79021531H
JANUARY, 2006

Challenger®

Parts Manual

660 COMBINE

ALPHABETICAL INDEX

The complete alphabetical index appears at the beginning of this publication. It is used to locate major groups, assemblies and components.

NUMERICAL INDEX

The numerical index of this publication follows the Alphabetical Index at the beginning of the publication and indicates at which grid location and page number a part number appears.

ILLUSTRATIONS

All illustrations are located on the left hand page with the text on the right. Except for some common hardware, all parts are identified with an item number which corresponds to the “item” column on the text page. This is followed by the parts number, quantity and description.

HARDWARE

Common hardware not identified such as bolts, nuts, cotter pins and lube fittings, are listed indented in the text beneath the item to which they attach or fit. Common hardware listed indented beneath an item is NOT included unless specified. Example: (Incl. BOLT, LOCKWASHER AND NUT).

ORDERING PARTS

Be sure to refer to both the text and the illustration to assure ordering the correct part.

RECOMMENDED DEALER STOCK

A recommended dealer stock listing appears at the end of this publication.

AGCO

ACCESSORIES

BEACON LIGHT 575

CAB

AIR CONDITIONER COMPRESSOR (SANDEN) 147
AIR CONDITIONER LINES 145
BRAKE MASTER CYLINDER 115
CONSOLE - SEAT 109
CONTROL GEARSHIFT 119
CONTROL PARK BRAKE & HYDRO PROPEL CABLE 117
CONTROL SERVICE BRAKES 113
CONTROL STEERING COLUMN 121
DECK EXTENSION 145" TREAD AND DUALS 97
FRAME & MOUNTING 83
HEATER LINES 149
HVAC BLOWER ASY. EVANS TEMPCON 143
HVAC CONTROL PANEL 137
HVAC PRESSURIZER UNIT EVANS-TEMPCON 139
HVAC PRESSURIZER UNIT & DUCTING 135
INTERIOR COVERINGS & TRIM LOWER AND REAR 91
INTERIOR COVERINGS & TRIM UPPER AND FRONT 89
LH DOOR INTERIOR & EXTERIOR HANDLES 87
MIRRORS & EXTREMITY LIGHTS MANUAL & ELECTRIC ADJUST 103
PIVOTING LADDER LH 95
PLATFORM LEFT & RIGHT 93
ROOF & INTERIOR/EXTERIOR LIGHTS 107
SEAT BASE & SUSPENSION 127
SEAT CUSHION AND BACKREST 131
SEAT OPERATOR & INSTRUCTOR 125
STAIRCASE LADDER & PLATFORM 99
STEERING COLUMN 123
WINDOWS AND DOORS 85
WINDSHIELD WIPER 105

CHOPPER & SPREADER

CHAFF SPREADER HYDRAULIC DRIVE 319
CHAFF SPREADER REKORD 321
CHAFF SPREADER REKORD, HYDRAULICS 323
JACKSHAFT DRIVE 289
STRAW CHOPPER ROTOR 303
STRAW CHOPPER DRIVE 293
STRAW CHOPPER DRIVE KIT HEAVY DUTY 297
STRAW CHOPPER HOOD & SUPPORTS 307
STRAW CHOPPER HOUSING REDEKOP 299
STRAW SPREADER COMPONENTS 313
STRAW SPREADER DRIVE 309

DECALS & LABELS

LABELS LEFT SIDE & FRONT 31
LABELS RIGHT SIDE & REAR 33

DRIVES

BELTS LEFT 569
BELTS RIGHT 571
CHAINS DRIVE 573

ELECTRICAL

ALTERNATOR - 150 AMP 163
BEACON LIGHTS FIELD KIT 181
CAB COMPONENTS CONTROLS & SWITCHES 165
CAB COMPONENTS FUSE PANEL & HYDRO HANDLE 169
CAB COMPONENTS RADIO AND ANTENNA 173
CAB COMPONENTS UPPER CONSOLE 171
ELECTRICAL HARNESSES REAR 179

ELECTRICAL (CONTINUED)

ELECTRICAL HARNESSES & SWITCHES FRONT 153
ENGINE & BATTERY WIRING (EFF. S/N HR87101) 159
ENGINE & BATTERY WIRING (PRIOR S/N HR87101) 155
FEEDER ELECTRICAL 151
HARNESSES & LIGHTING GRAIN BIN 177
HIGH INTENSITY LIGHTING FIELD KIT 183
MONITORING SYSTEMS DIGITAL TACHOMETER 175
SERVICE CONNECTORS HARNESS REPAIR 185

ENGINE

AIR INTAKE & EXHAUST (EFF. S/N HR87101) 47
AIR INTAKE & EXHAUST (PRIOR S/N HR87101) 43
COOLING SYSTEM (EFF. S/N HR87101) 61
COOLING SYSTEM (PRIOR S/N HR87101) 55
ENGINE & MOUNTS (EFF. S/N HR87101) 39
ENGINE & MOUNTS (PRIOR S/N HR87101) 35
FUEL LINES (EFF. S/N HP87101- HP87999) 75
FUEL LINES (EFF. S/N HR87101) 79
FUEL LINES (PRIOR S/N HP87101) 73
MAIN ENGINE DRIVES 51
RADIATOR SLINGER 67
ROTARY SCREEN DOOR & SCREEN 69
ROTARY SCREEN MOTOR & DRIVE 71

FEEDER

CONVEYOR (EFF. S/N HP87101) 227
CONVEYOR (PRIOR S/N HP87101) 225
COUNTERSHAFT HEADER DRIVE (PRIOR S/N HP87101) 219
COUNTERSHAFT VARIABLE & FIXED SPEED HEADER DRIVE (EFF. S/N HP87101) 221
FEED FLOOR 201
HEADER REVERSER DRIVE & HYDRAULICS (EFF. S/N HP87101) 231
HEADER REVERSER LINES & FITTINGS (PRIOR S/N HP87101) 229
HOUSING (PRIOR S/N HP87101) 189
HOUSING & SHIELDS (EFF. S/N HP87101) 193
HYDRAULIC LINES V.S. HEADER DRIVE (EFF. S/N HP87101) 215
JACK 199
JACKSHAFT & C'SHAFT DRIVE IDLER FIXED SPEED HEADER DRIVE (EFF. S/N HP87101) 217
JACKSHAFT & V.S. IDLER V.S. HEADER DRIVE (EFF. S/N HP87101) 213
JACKSHAFT DRIVE R.H. FEEDERHOUSE (EFF. S/N HP87101) 211
LATCH HEADER 223
LH PIVOT DRIVE (EFF. S/N HP87101) 207
PIVOT SHAFT (EFF. S/N HP87101) 205
PIVOT SHAFT (PRIOR S/N HP87101) 203
REVERSER MOTOR CLUTCH HOUSING & SHAFT ASSEMBLY (EFF. S/N HP87101) 235
REVERSER MOTOR TORQUE MOTOR ASY. (EFF. S/N HP87101) 237
REVERSER MOTOR & CLUTCH COMPONENTS (PRIOR S/N HP87101) 233
RH DRIVE (PRIOR S/N HP87101) 209

GRAIN BIN & ELEVATOR

BIN EXTENSIONS 407
FUEL TANKS 409
GRAIN BIN LOWER STRUCTURE 393
GRAIN BIN UPPER STRUCTURE & MOUNTS 399
GRAIN ELEVATOR BIN FILL AUGER 353
GRAIN ELEVATOR HEAD ASSEMBLY 351
GRAIN ELEVATOR LOWER 347
RETURN ELEVATOR LOWER (PRIOR S/N HP87101) 357
RETURN ELEVATOR LOWER (EFF. S/N HP87101) 361
RETURN ELEVATOR UPPER 365
RETURN ELEVATOR DRIVE 371
STAINLESS STEEL ELEVATOR PACKAGE RICE 369
UNLOADER DRIVE 389
UNLOADING AUGER LOWER 373

GRAIN BIN & ELEVATOR (CONTINUED)

UNLOADING AUGER UPPER 385
UNLOADING AUGER VERTICAL PRIOR S/N HN87101 377
UNLOADING AUGER VERTICAL EFFECTIVE S/N HN87101 381

HYDRAULICS

ACCUMULATOR PARKER 463
CONTROL VALVE STACK 471
FEEDER REVERSER VALVE 477
GREASE LINES 507
HEADER LIFT CYLINDERS 465
HEADER LIFT VALVE 473
HYDRAULIC PUMP 493
HYDRAULIC PUMP & LINES 487
PRIORITY VALVE 469
PROPEL PUMP AND MOTOR LINES 505
REEL DRIVE VALVE 481
REEL LIFT VALVE 475
RESERVOIR & FILTER 499
ROTARY SCREEN MOTOR LINES 485
ROTARY SCREEN VALVE & MOTOR 483
ROTOR PUMP AND MOTOR LINES 503
STEERING & HEADER FUNCTIONS 451
STEERING CYLINDER RWA AXLE 461
STEERING CYLINDER STD. ADJUSTABLE AXLE (PRIOR S/N HP 87101) 457
STEERING CYLINDER STD. ADJUSTABLE AXLE (EFF. S/N HP87101) 459
UNLOADER ENGAGE LINES 495
UNLOADER ENGAGE VALVE 497
UNLOADER SWING CYLINDER 467
UNLOADER SWING VALVE 479

LATERAL TILT

ANCHORS & SENSOR 243
HOUSING 239
HYDRAULIC CYLINDER 245
HYDRAULICS 247
VALVE & CONTROL 249

PROCESSOR

CONCAVE & CONTROLS 263
FRONT BEATER 251
FRONT BEATER DRIVE AND IDLER 257
INLET HOUSING AND STONE TRAP 259
MAIN COUNTERSHAFT 253
MAIN COUNTERSHAFT DRIVE AND IDLER 255
POWER CONCAVE CONTROL 269
REAR ROTOR HOUSING 271
ROTOR 281
ROTOR DRIVE GEARBOX SHIFT LINKAGE 285
ROTOR DRIVE 2-SPEED GEARBOX 287
SEPARATOR GRATE SUPPORTS RICE 279
SEPARATOR GRATES 275

RECOMMENDED DEALER STOCK

RECOMMENDED DEALER STOCK 577

SEPARATOR

GRAIN ELEVATOR DRIVE (EFF. S/N HP87101) 345
GRAIN ELEVATOR DRIVE (PRIOR S/N HP87101) 343
LOWER AUGER HOUSING AND FANNING MILL 325
PITMAN DRIVE 341
SEPARATOR PAN 333
SHAKER SHOE AND SIEVES 335
VARIABLE SPEED FAN DRIVE 331

SHIELDS

ENGINE COVERS 411
MUD SHIELDS LEFT SIDE (PRIOR S/N HP87101) 441
MUD SHIELDS LEFT SIDE (EFF. S/N HP87101) 447
MUD SHIELDS RIGHT SIDE 437
REAR DECK AND LADDER 415
SIDE SHIELDS LEFT FRONT AND MIDDLE 419
SIDE SHIELDS LEFT SIDE 423
SIDE SHIELDS RIGHT FRONT AND MIDDLE 429
SIDE SHIELDS RIGHT SIDE 433

TRANSMISSION & AXLES

DRUM BRAKES LINES & FITTINGS 545
DRUM BRAKES SERVICE & PARKING 543
FINAL DRIVE S39 529
FINAL DRIVE 4" AXLE RISERS 533
HYDROSTATIC TANDEM PUMPS 509
MAIN FRAME AND AXLE SUPPORTS 547
MOTOR, HYDRO PROPEL & ROTOR COMPONENTS 527
PROPEL PUMP COMPONENTS, 1 OF 4 511
PROPEL PUMP COMPONENTS, 2 OF 4 513
PROPEL PUMP COMPONENTS, 3 OF 4 515
PROPEL PUMP COMPONENTS, 4 OF 4 517
REAR AXLE & WHEELS ADJUSTABLE TREAD (PRIOR S/N HP87101) 549
REAR AXLE & WHEELS ADJUSTABLE TREAD (EFF. S/N HP87101) 553
REAR AXLE & WHEELS REAR WHEEL ASSIST 557
REAR WHEEL ASSIST SELECTOR VALVE & FLOW DIVIDER 565
REAR WHEEL ASSIST WHEEL MOTOR UNIT 563
ROTOR PUMP COMPONENTS, 1 OF 4 519
ROTOR PUMP COMPONENTS, 2 OF 4 521
ROTOR PUMP COMPONENTS, 3 OF 4 523
ROTOR PUMP COMPONENTS, 4 OF 4 525
TRANSMISSION, GEAR DIFFERENTIAL 541
TRANSMISSION, GEAR INPUT SHAFT & GEARS 537
TRANSMISSION, GEAR INTERMEDIATE & MAIN SHAFT 539
TRANSMISSION, GEAR PRESSURE LUBE & HYDRO MOTOR 535
WHEELS DRIVE 567

INDEX

Part No.	Page	Grid	Part No.	Page	Grid	Part No.	Page	Grid	Part No.	Page	Grid
AG133717	517	1-D 6	Y704635	429	1-C 21	Y704734	101	1-B 13	Y704742	261	1-C 5
CH1R-0771	79	1-B 10	Y704726	43	1-B 7	Y704734	103	1-B 13	Y704742	263	1-C 5
CH1R-0771	579	1-D 12	Y704726	47	1-B 7	Y704734	119	1-B 14	Y704742	265	1-C 5
D49070008	321	1-C 11	Y704726	57	1-B 8	Y704734	191	1-B 22	Y704742	269	1-C 5
D49070025	323	1-C 11	Y704726	59	1-B 8	Y704734	195	1-B 22	Y704742	275	1-C 6
D49080047	321	1-C 11	Y704726	63	1-B 9	Y704734	197	1-B 22	Y704742	277	1-C 6
D49080090	299	1-C 8	Y704726	65	1-B 9	Y704734	203	1-B 23	Y704742	307	1-C 9
D49100159	321	1-C 11	Y704726	71	1-B 10	Y704734	205	1-B 23	Y704742	317	1-C 10
K3518	357	1-C 14	Y704726	73	1-B 10	Y704734	213	1-B 24	Y704742	325	1-C 11
K3518	363	1-C 15	Y704726	75	1-B 10	Y704734	217	1-B 24	Y704742	327	1-C 11
K3518	365	1-C 15	Y704726	77	1-B 10	Y704734	257	1-C 4	Y704742	331	1-C 12
K3999	219	1-B 24	Y704726	79	1-B 10	Y704734	259	1-C 4	Y704742	333	1-C 12
K3999	313	1-C 10	Y704726	81	1-B 11	Y704734	261	1-C 5	Y704742	337	1-C 12
K3999	581	1-D 13	Y704726	85	1-B 11	Y704734	263	1-C 5	Y704742	341	1-C 13
K4037	313	1-C 10	Y704726	93	1-B 12	Y704734	275	1-C 6	Y704742	345	1-C 13
K4037	577	1-D 12	Y704726	95	1-B 12	Y704734	285	1-C 7	Y704742	355	1-C 14
N12998	113	1-B 14	Y704726	97	1-B 12	Y704734	289	1-C 7	Y704742	357	1-C 14
PZND1041V	301	1-C 9	Y704726	99	1-B 12	Y704734	293	1-C 8	Y704742	363	1-C 15
RE210066	107	1-B 13	Y704726	107	1-B 13	Y704734	295	1-C 8	Y704742	367	1-C 15
RE210066	173	1-B 20	Y704726	119	1-B 14	Y704734	307	1-C 9	Y704742	373	1-C 16
RE210066	577	1-D 12	Y704726	145	1-B 17	Y704734	309	1-C 9	Y704742	377	1-C 16
RE530013	173	1-B 20	Y704726	149	1-B 17	Y704734	311	1-C 10	Y704742	379	1-C 16
RE701128D6	173	1-B 20	Y704726	259	1-C 4	Y704734	315	1-C 10	Y704742	381	1-C 17
RE701141D6	173	1-B 20	Y704726	265	1-C 5	Y704734	317	1-C 10	Y704742	385	1-C 17
RE701156D6	173	1-B 20	Y704726	275	1-C 6	Y704734	325	1-C 11	Y704742	389	1-C 17
WR519751	501	1-D 5	Y704726	281	1-C 7	Y704734	327	1-C 11	Y704742	395	1-C 18
WSP1344	99	1-B 12	Y704726	285	1-C 7	Y704734	331	1-C 12	Y704742	397	1-C 18
W1511670	573	1-D 12	Y704726	295	1-C 8	Y704734	333	1-C 12	Y704742	413	1-C 20
W1511670	579	1-D 12	Y704726	307	1-C 9	Y704734	335	1-C 12	Y704742	433	1-C 22
W500053E	113	1-B 14	Y704726	309	1-C 9	Y704734	337	1-C 12	Y704742	449	1-C 23
W915795-4	251	1-C 4	Y704726	311	1-C 10	Y704734	339	1-C 12	Y704742	555	1-D 10
W937119	379	1-C 16	Y704726	313	1-C 10	Y704734	341	1-C 13	Y704742	559	1-D 10
W937119	383	1-C 17	Y704726	315	1-C 10	Y704734	357	1-C 14	Y705020	37	1-B 6
W943003	149	1-B 17	Y704726	317	1-C 10	Y704734	359	1-C 14	Y705020	43	1-B 7
W9863030	357	1-C 14	Y704726	325	1-C 11	Y704734	363	1-C 15	Y705020	45	1-B 7
W9863030	363	1-C 15	Y704726	327	1-C 11	Y704734	365	1-C 15	Y705020	47	1-B 7
Y52209	119	1-B 14	Y704726	333	1-C 12	Y704734	367	1-C 15	Y705020	55	1-B 8
Y52894	531	1-D 8	Y704726	335	1-C 12	Y704734	377	1-C 16	Y705020	69	1-B 9
Y58040	419	1-C 20	Y704726	337	1-C 12	Y704734	379	1-C 16	Y705020	103	1-B 13
Y58040	429	1-C 21	Y704726	343	1-C 13	Y704734	381	1-C 17	Y705020	109	1-B 13
Y58040	431	1-C 22	Y704726	345	1-C 13	Y704734	383	1-C 17	Y705020	117	1-B 14
Y61879	251	1-C 4	Y704726	377	1-C 16	Y704734	385	1-C 17	Y705020	135	1-B 16
Y61879	291	1-C 8	Y704726	381	1-C 17	Y704734	387	1-C 17	Y705020	151	1-B 18
Y702951	157	1-B 18	Y704726	385	1-C 17	Y704734	389	1-C 17	Y705020	155	1-B 18
Y702951	161	1-B 19	Y704726	391	1-C 18	Y704734	391	1-C 18	Y705020	157	1-B 18
Y702951	215	1-B 24	Y704726	393	1-C 18	Y704734	393	1-C 18	Y705020	159	1-B 18
Y702951	393	1-C 18	Y704726	415	1-C 20	Y704734	395	1-C 18	Y705020	161	1-B 19
Y702951	395	1-C 18	Y704726	423	1-C 21	Y704734	397	1-C 18	Y705020	299	1-C 8
Y702951	485	1-D 3	Y704726	425	1-C 21	Y704734	403	1-C 19	Y705020	327	1-C 11
Y702951	489	1-D 3	Y704726	427	1-C 21	Y704734	405	1-C 19	Y705020	329	1-C 11
Y703132	83	1-B 11	Y704726	433	1-C 22	Y704734	407	1-C 19	Y705020	351	1-C 14
Y703132	107	1-B 13	Y704726	435	1-C 22	Y704734	413	1-C 20	Y705020	353	1-C 14
Y703132	117	1-B 14	Y704726	447	1-C 23	Y704734	433	1-C 22	Y705020	399	1-C 18
Y703140	295	1-C 8	Y704726	449	1-C 23	Y704734	435	1-C 22	Y705020	407	1-C 19
Y704072	65	1-B 9	Y704726	489	1-D 3	Y704734	437	1-C 22	Y705020	415	1-C 20
Y704072	83	1-B 11	Y704726	491	1-D 4	Y704734	439	1-C 22	Y705020	419	1-C 20
Y704072	111	1-B 14	Y704726	495	1-D 4	Y704734	445	1-C 23	Y705020	423	1-C 21
Y704072	419	1-C 20	Y704734	35	1-B 6	Y704734	447	1-C 23	Y705020	425	1-C 21
Y704072	429	1-C 21	Y704734	37	1-B 6	Y704734	449	1-C 23	Y705020	427	1-C 21
Y704288	239	1-C 2	Y704734	39	1-B 6	Y704734	499	1-D 4	Y705020	433	1-C 22
Y704361	155	1-B 18	Y704734	41	1-B 7	Y704734	507	1-D 5	Y705020	437	1-C 22
Y704361	161	1-B 19	Y704734	43	1-B 7	Y704734	547	1-D 9	Y705020	439	1-C 22
Y704395	573	1-D 12	Y704734	47	1-B 7	Y704734	557	1-D 10	Y705020	445	1-C 23
Y704445	117	1-B 14	Y704734	51	1-B 8	Y704742	51	1-B 8	Y705046	35	1-B 6
Y704445	121	1-B 15	Y704734	55	1-B 8	Y704742	53	1-B 8	Y705046	39	1-B 6
Y704445	155	1-B 18	Y704734	61	1-B 9	Y704742	71	1-B 10	Y705046	71	1-B 10
Y704445	159	1-B 18	Y704734	71	1-B 10	Y704742	83	1-B 11	Y705046	107	1-B 13
Y704445	171	1-B 20	Y704734	73	1-B 10	Y704742	99	1-B 12	Y705046	189	1-B 21
Y704445	175	1-B 20	Y704734	75	1-B 10	Y704742	101	1-B 13	Y705046	193	1-B 22
Y704445	179	1-B 20	Y704734	77	1-B 10	Y704742	119	1-B 14	Y705046	203	1-B 23
Y704445	269	1-C 5	Y704734	79	1-B 10	Y704742	229	1-C 1	Y705046	205	1-B 23
Y704445	419	1-C 20	Y704734	81	1-B 11	Y704742	231	1-C 2	Y705046	213	1-B 24
Y704445	429	1-C 21	Y704734	93	1-B 12	Y704742	255	1-C 4	Y705046	219	1-B 24
Y704452	433	1-C 22	Y704734	97	1-B 12	Y704742	257	1-C 4	Y705046	221	1-C 1
Y704635	419	1-C 20	Y704734	99	1-B 12	Y704742	259	1-C 4	Y705046	231	1-C 2

Part No.	Page	Grid
Y705046	243	1-C 3
Y705046	251	1-C 4
Y705046	253	1-C 4
Y705046	267	1-C 5
Y705046	275	1-C 6
Y705046	277	1-C 6
Y705046	279	1-C 6
Y705046	281	1-C 7
Y705046	283	1-C 7
Y705046	293	1-C 8
Y705046	301	1-C 9
Y705046	303	1-C 9
Y705046	309	1-C 9
Y705046	325	1-C 11
Y705046	327	1-C 11
Y705046	349	1-C 13
Y705046	353	1-C 14
Y705046	377	1-C 16
Y705046	381	1-C 17
Y705046	387	1-C 17
Y705046	411	1-C 20
Y705046	415	1-C 20
Y705046	437	1-C 22
Y705046	441	1-C 23
Y705046	451	1-C 24
Y705046	489	1-D 3
Y705046	547	1-D 9
Y705046	551	1-D 10
Y705046	553	1-D 10
Y705046	561	1-D 11
Y705525	61	1-B 9
Y705525	63	1-B 9
Y705525	65	1-B 9
Y705525	93	1-B 12
Y705525	95	1-B 12
Y705525	99	1-B 12
Y705525	109	1-B 13
Y705525	119	1-B 14
Y705525	427	1-C 21
Y705525	433	1-C 22
Y705525	435	1-C 22
Y705533	61	1-B 9
Y705533	67	1-B 9
Y705533	71	1-B 10
Y705533	93	1-B 12
Y705533	99	1-B 12
Y705533	103	1-B 13
Y705533	197	1-B 22
Y705533	285	1-C 7
Y705533	327	1-C 11
Y705533	349	1-C 13
Y705533	355	1-C 14
Y705533	361	1-C 15
Y705533	363	1-C 15
Y705533	365	1-C 15
Y705533	367	1-C 15
Y705533	429	1-C 21
Y705533	433	1-C 22
Y705566	71	1-B 10
Y705566	567	1-D 11
Y705582	35	1-B 6
Y705582	39	1-B 6
Y705582	227	1-C 1
Y705608	37	1-B 6
Y705608	45	1-B 7
Y705608	47	1-B 7
Y705608	49	1-B 7
Y705608	55	1-B 8
Y705608	69	1-B 9
Y705608	73	1-B 10
Y705608	75	1-B 10
Y705608	79	1-B 10
Y705608	117	1-B 14
Y705608	145	1-B 17
Y705608	315	1-C 10
Y705608	329	1-C 11
Y705608	337	1-C 12
Y705608	359	1-C 14
Y705608	361	1-C 15
Y705608	489	1-D 3
Y705624	35	1-B 6
Y705624	39	1-B 6
Y705624	213	1-B 24
Y705624	215	1-B 24
Y705624	223	1-C 1
Y705624	239	1-C 2
Y705624	255	1-C 4
Y705624	261	1-C 5
Y705624	301	1-C 9
Y705624	331	1-C 12
Y705624	367	1-C 15
Y705624	543	1-D 9
Y705624	559	1-D 10
Y707042	353	1-C 14
Y707042	363	1-C 15
Y710293	365	1-C 15
Y730804	535	1-D 8
Y761312	375	1-C 16
Y763318	529	1-D 7
Y764126	339	1-C 12
Y772129	87	1-B 11
Y851774	573	1-D 12
Y851774	579	1-D 12
1P-0436	37	1-B 6
1R-0716	37	1-B 6
1R-0716	41	1-B 7
1R-0716	579	1-D 12
1R-0751	73	1-B 10
1R-0751	77	1-B 10
1R-0751	81	1-B 11
1R-0751	579	1-D 12
10033	365	1-C 15
10033	577	1-D 12
100801	557	1-D 10
101065M1	295	1-C 8
101065M1	311	1-C 10
101066M1	295	1-C 8
101066M1	311	1-C 10
101069M1	295	1-C 8
101069M1	309	1-C 9
101074M2	291	1-C 8
101075M1	291	1-C 8
101078M1	251	1-C 4
101098M91	289	1-C 7
101100M91	289	1-C 7
101102M1	389	1-C 17
101102M1	569	1-D 11
101102M1	577	1-D 12
101126M1	337	1-C 12
101158M1	367	1-C 15
101218M91	441	1-C 23
101218M91	449	1-C 23
101221M92	445	1-C 23
101221M92	449	1-C 23
101231M1	445	1-C 23
101231M1	449	1-C 23
101232M1	445	1-C 23
101232M1	449	1-C 23
101276M2	289	1-C 7
101276M2	293	1-C 8
101276M2	389	1-C 17
101276M2	583	1-D 13
101411M91	293	1-C 8
101411M91	309	1-C 9
101575M1	391	1-C 18
101588M1	487	1-D 3
101589M91	451	1-C 24
101590M1	319	1-C 10
101590M1	491	1-D 4
101596M92	451	1-C 24
101598M1	491	1-D 4
101618M1	73	1-B 10
101618M1	75	1-B 10
101618M1	491	1-D 4
101618M1	503	1-D 5
10163	311	1-C 10
101643M91	491	1-D 4
101646M1	77	1-B 10
101646M1	81	1-B 11
101646M1	145	1-B 17
101646M1	157	1-B 18
101646M1	161	1-B 19
101646M1	229	1-C 1
101646M1	451	1-C 24
101646M1	491	1-D 4
101646M1	495	1-D 4
101650M1	487	1-D 3
101698M1	451	1-C 24
101705M1	451	1-C 24
10171	457	1-C 24
101751M1	491	1-D 4
101752M1	491	1-D 4
101781M1	203	1-B 23
101783M1	203	1-B 23
101785M1	203	1-B 23
101832M1	453	1-C 24
101832M1	495	1-D 4
101841M1	57	1-B 8
101841M1	63	1-B 9
101841M1	503	1-D 5
101841M1	505	1-D 5
101841M1	561	1-D 11
101842M1	57	1-B 8
101842M1	63	1-B 9
101842M1	503	1-D 5
101842M1	505	1-D 5
101842M1	561	1-D 11
101843M1	505	1-D 5
101843M1	559	1-D 10
101844M1	505	1-D 5
1018729M1	179	1-B 20
1018729M1	579	1-D 12
101930M1	281	1-C 7
102028M1	559	1-D 10
102038M1	547	1-D 9
102158M1	443	1-C 23
102237M1	445	1-C 23
102302M1	35	1-B 6
102302M1	39	1-B 6
102367M1	561	1-D 11
1026105M1	535	1-D 8
102764M91	263	1-C 5
102835M91	281	1-C 7
102903M91	403	1-C 19
102934M1	291	1-C 8
102981M91	281	1-C 7
103001M91	267	1-C 5
103004M91	267	1-C 5
103284M1C	51	1-B 8
103287M2	503	1-D 5
103288M2	503	1-D 5
103316M1	293	1-C 8
103338W1	307	1-C 9
103338W1	317	1-C 10
103339W1	307	1-C 9
103339W1	317	1-C 10
103342W91	301	1-C 9
103600W1	451	1-C 24
103657W91	331	1-C 12
103668W1	93	1-B 12
103668W1	99	1-B 12
103714W1	493	1-D 4
103732W1	233	1-C 2
103736W1	233	1-C 2
103737W1	233	1-C 2
103738W1	233	1-C 2
103745W1	473	1-D 2
103746W1	473	1-D 2
103747W1	473	1-D 2
103753W1	473	1-D 2
103754W1	473	1-D 2
103759W91	471	1-D 2
103764W1	471	1-D 2
103766W92	471	1-D 2
103766W92	475	1-D 2
103767W1	233	1-C 2
103778W91	471	1-D 2
103789W1	473	1-D 2
103789W1	481	1-D 3
103796W1	473	1-D 2
103797W1	473	1-D 2
103834W1	203	1-B 23
103834W1	205	1-B 23
104021W1	377	1-C 16
104035W1	307	1-C 9
104037W1	307	1-C 9
104128W1	473	1-D 2
104128W1	481	1-D 3
104130W91	473	1-D 2
104135W91	481	1-D 3
104135W91	489	1-D 3
104139W91	473	1-D 2
104139W91	477	1-D 2
104145W91	471	1-D 2
104145W91	473	1-D 2
104156W91	501	1-D 5
104201W1	261	1-C 5
104207W1	341	1-C 13
1042752M1	233	1-C 2
104307W91	229	1-C 1
104307W91	233	1-C 2
104308W1	499	1-D 4
104309W91	499	1-D 4
104309W91	579	1-D 12
104456W1	493	1-D 4
104468W1	233	1-C 2
104468W1	235	1-C 2
104473W91	233	1-C 2
104475W1	233	1-C 2
104476W1	233	1-C 2
104476W1	237	1-C 2
104477W1	233	1-C 2
104478W91	233	1-C 2
104479W1	233	1-C 2
104479W1	237	1-C 2
104480W91	233	1-C 2
104482W1	233	1-C 2
104483W1	233	1-C 2
104484W1	233	1-C 2
104485W1	233	1-C 2
104486W1	233	1-C 2
104500W1	251	1-C 4
104500W1	445	1-C 23
104502W1	481	1-D 3
104503W1	481	1-D 3
104505W1	481	1-D 3
104508W1	481	1-D 3
104509W1	481	1-D 3
104510W1	481	1-D 3
104512W1	481	1-D 3
104715W1	253	1-C 4
104740W1	379	1-C 16
104740W1	383	1-C 17
104741W1	379	1-C 16
104741W1	383	1-C 17
104742W1	379	1-C 16
104742W1	383	1-C 17
104751W1	251	1-C 4
104751W1	253	1-C 4
104751W1	291	1-C 8

INDEX

Part No.	Page	Grid
104904W91	265	1-C 5
104916W91	443	1-C 23
104916W91	447	1-C 23
104920W2	333	1-C 12
104921W2	333	1-C 12
104922W91	273	1-C 6
104925W91	271	1-C 6
104928W1	271	1-C 6
105050W91	333	1-C 12
105068W1	479	1-D 2
105076W1	479	1-D 2
105077W1	479	1-D 2
105078W1	479	1-D 2
105084W1	479	1-D 2
105085W1	479	1-D 2
105086W91	257	1-C 4
105091W1	45	1-B 7
105092W1	45	1-B 7
105177W1	301	1-C 9
1052337M1	473	1-D 2
1052341M1	473	1-D 2
1052349M1	473	1-D 2
1052351M1	473	1-D 2
1052358M1	479	1-D 2
1052359M91	475	1-D 2
1052370M91	471	1-D 2
1052370M91	473	1-D 2
1052370M91	475	1-D 2
1052370M91	479	1-D 2
1052384M1	475	1-D 2
1052390M1	479	1-D 2
1052393M1	479	1-D 2
1052394M1	473	1-D 2
1052408M1	479	1-D 2
105493W1	265	1-C 5
105495W1	265	1-C 5
105495W1	583	1-D 13
1055944M1	479	1-D 2
105733W1	233	1-C 2
1068614M91	331	1-C 12
1068617M1	331	1-C 12
1068620M91	331	1-C 12
107041	165	1-B 19
1073032M1	473	1-D 2
1073032M1	475	1-D 2
107320M1	167	1-B 19
107499M1	171	1-B 20
107500M1	171	1-B 20
1077183M91	559	1-D 10
1077238M91	565	1-D 11
1077239M91	565	1-D 11
1077240M91	565	1-D 11
1077602M1	515	1-D 6
1077602M1	523	1-D 7
1077604M1	511	1-D 6
1077604M1	513	1-D 6
1077604M1	519	1-D 6
1077604M1	521	1-D 7
1077605M1	511	1-D 6
1077605M1	517	1-D 6
1077605M1	519	1-D 6
1077605M1	525	1-D 7
1077605M1	527	1-D 7
1077611M1	523	1-D 7
1077611M1	527	1-D 7
1077615M1	515	1-D 6
1077615M1	523	1-D 7
1077616M1	515	1-D 6
1077616M1	523	1-D 7
1077624M1	525	1-D 7
1077627M1	517	1-D 6
1077627M1	525	1-D 7
1077628M1	525	1-D 7
1077631M91	511	1-D 6
1077631M91	519	1-D 6
1077633M1	525	1-D 7
1077635M2	523	1-D 7
1077636M1	525	1-D 7
1077637M1	525	1-D 7
1077638M1	517	1-D 6
1077638M1	525	1-D 7
1077639M92	521	1-D 7
1077648M1	511	1-D 6
1077651M1	511	1-D 6
1077651M1	519	1-D 6
1077654M1	521	1-D 7
1077656M1	513	1-D 6
1077656M1	521	1-D 7
1077658M1	513	1-D 6
1077658M1	521	1-D 7
1077661M1	513	1-D 6
1077664M1	525	1-D 7
1077664M1	527	1-D 7
1077666M1	519	1-D 6
1077666M1	527	1-D 7
1077673M1	517	1-D 6
1077673M1	525	1-D 7
1077675M1	525	1-D 7
1077676M1	525	1-D 7
1077677M1	525	1-D 7
1077678M1	525	1-D 7
1077684M1	513	1-D 6
1077684M1	521	1-D 7
1077685M1	525	1-D 7
1077695M1	527	1-D 7
1077696M1	527	1-D 7
1077960M1	527	1-D 7
108047W1	155	1-B 18
108047W1	159	1-B 18
108048W1	155	1-B 18
108048W1	159	1-B 18
108076W1	155	1-B 18
108076W1	159	1-B 18
1081151M1	563	1-D 11
1081158M91	563	1-D 11
1081159M1	563	1-D 11
1081655M1	515	1-D 6
1081656M1	515	1-D 6
1081657M91	515	1-D 6
1081658M1	515	1-D 6
1081659M1	515	1-D 6
1081660M1	515	1-D 6
1081661M1	515	1-D 6
1081662M91	515	1-D 6
1081663M1	515	1-D 6
1081664M1	515	1-D 6
1081665M1	515	1-D 6
1081666M1	515	1-D 6
1081667M91	515	1-D 6
1081668M91	515	1-D 6
1081669M1	515	1-D 6
1081670M1	515	1-D 6
1081671M1	515	1-D 6
1081672M1	515	1-D 6
1081673M1	515	1-D 6
1081674M1	515	1-D 6
1081675M1	517	1-D 6
1081676M1	517	1-D 6
1081677M1	517	1-D 6
1081678M1	517	1-D 6
1081680M1	517	1-D 6
1081681M1	517	1-D 6
1081682M1	517	1-D 6
1081683M91	517	1-D 6
1081684M1	515	1-D 6
1081685M91	513	1-D 6
1081686M1	513	1-D 6
1081687M1	513	1-D 6
1081688M91	513	1-D 6
1081689M1	513	1-D 6
1081690M1	513	1-D 6
1081691M1	517	1-D 6
1081692M1	517	1-D 6
1081693M91	511	1-D 6
1081694M1	511	1-D 6
1081695M1	511	1-D 6
1081696M1	511	1-D 6
1081697M1	511	1-D 6
1081699M1	517	1-D 6
1081699M1	525	1-D 7
1081700M1	517	1-D 6
1081701M1	517	1-D 6
1081702M1	517	1-D 6
1081703M1	517	1-D 6
1081704M1	517	1-D 6
1081705M1	517	1-D 6
1081706M1	513	1-D 6
1081706M1	521	1-D 7
1081707M91	511	1-D 6
1081707M91	519	1-D 6
1081708M91	517	1-D 6
1081709M1	517	1-D 6
1081710M1	517	1-D 6
1081711M1	517	1-D 6
1081712M91	515	1-D 6
1081712M91	523	1-D 7
1081713M91	517	1-D 6
1081714M1	517	1-D 6
1081715M1	517	1-D 6
1081718M1	523	1-D 7
1081720M91	521	1-D 7
1081721M1	521	1-D 7
1081722M1	521	1-D 7
1081723M1	521	1-D 7
1081724M1	521	1-D 7
1081725M1	521	1-D 7
1081726	521	1-D 7
1081727M1	509	1-D 5
1081727M1	521	1-D 7
1081728M1	521	1-D 7
1081729M1	521	1-D 7
1081731M1	525	1-D 7
1081733M1	519	1-D 6
1081734M91	525	1-D 7
1081735M91	525	1-D 7
1081737M91	525	1-D 7
108202W1	329	1-C 11
108202W1	373	1-C 16
108247W1	501	1-D 5
108275W91	389	1-C 17
108531W91	495	1-D 4
108531W91	497	1-D 4
108541W1	499	1-D 4
108575W1	377	1-C 16
108575W1	381	1-C 17
108575W1	389	1-C 17
108586W91	389	1-C 17
108592W1	389	1-C 17
108593W91	389	1-C 17
108597W91	389	1-C 17
108599W1	389	1-C 17
108600W1	391	1-C 18
108601W1	389	1-C 17
108602W1	389	1-C 17
108610W1	401	1-C 19
108664W1	165	1-B 19
108664W1	249	1-C 3
108843W1	349	1-C 13
108910W91	489	1-D 3
108925W1	495	1-D 4
1109055	333	1-C 12
1109055	577	1-D 12
1109070	541	1-D 9
111089W1	473	1-D 2
111091W1	31	1-B 6
111095W1	31	1-B 6
1112299	127	1-B 15
1114720W1	333	1-C 12
1114720W1	583	1-D 13
111670W1	31	1-B 6
111670W1	33	1-B 6
111670W1	437	1-C 22
111670W1	443	1-C 23
111711W1	117	1-B 14
111736W2	33	1-B 6
111737W1	301	1-C 9
111737W1	319	1-C 10
111741W1	31	1-B 6
111743W1	33	1-B 6
111743W1	369	1-C 15
112016W1	501	1-D 5
112019W1	505	1-D 5
112020W1	503	1-D 5
112027W1	495	1-D 4
112041W1	487	1-D 3
112043W1	489	1-D 3
112044W1	491	1-D 4
112046W1	229	1-C 1
112050W1	487	1-D 3
112159W1	153	1-B 18
112174W1	489	1-D 3
112202W91	563	1-D 11
112204W91	563	1-D 11
112235W91	565	1-D 11
112236W1	165	1-B 19
112253W1	557	1-D 10
112283W1	559	1-D 10
112412W1	261	1-C 5
112678W1	79	1-B 10
112678W1	145	1-B 17
112685W1	251	1-C 4
112716W92	377	1-C 16
112716W92	381	1-C 17
112720W91	379	1-C 16
112720W91	383	1-C 17
112734W1	113	1-B 14
112735W91	113	1-B 14
112752W1	283	1-C 7
112774W1	389	1-C 17
112785W92	467	1-D 1
112785W92	491	1-D 4
112811W1	167	1-B 19
112812W1	167	1-B 19
112814W1	167	1-B 19
112858W91	499	1-D 4
112887W1	499	1-D 4
112887W1	579	1-D 12
112890W91	499	1-D 4
112932W91	499	1-D 4
112942W1	57	1-B 8
112942W1	65	1-B 9
112942W1	293	1-C 8
112942W1	309	1-C 9
112942W1	443	1-C 23
112942W1	447	1-C 23
112972W1	451	1-C 24
112972W1	491	1-D 4
112977W92C	377	1-C 16
1130100W1	333	1-C 12
1138480	253	1-C 4
1138480	577	1-D 12
1139003	333	1-C 12
1139003	577	1-D 12
1157990W1	333	1-C 12
1157990W1	339	1-C 12
116047W1	111	1-B 14
116082W1	303	1-C 9
116106W1	203	1-B 23
116106W1	205	1-B 23
116107W1	203	1-B 23

Part No.	Page	Grid
116107W1	205	1-B 23
116108W1	203	1-B 23
116108W1	205	1-B 23
116143W1	467	1-D 1
116145W1	467	1-D 1
116146W1	467	1-D 1
116147W91	467	1-D 1
116148W1	467	1-D 1
116149W1	467	1-D 1
116159W1	505	1-D 5
116246W91	299	1-C 8
116247W91	299	1-C 8
116248W91	301	1-C 9
116249W1	301	1-C 9
116250W1	301	1-C 9
116252W1	303	1-C 9
116281W1	509	1-D 5
116282W1	509	1-D 5
116312W1	223	1-C 1
116327W1	189	1-B 21
116327W1	193	1-B 22
116328W1	191	1-B 22
116328W1	193	1-B 22
116339W1	223	1-C 1
116343W1	193	1-B 22
116343W1	223	1-C 1
116346W1	223	1-C 1
116348W1	223	1-C 1
116349W1	223	1-C 1
116353W1	201	1-B 23
116354W1	201	1-B 23
116355W1	201	1-B 23
116357W1	201	1-B 23
116359W1	201	1-B 23
116362W1	201	1-B 23
116363W1	201	1-B 23
116375W1	225	1-C 1
116375W1	227	1-C 1
116465W91	471	1-D 2
116465W91	479	1-D 2
116479W1	451	1-C 24
116482W1	451	1-C 24
116518W1	191	1-B 22
116519W1	191	1-B 22
116626W1	465	1-D 1
116627W1	465	1-D 1
116640W1	487	1-D 3
116644W1	489	1-D 3
116675W1	219	1-B 24
116757W1	465	1-D 1
116759W1	465	1-D 1
116876W91	303	1-C 9
116953W91	303	1-C 9
118-0386	35	1-B 6
124-0506	37	1-B 6
129-0838	39	1-B 6
129-5096	35	1-B 6
129-5096	39	1-B 6
129-5096	157	1-B 18
129-5096	161	1-B 19
133-5673	73	1-B 10
133-5673	75	1-B 10
133-5673	579	1-D 12
133827M1	499	1-D 4
133828M91	499	1-D 4
135-9819	487	1-D 3
136-3608	37	1-B 6
13601	205	1-B 23
13601	263	1-C 5
13811X	207	1-B 23
13811X	209	1-B 23
13811X	211	1-B 24
13811X	217	1-B 24
13811X	221	1-C 1
13811X	239	1-C 2
13811X	243	1-C 3
13811X	341	1-C 13
13811X	367	1-C 15
13811X	529	1-D 7
13811X	549	1-D 9
13811X	551	1-D 10
13811X	553	1-D 10
13811X	579	1-D 12
13887X	221	1-C 1
13887X	551	1-D 10
13887X	553	1-D 10
141-0284	73	1-B 10
141-0284	75	1-B 10
141-0284	579	1-D 12
144-0367	43	1-B 7
144-0367	47	1-B 7
1440921X1	321	1-C 11
1441932X1	321	1-C 11
148022M1	229	1-C 1
148022M1	451	1-C 24
148039M1	489	1-D 3
148203M1	77	1-B 10
148203M1	81	1-B 11
148203M1	157	1-B 18
148203M1	161	1-B 19
148203M1	495	1-D 4
14987	337	1-C 12
1500050W1	379	1-C 16
1500050W1	383	1-C 17
1500060W1	379	1-C 16
1500060W1	383	1-C 17
1500070W1	379	1-C 16
1500070W1	383	1-C 17
1500268M1	475	1-D 2
1501060W1	333	1-C 12
1501060W1	337	1-C 12
1501060W1	339	1-C 12
1505030W1	333	1-C 12
1508070W1	373	1-C 16
1510740W1	357	1-C 14
1510831W91	365	1-C 15
151257M1	277	1-C 6
151257M1	343	1-C 13
151257M1	345	1-C 13
1520233W91	333	1-C 12
155-2629	73	1-B 10
155-2629	75	1-B 10
1564540W1	333	1-C 12
1564540W1	335	1-C 12
1564540W1	337	1-C 12
1565240W1	113	1-B 14
1579720W1	309	1-C 9
1579720W1	345	1-C 13
1579720W1	371	1-C 16
1588480W1	333	1-C 12
1599410W1	385	1-C 17
1605510W1	341	1-C 13
1605510W1	365	1-C 15
1609121W91	199	1-B 22
1609200W1	199	1-B 22
1611180W1	199	1-B 22
1651910W1	57	1-B 8
1651910W1	63	1-B 9
1651910W1	357	1-C 14
1656110W2	195	1-B 22
1656110W2	407	1-C 19
1656110W2	413	1-C 20
1656110W2	437	1-C 22
1656110W2	443	1-C 23
1656110W2	447	1-C 23
1659630W1	203	1-B 23
1659630W1	205	1-B 23
1659650W1	203	1-B 23
1659650W1	205	1-B 23
1659660W1	203	1-B 23
1680230W1	309	1-C 9
1680230W1	571	1-D 12
1680230W1	577	1-D 12
1689170W1	257	1-C 4
1689170W1	289	1-C 7
1689170W1	293	1-C 8
1689170W1	309	1-C 9
1689170W1	343	1-C 13
1689170W1	345	1-C 13
1689170W1	389	1-C 17
1689170W1	579	1-D 12
1703321	35	1-B 6
1703321	39	1-B 6
1703354	57	1-B 8
1703354	59	1-B 8
1703354	63	1-B 9
1703354	65	1-B 9
1703354	73	1-B 10
1703354	75	1-B 10
1703354	87	1-B 11
1703354	95	1-B 12
1703354	109	1-B 13
1703354	151	1-B 18
1703354	195	1-B 22
1703354	295	1-C 8
1703354	311	1-C 10
1703354	315	1-C 10
1703354	317	1-C 10
1703354	401	1-C 19
1703354	419	1-C 20
1703354	429	1-C 21
1703354	431	1-C 22
1703354	435	1-C 22
1703354	443	1-C 23
1703354	445	1-C 23
1703354	447	1-C 23
1703354	449	1-C 23
1705938	55	1-B 8
1706380W1	251	1-C 4
1706380W1	253	1-C 4
1706393W91	253	1-C 4
1712530W1	385	1-C 17
1714400W1	385	1-C 17
1714410W1	385	1-C 17
1714430W1	385	1-C 17
1716190W1	387	1-C 17
1717640W1	203	1-B 23
1717640W1	205	1-B 23
1717650W1	203	1-B 23
1717650W1	205	1-B 23
1720176	349	1-C 13
1721491W2C	385	1-C 17
1736510W1	387	1-C 17
1736870W1	385	1-C 17
1737620W1	385	1-C 17
1737660W1	387	1-C 17
1742670W1	289	1-C 7
1742670W1	343	1-C 13
1742670W1	345	1-C 13
1742670W1	579	1-D 12
1774490W91	117	1-B 14
1777403W91	203	1-B 23
1777403W91	205	1-B 23
17789	303	1-C 9
17789	325	1-C 11
17789	327	1-C 11
17789	349	1-C 13
1786320W1	377	1-C 16
1787520W1	295	1-C 8
1787520W1	309	1-C 9
1787520W1	445	1-C 23
1787520W1	449	1-C 23
1791851W91	117	1-B 14
1797450W1	389	1-C 17
1799410W1	69	1-B 9
1799410W1	347	1-C 13
1799410W1	359	1-C 14
1799410W1	361	1-C 15
1799410W1	373	1-C 16
1817730W1	333	1-C 12
1817801W91	333	1-C 12
1831580W1	315	1-C 10
191-4457	37	1-B 6
195160M1	551	1-D 10
195160M1	553	1-D 10
195412M1	331	1-C 12
201-9915	155	1-B 18
201-9915	159	1-B 18
202-8687	37	1-B 6
212-9580	79	1-B 10
22289X	333	1-C 12
22602X	283	1-C 7
22602X	337	1-C 12
22602X	577	1-D 12
227-1364	37	1-B 6
227-1364	41	1-B 7
227-1364	571	1-D 12
227-1364	577	1-D 12
227455M1	289	1-C 7
227455M1	343	1-C 13
227455M1	569	1-D 11
227455M1	571	1-D 12
227455M1	577	1-D 12
2400540W1	337	1-C 12
2403570W1	337	1-C 12
2403610W1	203	1-B 23
2403610W1	205	1-B 23
2407570W1	341	1-C 13
2407570W1	383	1-C 17
2412670W1	347	1-C 13
2412670W1	361	1-C 15
2412960W1	355	1-C 14
2414623W1	385	1-C 17
2414630W2	385	1-C 17
2414640W1	385	1-C 17
2438160W1	377	1-C 16
2440720W1	327	1-C 11
2440720W1	583	1-D 13
2441250W1	549	1-D 9
2441250W1	553	1-D 10
2441250W1	557	1-D 10
2441340W1	551	1-D 10
2441340W1	553	1-D 10
2441340W1	561	1-D 11
2441490W1	289	1-C 7
2441490W1	293	1-C 8
2441490W1	309	1-C 9
2441490W1	343	1-C 13
2441490W1	345	1-C 13
2441970W1	365	1-C 15
2442480W2	327	1-C 11
2442960W1	263	1-C 5
2442970W1	263	1-C 5
2443410W1	333	1-C 12
2443420W1	333	1-C 12
2445360W1	251	1-C 4
2446310W1	331	1-C 12
2446400W1	337	1-C 12
2446893W91	325	1-C 11
2446903W91	325	1-C 11
2446920W1	325	1-C 11
2446930W1	325	1-C 11
2447080W1	371	1-C 16
2449760W1	341	1-C 13
2450441W4	385	1-C 17
2450500W1	385	1-C 17
2451440W1	295	1-C 8
2451440W1	343	1-C 13
2451440W1	345	1-C 13
2452270W1	379	1-C 16

INDEX

Part No.	Page	Grid
2452270W1	383	1-C 17
2460840W2	379	1-C 16
2460840W2	383	1-C 17
2464250W1	331	1-C 12
2466861W91	265	1-C 5
2466960W2	265	1-C 5
2467220W1	263	1-C 5
2467220W1	275	1-C 6
2467220W1	583	1-D 13
2467230W1	263	1-C 5
2467230W1	275	1-C 6
2467230W1	583	1-D 13
2469711W91	281	1-C 7
2469760W1	281	1-C 7
2472260W1	341	1-C 13
2472450W1	265	1-C 5
2474120W1	337	1-C 12
2474130W1	337	1-C 12
2474140W1	325	1-C 11
2474140W1	327	1-C 11
2474140W1	335	1-C 12
2474410W1	325	1-C 11
2474660W1	333	1-C 12
2476070W1	341	1-C 13
2476203W1C	373	1-C 16
2476230W1	373	1-C 16
2476240W1	347	1-C 13
2476240W1	361	1-C 15
2476240W1	373	1-C 16
2479620W1	261	1-C 5
2479640W1	261	1-C 5
2485470W1	289	1-C 7
2485470W1	377	1-C 16
2486140W1	377	1-C 16
2486150W1	377	1-C 16
2486150W1	381	1-C 17
2486160W1	377	1-C 16
2486160W1	381	1-C 17
2486170W2	377	1-C 16
2486170W2	381	1-C 17
2488980W1	259	1-C 4
2489330W1	283	1-C 7
2489920W1	283	1-C 7
2489940W1	283	1-C 7
2492063W91	337	1-C 12
2493000W1	377	1-C 16
2493870W1	379	1-C 16
2493870W1	383	1-C 17
2495780W1	177	1-B 20
2497273W91	281	1-C 7
2497273W91	579	1-D 12
2498390W1	275	1-C 6
2498390W1	583	1-D 13
2502830W1	261	1-C 5
2502850W1	259	1-C 4
2502891W91	261	1-C 5
2503350W1	291	1-C 8
2506040W1	189	1-B 21
2506040W1	193	1-B 22
2506050W1	189	1-B 21
2506050W1	193	1-B 22
2513840W1	547	1-D 9
2517880W1	261	1-C 5
2517890W1	261	1-C 5
2522600W1	259	1-C 4
252502M1	267	1-C 5
2526120W1	377	1-C 16
2526120W1	381	1-C 17
2530670W1	267	1-C 5
2530670W1	277	1-C 6
2531340W1	267	1-C 5
2531671W91	259	1-C 4
2531681W91	259	1-C 4
2537720W1	331	1-C 12
2538810W1	277	1-C 6
2544120W1	265	1-C 5
2545270W1	257	1-C 4
2545270W1	331	1-C 12
2545270W1	389	1-C 17
2545270W1	391	1-C 18
2545270W1	581	1-D 13
2545471W91	265	1-C 5
2545511W91	265	1-C 5
2547531W91	267	1-C 5
2547540W1	267	1-C 5
254763M1	267	1-C 5
2551250W1	333	1-C 12
2551250W1	339	1-C 12
255301M2	51	1-B 8
2553251W91	365	1-C 15
2553271W92	367	1-C 15
2553290W1	367	1-C 15
2553300W1	367	1-C 15
2553320W1	365	1-C 15
2553560W1	289	1-C 7
2553560W1	343	1-C 13
2553560W1	345	1-C 13
2553560W1	581	1-D 13
2554680W1	347	1-C 13
2554761W91	281	1-C 7
2554761W91	581	1-D 13
2555130W1	357	1-C 14
2555170W1	357	1-C 14
2555180W1	357	1-C 14
2555190W1	357	1-C 14
2555190W1	443	1-C 23
2555190W1	447	1-C 23
2555200W1	357	1-C 14
2555211W91	357	1-C 14
2555231W91	357	1-C 14
2555310W1	333	1-C 12
2555401W91	347	1-C 13
2556880W1	507	1-D 5
2556880W1	545	1-D 9
2559763W91	335	1-C 12
2559900W1	335	1-C 12
2563800W1	203	1-B 23
2563800W1	205	1-B 23
2571510W1	349	1-C 13
2571520W1	349	1-C 13
2573180W1	203	1-B 23
2573370W1	311	1-C 10
2573610W1	311	1-C 10
2577893W91	45	1-B 7
2580580W1	547	1-D 9
2580593W91	547	1-D 9
2581690W1	325	1-C 11
2588071W92	331	1-C 12
2588510W1	251	1-C 4
2590650W1	341	1-C 13
2591531W91	359	1-C 14
2601260W1	377	1-C 16
2601260W1	397	1-C 18
2605880W91	573	1-D 12
2608280W1	339	1-C 12
2608290W1	339	1-C 12
2609080W1	33	1-B 6
2612870W1	259	1-C 4
2612880W1	259	1-C 4
2612910W1	259	1-C 4
2612961W91	259	1-C 4
2613771W91	341	1-C 13
2614090W1	341	1-C 13
2614090W1	345	1-C 13
2615101W92	333	1-C 12
2615120W1	333	1-C 12
2615130W1	333	1-C 12
2615140W2	333	1-C 12
2615160W1	337	1-C 12
2615181W91	337	1-C 12
2615233W92	359	1-C 14
2615233W92	573	1-D 12
2615233W92	579	1-D 12
2616131W91	547	1-D 9
2616141W91	547	1-D 9
2618650W2	333	1-C 12
2618670W1	277	1-C 6
2618680W1	277	1-C 6
2619180W1	289	1-C 7
2619180W1	297	1-C 8
2619220W1	261	1-C 5
2619230W1	259	1-C 4
2619240W1	259	1-C 4
2619251W91	259	1-C 4
2619280W1	259	1-C 4
2619380W1	291	1-C 8
2619560W1	253	1-C 4
2619570W1	341	1-C 13
2620021W91	357	1-C 14
2620021W91	363	1-C 15
2620130W1	251	1-C 4
2620180W1	251	1-C 4
2620180W1	253	1-C 4
2620190W1	303	1-C 9
2620853W91	343	1-C 13
2620853W91	345	1-C 13
2620871W91	343	1-C 13
2620920W1	343	1-C 13
2624230W1	389	1-C 17
2625050W1	549	1-D 9
2625050W1	553	1-D 10
2625050W1	561	1-D 11
2625940W1	43	1-B 7
2625940W1	47	1-B 7
2626120W1	257	1-C 4
2627000W1	257	1-C 4
2627000W1	583	1-D 13
2628221W91	289	1-C 7
2628310W1	289	1-C 7
2628321W92	309	1-C 9
2628340W1	293	1-C 8
2629073W91	499	1-D 4
2629080W1	501	1-D 5
2629511W93	389	1-C 17
2629570W1	339	1-C 12
2629720W1	489	1-D 3
2630100W2	291	1-C 8
2630100W2	293	1-C 8
2630210W2	501	1-D 5
2630960W1	503	1-D 5
2631400W1	311	1-C 10
2631433W91	547	1-D 9
2631690W1	317	1-C 10
2631700W1	317	1-C 10
2632680W1	47	1-B 7
2632690W1	417	1-C 20
2633681W2	401	1-C 19
2634840W1	371	1-C 16
2635230W1	391	1-C 18
2635250W1C	415	1-C 20
2635460W1	391	1-C 18
2635690W1	573	1-D 12
2636000W1	325	1-C 11
2636010W1	325	1-C 11
2636010W1	359	1-C 14
2636170W1	257	1-C 4
2636210W1	257	1-C 4
2636631W91	371	1-C 16
2636870W2	263	1-C 5
2636890W1	315	1-C 10
2637890W1	291	1-C 8
26674	549	1-D 9
26674	553	1-D 10
27342	59	1-B 8
27342	65	1-B 9
2813878M1	129	1-B 15
28280440	197	1-B 22
286501M1	487	1-D 3
286501M1	579	1-D 12
293766M1	153	1-B 18
293766M1	177	1-B 20
293817M91	331	1-C 12
293888M1	503	1-D 5
293888M1	505	1-D 5
294148M91	387	1-C 17
29780X	355	1-C 14
29780X	365	1-C 15
29780X	581	1-D 13
3L-9656	43	1-B 7
3L-9656	47	1-B 7
30-3076830	149	1-B 17
30-3076830	583	1-D 13
30-3076830	583	1-D 13
3001429X1	297	1-C 8
3001429X1	305	1-C 9
3008469	531	1-D 8
3009340X1	303	1-C 9
3009495X1	289	1-C 7
3009495X1	293	1-C 8
3009495X1	297	1-C 8
3009627X1	297	1-C 8
3009627X1	305	1-C 9
3009695X1	301	1-C 9
3009695X1	303	1-C 9
3009695X1	321	1-C 11
3009920X1	321	1-C 11
3010442X1	303	1-C 9
3010636X1	39	1-B 6
3010842X1	303	1-C 9
3019124X1	301	1-C 9
3019124X1	321	1-C 11
3019125X1	301	1-C 9
31-1588410	341	1-C 13
31-1588410	577	1-D 12
31-2446490	343	1-C 13
31-2446490	581	1-D 13
31-2455700	293	1-C 8
31-2455700	309	1-C 9
31-2455700	581	1-D 13
31-2530050	45	1-B 7
31-2530050	49	1-B 7
31-2530050	179	1-B 20
31752	535	1-D 8
329951M91	573	1-D 12
3304008M1	505	1-D 5
339025X1	321	1-C 11
339375X1	321	1-C 11
339376X1	289	1-C 7
339376X1	293	1-C 8
339376X1	297	1-C 8
339376X1	305	1-C 9
339456X1	321	1-C 11
339666X1	87	1-B 11
339768X1	305	1-C 9
350392X1	253	1-C 4
352976X1	377	1-C 16
352976X1	381	1-C 17
353062X1	213	1-B 24
353426X1	113	1-B 14
353436X1	71	1-B 10
353436X1	243	1-C 3
353438X1	475	1-D 2
353438X1	481	1-D 3
353446X1	321	1-C 11
353505X1	53	1-B 8
353509X1	139	1-B 16
353538X1	473	1-D 2
353609X1	229	1-C 1
353609X1	231	1-C 2
353613X1	555	1-D 10

Part No.	Page	Grid	Part No.	Page	Grid	Part No.	Page	Grid	Part No.	Page	Grid
353724X1	233	1-C 2	3715144M92	575	1-D 12	60049M1	333	1-C 12	700701772	165	1-B 19
353769X1	63	1-B 9	372536X1	87	1-B 11	61002	71	1-B 10	700701772	173	1-B 20
353769X1	69	1-B 9	3725830M1	293	1-C 8	61085	367	1-C 15	700701814	489	1-D 3
353769X1	95	1-B 12	3725830M1	311	1-C 10	61101	349	1-C 13	700701834	491	1-D 4
353769X1	175	1-B 20	3725885M1	431	1-C 22	61234	305	1-C 9	700702141	263	1-C 5
353769X1	347	1-C 13	3725885M1	435	1-C 22	6131916	83	1-B 11	700702206	113	1-B 14
353769X1	361	1-C 15	3725988M1	409	1-C 19	6136964	371	1-C 16	700702358	65	1-B 9
353769X1	367	1-C 15	372728X1	91	1-B 12	61523	341	1-C 13	700702916	113	1-B 14
353769X1	489	1-D 3	372729X1	97	1-B 12	61770	203	1-B 23	700702916	433	1-C 22
353771X1	261	1-C 5	372729X1	151	1-B 18	61770	205	1-B 23	700702979	123	1-B 15
353771X1	263	1-C 5	372729X1	239	1-C 2	62026	419	1-C 20	700703267	431	1-C 22
353771X1	275	1-C 6	372729X1	373	1-C 16	62026	429	1-C 21	700703267	435	1-C 22
353771X1	281	1-C 7	372729X1	453	1-C 24	62075	69	1-B 9	700703830	173	1-B 20
353771X1	283	1-C 7	3728019M1	71	1-B 10	62075	433	1-C 22	700703922	97	1-B 12
353771X1	293	1-C 8	3729528M1	177	1-B 20	62075	435	1-C 22	700703922	203	1-B 23
353771X1	309	1-C 9	3729545M1	179	1-B 20	62190	267	1-C 5	700703922	229	1-C 1
353771X1	335	1-C 12	373136X1	415	1-C 20	62232	123	1-B 15	700703922	253	1-C 4
353773X1	53	1-B 8	373159X1	359	1-C 14	63834	327	1-C 11	700703922	257	1-C 4
353773X1	251	1-C 4	373293X1	281	1-C 7	6389795	37	1-B 6	700703922	261	1-C 5
353773X1	281	1-C 7	373839X1	93	1-B 12	64642	339	1-C 12	700703922	271	1-C 6
353773X1	385	1-C 17	373839X1	99	1-B 12	6514772	95	1-B 12	700703922	277	1-C 6
353919X1	481	1-D 3	375028X1	193	1-B 22	6522940	355	1-C 14	700703922	283	1-C 7
353924X1	67	1-B 9	375028X1	223	1-C 1	6529705	53	1-B 8	700703922	289	1-C 7
354068X1	417	1-C 20	375028X1	239	1-C 2	6555346	327	1-C 11	700703922	293	1-C 8
354273X1	351	1-C 14	375028X1	339	1-C 12	6586259	157	1-B 18	700703922	309	1-C 9
354920X1	289	1-C 7	375028X1	579	1-D 12	6586259	161	1-B 19	700703922	331	1-C 12
354920X1	297	1-C 8	375112X1	53	1-B 8	6661624	549	1-D 9	700703922	341	1-C 13
354920X1	379	1-C 16	375112X1	267	1-C 5	6661624	555	1-D 10	700703922	343	1-C 13
354920X1	383	1-C 17	375113X1	51	1-B 8	68619	83	1-B 11	700703922	345	1-C 13
354920X1	385	1-C 17	375114X1	333	1-C 12	68619	219	1-B 24	700703922	373	1-C 16
354920X1	577	1-D 12	375114X1	337	1-C 12	68619	221	1-C 1	700703922	389	1-C 17
355485X1	377	1-C 16	377690X1	379	1-C 16	68619	231	1-C 2	700703922	403	1-C 19
355485X1	383	1-C 17	377690X1	381	1-C 17	68619	251	1-C 4	700703922	547	1-D 9
355547X1	233	1-C 2	377690X1	389	1-C 17	68619	301	1-C 9	700703923	403	1-C 19
355602X1	493	1-D 4	3778093M91	181	1-B 21	68619	325	1-C 11	700703923	547	1-D 9
355736X1	189	1-B 21	3778093M91	575	1-D 12	68619	327	1-C 11	700704010	57	1-B 8
355997X1	203	1-B 23	385391X1	301	1-C 9	68619	345	1-C 13	700704010	63	1-B 9
355997X1	205	1-B 23	385391X1	303	1-C 9	6875314	337	1-C 12	700704010	83	1-B 11
356044X1	385	1-C 17	3903044M1	127	1-B 15	68759	313	1-C 10	700704010	261	1-C 5
356612X1	507	1-D 5	390809X1	301	1-C 9	68759	325	1-C 11	700704010	281	1-C 7
357194X1	79	1-B 10	390912X1	261	1-C 5	68759	327	1-C 11	700704010	349	1-C 13
357194X1	451	1-C 24	390972X1	127	1-B 15	68759	373	1-C 16	700704010	363	1-C 15
360202X91	71	1-B 10	390972X1	131	1-B 16	68759	375	1-C 16	700704010	409	1-C 19
360202X91	453	1-C 24	391038X1	321	1-C 11	68759	411	1-C 20	700704854	331	1-C 12
360202X91	559	1-D 10	391039X1	131	1-B 16	68759	413	1-C 20	700704856	331	1-C 12
360202X91	579	1-D 12	391148X1	133	1-B 16	68759	427	1-C 21	700704927	331	1-C 12
360503X1	373	1-C 16	391212X1	301	1-C 9	69476	37	1-B 6	700705088	293	1-C 8
360503X1	439	1-C 22	391290X1	321	1-C 11	69476	41	1-B 7	700705088	311	1-C 10
360555X1	343	1-C 13	393761X1	487	1-D 3	7C-1289	487	1-D 3	700705088	419	1-C 20
3617859M1	181	1-B 21	4W-4794	37	1-B 6	7E-6293	35	1-B 6	700705088	429	1-C 21
3617859M1	575	1-D 12	4W-9160	43	1-B 7	7E-8630	43	1-B 7	700705119	451	1-C 24
3617860M1	181	1-B 21	4W-9160	47	1-B 7	700129058	401	1-C 19	700705135	111	1-B 14
3617860M1	575	1-D 12	4272612M92	131	1-B 16	700129071	407	1-C 19	700705185	107	1-B 13
363282X1	229	1-C 1	487777	65	1-B 9	700134393	407	1-C 19	700705185	165	1-B 19
363282X1	231	1-C 2	49920X	303	1-C 9	700149006	209	1-B 23	700705614	347	1-C 13
364076X1	479	1-D 2	5000017X1	531	1-D 8	700159550	435	1-C 22	700705676	99	1-B 12
364125X1	37	1-B 6	50021	341	1-C 13	700525382	273	1-C 6	700706151	249	1-C 3
364125X1	41	1-B 7	50021	375	1-C 16	700700057	99	1-B 12	700706356	113	1-B 14
364377X1	557	1-D 10	50021	577	1-D 12	700701160	175	1-B 20	700706419	547	1-D 9
364578X1	337	1-C 12	50468	325	1-C 11	700701265	107	1-B 13	700706463	281	1-C 7
364988X1	345	1-C 13	50468	349	1-C 13	700701287	121	1-B 15	700706490	493	1-D 4
365098X1	331	1-C 12	50468	577	1-D 12	700701331	73	1-B 10	700707139	219	1-B 24
365775X1	113	1-B 14	510060W1	373	1-C 16	700701331	75	1-B 10	700707139	221	1-C 1
365775X1	189	1-B 21	51871M1	285	1-C 7	700701331	79	1-B 10	700707203	93	1-B 12
365775X1	193	1-B 22	52167	95	1-B 12	700701350	489	1-D 3	700707203	99	1-B 12
367451X1	203	1-B 23	52175	119	1-B 14	700701354	503	1-D 5	700707619	91	1-B 12
367451X1	205	1-B 23	52175	579	1-D 12	700701354	505	1-D 5	700707823	141	1-B 17
368384X1	337	1-C 12	52233	337	1-C 12	700701355	247	1-C 3	700707823	387	1-C 17
368615X1	193	1-B 22	530132M1	155	1-B 18	700701355	319	1-C 10	700708270	337	1-C 12
368615X1	251	1-C 4	530132M1	159	1-B 18	700701355	485	1-D 3	700708340	177	1-B 20
368615X1	257	1-C 4	539651M1	551	1-D 10	700701355	487	1-D 3	700708343	283	1-C 7
368615X1	389	1-C 17	539651M1	555	1-D 10	700701356	485	1-D 3	700708343	535	1-D 8
368933X1	203	1-B 23	539651M1	561	1-D 11	700701356	487	1-D 3	700708349	113	1-B 14
3714264M1	171	1-B 20	539651M1	567	1-D 11	700701744	487	1-D 3	700708349	285	1-C 7
3715144M92	181	1-B 21	590769M1	31	1-B 6	700701753	489	1-D 3	700708349	305	1-C 9

INDEX

Part No.	Page	Grid
700708349	321	1-C 11
700708349	537	1-D 8
700708349	539	1-D 8
700708353	285	1-C 7
700708355	35	1-B 6
700708355	39	1-B 6
700708359	287	1-C 7
700708367	155	1-B 18
700708367	159	1-B 18
700708648	93	1-B 12
700708648	99	1-B 12
700708648	579	1-D 12
700709503	233	1-C 2
700709503	237	1-C 2
700709601	55	1-B 8
700709601	59	1-B 8
700709601	89	1-B 11
700709601	107	1-B 13
700709601	175	1-B 20
700709601	299	1-C 8
700709601	301	1-C 9
700709601	351	1-C 14
700709601	421	1-C 21
700709601	455	1-C 24
700709601	489	1-D 3
700709601	545	1-D 9
700709601	573	1-D 12
700709602	43	1-B 7
700709602	47	1-B 7
700709602	55	1-B 8
700709602	107	1-B 13
700709602	135	1-B 16
700709602	153	1-B 18
700709602	265	1-C 5
700709602	299	1-C 8
700709602	337	1-C 12
700709602	371	1-C 16
700709602	379	1-C 16
700709602	383	1-C 17
700709602	419	1-C 20
700709602	423	1-C 21
700709602	425	1-C 21
700709602	427	1-C 21
700709602	451	1-C 24
700709602	499	1-D 4
700709607	263	1-C 5
700709608	345	1-C 13
700709866	65	1-B 9
700709919	187	1-B 21
700710188	91	1-B 12
700710188	167	1-B 19
700710788	119	1-B 14
700710957	463	1-D 1
700710959	463	1-D 1
700710960	463	1-D 1
700710961	463	1-D 1
700710984	101	1-B 13
700711132	37	1-B 6
700711132	41	1-B 7
700711132	67	1-B 9
700711134	37	1-B 6
700711134	41	1-B 7
700711134	67	1-B 9
700711230	431	1-C 22
700711230	435	1-C 22
700711238	427	1-C 21
700711262	97	1-B 12
700711357	331	1-C 12
700711557	433	1-C 22
700711557	435	1-C 22
700711659	151	1-B 18
700711659	167	1-B 19
700712632	451	1-C 24
700712632	463	1-D 1
700712651	463	1-D 1
700712652	463	1-D 1
700712973	37	1-B 6
700712973	41	1-B 7
700712973	499	1-D 4
700713516	249	1-C 3
700714064	71	1-B 10
700714189	249	1-C 3
700714528	83	1-B 11
700714529	83	1-B 11
700714529	413	1-C 20
700714706	413	1-C 20
700714706	581	1-D 13
700715255	107	1-B 13
700715255	183	1-B 21
700715277	85	1-B 11
700715278	85	1-B 11
700715285	85	1-B 11
700715393	249	1-C 3
700715662	249	1-C 3
700715848	487	1-D 3
700715848	501	1-D 5
700716462	247	1-C 3
700717212	355	1-C 14
700717212	365	1-C 15
700717212	579	1-D 12
700717365	531	1-D 8
700717402	31	1-B 6
700717402	33	1-B 6
700717403	31	1-B 6
700717404	31	1-B 6
700717404	33	1-B 6
700717509	375	1-C 16
700717509	387	1-C 17
700717539	71	1-B 10
700717621	107	1-B 13
700717627	117	1-B 14
700717627	119	1-B 14
700717627	319	1-C 10
700717635	189	1-B 21
700717635	193	1-B 22
700717635	351	1-C 14
700717635	353	1-C 14
700717635	367	1-C 15
700717635	393	1-C 18
700717635	395	1-C 18
700717635	397	1-C 18
700717635	399	1-C 18
700717635	401	1-C 19
700717635	407	1-C 19
700717635	413	1-C 20
700717635	419	1-C 20
700717635	421	1-C 21
700717635	427	1-C 21
700717635	429	1-C 21
700717635	431	1-C 22
700717635	435	1-C 22
700717644	117	1-B 14
700717644	119	1-B 14
700717644	135	1-B 16
700717761	43	1-B 7
700717761	47	1-B 7
700718010	121	1-B 15
700718444	37	1-B 6
700718444	41	1-B 7
700718515	83	1-B 11
700718599	179	1-B 20
700718792	187	1-B 21
700718807	95	1-B 12
700719105	485	1-D 3
700719780	493	1-D 4
700719782	493	1-D 4
700719783	493	1-D 4
700719784	493	1-D 4
700719785	493	1-D 4
700719940	183	1-B 21
700720004	51	1-B 8
700720605	33	1-B 6
700720621	497	1-D 4
700720676	429	1-C 21
700720676	431	1-C 22
700720676	435	1-C 22
700720727	33	1-B 6
700720863	165	1-B 19
700720909	121	1-B 15
700720917	497	1-D 4
700720958	259	1-C 4
700720958	263	1-C 5
700720958	275	1-C 6
700721123	121	1-B 15
700721124	31	1-B 6
700721139	31	1-B 6
700721197	411	1-C 20
700721197	413	1-C 20
700721197	419	1-C 20
700721197	423	1-C 21
700721197	425	1-C 21
700721197	429	1-C 21
700721198	419	1-C 20
700721198	425	1-C 21
700721198	427	1-C 21
700721204	433	1-C 22
700721309	149	1-B 17
700721382	493	1-D 4
700721383	493	1-D 4
700721405	121	1-B 15
700721405	581	1-D 13
700721586	151	1-B 18
700721620	169	1-B 19
700721620	581	1-D 13
700721684	535	1-D 8
700721776	187	1-B 21
700721781	31	1-B 6
700721854	419	1-C 20
700721854	425	1-C 21
700721854	429	1-C 21
700721873	33	1-B 6
700721874	33	1-B 6
700721875	33	1-B 6
700721876	33	1-B 6
700721877	31	1-B 6
700721879	31	1-B 6
700721880	31	1-B 6
700721915	407	1-C 19
700721916	407	1-C 19
700721916	425	1-C 21
700721965	31	1-B 6
700721966	31	1-B 6
700721966	33	1-B 6
700721986	31	1-B 6
700721986	33	1-B 6
700722351	179	1-B 20
700722351	579	1-D 12
700722408	73	1-B 10
700722408	75	1-B 10
700722408	79	1-B 10
700722432	33	1-B 6
700722435	33	1-B 6
700723358	425	1-C 21
700723358	433	1-C 22
700723598	91	1-B 12
700724394	567	1-D 11
700724395	567	1-D 11
700724622	127	1-B 15
700724623	129	1-B 15
700724693	319	1-C 10
700724693	483	1-D 3
700725576	107	1-B 13
700725576	579	1-D 12
700725632	83	1-B 11
700725632	117	1-B 14
700725633	83	1-B 11
700725634	83	1-B 11
700725634	93	1-B 12
700725634	99	1-B 12
700725670	33	1-B 6
700725810	131	1-B 16
700725833	133	1-B 16
700725836	129	1-B 15
700725837	129	1-B 15
700725840	127	1-B 15
700725843	127	1-B 15
700725844	127	1-B 15
700725845	127	1-B 15
700725864	527	1-D 7
700725871	133	1-B 16
700725918	175	1-B 20
700725918	297	1-C 8
700725918	305	1-C 9
700725958	93	1-B 12
700725958	103	1-B 13
700725958	107	1-B 13
700726168	179	1-B 20
700726172	179	1-B 20
700726696	165	1-B 19
700726978	319	1-C 10
700726979	319	1-C 10
700726979	483	1-D 3
700727621	489	1-D 3
700727622	489	1-D 3
700727993	31	1-B 6
700728301	129	1-B 15
700953657	297	1-C 8
701235	51	1-B 8
701235	213	1-B 24
701235	217	1-B 24
701235	229	1-C 1
701235	231	1-C 2
701235	255	1-C 4
701235	261	1-C 5
701235	279	1-C 6
701235	283	1-C 7
701235	325	1-C 11
701235	349	1-C 13
701235	373	1-C 16
701235	379	1-C 16
701235	397	1-C 18
701235	415	1-C 20
701235	437	1-C 22
701235	535	1-D 8
701565	61	1-B 9
701565	63	1-B 9
701953	73	1-B 10
701953	75	1-B 10
701953	113	1-B 14
701953	171	1-B 20
7020027	409	1-C 19
70210011	531	1-D 8
70210012	531	1-D 8
70225441	535	1-D 8
70226012	535	1-D 8
70226012	581	1-D 13
70228509	539	1-D 8
70228509	579	1-D 12
70232758	155	1-B 18
70232758	157	1-B 18
70232758	159	1-B 18
70232758	161	1-B 19
7025075	445	1-C 23
7025075	449	1-C 23
702514	335	1-C 12
70257297	45	1-B 7
70257297	49	1-B 7
70261383	493	1-D 4
70263605	127	1-B 15
702670	311	1-C 10

Part No.	Page	Grid	Part No.	Page	Grid	Part No.	Page	Grid	Part No.	Page	Grid
70267132	493	1-D 4	704031	279	1-C 6	705012	175	1-B 20	705038	543	1-D 9
70267148	493	1-D 4	704031	301	1-C 9	705012	177	1-B 20	705038	545	1-D 9
70267150	493	1-D 4	704031	303	1-C 9	705012	179	1-B 20	705038	547	1-D 9
70267155	493	1-D 4	704031	325	1-C 11	705012	193	1-B 22	705038	557	1-D 10
70267167	493	1-D 4	704031	327	1-C 11	705012	215	1-B 24	705038	559	1-D 10
70269246	45	1-B 7	704031	341	1-C 13	705012	241	1-C 3	705038	561	1-D 11
70269246	49	1-B 7	704031	349	1-C 13	705012	261	1-C 5	705129	91	1-B 12
70269408	47	1-B 7	704031	353	1-C 14	705012	269	1-C 5	705129	165	1-B 19
70269722	493	1-D 4	704031	387	1-C 17	705012	297	1-C 8	705129	169	1-B 19
70269723	493	1-D 4	704031	411	1-C 20	705012	299	1-C 8	705129	173	1-B 20
70270210	493	1-D 4	704031	415	1-C 20	705012	301	1-C 9	705160	151	1-B 18
70272355	493	1-D 4	704031	437	1-C 22	705012	303	1-C 9	705160	153	1-B 18
70272357	493	1-D 4	704031	441	1-C 23	705012	305	1-C 9	70522328	333	1-C 12
70272358	493	1-D 4	704031	489	1-D 3	705012	327	1-C 11	70527219	375	1-C 16
70272360	493	1-D 4	704031	547	1-D 9	705012	347	1-C 13	70529432	71	1-B 10
70272361	493	1-D 4	704031	561	1-D 11	705012	349	1-C 13	70533638	333	1-C 12
70272365	493	1-D 4	704056	53	1-B 8	705012	351	1-C 14	70533638	579	1-D 12
7027469	551	1-D 10	704056	209	1-B 23	705012	355	1-C 14	70534931	219	1-B 24
7027469	555	1-D 10	704056	257	1-C 4	705012	365	1-C 15	70534931	221	1-C 1
7027469	561	1-D 11	704056	327	1-C 11	705012	397	1-C 18	70537291	65	1-B 9
7027469	567	1-D 11	70409	261	1-C 5	705012	401	1-C 19	70537291	367	1-C 15
702928	203	1-B 23	7041015	231	1-C 2	705012	407	1-C 19	70537291	547	1-D 9
70301781	209	1-B 23	7041015	453	1-C 24	705012	409	1-C 19	70547934	395	1-C 18
70301781	211	1-B 24	7041015	455	1-C 24	705012	413	1-C 20	705541	71	1-B 10
70301781	217	1-B 24	704247	37	1-B 6	705012	421	1-C 21	705541	99	1-B 12
70301781	255	1-C 4	704247	41	1-B 7	705012	443	1-C 23	705541	195	1-B 22
70301781	257	1-C 4	704247	99	1-B 12	705012	451	1-C 24	705541	293	1-C 8
703082	251	1-C 4	704247	113	1-B 14	705012	453	1-C 24	705541	309	1-C 9
703249	47	1-B 7	704247	155	1-B 18	705012	455	1-C 24	705541	327	1-C 11
70327382	235	1-C 2	704247	157	1-B 18	705012	489	1-D 3	705541	349	1-C 13
70327997	235	1-C 2	704247	159	1-B 18	705012	491	1-D 4	705541	363	1-C 15
7035983	493	1-D 4	704247	161	1-B 19	705012	495	1-D 4	705632	35	1-B 6
703603	51	1-B 8	704247	299	1-C 8	705012	503	1-D 5	705632	39	1-B 6
703603	119	1-B 14	704247	301	1-C 9	705012	507	1-D 5	705632	83	1-B 11
703603	121	1-B 15	704247	403	1-C 19	705012	545	1-D 9	705632	407	1-C 19
703603	395	1-C 18	704254	99	1-B 12	705038	37	1-B 6	705665	529	1-D 7
703603	423	1-C 21	704254	103	1-B 13	705038	41	1-B 7	705665	567	1-D 11
703983	51	1-B 8	704262	265	1-C 5	705038	51	1-B 8	705681	239	1-C 2
703983	53	1-B 8	704494	151	1-B 18	705038	83	1-B 11	705681	285	1-C 7
703983	263	1-C 5	704494	167	1-B 19	705038	119	1-B 14	70569880	171	1-B 20
703983	279	1-C 6	704551	91	1-B 12	705038	121	1-B 15	705707	55	1-B 8
704007	55	1-B 8	704551	165	1-B 19	705038	145	1-B 17	705707	83	1-B 11
704007	179	1-B 20	704551	167	1-B 19	705038	153	1-B 18	705707	87	1-B 11
704007	241	1-C 3	704551	173	1-B 20	705038	177	1-B 20	705707	269	1-C 5
704007	265	1-C 5	704551	191	1-B 22	705038	179	1-B 20	705707	401	1-C 19
704007	269	1-C 5	704551	195	1-B 22	705038	189	1-B 21	705723	37	1-B 6
704007	351	1-C 14	704692	549	1-D 9	705038	207	1-B 23	70590704	325	1-C 11
704007	407	1-C 19	704692	553	1-D 10	705038	225	1-C 1	70590704	357	1-C 14
704007	409	1-C 19	704858	549	1-D 9	705038	227	1-C 1	70590704	361	1-C 15
704007	421	1-C 21	704858	553	1-D 10	705038	247	1-C 3	70590704	365	1-C 15
704007	451	1-C 24	704858	561	1-D 11	705038	251	1-C 4	70590704	577	1-D 12
704007	453	1-C 24	705004	65	1-B 9	705038	259	1-C 4	70590709	333	1-C 12
704007	455	1-C 24	705004	83	1-B 11	705038	299	1-C 8	70590709	577	1-D 12
704007	489	1-D 3	705004	111	1-B 14	705038	383	1-C 17	706176	399	1-C 18
704007	491	1-D 4	705004	117	1-B 14	705038	391	1-C 18	706432	83	1-B 11
704007	495	1-D 4	705004	121	1-B 15	705038	393	1-C 18	7087398	355	1-C 14
704007	503	1-D 5	705004	155	1-B 18	705038	395	1-C 18	7087398	583	1-D 13
704007	507	1-D 5	705004	159	1-B 18	705038	397	1-C 18	70901480	533	1-D 8
704007	545	1-D 9	705004	175	1-B 20	705038	399	1-C 18	70901651	235	1-C 2
704031	107	1-B 13	705004	177	1-B 20	705038	401	1-C 19	70901763	547	1-D 9
704031	203	1-B 23	705004	179	1-B 20	705038	403	1-C 19	70901828	409	1-C 19
704031	205	1-B 23	705004	269	1-C 5	705038	405	1-C 19	70901840	533	1-D 8
704031	207	1-B 23	705004	419	1-C 20	705038	407	1-C 19	70903082	377	1-C 16
704031	209	1-B 23	705004	429	1-C 21	705038	409	1-C 19	70903835	193	1-B 22
704031	211	1-B 24	705004	445	1-C 23	705038	423	1-C 21	70905126	193	1-B 22
704031	217	1-B 24	705004	449	1-C 23	705038	425	1-C 21	70905127	313	1-C 10
704031	219	1-B 24	705012	53	1-B 8	705038	427	1-C 21	70905128	333	1-C 12
704031	221	1-C 1	705012	55	1-B 8	705038	433	1-C 22	70905262	409	1-C 19
704031	231	1-C 2	705012	69	1-B 9	705038	447	1-C 23	70906852	303	1-C 9
704031	251	1-C 4	705012	87	1-B 11	705038	453	1-C 24	70910224	71	1-B 10
704031	255	1-C 4	705012	89	1-B 11	705038	455	1-C 24	70910815	465	1-D 1
704031	257	1-C 4	705012	95	1-B 12	705038	485	1-D 3	70911201	349	1-C 13
704031	261	1-C 5	705012	161	1-B 19	705038	495	1-D 4	70911255	203	1-B 23
704031	263	1-C 5	705012	165	1-B 19	705038	499	1-D 4	70912094	533	1-D 8
704031	265	1-C 5	705012	167	1-B 19	705038	507	1-D 5	70912278	335	1-C 12

INDEX

Part No.	Page	Grid	Part No.	Page	Grid	Part No.	Page	Grid	Part No.	Page	Grid
70912299	251	1-C 4	70919135	215	1-B 24	70921885	79	1-B 10	70923404	537	1-D 8
70913160	37	1-B 6	70919140	215	1-B 24	70921887	499	1-D 4	70923427	223	1-C 1
70913680	573	1-D 12	70919171	215	1-B 24	70921888	499	1-D 4	70923470	283	1-C 7
70913682	573	1-D 12	70919173	507	1-D 5	70921898	559	1-D 10	70923473	333	1-C 12
70913719	469	1-D 1	70919195	73	1-B 10	70921910	409	1-C 19	70923501	389	1-C 17
70913744	203	1-B 23	70919197	487	1-D 3	70921911	37	1-B 6	70923504	391	1-C 18
70914192	53	1-B 8	70919214	113	1-B 14	70921912	43	1-B 7	70923510	181	1-B 21
70914383	245	1-C 3	70919310	189	1-B 21	70921915	145	1-B 17	70923520	151	1-B 18
70914465	119	1-B 14	70919332	37	1-B 6	70921958	165	1-B 19	70923530	365	1-C 15
70914584	231	1-C 2	70919378	445	1-C 23	70921959	139	1-B 16	70923544	339	1-C 12
70914687	71	1-B 10	70919381	109	1-B 13	70921960	107	1-B 13	70923550	109	1-B 13
70914767	285	1-C 7	70919387	239	1-C 2	70921962	269	1-C 5	70923558	481	1-D 3
70915019	371	1-C 16	70919391	239	1-C 2	70921965	55	1-B 8	70923577	221	1-C 1
70915276	507	1-D 5	70919393	223	1-C 1	70921966	263	1-C 5	70923584	221	1-C 1
70915314	471	1-D 2	70919431	465	1-D 1	70921969	67	1-B 9	70923594	541	1-D 9
70915500	359	1-C 14	70919434	209	1-B 23	70921971	45	1-B 7	70923683	117	1-B 14
70915726	225	1-C 1	70919439	303	1-C 9	70921974	55	1-B 8	70923690	507	1-D 5
70915794	223	1-C 1	70919472	77	1-B 10	70921977	73	1-B 10	70923701	261	1-C 5
70915935	223	1-C 1	70919624	487	1-D 3	70921978	311	1-C 10	70923717	471	1-D 2
70915955	45	1-B 7	70920037	277	1-C 6	70922002	285	1-C 7	70923737	73	1-B 10
70915988	255	1-C 4	70920117	245	1-C 3	70922037	53	1-B 8	70923808	511	1-D 6
70916079	445	1-C 23	70920161	93	1-B 12	70922080	299	1-C 8	70923813	221	1-C 1
70916080	449	1-C 23	70920272	549	1-D 9	70922127	245	1-C 3	70923816	531	1-D 8
70916602	473	1-D 2	70920328	203	1-B 23	70922130	93	1-B 12	70923818	539	1-D 8
70916621	179	1-B 20	70920397	225	1-C 1	70922181	487	1-D 3	70923828	213	1-B 24
70916622	55	1-B 8	70920415	35	1-B 6	70922285	337	1-C 12	70923831	213	1-B 24
70916767	355	1-C 14	70920426	155	1-B 18	70922522	319	1-C 10	70923841	479	1-D 2
70916937	413	1-C 20	70920438	95	1-B 12	70922523	247	1-C 3	70923843	559	1-D 10
70916950	37	1-B 6	70920469	313	1-C 10	70922571	453	1-C 24	70923846	473	1-D 2
70916952	33	1-B 6	70920655	507	1-D 5	70922586	275	1-C 6	70923858	253	1-C 4
70916964	55	1-B 8	70920787	67	1-B 9	70922605	335	1-C 12	70923894	453	1-C 24
70916965	45	1-B 7	70920808	149	1-B 17	70922632	487	1-D 3	70923905	73	1-B 10
70917356	47	1-B 7	70920821	113	1-B 14	70922645	71	1-B 10	70923906	121	1-B 15
70917372	37	1-B 6	70920990	387	1-C 17	70922658	259	1-C 4	70923943	473	1-D 2
70917373	35	1-B 6	70921024	337	1-C 12	70922664	35	1-B 6	70923945	473	1-D 2
70917377	33	1-B 6	70921050	573	1-D 12	70922760	263	1-C 5	70924048	471	1-D 2
70917378	35	1-B 6	70921159	451	1-C 24	70922770	331	1-C 12	70924095	53	1-B 8
70917380	65	1-B 9	70921160	77	1-B 10	70922771	203	1-B 23	70924113	355	1-C 14
70917395	151	1-B 18	70921169	251	1-C 4	70922786	349	1-C 13	70924114	467	1-D 1
70917421	119	1-B 14	70921176	255	1-C 4	70922837	55	1-B 8	70924186	535	1-D 8
70917458	191	1-B 22	70921203	503	1-D 5	70922845	51	1-B 8	70924204	197	1-B 22
70917459	167	1-B 19	70921205	71	1-B 10	70922862	507	1-D 5	70924272	535	1-D 8
70917579	537	1-D 8	70921206	149	1-B 17	70922863	409	1-C 19	70924283	399	1-C 18
70917580	381	1-C 17	70921210	35	1-B 6	70922874	565	1-D 11	70924296	559	1-D 10
70917642	43	1-B 7	70921211	333	1-C 12	70922887	547	1-D 9	70924403	565	1-D 11
70917861	213	1-B 24	70921214	487	1-D 3	70922890	549	1-D 9	70924622	481	1-D 3
70917919	57	1-B 8	70921235	487	1-D 3	70922918	555	1-D 10	70924744	35	1-B 6
70917970	57	1-B 8	70921263	193	1-B 22	70922928	191	1-B 22	70924746	557	1-D 10
70918111	109	1-B 13	70921278	259	1-C 4	70923014	337	1-C 12	70924763	285	1-C 7
70918151	175	1-B 20	70921279	565	1-D 11	70923027	503	1-D 5	70924764	419	1-C 20
70918168	341	1-C 13	70921291	85	1-B 11	70923086	321	1-C 11	70924783	489	1-D 3
70918199	51	1-B 8	70921295	549	1-D 9	70923093	321	1-C 11	70924786	229	1-C 1
70918213	245	1-C 3	70921297	489	1-D 3	70923094	53	1-B 8	70924791	493	1-D 4
70918222	93	1-B 12	70921298	215	1-B 24	70923104	293	1-C 8	70924799	353	1-C 14
70918249	57	1-B 8	70921318	505	1-D 5	70923110	55	1-B 8	70924837	69	1-B 9
70918264	57	1-B 8	70921324	263	1-C 5	70923111	209	1-B 23	70924845	213	1-B 24
70918265	53	1-B 8	70921326	487	1-D 3	70923112	97	1-B 12	70924856	191	1-B 22
70918266	57	1-B 8	70921327	489	1-D 3	70923113	227	1-C 1	70924906	337	1-C 12
70918267	225	1-C 1	70921332	43	1-B 7	70923114	193	1-B 22	70924946	31	1-B 6
70918268	203	1-B 23	70921333	37	1-B 6	70923126	199	1-B 22	70924947	139	1-B 16
70918269	41	1-B 7	70921343	245	1-C 3	70923151	225	1-C 1	70925011	467	1-D 1
70918431	51	1-B 8	70921349	37	1-B 6	70923154	235	1-C 2	70925094	127	1-B 15
70918432	53	1-B 8	70921360	253	1-C 4	70923163	319	1-C 10	70925097	547	1-D 9
70918433	331	1-C 12	70921419	533	1-D 8	70923219	327	1-C 11	70925160	325	1-C 11
70918447	57	1-B 8	70921467	503	1-D 5	70923220	333	1-C 12	70925205	191	1-B 22
70918452	53	1-B 8	70921525	281	1-C 7	70923230	251	1-C 4	70925246	153	1-B 18
70918455	331	1-C 12	70921573	73	1-B 10	70923240	239	1-C 2	70925284	51	1-B 8
70918458	239	1-C 2	70921671	297	1-C 8	70923306	219	1-B 24	70925442	37	1-B 6
70918459	223	1-C 1	70921719	157	1-B 18	70923320	373	1-C 16	70925459	529	1-D 7
70918461	263	1-C 5	70921865	111	1-B 14	70923325	259	1-C 4	70925468	485	1-D 3
70918547	57	1-B 8	70921880	53	1-B 8	70923326	303	1-C 9	70925615	253	1-C 4
70918830	385	1-C 17	70921881	473	1-D 2	70923343	487	1-D 3	70925617	57	1-B 8
70919062	215	1-B 24	70921882	493	1-D 4	70923353	39	1-B 6	70925619	73	1-B 10
70919089	189	1-B 21	70921883	319	1-C 10	70923356	549	1-D 9	70925621	559	1-D 10
70919128	453	1-C 24	70921884	485	1-D 3	70923362	109	1-B 13	70925625	225	1-C 1

Part No.	Page	Grid	Part No.	Page	Grid	Part No.	Page	Grid	Part No.	Page	Grid
70925690	63	1-B 9	70927745	221	1-C 1	70931822	145	1-B 17	70937297	145	1-B 17
70925693	109	1-B 13	70927879	557	1-D 10	70931833	155	1-B 18	70937300	225	1-C 1
70925696	225	1-C 1	70927903	471	1-D 2	70931880	149	1-B 17	70937347	213	1-B 24
70925702	293	1-C 8	70927974	479	1-D 2	70931942	117	1-B 14	70937348	213	1-B 24
70925703	207	1-B 23	70927999	477	1-D 2	70932612	303	1-C 9	70937424	139	1-B 16
70925704	53	1-B 8	70928136	51	1-B 8	70932619	241	1-C 3	70937461	209	1-B 23
70925705	293	1-C 8	70928148	135	1-B 16	70932665	35	1-B 6	70937465	53	1-B 8
70925706	343	1-C 13	70928178	541	1-D 9	70932720	173	1-B 20	70937480	225	1-C 1
70925719	53	1-B 8	70928304	95	1-B 12	70932747	127	1-B 15	70937534	551	1-D 10
70925721	555	1-D 10	70928348	179	1-B 20	70932996	377	1-C 16	70937548	225	1-C 1
70925731	113	1-B 14	70928352	361	1-C 15	70932997	377	1-C 16	70937550	107	1-B 13
70925785	285	1-C 7	70928367	345	1-C 13	70933036	57	1-B 8	70937603	225	1-C 1
70925806	529	1-D 7	70928397	203	1-B 23	70933255	493	1-D 4	70937605	169	1-B 19
70925852	487	1-D 3	70928486	519	1-D 6	70933339	321	1-C 11	70937606	169	1-B 19
70925863	553	1-D 10	70928488	493	1-D 4	70933375	251	1-C 4	70937607	169	1-B 19
70925872	41	1-B 7	70928512	225	1-C 1	70933454	75	1-B 10	70937608	169	1-B 19
70925919	535	1-D 8	70928605	473	1-D 2	70933817	531	1-D 8	70937609	139	1-B 16
70925960	93	1-B 12	70928635	405	1-C 19	70933818	465	1-D 1	70937610	169	1-B 19
70925974	341	1-C 13	70928654	113	1-B 14	70933955	229	1-C 1	70937646	213	1-B 24
70925991	351	1-C 14	70928656	73	1-B 10	70933988	349	1-C 13	70937658	171	1-B 20
70925997	289	1-C 7	70928705	397	1-C 18	70934479	103	1-B 13	70937660	85	1-B 11
70926049	73	1-B 10	70929018	251	1-C 4	70934704	557	1-D 10	70937676	543	1-D 9
70926106	57	1-B 8	70929019	549	1-D 9	70934728	155	1-B 18	70937677	37	1-B 6
70926115	253	1-C 4	70929095	355	1-C 14	70934842	381	1-C 17	70937682	145	1-B 17
70926126	387	1-C 17	70929116	231	1-C 2	70934892	85	1-B 11	70937684	37	1-B 6
70926127	547	1-D 9	70929257	499	1-D 4	70934923	241	1-C 3	70937685	151	1-B 18
70926137	119	1-B 14	70929287	195	1-B 22	70935032	229	1-C 1	70937691	179	1-B 20
70926154	281	1-C 7	70929288	51	1-B 8	70935033	213	1-B 24	70937712	37	1-B 6
70926155	337	1-C 12	70929356	333	1-C 12	70935035	217	1-B 24	70937714	413	1-C 20
70926157	541	1-D 9	70929402	37	1-B 6	70935036	209	1-B 23	70937715	379	1-C 16
70926165	257	1-C 4	70929591	419	1-C 20	70935072	171	1-B 20	70937716	341	1-C 13
70926192	541	1-D 9	70929593	53	1-B 8	70935118	493	1-D 4	70937727	355	1-C 14
70926208	53	1-B 8	70929594	267	1-C 5	70935175	527	1-D 7	70937730	89	1-B 11
70926243	465	1-D 1	70929595	419	1-C 20	70935275	201	1-B 23	70950002	321	1-C 11
70926292	247	1-C 3	70929720	117	1-B 14	70935290	255	1-C 4	70950052	535	1-D 8
70926356	473	1-D 2	70929722	179	1-B 20	70935299	209	1-B 23	70950377	531	1-D 8
70926526	165	1-B 19	70929725	153	1-B 18	70935416	215	1-B 24	70950382	541	1-D 9
70926533	503	1-D 5	70929785	561	1-D 11	70935427	155	1-B 18	70950388	529	1-D 7
70926542	473	1-D 2	70929872	561	1-D 11	70935468	155	1-B 18	70950394	543	1-D 9
70926551	531	1-D 8	70929957	113	1-B 14	70935768	487	1-D 3	70950417	531	1-D 8
70926622	139	1-B 16	70930224	73	1-B 10	70935781	37	1-B 6	70950420	557	1-D 10
70926626	221	1-C 1	70930235	203	1-B 23	70935830	473	1-D 2	70950453	35	1-B 6
70926647	213	1-B 24	70930415	221	1-C 1	70935836	493	1-D 4	70950490	541	1-D 9
70926694	203	1-B 23	70930424	541	1-D 9	70935847	493	1-D 4	70950981	35	1-B 6
70926762	521	1-D 7	70930426	541	1-D 9	70935902	473	1-D 2	71012174	493	1-D 4
70926768	247	1-C 3	70930441	493	1-D 4	70936104	387	1-C 17	71122510	303	1-C 9
70926838	203	1-B 23	70930510	487	1-D 3	70936298	567	1-D 11	71122510	327	1-C 11
70926850	453	1-C 24	70930594	103	1-B 13	70936306	549	1-D 9	71122510	577	1-D 12
70926874	171	1-B 20	70930611	89	1-B 11	70936314	177	1-B 20	71124448	353	1-C 14
70926919	113	1-B 14	70930708	175	1-B 20	70936326	157	1-B 18	71127313	325	1-C 11
70926946	51	1-B 8	70930757	225	1-C 1	70936348	267	1-C 5	71127313	353	1-C 14
70926957	341	1-C 13	70930760	139	1-B 16	70936419	549	1-D 9	71127313	357	1-C 14
70926977	349	1-C 13	70930777	471	1-D 2	70936467	453	1-C 24	71127313	363	1-C 15
70927034	573	1-D 12	70930879	501	1-D 5	70936473	73	1-B 10	71127313	365	1-C 15
70927035	573	1-D 12	70930883	529	1-D 7	70936474	145	1-B 17	71127313	581	1-D 13
70927036	581	1-D 13	70930884	529	1-D 7	70936498	493	1-D 4	71130258	219	1-B 24
70927075	191	1-B 22	70930889	555	1-D 10	70936525	349	1-C 13	71130258	221	1-C 1
70927097	57	1-B 8	70930897	475	1-D 2	70936592	89	1-B 11	71130258	581	1-D 13
70927103	119	1-B 14	70930911	535	1-D 8	70936747	409	1-C 19	71133361	71	1-B 10
70927122	83	1-B 11	70931187	349	1-C 13	70936765	43	1-B 7	71133361	581	1-D 13
70927134	145	1-B 17	70931194	225	1-C 1	70936774	149	1-B 17	71149388	573	1-D 12
70927261	75	1-B 10	70931209	33	1-B 6	70936778	57	1-B 8	71149894	225	1-C 1
70927321	541	1-D 9	70931211	181	1-B 21	70936813	135	1-B 16	71149894	227	1-C 1
70927340	489	1-D 3	70931226	409	1-C 19	70937005	251	1-C 4	71149894	573	1-D 12
70927401	73	1-B 10	70931240	505	1-D 5	70937010	255	1-C 4	71149894	581	1-D 13
70927469	541	1-D 9	70931277	71	1-B 10	70937101	271	1-C 6	71149895	225	1-C 1
70927477	239	1-C 2	70931316	347	1-C 13	70937133	73	1-B 10	71149895	227	1-C 1
70927523	69	1-B 9	70931317	55	1-B 8	70937169	165	1-B 19	71149895	573	1-D 12
70927529	549	1-D 9	70931348	259	1-C 4	70937179	409	1-C 19	71149895	581	1-D 13
70927557	201	1-B 23	70931350	195	1-B 22	70937253	335	1-C 12	71149896	225	1-C 1
70927692	67	1-B 9	70931449	401	1-C 19	70937263	91	1-B 12	71149896	227	1-C 1
70927700	493	1-D 4	70931643	289	1-C 7	70937280	89	1-B 11	71149896	241	1-C 3
70927708	333	1-C 12	70931809	303	1-C 9	70937294	313	1-C 10	71149896	573	1-D 12
70927732	331	1-C 12	70931810	303	1-C 9	70937295	139	1-B 16	71149896	581	1-D 13
70927738	119	1-B 14	70931820	413	1-C 20	70937296	145	1-B 17	71149992	229	1-C 1

INDEX

Part No.	Page	Grid
71149992	573	1-D 12
71149992	579	1-D 12
71149999	225	1-C 1
71149999	573	1-D 12
71149999	579	1-D 12
71154722	203	1-B 23
71154722	205	1-B 23
71154722	251	1-C 4
71154722	253	1-C 4
71154722	577	1-D 12
71157144	367	1-C 15
71157144	579	1-D 12
71160040	537	1-D 8
71160040	539	1-D 8
71160055	541	1-D 9
71160067	537	1-D 8
71160067	539	1-D 8
71160085	541	1-D 9
71160303	537	1-D 8
71160303	539	1-D 8
71160379	525	1-D 7
71161396	221	1-C 1
71162565	537	1-D 8
71162781	531	1-D 8
71162782	531	1-D 8
71166170	531	1-D 8
71166171	531	1-D 8
71166172	531	1-D 8
71169204	567	1-D 11
71170388	551	1-D 10
71170388	555	1-D 10
71170388	561	1-D 11
71170388	567	1-D 11
71170390	551	1-D 10
71170390	555	1-D 10
71170390	567	1-D 11
71173857	221	1-C 1
71174391	213	1-B 24
71174391	229	1-C 1
71174718	473	1-D 2
71174718	477	1-D 2
71175918	551	1-D 10
71175918	555	1-D 10
71175918	561	1-D 11
71175918	567	1-D 11
71175919	551	1-D 10
71175919	555	1-D 10
71175919	561	1-D 11
71175919	567	1-D 11
71175961	537	1-D 8
71175961	539	1-D 8
71175962	537	1-D 8
71175962	539	1-D 8
71175963	537	1-D 8
71175963	539	1-D 8
71176951	473	1-D 2
71176951	475	1-D 2
71176962	473	1-D 2
71176962	477	1-D 2
71176963	475	1-D 2
71176964	473	1-D 2
71176964	475	1-D 2
71176964	477	1-D 2
71176964	479	1-D 2
711770	119	1-B 14
711770	577	1-D 12
71177385	539	1-D 8
71177386	539	1-D 8
71178962	51	1-B 8
71179395	219	1-B 24
71179395	221	1-C 1
71182840	207	1-B 23
71182840	209	1-B 23
71182840	257	1-C 4
71182840	371	1-C 16
71183535	535	1-D 8
71183746	535	1-D 8
71183747	535	1-D 8
71183750	535	1-D 8
71183757	531	1-D 8
71183828	535	1-D 8
71183839	537	1-D 8
71184133	537	1-D 8
71184134	537	1-D 8
71184135	537	1-D 8
71184144	537	1-D 8
71184144	539	1-D 8
71184145	535	1-D 8
71184147	535	1-D 8
71184148	535	1-D 8
71184188	561	1-D 11
71184188	567	1-D 11
71184401	477	1-D 2
71184409	477	1-D 2
71184415	473	1-D 2
71184418	473	1-D 2
71184418	475	1-D 2
71184418	477	1-D 2
71184418	479	1-D 2
71186166	325	1-C 11
71186745	537	1-D 8
71186745	539	1-D 8
71186746	537	1-D 8
71186746	539	1-D 8
71186814	409	1-C 19
71188145	177	1-B 20
71188145	355	1-C 14
71188145	357	1-C 14
71188145	361	1-C 15
71188503	471	1-D 2
71188503	473	1-D 2
71188503	475	1-D 2
71188503	477	1-D 2
71188503	479	1-D 2
71188503	481	1-D 3
71188504	471	1-D 2
71188504	473	1-D 2
71188504	475	1-D 2
71188504	477	1-D 2
71188504	479	1-D 2
71188504	579	1-D 12
71188949	353	1-C 14
71190292	537	1-D 8
71190960	399	1-C 18
71191799	149	1-B 17
71192243	313	1-C 10
71192243	327	1-C 11
71192243	581	1-D 13
71193260	179	1-B 20
71194263	53	1-B 8
71194263	255	1-C 4
71194367	355	1-C 14
71195328	537	1-D 8
71195328	539	1-D 8
71195913	251	1-C 4
71195913	577	1-D 12
71197117	207	1-B 23
71197117	209	1-B 23
71197117	211	1-B 24
71197117	217	1-B 24
71197117	255	1-C 4
71197117	371	1-C 16
71197323	209	1-B 23
71197323	583	1-D 13
71197376	347	1-C 13
712208	539	1-D 8
712208	579	1-D 12
71300327	477	1-D 2
71300507	539	1-D 8
71300509	537	1-D 8
71302422	481	1-D 3
71302467	537	1-D 8
71302468	537	1-D 8
71302469	537	1-D 8
71302470	537	1-D 8
71302471	537	1-D 8
71304149	191	1-B 22
71304149	195	1-B 22
71304261	529	1-D 7
71304262	529	1-D 7
71304263	529	1-D 7
71304264	529	1-D 7
71304266	529	1-D 7
71304267	529	1-D 7
71304271	531	1-D 8
71304292	531	1-D 8
71304362	53	1-B 8
71304362	255	1-C 4
71305916	413	1-C 20
71305916	583	1-D 13
71306656	577	1-D 12
71306660	577	1-D 12
71306949	127	1-B 15
71306949	581	1-D 13
71307131	413	1-C 20
71307132	413	1-C 20
71307626	549	1-D 9
71308156	209	1-B 23
71308156	217	1-B 24
71308156	581	1-D 13
71308770	333	1-C 12
71308770	337	1-C 12
71308770	577	1-D 12
71308951	71	1-B 10
71308951	339	1-C 12
71308951	577	1-D 12
71308984	365	1-C 15
71308984	577	1-D 12
71308995	353	1-C 14
71309117	225	1-C 1
71309117	227	1-C 1
71309117	327	1-C 11
71309117	577	1-D 12
71309514	529	1-D 7
71309515	529	1-D 7
71309766	213	1-B 24
71309767	289	1-C 7
71309767	297	1-C 8
71309768	207	1-B 23
71309768	211	1-B 24
71309768	255	1-C 4
71309768	581	1-D 13
71310379	529	1-D 7
71310976	191	1-B 22
71310976	195	1-B 22
71311456	531	1-D 8
71311456	533	1-D 8
71312323	533	1-D 8
71312602	207	1-B 23
71312602	211	1-B 24
71312602	213	1-B 24
71312602	255	1-C 4
71312602	291	1-C 8
71312602	297	1-C 8
71312603	53	1-B 8
71312603	213	1-B 24
71312819	213	1-B 24
71312823	213	1-B 24
71313115	577	1-D 12
71314321	251	1-C 4
71314321	253	1-C 4
71314321	581	1-D 13
71314481	529	1-D 7
71314833	239	1-C 2
71314842	239	1-C 2
71314999	241	1-C 3
71315780	303	1-C 9
71315780	327	1-C 11
71315785	303	1-C 9
71315785	327	1-C 11
71315999	225	1-C 1
71315999	227	1-C 1
71315999	577	1-D 12
71317628	539	1-D 8
71317841	193	1-B 22
71317841	223	1-C 1
71317841	239	1-C 2
71318052	253	1-C 4
71323575	397	1-C 18
71325523	583	1-D 13
71325553	313	1-C 10
71326336	403	1-C 19
71327595	529	1-D 7
71327984	351	1-C 14
71328361	215	1-B 24
71328362	453	1-C 24
71328365	215	1-B 24
71328365	453	1-C 24
71328912	567	1-D 11
71332011	215	1-B 24
71332011	285	1-C 7
71334329	451	1-C 24
71334986	551	1-D 10
71334986	553	1-D 10
71334988	549	1-D 9
71334988	553	1-D 10
71334989	549	1-D 9
71334989	553	1-D 10
71335184	219	1-B 24
71335184	221	1-C 1
71335184	577	1-D 12
71335195	251	1-C 4
71335195	253	1-C 4
71335689	275	1-C 6
71335690	239	1-C 2
71335782	535	1-D 8
71335783	535	1-D 8
71335784	535	1-D 8
71336386	57	1-B 8
71336386	63	1-B 9
71337414	157	1-B 18
71337414	161	1-B 19
71338308	549	1-D 9
71338308	553	1-D 10
71338651	551	1-D 10
71338789	551	1-D 10
71338789	553	1-D 10
71338799	551	1-D 10
71338799	553	1-D 10
71339238	531	1-D 8
71339847	57	1-B 8
71339847	63	1-B 9
71339847	85	1-B 11
71339847	425	1-C 21
71339847	433	1-C 22
71340437	531	1-D 8
71341448	313	1-C 10
71341450	313	1-C 10
71341450	581	1-D 13
71342216	153	1-B 18
71342216	535	1-D 8
71342217	535	1-D 8
71342768	83	1-B 11
71343344	37	1-B 6
71343344	41	1-B 7
71343344	403	1-C 19
71344597	541	1-D 9
71344598	541	1-D 9
71344647	209	1-B 23
71344649	209	1-B 23

Part No.	Page	Grid	Part No.	Page	Grid	Part No.	Page	Grid	Part No.	Page	Grid
71344833	353	1-C 14	71356061	211	1-B 24	71365883	453	1-C 24	71371332	143	1-B 17
71345822	413	1-C 20	71356061	217	1-B 24	71366126	457	1-C 24	71371333	139	1-B 16
71345898	315	1-C 10	71356061	255	1-C 4	71366127	457	1-C 24	71371336	139	1-B 16
71346267	53	1-B 8	71356061	371	1-C 16	71366540	37	1-B 6	71371338	139	1-B 16
71346267	209	1-B 23	71356061	583	1-D 13	71366540	41	1-B 7	71371343	139	1-B 16
71346267	211	1-B 24	71356067	207	1-B 23	71367031	37	1-B 6	71371346	139	1-B 16
71346267	217	1-B 24	71356529	53	1-B 8	71367032	57	1-B 8	71371347	139	1-B 16
71346267	255	1-C 4	71356938	207	1-B 23	71367037	37	1-B 6	71371349	139	1-B 16
71346998	57	1-B 8	71358545	525	1-D 7	71367037	41	1-B 7	71371520	281	1-C 7
71346998	63	1-B 9	71358564	453	1-C 24	71367218B	189	1-B 21	71371520	579	1-D 12
71347777	541	1-D 9	71359538	541	1-D 9	71367218B	193	1-B 22	71371526	281	1-C 7
71347780	541	1-D 9	71359545	551	1-D 10	71367308	237	1-C 2	71371526	579	1-D 12
71347782	541	1-D 9	71359772	549	1-D 9	71367309	233	1-C 2	71371720	33	1-B 6
71348314	329	1-C 11	71359841	549	1-D 9	71367309	237	1-C 2	71372132	551	1-D 10
71348455	531	1-D 8	71359841	553	1-D 10	71367312	237	1-C 2	71372132	555	1-D 10
71348455	567	1-D 11	71359851	561	1-D 11	71367314	237	1-C 2	71372133	551	1-D 10
71348560	33	1-B 6	71359864	557	1-D 10	71367316	237	1-C 2	71372133	555	1-D 10
71349270	53	1-B 8	71359865	557	1-D 10	71367317	233	1-C 2	71372724	145	1-B 17
71349270	211	1-B 24	71359889	565	1-D 11	71367317	237	1-C 2	71372724	165	1-B 19
71349270	217	1-B 24	71359890	565	1-D 11	71367320	233	1-C 2	71373126	139	1-B 16
71349270	255	1-C 4	71359891	565	1-D 11	71367320	237	1-C 2	71373127	139	1-B 16
71349763	419	1-C 20	71359897	561	1-D 11	71367323	233	1-C 2	71373144	137	1-B 16
71349763	429	1-C 21	71359912	563	1-D 11	71367323	237	1-C 2	71373144	141	1-B 17
71349811	211	1-B 24	71359922	563	1-D 11	71367324	233	1-C 2	71373144	143	1-B 17
71349811	217	1-B 24	71359927	563	1-D 11	71367324	237	1-C 2	71373145	137	1-B 16
71349811	255	1-C 4	71359946	563	1-D 11	71367526	237	1-C 2	71373146	139	1-B 16
71349813	53	1-B 8	71361243	477	1-D 2	71367528	233	1-C 2	71373403	495	1-D 4
71349813	211	1-B 24	71361312	477	1-D 2	71367528	237	1-C 2	71373513	399	1-C 18
71349813	217	1-B 24	71361355	481	1-D 3	71367529	235	1-C 2	71373538	485	1-D 3
71349813	255	1-C 4	71361357	481	1-D 3	71368074	33	1-B 6	71373538	489	1-D 3
71351200	313	1-C 10	71361358	481	1-D 3	71368570	207	1-B 23	71373684	329	1-C 11
71351389	117	1-B 14	71361359	481	1-D 3	71368598	351	1-C 14	71373693	353	1-C 14
71352828	191	1-B 22	71361361	481	1-D 3	71368741	73	1-B 10	71373962	245	1-C 3
71352828	195	1-B 22	71361364	481	1-D 3	71368741	75	1-B 10	71374340	523	1-D 7
71353127	207	1-B 23	71361367	481	1-D 3	71368741	79	1-B 10	71374425	191	1-B 22
71353127	291	1-C 8	71361368	481	1-D 3	71368761	207	1-B 23	71374425	195	1-B 22
71353127	297	1-C 8	71361406	567	1-D 11	71368951	43	1-B 7	71374564	45	1-B 7
71354306	551	1-D 10	71361720	113	1-B 14	71368952	43	1-B 7	71374564	49	1-B 7
71354306	553	1-D 10	71361831	107	1-B 13	71368952	47	1-B 7	71374565	45	1-B 7
71354345	373	1-C 16	71361940	113	1-B 14	71368953	47	1-B 7	71374565	49	1-B 7
71354636	329	1-C 11	71361941	113	1-B 14	71368961	45	1-B 7	71374663	243	1-C 3
71354855	233	1-C 2	71361947	113	1-B 14	71368961	49	1-B 7	71374666	243	1-C 3
71354855	235	1-C 2	71362149	453	1-C 24	71368961	579	1-D 12	71374667	243	1-C 3
71354856	235	1-C 2	71362390	83	1-B 11	71368962	45	1-B 7	71374669	243	1-C 3
71354859	233	1-C 2	71362391	83	1-B 11	71368962	49	1-B 7	71374670	243	1-C 3
71354859	235	1-C 2	71362525	95	1-B 12	71368962	579	1-D 12	71374671	245	1-C 3
71354861	233	1-C 2	71362539	481	1-D 3	71368963	45	1-B 7	71374672	239	1-C 2
71354861	235	1-C 2	71362813	173	1-B 20	71368963	49	1-B 7	71374674	239	1-C 2
71354863	235	1-C 2	71362941	231	1-C 2	71368991	215	1-B 24	71374776	245	1-C 3
71354864	235	1-C 2	71362941	235	1-C 2	71369299	531	1-D 8	71374778	245	1-C 3
71354865	233	1-C 2	71362941	237	1-C 2	71369307	533	1-D 8	71374779	245	1-C 3
71354865	235	1-C 2	71362970	353	1-C 14	71369761	145	1-B 17	71374781	245	1-C 3
71355001	235	1-C 2	71363526	225	1-C 1	71369761	579	1-D 12	71374782	245	1-C 3
71355063	547	1-D 9	71363526	227	1-C 1	71369762	147	1-B 17	71374785	477	1-D 2
71355063	561	1-D 11	71363845	119	1-B 14	71369762	581	1-D 13	71374790	479	1-D 2
71355339	511	1-D 6	71364016	465	1-D 1	71369877	45	1-B 7	71374793	479	1-D 2
71355339	519	1-D 6	71364024	465	1-D 1	71369877	49	1-B 7	71374794	479	1-D 2
71355340	515	1-D 6	71364349	85	1-B 11	71370120	225	1-C 1	71374796	239	1-C 2
71355340	523	1-D 7	71364946	573	1-D 12	71370120	227	1-C 1	71374798	239	1-C 2
71355340	527	1-D 7	71364946	583	1-D 13	71370121	225	1-C 1	71374803	243	1-C 3
71355384	517	1-D 6	71365064	251	1-C 4	71370121	227	1-C 1	71374807	245	1-C 3
71355395	559	1-D 10	71365064	253	1-C 4	71370121	579	1-D 12	71374808	245	1-C 3
71355604	103	1-B 13	71365101	473	1-D 2	71370165	51	1-B 8	71374816	239	1-C 2
71356058	207	1-B 23	71365101	477	1-D 2	71370232	33	1-B 6	71374827	527	1-D 7
71356058	341	1-C 13	71365102	457	1-C 24	71370496	225	1-C 1	71374828	527	1-D 7
71356060	53	1-B 8	71365114	457	1-C 24	71370496	227	1-C 1	71374831	511	1-D 6
71356060	207	1-B 23	71365245	453	1-C 24	71370496	583	1-D 13	71374831	519	1-D 6
71356060	209	1-B 23	71365245	457	1-C 24	71370508	85	1-B 11	71374831	527	1-D 7
71356060	211	1-B 24	71365245	551	1-D 10	71370634	225	1-C 1	71374834	521	1-D 7
71356060	217	1-B 24	71365312	547	1-D 9	71370634	227	1-C 1	71374834	527	1-D 7
71356060	255	1-C 4	71365327	127	1-B 15	71370634	581	1-D 13	71374835	523	1-D 7
71356060	371	1-C 16	71365412	31	1-B 6	71370926	531	1-D 8	71374836	519	1-D 6
71356060	579	1-D 12	71365476	171	1-B 20	71370926	567	1-D 11	71374840	511	1-D 6
71356061	207	1-B 23	71365477	171	1-B 20	71370934	567	1-D 11	71374840	519	1-D 6
71356061	209	1-B 23	71365880	453	1-C 24	71371331	139	1-B 16	71374840	527	1-D 7

INDEX

Part No.	Page	Grid
71374841	527	1-D 7
71374842	523	1-D 7
71374842	527	1-D 7
71374843	523	1-D 7
71374843	527	1-D 7
71374844	523	1-D 7
71374844	527	1-D 7
71374845	523	1-D 7
71374845	527	1-D 7
71374846	523	1-D 7
71374846	527	1-D 7
71374847	523	1-D 7
71374847	527	1-D 7
71374848	527	1-D 7
71374849	527	1-D 7
71374852	513	1-D 6
71374852	521	1-D 7
71374853	513	1-D 6
71374853	521	1-D 7
71374859	511	1-D 6
71374859	519	1-D 6
71374860	525	1-D 7
71374863	517	1-D 6
71374865	517	1-D 6
71374866	517	1-D 6
71374867	517	1-D 6
71374870	513	1-D 6
71374870	521	1-D 7
71374875	523	1-D 7
71374876	523	1-D 7
71374877	523	1-D 7
71374879	523	1-D 7
71374880	523	1-D 7
71374881	515	1-D 6
71374881	523	1-D 7
71374882	523	1-D 7
71374883	515	1-D 6
71374883	523	1-D 7
71374884	515	1-D 6
71374884	523	1-D 7
71374885	515	1-D 6
71374886	511	1-D 6
71374886	523	1-D 7
71374888	525	1-D 7
71374890	517	1-D 6
71374890	525	1-D 7
71374891	525	1-D 7
71374894	513	1-D 6
71374894	521	1-D 7
71374895	513	1-D 6
71374895	521	1-D 7
71374896	513	1-D 6
71374896	521	1-D 7
71374897	513	1-D 6
71374897	521	1-D 7
71374898	521	1-D 7
71374900	513	1-D 6
71374900	521	1-D 7
71374901	525	1-D 7
71374904	523	1-D 7
71374905	523	1-D 7
71374907	517	1-D 6
71374908	517	1-D 6
71374908	525	1-D 7
71374909	517	1-D 6
71374909	525	1-D 7
71374918	511	1-D 6
71374918	519	1-D 6
71374932	241	1-C 3
71374952	525	1-D 7
71374958	523	1-D 7
71374959	523	1-D 7
71374960	525	1-D 7
71374961	517	1-D 6
71374961	525	1-D 7
71374962	525	1-D 7
71374967	519	1-D 6
71374967	527	1-D 7
71374968	527	1-D 7
71374968	581	1-D 13
71374970	527	1-D 7
71375122	241	1-C 3
71375335	225	1-C 1
71375335	227	1-C 1
71375335	583	1-D 13
71375388	191	1-B 22
71375388	197	1-B 22
71375556	239	1-C 2
71375559	239	1-C 2
71375564	239	1-C 2
71375751	533	1-D 8
71375752	533	1-D 8
71375791	243	1-C 3
71375902	169	1-B 19
71375911	177	1-B 20
71375911	583	1-D 13
71376042	353	1-C 14
71376312	397	1-C 18
71376324	399	1-C 18
71376349	399	1-C 18
71376350B	407	1-C 19
71376446	543	1-D 9
71376758P	327	1-C 11
71376825	175	1-B 20
71376825	243	1-C 3
71376825	269	1-C 5
71376825	583	1-D 13
71376888	225	1-C 1
71376907	245	1-C 3
71376908	245	1-C 3
71376909	245	1-C 3
71377310	225	1-C 1
71377310	227	1-C 1
71377407	537	1-D 8
71377408	537	1-D 8
71377410	539	1-D 8
71377411	539	1-D 8
71377412	539	1-D 8
71377413	539	1-D 8
71377414	539	1-D 8
71377415	539	1-D 8
71377416	539	1-D 8
71377417	539	1-D 8
71377418	539	1-D 8
71377419	535	1-D 8
71377420	535	1-D 8
71377531	535	1-D 8
71377534	539	1-D 8
71377535	539	1-D 8
71377548	537	1-D 8
71377549	539	1-D 8
71377709	535	1-D 8
71377710	537	1-D 8
71377711	539	1-D 8
71377712	539	1-D 8
71377713	539	1-D 8
71377714	539	1-D 8
71377715	539	1-D 8
71377716	539	1-D 8
71377717	541	1-D 9
71377718	541	1-D 9
71377719	541	1-D 9
71377720	541	1-D 9
71377721	541	1-D 9
71377722	539	1-D 8
71377723	539	1-D 8
71377769	239	1-C 2
71377770	239	1-C 2
71377939	505	1-D 5
71377941	505	1-D 5
71377945	467	1-D 1
71378014	387	1-C 17
71378104	155	1-B 18
71378104	159	1-B 18
71378250	299	1-C 8
71378317	241	1-C 3
71378364	113	1-B 14
71378364	115	1-B 14
71378441	57	1-B 8
71378441	63	1-B 9
71378577	281	1-C 7
71378577	579	1-D 12
71378579	281	1-C 7
71378873	203	1-B 23
71378873	229	1-C 1
71378873	373	1-C 16
71378873	583	1-D 13
71379103	219	1-B 24
71379105	209	1-B 23
71379105	571	1-D 12
71379105	577	1-D 12
71379111	225	1-C 1
71379111	227	1-C 1
71379126	33	1-B 6
71379126	369	1-C 15
71379127	31	1-B 6
71379127	33	1-B 6
71379127	415	1-C 20
71379127	425	1-C 21
71379128	31	1-B 6
71379128	33	1-B 6
71379128	429	1-C 21
71379129	31	1-B 6
71379129	33	1-B 6
71379129	369	1-C 15
71379129	415	1-C 20
71379130	31	1-B 6
71379132	33	1-B 6
71379132	411	1-C 20
71379134	189	1-B 21
71379134	193	1-B 22
71379210	299	1-C 8
71379211	299	1-C 8
71379249	299	1-C 8
71379254	285	1-C 7
71379254	413	1-C 20
71379260	307	1-C 9
71379261	307	1-C 9
71379303	487	1-D 3
71379304	73	1-B 10
71379304	75	1-B 10
71379304	79	1-B 10
71379304	487	1-D 3
71379306	471	1-D 2
71379323	167	1-B 19
71379325	471	1-D 2
71379325	473	1-D 2
71379434	33	1-B 6
71379519	255	1-C 4
71379520	255	1-C 4
71379631	229	1-C 1
71379631	231	1-C 2
71379701	117	1-B 14
71379811	321	1-C 11
71379824	379	1-C 16
71379824	383	1-C 17
71379825	377	1-C 16
71379825	381	1-C 17
71380028	221	1-C 1
71380043	221	1-C 1
71380423	189	1-B 21
71380460	213	1-B 24
71380463	221	1-C 1
71380468	53	1-B 8
71380905	221	1-C 1
71380994	367	1-C 15
71381213	339	1-C 12
71381274	41	1-B 7
71381495	59	1-B 8
71381680	225	1-C 1
71381682	225	1-C 1
71381682	227	1-C 1
71382053	213	1-B 24
71382055	213	1-B 24
71382057	213	1-B 24
71382057	217	1-B 24
71382256	303	1-C 9
71382257	303	1-C 9
71382269	301	1-C 9
71382269	581	1-D 13
71382607	243	1-C 3
71382694	37	1-B 6
71382694	41	1-B 7
71382716	341	1-C 13
71382731	35	1-B 6
71382758	303	1-C 9
71382759	303	1-C 9
71382868	341	1-C 13
71382871	341	1-C 13
71382933	381	1-C 17
71382983	213	1-B 24
71382983	217	1-B 24
71382985	213	1-B 24
71383233	43	1-B 7
71383499	307	1-C 9
71383653	127	1-B 15
71383661	129	1-B 15
71383662	129	1-B 15
71383667	127	1-B 15
71383667	131	1-B 16
71383673	131	1-B 16
71383736	299	1-C 8
71383737	299	1-C 8
71383783	189	1-B 21
71383783	193	1-B 22
71383783	197	1-B 22
71383914	175	1-B 20
71383914	583	1-D 13
71383930	303	1-C 9
71383932	305	1-C 9
71383932	581	1-D 13
71383934	305	1-C 9
71383934	583	1-D 13
71384272	139	1-B 16
71384279	559	1-D 10
71384284	559	1-D 10
71384406	465	1-D 1
71384407	465	1-D 1
71384411	465	1-D 1
71384412	465	1-D 1
71384413	465	1-D 1
71384414	465	1-D 1
71384551	139	1-B 16
71384552	139	1-B 16
71384553	143	1-B 17
71384555	143	1-B 17
71384556	143	1-B 17
71384558	143	1-B 17
71384836	203	1-B 23
71384878	567	1-D 11
71384879	567	1-D 11
71384912	371	1-C 16
71384922	365	1-C 15
71385108	175	1-B 20
71385633	191	1-B 22
71385633	195	1-B 22
71385680	365	1-C 15
71385690	367	1-C 15
71385694	371	1-C 16
71385697	371	1-C 16

Part No.	Page	Grid	Part No.	Page	Grid	Part No.	Page	Grid	Part No.	Page	Grid
71385793	33	1-B 6	71387355	307	1-C 9	71388133	165	1-B 19	71389232	543	1-D 9
71385801	371	1-C 16	71387357	307	1-C 9	71388133	169	1-B 19	71389233	543	1-D 9
71385801	571	1-D 12	71387375	327	1-C 11	71388136	89	1-B 11	71389235	543	1-D 9
71385801	577	1-D 12	71387393	283	1-C 7	71388142	109	1-B 13	71389250	547	1-D 9
71385802	367	1-C 15	71387393	287	1-C 7	71388149	109	1-B 13	71389309	155	1-B 18
71385836	291	1-C 8	71387408	165	1-B 19	71388152	109	1-B 13	71389309	159	1-B 18
71385837	289	1-C 7	71387413	165	1-B 19	71388154	109	1-B 13	71389313	155	1-B 18
71385837	571	1-D 12	71387414	167	1-B 19	71388157	131	1-B 16	71389313	159	1-B 18
71385837	577	1-D 12	71387414	561	1-D 11	71388167	83	1-B 11	71389319	179	1-B 20
71385907	153	1-B 18	71387416	165	1-B 19	71388188	135	1-B 16	71389356	549	1-D 9
71385907	167	1-B 19	71387417	165	1-B 19	71388202	251	1-C 4	71389362	549	1-D 9
71385907	535	1-D 8	71387418	171	1-B 20	71388207	257	1-C 4	71389381	549	1-D 9
71385996	55	1-B 8	71387419	181	1-B 21	71388213	257	1-C 4	71389385	549	1-D 9
71385998	499	1-D 4	71387419	575	1-D 12	71388217	209	1-B 23	71389386	549	1-D 9
71385999	37	1-B 6	71387420	105	1-B 13	71388217	581	1-D 13	71389394	549	1-D 9
71386129	249	1-C 3	71387420	171	1-B 20	71388248	191	1-B 22	71389394	557	1-D 10
71386169	273	1-C 6	71387422	171	1-B 20	71388248	197	1-B 22	71389405	35	1-B 6
71386195	299	1-C 8	71387423	171	1-B 20	71388256	293	1-C 8	71389405	39	1-B 6
71386199	299	1-C 8	71387424	171	1-B 20	71388256	309	1-C 9	71389426	271	1-C 6
71386200	307	1-C 9	71387470	283	1-C 7	71388301	263	1-C 5	71389427	271	1-C 6
71386352	257	1-C 4	71387515	289	1-C 7	71388312	263	1-C 5	71389455	301	1-C 9
71386352	569	1-D 11	71387523	253	1-C 4	71388314	263	1-C 5	71389456	301	1-C 9
71386352	577	1-D 12	71387625	43	1-B 7	71388315	263	1-C 5	71389457	301	1-C 9
71386353	507	1-D 5	71387642	55	1-B 8	71388318	263	1-C 5	71389458	301	1-C 9
71386394	335	1-C 12	71387643	55	1-B 8	71388321	265	1-C 5	71389509	115	1-B 14
71386400	327	1-C 11	71387644	55	1-B 8	71388322	269	1-C 5	71389511	115	1-B 14
71386414	489	1-D 3	71387650	43	1-B 7	71388391	181	1-B 21	71389512	115	1-B 14
71386517	55	1-B 8	71387680	307	1-C 9	71388391	575	1-D 12	71389513	115	1-B 14
71386557	471	1-D 2	71387680	315	1-C 10	71388439	275	1-C 6	71389514	115	1-B 14
71386557	477	1-D 2	71387699	273	1-C 6	71388441	275	1-C 6	71389515	115	1-B 14
71386572	477	1-D 2	71387700	273	1-C 6	71388442	275	1-C 6	71389516	115	1-B 14
71386574	509	1-D 5	71387749	33	1-B 6	71388451	277	1-C 6	71389518	53	1-B 8
71386574	519	1-D 6	71387749	45	1-B 7	71388458	277	1-C 6	71389518	509	1-D 5
71386668	203	1-B 23	71387797	63	1-B 9	71388459	275	1-C 6	71389522	389	1-C 17
71386669	203	1-B 23	71387797	135	1-B 16	71388465	277	1-C 6	71389601	547	1-D 9
71386683	257	1-C 4	71387797	149	1-B 17	71388466	275	1-C 6	71389611B	253	1-C 4
71386773	415	1-C 20	71387797	161	1-B 19	71388712	293	1-C 8	71389619	531	1-D 8
71386866	541	1-D 9	71387797	453	1-C 24	71388712	571	1-D 12	71389638	209	1-B 23
71386867	541	1-D 9	71387798	319	1-C 10	71388712	577	1-D 12	71389638	211	1-B 24
71386880	51	1-B 8	71387826	273	1-C 6	71388713	567	1-D 11	71389638	217	1-B 24
71386892	37	1-B 6	71387842	299	1-C 8	71388717	311	1-C 10	71389647	529	1-D 7
71386997	35	1-B 6	71387845	293	1-C 8	71388736	293	1-C 8	71389729	497	1-D 4
71387142	119	1-B 14	71387846	299	1-C 8	71388736	309	1-C 9	71389731	497	1-D 4
71387145	121	1-B 15	71387848	293	1-C 8	71388739	389	1-C 17	71389732	497	1-D 4
71387148	119	1-B 14	71387848	309	1-C 9	71388748	289	1-C 7	71389733	497	1-D 4
71387177	113	1-B 14	71387962	411	1-C 20	71388751	409	1-C 19	71389737	471	1-D 2
71387178	113	1-B 14	71387996	69	1-B 9	71388752	409	1-C 19	71389740	319	1-C 10
71387181	113	1-B 14	71388056	319	1-C 10	71388826	319	1-C 10	71389741	319	1-C 10
71387185	83	1-B 11	71388058	501	1-D 5	71388829	285	1-C 7	71389742	319	1-C 10
71387186	83	1-B 11	71388059	505	1-D 5	71388833	285	1-C 7	71389743	319	1-C 10
71387195	85	1-B 11	71388060	505	1-D 5	71388839	503	1-D 5	71389743	483	1-D 3
71387205	119	1-B 14	71388061	57	1-B 8	71388842	285	1-C 7	71389746	157	1-B 18
71387266	85	1-B 11	71388061	63	1-B 9	71388843	285	1-C 7	71389746	161	1-B 19
71387267	107	1-B 13	71388062	57	1-B 8	71388844	285	1-C 7	71389746	503	1-D 5
71387268	107	1-B 13	71388062	63	1-B 9	71388856	145	1-B 17	71389747	477	1-D 2
71387271	103	1-B 13	71388063	57	1-B 8	71388875	487	1-D 3	71389750	509	1-D 5
71387272	103	1-B 13	71388063	63	1-B 9	71388880	57	1-B 8	71389751	507	1-D 5
71387273	103	1-B 13	71388063	145	1-B 17	71388880	65	1-B 9	71389754	153	1-B 18
71387278	103	1-B 13	71388064	57	1-B 8	71388882	57	1-B 8	71389754	453	1-C 24
71387279	103	1-B 13	71388064	63	1-B 9	71388882	65	1-B 9	71389784	409	1-C 19
71387280	103	1-B 13	71388073	75	1-B 10	71388912	441	1-C 23	71389785	409	1-C 19
71387281	103	1-B 13	71388073	79	1-B 10	71388938	411	1-C 20	71389811	165	1-B 19
71387292P	83	1-B 11	71388076	145	1-B 17	71388940	353	1-C 14	71389812	169	1-B 19
71387293	121	1-B 15	71388081	491	1-D 4	71388942	413	1-C 20	71389813	169	1-B 19
71387295	105	1-B 13	71388085	489	1-D 3	71388944	413	1-C 20	71389814	169	1-B 19
71387297	105	1-B 13	71388086	489	1-D 3	71388967	299	1-C 8	71389815	169	1-B 19
71387297	577	1-D 12	71388089	57	1-B 8	71389066	321	1-C 11	71389818	175	1-B 20
71387307	293	1-C 8	71388089	63	1-B 9	71389068	321	1-C 11	71389818	535	1-D 8
71387307	309	1-C 9	71388092	505	1-D 5	71389084	263	1-C 5	71389818	583	1-D 13
71387325	367	1-C 15	71388093	501	1-D 5	71389087	261	1-C 5	71389825	165	1-B 19
71387329	269	1-C 5	71388098	319	1-C 10	71389158	33	1-B 6	71389842	351	1-C 14
71387343	275	1-C 6	71388099	319	1-C 10	71389158	85	1-B 11	71389851	359	1-C 14
71387344	275	1-C 6	71388100	319	1-C 10	71389221	203	1-B 23	71389997	321	1-C 11
71387345	275	1-C 6	71388129	109	1-B 13	71389229	543	1-D 9	71390005	265	1-C 5
71387351	299	1-C 8	71388131	111	1-B 14	71389230	543	1-D 9	71390019	275	1-C 6

INDEX

Part No.	Page	Grid
71390022	263	1-C 5
71390024	263	1-C 5
71390090	51	1-B 8
71390092	53	1-B 8
71390093	331	1-C 12
71390101	319	1-C 10
71390122	103	1-B 13
71390148	399	1-C 18
71390152	397	1-C 18
71390157	397	1-C 18
71390178	253	1-C 4
71390179	547	1-D 9
71390183	255	1-C 4
71390185	365	1-C 15
71390186	561	1-D 11
71390188	255	1-C 4
71390188	569	1-D 11
71390188	577	1-D 12
71390190	255	1-C 4
71390191	391	1-C 18
71390196	341	1-C 13
71390199	341	1-C 13
71390199	569	1-D 11
71390199	577	1-D 12
71390203	53	1-B 8
71390208	53	1-B 8
71390223	253	1-C 4
71390241	409	1-C 19
71390242	409	1-C 19
71390248	409	1-C 19
71390252	321	1-C 11
71390259	321	1-C 11
71390260	321	1-C 11
71390263	323	1-C 11
71390265	323	1-C 11
71390266	323	1-C 11
71390267	323	1-C 11
71390268	323	1-C 11
71390272	323	1-C 11
71390279	323	1-C 11
71390280	323	1-C 11
71390281	323	1-C 11
71390282	323	1-C 11
71390283	323	1-C 11
71390284	323	1-C 11
71390292	547	1-D 9
71390314	121	1-B 15
71390323	167	1-B 19
71390325	165	1-B 19
71390325	171	1-B 20
71390357	385	1-C 17
71390360	377	1-C 16
71390364	373	1-C 16
71390384	403	1-C 19
71390407	113	1-B 14
71390413	113	1-B 14
71390414	113	1-B 14
71390417	121	1-B 15
71390450	103	1-B 13
71390451	103	1-B 13
71390452	103	1-B 13
71390453	103	1-B 13
71390468	105	1-B 13
71390472	105	1-B 13
71390502	547	1-D 9
71390579	261	1-C 5
71390582	259	1-C 4
71390672	357	1-C 14
71390672	363	1-C 15
71390721	251	1-C 4
71390755	411	1-C 20
71390756	385	1-C 17
71390759C	413	1-C 20
71390762	411	1-C 20
71390764	399	1-C 18
71390770	413	1-C 20
71390789	417	1-C 20
71390804	185	1-B 21
71390806	185	1-B 21
71390809	185	1-B 21
71390810	185	1-B 21
71390813	185	1-B 21
71390815	185	1-B 21
71390816	185	1-B 21
71390817	185	1-B 21
71390820	185	1-B 21
71390821	185	1-B 21
71390822	185	1-B 21
71390823	185	1-B 21
71390824	185	1-B 21
71390825	185	1-B 21
71390851	341	1-C 13
71390853	341	1-C 13
71390855	535	1-D 8
71390860	379	1-C 16
71390861	53	1-B 8
71390863	507	1-D 5
71390866	507	1-D 5
71390867	507	1-D 5
71390867	543	1-D 9
71390870	51	1-B 8
71390887	541	1-D 9
71390888	541	1-D 9
71390909	443	1-C 23
71390910	437	1-C 22
71390911	439	1-C 22
71390911	441	1-C 23
71390913	441	1-C 23
71390913	449	1-C 23
71390914	409	1-C 19
71390926	377	1-C 16
71390929	387	1-C 17
71391001	185	1-B 21
71391002	185	1-B 21
71391003	185	1-B 21
71391016	153	1-B 18
71391017	153	1-B 18
71391020	177	1-B 20
71391021	175	1-B 20
71391021	177	1-B 20
71391021	303	1-C 9
71391021	313	1-C 10
71391021	355	1-C 14
71391021	583	1-D 13
71391030	69	1-B 9
71391031	69	1-B 9
71391036	69	1-B 9
71391037	69	1-B 9
71391039	71	1-B 10
71391041	43	1-B 7
71391045	41	1-B 7
71391083	121	1-B 15
71391083	453	1-C 24
71391112	437	1-C 22
71391113	439	1-C 22
71391131	377	1-C 16
71391131	383	1-C 17
71391133	375	1-C 16
71391135	373	1-C 16
71391140	373	1-C 16
71391141	375	1-C 16
71391143	393	1-C 18
71391146	397	1-C 18
71391147	395	1-C 18
71391150	399	1-C 18
71391153	135	1-B 16
71391153	577	1-D 12
71391157	111	1-B 14
71391158	89	1-B 11
71391172	89	1-B 11
71391175	135	1-B 16
71391179	441	1-C 23
71391181	441	1-C 23
71391219	251	1-C 4
71391220	251	1-C 4
71391221	251	1-C 4
71391224	251	1-C 4
71391225	251	1-C 4
71391234	73	1-B 10
71391234	75	1-B 10
71391234	79	1-B 10
71391236	451	1-C 24
71391238	501	1-D 5
71391246	491	1-D 4
71391252	491	1-D 4
71391255	113	1-B 14
71391256	113	1-B 14
71391261	285	1-C 7
71391263	287	1-C 7
71391270	285	1-C 7
71391322	135	1-B 16
71391327	325	1-C 11
71391330	327	1-C 11
71391331	329	1-C 11
71391336	377	1-C 16
71391339	359	1-C 14
71391339	363	1-C 15
71391403	181	1-B 21
71391403	575	1-D 12
71391404	181	1-B 21
71391404	575	1-D 12
71391416	171	1-B 20
71391417	171	1-B 20
71391418	179	1-B 20
71391418	501	1-D 5
71391420	151	1-B 18
71391435	379	1-C 16
71391435	383	1-C 17
71391441	379	1-C 16
71391441	383	1-C 17
71391453	469	1-D 1
71391453	487	1-D 3
71391461	67	1-B 9
71391462	67	1-B 9
71391463	67	1-B 9
71391466	67	1-B 9
71391474	55	1-B 8
71391475	55	1-B 8
71391489	265	1-C 5
71391495	229	1-C 1
71391496	229	1-C 1
71391501	103	1-B 13
71391515	119	1-B 14
71391516	119	1-B 14
71391518	87	1-B 11
71391519	87	1-B 11
71391526	331	1-C 12
71391529	255	1-C 4
71391540	67	1-B 9
71391541	67	1-B 9
71391548	253	1-C 4
71391549	253	1-C 4
71391567	213	1-B 24
71391572	529	1-D 7
71391576	313	1-C 10
71391577	313	1-C 10
71391579	313	1-C 10
71391592	315	1-C 10
71391620	437	1-C 22
71391624	443	1-C 23
71391624	447	1-C 23
71391625	409	1-C 19
71391625	579	1-D 12
71391643	285	1-C 7
71391654	285	1-C 7
71391654	395	1-C 18
71391656	501	1-D 5
71391657	505	1-D 5
71391659	249	1-C 3
71391660	285	1-C 7
71391709	179	1-B 20
71391713	83	1-B 11
71391713	167	1-B 19
71391746	89	1-B 11
71391747	89	1-B 11
71391748	91	1-B 12
71391752	281	1-C 7
71391762	261	1-C 5
71391764	259	1-C 4
71391792	213	1-B 24
71391831	415	1-C 20
71391835	415	1-C 20
71391848	397	1-C 18
71391849	395	1-C 18
71391850	393	1-C 18
71391851	85	1-B 11
71391858	151	1-B 18
71391869	151	1-B 18
71391869	583	1-D 13
71391870	155	1-B 18
71391870	159	1-B 18
71391870	179	1-B 20
71391871	179	1-B 20
71391874	175	1-B 20
71391897	85	1-B 11
71391899	85	1-B 11
71391902	275	1-C 6
71391932	409	1-C 19
71391935	393	1-C 18
71391938	393	1-C 18
71391939	393	1-C 18
71391946	393	1-C 18
71391947	393	1-C 18
71391948	395	1-C 18
71391951	393	1-C 18
71391953	399	1-C 18
71391954	397	1-C 18
71391956	395	1-C 18
71391957	397	1-C 18
71391960C	399	1-C 18
71391961	401	1-C 19
71391962	401	1-C 19
71391963	401	1-C 19
71391964	401	1-C 19
71391966	399	1-C 18
71391967	397	1-C 18
71391968	397	1-C 18
71391969	397	1-C 18
71391970	397	1-C 18
71391971	397	1-C 18
71391972	397	1-C 18
71391974	373	1-C 16
71391975	373	1-C 16
71392194	501	1-D 5
71392601	399	1-C 18
71392602	399	1-C 18
71392605	397	1-C 18
71392610	397	1-C 18
71392611	395	1-C 18
71392616	395	1-C 18
71392616	401	1-C 19
71392618	399	1-C 18
71392620	395	1-C 18
71392621	401	1-C 19
71392622	401	1-C 19
71392624	401	1-C 19
71392654	397	1-C 18
71392656	395	1-C 18
71392657	395	1-C 18
71392658	401	1-C 19

Part No.	Page	Grid	Part No.	Page	Grid	Part No.	Page	Grid	Part No.	Page	Grid
71392663	399	1-C 18	71393263	351	1-C 14	71393616	135	1-B 16	71393924	437	1-C 22
71392664	399	1-C 18	71393264	351	1-C 14	71393617	135	1-B 16	71393926	89	1-B 11
71392675	373	1-C 16	71393265	351	1-C 14	71393619	135	1-B 16	71393926	111	1-B 14
71392677	339	1-C 12	71393268	351	1-C 14	71393620	135	1-B 16	71393929	111	1-B 14
71392681	335	1-C 12	71393269	351	1-C 14	71393636	71	1-B 10	71393938	91	1-B 12
71392690	273	1-C 6	71393273	351	1-C 14	71393650	69	1-B 9	71393939	109	1-B 13
71392691	339	1-C 12	71393274	351	1-C 14	71393666	219	1-B 24	71393940	89	1-B 11
71392692	339	1-C 12	71393277	165	1-B 19	71393671	219	1-B 24	71393941	91	1-B 12
71392693	339	1-C 12	71393278	175	1-B 20	71393694	113	1-B 14	71393943	103	1-B 13
71392694	339	1-C 12	71393281	121	1-B 15	71393695B	113	1-B 14	71393943	137	1-B 16
71392696	335	1-C 12	71393282	121	1-B 15	71393703	183	1-B 21	71393944	91	1-B 12
71392697	335	1-C 12	71393285	165	1-B 19	71393704	177	1-B 20	71393947	91	1-B 12
71392698	335	1-C 12	71393287	173	1-B 20	71393713	155	1-B 18	71393948	135	1-B 16
71392700	349	1-C 13	71393301	119	1-B 14	71393713	159	1-B 18	71393949	135	1-B 16
71392705	67	1-B 9	71393307	83	1-B 11	71393716	175	1-B 20	71393950	135	1-B 16
71392766	507	1-D 5	71393323	103	1-B 13	71393717	175	1-B 20	71393977C	421	1-C 21
71392776	33	1-B 6	71393324	103	1-B 13	71393718	157	1-B 18	71393984	417	1-C 20
71392776	331	1-C 12	71393350	169	1-B 19	71393718	161	1-B 19	71393992	417	1-C 20
71392778	391	1-C 18	71393352	261	1-C 5	71393718	175	1-B 20	71393994	417	1-C 20
71392779	389	1-C 17	71393387	313	1-C 10	71393718	535	1-D 8	71393995	417	1-C 20
71392781	379	1-C 16	71393389	313	1-C 10	71393718	583	1-D 13	71394119	337	1-C 12
71392782	379	1-C 16	71393391	313	1-C 10	71393742	177	1-B 20	71394126	287	1-C 7
71392787	543	1-D 9	71393392	313	1-C 10	71393776	189	1-B 21	71394127	287	1-C 7
71392788	543	1-D 9	71393401	351	1-C 14	71393778	189	1-B 21	71394128	287	1-C 7
71392829	425	1-C 21	71393402	351	1-C 14	71393780	189	1-B 21	71394129	287	1-C 7
71392835C	425	1-C 21	71393403B	353	1-C 14	71393782	191	1-B 22	71394130	287	1-C 7
71392837	421	1-C 21	71393404	353	1-C 14	71393784	189	1-B 21	71394131	287	1-C 7
71392846	411	1-C 20	71393405	351	1-C 14	71393786	189	1-B 21	71394132	287	1-C 7
71392847	411	1-C 20	71393410	399	1-C 18	71393788	189	1-B 21	71394133	287	1-C 7
71392852	469	1-D 1	71393411	399	1-C 18	71393818	339	1-C 12	71394133	579	1-D 12
71392853	469	1-D 1	71393413	393	1-C 18	71393822B	327	1-C 11	71394134	287	1-C 7
71392854	469	1-D 1	71393414	393	1-C 18	71393824	327	1-C 11	71394137	229	1-C 1
71392855	469	1-D 1	71393416	393	1-C 18	71393831C	59	1-B 8	71394141	73	1-B 10
71392856	469	1-D 1	71393419	353	1-C 14	71393831C	65	1-B 9	71394141	75	1-B 10
71392857	469	1-D 1	71393424B	403	1-C 19	71393842	61	1-B 9	71394141	79	1-B 10
71392870	285	1-C 7	71393425P	403	1-C 19	71393843	451	1-C 24	71394146	453	1-C 24
71392870	527	1-D 7	71393429	347	1-C 13	71393847	75	1-B 10	71394150	453	1-C 24
71392870	535	1-D 8	71393439	299	1-C 8	71393847	79	1-B 10	71394151	453	1-C 24
71392872	453	1-C 24	71393440	333	1-C 12	71393849	545	1-D 9	71394168	487	1-D 3
71392875	453	1-C 24	71393440	339	1-C 12	71393850	55	1-B 8	71394169	247	1-C 3
71392876	121	1-B 15	71393455	103	1-B 13	71393854	379	1-C 16	71394170	247	1-C 3
71392876	453	1-C 24	71393463	135	1-B 16	71393854	383	1-C 17	71394172	145	1-B 17
71392879	487	1-D 3	71393467	119	1-B 14	71393867B	407	1-C 19	71394173	451	1-C 24
71392881	453	1-C 24	71393468	87	1-B 11	71393868	407	1-C 19	71394174	489	1-D 3
71392882	487	1-D 3	71393469	87	1-B 11	71393869B	407	1-C 19	71394175	33	1-B 6
71392886	287	1-C 7	71393470	87	1-B 11	71393870	407	1-C 19	71394175	369	1-C 15
71392887	287	1-C 7	71393471	87	1-B 11	71393871B	407	1-C 19	71394303	443	1-C 23
71392888	287	1-C 7	71393472	87	1-B 11	71393873	403	1-C 19	71394303	447	1-C 23
71392889	287	1-C 7	71393473	87	1-B 11	71393875	405	1-C 19	71394306	445	1-C 23
71392890	287	1-C 7	71393474	87	1-B 11	71393876	87	1-B 11	71394318	373	1-C 16
71392891	287	1-C 7	71393474	581	1-D 13	71393878	87	1-B 11	71394321	395	1-C 18
71392892	287	1-C 7	71393475	87	1-B 11	71393879	87	1-B 11	71394321	401	1-C 19
71392894	287	1-C 7	71393476	413	1-C 20	71393881	87	1-B 11	71394322	395	1-C 18
71392895	287	1-C 7	71393492	415	1-C 20	71393883	87	1-B 11	71394323	395	1-C 18
71392896	287	1-C 7	71393493	415	1-C 20	71393885	85	1-B 11	71394325	401	1-C 19
71392897	287	1-C 7	71393493	431	1-C 22	71393886	87	1-B 11	71394352	331	1-C 12
71392898	287	1-C 7	71393493	435	1-C 22	71393887	87	1-B 11	71394352	571	1-D 12
71392899	287	1-C 7	71393494	415	1-C 20	71393888	87	1-B 11	71394352	577	1-D 12
71392900	287	1-C 7	71393526	347	1-C 13	71393893	83	1-B 11	71394353	251	1-C 4
71393101	251	1-C 4	71393533	573	1-D 12	71393893	135	1-B 16	71394354	251	1-C 4
71393101	581	1-D 13	71393534	349	1-C 13	71393893	139	1-B 16	71394356B	331	1-C 12
71393107	281	1-C 7	71393534	573	1-D 12	71393893	579	1-D 12	71394363	255	1-C 4
71393118	265	1-C 5	71393534	579	1-D 12	71393901	403	1-C 19	71394364	255	1-C 4
71393122	267	1-C 5	71393543	337	1-C 12	71393907	403	1-C 19	71394397	253	1-C 4
71393220	251	1-C 4	71393546	349	1-C 13	71393908	403	1-C 19	71394418P	407	1-C 19
71393236	547	1-D 9	71393547	347	1-C 13	71393909	403	1-C 19	71394419	401	1-C 19
71393251	401	1-C 19	71393551	135	1-B 16	71393913	403	1-C 19	71394420	401	1-C 19
71393252	399	1-C 18	71393601	89	1-B 11	71393916	379	1-C 16	71394472	95	1-B 12
71393253	399	1-C 18	71393604	89	1-B 11	71393916	383	1-C 17	71394501	85	1-B 11
71393257	399	1-C 18	71393605	89	1-B 11	71393917	393	1-C 18	71394502	85	1-B 11
71393258	353	1-C 14	71393609	109	1-B 13	71393918	393	1-C 18	71394503	85	1-B 11
71393259	353	1-C 14	71393612	109	1-B 13	71393919	441	1-C 23	71394514	89	1-B 11
71393260	355	1-C 14	71393613	109	1-B 13	71393919	449	1-C 23	71394515	89	1-B 11
71393261	355	1-C 14	71393614	109	1-B 13	71393921	445	1-C 23	71394516	89	1-B 11
71393262	355	1-C 14	71393615	109	1-B 13	71393923	445	1-C 23	71394517	89	1-B 11

INDEX

Part No.	Page	Grid
71394518	89	1-B 11
71394519	89	1-B 11
71394521	89	1-B 11
71394522	89	1-B 11
71394523	85	1-B 11
71394525	83	1-B 11
71394534	349	1-C 13
71394540	337	1-C 12
71394674	191	1-B 22
71394681	395	1-C 18
71394688	401	1-C 19
71394716	165	1-B 19
71394716	249	1-C 3
71394717	169	1-B 19
71394721	175	1-B 20
71394789	113	1-B 14
71394790	113	1-B 14
71394791	87	1-B 11
71394792	87	1-B 11
71394795	119	1-B 14
71394796	117	1-B 14
71394797	119	1-B 14
71394799	117	1-B 14
71394800	107	1-B 13
71394821	191	1-B 22
71394821	195	1-B 22
71394833	335	1-C 12
71394841	339	1-C 12
71394865C	433	1-C 22
71394867C	425	1-C 21
71394874P	419	1-C 20
71394874P	429	1-C 21
71394877	91	1-B 12
71394878	89	1-B 11
71394879	91	1-B 12
71394884	91	1-B 12
71394885	91	1-B 12
71394886	125	1-B 15
71394887	125	1-B 15
71394890	91	1-B 12
71394891	91	1-B 12
71394892	91	1-B 12
71394893	91	1-B 12
71394894	125	1-B 15
71394896	91	1-B 12
71394897	91	1-B 12
71394898	91	1-B 12
71394899	91	1-B 12
71394900	91	1-B 12
71394920	403	1-C 19
71394957	335	1-C 12
71394960	337	1-C 12
71394962	335	1-C 12
71394966	339	1-C 12
71394967	339	1-C 12
71394969	339	1-C 12
71394970	325	1-C 11
71395048	181	1-B 21
71395048	575	1-D 12
71395151	543	1-D 9
71395152	543	1-D 9
71395153	543	1-D 9
71395154	543	1-D 9
71395155	543	1-D 9
71395157	543	1-D 9
71395158	543	1-D 9
71395159	543	1-D 9
71395160	543	1-D 9
71395161	543	1-D 9
71395162	543	1-D 9
71395163	543	1-D 9
71395167	559	1-D 10
71395172	555	1-D 10
71395172	561	1-D 11
71395173	555	1-D 10
71395173	561	1-D 11
71395175	53	1-B 8
71395229	313	1-C 10
71395232	313	1-C 10
71395234	315	1-C 10
71395239	301	1-C 9
71395244	301	1-C 9
71395250	303	1-C 9
71395261	335	1-C 12
71395266	339	1-C 12
71395273	325	1-C 11
71395275	83	1-B 11
71395332	547	1-D 9
71395334	263	1-C 5
71395335	263	1-C 5
71395336	263	1-C 5
71395337	265	1-C 5
71395338	265	1-C 5
71395339	263	1-C 5
71395344	271	1-C 6
71395346	271	1-C 6
71395351	421	1-C 21
71395351	433	1-C 22
71395353	419	1-C 20
71395353	429	1-C 21
71395354	419	1-C 20
71395354	429	1-C 21
71395359	415	1-C 20
71395372	411	1-C 20
71395375	411	1-C 20
71395376	413	1-C 20
71395385C	425	1-C 21
71395386	407	1-C 19
71395387	407	1-C 19
71395388	407	1-C 19
71395389	407	1-C 19
71395390	407	1-C 19
71395407	265	1-C 5
71395413	281	1-C 7
71395571	327	1-C 11
71395572	327	1-C 11
71395573	327	1-C 11
71395576	335	1-C 12
71395582	335	1-C 12
71395583	335	1-C 12
71395585	547	1-D 9
71395586	547	1-D 9
71395589	335	1-C 12
71395728	71	1-B 10
71395743	45	1-B 7
71395743	49	1-B 7
71395744	43	1-B 7
71395744	47	1-B 7
71395745	37	1-B 6
71395746	37	1-B 6
71395747	43	1-B 7
71395749	71	1-B 10
71395750	69	1-B 9
71395752	117	1-B 14
71395753	117	1-B 14
71395754	109	1-B 13
71395760	91	1-B 12
71395761	121	1-B 15
71395762	33	1-B 6
71395763	103	1-B 13
71395763	137	1-B 16
71395764	111	1-B 14
71395767	89	1-B 11
71395768	91	1-B 12
71395769	91	1-B 12
71395770	119	1-B 14
71395771	91	1-B 12
71395773	91	1-B 12
71395776B	53	1-B 8
71395787	559	1-D 10
71395789	555	1-D 10
71395789	561	1-D 11
71395799	221	1-C 1
71395805	51	1-B 8
71395808	51	1-B 8
71395810	51	1-B 8
71395813	53	1-B 8
71395825	529	1-D 7
71395830	181	1-B 21
71395830	575	1-D 12
71395832	151	1-B 18
71395838B	151	1-B 18
71395840	151	1-B 18
71395848	117	1-B 14
71395848	165	1-B 19
71395855	327	1-C 11
71395865	335	1-C 12
71395872	53	1-B 8
71395877	225	1-C 1
71395877	227	1-C 1
71395877	573	1-D 12
71395877	583	1-D 13
71395903C	55	1-B 8
71395906	69	1-B 9
71395913	35	1-B 6
71395917	43	1-B 7
71395918	35	1-B 6
71395921	55	1-B 8
71395922	43	1-B 7
71395923	55	1-B 8
71395976B	353	1-C 14
71395983	379	1-C 16
71395983	383	1-C 17
71395984	437	1-C 22
71395987	31	1-B 6
71395991	437	1-C 22
71395992C	401	1-C 19
71395993	439	1-C 22
71395996	399	1-C 18
71395997	399	1-C 18
71395998	353	1-C 14
71395998	583	1-D 13
71396110	365	1-C 15
71396124	357	1-C 14
71396137	527	1-D 7
71396169	527	1-D 7
71396226	313	1-C 10
71396227	315	1-C 10
71396228	315	1-C 10
71396229	315	1-C 10
71396259	145	1-B 17
71396263	73	1-B 10
71396264	485	1-D 3
71396265	485	1-D 3
71396266	485	1-D 3
71396267	483	1-D 3
71396267	485	1-D 3
71396269	73	1-B 10
71396269	75	1-B 10
71396269	79	1-B 10
71396273	113	1-B 14
71396276	83	1-B 11
71396283	93	1-B 12
71396348	567	1-D 11
71396349	567	1-D 11
71396355	53	1-B 8
71396374	567	1-D 11
71396377	125	1-B 15
71396381	135	1-B 16
71396382	135	1-B 16
71396385	53	1-B 8
71396387	117	1-B 14
71396390	135	1-B 16
71396391	165	1-B 19
71396393	119	1-B 14
71396394	119	1-B 14
71396396	117	1-B 14
71396397	125	1-B 15
71396398	125	1-B 15
71396401	419	1-C 20
71396401	429	1-C 21
71396403B	407	1-C 19
71396404B	407	1-C 19
71396414	385	1-C 17
71396453	325	1-C 11
71396456	339	1-C 12
71396462	339	1-C 12
71396467	347	1-C 13
71396469	341	1-C 13
71396470	333	1-C 12
71396472	333	1-C 12
71396481	227	1-C 1
71396501	93	1-B 12
71396501	99	1-B 12
71396510	93	1-B 12
71396510	99	1-B 12
71396558	543	1-D 9
71396567	51	1-B 8
71396569	53	1-B 8
71396569	569	1-D 11
71396569	577	1-D 12
71396580	557	1-D 10
71396580	563	1-D 11
71396581	563	1-D 11
71396582	563	1-D 11
71396583	563	1-D 11
71396584	563	1-D 11
71396585	563	1-D 11
71396586	563	1-D 11
71396587	563	1-D 11
71396588	563	1-D 11
71396589	563	1-D 11
71396590	563	1-D 11
71396591	563	1-D 11
71396592	563	1-D 11
71396593	563	1-D 11
71396594	563	1-D 11
71396595	563	1-D 11
71396596	563	1-D 11
71396596	579	1-D 12
71396597	563	1-D 11
71396598	563	1-D 11
71396599	563	1-D 11
71396600	563	1-D 11
71396601	559	1-D 10
71396601	563	1-D 11
71396602	563	1-D 11
71396603	563	1-D 11
71396604	563	1-D 11
71396605	563	1-D 11
71396606	563	1-D 11
71396607	563	1-D 11
71396608	563	1-D 11
71396609	563	1-D 11
71396610	563	1-D 11
71396611	563	1-D 11
71396612	563	1-D 11
71396613	563	1-D 11
71396614	563	1-D 11
71396615	563	1-D 11
71396616	563	1-D 11
71396617	461	1-D 1
71396617	559	1-D 10
71396618	459	1-C 24
71396618	461	1-D 1
71396619	461	1-D 1
71396620	459	1-C 24
71396620	461	1-D 1
71396621	459	1-C 24
71396621	461	1-D 1

Part No.	Page	Grid	Part No.	Page	Grid	Part No.	Page	Grid	Part No.	Page	Grid
71396622	461	1-D 1	71396977C	43	1-B 7	71397388	323	1-C 11	71397682	185	1-B 21
71396623	459	1-C 24	71396979	35	1-B 6	71397389	323	1-C 11	71397683	185	1-B 21
71396623	461	1-D 1	71396980	55	1-B 8	71397390	321	1-C 11	71397684	185	1-B 21
71396624	459	1-C 24	71396983	43	1-B 7	71397391	321	1-C 11	71397685	185	1-B 21
71396624	461	1-D 1	71396983	47	1-B 7	71397392	321	1-C 11	71397686	185	1-B 21
71396625	557	1-D 10	71396984	37	1-B 6	71397393	321	1-C 11	71397687	185	1-B 21
71396625	565	1-D 11	71396984	41	1-B 7	71397394	321	1-C 11	71397688	185	1-B 21
71396653	353	1-C 14	71396990	43	1-B 7	71397427	91	1-B 12	71397689	185	1-B 21
71396653	581	1-D 13	71396991	43	1-B 7	71397428	53	1-B 8	71397690	185	1-B 21
71396662C	373	1-C 16	71396992	35	1-B 6	71397429	117	1-B 14	71397691	185	1-B 21
71396664C	401	1-C 19	71396994	43	1-B 7	71397432	137	1-B 16	71397692	185	1-B 21
71396677	95	1-B 12	71396994	47	1-B 7	71397433	137	1-B 16	71397693	185	1-B 21
71396682B	93	1-B 12	71396996	487	1-D 3	71397434	137	1-B 16	71397695	185	1-B 21
71396684	93	1-B 12	71396996	493	1-D 4	71397436	137	1-B 16	71397697	185	1-B 21
71396707	35	1-B 6	71397111	403	1-C 19	71397437	137	1-B 16	71397698	185	1-B 21
71396709	35	1-B 6	71397121	403	1-C 19	71397438	137	1-B 16	71397701	185	1-B 21
71396715	37	1-B 6	71397122	403	1-C 19	71397439	137	1-B 16	71397702	185	1-B 21
71396715	41	1-B 7	71397124	403	1-C 19	71397440	137	1-B 16	71397703	185	1-B 21
71396715	147	1-B 17	71397152	365	1-C 15	71397441	137	1-B 16	71397704	187	1-B 21
71396715	579	1-D 12	71397153	365	1-C 15	71397443	137	1-B 16	71397705	187	1-B 21
71396716	147	1-B 17	71397173	321	1-C 11	71397443	579	1-D 12	71397706	187	1-B 21
71396729	93	1-B 12	71397179	557	1-D 10	71397444	139	1-B 16	71397707	187	1-B 21
71396729	99	1-B 12	71397180	557	1-D 10	71397445	139	1-B 16	71397708	187	1-B 21
71396735	95	1-B 12	71397181	557	1-D 10	71397446	139	1-B 16	71397709	187	1-B 21
71396736	107	1-B 13	71397184	559	1-D 10	71397447	139	1-B 16	71397710	187	1-B 21
71396743	93	1-B 12	71397185	557	1-D 10	71397448	139	1-B 16	71397711	187	1-B 21
71396743	95	1-B 12	71397186	557	1-D 10	71397449	139	1-B 16	71397712	187	1-B 21
71396745	95	1-B 12	71397187	557	1-D 10	71397452B	189	1-B 21	71397713	187	1-B 21
71396752	69	1-B 9	71397189	559	1-D 10	71397478	527	1-D 7	71397714	187	1-B 21
71396753	71	1-B 10	71397190	559	1-D 10	71397480	527	1-D 7	71397715	187	1-B 21
71396754	71	1-B 10	71397191	559	1-D 10	71397481	527	1-D 7	71397716	187	1-B 21
71396754	577	1-D 12	71397192	559	1-D 10	71397482	527	1-D 7	71397717	187	1-B 21
71396755	71	1-B 10	71397193	557	1-D 10	71397483	527	1-D 7	71397718	187	1-B 21
71396755	483	1-D 3	71397194	559	1-D 10	71397484	527	1-D 7	71397719	187	1-B 21
71396756	71	1-B 10	71397195	559	1-D 10	71397485	527	1-D 7	71397720	187	1-B 21
71396758	71	1-B 10	71397196	557	1-D 10	71397486	527	1-D 7	71397721	187	1-B 21
71396758	483	1-D 3	71397197	557	1-D 10	71397487	527	1-D 7	71397722	187	1-B 21
71396759	35	1-B 6	71397198	557	1-D 10	71397492	483	1-D 3	71397724	187	1-B 21
71396762	35	1-B 6	71397199	557	1-D 10	71397493	319	1-C 10	71397725	155	1-B 18
71396762	39	1-B 6	71397201	559	1-D 10	71397493	483	1-D 3	71397725	159	1-B 18
71396763	37	1-B 6	71397202	557	1-D 10	71397506	97	1-B 12	71397725	179	1-B 20
71396763	41	1-B 7	71397203	557	1-D 10	71397510	95	1-B 12	71397725	187	1-B 21
71396764	37	1-B 6	71397204	557	1-D 10	71397511	95	1-B 12	71397726	155	1-B 18
71396764	41	1-B 7	71397205	557	1-D 10	71397515	95	1-B 12	71397726	159	1-B 18
71396768	73	1-B 10	71397222	251	1-C 4	71397523	107	1-B 13	71397729	155	1-B 18
71396771	37	1-B 6	71397244	383	1-C 17	71397524	107	1-B 13	71397729	159	1-B 18
71396771	41	1-B 7	71397245	383	1-C 17	71397526	97	1-B 12	71397731	187	1-B 21
71396788	47	1-B 7	71397246	379	1-C 16	71397532	97	1-B 12	71397732	187	1-B 21
71396790	37	1-B 6	71397246	383	1-C 17	71397535	97	1-B 12	71397733	187	1-B 21
71396792	73	1-B 10	71397247	383	1-C 17	71397536	97	1-B 12	71397734	187	1-B 21
71396792	75	1-B 10	71397248	381	1-C 17	71397538	97	1-B 12	71397735	187	1-B 21
71396793	73	1-B 10	71397255	95	1-B 12	71397539	123	1-B 15	71397736	187	1-B 21
71396794	73	1-B 10	71397261	119	1-B 14	71397540	123	1-B 15	71397737	187	1-B 21
71396795	73	1-B 10	71397262	119	1-B 14	71397541	123	1-B 15	71397738	187	1-B 21
71396796	145	1-B 17	71397263	119	1-B 14	71397542	123	1-B 15	71397739	187	1-B 21
71396797	145	1-B 17	71397265	97	1-B 12	71397543	123	1-B 15	71397740	187	1-B 21
71396798	149	1-B 17	71397268	97	1-B 12	71397544	123	1-B 15	71397741	187	1-B 21
71396952	161	1-B 19	71397271	97	1-B 12	71397545	123	1-B 15	71397742	187	1-B 21
71396954	107	1-B 13	71397272	97	1-B 12	71397546	123	1-B 15	71397743	187	1-B 21
71396955	151	1-B 18	71397303	437	1-C 22	71397547	123	1-B 15	71397826	123	1-B 15
71396956	153	1-B 18	71397348	317	1-C 10	71397548	123	1-B 15	71397827	123	1-B 15
71396957	35	1-B 6	71397349	317	1-C 10	71397549	123	1-B 15	71397828	123	1-B 15
71396957	39	1-B 6	71397350	317	1-C 10	71397550	123	1-B 15	71397829	123	1-B 15
71396957	157	1-B 18	71397378	321	1-C 11	71397631	37	1-B 6	71397830	123	1-B 15
71396957	161	1-B 19	71397378	577	1-D 12	71397633	71	1-B 10	71397831	123	1-B 15
71396957	163	1-B 19	71397379	321	1-C 11	71397634	71	1-B 10	71397832	123	1-B 15
71396957	577	1-D 12	71397379	577	1-D 12	71397644	75	1-B 10	71397833	123	1-B 15
71396963	155	1-B 18	71397380	321	1-C 11	71397644	79	1-B 10	71397834	123	1-B 15
71396970	169	1-B 19	71397380	583	1-D 13	71397650	147	1-B 17	71397835	123	1-B 15
71396970	581	1-D 13	71397381	323	1-C 11	71397676	185	1-B 21	71397836	123	1-B 15
71396971	169	1-B 19	71397382	323	1-C 11	71397677	185	1-B 21	71397837	105	1-B 13
71396971	581	1-D 13	71397383	323	1-C 11	71397678	185	1-B 21	71397838	103	1-B 13
71396972	169	1-B 19	71397384	323	1-C 11	71397679	185	1-B 21	71397839	103	1-B 13
71396976	55	1-B 8	71397385	323	1-C 11	71397680	185	1-B 21	71397840	103	1-B 13
71396976	61	1-B 9	71397387	323	1-C 11	71397681	185	1-B 21	71397842	99	1-B 12

INDEX

Part No.	Page	Grid	Part No.	Page	Grid	Part No.	Page	Grid	Part No.	Page	Grid
71397878	43	1-B 7	71398358	213	1-B 24	71398791	133	1-B 16	71398956	59	1-B 8
71397881	49	1-B 7	71398360	213	1-B 24	71398792	133	1-B 16	71398956	65	1-B 9
71397882P	47	1-B 7	71398360	217	1-B 24	71398793	133	1-B 16	71398957	59	1-B 8
71397884	49	1-B 7	71398361	213	1-B 24	71398794	133	1-B 16	71398957	65	1-B 9
71397885	49	1-B 7	71398362	221	1-C 1	71398795	133	1-B 16	71398958C	421	1-C 21
71397886	49	1-B 7	71398364	217	1-B 24	71398796	133	1-B 16	71398959C	421	1-C 21
71397887	49	1-B 7	71398365	221	1-C 1	71398798	133	1-B 16	71398961	425	1-C 21
71397889	47	1-B 7	71398376	205	1-B 23	71398799	133	1-B 16	71398961	433	1-C 22
71397895	47	1-B 7	71398379	213	1-B 24	71398800	133	1-B 16	71398964C	423	1-C 21
71397926	139	1-B 16	71398384	211	1-B 24	71398801	133	1-B 16	71398965C	435	1-C 22
71397927	139	1-B 16	71398384	571	1-D 12	71398802	133	1-B 16	71398966C	435	1-C 22
71397929	139	1-B 16	71398385	255	1-C 4	71398803	133	1-B 16	71398967	435	1-C 22
71397930	141	1-B 17	71398388	207	1-B 23	71398804	133	1-B 16	71398974	435	1-C 22
71397932	139	1-B 16	71398388	569	1-D 11	71398808	89	1-B 11	71398980	453	1-C 24
71397933	139	1-B 16	71398389	207	1-B 23	71398809	89	1-B 11	71398981	453	1-C 24
71397934	139	1-B 16	71398391	217	1-B 24	71398814	111	1-B 14	71398983	249	1-C 3
71397939	143	1-B 17	71398421	315	1-C 10	71398815	109	1-B 13	71398984	249	1-C 3
71397940	169	1-B 19	71398424	315	1-C 10	71398819	139	1-B 16	71398985	249	1-C 3
71397941	169	1-B 19	71398429	99	1-B 12	71398820	139	1-B 16	71398988	249	1-C 3
71397942	169	1-B 19	71398436	99	1-B 12	71398826	157	1-B 18	71398989	249	1-C 3
71397944	117	1-B 14	71398445	99	1-B 12	71398826	161	1-B 19	71398993	249	1-C 3
71397989	301	1-C 9	71398453C	419	1-C 20	71398828	155	1-B 18	71398994	249	1-C 3
71397999	335	1-C 12	71398453C	429	1-C 21	71398828	159	1-B 18	71398995	249	1-C 3
71398103	157	1-B 18	71398477	239	1-C 2	71398832	175	1-B 20	71399014	335	1-C 12
71398104	157	1-B 18	71398501	99	1-B 12	71398850	179	1-B 20	71399115	551	1-D 10
71398104	161	1-B 19	71398505	99	1-B 12	71398851	187	1-B 21	71399115	555	1-D 10
71398110	177	1-B 20	71398509	101	1-B 13	71398852	187	1-B 21	71399119	453	1-C 24
71398131	245	1-C 3	71398510	101	1-B 13	71398853	187	1-B 21	71399143	467	1-D 1
71398134	249	1-C 3	71398511	101	1-B 13	71398877C	433	1-C 22	71399143	491	1-D 4
71398136	249	1-C 3	71398514	101	1-B 13	71398878C	423	1-C 21	71399144	451	1-C 24
71398139	491	1-D 4	71398518	101	1-B 13	71398880C	423	1-C 21	71399177C	427	1-C 21
71398152	165	1-B 19	71398525	107	1-B 13	71398881C	419	1-C 20	71399178C	427	1-C 21
71398153	165	1-B 19	71398721	439	1-C 22	71398882	421	1-C 21	71399179	427	1-C 21
71398154	165	1-B 19	71398726	127	1-B 15	71398883C	421	1-C 21	71399185C	433	1-C 22
71398155	165	1-B 19	71398727	127	1-B 15	71398883C	425	1-C 21	71399186C	433	1-C 22
71398165	109	1-B 13	71398728	129	1-B 15	71398884C	425	1-C 21	71399187C	433	1-C 22
71398171	83	1-B 11	71398731	131	1-B 16	71398886C	425	1-C 21	71399190	423	1-C 21
71398172	127	1-B 15	71398732	133	1-B 16	71398888C	425	1-C 21	71399191B	425	1-C 21
71398173	129	1-B 15	71398733	131	1-B 16	71398889	425	1-C 21	71399195C	433	1-C 22
71398174	127	1-B 15	71398734	131	1-B 16	71398890C	425	1-C 21	71399196C	433	1-C 22
71398175	127	1-B 15	71398735	131	1-B 16	71398891C	423	1-C 21	71399197	429	1-C 21
71398175	133	1-B 16	71398736	131	1-B 16	71398892C	423	1-C 21	71399198	419	1-C 20
71398182	99	1-B 12	71398737	131	1-B 16	71398893C	423	1-C 21	71399198	429	1-C 21
71398188B	99	1-B 12	71398738	131	1-B 16	71398896	423	1-C 21	71399199	419	1-C 20
71398196	99	1-B 12	71398739	131	1-B 16	71398899B	425	1-C 21	71399199	429	1-C 21
71398197	99	1-B 12	71398740	131	1-B 16	71398900	419	1-C 20	71399228	187	1-B 21
71398202	411	1-C 20	71398741	131	1-B 16	71398901	433	1-C 22	71399270P	405	1-C 19
71398203	491	1-D 4	71398742	131	1-B 16	71398906C	431	1-C 22	71399271P	405	1-C 19
71398211	567	1-D 11	71398743	131	1-B 16	71398906C	435	1-C 22	71399326	419	1-C 20
71398212	567	1-D 11	71398744	131	1-B 16	71398907C	435	1-C 22	71399326	429	1-C 21
71398223	545	1-D 9	71398745	131	1-B 16	71398908C	435	1-C 22	71399329	423	1-C 21
71398224	545	1-D 9	71398746	131	1-B 16	71398911B	423	1-C 21	71399329	433	1-C 22
71398226	545	1-D 9	71398749	131	1-B 16	71398912	433	1-C 22	71399330C	421	1-C 21
71398227	451	1-C 24	71398750	131	1-B 16	71398913	433	1-C 22	71399331	431	1-C 22
71398228	555	1-D 10	71398761	279	1-C 6	71398914P	433	1-C 22	71399333	431	1-C 22
71398228	561	1-D 11	71398762	279	1-C 6	71398915C	419	1-C 20	71399338	57	1-B 8
71398241	567	1-D 11	71398763	279	1-C 6	71398916C	419	1-C 20	71399338	65	1-B 9
71398242	567	1-D 11	71398768	279	1-C 6	71398924C	419	1-C 20	71399341	427	1-C 21
71398243	567	1-D 11	71398769	279	1-C 6	71398925	419	1-C 20	71399341	435	1-C 22
71398244	567	1-D 11	71398770	279	1-C 6	71398926C	429	1-C 21	71399342C	429	1-C 21
71398245	567	1-D 11	71398771	279	1-C 6	71398927	429	1-C 21	71399343	429	1-C 21
71398271	281	1-C 7	71398777	131	1-B 16	71398932C	429	1-C 21	71399344P	429	1-C 21
71398275B	265	1-C 5	71398778	131	1-B 16	71398942	431	1-C 22	71399347P	431	1-C 22
71398327	541	1-D 9	71398779	131	1-B 16	71398942	435	1-C 22	71399347P	435	1-C 22
71398328	541	1-D 9	71398780	131	1-B 16	71398944	431	1-C 22	71399348	431	1-C 22
71398329	541	1-D 9	71398781	131	1-B 16	71398945	433	1-C 22	71399348	435	1-C 22
71398330	541	1-D 9	71398782	131	1-B 16	71398947C	421	1-C 21	71399426	107	1-B 13
71398331	51	1-B 8	71398783	131	1-B 16	71398948C	59	1-B 8	71399437B	93	1-B 12
71398331	577	1-D 12	71398784	131	1-B 16	71398948C	65	1-B 9	71399442	93	1-B 12
71398332	51	1-B 8	71398785	131	1-B 16	71398951C	59	1-B 8	71399442	99	1-B 12
71398333	51	1-B 8	71398786	131	1-B 16	71398951C	65	1-B 9	71399444	93	1-B 12
71398337	507	1-D 5	71398787	133	1-B 16	71398954C	59	1-B 8	71399444	99	1-B 12
71398354	535	1-D 8	71398788	133	1-B 16	71398954C	65	1-B 9	71399445	93	1-B 12
71398356	541	1-D 9	71398789	133	1-B 16	71398955C	59	1-B 8	71399445	101	1-B 13
71398357	251	1-C 4	71398790	133	1-B 16	71398955C	65	1-B 9	71399446	93	1-B 12

Part No.	Page	Grid	Part No.	Page	Grid	Part No.	Page	Grid	Part No.	Page	Grid
71399447	97	1-B 12	71400430	349	1-C 13	71401453	353	1-C 14	71403691	555	1-D 10
71399477	331	1-C 12	71400431	347	1-C 13	71401461	397	1-C 18	71403710B	389	1-C 17
71399481	331	1-C 12	71400432	347	1-C 13	71401462	355	1-C 14	71403712	389	1-C 17
71399483	213	1-B 24	71400435	347	1-C 13	71401463	449	1-C 23	71403852	193	1-B 22
71399484	213	1-B 24	71400460	427	1-C 21	71401468	449	1-C 23	71403880	547	1-D 9
71399484	217	1-B 24	71400461	427	1-C 21	71401470	447	1-C 23	71403891	325	1-C 11
71399485	221	1-C 1	71400501	109	1-B 13	71401526	135	1-B 16	71403891	369	1-C 15
71399487	221	1-C 1	71400502	91	1-B 12	71401526	139	1-B 16	71403918	393	1-C 18
71399505	213	1-B 24	71400504	91	1-B 12	71401530	139	1-B 16	71403919	379	1-C 16
71399505	571	1-D 12	71400505	167	1-B 19	71401533	83	1-B 11	71403919	397	1-C 18
71399508	205	1-B 23	71400508	131	1-B 16	71401534	127	1-B 15	71403922	395	1-C 18
71399511	205	1-B 23	71400509	131	1-B 16	71401544	143	1-B 17	71404300	205	1-B 23
71399519	217	1-B 24	71400510	131	1-B 16	71401545	139	1-B 16	71404303	449	1-C 23
71399519	571	1-D 12	71400511	131	1-B 16	71401546	139	1-B 16	71404305	447	1-C 23
71399520	217	1-B 24	71400512	131	1-B 16	71401548	137	1-B 16	71404306B	443	1-C 23
71399521	537	1-D 8	71400523	139	1-B 16	71401626	195	1-B 22	71404306B	447	1-C 23
71399524	221	1-C 1	71400523	143	1-B 17	71401627	195	1-B 22	71404326	273	1-C 6
71399637	281	1-C 7	71400549	337	1-C 12	71401628	195	1-B 22	71404357	547	1-D 9
71399641	281	1-C 7	71400554	61	1-B 9	71401632	195	1-B 22	71404359	547	1-D 9
71399654	381	1-C 17	71400556	73	1-B 10	71401633	195	1-B 22	71404396	69	1-B 9
71399656	381	1-C 17	71400556	75	1-B 10	71401636	195	1-B 22	71404399	69	1-B 9
71399658	385	1-C 17	71400556	79	1-B 10	71401637	195	1-B 22	71404400	69	1-B 9
71399661	381	1-C 17	71400561	47	1-B 7	71401638	195	1-B 22	71404401	69	1-B 9
71399662P	381	1-C 17	71400562	47	1-B 7	71401643	437	1-C 22	71404402	69	1-B 9
71399665	383	1-C 17	71400603	329	1-C 11	71401645	439	1-C 22	71404403	69	1-B 9
71399666	383	1-C 17	71400626	97	1-B 12	71401645	447	1-C 23	71404404	69	1-B 9
71399669	385	1-C 17	71400628	95	1-B 12	71401658	197	1-B 22	71404414	67	1-B 9
71399674	383	1-C 17	71400630	95	1-B 12	71401660	197	1-B 22	71404416	63	1-B 9
71399675C	381	1-C 17	71400631	95	1-B 12	71401661	439	1-C 22	71404417	63	1-B 9
71399675R	397	1-C 18	71400635	83	1-B 11	71401700	93	1-B 12	71404420	61	1-B 9
71399697	49	1-B 7	71400641	95	1-B 12	71401701	97	1-B 12	71404430	567	1-D 11
71399802	361	1-C 15	71400645	97	1-B 12	71401707	93	1-B 12	71404432	567	1-D 11
71399807	347	1-C 13	71400646	97	1-B 12	71401710B	95	1-B 12	71404436	149	1-B 17
71399829	189	1-B 21	71400654	507	1-D 5	71401715	85	1-B 11	71404450	77	1-B 10
71399830	189	1-B 21	71400661	251	1-C 4	71401718P	107	1-B 13	71404450	81	1-B 11
71399854	387	1-C 17	71400669	391	1-C 18	71401719	107	1-B 13	71404450	455	1-C 24
71399858	381	1-C 17	71400691	451	1-C 24	71401722	101	1-B 13	71405933B	403	1-C 19
71399861	381	1-C 17	71400693	553	1-D 10	71401723	101	1-B 13	71405945	411	1-C 20
71399870	441	1-C 23	71400698	553	1-D 10	71401727	491	1-D 4	71405950C	411	1-C 20
71399985	361	1-C 15	71400701	553	1-D 10	71401728	489	1-D 3	71405972	79	1-B 10
71399994	347	1-C 13	71400705	553	1-D 10	71401729	491	1-D 4	71405973	75	1-B 10
71400002	561	1-D 11	71400710	555	1-D 10	71401730	287	1-C 7	71405973	79	1-B 10
71400006	533	1-D 8	71400711	555	1-D 10	71401731	283	1-C 7	71405976	75	1-B 10
71400007	97	1-B 12	71400716	555	1-D 10	71401731	287	1-C 7	71405976	79	1-B 10
71400008	97	1-B 12	71400719	459	1-C 24	71401733	567	1-D 11	71405982	75	1-B 10
71400012	173	1-B 20	71400719	555	1-D 10	71401735	567	1-D 11	71405982	79	1-B 10
71400018	339	1-C 12	71400736	413	1-C 20	71401738	467	1-D 1	71405984	75	1-B 10
71400019	339	1-C 12	71400738	413	1-C 20	71401740	231	1-C 2	71405984	79	1-B 10
71400021	339	1-C 12	71400739	195	1-B 22	71401741	231	1-C 2	71405985	75	1-B 10
71400023	339	1-C 12	71400739	413	1-C 20	71401753	285	1-C 7	71405985	79	1-B 10
71400025	339	1-C 12	71400852	231	1-C 2	71401754	215	1-B 24	71405987	75	1-B 10
71400039	199	1-B 22	71400911C	411	1-C 20	71401756	215	1-B 24	71405987	79	1-B 10
71400042	241	1-C 3	71400912	411	1-C 20	71401799	61	1-B 9	71405988	75	1-B 10
71400045	281	1-C 7	71400913	413	1-C 20	71401807	61	1-B 9	71405988	79	1-B 10
71400046	281	1-C 7	71400915	351	1-C 14	71401848B	335	1-C 12	71406011	241	1-C 3
71400050	265	1-C 5	71400919	385	1-C 17	71401912	283	1-C 7	71406050	197	1-B 22
71400051	263	1-C 5	71400922C	373	1-C 16	71402015	97	1-B 12	71406070	173	1-B 20
71400052	263	1-C 5	71400970	189	1-B 21	71402104	189	1-B 21	71406074	183	1-B 21
71400053	261	1-C 5	71401208	363	1-C 15	71402109	181	1-B 21	71406084	197	1-B 22
71400059	319	1-C 10	71401212	361	1-C 15	71402112	183	1-B 21	71406260	349	1-C 13
71400061	265	1-C 5	71401220	361	1-C 15	71403605	31	1-B 6	71406280	529	1-D 7
71400062	265	1-C 5	71401221	361	1-C 15	71403618B	405	1-C 19	71406296	459	1-C 24
71400063	311	1-C 10	71401224	361	1-C 15	71403624B	437	1-C 22	71406297	459	1-C 24
71400065	295	1-C 8	71401307B	239	1-C 2	71403676	205	1-B 23	71406298	535	1-D 8
71400144	45	1-B 7	71401326	283	1-C 7	71403677	205	1-B 23	71406300	535	1-D 8
71400383	441	1-C 23	71401333	175	1-B 20	71403678	205	1-B 23	71406301	555	1-D 10
71400385	385	1-C 17	71401336	181	1-B 21	71403679	207	1-B 23	71406302	555	1-D 10
71400401	147	1-B 17	71401342	183	1-B 21	71403680	345	1-C 13	71406309	343	1-C 13
71400402	37	1-B 6	71401355	45	1-B 7	71403681	549	1-D 9	71406327	291	1-C 8
71400402	41	1-B 7	71401381	351	1-C 14	71403681	551	1-D 10	71406327	297	1-C 8
71400413	59	1-B 8	71401417	251	1-C 4	71403682	349	1-C 13	71406328	289	1-C 7
71400413	65	1-B 9	71401418	281	1-C 7	71403684	345	1-C 13	71406328	297	1-C 8
71400413	579	1-D 12	71401419	251	1-C 4	71403685	345	1-C 13	71406330	289	1-C 7
71400415	39	1-B 6	71401429	335	1-C 12	71403685	569	1-D 11	71406330	297	1-C 8
71400429	349	1-C 13	71401452	351	1-C 14	71403690	555	1-D 10	71406332	293	1-C 8

INDEX

Part No.	Page	Grid
71406332	297	1-C 8
71406333	297	1-C 8
71406333	305	1-C 9
71406334	297	1-C 8
71406339	293	1-C 8
71406339	297	1-C 8
71406339	571	1-D 12
71406339	577	1-D 12
71406361	289	1-C 7
71406361	297	1-C 8
71406361	571	1-D 12
71406361	577	1-D 12
71406362	289	1-C 7
71406364	293	1-C 8
71406364	309	1-C 9
71406368	293	1-C 8
71406368	309	1-C 9
71406414	413	1-C 20
71406454	337	1-C 12
71406471	547	1-D 9
71406476	171	1-B 20
71406478	171	1-B 20
71406480	169	1-B 19
71406481	169	1-B 19
71406492	165	1-B 19
71406504	193	1-B 22
71406510	193	1-B 22
71406512	197	1-B 22
71406514	193	1-B 22
71406518	193	1-B 22
71406520	193	1-B 22
71406608	49	1-B 7
71406619	77	1-B 10
71406619	81	1-B 11
71406694	67	1-B 9
71406749	107	1-B 13
71406751	101	1-B 13
71406753B	83	1-B 11
71406761	393	1-C 18
71406769	31	1-B 6
71406770	33	1-B 6
71406788	553	1-D 10
71406795	363	1-C 15
71406795	573	1-D 12
71406802	193	1-B 22
71406802	223	1-C 1
71406803	223	1-C 1
71406804	193	1-B 22
71406849	351	1-C 14
71406866	107	1-B 13
71406876	109	1-B 13
71406877S	91	1-B 12
71406878	119	1-B 14
71406891	139	1-B 16
71406894	165	1-B 19
71406894	167	1-B 19
71406895	125	1-B 15
71406934	227	1-C 1
71406951	301	1-C 9
71406952	301	1-C 9
71406953	301	1-C 9
71406954	301	1-C 9
71406957	335	1-C 12
71406970	301	1-C 9
71406971	301	1-C 9
71406972	301	1-C 9
71406973	301	1-C 9
71407048	349	1-C 13
71407048	363	1-C 15
71407158	295	1-C 8
71407293	177	1-B 20
71407293	409	1-C 19
71407293	583	1-D 13
71407298	165	1-B 19
71407327P	393	1-C 18
71407426	163	1-B 19
71407427	163	1-B 19
71407428	163	1-B 19
71407429	163	1-B 19
71407430	163	1-B 19
71407431	163	1-B 19
71407432	163	1-B 19
71407433	163	1-B 19
71407434	163	1-B 19
71407435	163	1-B 19
71407436	163	1-B 19
71407437	163	1-B 19
71407438	163	1-B 19
71407439	163	1-B 19
71407440	163	1-B 19
71407441	163	1-B 19
71407442	163	1-B 19
71407443	163	1-B 19
71407444	163	1-B 19
71407445	163	1-B 19
71407446	163	1-B 19
71407447	163	1-B 19
71407448	163	1-B 19
71407449	163	1-B 19
71407450	163	1-B 19
71407574	315	1-C 10
71407651	121	1-B 15
71407651	123	1-B 15
71407652	123	1-B 15
71407653	89	1-B 11
71407653	123	1-B 15
71407655	103	1-B 13
71407657	85	1-B 11
71407659	85	1-B 11
71407660	195	1-B 22
71407700	31	1-B 6
71407700	285	1-C 7
71407956	495	1-D 4
71407956	497	1-D 4
71407957	497	1-D 4
71407958	497	1-D 4
71407962	231	1-C 2
71408182	311	1-C 10
71408201	169	1-B 19
71408202	109	1-B 13
71408209	139	1-B 16
71408210	141	1-B 17
71408211	139	1-B 16
71408211	583	1-D 13
71408215	139	1-B 16
71408217	447	1-C 23
71408218	137	1-B 16
71408221	137	1-B 16
71408222	135	1-B 16
71408222	139	1-B 16
71408223	91	1-B 12
71408224	91	1-B 12
71408225	91	1-B 12
71408385	183	1-B 21
71408386	183	1-B 21
71408387	183	1-B 21
71408392	155	1-B 18
71408393	183	1-B 21
71408394	183	1-B 21
71408395	183	1-B 21
71408396	183	1-B 21
71408397	183	1-B 21
71408401	41	1-B 7
71408403	41	1-B 7
71408501	351	1-C 14
71408514	351	1-C 14
71408514	369	1-C 15
71408701	529	1-D 7
71408762	305	1-C 9
71408765	295	1-C 8
71408765	297	1-C 8
71408827	405	1-C 19
71408828	405	1-C 19
71408830	403	1-C 19
71408989	383	1-C 17
71408990	383	1-C 17
71409176	247	1-C 3
71409176	249	1-C 3
71409265	347	1-C 13
71409265	369	1-C 15
71409266	349	1-C 13
71409266	369	1-C 15
71409267	349	1-C 13
71409267	369	1-C 15
71409268	347	1-C 13
71409268	369	1-C 15
71409269	347	1-C 13
71409269	369	1-C 15
71409271	347	1-C 13
71409271	369	1-C 15
71409282	259	1-C 4
71409282	369	1-C 15
71409284	369	1-C 15
71409287	369	1-C 15
71409301	41	1-B 7
71409304	47	1-B 7
71409309	39	1-B 6
71409311	41	1-B 7
71409312	81	1-B 11
71409313	79	1-B 10
71409370	361	1-C 15
71409370	369	1-C 15
71409371	363	1-C 15
71409371	369	1-C 15
71409374	361	1-C 15
71409374	369	1-C 15
71409379	361	1-C 15
71409379	369	1-C 15
71409380	361	1-C 15
71409380	369	1-C 15
71409381	349	1-C 13
71409381	369	1-C 15
71409382	361	1-C 15
71409382	369	1-C 15
71409384	361	1-C 15
71409384	369	1-C 15
71409402	353	1-C 14
71409402	369	1-C 15
71409403	337	1-C 12
71409415	333	1-C 12
71409418	369	1-C 15
71409451	297	1-C 8
71409451	299	1-C 8
71409452	297	1-C 8
71409452	299	1-C 8
71409453	297	1-C 8
71409453	301	1-C 9
71409456	197	1-B 22
71409576	109	1-B 13
71409579	111	1-B 14
71409581	135	1-B 16
71409581	137	1-B 16
71409582	137	1-B 16
71409583	89	1-B 11
71409584	89	1-B 11
71409594	111	1-B 14
71409600	109	1-B 13
71409729	39	1-B 6
71409731	39	1-B 6
71409733	39	1-B 6
71409735	39	1-B 6
71409743	61	1-B 9
71409746	61	1-B 9
71409748	63	1-B 9
71409807	161	1-B 19
71409808	161	1-B 19
71409810	161	1-B 19
71409811	161	1-B 19
71409828	301	1-C 9
71409829	303	1-C 9
71409830	301	1-C 9
71409848	317	1-C 10
71409942	547	1-D 9
71409947	547	1-D 9
71409983	259	1-C 4
71409987	259	1-C 4
71409993	265	1-C 5
71409995	259	1-C 4
71410008	39	1-B 6
71410011	63	1-B 9
71410044	47	1-B 7
71410046	61	1-B 9
71410049	47	1-B 7
71410375	413	1-C 20
71410437	281	1-C 7
71410439	283	1-C 7
71410441	283	1-C 7
71410456	347	1-C 13
71410458	361	1-C 15
71410480	499	1-D 4
71410558	167	1-B 19
71410560	167	1-B 19
71410573	159	1-B 18
71410577	259	1-C 4
71410786	411	1-C 20
71410879	367	1-C 15
71410912	183	1-B 21
71410922	137	1-B 16
71410958	89	1-B 11
71410959	91	1-B 12
71410993	415	1-C 20
71411452	383	1-C 17
71411453	383	1-C 17
71411902	269	1-C 5
71412116	491	1-D 4
71412130	329	1-C 11
71412349	261	1-C 5
71449001	225	1-C 1
71449001	573	1-D 12
71449001	579	1-D 12
71449007	225	1-C 1
71449007	573	1-D 12
71449007	579	1-D 12
71449015	227	1-C 1
71449015	573	1-D 12
71449016	227	1-C 1
71449016	573	1-D 12
71449018	227	1-C 1
71449018	573	1-D 12
71449018	579	1-D 12
71449019	231	1-C 2
71502674	477	1-D 2
71530252	265	1-C 5
720219	37	1-B 6
720219	41	1-B 7
720649	409	1-C 19
720656	501	1-D 5
72160919	167	1-B 19
72160919	169	1-B 19
72160919	181	1-B 21
72160919	183	1-B 21
72160919	581	1-D 13
72160993	43	1-B 7
72160993	47	1-B 7
72161024	135	1-B 16
72161280	45	1-B 7
72161999	87	1-B 11
72272098	133	1-B 16
722769	45	1-B 7
722769	49	1-B 7

Part No.	Page	Grid	Part No.	Page	Grid	Part No.	Page	Grid	Part No.	Page	Grid
72500822	167	1-B 19	763136	113	1-B 14	7702202	51	1-B 8	7704919	99	1-B 12
72501085	167	1-B 19	763300	543	1-D 9	7703259	283	1-C 7	77057	381	1-C 17
72501110	179	1-B 20	766410	95	1-B 12	7703416	335	1-C 12	7710551	225	1-C 1
72502789	125	1-B 15	76695	315	1-C 10	7703424	93	1-B 12	7710551	227	1-C 1
72502796	91	1-B 12	768036	313	1-C 10	7703424	99	1-B 12	7710551	327	1-C 11
72503309	179	1-B 20	768036	325	1-C 11	7703432	125	1-B 15	7710551	365	1-C 15
72504036	121	1-B 15	768036	381	1-C 17	7703432	191	1-B 22	7713860	529	1-D 7
72504740	127	1-B 15	768226	299	1-C 8	7703457	55	1-B 8	7720063	135	1-B 16
72504762	129	1-B 15	768432	365	1-C 15	7703457	57	1-B 8	772418	487	1-D 3
72504775	127	1-B 15	7700107	95	1-B 12	7703457	59	1-B 8	772426	83	1-B 11
72504776	127	1-B 15	7700156	263	1-C 5	7703457	63	1-B 9	772525	151	1-B 18
72504785	127	1-B 15	7700156	265	1-C 5	7703457	65	1-B 9	773697	559	1-D 10
72504786	127	1-B 15	7700461	43	1-B 7	7703457	69	1-B 9	7744477	529	1-D 7
72504786	131	1-B 16	7700461	57	1-B 8	7703457	83	1-B 11	7746233	149	1-B 17
72504791	127	1-B 15	7700461	59	1-B 8	7703457	95	1-B 12	7746449	37	1-B 6
72504792	127	1-B 15	7700461	65	1-B 9	7703457	135	1-B 16	7746449	41	1-B 7
72504802	127	1-B 15	7700461	71	1-B 10	7703457	161	1-B 19	774745	169	1-B 19
72504803	127	1-B 15	7700461	201	1-B 23	7703457	175	1-B 20	7751605	533	1-D 8
72504804	127	1-B 15	7700461	271	1-C 6	7703457	179	1-B 20	7751605	535	1-D 8
72504808	127	1-B 15	7700461	273	1-C 6	7703457	189	1-B 21	776682	295	1-C 8
72504809	127	1-B 15	7700461	281	1-C 7	7703457	193	1-B 22	776682	311	1-C 10
72504810	127	1-B 15	7700461	299	1-C 8	7703457	267	1-C 5	776682	445	1-C 23
72504811	127	1-B 15	7700461	301	1-C 9	7703457	277	1-C 6	776682	449	1-C 23
72504812	127	1-B 15	7700461	313	1-C 10	7703457	297	1-C 8	7770167	175	1-B 20
72505639	91	1-B 12	7700461	333	1-C 12	7703457	299	1-C 8	7770167	401	1-C 19
72506418	157	1-B 18	7700461	349	1-C 13	7703457	301	1-C 9	7770282	301	1-C 9
72506418	161	1-B 19	7700461	351	1-C 14	7703457	305	1-C 9	7770308	47	1-B 7
72506489	85	1-B 11	7700461	353	1-C 14	7703457	315	1-C 10	7770456	301	1-C 9
72506489	91	1-B 12	7700461	363	1-C 15	7703457	317	1-C 10	7770456	313	1-C 10
72506694	145	1-B 17	7700461	379	1-C 16	7703457	351	1-C 14	7770456	315	1-C 10
72506694	147	1-B 17	7700461	383	1-C 17	7703457	367	1-C 15	7770456	393	1-C 18
72506922	145	1-B 17	7700461	393	1-C 18	7703457	397	1-C 18	7771371	83	1-B 11
72506922	147	1-B 17	7700461	411	1-C 20	7703457	401	1-C 19	7771470	93	1-B 12
72507231	463	1-D 1	7700461	423	1-C 21	7703457	409	1-C 19	7771470	99	1-B 12
72507406	147	1-B 17	7700461	425	1-C 21	7703457	413	1-C 20	7771504	267	1-C 5
72507407	147	1-B 17	7700461	427	1-C 21	7703457	419	1-C 20	7771629	557	1-D 10
72507408	147	1-B 17	7700461	433	1-C 22	7703457	421	1-C 21	7771744	65	1-B 9
72507682	145	1-B 17	7700461	435	1-C 22	7703457	429	1-C 21	7771744	145	1-B 17
72507682	147	1-B 17	7700578	313	1-C 10	7703457	431	1-C 22	7771744	157	1-B 18
72507682	581	1-D 13	7700578	335	1-C 12	7703457	443	1-C 23	7771744	161	1-B 19
72509305	145	1-B 17	7700578	411	1-C 20	7703457	447	1-C 23	7771751	157	1-B 18
72509675	407	1-C 19	7701055	101	1-B 13	7703457	453	1-C 24	7771751	161	1-B 19
72511891	129	1-B 15	7701055	339	1-C 12	7703457	455	1-C 24	7771751	313	1-C 10
72513700	131	1-B 16	7701055	377	1-C 16	7703457	491	1-D 4	7771769	403	1-C 19
72514052	127	1-B 15	7701055	381	1-C 17	7703457	503	1-D 5	7771785	543	1-D 9
72514053	129	1-B 15	7701188	51	1-B 8	7703457	507	1-D 5	7772015	155	1-B 18
72514054	129	1-B 15	7701188	275	1-C 6	7703457	545	1-D 9	7772015	159	1-B 18
72514055	133	1-B 16	7701188	277	1-C 6	7703473	407	1-C 19	7772049	93	1-B 12
72514061	127	1-B 15	7701188	433	1-C 22	7703473	431	1-C 22	7772056	125	1-B 15
72514066	127	1-B 15	7701188	489	1-D 3	7703473	435	1-C 22	7772197	53	1-B 8
72514067	129	1-B 15	7701485	229	1-C 1	7703473	545	1-D 9	7772197	321	1-C 11
72514069	127	1-B 15	7701485	451	1-C 24	7703499	55	1-B 8	7772312	539	1-D 8
72514070	127	1-B 15	7701485	491	1-D 4	7703499	61	1-B 9	7772312	541	1-D 9
72514076	131	1-B 16	7701485	495	1-D 4	7703499	79	1-B 10	7772361	127	1-B 15
72525468	489	1-D 3	7701501	165	1-B 19	7703499	275	1-C 6	7772767	265	1-C 5
72526244	487	1-D 3	7701550	279	1-C 6	7703499	423	1-C 21	7772767	407	1-C 19
72528004	493	1-D 4	7701592	125	1-B 15	7703499	425	1-C 21	7773856	535	1-D 8
72528006	493	1-D 4	7701634	315	1-C 10	7703499	427	1-C 21	7773864	265	1-C 5
72528008	493	1-D 4	7701634	439	1-C 22	7703499	433	1-C 22	7774466	549	1-D 9
72528012	493	1-D 4	7701659	257	1-C 4	7703507	495	1-D 4	7774466	553	1-D 10
72528022	493	1-D 4	7701659	403	1-C 19	7703531	53	1-B 8	7774466	555	1-D 10
72528024	493	1-D 4	7701659	535	1-D 8	7703838	95	1-B 12	7827629	181	1-B 21
72528025	493	1-D 4	7701659	547	1-D 9	7703838	329	1-C 11	7827629	575	1-D 12
734590	469	1-D 1	7701675	99	1-B 12	7704000	71	1-B 10	7827983	107	1-B 13
74254699	537	1-D 8	7701683	371	1-C 16	7704117	95	1-B 12	7845068	53	1-B 8
74254699	579	1-D 12	7701683	535	1-D 8	7704117	273	1-C 6	7846777	453	1-C 24
74254700	537	1-D 8	7701717	93	1-B 12	7704117	561	1-D 11	7883267	153	1-B 18
74254700	579	1-D 12	7701717	99	1-B 12	7704141	99	1-B 12	7883267	169	1-B 19
74906743	115	1-B 14	7701717	119	1-B 14	7704141	113	1-B 14	7883267	195	1-B 22
755785	215	1-B 24	7701964	167	1-B 19	7704141	417	1-C 20	7883267	419	1-C 20
758342	65	1-B 9	7701964	495	1-D 4	7704141	549	1-D 9	7883267	429	1-C 21
762975	189	1-B 21	7702012	195	1-B 22	7704141	555	1-D 10	7883275	33	1-B 6
762975	193	1-B 22	7702012	197	1-B 22	7704778	531	1-D 8	7883275	125	1-B 15
762975	339	1-C 12	7702145	37	1-B 6	7704919	93	1-B 12	7883283	125	1-B 15
762975	353	1-C 14	7702145	403	1-C 19	7704919	97	1-B 12	7883283	167	1-B 19

INDEX

Part No.	Page	Grid
7883317	353	1-C 14
7883325	97	1-B 12
7883325	107	1-B 13
7883325	125	1-B 15
7883325	171	1-B 20
7883325	177	1-B 20
7883325	437	1-C 22
7883333	47	1-B 7
7883333	71	1-B 10
7883333	119	1-B 14
7883374	197	1-B 22
7883382	97	1-B 12
7883382	181	1-B 21
7883382	195	1-B 22
7883382	197	1-B 22
7883382	435	1-C 22
7883382	575	1-D 12
7883408	71	1-B 10
7883408	101	1-B 13
7883408	403	1-C 19
7883424	99	1-B 12
7883432	35	1-B 6
7883432	39	1-B 6
7884570	535	1-D 8
79014728	379	1-C 16
79014728	383	1-C 17
79017915	385	1-C 17
79017915	581	1-D 13
79018975	155	1-B 18
79018975	159	1-B 18
79018975	577	1-D 12
79019067	387	1-C 17
79021648	67	1-B 9
79021648	239	1-C 2
79021649	287	1-C 7
79021649	529	1-D 7
79021668	67	1-B 9
79021669	531	1-D 8
79021669	533	1-D 8
79021669	537	1-D 8
79021669	539	1-D 8
79021669	541	1-D 9
79021669	543	1-D 9
79021671	385	1-C 17
79021672	67	1-B 9
79021676	203	1-B 23
79021676	239	1-C 2
79021676	243	1-C 3
79021676	531	1-D 8
79021676	533	1-D 8
79021676	537	1-D 8
79021676	539	1-D 8
79021676	541	1-D 9
79021676	543	1-D 9
791319	327	1-C 11
8T-4986	47	1-B 7
8022733	73	1-B 10
8027427	117	1-B 14
8027427	119	1-B 14
8027427	157	1-B 18
8027427	161	1-B 19
8046955	503	1-D 5
8050866	95	1-B 12
8050866	577	1-D 12
827758	285	1-C 7
831268M1	331	1-C 12
831822M1	373	1-C 16
831822M1	387	1-C 17
831822M1	577	1-D 12
832088M1	283	1-C 7
832653M1	175	1-B 20
832982M1	381	1-C 17
833059M1	577	1-D 12
834580M1	537	1-D 8
834580M1	539	1-D 8
834581M1	537	1-D 8
834581M1	539	1-D 8
837853M91	525	1-D 7
840327M91	573	1-D 12
844173M1	51	1-B 8
844174M1	51	1-B 8
846204	489	1-D 3
846337	455	1-C 24
846337	535	1-D 8
846634	247	1-C 3
846634	495	1-D 4
846774	215	1-B 24
850181M1	551	1-D 10
850181M1	553	1-D 10
850182M1	549	1-D 9
850182M1	553	1-D 10
853288	497	1-D 4
863415	197	1-B 22
863415	407	1-C 19
863415	413	1-C 20
863415	437	1-C 22
863415	443	1-C 23
863415	447	1-C 23
8701211	53	1-B 8
8701708	251	1-C 4
8701708	281	1-C 7
8701781	71	1-B 10
8722910	295	1-C 8
8722910	311	1-C 10
873026	487	1-D 3
873141	365	1-C 15
873364	95	1-B 12
873497	99	1-B 12
873802	53	1-B 8
8746018	71	1-B 10
8746018	231	1-C 2
8746430	73	1-B 10
9F-4446	37	1-B 6
9H-8872	487	1-D 3
940134W1	507	1-D 5
942253	519	1-D 6
98-2107	315	1-C 10
9863040W1	365	1-C 15

Part No.	Page	Grid	Part No.	Page	Grid	Part No.	Page	Grid	Part No.	Page	Grid

LABELS
LEFT SIDE & FRONT

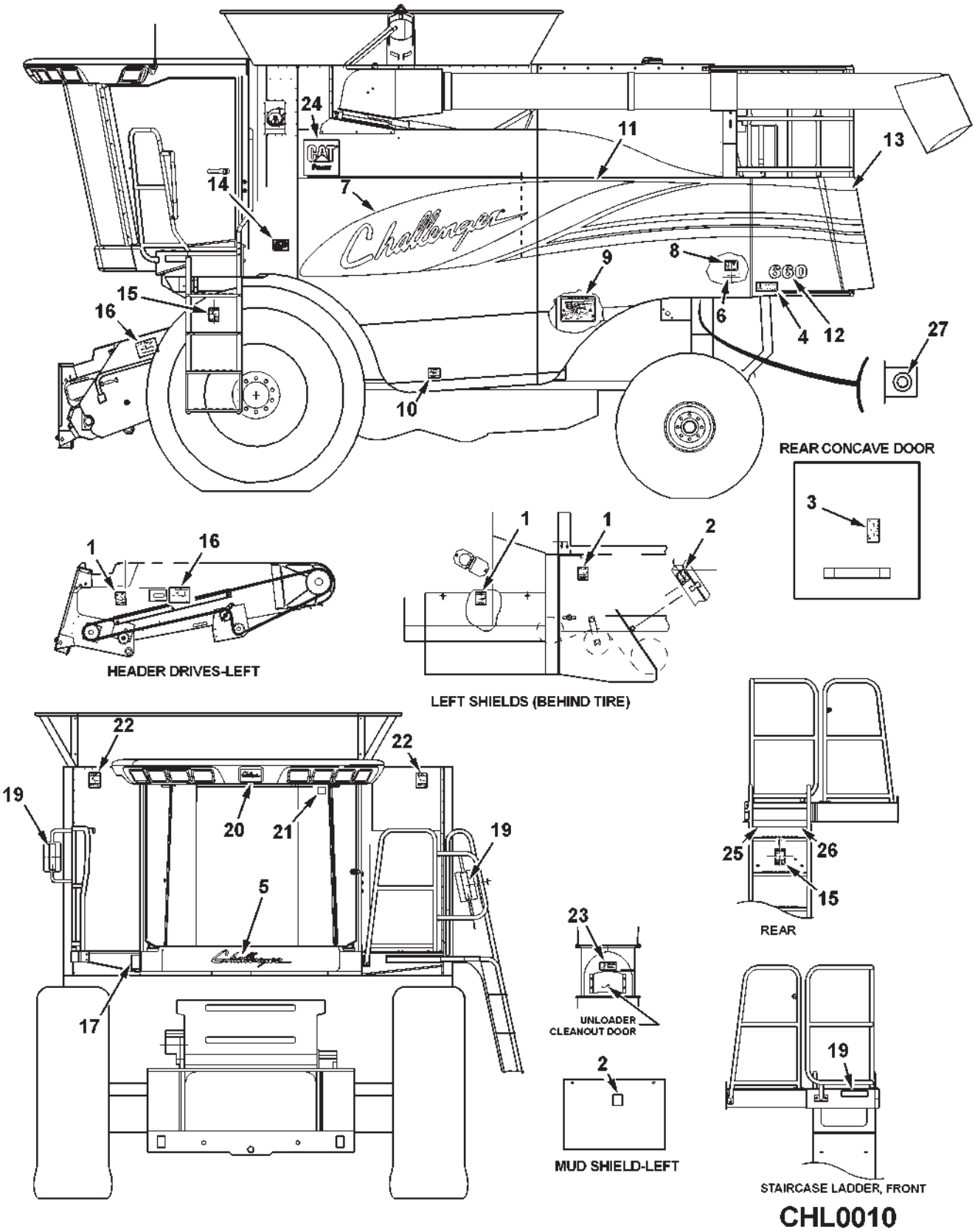

LABELS
LEFT SIDE & FRONT

ITEM	NUMBER	QTY	DESCRIPTION
1	111091W1	3	DECAL, DANGER, MISSING SHIELDS
2	111670W1	2	DECAL, WARNING, BELT OR CHAIN
3	71407700	1	DECAL, CYLINDER GEAR SHIFT
4	71379127	1	DECAL, WARNING, STAND CLEAR
5	700721965	1	DECAL, CHALLENGER FRONT
6	-----	1	PLATE, SERIAL NUMBER
	70924946	2	RIVET, 1/8 X 9/32
7	700721879	1	DECAL, COMBO, LEFT FRONT
8	590769M1	1	DECAL, PATENT
9	71395987	1	DECAL, LUBE GUIDE (PRIOR S/N HN87101)
	71403605	1	DECAL, LUBE GUIDE (EFF. S/N HN87101)
	71406769	1	DECAL, LUBE GUIDE (EFF. S/N HP87101)
10	71379128	1	DECAL, WARNING, SHIELDS IN PLACE
11	700721880	1	DECAL, COMBO, LEFT
12	700721966	1	DECAL, 660
13	700721877	1	DECAL, COMBO, LEFT REAR
14	700721139	1	DECAL, TIRE USAGE
15	700721781	1	DECAL, WARNING, KEEP OFF
16	111095W1	2	DECAL, DANGER, HEADER FALLING
17	71379129	1	DECAL, WARNING, FALLING OFF
19	700717403	2	REFLECTOR, AMBER
20	700721124	1	EMBLEM, CHALLENGER
21	71365412	1	DECAL, US FLAG
22	71379130	2	DECAL, WARNING, GRAIN TANK
23	111741W1	1	DECAL, DANGER, CLEANOUT
24	700721986	1	DECAL, CAT POWER
25	700717402	1	DECAL, REFLECTOR, RED
26	700717404	1	DECAL, REFLECTOR, RED/ORANGE
27	700727993	1	DECAL, BATTERY SWITCH (EFF. S/N HR87101)

CHL0010
PR: 438

LABELS
RIGHT SIDE & REAR

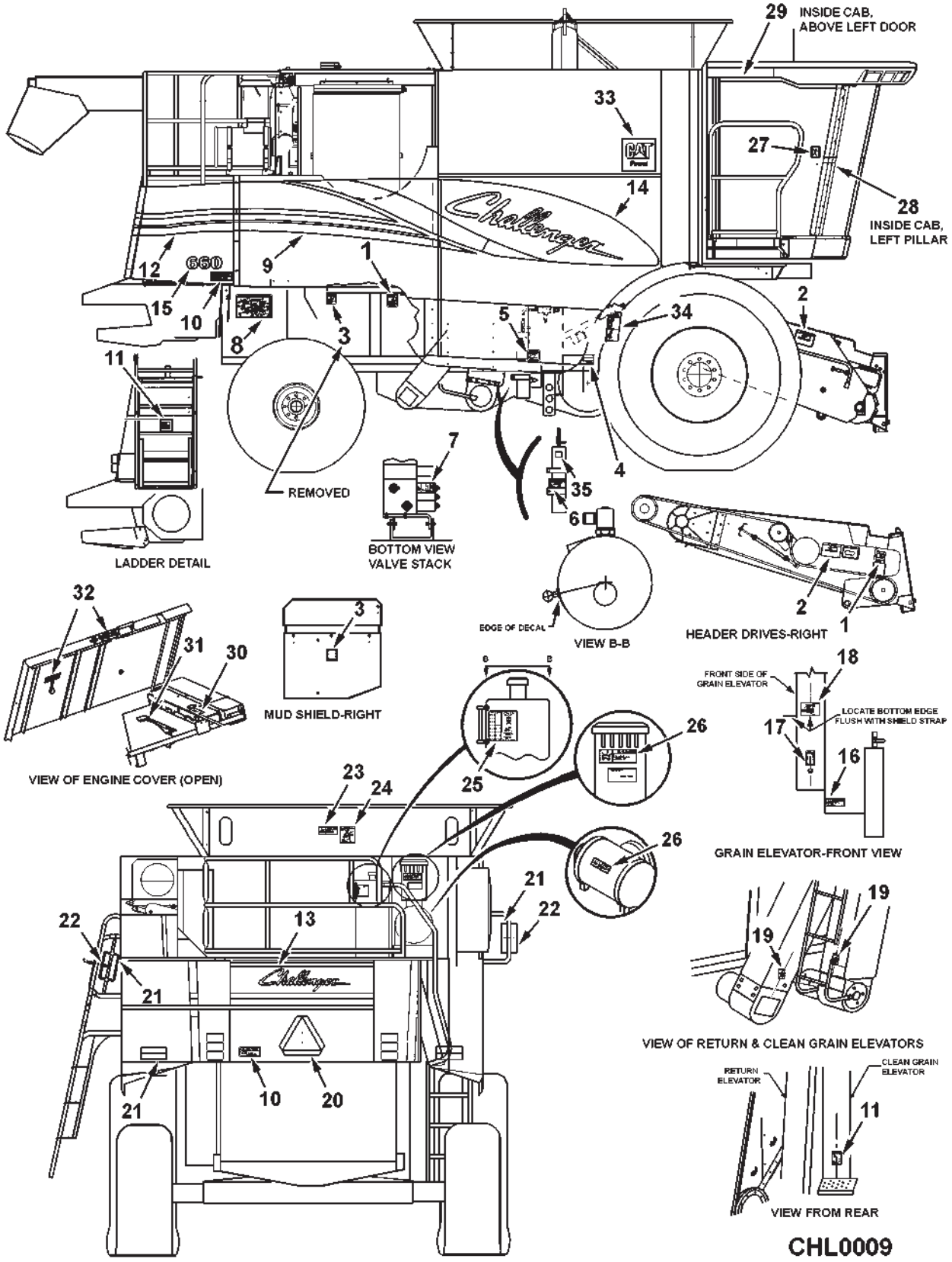

LABELS
RIGHT SIDE & REAR

ITEM	NUMBER	QTY	DESCRIPTION
1	111091W1	2	DECAL, DANGER, SHIELD MISSING
2	111095W1	2	DECAL, DANGER, HEADER FALLING
3	111670W1	1	DECAL, WARNING, BELT OR CHAIN (QTY 2 PRIOR S/N HR87101)
4	700720727	1	DECAL, DANGER, BELT OR CHAIN
5	71379128	1	DECAL, WARNING, SHIELDS IN PLACE
6	71371720	1	DECAL, DANGER, RAM STOP
7	2609080W1	1	DECAL, HEAD LOWER ADJUST
8	700722435	1	DECAL, LUBE GUIDE (PRIOR S/N HP87101)
	71406770	1	DECAL, LUBE GUIDE (EFF. S/N HP87101)
9	700721874	1	DECAL, COMBO, RIGHT
10	71379127	2	DECAL, WARNING, STAND CLEAR
11	71379129	2	DECAL, WARNING, FALLING OFF
12	700721875	1	DECAL, COMBO, RIGHT REAR
13	700721876	1	DECAL, COMBO, REAR
14	700721873	1	DECAL, COMBO, RIGHT FRONT
15	700721966	1	DECAL, 660
16	71348560	1	DECAL, DANGER, FILL W/NITROGEN
17	71379126	1	DECAL, WARNING, FLUID PRESSURE
18	71394175	1	DECAL, VALVE STACK
19	111743W1	2	DECAL, WARNING, HAND AWAY
20	71379434	1	EMBLEM, SMV
	7883275	2	SCR, HEX WSHR HD MACH, 1/4-20 X 3/4
	70931209	2	LOCK NUT, HEX FLANGE SERR, 1/4-20
	70917377	2	WASHER, 1/4, WIDE
	70916952	2	WING NUT, 1/4-20
21	700717404	4	REFLECTOR, RED/ORANGE
22	700717402	4	REFLECTOR, RED
23	111736W2	1	DECAL, DANGER, STOP ENGINE
24	71368074	1	DECAL, BIN LOADER
25	700722432	1	DECAL, HYDRAULIC RESERVOIR
26	71387749	1	DECAL, DANGER, STARTING FLUID
27	71389158	1	LABEL, EXIT
28	700725670	1	DECAL, WARNING, INSTRUCTOR SEAT
29	71395762	1	DECAL, DANGER/WARNING
30	700720605	1	DECAL, WARNING, RADIATOR CAP
31	71385793	1	DECAL, AIR CONDTNING (PRIOR S/N HP87101)
32	71379132	2	DECAL, WARNING
33	700721986	1	DECAL, CAT POWER
34	71392776	1	DECAL, V.S. FAN DRIVE
35	71370232	1	DECAL, ACCUMULATOR SHUT-OFF

CHL0009
PR: 440

ENGINE & MOUNTS
(PRIOR S/N HR87101)

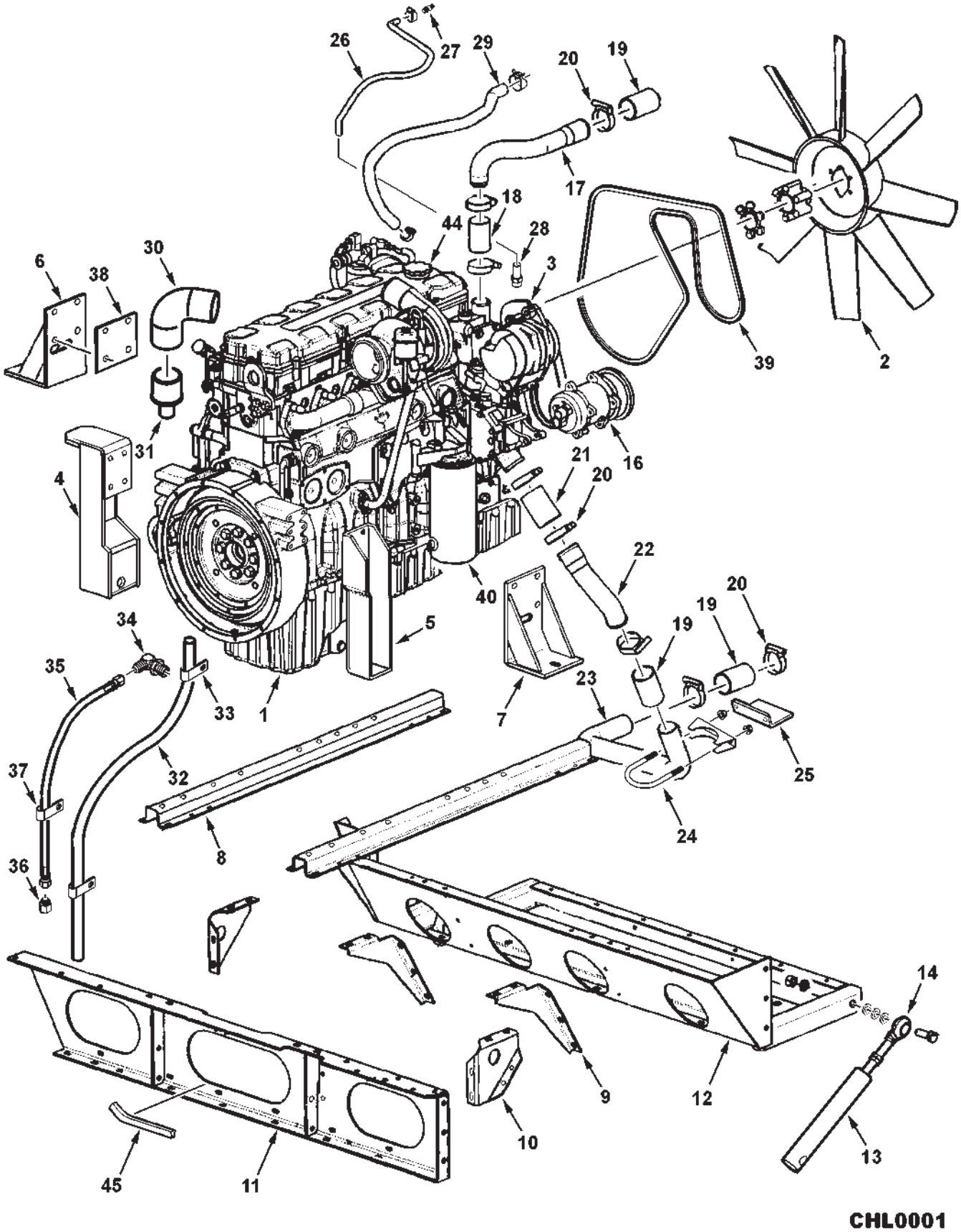

ENGINE & MOUNTS
(PRIOR S/N HR87101)

ITEM	NUMBER	QTY	DESCRIPTION
1	71396759	1	ENGINE, CAT C9, 285 HP (SOURCE: CAT)
2	71396762	1	FAN BLADE ASY.
	7E-6293	1	SPACER, FAN (SOURCE: CAT)
	118-0386	1	SPACER, FAN (SOURCE: CAT)
	70950981	6	CAPSCREW, M8-1.25 X 90, CL8.8
	1703321	6	WASHER, PLAIN, M8
3	71396957	1	ALTERNATOR, 150 AMP (LEECE NEVILLE)
	129-5096	1	PULLEY, ALT.
	7883432	1	SCREW, HEX FLNG, 1/2-13 X 1-3/4 GR8
4	71395913	1	BRACKET WLDMT, L FRONT ENG
	70924744	1	CAPSCREW, 5/8-11 X 1-1/2 GR5
	Y705582	1	WASHER, HARD, 5/8
	70950453	4	CAPSCREW, M12-1.75 X 35, CL 8.8
	Y705624	4	WASHER, 1/2 NARROW
	Y705046	4	LOCKWASHER, 1/2 REG
5	71395918	1	BRACKET WLDMT, L REAR ENG
	70924744	1	CAPSCREW, 5/8-11 X 1-1/2 GR5
	Y705582	1	WASHER, HARD, 5/8
	70950453	4	CAPSCREW, M12-1.75 X 35, CL 8.8
	Y705624	4	WASHER, 1/2 NARROW
	Y705046	4	LOCKWASHER, 1/2 REG
6	71396707	1	BRACKET WLDMT, R FRONT ENG
	70924744	1	CAPSCREW, 5/8-11 X 1-1/2 GR5
	Y705582	1	WASHER, HARD, 5/8
	700708355	4	CAPSCREW, M16-2 X 40, CL 10.9
	70917373	4	LOCKWASHER, 5/8 REG
	705632	4	WASHER, 5/8 NARROW
7	71396709	1	BRACKET WLDMT, R REAR ENG
	70924744	1	CAPSCREW, 5/8-11 X 1-1/2 GR5
	Y705582	1	WASHER, HARD, 5/8
	700708355	4	CAPSCREW, M16-2 X 40, CL 10.9
	70917373	4	LOCKWASHER, 5/8 REG
	705632	4	WASHER, 5/8 NARROW
8	71396979	2	SUPPORT RAIL WLDMT, ENGINE
	70920415	8	CAPSCREW, 3/8-16 X 1-1/4 GR5
	70917378	4	WASHER, 3/8 WIDE
	Y704734	8	NUT, HEX FLANGE TOP LOCK, 3/8-16
9	71386997	2	GUSSET, ENGINE RAIL
	70920415	10	CAPSCREW, 3/8-16 X 1-1/4 GR5
	Y704734	10	NUT, HEX FLANGE TOP LOCK, 3/8-16
10	102302M1	2	GUSSET, ENGINE RAIL
	70921210	8	CAPSCREW, 3/8-16 X 1 GR5
	Y704734	8	NUT, HEX FLANGE TOP LOCK, 3/8-16
11	71389405	1	SUB-FRAME WLDMT, ENGINE, LH
	70920415	8	CAPSCREW, 3/8-16 X 1-1/4 GR5
	70917378	8	WASHER, 3/8 WIDE
	Y704734	8	NUT, HEX FLANGE TOP LOCK, 3/8-16
12	71396992	1	SUB-FRAME WLDMT, ENGINE & RAD, RH
	70920415	8	CAPSCREW, 3/8-16 X 1-1/4 GR5
	70917378	8	WASHER, 3/8 WIDE
	Y704734	8	NUT, HEX FLANGE TOP LOCK, 3/8-16
13	71382731	2	BRACE, TUBE
	70922664	2	CAPSCREW, 5/8-11 X 2 GR5
	70917373	2	LOCKWASHER, 5/8 REG
	70932665	2	NUT, 5/8-11 REG

CONTINUED

ENGINE & MOUNTS
(PRIOR S/N HR87101)

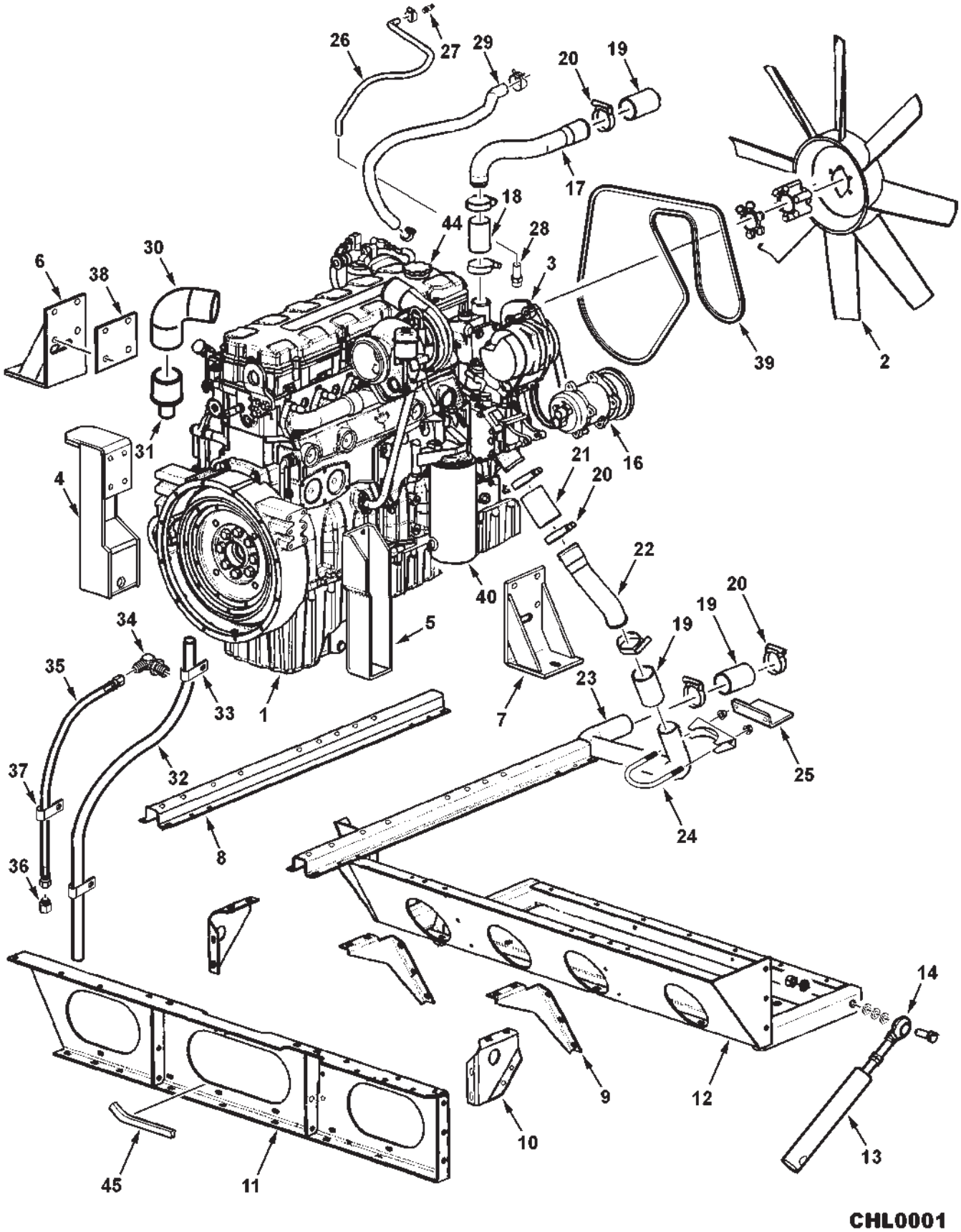

ENGINE & MOUNTS
(PRIOR S/N HR87101)

ITEM	NUMBER	QTY	DESCRIPTION
14	71343344	2	EYE BOLT, 3/4-10UNC
	7702145	2	CAPSCREW, 3/4-10 X 2-1/2 GR5
	705723	6	WASHER, 3/4 NARROW
	70919332	2	LOCKWASHER, 3/4 REG
	70913160	6	NUT, 3/4-10 REG
16	71396715	1	A/C COMPRESSOR W/CLUTCH,W/O PAD (SANDEN) (SEE BREAKDOWN)
	700711132	1	SCREW, HEX FLANGE, 3/8-16 X 2 GR8
	700711134	1	SCREW,HEX FLANGE, 3/8-16 X 1-3/4 GR8
	69476	1	SET SCREW, HX SOCKET, 3/8-16 X 2-1/2
	704247	2	LOCKNUT, HEX SERR FLANGE, 3/8-16
	Y704734	2	NUT, HEX FLANGE TOP LOCK, 3/8-16
17	71395745	1	TUBE, COOLANT, ENG TO RAD
18	6389795	1	HOSE, RADIATOR
19	71367037	3	HOSE, CONNECTOR, RAD
20	71366540	10	CLAMP, CONST. TORQUE, RAD HOSE
21	71396984	1	HOSE, RADIATOR
22	71395746	1	TUBE, COOLANT, ENG TO RAD
23	71386892	1	TUBE, COOLANT, ENG TO RAD
24	70937712	1	CLAMP, TUBE
25	71385999	1	BRACKET, RADIATOR TUBE
	70921333	2	CAPSCREW, 5/16-18 X 1 GR5
	Y705608	2	WASHER, 5/16 NARROW
	Y705020	2	LOCKWASHER, 5/16
	70917372	2	NUT, 5/16-18 REG
26	71367031	1	HOSE, 3/8, COOLANT
	70929402	2	CLAMP, HOSE
	70925442	1	TIE, NYLON, 14.6 LG
27	7746449	1	FITTING, 1/4-18 NPTF X 3/8 STEM
28	71400402	1	FITTING, 3/4-16 ORB X 3/8 STEM
	70921349	1	O-RING, .087 X .644 ID
29	71397631	1	HOSE, 3/4 ID X 38" LG
	70921911	2	CLAMP, WORM DRIVE, .69- 1.25 DIA
30	71396763	1	HOSE, MOULDED, 90 DEG X 2" ID
	720219	2	CLAMP, HOSE
31	71396771	1	ADAPTER, 2" X 1" DIA
32	71396764	1	HOSE, 1" ID X 120"
	364125X1	1	CLAMP, HOSE
33	70937684	4	CLAMP, J-TYPE, 1-1/4 X .406 HOLE
	70921210	4	CAPSCREW, 3/8-16 X 1 GR5
	705038	4	LOCKWASHER, 3/8
	70916950	4	NUT, 3/8-16 REG
34	70935781	1	ELBOW, 90 DEG, 3/4-16 JIC X ORB
	70921349	1	O-RING, .087 X .644 ID
35	71382694	1	HOSE ASM, OIL DRAIN
36	700712973	1	PLUG, 3/4-16 JIC
37	70937677	4	CLAMP, J-TYPE, 1 X .406 HOLE
38	71396790	2	PLATE, SPACER
39	227-1364	1	BELT, ALTR'R AND COMPR'R (SOURCE: CAT)
40	1R-0716	1	OIL FILTER ASY
41	202-8687	1	BREATHER ASY (NOT ILLUSTRATED)
	9F-4446	1	O-RING (BREATHER)
42	4W-4794	1	TEMP REGULATOR (NOT ILLUSTRATED)
	191-4457	1	GASKET, TEMP REGULATOR
43	1P-0436	1	GASKET, PRIMING PUMP (NOT ILLUSTRATED)
44	136-3608	1	CAP ASY, OIL FILLER
	124-0506	1	SEAL, OIL FILLER CAP
45	700718444	1	TRIM, EDGE PROTECTOR

ENGINE & MOUNTS
(EFF. S/N HR87101)

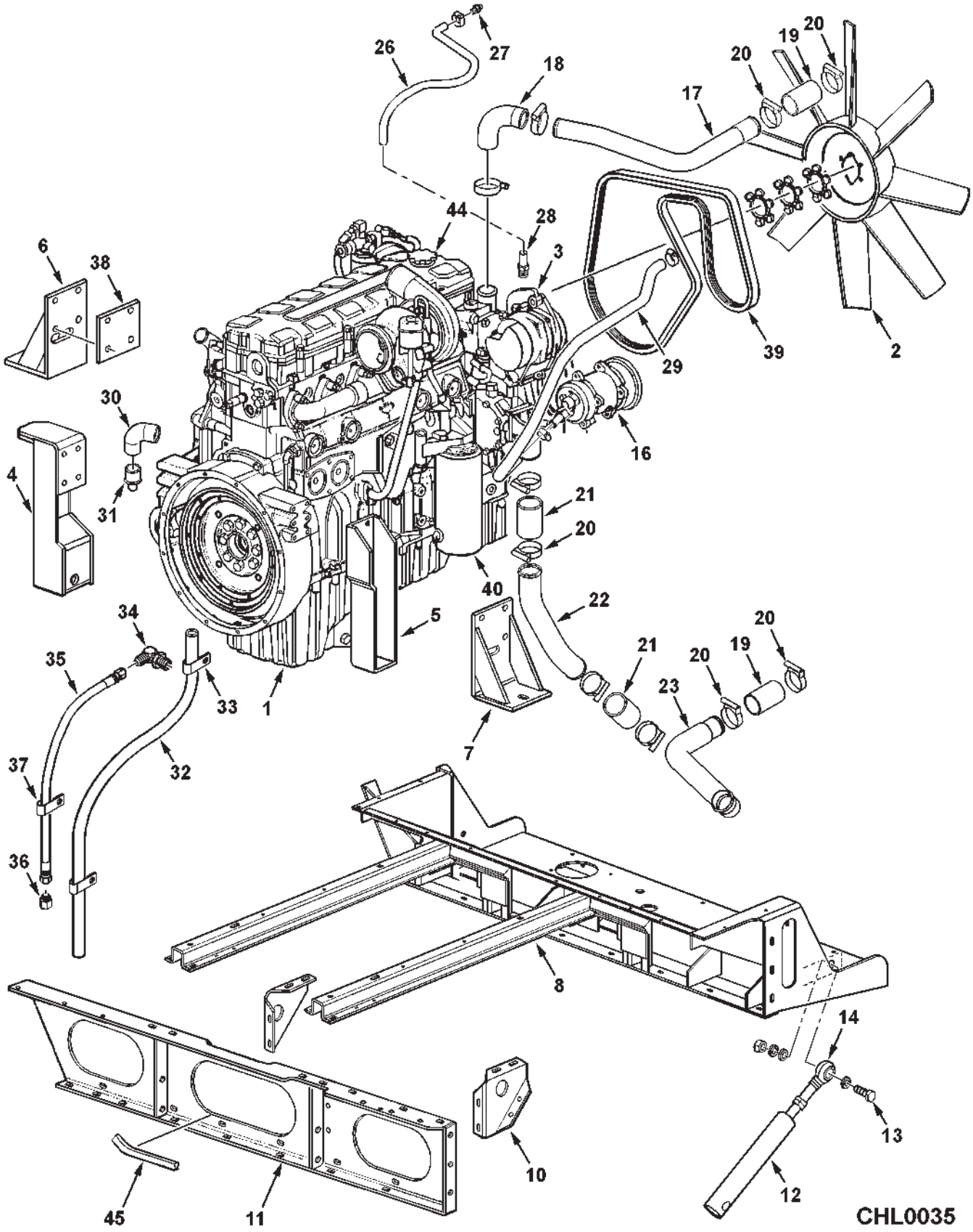

ENGINE & MOUNTS
(EFF. S/N HR87101)

ITEM	NUMBER	QTY	DESCRIPTION
1	71400415	1	ENGINE, CAT C9, 300 HP (SOURCE: CAT)
2	71396762	1	FAN BLADE ASY.
	129-0838	3	SPACER, FAN (SOURCE: CAT)
	3010636X1	6	CPSCR, HEX FLNG, M8-1.25 X 90 CL10.9
	1703321	6	WASHER, M8
3	71396957	1	ALTERNATOR, 150 AMP (LEECE NEVILLE)
	129-5096	1	PULLEY, ALT.
	7883432	1	SCREW, HEX FLNG, 1/2-13 X 1-3/4 GR8
4	71409729	1	MOUNT WLMT, ENGINE, L FRONT
	70924744	1	CAPSCREW, 5/8-11 X 1-1/2 GR5
	Y705582	1	WASHER, HARD, 5/8
	70950453	4	CAPSCREW, M12-1.75 X 35, CL 8.8
	Y705624	4	WASHER, 1/2 NARROW
	Y705046	4	LOCKWASHER, 1/2 REG
5	71409731	1	MOUNT WLMT, ENGINE, L REAR
	70924744	1	CAPSCREW, 5/8-11 X 1-1/2 GR5
	Y705582	1	WASHER, HARD, 5/8
	70950453	4	CAPSCREW, M12-1.75 X 35, CL 8.8
	Y705624	4	WASHER, 1/2 NARROW
	Y705046	4	LOCKWASHER, 1/2 REG
6	71409735	1	MOUNT WLMT, ENGINE, R FRONT
	70924744	1	CAPSCREW, 5/8-11 X 1-1/2 GR5
	Y705582	1	WASHER, HARD, 5/8
	700708355	4	CAPSCREW, M16-2 X 40, CL 10.9
	70917373	4	LOCKWASHER, 5/8 REG
	705632	4	WASHER, 5/8 NARROW
7	71409733	1	MOUNT WLMT, ENGINE, R REAR
	70924744	1	CAPSCREW, 5/8-11 X 1-1/2 GR5
	Y705582	1	WASHER, HARD, 5/8
	700708355	4	CAPSCREW, M16-2 X 40, CL 10.9
	70917373	4	LOCKWASHER, 5/8 REG
	705632	4	WASHER, 5/8 NARROW
8	71409309	1	SUB-FRAME WLDMT, ENGINE & RAD
	70920415	12	CAPSCREW, 3/8-16 X 1-1/4 GR5
	70917378	12	WASHER, 3/8 WIDE
	Y704734	12	NUT, HEX FLANGE TOP LOCK, 3/8-16
10	102302M1	2	GUSSET, ENGINE RAIL
	70920415	10	CAPSCREW, 3/8-16 X 1-1/4 GR5
	70917378	10	WASHER, 3/8 WIDE
	Y704734	10	NUT, HEX FLANGE TOP LOCK, 3/8-16
11	71389405	1	SUB-FRAME WLDMT, ENGINE, LH
	70920415	16	CAPSCREW, 3/8-16 X 1-1/4 GR5
	70917378	16	WASHER, 3/8 WIDE
	Y704734	16	NUT, HEX FLANGE TOP LOCK, 3/8-16
12	71410008	2	BRACE, TUBE
	70922664	2	CAPSCREW, 5/8-11 X 2 GR5
	70923353	2	NUT, CENTER LOCK, 5/8-11

CONTINUED

ENGINE & MOUNTS
(EFF. S/N HR87101)

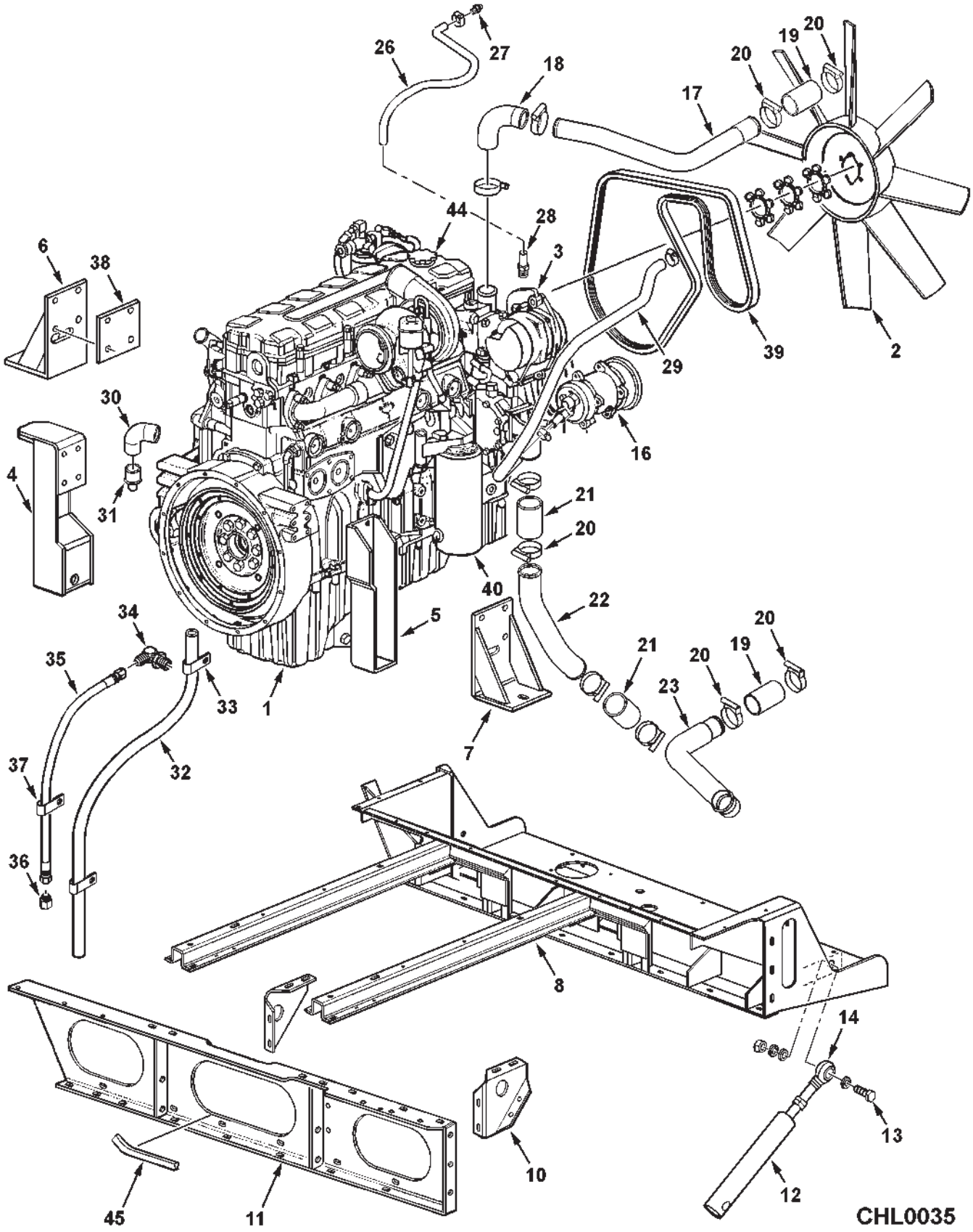

ENGINE & MOUNTS
(EFF. S/N HR87101)

ITEM	NUMBER	QTY	DESCRIPTION
13	70925872	2	CAPSCREW, 3/4-10 X 2-1/4 GR5
	70918269	4	WASHER, 3/4 NARROW
	70919332	2	LOCKWASHER, 3/4
	70913160	2	NUT, 3/4-10 REG
14	71343344	2	EYE BOLT, 3/4-10UNC
	70913160	4	NUT, 3/4-10 REG
16	71396715	1	A/C COMPRESSOR W/CLUTCH,W/O PAD (SANDEN)
			(SEE BREAKDOWN)
	700711132	1	SCREW, HEX FLANGE, 3/8-16 X 2 GR8
	700711134	1	SCREW,HEX FLANGE, 3/8-16 X 1-3/4 GR8
	69476	1	SET SCREW, HX SOCKET, 3/8-16 X 2-1/2
	704247	2	LOCKNUT, HEX SERR FLANGE, 3/8-16
	Y704734	2	NUT, HEX FLANGE TOP LOCK, 3/8-16
17	71409301	1	TUBE, COOLANT, ENG TO RAD
18	71381274	1	ELBOW, 90 DEG, 2" ID
19	71367037	2	HOSE, CONNECTOR, RAD
20	71366540	10	CLAMP, CONST. TORQUE, RAD HOSE
21	71396984	2	HOSE, RADIATOR
22	71408403	1	TUBE, COOLANT, ENG TO RAD
23	71408401	1	TUBE, COOLANT, ENG TO RAD
26	71391045	1	HOSE, 3/8 ID, COOLANT
27	7746449	1	FITTING, 1/4-18 NPTF X 3/8 STEM
28	71400402	1	FITTING, 3/4-16 ORB X 3/8 STEM
	70921349	1	O-RING, .087 X .644 ID
29	71409311	1	HOSE, .75 ID, COOLANT
	70921911	2	CLAMP, WORM DRIVE, .69- 1.25 DIA
30	71396763	1	HOSE, MOULDED, 90 DEG X 2" ID
	720219	2	CLAMP, HOSE
31	71396771	1	ADAPTER, 2" X 1" DIA
32	71396764	1	HOSE, 1" ID X 120"
	364125X1	1	CLAMP, HOSE
33	70937684	4	CLAMP, J-TYPE, 1-1/4 X .406 HOLE
	70921210	4	CAPSCREW, 3/8-16 X 1 GR5
	705038	4	LOCKWASHER, 3/8
	70916950	4	NUT, 3/8-16 REG
34	70935781	1	ELBOW, 90 DEG, 3/4-16 JIC X ORB
	70921349	1	O-RING, .087 X .644 ID
35	71382694	1	HOSE ASM, OIL DRAIN
36	700712973	1	PLUG, 3/4-16 JIC
37	70937677	4	CLAMP, J-TYPE, 1" X .406 HOLE
39	227-1364	1	BELT, ALTR'R AND COMPR'R (SOURCE: CAT)
40	1R-0716	1	OIL FILTER ASY
45	700718444	1	TRIM, EDGE PROTECTOR

CHL0035
PR: t06a25h54a0001

AIR INTAKE & EXHAUST
(PRIOR S/N HR87101)

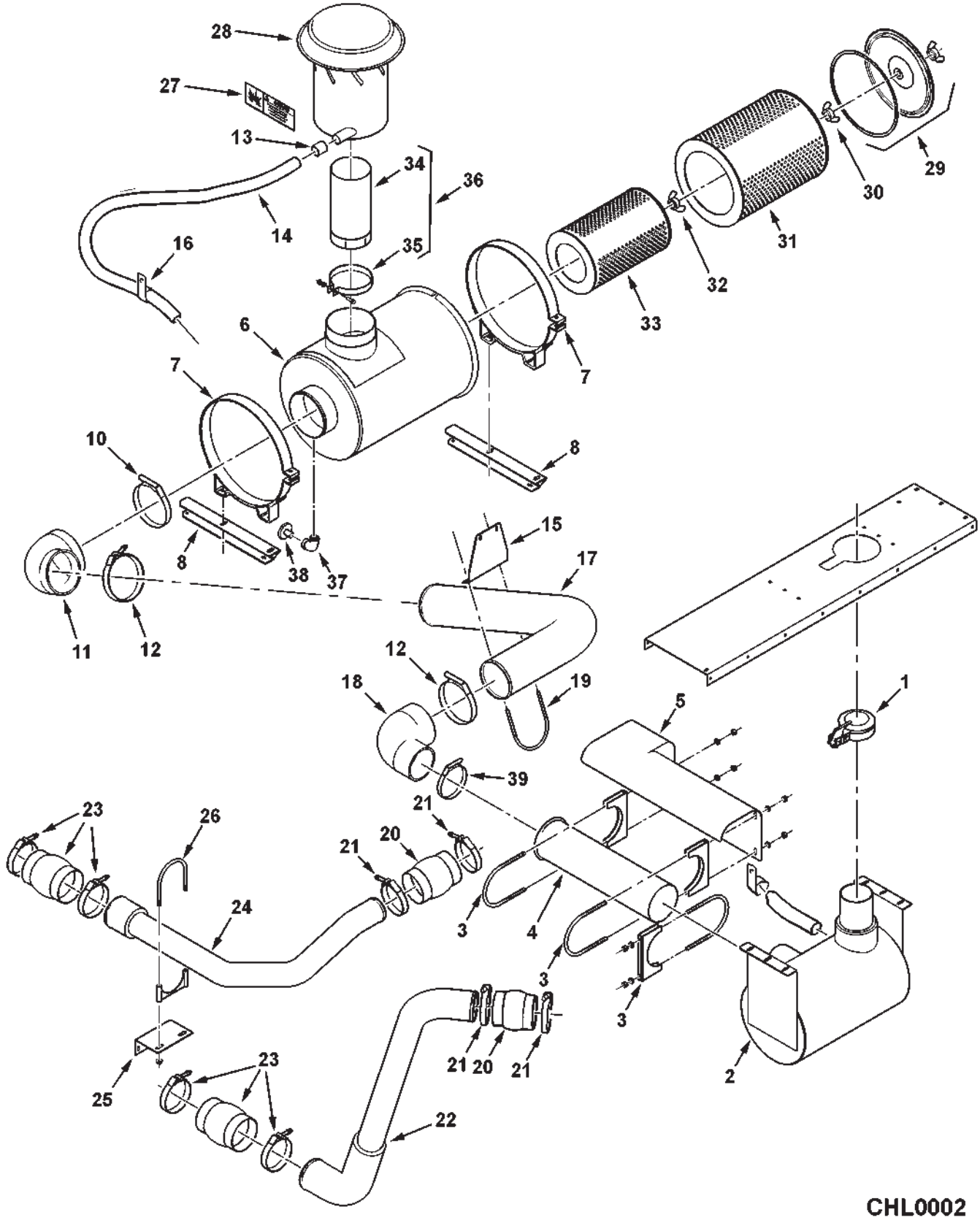

AIR INTAKE & EXHAUST
(PRIOR S/N HR87101)

ITEM	NUMBER	QTY	DESCRIPTION
1	71397878	1	CAP ASY, 4.5" EXHAUST
2	71395917	1	MUFFLER
	70917372	6	NUT, 5/16-18 REG
	Y705020	6	LOCKWASHER, 5/16 REG
	700709602	6	WASHER, 5/16 WIDE
	7700461	6	BOLT,RD HD SHRT SQ NK, 5/16-18 X 3/4
3	71396994	3	CLAMP, 5" MUFFLER
	Y704734	6	NUT, HEX FLNG TOP LK, 3/8-16
	70917378	4	WASHER, 3/8 WIDE
4	71395747	1	PIPE, EXHAUST
	4W-9160	1	CLAMP, EXHAUST, V-BAND (SOURCE: CAT)
5	71396990	1	SHIELD WLDMT, EXHAUST
6	71383233	1	AIR CLEANER (INCL ITEMS 29 - 33)
7	71368952	2	BAND CLAMP, 14" ID
	70921210	4	CAPSCREW, 3/8-16 X 1 GR5
	Y704734	4	NUT, HEX FLNG TOP LK, 3/8-16
8	71391041	2	CHANNEL, SUPPORT, AIR CLNR
	70921333	4	CAPSCREW, 5/16-18 X 1 GR5
	Y704726	4	NUT, HEX FLNG TOP LK, 5/16-18
10	700717761	1	CLAMP, T-BOLT
11	71368951	1	ELBOW, 90 DEG REDUCER, 6 X 5
12	72160993	2	CLAMP, HOSE
13	71387650	1	BUSHING, HOSE
14	71387625	1	HOSE, ASPIRATOR, 1.5 ID
	70921912	2	CLAMP, HOSE WORM, 1.06-2.0
15	71396977C	1	BRACKET, TUBE SUPP'T
	70917372	2	NUT, 5/16-18 REG
	Y705020	2	LOCKWASHER, 5/16 REG
	70921332	2	CAPSCREW, 5/16-18 X 3/4 GR5
16	70936765	2	CLAMP, 1-3/4 X .406 HOLE
17	71395922	1	TUBE, AIR CLEANER TO ENG
18	71396991	1	ELBOW, 90 DEG REDUCER, 5 X 4
19	2625940W1	1	U-BOLT, 5 DIA, 5/16-18
	70917642	2	WASHER, 5/16 WIDE
	Y705020	2	LOCKWASHER, 5/16 REG
	70917372	2	NUT, 5/16-18 REG
20	3L-9656	2	HUMP HOSE, 3" (SOURCE: CAT)
21	144-0367	4	CLAMP, CONSTANT TORQUE (SOURCE: CAT)
22	71395744	1	TUBE, AIR, CAC LOWER
23	7E-8630	2	HOSE, HUMP, 4" (SOURCE: CAT)
	71396983	4	CLAMP, T-BOLT, AIR INTAKE

CONTINUED

AIR INTAKE & EXHAUST
(PRIOR S/N HR87101)

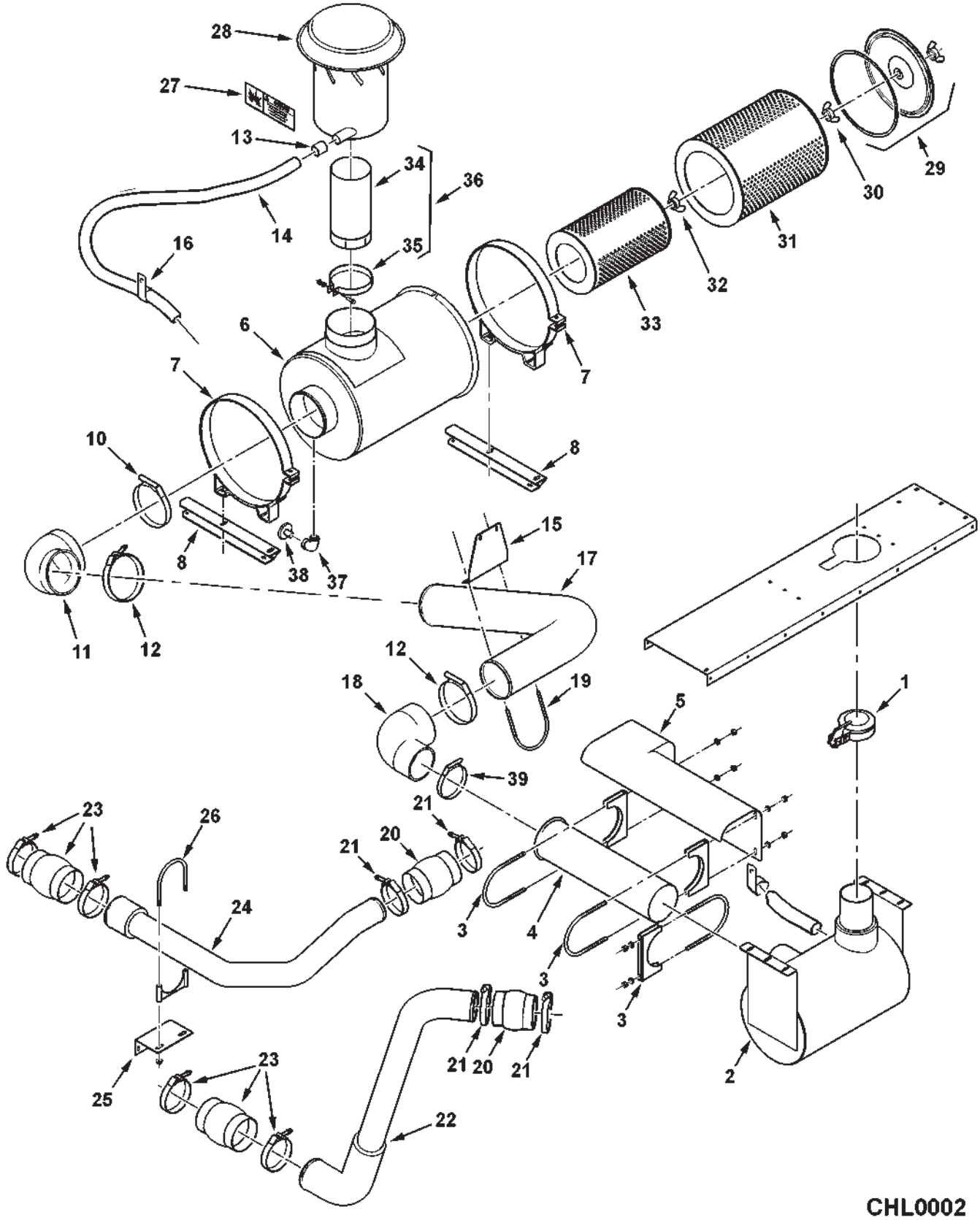

AIR INTAKE & EXHAUST
(PRIOR S/N HR87101)

ITEM	NUMBER	QTY	DESCRIPTION
24	71395743	1	TUBE, AIR, CAC UPPER
25	71401355	1	SUPPORT BRKT, AIR TUBE
	70921332	2	CAPSCREW, 5/16-18 X 3/4 GR5
	Y705020	2	LOCKWASHER, 5/16 REG
	Y705608	2	WASHER, 5/16 NARROW
26	722769	1	CLAMP, 3" TUBE
27	71387749	2	DECAL, WARNING, NO START FLUID
28	2577893W91	1	PRE CLEANER
29	71368963	1	COVER ASY, (INCL. NUT, CLIP & GASKET)
	71374564	1	WING NUT
	71374565	1	CLIP
	71369877	1	GASKET, COVER
30	70269246	1	NUT ASY.
31	71368961	1	ELEMENT, PRIMARY FILTER
32	70257297	1	NUT ASY, SAFETY
33	71368962	1	ELEMENT, FILTER, SAFETY
34	105092W1	1	TUBE 11" AIR INLET
35	105091W1	1	STRAP, CLAMP
	70921971	1	BOLT, HEX, 3/8-16 X 1-3/4
	70916965	1	LOCKWASHER, 3/8
	70916950	1	NUT, 3/8-16
36	71400144	AR	AIR INTAKE EXTEN. KIT, 11" (INCL. ITEMS 34 & 35)(ORDER THRU DEALER CENTRAL)
37	70915955	1	ELBOW, 90 DEG, FEM. 1/8-27 NPTF
38	31-2530050	1	SWITCH, AIR CLEANER VACUUM
39	72161280	1	CLAMP, HOSE, T-BOLT, 4.50 DIA

CHL0002
PR: 28

AIR INTAKE & EXHAUST
(EFF. S/N HR87101)

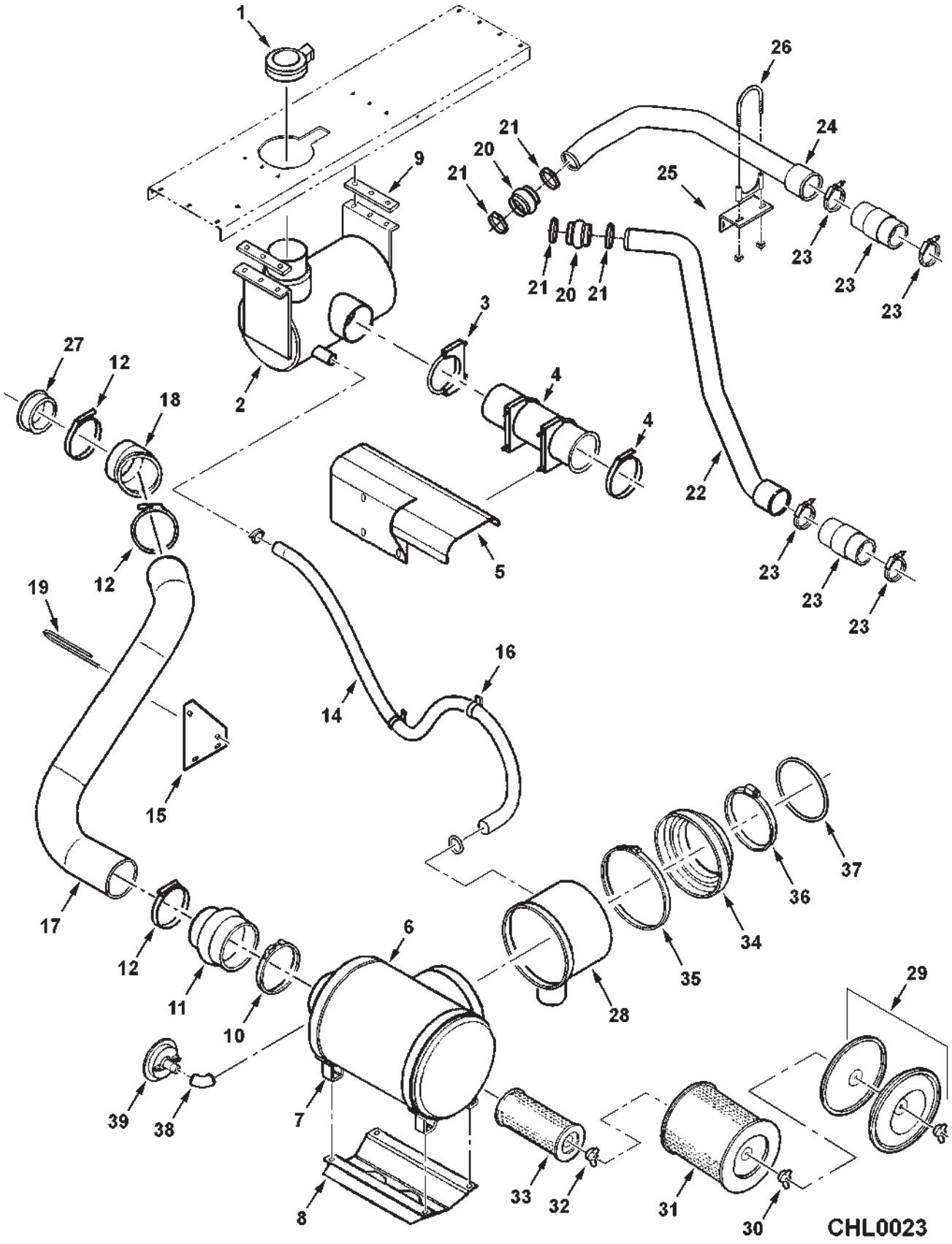

AIR INTAKE & EXHAUST
(EFF. S/N HR87101)

ITEM	NUMBER	QTY	DESCRIPTION
1	70269408	1	CAP ASY, 4.0" EXHAUST
2	71410044	1	MUFFLER
	70917372	6	NUT, 5/16-18 REG
	Y705020	6	LOCKWASHER, 5/16 REG
	700709602	6	WASHER, 5/16 WIDE
	7770308	6	BOLT, RD HD SQ NK, 5/16-18 X 1-1/2
3	71396994	3	CLAMP, 5" MUFFLER
	Y704734	6	NUT, HEX FLANGE TOP LOCK, 3/8-16
	70917378	4	WASHER, 3/8 WIDE
4	71396788	1	TUBE, EXHAUST
	4W-9160	1	CLAMP, EXHAUST, V-BAND (SOURCE: CAT)
5	71397889	1	SHIELD WLMT, EXHAUST
6	71368953	1	AIR CLEANER (INCL ITEMS 29 - 33)
7	71368952	2	BAND CLAMP, 14" ID
	703249	4	CAPSCREW, 3/8-16 X 1 GR5
	Y704734	4	NUT, HEX FLANGE TOP LOCK, 3/8-16
8	71397882P	1	CHANNEL, MOUNT, AIR CLNR
	7883333	2	SCREW, HEX WSHR HD, 5/16-18 X 1
	Y704726	2	NUT, HEX FLANGE TOP LOCK, 5/16-18
9	71400562	2	SPACER BAR, MUFFLER
10	700717761	1	CLAMP, T-BOLT
11	2632680W1	1	REDUCER, 6 X 5 DIA
12	72160993	3	CLAMP, HOSE
14	71400561	1	HOSE, ASPIRATOR, 1.5 ID
	70921912	2	CLAMP, HOSE WORM, 1.06 - 2.0
15	71410049	1	PLATE, INTAKE TUBE SUPP'T
	70917372	2	NUT, 5/16-18 REG
	Y705608	2	WASHER, 5/16 NARR
	70917356	2	LOCKWASHER, 5/16
	70921332	2	CAPSCREW, 5/16-18 X 3/4 GR5
16	70936765	2	CLAMP, 1-3/4 X .406 HOLE
17	71409304	1	TUBE, AIR CLEANER TO ENG
18	71397895	1	ELBOW, 45 DEG, 5"
19	2625940W1	1	U-BOLT, 5 DIA, 5/16-18
	Y705608	2	WASHER, 5/16 NARR
	70917356	2	LOCKWASHER, 5/16 REG
	70917372	2	NUT, 5/16-18 REG
20	3L-9656	2	HUMP HOSE, 3" (SOURCE: CAT)
21	144-0367	4	CLAMP, CONSTANT TORQUE (SOURCE: CAT)
22	71395744	1	TUBE, AIR, CAC LOWER
23	8T-4986	2	HUMP HOSE, 4" (CAT)
	71396983	4	CLAMP, T-BOLT, AIR INTAKE

CONTINUED

AIR INTAKE & EXHAUST
(EFF. S/N HR87101)

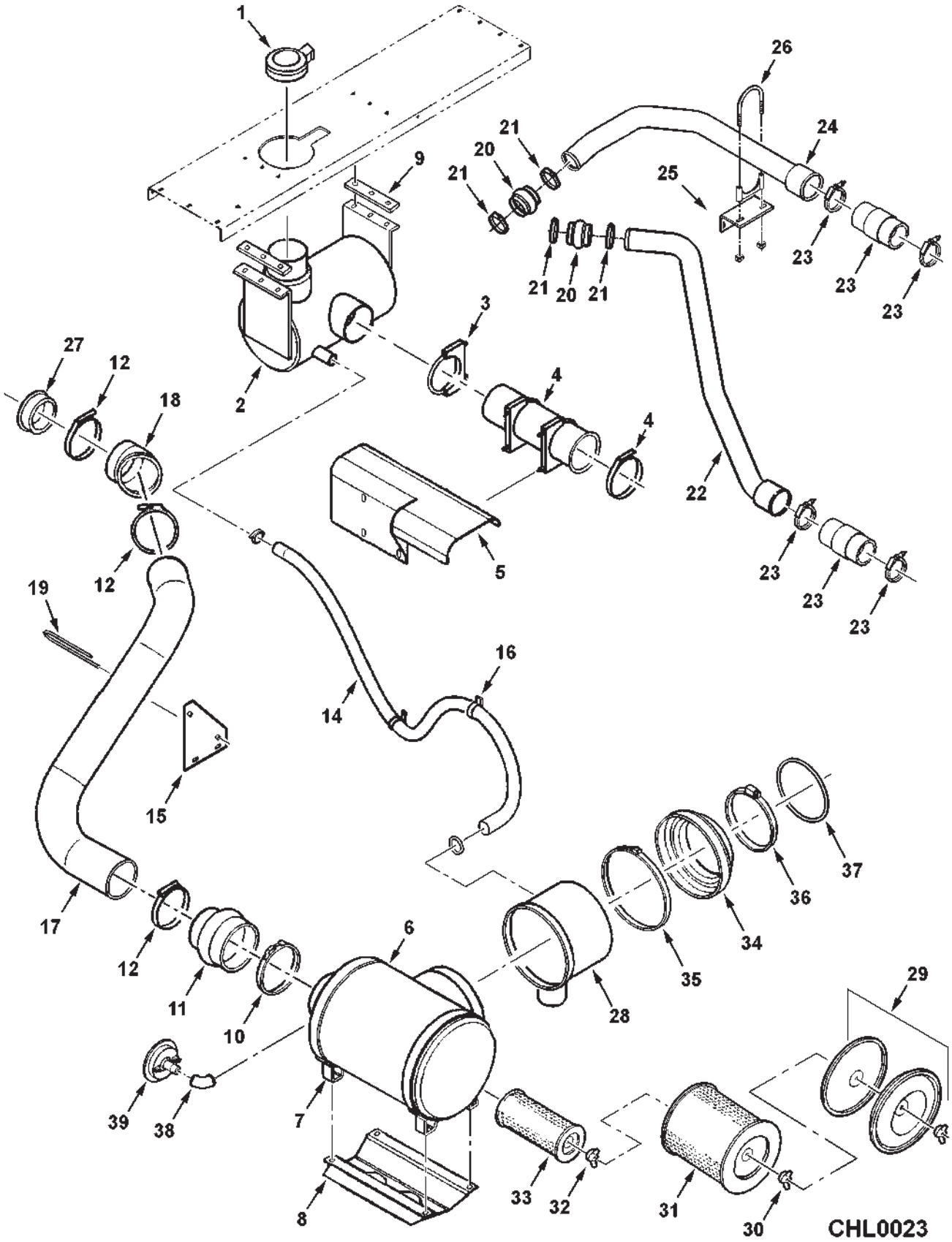

AIR INTAKE & EXHAUST
(EFF. S/N HR87101)

ITEM	NUMBER	QTY	DESCRIPTION
24	71395743	1	TUBE, AIR, CAC UPPER
25	71406608	1	ANGLE BRKT, UPPER TUBE SUPPORT
	70921332	2	CAPSCREW, 5/16-18 X 3/4 GR5
	70917356	2	LOCKWASHER, 5/16 REG
	Y705608	2	WASHER, 5/16 NARROW
26	722769	1	CLAMP, 3" TUBE
27	71397881	1	REDUCER, 5" TO 4" DIA
28	71397886	1	PRE CLEANER
29	71368963	1	COVER ASY, (INCL. NUT, CLIP & GASKET)
	71374564	1	WING NUT
	71374565	1	CLIP
	71369877	1	GASKET, COVER
30	70269246	1	NUT ASY
31	71368961	1	ELEMENT, PRIMARY, FILTER
32	70257297	1	NUT ASY, SAFETY
33	71368962	1	ELEMENT, FILTER, SAFETY
34	71397887	1	REDUCER, INLET, 11 TO 8" DIA (PRIOR S/N HP36101)
35	71397884	1	CLAMP, HOSE, WORM (PRIOR S/N HP36101)
36	71397885	1	CLAMP, HOSE, WORM (PRIOR S/N HP36101)
37	71399697	1	SEAL, AIR CLEANER (EFF. S/N HP36101)
38	70915955	1	ELBOW, 90 DEG FEM. 1/8-27 NPTF
39	31-2530050	1	SWITCH, AIR CLEANER VACUUM

CHL0023
PR: t06a25h54a0002

MAIN ENGINE DRIVES

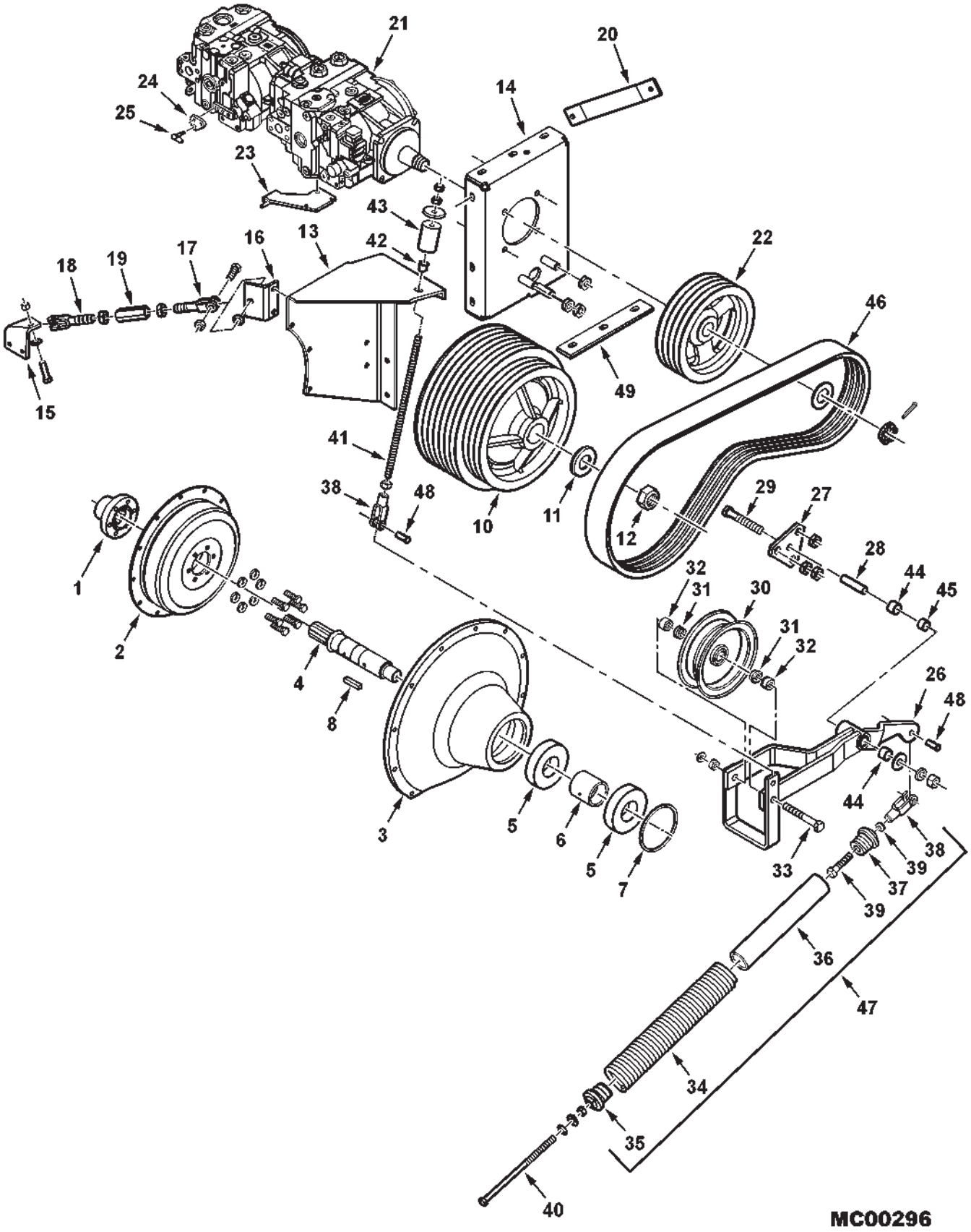

ITEM	NUMBER	QTY	DESCRIPTION
1	71386880	1	HUB, FLEX COUPLING
2	71370165	1	COUPLING, FLEX
	7702202	6	CAPSCREW, 7/16-14 X 1-1/4 GR5
	70918199	6	LOCKWASHER, 7/16, REG
	70922845	8	SCR,FLNG 12-PT HD, 3/8-16 X 3/4 GR8
3	71390090	1	HOUSING, PTO
	703603	9	CAPSCREW, 3/8-16 X 1-1/2 GR5 (WAS 10 PRIOR S/N HP87--- MID PROD'N RUN)
	705038	9	LOCKWASHER, 3/8 (WAS QTY 10)
4	71398332	1	SHAFT, PTO
5	71398331	2	BEARING, BALL, SEALED
6	71398333	1	SPACER, BEARING
7	700720004	1	RING, RETAINING, INTERNAL
8	71178962	1	KEY, 3/8 SQ. ROUND END
10	71396567	1	SHEAVE, PTO DRIVER
11	70928136	1	WASHER, HARD, 1.56 ID X 3.0 OD
12	70925284	1	NUT, HEX, NYLON LOCK, 1-1/2-12
13	71395810	1	BRACE WLDMT, PUMP SUPPORT
	7701188	1	CAPSCREW, 1/2-13 X 1-1/4 GR5
	701235	2	CAPSCREW, 1/2-13 X 1-1/2 GR5
	70918431	1	WASHER, FLAT, 1/2, WIDE
	Y704742	3	LOCKNUT, HEX FLANGE, 1/2-13, GR G
14	71395805	1	SUPPORT WLDMT, PUMP
	701235	3	CAPSCREW, 1/2-13 X 1-1/2 GR5
	70918431	3	WASHER, FLAT, 1/2, WIDE
	Y704742	3	LOCKNUT, HEX FLANGE, 1/2-13, GR G
15	103284M1C	1	BRACE, PUMP SUPPORT
	70921210	2	CAPSCREW, 3/8-16 X 1" GR5
	Y704734	2	LOCKNUT, HEX FLANGE, 3/8-16, GR G
16	71395808	1	ANCHOR, CLEVIS
17	844174M1	1	CLEVIS, 3/4-10UNC, LH THD
	703983	1	CAPSCREW, 1/2-13 X 1-3/4, GR5
	70918431	2	WASHER, FLAT, 1/2, WIDE
	70926946	1	LOCKNUT, HEX TOP, 1/2-13
18	844173M1	1	CLEVIS, 3/4-10UNC, RH THD
	703983	1	CAPSCREW, 1/2-13 X 1-3/4, GR5
	70918431	2	WASHER, FLAT, 1/2, WIDE
	70926946	1	LOCKNUT, HEX TOP, 1/2-13
19	255301M2	1	TURNBUCKLE, 3/4-10UNC
	70929288	1	NUT, JAM, 3/4-10 LH
	375113X1	1	NUT, JAM, 3/4-10 RH
20	71390870	1	BRACE, ROTOR PUMP
	70920415	1	CAPSCREW, 3/8-16 X 1-1/4, GR5
	Y704734	1	LOCKNUT, HEX FLANGE, 3/8-16, GR G
	7701188	1	CAPSCREW, 1/2-13 X 1-1/4, GR5
	Y704742	1	LOCKNUT, HEX FLANGE, 1/2-13, GR G

CONTINUED

MAIN ENGINE DRIVES

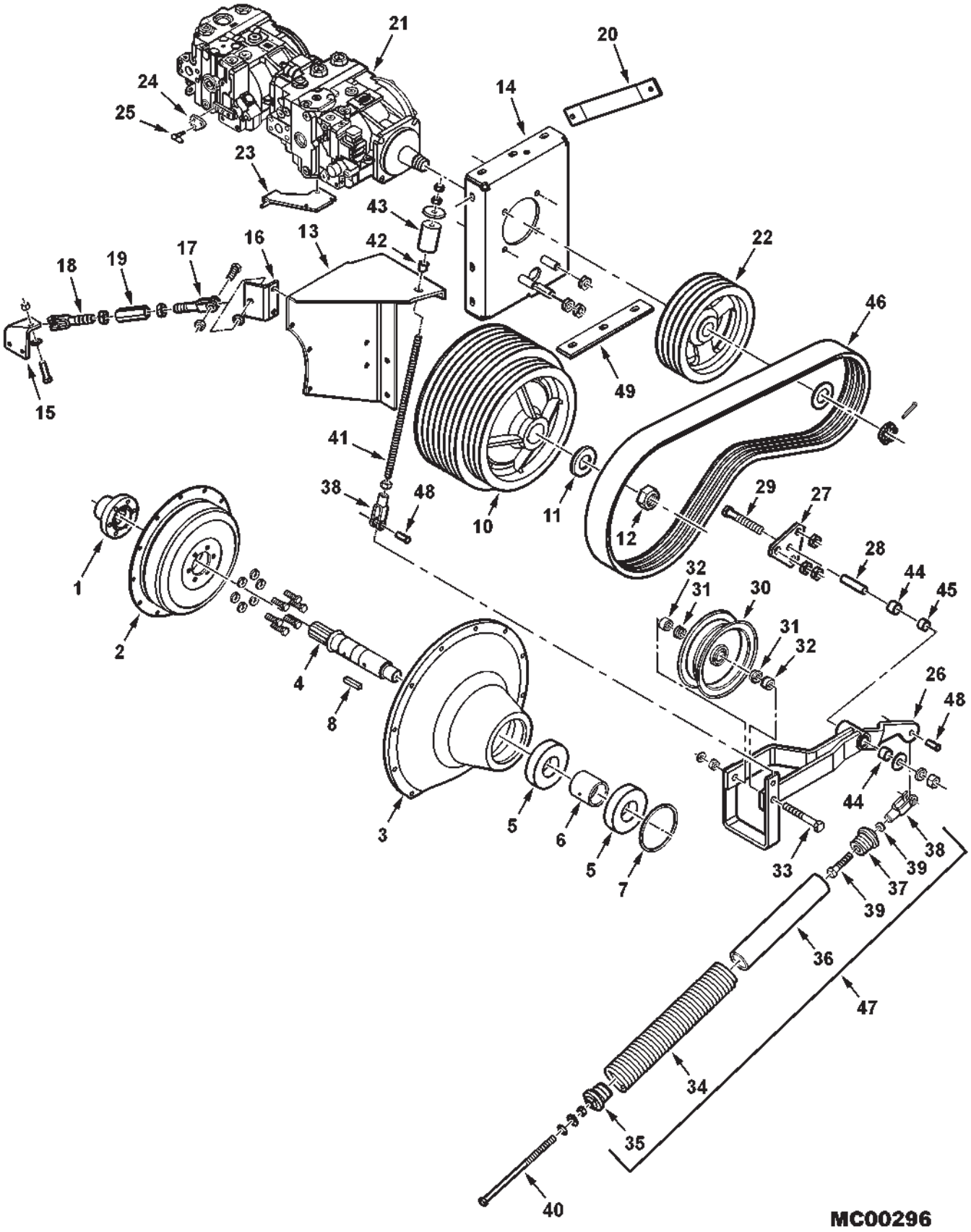

ITEM	NUMBER	QTY	DESCRIPTION
21	71389518	1	TANDEM PUMPS
	703983	4	CAPSCREW, 1/2-13 X 1-3/4, GR5
	353773X1	4	WASHER, HVY HARD, .50
	Y704742	4	LOCKNUT, HEX FLANGE, 1/2-13, GR G
22	71390092	1	SHEAVE, ROTOR PUMP
	70926208	1	WASHER, HARD, 1.31 X 2.25 X .25
	71356529	1	NUT, SLOTTED HEX (SUPPL'D W/ PUMP)
	70925719	1	PIN, COTTER, 1/8 X 2"
23	71396385	1	BRACKET, CABLE ANCHOR
	70918265	9	WASHER, 5/16 NARROW
	7772197	3	CAPSCREW, M8-1.25 X 25 FULL THD
24	71397428	1	PLATE, ADAPTER
	353505X1	2	CAPSCREW, 1/4-28 X 1" GR5
	705012	2	LOCKWASHER, 1/4 REG
	70914192	2	NUT, 1/4-28UNF
25	7845068	1	BALL JOINT
	70921880	1	WASHER, EXT TOOTH, .25 NOM.
	70914192	1	NUT, 1/4-28UNF
26	71395813	1	ARM ASY, IDLER
27	71346267	1	PLATE, MOUNTING
	70922037	6	JAMNUT, 3/4-10UNC
28	71390203	1	SLEEVE, IDLER PIVOT
29	70925704	1	CAPSCREW, 5/8-11 X 4-1/2 GR5
	70918432	1	WASHER, 5/8, WIDE
	70917373	1	LOCKWASHER, 5/8 REG
	70932665	1	NUT, 5/8-11UNC, REG
30	71390861	1	IDLER, 8" DIA
31	71312603	2	SPACER, IDLER
32	6529705	2	SPACER, 1" OD X .492 LG
33	873802	1	CAPSCREW, 5/8-11 X 7" GR5
	70917373	1	LOCKWASHER, 5/8
	70932665	1	NUT, 5/8-11UNC, REG
34	71349270	1	SPRING, EXTENSION
35	71395776B	1	PLUG, SPRING, 5/8-11UNC
36	71396355	1	HOSE, SPRING DAMPER
37	71349813	1	PLUG, SPRING, .53 HOLE
38	70937465	2	YOKE, 1/2-13UNC
39	7703531	1	CAPSCREW, 1/2-13 X 2-1/2 GR5
	704056	1	NUT, JAM, 1/2-13UNC
40	8701211	1	BOLT, HEX, 5/8-11 X 13" FULL THD, GR5
	71395175	1	PIVOT WASHER, 11/16 HOLE
	70918432	1	WASHER, 5/8, WIDE
	375112X1	1	NUT, HEX JAM, 5/8-11
41	71380468	1	ROD, THREADED, 1/2-13UNC X 15.3 LG
	704056	3	JAMNUT, 1/2-13UNC
42	71304362	1	BUSHING, NYLON
	70924095	1	NUT, SPEED, FLAT, 3/4 NOM
43	71194263	1	BUSHING, RUBBER
	70923094	1	WASHER, .53 X 2.0 X .18 FLAT
44	71356060	2	BUSHING, IDLER ARM
45	71390208	1	SPACER
46	71396569	1	BELT, TANDEM PUMPS
47	71395872	1	SPRING ASY, PUMP DRIVE (INCL IT'S 34-39)
48	70929593	2	PIN, CLEVIS, 1/2 DIA
	70918452	2	COTTER PIN, 1/8 X 1"
49	-----	--	SPACER, HYDRO MOUNT (NOT APPLICABLE)

MC00296
PR: 32

COOLING SYSTEM
(PRIOR S/N HR87101)

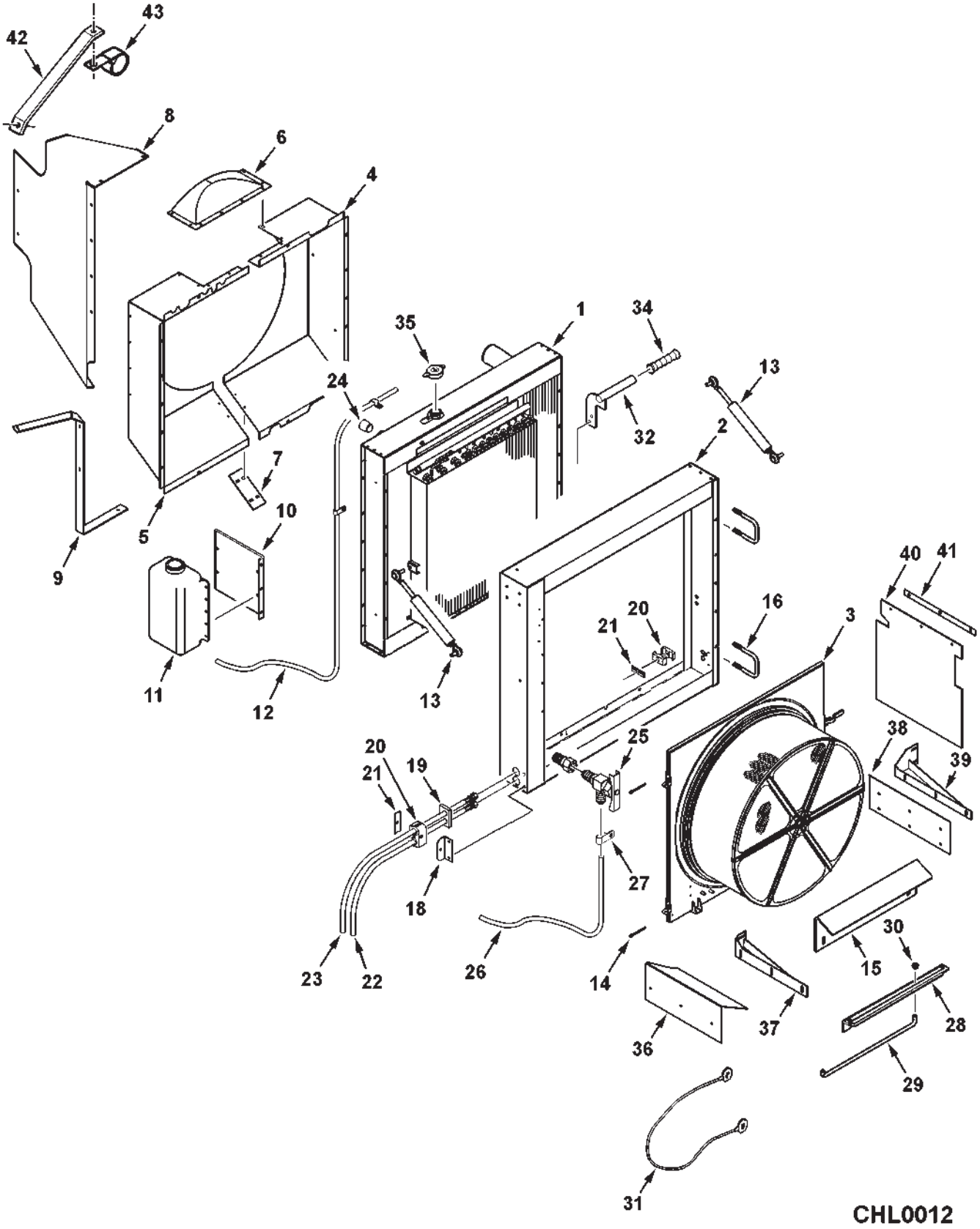

COOLING SYSTEM
(PRIOR S/N HR87101)

ITEM	NUMBER	QTY	DESCRIPTION
1	71391474	1	COOLING PACKAGE ASY.(INCL. NEXT 4 ITEMS)
	71387642	1	RAD & CHARGE AIR COOLER ASY W/FRAME
	71387643	1	RADIATOR, NKKX, 7 ROW, 5 FPI
	71387644	1	CHARGE AIR COOLER, 4 ROW, 4 FPI
	71391475	1	COMBINATION COOLER, 4 ROW, 5 FPI (A/C, OIL & FUEL COOLER)
	70923110	2	CAPSCREW, 3/4-10 X 1-1/2
	70919332	2	LOCKWASHER, 3/4 REG
	70913160	2	NUT, 3/4-10
2	71395903C	1	SHROUD WELDMENT, ROTARY SCREEN
	Y704734	4	NUT, HEX FLNG TOP LK, 3/8-16
	70921210	10	CAPSCREW, 3/8-16 X 1.0
	70916965	10	LOCKWASHER, 3/8
	1705938	7	SCREW, HX WSR HD,TPPNG, 1/4-20 X 3/4
3	-----	1	SCREEN ASY. COMPLETE (SERVICED WITH COMPONENTS)
4	71396980	1	SHROUD WLDMT, FAN FRONT
	Y704734	2	NUT, HEX FLNG TOP LK, 3/8-16
	70921965	4	CAPSCREW, 3/8-16 X 3/4
	70921974	2	CAPSCREW, 3/8-16 X 1-1/2 GR5
	70917378	8	WASHER, 3/8 WIDE
	70916965	6	LOCKWASHER, 3/8 REG
5	71395921	1	SHROUD WLDMT, FAN REAR
	Y704734	2	NUT, HEX FLNG TOP LK, 3/8-16
	70921965	4	CAPSCREW, 3/8-16 X 3/4
	70917378	6	WASHER, 3/8 WIDE
	70916965	4	LOCKWASHER, 3/8
6	71396976	1	SHROUD WELDMENT, FAN TOP
	7703499	8	CAPSCREW, 5/16-18 X 3/4 GR5
	70917356	8	LOCKWASHER, 5/16
	700709602	8	WASHER, 5/16 WIDE
7	71386517	1	PLATE, SPLICE FAN SHROUD
	70931317	4	BOLT, RD HD,SHT SQ NK, 1/4-20 X 3/4
	70916964	4	LOCKWASHER, 1/4
	70916622	4	NUT, 1/4-20, REG
8	71395923	1	DEFLECTOR, ENGINE AIR
	70921332	6	CAPSCREW, 5/16-18 X 3/4 GR5
	Y705608	6	WASHER, 5/16 NARROW
	Y705020	6	LOCKWASHER, 5/16
9	71393850	1	STRAP, SUPPORT, AIR DEFLECTOR
	70921332	1	CAPSCREW, 5/16-18 X 3/4 GR5
	Y705020	1	LOCKWASHER, 5/16
	Y705608	1	WASHER, 5/16, NARROW
	70922837	2	CAPSCREW, 1/4-20 X 1-1/2 GR5
	700709601	4	WASHER, 1/4, WIDE
	70916964	2	LOCKWASHER, 1/4
	70916622	2	NUT, 1/4-20, REG
10	71385996	1	PLATE, SUPPORT OVERFLOW TANK
	7703457	3	CAPSCREW, 1/4-20 X 3/4 GR5
	705707	3	WASHER, 1/4, NARROW
	705012	3	LOCKWASHER, 1/4 REG
	704007	3	NUT, HEX, 1/4-20

CONTINUED

COOLING SYSTEM
(PRIOR S/N HR87101)

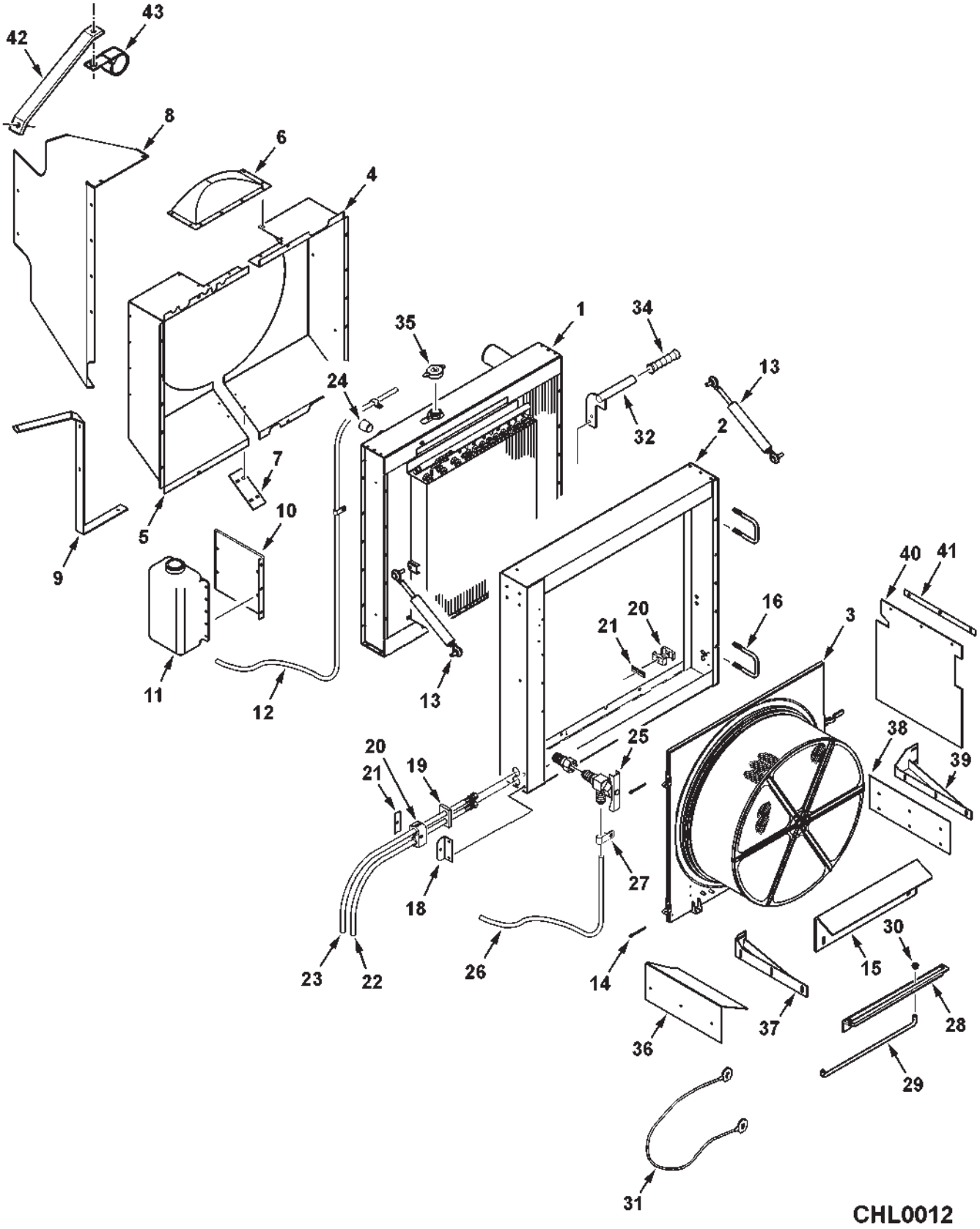

COOLING SYSTEM
(PRIOR S/N HR87101)

ITEM	NUMBER	QTY	DESCRIPTION
11	71346998	1	TANK, COOLANT OVERFLOW
	70931317	4	BOLT, RD HD,SHT SQ NK, 1/4-20 X 3/4
	70918264	4	WASHER, 1/4 NARROW
	70916964	4	LOCKWASHER, 1/4 REG
	70916622	4	NUT, HEX, 1/4-20
12	71367032	1	HOSE, COOLANT OVERFLOW
	70925617	1	CLAMP, 1/2 X .406 HOLE
	70927097	1	CLAMP, 1/2 X .281 HOLE
13	71336386	2	SPRING, GAS
	71339847	4	STUD, BALL
	70917356	4	LOCKWASHER, 5/16 REG
	70917372	4	NUT, HEX 5/16-18
14	70918452	2	PIN, COTTER, 1/8 X 1
15	71378441	1	RAMP, ROTARY SCREEN
	70921210	2	CAPSCREW, 3/8-16 X 1
	70917378	2	WASHER, 3/8 WIDE
	70916965	2	LOCKWASHER, 3/8 REG
	70916950	2	NUT, HEX 3/8-16 REG
16	1651910W1	2	LATCH BOLT
	70916950	8	NUT, HEX 3/8-16 REG
18	71388063	1	ANGLE, SUPPORT, HOSE
	70921332	2	CAPSCREW, 5/16-18 X 3/4 GR5
	Y704726	2	NUT, HEX FLANGE TOP LOCK, 5/16-18
19	71388064	1	SEAL, COOLER HOSE
20	101841M1	4	CLAMP PAIR, DOUBLE, 1-1/2 DIA
21	101842M1	4	PLATE, COVER
	70926106	4	CAPSCREW, 5/16-18 X 3-1/4, GR5
	Y704726	4	NUT, HEX FLANGE TOP LOCK, 5/16-18
22	71388061	1	HOSE ASY., COOLER
23	71388062	1	HOSE ASY., COOLER
24	70917970	1	PLUG, RECESSED SOCKET, 1/2-14 NPT
25	70933036	1	VALVE, DRAIN
	70917919	1	ADAPTER, 1/4 X 1/4 NPTF
26	71388089	1	HOSE ASY, RAD DRAIN
	700704010	AR	SILICONE SEALANT, BLACK, 10.2 OZ.
27	70936778	1	J-CLIP, 3/4 X .406 HOLE
	70918249	1	SCREW, TRUSS HD, 5/16-18 X 3/4
	70917642	1	WASHER, 5/16, WIDE
	70917372	1	NUT, 5/16-18, REG
28	71388880	1	BRACKET, PROP ROD
	70917356	3	LOCKWASHER, 5/16
	7700461	3	BOLT, RD HD SHT SQ NK, 5/16-18 X 3/4
	70917372	3	NUT, 5/16-18 REG
29	71399338	1	ROD, PROP - ROTARY SCREEN
	70918266	2	WASHER, 3/8 NARROW
	70918547	1	PIN, SPRING, 1/8 X 1/2
	70918447	3	COTTER PIN, 3/32 X 3/4
30	71388882	1	BUSHING, PROP ROD
31	112942W1	1	TETHER STRAP
	7703457	2	CAPSCREW, 1/4-20 X 3/4
	70918264	1	WASHER, 1/4, NARROW
	1703354	2	NUT, HEX FLANGE TOP LOCK, 1/4-20

CONTINUED

COOLING SYSTEM
(PRIOR S/N HR87101)

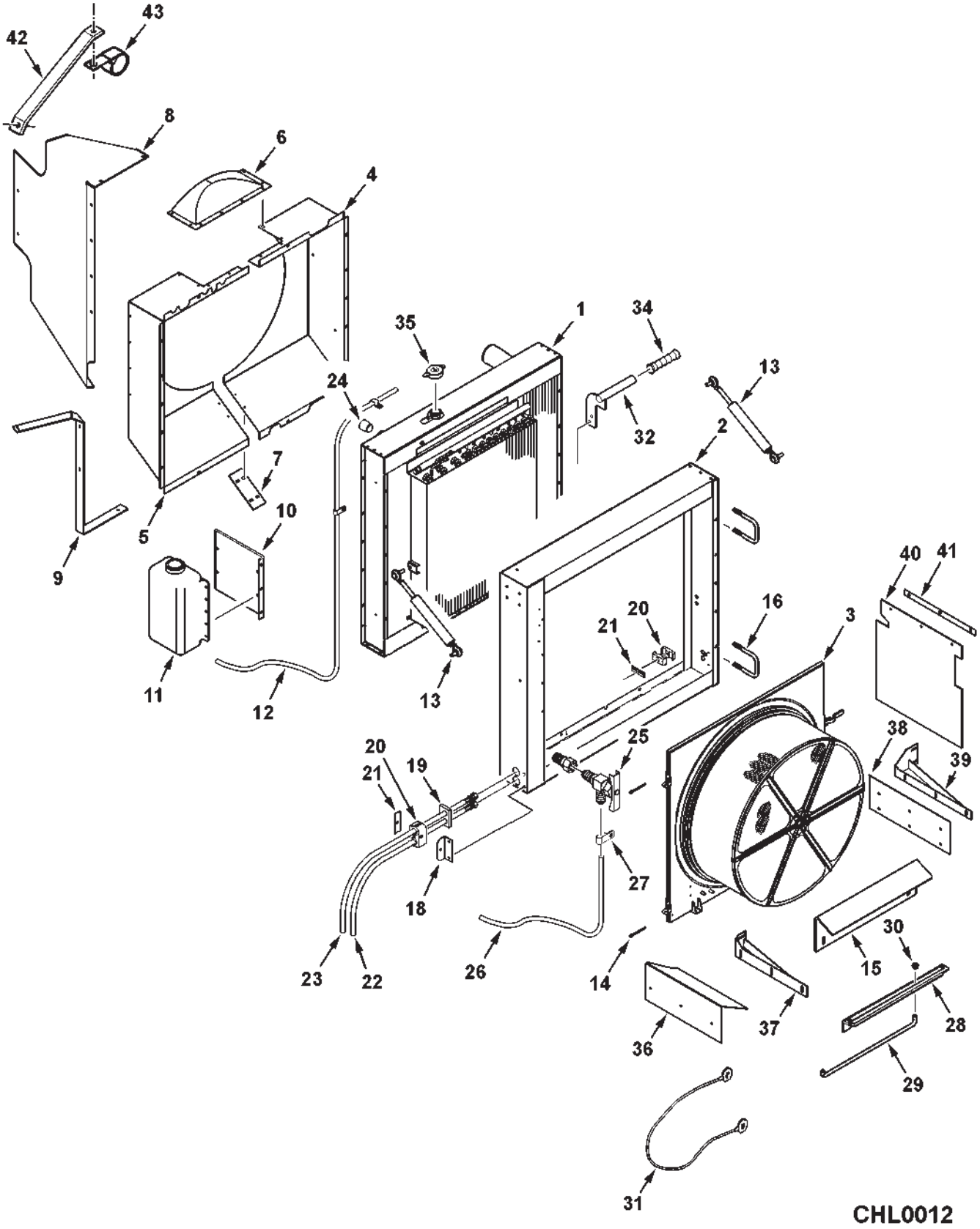

COOLING SYSTEM
(PRIOR S/N HR87101)

ITEM	NUMBER	QTY	DESCRIPTION
32	71393831C	1	HANDLE WLDMT, COOLER
	70917356	2	LOCKWASHER, 5/16
	70917372	2	NUT, 5/16-18 REG
34	27342	1	HANDLE GRIP
35	71400413	1	CAP, RADIATOR PRESSURE
36	71398954C	1	CHAFF STRIPPER, ROT SCREEN, REAR
37	71398948C	1	SUPPT WLDMT, STRIPPER, REAR
	7700461	5	BOLT, RD HD SHT SQ NK, 5/16-18 X 3/4
	Y704726	5	NUT, HEX FLNG TOP LK, 5/16-18
38	71398955C	1	CHAFF STRIPPER, ROT SCREEN, FRONT
39	71398951C	1	SUPPT WLDMT, STRIPPER, FRONT
	7700461	5	BOLT, RD HD SHT SQ NK, 5/16-18 X 3/4
	Y704726	5	NUT, HEX FLNG TOP LK, 5/16-18
40	71398956	1	CURTAIN, FRONT
41	71398957	1	STRAP, BACKUP
	7700461	3	BOLT, RD HD SHT SQ NK, 5/16-18 X 3/4
	Y704726	3	NUT, HEX FLNG TOP LK, 5/16-18
42	71381495	1	BRACE, DEFLECTOR
43	70937684	1	J-CLIP, 1-1/4 DIA X .406 HOLE
	7703457	1	CAPSCREW, 1/4-20 X 3/4 GR5
	700709601	1	WASHER, 1/4, WIDE
	1703354	1	NUT, HEX FLANGE TOP LOCK, 1/4-20

CHL0012
PR: 36

COOLING SYSTEM
(EFF. S/N HR87101)

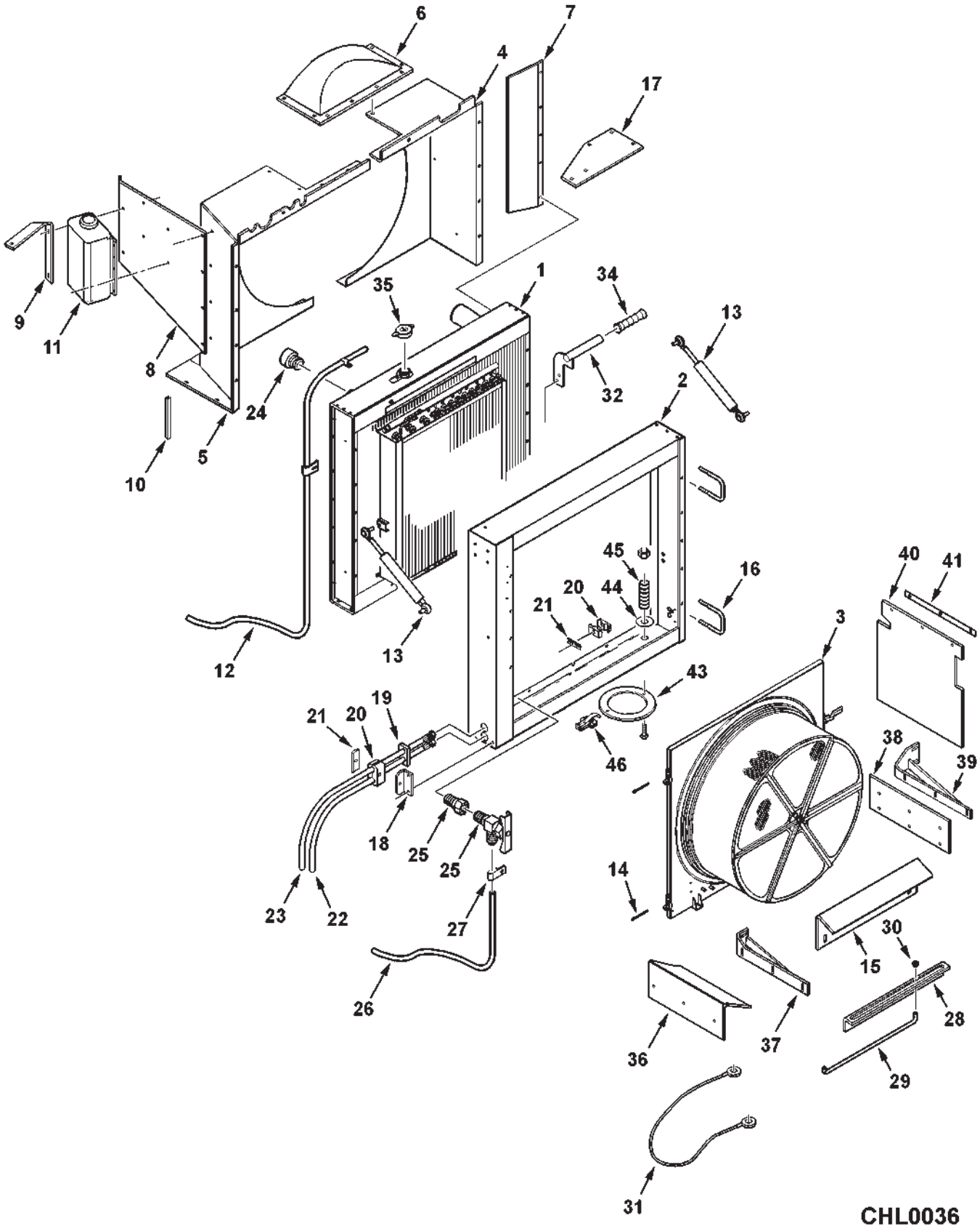

COOLING SYSTEM
(EFF. S/N HR87101)

ITEM	NUMBER	QTY	DESCRIPTION
1	-----	1	COOLING PACKAGE ASY.
			(INCL. FOLLOWING 4 COMPONENTS)
	71401799	1	RAD & CHARGE AIR COOLER ASY W/FRAME
	71400554	1	RADIATOR, NKXX, 7 ROW, 6 FPI
	71404420	1	CHARGE AIR COOLER, 4 ROW, 4 FPI
	71393842	1	COMBINATION COOLER, 4 ROW, 5 FPI
			(A/C, OIL & FUEL COOLER)
	70921210	2	CAPSCREW, 3/8-16 X 1" GR5
	70916965	2	LOCKWASHER, 3/8, REG
	Y705533	2	WASHER, 3/8, HARD PLAIN
2	71401807	1	SHROUD WLMT, ROTARY SCREEN
			(FILL UNUSED HOLES W/SCREWS)
	Y704734	4	NUT, HEX FLANGE TOP LOCK, 3/8-16
	70921210	9	CAPSCREW, 3/8-16 X 1 GR5
	Y705533	9	WASHER, 3/8, HARD PLAIN
	70916965	9	LOCKWASHER, 3/8, REG
3	-----	1	SCREEN ASY. 40", COMPLETE (SEE
			COMPONENTS LISTING)
4	71409743	1	SHROUD WLMT, FAN FRONT
	Y704734	1	NUT, HEX FLANGE TOP LOCK, 3/8-16
	70921210	4	CAPSCREW, 3/8-16 X 1 GR5
	70916965	4	LOCKWASHER, 3/8 REG
	Y705533	4	WASHER, 3/8, HARD PLAIN
	701565	5	SCREW, HEX WSHR HD, 1/4-20 X 3/4
5	71409746	1	SHROUD WLMT, FAN REAR
	Y704734	1	NUT, HEX FLANGE TOP LOCK, 3/8-16
	70921210	4	CAPSCREW, 3/8-16 X 1 GR5
	70916965	4	LOCKWASHER, 3/8 REG
	Y705533	4	WASHER, 3/8, HARD PLAIN
	701565	6	SCREW, HEX WSHR HD, 1/4-20 X 3/4
6	71396976	1	SHROUD WLMT, FAN TOP
	7703499	8	CAPSCREW, 5/16-18 X 3/4 GR5
	70917356	8	LOCKWASHER, 5/16 REG
	Y705525	8	WASHER, 5/16, HARD PLAIN
7	71410046	1	PANEL, BAFFLE

CONTINUED

COOLING SYSTEM
(EFF. S/N HR87101)

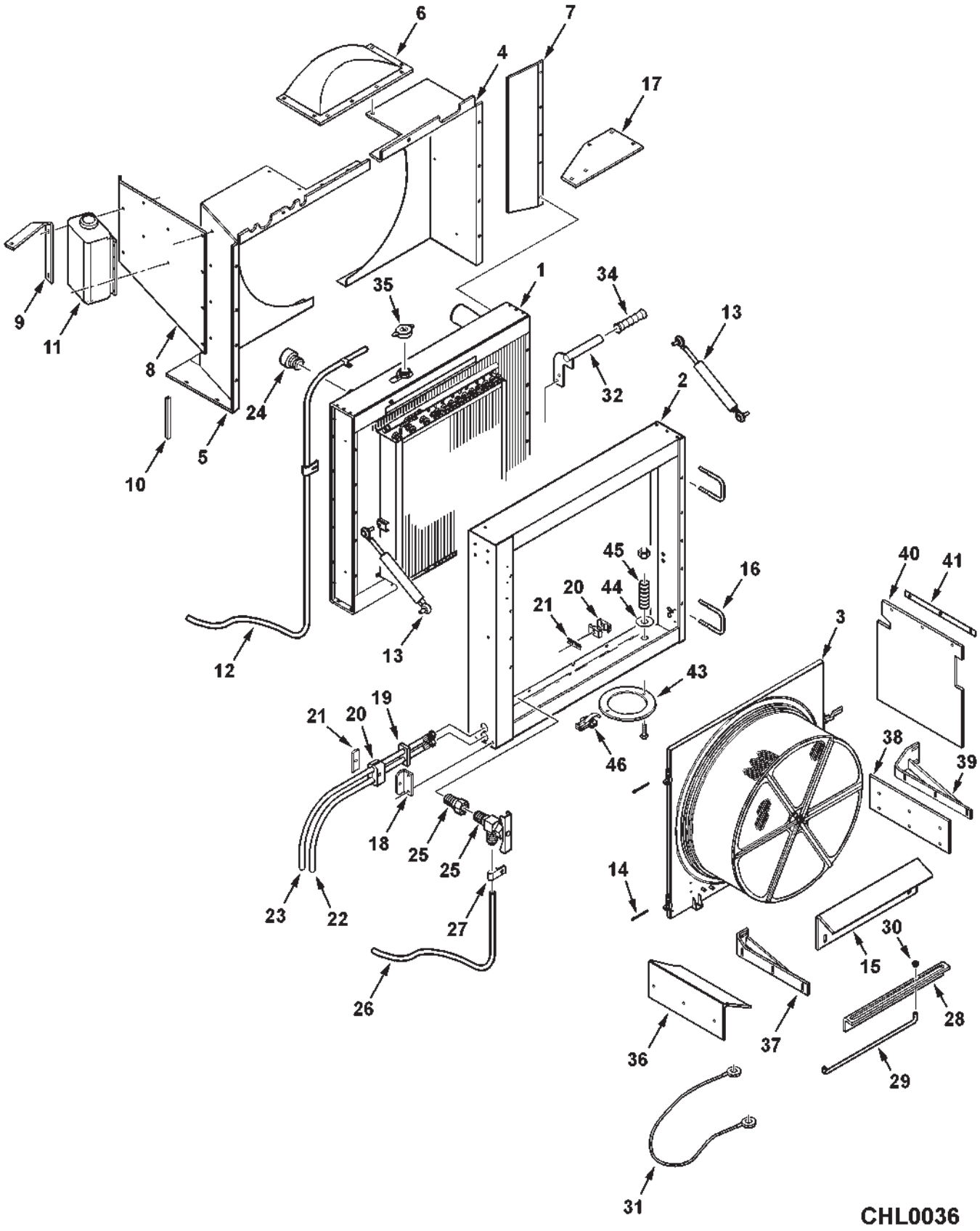

ITEM	NUMBER	QTY	DESCRIPTION
8	71409748	1	DEFLECTOR, AIR
	70921332	4	CAPSCREW, 5/16-18 X 3/4 GR5
	Y705525	4	WASHER, 5/16, HARD PLAIN
	70917356	4	LOCKWASHER, 5/16 REG
9	71410011	1	BRACE STRAP, AIR DEFLECTOR
	7703457	2	CAPSCREW, 1/4-20 X 3/4 GR5
	353769X1	2	WASHER, 1/4, HARD PLAIN
	1703354	2	NUT, HEX FLANGE TOP LOCK, 1/4-20
10	71387797	1	EDGE MOULDING, 8" LG
11	71346998	1	TANK, COOLANT OVERFLOW
	7703457	4	CAPSCREW, 1/4-20 X 3/4 GR5
	353769X1	4	WASHER, 1/4, HARD PLAIN
	1703354	4	NUT, HEX FLANGE TOP LOCK, 1/4-20
12	71404417	1	HOSE, COOLANT RECOVERY
	70925617	2	CLAMP, 1/2 X .406 HOLE
13	71336386	2	SPRING, GAS
	71339847	4	STUD, BALL
	70917356	4	LOCKWASHER, 5/16 REG
	70917372	2	NUT, HEX 5/16-18
14	70918452	2	PIN, COTTER, 1/8 X 1
15	71378441	1	RAMP, ROTARY SCREEN
	70921210	2	CAPSCREW, 3/8-16 X 1
	70917378	2	WASHER, 3/8 WIDE
	70916965	2	LOCKWASHER, 3/8 REG
	70916950	2	NUT, HEX 3/8-16 REG
16	1651910W1	2	LATCH BOLT
	70916950	8	NUT, HEX 3/8-16 REG
17	71404416	1	COVER, LOWER SUB-FRAME
	701565	5	SCR,HX WSHR HD,TAPPING, 1/4-20 X 3/4
18	71388063	1	ANGLE, SUPPORT, HOSE
	70921332	2	CAPSCREW, 5/16-18 X 3/4 GR5
	Y704726	2	NUT, HEX FLANGE TOP LOCK, 5/16-18
19	71388064	1	SEAL, COOLER HOSE
20	101841M1	4	CLAMP PAIR, DOUBLE, 1-1/2 DIA
21	101842M1	4	PLATE, COVER
	70925690	4	CAPSCREW, 5/16-18 X 3-1/2, GR5
	Y704726	2	NUT, HEX FLANGE TOP LOCK, 5/16-18
	70917356	2	LOCKWASHER, 5/16 REG
22	71388061	1	HOSE ASY., COOLER
23	71388062	1	HOSE ASY., COOLER
24	70917970	1	PLUG, RECESSED SOCKET, 1/2-14 NPT
25	70933036	1	VALVE, DRAIN
	70917919	1	ADAPTER, 1/4 MALE X 1/4 FEM. NPTF
26	71388089	1	HOSE ASY, RAD DRAIN
	700704010	AR	SILICONE SEALANT, BLACK, 10.2 OZ.

CONTINUED

COOLING SYSTEM
(EFF. S/N HR87101)

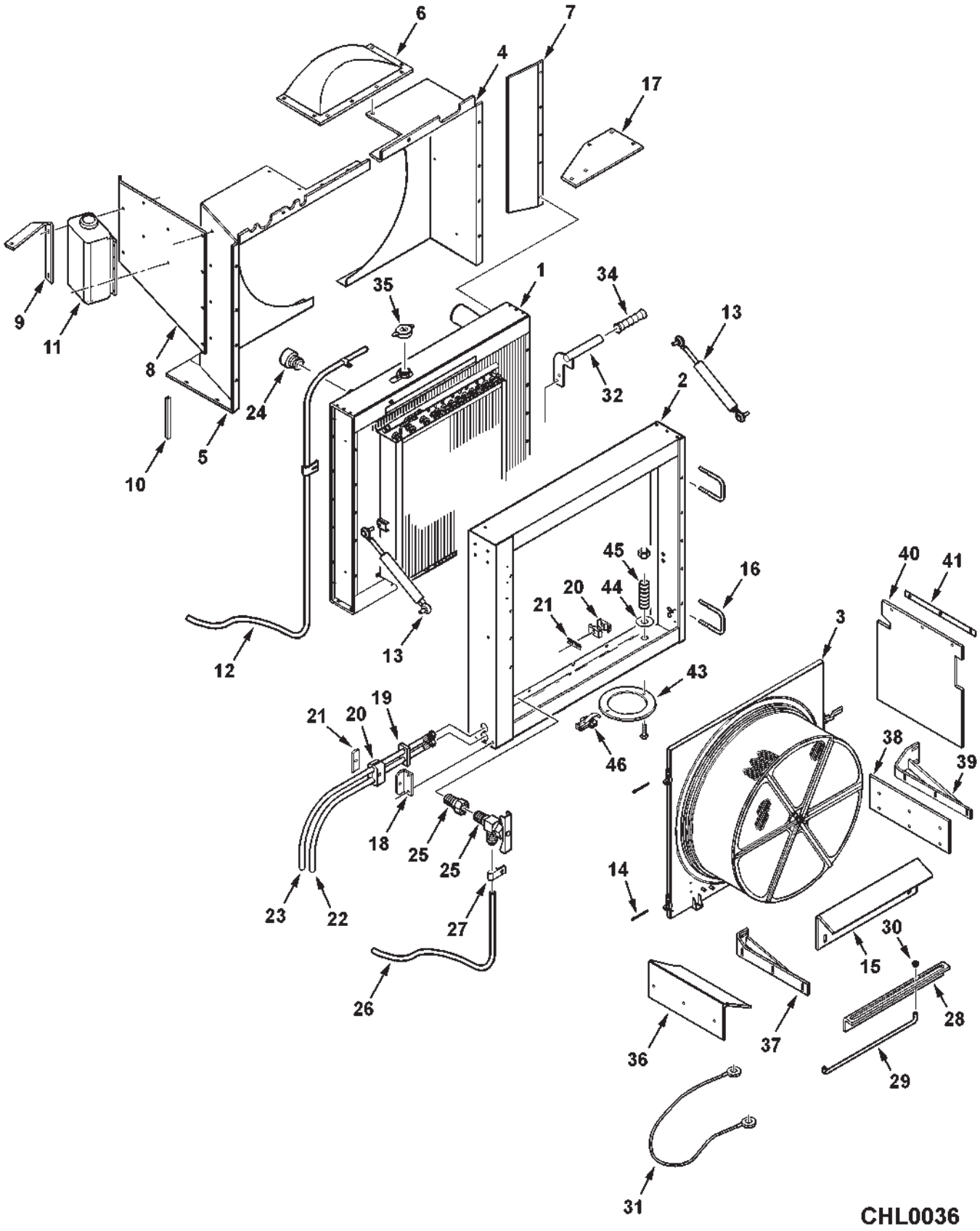

ITEM	NUMBER	QTY	DESCRIPTION
27	70936778	1	J-CLIP, 3/4 X .406 HOLE
	70918249	1	SCREW, TRUSS HD, 5/16-18 X 3/4
	70917642	1	WASHER, 5/16, WIDE
	70917372	1	NUT, 5/16-18, REG
28	71388880	1	BRACKET, PROP ROD
	7700461	3	BOLT, RD HD SQ NK, 5/16-18 X 3/4
	Y705525	3	WASHER, 5/16, HARD PLAIN
	70917372	3	NUT, 5/16-18 REG
29	71399338	1	ROD, PROP, ROTARY SCREEN
	70918266	2	WASHER, 3/8 NARROW
	70918447	3	COTTER PIN, 3/32 X 3/4
	70918547	1	SPRING PIN, 1/8 X 1/2, PLAIN
30	71388882	1	BUSHING, PROP ROD
31	112942W1	1	TETHER STRAP
	7703457	2	CAPSCREW, 1/4-20 X 3/4
	70918264	2	WASHER, 1/4 NARROW
	1703354	2	NUT, HEX FLANGE TOP LOCK, 1/4-20
32	71393831C	1	HANDLE WLMT, COOLER
	70917356	2	LOCKWASHER, 5/16 REG
	70917372	2	NUT, HEX, 5/16-18
34	27342	1	HANDLE GRIP
35	71400413	1	CAP, FILLER
36	71398954C	1	CHAFF STRIPPER, ROT SCREEN, REAR
37	71398948C	1	SUPPT WLDMT, STRIPPER, REAR
	7700461	5	BOLT, RD HD SHT SQ NK, 5/16-18 X 3/4
	Y704726	5	NUT, HEX FLANGE TOP LOCK, 5/16-18
38	71398955C	1	CHAFF STRIPPER, ROT SCREEN, FRONT
39	71398951C	1	SUPPT WLMT, STRIPPER, FRONT
	7700461	5	BOLT, RD HD SHT SQ NK, 5/16-18 X 3/4
	Y704726	5	NUT, HEX FLNG TOP LK, 5/16-18
40	71398956	1	CURTAIN, FRONT
41	71398957	1	STRAP, BACKUP
	7700461	3	BOLT, RD HD SHT SQ NK, 5/16-18 X 3/4
	Y704726	3	NUT, HEX FLANGE TOP LOCK, 5/16-18
43	487777	1	COVER, CLEANOUT ACCESS
	Y705525	1	WASHER, 5/16 HARD PLAIN
	Y704726	1	NUT, HEX FLANGE TOP LOCK, 5/16-18
	7771744	1	CAPSCREW, 5/16-18 X 2-1/4 GR5
44	700709866	1	WASHER, SELF-ADHESIVE
45	758342	1	SPRING
46	70537291	1	FASTENER, SNAP
	700702358	1	SCREW, PAN HEAD, #10-24 X 1"
	70917380	1	WASHER, #10 PLAIN
	705004	1	LOCKWASHER, #10 REG
	Y704072	1	NUT, #10-24 REG

CHL0036
PR: t06a25h54a0003

RADIATOR SLINGER

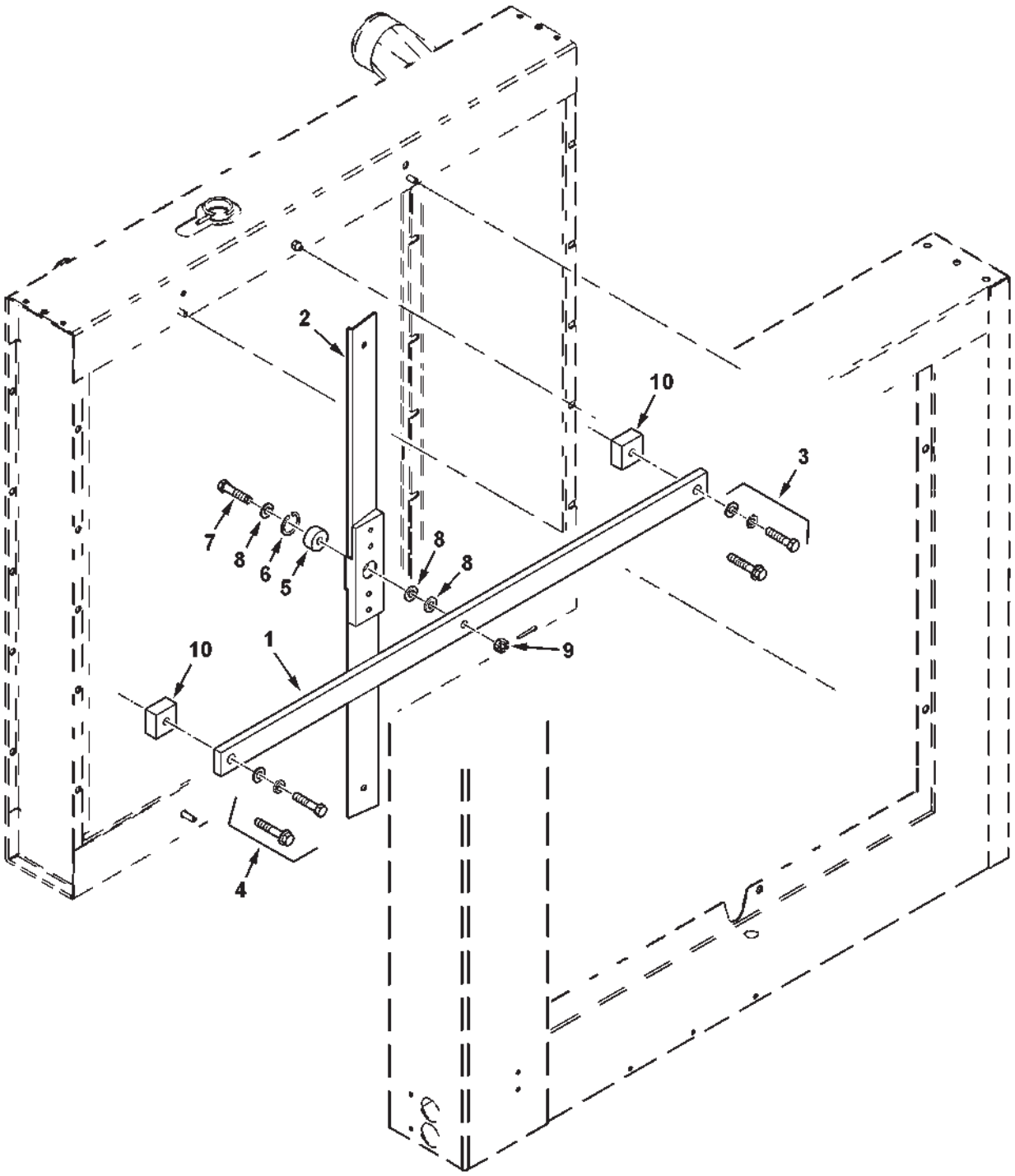

MC00386

RADIATOR SLINGER

ITEM	NUMBER	QTY	DESCRIPTION
1	71391541	1	SUPPT CHANNEL,SLINGER(PRIOR S/N HR87101)
	71404414	1	SUPPORT BAR, SLINGER (EFF. S/N HR87101)
2	71391463	1	BLADE ASY, SLINGER
	71391461	2	BLADE, SLINGER
	71391462	1	CARRIER, BRG, SLINGER
	70920787	4	CAPSCREW, 5/16-18 X 1/2 LG, GR5
	79021668	AR	THREAD LOCKER, HIGH STRENGTH
	79021648	AR	PRIMER N
3	70921969	1	CPSCR, 3/8-16 X 1-1/2(PRIOR S/N HR87101)
	70916965	1	LOCKWASHER 3/8
	Y705533	1	WASHER, HARDENED .406 x .844
	700711134	1	CAPSCREW, HEX FLANGE, 3/8-16 X 1-3/4 (EFF. S/N HR87101)
4	70921971	1	CPSCR, 3/8-16 X 1-3/4(PRIOR S/N HR87101)
	70916965	1	LOCKWASHER 3/8
	Y705533	1	WASHER, HARDENED .406 x .844
	700711132	1	CAPSCREW, HEX FLANGE, 3/8-16 X 2 (EFF. S/N HR87101)
5	71391540	1	BEARING, BALL
6	70927692	1	RING, RETAINING
7	71391466	1	CAPSCREW, SPL. 3/8-24 X 1-1/4 (PRIOR S/N HR87101)
	71406694	1	CAPSCREW, SPL. 3/8-24 X 1-3/4 (EFF. S/N HR87101)
8	70918266	3	WASHER, 3/8, NARROW (WAS 2 PRIOR TO S/N HR87101)
9	353924X1	1	NUT, SLOTTED HEX, 3/8-24
	70918452	1	COTTER PIN 1/8 X 1
	79021672	AR	THREAD LOCKER -MED. STRENGTH
	79021648	AR	PRIMER N
10	71392705	2	SPACER BLOCK, 3/4 THICK

MC00386
PR: t06a25h54a0004

ROTARY SCREEN
DOOR & SCREEN

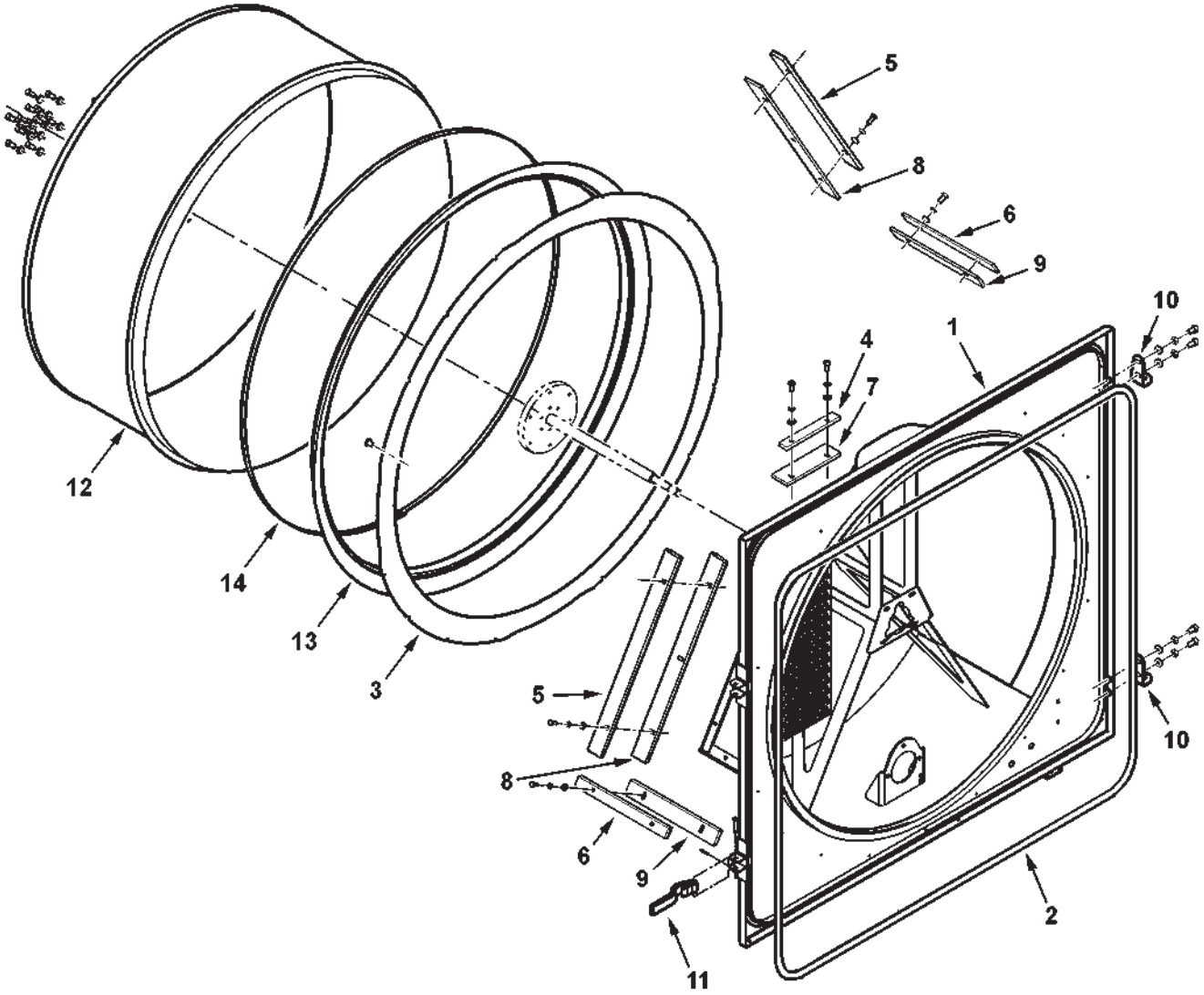

MC00384

ITEM	NUMBER	QTY	DESCRIPTION
1	71391030	1	PANEL WLDMT, 40" DIA ROTARY SCREEN (PRIOR S/N HR87101)
	71404396	1	PANEL WLDMT, 40" DIA ROTARY SCREEN (EFF. S/N HR87101)
2	71387996	1	SEAL, ROTARY SCREEN
3	71395750	1	RING, WEAR
	70924837	16	RIVET, 3/16 X 9/32
4	71391036	1	PLATE, CUTOFF, UPPER (PRIOR S/N HR87101)
	71404403	1	PLATE, CUTOFF, UPPER (EFF. S/N HR87101)
	7703457	12	CAPSCREW, 1/4-20 X 3/4 GR5
	705012	12	LOCKWASHER, 1/4
	353769X1	2	WASHER, HARD, .281 X .656 X .074 TH
5	71391037	2	PLATE, CUTOFF, SIDE (PRIOR S/N HR87101)
	71404404	2	PLATE, CUTOFF, SIDE (EFF. S/N HR87101)
6	71404399	2	PLATE, CUTOFF, LOWER (EFF. S/N HR87101)
7	71404402	1	CURTAIN STRAP, FRONT (EFF. S/N HR87101)
8	71404401	2	CURTAIN STRAP, SIDE (EFF. S/N HR87101)
9	71404400	2	CURTAIN STRAP, LOWER (EFF. S/N HR87101)
10	71395906	2	BRACKET, HINGE
	Y705608	4	WASHER, 5/16 NARROW
	Y705020	4	LOCKWASHER, 5/16
	70921332	4	CAPSCREW, 5/16-18 X 3/4 GR5
11	1799410W1	2	HANDLE, LATCH
	62075	2	COTTER PIN 1/8 X 3/4
	70927523	2	PIN, OVAL HD, DRILLED, 5/16 X 1-1/2
12	71391031	1	ROTARY SCREEN WLDMT
	353769X1	12	WASHER, HARD, .281 X .625 X .074 TH
	7703457	12	CAPSCREW, 1/4-20 X 3/4 GR5
13	71393650	1	SEAL, ROTARY SCREEN
14	71396752	1	CLAMP, BAND

MC00384
PR: t06a25h54a0005

ROTARY SCREEN
MOTOR & DRIVE

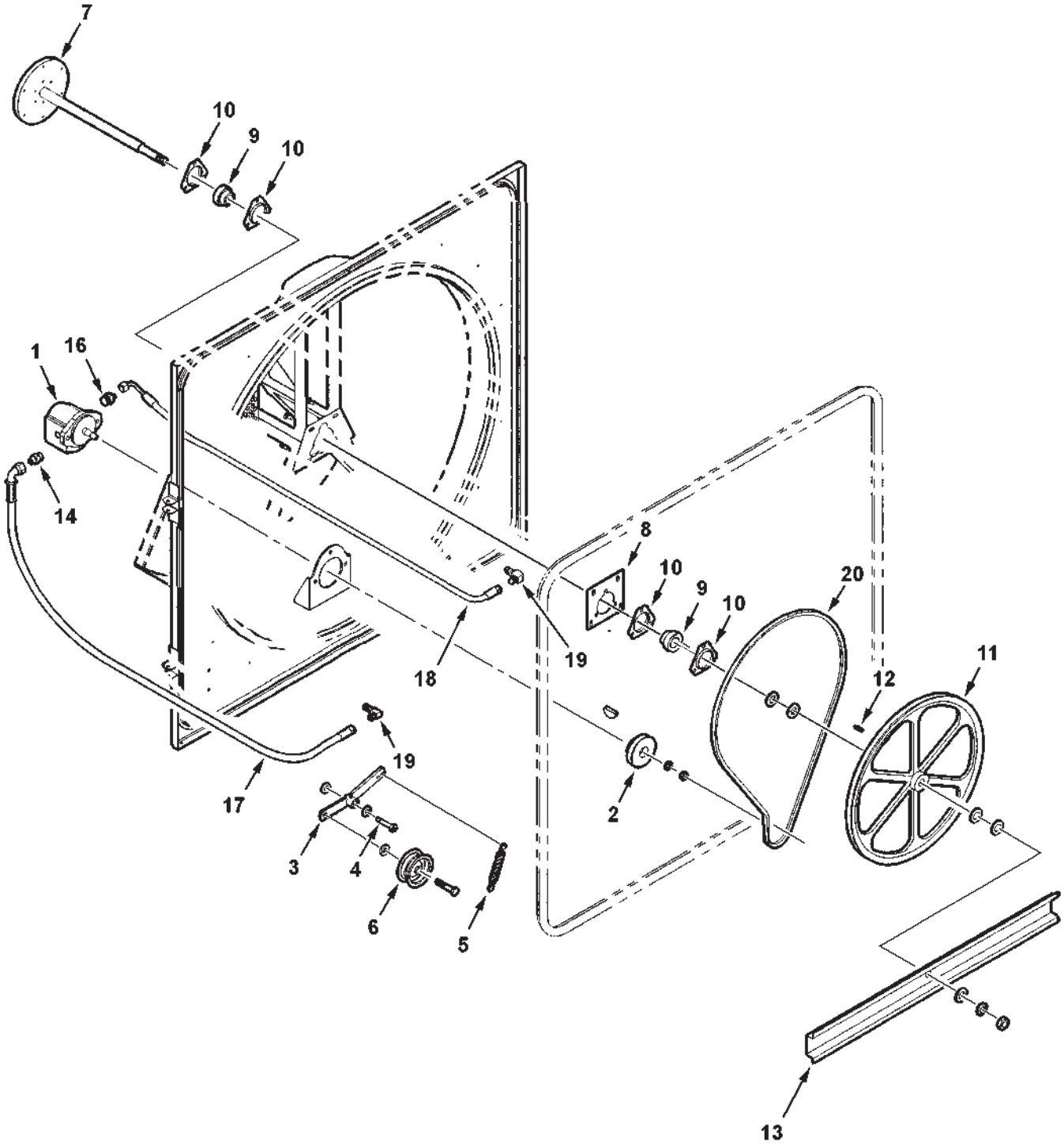

MC00294

ITEM	NUMBER	QTY	DESCRIPTION
1	71396755	1	MOTOR, HYDRAULIC (INCLUDES KEY)
	71396758	AR	SEAL KIT (SOLE SERVICE COMPONENT)
	70910224	1	KEY, WOODRUFF, 5/32 X 5/8 DIA
	7883408	2	SCREW,HEX FLANGE, 3/8-16 X 1-1/4 GR8
	Y705533	2	WASHER, HARD, .406 X .781 X .065
	Y704734	2	NUT, HEX FLNG TOP LK, 3/8-16 GR G
2	71395749	1	SHEAVE, DRIVE
	Y705046	1	LOCKWASHER, 1/2 REG
	7704000	1	JAM NUT, 1/2-20 GR2
3	71396756	1	ARM ASY, IDLER
	3728019M1	2	BUSHING
	70914687	1	LUBE FTG, 1/4-28, STRAIGHT
4	8701781	1	SCREW, SOCKET HD, SHOULDER,1/2 X 3/8-16
	705541	2	WASHER, HARD, .531 X 1.03 X .120
	Y704734	1	NUT, HEX FLNG TOP LK, 3/8-16 GR G
5	700714064	1	SPRING
	70931277	2	LOCKNUT, SERR FLNG, 5/16-18
	7883333	1	SCREW, HEX WSHR HD, 5/16-18 X 1"
6	70529432	1	IDLER, 2-3/4 DIA, FLAT
	705541	2	WASHER, HARD, .531 X 1.03 X .120
	Y704742	1	NUT, HEX FLNG TOP LK, 1/2-13 GR G
	70922645	1	CAPSCREW, 1/2-13 X 2-1/4 GR5
7	71391039	1	SHAFT WLDMT, ROTARY SCREEN
8	71395728	1	PLATE, BEARING
	Y704726	4	NUT, HEX FLNG TOP LK, 5/16-18 GR G
	7700461	4	BOLT, RND HD SQ NK, 5/16-18 X 3/4
9	71308951	2	BEARING, BALL, SPHERICAL
10	71133361	4	FLANGE, BEARING
	Y704726	6	NUT, HEX FLNG TOP LK, 5/16-18 GR G
	70921332	3	CAPSCREW, 5/16-18 X 3/4 GR5
	7700461	3	BOLT, RND HD SQ NK, 5/16-18 X 3/4
11	71396753	1	SHEAVE, DRIVEN
12	61002	1	KEY, 3/16 SQ X 1"
13	71393636	1	BLADE, WINDMILL
	Y705566	7	WASHER, HARD, .812 X 1.5 X .140
	70919332	1	LOCKWASHER, 3/4 REG
	353436X1	1	JAM NUT, 3/4-16 GR2
14	360202X91	1	CONNECTOR, 9/16-18 JIC X 3/4-16 ORB
	70921349	1	O-RING, .087 X .644 ID
16	8746018	1	CONNECTOR, 9/16-18 JIC X 7/8-14 ORB
	70921205	1	O-RING, .097 X .755 ID
17	71397634	1	HOSE ASY, HYDRAULIC
18	71397633	1	HOSE ASY, HYDRAULIC
19	700717539	2	ELBOW, 90 D, BLKHD, 9/16-18 JIC MALE
20	71396754	1	BELT, ROTARY SCREEN DRIVE (69.89")

MC00294
PR: 46

FUEL LINES
(PRIOR S/N HP87101)

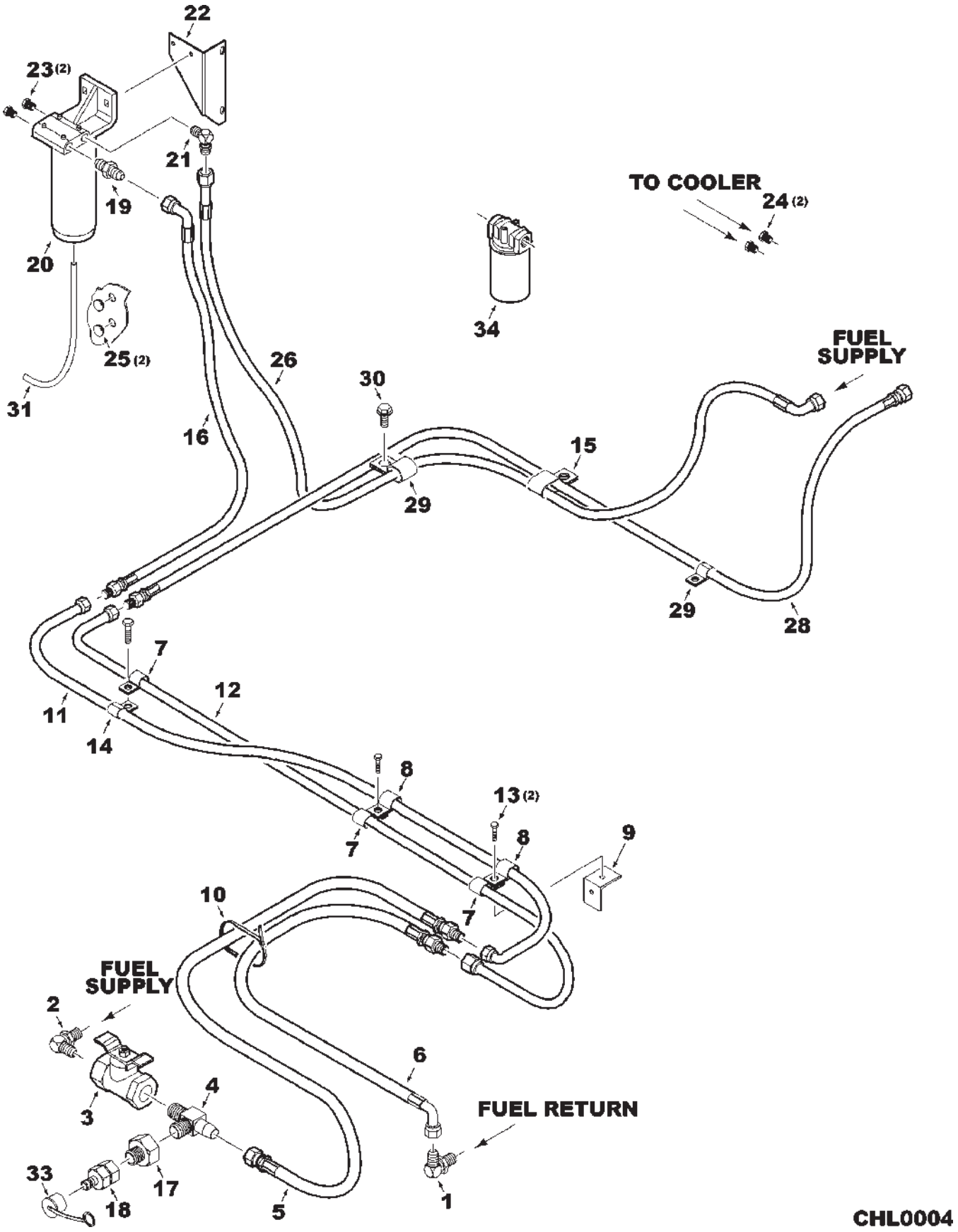

FUEL LINES
(PRIOR S/N HP87101)

ITEM	NUMBER	QTY	DESCRIPTION
1	70919195	1	ELBOW, 90 DEG, 3/4-16 JIC X 1/2 NPTF
2	700701331	1	ELBOW, 90 DEG, 1/2 NPTF X 1/2 NPTF
3	71368741	1	VALVE, BALL, 1/2 NPT
4	71400556	1	TEE, MALE, 7/8-14 X 1/2 NPTF RUN
5	71394141	1	HOSE ASY, FUEL SUPPLY
6	71396269	1	HOSE ASY, FUEL RETURN
7	70925617	3	CLAMP, 1/2 TUBE X .406 HOLE
8	70928656	3	CLAMP, 5/8 TUBE X .406 HOLE
9	101618M1	1	ANGLE, BRACKET
	70927401	2	CAPSCREW, 1/4-20 X 1 GR5
	1703354	2	NUT, HEX FLNG TOP LK, 1/4-20
10	70937133	1	TIE, NYLON
11	71396263	1	TUBE ASY, FUEL SUPPLY
12	71391234	1	TUBE ASY, FUEL RETURN
13	70921977	2	CAPSCREW, 5/16-18 X 1-1/4 GR5
	Y704726	2	NUT, HEX FLNG TOP LK, 5/16-18
	Y705608	2	WASHER, 5/16 NARROW
14	70926049	1	CLAMP, 3/4 TUBE X .406 HOLE
15	70936473	1	CLAMP, DBL, .875 TUBE X .406 HOLE
16	71396792	1	HOSE ASY, FUEL SUPPLY
17	70930224	1	REDUCER, 7/8-14 JIC FEM X 9/16-18 JIC
18	700722408	1	NIPPLE, DIAGNOSTIC, 9/16-18 JIC FEM
19	8746430	1	STR CONN, 7/8-14 JIC X 3/4-16 ORB
	70921349	1	O-RING, .087 X .644 ID
20	133-5673	1	ELEMENT, PRMRY FUEL FLTR/WATER SEPR'TOR
	155-2629	1	BOWL ASY, PRIMARY FUEL FILTER
	141-0284	1	KIT, FUEL FILTER & WATER SEPARATOR
	70920415	2	CAPSCREW, 3/8-16 X 1-1/4 GR5
	Y704734	2	NUT, HX FLNG TOP LK, 3/8-16
	70918266	2	WASHER, 3/8 NARROW
21	70923905	1	ELBOW, 90 DEG, 9/16-18 JIC X 3/4-16 ORB
	70921349	1	O-RING, .087 X .644 ID
22	71396795	1	BRACKET, FUEL FILTER
	Y704734	2	NUT, HX FLNG TOP LK, 3/8-16
	70918266	2	WASHER, 3/8 NARROW
23	70921573	2	PLUG, 3/4-16 ORB
24	70923737	2	CAP, 3/4-16 JIC
25	8022733	2	BUTTON PLUG
26	71396793	1	HOSE ASY, FUEL SUPPLY
28	71396794	1	HOSE ASY, FUEL RETURN
29	70925619	3	CLAMP, 11/16 TUBE X .406 HOLE
	70921210	1	CAPSCREW, 3/8-16 X 1 GR5
	Y704734	1	NUT, HX FLNG TOP LK, 3/8-16
30	701953	1	SCREW,HEX WSHR HD TAPPING, 5/16-18 X 3/4
31	71396768	1	DRAIN HOSE, WATER SEPARATOR
	70929402	1	CLAMP, HOSE, WORM DR, .22-.63
33	71379304	1	CAP, DUST
34	1R-0751	1	FUEL FILTER ASY

FUEL LINES
(EFF. S/N HP87101- HP87999)

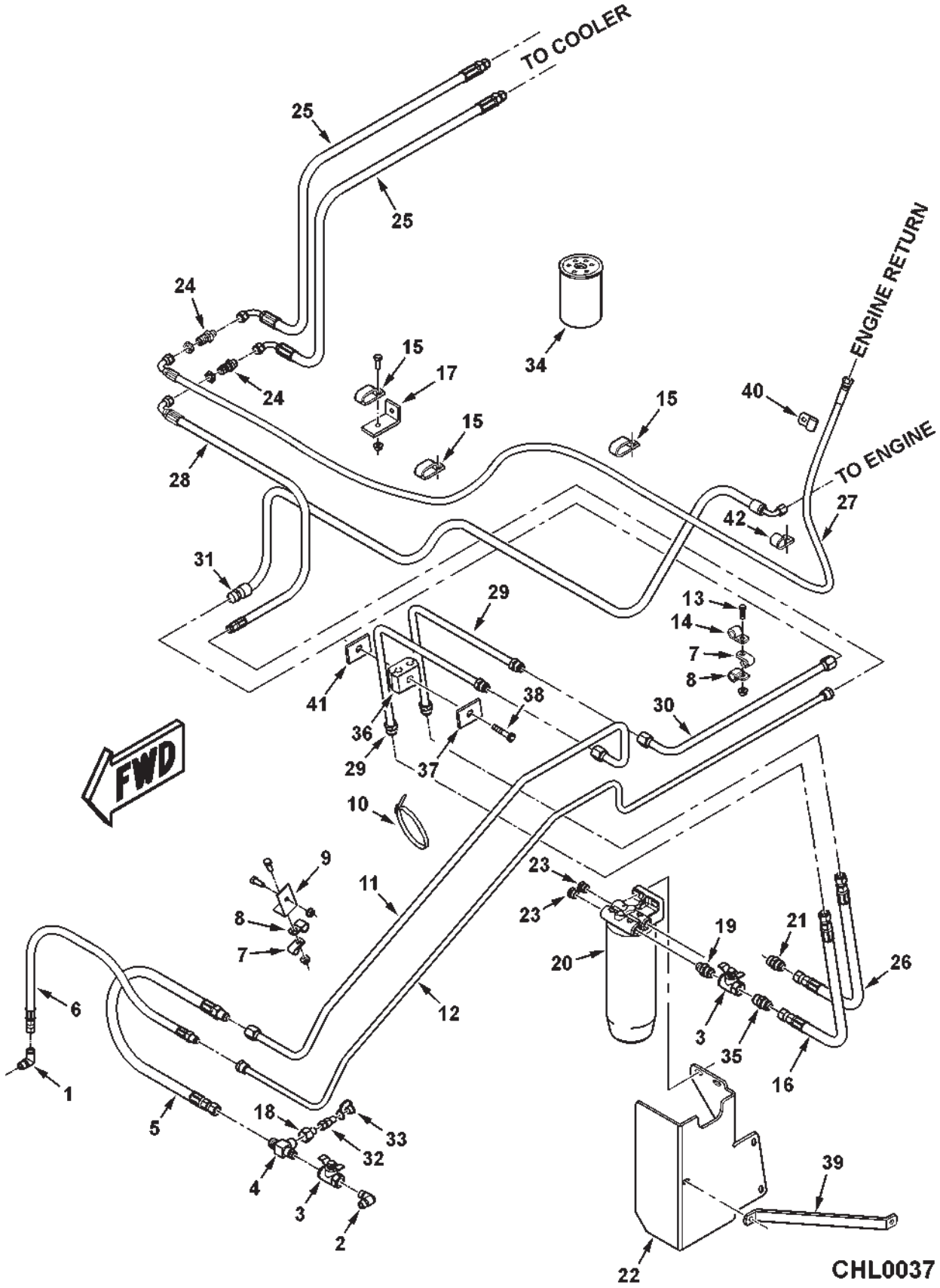

FUEL LINES
(EFF. S/N HP87101- HP87999)

ITEM	NUMBER	QTY	DESCRIPTION
1	70919195	1	ELBOW, 90 DEG, 3/4-16 JIC X 1/2 NPTF
2	700701331	1	ELBOW, 90 DEG, 1/2 NPTF X 1/2 NPTF
3	71368741	2	VALVE, BALL, 1/2 NPT
4	71400556	1	TEE, MALE, 7/8-14 X 1/2 NPTF RUN
5	71394141	1	HOSE ASY, FUEL SUPPLY
6	71396269	1	HOSE ASY, FUEL RETURN
7	70925617	3	CLAMP, 1/2 TUBE X .406 HOLE
8	70928656	3	CLAMP, 5/8 TUBE X .406 HOLE
9	101618M1	1	ANGLE, BRACKET
	70927401	2	CAPSCREW, 1/4-20 X 1 GR5
	1703354	2	NUT, HEX FLANGE TOP LOCK, 1/4-20
10	70937133	1	TIE, NYLON
11	71405985	1	TUBE ASY, FUEL SUPPLY
12	71391234	1	TUBE ASY, FUEL RETURN
13	70921977	2	CAPSCREW, 5/16-18 X 1-1/4 GR5
	Y704726	2	NUT, HEX FLANGE TOP LOCK, 5/16-18
	Y705608	2	WASHER, 5/16 NARROW
14	70926049	1	CLAMP, 3/4 TUBE X .406 HOLE
15	70936473	3	CLAMP, DBL, .875 TUBE X .406 HOLE
	701953	1	SCR,HX WSHR HD TAPP'G, 5/16-18 X 3/4
16	71396792	1	HOSE ASY, FUEL SUPPLY
17	-----	--	(670 ONLY)(SEE A/C LINES)
18	70930224	1	REDUCER, 7/8-14 JIC FEM X 9/16-18 JIC
19	70933454	1	STR CONN, 1/2 NPTF X 3/4-16 ORB
	70921349	1	O-RING, .087 X .644 ID
20	133-5673	1	ELEMENT, PRMRY FUEL FLTR/WATER SEPR'TOR
	155-2629	1	BOWL ASY, PRIMARY FUEL FILTER
	141-0284	1	KIT, FUEL FILTER & WATER SEPARATOR
	70920415	2	CAPSCREW, 3/8-16 X 1-1/4 GR5
	Y704734	2	NUT, HEX FLANGE TOP LOCK, 3/8-16
	70918266	2	WASHER, 3/8 NARROW
21	71405988	1	CHECK VALVE, 3/4-16 JIC X ORB
	70921349	1	O-RING, .087 X .644 ID
22	71405976	1	BRACKET, FUEL FILTER
23	70921573	2	PLUG, 3/4-16 ORB
24	70927261	2	UNION BULKHEAD, 3/4-16 JIC
25	71388073	2	HOSE ASY, FUEL COOLER
26	71405973	1	HOSE ASY, FUEL SUPPLY
27	71397644	1	HOSE ASY, FUEL RETURN TO COOLER
28	71393847	1	HOSE ASY, FUEL RETURN TO TANK
29	71405987	1	TUBE ASY, FUEL SUPPLY
30	71405984	1	TUBE ASY, FUEL SUPPLY
31	71405982	1	HOSE ASY, FUEL SUPPLY
32	700722408	1	NIPPLE, DIAGNOSTIC, 9/16-18 JIC FEM
33	71379304	1	CAP, DUST

CONTINUED

FUEL LINES
(EFF. S/N HP87101- HP87999)

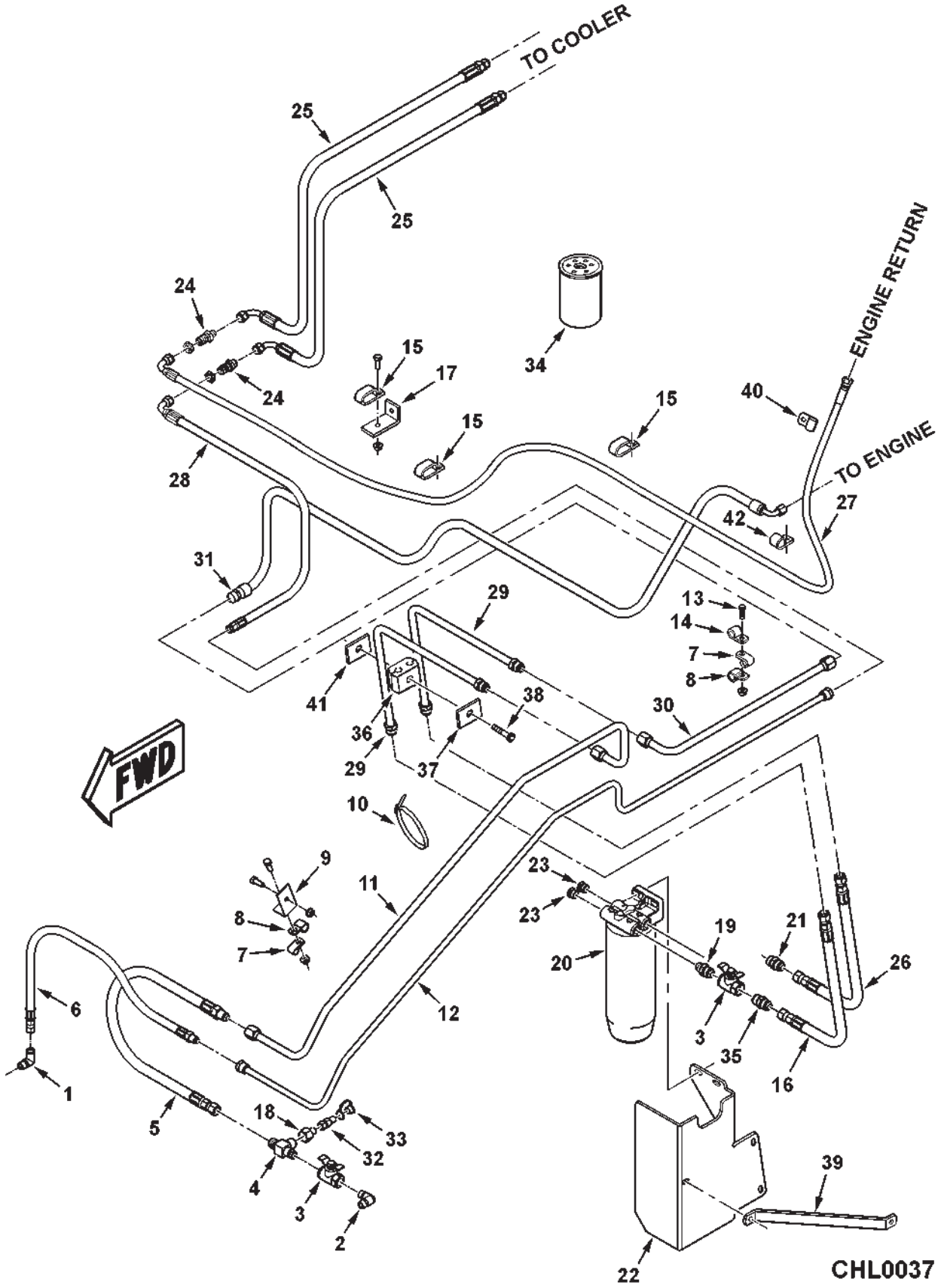

FUEL LINES
(EFF. S/N HP87101- HP87999)

ITEM	NUMBER	QTY	DESCRIPTION
34	1R-0751	1	FUEL FILTER ASY
35	70919472	1	STR CONN, 7/8-14 JIC X 1/2 NPTF
36	148203M1	1	CLAMP PAIR, 5/8 DIA DOUBLE
37	101646M1	1	COVER PLATE
38	70921160	1	CAPSCREW, 5/16-18 X 2-1/4 GR5
	Y704726	1	NUT, HEX FLANGE TOP LOCK, 5/16-18
39	71406619	1	BRACE STRAP, FUEL FILTER
	70921210	2	CAPSCREW, 3/8-16 X 1 GR5
	Y704734	2	NUT, HEX FLANGE TOP LOCK, 3/8-16
40	70925619	1	CLAMP, .688 TUBE X .406 HOLE
	70921210	1	CAPSCREW, 3/8-16 X 1 GR5
	Y704734	1	NUT, HEX FLANGE TOP LOCK, 3/8-16
41	71404450	1	SPACER PLATE
42	70925619	1	CLAMP, .688 TUBE X .406 HOLE

CHL0037
PR: t05b15n00a0001

FUEL LINES
(EFF. S/N HR87101)

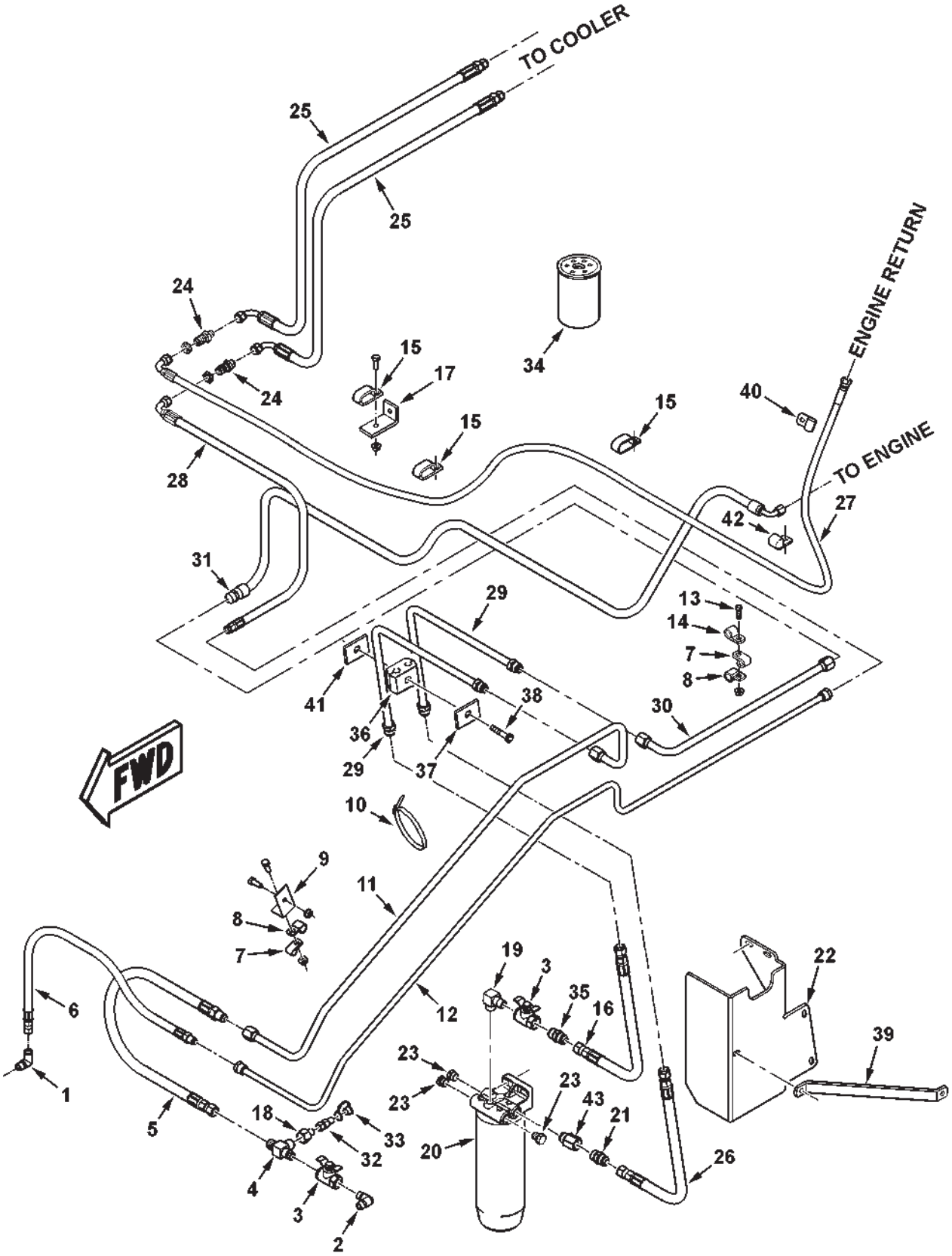

CHL0028

FUEL LINES
(EFF. S/N HR87101)

ITEM	NUMBER	QTY	DESCRIPTION
1	70919195	1	ELBOW, 90 DEG, 3/4-16 JIC X 1/2 NPTF
2	700701331	1	ELBOW, 90 DEG, 1/2 NPTF X 1/2 NPTF
3	71368741	2	VALVE, BALL, 1/2 NPT
4	71400556	1	TEE, MALE, 7/8-14 X 1/2 NPTF RUN
5	71394141	1	HOSE ASY, FUEL SUPPLY
6	71396269	1	HOSE ASY, FUEL RETURN
7	70925617	3	CLAMP, 1/2 TUBE X .406 HOLE
8	70928656	3	CLAMP, 5/8 TUBE X .406 HOLE
9	112678W1	1	ANGLE, BRACKET
	70921210	2	CAPSCREW, 3/8-16 X 1 GR5
	Y704734	2	NUT, HEX FLANGE TOP LOCK, 3/8-16
10	70937133	3	TIE, NYLON
11	71405985	1	TUBE ASY, FUEL SUPPLY
12	71391234	1	TUBE ASY, FUEL RETURN
13	70921977	2	CAPSCREW, 5/16-18 X 1-1/4 GR5
	Y704726	2	NUT, HEX FLANGE TOP LOCK, 5/16-18
	Y705608	2	WASHER, 5/16 NARROW
14	70926049	1	CLAMP, 3/4 TUBE X .406 HOLE
15	70936473	3	CLAMP, DBL, .875 TUBE X .406 HOLE
	70921210	1	CAPSCREW, 3/8-16 X 1 GR5
	Y704734	1	NUT, HEX FLANGE TOP LOCK, 3/8-16
16	71405972	1	HOSE ASY, FUEL SUPPLY
17	112678W1	1	ANGLE, BRACKET
	Y705608	1	WASHER, 5/16 NARROW
	7703499	1	CAPSCREW, 5/16-18 X 3/4
18	70930224	1	REDUCER, 7/8-14 JIC FEM X 9/16-18 JIC
19	71409313	1	ELBOW, 90 DEG, 1/2 NPTF X 3/4-16 ORB
	70921349	1	O-RING, .087 X .644 ID
20	CH1R-0771	1	FILTER ELEMENT ASY, FUEL
	212-9580	1	FILTER GRP., ELEMENT & BOWL ASY
	70920415	2	CAPSCREW, 3/8-16 X 1-1/4 GR5
	Y704734	2	NUT, HEX FLANGE TOP LOCK, 3/8-16
	70918266	2	WASHER, 3/8 NARROW
21	71405988	1	CHECK VALVE, 3/4-16 JIC X ORB
	70921349	1	O-RING, .087 X .644 ID
22	71405976	1	BRACKET, FUEL FILTER
23	357194X1	5	PLUG, 9/16-18 ORB
	70921885	AR	O-RING, .078 X .468 ID
24	70927261	2	UNION BULKHEAD, 3/4-16 JIC
25	71388073	2	HOSE ASY, FUEL COOLER
26	71405973	1	HOSE ASY, FUEL SUPPLY
27	71397644	1	HOSE ASY, FUEL RETURN TO COOLER
28	71393847	1	HOSE ASY, FUEL RETURN TO TANK
29	71405987	2	TUBE ASY, FUEL SUPPLY
30	71405984	1	TUBE ASY, FUEL SUPPLY
31	71405982	1	HOSE ASY, FUEL SUPPLY
32	700722408	1	NIPPLE, DIAGNOSTIC, 9/16-18 JIC FEM
33	71379304	1	CAP, DUST

CONTINUED

FUEL LINES
(EFF. S/N HR87101)

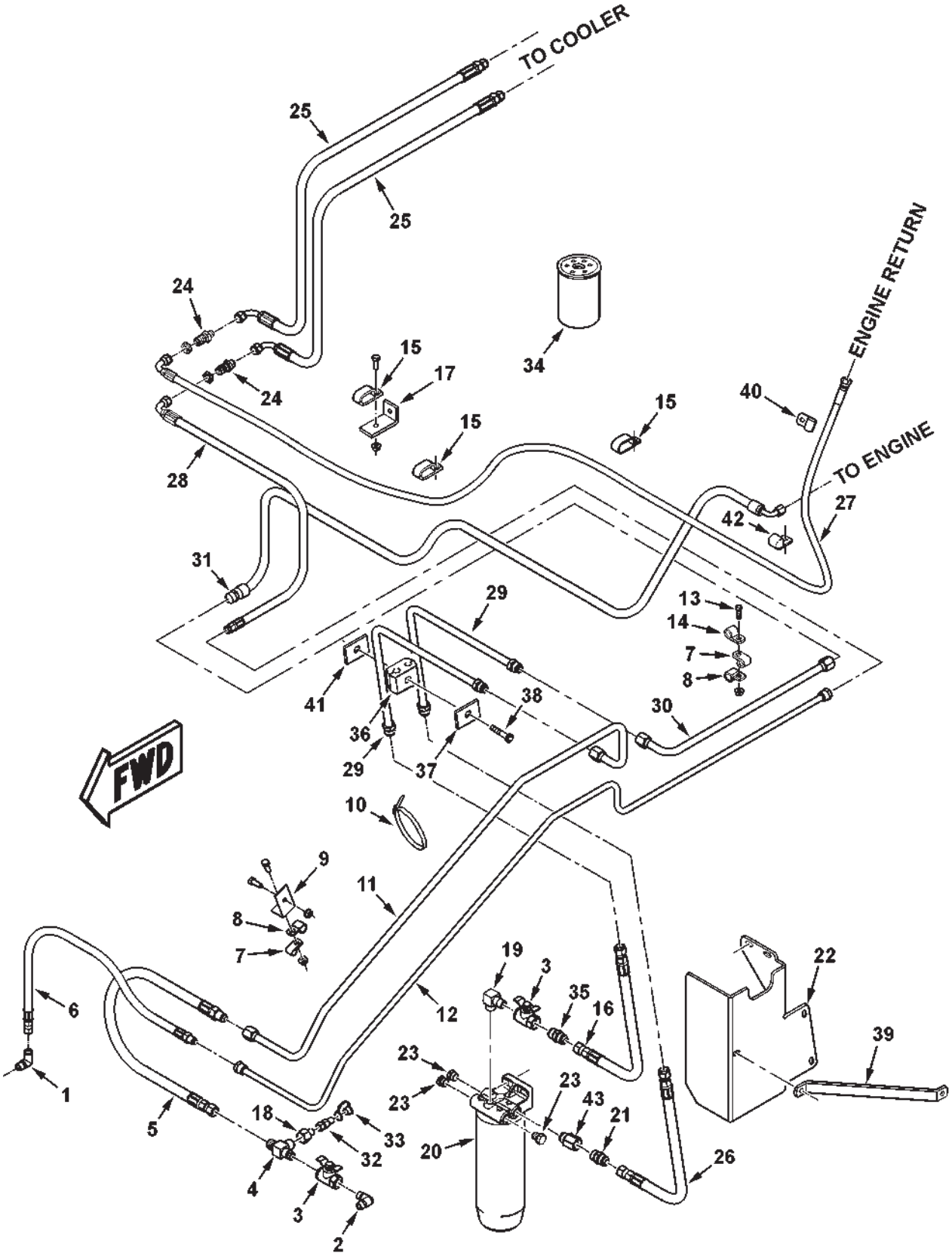

CHL0028

FUEL LINES
(EFF. S/N HR87101)

ITEM	NUMBER	QTY	DESCRIPTION
34	1R-0751	1	FUEL FILTER ASY
35	70919472	1	STR CONN, 7/8-14 JIC X 1/2 NPTF
36	148203M1	1	CLAMP PAIR, DOUBLE, 5/8 DIA
37	101646M1	1	COVER PLATE
38	70921160	1	CAPSCREW, 5/16-18 X 2-1/4 GR5
	Y704726	1	NUT, HEX FLANGE TOP LOCK, 5/16-18
39	71406619	1	BRACE STRAP, FUEL FILTER
	70921210	2	CAPSCREW, 3/8-16 X 1 GR5
	Y704734	2	NUT, HEX FLANGE TOP LOCK, 3/8-16
40	70926049	1	CLAMP, 3/4 TUBE X .406 HOLE
	70921210	1	CAPSCREW, 3/8-16 X 1 GR5
	Y704734	1	NUT, HEX FLANGE TOP LOCK, 3/8-16
41	71404450	1	SPACER PLATE
42	70936473	1	CLAMP, DBL, .875 TUBE X .406 HOLE
43	71409312	1	REDUCER, 3/4-16 ORB FEM X 9/16-18 ORB M
	70921885	1	O-RING, .078 X .468 ID

CHL0028
PR: t06a25h54a0006

FRAME & MOUNTING

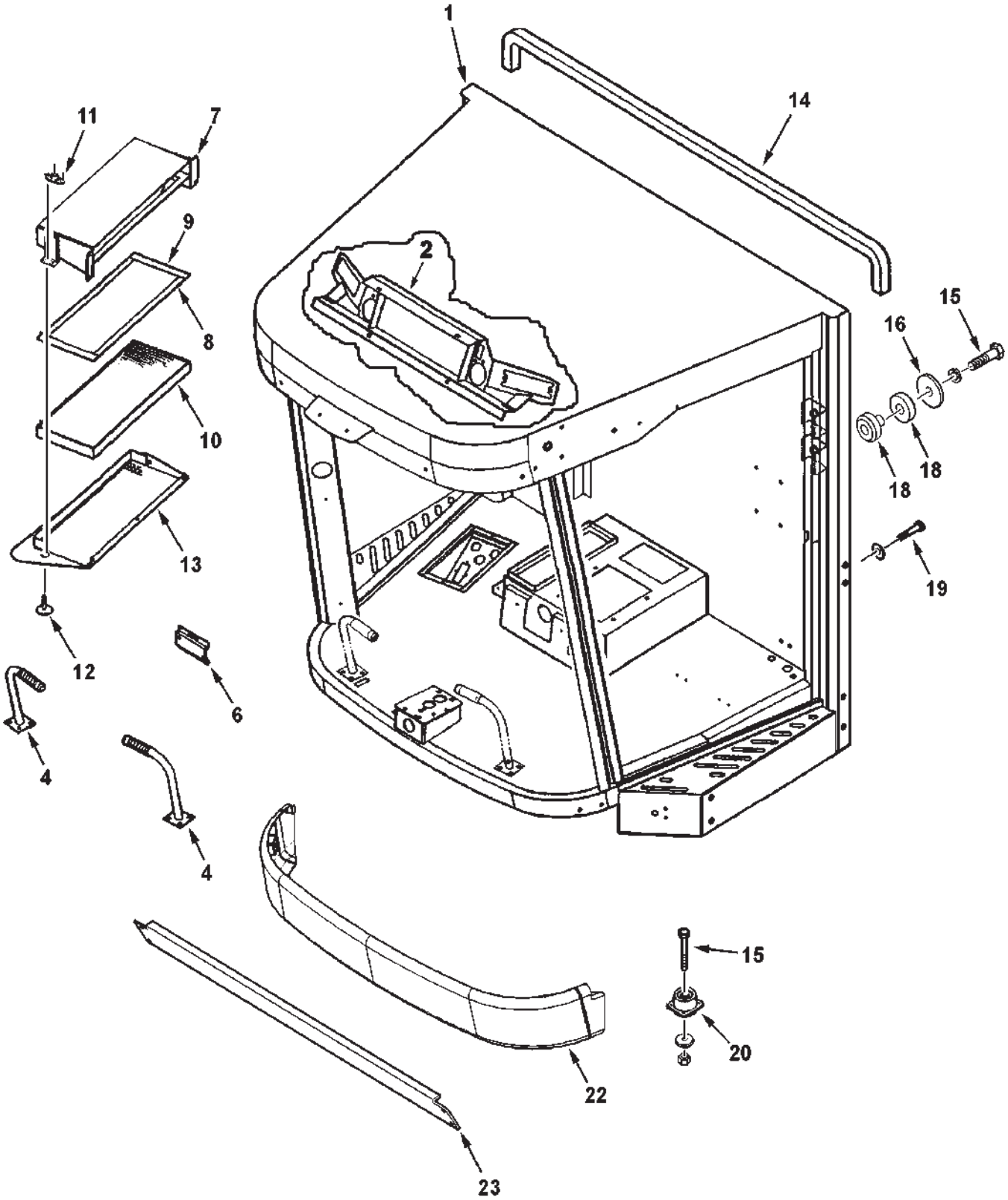

MC00280

ITEM	NUMBER	QTY	DESCRIPTION
1	-----	1	CAB WLDMT (PRIOR S/N HP87101)(SERVICE W/ 71406753B)
	71406753B	1	CAB WELDMT (EFF. S/N HP87101)
	700718515	AR	INSERT, THREADED 5/16-18
	700725634	AR	INSERT, THREADED 3/8-16
	700725632	AR	INSERT, THREADED 3/8-16
	700725633	AR	INSERT, THREADED 1/4-20
	71391713	AR	INSERT, THREADED 8-32
2	71388167	1	SUPPORT WLDMT, E.I.P.
	Y703132	4	CAPSCREW, 5/16-18 X 3/4
	700718515	4	INSERT, THREADED 5/16-18
	700725633	8	INSERT, THREADED 1/4-20
4	71387185	1	FOOTREST, RH
	71387186	1	FOOTREST, LH
	71396276	2	GRIP, FOOTREST
	70920415	8	CAPSCREW, 3/8-16 X 1-1/4
	700725632	8	INSERT, THREADED 3/8-16
6	71394525	1	MOUNT, FUSE BLOCK
	7703457	4	CAPSCREW, 1/4-20 X 3/4
	705707	2	WASHER, 1/4
	700725633	5	INSERT, THREADED 1/4-20
7	71393307	1	SUPPORT WLDMT, FILTER
	Y703132	4	CAPSCREW, 5/16-18 X 3/4
	700718515	4	INSERT, THREADED 5/16-18
8	71362390	2	SEAL, FILTER (LONG)
9	71362391	2	SEAL, FILTER (SHORT)
10	71393893	1	ELEMENT, AIR FILTER
11	700714529	2	RECEPTACLE
	772426	4	SCREW, HEX WSHR HD, #10-24 X 5/8
	705004	4	LOCKWASHER, #10
	Y704072	4	HEX NUT, #10-24
12	700714528	2	LATCH, 90 DEG TURN
13	71400635	1	DOOR WLDMT, FILTER
	706432	3	SCREW, PAN HEAD MACH, 5/16-18 X 1
14	71398171	1	SEAL, CAB
15	70925704	4	CAPSCREW, 5/8-11 X 4-1/2 GR5
	70917373	4	LOCKWASHER, 5/8
16	70927122	2	WASHER, .781 X 2.50 X .25
18	71342768	2	ISOLATOR MOUNT, CAB
19	70922664	2	CAPSCREW, 5/8-11 X 2 GR5
	705632	2	WASHER, 5/8 NARROW
20	71401533	2	MOUNT, CAB
	70932665	2	NUT, 5/8-11 REG
	70921210	8	CAPSCREW, 3/8-16 X 1.0
	705038	8	LOCKWASHER, 3/8
	70916950	8	HEX NUT, 3/8-16
22	71387292P	1	VALANCE ASY.
	7771371	4	SCREW, HEX FLNG SERR 5/16-18 X 1-1/4
	6131916	4	BUSHING, 3/4 OD X .55 LG
	700718515	4	INSERT, THREADED, 5/16-18
23	71395275	1	CROSS BRACE, CAB SUPPORT
	68619	4	BOLT, RD HD SQ NK, 1/2-13 X 1-1/4
	Y704742	4	NUT, HEX FLNG, TOP LOCK, 1/2-13
-	700704010	AR	SEALANT, SILICONE, BLACK, 10.2 OZ.

MC00280
PR: 50

WINDOWS AND DOORS

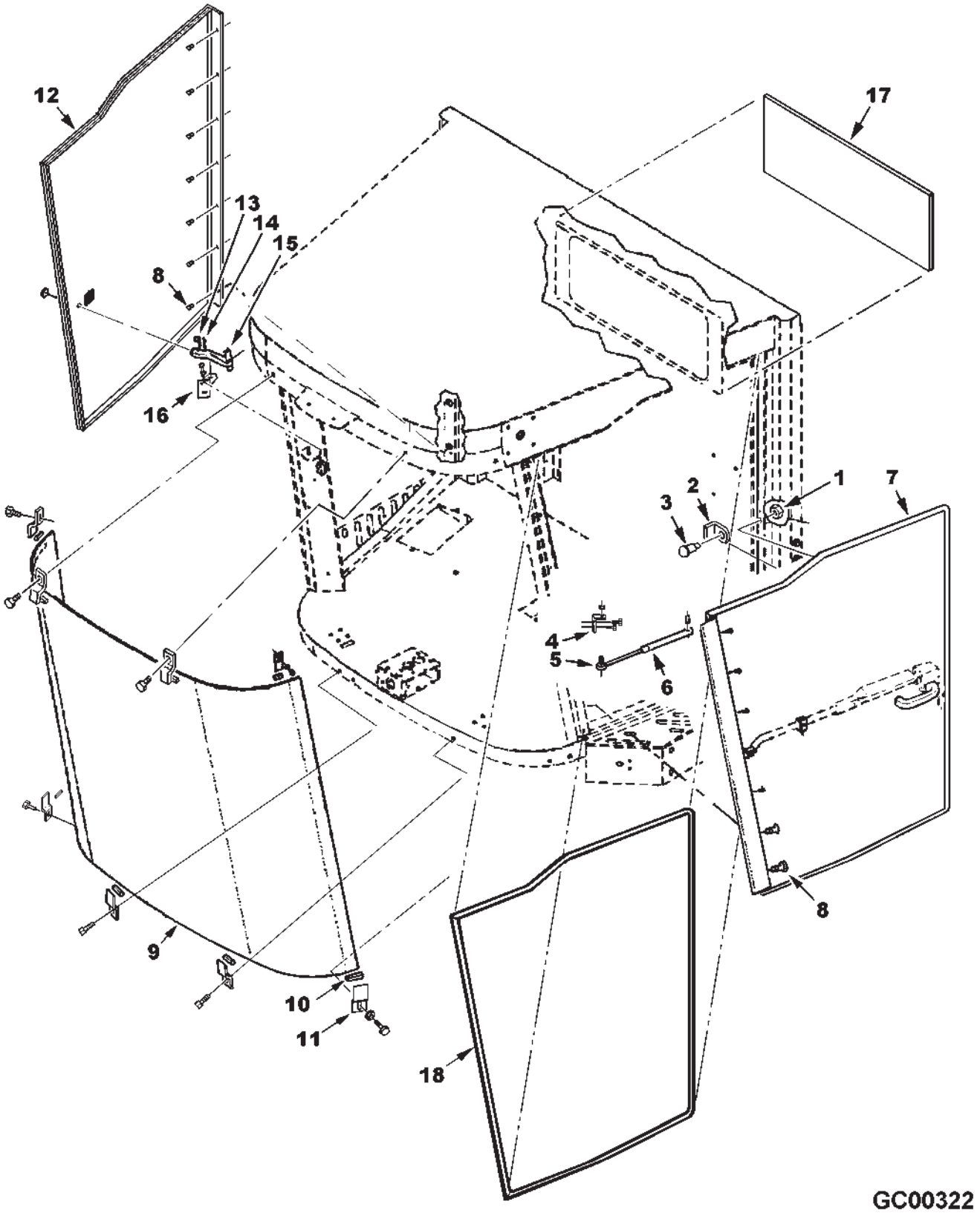

ITEM	NUMBER	QTY	DESCRIPTION
1	71394502	1	NUT, STRIKER
2	71394503	1	GUARD, STRIKER
3	71394501	1	STRIKER, BOLT
4	71394523	1	BRACKET, GAS SPRING
	70937660	2	SCREW, PAN HD TAPPING, 1/4-20 X 5/8
5	71339847	1	STUD, BALL
	Y704726	1	NUT, HEX FLANGE TOP LOCK, 5/16-18
6	700715277	1	SPRING, GAS
	700715278	2	RETAINER, CLIP
7	71391897	1	GLASS DOOR ASY. LH (INCL HANDLES)
	71393885	1	GLASS, GASKET & HINGE ASY, LH DOOR
	71391899	1	GASKET, DOOR LH
8	70937660	14	SCREW, PAN HD, TAPTITE, 1/4-20 X 5/8
9	71391851	1	WINDSHIELD
	71370508	AR	PRIMER, GLASS ADHESIVE
	72506489	AR	ADHESIVE, GLASS
10	700715285	8	PAD, RUBBER
11	71387195	8	CLIP, WINDSHIELD
	70921332	8	CAPSCREW, 5/16-18 X 3/4
	70917642	8	WASHER, 5/16
12	71407657	1	GLASS DOOR & HINGE ASY. (INCL. DECAL)
	71391899	1	GASKET, DOOR RH
	71389158	1	DECAL, EMERGENCY EXIT
13	70934892	1	PIN, CLEVIS RETAINER, W/RING
14	70921291	1	PIN, SPRING, 3/16 X 5/8
15	71364349	1	LATCH, WINDOW, W/O PIN
16	71407659	1	BRACKET WLMT, LATCH
	70937660	2	SCREW, PAN HD, TAPTITE, 1/4-20 X 5/8
17	71387266	1	GLASS, REAR WINDOW
18	71401715	1	SEAL, FOAM RUBBER, DOOR FRAME

GC00322
PR: 52

LH DOOR
INTERIOR & EXTERIOR HANDLES

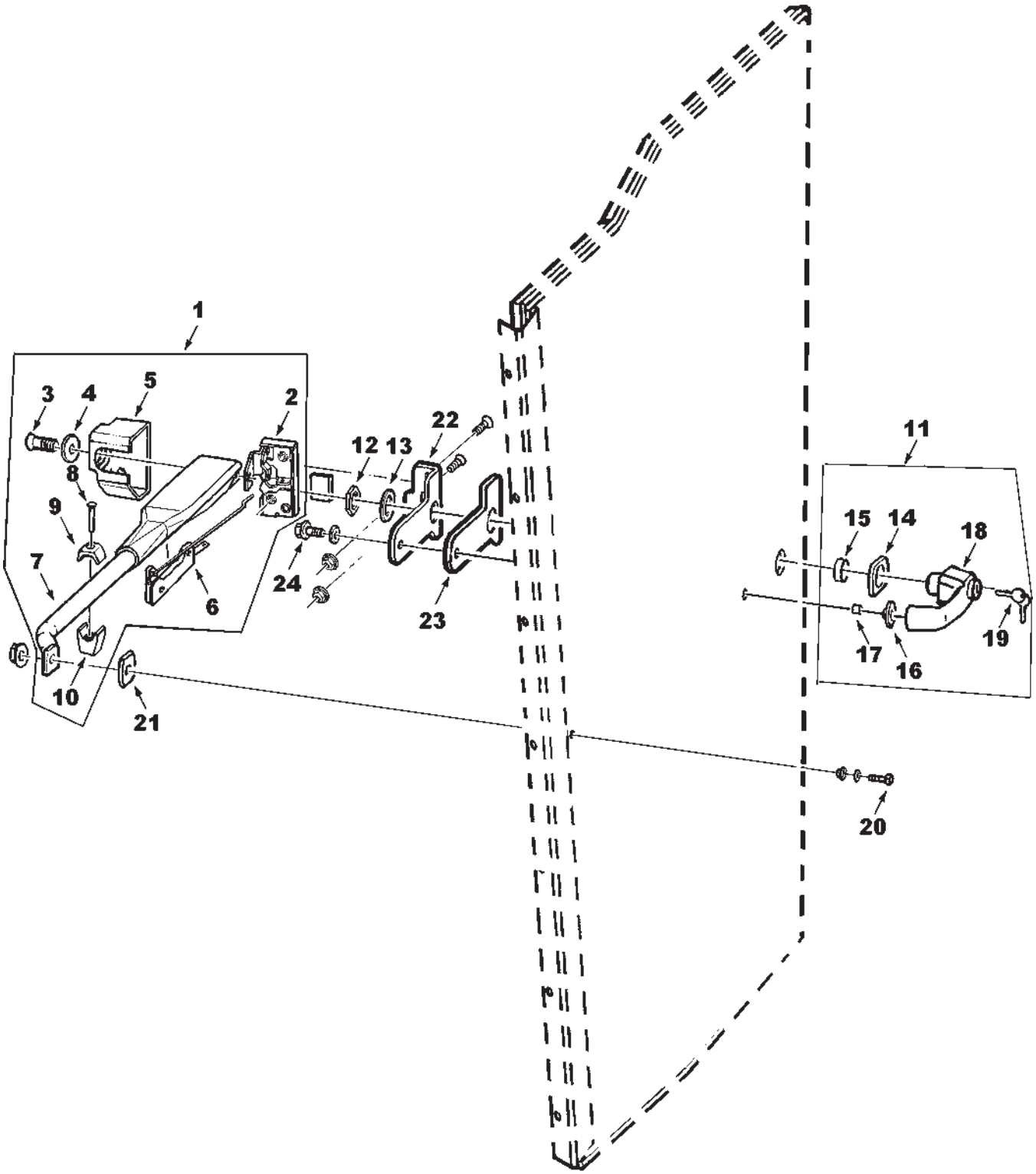

LH DOOR
INTERIOR & EXTERIOR HANDLES

ITEM	NUMBER	QTY	DESCRIPTION
1	71393881	1	DOOR HANDLE ASY, INNER (INCL ITEMS 2-10)
2	71393879	1	LATCH, DOOR, DOUBLE ROTOR
3	71394791	1	SCREW, INNER DOOR HANDLE
4	705012	1	WASHER, LOCK 1/4
5	71393878	1	COVER, INNER HANDLE
6	71394792	1	HANDLE, INNER RELEASE
7	-----	1	TUBE ASY, ARMREST (ORDER ITEM 1)
8	71393888	1	SCREW, HEX SOCKET, FLAT HD, M6 X 40
9	71393887	1	MOUNT, GAS SPRING UPPER
10	71393886	1	MOUNT, GAS SPRING LOWER
11	71393876	1	DOOR HANDLE ASY, EXT (INCL ITEMS 12-19)
12	71393469	1	NUT, EXTERIOR HANDLE
13	71393470	1	WASHER, EXT. HANDLE
14	71393471	1	GASKET, EXT. HANDLE (LARGE)
15	71393473	1	BUSHING
16	71393472	1	GASKET, EXT. HANDLE (SMALL)
17	71393468	1	BUSHING
18	71393475	1	HANDLE, EXTERIOR
19	71393474	AR	KEY, DOOR
20	372536X1	1	SCREW, MACH. HEX WSHR HD, 1/4-20 X 1.0
	705707	2	WASHER, 1/4
	72161999	1	SPACER
	1703354	1	LOCKNUT, HEX FLANGE TOP 1/4-20
21	71393883	1	GASKET
22	71391518	1	BRACKET, DOOR LATCH
	Y772129	2	SCR, HEX SKT FLT HD, 5/16-18 X 1-3/4
	70931277	2	NUT, HEX FLANGE, SERRATED, 5/16-18
23	71391519	1	GASKET
24	339666X1	1	CAPSCREW, M6-1 X 16
	705707	1	WASHER, 1/4

GC00323
PR: 54

INTERIOR COVERINGS & TRIM
UPPER AND FRONT

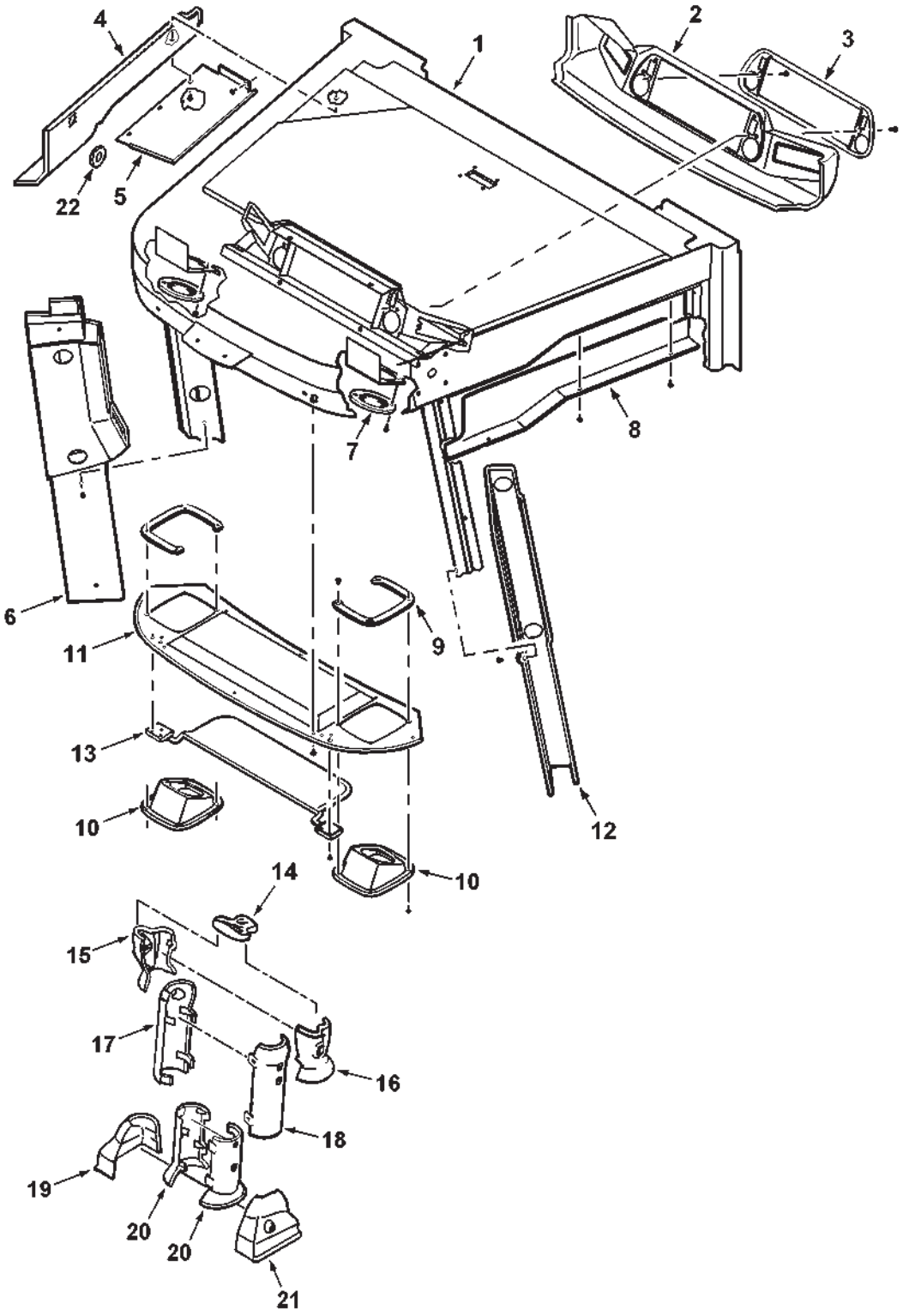

GC00457

ITEM	NUMBER	QTY	DESCRIPTION
1	71391747	1	HEADLINER, REAR
2	71393601	1	SURROUND, ELECT. INSTRUMENT PANEL
3	71388136	1	BEZEL, ELECT. INSTRUMENT PANEL
	70937730	2	SCREW,PAN HD TAPPING, 1/4-20 X 1-1/4
4	71393605	1	TRIM, HEADER, RH (PRIOR S/N HR87101)
	71409583	1	TRIM, HEADER, RH (EFF. S/N HR87101)
	70937660	4	SCREW, PAN HD TAPPING, 1/4-20 X 5/8
	70927401	4	CAPSCREW, 1/4-20 X 1
	705012	4	LOCKWASHER, 1/4
	700709601	4	WASHER, 1/4 WIDE
5	71394878	1	PLATE, ACCESSORY MNT (PRIOR S/N HR87101)
	71410958	1	PLATE, ACCESSORY MOUNT (EFF S/N HR87101)
	70937660	4	SCREW, PAN HD TAPPING, 1/4-20 X 5/8
6	71398809	1	COVER, B-PILLER (RH)
	70937660	6	SCREW, PAN HD TAPPING, 1/4-20 X 5/8
7	71393940	2	GRILLE, SPEAKER
8	71393604	1	TRIM, HEADER (LH)
	70937660	3	SCREW, PAN HD TAPPING, 1/4-20 X 5/8
9	71395767	2	PLATE, SPEAKER HSG. RETAINER
	70937280	8	SCREW, PAN HD TAPPING, #8-32 X 3/4
10	71391158	2	HOUSING, SPEAKER TRIM
	70937280	8	SCREW, PAN HD TAPPING, #8-32 X 3/4
11	71391746	1	HEADLINER, FRONT
12	71398808	1	COVER, B-PILLER (LH)
	70937660	6	SCREW, PAN HD TAPPING, 1/4-20 X 5/8
13	71391172	1	SUNVISOR
	70936592	6	SCREW, PAN HD. TAPPING #10-16 X 3/4
14	71394514	1	COVER, TOP
	70937280	2	SCREW, PAN HD TAPPING, #8-32 X 3/4
15	71394515	1	COVER, UPPER (RH)
	71407653	2	SCREW, PAN HD. MACH., M5 X 16
	71393926	1	WELLNUT, #8-32
16	71394516	1	COVER, UPPER (LH)
	71407653	2	SCREW, PAN HD. MACH., M5 X 16
	71393926	1	WELLNUT, #8-32
17	71394517	1	COVER, LOWER (RH)
	71407653	2	SCREW, PAN HD. MACH., M5 X 16
18	71394518	1	COVER, LOWER (LH)
	71407653	2	SCREW, PAN HD. MACH., M5 X 16
19	71394521	1	COVER, BOTTOM (RH)
	70930611	2	SCREW, PAN HD. MACH. #10-24 X 3/8
20	71394519	2	COVER, MID
	71407653	4	SCREW, PAN HD. MACH., M5 X 16
21	71394522	1	COVER, BOTTOM (LH)
	70930611	2	SCREW, PAN HD. MACH. #10-24 X 3/8
22	71409584	1	GROMMET, 1 ID X 1.87 DIA PANEL HOLE (EFF. S/N HR87101)

GC00457
PR: 56

INTERIOR COVERINGS & TRIM
LOWER AND REAR

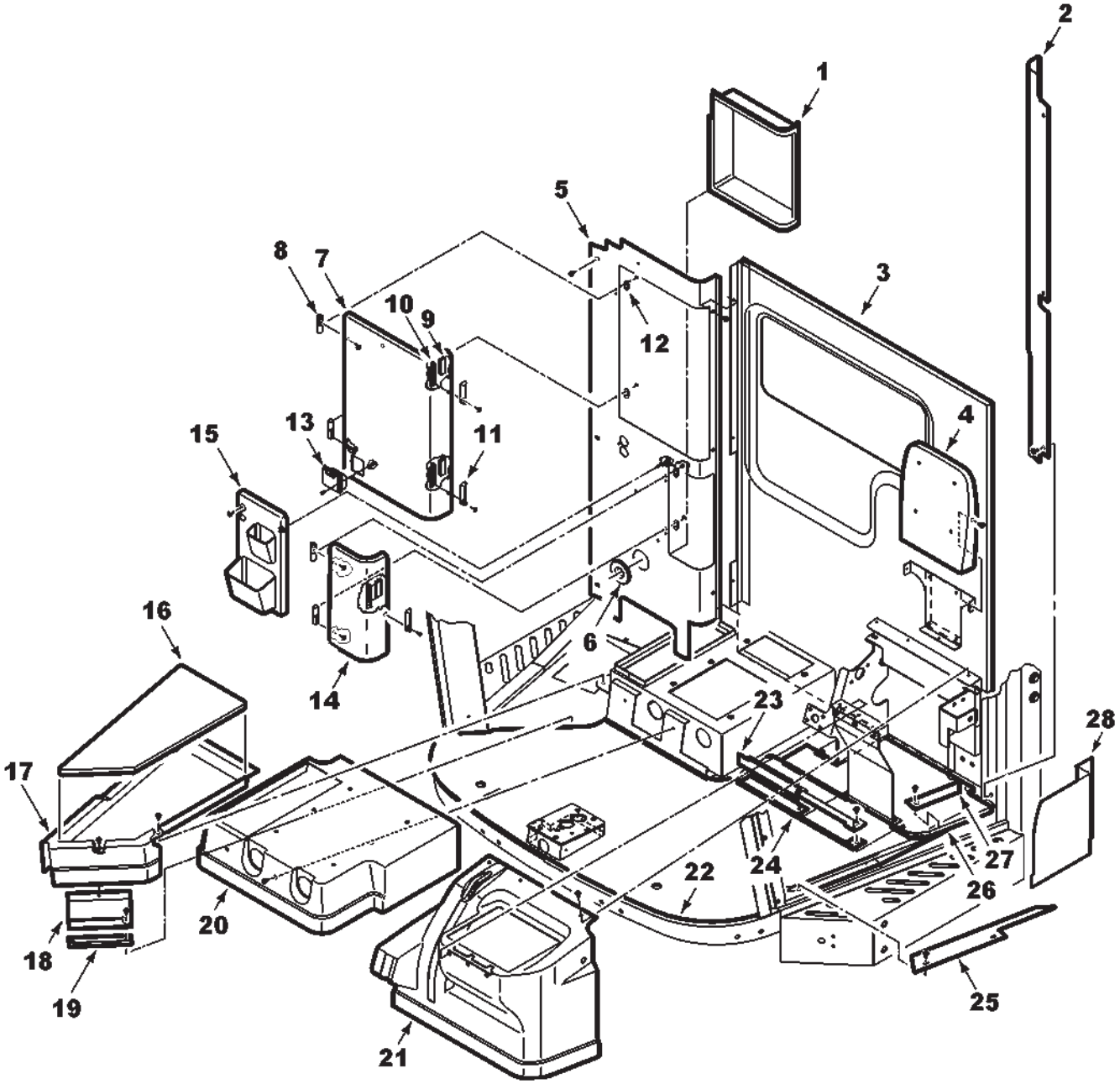

GC00304

ITEM	NUMBER	QTY	DESCRIPTION
1	71393941	1	BOX, MANUAL HOLDER
	71395769	AR	PRIMER, PLASTIC
	72506489	AR	ADHESIVE, URETHANE
2	71394877	1	PANEL, TRIM (LH)
	70937660	3	SCREW, SELF TAPPING 1/4-20 X 5/8
3	71391748	1	BACKLINER ASY.
	72506489	AR	ADHESIVE, URETHANE
4	71394893	1	SUPPORT, BACKREST
	70937660	3	SCREW, SELF TAPPING 1/4-20 X 5/8
5	71406877S	1	PANEL, ELECT. CABINET
	70937660	3	SCREW, SELF TAPPING 1/4-20 X 5/8
6	71394884	1	GROMMET
7	71395768	1	DOOR ASY, FUSE PNL (SERVICED W/71400502 OOR ASY, 71400504 ASH TRAY & SCREWS)
	71400502	1	DOOR ASY, FUSE PNL (EFF S/N HM87---)
	71395760	1	DECAL, FUSE LABEL (INSIDE OF DOOR) (PRIOR S/N HN87101)
	700723598	1	DECAL, FUSE LABEL (EFF. S/N HN87101)
8	71393944	4	HINGE ASY.
	70930611	8	SCREW, PAN HD. MACH. #10-24 X 3/8
9	72505639	3	LATCH, MAGNETIC
10	71394879	3	PLATE, LATCH MOUNTING
11	71393947	3	PULL, CABINET DOOR
	70937263	6	SCREW, SELF TAPPING #10-16 X 1/2
12	71394885	4	SHIM
	70930611	8	SCREW, PAN HD. MACH. #10-24 X 3/8
13	72502796	1	ASH TRAY (PRIOR TO S/N HM87---)(USED W/ 71395768 DOOR ASY)
	700707619	2	SCREW, PAN HD. MACH. #6-32 X 1/2
	705129	2	LOCKWASHER, #6
	704551	2	HEXNUT, #6-32
	71400504	1	ASH TRAY (EFF S/N HM87---)(USED W/ 71400502 DOOR ASY, FUSE PNL)
	700710188	2	SCR, PAN HD MACH, #6-32 X 3/4
14	71393938	1	DOOR, MANUAL HOLDER
15	71395771	1	PANEL ASY.
	70937660	1	SCREW, SELF TAPPING, 1/4-20 X 5/8
16	71408224	1	FLOORMAT, (RH)
17	71394892	1	COVER, FLOOR (RH)
	70937660	3	SCREW, SELF TAPPING, 1/4-20 X 5/8
18	71394899	1	SUPPORT
	70937660	2	SCREW, SELF TAPPING, 1/4-20 X 5/8
19	71394900	1	GUIDE
20	71394891	1	SURROUND, OPERATORS SEAT
	70937660	2	SCREW, SELF TAPPING, 1/4-20 X 5/8
21	71394890	1	SURROUND, INSTRUCTORS SEAT
	70937660	3	SCREW, SELF TAPPING, 1/4-20 X 5/8
22	71408223	1	FLOORMAT, MAIN
	71410959	1	PROTECTOR SHEET, FLRMAT(EFF.S/N HR87101)
23	71394898	1	SUPPORT, MAIN
	70937660	2	SCREW, SELF TAPPING, 1/4-20 X 5/8
24	71394897	1	GUIDE, FRONT
25	71395773	1	THRESHOLD
	70937660	2	SCREW, SELF TAPPING, 1/4-20 X 5/8
26	71408225	1	FLOORMAT, INSTRUCTORS SEAT
27	71394896	1	SUPPORT, LEFT
	70937660	2	SCREW, SELF TAPPING, 1/4-20 X 5/8
28	71397427	1	BAFFLE
	372728X1	2	SCREW, SELF-TAPPING, 3/8-16 X 5/8

PLATFORM
LEFT & RIGHT

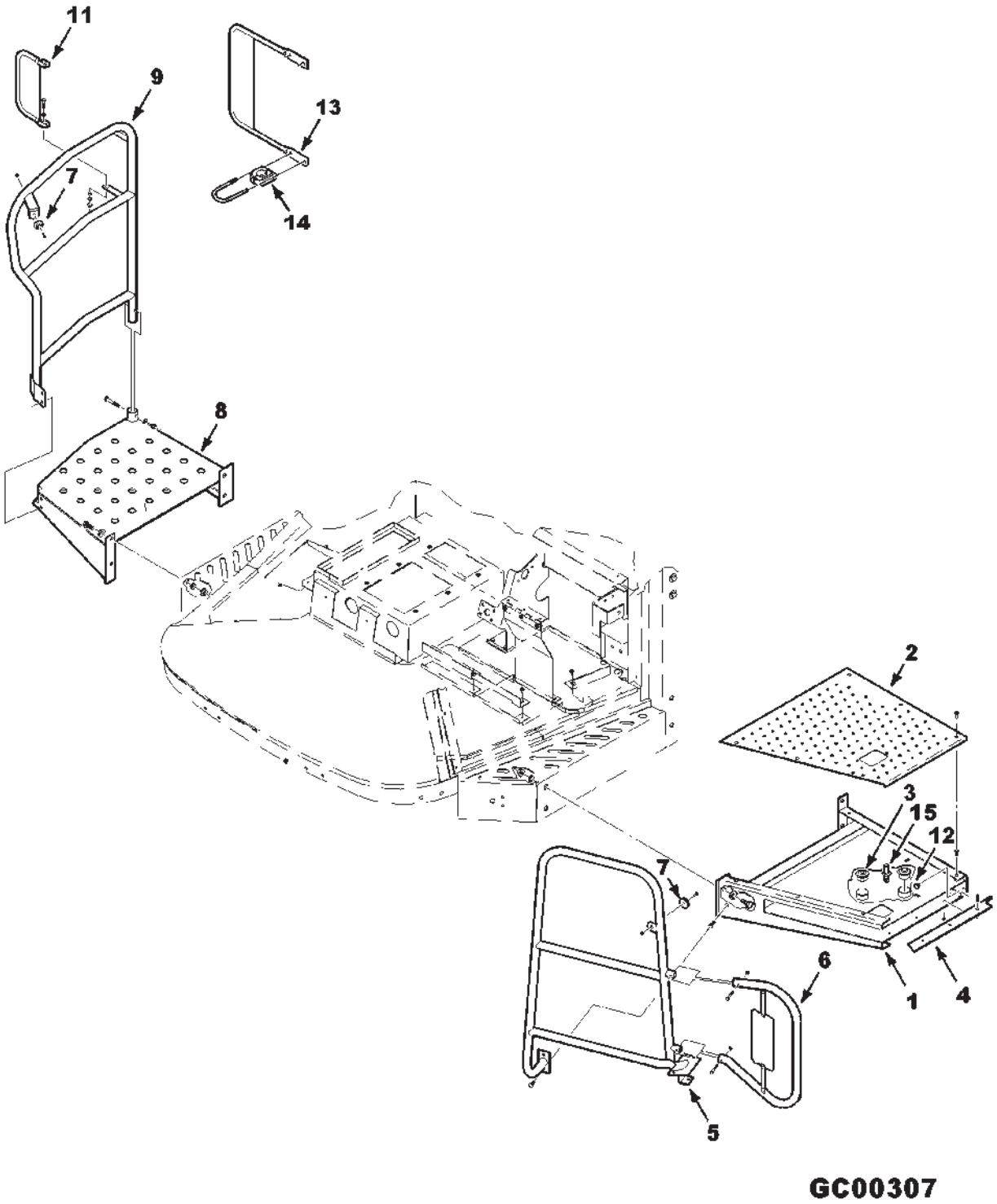

PLATFORM
LEFT & RIGHT

ITEM	NUMBER	QTY	DESCRIPTION
1	71399437B	1	PLATFORM WLDMT, LH
	70924744	4	CAPSCREW, 5/8-11 X 1-1/2
	70917373	4	LOCKWASHER, 5/8
	7704919	2	NUT, HEX FLANGE, 5/8-11 GR8
	70921965	2	CAPSCREW, 3/8-16 X 3/4
2	71396682B	1	PLATE, TOP DECK
	7772049	6	SCREW, HEX FLNG SERR, 5/16-18 X 1
	700725958	6	INSERT, THREADED, 5/16-18
3	71396743	2	BALL, TRANSFER, 30MPC
4	71396684	1	PLATE, WEAR (LOWER FRT.)
	70918222	3	SCR, FLAT CSK HD MACH, 1/4-20 X 3/4
	70931209	3	LOCKNUT, HEX FLNG SERR, 1/4-20
5	71396283	1	HANDRAIL WLDMT, LH
	7703424	3	SCREW, HEX FLNG. SERR., 3/8-16 X 1.0
	700725634	3	INSERT, THREADED, 3/8-16
6	71401700	1	GRABRAIL WLDMT, LH
	70925960	2	SCREW, PAN HD MACH, 5/16-18 X 1-1/2
	70931277	2	LOCKNUT, HEX SERR. FLANGE, 5/16-18
7	700708648	2	BUMPER
	700707203	2	SCREW, HEX WSHR HD MACH #12-24 X 3/4
	373839X1	2	NUT, HEX CENTER LOCK, #12-24
8	71396501	1	PLATFORM, RH
	70924744	4	CAPSCREW, 5/8-11 X 1-1/2
	70917373	4	LOCKWASHER, 5/8
	7704919	2	NUT, HEX FLANGE, 5/8-11 GR8
9	71396510	1	HANDRAIL WLDMT, RH (PRIOR S/N HN87101)
	71399442	1	HANDRAIL WLDMT, RH (EFF. S/N HN87101)
	7771470	2	SCREW, HEX FLNG SERR. 3/8-16 X 1-1/4
	700725634	2	INSERT, THREADED, 3/8-16
	70922130	1	CAPSCREW, 3/8-16 X 2-1/4
	Y705533	1	WASHER, 3/8 HARD
	Y704734	1	NUT, HEX FLNG TOP LOCK, 3/8-16
11	71396729	1	BRKT WLDMT, REFLECTOR(PRIOR S/N HN87101)
	103668W1	2	SPACER, PRESSURE PAD (PRIOR S/N HN87101)
	7701717	2	CAPSCREW, 5/16-18 X 1-1/2
	Y705525	4	WASHER, 5/16
	Y704726	2	NUT, HEX FLNG TOP LK, 5/16-18
12	71399446	1	BUMPER, RUBBER, 5/16-18 X 1 STUD
	70920161	1	NUT, HEX JAM, 5/16-18
13	71399444	1	BRKT WLDMT, REFLECTOR (EFF. S/N HN87101)
14	71399445	2	U-CLAMP ASY, W/NUTS, 1/4-20 (EFF. S/N HN87101)
15	71401707	2	STRIKER, LATCH
	Y705525	2	WASHER, 5/16 HARD
	70931277	2	LOCKNUT, HEX SERR. FLANGE, 5/16-18

GC00307
PR: 60

PIVOTING LADDER LH

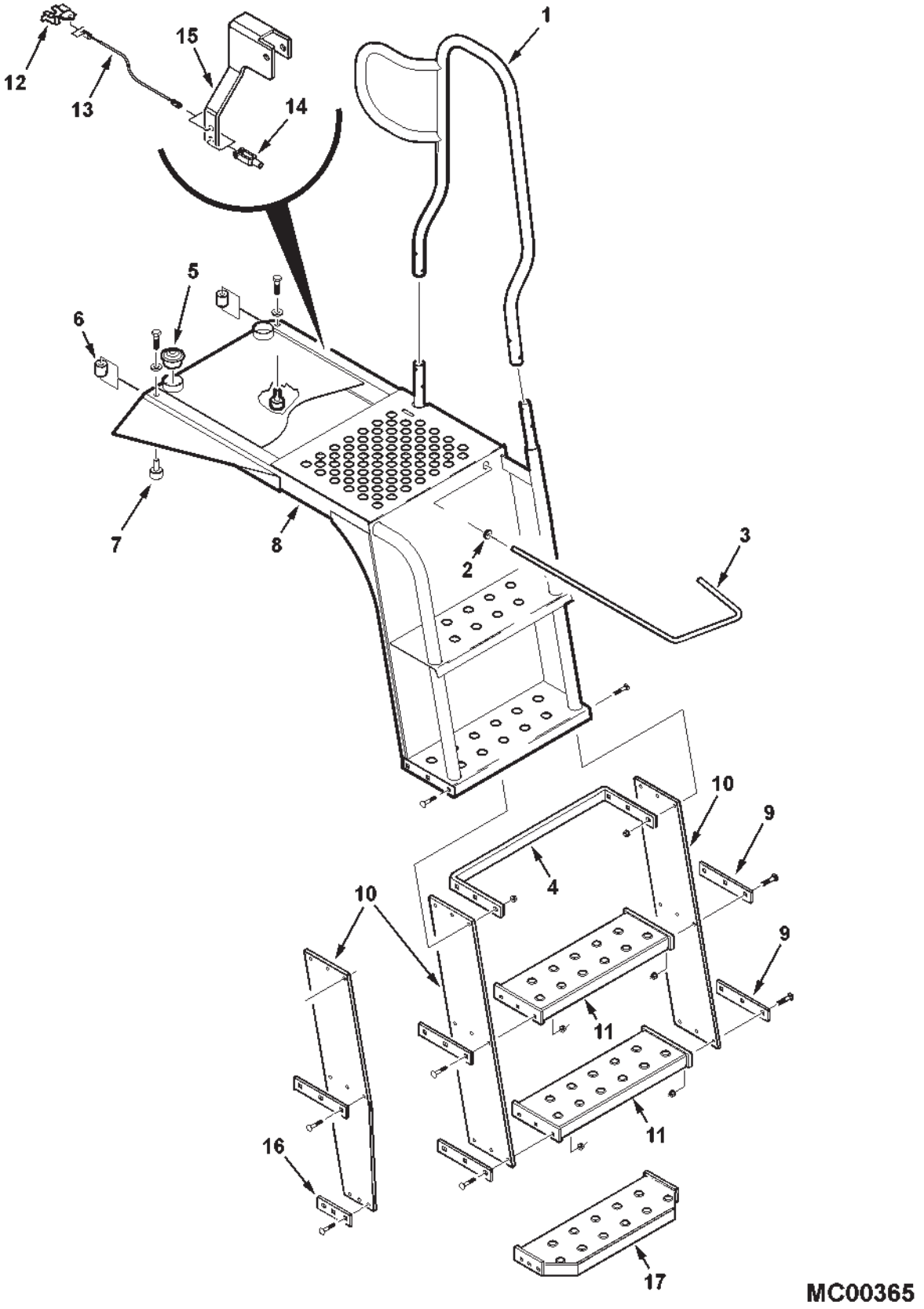

PIVOTING LADDER LH

ITEM	NUMBER	QTY	DESCRIPTION
1	71400628	1	TUBE WLDMT, GRAB
	7703838	1	CAPSCREW, 5/16-18 X 1-3/4
	6514772	1	SPACER
	7704117	1	NUT, HEX TOP LOCK, 5/16-18
	70925960	1	SCR,PHILLIPS PAN HD, 5/16-18 X 1-1/2
	Y705525	1	WASHER, 5/16 HARD
	70931277	1	NUT, HEX FLNG SERR, 5/16-18
2	70928304	1	GROMMET
3	71396745	1	ROD, OUTER LATCH
4	71397515	1	BRACKET, TREAD SUPPORT
5	71396743	2	BALL, TRANSFER, 30MPC
6	71396677	2	SPACER, THREADED
7	8050866	2	BEARING, CAM FOLLOWER
	873364	2	CAPSCREW, 1/2-20 X 3/4
	52167	2	BUSHING, 1/2 ID X 7/8 OD X 18 GA
8	71401710B	1	LADDER WLDMT, PLATFORM
9	71362525	4	ANCHOR STRAP (QTY 2, S/N HN87101 THRU S/N HP87155, PROD'N MID-RUN)
10	71396735	2	PLATE, FLEXIBLE, PARALLEL SIDES
	71400641	2	PLATE,FLEXIBLE, TAPERED PROFILE (EFF.S/N HN87101 THRU HP87155 PROD'N MID-RUN)
	7700107	18	BOLT, RD HD SQ NK, 5/16-18 X 1-1/4
	70931277	18	LOCKNUT, HEX SERR. FLANGE, 5/16-18
11	71394472	2	TREAD WLDMT, STEP (QTY 1, S/N HN87101 THRU S/N HP87155, PROD'N MID-RUN)
12	71397510	1	LATCH ASY
	700718807	2	SCR,HX SCKT FLAT HD,SPL, 5/16-18 X 1
13	71397511	1	CABLE ASY, LATCH RELEASE
	7703457	3	CAPSCREW, 1/4-20 X 3/4
	1703354	2	NUT, HEX FLANGE TOP LOCK, 1/4-20
	705012	1	LOCKWASHER, 1/4
	353769X1	3	WASHER, HARDENED, 1/4
	70920438	2	JAM NUT, 5/16-24
14	766410	1	CLEVIS
	70927401	1	CAPSCREW, 1/4-20 X 1
	1703354	1	NUT, HEX FLANGE TOP LOCK, 1/4-20
15	71397255	1	PEDAL, FLOOR LATCH
	7703838	1	CAPSCREW, 5/16-18 X 1-3/4
	Y704726	1	NUT, HEX FLANGE TOP LOCK, 5/16-18
16	71400630	2	ANCHOR STRAP, BOTTOM (EFF. S/N HN87101 THRU S/N HP87155, PROD'N MID-RUN)
17	71400631	1	TREAD WLDMT, BOTTOM (EFF. S/N HN87101 THRU S/N HP87155, PROD'N MID-RUN)

MC00365
PR: 62

DECK EXTENSION
145" TREAD AND DUALS

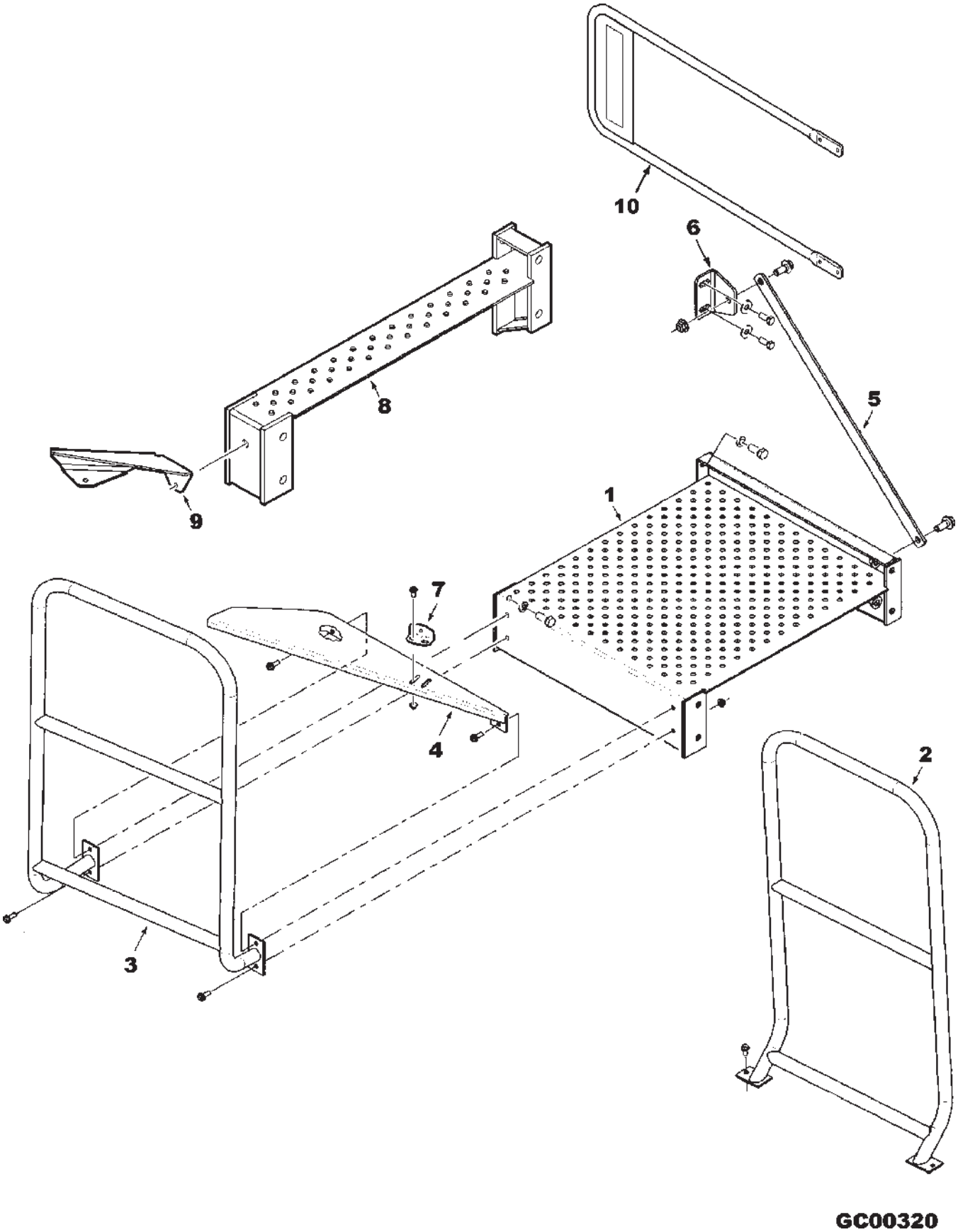

DECK EXTENSION
145" TREAD AND DUALS

ITEM	NUMBER	QTY	DESCRIPTION
1	71397268	1	PLATFORM EXTN WLDMT, 145" TREAD
	71397526	1	PLATFORM EXTN WLDMT, DUALS
	70924744	4	CAPSCREW, 5/8-11 X 1-1/2 GR5
	70917373	4	LOCKWASHER, 5/8 REG
	7704919	4	NUT, HEX FLANGE GR8
2	71400645	1	HANDRAIL WLDMT, SIDE, 145" TREAD
	71400646	1	HANDRAIL WLDMT, SIDE, DUALS
	372729X1	2	SCR, HX WSHR HD TAP'G, 5/16-18 X 3/4
3	71397265	1	HANDRAIL WLDMT, 145" TREAD
	71397532	1	HANDRAIL WLDMT, DUALS
	Y704734	4	NUT, HEX FLNG TOP LK, 3/8-16
	7883382	4	SCREW, HEX WSHR HD MACH, 3/8-16 X 1
4	71397272	1	FILLER WLDMT, EXTENSION, 145" TREAD
	71397536	1	FILLER WLDMT, EXTENSION, DUALS
5	71397271	1	STRAP, SUPPORT, 145" TREAD
	71397535	1	STRAP, SUPPORT, DUALS
	700703922	2	NUT, HEX FLNG TOP LK, 5/8-11
	700711262	2	CAPSCREW, HEX FLNG, 5/8-11 X 1-1/2
6	71397506	1	BRACKET, SUPPORT
7	71397538	1	ANGLE, DOOR STOP (DUALS)
	Y704726	2	NUT, HEX FLNG TOP LOCK, 5/16-18
	7883325	2	SCR, HEX WSHR HD MACH, 5/16-18 X 3/4
8	71400626	1	PLATFORM EXT'N WLDMT, 4"
	70923112	4	CAPSCREW, 5/8-11 X 1-3/4 GR5
	70917373	4	LOCKWASHER, 5/8 REG
	7704919	4	NUT, HEX FLANGE GR8
9	71399447	1	PLATE, FILLER, 4" EXT'N
	7883325	2	SCR, HEX WSHR HD MACH, 5/16-18 X 3/4
	Y704726	2	NUT, HEX FLNG TOP LOCK, 5/16-18
10	71401701	1	BRKT EXT WLDMT, RH, W/REFLECTOR DECALS
-	71400007	AR	*KIT, DECK EXTENSION (145" TREAD)
-	71400008	AR	*KIT, DECK EXTENSION (180" TREAD/DUALS)
-	71402015	AR	*KIT, 4" DECK EXTENSION

*ORDER THRU DEALER CENTRAL

GC00320
PR: 64

STAIRCASE LADDER & PLATFORM

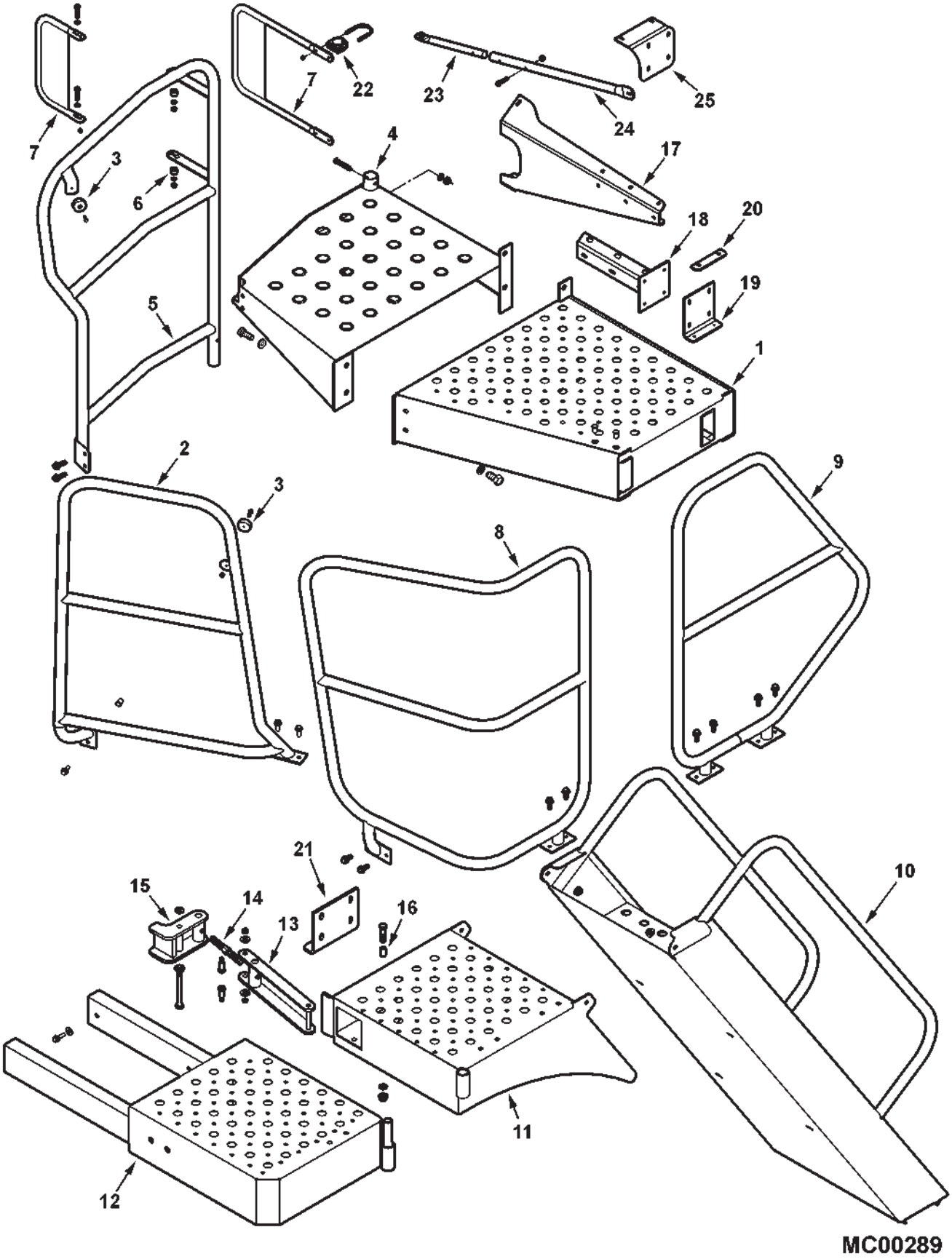

STAIRCASE LADDER & PLATFORM

ITEM	NUMBER	QTY	DESCRIPTION
1	71398429	1	PLATFORM, STAIRCASE
	70924744	4	CAPSCREW, 5/8-11 X 1-1/2
	70917373	4	LOCKWASHER, 5/8
	7704919	2	NUT, HEX FLANGE, 5/8-11 GR 8
2	71398436	1	HANDRAIL, LH
	700725634	4	INSERT, THREAD, 3/8-16
	7703424	4	SCREW, HEX SERR FLNG, 3/8-16 X 1
3	700708648	2	BUMPER
	700707203	2	SCREW, HEX WSHR HD #12-24 X 3/4
	373839X1	2	NUT, HEX CENTER LOCK, #12-24
4	71396501	1	PLATFORM, RH
	70924744	4	CAPSCREW, 5/8-11 X 1-1/2
	70917373	4	LOCKWASHER, 5/8
	7704919	2	NUT, HEX FLANGE, 5/8-11 GR 8
5	71396510	1	HANDRAIL WLMT, RH (PRIOR S/N HP87101)
	71399442	1	HANDRAIL WLMT, RH (EFF. S/N HP87101)
	70922130	1	CAPSCREW, 3/8-16 X 2-1/4
	Y705533	1	WASHER, HARDENED 3/8
	Y704734	1	NUT, HEX FLNG TOP LOCK, 3/8-16
	7771470	2	SCREW, HEX SERR FLNG, 3/8-16 X 1-1/4
	700725634	2	INSERT, THREAD, 3/8-16
6	103668W1	2	SPACER, PRESSURE PAD (PRIOR S/N HP87101)
7	71396729	1	BRACKET WLMT, RFLCTRS(PRIOR S/N HP87101)
	71399444	1	BRACKET WLMT, RFLCTRS (EFF. S/N HP87101)
	7701717	2	CAPSCREW, 5/16-18 X 1-1/2 (PRIOR S/N HP87101)
	Y705525	4	WASHER, HARDENED 5/16
	Y704726	2	NUT, HEX FLNG TOP LOCK, 5/16-18
8	71398196	1	HANDRAIL, CORNER
	7703424	4	SCREW, HEX FLNG SERR, 3/8-16 X 1
9	71397842	1	HANDRAIL, STAIRCASE LEFT
	7703424	4	SCREW, HEX FLNG SERR, 3/8-16 X 1
	704247	4	NUT, HEX FLNG SERR, 3/8-16
10	71398182	1	STAIRCASE WLDMT
	7883424	2	CAPSCREW, HEX FLNG, 1/2-13 X 1
	Y704742	2	NUT, HEX FLNG TOP LOCK, 1/2-13
11	71398188B	1	LANDING, STAIRCASE
12	71398197	1	EXTENSION, STAIRCASE
	7771470	4	SCREW, HEX FLNG SERR, 3/8-16 X 1
	70917378	4	WASHER, WIDE 3/8
13	71398445	1	HANDLE WLDMT
	700705676	2	SCREW, HEX SKT HD 1/2 X 1 X 3/8-16
	705541	2	WASHER, HARDENED 1/2
	7704141	2	NUT, HEX TOP LOCK, 3/8-16
14	71398505	1	STUD, ADJUSTMENT
15	71398501	1	LATCH, HANDLE
	873497	1	CAPSCREW, 1/2-13 X 5-1/2
	705541	2	WASHER, HARDENED 1/2
16	WSP1344	1	SPACER, TUBE
	7701675	1	CAPSCREW, HEX 1/2-13 X 2
	700700057	1	WASHER, 1/2
	704254	1	NUT, HEX FLNG SER LOCK, 3/8-16

CONTINUED

STAIRCASE LADDER & PLATFORM

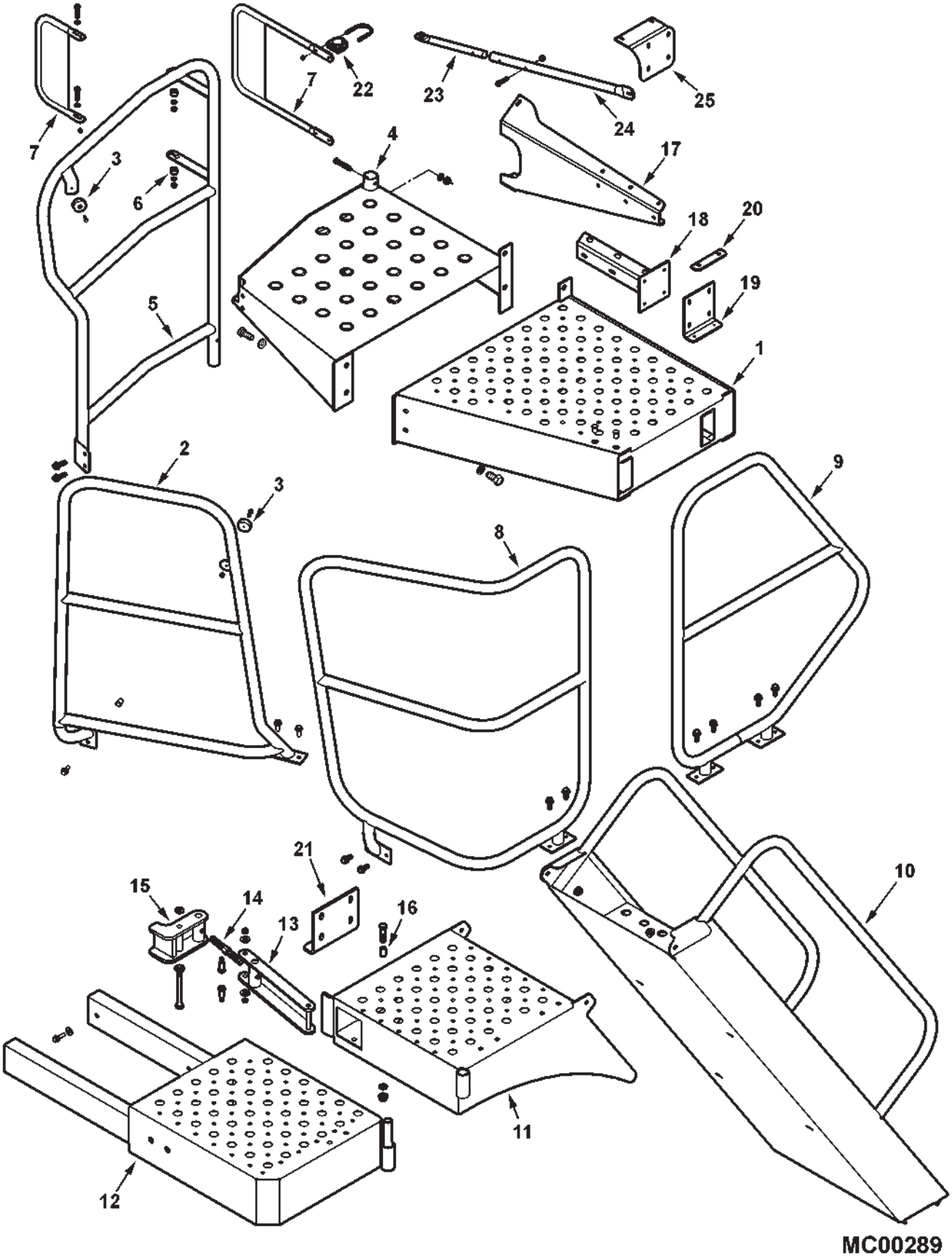

ITEM	NUMBER	QTY	DESCRIPTION
17	71398514	1	SUPPORT WLMT, LADDER (PRIOR S/N HP87101)
	7883408	1	SCREW, HEX FLNG, 3/8-16 X 1-1/4 GR8
	Y704734	1	NUT, HEX FLNG TOP LOCK, 3/8-16
	700710984	1	SCREW, HEX FLNG, 1/2-13 X 1-1/4 GR8
	Y704742	1	NUT, HEX FLNG TOP LOCK, 1/2-13
18	71398511	1	EXTENSION WLMT, SUPPT(PRIOR S/N HP87101)
	700710984	4	SCREW, HEX FLNG, 1/2-13 X 1-1/4 GR8
	Y704742	4	NUT, HEX FLNG TOP LOCK, 1/2-13
19	71398509	1	SUPPORT BRKT, BUMPER
	7883408	4	SCREW, HEX FLNG, 3/8-16 X 1-1/4 GR8
	Y704734	4	NUT, HEX FLANGE TOP LOCK, 3/8-16
20	71398518	1	PLATE, CONTACT
	70918222	2	SCREW, MACH, 1/4-20 X 3/4
	70931209	2	NUT, HEX SERR FLANGE, 1/4-20
21	71398510	1	SUPPORT BRACKET
	70921210	4	CAPSCREW, 3/8-16 X 1"
	Y704734	4	NUT, HEX FLANGE TOP LOCK, 3/8-16
22	71399445	2	U-CLAMP ASY, W/NUTS, 1/4-20 (EFF. S/N HP87101)
23	71401723	1	TUBE, INNER SUPPORT (EFF. S/N HP87101)
	70920415	2	CAPSCREW, 3/8-16 X 1-1/4 GR5
	Y704734	2	NUT, HEX FLANGE TOP LOCK, 3/8-16
24	71401722	1	TUBE, OUTER SUPPORT (EFF. S/N HP87101)
	7701055	1	CAPSCREW, 3/8-16 X 1-3/4 GR5
	Y704734	1	NUT, HEX FLANGE TOP LOCK, 3/8-16
25	71406751	1	BRKT WLDMT, SUPPORT (EFF. S/N HP87101)
	7883408	2	SCREW, HEX FLNG, 3/8-16 X 1-1/4 GR8
	Y704734	2	NUT, HEX FLANGE TOP LOCK, 3/8-16

MC00289
PR: 66

MIRRORS & EXTREMITY LIGHTS
MANUAL & ELECTRIC ADJUST

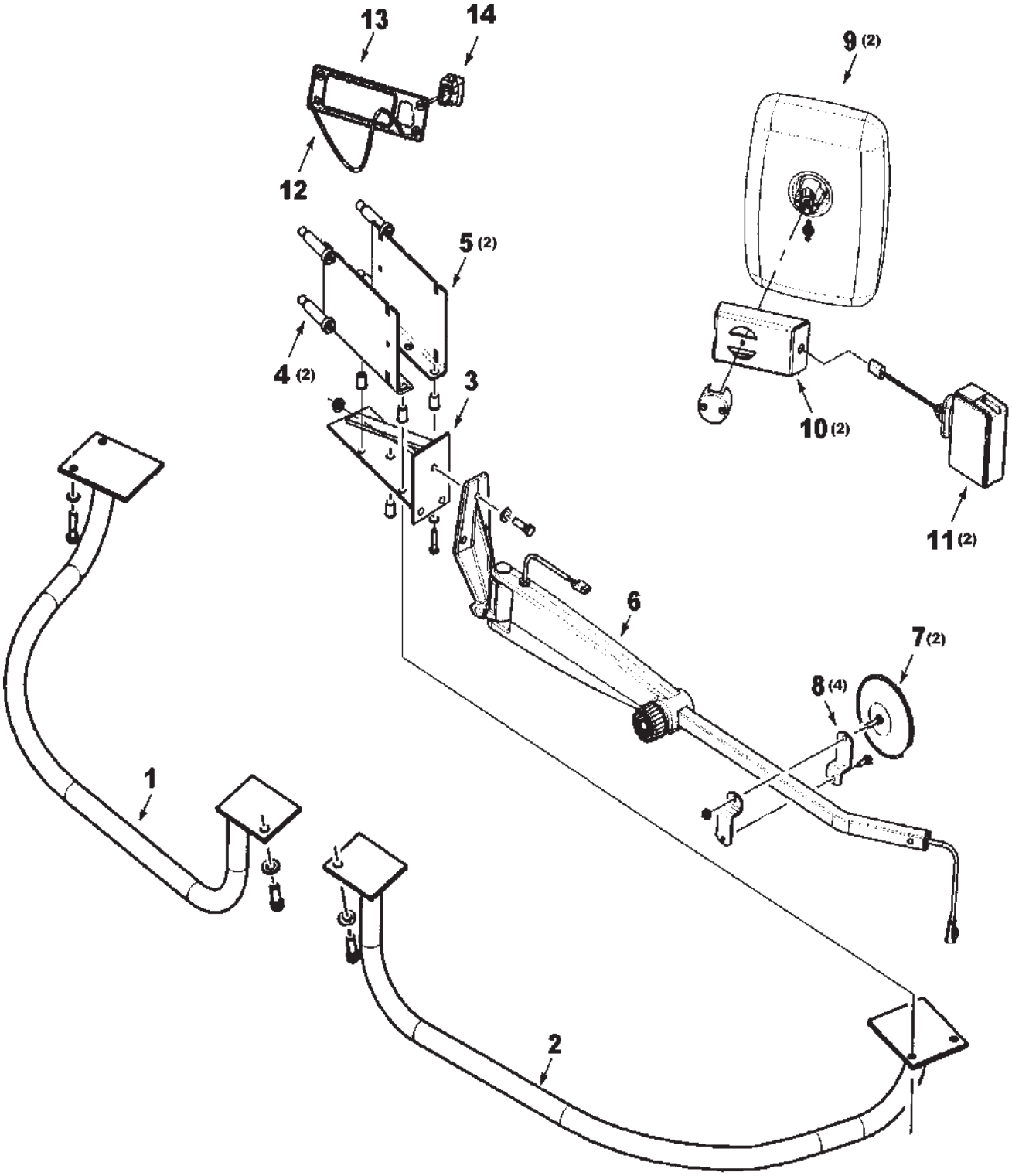

GC00315

MIRRORS & EXTREMITY LIGHTS
MANUAL & ELECTRIC ADJUST

ITEM	NUMBER	QTY	DESCRIPTION
1	71393324	1	GRABRAIL, RIGHT
	70921210	1	CAPSCREW, 3/8-16 X 1.0
	Y705533	1	WASHER, 3/8
	Y704734	1	LOCKNUT, HEX FLNG, 3/8-16
	70921977	2	CAPSCREW, 5/16-18 X 1-1/4
	Y705020	2	LOCKWASHER, 5/16
2	71393323	1	GRABRAIL, LEFT
	70921210	1	CAPSCREW, 3/8-16 X 1.0
	Y705533	1	WASHER, 3/8
	Y704734	1	LOCKNUT, HEX FLNG, 3/8-16
	70921977	2	CAPSCREW, 5/16-18 X 1-1/4
	Y705020	2	LOCKWASHER, 5/16
3	71390453	1	BRACKET, MIRROR ARM (LH)
	71390452	1	BRACKET, MIRROR ARM (RH)
	70921977	4	CAPSCREW, 5/16-18 X 1-1/4
	Y705020	4	LOCKWASHER, 5/16
	700725958	AR	INSERT, THREADED, 5/16-18
4	71390450	2	BRACKET
	704254	4	LOCKNUT, HEX FLNG SERR, 1/2-13
5	71390451	2	BRACKET
	704254	4	LOCKNUT, HEX FLNG SERR, 1/2-13
6	71387272	1	ARM, MIRROR (MANUAL) (LH)
	71387279	1	ARM, MIRROR (REMOTE) (LH)
	71387271	1	ARM, MIRROR (MANUAL) (RH)
	71387278	1	ARM, MIRROR (REMOTE) (RH)
	71397838	1	THUMBWHEEL ASY.
	70920415	6	CAPSCREW, 3/8-16 X 1-1/4
	Y705533	6	WASHER, 3/8
	Y704734	6	LOCKNUT, HEX FLNG, 3/8-16
7	71355604	2	MIRROR, GRAIN BIN
	70931209	2	LOCKNUT, HEX FLNG SERR, 1/4-20
8	71407655	4	BRACKET
	70930594	2	SCR, HEX SERR FLNG HD, 1/4-20 X 3/4
	70934479	2	NUT, HEX TOP LOCK, 1/4-20
9	71387273	2	MIRROR ASY., (MANUAL)
	71387280	2	MIRROR ASY., (REMOTE)
	71397839	2	MIRROR, GLASS
	71397840	2	RETAINING KIT, MIRROR
10	71393455	2	BRACKET, EXTREMITY LIGHT
11	71391501	2	LAMP, EXTREMITY
12	71390122	1	HARNESS, REMOTE MIRR.(PRIOR S/N HP87101)
13	71395763	1	BEZEL, HVAC (MANUAL ADJUST MIRRORS) (PRIOR S/N HN87101)
	71393943	1	BEZEL, HVAC (REMOTE ADJUST MIRRORS)
	70937280	4	SCREW, PAN HD. SELF-TAP #8-32 X 3/4
14	71387281	1	SWITCH, REMOTE MIRROR

GC00315
PR: 70

WINDSHIELD WIPER

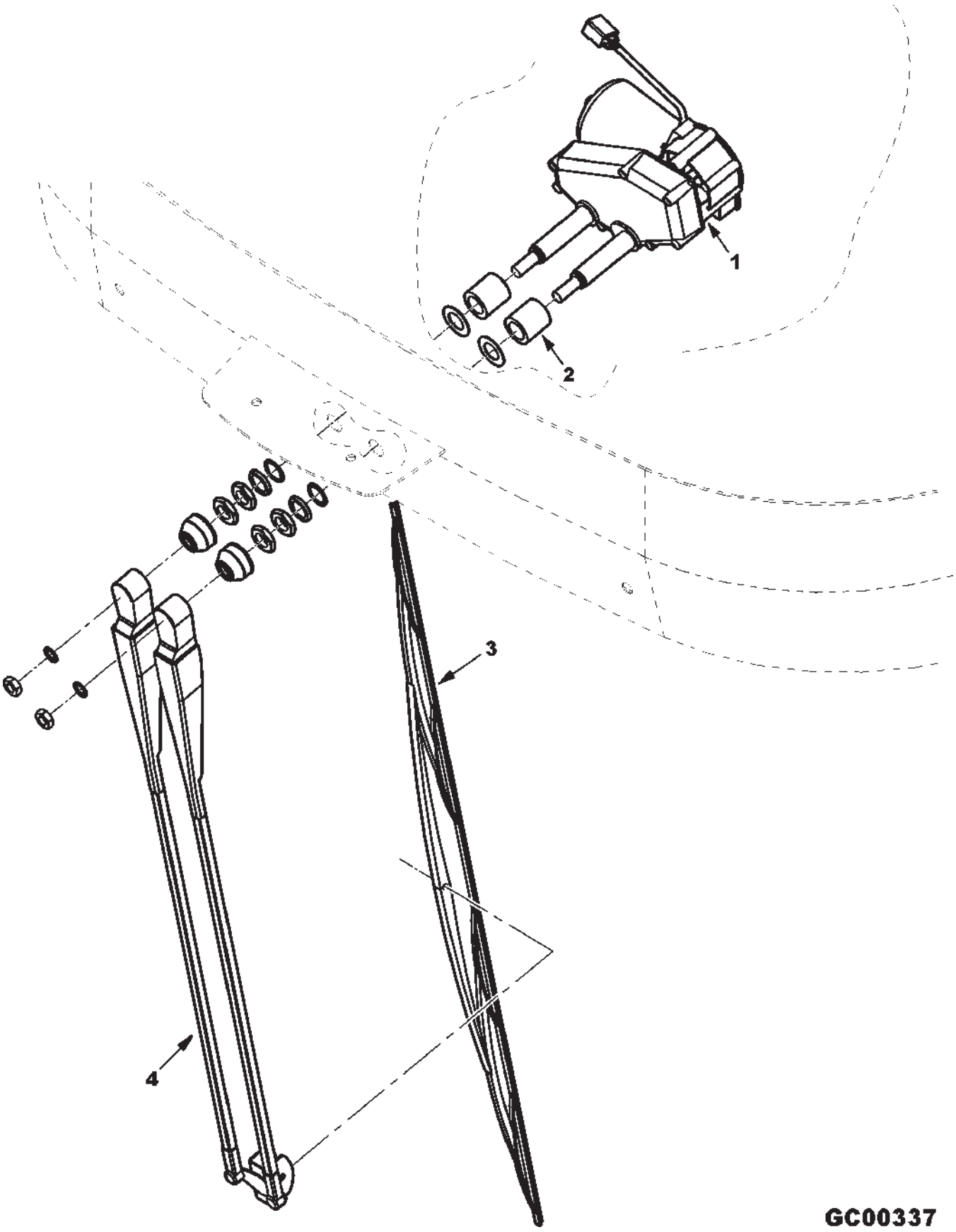

ITEM	NUMBER	QTY	DESCRIPTION
1	71387295	1	MOTOR, WIPER (INCLUDES MOUNTING HRDWR)
	71397837	1	HRDWR KIT, MOTOR MOUNTING
-	71387420	1	SWITCH, WIPER (NOT ILL.) (REF. ALSO MODULES, UPPER CONSOLE)
2	71390468	2	BUSHING, WIPER
3	71387297	1	BLADE, WIPER
4	71390472	1	ARM, WIPER

GC00337
PR: 72

ROOF & INTERIOR/EXTERIOR LIGHTS

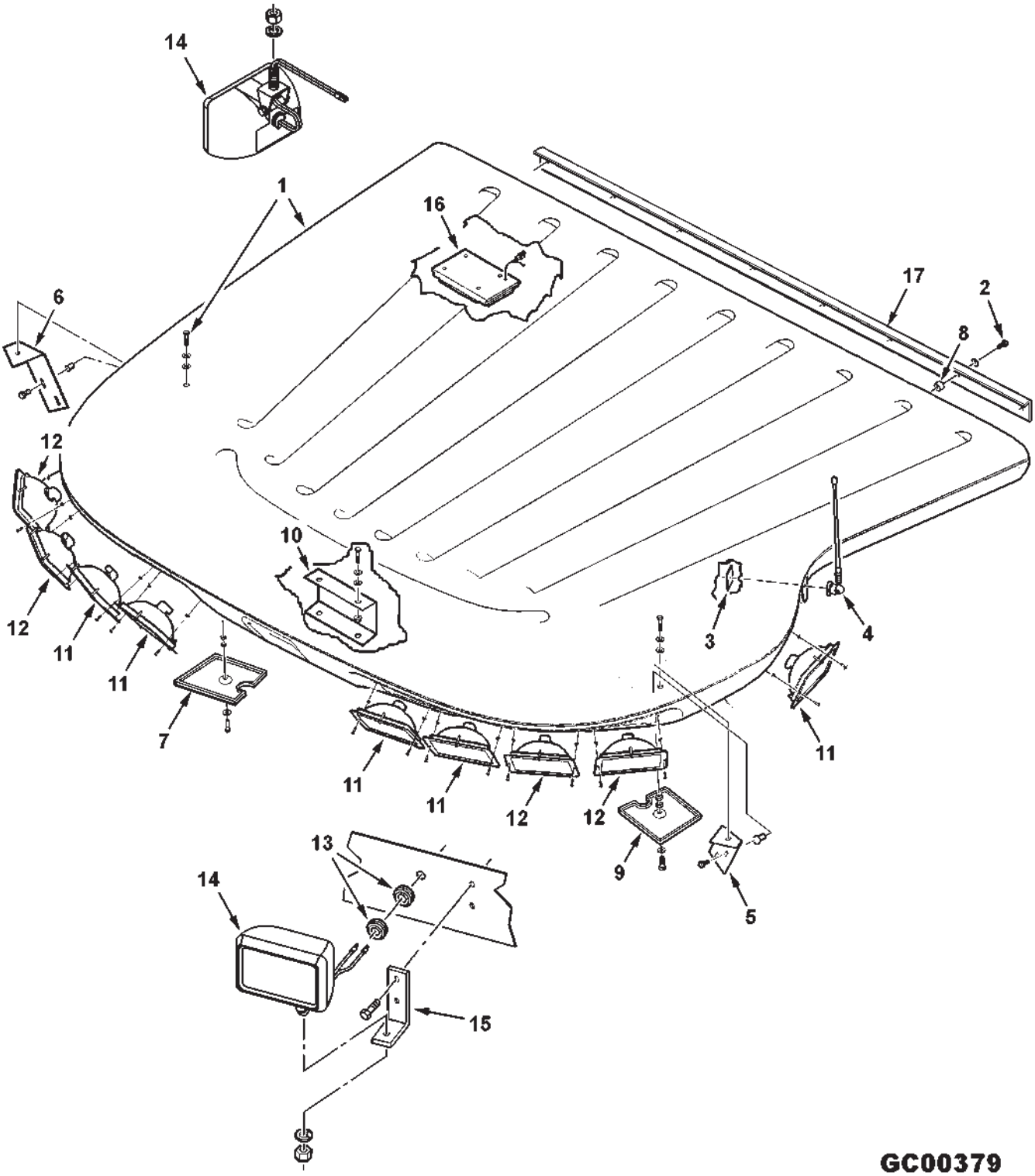

ITEM	NUMBER	QTY	DESCRIPTION
1	-----	1	ROOF ASY, CAB (PRIOR S/N HP87101)
			(ITEM 8 & 17 REQUIRED)
			(SERVICE W/ 71406749)
	71406749	1	ROOF ASY, CAB (EFF. S/N HP87101)
			(ITEM 8 NOT REQUIRED)
	7883325	4	SCR, HEX WSHR HD MACH, 5/16-18 X 3/4
	700709602	4	WASHER, 5/16 WIDE
	700717621	4	WASHER, RUBBER, .370 X .88 X .090
	Y704726	4	NUT, HEX FLANGE TOP LOCK, 5/16-18
2	70921960	9	CAPSCREW, 1/4-20 X 1 GR5
	700709601	9	WASHER, PLAIN WIDE, 1/4
3	71394800	1	PLATE, ANTENNA GRND.
4	RE210066	1	ANTENNA
5	71396736	1	BRACKET, ROOF SUPPORT, LH
6	71399426	1	BRACKET, ROOF SUPPORT, RH
	Y703132	4	SCR, HEX FLNG SERR., 5/16-18 X 3/4
	700725958	4	INSERT, THREADED, 5/16-18
7	71397523	1	COVER, SUPPORT ACCESS (RH)
	70921977	1	CAPSCREW, 5/16-18 X 1-1/4
	700709602	1	WASHER, WIDE PLAIN, 5/16
	70920161	1	JAM NUT, 5/16-18
	70917372	1	NUT, 5/16-18 REG
8	71401719	9	SPACER, .281 ID X .50 X .20 TH (PRIOR
			S/N HP87101)
9	71397524	1	COVER, SUPPORT ACCESS (LH)
	70921977	1	CAPSCREW, 5/16-18 X 1-1/4
	700709602	1	WASHER, PLAIN WIDE, 5/16
	70920161	1	JAM NUT, 5/16-18
	70917372	1	HEXNUT, 5/16-18
10	71398525	1	BRACKET, ROOF SUPPORT, FRONT
11	71387267	5	LAMP ASY., TRAP 25 DEG. UP
	700725576	AR	BULB, 12V 60W (GE 9004U)
	70937550	10	SCREW, PAN HD. SELF-TAP #8-18 X 3/4
	700715255	10	NUT, SPEED, #8
12	71387268	4	LAMP ASY., FLOOD 10 DEG. UP
	700725576	AR	BULB, 12V 60W (GE 9004U)
	70937550	8	SCREW, PAN HD. SELF-TAP #8-18 X 3/4
	700715255	8	NUT, SPEED, #8
13	7827983	4	GROMMET, WIRE
14	71406866	3	LIGHT, CAB, EXTERIOR
	Y705046	3	LOCKWASHER, 1/2
	704031	3	NUT, HEX 1/2-13
15	71396954	2	BRACKET
	7883325	4	SCREW, HEX MACH. 5/16-18 X 3/4
	70931277	4	LOCKNUT, HEX SERR FLANGE, 5/16-18
16	71361831	1	LIGHT, INTERIOR
	700701265	4	SCR, PAN HD. SELF-TAP, #8-18 X 1-1/2
	700705185	1	SCREW, PAN HD. MACH. #8-32 X 1/2
			(GRND WIRE ATTACHING SCREW)
17	71401718P	1	ANGLE, ROOF RETAINER, REAR

GC00379
PR: 74

CONSOLE - SEAT

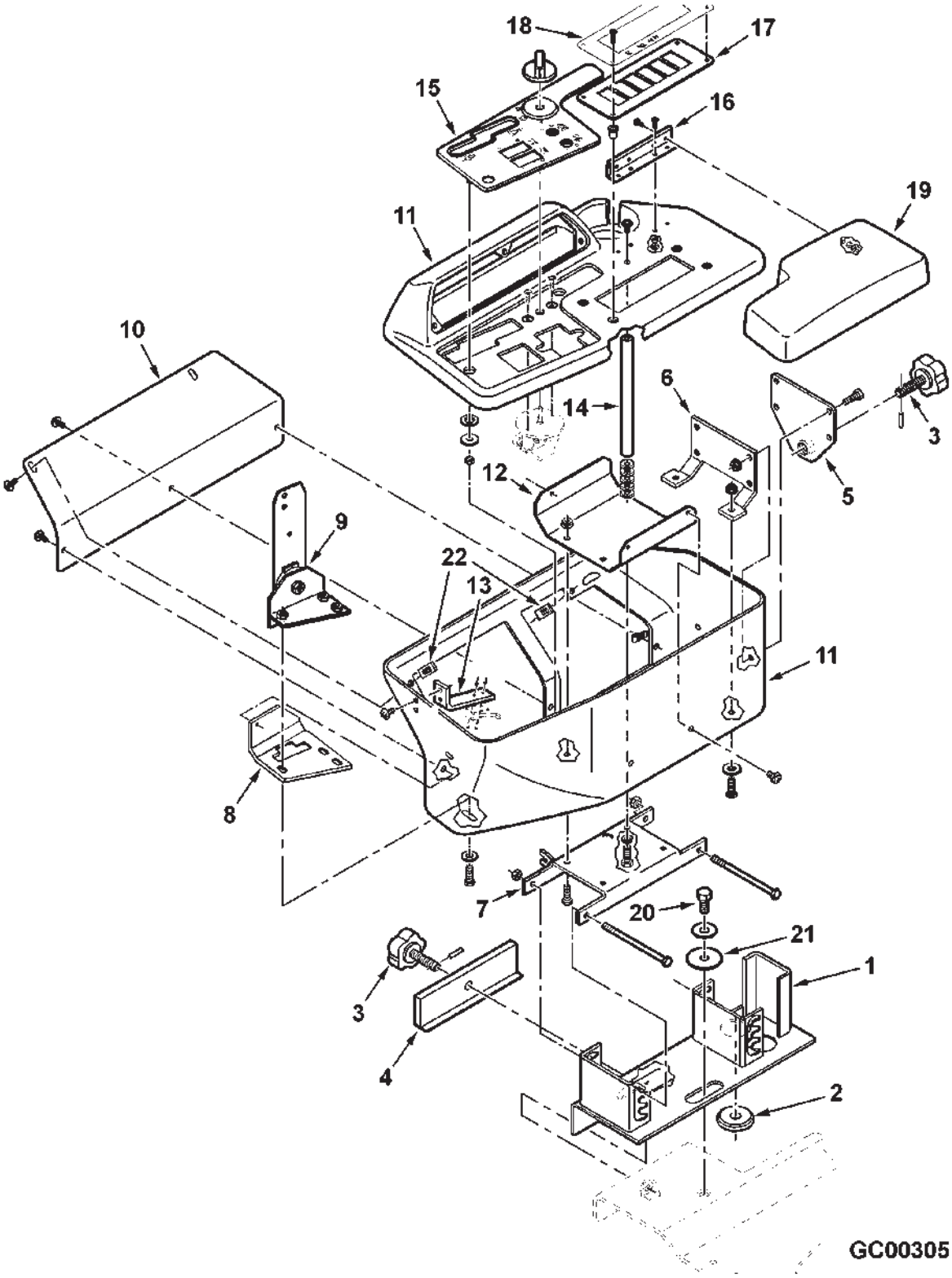

ITEM	NUMBER	QTY	DESCRIPTION
1	71398815	1	PLATE WLMT, ADJUSTER (PRIOR S/N HR87101)
	71409576	1	PLATE WLMT, ADJUSTER (EFF. S/N HR87101)
2	71395754	1	GROMMET
3	71388152	2	KNOB, THREADED, 1/2-13 X 2
	70918111	2	PIN, SPRING, 1/8 X 1
4	71393609	1	BAR, STABILIZER
5	71388149	1	PLATE, KNOB
	70921333	4	CAPSCREW, 5/16-18 X 1.0
	70931277	4	LOCKNUT, HEX SERR. FLANGE, 5/16-18
6	71393613	1	STIFFENER, REAR
	70921333	2	CAPSCREW, 5/16-18 X 1.0
	70917642	2	WASHER, 5/16 WIDE
	70931277	2	LOCKNUT, HEX SERR. FLANGE, 5/16-18
7	71388142	1	BASEPLATE
	70925693	2	CAPSCREW, 5/16-18 X 5.0
	70923362	2	LOCKNUT, 5/16-18
8	71393615	1	STIFFENER
9	71388129	1	PIVOT ASY., HYDRO HANDLE
	71408202	AR	KIT, PIVOT ASY REPAIR (INCL. ALL COMP'TS EXCEPT MTG BRKT & PVT LEVER)
	70921333	3	CAPSCREW, 5/16-18 X 1.0
	70917642	3	WASHER, 5/16 WIDE
10	71388154	1	COVER
	70937660	5	SCREW, PAN HD,TAPPING, 1/4-20 X 5/8
11	71400501	1	CONSOLE HSG (1 PIECE. SHOWN IN 2 PIECES) (PRIOR S/N HR87101)
	71409600	1	CONSOLE HSG (1 PIECE. SHOWN IN 2 PIECES) (EFF. S/N HR87101)
12	71393612	1	STIFFENER, BOTTOM
	70921333	3	CAPSCREW, 5/16-18 X 1.0
	70931277	3	LOCKNUT, HEX FLANGE SERR, 5/16-18
	70937660	2	SCREW, PAN HD,TAPPING, 1/4-20 X 5/8
13	71398165	1	BRACKET, PROXIMITY SWITCH (SERVICE WITH #71406876 FOR MICRO SWITCH)
	71406876	1	BRACKET, MICRO SWITCH (USED W/SWITCH #107041 - SEE ELECT. SECTION)
	70937660	2	SCREW, PAN HD,TAPPING, 1/4-20 X 5/8
14	71393614	1	STIFFENER, VERTICAL
	70921333	1	CAPSCREW, 5/16-18 X 1.0
	Y705525	5	WASHER, 5/16
	Y705020	1	LOCKWASHER, 5/16
	70937660	1	SCREW, PAN HD,TAPPING, 1/4-20 X 5/8
15	71393939	1	BEZEL, CONSOLE
	70923550	4	WASHER, .562 X 1.0 X 12GA
	70919381	4	WASHER, .344 X 1.0
	1703354	4	NUT, HEX FLNG TOP LK, 1/4-20

CONTINUED

CONSOLE - SEAT

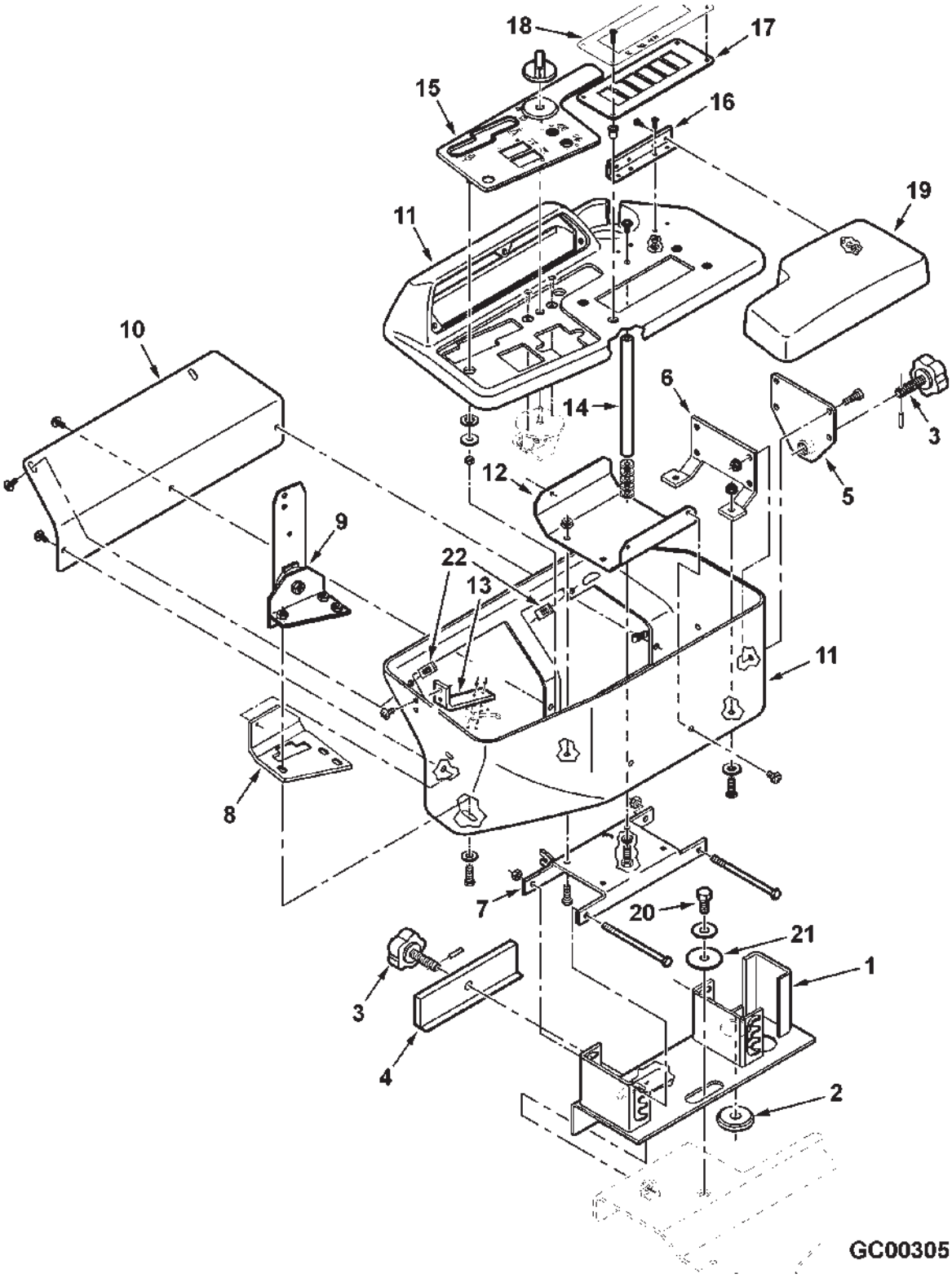

ITEM	NUMBER	QTY	DESCRIPTION
16	71391157	1	HINGE
	116047W1	8	SCREW, PAN HD. MACH. #10-24 X 5/8
	705004	8	LOCKWASHER, #10
	Y704072	8	HEXNUT, #10-24
17	71393929	1	PLATE, SWITCH MTG. (PRIOR S/N HR87101)
	71409579	1	PLATE, SWITCH MTG. (EFF. S/N HR87101)
	70937280	4	SCREW, SELF TAPPING #8-32 X 3/4
	71393926	4	WELLNUT, #8-32
18	71395764	1	DECAL, SWITCHES (PRIOR S/N HR87101)
	71409594	1	DECAL, SWITCHES (EFF. S/N HR87101)
19	71388131	1	ARMREST ASY.
20	70921865	1	CAPSCREW, NYLOK, 1/2-13 X 1
	70918431	1	WASHER, 1/2 WIDE
21	71398814	1	WASHER, POLYETHYLENE, NATURAL
22	700705135	3	SPEEDNUT 1/4-20

GC00305
PR: 76

CONTROL
SERVICE BRAKES

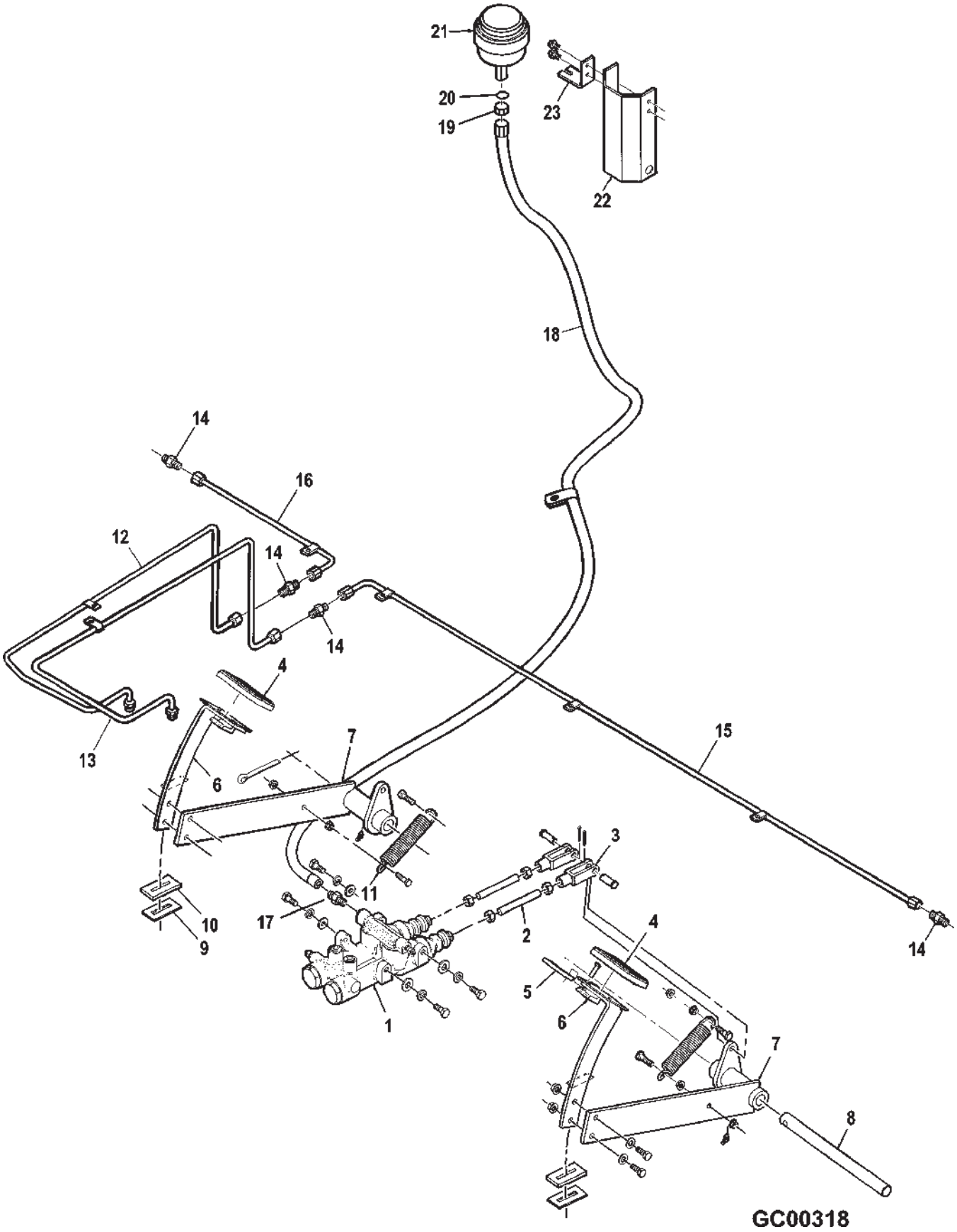

ITEM	NUMBER	QTY	DESCRIPTION
1	71378364	1	MASTER CYLINDER, BRAKE
	700708349	4	CAPSCREW, M10 X 1.5 X 25
	700702206	4	LOCKWASHER, 7/16
	700702916	4	WASHER, FLAT 3/8
2	71361940	2	ROD, BRAKE
	353426X1	4	HEXNUT, 7/16-20
3	W500053E	2	YOKE
	700706356	2	PIN, CLEVIS, 7/16 X 1-1/4
	70918452	2	PIN, COTTER, 1/8 X 1.0
4	71361947	2	PAD, PEDAL
5	71361941	1	LOCK, LINK (LH ONLY)
	763136	1	PIN, CLEVIS, 1/4 X 1.0
6	71390414	1	PEDAL, BRAKE (LH)
	71390413	1	PEDAL, BRAKE (RH)
	70921210	4	CAPSCREW, 3/8-16 X 1.0
	70918266	4	WASHER, FLAT, 3/8
	704247	4	LOCKNUT, 3/8-16
7	71387178	1	ARM, BRAKE PEDAL (LH)
	71387177	1	ARM, BRAKE PEDAL (RH)
	70925731	2	FITTING, GREASE, 1/4-28 X 45 DEG.
8	71361720	1	SHAFT, BRAKE PEDAL
	70929957	1	PIN, COTTER, 3/8 X 3.0
9	71387181	2	BRACKET
10	71390407	2	SEAL, PEDAL
11	1565240W1	2	SPRING
	70921977	4	CAPSCREW, 5/16 X 1-1/4
	70931277	8	LOCKNUT, HX FLNG SER 5/16-18
12	71391255	1	TUBE, M/CYL. (RH)
	70928654	1	CLAMP
	7704141	1	LOCKNUT, HX FLNG SER 3/8-16
13	71391256	1	TUBE, M/CYL. (LH)
	70928654	1	CLAMP
	7704141	1	LOCKNUT, HX FLNG SER 3/8-16
14	70919214	4	UNION, 1/4 JIC X 1/4 JIC
15	71394790	1	TUBE, CAB, (LH)
	70926919	3	CLAMP
	365775X1	3	SCREW, HEX SELF-TAP, 1/4-20 X 1/2
16	71394789	1	TUBE, CAB, (RH)
	70926919	1	CLAMP
	365775X1	1	SCREW, HEX SELF-TAP, 1/4-20 X 1/2
17	70920821	1	CONNECTOR, 1/4 HOSE X 5/16 INVERTED
18	71396273	1	HOSE ASY.
	70929402	1	CLAMP, HOSE, WORM DRIVE
19	N12998	1	NUT, HEX BULKHD, 9/16-18, SAE J514
20	112734W1	1	O-RING, .070 WIDE X .301 ID
21	112735W91	1	RESERVOIR, BRAKE
22	71393695B	1	COVER, RESERVOIR
23	71393694	1	BRACKET, RESERVOIR
	701953	2	SCR, HEX HD, THD TAPG, 5/16-18 X 3/4

GC00318
PR: 78

BRAKE MASTER CYLINDER

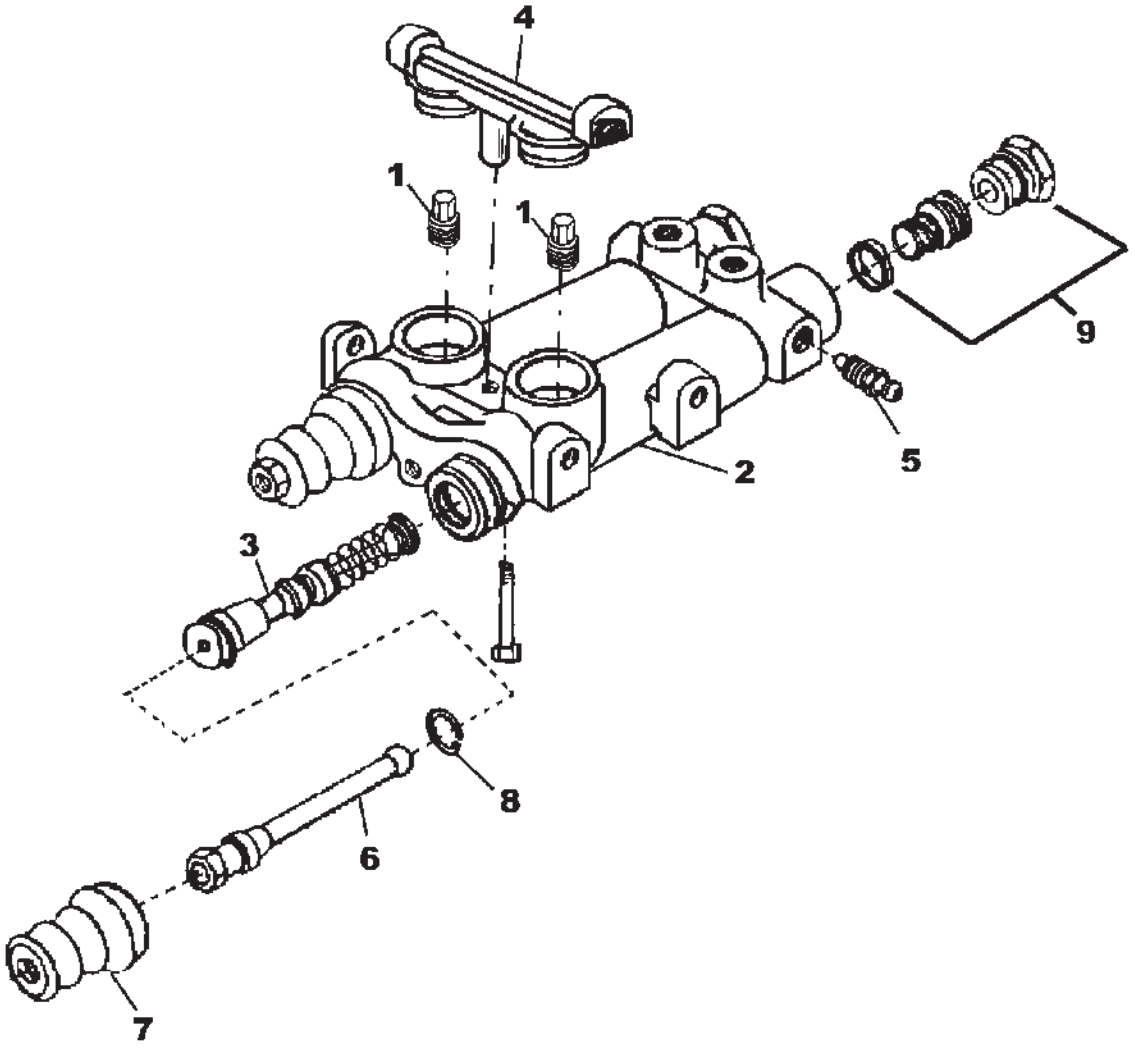

MC00218

BRAKE MASTER CYLINDER

ITEM	NUMBER	QTY	DESCRIPTION
-	71378364	1	MASTER CYLINDER, BRAKE
1	71389509	2	VALVE ASSEMBLY, FAST FILL
2	-----	1	BODY AND TUBE SEAT ASSEMBLY (ORDER BRAKE MASTER CYLINDER)
3	71389511	2	PISTON ASSEMBLY
4	71389512	1	CONNECTOR AND TUBE SEAT ASSEMBLY
5	71389513	2	BLEED SCREW
6	74906743	2	PUSH ROD
7	71389514	2	BOOT
8	71389515	2	RETAINING RING
9	71389516	2	POPPET PACKAGE

MC00218
PR: 80

CONTROL
PARK BRAKE & HYDRO PROPEL CABLE

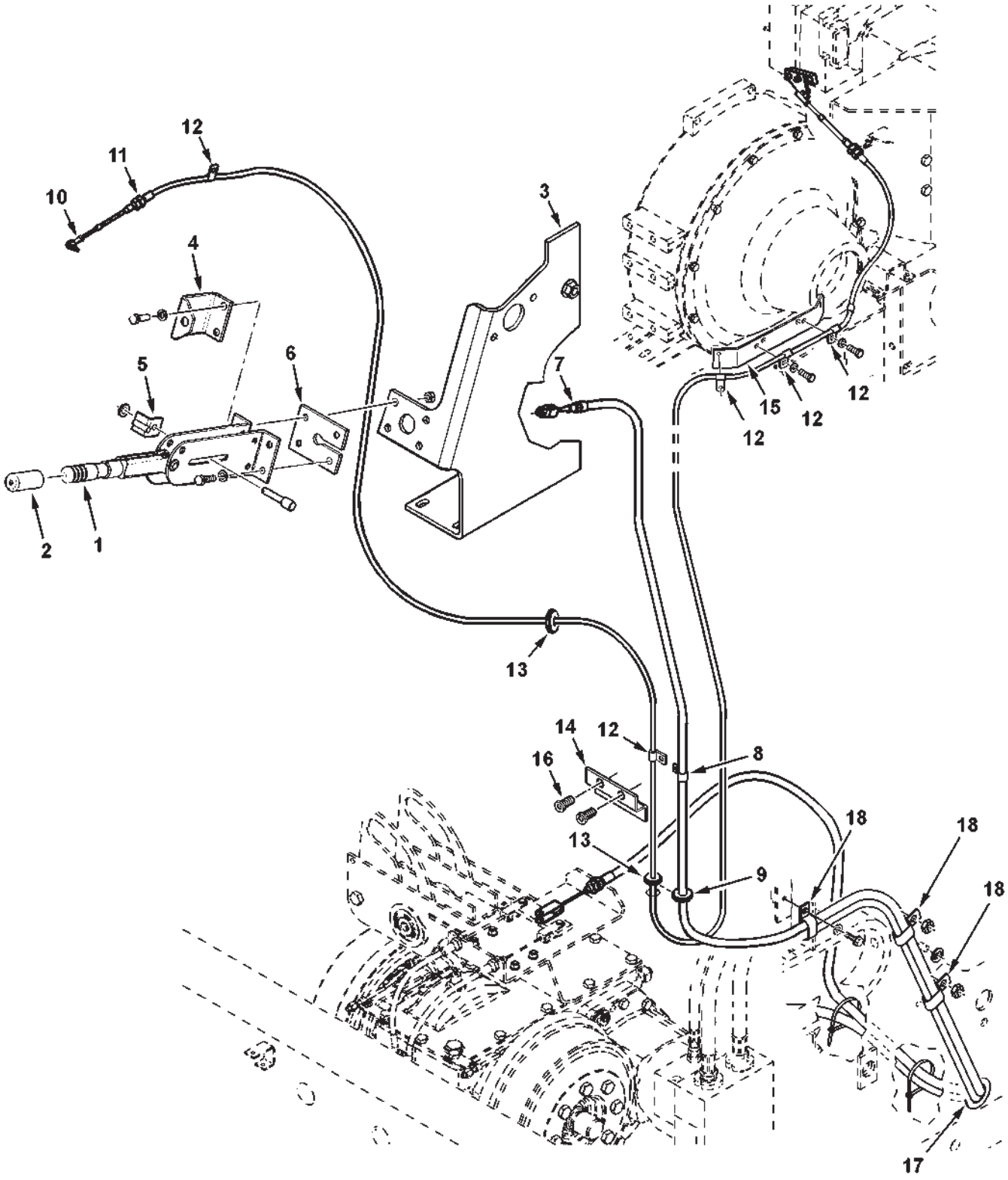

ITEM	NUMBER	QTY	DESCRIPTION
1	1774490W91	1	LEVER ASY., PARKING BRAKE
	70921333	4	CAPSCREW, 5/16-18 X 1.0 GR5
	Y705020	4	LOCKWASHER, 5/16
	70917372	4	NUT, 5/16-18 REG
2	111711W1	1	HANDLE, GRIP
3	71394796	1	SUPPORT BRKT WLDMT
	70921977	4	CAPSCREW, 5/16-18 X 1-1/4
	Y705608	4	WASHER, 5/16 NARR
4	71394799	1	BRACKET, SWITCH
	71395848	1	SWITCH, PARK BRAKE (NOT ILL.)
5	1791851W91	1	BRACKET WLDMT, PARKING BRAKE
6	71379701	1	PLATE, ANCHOR
7	71396396	1	CABLE ASY., PARK BRAKE
8	70928656	1	CLAMP, CABLE, 5/8 X .406 HOLE
	70921965	1	CAPSCREW, 3/8-16 X 3/4
9	71395753	1	GROMMET
10	71351389	1	JOINT, BALL
	705004	1	LOCKWASHER, #10
	Y704445	1	NUT, #10-32
11	71396387	1	CABLE ASY., HYDRO
	700717644	3	NYLON TIE, .30 X 8.1 LG
12	70929720	6	CLAMP, CABLE, 5/16 X .406 HOLE
	70923683	4	SCREW, SELF-TAPPING 3/8-16 X 1-1/2
	70921965	1	CAPSCREW, 3/8-16 X 3/4
	70931277	1	LOCKNUT, HEX SERR FLANGE, 5/16-18
13	71395752	2	GROMMET
14	71397429	1	BRACKET ASY, CABLE SUPPORT (W/ INSERTS) (PRIOR S/N HP87101)
	Y703132	2	SCREW, HEX SERR FLNG, 5/16-18 X 3/4
15	71397944	1	BRACKET, CABLE SUPPORT
	70921969	2	CAPSCREW, 3/8-16 X 1-1/2
	70916965	2	LOCKWASHER, 3/8
16	700725632	2	INSERT, THREADED, 3/8-16
17	8027427	1	GROMMET, 2.0 ID X 2.5 HOLE
18	700717627	3	CLAMP, DOUBLE, 11/16 DIA X .406 HOLE
	70931942	2	SPEED NUT, PUSH-ON, 3/8

CHL0006
PR: 82

CONTROL
GEARSHIFT

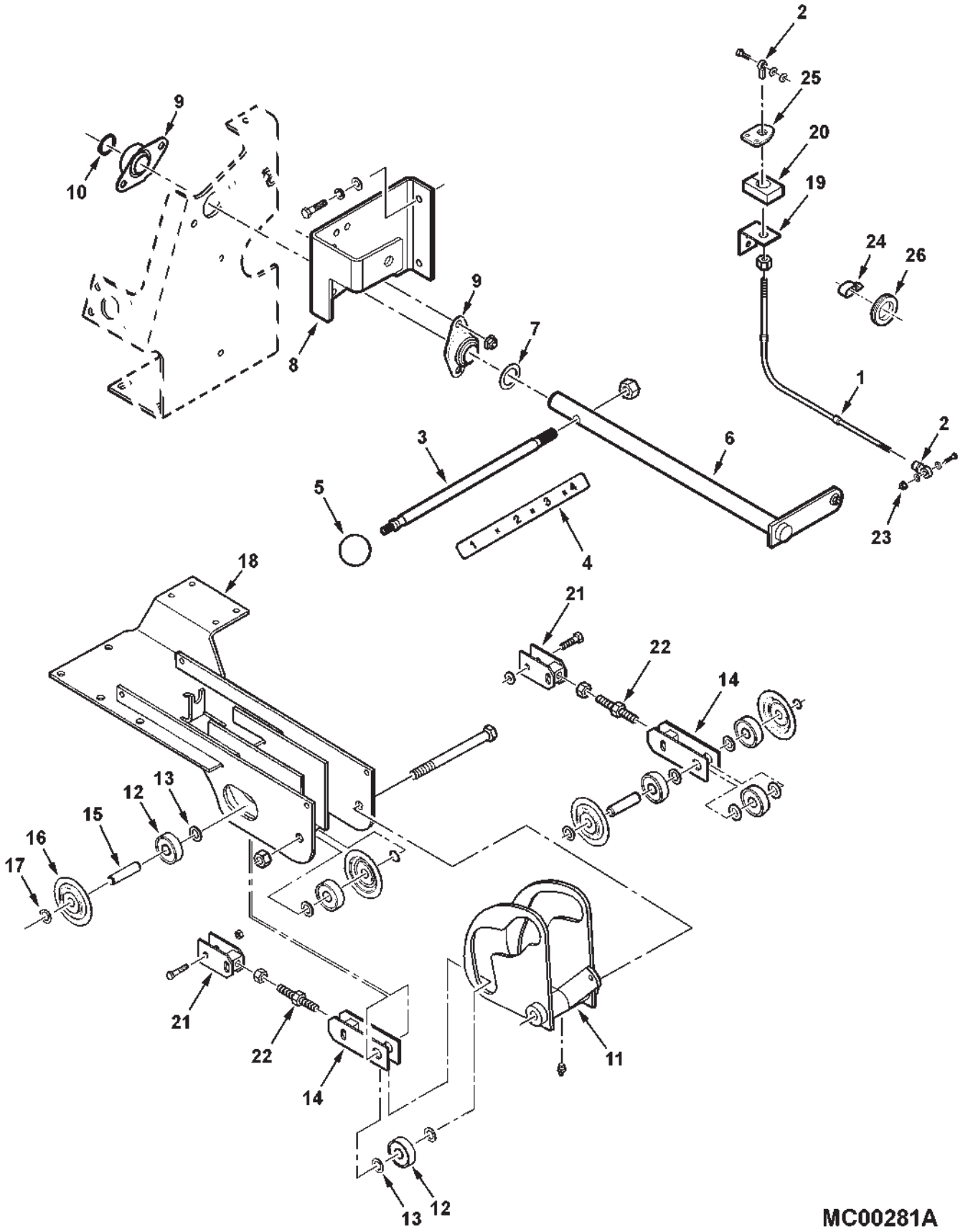

ITEM	NUMBER	QTY	DESCRIPTION
1	71387205	1	CABLE ASY., SHIFTER
	700717644	2	NYLON TIE, .30 X 8.1 LG
2	700710788	2	BEARING, ROD END
	70921977	2	CAPSCREW, 5/16-18 X 1-1/4 GR5
	Y705525	4	WASHER, HARD, .344 X .688 X 16GA
3	71391515	1	LEVER
	Y704742	1	NUT, HEX FLNG TOP LOCK, 1/2-13
4	71395770	1	DECAL, SHIFTER
5	71363845	1	KNOB
6	71391516	1	LEVER WLDMT, SHIFT
7	Y52209	1	WASHER, SPL, 1 X 1-1/2 X 18 GUAGE
8	71394795	1	SUPPORT WLDMT, SHAFT (LH)
	703603	2	CAPSCREW, 3/8-16 X 1-1/2 GR5
	705038	2	LOCKWASHER, 3/8
	70918266	2	WASHER, 3/8, NARROW
9	71394797	2	BEARING, FLANGE 1.0
	70921210	4	CAPSCREW, 3/8-16 X 1.0
	Y704734	4	NUT, HEX FLNG TOP LOCK, 3/8-16
10	70927738	1	RETAINING RING
11	71387142	1	CAM WELD ASM
	70914465	1	LUBE FTG, STRAIGHT, 1/8-27 NPT
	70926137	1	CAPSCREW, 5/8-11 X 7" GR 5
	70923353	1	NUT, CENTER LOCK, 5/8-11
12	711770	6	BEARING, ROLLER
13	52175	8	WASHER, SPL .62 X 1.0 X 18 GA, NON-PLTD
14	71397262	2	YOKE WLDMT, LONG
	7701717	2	CAPSCREW, 5/16-18 X 1-1/2
	70923362	2	NUT, CENTER LOCK, 5/16-18
15	71393301	2	PIN, SHIFTER
16	71393467	4	CAP, BEARING RETAINER
17	70927103	4	RING, RETAINING
18	71387148	1	BASE WELD ASM, SHIFTER
19	71396393	1	BRKT ASY, SHIFT CABLE(PRIOR S/N HP87101)
	7883333	2	SCREW, HX WSHR HD MACH, 5/16-18 X 1
	70917642	2	WASHER, 5/16 WIDE
20	71396394	1	SEAL, SHIFT CABLE (PRIOR S/N HP87101)
21	71397263	2	YOKE WLDMT, SHORT
22	71397261	2	STUD, YOKE
	70917421	2	JAM NUT, 3/8-16
23	Y704726	1	NUT, HEX FLNG TOP LOCK, 5/16-18
24	700717627	3	CLAMP, DOUBLE, 11/16 DIA X .406 HOLE
	70931942	2	SPEED NUT, PUSH-ON, 3/8
25	71406878	1	RETAINER WLMT, CABLE (EFF. S/N HP87101)
	70921210	2	CAPSCREW, 3/8-16 X 1 GR5
26	8027427	1	GROMMET, RUBBER (EFF. S/N HP87101)

MC00281A
PR: 84

CONTROL
STEERING COLUMN

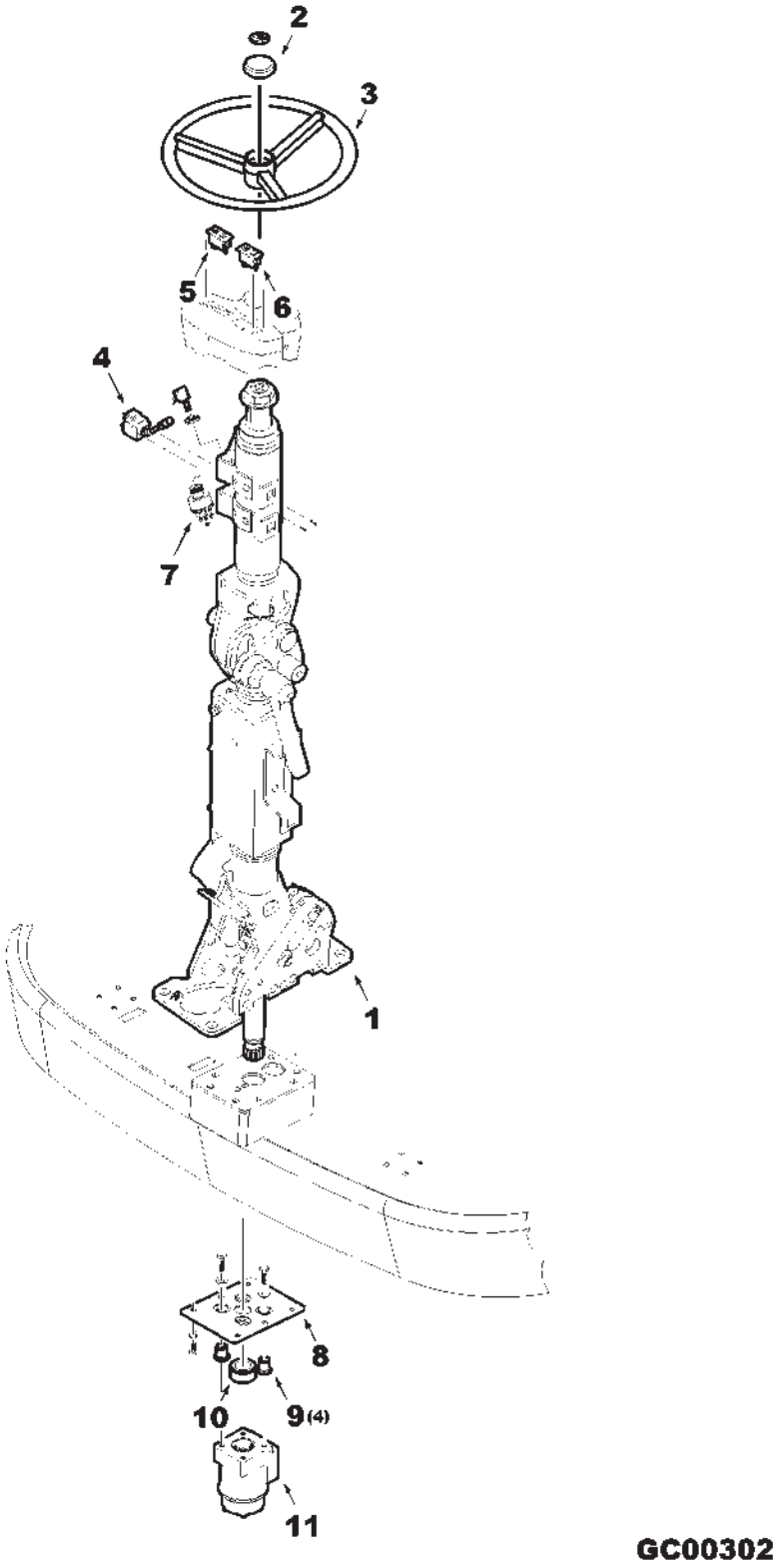

ITEM	NUMBER	QTY	DESCRIPTION
1	71407651	1	STEERING COLUMN ASY
	703603	4	CAPSCREW, 3/8-16 X 1-1/2
	705038	4	LOCKWASHER, 3/8
2	71387145	1	CAP, STRG. WHEEL, CENTER
	700721123	1	EMBLEM, CHALLENGER
3	71387293	1	WHEEL, STEERING (LEATHER WRAPPED)
4	71390314	1	SWITCH, TURN SIGNAL/HORN
	700720909	2	SCREW, PAN HD MACH, M4 X 0.7 X 10
	70923906	2	WASHER, #8, NARROW
5	71393282	1	MODULE, BLINKER/WAIT TO START
6	71393281	1	MODULE, BLINKER/HIGH BEAM
7	700718010	1	SWITCH, IGNITION
	71395761	1	DECAL, IGNITION SWITCH
	700721405	1	KEY, IGNITION (QTY 2 W/RING)
	Y704445	4	NUT, #10-32 UNF
	705004	4	LOCKWASHER, #10
8	71390417	1	PLATE W/A, STRG. CONTROL
	70921965	6	CAPSCREW, 3/8-16 X 3/4
	705038	6	LOCKWASHER, 3/8
	70920415	4	CAPSCREW, 3/8-16 X 1-1/4
	70917378	4	WASHER, PLAIN WIDE, 3/8
9	700701287	4	MOUNT, RUBBER
10	72504036	1	SEAL, FOAM RING
11	71392876	1	STEERING CONTROL UNIT (200 CC/REV)
-	71391083	1	SEAL KIT, STRG CONTROL UNIT
			(NO OTHER SERVICED COMPONENTS)

GC00302
PR: 86

STEERING COLUMN

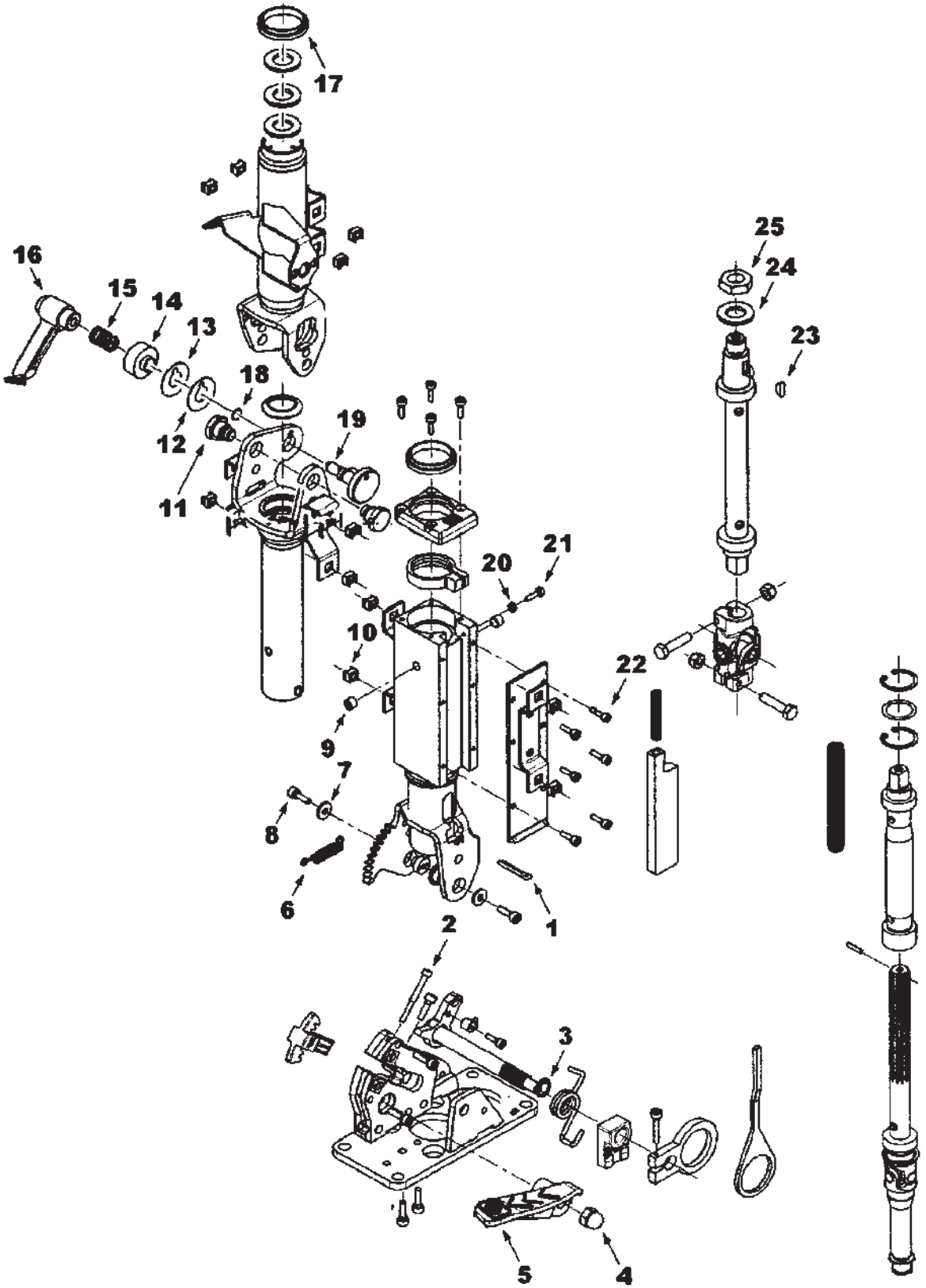

GC00396

ITEM	NUMBER	QTY	DESCRIPTION
-	71407651	--	STEERING COLUMN ASY
1	62232	1	COTTER PIN, 3/16 X 1-1/4
2	71397834	1	CAPSCR, HEX SOC HD, M5-1 X 50
3	71397830	1	RING, RETAINING, EXT.
4	71397550	1	NUT, HEX CAP, M10-1.5
5	71397543	1	PEDAL
6	71397546	1	SPRING, EXTENSION
7	71397827	2	WASHER, FLAT, M6
8	71397828	2	CAPSCR, HEX SOC HD, M6-1 X 18
9	71397833	2	SETSCREW, M10-1 X 8
10	71397829	12	NUT, CAGE, #10-24 (PRIOR S/N HP87101)
	71407652	12	NUT, CAGE, M5 (EFF. S/N HP87101)
	71407653	12	SCREW, M5 X 16, BLACK
11	71397539	2	SCREW, FULCRUM
12	71397544	1	SPACER, 1 MM TH.
13	71397542	1	SPACER, .5 MM TH.
14	71397541	1	RING
15	71397549	1	SPRING, COMPRESSION
16	71397548	1	HANDLE
17	71397545	2	GROMMET, RUBBER
18	71397835	1	O-RING, .344 ID X .070
19	71397547	1	STOP, TILT
20	71397540	1	NUT, HEX, M5-1.5
21	71397836	1	CAPSCREW, HEX, M5-1 X 18
22	71397826	11	CAPSCREW, HEX SOC HD, M5-1 X 16
23	71397831	1	KEY, WOODRUFF, 5 X 6.5 MM
24	700702979	1	WASHER, FLAT, 19 ID X 34 X 3 MM
25	71397832	1	NUT, HEX, M18-1.5

GC00396
PR: 88

SEAT
OPERATOR & INSTRUCTOR

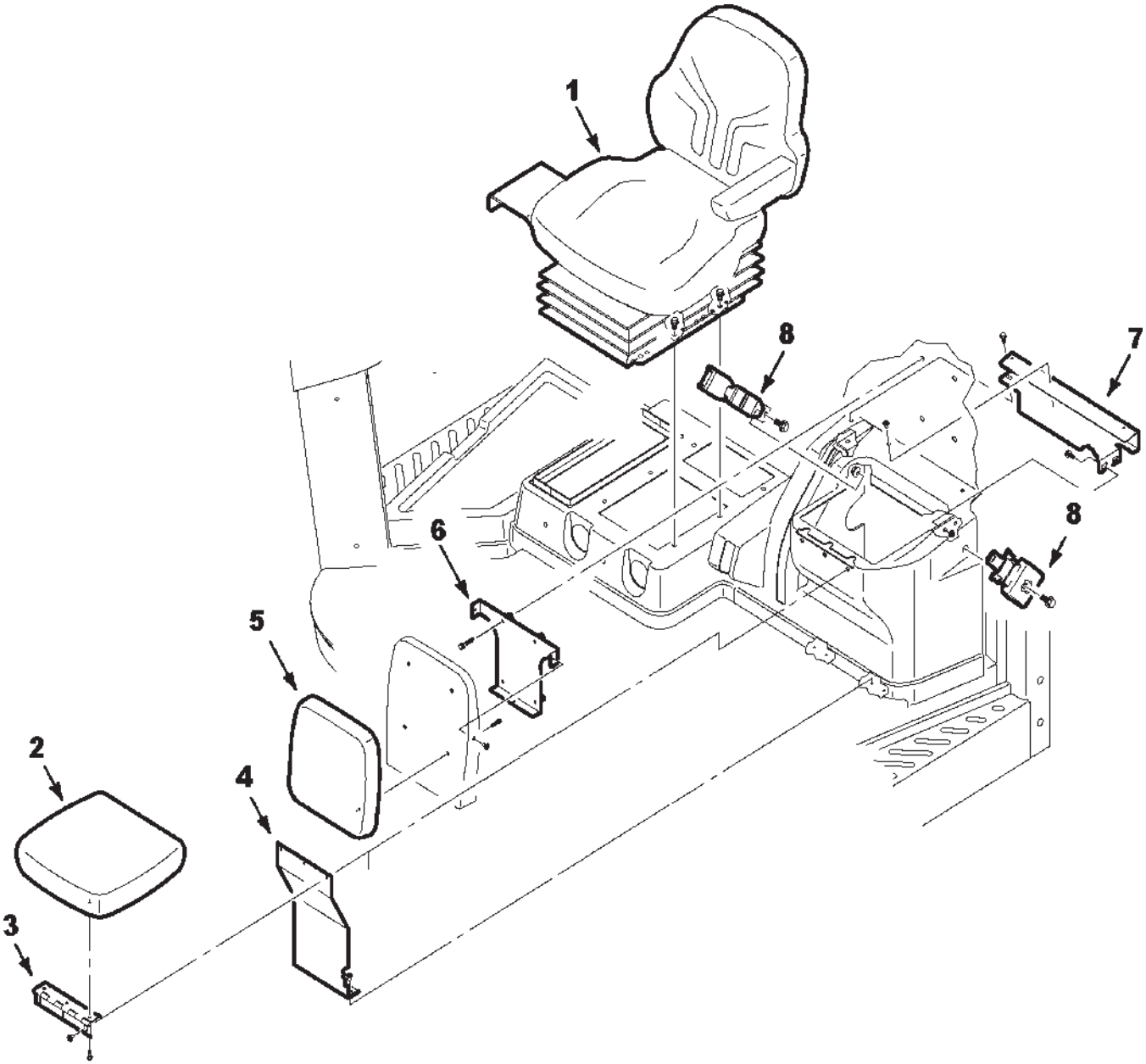

GC00306A

SEAT
OPERATOR & INSTRUCTOR

ITEM	NUMBER	QTY	DESCRIPTION
1	71406895	1	SEAT ASSEMBLY (SEE BREAKDOWN)
	7703432	4	SCREW, HEX FLNG SERR. 3/8-16 X 3/4
2	71396397	1	CUSHION, INSTRUCTORS SEAT
	7883275	3	MACH SCR, HEX WSHR HD. 1/4-20 X 3/4
3	71394887	1	HINGE, INSTR. SEAT
	70937660	3	SCR, PAN HD, THD TAP'G 1/4-20 X 5/8
4	71394886	1	SUPPORT, INSTR. SEAT FRONT
	70937660	2	SCR, PAN HD, THD TAP'G 1/4-20 X 5/8
5	71396398	1	CUSHION, INSTRUCTORS SEAT BACK
	7883283	4	MACH SCR, HEX WSHR HD. 1/4-20 X 1.0
6	71396377	1	BRACKET WLDMT, BACKREST MTG
	7772056	4	SCREW, HEX FLNG SERR.5/16-18 X 1-1/2
7	71394894	1	SUPPORT, INSTR. SEAT REAR
	7883325	3	MACH SCR, HEX WSHR HD. 5/16-18 X 3/4
	70931277	3	LOCKNUT, HEX FLNG SERR. 5/16-18
	70937660	3	SCR, PAN HD, THD TAP'G 1/4-20 X 5/8
8	72502789	1	SEAT BELT ASY. (INCL. BOTH HALVES)
	7701592	2	SCREW, HEX FLNG SERR. 1/2-13 X 1.0

GC00306A
PR: 90

SEAT
BASE & SUSPENSION

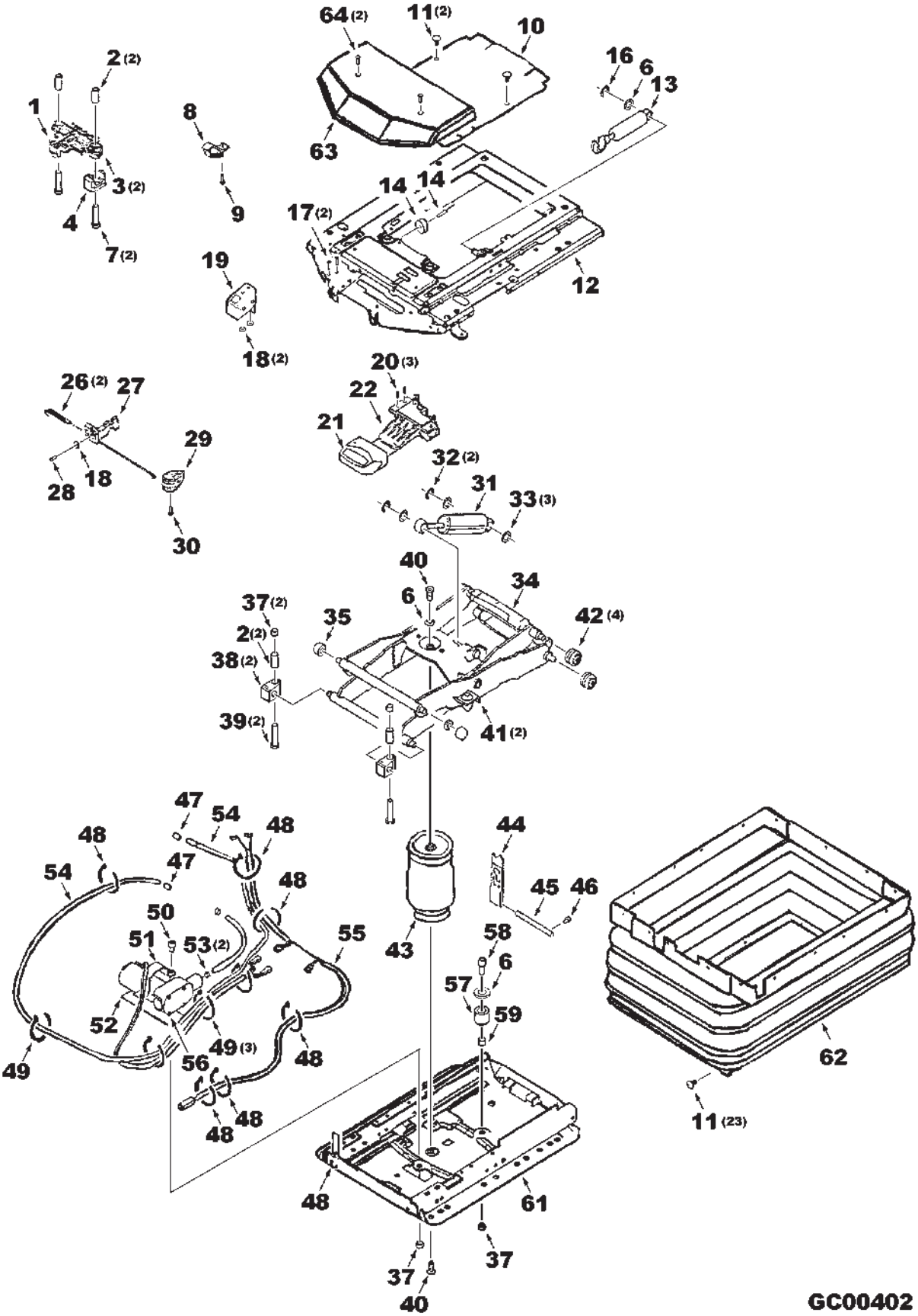

ITEM	NUMBER	QTY	DESCRIPTION
-	71383653	AR	BASE & SUSPENSION ASY., COMPLETE
1	72504803	1	KIT, ISOLATOR, HORIZ, (INCL. ITEMS 2, 3, 4, 7, 9, 11, 14, 35)
2	72504802	4	TUBE
3	72504775	2	BUSHING
4	72504804	1	BUMPER
6	390972X1	3	WASHER M8 STD, 9.0MM X 17 X 1.36 TH
7	7772361	2	SCREW, M8-1.25 X 35
8	72504791	2	KIT, STOP (INCL ITEMS 9, 11)
9	72504792	2	RIVET, 4 X 16.9MM
10	72514069	1	COVER
11	71306949	25	PLUG, RETAINER
12	71398172	1	KIT, SUSPENSION UPPER (INCL ITEMS 9, 11, 14, 18, 19, 26-29, 35, 42)
13	700725845	1	KIT, SHOCK ABSORBER (INCL ITEMS 6,11,16)
14	72504785	1	KIT, BUMPER & RIVET
16	72504740	1	CLIP RING, RETAINING
17	72514052	2	RIVET, 4 X 12MM
18	72504786	3	WASHER, 4.3-HV140
19	71398174	1	KIT, LEVEL CONTROL (INCL. 11, 17, 18)
20	71398175	3	SCREW, M5 X 16
21	700725844	1	HANDLE
22	72514061	1	KIT, OPERATION (INCL ITEMS 11, 20, 21)
26	3903044M1	2	SPRING, TENSION
27	72514070	1	KIT, LEVER, LOCKING (INCL ITEM 11)
28	71398726	1	SCREW, M3.5 X 12
29	71365327	1	HANDLE
30	72514066	1	SCREW, M4 X 14
31	700725843	1	KIT, SHOCK ABSORBER (INCL ITEMS 5, 11, 32, 33)
32	72504812	4	CLIP RING, RETAINING
33	72504776	3	WASHER, 13MM
34	71398727	1	KIT, SWING ARM (INCL ITEMS 2, 6, 9, 11, 35, 37, 38, 40-42, 48-50)
35	71401534	2	ROLLER
37	71383667	4	NUT, M8-SI
38	72504809	2	BEARING
39	72504808	2	SCREW
40	72504811	2	SCREW, M8 X 20 TORX
41	70263605	2	BUMPER
42	72504810	4	ROLLER
43	700724622	1	KIT, AIR SPRING (INCL ITEMS 6, 11, 40, 47, 48, 53)
47	700725840	2	NIPPLE, HOSE
48	70932747	7	TIE, BLACK NYLON, SELF-LOCK .10 X 4.0
49	70925094	4	TIE, BLACK NYLON, SELF-LOCK .15 X 7.3
50	1112299	1	SCREW, M8 X 12

CONTINUED

SEAT
BASE & SUSPENSION

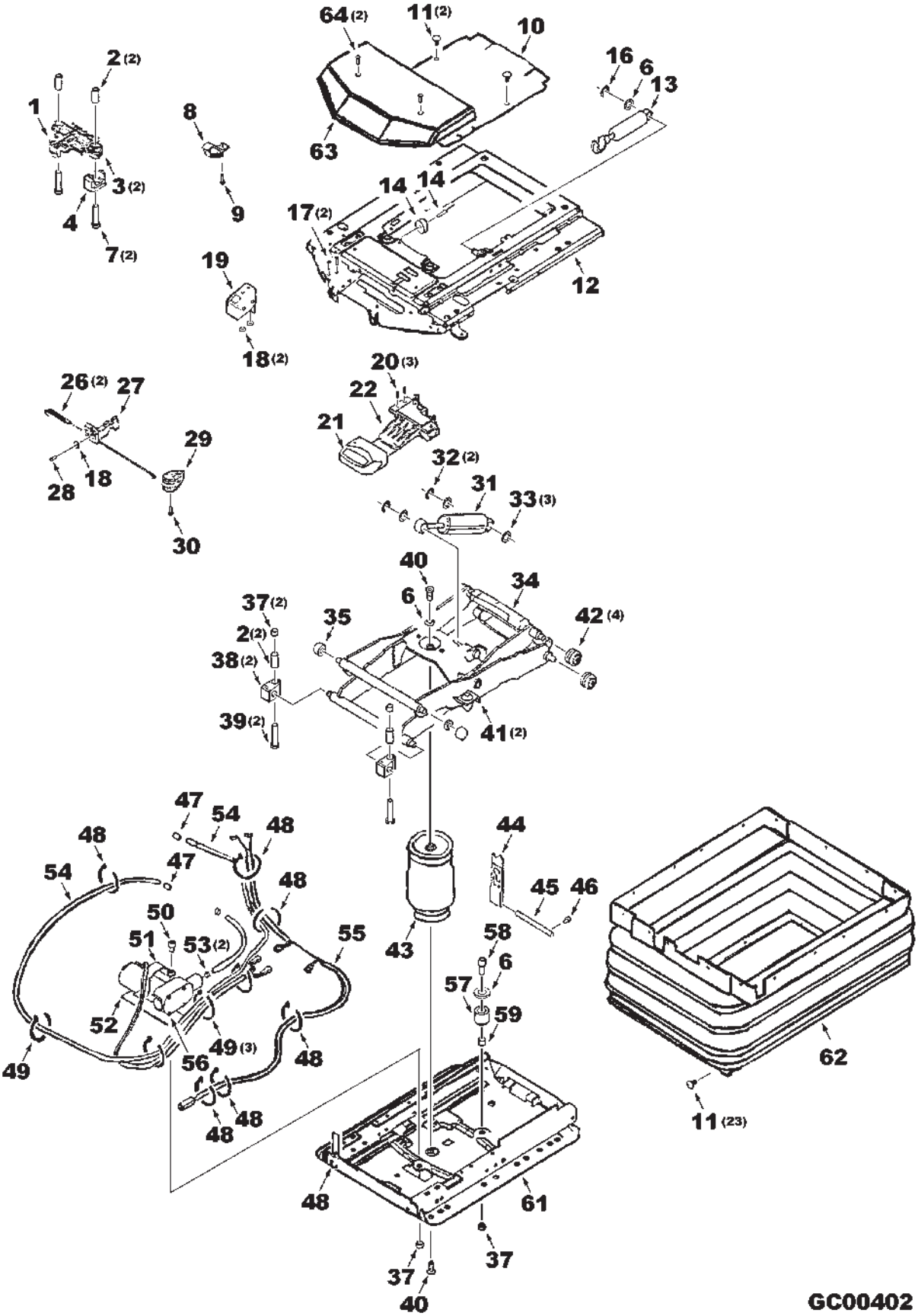

ITEM	NUMBER	QTY	DESCRIPTION
51	72511891	1	BRACKET
52	72504762	1	PLATE
53	700725837	2	CLAMP, HOSE
54	700724623	1	KIT, AIR TUBE (REPAIR AIR LINES BETWEEN COMPRESSOR & AIR SPRING)
55	700725836	1	KIT, CABLE, CONNECTING (INCL ITEMS 11, 48, 49)
56	700728301	1	KIT, COMPRESSOR (INCL ITEMS 11,37,48-53)
57	72514067	1	KIT, BUMPER (INCLS ITEMS 6, 11, 37, 58, 59)
58	72514054	1	SCREW, M8 X 20
59	72514053	1	TUBE
61	71398728	1	KIT, SUSPENSION, LOWER (INCL ITEMS 2,11, 37-40, 42, 48-50, 57)
62	71383661	1	KIT, BELLOWS (INCL ITEM 11)
63	71383662	1	KIT, COVER (INCL ITEM 64)
64	2813878M1	2	RIVET, 4.8 X 10.3
-	71398173	1	KIT, WEAR PARTS (INCL. 2, 4, 9, 11, 14, 35, 38, 40-42, 48-50, 53 & 57)

GC00402
PR: 92

SEAT
CUSHION AND BACKREST

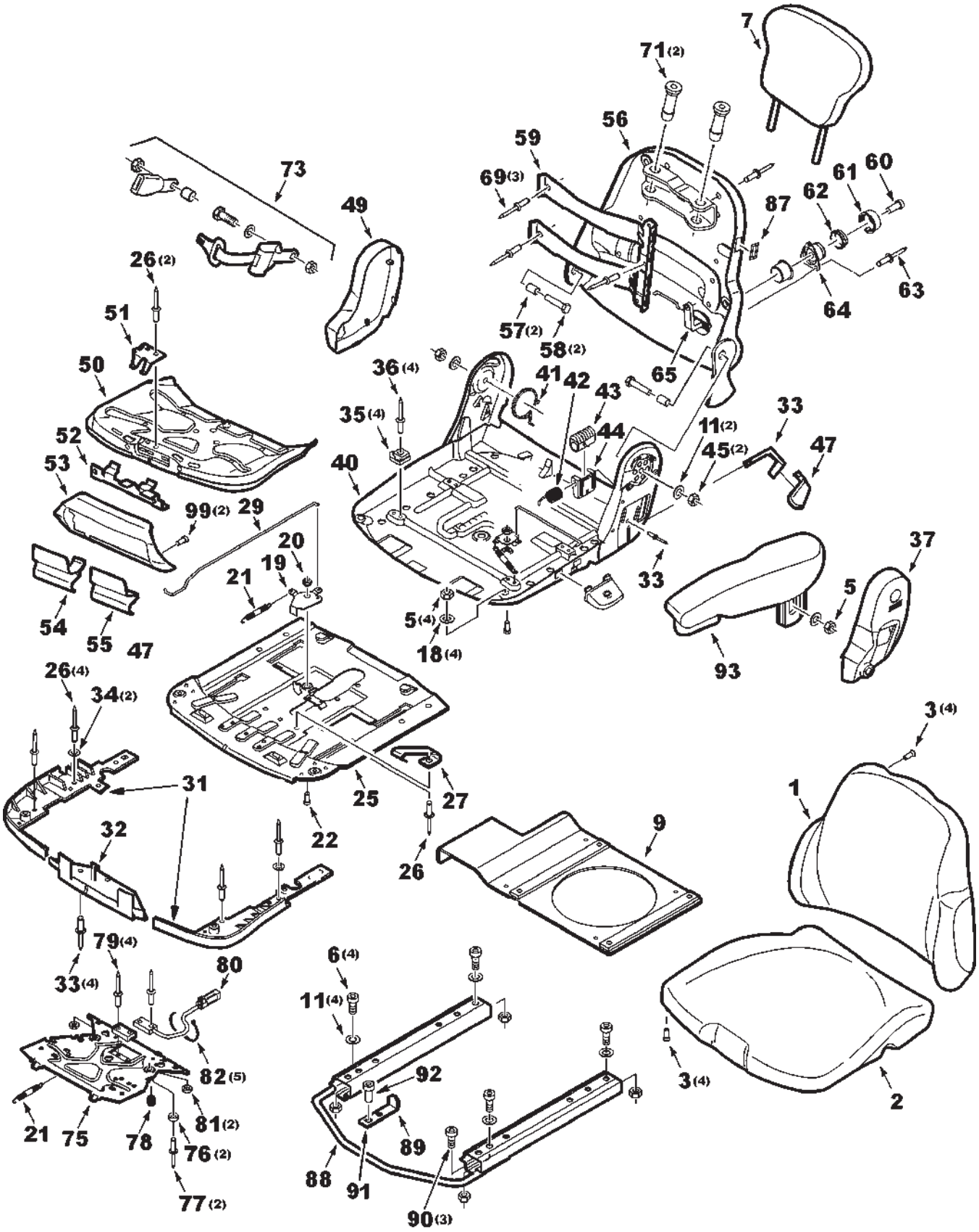

CHL0026

ITEM	NUMBER	QTY	DESCRIPTION
1	71400511	1	KIT, BACKREST CUSHION (INCL ITEM 3)
2	71400512	1	KIT, SEAT CUSHION (INCL ITEM 3)
3	71398731	8	SCREW, M5 X 25
5	72513700	5	NUT, M8
6	71383673	4	SCREW, M8 X 25
7	4272612M92	1	BACKREST EXTENSION, CHALLENGER
9	71388157	1	PLATE WLDMT, CONSOLE SUPPORT
11	391039X1	4	WASHER M8 WIDE, 9.0MM X 24 X 1.82 TH
18	390972X1	4	WASHER M8 STD, 9.0MM X 17 X 1.36 TH
19	71400508	1	KIT, LEVER, DEPTH ADJUST (INCL ITEMS 20, 21, 22)
20	71400509	1	BUSHING
21	700725810	2	SPRING, EXTENSION
22	71400510	1	SCREW, M8 X 12
25	71398733	1	KIT, PLATE FOR SEAT DEPTH
26	72514076	7	RIVET, 4 X 8
27	71398734	1	BRACKET, SPRING
29	71398735	1	ROD, ADJUSTER
31	71398736	1	KIT, SEAT ANGLE COVERS(INCL ITEMS 26,34)
32	71398737	1	KIT, BRACKET (INCL ITEM 33)
33	71398740	5	RIVET, 6 X 12
34	72504786	2	WASHER, 4.3MM
35	71398738	4	GLIDE
36	71398739	4	RIVET, 4 X 16
37	71398741	1	COVER, ARMREST
40	71398742	1	KIT, SEAT PAN (INCL ITEMS 11, 33, 35, 36, 45, 57, 58)
41	71398743	1	SPRING, TORSION
42	71398744	1	SPRING, SPIRAL
43	71398746	1	WORM GEAR
44	71398745	1	KIT, BEARING (INCL ITEMS 33, 43)
45	71383667	2	NUT, M8
46	-----	1	KIT, BACKREST TILT LEVER (INCL ITEMS 33, 47)(NOT AVLBL AT TIME OF PRINT)
47	-----	1	KNOB (NOT AVAILABLE AT TIME OF PRINTING)
49	71398749	1	COVER, ARMREST
50	71398750	1	KIT, SEAT ANGLE ADJUST(INCL ITEMS 3, 51)
51	71398777	1	BRACKET, SPRING
52	71398778	1	LATCH
53	71398779	1	KIT, COVER, FORE & AFT (INCL ITEM 99)
54	71398780	1	KIT, HANDLE, SEAT DEPTH (INCL ITEM 29)
55	71398781	1	HANDLE
56	71398782	1	BACKREST ASY
57	71398783	2	TUBE
58	71398784	2	SCREW, M8 X 40
59	71398786	1	KIT, LUMBAR SUPPORT (INCL ITEMS 60-69)
60	71398785	1	SCREW, M6 X 10

CONTINUED

SEAT
CUSHION AND BACKREST

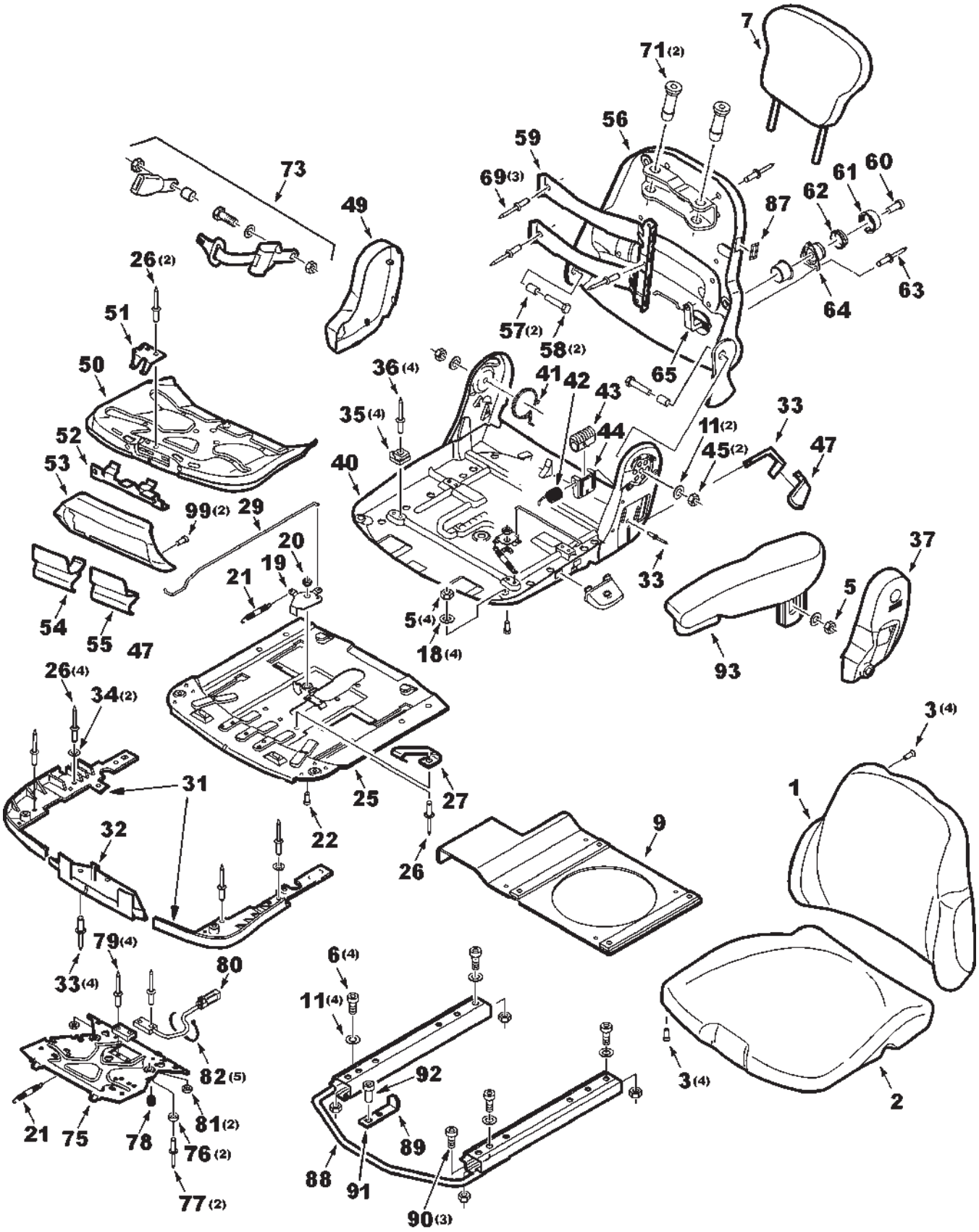

CHL0026

ITEM	NUMBER	QTY	DESCRIPTION
61	71398787	1	KIT, HANDLE, LUMBAR ADJ (INCL ITEM 60)
62	71398788	1	WHEEL, TOOTHED
63	71398789	3	RIVET, 3.2 X 8
64	71398790	1	SLING, SPRING BRAKE
65	71398791	1	CARRIER
66	71398792	1	ROD, LINK
67	71398793	1	PLATE, LUMBAR
68	71398794	2	PLATE, LUMBAR
69	71398795	3	RIVET, 4 X 8
71	71398796	2	BUSHING
73	700725833	1	SEAT BELT ASY
75	700725871	1	KIT, OPERATOR PRESENCE SWITCH MTG (INCL ITEMS 21, 76, 77, 78, 80, 81)
76	-----	2	SPACER (NOT SERVICED SEPARATELY)
77	-----	2	RIVET (NOT SERVICED SEPARATELY)
78	71398798	2	SPRING, COMPRESSION
79	71398799	4	RIVET, 3.2 X 14
80	71398800	1	KIT, SWITCH (INCL ITEMS 79, 82)
81	72272098	2	GROMMET
82	70932747	5	TIE, BLACK NYLON, SELF-LOCK .10 X 4.0
87	71398801	1	COVER
88	71398802	1	RAIL ASY, ADJUSTMENT
89	71398732	1	KIT, ADJUSTMENT RAIL MOUNTING (INCLUDES ITEMS 90, 91, 92)
90	72514055	3	SCREW, M8 X 16
91	71398803	1	ANGLE
92	391148X1	1	CAPSCREW, HEX SOCKET HD, M8 X 20 CL8.8
93	71398804	1	ARMREST ASY
99	71398175	2	SCREW, M5 X 16

CHL0026
PR: t04c23m56d0001

HVAC
PRESSURIZER UNIT & DUCTING

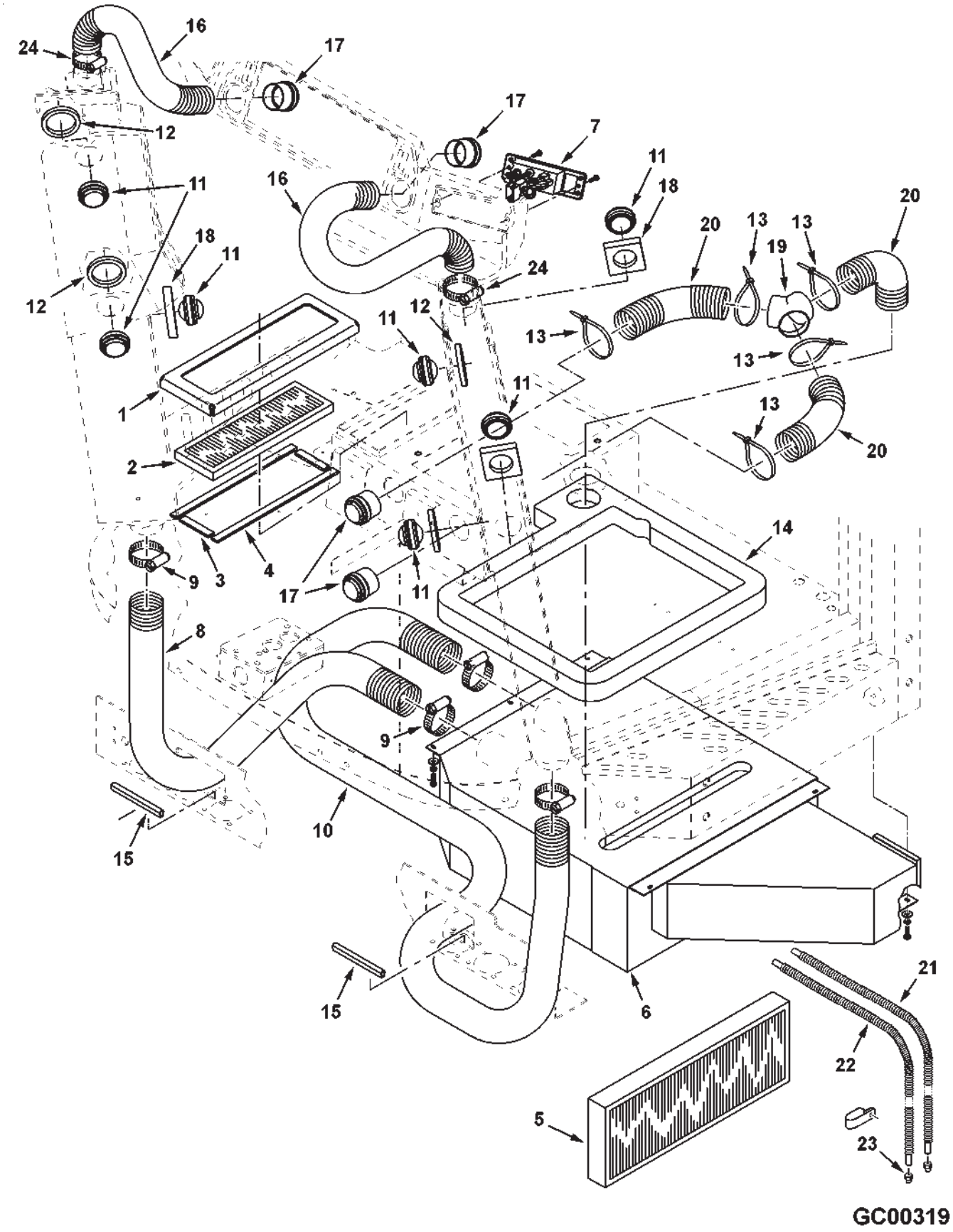

ITEM	NUMBER	QTY	DESCRIPTION
1	71393463	1	RETAINER, FILTER
2	71391153	1	AIR FILTER
3	71393620	2	SEAL, AIR FILTER (SHORT)
4	71393619	2	SEAL, AIR FILTER (LONG)
5	71393893	1	AIR FILTER
6	71408222	1	A/C & HEATER ASY.(REQUIRES ITEM 14 & 1408216 ASY INST. PRIOR S/N HP87101)
	70921333	6	CAPSCREW, 5/16-18 X 1.0
	Y705020	6	LOCKWASHER, 5/16
	700709602	6	WASHER, 5/16
7	71409581	1	CONTROL PANEL ASY. (SEE BREAKDOWN)
	7703457	2	CAPSCREW, 1/4-20 X 3/4 GR5
8	71393949	1	HOSE, FLEX AIR
9	70936813	4	CLAMP, HOSE
10	71393948	1	HOSE, FLEX AIR
11	72161024	7	LOUVER ASY., BALL
12	71393617	4	SEAL, DEFROST LOUVER
13	70925442	5	TIE, NYLON
14	71401526	1	SEAL (EFF. S/N HP87101)
	71393551	AR	ADHESIVE SPRAY
15	71387797	2	TRIM, EDGE PROTECTOR (EFF. S/N HP87101)
16	71393950	2	HOSE, FLEX AIR
17	71388188	4	LOUVER ASY., BALL
18	71393616	3	SEAL, A/C LOUVER
19	71391175	1	CONNECTOR, HOSE "Y"
20	71391322	3	HOSE, FLEX AIR
21	71396381	1	HOSE, DRAIN, 88" LONG
22	71396382	1	HOSE, DRAIN, 108" LONG
	700717644	3	TIE, NYLON
	70928148	1	CLAMP, DBL, 3/4 DIA X .406 HOLE
23	71396390	2	RESTRICTOR, DRAIN
24	7720063	2	CLAMP, HOSE

GC00319
PR: 96

HVAC
CONTROL PANEL

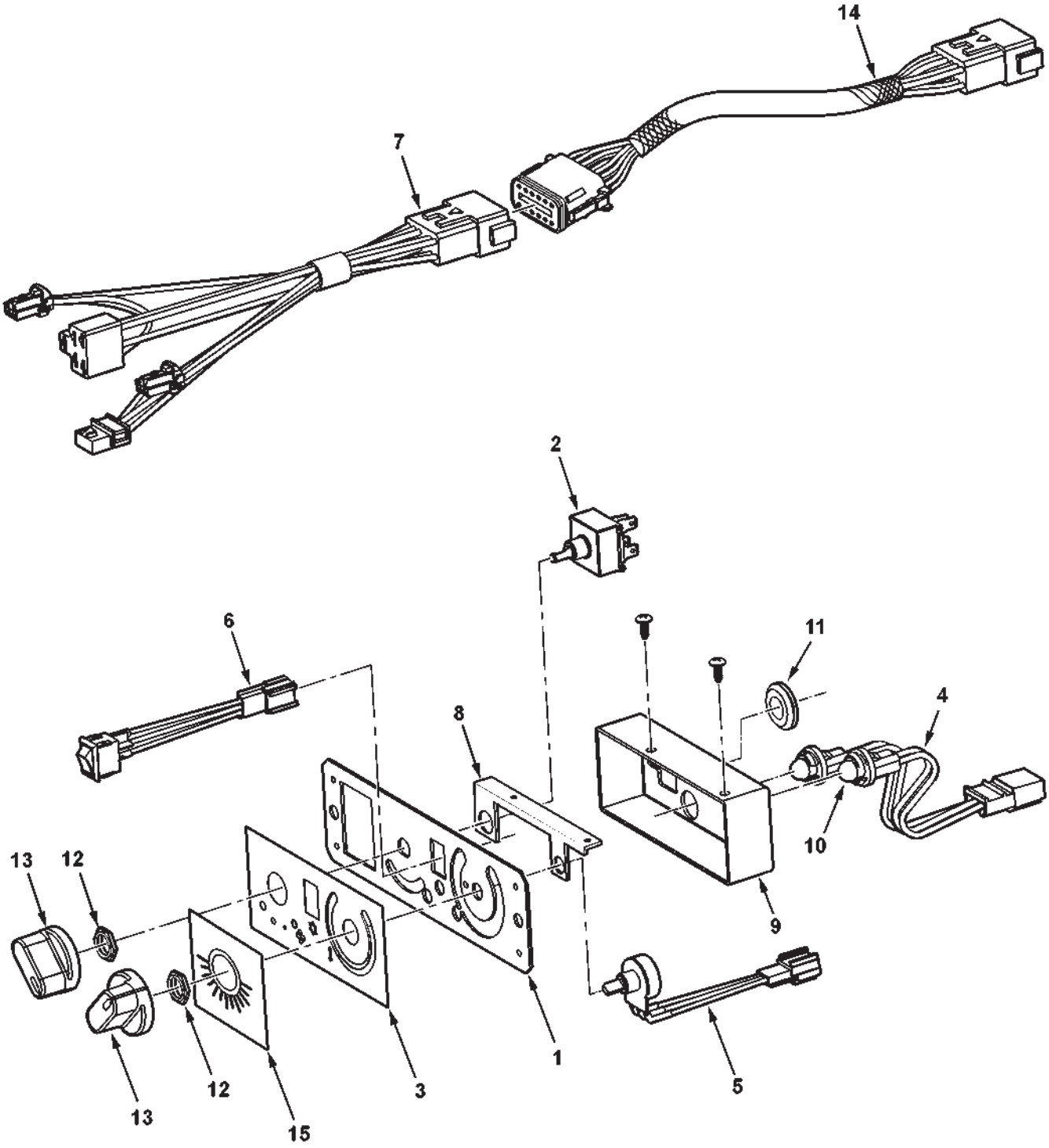

GCOO314

ITEM	NUMBER	QTY	DESCRIPTION
-	71409581	1	CONTROL PANEL ASY. (INCL. ITEMS 1-13)
-	71395763	1	BEZEL, HVAC (MANUAL ADJ. MIRRORS)(PRIOR S/N HP87101)(NOT ILLUS.)(ALSO SEE MIRRORS)
-	71393943	1	BEZEL, HVAC (REMOTE ADJUST MIRRORS) (NOT ILLUSTRATED)(ALSO SEE MIRRORS)
1	71397433	1	CONTROL HOUSING ASY
2	71397432	1	SWITCH, BLOWER
3	71409582	1	DECAL, CONTROL PANEL
4	71397434	1	SOCKET ASY. LAMP
5	71401548	1	POTENTIOMETER, HEATER CONTROL
6	71397438	1	SWITCH, A/C
7	71397439	1	WIRE HARNESS
8	71397440	2	BRACKET, LIGHT BOX
9	71397437	1	LIGHT BOX
	71373144	2	SCREW, #8-18 X 1/2
10	71397443	2	BULB, LIGHT
11	71397441	1	GROMMET, RUBBER
12	71373145	2	NUT
13	71397436	2	KNOB, CONTROL
14	71410922	1	* HARNESS, A/C JUMPER
15	71408221	1	* DECAL, OVERLAY, A/C
-	71408218	AR	* KIT, HVAC CONTROL MODIFICATION (FIELD CAMPAIGN)(APPLIES S/N'S HM, HN, HP)

GC00314
PR: 98

HVAC
PRESSURIZER UNIT
EVANS-TEMPCON

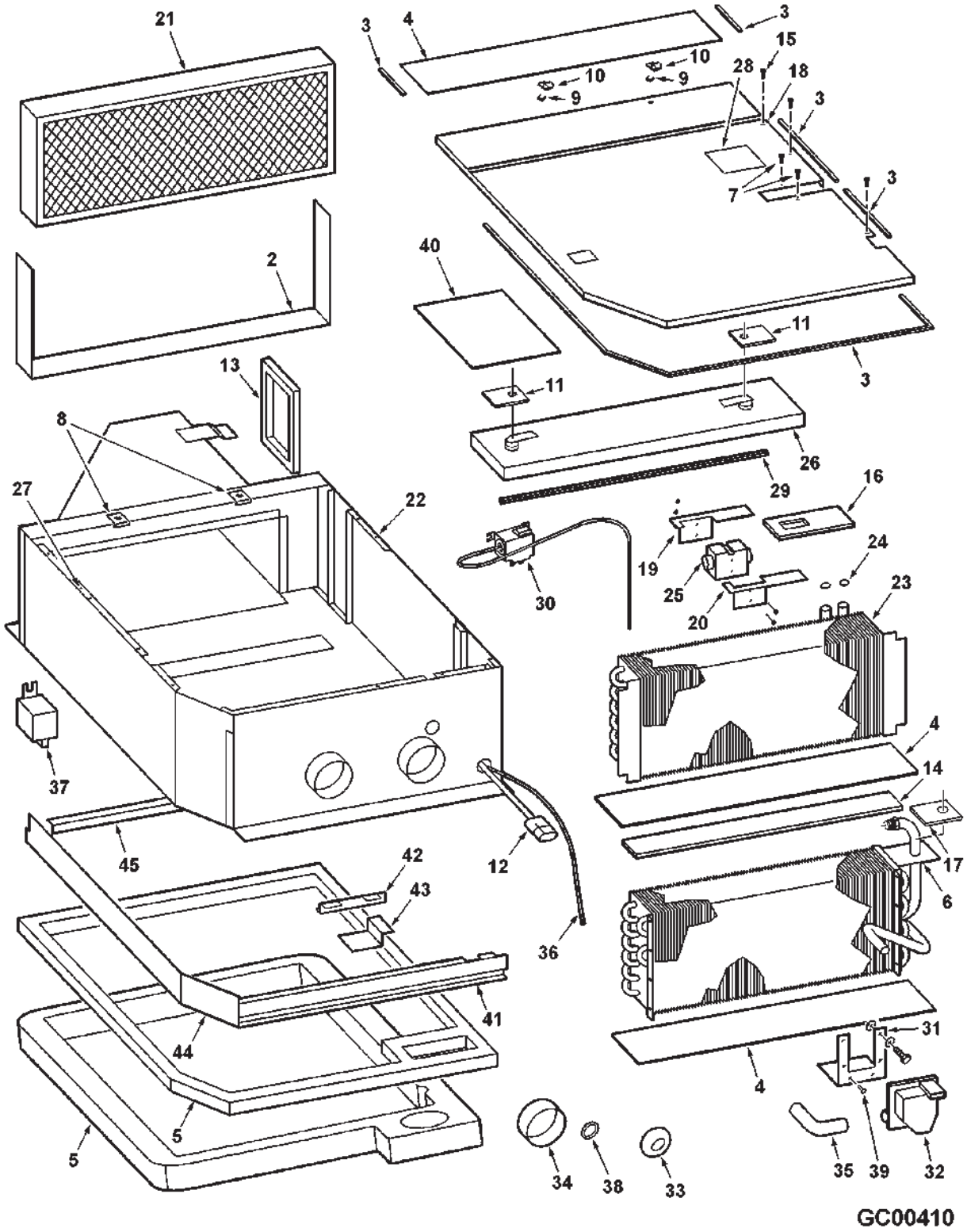

HVAC
PRESSURIZER UNIT
EVANS-TEMPCON

ITEM	NUMBER	QTY	DESCRIPTION
-	71408222	--	A/C & HEATER ASY. (INCL. FOLLOWING)
2	71371331	1	TAPE, FOAM 1/4 X 1-1/2 (3.50 FT)
3	71397934	1	TAPE, FOAM, 1/4 X 1/2
4	71371333	1	TAPE, FOAM 1/8 X 3-7/8 (6.0 FT)
5	71401530	1	TAPE, FOAM 1" X 1-1/8" (8.67 FT)(PRIOR S/N HP87101)
	71401526	1	SEAL (EFF. S/N HP87101) (NOT INCLUDED IN A/C & HTR ASY)
6	71397445	1	HEATER CORE (PRIOR S/N HN87...)
	71401546	1	HEATER CORE (EFF. S/N HN87...)
7	71400523	2	SCREW, #10, SELF DRILLING
8	71371336	2	RECEPTACLE, CLIP-ON, #5 STUD
9	71384272	2	RETAINER, PUSH ON
10	71371338	2	FASTENER, 1/4 TURN
11	71397444	2	SEAL, DRAIN TUBE
12	71397446	1	HARNESS, WIRING
13	71397447	1	GASKET, FRESH AIR
14	71384552	1	FOAM TAPE, 3/8 X 2 (21.62" LG)
15	71373146	10	SCREW, SELF TAPPING, #10-24
16	71371343	1	SEAL, EXPANSION VALVE
17	71397449	1	SEAL, HEATER TUBES
18	71408215	1	COVER & FILTER DOOR ASY. (INCL. TAPE & POP-RIVETS)
	70924947	5	POP-RIVET, 1/8 X .251-.312
19	71371346	1	BRACKET, EXPANSION VALVE, R.H.
20	71371347	1	BRACKET, EXPANSION VALVE, L.H.
	353509X1	2	BOLT, 1/4-28 X 1-1/2
	70930760	2	NUT, LOCK, 1/4-28
21	71393893	1	FILTER, AIR
22	71406891	1	CASE ASY (INCL. ITEMS 2,4,8,13,27,33, 34 & 38)
23	71371349	1	EVAPORATOR ASY. (INCL. ITEMS 24 & 25) (PRIOR S/N HN87...)
	71373126	1	EVAPORATOR UNIT (PRIOR S/N HN87)
	71401545	1	EVAPORATOR ASY. (INCL. ITEMS 24 & 25) (EFF. S/N HN87...)(SEE * NOTE)
24	70937295	2	O-RING, #8, R134a
25	71373127	1	VALVE, EXPANSION (REQUIRES SEAL IT. 16)
26	71397926	1	PAN ASY., DRAIN
27	70937424	10	NUT, SPEED
28	71397927	1	LABEL, WARNING, R134a
29	71397448	1	FOAM SEAL, 1/4 X 1/2 (DRAIN PAN)
30	71397929	1	THERMOSTAT, COLD CONTROL
31	71397933	1	BRACKET, WATER VALVE
32	71408211	1	VALVE ASY., WATER
	70921959	4	CAPSCREW, 1/4-20 X 5/8
	70926622	4	HEXNUT, 1/4-20
33	71397932	1	GROMMET, WIRE
34	71384551	2	STRIP, CLOSED CELL FOAM, 1/8 X 1 X 9.4"
35	71408209	1	HOSE, FORMED 90DEG (WATER VALVE TO CORE)
	70921911	2	CLAMP, HOSE, WORM DR, .69-1.25 DIA
36	71398819	1	WIRE HARNESS ASY, HI SPEED, W/FUSE
	70937609	AR	MINI FUSE, 25 AMP (NOT ILLUS.)
37	71398820	1	RELAY

CONTINUED

HVAC
PRESSURIZER UNIT
EVANS-TEMPCON

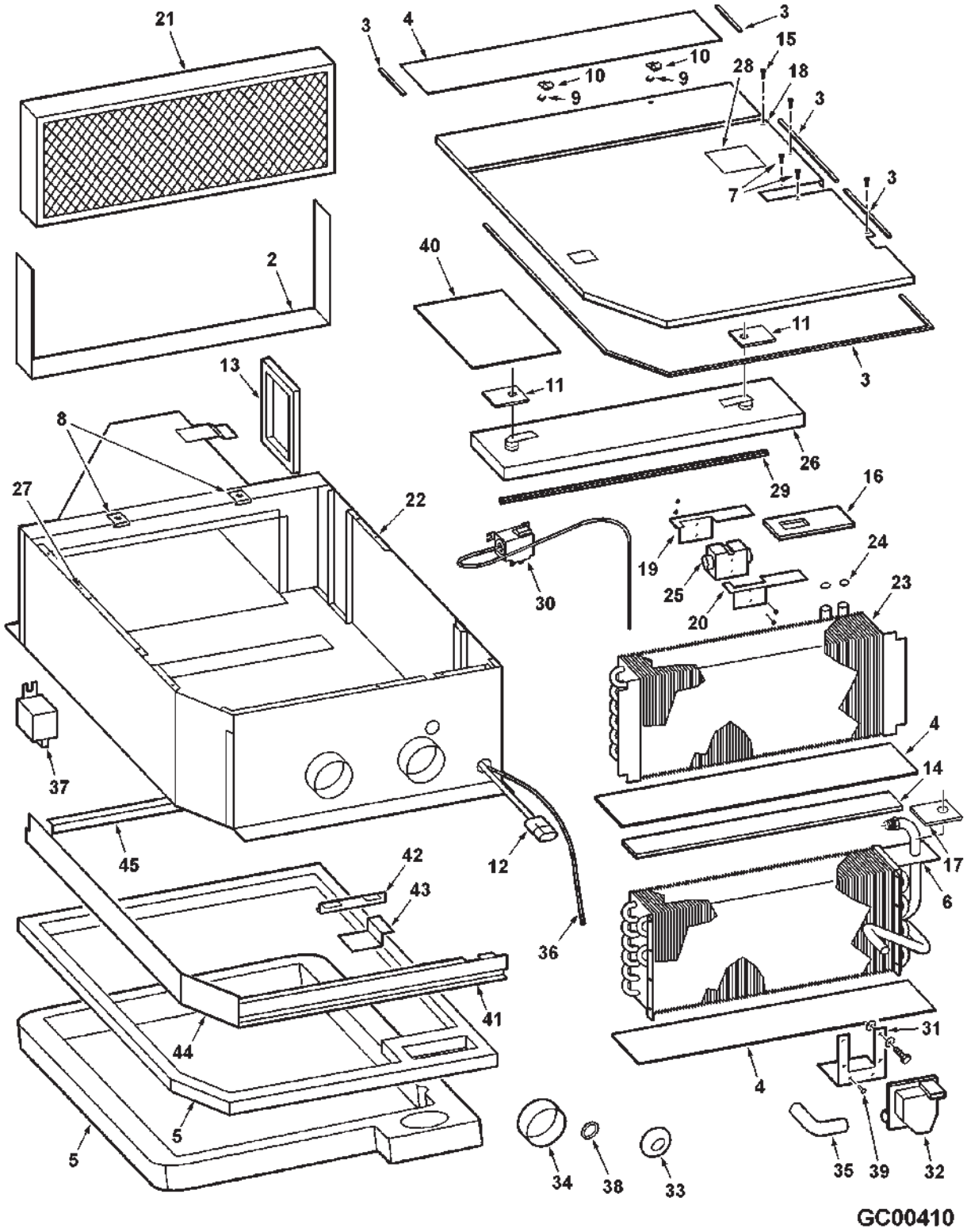

ITEM	NUMBER	QTY	DESCRIPTION
38	71397930	1	SNAP BUSHING
39	71373144	24	SCREW, TAPPING, #8-18 X 1/2
40	71408210	1	LABEL, WIRING DIAGRAM
41	-----	1	SPACER, OUTLET (NOT SERVICED)(PRIOR S/N HP87101)
42	-----	1	SPACER, RECIRCULATOR (NOT SERVICED) (PRIOR S/N HP87101)
43	-----	1	SPACER, RECIRCULATOR END (NOT SERVICED) (PRIOR S/N HP87101)
44	-----	1	SPACER, FRONT (NOT SERVICED)(PRIOR S/N HP87101)
45	-----	1	SPACER, FRESH AIR (NOT SERVICED)(PRIOR S/N HP87101)
-	700707823	AR	SEALANT, SILASTIC (NOT ILLUS.)

* NOTE: UPGRADE OF A/C COOLING FOR MACHINES PRIOR TO S/N HN87, REQUIRES 71401545 EVAP. ASY, 71401546 HEATER CORE, 71401544 BLOWER ASY, & RECHARGE TO LATEST REFRIGERATION SPEC.

GC00410
PR: 100

HVAC
BLOWER ASY.
EVANS TEMPCON

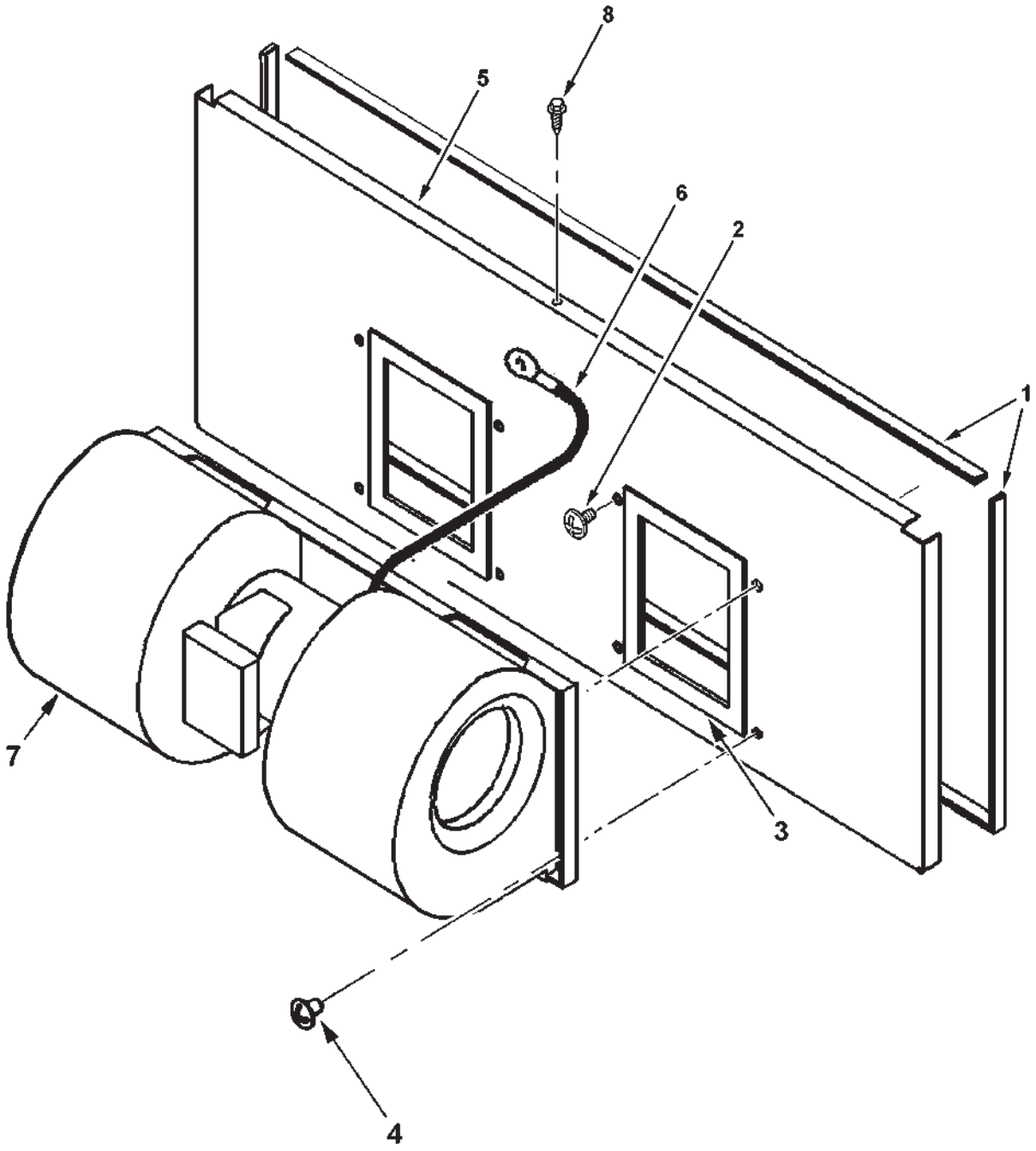

GC00267

HVAC
BLOWER ASY.
EVANS TEMPCON

ITEM	NUMBER	QTY	DESCRIPTION
-	-----	1	BLOWER & PANEL ASY (NOT SERVICED)
1	71371332	1	TAPE, FOAM, 1/4 X 1/2 (4.78 FT)
2	71373144	1	SCREW, #8-18 X 1/2, SELF-TAPPING
3	71384553	1	TAPE, FOAM, 1/8 X 1/4 (2.0 FT)
4	71384558	8	SCREW, #10-24 X 1/2, SELF-TAPPING
5	71397939	1	PANEL ASY., BLOWER
6	71384555	1	WIRE ASY., (GROUND)
7	71384556	1	BLOWER ASY, PLASTIC (PRIOR S/N HN87) (SERVICE W/ 71401544)
	71401544	1	BLOWER ASY, PLASTIC (EFF. S/N HN87) (COMPONENTS NOT SERVICED)(SEE * NOTE IN PRESSURIZER UNIT)
8	71400523	1	SCREW, #10, SELF DRILLING

GC00267
PR: 102

AIR CONDITIONER
LINES

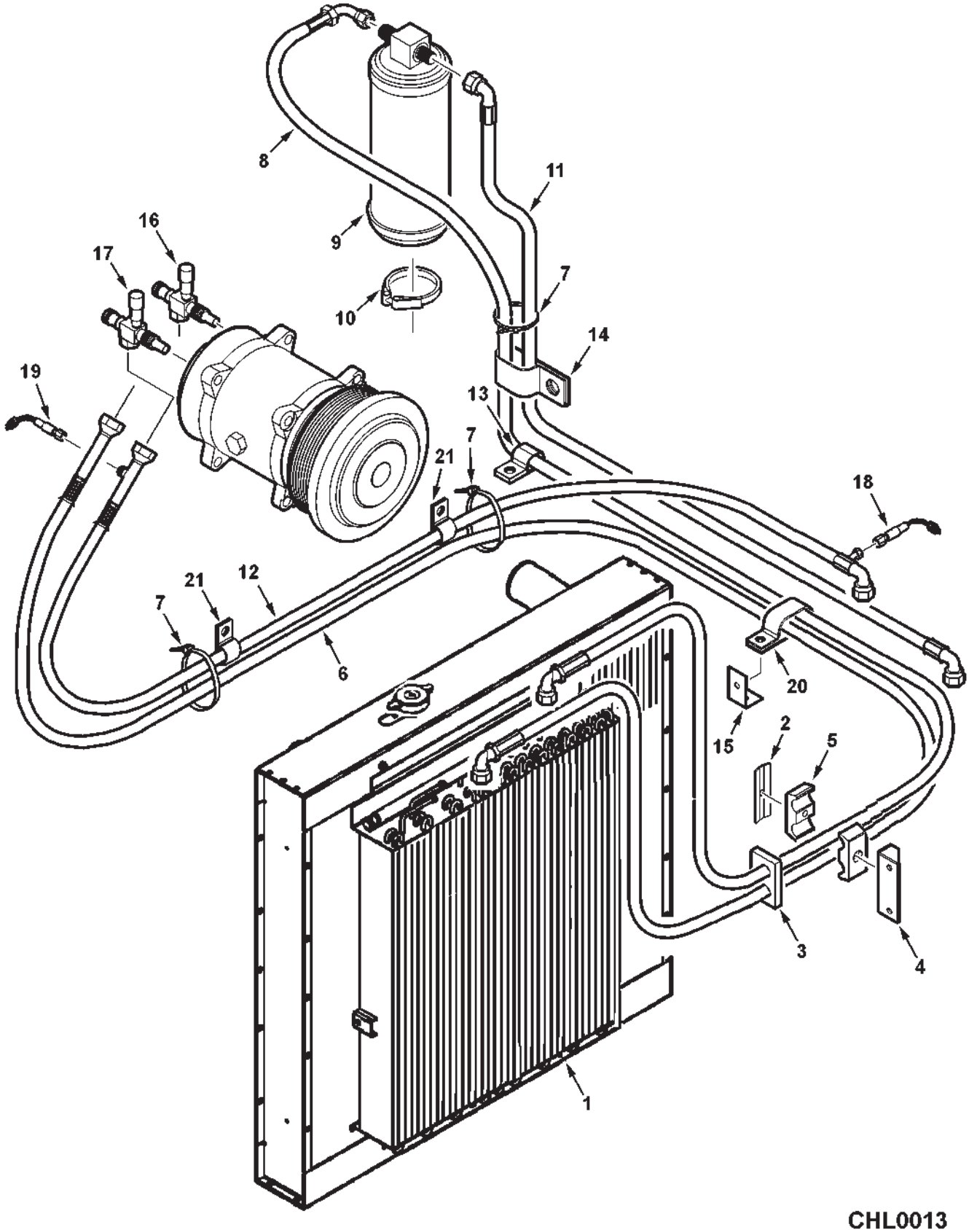

CHL0013

ITEM	NUMBER	QTY	DESCRIPTION
1	-----	1	COMBINATION COOLER (SEE COOLING SYSTEM)
2	101646M1	1	COVER PLATE
	7771744	1	CAPSCREW, 5/16-18 X 2-1/4
	Y704726	1	NUT, HEX FLNG TOP LK, 5/16-18
3	71388076	1	SEAL, A/C HOSES
4	71388063	1	ANGLE, HOSE SUPPORT
	70921332	2	CAPSCREW, 5/16-18 X 3/4
	Y704726	2	NUT, HEX FLNG TOP LK, 5/16-18
5	71388856	1	CLAMP, DOUBLE, 7/8
6	71396797	1	HOSE ASY., COMPRESSOR TO CONDENSER
	70937295	2	O-RING, .070 X .426 ID, 70 DUR, HNBR
7	70925442	9	TIE, CABLE .18 X 14 LG
8	71394172	1	HOSE ASY., CONDENSER TO DRYER
	70937296	2	O-RING, .070 X .301 ID, 70 DUR, HNBR
9	71369761	1	RECEIVER, DRYER (R134A)
10	70921915	1	CLAMP, WORM, 2.81 - 3.75 DIA
11	71396259	1	HOSE ASY., DRYER TO CAB
	70937296	2	O-RING, .070 X .301 ID, 70 DUR, HNBR
12	71396796	1	HOSE ASY., CAB TO COMPRESSOR
	70937297	2	O-RING, .070 X .551 ID, 70 DUR, HNBR
13	70936474	9	CLAMP, DOUBLE, 1" X .406 HOLE
	70931822	2	SCR, HEX WSHR HD,TAPPING, 5/16 X 3/4
	70921977	3	CAPSCREW, 5/16-18 X 1-1/4
	Y704726	3	NUT, HEX FLANGE TOP LOCK, 5/16-18
14	70928148	2	CLAMP, DOUBLE, 3/4 X .406 HOLE
	70931822	2	SCR, HEX WSHR HD,TAPPING, 5/16 X 3/4
15	112678W1	1	ANGLE, BRACKET
	70921332	1	CAPSCREW, 5/16-18 X 3/4
	Y705608	1	WASHER, 5/16, NARROW
16	72506694	1	VALVE ASY, A/C SERVICE, HIGH
17	72506922	1	VALVE ASY, A/C SERVICE, LOW
18	71372724	1	SWITCH, LOW PRESSURE
19	72509305	1	SWITCH, HIGH PRESSURE
20	70936474	1	CLAMP, DOUBLE, 1.0 X .406 HOLE
	70921210	1	CAPSCREW, 3/8-16 X 1
	705038	1	LOCKWASHER, 3/8
	70916950	1	NUT, 3/8-16 REG
21	70937682	2	J-CLIP, 3/4 D X .656 HOLE(PRIOR HR87101)
	70927134	2	J-CLIP, 5/8 D X .406 HOLE (EFF. HR87101)
-	72507682	AR	LUBRICANT, AC COMPRESSOR

AIR CONDITIONER
COMPRESSOR (SANDEN)

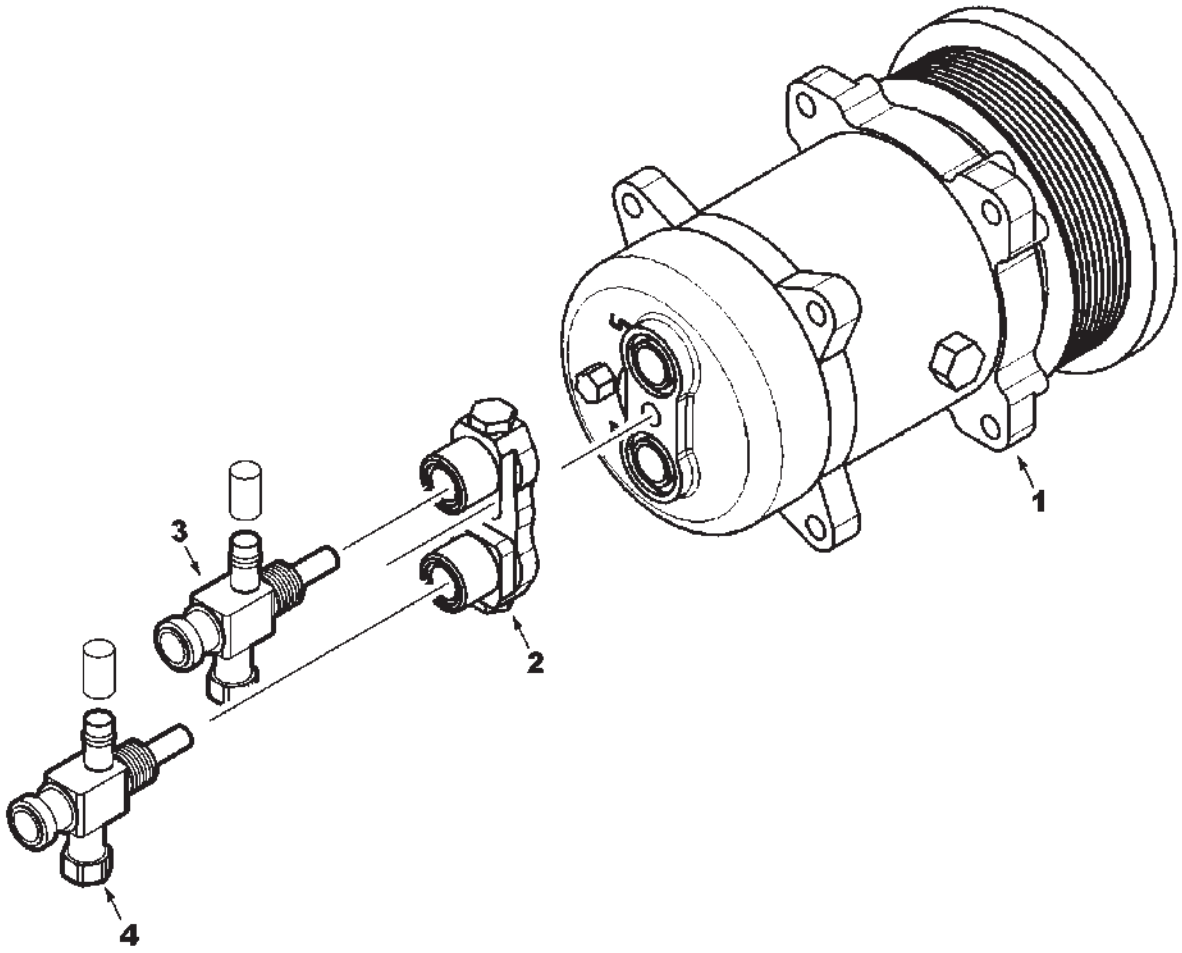

CHL0005

AIR CONDITIONER
COMPRESSOR (SANDEN)

ITEM	NUMBER	QTY	DESCRIPTION
1	71396715	1	A/C COMPRESSOR W/CLUTCH (LESS PAD)
	71400401	1	CLUTCH, ELECTRIC (SANDEN)
	71397650	2	O-RING, PAD TO COMPRESSOR
2	71396716	1	PAD, COMPRESSOR FITTINGS
3	72506694	1	SERVICE VALVE, (HI-SIDE) (DISCHARGE)
	70937297	1	O-RING, .070 X .551 ID, 70 DUR, HNBR
	72507408	1	PLUG, CAP
	72507406	1	CAP, STEM
4	72506922	1	SERVICE VALVE, (LO-SIDE) (SUCTION)
	70937297	1	O-RING, .070 X .551 ID, 70 DUR, HNBR
	72507407	1	PLUG, CAP
	72507406	1	CAP, STEM
-	72507682	AR	LUBRICANT, PAG, AC COMPRESSOR (SP-15 200cc)
-	71369762	AR	REFRIGERANT, R134A

CHL0005
PR: 106

HEATER LINES

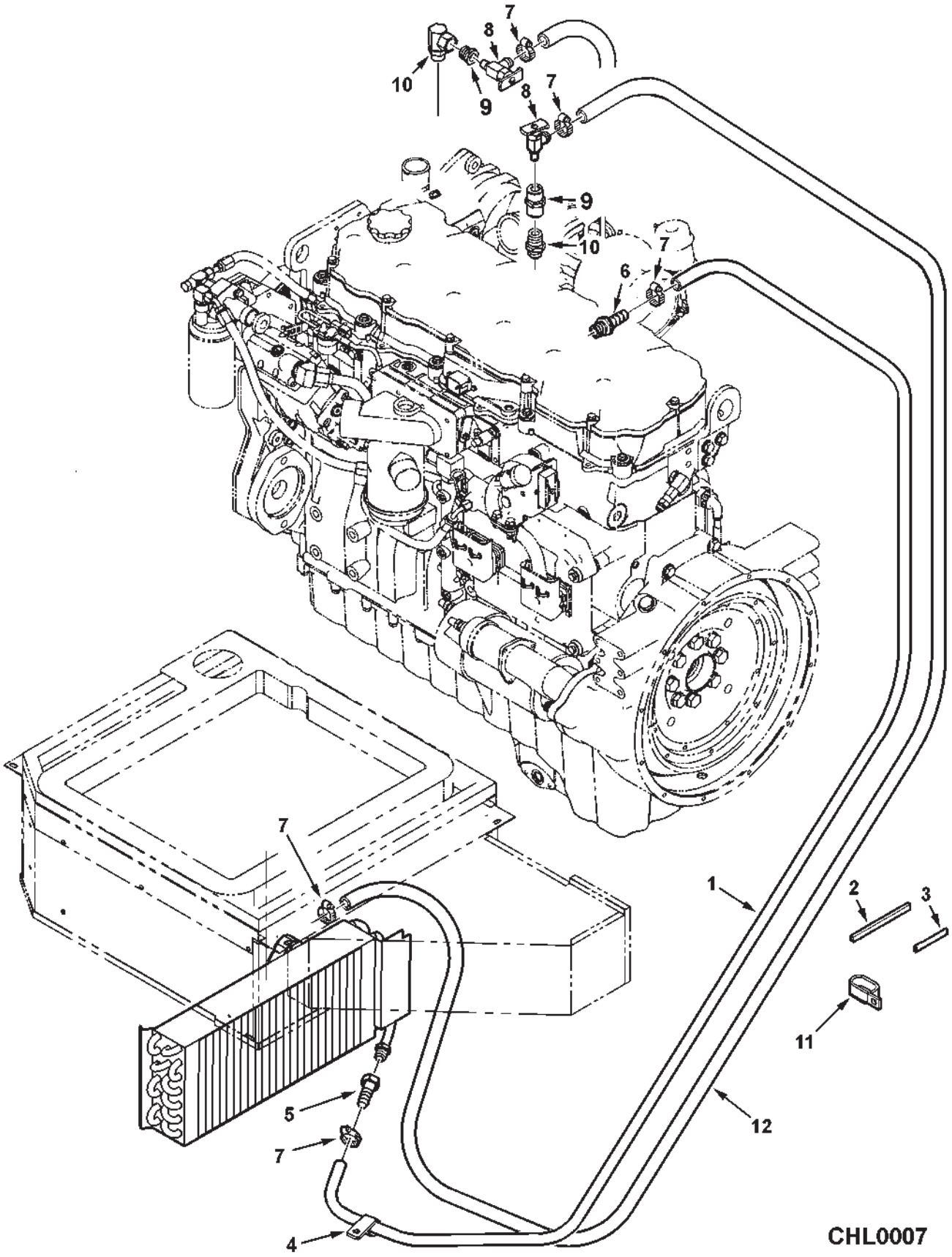

HEATER LINES

ITEM	NUMBER	QTY	DESCRIPTION
1	71396798	1	HOSE, 5/8 ID, HEATER RETURN, 260" LG
	70925442	AR	TIE, CABLE .189 X 14.19
2	71387797	1	EDGE PROTECTOR
3	71191799	2	EDGE PROTECTOR
4	70925619	1	CLAMP, .69 TUBE X .406 HOLE
5	70920808	1	FITTING, 7/8-14 JIC FEM X 5/8 BARB STEM
6	700721309	1	FITTING, 3/4-16 ORB MALE X 5/8 HOSE STEM
	70921349	1	O-RING, .087 X .644 ID
7	70921911	4	CLAMP, WORM DRIVE, .69- 1.25 DIA
8	30-3076830	1	VALVE, SHUT-OFF, WATER
9	W943003	1	PIPE COUPLER, 3/8 NPTF FEMALE (PRIOR S/N HR87101)
	70936774	1	REDUCER, 3/4 NPTF M X 3/8 NPTF FEM (EFF. S/N HR87101)
10	70931880	1	REDUCER NIPPLE, 3/8 NPTF M X 1/2 NPTF M (PRIOR S/N HR87101)
	7746233	1	ELB 90 D, 1-1/16-12 ORB M X 3/4 NPSM FEM (EFF. S/N HR87101)
	70921206	1	O-RING, .116 X .924 ID
11	70936474	3	CLAMP, DOUBLE, 1.0 DIA X .406 HOLE
	70921977	3	CAPSCREW, 5/16-18 X 1-1/4 GR5
	Y704726	3	NUT, HEX FLANGE TOP LOCK, 5/16-18
12	71404436	1	HOSE, 5/8 ID, HEATER SUPPLY, 260" LG

NOTE: DOUBLE CLAMPS SHOWN WITH A/C LINES

CHL0007
PR: 108

FEEDER ELECTRICAL

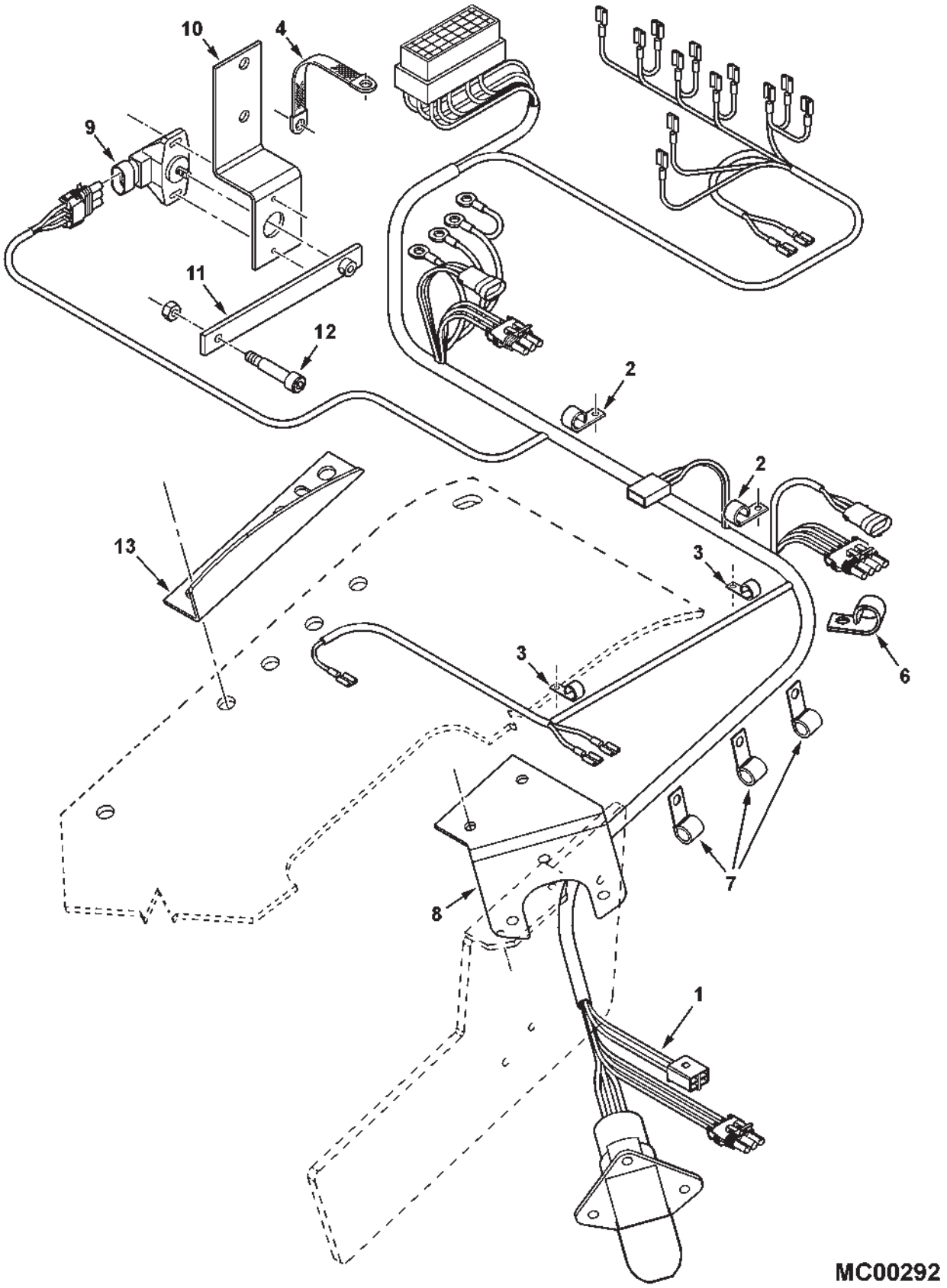

FEEDER ELECTRICAL

ITEM	NUMBER	QTY	DESCRIPTION
1	71391858	1	HARNESS, FEEDER
	70937133	2	TIE, SELF-LOCK, 14.5 X .300
	70925094	2	TIE, SELF-LOCK, 7.31 X .184
2	70937677	2	J-CLIP, 1.0 DIA X .406 HOLE
	772525	2	SCREW, HEX HD SELF-TAP,5/16-18 X 1/2
3	70937685	2	J-CLIP, 3/8 X .406 HOLE
	772525	2	SCREW, HEX HD SELF-TAP,5/16-18 X 1/2
4	71396955	1	STRAP, GROUND
	372729X1	1	SCREW, HEX WSH HD, 5/16-18 X 3/4
	772525	1	SCREW, HEX HD SELF-TAP,5/16-18 X 1/2
	705160	2	LOCKWASHER, EXT TOOTH, 5/16
6	70937682	1	J-CLIP, 3/4 DIA X .656 HOLE
7	70936778	3	J-CLIP, 3/4 DIA X .406 HOLE
	70916950	4	HEXNUT, 3/8-16
8	71391420	1	BRACKET, HEADER CONNECTOR
	372729X1	2	SCREW, HEX HD SELF-TAP,5/16-18 X 3/4
	70921333	3	CAPSCREW, 5/16-18 X 1.0
	Y705020	3	LOCKWASHER, 5/16
	70917372	3	HEXNUT, 5/16-18
9	71391869	1	SENSOR, ROTARY POSITION
	700711659	2	SCREW, PAN HD MACH #8-32 X 3/4
	70923906	2	WASHER, #8, NARROW
	70917395	2	LOCKWASHER, #8
	704494	2	HEXNUT, #8-32
10	71395832	1	BRACKET, SENSOR MOUNT
	70920415	2	CAPSCREW, 3/8-16 X 1-1/4
	70916965	2	LOCKWASHER, 3/8
	70916950	2	HEXNUT, 3/8-16
11	71395840	1	ARM, SENSOR
	70923520	1	SETSCREW, #8-32 X 1/4
12	700721586	1	SHOULDER BOLT, 5/16 X 1-1/4 X 1/4-20
	1703354	1	NUT, HEX FLNG TOP LOCK, 1/4-20
13	71395838B	1	BRACKET, FEEDHOUSE SHARK FIN
	372729X1	4	SCREW, HEX WSH HD, 5/16-18 X 3/4

MC00292
PR: 110

ELECTRICAL HARNESSES & SWITCHES
FRONT

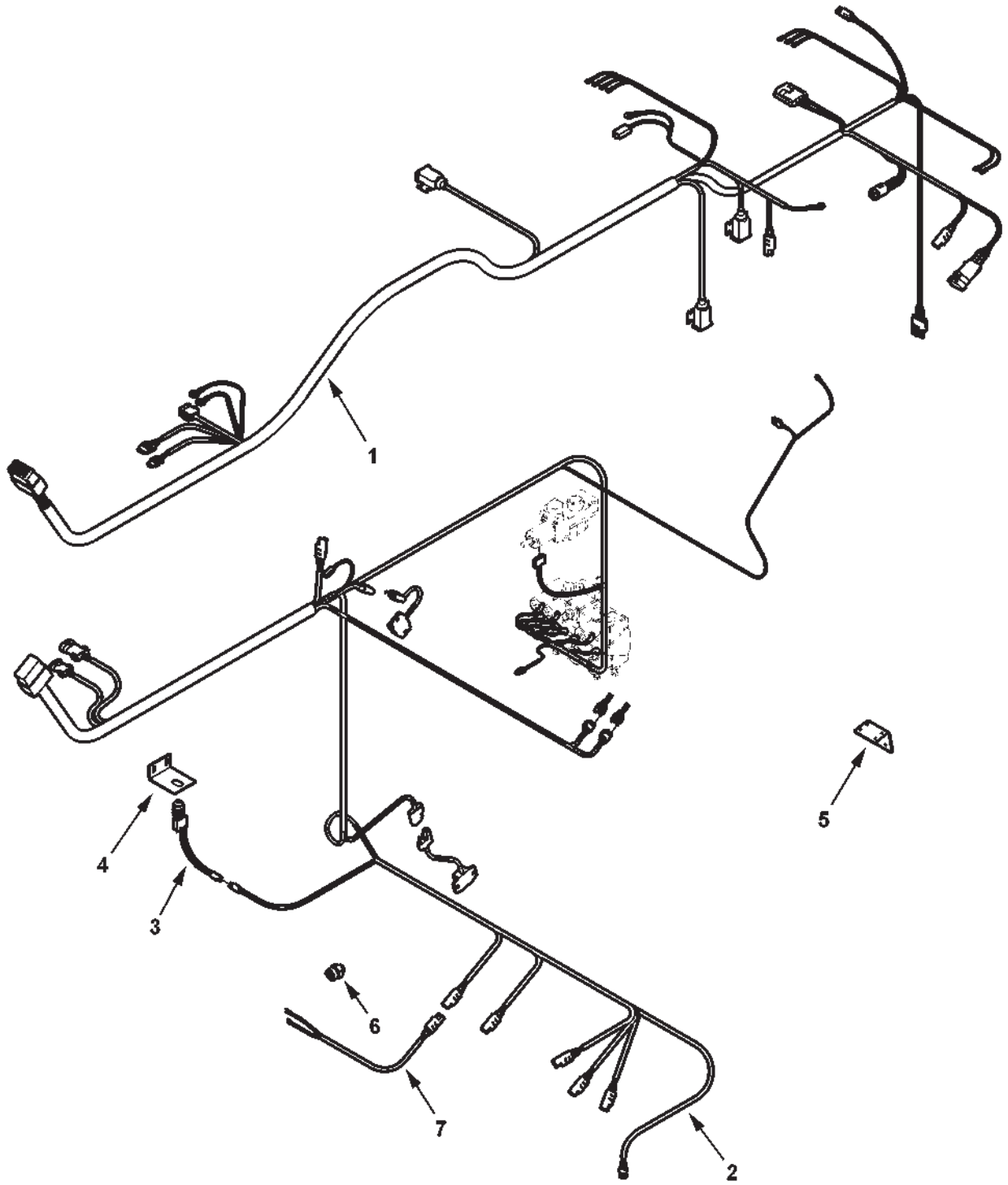

MC00308

ELECTRICAL HARNESSES & SWITCHES
FRONT

ITEM	NUMBER	QTY	DESCRIPTION
1	71391016	1	HARNESS, MAIN
	70937685	3	CLIP, J, 3/8 X .406 HOLE
	70927134	1	CLIP, J, 5/8 X .406 HOLE
	70936778	6	CLIP, J, 3/4 X .406 HOLE
	70937684	1	CLIP, J, 1-1/4 X .406 HOLE
	70921333	1	CAPSCREW, 5/16-18 X 1.0
	700709602	1	WASHER, 5/16
	70917356	1	LOCKWASHER, 5/16
	70917372	1	HEXNUT, 5/16-18
	71389754	1	MOLDING, EDGE
	70925094	AR	TIE, SELF-LOCKING .184 X 7.31
2	71391017	1	HARNESS, FAN/HYD
	70925246	AR	CLIP, J, .500 X .281 HOLE
	7883267	AR	SCREW, HX WSHR HD MACH 1/4-20 X 1/2
	70931209	AR	LOCKNUT, 1/4-20
	70937685	AR	CLIP, J, 3/8 X .406 HOLE
	70936778	1	CLIP, J, 3/4 X .406 HOLE
	70929725	2	CLIP, J, 7/16 X .406 HOLE
	70927134	1	CLIP, J, 5/8 X .406 HOLE
	70921965	4	CAPSCREW, 3/8-16 X 3/4
	705038	4	LOCKWASHER, 3/8
	70916950	4	HEXNUT, 3/8-16
	70925094	AR	TIE, SELF-LOCKING .184 X 7.31
3	293766M1	1	SWITCH, STONE TRAP DOOR
	70925094	1	TIE, SELF-LOCKING .184 X 7.31
4	112159W1	1	BRACKET, SWITCH
	70921333	2	CAPSCREW, 5/16-18 X 1.0
	700709602	2	WASHER, 5/16
	70917356	2	LOCKWASHER, 5/16
	70917372	2	HEXNUT, 5/16-18
5	71396956	1	BRACKET, MAG LIGHT 12V POWER
	70936592	4	SCREW, PN HD X-REC, #10-16 X 3/4
	705160	4	LOCKWASHER, 5/16
6	71342216	1	SWITCH, START
7	71385907	1	WIRE ASM., SWITCH

MC00308
PR: 112

ENGINE & BATTERY WIRING
(PRIOR S/N HR87101)

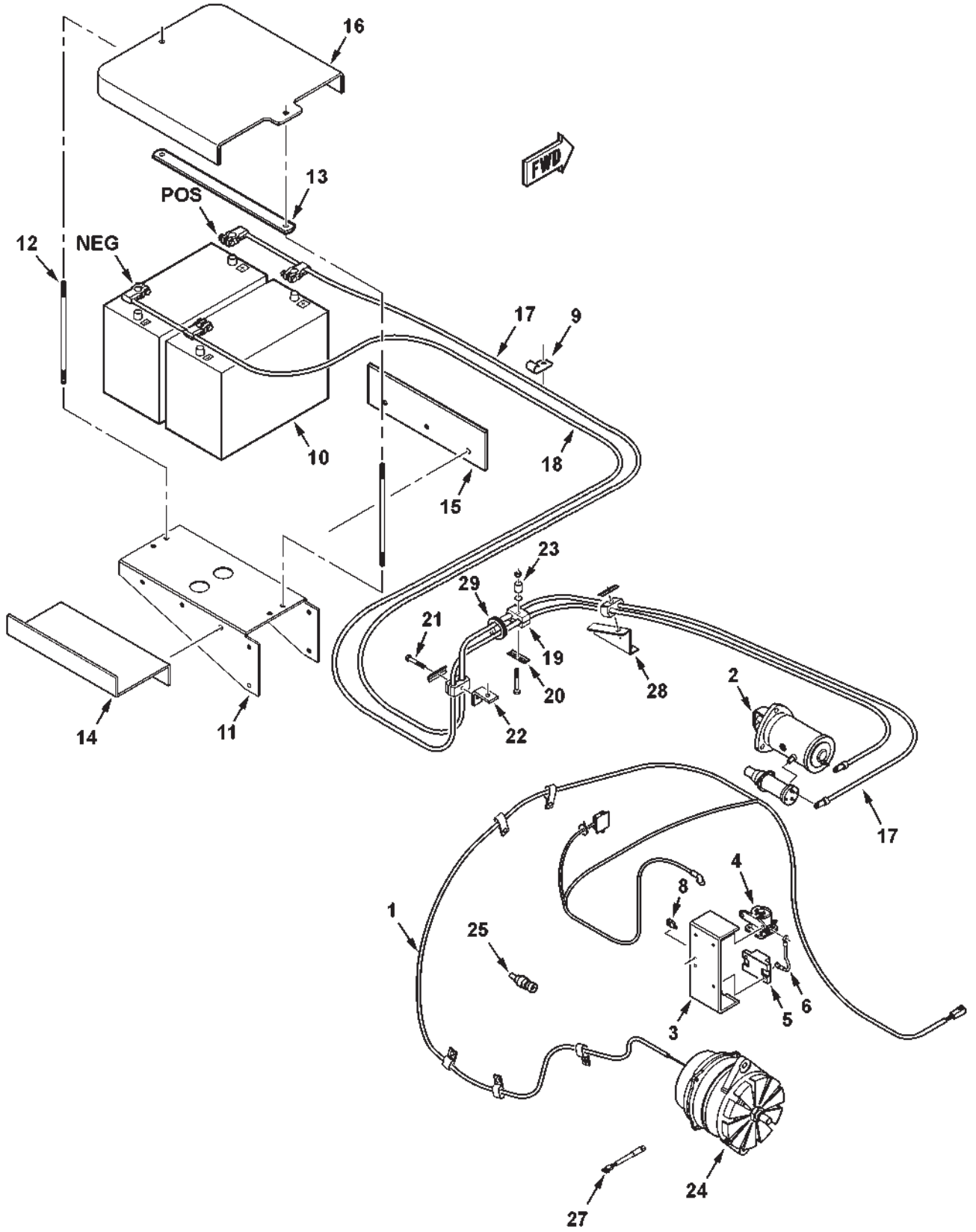

ENGINE & BATTERY WIRING
(PRIOR S/N HR87101)

ITEM	NUMBER	QTY	DESCRIPTION
-	71391870	1	LIGHT, MAGNTC SERVICE(IN CAB BUDDY SEAT)
-	71397725	AR	OUTLET SOCKET, SERVICE LIGHT
1	71396963	1	HARNESS, ENGINE
	71408392	1	WIRE ASY, ALT'R, 78.7" (FIELD INSTAL'N UPGRADE. 2003 & 2004 PROD'N ONLY, S/N HM87---)(NOT ILLUS.)
	70935427	2	FUSE, 15 AMP
	70232758	4	COVER, TERMINAL
	70937133	3	TIE, SELF-LOCKING .300 X 14.5
	70925094	7	TIE, SELF-LOCKING .184 X 7.31
	70935468	1	TIE, SELF-LOCKING .300 X 30.0
	70936778	2	J-CLIP, .750 X .406 HOLE
	70937677	4	J-CLIP, 1.0 X .406 HOLE
	7772015	3	CAPSCREW, M10-1.5 X 20 LG
	700708367	3	LOCKWASHER, 10MM
	70921332	2	CAPSCREW, 5/16-18 X 3/4
	70920426	1	LOCKWASHER, EXT TOOTH, 5/16
2	201-9915	1	STARTER MOTOR (SOURCE: CAT)
3	71398828	1	BRACKET, SOLENOID MTG.
4	530132M1	1	SOLENOID
	70931833	2	SCREW, MTG. 1/4-20 X 1/2
	Y705020	2	LOCKWASHER, 5/16
	70917372	2	HEXNUT, TERMINAL 5/16-18
	705004	2	LOCKWASHER, #10
	Y704445	2	HEXNUT, TERMINAL #10-32
	70232758	2	TERMINAL COVER
5	71389309	1	BREAKER, CIRCUIT, 150A
	70934728	2	SCREW, MTG. 1/4-20 X 3/4
6	71389313	1	WIRE, START RELAY (APPRX. 6-1/4 LG.)
8	71378104	1	RELAY
	70931833	1	SCREW, PAN HD TAPPING, 1/4-20 X 1/2
9	70936778	1	J-CLIP, 3/4 DIA X .406 HOLE
10	79018975	2	BATTERY, GROUP 31
11	71393713	1	BRACKET, BATTERY SUPPORT
	70921210	4	CAPSCREW, 3/8-16 X 1.0
	704247	4	LOCKNUT, HEX SERR FLANGE, 3/8-16
12	108047W1	2	ROD, BATTERY HOLD DOWN
13	108048W1	1	STRAP, TIE BAR
	704247	8	LOCKNUT, HEX SERR FLANGE, 3/8-16
14	71397729	1	ANGLE, BATTERY SUPPORT
	70921210	3	CAPSCREW, 3/8-16 X 1.0
	704247	3	LOCKNUT, HEX SERR FLANGE, 3/8-16
15	71397726	1	PLATE, BATTERY SUPPORT
	70921210	3	CAPSCREW, 3/8-16 X 1.0
	704247	3	LOCKNUT, HEX SERR FLANGE, 3/8-16
16	108076W1	1	COVER, BATTERY
	Y704361	2	WINGNUT, 3/8-16

CONTINUED

ENGINE & BATTERY WIRING
(PRIOR S/N HR87101)

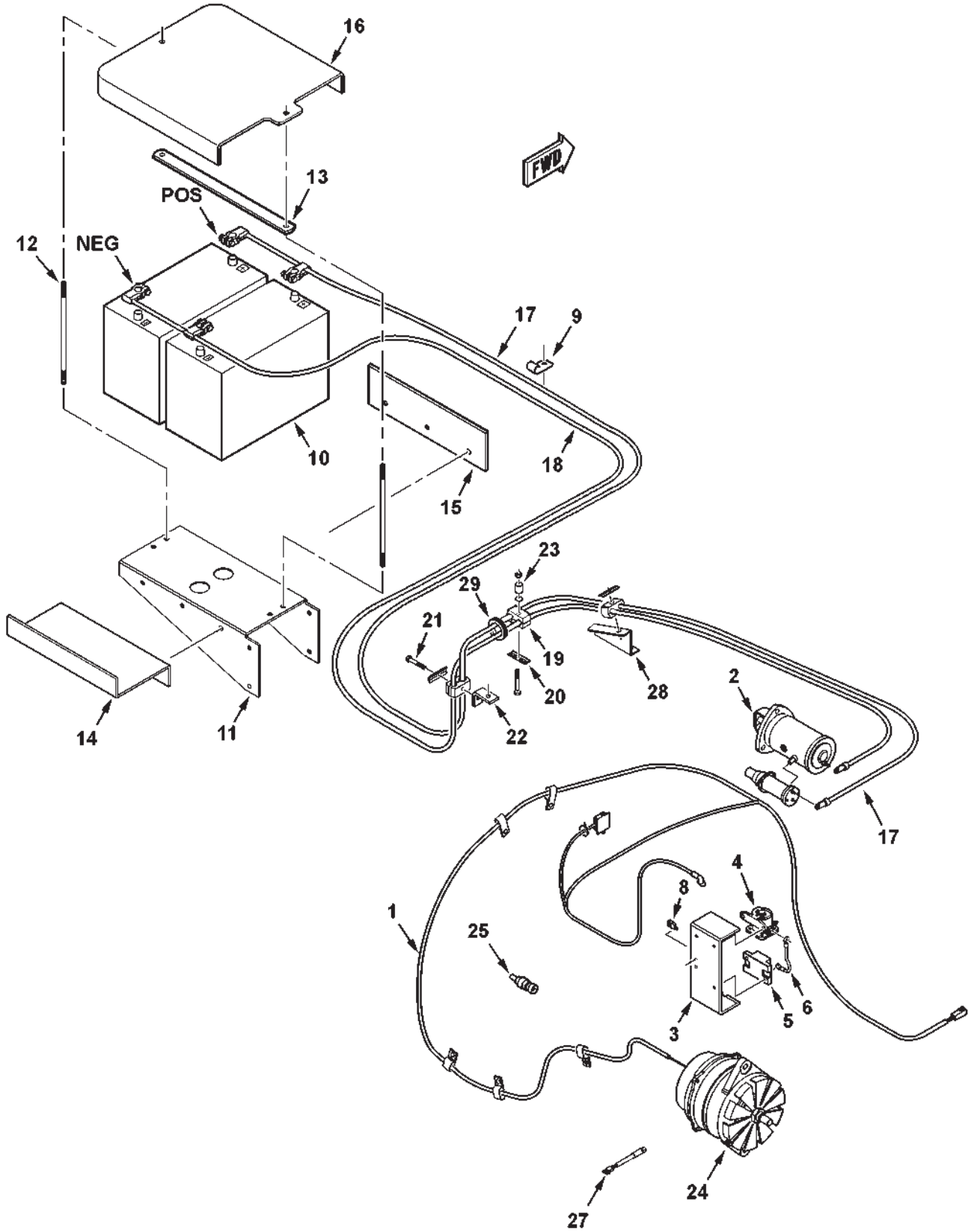

ENGINE & BATTERY WIRING
(PRIOR S/N HR87101)

ITEM	NUMBER	QTY	DESCRIPTION
17	71398103	1	CABLE, POSITIVE BATTERY
18	71398104	1	CABLE, NEGATIVE BATTERY
	70925094	2	TIE, SELF-LOCKING .184 X 7.31
	Y702951	1	SCREW, HEX WSHR HD, 3/8-16 X 3/4 (GRND LUG ATTACH)
19	148203M1	3	CLAMP PAIR, 5/8 DIA DOUBLE, BATT. CABLE
20	101646M1	3	PLATE, TOP COVER
21	70921719	1	CAPSCREW, 5/16-18 X 2-1/2
	70918431	1	WASHER, 1/2, WIDE
	70917356	1	LOCKWASHER, 5/16
	70917372	1	NUT, 5/16-18 REG
22	71337414	1	BRACKET
23	7771751	1	CAPSCREW, 5/16-18 X 3-1/4
	70917356	1	LOCKWASHER, 5/16
	70917372	1	NUT, 5/16-18 REG
	70918431	1	WASHER, 1/2, WIDE
	6586259	1	SPACER, .75 OD X .391 ID X 1 LG
24	71396957	1	ALTERNATOR, 150A
	129-5096	1	PULLEY, ALTERNATOR
	72506418	3	COVER, TERMINAL
	70232758	1	COVER, TERMINAL
25	71393718	1	SENSOR, TEMPERATURE
	70936326	1	O-RING, .072 X .414 ID, VITON
27	71389746	1	SWITCH, ROTOR PRESSURE
	70921885	1	O-RING, .078 X .468 ID
28	71398826	1	BRACKET, BATT. CABLE
	70921965	2	CAPSCREW, 3/8-16 X 3/4
	704247	2	NUT, HEX FLNG SERR LOCK, 3/8-16
	7771744	1	CAPSCREW, 5/16-18 X 2-1/4
	Y705020	1	LOCKWASHER, 5/16 REG
	70917372	1	NUT, 5/16-18 REG
29	8027427	1	GROMMET

CHL0008
PR: 114

ENGINE & BATTERY WIRING
(EFF. S/N HR87101)

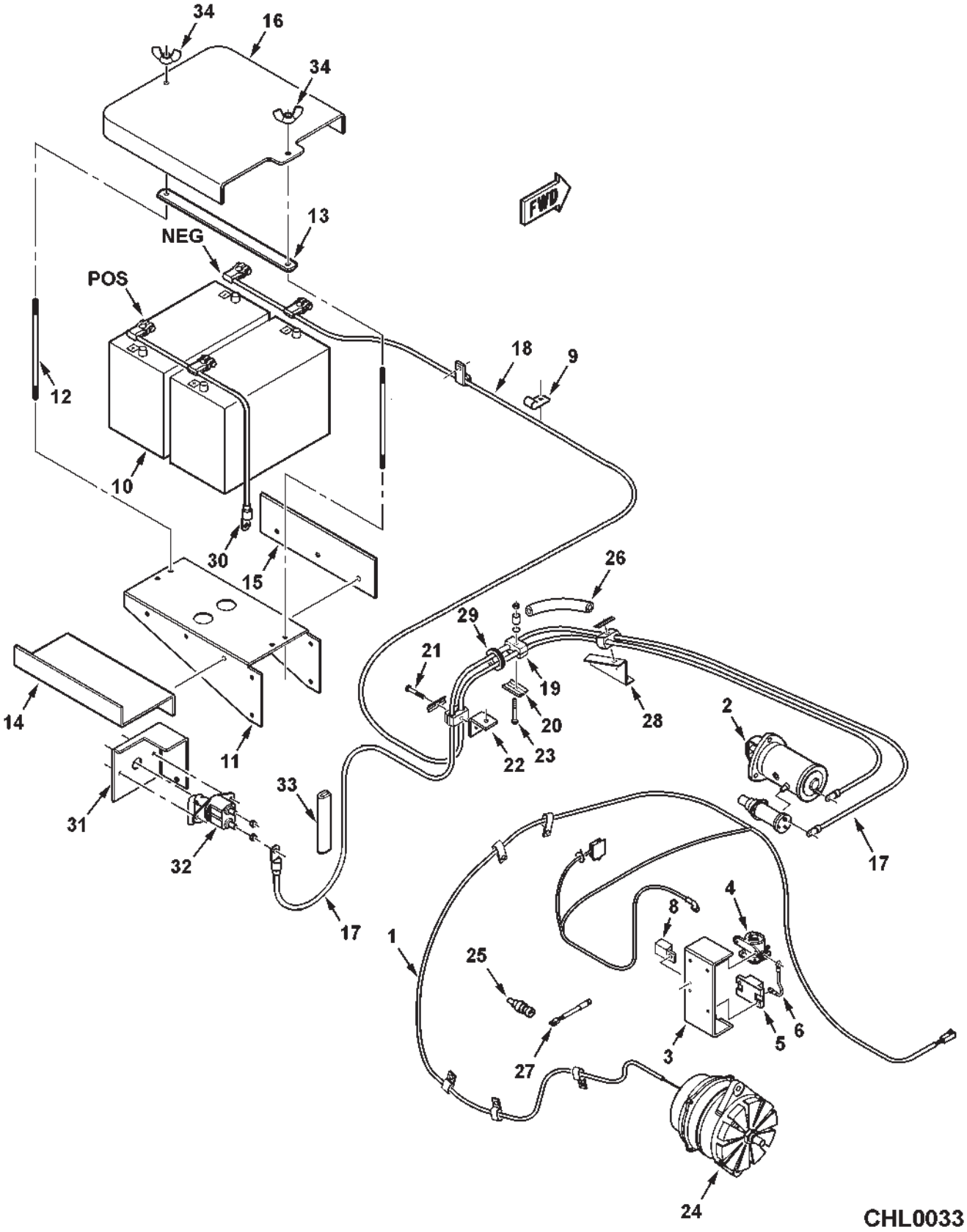

ENGINE & BATTERY WIRING
(EFF. S/N HR87101)

ITEM	NUMBER	QTY	DESCRIPTION
-	71391870	1	LIGHT, MAGNETIC SRVC (IN CAB BUDDY SEAT)
-	71397725	AR	OUTLET SOCKET, SERVICE LIGHT
1	71410573	1	HARNESS, ENGINE
	70935427	2	FUSE, 15 AMP
	70232758	4	COVER, TERMINAL
	70937133	3	TIE, SELF-LOCKING .300 X 14.5
	70925094	7	TIE, SELF-LOCKING .184 X 7.31
	70935468	1	TIE, SELF-LOCKING .300 X 30.0
	70936778	2	J-CLIP, .750 X .406 HOLE
	70937677	4	J-CLIP, 1.0 X .406 HOLE
	7772015	3	CAPSCREW, M10-1.5 X 20 LG
	700708367	3	LOCKWASHER, 10MM
	70921332	2	CAPSCREW, 5/16-18 X 3/4
	70920426	1	LOCKWASHER, EXT TOOTH, 5/16
2	201-9915	1	STARTER MOTOR (SOURCE: CAT)
3	71398828	1	BRACKET, SOLENOID MTG.
4	530132M1	1	SOLENOID
	70931833	2	SCREW, MTG. 1/4-20 X 1/2
	Y705020	2	LOCKWASHER, 5/16
	70917372	2	HEXNUT, TERMINAL 5/16-18
	705004	2	LOCKWASHER, #10
	Y704445	2	HEXNUT, TERMINAL #10-32
	70232758	2	TERMINAL COVER
5	71389309	1	BREAKER, CIRCUIT, 150A
	70934728	2	SCREW, MTG. 1/4-20 X 3/4
6	71389313	1	WIRE, START RELAY (APPRX. 6-1/4 LG.)
8	71378104	1	RELAY
	70931833	1	SCREW, PAN HD TAPPING, 1/4-20 X 1/2
9	70936778	1	J-CLIP, 3/4 DIA X .406 HOLE
10	79018975	2	BATTERY, GROUP 31
11	71393713	1	BRACKET, BATTERY SUPPORT
	70921210	4	CAPSCREW, 3/8-16 X 1.0
	704247	4	LOCKNUT, HEX SERR FLANGE, 3/8-16
12	108047W1	2	ROD, BATTERY HOLD DOWN
13	108048W1	1	STRAP, TIE BAR
	704247	8	LOCKNUT, HEX SERR FLANGE, 3/8-16
14	71397729	1	ANGLE, BATTERY SUPPORT
	70921210	3	CAPSCREW, 3/8-16 X 1.0
	704247	3	LOCKNUT, HEX SERR FLANGE, 3/8-16
15	71397726	1	PLATE, BATTERY SUPPORT
	70921210	3	CAPSCREW, 3/8-16 X 1.0
	704247	3	LOCKNUT, HEX SERR FLANGE, 3/8-16
16	108076W1	1	COVER, BATTERY

CONTINUED

ENGINE & BATTERY WIRING
(EFF. S/N HR87101)

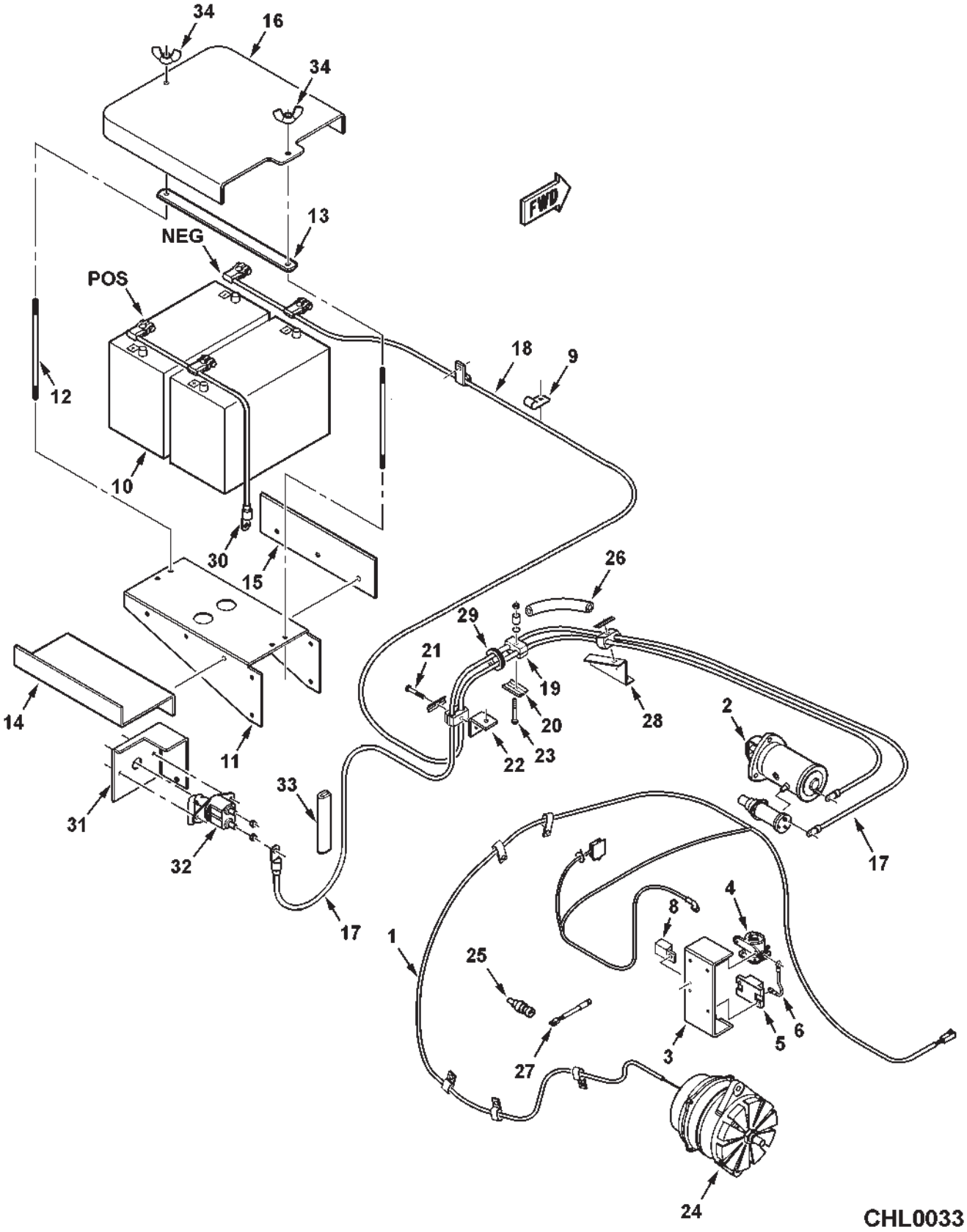

ENGINE & BATTERY WIRING
(EFF. S/N HR87101)

ITEM	NUMBER	QTY	DESCRIPTION
17	71409808	1	CABLE, POSITIVE BATTERY
18	71398104	1	CABLE, NEGATIVE BATTERY
	70925094	2	TIE, SELF-LOCKING .184 X 7.31
	Y702951	1	SCREW, HEX WSHR HD, 3/8-16 X 3/4 (GRND LUG ATTACH)
19	148203M1	3	CLAMP PAIR, 5/8 DIA DOUBLE, BATT. CABLE
20	101646M1	3	PLATE, TOP COVER
21	70921719	1	CAPSCREW, 5/16-18 X 2-1/2
	70918431	1	WASHER, 1/2, WIDE
	70917356	1	LOCKWASHER, 5/16
	70917372	1	NUT, 5/16-18 REG
22	71337414	1	BRACKET
23	7771751	1	CAPSCREW, 5/16-18 X 3-1/4
	70917356	1	LOCKWASHER, 5/16
	70917372	1	NUT, 5/16-18 REG
	70918431	1	WASHER, 1/2, WIDE
	6586259	1	SPACER, .75 OD X .391 ID X 1 LG
24	71396957	1	ALTERNATOR, 150A
	129-5096	1	PULLEY, ALTERNATOR
	72506418	3	COVER, TERMINAL
	70232758	1	COVER, TERMINAL
25	71393718	1	SENSOR, TEMPERATURE
	70936326	1	O-RING, .072 X .414 ID, VITON
26	71396952	1	HOSE, PROTECTOR
	70925094	3	TIE, SELF-LOCKING .184 X 7.31
27	71389746	1	SWITCH, ROTOR PRESSURE
	70921885	1	O-RING, .078 X .468 ID
28	71398826	1	BRACKET, BATT. CABLE
	70921965	2	CAPSCREW, 3/8-16 X 3/4
	704247	2	NUT, HEX FLNG SERR LOCK, 3/8-16
	7771744	1	CAPSCREW, 5/16-18 X 2-1/4
	Y705020	1	LOCKWASHER, 5/16 REG
	70917372	1	NUT, 5/16-18 REG
29	8027427	1	GROMMET
30	71409807	1	CABLE, POSITIVE BATTERY
31	71409810	1	BRACKET, BATTERY DISCONNECT
32	71409811	1	SWITCH, BATTERY DISCONNECT
	7703457	2	CAPSCREW, 1/4-20 X 3/4 GR5
	705012	2	LOCKWASHER, 1/4
	70916622	2	NUT, 1/4-20 REG
33	71387797	1	EDGE PROTECTOR, 1/4 X 8"
34	Y704361	2	WINGNUT, 3/8-16

CHL0033
PR: t06a25h54a0007

ALTERNATOR - 150 AMP

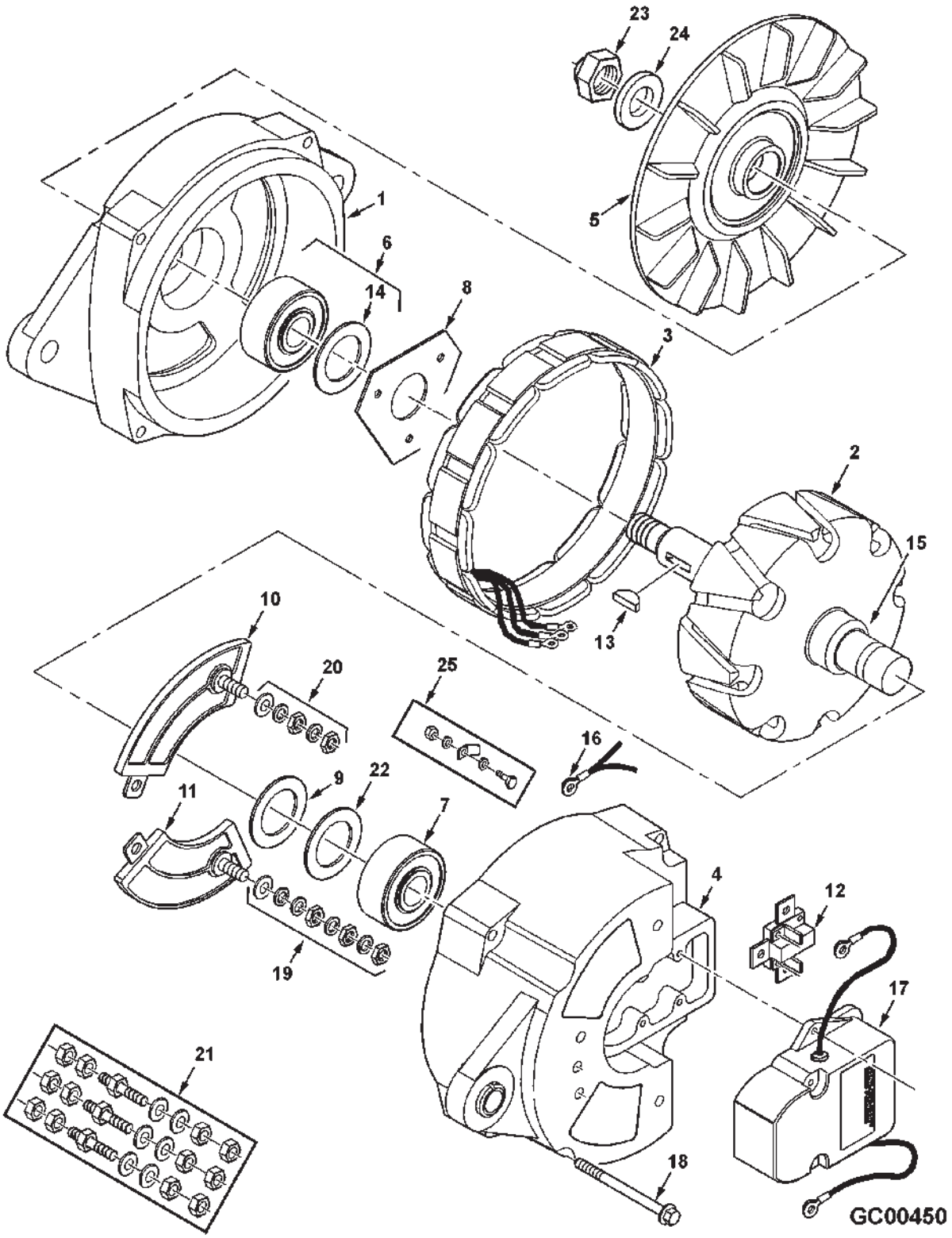

ALTERNATOR - 150 AMP

ITEM	NUMBER	QTY	DESCRIPTION
-	71396957	1	ALTERNATOR, LEECE NEVILLE, 150 AMP
1	71407431	1	FRONT HOUSING
2	71407436	1	ROTOR ASY
3	71407434	1	STATOR ASY
4	71407446	1	REAR HOUSING
5	71407428	1	FAN
6	71407432	1	FRONT BEARING PKG.
7	71407440	1	REAR BEARING
8	71407429	1	FRONT BEARING RETAINER PKG.
9	71407438	1	REAR BEARING RETAINER
10	71407442	1	DIODE RING ASY, NEGATIVE
11	71407441	1	DIODE RING ASY, POSITIVE
12	71407448	1	BRUSH ASY
13	71407435	1	KEY, WOODRUFF
14	71407433	1	SEAL, FRONT BEARING
15	71407437	1	SLIP RING
16	71407445	1	CABLE ASY, RECT.
17	71407450	1	REGULATOR KIT
18	71407430	1	THRU BOLT PKG.
19	71407443	1	TERMINAL STUD PKG, POSITIVE
20	71407444	1	TERMINAL STUD PKG, NEGATIVE
21	71407449	1	TERMINAL STUD PKG, AC
22	71407439	1	SPACER, REAR BEARING
23	71407426	1	LOCK NUT, PULLEY
24	71407427	1	WASHER, 5/8
25	71407447	1	AC FLAG TERMINAL PKG.

GC00450
PR: t05b15n00a0002

CAB COMPONENTS
CONTROLS & SWITCHES

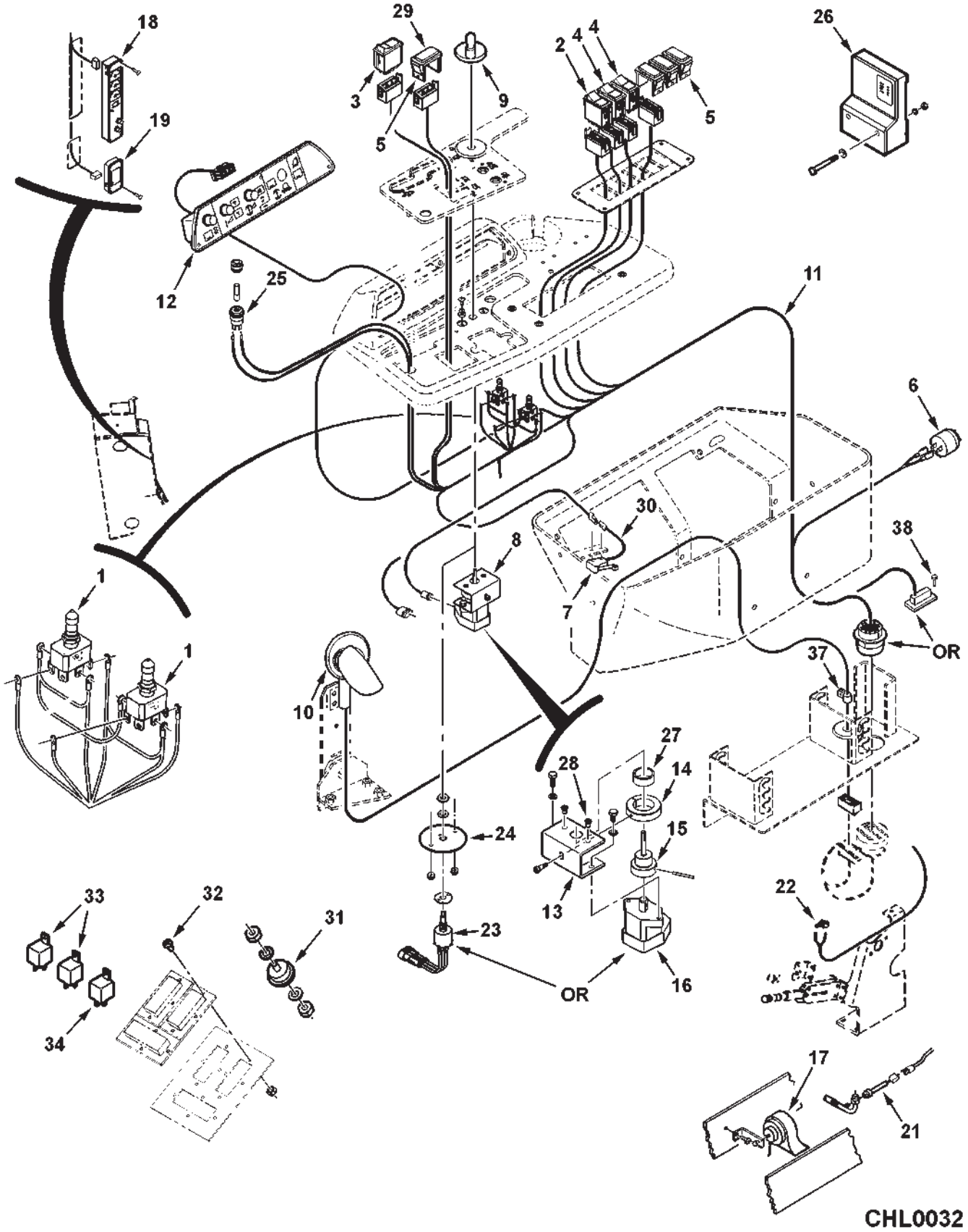

ITEM	NUMBER	QTY	DESCRIPTION
1	700726696	2	SWITCH, LEVER LOCK
2	71387413	1	SWITCH, SPEED, HARE/TORTOISE
3	71387416	1	SWITCH, HEADER REVERSE
4	71387417	2	SWITCH, INCREASE/DECREASE
5	71390325	4	PLUG, SWITCH
6	112236W1	1	BUZZER
7	71389825	--	SWITCH, PROXIMITY, BACK-UP (SERVICE W/ 107041 & 71385907 WIRE ASY.)
	107041	1	SWITCH, MICRO, BACK-UP (SEE "CAB, SEAT CONSOLE" FOR MOUNTING BRACKET)
	700701772	2	SCR, MACH, PAN HD, #6-32 X 1
	705129	2	LOCKWASHER, #6
	704551	2	NUT, #6-32 REG
8	-----	--	THROTTLE ASY. (SERVICED WITH COMPONENT ITEMS 13-16 & 27, 28) (SEE * KIT) (PRIOR S/N HR87101)
	700705185	2	SCREW, PAN HD. MACH. #8-32 X 1/2
	70917395	2	LOCKWASHER, #8
	70923906	2	WASHER, #8, NARROW
9	71396391	1	KNOB, THROTTLE
10	71388133	1	HANDLE ASY., HYDRO (SEE BREAKDOWN)
	70921332	2	CAPSCREW, 5/16-18 X 3/4
11	71387408	1	HARNESS, CONSOLE (PRIOR S/N HR87101)
	71407298	1	HARNESS, CONSOLE (EFF. S/N HR87101)
12	71393285	1	CONTROLLER - CONSOLE
	108664W1	3	KNOB
	71394716	3	SHAFT, KNOB
13	71398153	1	BRACKET, THROTTLE SUPPORT
14	71398152	1	COLLAR, SHAFT
	70937169	1	SCR, SHLDR, SOC HD. 1/4 DIA X #10-24
15	71398154	1	SHAFT, THROTTLE
	70926526	1	PIN, SPIRAL
16	71398155	1	THROTTLE CONTROL, ELECTRONIC
	70921958	2	CAPSCREW, 1/4-20 X 1/2
	705012	2	LOCKWASHER, 1/4
17	71406492	1	HORN
	7701501	1	SCR, HEX WSHR HD TAPPG, 1/4-14 X 3/4
18	71389811	1	CLUSTER, GAUGE (FUEL, PRESS, TEMP, ETC.)
	70937280	4	SCREW, PAN HD. MACH. #8-32 X 3/4
	108664W1	2	KNOB
	71394716	2	SHAFT, KNOB
19	71393277	1	CONTROL, TACHOMETER
	700720863	4	SCREW, PAN HD. MACH. #8-32 X 2.0
21	71372724	1	SWITCH, LOW PRESSURE
22	71395848	1	SWITCH, PARK BRAKE
23	71406894	1	THROTTLE SWITCH ASY (EFF. S/N HR87101)

CONTINUED

CAB COMPONENTS
CONTROLS & SWITCHES

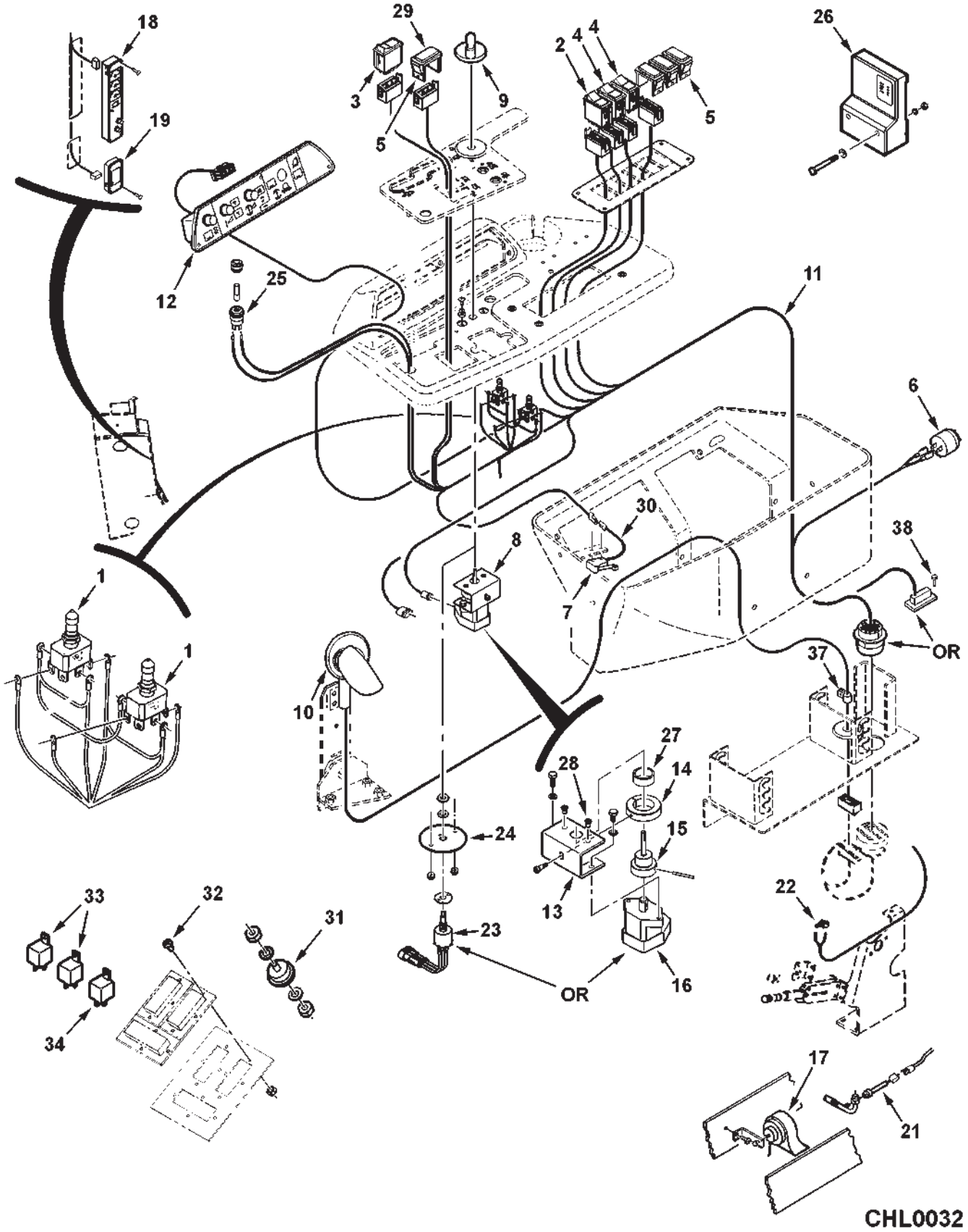

ITEM	NUMBER	QTY	DESCRIPTION
24	71400505	1	PLATE, THROTTLE MTG (EFF. S/N HR87101)
	700710188	2	SCREW, PAN HD MACH. #6-32 X 3/4
	70917395	2	LOCKWASHER, #8
	70923906	4	WASHER, #8, NARROW
	704551	2	NUT, #6-32 REG
	70917459	2	LOCKWASHER, #6
25	112812W1	1	SOCKET ASY, LAMP
	112811W1	1	LAMP, PILOT
	112814W1	1	LENS, AMBER
26	71379323	1	CONTROL, ROTOR SPEED (PRIOR S/N HR87101)
	7701964	2	CAPSCREW, 1/4-20 X 2-1/2 GR2
	705012	2	LOCKWASHER, 1/4 REG
	70917377	2	WASHER, HARD, 1/4
27	72501085	1	SLEEVE, BEARING
28	71391713	2	NUT, GRIP TITE #8-31
29	71387414	1	SWITCH, ON/OFF, RWA
30	71385907	1	WIRE ASY, MICRO SWITCH(PRIOR SN HR87101)
31	72500822	2	TERMINAL, FEED THRU, 3/8-16 UNC
32	700711659	12	SCREW, PAN HD MACH, #8-32 X 3/4
	107320M1	12	LOCKNUT, HEX SERR FLANGE, #8-32
33	71390323	2	RELAY, 70 AMP
34	72160919	1	RELAY, 40 AMP
37	70927097	1	CLAMP, LINE, 1/2 DIA X .281 HOLE (EFF. S/N HR87101)
	7883283	1	SCREW, HEX WSHR HD MACH, 1/4-20 X 1
	70931209	1	LOCKNUT, HEX SERR FLANGE, 1/4-20
38	700711659	2	SCREW, PAN HD MACH, #8-32 X 3/4 (EFF. S/N HR87101)
	107320M1	2	LOCKNUT, HEX SERR FLANGE, #8-32
-	71410560	AR	*KIT,THROTTLE PERFORMANCE (REPLACES IT.8 Y)(INCL FOLLOWNG)(PRIOR S/N HR87101)
	71406894	1	SWITCH ASY, THROTTLE (3 DETENT W/ 2 JAM NUTS, 3/8-32UNEF)
	71400505	1	PLATE, THROTTLE MOUNTING
	71410558	1	WIRE ASY,THROTTLE UPGRADE(NOT ILLUS.
	704494	2	HEX NUT, #8-32 UNC

CHL0032
PR: 118

CAB COMPONENTS
FUSE PANEL & HYDRO HANDLE

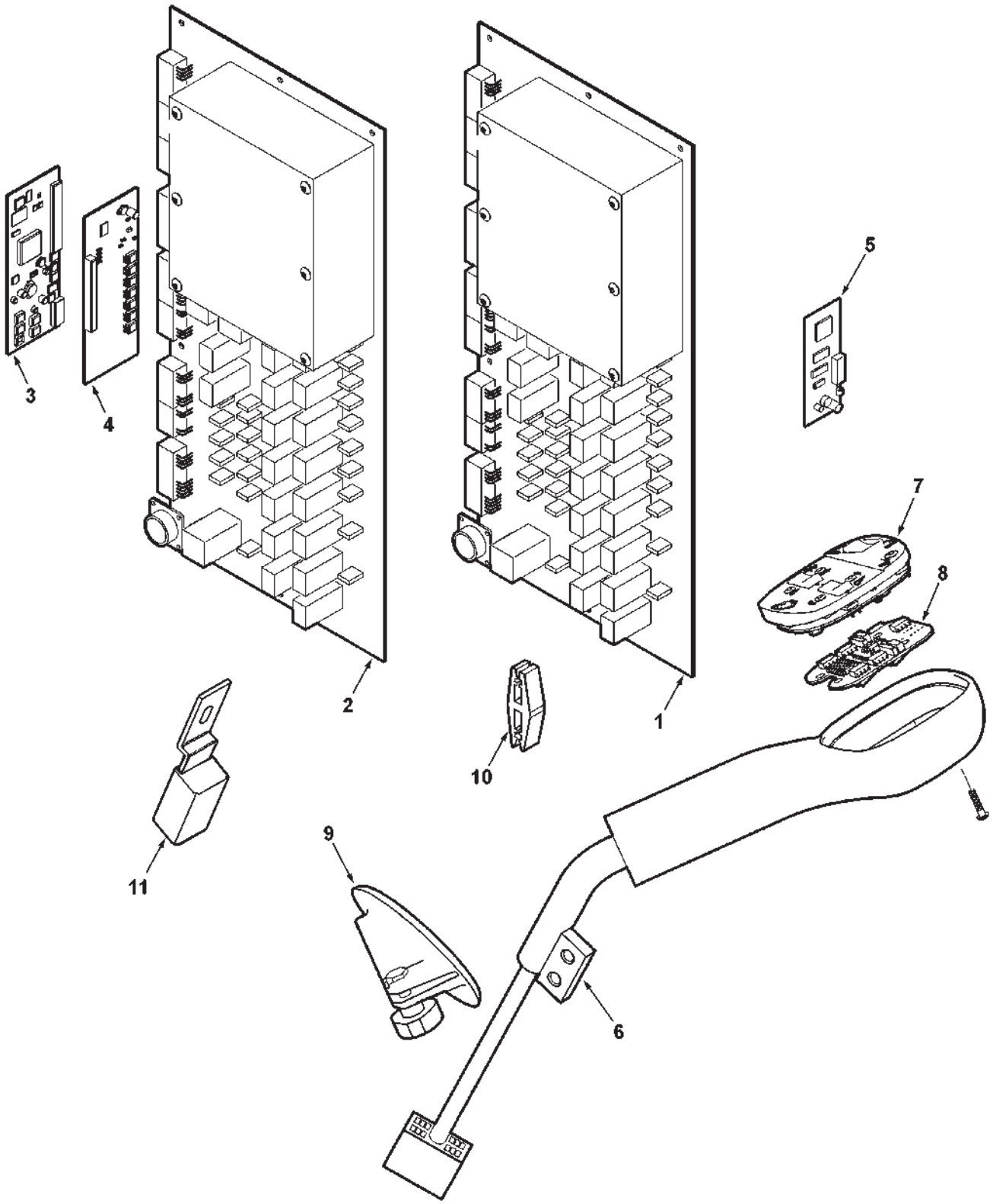

ITEM	NUMBER	QTY	DESCRIPTION
1	71394717	1	PANEL ASY., FUSE (INCL. ITEMS 2-4) (PRIOR S/N HR87101)
	71406480	1	PANEL ASY, FUSE (EFF. S/N HR87101)
	71389815	10	BOLT, ISOLATOR FLEX
	70917395	10	LOCKWASHER, #8
	774745	10	NUT, HEX, #8-32
	7883267	1	SCR, HEX WSHR HD MACH, 1/4-20 X 1/2
2	71389812	1	PANEL, FUSE
	700721620	9	MINI FUSE, 3 AMP
	70937605	8	MINI FUSE, 5 AMP
	70937606	5	MINI FUSE, 10 AMP
	70937607	AR	MINI FUSE, 15 AMP
	70937608	AR	MINI FUSE, 20 AMP
	70937609	AR	MINI FUSE, 25 AMP
	70937610	AR	MINI FUSE, 30 AMP
	71396970	3	PCB RELAY, 40 AMP
	71396971	17	PCB RELAY, 20 AMP
	71396972	1	LID, CARD CAGE
3	71389813	1	CARD, MAIN CONTROL (PRIOR S/N HR87101)
	71406481	1	CARD, MAIN CONTROL (EFF. S/N HR87101)
4	71389814	1	CARD, OUTPUT DRIVER
5	71393350	1	CARD, FIELDSTAR INTERFACE (OPT.)
6	71388133	1	HANDLE ASY, HYDRO (INCLUDES ITEMS 7 - 9)
	-----	1	HANDLE & SUPP'T ASY., HYDRO (ORDER HYDRO HANDLE ASY.)
7	71397940	1	DECK ASY. SWITCHES
	705129	4	LOCKWASHER, #6
	-----	4	SCREW, HEX SOCK BUTTON HD, #6-32 X 5/8 (SERVICE W/ 71408201)
	71408201	4	SCREW, TORX HD, #6-32 X 3/4, BLACK
8	71397941	1	CIRCUIT BOARD ASY., HANDLE
9	71397942	1	PALM/WRIST REST KIT, HANDLE
10	71375902	1	FUSE PULLER
11	72160919	1	RELAY, 40 AMP

GC00332
PR: 120

CAB COMPONENTS
UPPER CONSOLE

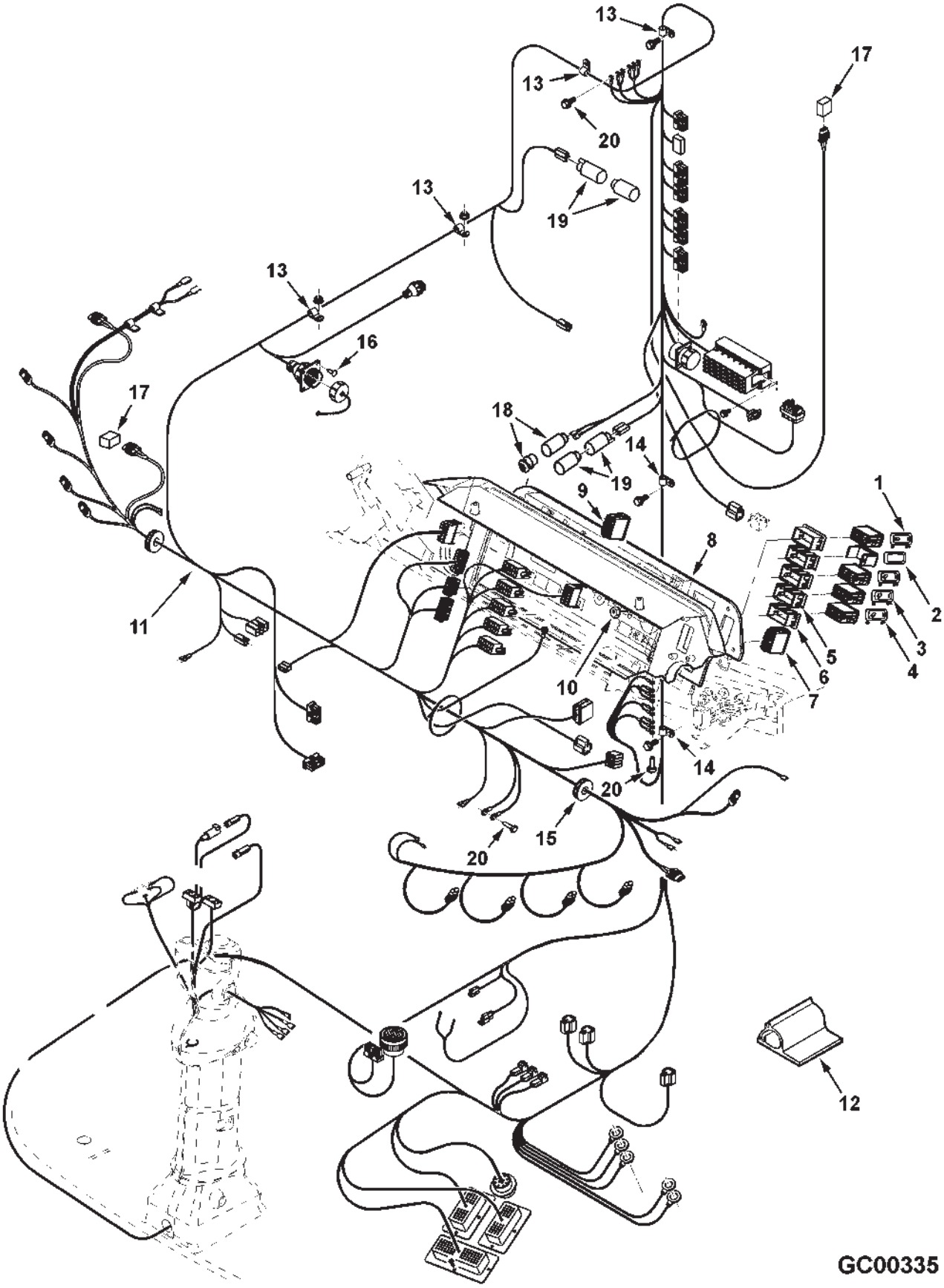

CAB COMPONENTS
UPPER CONSOLE

ITEM	NUMBER	QTY	DESCRIPTION
1	71387423	1	SWITCH, EXIT LIGHT
2	71390325	1	PLUG, SWITCH COVER
3	71387424	2	SWITCH, FIELD LIGHTS
4	71387418	1	SWITCH, HEADLIGHT
5	71391417	3	BEZEL, SWITCH CENTER
6	71391416	2	BEZEL, SWITCH END
7	71387422	1	SWITCH, HAZARD
8	71406478	1	PANEL, ELECTRONIC INSTRUMENT (E.I.P.)
	70935072	4	SCREW, PAN HD. SELF-TAP 1/4-20 X 5/8
9	71387420	1	SWITCH, WIPER, FRONT GLASS
10	Y704445	1	NUT, HEX #10-32
11	71406476	1	HARNESS, MAIN CAB
12	70569880	2	CLIP, WIRING, SELF-ADHESIVE PLASTIC
13	70926874	4	CLAMP, HARNESS, 1-1/2 X .406 HOLE
	7883325	1	SCREW,HX WSHR HD MACH, 5/16-18 X 3/4
	70931277	2	LOCKNUT, SERR. FLANGE, 5/16-18
14	70936765	2	CLAMP, HARNESS, 1-3/4 X .406 HOLE
	7883325	2	SCREW,HX WSHR HD MACH, 5/16-18 X 3/4
15	70937658	1	GROMMET, RUBBER
16	70937550	4	SCR,PHILLIPS PAN HD,TAPPING, #8-18 X 3/4 (FIELDSTAR PLUG)
17	3714264M1	2	SENSOR, AIR TEMPERATURE
18	71365477	1	ELEMENT, LIGHTER
	71365476	1	HOUSING, LIGHTER
19	107500M1	2	SOCKET, AUX. POWER
	107499M1	2	PLUG, AUX. POWER SOCKET
20	701953	3	SCR, HEX WSHR HD TAPPING, 5/16-18 X 3/4

GC00335
PR: 122

CAB COMPONENTS
RADIO AND ANTENNA

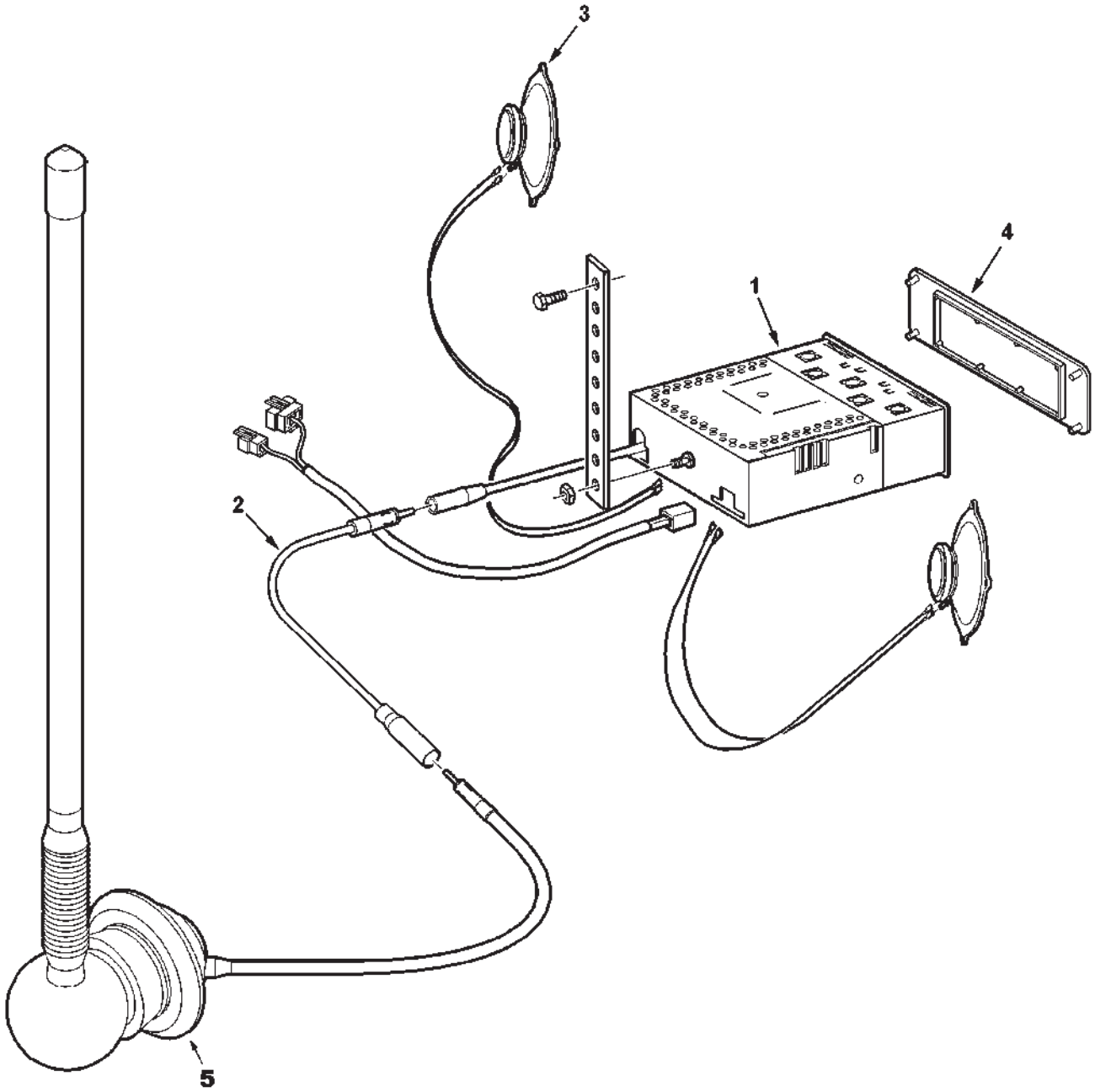

GC00338

ITEM	NUMBER	QTY	DESCRIPTION
1	RE701156D6	1	* RADIO, AM/FM, CD, WEATHERBAND
	RE701141D6	1	* RADIO, AM/FM, CASSETTE, WEATHERBAND
	RE701128D6	1	* RADIO, AM/FM, CASSETTE
2	RE530013	1	CABLE, ANTENNA EXTENSION
3	71393287	2	SPEAKER, 5-1/4 POLYCONE
	700701772	8	SCREW, PAN HD. MACH. #6-32 X 1.0
	700703830	8	WASHER, FLAT #6
	705129	8	LOCKWASHER, #6
	704551	8	HEXNUT, #6-32
4	71362813	1	PANEL, BLANK, W/O RADIO
	70932720	4	NUT, SPEED
5	RE210066	1	ANTENNA ASY., W/CABLE
-	71406070	1	** KIT, RADIO, AM/FM, CD, WEATHERBAND
-	71400012	1	** KIT, RADIO, AM/FM,CASSETTE,WEATHRBAND

* INCL. HARNESS, MTG STRAP & HRDWR
** FIELD INSTALL. ORDER THRU DLR CENTRAL

GC00338
PR: 124

MONITORING SYSTEMS
DIGITAL TACHOMETER

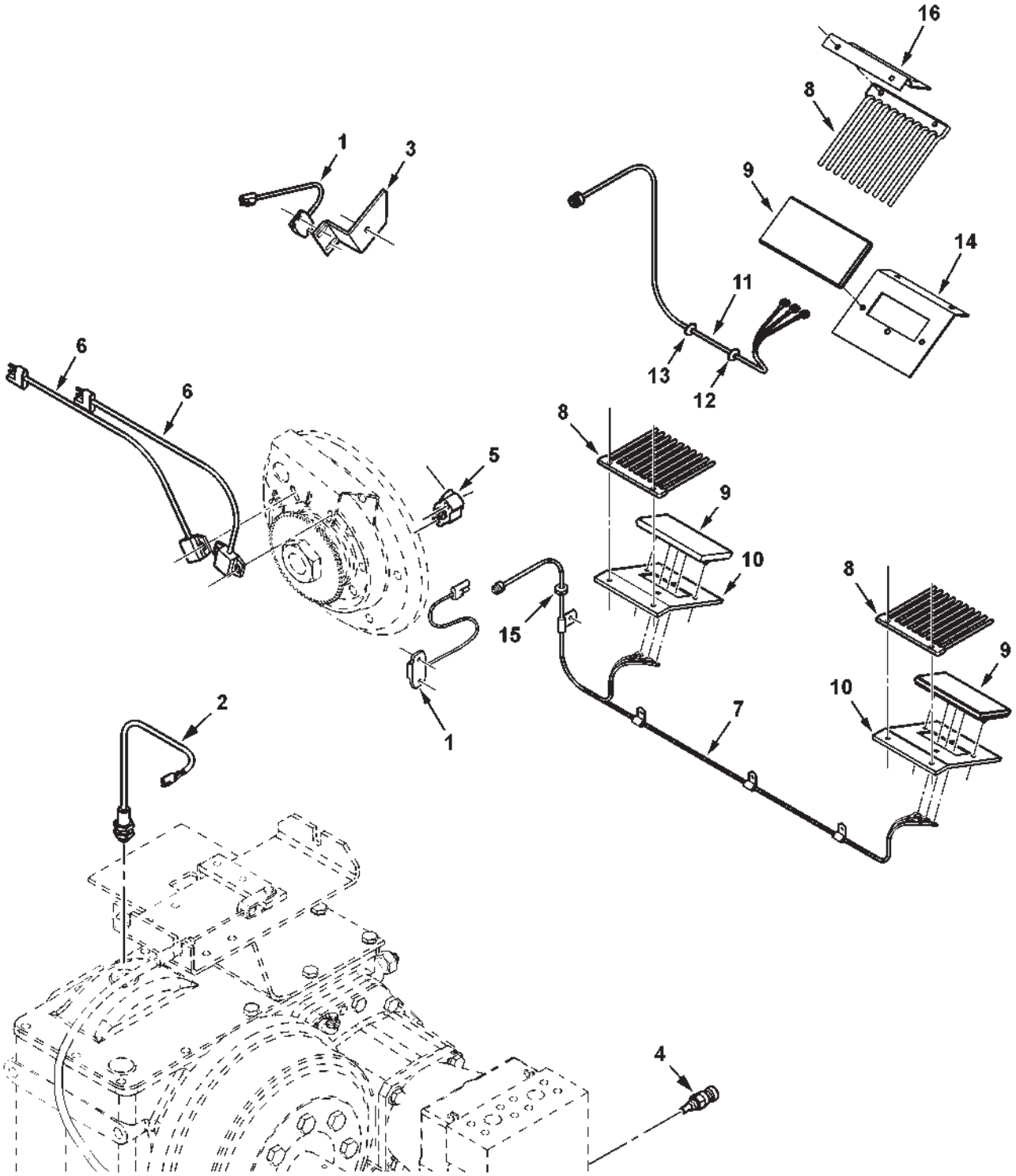

MC00310

ITEM	NUMBER	QTY	DESCRIPTION
1	71391021	4	SENSOR ASY., TWO WIRE
	70931317	8	BOLT, RD HD SHT SQ NK, 1/4-20 X 3/4
	705012	8	LOCKWASHER, 1/4
	70916622	8	NUT, 1/4-20 REG
2	71389818	1	SENSOR, GROUND SPEED
3	71385108	1	BRACKET, BEATER SPEED SENSOR
4	71393718	1	SENSOR, HYDRO TEMP
	70936326	1	O-RING, .072 X .414 ID, VITON
5	71376825	1	SENSOR, CONCAVE POS'N (SEE "PROCESSOR")
	70918151	2	SCREW, TRUSS HD MACH #10-32 X 1-1/4
	70917380	2	WASHER, #10
	705004	2	LOCKWASHER, #10
	Y704445	2	HEXNUT, #10-32
6	71383914	2	SENSOR, ROTOR SPEED
	70931317	4	BOLT, RD HD SHT SQ NK, 1/4-20 X 3/4
	705012	4	LOCKWASHER, 1/4
	70916622	4	NUT, 1/4-20 REG
7	71394721	1	HARNESS, SHOE LOSS (TIED TO SHAKER ARM) (PRIOR S/N HP87101)
	71398832	1	HARNESS,SHOE LOSS(THRU GROMMET IN FRAME) (EFF. S/N HP87101)
	70937685	2	J-CLIP, 3/8 X .406 HOLE
	700725918	7	J-CLIP, 5/16 X .281 HOLE
	70931317	3	BOLT, RD HD SHT SQ NK, 1/4-20 X 3/4
	70916622	3	NUT, 1/4-20 REG
	705012	3	LOCKWASHER, 1/4
	7703457	1	CAPSCREW, 1/4-20 X 3/4 GR5
	70931209	1	NUT, SERR. FLANGE, 1/4-20
	353769X1	1	WASHER, 1/4, HARD
	70930708	1	CLAMP, 5/16 X .344 HOLE (PRIOR S/N HP87101)
8	71393717	3	FINGER DIFFUSER
	7703457	2	CAPSCREW, 1/4-20 X 3/4 GR5
	70916622	2	NUT, 1/4-20 REG
	705012	2	LOCKWASHER, 1/4
9	71393278	3	SENSOR, GRAIN LOSS
	70916622	6	NUT, 1/4-20 REG
	705012	6	LOCKWASHER, 1/4
10	71393716	2	BRKT, GRN LOSS (QTY 3 PRIOR S/N HN87101)
	7770167	4	BOLT, RH HD SQ NK, 1/4-20 X 1.0
	700709601	4	WASHER, FLAT 1/4
	705012	4	LOCKWASHER, 1/4
	70916622	4	NUT, 1/4-20 REG
11	71391874	1	HARNESS, GRAIN LOSS, ROTOR
12	700701160	1	GROMMET
13	832653M1	1	GROMMET
14	71401333	1	BRKT,ROTOR LOSS SENSOR (EFF S/N HM87101)
	70916622	2	NUT, 1/4-20 REG
	705012	2	LOCKWASHER, 1/4
15	70937658	2	GROMMET, RUBBER (EFF. S/N HP87101)
			BRACKET, MOUNTING, FINGER DIFFUSER

MC00310
PR: 126

HARNESSES & LIGHTING
GRAIN BIN

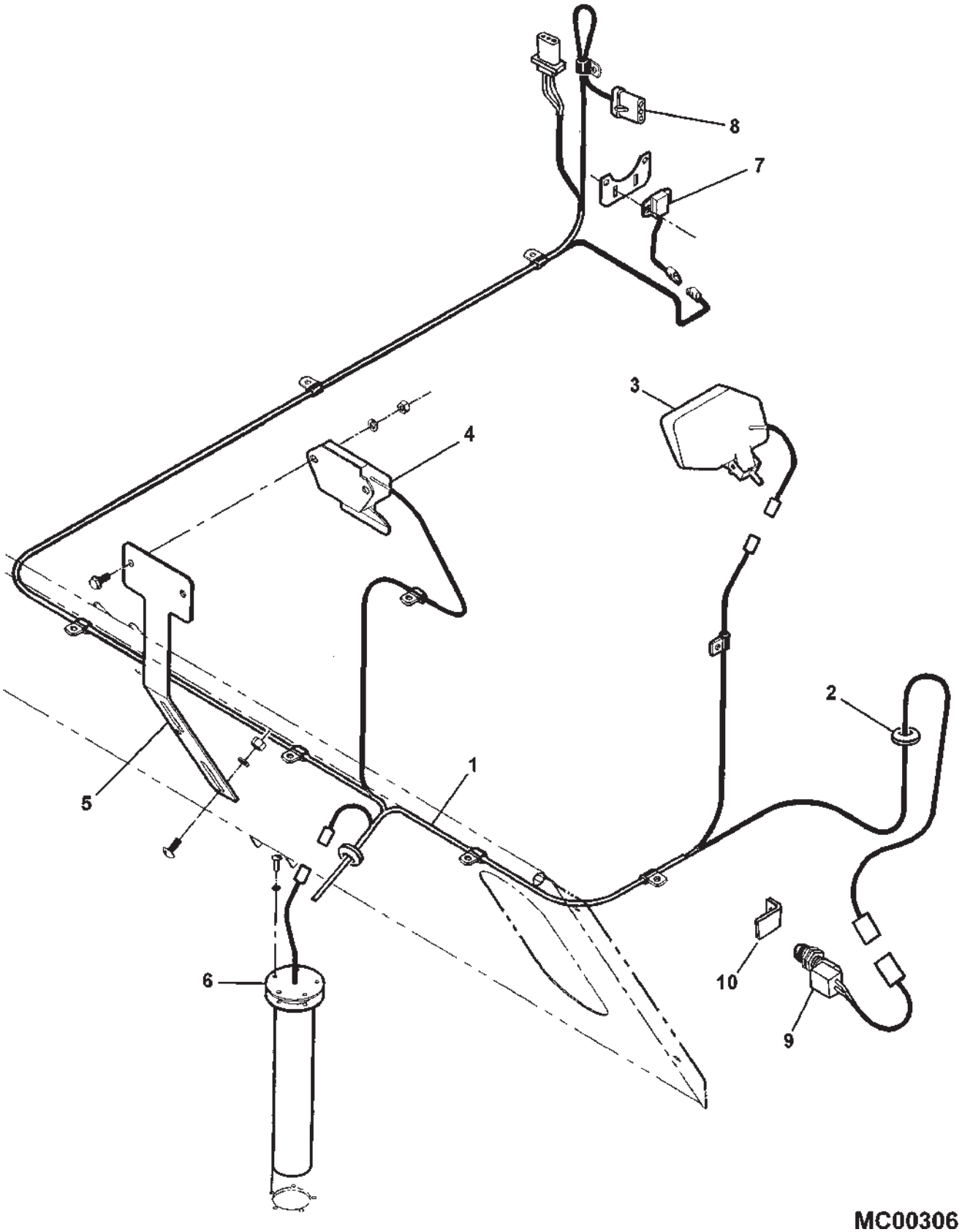

ITEM	NUMBER	QTY	DESCRIPTION
1	71391020	1	HARNESS, GRAIN BIN
	70937685	11	J-CLIP, 3/8 X .406 HOLE
	70936314	5	J-CLIP, 1/2 X .406 HOLE
	70921332	AR	CAPSCREW, 5/16-18 X 3/4
	70917356	AR	LOCKWASHER, 5/16
	70917372	AR	HEXNUT, 5/16-18
	70925094	3	TIE, BLACK NYLON, .184 X 7.31
2	700708340	1	GROMMET, RUBBER
3	71393704	1	LIGHT, GRAIN BIN
4	71375911	1	SENSOR, BIN LEVEL
	7883325	2	SCREW, WSHR HD MACH, 5/16-18 X 3/4
	70917356	2	LOCKWASHER, 5/16
	70917372	2	HEXNUT, 5/16-18
5	71393742	1	BRACKET, BIN LEVEL SENSOR
6	71407293	1	SENDER, FUEL LEVEL W/ GASKET
	3729528M1	5	SCREW, PAN HD MACH, #10-24 X 1-1/4
	705004	5	LOCKWASHER, #10 REG
	70917380	5	WASHER, .219 X .50 X .049 TH
	71398110	1	GASKET, SENDER
7	71391021	1	SENSOR, TWO WIRE
	70931317	2	BOLT, RD HD,SHT SQ NK, 1/4-20 X 3/4
	705012	2	LOCKWASHER, 1/4
	70916622	2	HEXNUT, 1/4-20
8	71188145	1	BRACKET, SHAFT
9	293766M1	1	SWITCH, MOMENTARY
10	2495780W1	1	BRACKET, UNLOADER INDICATOR
	70921210	1	CAPSCREW, 3/8-16 X 1.0
	70917378	3	WASHER, WIDE, 3/8
	705038	1	LOCKWASHER, 3/8
	70916950	1	HEXNUT, 3/8-16

MC00306
PR: 128

ELECTRICAL HARNESSES
REAR

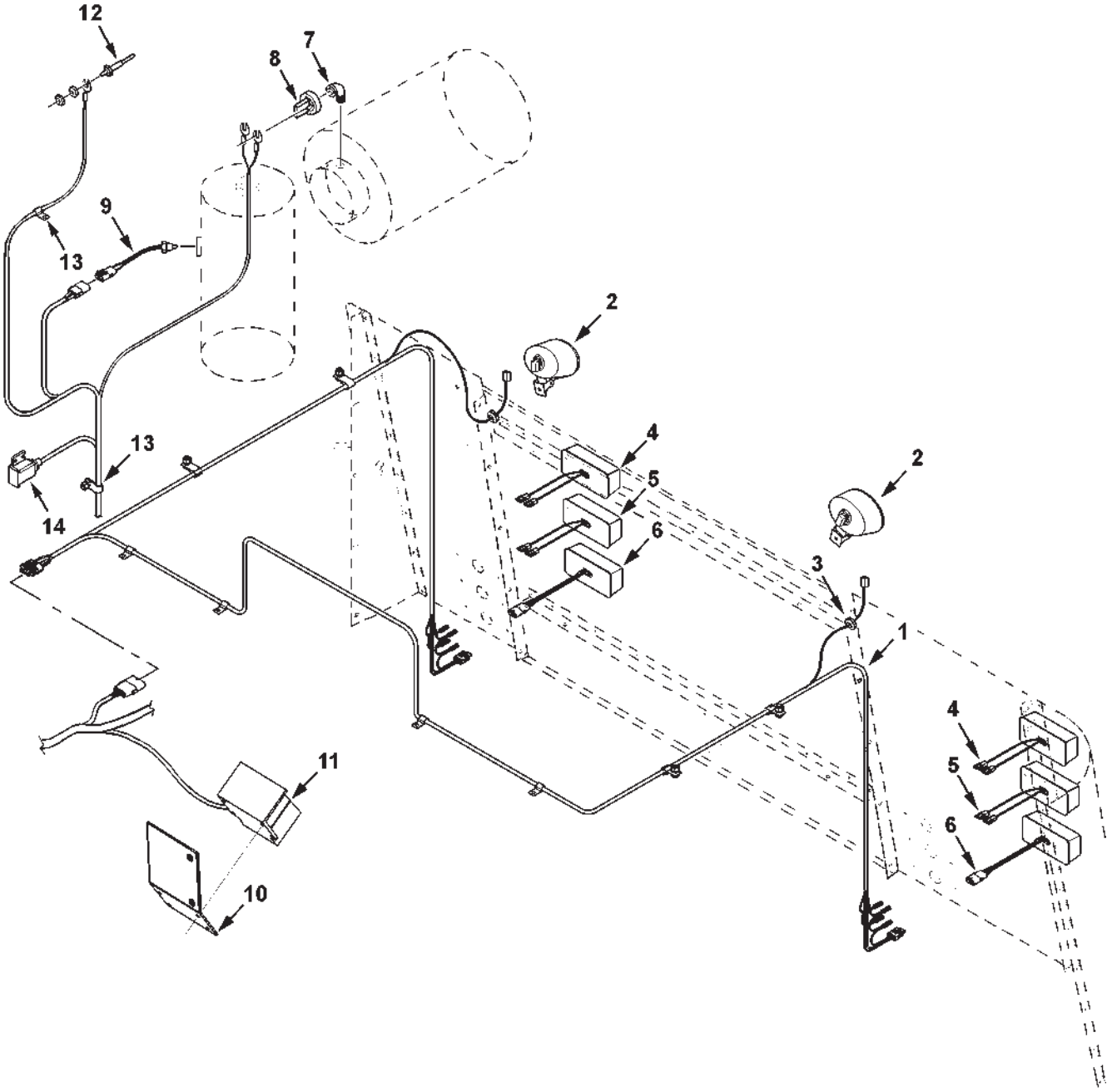

MC00363

ELECTRICAL HARNESSES
REAR

ITEM	NUMBER	QTY	DESCRIPTION
1	71391709	1	HARNESS, TAIL LIGHT
	70937677	1	J-CLIP, 1.0 X .406 HOLE
	70936314	12	J-CLIP, 1/2 X .406 HOLE
	70921965	4	CAPSCREW, 3/8-16 X 3/4
	705038	4	LOCKWASHER, 3/8
	70916950	4	HEXNUT, 3/8-16
	70925094	AR	TIE, SELF-LOCK .184 X 7.31
2	700726172	2	LIGHT, FLOOD
	700722351	2	BULB, HALOGEN 12V (GE #862)
3	70937691	2	GROMMET
4	72503309	2	LAMP ASY., WARNING (AMBER)
	1018729M1	1	BULB, 1156
	72501110	1	LENS, REPLACEMENT
	3729545M1	4	SCREW, PAN HD MACH, #10-24 X 2-1/2
	705004	4	LOCKWASHER, #10
	70916621	4	NUT, #10-24, REG
5	71391871	2	LAMP ASY., BACKUP (CLEAR)
	1018729M1	1	BULB, 1156
	3729545M1	4	SCREW, PAN HD MACH, #10-24 X 2-1/2
	705004	4	LOCKWASHER, #10
	70916621	4	NUT, #10-24, REG
6	700726168	2	LAMP ASY., TURN SIGNAL (RED)
	70928348	1	BULB, 1157
	-----	1	LENS, REPLACEMENT (ORDER ASY.)
	700718599	AR	KIT, CONNECTOR REPAIR
	3729545M1	4	SCREW, PAN HD MACH, #10-24 X 2-1/2
	705004	4	LOCKWASHER, #10
	70916621	4	NUT, #10-24, REG
7	70915955	1	ELBOW, 90 DEG FEM. 1/8-27 NPTF
8	31-2530050	1	SWITCH, AIR CLEANER VACUUM
9	71391418	1	SENSOR, OIL LEVEL W/WIRES
10	71398850	1	BRKT, BACK-UP ALARM (EFF. S/N HP87101)
11	71389319	1	ALARM, BACK-UP (EFF. S/N HP87101)
	7703457	4	CAPSCREW, 1/4-20 X 3/4 GR5
	705012	4	LOCKWASHER, 1/4
	704007	4	NUT, 1/4-20, REG
12	71193260	1	SENDER, RADIATOR LEVEL
	705004	1	LOCKWASHER, #10
	Y704445	1	HEXNUT, #10-32
13	70937685	2	J-CLIP, 3/8 DIA X .406 HOLE
	70929722	1	J-CLIP, 3/16 DIA X .281 HOLE
14	71391870	1	SERVICE LIGHT, MAGNETIC
	71397725	AR	OUTLET SOCKET, 12V, SERVICE LIGHT
	70936592	4	SCREW, PAN HD TAPPING, #10-16 X 3/4

MC00363
PR: 130

BEACON LIGHTS
FIELD KIT

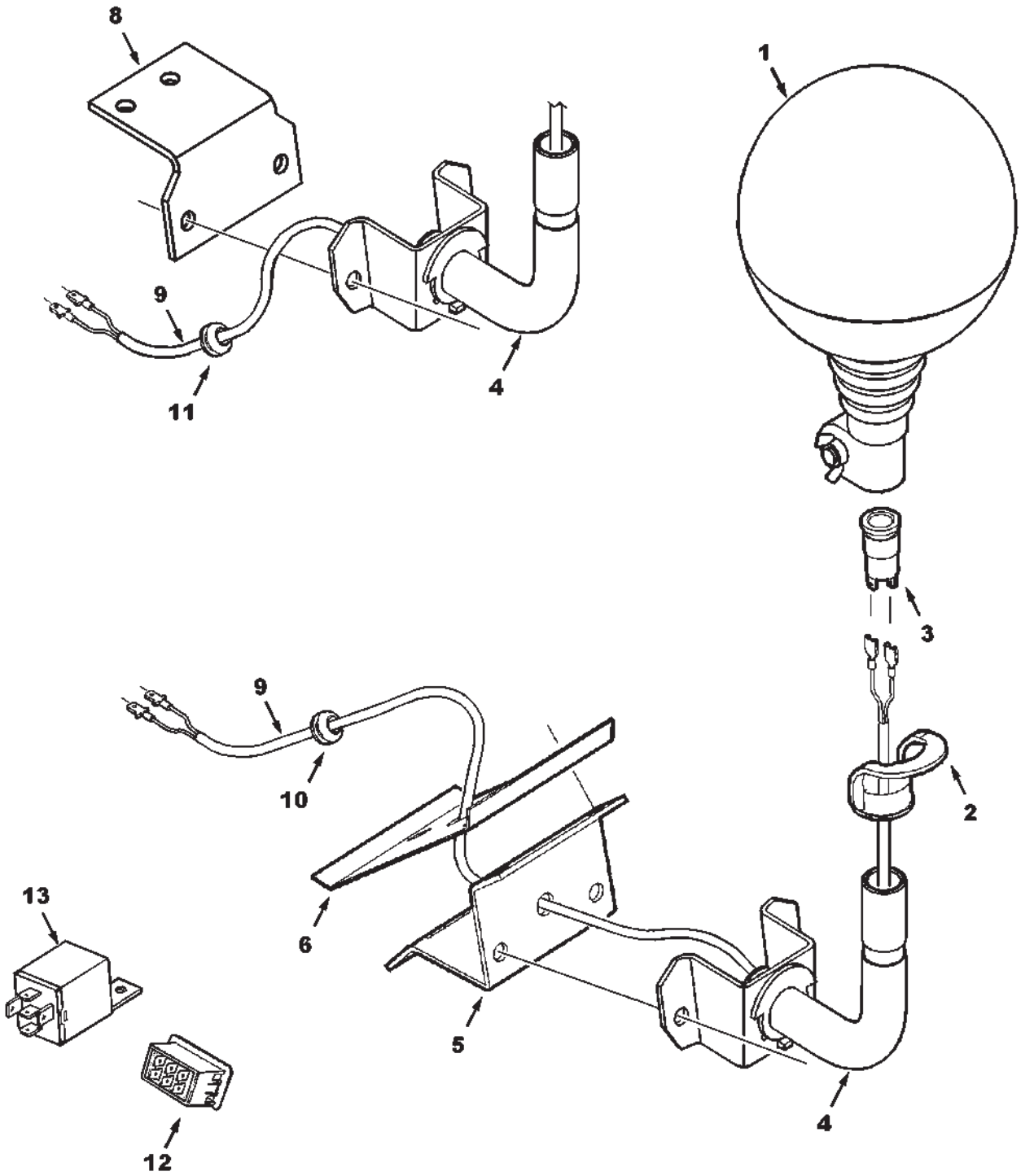

BEACON LIGHTS
FIELD KIT

ITEM	NUMBER	QTY	DESCRIPTION
-	71395048	1	* KIT, BEACON LIGHT (PRIOR S/N HN87101)
-	71402109	1	* KIT, BEACON LIGHT (EFF. S/N HN87101)
1	3715144M92	2	BEACON
2	3617860M1	2	PLUG, BEACON
3	3617859M1	2	CAP, BEACON
4	3778093M91	2	SUPPORT, BEACON
	7883382	4	SCREW, HEX WSHR HD MACH, 3/8-16 X 1
	70931211	4	LOCKNUT, SERRATED FLANGE, 3/8-16
5	71391403	1	BRACKET, BEACON MTG. (FRONT)
	7883382	3	SCREW, HEX WSHR HD MACH, 3/8-16 X 1
	70931211	3	LOCKNUT, SERRATED FLANGE, 3/8-16
6	71391404	1	PLATE, BACKUP (FRT)
8	71388391	1	BRACKET, BEACON MTG. (REAR)
9	71395830	2	HARNESS, BEACON LIGHT (FRT & REAR)
10	70923510	1	GROMMET, RUBBER, .375 ID X 3/4 OD (FRT)
11	7827629	1	GROMMET, RUBBER, .375 ID X 5/8 OD (REAR)
12	71387419	1	SWITCH, BEACON (PRIOR S/N HN87101)
	71401336	1	SWITCH, BEACON (EFF. S/N HN87101)
13	72160919	1	RELAY, 40 AMP (EFF. S/N HN87101)
	70925442	2	TIE, BLACK NYLON, .165 X 14 LG

* ORDER THRU DEALER CENTRAL

MC00364
PR: t04c23m56d0003

HIGH INTENSITY LIGHTING
FIELD KIT

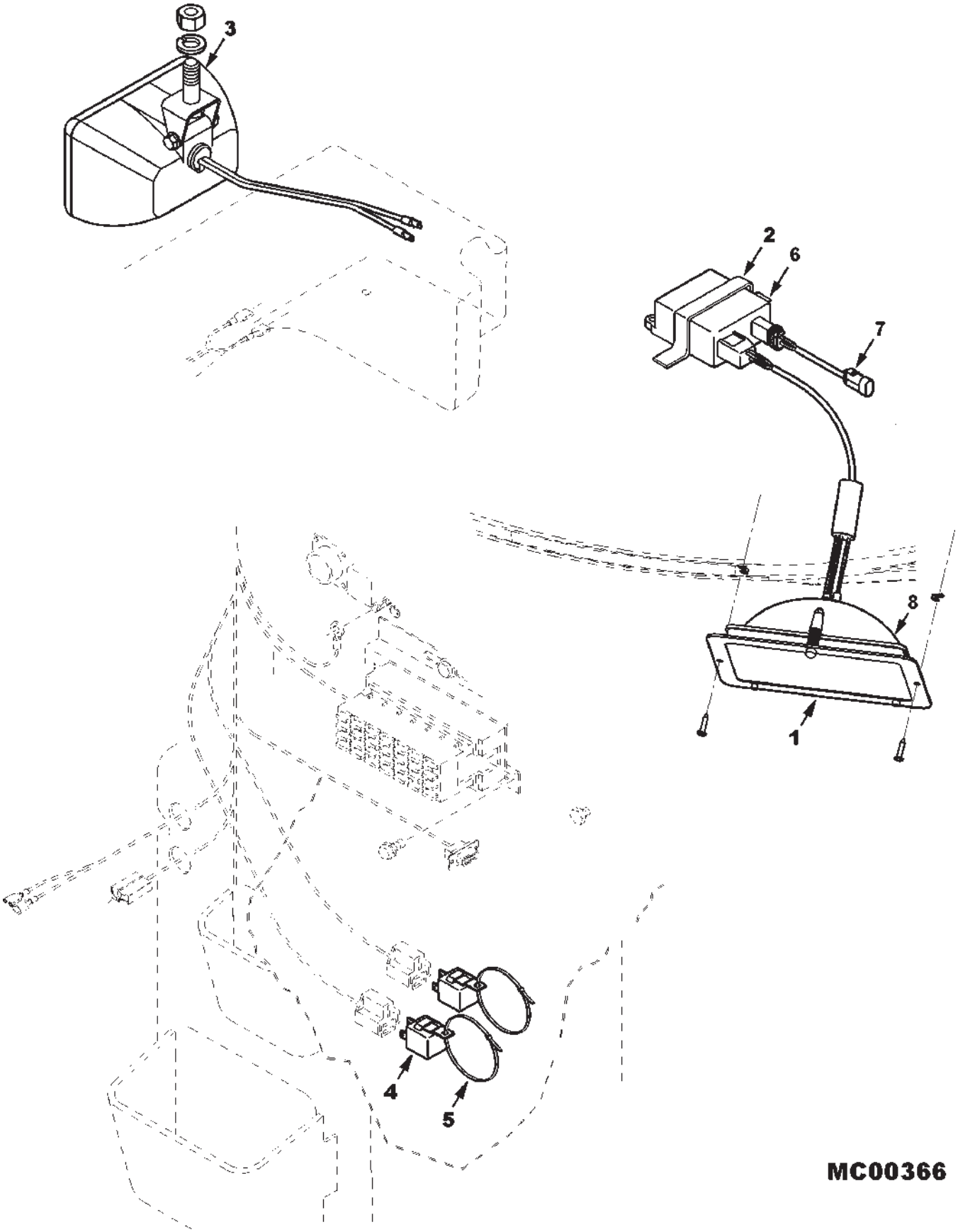

HIGH INTENSITY LIGHTING
FIELD KIT

ITEM	NUMBER	QTY	DESCRIPTION
-	71402112	1	*KIT, H.I.D. LIGHTING(PRIOR S/N HP87101)
-	71406074	1	*KIT, H.I.D. LIGHTING (EFF. S/N HP87101)
1	71401342	2	LAMP ASY, HIGH INTENSITY (INCL IT.6,7,8)
			(SERVICE W/ 71410912)
	71410912	2	LAMP ASY,HIGH INT'Y (INCL IT.6,7,8,9,10)
	70937550	4	SCREW, PAN HD, TAPPING, #8-18 X 3/4
	700715255	4	NUT, SPEED, #8
2	700719940	2	FASTENER, ADHESIVE BACK
3	71393703	1	LIGHT, CAB (PRIOR S/N HP87101)
4	72160919	2	RELAY, 40 AMP (PRIOR S/N HP87101)
5	70925094	2	TIE, BLACK NYLON (PRIOR S/N HP87101)
6	71408385	1	BALLAST (FOR LAMP 71401342)
	71408393	1	BALLAST (FOR LAMP 71410912)
7	71408386	1	ADAPTER WIRE (FOR LAMP 71401342)
	71408394	1	ADAPTER WIRE (FOR LAMP 71410912)
8	71408387	1	LAMP & STARTER (FOR LAMP 71401342)
	71408397	1	LAMP ASY (FOR LAMP 71410912)
9	71408395	1	WIRE ASY, STARTER (NOT ILLUS.)
10	71408396	1	WIRE ASY, BULB (NOT ILLUS.)

* ORDER THRU DEALER CENTRAL

MC00366
PR: t04c23m56d0004

SERVICE CONNECTORS
HARNESS REPAIR

ILLUSTRATION NOT AVAILABLE

XXXXXXXX

ITEM	NUMBER	QTY	DESCRIPTION
-			LISTED PARTS USED FOR REPAIR OF WIRE HARNESSES
1	71390804	AR	CONNECTOR, 26 WAY, DEUTSCH, DRC26-50S-05
2	71390806	AR	REMOVAL TOOL, DEUTSCH, 0411-240-2005
3	71390809	AR	PROBE, EXTRTN TOOL, SZ 16, 0411-310-1605
4	71390810	AR	CONNECTOR, 36 WAY, DEUTSCH, HD36-24-23SN
5	71390813	AR	CONNECTOR, 3 WAY, DEUTSCH, DT06-3S-P012
6	71390815	AR	WEDGE CONNECTOR, DEUTSCH, W3S-P012
7	71390816	AR	CONNECTOR,12 WAY,DEUTSCH, DT06-12SA-P012
8	71390817	AR	WEDGE CONNECTOR, DEUTSCH, W12S-P012
9	71390820	AR	PLUG CONNECTOR, 15 WAY, AMP, 1-640523-0
10	71390821	AR	RECEPTACLE CONN, 12 WAY, AMP,1-640512-0
11	71390822	AR	PLUG CONNECTOR, 12 WAY, AMP, 1-640522-0
12	71390823	AR	RECEPTACLE CONN, 9 WAY, AMP, 1-640511-0
13	71390824	AR	PLUG CONNECTOR, 9 WAY, AMP, 1-640521-0
14	71390825	AR	RECEPTACLE CONN, 6 WAY, AMP, 1-640510-0
15	71391001	AR	PLUG CONNECTOR, 6 WAY, AMP, 1-640520-0
16	71391002	AR	PIN TERMINAL, 10 PCS. AMP, 645545-1
17	71391003	AR	RECEPTACLE TERML, 10 PCS, AMP, 641300-1
18	71397676	AR	RECEPT CONN, 9 WAY, DEUTSCH, HD14-9-96P
19	71397677	AR	PLUG CONNECTOR, 9, DEUTSCH, HD16-9-96S
20	71397678	AR	CONNECTOR, 3 WAY, DEUTSCH, DT04-3P-E004
21	71397679	AR	WEDGE LOCK, 3 TERM'L, DEUTSCH, W3P
22	71397680	AR	CONNECTOR, 7 PIN FEM, COLE HERSEE, 12301
23	71397681	AR	RECEPT CONN, 8 PIN, DEUTSCH, DTM04-08PB
24	71397682	AR	PLUG CONNECTOR, DEUTSCH, HDP26-18-14-SE
25	71397683	AR	PLUG CONNECTOR, 40, DEUTSCH, DRC18-40SB
26	71397684	AR	SUPERSEAL CONNECTOR, AMP, 282087-1
27	71397685	AR	TERMINAL, AMP, 183025-1
28	71397686	AR	SEAL-WIRE, AMP, 281934-2
29	71397687	AR	CONNECTOR, 7 PIN, COLE HERSEE, 12300
30	71397688	AR	CONNECTOR, 6 PIN, PACKARD, 12124107
31	71397689	AR	CONNECTOR, 12 PIN, CARLINGSWITCH, LC1-02
32	71397690	AR	CONNECTOR, 3 PIN, PACKARD, 12162280
33	71397691	AR	CONNECTOR, 5 PIN, PACKARD, 12110539
34	71397692	AR	TERM. METRI-PK,10 PCS, PACKARD, 12129409
35	71397693	AR	SEAL, METRI-PK,10 PCS, PACKARD, 12015359
36	71397695	AR	SEAL, METRI-PK,10 PCS, PACKARD, 1201539
37	71397697	AR	SEC LOCK, PACKARD, 12110540
38	71397698	AR	CONNECTOR, 3 PIN, PACKARD, 12162182
39	71397701	AR	SEAL, 3 WAY, PACKARD, 12065285
40	71397702	AR	TERMINAL, 10 PCS, DEUTSCH, 1062-16-0144
41	71397703	AR	RESISTOR, 3 WAY, DEUTSCH, DT04-3P-P006

CONTINUED

SERVICE CONNECTORS
HARNESS REPAIR

ILLUSTRATION NOT AVAILABLE

XXXXXXXX

ITEM	NUMBER	QTY	DESCRIPTION
-			LISTED PARTS USED FOR REPAIR OF WIRE HARNESSES
42	71397704	AR	CONNECTOR, 16 PIN, PACKARD, 15326667
43	71397705	AR	TERMINAL, 10 PCS, PACKARD, 15304731
44	71397706	AR	SEAL, 14 GA, PACKARD, 12191222
45	71397707	AR	SEAL, 12 GA, PACKARD, 12191223
46	71397708	AR	PLUG, PACKARD, 15305170
47	71397709	AR	CONNECTOR, 16 PIN, PACKARD, 15326666
48	71397710	AR	TERMINAL-SOCK, 10 PCS, PACKARD, 15304719
49	71397711	AR	CONN, 8 PIN, METRI PAC,PACKARD, 12047931
50	71397712	AR	SEC-LOCK, PACKARD, 12047936
51	71397713	AR	CONNECTOR, METRI PAC, PACKARD, 12129615
52	71397714	AR	CONN.RECEPTCL, 5 PIN, PACKARD, 12034342
53	71397715	AR	CONNECTOR, METRI PAC, PACKARD, 12124819
54	71397716	AR	SEC-LOCK, METRI PACK, PACKARD, 12020807
55	71397717	AR	TERM. METRI-PK,10 PCS, PACKARD, 12077411
56	71397718	AR	SEAL, 10 PCS, PACKARD, 12041351
57	71397719	AR	CONN, 8 PIN, METRI PAC,PACKARD, 12047937
58	71397720	AR	SEC-LOCK, METRI PACK, PACKARD, 12066304
59	71397721	AR	BOOT, COLE HERSEE, 81356
60	71397722	AR	TERMINAL-SOCKET, COLE HERSEE, 31784
61	71397724	AR	SEC-LOCK, METRI PACK, PACKARD, 12052850
62	71397725	AR	ELECT. OUTLET, 12 VOLT, CASCO, 212711
63	71397731	AR	CONNECTOR, FUSE, PACKARD, 12033769
64	71397732	AR	PLUG CONN'R, 70 PIN, DEUTSCH, DRC16-70SA
65	71397733	AR	CONN. RECEPTCL, 4 PIN, DEUTSCH, DT04-4P
66	71397734	AR	SEAL, METRI-PK,10 PCS, PACKARD, 12052924
67	71397735	AR	PLUG CONN'R, 40 PIN, DEUTSCH, DRC18-40SA
68	71397736	AR	PLUG CONN'R, 4 PIN, DEUTSCH, DTM06-4SA
69	71397737	AR	CONN. RECEPTCL, 2 PIN, PACKARD, 08911772
70	71397738	AR	TERM. METRI-PK,10 PCS, PACKARD, 15304730
71	71397739	AR	SEAL-DELPHI, PACKARD, 15366067
72	71397740	AR	CONN, 2 PIN, METRI-PAC,PACKARD, 12162000
73	71397741	AR	TERMINAL-SOCK, 10 PCS, PACKARD, 08911640
74	71397742	AR	HARNESS, 4 PIN, MOLDED, 12" LG
75	71397743	AR	CONNECTOR, 5 PIN, PACKARD, 12065158
76	71398851	AR	SEAL-DELPHI, PACKARD, 12015284
77	71398852	AR	TERMINAL-SOCK, 10 PCS, PACKARD, 12084590
78	71398853	AR	TERM. METRI-PK,10 PCS, PACKARD, 12015870
79	700709919	AR	TERMINAL-PIN, 18-14 AWG, AMP, 66602-2
80	700718792	AR	CONNECTOR, 6 PIN, PACKARD, 12052848
81	71399228	AR	CONTACT PIN, DEUTSCH, 0460-204-12141
82	700721776	AR	CONTACT SOCKET, DEUTSCH, 0462-203-12141

XXXXXXXX
PR: t05b15n00a0003

HOUSING
(PRIOR S/N HP87101)

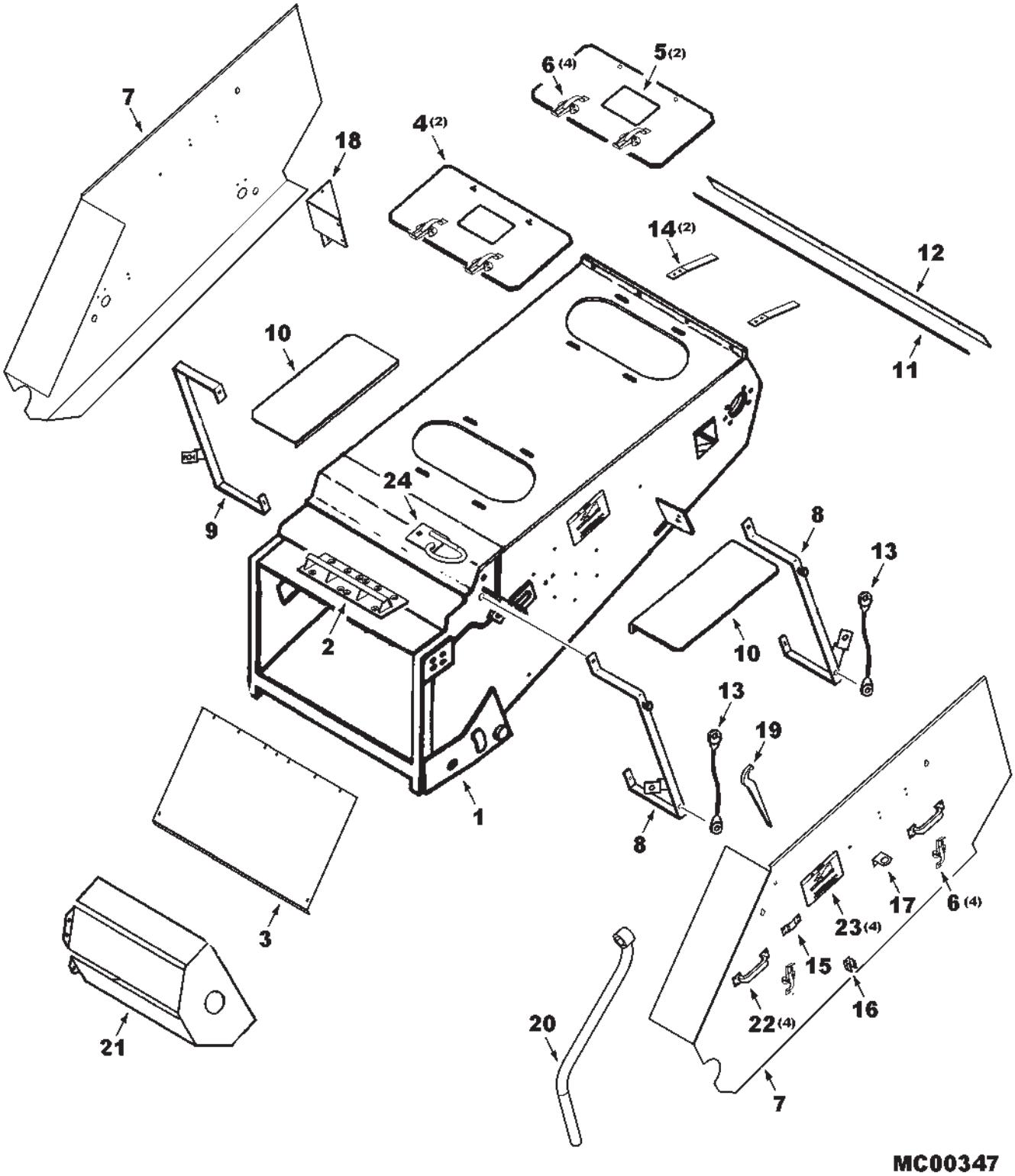

HOUSING
(PRIOR S/N HP87101)

ITEM	NUMBER	QTY	DESCRIPTION
1	71400970	1	HOUSING WLDMT, FEEDER
2	71380423	2	HOOKUP WLDMT, HEADER
	355736X1	14	CAPSCREW, HEX SOCKT, 1/2-13 X 1-1/4
	71383783	4	SHIM, HEADER LEVELING
	71402104	--	KIT, HDR HOOKUP GRP(HIGH MOUNT, NON-LTM)
			ORDER FROM DEALER CENTRAL)(INCLUDES)
	71399829	1	RISER WLDMT, LH (NOT ILLUS.)
	71399830	1	RISER WLDMT, RH (NOT ILLUS.)
	71383783	4	SHIM, HEADER LEVELING
	70919089	14	CAPSCREW, 1/2-13 X 1-3/4 GR5
	Y705046	14	LOCKWASHER, 1/2 REG
3	116327W1	1	COVER, FLOOR
	365775X1	2	SCREW, THD FORM., 1/4-20 X 1/2
	70931317	5	BOLT, RD HD,SHT SQ NK, 1/4-20 X 3/4
	70931209	5	NUT, SERR. FLNG, 1/4-20
4	71367218B	4	DOOR ASY. (INCL. CLAMPS & DECAL)
5	71379134	4	DECAL, WARNING
6	762975	8	CLAMP
	700717635	16	RIVET, 3/16 X 13/32
7	71393786	1	SHIELD ASY, LH (INCL IT'S 6,22,23,15-17)
	71393784	1	SHIELD ASY, RH (INCL IT'S 6,22,23)
8	71393776	1	BRACKET WLDMT, FRONT, LH
	70921333	1	CAPSCREW, 5/16-18 X 1.0
	70917356	1	LOCKWASHER, 5/16
	70917372	1	NUT, 5/16-18 REG
	70921965	1	CAPSCREW, 3/8-16 X 3/4 GR5
	705038	1	LOCKWASHER, 3/8 REG
	71393780	1	BRACKET WLDMT, REAR, LH
	70921210	2	CAPSCREW, 3/8-16 X 1"
	705038	2	LOCKWASHER, 3/8
	70916950	2	NUT, 3/8-16 REG
	70918266	1	WASHER, 3/8 NARR.
9	71393778	1	BRACKET ASY., FRONT, RH
	70921333	1	CAPSCREW, 5/16-18 X 1.0
	70917356	1	LOCKWASHER, 5/16
	70917372	1	NUT, 5/16-18 REG
	70921965	1	CAPSCREW, 3/8-16 X 3/4 GR5
	705038	1	LOCKWASHER, 3/8 REG
10	71397452B	1	SHIELD, TOP, LH
	70936778	2	J-CLIP, 3/4 X .406 HOLE
	70923683	3	SCREW,HEX HD, TAPPING, 3/8-16 X 3/4
	71393788	1	SHIELD, TOP, RH
	70923683	3	SCREW,HEX HD, TAPPING, 3/8-16 X 3/4
11	2506050W1	1	RETAINER, PIVOT SEAL
12	2506040W1	1	SEAL, UPPER PIVOT
	7703457	9	CAPSCREW, 1/4-20 X 3/4 GR5
	70919310	9	LOCKWASHER, 1/4
	70916622	9	NUT, 1/4-20 REG

CONTINUED

HOUSING
(PRIOR S/N HP87101)

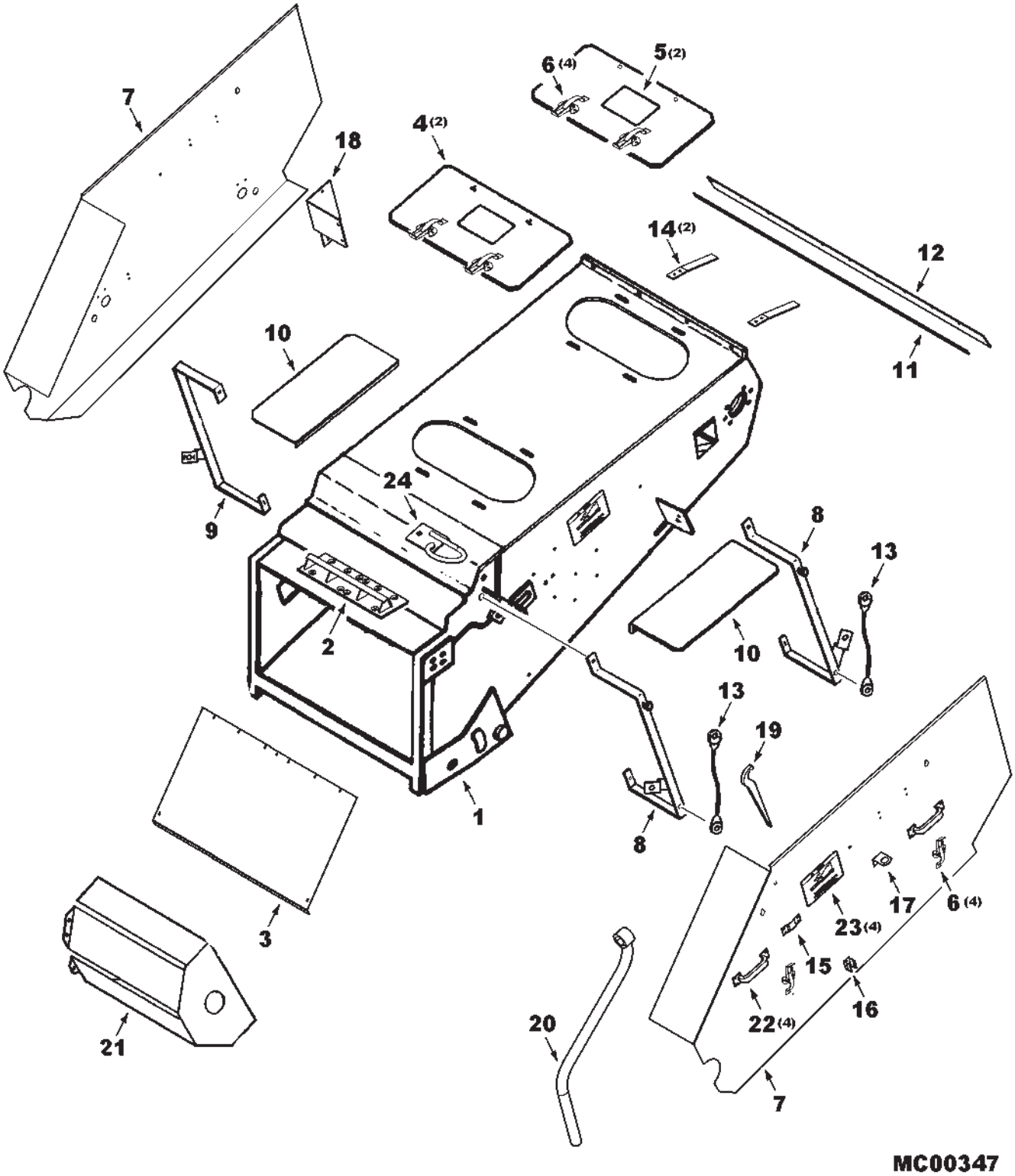

HOUSING
(PRIOR S/N HP87101)

ITEM	NUMBER	QTY	DESCRIPTION
13	71374425	2	CABLE, SHIELD RETAINER
	70917356	4	WASHER, LOCK, 5/16
	70917372	4	NUT, HEX, 5/16-18
	70918265	4	WASHER, 5/16 NARR
	70927075	4	BOLT, RHSN, 5/16-18 X 1.0
14	116328W1	2	SUPPORT, PIVOT SLIDE
	70927075	4	BOLT, CARRIAGE, 5/16-18 UNC X 1
	70917356	4	LOCKWASHER, 5/16
	70917372	4	NUT, HEX 5/16-18
15	71385633	1	BRACKET, WRENCH
	71394821	1	SPACER, BRKT.
	70924837	4	RIVET, .188 X .277 LG
16	71310976	1	CLIP, WRENCH
	70922928	2	SCREW, #6-32 X 1/2
	70917458	2	WASHER, FLAT #6
	70917459	2	LOCKWASHER, #6
	704551	2	NUT, #6-32
17	71352828	1	BRACKET, WRENCH
	70925205	1	BOLT, HEX 5/16-18 X 5/8
	70917356	1	LOCKWASHER, 5/16
	70917372	1	NUT, HEX, 5/16-18
18	71393782	1	BRACKET ASY, REAR, RH
	70921333	2	CAPSCREW, 5/16-18 X 1
	70917356	2	WASHER, LOCK, 5/16
	70917372	2	NUT, 5/16-18
19	71394674	1	WRENCH, C'SHAFT
20	71388248	1	HANDLE WLMT., FEEDER LATCH
21	116518W1	1	SHIELD, COUNTERSHAFT, LH
	116519W1	1	SHIELD, COUNTERSHAFT, RH
	70924856	6	SCREW,HEX HD,TAPPING, 5/16-18 X 1/2
22	71304149	4	HANDLE
	70924837	16	RIVET, .188 X .277 LG
23	111095W1	4	DECAL, DANGER
24	71375388	1	RETAINER WLDMT, HOSES
	7703432	2	SCREW, HEX FLNG SERR, 3/8-16 X 3/4
	Y704734	2	NUT, HEX FLNG TOP LK, 3/8-16

MC00347
PR: 132

HOUSING & SHIELDS
(EFF. S/N HP87101)

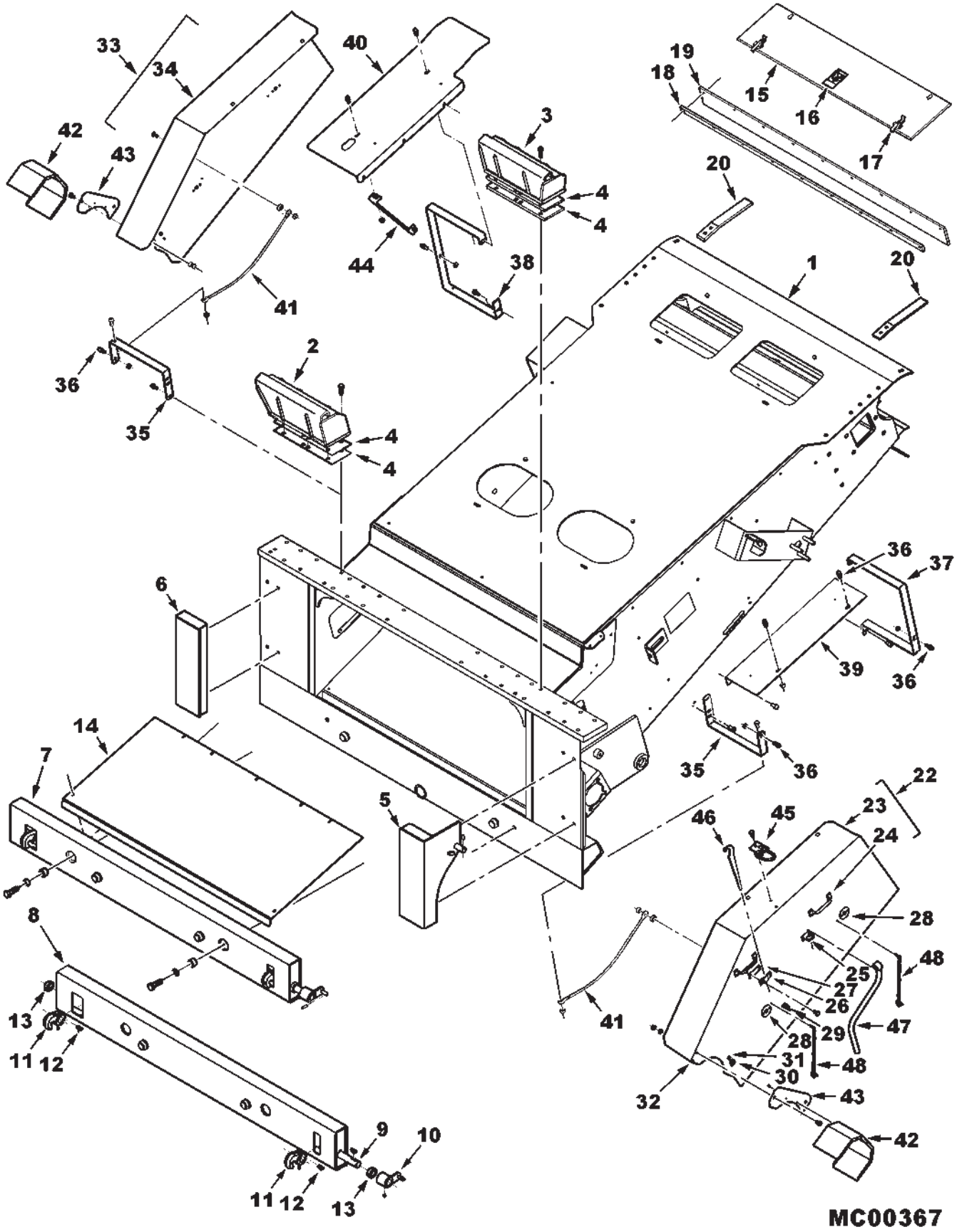

HOUSING & SHIELDS
(EFF. S/N HP87101)

ITEM	NUMBER	QTY	DESCRIPTION
1	71403852	1	HOUSING WLDMT, FEEDER
2	71406510	1	HOOKUP WLDMT, RH, HEADER
	70919089	7	CAPSCREW, 1/2-13 X 1-3/4
	Y705046	7	LOCKWASHER, 1/2
3	71406504	7	HOOKUP WLDMT, LH, HEADER
	70919089	7	CAPSCREW, 1/2-13 X 1-3/4
	Y705046	7	LOCKWASHER, 1/2
4	71383783	4	SHIM, HEADER LEVELING
5	71406518	1	FRAME WLDMT, LH, VERTICAL
	70923114	2	CAPSCREW, 1/2-13 X 1 GR5
	Y705046	2	LOCKWASHER, 1/2 REG
6	71406514	1	FRAME WLDMT, RH, VERTICAL
	70923114	2	CAPSCREW, 1/2-13 X 1 GR5
	Y705046	2	LOCKWASHER, 1/2
7	71406804	1	FRAME ASY, HDR HOOKUP, LOWER (INCL. ITEMS 8 THRU 13)
	70922664	2	CAPSCREW, 5/8-11 X 2 GR5
	70917373	2	LOCKWASHER, 5/8
	368615X1	2	SPACER, .656 X 1.125 OD X .66 LG
8	71406520	1	FRAME WLDMT, HDR HOOKUP, LOWER
9	71406802	1	SHAFT, HEADER LATCH
10	116343W1	1	CRANK WLDMT, LATCH, LOWER
	70921263	1	SETSCREW, HEX SOCKET, 5/16-18 X 3/8
11	71317841	2	HOOK
	70903835	2	SETSCREW, HEX SOCKET, 1/4-20 X 3/8
12	70905126	3	KEY, WOODRUFF, .25 X 1 DIA, #808
13	375028X1	2	COLLAR, BRG, 1 DIA, W/SETSCREW
14	116327W1	1	COVER, FLOOR
	365775X1	2	SCREW, THD FORM., 1/4-20 X 1/2
	70931317	5	BOLT, RD HD,SHT SQ NK, 1/4-20 X 3/4
	70931209	5	NUT, SERR. FLNG, 1/4-20
15	71367218B	4	DOOR ASY (INCL. CLAMPS & DECAL)
16	71379134	4	DECAL, WARNING
17	762975	8	CLAMP
	700717635	16	RIVET, 3/16 X 13/32
18	2506050W1	1	RETAINER, PIVOT SEAL
19	2506040W1	1	SEAL, UPPER PIVOT
	7703457	9	CAPSCREW, 1/4-20 X 3/4 GR5
	705012	9	LOCKWASHER, 1/4
	70916622	9	NUT, 1/4-20 REG
20	116328W1	2	SUPPORT, PIVOT SLIDE
	70927075	4	BOLT, CARRIAGE, 5/16-18 UNC X 1
	70917356	4	LOCKWASHER 5/16
	70917372	4	NUT, HEX 5/16-18

CONTINUED

MC00367
PR: t05b15n00a0004

HOUSING & SHIELDS
(EFF. S/N HP87101)

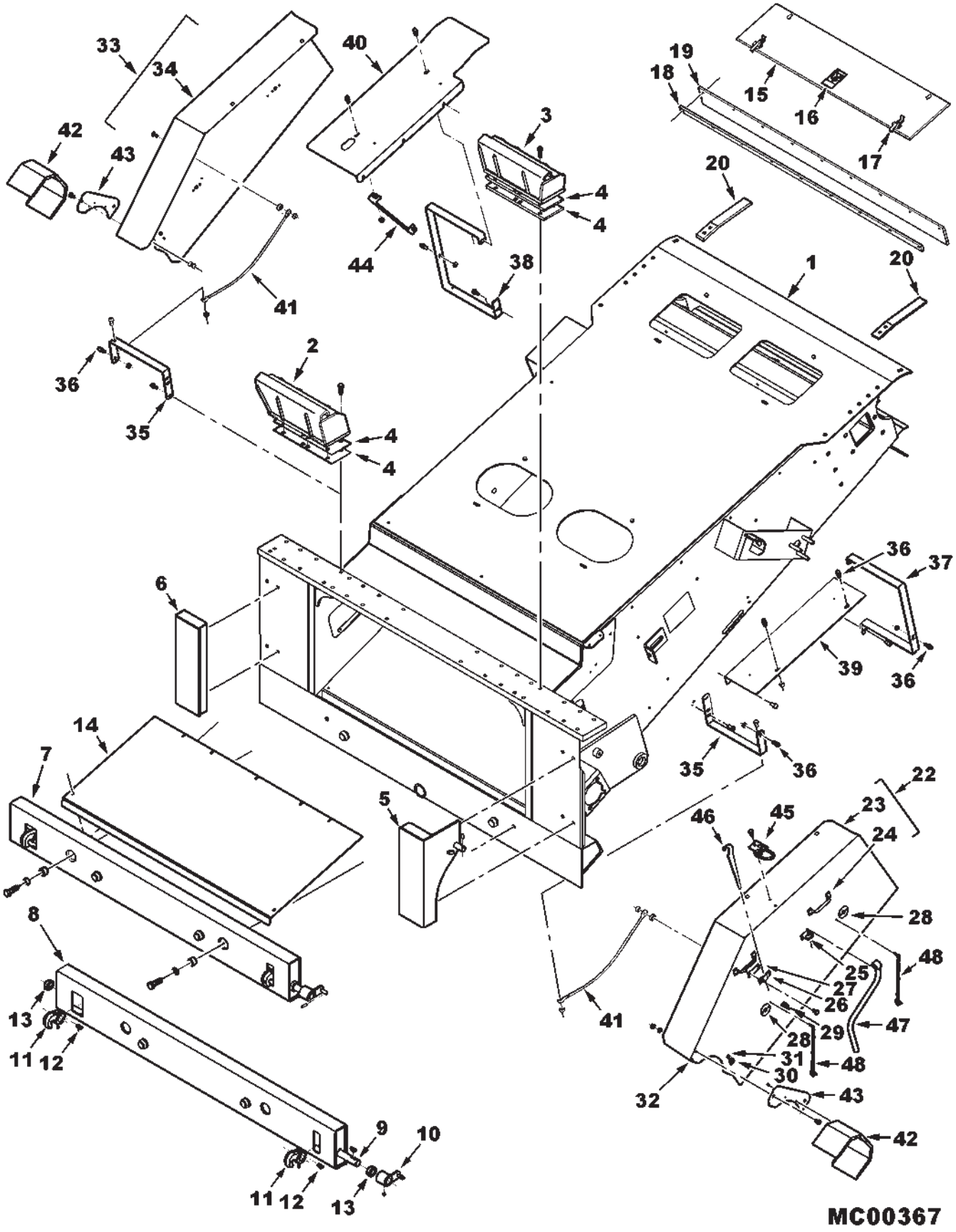

HOUSING & SHIELDS
(EFF. S/N HP87101)

ITEM	NUMBER	QTY	DESCRIPTION
22	71401636	1	SHIELD ASY, FEEDER, LEFT (INCL. ITEMS 23 THRU 32)
23	71401637	1	SHIELD, LEFT
24	71304149	2	HANDLE
	70924837	8	POP RIVET, .188 X .063-.125 GRIP
25	71352828	1	BRACKET, HANDLE MOUNT
	70925205	1	CAPSCREW, 5/16-18 X 5/8
	70917356	1	LOCKWASHER, 5/16
	70917372	1	NUT, 5/16-18 REG
26	71385633	1	BRACKET, WRENCH
27	71394821	1	SPACER, BRKT.
	70924837	4	POP RIVET, .188 X .063-.125 GRIP
28	71400739	2	PLATE, PIN
	70924837	4	POP RIVET, .188 X .063-.125 GRIP
29	71310976	1	CLIP, WRENCH
	70922928	2	SCREW, #6-32 X 1/2
	70917458	2	WASHER, FLAT #6
	70917459	2	LOCKWASHER #6
	704551	2	NUT, #6-32
30	70929287	1	FASTENER, SNAP
	70924837	1	POP RIVET, .188 X .063-.125 GRIP
31	70937660	1	SCREW, PAN HD TAPPING, 1/4-20 X 5/8
	1703354	1	NUT, HEX FLNG TOP LOCK, 1/4-20
32	7883267	1	SCREW, HEX WSHR HD, MACH, 1/4-20 X 1/2
	1703354	1	NUT, HEX FLNG TOP LOCK, 1/4-20
33	71401628	1	SHIELD ASY, FEEDER, RIGHT (INCL. ITEMS 24, 28, 30, 31, 32, 34)
34	71401627	1	SHIELD, RIGHT
35	71407660	2	SUPPORT, SHIELD, FRONT
	7702012	2	SCR, HEX WSHR HD TAPPING, 3/8-16 X 1
36	1656110W2	8	PIN, SHIELD LOCK
	Y704734	8	NUT, HEX FLNG TOP LOCK, 3/8-16
37	71401633	1	SUPPORT, SHIELD, LEFT
	7702012	1	SCR, HEX WSHR HD TAPPING, 3/8-16 X 1
38	71401632	1	SUPPORT, SHIELD, RIGHT
	7702012	1	SCR, HEX WSHR HD TAPPING, 3/8-16 X 1
39	71401638	1	SHIELD, TOP, LEFT
	70927134	2	J-CLIP, 5/8 X .406 HOLE (NOT ILLUS.)
	7702012	3	SCR, HEX WSHR HD TAPPING, 3/8-16 X 1
40	71401626	1	SHIELD, TOP, RIGHT
	70927134	2	J-CLIP, 5/8 X .406 HOLE (NOT ILLUS.)
41	71374425	2	CABLE, TETHER
	70931350	2	BOLT, RND HD SQ NK, 3/8-16 X 1
	705541	2	WASHER, 1/2 HARD
	Y704734	4	NUT, HEX FLNG TOP LOCK, 3/8-16
	7883382	2	SCREW, HEX WSHR HD MACH, 3/8-16 X 1

CONTINUED

HOUSING & SHIELDS
(EFF. S/N HP87101)

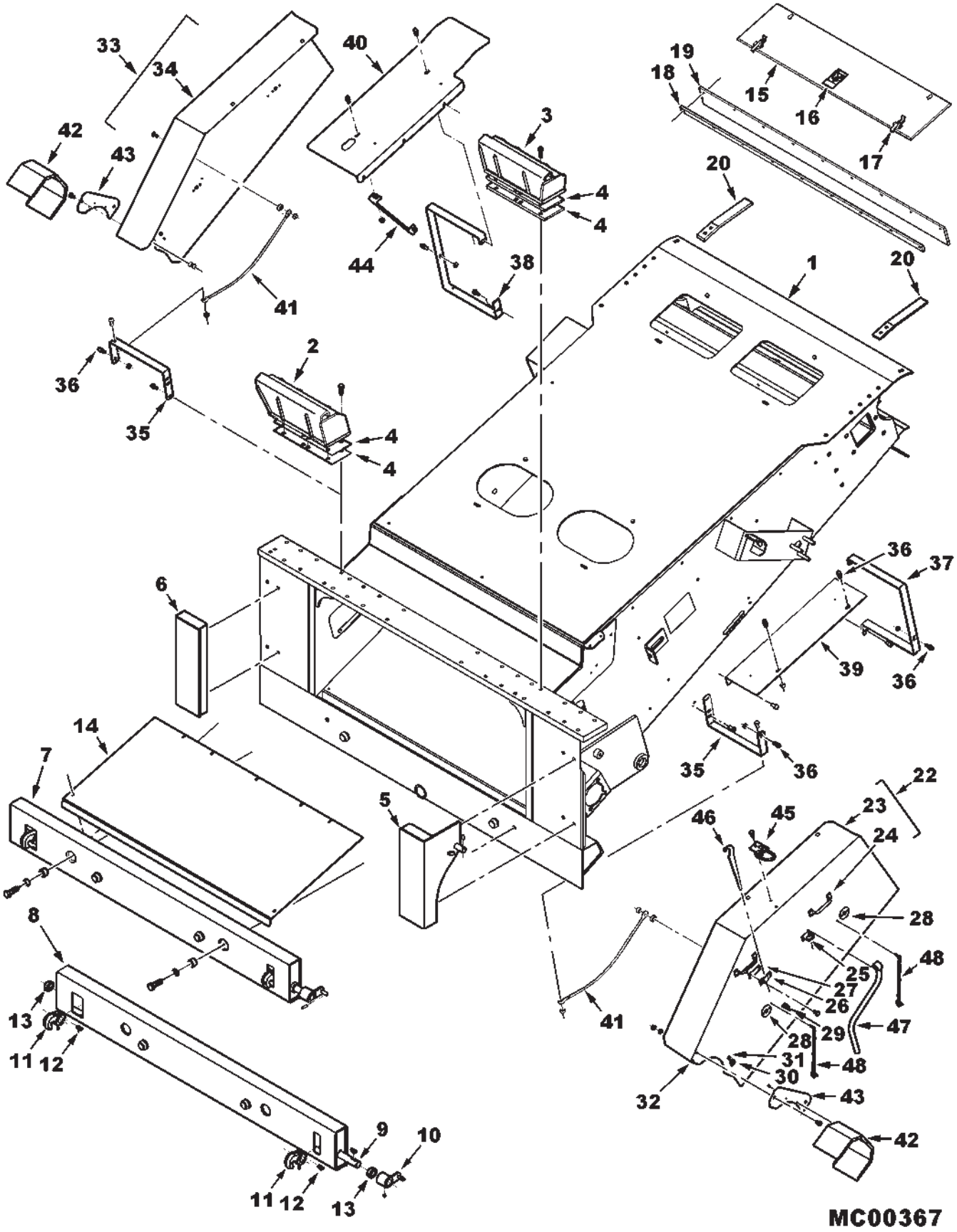

HOUSING & SHIELDS
(EFF. S/N HP87101)

ITEM	NUMBER	QTY	DESCRIPTION
42	71409456	2	SHIELD, DRIVELINE
43	71401660	2	PLATE, COVER
	7883374	2	SCREW,HEX WSHR HD MACH, 3/8-16 X 3/4
	Y705533	2	WASHER, 3/8 HARD
	Y704734	2	NUT, HEX FLNG TOP LOCK, 3/8-16
	70924837	6	POP RIVET, .188 X .063-.125 GRIP
44	71401658	1	SUPPORT, TOP SHIELD, RH
	7702012	3	SCR, HEX WSHR HD TAPPING, 3/8-16 X 1
45	71375388	1	RETAINER WLDMT, HOSE
	7883382	2	SCREW, HEX WSHR HD MACH, 3/8-16 X 1
	Y704734	2	NUT, HEX FLNG TOP LOCK, 3/8-16
46	28280440	1	WRENCH, C'SHAFT
47	71388248	1	HANDLE WLDMT, FEEDER LATCH
48	863415	4	KLIK PIN, W/CHAIN
-	71406084	--	KIT, HEADER HOOKUP LUGS, HIGH, NON-LTM
			INCL IT'S 2 THRU 13, & LATCH COMP'S.
			(ORDER THRU DEALER CENTRAL)
-	71406050	--	KIT, HEADER HOOKUP LUGS, LOW, NON-LTM
			(ORDER THRU DEALER CENTRAL)
	71406512	2	HOOKUP LUG WLDMT, SHORT
	71383783	4	SHIM, HEADER LEVELING
	70924204	14	SCR, HEX SOCK CSK HD, 1/2-13 X 1-1/4

MC00367
PR: t05b15n00a0004

JACK

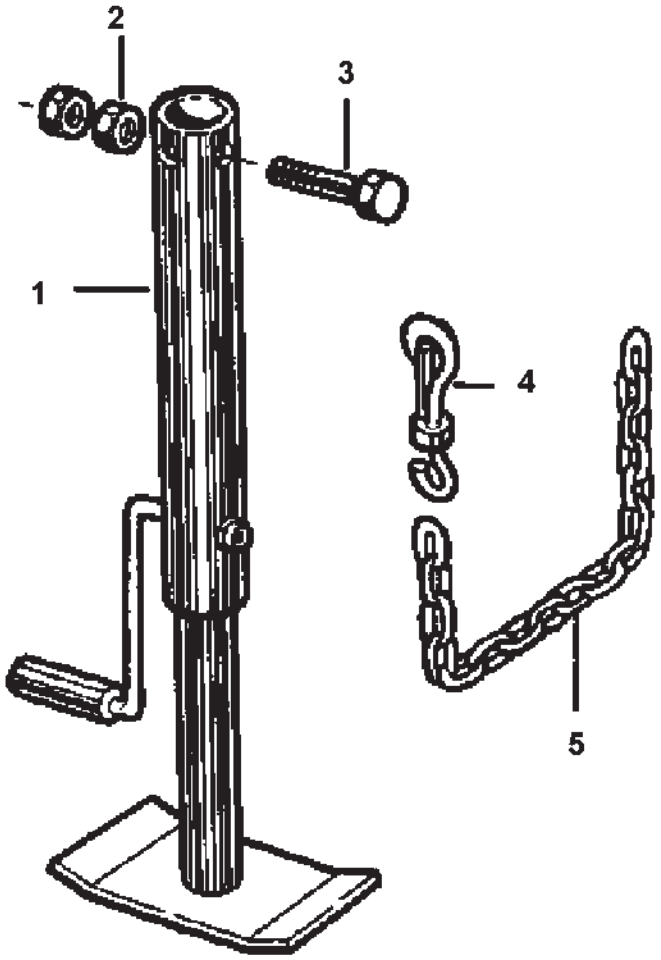

MC00209

ITEM	NUMBER	QTY	DESCRIPTION
1	1609121W91	1	JACK ASY, FEEDER STAND (ACCESSORY)
2	70913160	2	NUT, 3/4-10 UNC
3	70923126	1	CAPSCREW, 3/4-10 X 5 GR5
4	1611180W1	1	SNAP HOOK, CHAIN
5	1609200W1	1	CHAIN (18 LINKS)
	70921969	1	CAPSCREW, 3/8-16 X 1-1/2
	70917378	2	WASHER, 3/8, WIDE
	70916950	2	NUT, 3/8-16 REG
-	71400039	AR	KIT, FEEDER ELEVATOR JACK (ORDER FROM DEALER CENTRAL)

MC00209
PR: 136

FEED FLOOR

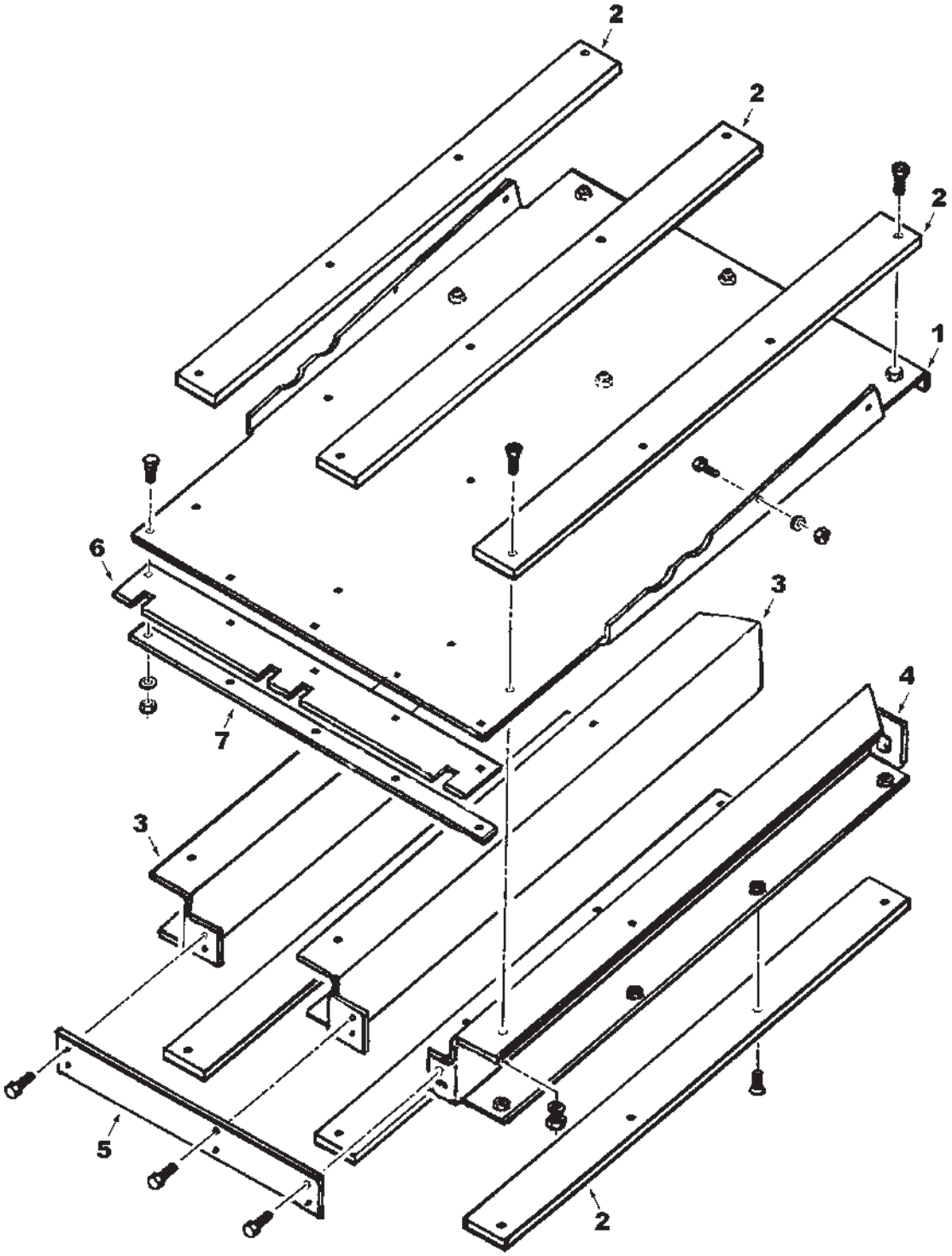

71375170

FEED FLOOR

ITEM	NUMBER	QTY	DESCRIPTION
1	116357W1	1	FLOOR WLMT. FEEDER
	70920415	2	CAPSCREW, 3/8-16 X 1-1/4
	70921965	5	CAPSCREW, 3/8-16 X 3/4
	70916965	7	WASHER, LOCK, 3/8
	70916950	7	NUT, 3/8-16
2	116354W1	6	STRIP, WEAR
	70935275	30	SCREW, CTRSK., HEX SOC, 5/16-18 X 1
	70927557	6	LOCKNUT, LG SERR FLNG, 5/16-18
3	116362W1	2	SUPPORT WLMT, RAIL RH
4	116363W1	1	SUPPORT WLMT, RAIL LH
5	116359W1	1	SUPPORT, FRONT
	7700461	6	CAPSCREW, 5/16-18 X 1
	70917356	6	WASHER, LOCK, 5/16
6	116353W1	1	SEAL, DRUM
	7700461	5	BOLT, RHSN, 5/16-18 X 3/4
	70917356	5	WASHER, LOCK, 5/16
	70917372	5	NUT, HEX, 5/16-18
7	116355W1	1	RETAINER, SEAL

71375170
PR: 138

PIVOT SHAFT
(PRIOR S/N HP87101)

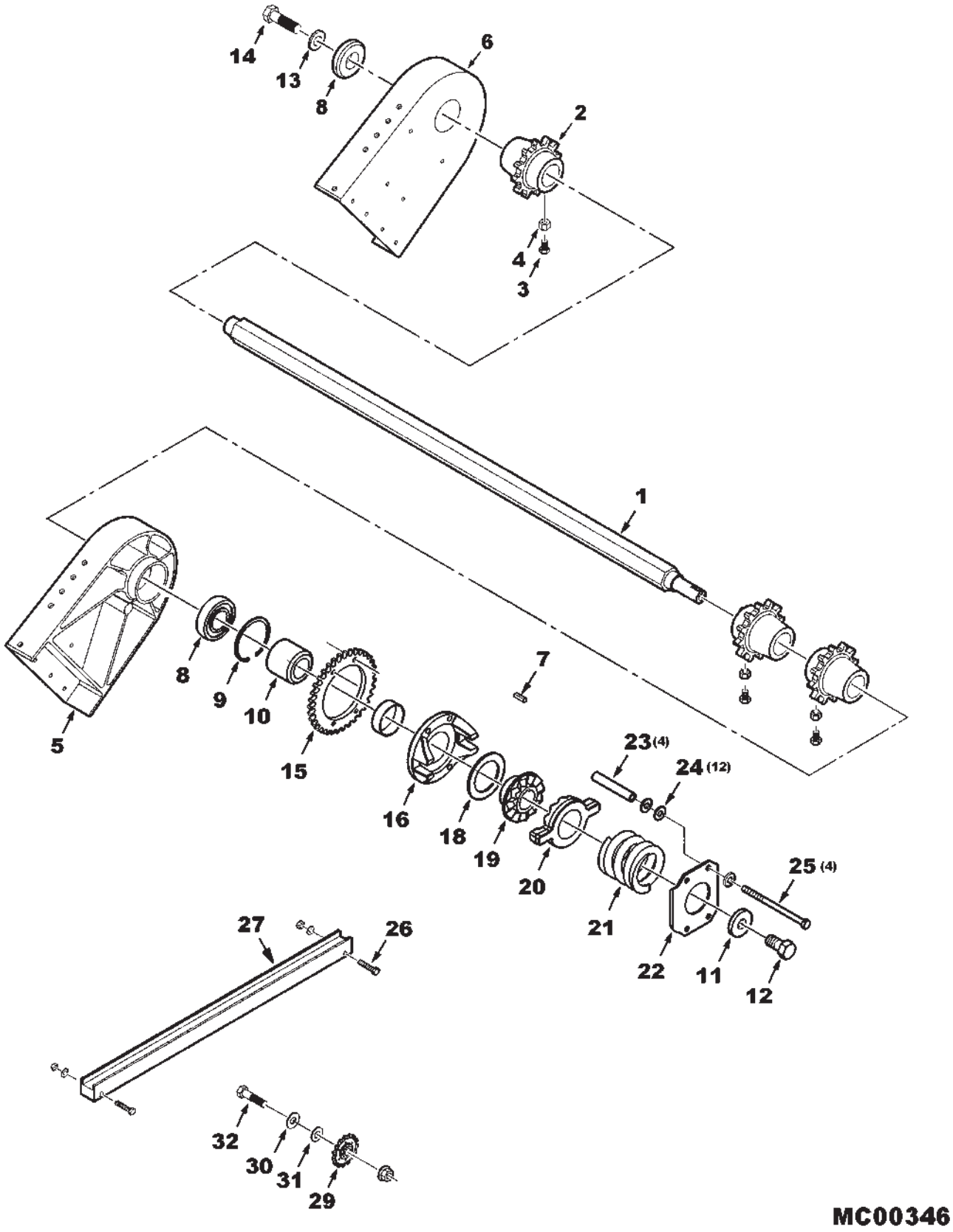

PIVOT SHAFT
(PRIOR S/N HP87101)

ITEM	NUMBER	QTY	DESCRIPTION
1	101781M1	1	SHAFT, TOP FEEDER
2	116108W1	3	SPROCKET, PIVOT SHAFT
3	70911255	6	SETSCREW, HEX SOCKET, 1/2-13 X 3/4
4	70913744	6	NUT, HEX JAM, 1/2-13 UNC
5	116106W1	1	CASTING, PIVOT, LH
6	116107W1	1	CASTING, PIVOT, RH
	70926838	2	BOLT, RD HD,SQ NK, 1/2-13 X 1-1/2
	70920328	28	CAPSCREW, 1/2-13 X 1-1/2, GR5
	Y705046	30	LOCKWASHER, 1/2 REG
	704031	12	NUT, 1/2-13 REG
7	61770	1	KEY, SQ, 3/8 X 3/8 X 1 1/2
8	71154722	2	BEARING, 1-31/32 X 4-11/32 X 1-1/16
9	355997X1	1	RING, RETAINING, INTERNAL
10	101785M1	1	SPACER
11	103834W1	1	WASHER, FLAT, SPL, .781 X 2.0 X .312
12	367451X1	1	BOLT, HEX LOCK, 3/4-10 X 1-1/2
13	2403610W1	1	WASHER, 29/32 X 2-1/2 X 3/8
14	70928397	1	CAPSCREW, 7/8-9 UNC X 1-1/2 GR8
15	101783M1	1	SPROCKET, 35 TEETH
16	1777403W91	1	DRIVE HSG & BUSHING ASY
	1717650W1	1	BUSHING, DRIVE HSG
18	1717640W1	1	THRUST WASHER
19	2563800W1	1	JAW, FIXED, CLUTCH
20	1659630W1	1	JAW, MOVABLE, CLUTCH
21	1659650W1	1	SPRING, CLUTCH
22	1659660W1	1	RETAINER, SPRING
23	2573180W1	4	SPACER, 31/64 X 5/8 X 3-21/32
24	70917378	12	WASHER, FLAT, 3/8 WIDE
25	70922771	4	CAPSCREW, HEX, 3/8-16 X 6" GR5
	Y704734	4	NUT, HEX FLNG TOP LOCK, 3/8-16
26	702928	2	CAPSCREW, 3/8-16 X 2-3/4 GR5
	70917378	2	WASHER, 3/8 WIDE
	Y704734	2	NUT, HEX FLNG TOP LOCK, 3/8-16
27	71384836	1	GUIDE, FEEDER CHAIN, UPPER
29	71378873	1	SPROCKET, IDLER, 15 TEETH
30	368933X1	2	WASHER, FLAT, .656 SQ. X 1.5 X .190 TH
31	70918268	2	WASHER, 5/8 NARROW
32	70926694	1	BOLT, RD HD,SQ NK, 5/8-11 X 2-1/2 GR5
	700703922	1	NUT, HEX FLNG TOP LOCK, 5/8-11
-	79021676	AR	PRIMER T
-	70930235	AR	LOCTITE 609
-	71389221	--	KIT, PERFORMANCE PKG
	71386668	1	STRIPPER, LH, PIVOT SHAFT SPROCKET
	71386669	1	STRIPPER, RH, PIVOT SHAFT SPROCKET

MC00346
PR: 140

PIVOT SHAFT
(EFF. S/N HP87101)

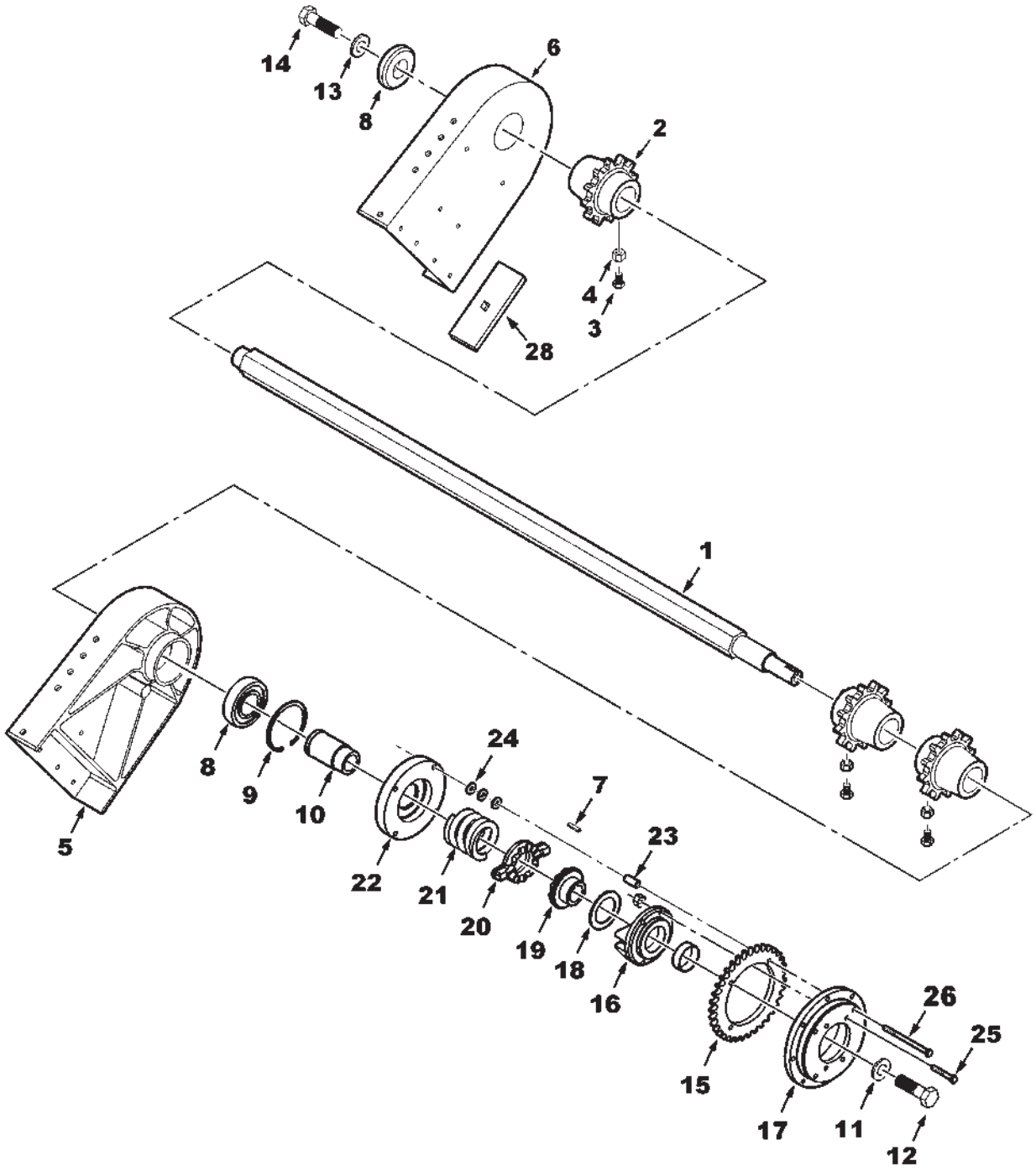

MC00368

PIVOT SHAFT
(EFF. S/N HP87101)

ITEM	NUMBER	QTY	DESCRIPTION
1	71398376	1	SHAFT, TOP FEEDER
2	116108W1	3	SPROCKET, PIVOT SHAFT
3	70911255	6	SETSCREW, HEX SOCKET, 1/2-13 X 3/4
4	70913744	6	NUT, HEX JAM, 1/2-13 UNC
5	116106W1	1	CASTING, PIVOT, LH
6	116107W1	1	CASTING, PIVOT, RH
	70926838	2	BOLT, RD HD,SQ NK, 1/2-13 X 1-1/2
	70920328	28	CAPSCREW, 1/2-13 X 1-1/2, GR5
	Y705046	30	LOCKWASHER 1/2 REG
	704031	12	NUT, 1/2-13 REG
7	61770	1	KEY, SQ, 3/8 X 3/8 X 1 1/2
8	71154722	2	BEARING, 1-31/32 X 4-11/32 X 1-1/16
9	355997X1	1	RING, RETAINING, INTERNAL
10	71399508	1	PILOT SLEEVE, SPRING
11	103834W1	1	WASHER, FLAT, SPL, .781 X 2.0 X .312
12	367451X1	1	BOLT, HEX LOCK, 3/4-10 X 1-1/2
13	2403610W1	1	WASHER, 29/32 X 2-1/2 X 3/8
14	70928397	1	CAPSCREW, 7/8-9 UNC X 1-1/2 GR8
15	71399511	1	SPROCKET, 35 TEETH
16	1777403W91	1	DRIVE HSG & BUSHING ASY.
	1717650W1	1	BUSHING, DRIVE HSG
17	71403678	1	HUB, FEEDER DRIVE CLUTCH
18	1717640W1	1	THRUST WASHER
19	2563800W1	1	JAW, FIXED, CLUTCH
20	1659630W1	1	JAW, MOVING, CLUTCH
21	1659650W1	1	SPRING, CLUTCH
22	71403677	1	RETAINER, SPRING
23	71403676	4	SPACER, SLIP CLUTCH
24	70917378	12	WASHER, 3/8 WIDE
25	70921969	4	CAPSCREW, 3/8-16 X 1-1/2 GR5
	Y704734	4	NUT, HEX FLNG TOP LOCK, 3/8-16
26	13601	4	CAPSCREW, 3/8-16 X 5-1/4 GR5
	70916965	4	LOCKWASHER 1/2 REG
28	71404300	1	PLATE, GUIDE, STONE TRAP HANDLE
	70926838	1	BOLT, RD HD,SQ NK, 1/2-13 X 1-1/2
	Y705046	1	LOCKWASHER 1/2 REG
	704031	1	NUT, 1/2-13 REG

MC00368
PR: t05b15n00a0005

LH PIVOT DRIVE
(EFF. S/N HP87101)

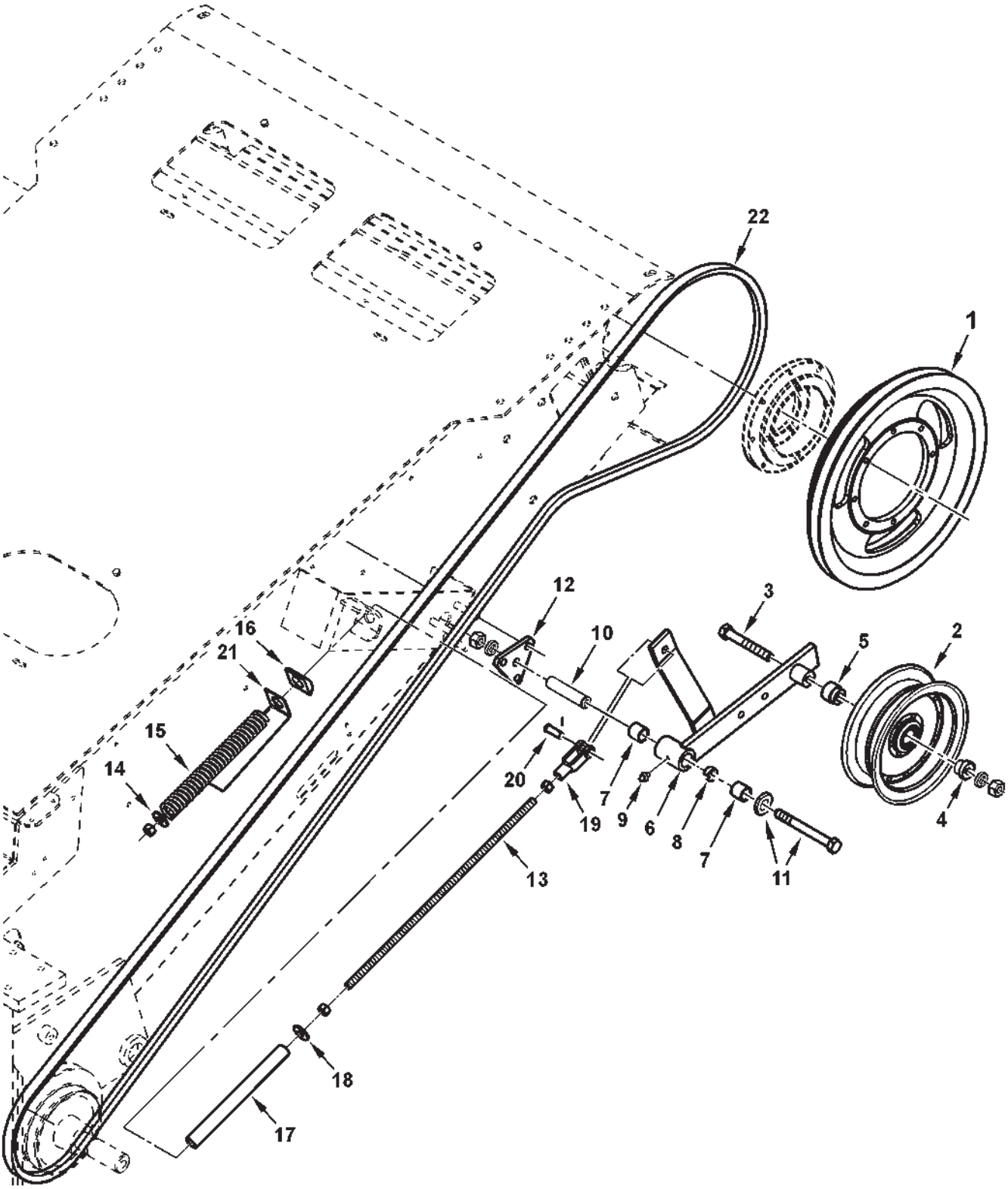

MC00369

LH PIVOT DRIVE
(EFF. S/N HP87101)

ITEM	NUMBER	QTY	DESCRIPTION
1	71403679	1	SHEAVE, DRIVEN, PIVOT SHAFT
	70920415	8	CAPSCREW, 3/8-16 X 1-1/4, GR5
	705038	8	LOCKWASHER, 3/8 REG
2	71309768	1	IDLER PULLEY
3	70925704	1	CAPSCREW, 5/8-11 X 4-1/2 GR5
	70917373	1	LOCKWASHER, 5/8
	70932665	1	NUT, 5/8-11 REG
4	71312602	1	SPACER, IDLER
5	71353127	1	SPACER, IDLER
6	71398389	1	IDLER ARM ASY (INCL. IT'S 7, 8, 9)
7	71356060	2	BUSHING, IDLER PIVOT
8	71197117	1	SPACER
9	13811X	1	LUBE FTG, STR, 1/4-28 TAPER
10	71356061	1	SLEEVE, HARD, IDLER PIVOT
11	70925703	1	CAPSCREW, 5/8-11 X 4 GR5
	70918432	1	WASHER, 5/8, WIDE
	70917373	1	LOCKWASHER, 5/8
	70932665	1	NUT, 5/8-11 REG
12	71182840	1	PLATE, MOUNTING
	70913744	6	NUT, HEX JAM, 1/2-13
13	71356938	1	ROD, 1/2-13UNC X 21 LG.
	704031	3	NUT, 1/2-13 REG
14	70923094	1	WASHER, .53 X 2.0 X .18 TH.
15	71356067	1	SPRING, IDLER
16	71356058	1	BLOCK, PIVOT
17	71368761	1	SPACER TUBE, SPRING
18	70918431	1	WASHER, 1/2, WIDE
19	70937465	1	YOKE, 1/2-13 THD.
20	70929593	1	PIN, 1/2 X 1.36 LG.
	70918452	1	COTTER PIN, 1/8 X 1
21	71368570	1	STRAP, INDICATOR, IDLER SPRING
22	71398388	1	BELT

MC00369
PR: t05b15n00a0006

RH DRIVE
(PRIOR S/N HP87101)

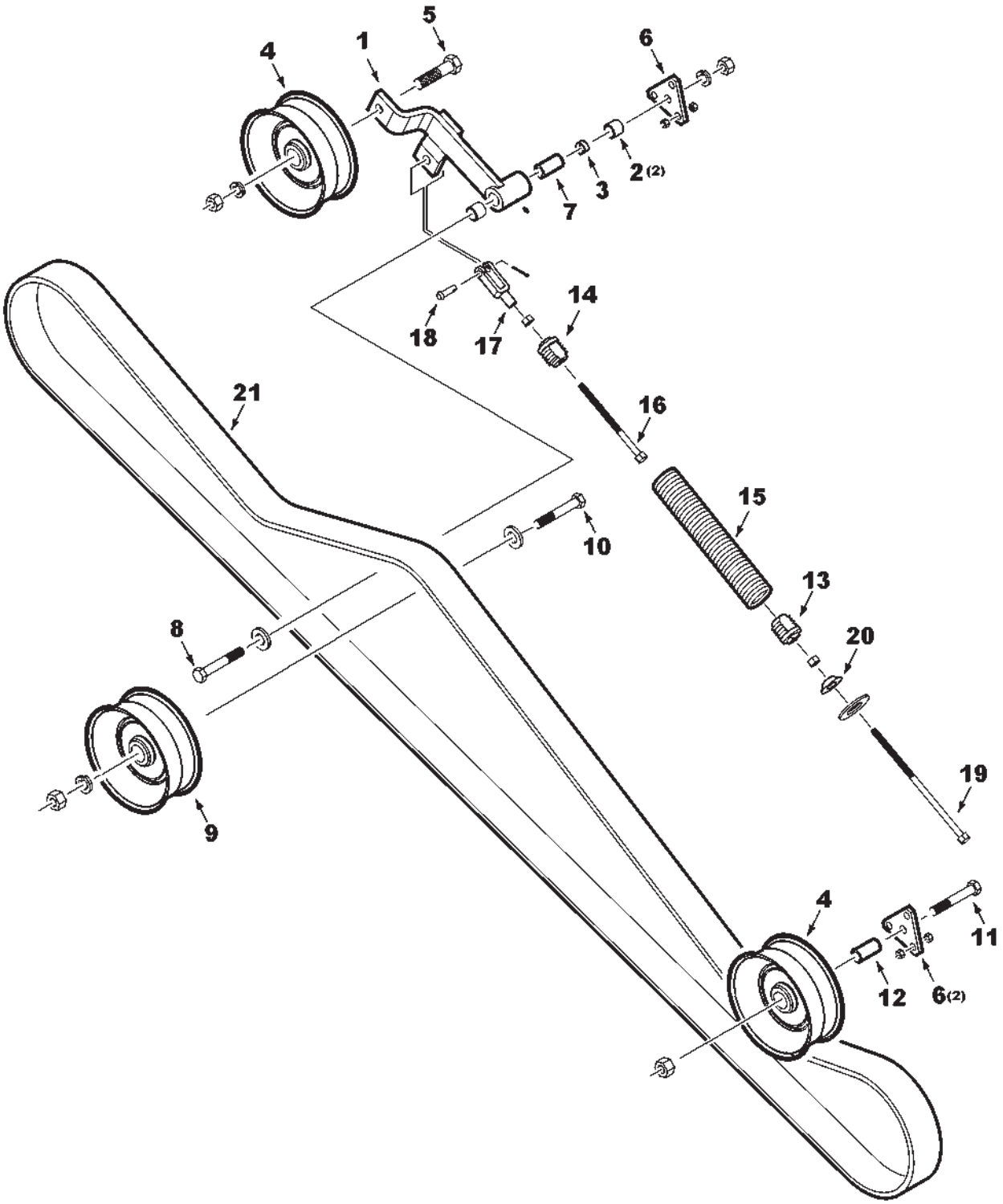

MC00349

RH DRIVE
(PRIOR S/N HP87101)

ITEM	NUMBER	QTY	DESCRIPTION
1	71389638	1	IDLER ARM WLDMT, W/BUSHINGS
	13811X	1	LUBE FTG, STR, 1/4-28 TAPER THD
2	71356060	2	BUSHING, PIVOT
3	71197117	1	SPACER, BUSHING
4	71308156	2	IDLER, BELT DR, 8" FLAT
5	70919434	1	CAPSCREW, 5/8-11 X 2-3/4 GR5
	70917373	1	LOCKWASHER, 5/8
	70932665	1	NUT, 5/8-11
6	71182840	2	PLATE, IDLER MNTG (PRIOR S/N HN87101)
	704056	12	JAM NUT, 1/2-13 (PRIOR S/N HN87101)
	71346267	2	PLATE, IDLER MNTG (EFF. S/N HN87101)
	70922037	12	JAM NUT, 3/4-10 (EFF. S/N HN87101)
7	71356061	1	SLEEVE, HARD, IDLER PIVOT
8	70925703	1	CAPSCREW, 5/8-11 X 4 GR5
	70918432	1	WASHER, 5/8 WIDE
	70917373	1	LOCKWASHER, 5/8
	70932665	1	NUT, 5/8-11 REG
9	71388217	1	IDLER, BELT, FLAT, 8" DIA
10	70923111	1	CAPSCREW, 5/8-11 X 3 GR5
	70918432	3	WASHER, 5/8 WIDE (USE AS REQUIRED)
	70917373	1	LOCKWASHER, 5/8 REG
	70932665	1	NUT, 5/8-11 REG
11	70925704	1	CAPSCREW, 5/8-11 X 4-1/2 GR5
	70917373	1	LOCKWASHER, 5/8
	70932665	1	NUT, 5/8-11 REG
12	700149006	1	SPACER
13	71344647	1	PLUG ASY, SPRING
	71344649	1	PLUG, SPRING
	704031	1	NUT, 1/2-13 REG
	70937461	1	WASHER, .531 X .812 X .036
14	71344649	1	PLUG, SPRING
15	71197323	1	SPRING
16	70935299	1	CAPSCREW, FULL THD, 1/2-13 X 12" GR5
17	70937465	1	YOKE
	704031	1	NUT, 1/2-13 REG
18	70929593	1	PIN, CLEVIS, 1/2 X 1.36 LG
	70918452	1	COTTER PIN, 1/8 X 1"
19	70935036	1	CAPSCREW, FULL THD, 1/2-13 X 16" GR5
	704031	1	NUT, 1/2-13 REG
20	70301781	1	WASHER, PIVOT
	70918431	1	WASHER, 1/2, WIDE
21	71379105	1	BELT, FEEDER DRIVE

MC00349
PR: 142

JACKSHAFT DRIVE
R.H. FEEDERHOUSE
(EFF. S/N HP87101)

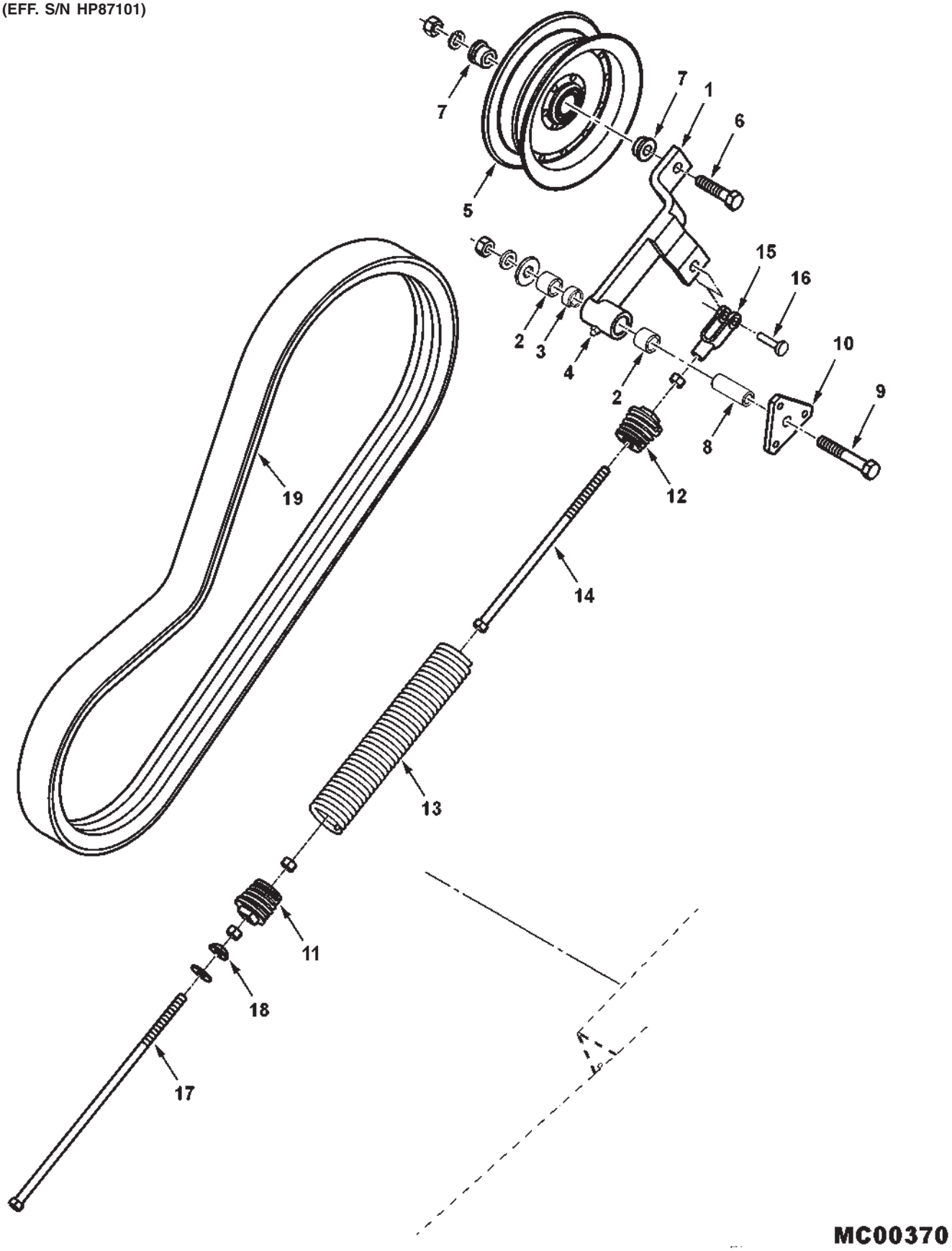

JACKSHAFT DRIVE
R.H. FEEDERHOUSE
(EFF. S/N HP87101)

ITEM	NUMBER	QTY	DESCRIPTION
1	71389638	1	IDLER ARM ASY, JACKSHAFT DR (INCL. ITEMS 2, 3 & 4)
2	71356060	2	BUSHING, PIVOT
3	71197117	1	SPACER, BUSHING
4	13811X	1	LUBE FITTING, STR, 1/4-28 TAPER
5	71309768	1	IDLER, BELT DRIVE
6	70919434	1	CAPSCREW, 5/8-11 X 2-3/4 GR5
	70917373	1	LOCKWASHER, 5/8
	70932665	1	NUT, 5/8-11 REG
7	71312602	2	SPACER, IDLER
8	71356061	1	SLEEVE, HARD, IDLER PIVOT
9	70925703	1	CAPSCREW, 5/8-11 X 4 GR5
	70918432	1	WASHER, 5/8, WIDE
	70917373	1	LOCKWASHER, 5/8
	70932665	1	NUT, 5/8-11 REG
10	71346267	1	PLATE, MOUNTING
	70922037	6	JAM NUT, 3/4-10
11	71349811	1	PLUG ASY, SPRING
	71349813	1	PLUG, SPRING
	704031	1	NUT, 1/2-13 REG
	70937461	1	WASHER, .531 X .812 X .036
12	71349813	1	PLUG, SPRING
13	71349270	1	SPRING
14	70935299	1	CAPSCREW, 1/2-13 X 12", FULL THD, GR5
15	70937465	1	YOKE, 1/2-13 THD.
	704031	1	NUT, 1/2-13 REG
16	70929593	1	PIN, CLEVIS, 1/2 X 1.36 LG
	70918452	1	COTTER PIN, 1/8 X 1"
17	70935036	1	CAPSCREW, 1/2-13 X 16, FULL THD, GR5
	704031	1	NUT, 1/2-13 REG
18	70301781	1	WASHER, PIVOT
	70918431	1	WASHER, 1/2, WIDE
19	71398384	1	BELT, BEATER TO JACKSHAFT

MC00370
PR: t05b15n00a0007

JACKSHAFT & V.S. IDLER

V.S. HEADER DRIVE
(EFF. S/N HP87101)

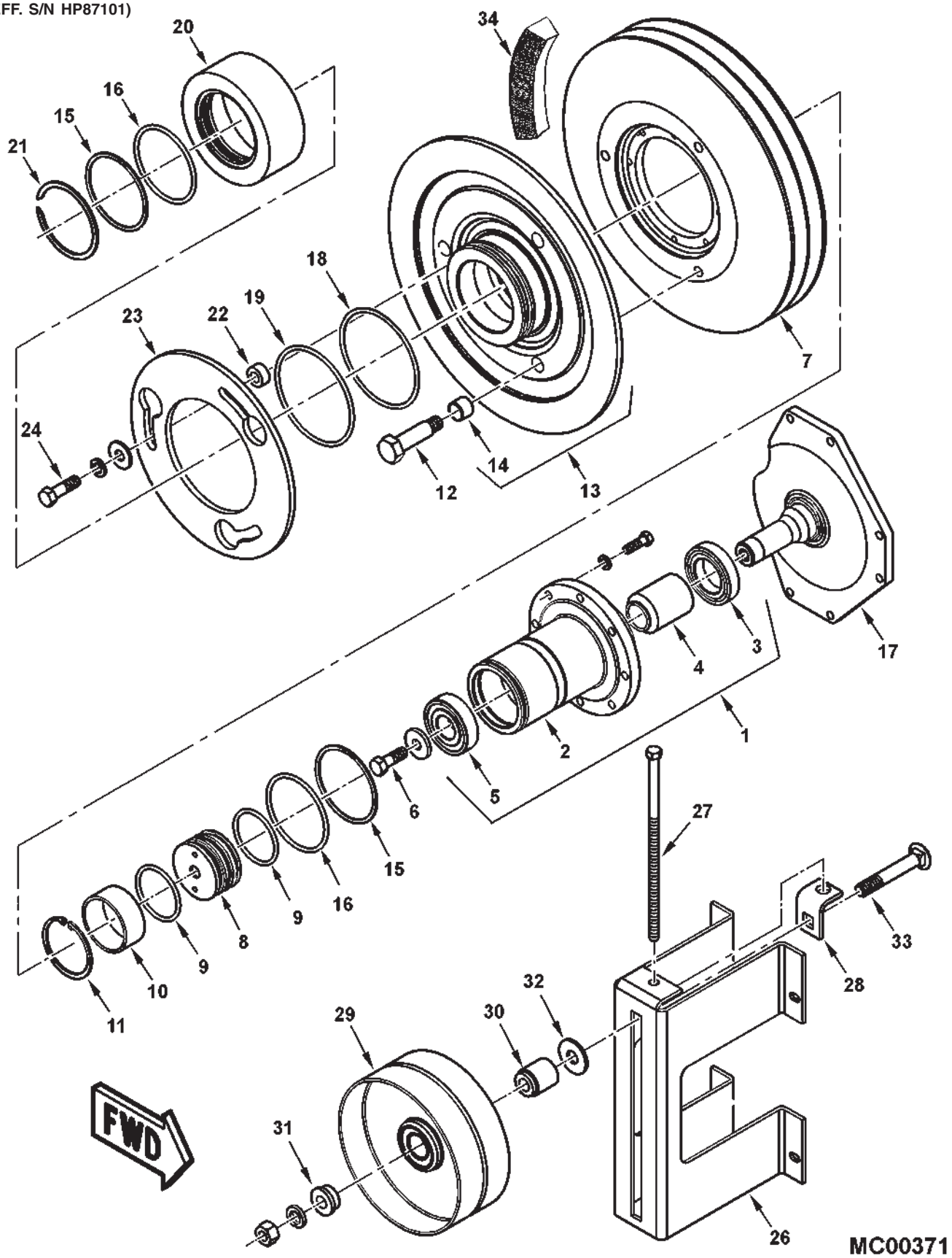

JACKSHAFT & V.S. IDLER

V.S. HEADER DRIVE
(EFF. S/N HP87101)

ITEM	NUMBER	QTY	DESCRIPTION
1	71399483	1	HUB & BEARING ASY, VS HDR DRIVE (INCL. ITEMS 2, 3, 4, & 5)
2	71398361	1	HUB, VS HEADER DRIVE
3	71382057	1	BEARING, BALL, W/SEALS
4	71399484	1	SPACER, BRG.
5	71382983	1	BEARING, BALL, W/SEALS
6	701235	1	CAPSCREW, 1/2-13 X 1-1/2 GR5
	70917861	1	WASHER, .531 X 1.50 X .180 TH.
7	71398358	1	SHEAVE, DRIVEN, FEEDER JACKSHAFT
	70920415	8	CAPSCREW, 3/8-16 X 1-1/4 GR5
	70916965	8	LOCKWASHER, 3/8
8	71382985	1	ADAPTER, ROTARY UNION
9	70923828	2	O-RING, .210 X 2.475 ID, 75 DURO.
10	71382055	1	SPACER, ADAPTER
11	353062X1	1	RETAINING RING, INTERNAL
12	71391567	3	GUIDE PIN, HEX HD, VS HDR DRIVE
13	71382053	1	SHEAVE ASY, OUTER HALF, VS HDR (INCL. IT. 14)
14	71380460	3	BUSHING, GUIDE
15	70926647	2	RING, BACKUP
16	70923831	2	O-RING, .210 X 3.60 ID, 75 DURO.
17	71398360	1	JACKSHAFT, SHEAVE SUPPORT
	70920415	6	CAPSCREW, 3/8-16 X 1-1/4 GR5
	Y704734	6	NUT, HEX FLNG TOP LOCK, 3/8-16
18	70937348	1	RING, BACKUP
19	70937347	1	O-RING, .210 X 4.725 ID, 75 DURO.
20	71391792	1	CAP, VS HDR DRIVE
21	70937646	1	RETAINING RING, EXTERNAL
22	71312819	3	SPACER
23	71312823	1	DISC, LOCKOUT
24	70919089	3	CAPSCREW, 1/2-13 X 1-3/4 GR5
	Y705624	3	WASHER, 1/2, NARROW
	Y705046	3	LOCKWASHER, 1/2
26	71398379	1	SUPPORT, IDLER, VS HDR DRIVE
	70921210	2	CAPSCREW, 3/8-16 X 1 GR5
	Y704734	4	NUT, HEX FLNG TOP LOCK, 3/8-16
27	70935033	1	CAPSCREW, 7/16-14 X 10.5 GR5
28	71174391	1	BRACKET WLDMT, IDLER ADJUST
29	71309766	1	IDLER, FLAT, W/BRG, 8.0 OD
30	71312603	1	SPACER, IDLER
31	71312602	1	SPACER, IDLER
32	70918432	1	WASHER, 5/8, WIDE
33	70924845	1	BOLT, RND HD SQ NECK, 5/8-11 X 4 GR5
	70917373	1	LOCKWASHER, 5/8
	70932665	1	NUT, 5/8-11 REG
34	71399505	1	BELT, VS HEADER DRIVE

MC00371
PR: t05b15n00a0008

HYDRAULIC LINES
V.S. HEADER DRIVE
(EFF. S/N HP87101)

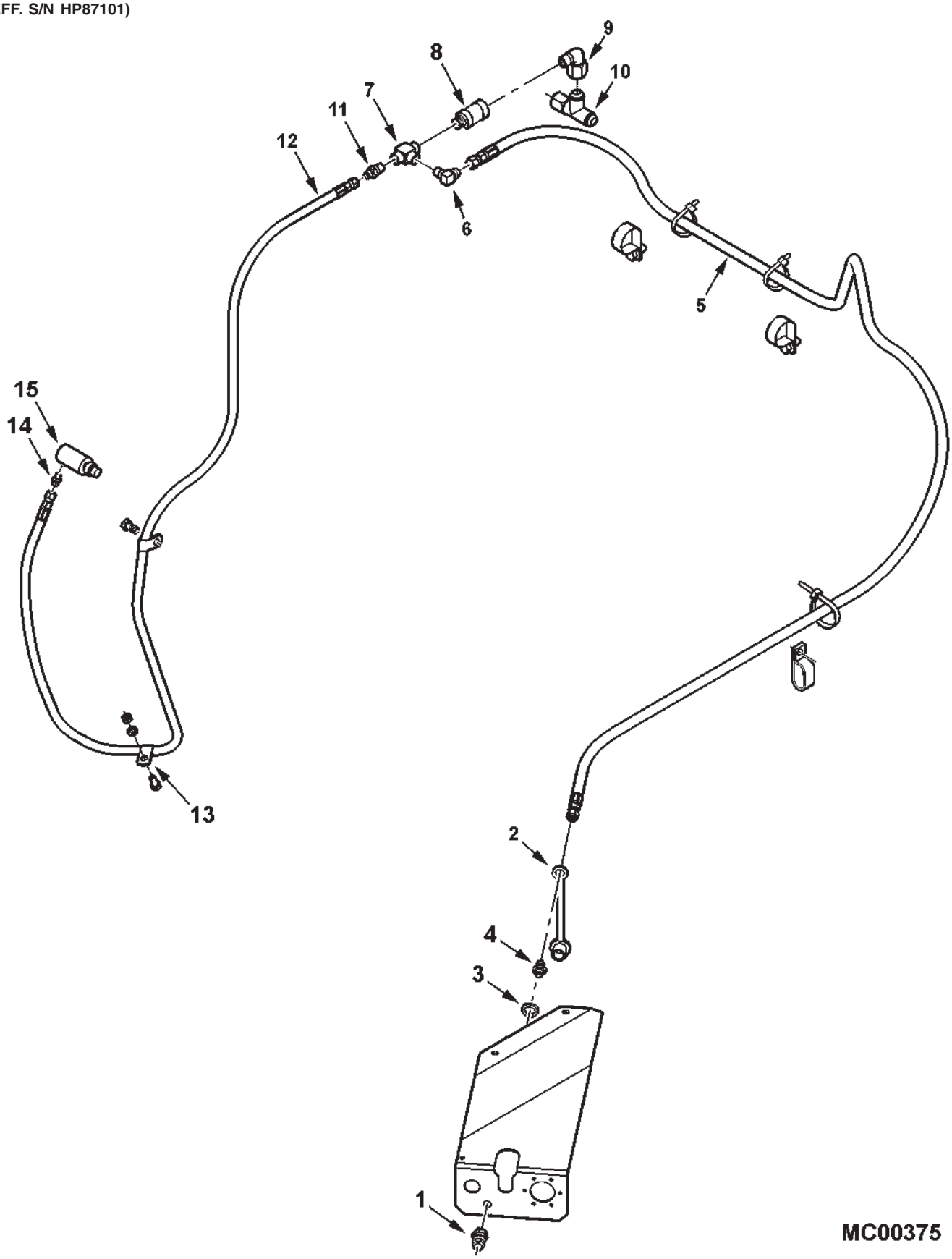

HYDRAULIC LINES
V.S. HEADER DRIVE
(EFF. S/N HP87101)

ITEM	NUMBER	QTY	DESCRIPTION
1	71328361	1	QUICK COUPLER HALF, MALE, 1/4 NPTF FEM.
2	71328365	1	DUST CAP, FEM. W/TETHER STRAP
3	Y705624	1	WASHER, 1/2, NARROW
4	70919062	1	CONN, STR. MALE, 9/16-18 JIC X 1/4 NPTF
5	71401754	1	HOSE ASY, 3/8 ID X 9/16-18 JIC FEM. (2)
	70925094	8	TIE, NYLON, .184 X 7.3 LG.
6	70919135	1	ELBOW, 90 D MALE, 9/16-18 JIC X 1/4 NPTF
7	846774	1	TEE, FEM. 1/4 NPTF
8	71368991	1	VALVE, RELIEF, IN-LINE, 500 PSI
9	70935416	1	ELBOW, 90 DEG, 3/8 NPTF M X 3/4-16 FEM.
10	70921298	1	TEE, SWIVEL RUN, 3/4-16 JIC
11	70919140	1	CONN, STR. MALE, 7/16-20 JIC X 1/4 NPTF
12	71401756	1	HOSE ASY, 1/4 ID X 7/16-20 JIC FEM. (2)
	70925617	1	CLAMP, 1/2 ID X .406 HOLE
	Y702951	1	SCR, HEX WSHR HD, 3/8-16 X 3/4
13	755785	2	CLAMP, 9/16 TUBE X .281 HOLE
	70921960	2	CAPSCREW, 1/4-20 X 1 GR5
	705012	2	LOCKWASHER, 1/4
	70916622	2	NUT, 1/4-20, REG
14	70919171	1	CONN, STR. MALE, 7/16-20 JIC X 1/8 NPTF
15	71332011	1	UNION, ROTATING

MC00375
PR: t05b15n00a0009

JACKSHAFT & C'SHAFT DRIVE IDLER

FIXED SPEED HEADER DRIVE
(EFF. S/N HP87101)

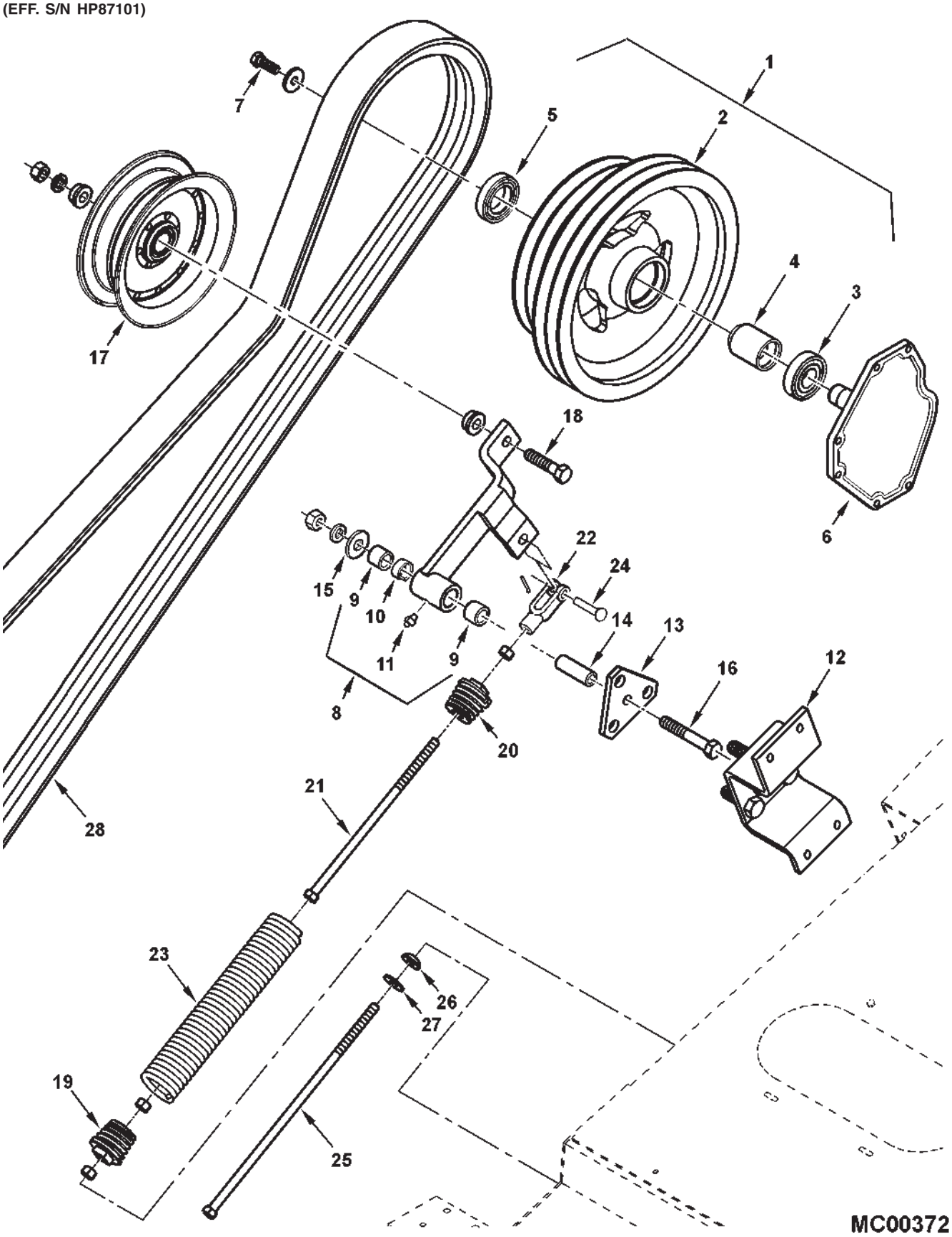

JACKSHAFT & C'SHAFT DRIVE IDLER

FIXED SPEED HEADER DRIVE
(EFF. S/N HP87101)

ITEM	NUMBER	QTY	DESCRIPTION
1	71399520	1	SHEAVE ASY, W/BEARINGS (INCL IT. 2, 3, 4 & 5)
2	71398364	1	SHEAVE, DRIVEN, FEEDER JACKSHAFT
3	71382057	1	BEARING, BALL, W/SEALS
4	71399484	1	SPACER, BEARING
5	71382983	1	BEARING, BALL, W/SEALS
6	71398360	1	JACKSHAFT, SHEAVE SUPPORT
	70920415	6	CAPSCREW, 3/8-16 X 1-1/4 GR5
	Y704734	6	NUT, HEX FLNG TOP LOCK, 3/8-16
7	701235	1	CAPSCREW, 1/2-13 X 1-1/2 GR5
	70917861	1	WASHER, .531 X 1.50 X .180 TH.
8	71389638	1	IDLER ARM ASY, FIXED SPD HDR DRIVE (INCL IT. 9, 10 & 11)
9	71356060	2	BUSHING, PIVOT
10	71197117	1	SPACER, BUSHING
11	13811X	1	LUBE FITTING, STR, 1/4-28 TAPER
12	71398391	1	SUPPORT WLDMT, IDLER, FIXED SPD DRIVE
	70921210	2	CAPSCREW, 3/8-16 X 1 GR5
	Y704734	4	NUT, HEX FLNG TOP LOCK, 3/8-16
13	71346267	1	PLATE, MOUNTING
	70922037	6	JAM NUT, 3/4-10 UNC
14	71356061	1	SLEEVE, HARD, IDLER PIVOT
15	70918432	1	WASHER, 5/8, WIDE
16	70925703	1	CAPSCREW, 5/8-11 X 4 GR5
	70917373	1	LOCKWASHER, 5/8
	70932665	1	NUT, 5/8-11 REG
17	71308156	1	IDLER, FLAT, FLANGED, 8.0 DIA
18	70919434	1	CAPSCREW, 5/8-11 X 2-3/4 GR5
	70917373	1	LOCKWASHER, 5/8
	70932665	1	NUT, 5/8-11 REG
19	71349811	1	PLUG ASY, SPRING
	71349813	1	PLUG, SPRING
	704031	1	NUT, 1/2-13 REG
	70937461	1	WASHER, .531 X .812 X .036
20	71349813	1	PLUG, SPRING
21	70935035	1	CAPSCREW, 1/2-13 X 8-1/2, FULL THD, GR5
22	70937465	1	YOKE, 1/2-13 UNC
	704031	1	NUT, 1/2-13 REG
23	71349270	1	SPRING
24	70929593	1	PIN, CLEVIS, 1/2 X 1.36 LG
	70918452	1	COTTER PIN, 1/8 X 1"
25	70935299	1	BOLT, HEX, 1/2-13 X 12, FULL THD, GR5
	704031	1	NUT, 1/2-13 REG
26	70301781	1	WASHER, PIVOT, CONVEX, 1/2
27	70918431	1	WASHER, 1/2, WIDE
28	71399519	1	BELT, FIXED SPEED C'SHAFT DRIVE

MC00372
PR: t05b15n00a0010

COUNTERSHAFT
HEADER DRIVE
(PRIOR S/N HP87101)

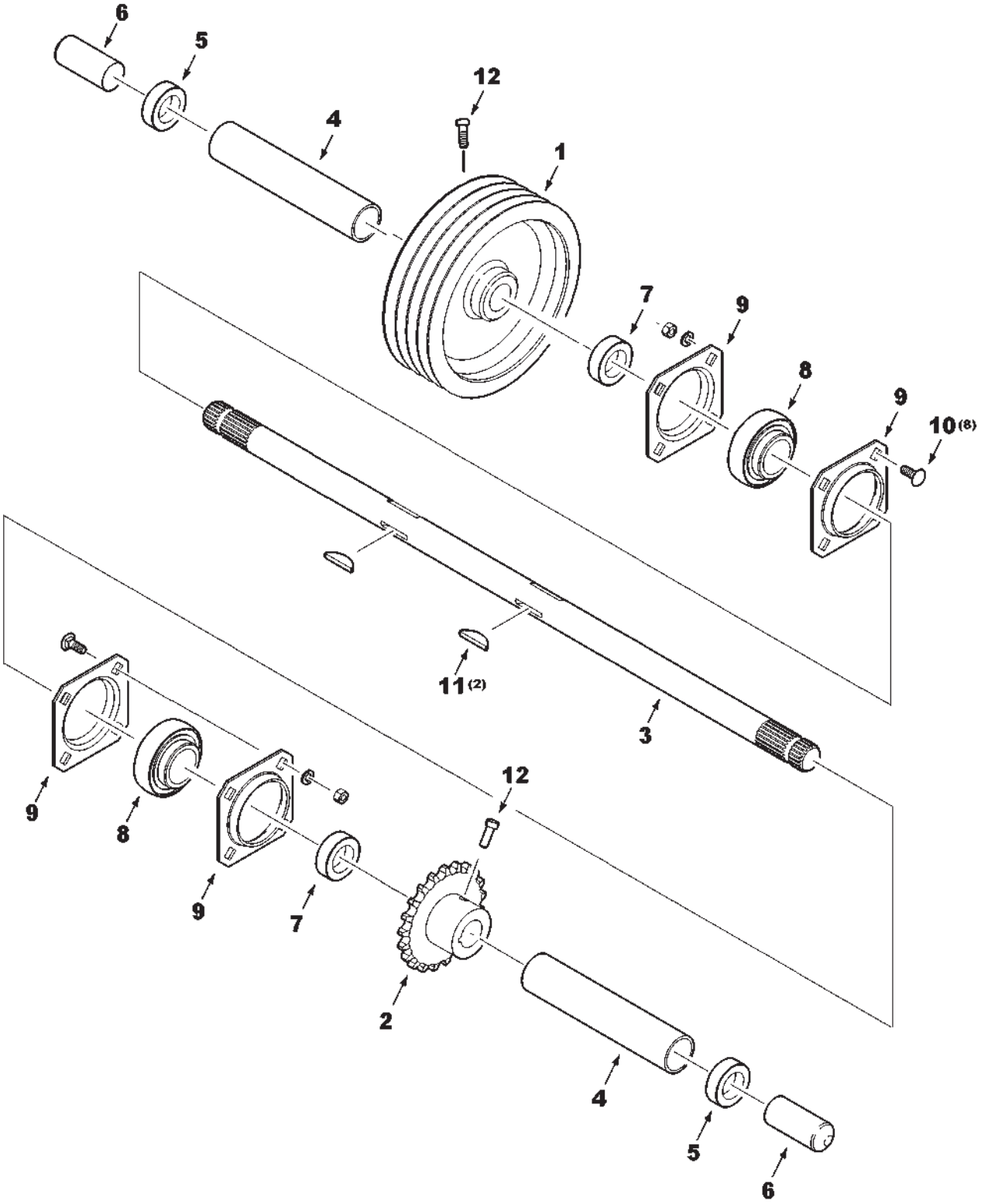

MC00350

COUNTERSHAFT
HEADER DRIVE
(PRIOR S/N HP87101)

ITEM	NUMBER	QTY	DESCRIPTION
1	71393671	1	SHEAVE, RH
2	71379103	1	SPROCKET, LH
3	71393666	1	COUNTERSHAFT
4	116675W1	2	COVER, FH COUNTERSHAFT
5	K3999	2	COLLAR (INCL. SETSCREW)
6	71179395	2	COVER, SHAFT
7	70534931	2	COLLAR, 1.75 (INCL. SETSCREW)
8	71335184	2	BEARING ASY. 1.75 (W/O COLLAR)
9	71130258	4	FLANGE, BEARING
10	68619	8	BOLT, RD HD,SHT SQ NK, 1/2-13 X 1-1/4
	Y705046	8	LOCKWASHER, 1/2 REG
	704031	8	NUT, 1/2-13 REG
11	700707139	2	KEY, WOODRUFF, #27, .250 X 2.125
12	70923306	4	SETSCREW, 1/2-13 X 1.0

MC00350
PR: 144

COUNTERSHAFT

VARIABLE & FIXED SPEED HEADER DRIVE
(EFF. S/N HP87101)

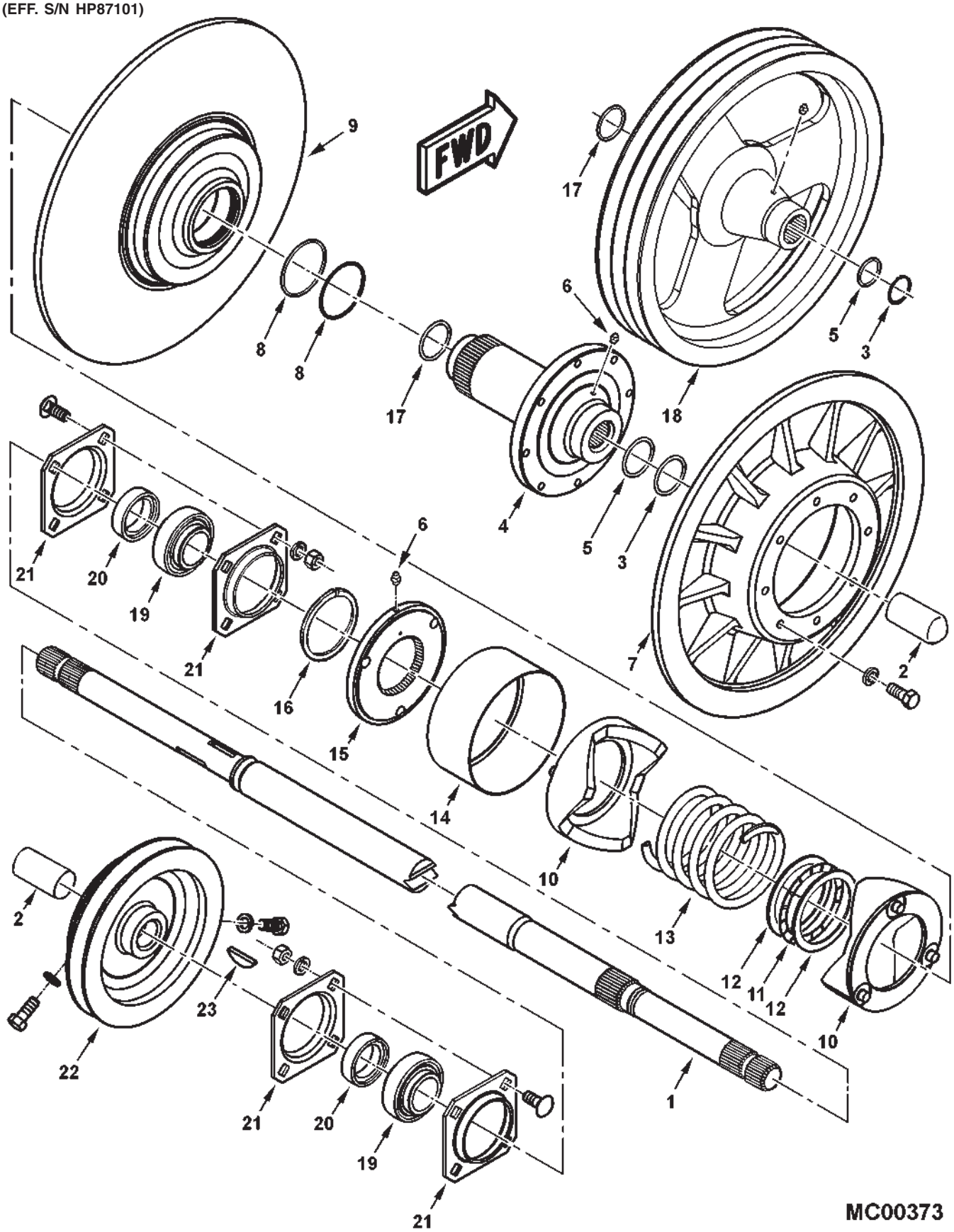

COUNTERSHAFT

VARIABLE & FIXED SPEED HEADER DRIVE
(EFF. S/N HP87101)

ITEM	NUMBER	QTY	DESCRIPTION
1	71399524	1	COUNTERSHAFT, FEEDER
2	71179395	2	COVER, SHAFT
3	70927745	1	RING, EXTERNAL RETAINING
4	71399485	1	HUB, V.S. COUNTERSHAFT
5	70923813	1	O-RING, .139 X 1.359 ID, 75 DUR
6	13811X	2	LUBE FITTING, STR, 1/4-28 TAPER
7	71380043	1	SHEAVE HALF, OUTER, V.S. HEADER
	70920415	8	CAPSCREW, 3/8-16 X 1-1/4 GR5
	70916965	8	LOCKWASHER, 3/8
8	70923584	1	O-RING, .139 X 2.984 ID, 75 DUR
	70926626	1	RING, BACKUP, .050 TH X 3.0 ID
9	71395799	1	SHEAVE HALF, INNER, V.S. HEADER
10	71399487	2	CAM, ACTUATOR, V.S. HEADER
11	71161396	1	BEARING, THRUST
12	71173857	2	RACE, THRUST BEARING
13	71380028	1	SPRING, V.S. HEADER CAM
14	71380905	1	COVER, CAM
15	71380463	1	PLATE, CAM CARRIER
16	70930415	1	RING, EXTERNAL RETAINING
17	70923577	1	O-RING, .139 X 1.734 ID, 75 DUR
18	71398365	1	SHEAVE, DRIVEN, FIXED SPEED HEADER
	13887X	1	LUBE FITTING, STR, 1/4 PTF
19	71335184	2	BEARING, W/O COLLAR, 1.75 DIA
20	70534931	2	COLLAR, BRG.
21	71130258	4	FLANGE, BEARING
	68619	8	BOLT, RND HD SQ NECK, 1/2-13 X 1-1/4
	Y705046	8	LOCKWASHER, 1/2
	704031	8	NUT, 1/2-13 REG
22	71398362	1	SHEAVE, DRIVE, C'SHAFT, LH
	70923306	2	SETSCREW, SQ HD, 1/2-13 X 1
23	700707139	1	KEY, WOODRUFF, #27, .250 X 2.125

MC00373
PR: t05b15n00a0011

LATCH
HEADER

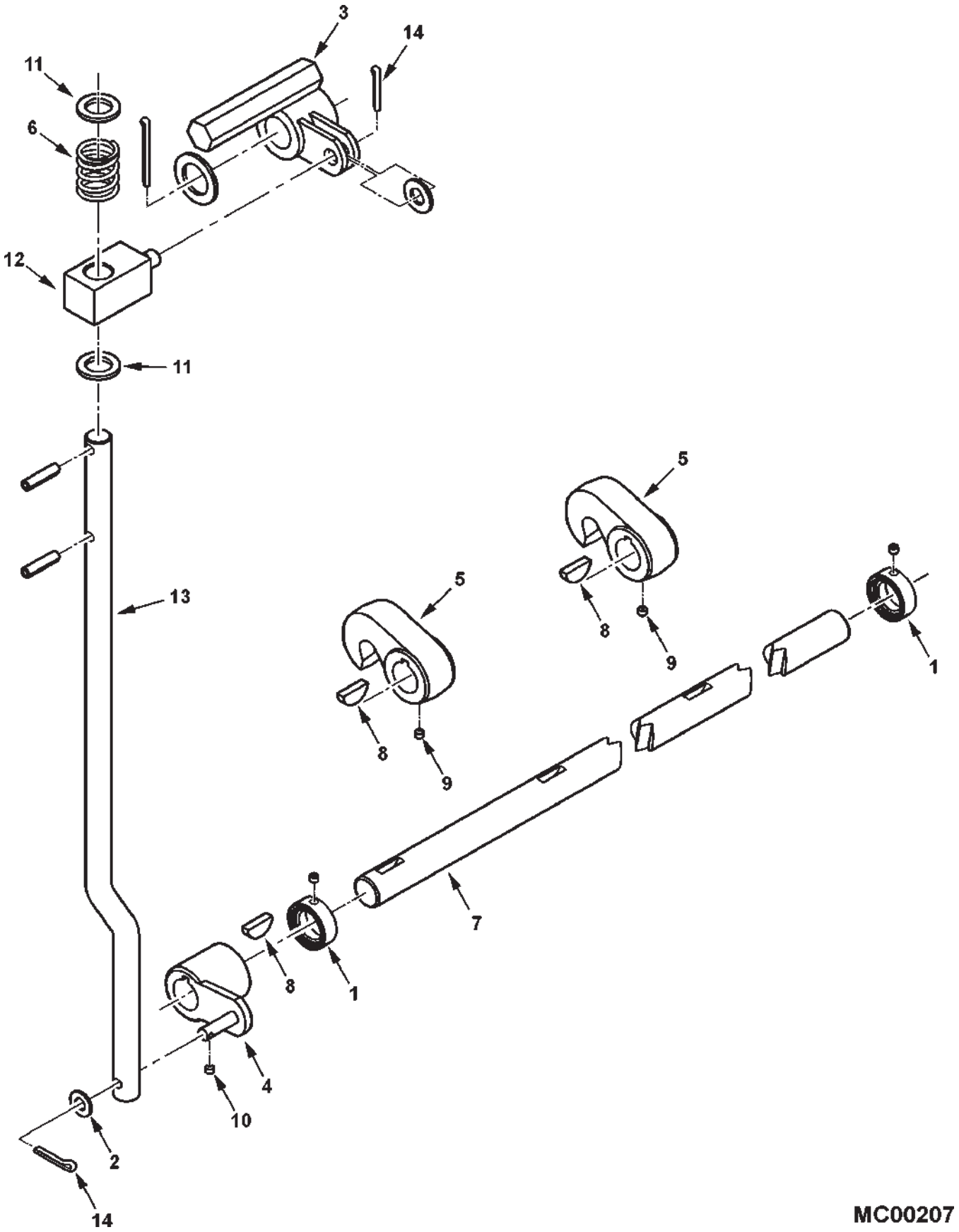

LATCH
HEADER

ITEM	NUMBER	QTY	DESCRIPTION
1	375028X1	2	COLLAR, LOCK, W/SETSCREW (QTY 1 PRIOR S/N HP 87101)
	70915794	2	SETSCREW, 1/4-20 X 1/4
2	70917378	1	WASHER, 3/8 WIDE (PRIOR S/N HP87101)
	70918266	4	WASHER, 3/8 NARROW (EFF. S/N HP87101)
3	116346W1	1	CRANK ASSEMBLY, LATCH, UPPER
	70919393	1	WASHER, PLAIN, 1.02 X 1.63 X 12 GA
	70918459	1	PIN, COTTER, 3/16 X 1 1/2
4	116343W1	1	CRANK ASSEMBLY, LATCH, LOWER
5	71317841	2	HOOK
6	116312W1	1	SPRING
	70915935	2	PIN, SPRING, 5/16 X 1-1/4
7	116349W1	1	SHAFT, HEADER LATCH (PRIOR S/N HP87101)
	71406802	1	SHAFT, HEADER LATCH (EFF. S/N HP87101)
8	70905126	3	KEY, WOODRUFF, #808, 1/4 X 1 DIA
9	70903835	2	SETSCREW, 1/4-20 X 3/8
10	70921263	1	SETSCREW, 5/16-18 X 3/8
11	70923427	2	WASHER, 25/32 X 1-1/4 X 11 GA
12	116348W1	1	BLOCK, LATCH PIVOT
	Y705624	1	WASHER, 1/2 NARROW
13	116339W1	1	ROD, LATCH (PRIOR S/N HP87101)
	71406803	1	ROD, LATCH (EFF. S/N HP87101)
14	70918452	2	PIN, COTTER, 1/8 X 1

MC00207
PR: 146

CONVEYOR
(PRIOR S/N HP87101)

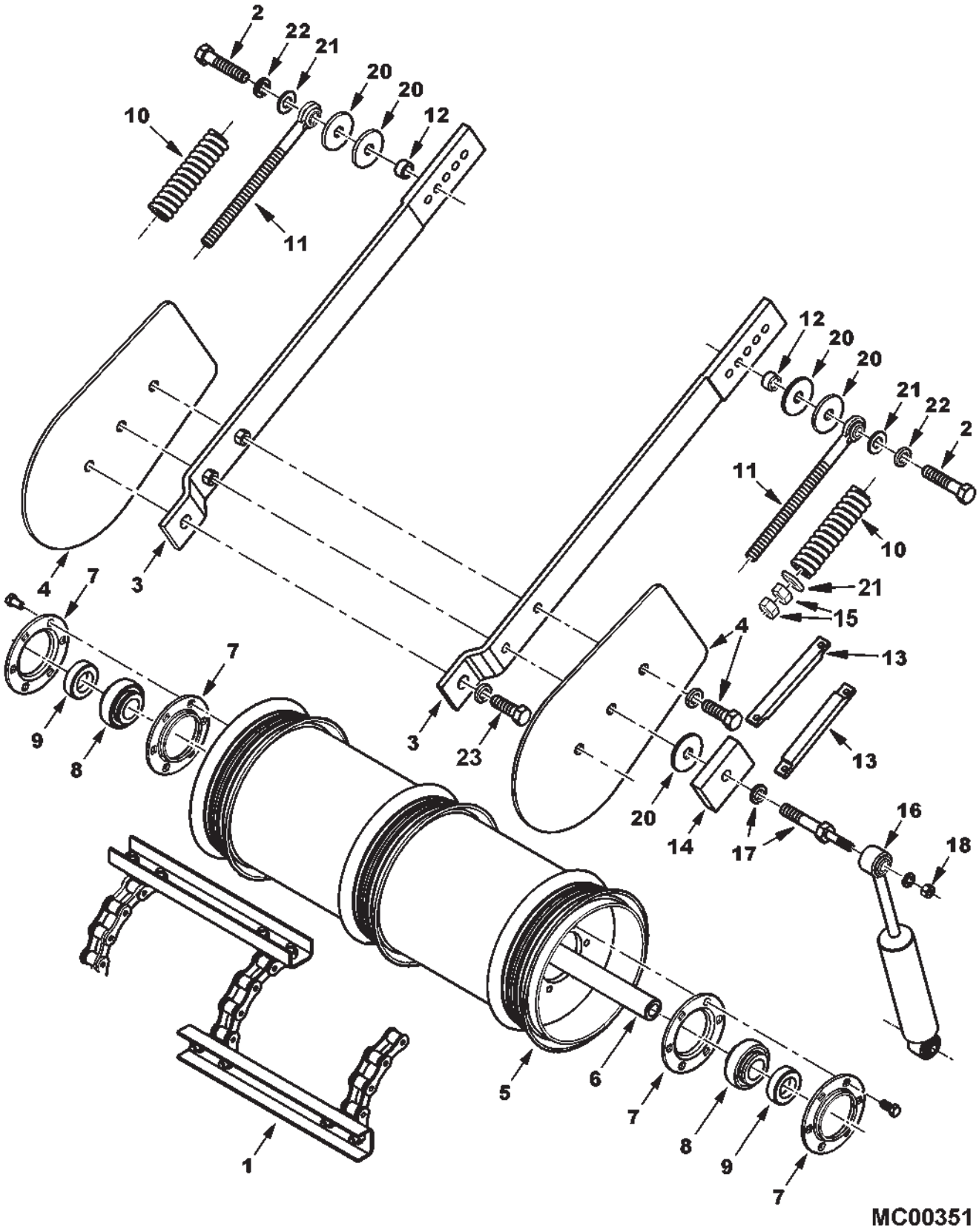

CONVEYOR
(PRIOR S/N HP87101)

ITEM	NUMBER	QTY	DESCRIPTION
1	71449007	1	CHAIN ASY, FEEDER CONVEYOR, W/SLATS
	71149999	1	CHAIN ASY, CONVEYOR, CENTER
	71449001	2	CHAIN ASY, CONVEYOR, SIDE
	71149894	AR	LINK, ATTACHING
	70937300	AR	LINK, ROLLER
	71149896	AR	LINK, OFFSET, INCL. PIN & LOCKNUT
	71149895	AR	LINK, COUPLING
	70920397	AR	NUT, NYLON LOCK, 1/4-20
	71395877	28	SLAT, FEEDER CHAIN
	70937603	112	CAPSCREW, LOCKING, 1/2-13 X 3/4 GR8
	70928512	112	NUT, 1/2-13 REG GR8
2	70923111	2	CAPSCREW, 5/8-11 X 3 GR5
3	71381680	2	ARM ASY, FEEDER DRUM
4	71381682	2	SHIELD, DUST
	70923151	2	CAPSCREW, 5/8-11 X 1-1/4 GR5
	70917373	2	LOCKWASHER, 5/8 REG
5	71379111	1	DRUM WLMT, 8.625"
	71377310	3	WEAR RING, 8.625"
6	116375W1	1	SHAFT, CONVEYOR DRUM
7	71370634	4	FLANGE, BEARING, 72MM
	70925625	12	CAPSCREW, 3/8-16 X 7/8, NYLOK GR8
	705038	12	LOCKWASHER, 3/8 REG
8	71309117	2	BEARING, 1-1/4, INCL. COLLAR
9	7710551	2	COLLAR, BEARING
10	71375335	2	SPRING
11	71363526	2	EYEBOLT, 5/8-11 THD.
12	71370121	2	SPACER, ARM
13	71370496	4	STOP, ARM, FEEDER HOUSING.
	70931317	8	BOLT, RD HD,SHT SQ NK, 1/4-20 X 3/4
	70916964	8	LOCKWASHER, 1/4
	70916622	8	NUT, 1/4-20 REG
14	71370120	2	STOP, DRUM POSITION
15	70915726	4	NUT, 5/8-11 REG
16	71315999	2	SHOCK ABSORBER
	70925696	2	CAPSCREW, 7/16-14 X 2 GR5
	70918199	2	LOCKWASHER, 7/16
	70918267	2	WASHER, 7/16 NARROW
17	71376888	2	STUD, DAMPER ATTACH
	70917373	2	LOCKWASHER, 5/8 REG
18	70930757	2	NUT, NYLOCK, 7/16-14
	70918267	2	WASHER, 7/16 NARROW
20	70937480	6	WASHER, HARD, 21/32 X 2-1/4 X 8 GA.
21	70918268	4	WASHER, PLAIN, 5/8 NARROW
22	70917373	2	LOCKWASHER, 5/8 REG
23	70937548	2	CAPSCREW, 3/4-10 X 2, GR 8, NYLOK
	70919332	2	LOCKWASHER, 3/4 REG
-	70931194	AR	LOCTITE, SEALANT, 271

MC00351
PR: 148

CONVEYOR
(EFF. S/N HP87101)

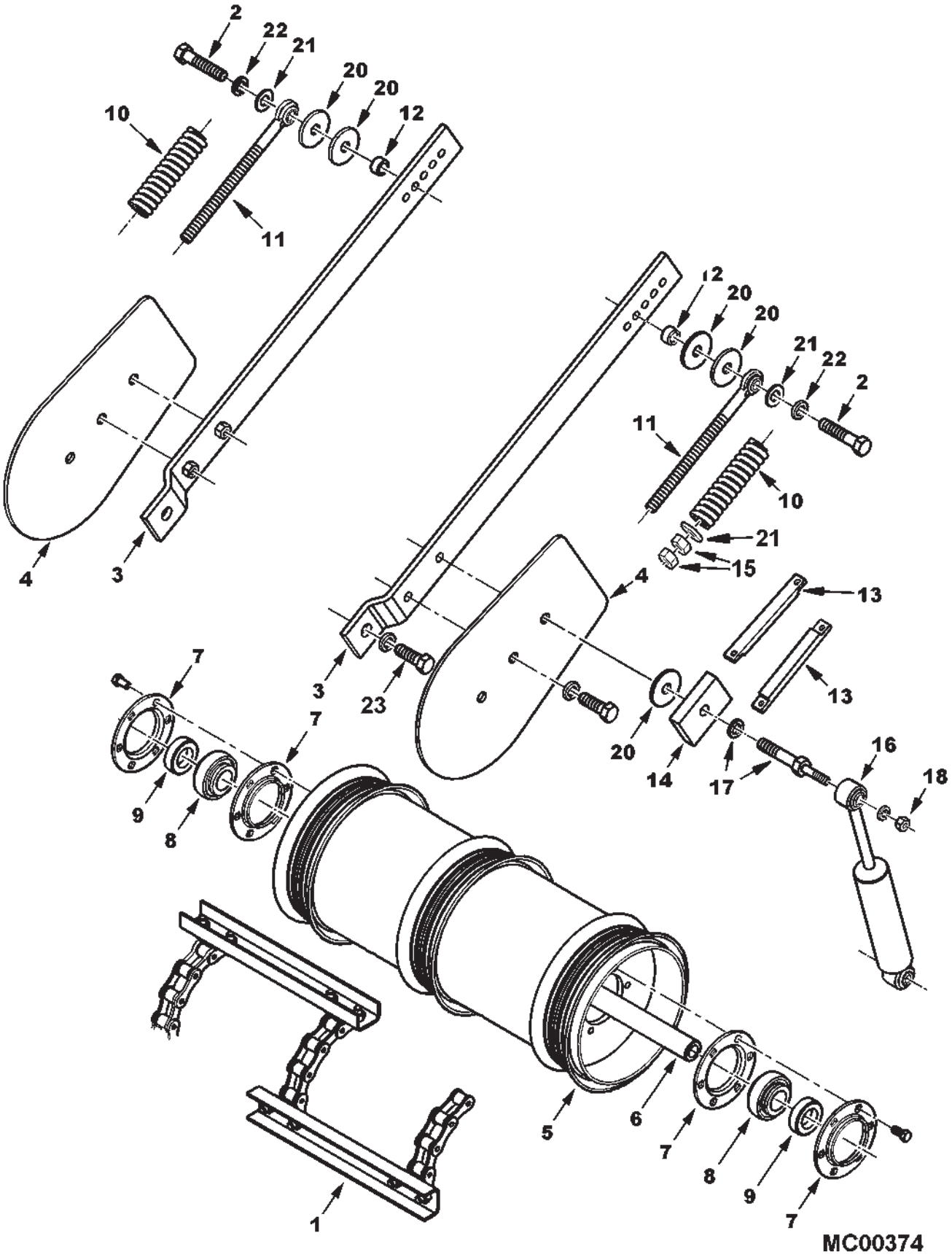

CONVEYOR
(EFF. S/N HP87101)

ITEM	NUMBER	QTY	DESCRIPTION
1	71449018	1	CHAIN ASY, FEEDER CONVEYOR, W/SLATS
	71449016	1	CHAIN ASY, CONVEYOR, CENTER
	71449015	2	CHAIN ASY, CONVEYOR, SIDE
	71149894	AR	LINK, ATTACHING
	70937300	AR	LINK, ROLLER
	71149896	AR	LINK, OFFSET, INCL. PIN & LOCKNUT
	71149895	AR	LINK, COUPLING
	70920397	AR	NUT, NYLON LOCK, 1/4-20
	71395877	28	SLAT, FEEDER CHAIN
	70937603	112	CAPSCR, LOCKING, 1/2-13 X 3/4 GR8
	70928512	112	NUT, 1/2-13 REG GR8
2	70923111	2	CAPSCREW, 5/8-11 X 3 GR5
3	71396481	2	ARM, FRONT FEEDER DRUM
4	71381682	2	SHIELD, DUST
	70923113	2	CAPSCREW 5/8-11 X 1 GR5
	70917373	2	LOCKWASHER, 5/8
5	71379111	1	DRUM WLMT, 8.625
	71377310	3	WEAR RING, 8.625"
6	116375W1	1	SHAFT, CONVEYOR DRUM
7	71370634	4	FLANGE, BEARING, 72MM
	70925625	12	CAPSCREW, 3/8-16 X 7/8, NYLOK GR8
	705038	12	LOCKWASHER, 3/8 REG
8	71309117	2	BEARING, 1-1/4, (INCL. COLLAR)
9	7710551	2	COLLAR, BEARING
10	71375335	2	SPRING
11	71363526	2	EYEBOLT, 5/8-11 THD.
12	71370121	2	SPACER, ARM
13	71370496	4	STOP, ARM, FEEDER HOUSING.
	70931317	8	BOLT, RD HD SHT SQ NK, 1/4-20 X 3/4
	70916964	8	LOCKWASHER, 1/4
	70916622	8	NUT, 1/4-20 REG
14	71370120	2	STOP, DRUM POSITION
15	70915726	4	NUT, 5/8-11 REG
16	71315999	2	SHOCK ABSORBER
	70925696	2	CAPSCREW, 7/16-14 X 2 GR5
	70918199	2	LOCKWASHER, 7/16
	70918267	2	WASHER, 7/16 NARROW
17	71406934	2	STUD, DAMPER ATTACH
18	70930757	2	NUT, NYLOCK, 7/16-14
	70918267	2	WASHER, 7/16 NARROW
20	Y705582	6	WASHER, HARD, .688 X 1.28 X .125 TH
21	70918268	4	WASHER, PLAIN, 5/8 NARROW
22	70917373	4	LOCKWASHER, 5/8
23	70937548	2	CAPSCREW, 3/4-10 X 2, GR 8, NYLOK
	70919332	2	LOCKWASHER, 3/4 REG
-	70931194	AR	LOCTITE, SEALANT, 271

MC00374
PR: t05b15n00a0012

HEADER REVERSER
LINES & FITTINGS
(PRIOR S/N HP87101)

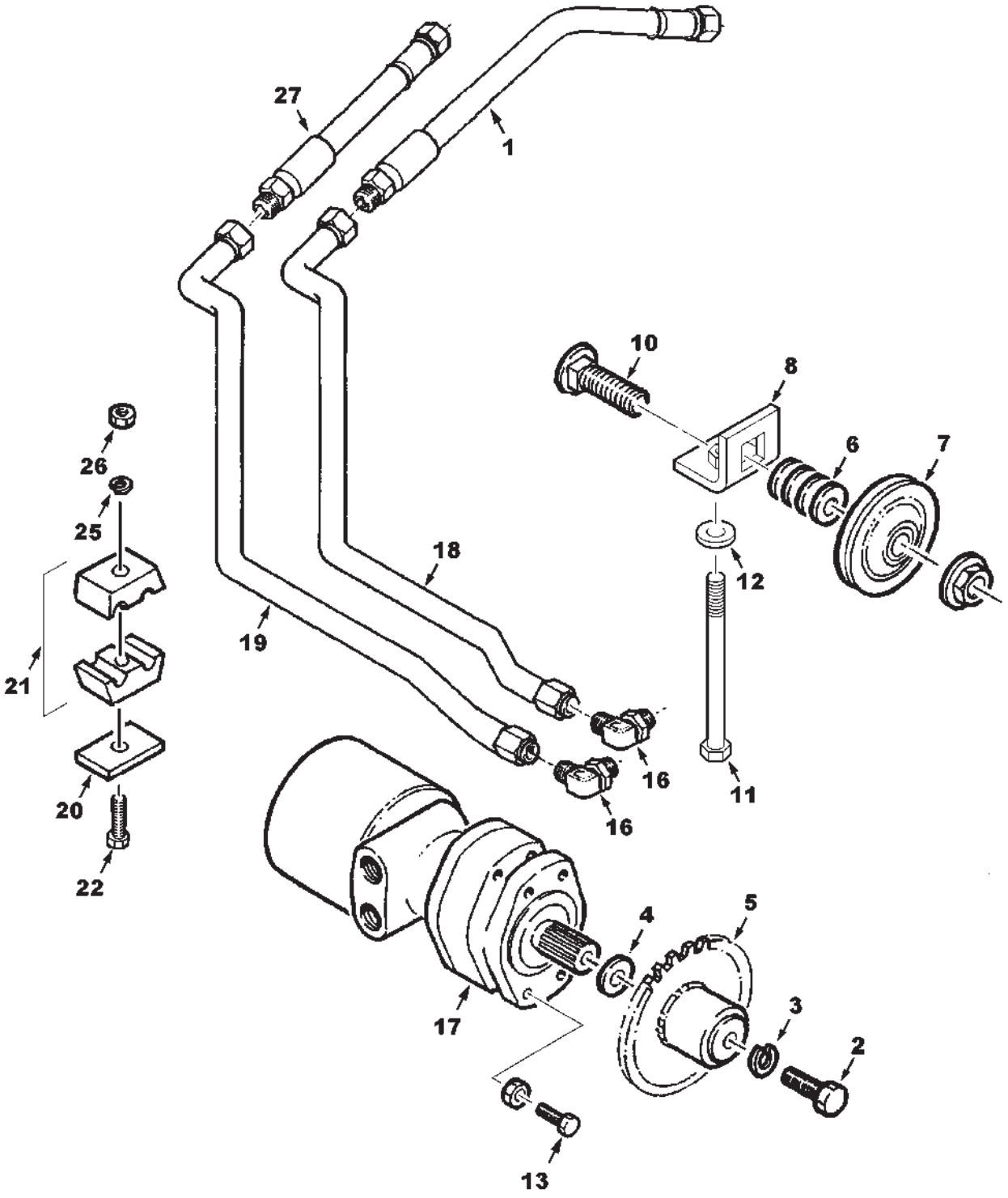

MC00353

HEADER REVERSER
LINES & FITTINGS
(PRIOR S/N HP87101)

ITEM	NUMBER	QTY	DESCRIPTION
1	112046W1	1	HOSE ASY, REVERSER RETURN, 3/8 X 32"
2	353609X1	1	CAPSCREW, 5/8-18 UNF X 1-1/4 GR5
3	70917373	1	LOCKWASHER, 5/8 REG
4	363282X1	AR	WASHER, SPCL, FLAT, .688 X 1.0 X .048
5	71379631	1	SPROCKET WLDMT, 15T 3/4 P
6	70918268	6	WASHER, 5/8 NARROW
7	71378873	1	SPROCKET, IDLER, 15 TEETH
8	71174391	1	BRACKET WLDMT, IDLER ADJUST
10	70933955	1	BOLT, RD HD,SQ NK, 5/8-11 X 2-3/4
	700703922	1	NUT, HEX FLNG, TOP LOCK, 5/8-11 UNC
11	70935032	1	CAPSCREW, 7/16-14 X 6 GR5
12	70918267	1	WASHER, 7/16 NARROW
13	701235	4	CAPSCREW, 1/2-13UNC X 1-1/2 GR5
	Y704742	4	NUT, HEX FLNG, TOP LOCK, 1/2-13
16	70924786	2	ELBOW, 90 DEG, 7/8-14 ORB X 3/4-16 JIC
	70921205	2	O-RING, .097 X .755 ID
17	104307W91	1	MOTOR AND CLUTCH ASSEMBLY
			(SEE MOTOR & CLUTCH LISTING)
18	71391496	1	TUBE ASSEMBLY, 1/2
19	71391495	1	TUBE ASSEMBLY, 1/2
20	101646M1	2	COVER PLATE
21	148022M1	2	CLAMP PAIR, DOUBLE, 1/2 X 1/2 DIA
22	7701485	2	CAPSCREW, 1/4-20 X 2" GR5
25	70916964	2	LOCKWASHER, 1/4 REG
26	70916622	1	NUT, 1/4-20 UNC, REG
27	71394137	1	HOSE ASY, REVERSER SUPPLY, 3/8 X 96"
28	71149992	1	CHAIN ASY, FEEDER DRIVE

MC00353
PR: 150

HEADER REVERSER
DRIVE & HYDRAULICS
(EFF. S/N HP87101)

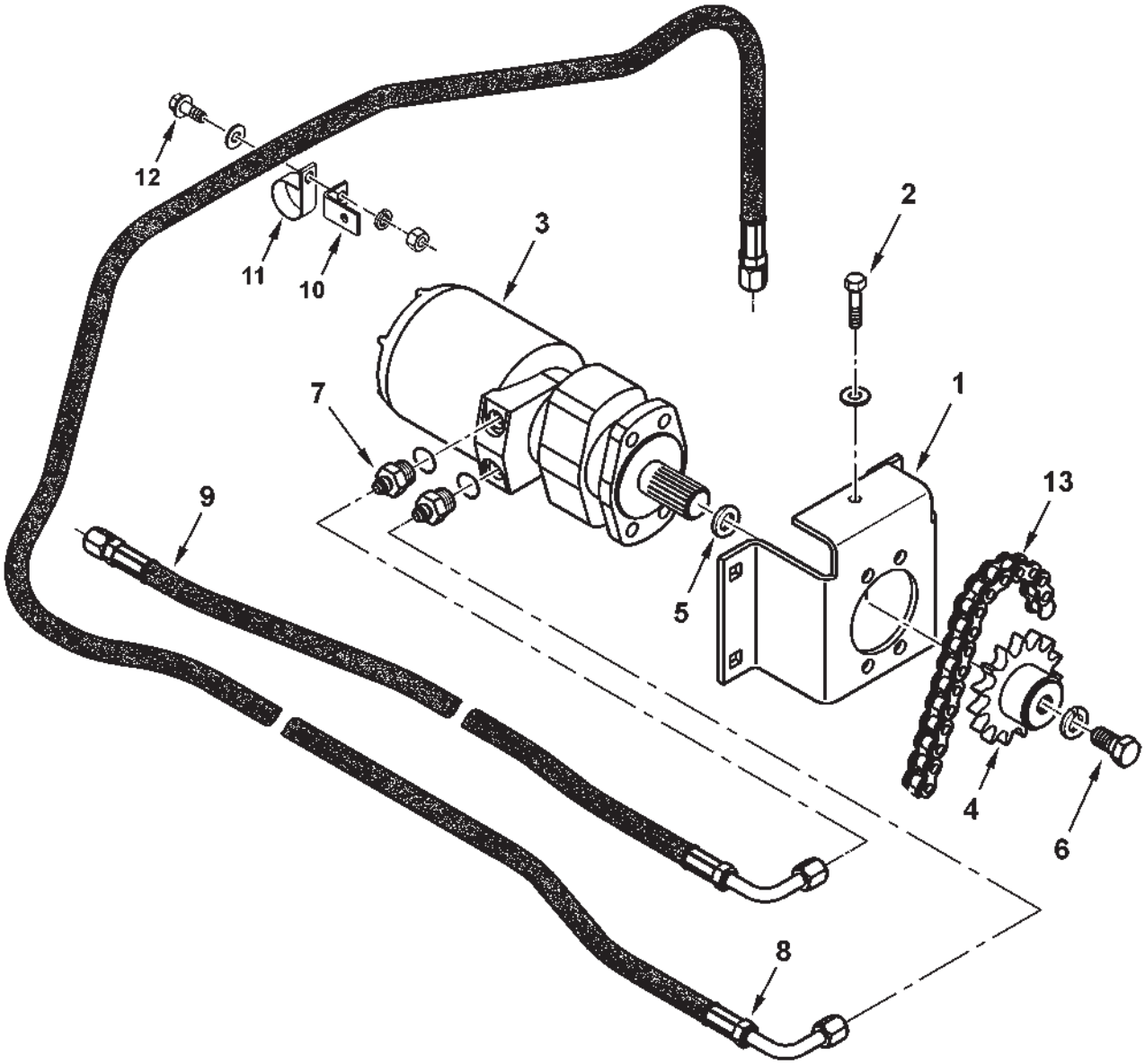

MC00376

HEADER REVERSER
DRIVE & HYDRAULICS
(EFF. S/N HP87101)

ITEM	NUMBER	QTY	DESCRIPTION
1	71400852	1	PLATE WLDMT, FEEDER REV'R MOTOR
	68619	1	BOLT, RND HD SQ NK, 1/2-13 X 1-1/4
	Y705046	1	LOCKWASHER, 1/2
	704031	1	NUT, 1/2-13 REG
2	70929116	1	CAPSCREW, 3/8-16 X 2 GR5, FULL THD
	70918266	1	WASHER, 3/8 NARROW
3	71362941	1	MOTOR AND CLUTCH ASY, REVERSER
	701235	4	CAPSCREW, 1/2-13 X 1-1/2 GR5
	Y704742	4	NUT, HEX FLNG TOP LOCK, 1/2-13
4	71379631	1	SPROCKET WLDMT, 15T 3/4 P
5	363282X1	AR	WASHER, SPCL, FLAT, .688 X 1.0 X .048
6	353609X1	1	CAPSCREW, 5/8-18 UNF X 1-1/4 GR5
	70917373	1	LOCKWASHER, 5/8
7	8746018	2	STR CONN. 9/16-18 JIC X 7/8-14 ORB
	70921205	2	O-RING, .097 X .755 ID
8	71401741	1	HOSE ASY, PRESSURE, 104" LG
9	71401740	1	HOSE ASY, RETURN, 48" LG
10	71407962	1	BRACKET, HOSE CLAMP
11	7041015	1	CLAMP, 2-1/4 ID X .531 HOLE
12	70921965	1	CAPSCREW, 3/8-16 X 3/4 GR5
	70918266	1	WASHER, 3/8 NARROW
	70916965	1	LOCKWASHER, 3/8
	70916950	1	NUT, 3/8-16, REG
13	-----	1	CHAIN ASY, REVERSER DRIVE (INCL. FOLLOWING 2 ITEMS)
	71449019	1	CHAIN, #60, 71 PITCHES
	70914584	1	CONNECTOR LINK, #60 CHAIN

MC00376
PR: t05b15n00a0013

REVERSER MOTOR & CLUTCH
COMPONENTS
(PRIOR S/N HP87101)

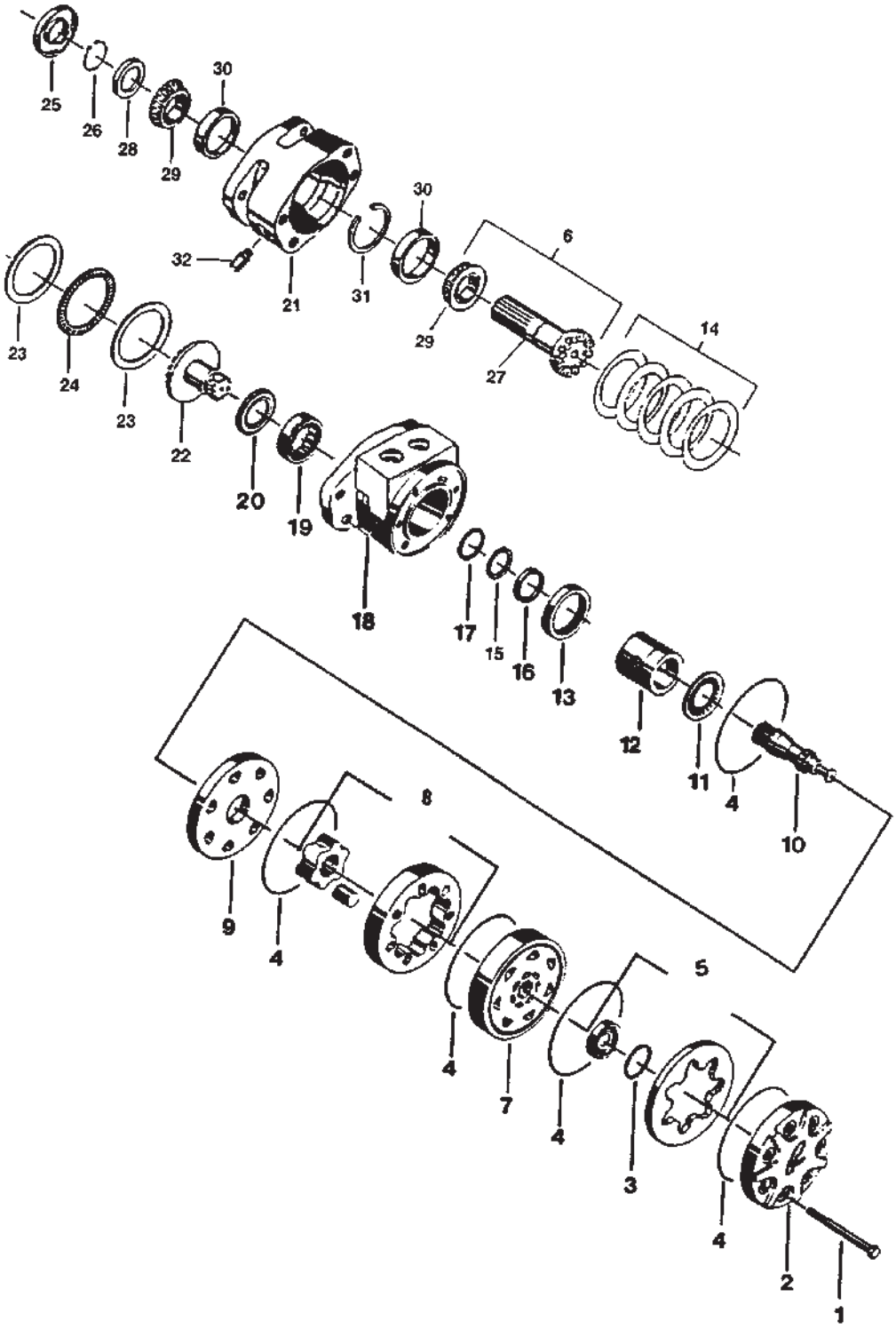

MC00006

REVERSER MOTOR & CLUTCH
COMPONENTS
(PRIOR S/N HP87101)

ITEM	NUMBER	QTY	DESCRIPTION
-	104307W91	1	MOTOR AND CLUTCH, HYDRAULIC (TRW MB)
1	104482W1	7	BOLT, SPECIAL
2	71367309	1	COVER, END
3	1042752M1	1	* RING, SEAL - COMMUTATOR
4	104475W1	5	* RING, SEAL
5	104480W91	1	COMMUTATOR ASSEMBLY (MATCHED SET)
7	104479W1	1	MANIFOLD
8	104478W91	1	SET ROTOR (MATCHED SET)
9	104476W1	1	PLATE, WEAR
10	104477W1	1	LINK, DRIVE
11	71367317	1	BEARING, THRUST
12	71367528	1	COUPLING & RETAINING RING ASSEMBLY
13	71367320	2	BEARING, INNER
14	71354859	AR	DISC SPRING
15	104486W1	1	WASHER, BACKUP
16	104485W1	1	* SEAL
17	104484W1	1	* WASHER, BACKUP
18	71367323	1	HOUSING ASSEMBLY
	353724X1	4	BOLT, HEX, 1/2-13 UNC X 1-1/2
19	71367324	1	BEARING, OUTER
20	104483W1	1	* SEAL
21	104473W91	1	CLUTCH HOUSING ASSEMBLY
			(INCLUDES 2-ITEM 30 & 1-ITEM 31)
22	104468W1	1	DRIVE GEAR, SPLINED
23	103732W1	2	WASHER, THRUST
24	71354855	1	BEARING, THRUST
25	71354861	1	SEAL, DIRT AND WATER
26	71354865	1	RING, RETAINING
27	103767W1	1	SHAFT, DRIVE
28	103736W1	1	WASHER, THRUST
29	103737W1	2	CONE, BEARING
30	105733W1	2	CUP, BEARING
31	103738W1	1	RING, RETAINING
32	355547X1	1	PLUG, PIPE
-	700709503	AR	KIT, SEAL (INCL * ITEMS 3,4,16,17,20)

MC00006
PR: 152

REVERSER MOTOR

CLUTCH HOUSING & SHAFT ASSEMBLY
(EFF. S/N HP87101)

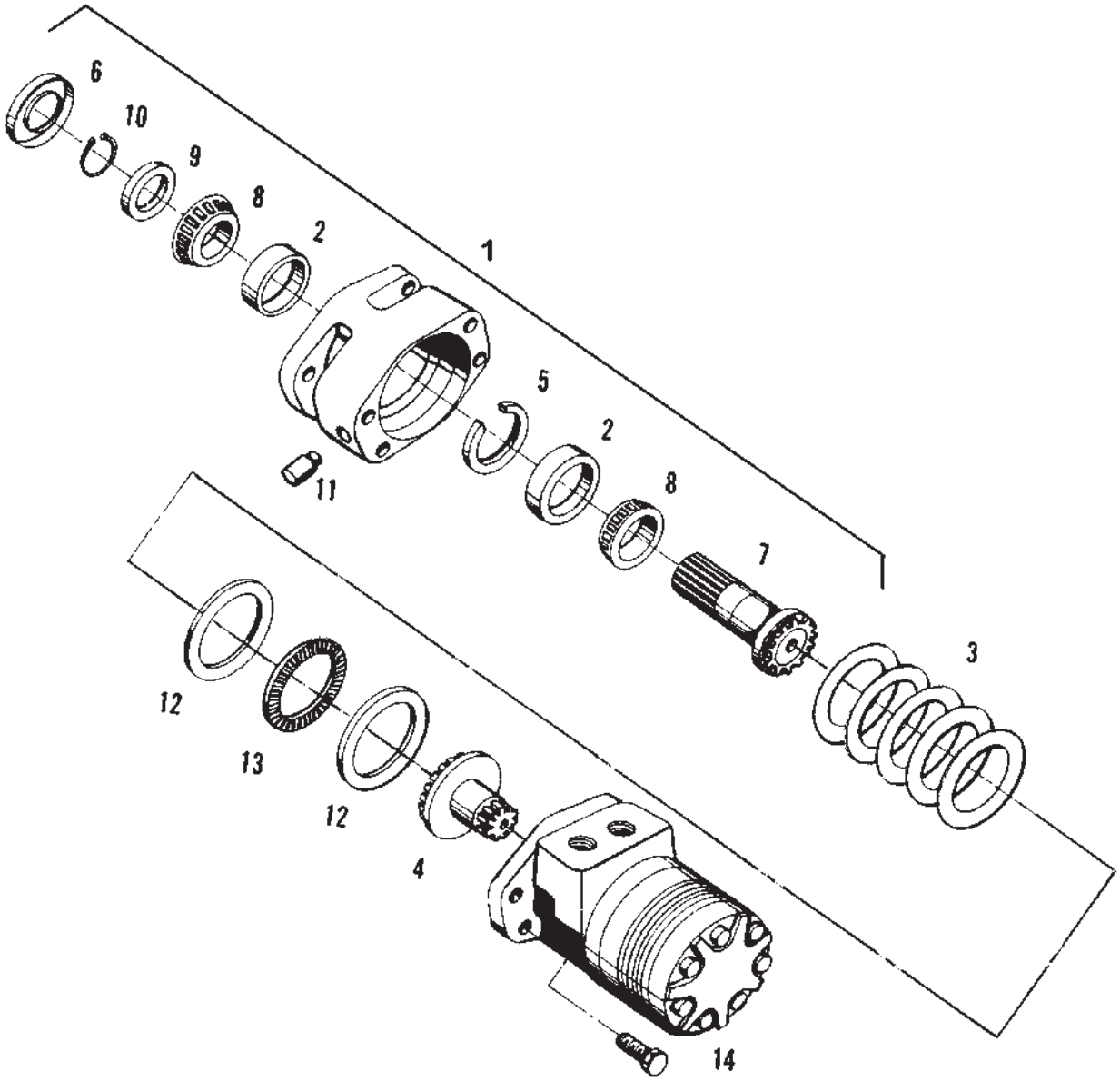

GC00123

REVERSER MOTOR
CLUTCH HOUSING & SHAFT ASSEMBLY
(EFF. S/N HP87101)

ITEM	NUMBER	QTY	DESCRIPTION
-	71362941	AR	MOTOR ASY., HDR REVERSER (INCL. CLUTCH)
	70923154	4	CAPSCREW, 1/2-13 X 1-1/2
1	71367529	1	HOUSING ASY. (INCL. ITEMS 2, 5-10)
2	70327997	2	CUP, BEARING
3	71354859	5	DISC SPRING
4	104468W1	1	DRIVE, SPLINE
5	71355001	1	RING, SNAP
6	71354861	1	SEAL, DIRT/WATER
7	71354863	1	SHAFT
8	70327382	2	CONE, BEARING
9	71354864	1	WASHER, THRUST
10	71354865	1	RING, SNAP
11	70901651	1	PLUG, PIPE, 1/8 NPT
12	71354856	2	WASHER, THRUST
13	71354855	1	BEARING, THRUST
14	-----	--	MOTOR TORQUE (SEE FEED REVERSER - TORQUE MOTOR FOR COMPONENTS)

GC00123
PR: t05b15n00a0014

REVERSER MOTOR

TORQUE MOTOR ASY.
(EFF. S/N HP87101)

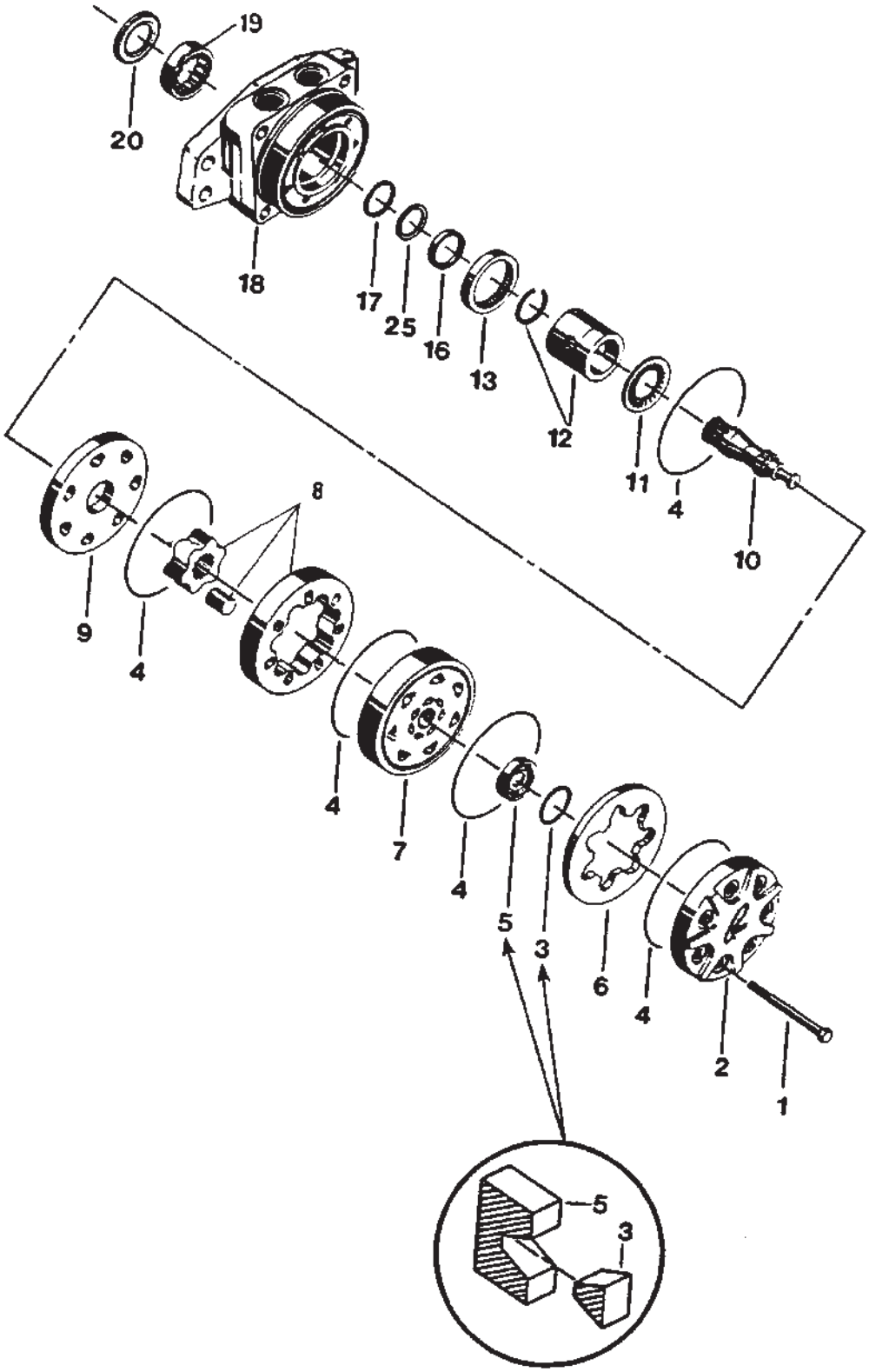

GC00124

REVERSER MOTOR
TORQUE MOTOR ASY.
(EFF. S/N HP87101)

ITEM	NUMBER	QTY	DESCRIPTION
-	71362941	AR	MOTOR ASY., HDR REVERSER (INCL. CLUTCH)
1	71367308	7	BOLT, SPECIAL
2	71367309	1	COVER, END
3	-----	1	RING, BONDEN (ORDER SEAL KIT #71367307)
4	-----	5	SEAL RING (ORDER SEAL KIT)
5	71367312	1	COMMUTATOR ASY. (INCL. ITEM 6)
6	-----	1	RING, COMMUTATOR (ORDER COMMUTATOR ASY.)
7	104479W1	1	MANIFOLD
8	71367314	1	ROTOR ASY.
9	104476W1	1	PLATE, WEAR
10	71367316	1	LINK, DRIVE
11	71367317	1	BEARING, THRUST
12	71367528	1	COUPLING ASY. (INCL. RETAINING RING)
13	71367320	1	BEARING
16	-----	1	SEAL, SHAFT (ORDER SEAL KIT)
17	-----	1	RING, BACK-UP (ORDER SEAL KIT)
18	71367323	1	HOUSING ASY.
19	71367324	1	BEARING
20	-----	1	SEAL (ORDER SEAL KIT)
25	71367526	1	WASHER
-	700709503	1	KIT, SEAL (INCL ITEMS 3, 4, 16, 17 & 20)

GC00124
PR: t05b15n00a0015

HOUSING

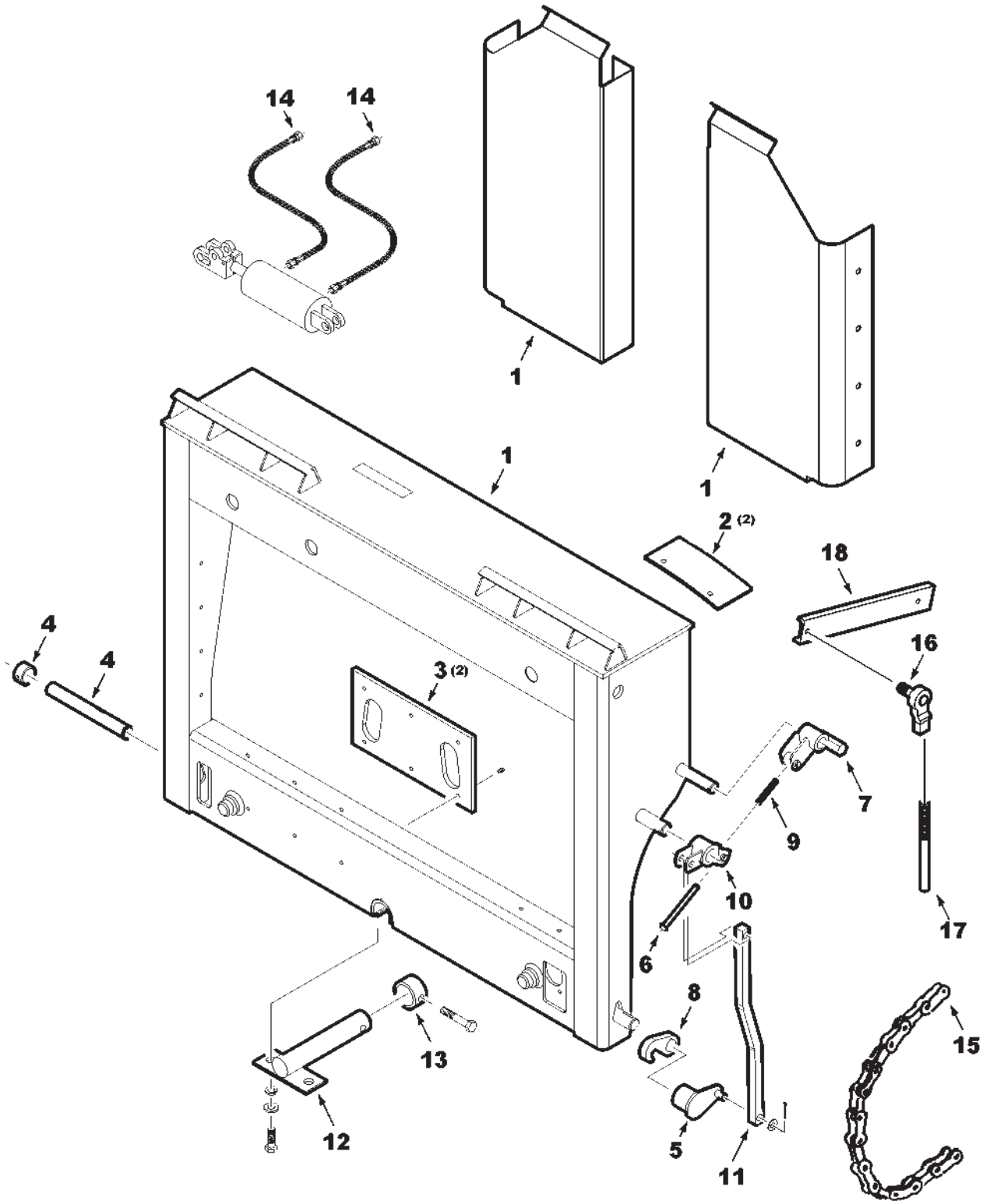

MC00345

ITEM	NUMBER	QTY	DESCRIPTION
1	71401307B	1	FRAME WLDMT, HDR
	71377769	1	PANEL, FILLER (LH)
	71377770	1	PANEL, FILLER (RH)
	372729X1	12	SCR,HX WSHR HD,TAPPING,5/16-18 X 3/4
2	71374672	2	TRACK, ROLLER
	70927477	4	CAPSCREW, 5/16 X 1 THD FORMING
	70917356	4	LOCKWASHER, 5/16
3	71374816	2	BEARING, LOWER PLASTIC
	71335690	12	SCREW, TORX,TRUSS HD, 5/16-18 X 7/8
	70931194	AR	LOCTITE #271
	79021676	AR	LOCTITE PRIMER
4	71374796	1	SHAFT, LATCH PIVOT
	375028X1	1	COLLAR, LOCK W/SETSCREW
	70905126	1	KEY, WOODRUFF #808, 1/4 X 1" DIA
5	71375564	1	CRANK ASSEMBLY, HOOK
	70905126	2	KEY, WOODRUFF #808, 1/4 X 1" DIA
	70921263	1	SETSCREW, SKT HD, 5/16-18 X 3/8
6	71314842	1	SHAFT ASSEMBLY, SPRING
	70918111	1	PIN, SPRING 1/8 X 1
	70918266	2	WASHER, 3/8 NARR (AR TO ADJUST SPRG)
7	71375556	1	CRANK ASSEMBLY, LATCH
	70918458	1	PIN, COTTER 3/16 X 1-1/4
	70919391	1	WASHER, .906 X 1.5 X #12GA.
8	71317841	2	HOOK
	70905126	2	KEY, WOODRUFF #808, 1/4 X 1" DIA
	70903835	2	SETSCREW, SKT HD, 1/4-20 X 3/8
9	71314833	1	SPRING
10	71375559	1	PIVOT ASSEMBLY
	70918458	1	PIN, COTTER 3/16 X 1-1/4
	70918452	1	COTTER PIN, 1/8 X 1
	705681	1	WASHER, 1" NARROW
	70929593	1	PIN, CLEVIS, 1/2 X 1.36 LG
11	71398477	1	ROD, LATCH
	70918452	1	COTTER PIN, 1/8 X 1
	Y705624	1	WASHER, SAE 1/2
12	71374798	1	PIN WLMT, PIVOT
	70919387	4	WASHER 41/64 X 1-1/4 X .065
	70922664	2	CAPSCREW, 5/8 X 2
	70917373	2	LOCKWASHER, 5/8
	13811X	1	LUBE FTG, STR, 1/4-28 TAPER THD
	70931194	AR	LOCTITE, #271
	79021648	AR	LOCQUIC PRIMER
13	71374674	1	COLLAR, PIN
	70923240	1	CAPSCREW, 1/2 X 2-3/4
	Y704288	1	NUT, HEX CENTER LOCK, 1/2

CONTINUED

HOUSING

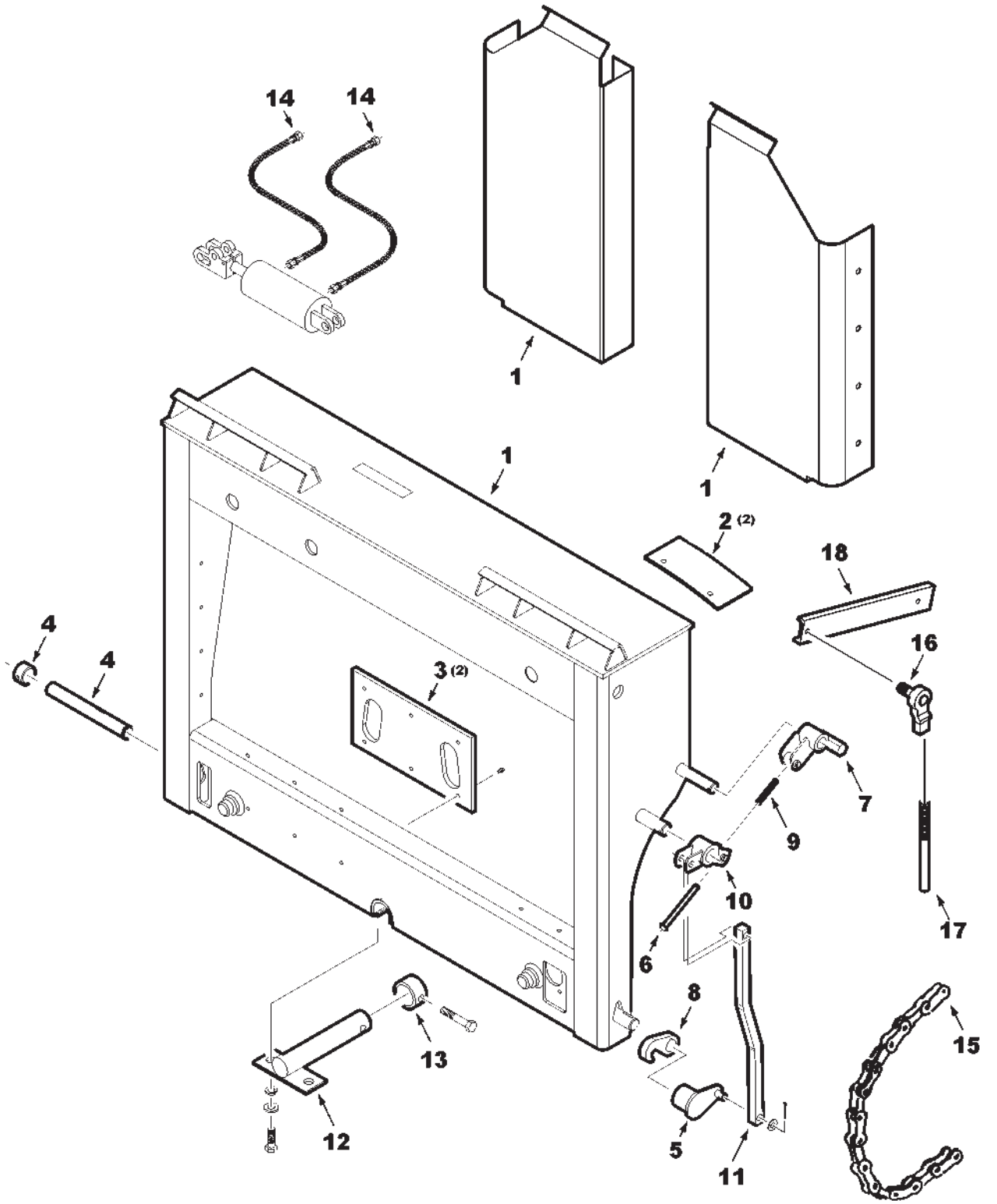

MC00345

ITEM	NUMBER	QTY	DESCRIPTION
14	71374932	2	HOSE ASSEMBLY 1/4
	70934923	2	STR CONN, 3/4-16 ORB X 7/16-20 JIC
	70932619	2	CLAMP, HOSE DBL. 1/2 X .406 HOLE
	70925442	8	TIE, PLASTIC
15	71149896	9	LINK, OFFSET, A557 (PRIOR S/N HP87101)
16	71314999	2	JOINT, BALL 1/4-28
	70914192	2	NUT, 1/4-28
	70916964	2	LOCKWASHER, 1/4
17	71375122	1	ROD, CONNECTING
	70914192	2	NUT, 1/4-28
18	71378317	1	ARM, FEEDER TILT SENSOR
	70927401	1	CAPSCREW, 1/4-20 X 1"
	704007	1	NUT, 1/4-20 REG
	705012	1	LOCKWASHER, 1/4 REG
-	71400042	AR	KIT, LATERAL TILT, FIELD (ORDER THRU DEALER CENTRAL)(PRIOR S/N HP87101)
-	71406011	AR	KIT, LATERAL TILT, FIELD (ORDER THRU DEALER CENTRAL)(EFF. S/N HP87101)

MC00345
PR: 154

ANCHORS & SENSOR

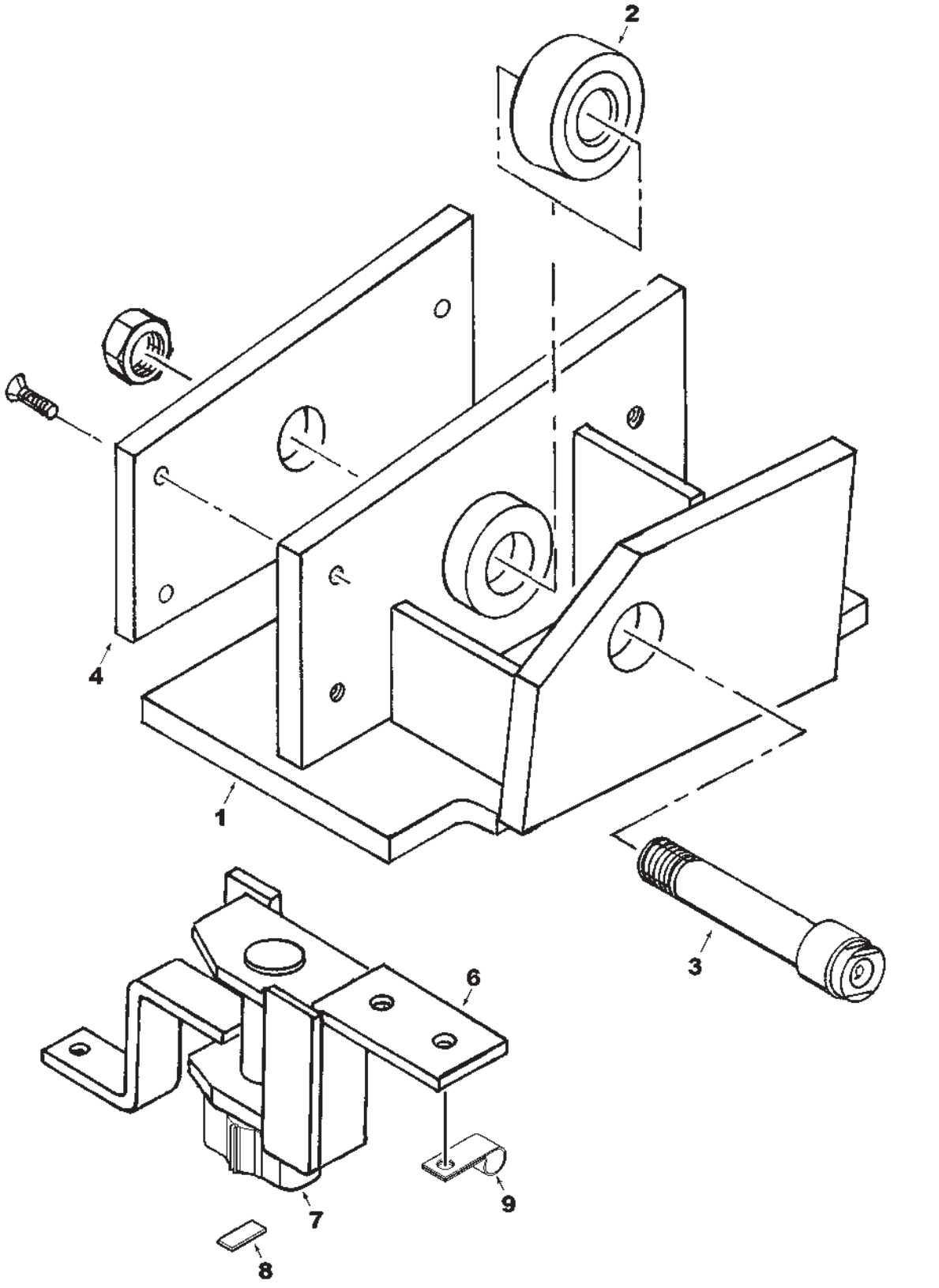

MC00354

ITEM	NUMBER	QTY	DESCRIPTION
1	71374666	1	ANCHOR WLDMT RH
	71374663	1	ANCHOR WLDMT LH
	70919089	10	CAPSCREW, 1/5 X 1-3/4
	Y705046	10	LOCKWASHER, 1/2
2	71374803	1	BEARING, ROLLER
3	71374667	1	SHAFT, ROLLER
	353436X1	1	NUT, JAM 3/4 UNF
	13811X	1	LUBE FTG, STR, 1/4-28 TAPER THD
4	71374670	1	BEARING, PLASTIC RH
	71374669	1	BEARING, PLASTIC LH
	70935275	6	SCREW, FLAT HD HEX SKT 5/16 X 1
	70931194	AR	LOCTITE #271
	79021676	AR	LOCTITE PRIMER
6	71375791	1	SENSOR ACTUATOR WLDMT
	70924856	2	SCREW, HEX HD, TAPPG, 5/16-18 X 1/2
7	71376825	1	POSITION SENSOR, 5K POT.
	70918151	2	SCREW, TRUSS HD, #10-32 X 1-1/4
8	71382607	1	TAB, DRIVE
9	70927134	1	J-CLIP, 5/8 DIA X .406 HOLE

MC00354
PR: 156

HYDRAULIC CYLINDER

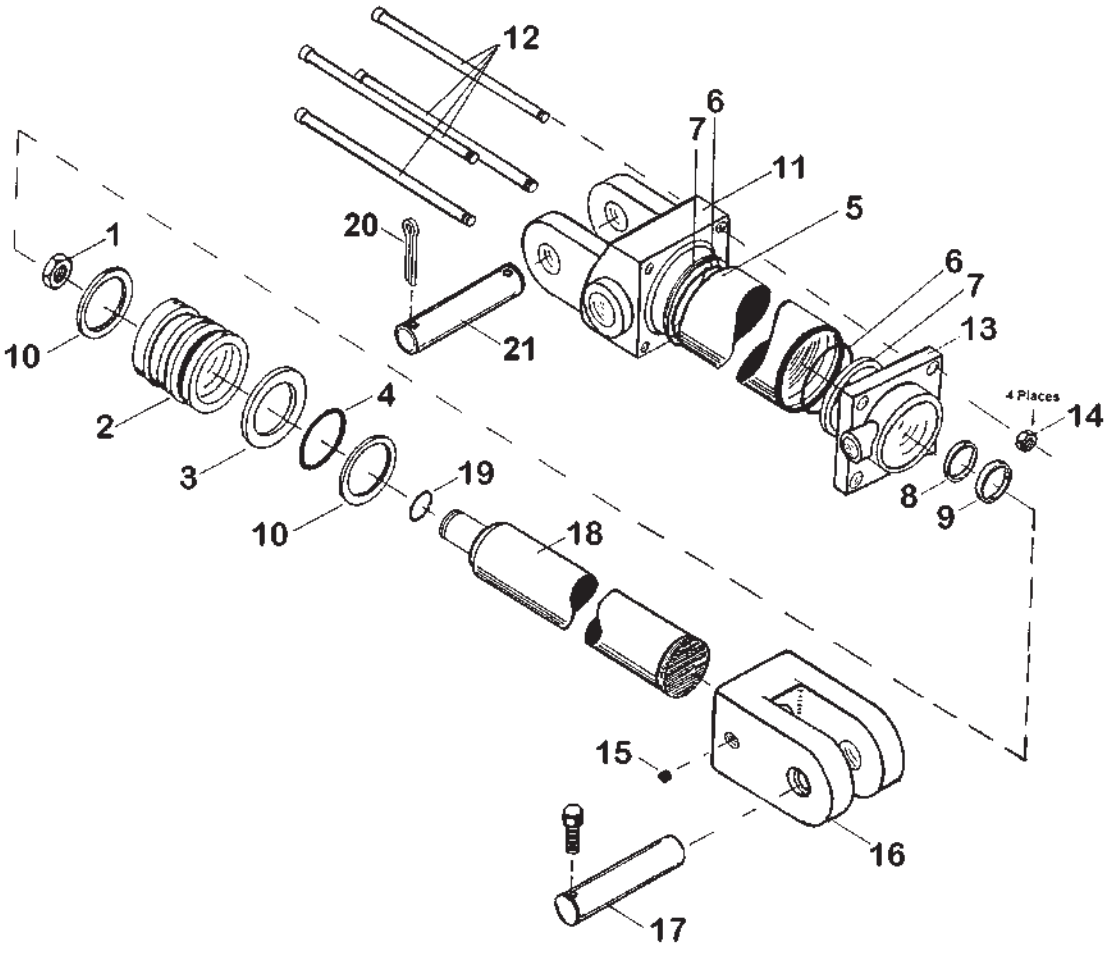

71374671

HYDRAULIC CYLINDER

ITEM	NUMBER	QTY	DESCRIPTION
-	71374671	1	CYL. ASY, HYDR (INCL. ITEMS 1-16,18,19) (PRIOR S/N HN87101)
-	71398131	1	CYL. ASY, HYDR (COMPONENTS NOT AVAILABLE AT THIS ISSUE)(EFF S/N HN87101)
1	70921343	1	NUT, LOCK
2	71374776	1	PISTON
3	-----	1	*SEAL, PISTON
4	-----	1	*O-RING
5	71376907	1	CASE
6	-----	2	*O-RING
7	-----	2	*BACKUP
8	-----	1	*U-CUP
9	-----	1	*WIPER
10	71374778	2	RING, WEAR
11	71374779	1	BASE, CYLINDER
12	71376908	4	ROD, TIE
13	71374781	1	HEAD, CYLINDER
14	70918213	4	NUT, 7/16-14
15	70914383	1	SETSCREW, 3/8-16 X 1/2
16	71374782	1	CLEVIS, CYLINDER
17	71374808	2	PIN, CYLINDER CLEVIS
	70922127	1	CAPSCREW, 5/16-18 X 1-3/4 GR5
	70923362	1	NUT, CENTER LOCK, 5/16-18
18	71376909	1	SHAFT, CYLINDER
19	-----	1	*O-RING
20	70920117	2	PIN, COTTER, 5/32 X 1-1/2
21	71374807	1	PIN, CYLINDER BASE
-	71373962	1	SEAL KIT (INCLUDES * ITEMS)

71374671
PR: 158

HYDRAULICS

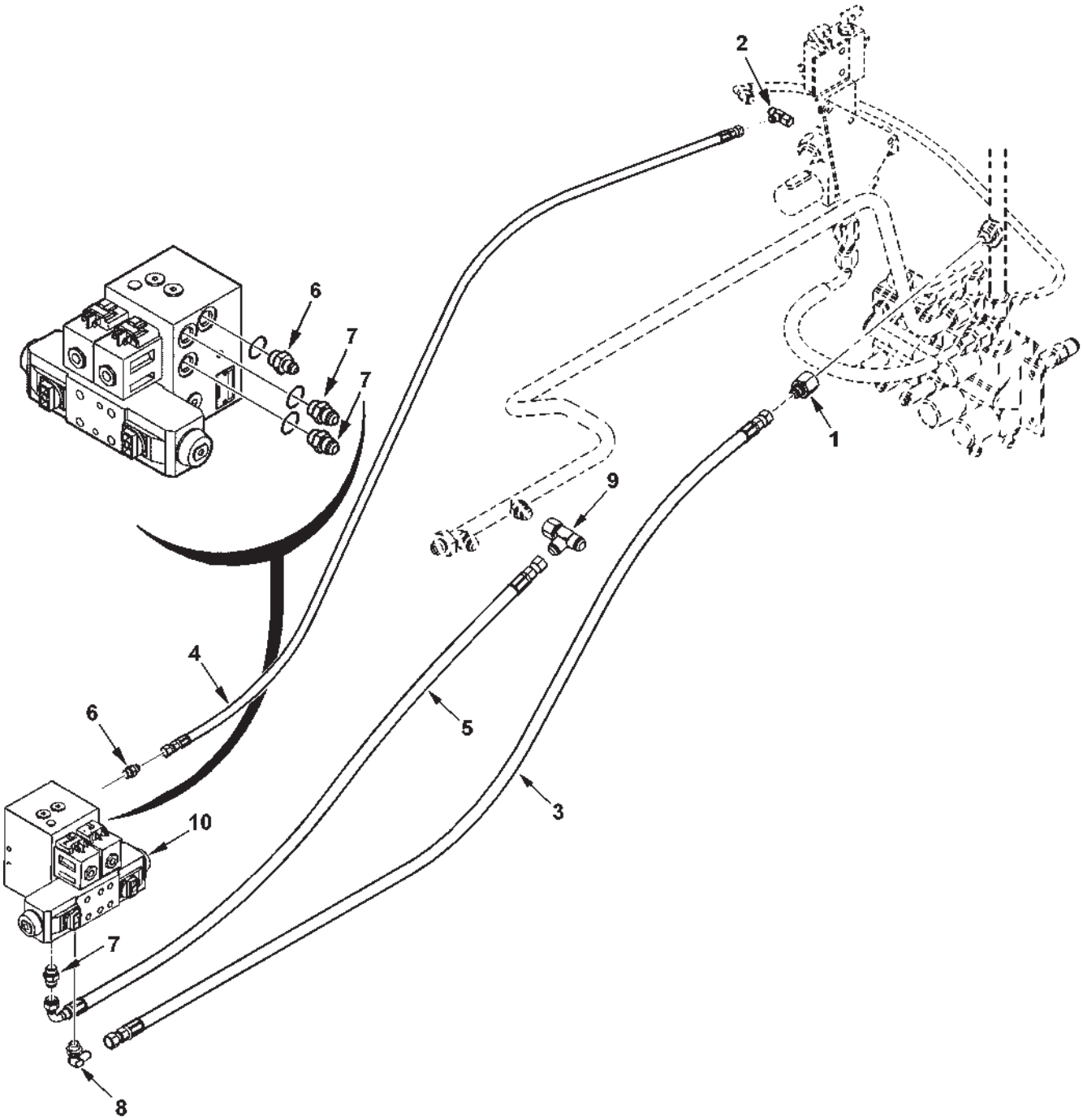

MC00355

ITEM	NUMBER	QTY	DESCRIPTION
1	70926768	1	REDUCER FTG, 9/16-18 JIC X 3/4-16 JIC
2	700701355	1	TEE, SWIV RUN, 7/16-20 JIC
3	700716462	1	HOSE ASY, 3/8 ID
4	71394169	1	HOSE ASY, 1/4 ID
	70937133	1	TIE, NYLON, .30 X 14.5"
5	71394170	1	HOSE ASY, 3/8 ID
6	70926292	1	CONN, STR, 7/16-20 JIC X 9/16-18 ORB
	70921885	1	O-RING, .078 X .468 ID
7	846634	3	CONN, STR, 9/16-18 JIC X 9/16-18 ORB
	70921885	3	O-RING, .078 X .468 ID
8	70922523	1	ELBOW, 90 DEG, 9/16-18 ADJ ORB X JIC
	70921885	1	O-RING, .078 X .468 ID
9	70921298	1	TEE, SWIV RUN, 3/4-16 JIC
10	71409176	1	VALVE ASY, LATERAL TILT (SEE BREAKDOWN)
	705038	2	LOCKWASHER, 3/8 REG
	70921210	2	CAPSCREW, 3/8-16 X 1" GR5

MC00355
PR: 160

VALVE & CONTROL

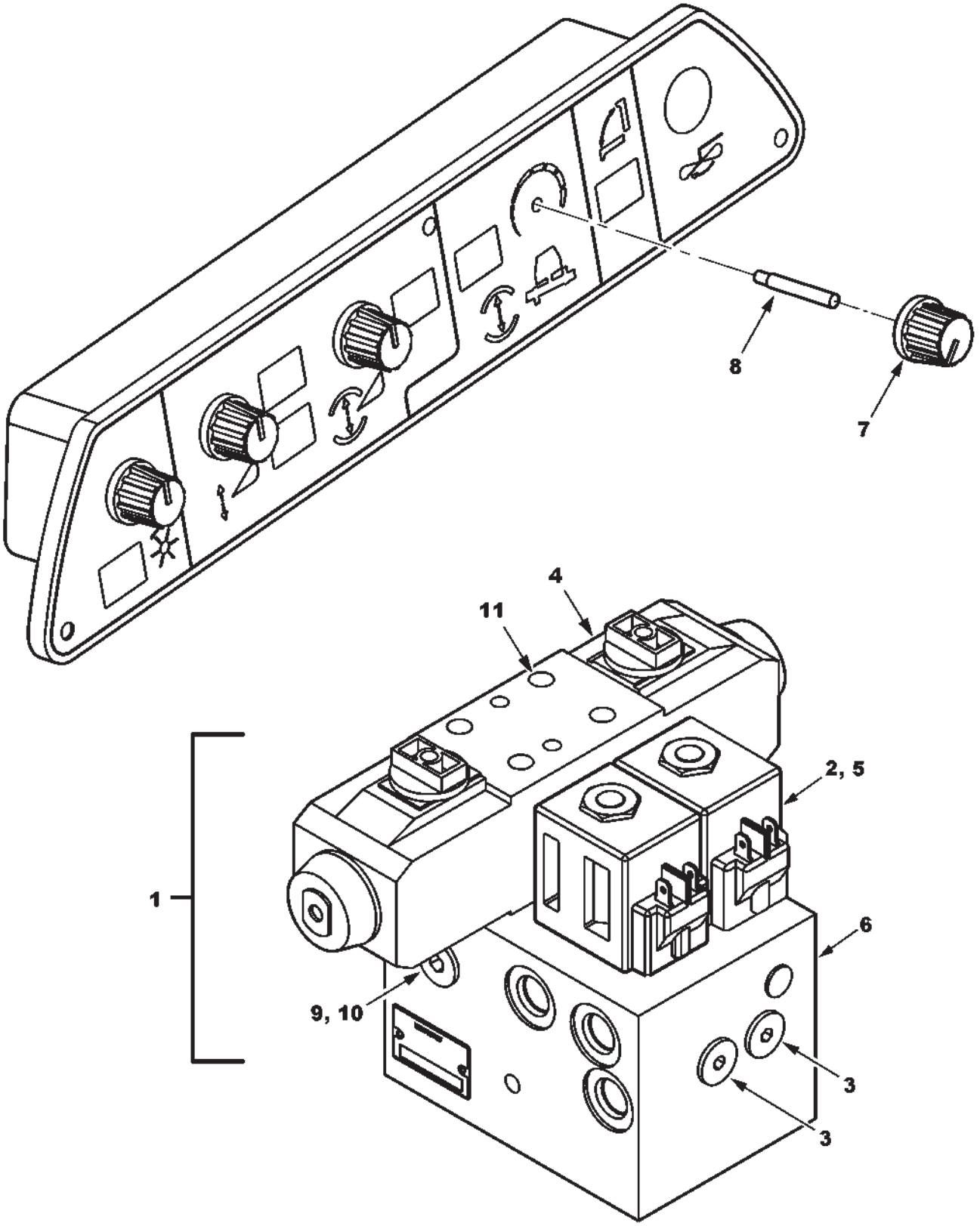

ITEM	NUMBER	QTY	DESCRIPTION
1	71391659	1	VALVE ASY, LATERAL TILT (INCL ITEMS 2-6, 9,10,11)(SERVICED W/ 71409176)
	71409176	1	VALVE ASY, LATERAL TILT (INCL ITEMS 2-6, 9,10,11)(EFF. HP87--- MID-RUN)
2	71398983	2	SOLENOID VALVE ASY
	71398984	2	CARTRIDGE
	71398985	2	COIL
	700706151	2	NUT, COIL
	700715662	AR	KIT, SEAL
3	71398993	2	KIT, SENSE CHECK
4	71398994	1	VALVE ASY, DIRECTIONAL CONTROL
	71398995	2	COIL
	700715393	2	NUT, COIL
	71386129	AR	KIT, SEAL
5	71398988	2	PISTON, PILOT
	71398989	AR	KIT, SEAL
6	-----	1	MANIFOLD (NOT SERVICED)
7	108664W1	1	KNOB, POINTER
8	71394716	1	SHAFT, CONTROL
9	71398134	1	PLUG, HEX SOCKET, SAE ORB
10	71398136	1	ORIFICE PLUG, .053 DIA (USED W/ VALVE ASY, 71391659)
	700713516	1	ORIFICE PLUG, .040 DIA (USED W/VALVE ASY 71409176)(MAY BE USED W/ 71391659)
11	700714189	1	KIT, BOLT

MC00356
PR: 162

FRONT BEATER

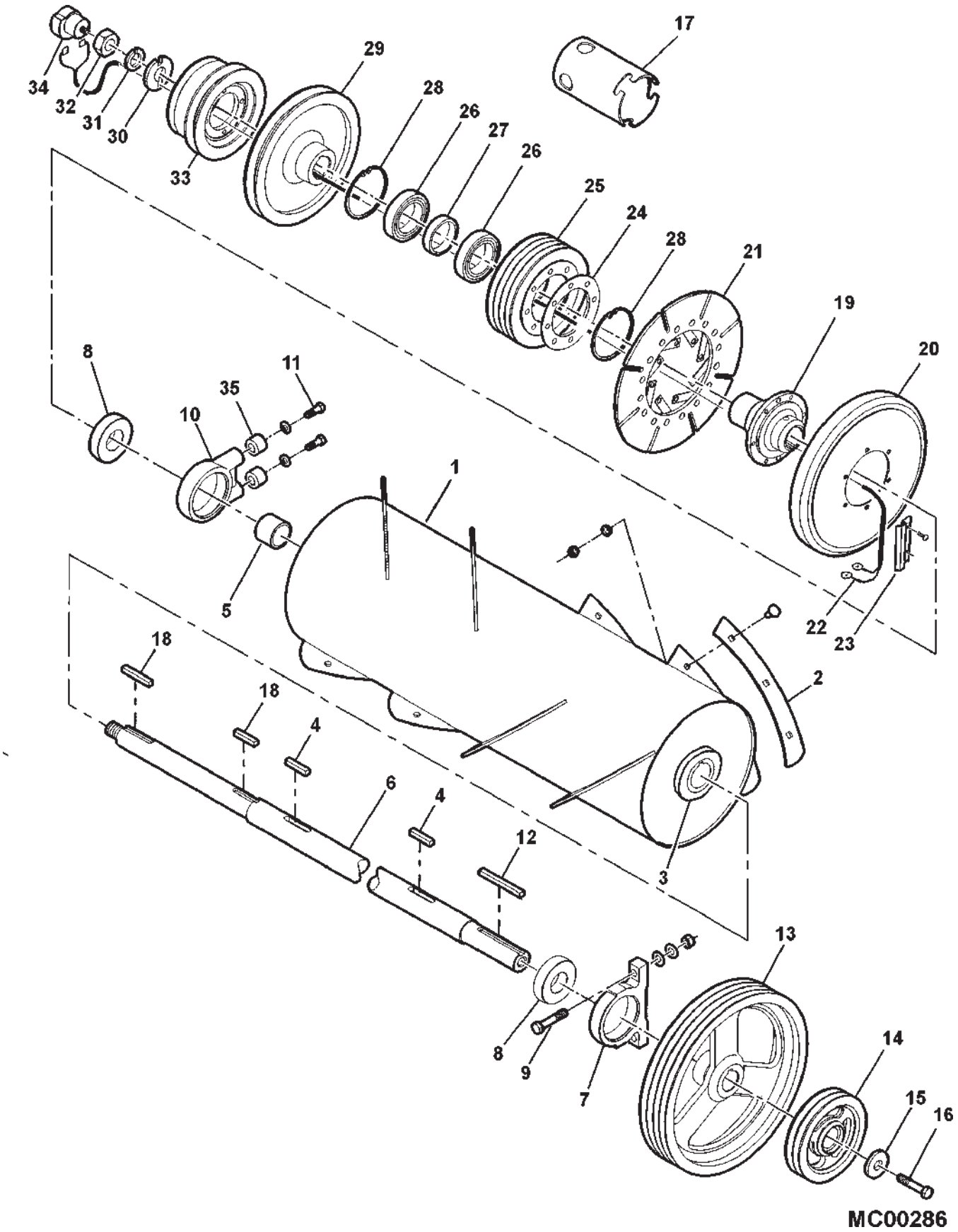

FRONT BEATER

ITEM	NUMBER	QTY	DESCRIPTION
1	71401417	1	BEATER DRUM ASY (BALANCED)(INCL. ITEM 2)
2	71393101	8	FLIGHT, WEAR
	68619	24	BOLT, RD HD SQ NK, 1/2-13 X 1-1/4
	Y705046	24	LOCKWASHER, 1/2 REG
	704031	24	NUT, 1/2-13 REG
3	101078M1	2	SEAL, BEATER
4	Y61879	2	KEY, SQ, 1/2 X 2-1/2
5	112685W1	1	SPACER, SLEEVE
6	71390721	1	SHAFT, BEATER
7	1706380W1	1	HOUSING, BEARING
8	71154722	2	BEARING
9	70929018	2	CAPSCREW, 5/8-11 X 3-1/4 GR8
	70937005	4	WASHER, HARD, .656 X 1.31 X 9GA
	W915795-4	2	LOCKNUT, HX TOP, 5/8-11
10	2445360W1	1	HOUSING, BEARING (PRIOR S/N HN87101)
	71401419	1	HOUSING, BEARING (EFF. S/N HN87101)
11	8701708	2	CAPSCREW, 1/2-13 X 1-1/4 GR8 (PRIOR S/N HN87101)
	353773X1	2	WASHER, HVY, HARD, 1/2
	70922664	2	CAPSCREW, 5/8-11 X 2 GR5 (EFF. S/N HN87101)
	70917373	2	LOCKWASHER, 5/8
12	2620180W1	1	KEY, HARD, 1/2 SQ. X 5
13	71388202	1	SHEAVE, BEATER DRIVE
14	2620130W1	1	SHEAVE, PITMAN DRIVE
15	104751W1	1	WASHER, .781 X 2.50 X .375
16	70921169	1	CAPSCREW, 3/4-16 X 1-1/2 GR8
17	104500W1	1	TUBE, REVERSER TOOL
18	2588510W1	2	KEY, CLUTCH HUB, 1/2 SQ. X 3.62
19	71391220	1	HUB, MAGNETIC CLUTCH
20	71335195	1	MAGNET ASY, CLUTCH
	705038	6	LOCKWASHER, 3/8 REG
	70921210	6	CAPSCREW, 3/8-16 X 1" GR5
21	71365064	1	ARMATURE ASY
	Y705046	8	LOCKWASHER, 1/2 REG
	70923114	8	CAPSCREW, 1/2-13 X 1" GR5
22	71391219	1	WIRE ASY, CLUTCH
23	71393220	1	DUCT, WIRE
	703082	1	SCREW, HEX HD TAPPING, #8-32 X 3/8
24	71397222	AR	SHIM, ARMATURE, .060 TH
	71400661	AR	SHIM, ARMATURE, .035 TH
25	71391221	1	SHEAVE, FDR DR. 4-GRV(PRIOR S/N HP87101)
	71398357	1	SHEAVE, FDR DR. 2-GRV (EFF. S/N HP87101)
26	71195913	2	BEARING, BALL
27	71391225	1	SPACER, BEARING
28	70933375	2	RING, RETAINING, INT
29	71394353	1	SHEAVE, DR, VARI SPEED FAN
30	71391224	1	WASHER, SPL, 3/8 THK
31	70912299	1	WASHER, 1-1/4 NARROW
32	70923230	1	NUT, JAM, 1-1/4-12 GR2
33	71394354	1	SHEAVE, DRIVE, RETURN ELEV
	705038	4	LOCKWASHER, 3/8 REG
	70921210	4	CAPSCREW, 3/8-16 X 1" GR5
34	71314321	1	BRUSHHOLDER ASY
	70925094	1	TIE, NYLON, .184 X 7.3
35	368615X1	2	SPACER, .66 LG (EFF. S/N HN87101)

MC00286
PR: 164

MAIN COUNTERSHAFT

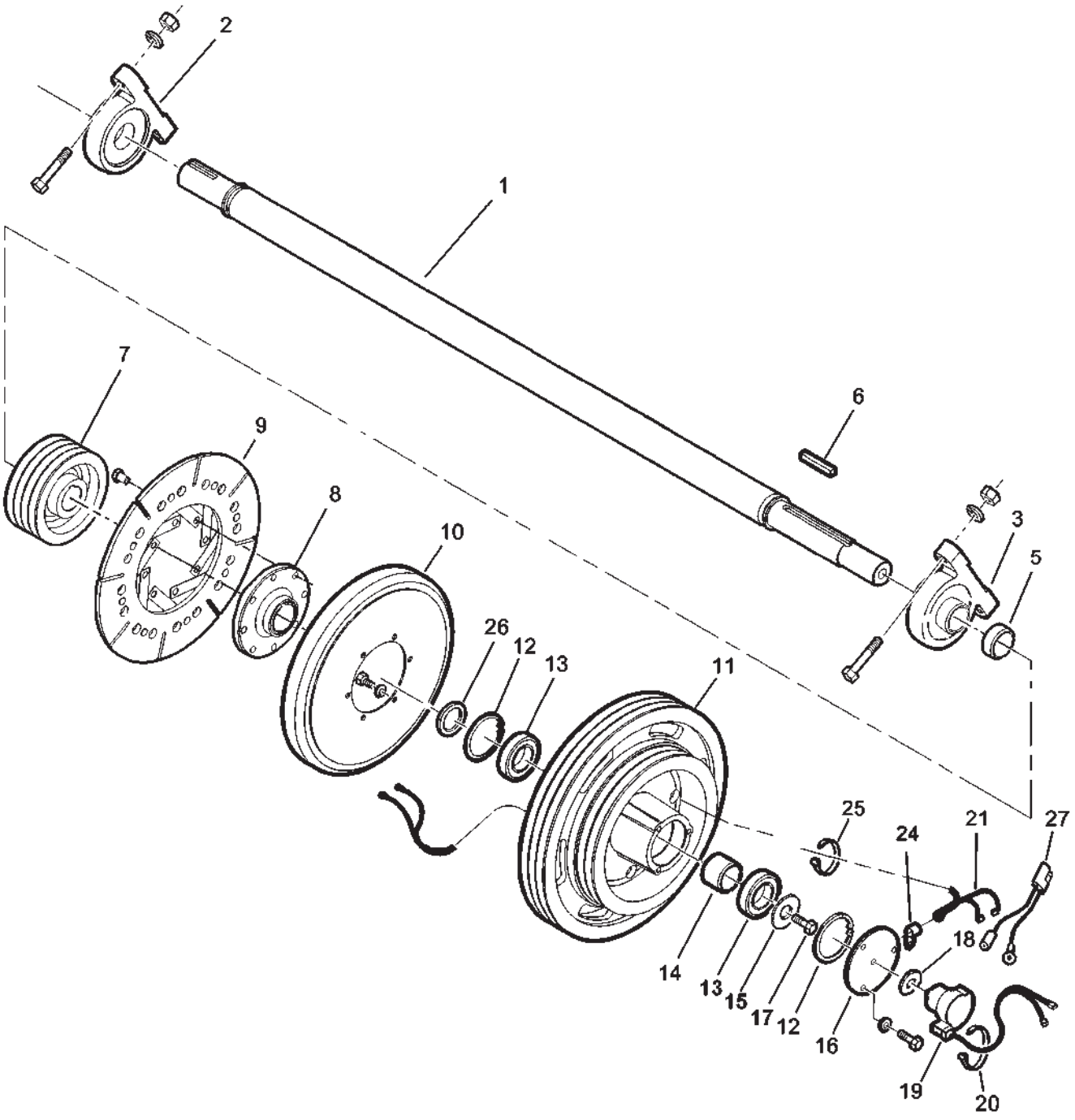

MC00287

MAIN COUNTERSHAFT

ITEM	NUMBER	QTY	DESCRIPTION
1	71391549	1	COUNTERSHAFT, MAIN
2	1706393W91	2	BEARING & HOUSING ASY.
	1706380W1	2	HOUSING, BEARING
	71154722	2	BEARING
	70921360	4	CAPSCREW, 5/8-11 X 2-1/4 GR5
	70918268	4	WASHER, 5/8 NARROW
	700703922	4	NUT, HEX FLNG TOP LOCK, 5/8-11 GR G
3	-----	--	BEARING & HSG ASY. (670 ONLY. SEE IT.2)
5	71391548	1	SPACER, SHEAVE
6	2620180W1	1	KEY, HARD. 1/2 SQ. X 5.0
7	71387523	1	SHEAVE, BEATER DRIVE
8	71390223	1	HUB, CLUTCH ARMATURE
9	71365064	1	ARMATURE ASY.
	70926115	8	CAPSCREW, 1/2-13 X 3/4 GR5
	Y705046	8	LOCKWASHER, 1/2
10	71335195	1	MAGNET ASY.
	70920415	6	CAPSCREW, 3/8-16 X 1-1/4 GR5
	70916965	6	LOCKWASHER, 3/8 REG
11	71389611B	1	SHEAVE, DRIVEN, COUNTERSHAFT
12	350392X1	2	RING, INTERNAL SNAP, 3-47/64 OD X 7/64
13	1138480	2	BEARING
14	2619560W1	1	SPACER, BEARING
15	104751W1	1	WASHER, 25/32 X 2-1/2 X 3/8
16	71390178	1	ADAPTOR, BRUSHHOLDER
	70921210	3	CAPSCREW, 3/8-16 X 1" GR5
	70916965	3	LOCKWASHER, 3/8 REG
17	70921169	1	CAPSCREW, 3/4-16 X 1-1/2 GR8
18	70923858	1	WASHER, FLAT, .531 X 1.25 X 7GA
19	71314321	1	BRUSHHOLDER ASY
20	70925094	1	TIE, NYLON, 7"-8" LG
21	71318052	1	WIRE ASY.
24	70925615	1	CLAMP, TUBE, .188 X .406 HOLE
25	70925442	1	TIE, NYLON, 14"-15" LG
26	104715W1	AR	SHIM (AS REQUIRED)
27	71394397	1	WIRE ASY. (JUMPER)

MC00287
PR: 166

MAIN COUNTERSHAFT
DRIVE AND IDLER

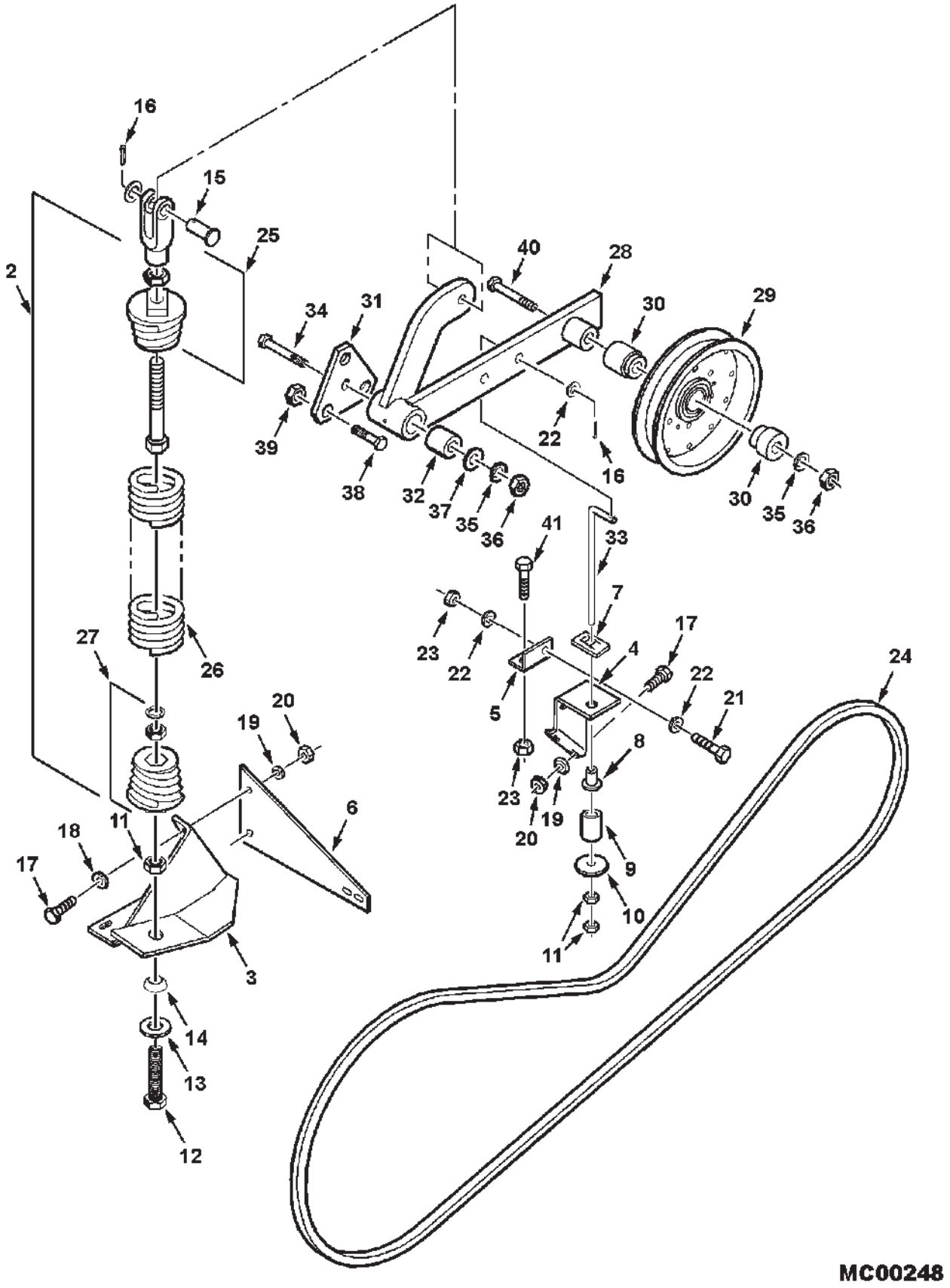

ITEM	NUMBER	QTY	DESCRIPTION
2	71379519	1	SPRING, ASY (INCL ITEMS 25, 26, 27)
3	71390183	1	ANCHOR WLDMT, SPRING
4	71394363	1	ANCHOR WLDMT, SNUBBER
5	71394364	1	ANGLE, SUPPORT
6	71390190	1	SUPPORT, BELT GUIDE
7	71304362	1	BUSHING, NYLON
8	70924095	1	NUT, SPEED
9	71194263	1	BUSHING, RUBBER
10	70923094	1	WASHER, 17/32 X 2 X 7GA
11	704031	3	NUT, 1/2-13 REG
12	70935299	1	CAPSCREW, 1/2-13 X 12" LG
13	70918431	1	WASHER, 1/2 WIDE
14	70301781	1	WASHER, PIVOT
15	70929593	1	PIN, CLEVIS, 1/2 X 1.36
16	70918452	2	PIN, COTTER, 1/8 X 1
17	70920415	6	CAPSCREW, 3/8-16 X 1-1/4 GR5
18	70917378	4	WASHER, 3/8 WIDE
19	70916965	6	LOCKWASHER, 3/8
20	70916950	6	NUT, 3/8-16 REG
21	70921176	1	CAPSCREW, 1/2-13 X 1-1/4 GR5
22	Y705624	3	WASHER, 1/2 NARROW
23	Y704742	2	NUT, HEX FLANGE TOP LOCK, 1/2-13
24	71390188	1	BELT, MAIN C'SHAFT DRIVE
25	71379520	1	YOKE & PLUG ASY.
	70937010	1	CAPSCREW, 1/2-13 X 5 GR5
	71349813	1	PLUG, SPRING
	70913744	1	NUT, JAM 1/2-13
	70937465	1	YOKE, 1/2-13
26	71349270	1	SPRING
27	71349811	1	PLUG & NUT ASY.
28	71391529	1	ARM ASY, IDLER, MAIN C'SHAFT
	71356060	2	BUSHING
	71197117	1	SPACER
29	71309768	1	IDLER, FLAT 8"
30	71312602	2	SPACER, IDLER
31	71346267	1	PLATE, MOUNTING
32	71356061	1	SLEEVE, HARD, IDLER PIVOT
33	71398385	1	ROD, SNUBBER
34	70925703	1	CAPSCREW, 5/8-11 X 4
35	70917373	2	LOCKWASHER, 5/8
36	70915726	2	NUT, 5/8-11 REG
37	70918432	1	WASHER, 5/8 WIDE
38	70935290	3	CAPSCREW, 3/4-10 X 3, FULL THD. GR5
39	70913160	3	NUT, 3/4-10 REG
40	70915988	1	CAPSCREW, 5/8-11 X 4-1/4 GR5
41	701235	1	CAPSCREW, 1/2-13 X 1-1/2 GR5

MC00248
PR: 168

FRONT BEATER
DRIVE AND IDLER

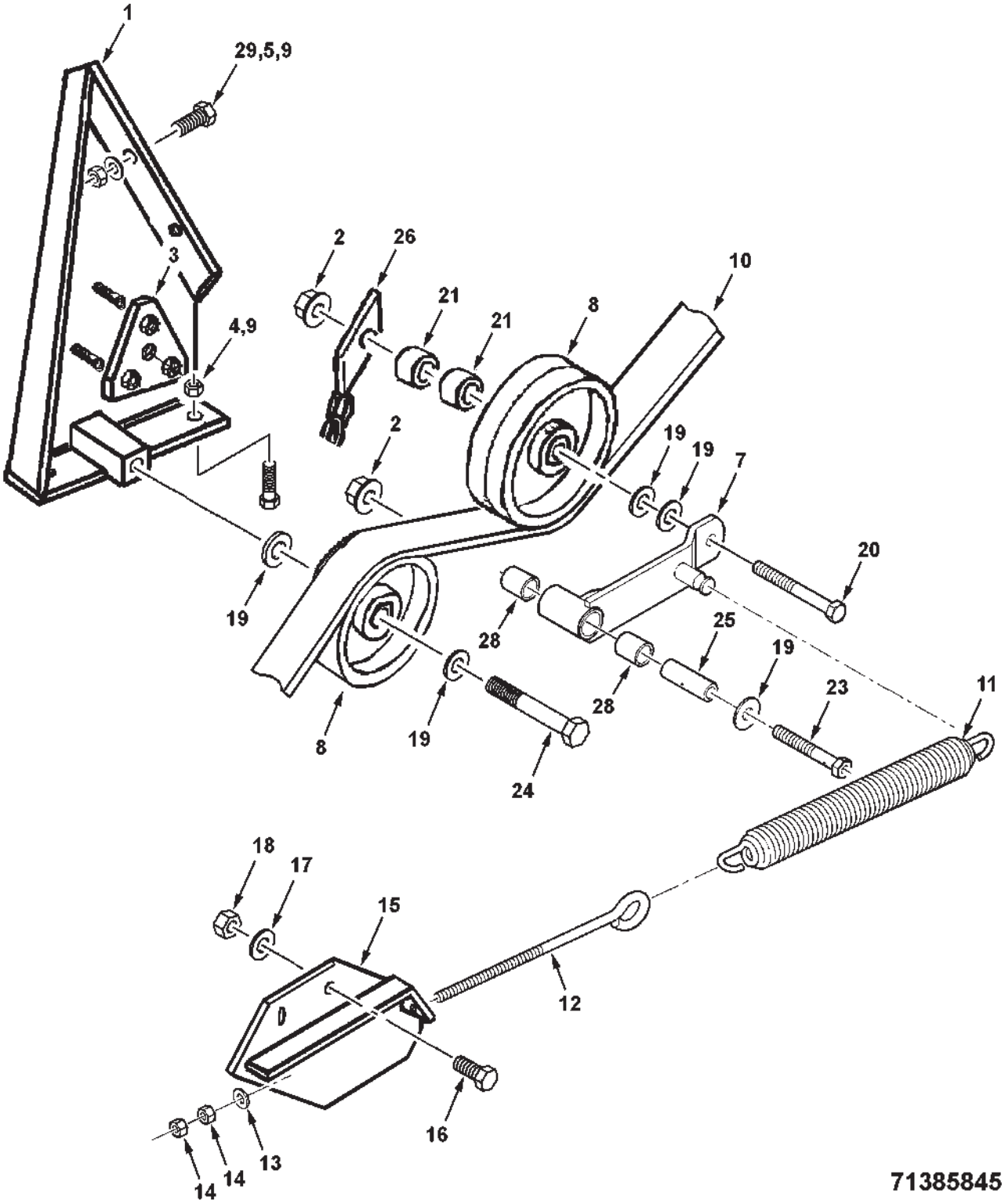

FRONT BEATER
DRIVE AND IDLER

ITEM	NUMBER	QTY	DESCRIPTION
1	71386683	1	BRACKET, IDLER
2	700703922	2	NUT, HEX FLNG TOP LOCK, 5/8-11
3	71182840	1	MOUNTING PLATE
	704056	6	NUT, JAM 1/2-13 GR2
4	70920415	2	CAPSCREW, 3/8-16 X 1-1/4 GR5
5	70917378	2	WASHER, PLAIN, 3/8 WIDE
7	71388213	1	ARM ASSEMBLY (W/BUSHINGS)
8	2545270W1	2	IDLER PULLEY, FLAT, 6.5" DIA.
9	Y704734	4	NUT, HEX FLNG TOP LOCK, 3/8-16
10	71386352	1	BELT, KEVLAR (SEE BELTS LISTING)
11	2627000W1	1	SPRING, 45-1/2 COILS, 17-1/4 FREE LENGTH
12	2626120W1	1	ROD, PULL, 12.63" LG
13	70301781	1	WASHER, SPHERICAL
14	704031	2	NUT, 1/2-13 REG
15	71388207	1	BRACKET ASSEMBLY, ANCHOR
16	70921176	2	CAPSCREW, 1/2-13 X 1-1/4 GR5
17	70918431	1	WASHER, PLAIN, 1/2 WIDE
18	Y704742	2	NUT, HEX FLNG TOP LOCK, 1/2-13
19	70918432	5	WASHER, PLAIN, 5/8 WIDE
20	70926165	1	CAPSCREW, 5/8-11 X 4-1/2 GR5
21	368615X1	2	SPACER, IDLER
23	2636170W1	1	BOLT, IDLER PIVOT, 5/8-11
24	7701659	1	CAPSCREW, 5/8-11 X 2-1/2 GR5
25	2636210W1	1	SLEEVE, PIVOT
26	105086W91	1	CHAIN ASSEMBLY, IDLER STOP
	70921969	1	CAPSCREW, 3/8-16 X 1-1/2 GR5
	70917378	1	WASHER, 3/8 WIDE
	70917642	4	WASHER, PLAIN, 5/16 WIDE
	Y704734	1	NUT, HEX FLNG TOP LOCK, 3/8-16
28	1689170W1	2	BUSHING, 1.25 OD X .750 LG
29	70921210	2	CAPSCREW, 3/8-16 X 1 GR5

71385845
PR: 170

INLET HOUSING AND STONE TRAP

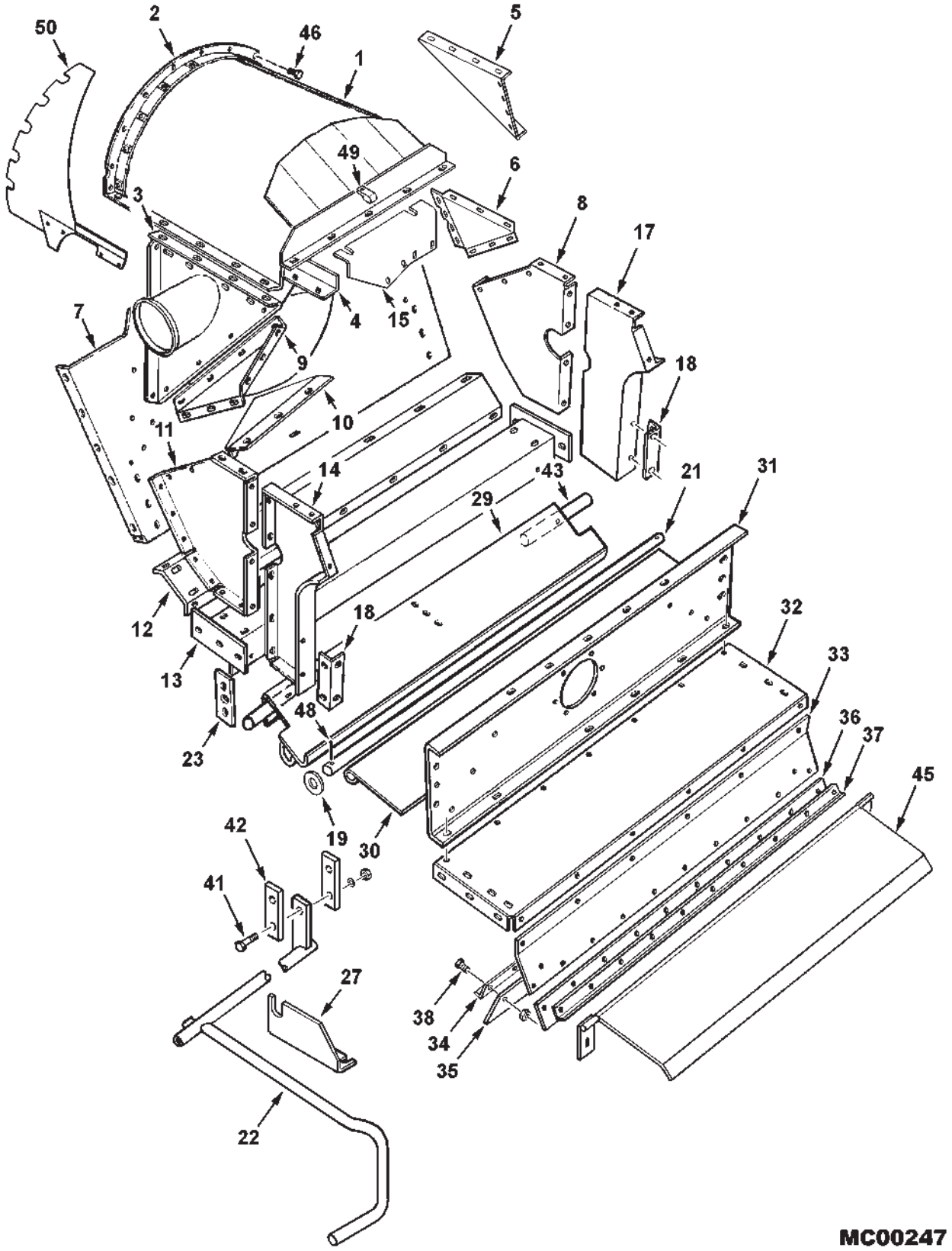

INLET HOUSING AND STONE TRAP

ITEM	NUMBER	QTY	DESCRIPTION
1	71409987	1	TOP COVER WLMT, INLET HOUSING
	700720958	9	SCR,BUTTON HD,RECESS SOCK,3/8-16 X 1
	70921965	12	CAPSCREW, 3/8-16 X 3/4 GR5
	70917378	8	WASHER, 3/8, WIDE
	Y704734	12	NUT, HEX FLANGE TOP LOCK, 3/8-16
2	2612961W91	1	ANGLE WLMT, INLET HOUSING
	70920787	10	CAPSCREW, 5/16-18 X 1/2 GR5
3	2619251W91	1	PLATE WLMT, RETURN TUBE
4	71410577	1	WEAR PLATE, RETURN INLET
	70931348	4	BOLT,RD HD SHT SQ NK, 3/8-16 X 3/4
	Y704734	4	NUT, HEX FLANGE TOP LOCK, 3/8-16
5	2619240W1	1	PLATE, LEFT REAR
6	2612910W1	1	PLATE, LEFT FRONT
7	71409995	1	FEED PLATE WLMT
	70921210	8	CAPSCREW, 3/8-16 X 1
	Y704734	8	NUT, HEX FLANGE TOP LOCK, 3/8-16
	70923325	11	CAPSCREW, 5/16-18 X 7/8 GR5
	Y704726	11	NUT, HEX FLANGE TOP LOCK, 5/16-18
8	2612880W1	1	SHIELD SIDE - INLET HOUSING
9	2619230W1	1	PLATE, RIGHT
10	2619280W1	1	PLATE, DEFLECTOR
	70921278	AR	SCREW, TRUSS HD
	70917378	AR	WASHER, 3/8, WIDE
	70916965	AR	LOCKWASHER, 3/8
	70916950	AR	NUT, HEX, 3/8
11	2612870W1	1	PANEL, RIGHT
12	71409983	1	PANEL WLMT, FLOOR, GR./CORN/ SOYBEAN
	71409282	1	PANEL WLMT, FLOOR, RICE
	70921965	17	CAPSCREW, 3/8-16 X 3/4 GR5
	70921210	7	CAPSCREW, 3/8-16 X 1 GR5
	70917378	7	WASHER, 3/8, WIDE
	705038	7	LOCKWASHER, 3/8
	Y704734	17	NUT, HEX FLANGE TOP LOCK, 3/8-16
13	71390582	1	CHANNEL WLMT
	70921176	6	CAPSCREW, 1/2-13 X 1-1/4 GR5
	Y704742	6	NUT, HEX FLANGE TOP LOCK, 1/2-13
14	2531671W91	1	PANEL WLMT, RIGHT FRONT
15	-----	1	BRKT, SENSOR(S/S BY 71401326)(SEE ROTOR)
17	2531681W91	1	PANEL WLMT, LEFT FRONT
18	2488980W1	2	SUPPORT, ANGLE
	70921210	7	CAPSCREW, 3/8-16 X 1
	70921969	1	CAPSCREW, 3/8-16 X 1-1/2 GR5
	70917378	8	WASHER, 3/8, WIDE
	Y704734	8	NUT, HEX FLANGE TOP LOCK, 3/8-16
19	70922658	2	WASHER, 1", WIDE
21	2502850W1	1	SHAFT, FEED PLATE
22	71391764	1	HANDLE WLMT, STONE TRAP
23	2522600W1	2	PLATE, ADJUSTABLE
	70920328	4	CAPSCREW, 1/2-13 X 1-1/2 GR5
	Y704742	4	NUT, HEX FLANGE TOP LOCK, 1/2-13

CONTINUED

INLET HOUSING AND STONE TRAP

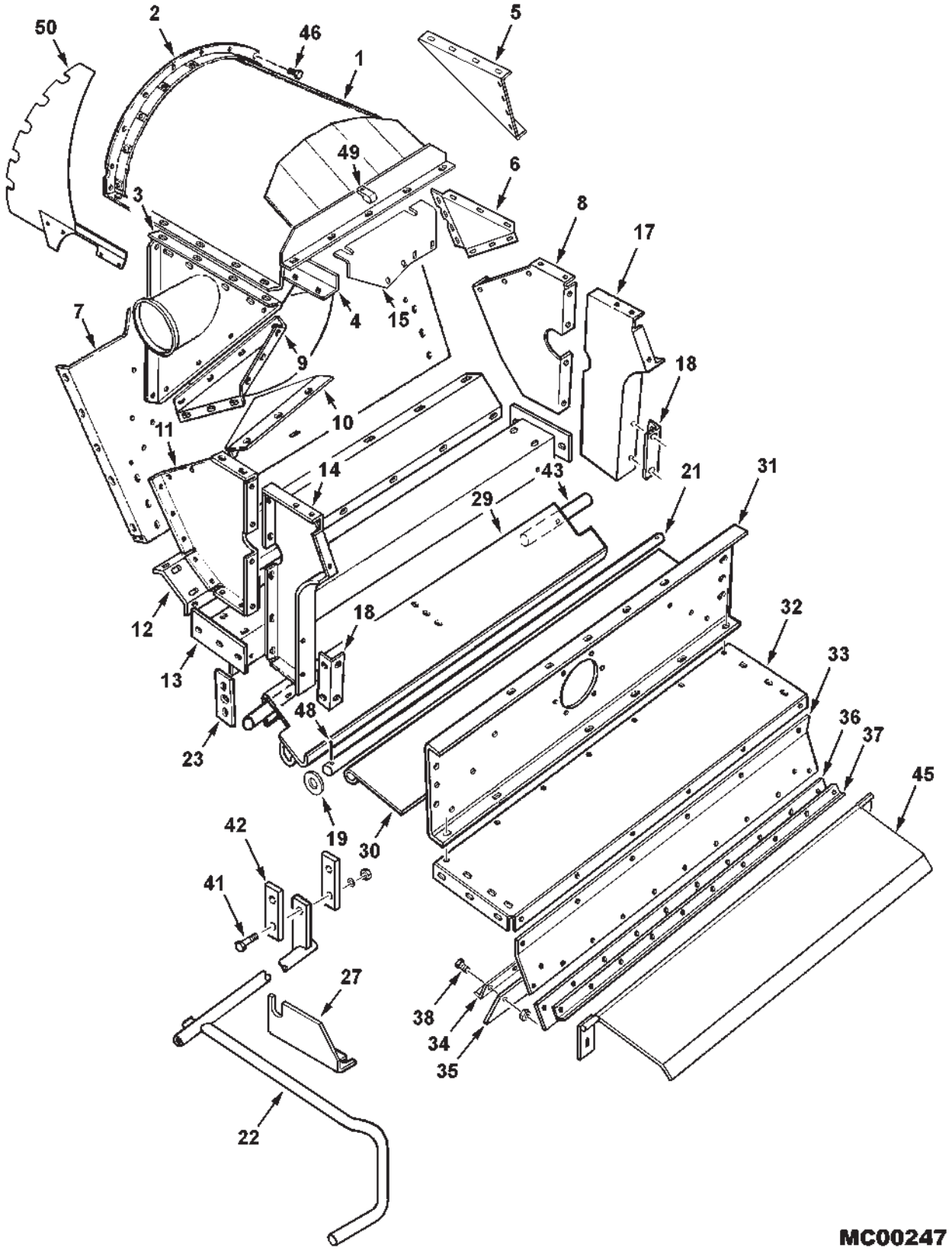

ITEM	NUMBER	QTY	DESCRIPTION
27	71391762	1	ANGLE, TRAP PIVOT
	701235	2	CAPSCREW, 1/2-13 X 1-1/2 GR5 (PRIOR S/N HN87101)
	390912X1	2	CAPSCREW, M12-1.75 X 40 CL8.8 (EFF. S/N HN87101)
	Y705624	4	WASHER, 1/2 NARROW (QTY VARIES)
29	71393352	1	PLATE WLMT, STONE TRAP
	70923701	4	CAPSCREW, 3/8-16 X 2 GR5
	353771X1	4	WASHER, HEAVY HARD, 3/8
	Y704734	4	NUT, HEX FLANGE TOP LOCK, 3/8-16
30	2502830W1	1	PLATE, FEED
31	2619220W1	1	CHANNEL, FRONT
	70921210	12	CAPSCREW, HEX HD, 3/8-16 X 1
	70917378	11	WASHER, 3/8 WIDE
	70916965	7	LOCKWASHER, 3/8
	Y704734	5	NUT, HEX FLANGE TOP LOCK, 3/8-16
	700703922	4	NUT, HEX FLANGE TOP LOCK, 5/8-11
32	71390579	1	PANEL ASY.
	70921965	15	CAPSCREW, 3/8-16 X 3/4 GR5
	70917378	15	WASHER, 3/8 WIDE
	Y704734	15	NUT, HEX FLANGE TOP LOCK, 3/8-16
33	2502891W91	1	SHEET WLMT, FRONT INLET HSG
	70916965	8	LOCKWASHER, 3/8
	70921965	8	CAPSCREW, 3/8-16 X 3/4 GR5
34	2517890W1	1	STRIP, SEAL CLAMPING, INNER
35	2517880W1	1	SEAL, INNER,
36	2479620W1	1	SEAL, OUTER,
37	2479640W1	1	STRIP, SEAL CLAMPING, OUTER
38	70409	19	SCREW, TRUSS HD MACH, 1/4-20 X 5/8
	705012	19	LOCKWASHER, 1/4
	70916622	19	NUT, 1/4-20 REG
41	70922645	2	CAPSCREW, 1/2-13 X 2-1/4 GR5
	Y705624	2	WASHER, 1/2 NARROW
	704031	4	NUT, 1/2-13 REG
42	112412W1	2	LINK, LEVER
43	104201W1	2	SHAFT, PIVOT
45	71389087	1	COVER WELDMENT, STONE TRAP
	70921176	2	CAPSCREW, 1/2-13 X 1-1/4 GR5
	Y704742	2	NUT, HEX FLANGE TOP LOCK, 1/2-13
46	70920787	10	CAPSCREW, 5/16-18 X 1/2
48	70918459	2	PIN, COTTER, 3/16 X 1-1/2
49	70936314	2	J-CLIP, 1/2 X .406 HOLE
50	71412349	1	PATCH WLMT, RETURN INLET (FIELD INSTALL, IMPROVED WEAR LIFE (PRIOR HR87101)
-	71400053	AR	KIT, STONE TRAP COVER (ORDER THRU DEALER CENTRAL)
-	700704010	AR	SILICONE SEALANT, BLACK, 10.2 OZ.

MC00247
PR: 172

CONCAVE & CONTROLS

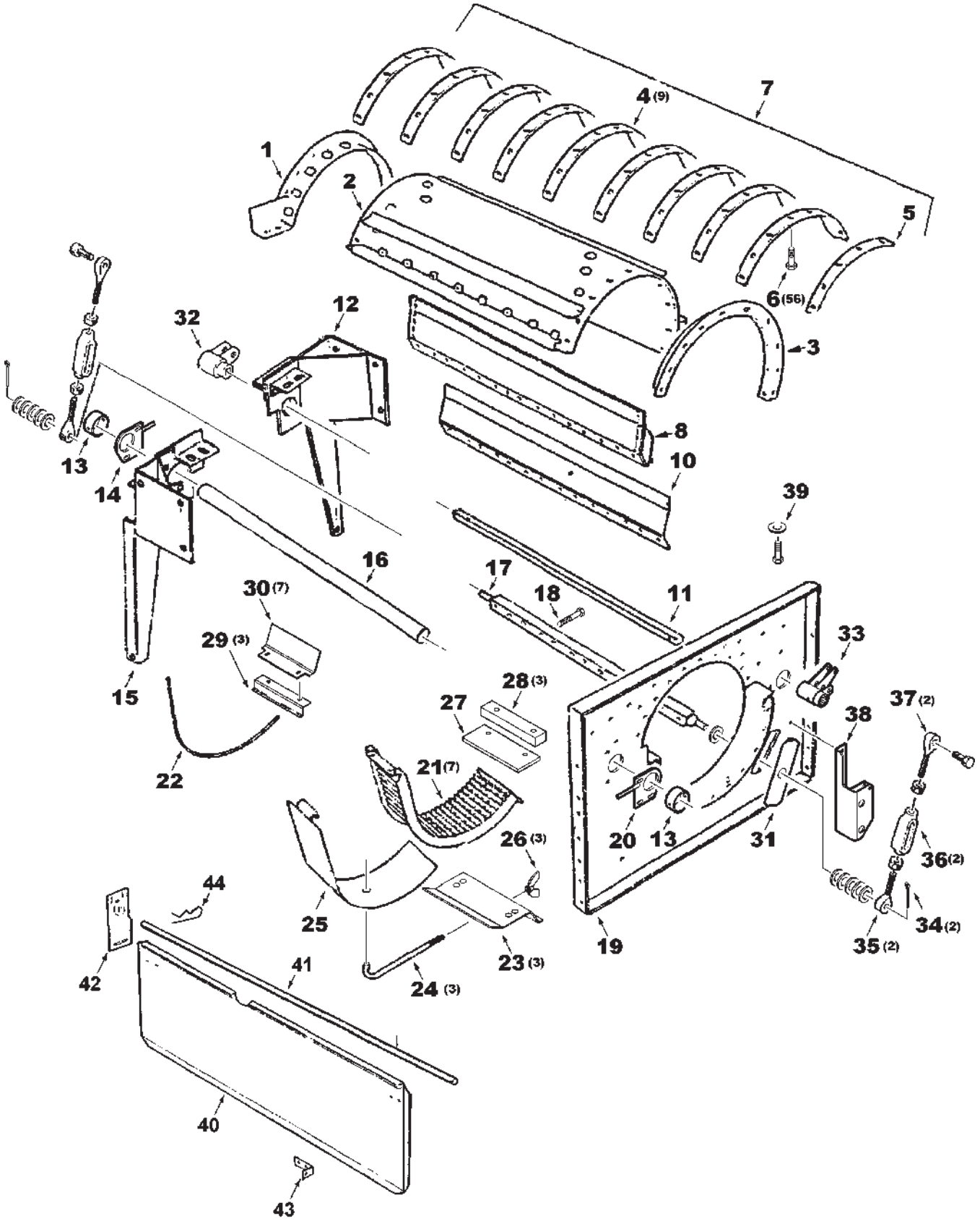

MC00275

ITEM	NUMBER	QTY	DESCRIPTION
1	71388318	1	ANGLE WLDMT, REAR CONCAVE COVER
	700720958	10	SCR,SKT BTN HD,THD CUT'G, 3/8-16 X 1
2	71388301	1	COVER WLDMT, THRESHER
3	71388315	1	ANGLE WLDMT, FRONT CONCAVE
	700720958	10	SCR,SKT BTN HD,THD CUT'G, 3/8-16 X 1
4	2467220W1	9	VANE, GUIDE, 7 HOLE
5	2467230W1	1	VANE, GUIDE, 5 HOLE
6	700720958	56	SCREW,SKT BTN HD,THD CUT'G, 3/8-16 X 1"
7	71388312	1	COVER ASSEMBLY (INCLUDES ITEMS 1-6)
	703983	5	CAPSCREW, 1/2-13 X 1-3/4 GR5
	Y704742	5	NUT, HEX FLANGE TOP LOCK, 1/2-13
	70923114	1	CAPSCREW, 1/2-13 X 1" GR5
	Y704742	1	NUT, HEX FLANGE TOP LOCK, 1/2-13
	70921966	9	CAPSCREW, 3/8-16 X 7/8 GR5
	Y704734	9	NUT, HEX FLANGE TOP LOCK, 3/8-16
8	102764M91	1	OVERLAP WLDMT, PERFORATED (CORN,SB,RICE)
	71400052	AR	KIT, OVERLAP WLMT, PERFORATED (ORDER THRU DEALER CENTRAL)
10	2636870W2	1	OVERLAP, CONCAVE, SOLID (REPLACES FOLLOWING 3 OVERLAP PTS S/N HR87101)
	71395334	1	OVERLAP, LT FRONT,(GRAIN, AUST, CE)
	71395335	2	OVERLAP, LT MID,(GRAIN, AUST, CE)
	71395336	1	OVERLAP, LT REAR,(GRAIN, AUST, CE)
	70921210	14	CAPSCREW, 3/8-16 X 1 GR5
	353771X1	14	WASHER, HEAVY, HARD, 3/8
	71400051	AR	KIT, OVERLAP, SOLID SEGMENT (GRAIN) (ORDER THRU DEALER CENTRAL)
11	71395339	1	ROD, CONCAVE CONTROL, 1-1/4 SQUARE
12	71390024	1	SUPPORT WLDMT, LH REAR CONCAVE
	70921176	4	CAPSCREW, 1/2-13 X 1-1/4 GR5
	Y704742	4	NUT, HEX FLANGE TOP LOCK, 1/2-13
13	2442960W1	2	HOLDER, PIVOT TUBE
	70921324	2	CAPSCREW, 3/8-16 X 3-3/4 GR5
	Y704734	2	NUT, HEX FLANGE TOP LOCK, 3/8-16
14	71388314	1	PLATE WLDMT, ADJUSTING, RT REAR
	7700156	3	BOLT, RD HD SQ NK, 1/2-13 X 1-1/2
	Y704742	3	NUT, HEX FLANGE TOP LOCK, 1/2-13
	704031	2	NUT, 1/2-13 REG
15	71390022	1	SUPPORT WLDMT, RH REAR CONCAVE
	70921176	4	CAPSCREW, 1/2-13 X 1-1/4 GR5
	Y704742	4	NUT, HEX FLANGE TOP LOCK, 1/2-13
16	2442970W1	1	TUBE, CONCAVE PIVOT
17	71389084	1	HANGER WLDMT, CONCAVE LH
	700709607	11	WASHER, 3/4 WIDE
	70918461	2	COTTER PIN, 1/4 X 1-1/2
18	700702141	14	CAPSCREW, 3/8-16 X 4-1/4 (QTY 8 PRIOR S/N HR87101)
	13601	4	CPSCR, 3/8-16 X 5-1/4(PRIOR HR87101)
	70922760	2	CPSCR, 3/8-16 X 5-1/2(PRIOR HR87101)
	70917378	14	WASHER, WIDE, 3/8
	70916965	14	LOCKWASHER, 3/8
	70916950	14	NUT, 3/8-16 REG

CONTINUED

CONCAVE & CONTROLS

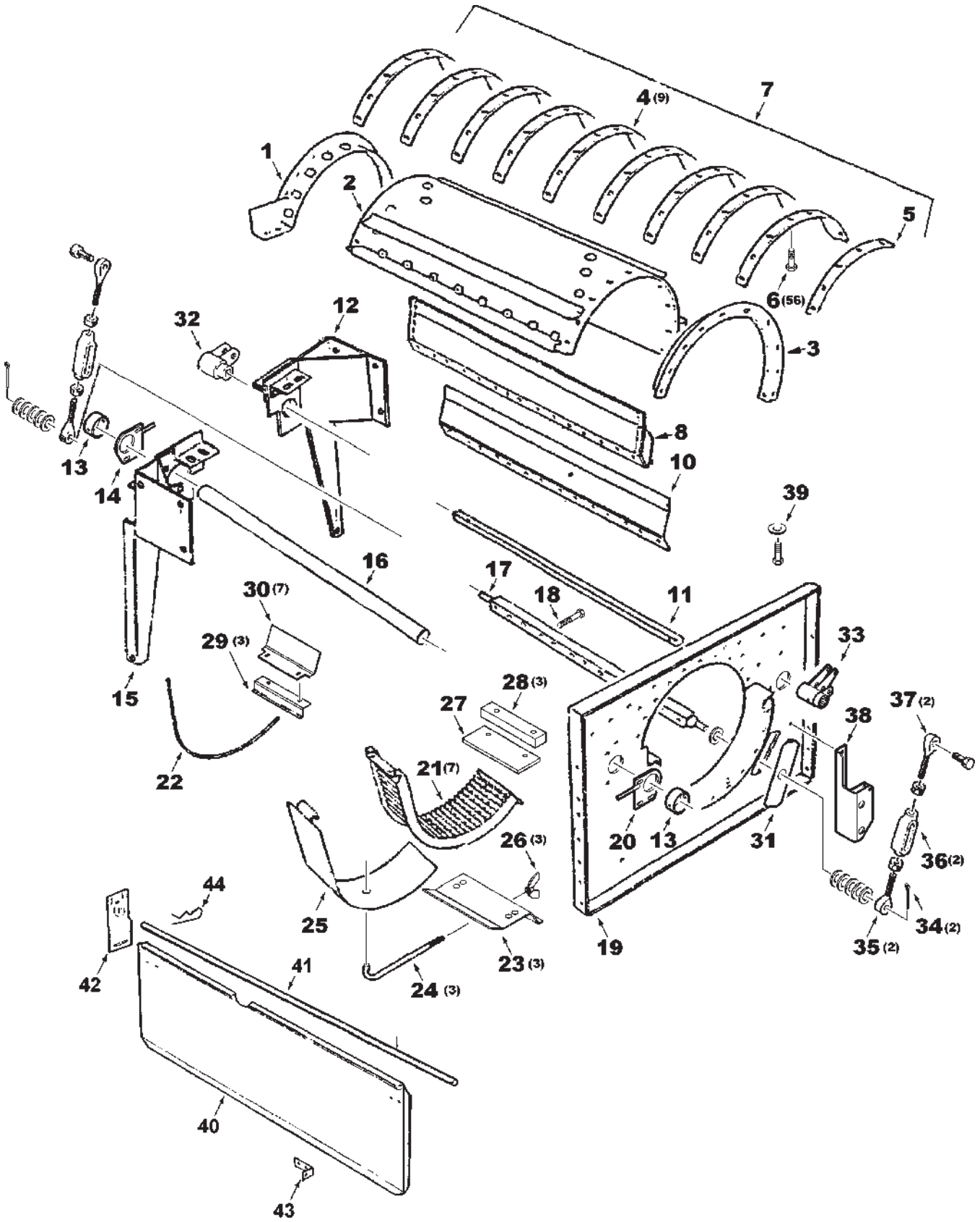

MC00275

ITEM	NUMBER	QTY	DESCRIPTION
19	71409993	1	BULKHEAD WLDMT, THRESHER
	70921176	12	CAPSCREW, 1/2-13 X 1-1/4
	Y704742	12	NUT, HEX FLANGE TOP LOCK, 1/2-13
20	71388321	1	PLATE WLDMT, ADJUSTING, RT FRONT
	7700156	3	BOLT, RD HD SQ NK, 1/2-13 X 1-1/2
	Y704742	3	NUT, HEX FLANGE TOP LOCK, 1/2-13
	704031	2	NUT, 1/2-13 REG
21	71390005	7	CONCAVE ASY, 3/16 ROD, 13/32 SPCG(GRAIN)
	71400050	--	*KIT, CONCAVE, GRAIN (INCLS 7, 71390005)
	104904W91	7	CONCAVE ASY, 1/4 ROD (CORN, SOYBN, AUST)
	71400062	--	*KIT, CONCAVE, CORN (INCLS 7, 104904W91)
	71398275B	7	CONCAVE ASY,(HT)1/4 ROD,1-1/4 SPCG(RICE)
	71530252	--	*KIT, CONCAVE, RICE (INCLS 7, 71398275)
	70921324	13	CAPSCREW, 3/8-16 X 3-3/4 GR5
	7772767	1	CAPSCREW, 3/8-16 X 3-1/2 GR5
	70916965	14	LOCKWASHER, 3/8 REG
	70916950	14	NUT, 3/8-16 REG
22	2472450W1	AR	ROD, CONCAVE, 3/16 DIA (GRAIN)
	105495W1	AR	ROD, CONCAVE, 5 MM DIA (CORN)
	71400061	--	*KIT,42 RODS,CORN CONCAVE, 5MM(5/8 SPCG)
	105493W1	AR	ROD, CONCAVE, 1/4 DIA (CORN, SOYBEAN, RICE & AUSTRALIA)
23	71391489	3	PLATE, LH BLANK ANCHOR
24	2544120W1	3	ROD, PULL, 5/16 THRDS
	700709602	3	WASHER, 5/16 WIDE
	70917356	3	LOCKWASHER, 5/16
	70917372	3	NUT, 5/16-18 REG
	Y704726	3	NUT, HEX FLANGE TOP LOCK, 5/16-18
25	2545511W91	3	BLANK ASY, CONCAVE
26	704262	3	NUT, WING, 5/16-18
27	71395338	1	PLATE, STOP, PWR CONCAVE ADJUST (PRIOR S/N HR87101)
28	71395337	3	SHIM, CONCAVE, 1" THICK (PRIOR HR87101)
29	2545471W91	3	HINGE PLATE ASY, CONCAVE BLANK
30	71395407	7	ANGLE, RH OVERLAP
	70920415	14	CAPSCREW, 3/8-16 X 1-1/4 GR5
	70917378	14	WASHER, 3/8 WIDE
	70916965	14	LOCKWASHER, 3/8 REG
	70916950	14	NUT, 3/8-16 REG
31	2466960W2	1	COVER
32	2466861W91	1	LEVER WLDMT, CONCAVE ADJ, REAR
33	71393118	1	LEVER WLDMT, CONCAVE ADJ, FRONT
	7773864	2	CAPSCREW, 1/4-20 X 3" GR5
	704007	4	NUT, 1/4-20 REG

CONTINUED

CONCAVE & CONTROLS

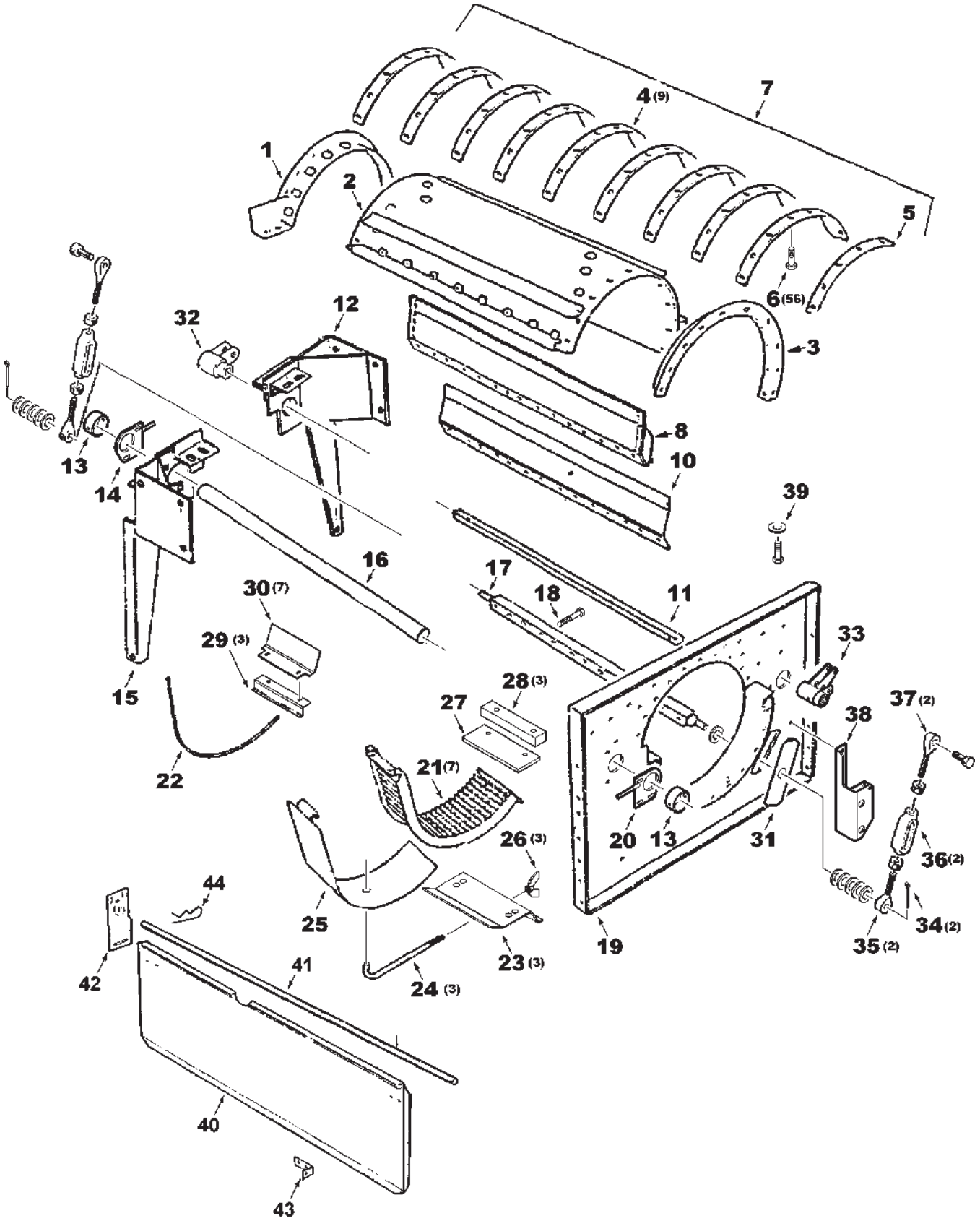

MC00275

ITEM	NUMBER	QTY	DESCRIPTION
34	70929594	2	PIN, CLEVIS, 3/4 X 1.91
	62190	2	COTTER PIN, 5/32 X 1-1/2
35	103001M91	2	ROD ASY, CONCAVE ADJUST, 3/4-10 RH THD
	70913160	2	NUT, 3/4-10 REG
36	252502M1	2	TURNBUCKLE, 3/4-10
37	103004M91	2	ROD ASY, CONCAVE ADJUST, 3/4-10 LH THD
	254763M1	2	NUT, HEX JAM, 3/4-10 UNC LH THD
38	71393122	1	BASE WLDMT, ACTUATOR
	70923114	3	CAPSCREW, 1/2-13 X 1" GR5
	Y705046	3	LOCKWASHER, 1/2 REG
39	7771504	1	CAPSCREW, 5/8-11 X 3, FULL THD (PRIOR S/N HR87101)
	375112X1	1	JAM NUT, 5/8-11 (PRIOR S/N HR87101)
40	2547540W1	1	PLATE, CONCAVE DEFLECTOR
41	2531340W1	1	ROD, DEFLECTOR HINGE
42	2547531W91	2	MOUNTING PLATE WLDMT, DEFLECTOR
43	2530670W1	2	BRKT, DEFLECTOR ADJUSTING
	7703457	6	CAPSCREW, 1/4-20 X 3/4
	70917377	8	WASHER, 1/4 WIDE
	70916964	4	LOCKWASHER, 1/4 REG
	70916622	6	NUT, 1/4-20 REG
44	70936348	2	PIN, QUICK PULL RTNR, .125 DIA X 2.56 LG

*(ORDER THRU DEALER CENTRAL)

MC00275
PR: 176

POWER CONCAVE CONTROL

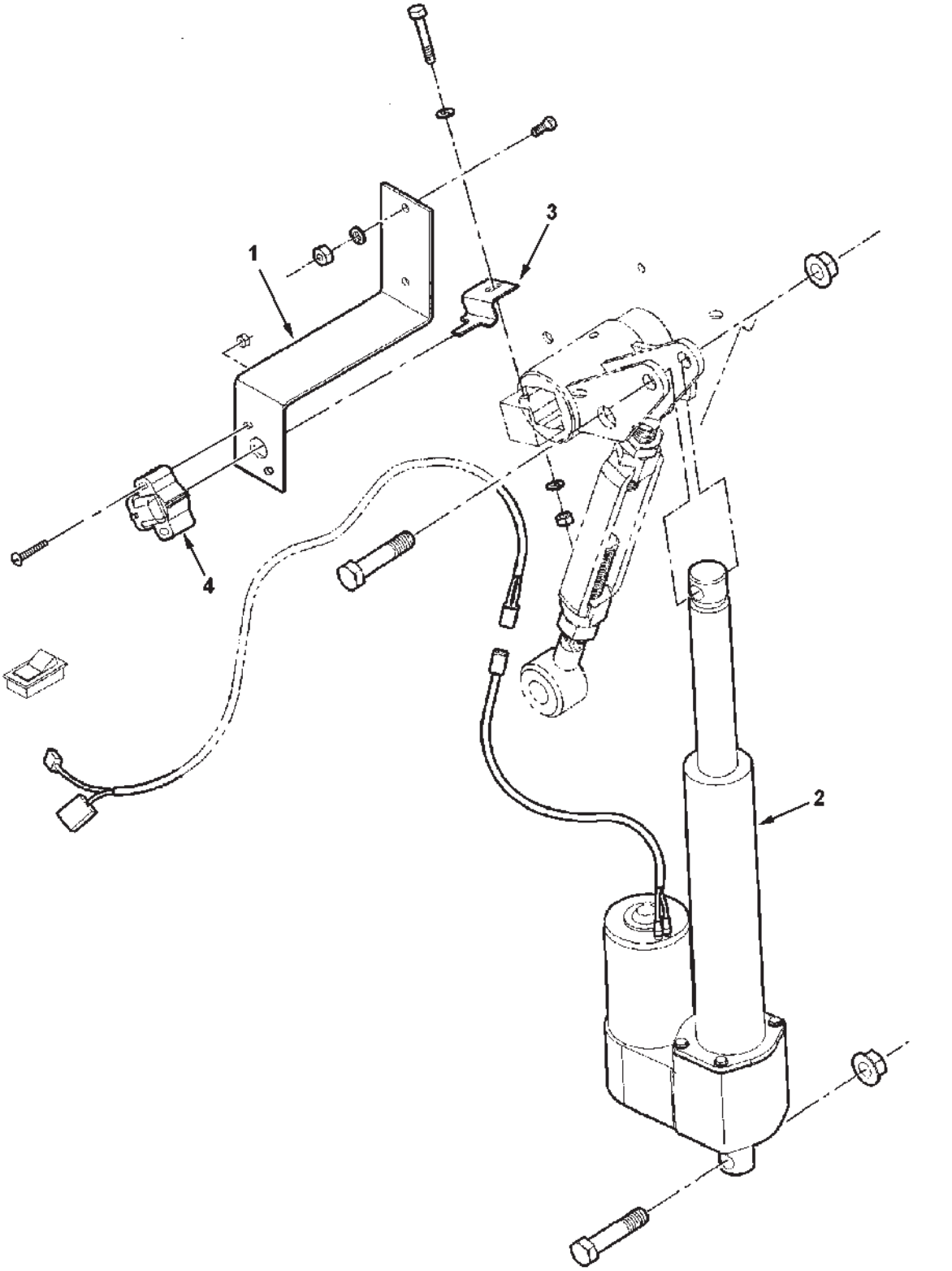

MC00291

ITEM	NUMBER	QTY	DESCRIPTION
1	71388322	1	BRACKET, SENSOR MOUNTING
	70927401	2	CAPSCREW, 1/4-20 X 1" GR5
	705012	2	LOCKWASHER, 1/4 REG
	704007	2	NUT, 1/4-20 REG
2	71411902	1	ACTUATOR, ELECTRIC
	70922645	2	CAPSCREW, 1/2-13 X 2-1/4 GR5
	Y704742	2	NUT, HEX FLNG TOP LOCK, 1/2-13
3	71387329	1	TAB, SENSOR DRIVE
	70921962	1	CAPSCREW, 1/4-20 X 1-3/4 GR5
	705707	1	WASHER, 1/4 NARROW
	705012	1	LOCKWASHER, 1/4 REG
	704007	1	NUT, 1/4-20 REG
4	71376825	1	SENSOR, CONCAVE POSITION
	70918151	2	SCREW, TRUSS HD, #10-32 X 1-1/4
	70917380	2	WASHER, #10 PLAIN
	705004	2	LOCKWASHER, #10 REG
	Y704445	2	NUT, #10-32 REG

MC00291
PR: 180

REAR ROTOR HOUSING

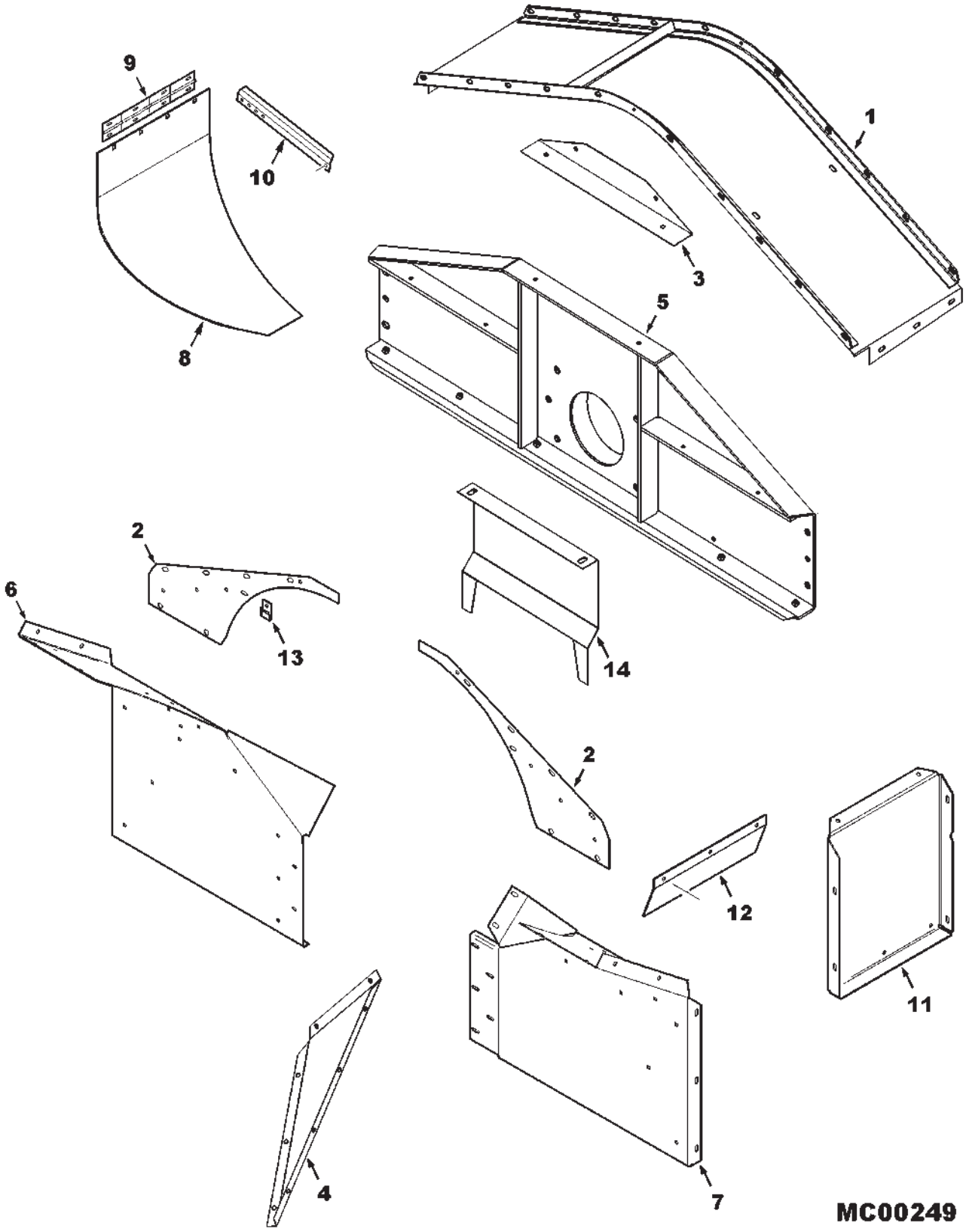

REAR ROTOR HOUSING

ITEM	NUMBER	QTY	DESCRIPTION
1	71389427	1	COVER WLDMT, TOP
	70921210	8	CAPSCREW, 3/8-16 X 1 GR5
	70917378	16	WASHER, 3/8
	70916965	8	LOCKWASHER, 3/8
	70916950	8	NUT, 3/8-16
2	71389426	2	BULKHEAD, REAR
	70921332	4	CAPSCREW, 5/16-18 X 3/4 GR5
	70917642	4	WASHER, 5/16
	70917356	4	LOCKWASHER, 5/16
	70921210	8	CAPSCREW, 3/8-16 X 1 GR5
	70921965	6	CAPSCREW, 3/8-16 X 3/4 GR5
	70917378	22	WASHER, 3/8
	70916965	14	LOCKWASHER, 3/8
	70916950	14	NUT, 3/8-16
3	71395346	1	COVER, BULKHEAD, ROTOR EXHAUST
	70921210	2	CAPSCREW, 3/8-16 X 1 GR5
	70921965	2	CAPSCREW, 3/8-16 X 3/4 GR5
	70917378	4	WASHER, 3/8
	70916965	4	LOCKWASHER, 3/8
	70916950	4	NUT, 3/8-16
4	104928W1	1	PLATE, DEFLECTOR
	70931317	2	BOLT, RD HD,SHT SQ NK, 1/4-20 X 3/4
	70937101	2	SPEEDNUT, 1/4-20
	7700461	3	BOLT, RD HD SHT SQ NK, 5/16-18 X 3/4
	70921332	6	CAPSCREW, 5/16-18 X 3/4 GR5
	70917642	7	WASHER, 5/16
	70917356	9	LOCKWASHER, 5/16
	70917372	9	NUT, HEX, 5/16-18
5	71395344	1	PLATE WLDMT, ROTOR
	700703922	4	NUT, HEX FLNG TOP LOCK, 5/8-11
6	104925W91	1	BULKHEAD ASY., LEFT
	7700461	10	BOLT, RD HD SHT SQ NK, 5/16-18 X 3/4
	70917642	10	WASHER, 5/16
	70917372	10	NUT, 5/16-18
	70921965	4	CAPSCREW, 3/8-16 X 3/4 GR5
	70921210	1	CAPSCREW, 3/8-16 X 1 GR5
	70917378	5	WASHER, 3/8
	70916965	5	LOCKWASHER, 3/8
	70916950	5	NUT, 3/8-16

CONTINUED

REAR ROTOR HOUSING

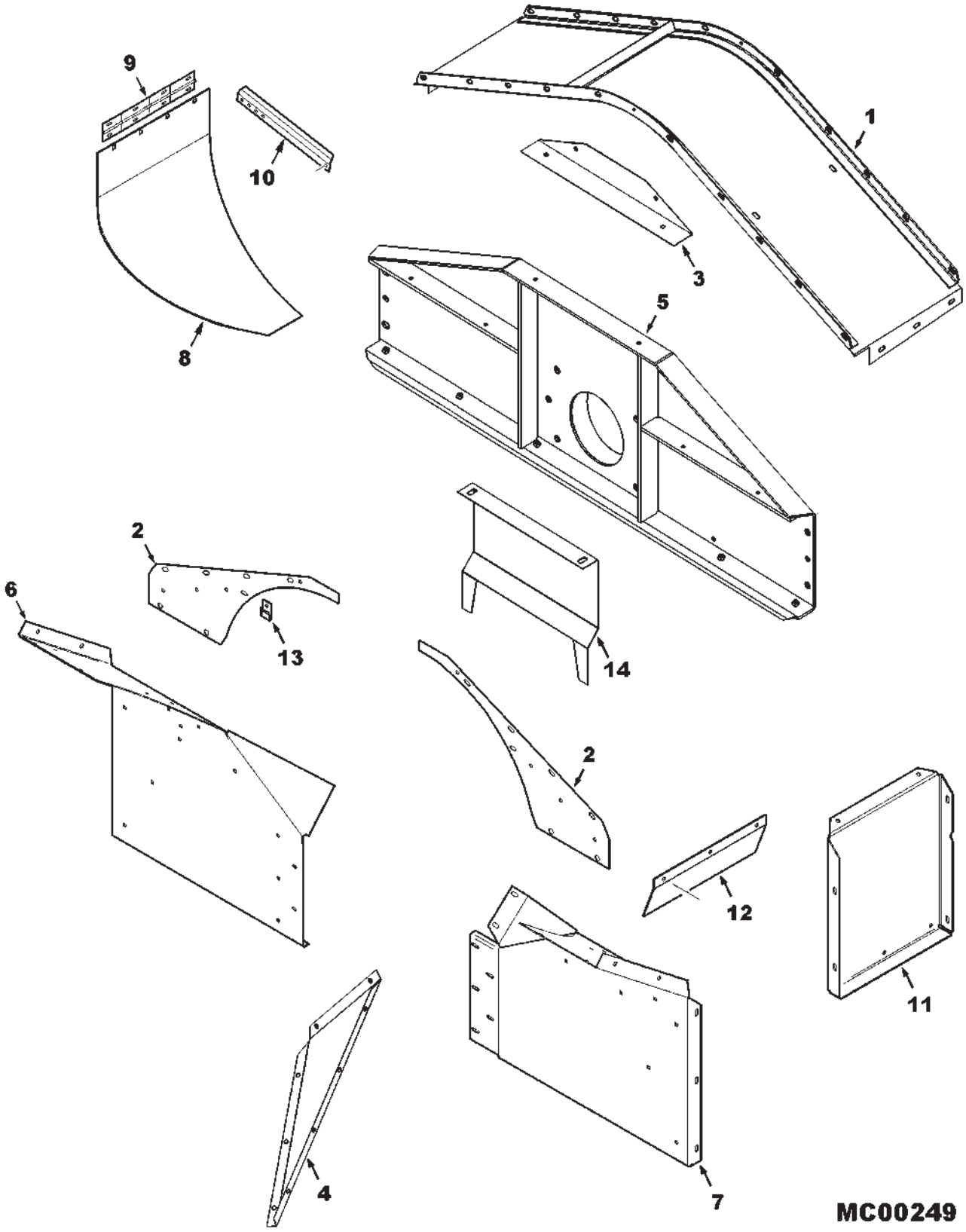

ITEM	NUMBER	QTY	DESCRIPTION
7	104922W91	1	BULKHEAD ASY, RIGHT
	7700461	2	BOLT, RD HD SHT SQ NK, 5/16-18 X 3/4
	70917642	2	WASHER, 5/16
	70917372	2	NUT, 5/16-18
	70921965	4	CAPSCREW, 3/8-16 X 3/4 GR5
	70921210	1	CAPSCREW, 3/8-16 X 1 GR5
	70917378	5	WASHER, 3/8
	70916965	5	LOCKWASHER, 3/8
	70916950	5	NUT, 3/8-16
8	71392690	1	DISCHARGE WLDMT, ROTOR DEFLECTOR
	70931348	4	BOLT, RD HD SQ NK, 3/8-16 X 3/4
	70916965	4	LOCKWASHER, 3/8
	70916950	4	NUT, 3/8-16
9	71386169	1	HINGE, DEFLECTOR
	70931348	4	BOLT, RD HD SQ NK, 3/8-16 X 3/4
	70916965	4	LOCKWASHER, 3/8
	70916950	4	NUT, 3/8-16
10	71387699	1	STRAP, DISCHARGE DEFLECTOR
	70921332	2	CAPSCREW, 5/16-18 X 3/4
	70917356	1	LOCKWASHER, 5/16
	70917372	1	NUT, HEX, 5/16-18
	7704117	1	NUT, HEX FLNG. TOP LOCK, 5/16-18
11	71387826	1	PLATE, UPPER RH
	70921210	5	CAPSCREW, 3/8-16 X 1 GR5
	70917378	6	WASHER, 3/8
	70916965	5	LOCKWASHER, 3/8
	70916950	5	NUT, 3/8-16
12	71387700	1	PLATE, DEFLECTOR
	70921210	3	CAPSCREW, HEX, 3/8-16 X 1
	70916965	3	LOCKWASHER, 3/8
	70916950	3	NUT, 3/8-16
13	70936314	4	J-CLIP, 1/2
14	71404326	1	* DEFLECTOR PANEL, ROTOR GEARBOX
	70917378	2	* WASHER, 3/8 WIDE
-	700525382	AR	* KIT, DEFLECTOR, ROTOR GEARBOX (FIELD CAMPAIGN)(EFF. S/N HM87101 THRU HN87300)

MC00249
PR: 182

SEPARATOR GRATES

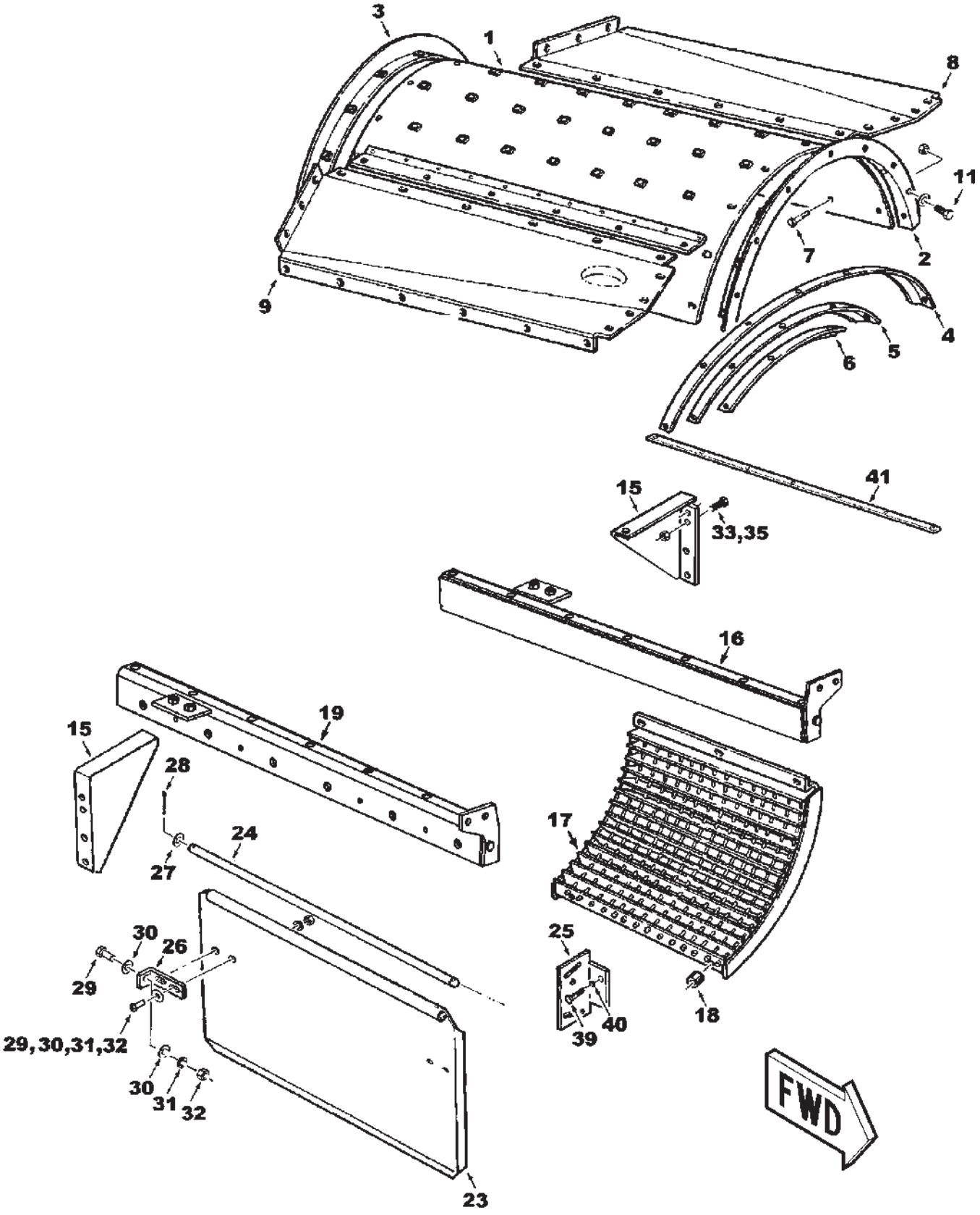

MC00250

ITEM	NUMBER	QTY	DESCRIPTION
-	71388466	1	GUIDE VANE ASY,SEPARATOR(INCL ITEMS 1-7)
	70919089	14	CAPSCREW, 1/2-13 X 1-3/4 GR5
	Y705046	14	LOCKWASHER, 1/2
1	71388439	1	COVER WLDMT
2	71388441	1	ANGLE WLDMT, FRONT
3	71388442	1	ANGLE WLDMT, REAR
4	2467220W1	5	VANE, GUIDE 7 HOLE
5	2467230W1	1	VANE, GUIDE 5 HOLE
6	2498390W1	1	VANE, GUIDE 3 HOLE
7	71335689	52	SCR, SOCK BUTTON HD,TAPP'G, 3/8-16 X 3/4
	700720958	16	SCR, SOCK BUTTON HD,TAPP'G, 3/8-16 X 1
8	71391902	1	COVER, LEFT REAR
	71387344	1	COVER, LEFT FRONT
	70922586	7	CAPSCREW, 3/8-16 X 5/8
	70921332	2	CAPSCREW, 5/16-18 X 3/4
	70923325	13	CAPSCREW, 5/16-18 X 7/8
	70917378	7	WASHER, 3/8 WIDE
	70917642	15	WASHER, 5/16 WIDE
	70917356	13	LOCKWASHER, 5/16
	70916965	7	LOCKWASHER, 3/8
	Y704726	2	NUT, HEX FLNG TOP LOCK, 5/16-18
	70916950	7	NUT, 3/8-16 REG
9	71387343	1	COVER, RIGHT REAR
	71387345	1	COVER, RIGHT FRONT
	70923325	26	CAPSCREW, 5/16-18 X 7/8
	70917642	29	WASHER, 5/16
	70917356	26	LOCKWASHER, 5/16
	70917372	12	NUT, 5/16-18 REG
	7703499	3	CAPSCREW, 5/16-18 X 3/4 GR5
	Y704726	3	NUT, HEX FLNG TOP LOCK, 5/16-18
11	70921210	16	CAPSCREW, 3/8-16 X 1.0
	353771X1	16	WASHER, HEAVY HARDENED FLAT, 3/8
	Y704734	16	NUT, HEX FLNG TOP LOCK, 3/8-16
15	71390019	2	BRACKET ASY.
	7701188	8	CAPSCREW, 1/2-13 X 1-1/4 GR5
	Y704742	8	NUT, HEX FLNG TOP LOCK, 1/2-13
16	71388459	1	HANGER WLDMT, LEFT REAR
	7701188	2	CAPSCREW, 1/2-13 X 1-1/4 GR5
	Y704742	2	NUT, HEX FLNG TOP LOCK, 1/2-13

CONTINUED

SEPARATOR GRATES

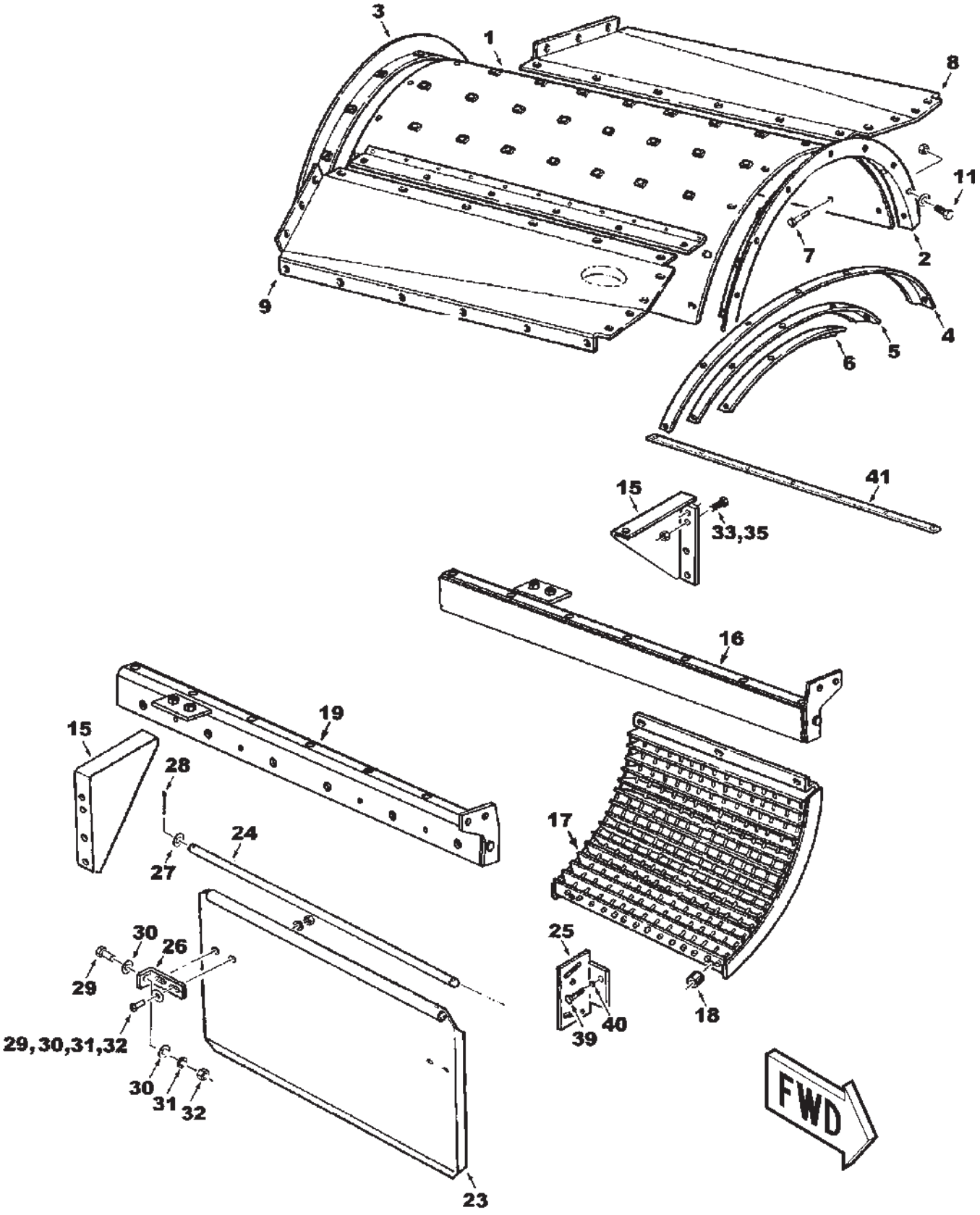

MC00250

ITEM	NUMBER	QTY	DESCRIPTION
17	71388451	4	GRATE WLDMT, SEPARATOR
	70920037	8	CAPSCREW, HEX SOCK HD, 1/2-13 X 5/8
	7701188	12	CAPSCREW, 1/2-13 X 1-1/4 GR5
	Y705046	12	LOCKWASHER, 1/2
18	151257M1	6	SPACER, 1-1/4 X 11/16 X 1-3/16
	70919434	6	CAPSCREW, 5/8-11 X 2-3/4 GR5
	700703922	6	NUT, HEX FLNGE TOP LOCK, 5/8-11
19	71388458	1	HANGER ASY., RH
	7701188	2	CAPSCREW, 1/2-13 X 1-1/4
	Y704742	2	NUT, HEX FLNG TOP LOCK, 1/2-13
23	2618670W1	2	SHIELD, DEFLECTOR
24	2618680W1	2	ROD, SEPARATOR DEFLECTOR, HINGE
25	2538810W1	4	BRACKET, SEPARATOR DEFLECTOR HINGE
26	2530670W1	4	BRACKET, ADJUSTING
27	70917378	4	WASHER, WIDE FLAT, 3/8
28	70918452	4	PIN, COTTER, 1/8 X 1.0
29	7703457	12	CAPSCREW, HEX, 1/4-20 UNC X 3/4
30	70917377	16	WASHER, WIDE FLAT, 1/4
31	70916964	12	WASHER, LOCK, 1/4
32	70916622	12	NUT, HEX, 1/4-20 UNC
33	70921176	8	CAPSCREW, 1/2-13 X 1-1/4
35	Y704742	8	NUT, HEX FLNG TOP LOCK, 1/2-13
39	70921210	4	CAPSCREW, 3/8-16 X 1.0
40	70916965	4	WASHER, LOCK, 3/8
41	71388465	2	FLAT STRAP, COVER REINF

MC00250
PR: 186

SEPARATOR GRATE SUPPORTS
RICE

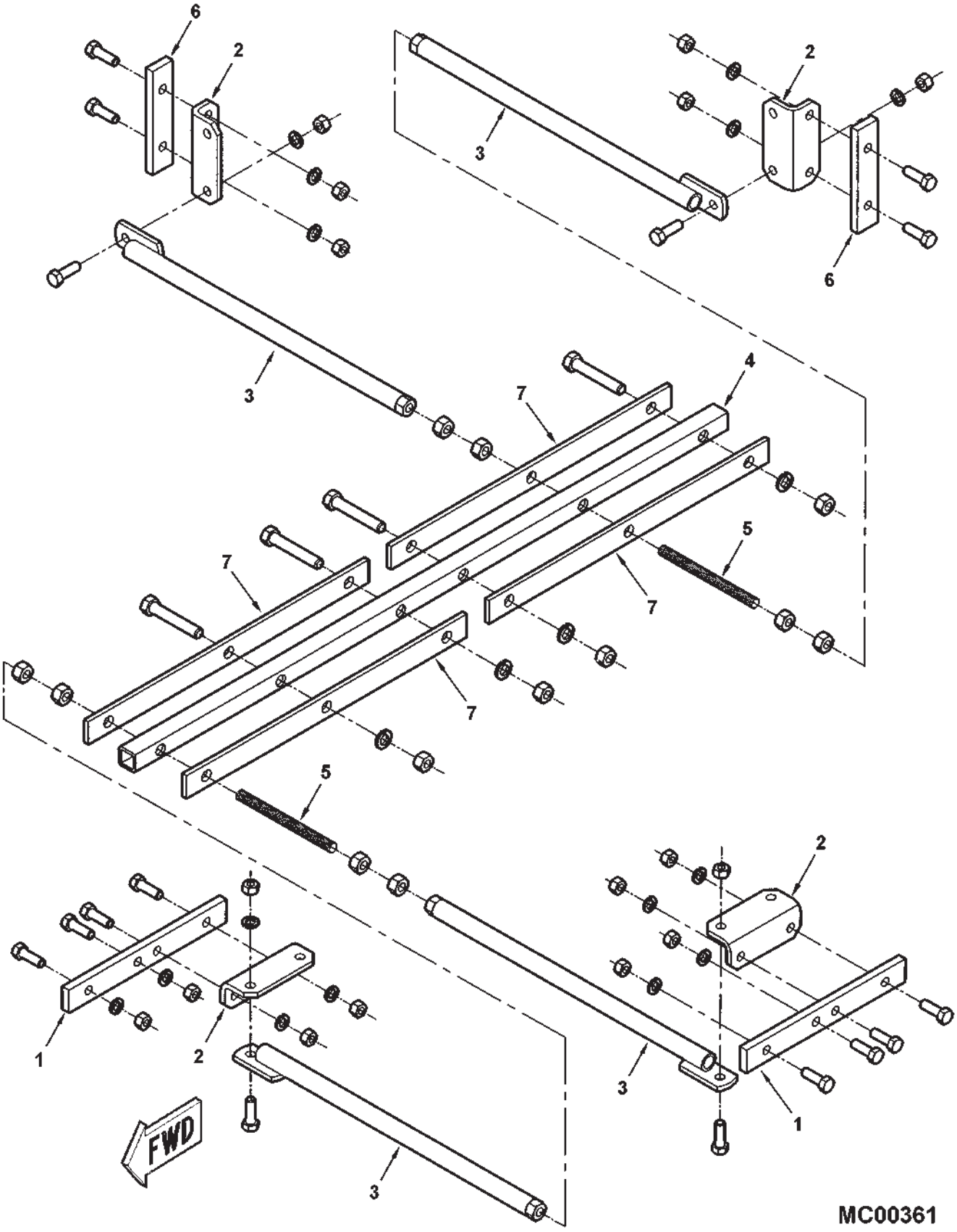

SEPARATOR GRATE SUPPORTS
RICE

ITEM	NUMBER	QTY	DESCRIPTION
1	71398761	2	BAR, REINFORCEMENT, FRONT
	703983	4	CAPSCREW, 1/2-13 X 1-3/4
	Y705046	4	LOCKWASHER, 1/2
	704031	4	NUT, HEX, 1/2-13
2	71398762	4	ANGLE, INNER SUPPORT
	703983	8	CAPSCREW, 1/2-13 X 1-3/4
	Y705046	8	LOCKWASHER, 1/2
	704031	8	NUT, HEX, 1/2-13
3	71398763	4	PIPE WLMT, SUPPORT
	701235	4	CAPSCREW, 1/2-13 X 1-1/2
	Y705046	4	LOCKWASHER, 1/2
	704031	4	NUT, HEX, 1/2-13
4	71398771	1	TUBE, STRUCTURAL
5	71398770	2	ROD, THREADED, 5/8-11 X 7.0
	70932665	8	NUT, HEX, 5/8-11
6	71398768	2	BAR, REINFORCEMENT, REAR
7	71398769	4	BAR, REINFORCEMENT
	7701550	4	CAPSCREW, 5/8-11 X 3-1/2
	70917373	4	LOCKWASHER, 5/8
	70932665	4	NUT, HEX, 5/8-11

MC00361
PR: 190

ROTOR

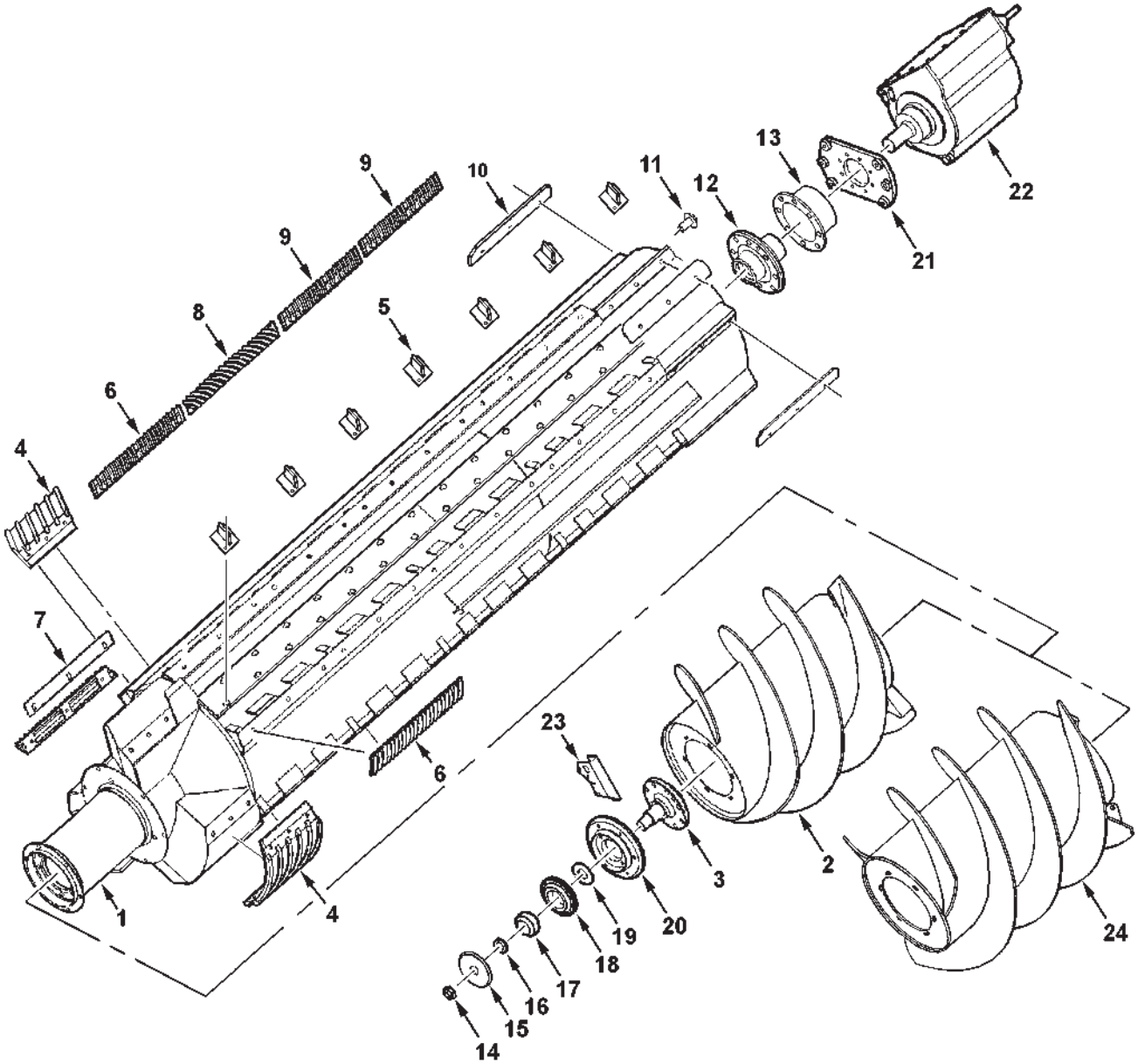

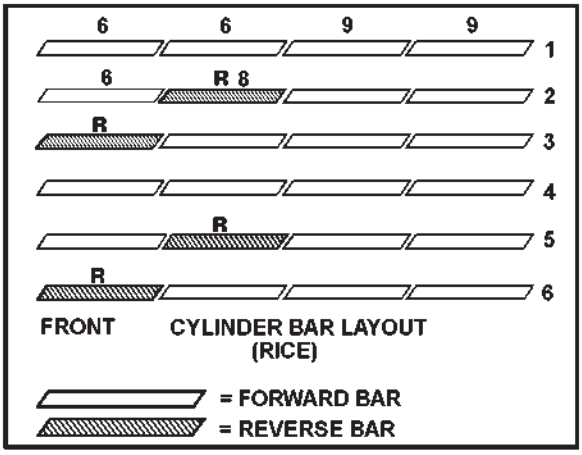

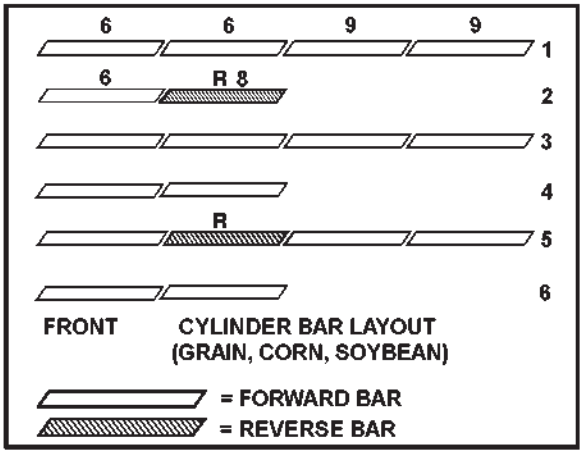

MC00251

ITEM	NUMBER	QTY	DESCRIPTION
-	71410437	1	ROTOR ASY, REPAIR (GRAIN, CORN, SOYBEAN) (COMPLETE W/ FLIGHTING WLMT IT. 24)
-	71398271	1	ROTOR ASY, REPAIR (RICE & AUSTRALIA)
1	-----	--	ROTOR WLDMT, (NOT SERVICED)
2	2469711W91	1	FLIGHTING ASY, INLET (PRIOR S/N HN87101) (SERVICE W/71399637 & 71401418)
	2469760W1	AR	FLIGHTING, WELD-ON (NON-HARDENED) (FOR 2469711W91)
	71399637	1	FLIGHTING ASY, INLET (EFF. S/N HN87101 RU S/N HP87999)(SERVICE W/ 71410439)
	71399641	AR	FLIGHTING, WELD-ON (NON-HARDENED) (FOR 71399637)(SERVICE W/ 71410441)
	71401418	AR	SPACER RING (REPAIRS ONLY)(USED W/ 71399637 & 71410439 ON ROTORS PRIOR S/N HN87101)
	70921210	15	CAPSCREW, 3/8-16 X 1 GR5
	70917378	15	WASHER, 3/8 WIDE
	70916965	15	LOCKWASHER, 3/8
	700704010	AR	SILICONE SEALANT, BLACK, 10.2 OZ.
3	101930M1	1	SHAFT, FRONT
	70921525	8	CAPSCREW, 1/2-13 X 1-3/4 GR8
4	2497273W91	1	ELEMENT, THRESHING (GR,CRN,SBN) SET OF 3
	102835M91	1	ELEMENT, THRESHING (RICE, AUS) SET OF 3
	700706463	18	CAPSCREW, 3/8-16 X 1 GR8
	353771X1	18	WASHER, HEAVY HARD 3/8
5	2554761W91	21	IMPELLER, ASY.
	7700461	42	BOLT, RD HD SHT SQ NK, 5/16-18 X 3/4
	Y704726	42	NUT, HEX FLNG, TOP LOCK, 5/16-18 GRG
	71400045	AR	KIT, 21 IMPELLERS, ROTOR (ORDER THRU DEALER CENTRAL)
6	71371520	10	CYLINDER BAR, .75 CHROME (GRN,CRN,SBN) QTY. 8 (RICE, AUST.)
7	71393107	AR	SHIM .0359
8	71371526	2	CYL BAR, REVERSE, .75 CHROME (GR,CN,SBN) QTY. 4 (RICE, AUST.)
9	71378577	6	CYL BAR, LONG, FWD .75 CHROME(GN,CN,SBN) QTY. 12 (RICE, AUST.)
	71378579	AR	CYL BAR, LONG, REVERSE, .75 CHROME (ALT)
	70926154	24	CAPSCREW, 1/2-13 X 1 GR8
	Y705046	24	LOCKWASHER, 1/2 REG
10	71395413	6	PLATE, SEPARATOR DISCHARGE QTY. 15 (RICE, AUST.)
	8701708	18	CAPSCREW, 1/2-13 X 1-1/4 GR8 QTY. 45 (RICE, AUST.)
	Y705046	18	LOCKWASHER, 1/2 QTY. 45 (RICE, AUST.)
	71400046	AR	KIT, SEPARATOR, 9 PADDLES (ORDER THRU DEALER CENTRAL)
11	373293X1	1	SCREW, TRUSS HEAD, 3/8 UNC X 3/4
12	71391752	1	HUB WLDMT, ROTOR DRIVE
13	102981M91	1	SHIELD ASSEMBLY
	70921525	8	CAPSCREW, 1/2-13 X 1-3/4 GR8
	353773X1	8	WASHER, HEAVY HARD 1/2

CONTINUED

ROTOR

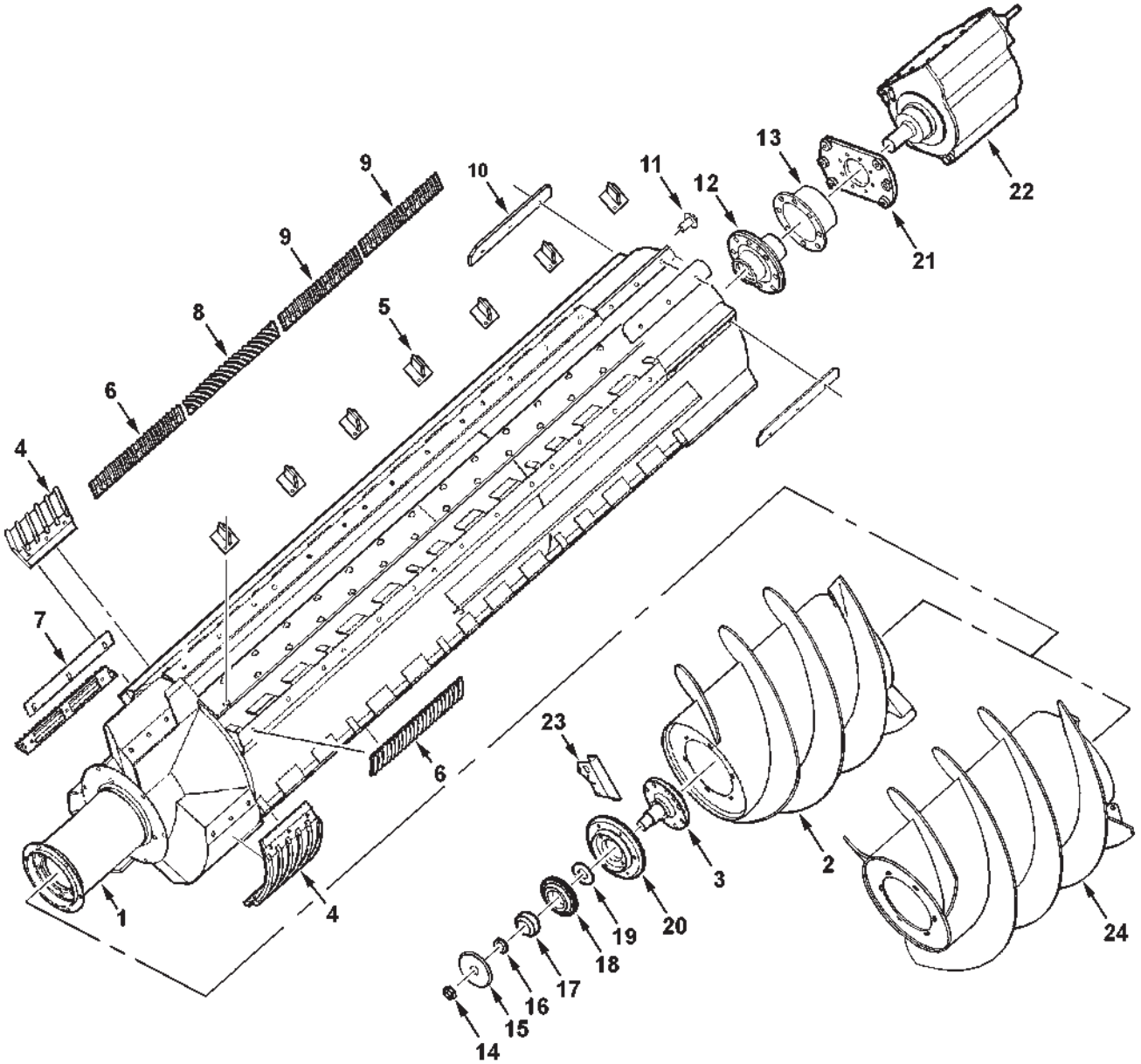

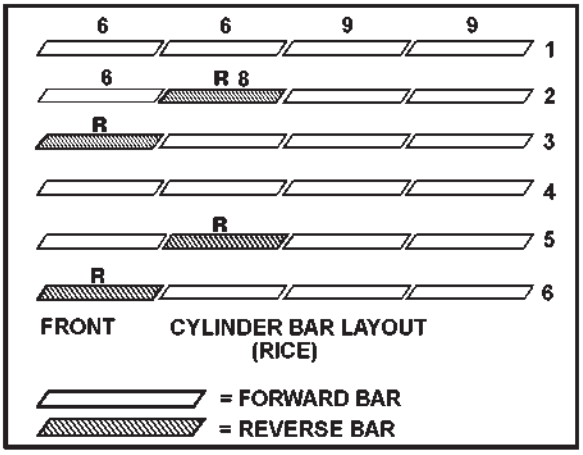

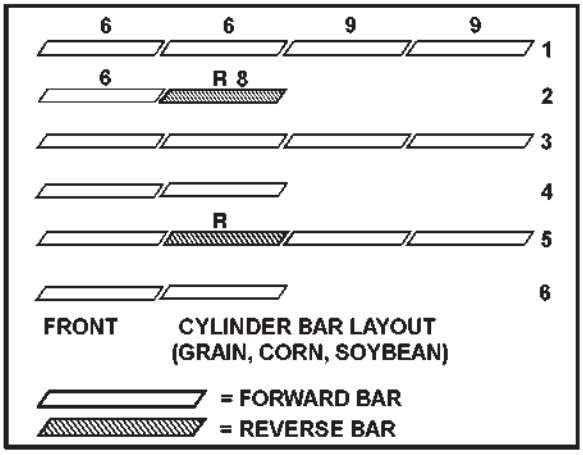

MC00251

ITEM	NUMBER	QTY	DESCRIPTION
14	832088M1	1	NUT, HEX JAM, SPL, 1-1/2-12
15	112752W1	1	WHEEL, ROTOR SPEED
16	2489940W1	1	WASHER, ROTOR FRONT
17	22602X	1	BEARING, WIDE INNER RACE
18	71387470	1	HOUSING, FRONT BEARING, ROTOR
	701235	4	CAPSCREW, 1/2-13 X 1-1/2 GR5
	Y705046	4	LOCKWASHER, 1/2 REG
19	2489920W1	1	SHIELD, BEARING
20	2489330W1	1	MOUNT, BEARING
	70923114	6	CAPSCREW, 1/2-13 X 1 GR5
	Y705046	6	LOCKWASHER, 1/2 REG
21	71401912	1	PLATE, GEARBOX MOUNTING
	70919434	6	CAPSCREW, 5/8-11 X 2-3/4
	70918432	6	WASHER, 5/8, WIDE
	700703922	6	NUT, HEX FLNG TOP LOCK, 5/8-11
22	71387393	1	GEARBOX, 2-SPEED (PRIOR S/N HP87101)
	71401731	1	GEARBOX, 2-SPEED (EFF. S/N HP87101)
	7703259	8	CAPSCREW, M12-1.75 X 50
	700708343	8	LOCKWASHER, M12
23	71401326	1	BRKT, ROTOR SENSORS (EFF. S/N HN87101)
24	71410439	1	FLIGHT WLMT, INLET (EFF. S/N HR87101)
	71410441	AR	FLIGHTING, WELD-ON (NON-HARDENED) (FOR 71410439 OR 71399637)
	70923470	3	CAPSCREW, 3/8-16 X 1-1/2, GR8
	353771X1	3	WASHER, HARD, 3/8

MC00251
PR: 192

ROTOR DRIVE
GEARBOX SHIFT LINKAGE

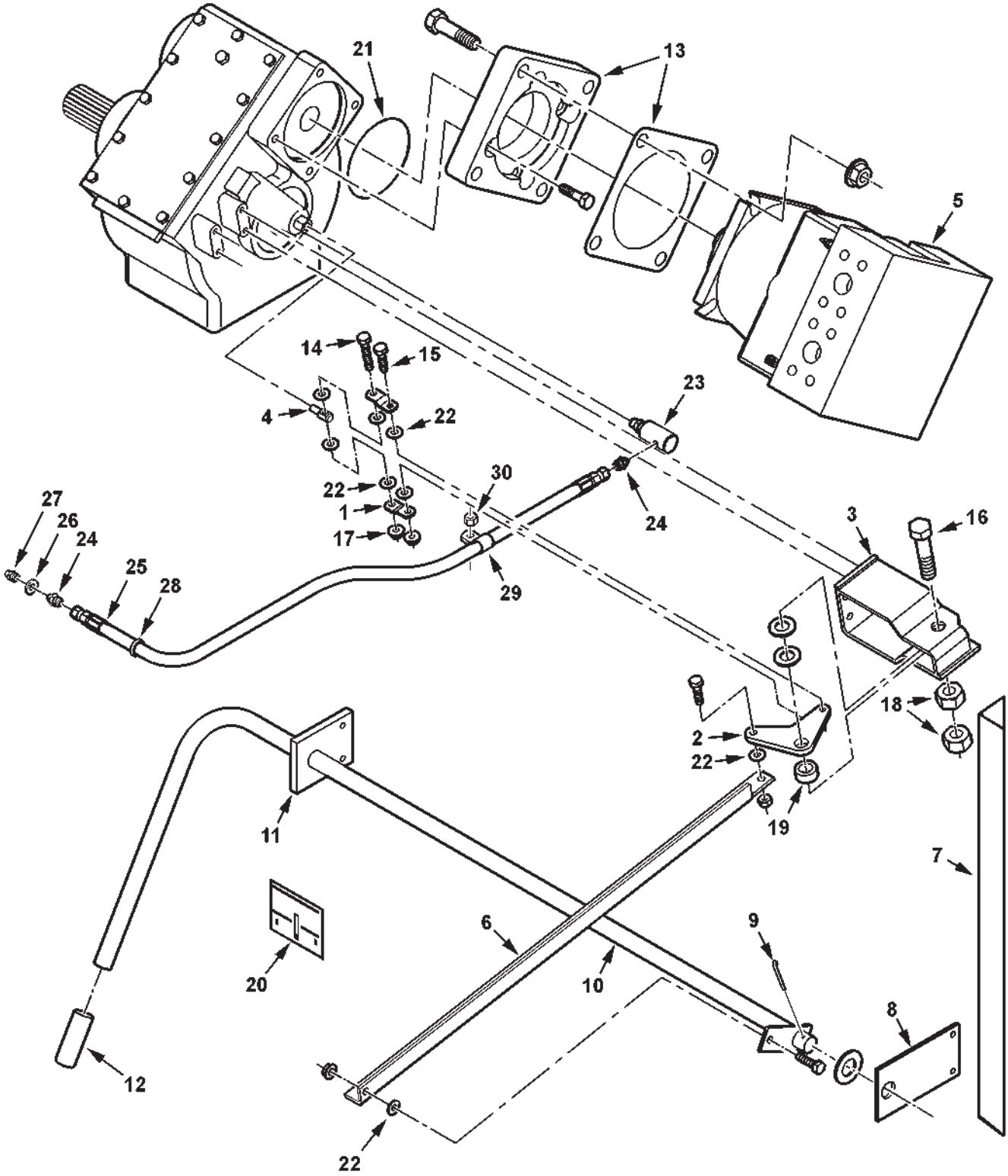

MC00252

ITEM	NUMBER	QTY	DESCRIPTION
1	71391261	2	LINK, SHIFT
2	71391643	1	BELLCRANK
3	71388829	1	PIVOT BRACKET ASY
	700708349	4	CAPSCREW, M10-1.5 X 25 CL8.8
	70917378	4	WASHER, 3/8 WIDE
4	71391660	1	SCREW, METRIC SPECIAL, M12-1.75
5	71392870	1	MOTOR, HYDRO ROTOR (SEE BREAKDOWN)
	70923858	4	WASHER, FLAT, .53 X 1.25 X 7 GA
	700708353	4	CAPSCREW, M12-1.75 X 40 CL8.8
6	71388842	1	LINK, GEARSHIFT
	70921210	2	CAPSCREW, 3/8-16 X 1.0 GR5
	Y704734	2	NUT, HEX FLNG TOP LOCK, 3/8-16
7	71388843	1	ANGLE, SUPPORT
	70921333	2	CAPSCREW, 5/16-18 X 1.0 GR5
	70917356	2	LOCKWASHER, 5/16 REG
	70917372	2	NUT, 5/16-18 REG
8	71388844	1	PLATE, REAR BEARING
	70921333	2	CAPSCREW, 5/16-18 X 1.0 GR5
	70917356	2	LOCKWASHER, 5/16 REG
	70917372	2	NUT, 5/16-18 REG
9	70922002	1	COTTER PIN, 3/16 X 2 LG
10	71388833	1	CRANK ASSEMBLY
	705681	1	WASHER, FLAT, 1.0 SAE
11	71391270	1	PLATE, FRONT BEARING
	70921977	2	CAPSCREW, 5/16-18 X 1-1/4 GR5
	70917642	2	WASHER, 5/16 WIDE
	70917356	2	LOCKWASHER, 5/16 REG
	70917372	2	NUT, 5/16-18 REG
12	71379254	1	GRIP, HANDLE
13	-----	--	ADAPTER, ROTOR MOTOR (CHALL. 670)
14	70922127	1	CAPSCREW, 5/16-18 X 1-3/4 GR5
	70917642	2	WASHER, 5/16 WIDE
15	70921977	1	CAPSCREW, 5/16-18 X 1-1/4 GR5
16	70924763	1	CAPSCREW, 3/4-10 X 3-1/2 GR5
	70918269	2	WASHER, 3/4 NARROW
17	Y704726	2	NUT, HEX FLNG TOP LOCK, 5/16-18
18	70913160	2	NUT, 3/4-10 REG
19	51871M1	1	SPACER
20	71407700	1	DECAL, IMPORTANT, ROTOR HI-LO
			(REPLACES DECAL 71368812)
21	70925785	1	O-RING, 4.987 X .103 (VITON)
22	71391654	6	WASHER, NYLON FRICTION
23	71332011	1	UNION, ROTATING, 9/16-18 ORB X 1/8
			NPTF FEM. (EFF. S/N HP87101)
	70921885	1	O-RING, .078 X .468 ID
24	70919171	2	CONN. STR MALE, 7/16-20 JIC X 1/8 NPTF
25	71401753	1	HOSE ASY, GEARBOX LUBE
26	Y705533	1	WASHER, 3/8, HARD
27	70914767	1	LUBE FITTING, STR, 1/8 NPTF FEM
28	827758	1	GROMMET, RUBBER, 1" ID
29	70925617	3	CLAMP, .50 TUBE X .406 HOLE
30	70916950	2	NUT, 3/8-16 REG

MC00252
PR: 194

ROTOR DRIVE
2-SPEED GEARBOX

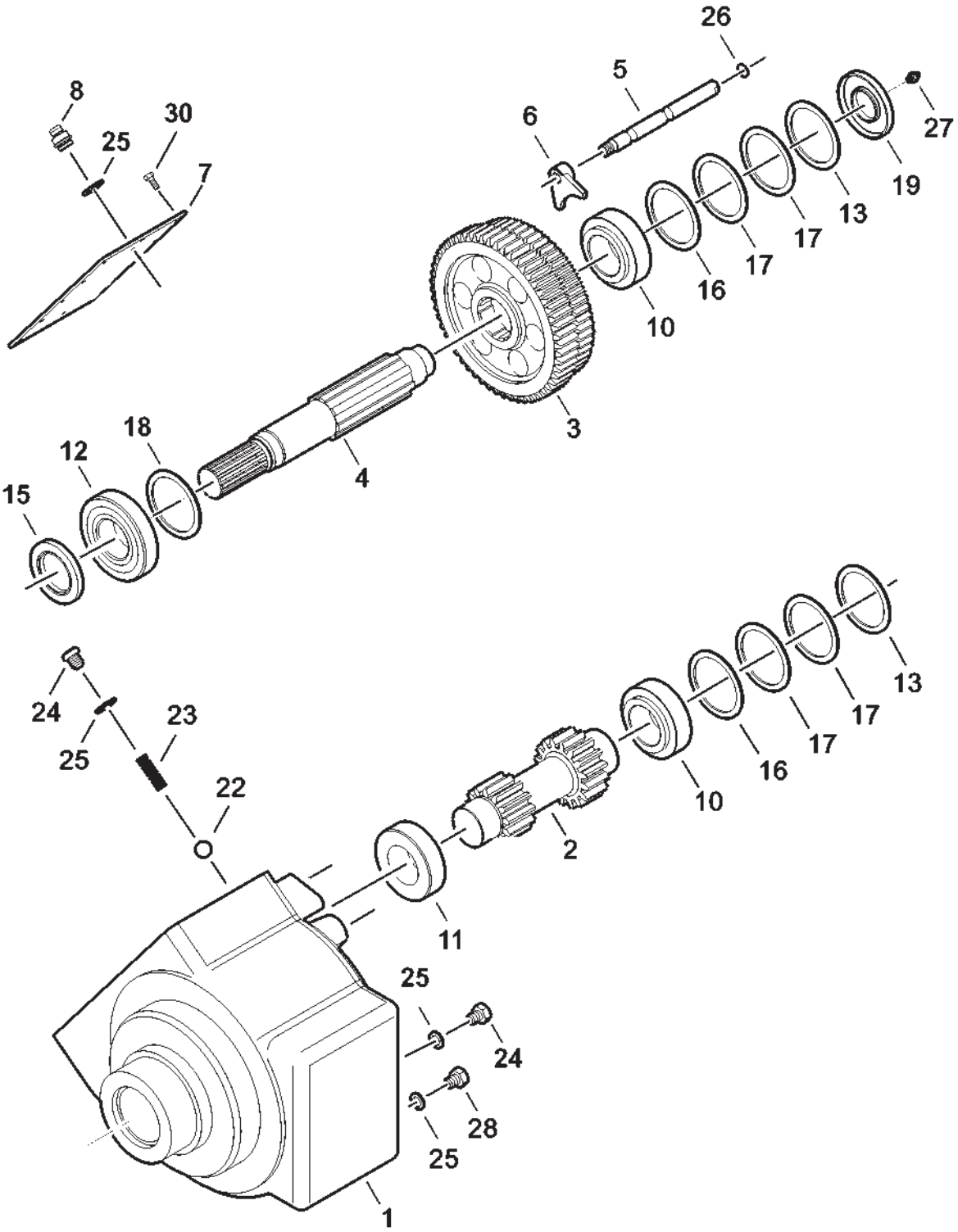

71387393

ROTOR DRIVE
2-SPEED GEARBOX

ITEM	NUMBER	QTY	DESCRIPTION
-	71387393	1	GEARBOX, 2-SPEED (PRIOR S/N HP87101)
-	71401731	1	GEARBOX, 2-SPEED (EFF. S/N HP87101)
1	71392886	1	GEAR CASE
2	71392887	1	SHAFT, GEAR (13 & 16 TEETH)
3	71392888	1	GEAR (53 & 56 TEETH)
4	71392889	1	SHAFT (LUBE FTG STYLE)(PRIOR S/N HP87101
	71401730	1	SHAFT(REMOTE LUBE STYLE)(EFF S/N HP87101
5	71392890	1	RAIL, SHIFT
6	71392891	1	FORK, SHIFT
7	71392892	1	COVER PLATE
	79021649	AR	SEALANT/GASKET (RTV SILICONE-CLEAR)
8	71391263	1	PLUG, BREATHER M16 X 1.5
10	71392894	2	BEARING, TAPER-ROLLER, CUP & CONE
11	71392895	1	BEARING, TAPER-ROLLER, CUP & CONE
12	71392896	1	BEARING, TAPER-ROLLER, CUP & CONE
13	71392897	2	RING, RETAINING, INTERNAL
15	71392898	1	SEAL (A60 X 95 X 10)
16	71392899	2	SHIM (90 X 100 X 2, 0)
17	71392900	4	SHIM (90 X 100 X 0, 1)
18	71394126	1	WASHER, SPACER
19	71394127	1	SEAL (AS45 X 100 X 10)
22	71394128	1	BALL (12mm)
23	71394129	1	SPRING, COMPRESSION
24	71394130	4	PLUG, HEX SOCKET
25	71394131	5	RING/GASKET (COPPER)
26	71394132	1	O-RING, SEALING
27	71394133	1	LUBE FITTING (M8 X 1)(PRIOR S/N HP87101)
28	71394134	1	PLUG, HEX SOCKET (MAGNETIC)
30	700708359	12	CAPSCREW, HEX (M8-1.25 X 20 CL8.8)

71387393
PR: 196

JACKSHAFT DRIVE

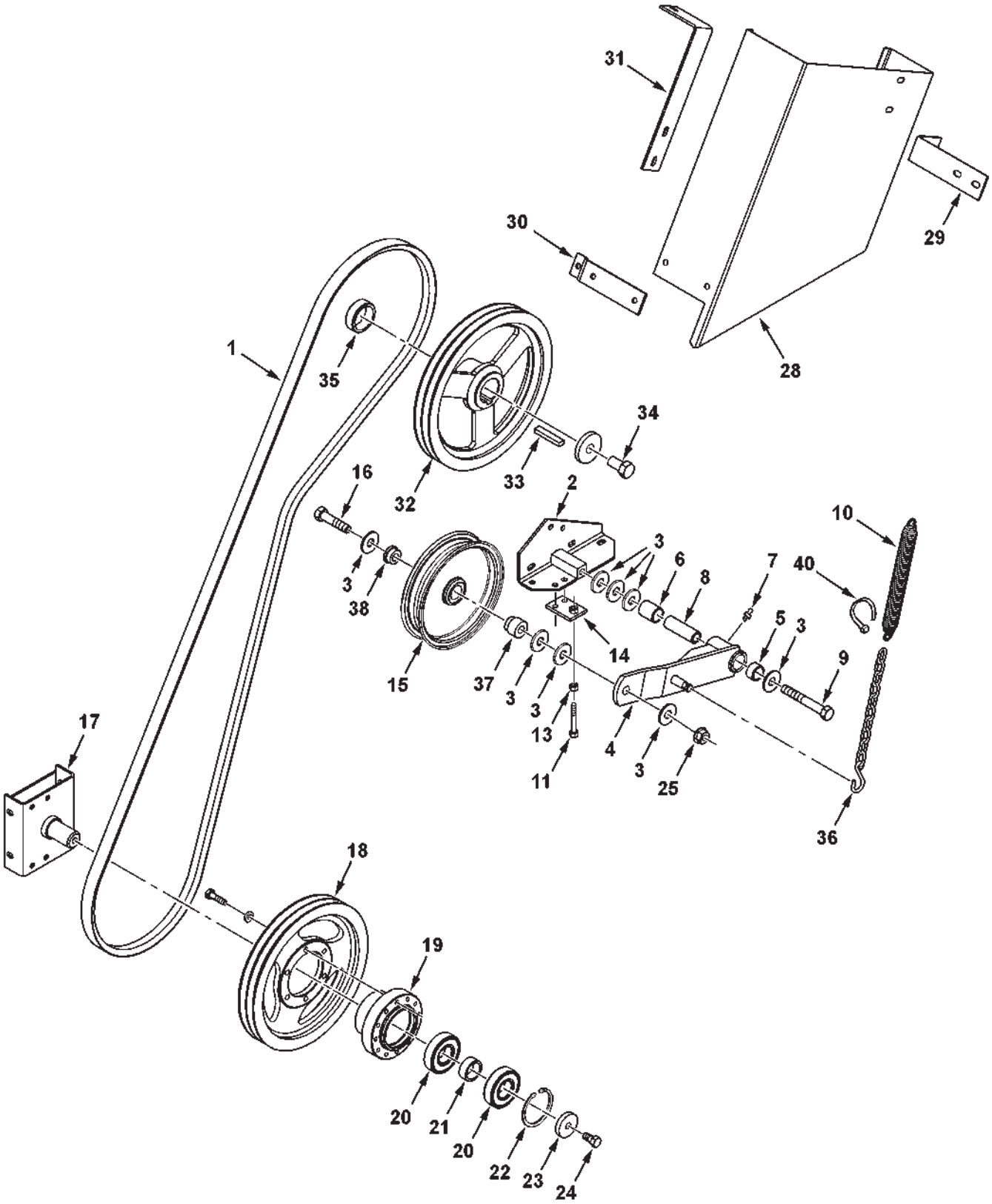

MC00044

JACKSHAFT DRIVE

ITEM	NUMBER	QTY	DESCRIPTION
1	227455M1	1	BELT - PRIMARY DR, SPREADER
	71385837	1	BELT-PRIMARY, CHOPPER(PRIOR S/N HR87101)
	71406361	1	BELT-PRIMARY, CHOPPER (EFF. S/N HR87101)
2	101098M91	1	PIVOT STAND WLMT, IDLER
	70920415	4	CAPSCREW, 3/8-16 X 1-1/4
	70917378	4	WASHER, PLAIN, 3/8
	Y704734	5	NUT, HEX FLANGE TOP LOCK, 3/8-16
3	70918432	4	WASHER, WIDE, 5/8 (QTY 6, PRIOR HR87101)
4	71406362	1	ARM ASY, IDLER JACKSHAFT
5	1689170W1	2	BUSHING, 1 X 1.24 X .75 LG (WAS QTY.1)
6	1742670W1	1	BUSHING, 1 X 1.24 X 1.50 LG (PRIOR S/N HP87---, MID-PROD'N RUN)
7	70914465	1	LUBE FITTING, 1/8-27 NPT, SPL EXT SHORT
8	2441490W1	1	SLEEVE, 41/64 X 63/64 X 3-1/16
9	70925704	1	CAPSCREW, 5/8-11 UNC X 4-1/2
10	101276M2	1	SPRING, IDLER TENSIONER
11	70931643	1	CAPSCREW, 3/8-16 X 3
13	70916950	1	NUT, 3/8-16 REG
14	2628221W91	1	STOP PLATE WLMT
	70921210	2	CAPSCREW, 3/8-16 X 1
	70917378	2	WASHER, WIDE, 3/8
	Y704734	2	NUT, HEX FLANGE TOP LOCK, 3/8-16
15	2553560W1	1	IDLER, FLAT, 8-3/4 OD(PRIOR S/N HR87101)
	71309767	1	IDLER, FLAT, 8 DIA (EFF. S/N HR87101)
16	70919434	1	CAPSCREW, 5/8-11 UNC X 2 3/4
17	101100M91	1	SUPPORT ASSEMBLY, JACKSHAFT
	70921965	4	CAPSCREW, 3/8-16 X 3/4
	70917378	4	WASHER, PLAIN, 3/8
	Y704734	4	NUT, HEX FLNG TOP LOCK, 3/8-16
18	2628310W1	1	SHEAVE, SPREADER, DRIVEN, JACKSHAFT
	71388748	1	SHEAVE, CHOPPER, DRIVEN, JACKSHAFT (PRIOR S/N HR87101)
	70923701	6	CAPSCREW, 3/8-16 X 2 (SPREADER)
	70921324	6	CAPSCREW, 3/8-16 X 3-3/4 (CHOPPER)
	70916965	6	LOCKWASHER 3/8
	70916950	6	NUT, 3/8-16
	71406328	1	SHEAVE, CHOPPER, DRIVEN(EFF.S/N HR87101)
	339376X1	6	LOCKWASHER, M10
	3009495X1	6	CAPSCREW, M10-1.5 X 40 CL8.8
19	71387515	1	HUB, JACKSHAFT (PRIOR S/N HR87101)
	71406330	1	HUB, JACKSHAFT (EFF. S/N HR87101)
20	354920X1	2	BEARING, BALL
21	2619180W1	1	SPACER, BEARING
22	70925997	1	RING, INTERNAL SNAP, 3-17/32 X 7/64
23	2485470W1	1	WASHER, 17/32 X 2 X 3/8
24	70923114	1	CAPSCREW, 1/2-13 UNC X 1
25	700703922	1	NUT, HEX FLANGE TOP LOCK, 5/8-11

CONTINUED

JACKSHAFT DRIVE

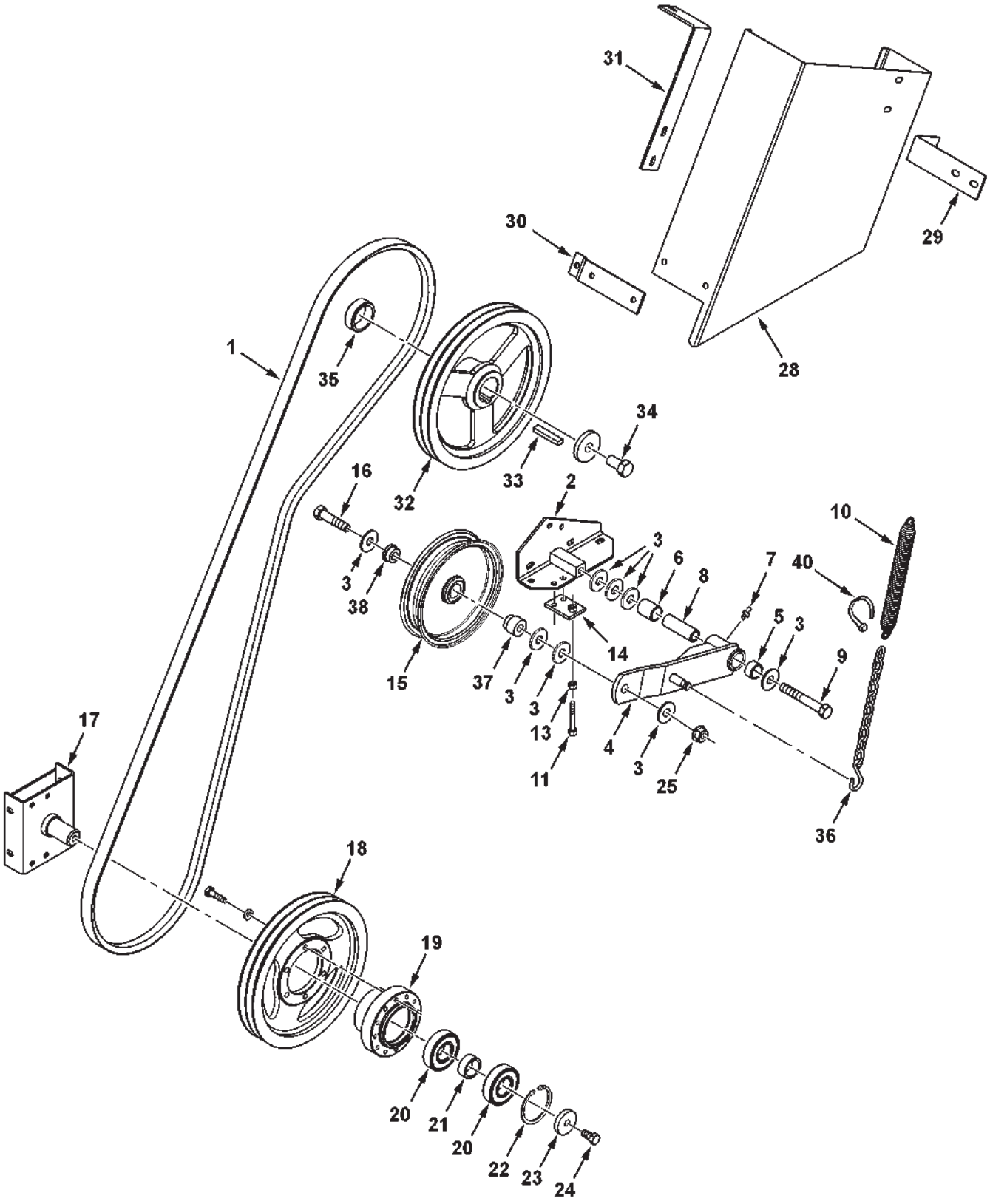

MC00044

ITEM	NUMBER	QTY	DESCRIPTION
28	101074M2	1	SHIELD WLMT (PRIOR S/N HR87101)
29	101075M1	1	BRACKET, SHIELD SUPPT(PRIOR S/N HR87101)
	70921210	4	CAPSCREW, 3/8-16 X 1
	70917378	4	WASHER, PLAIN, 3/8
	70916965	4	LOCKWASHER, 3/8
	70916950	4	NUT, HEX, 3/8-16
30	102934M1	1	BRACKET (PRIOR S/N HR87101)
31	2637890W1	1	BRACKET, SHIELD (PRIOR S/N HR87101)
32	2503350W1	1	SHEAVE, SPREADER DRIVER, MAIN CNTRSHFT
	71385836	1	SHEAVE, CHOPPER DRIVER, MAIN CNTRSHFT (PRIOR S/N HR87101)
	71406327	1	SHEAVE, CHOPPER DRIVER (EFF S/N HR87101)
33	Y61879	1	KEY, SQUARE, 1/2 X 2-1/2 LG
34	70921169	1	CAPSCREW, 3/4-16 X 1-1/2 GR8
	104751W1	1	WASHER, .78 ID X 2.5 OD X 3/8
35	2619380W1	1	SPACER, MAIN COUNTERSHAFT
36	2630100W2	1	CHAIN, IDLER TENSIONER
37	71353127	1	SPACER, IDLER (EFF. S/N HR87101)
38	71312602	1	SPACER, IDLER (EFF. S/N HR87101)
40	70925094	AR	TIE, NYLON LOCKING, .184 X 7 LG

MC00044
PR: 198

STRAW CHOPPER DRIVE

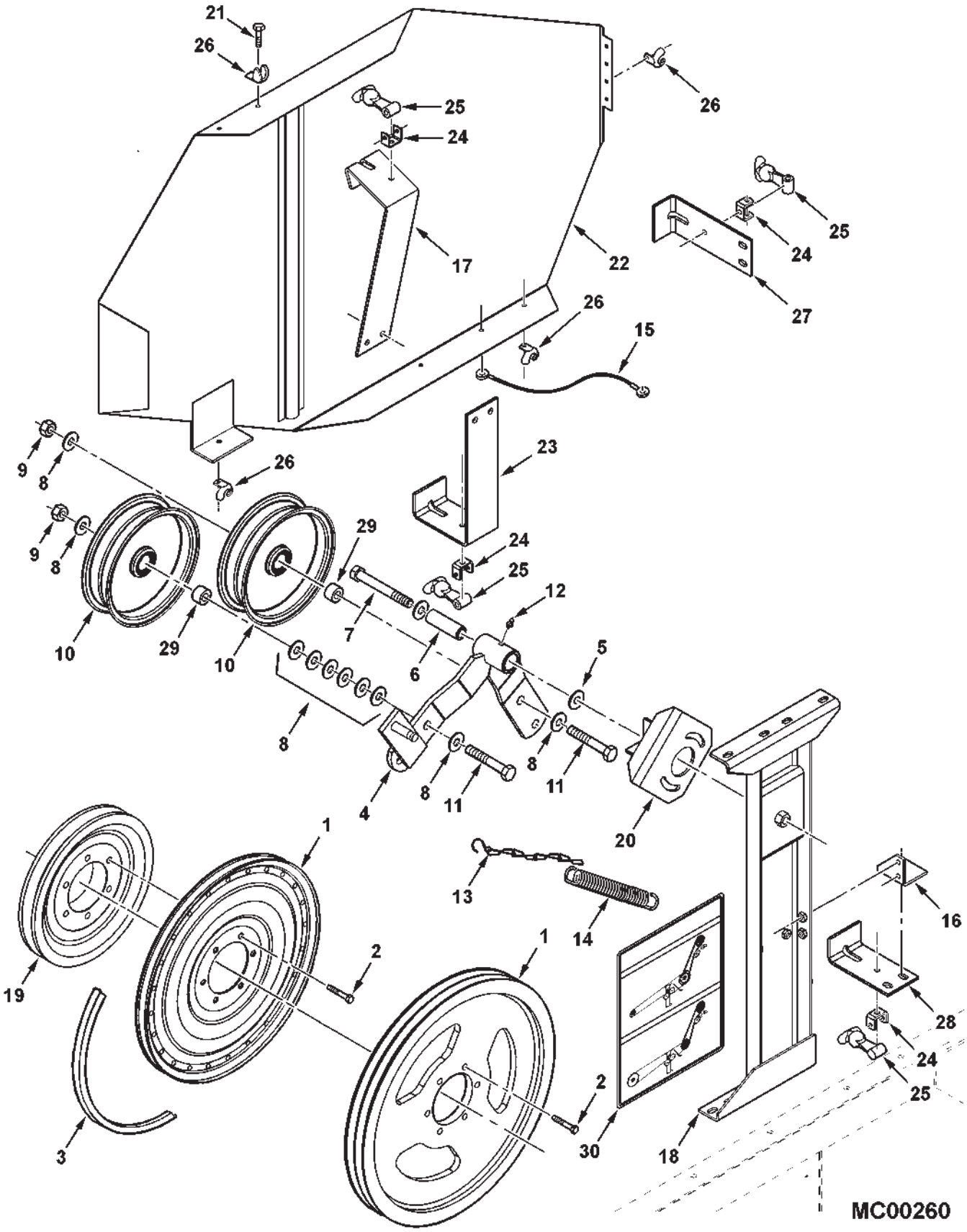

STRAW CHOPPER DRIVE

ITEM	NUMBER	QTY	DESCRIPTION
1	2628340W1	1	SHEAVE, 17.5 DIA (HIGH SPEED)(PRIOR S/N HR87101)
	71406332	1	SHEAVE, CHOPPER,17.5 D (EFF.S/N HR87101)
	339376X1	6	LOCKWASHER, M10
	3009495X1	6	CAPSCREW, M10-1.5 X 40 CL8.8
2	70921324	6	CAPSCREW, 3/8-16 X 3-3/4 (PRIOR HR87101)
3	71388712	1	BELT, SECONDARY DRIVE(PRIOR S/N HR87101)
	71406339	1	BELT, SECONDARY DRIVE (EFF. S/N HR87101)
4	71387307	1	ARM ASY, W/ BUSHINGS
	1689170W1	2	BUSHING, 1 ID X 3/4 LG
5	70923104	1	WASHER, .656 X 2.125 X .180
6	2441490W1	1	SLEEVE, 41/64 X 63/64 X 3-1/16
7	70925705	1	CAPSCREW, 5/8-11 X 5 GR5
	70918432	1	WASHER, WIDE, 5/8
8	70918432	17	WASHER, WIDE, 5/8 (PRIOR S/N HR87101)
9	700703922	2	NUT, HEX FLANGE TOP LOCK, 5/8-11
10	31-2455700	2	IDLER, FLAT, 8 3/4 OD
11	70925702	2	CAPSCREW, 5/8-11 X 3-1/2 GR5
12	70914465	1	LUBE FITTING, 1/8-27 PTF SPL. EXTR SHORT
13	2630100W2	1	CHAIN ASY, CHOPPER SPRING
	70925094	1	TIE, NYLON LOCKING, .184 X 7.3
14	101276M2	1	SPRING
15	112942W1	1	TETHER STRAP, 28IN.
16	71387845	1	BRACKET, SHIELD SUPPORT
	70921210	2	CAPSCREW, 3/8-16 X 1
	70916965	2	LOCKWASHER, 3/8
17	71388256	1	BRACKET, SHIELD SUPPORT
	70921210	2	CAPSCREW, 3/8-16 X 1
	Y704734	2	NUT, HEX FLNG TOP LOCK, 3/8-16
18	71387848	1	STAND WLMT, IDLER (PRIOR S/N HR87101) (SERVICE W/ 71406368)
	71406368	1	STAND WLMT, IDLER (EFF. S/N HR87101) (REQUIRES 71406364 STOP WLMT IT. 20)
	70921969	2	CAPSCREW, 3/8-16 X 1-1/2
	70921210	2	CAPSCREW, 3/8-16 X 1
	70917378	1	WASHER, WIDE 3/8
	Y704734	4	NUT, HEX FLANGE TOP LOCK, 3/8-16
19	103316M1	1	PULLEY (PRIOR S/N HR87101)
20	101411M91	1	STOP WLMT, IDLER (PRIOR S/N HR87101)
	70921210	2	CAPSCREW, 3/8-16 X 1
	353771X1	2	WASHER, HEAVY HARD 3/8
	70916965	2	LOCKWASHER, 3/8
	71406364	1	STOP WLMT, IDLER (EFF. S/N HR87101)
	70923114	2	CAPSCREW, 1/2-13 X 1 GR5
	Y705046	2	LOCKWASHER, 1/2
	705541	2	WASHER, HARD, 1/2
21	700705088	4	SCREW, PHILLIPS HD MACH, 10-24 X 3/4
	3725830M1	4	LOCKNUT, HEX SERR FLANGE, 10-24
22	71388736	1	SHIELD ASSEMBLY

CONTINUED

STRAW CHOPPER DRIVE

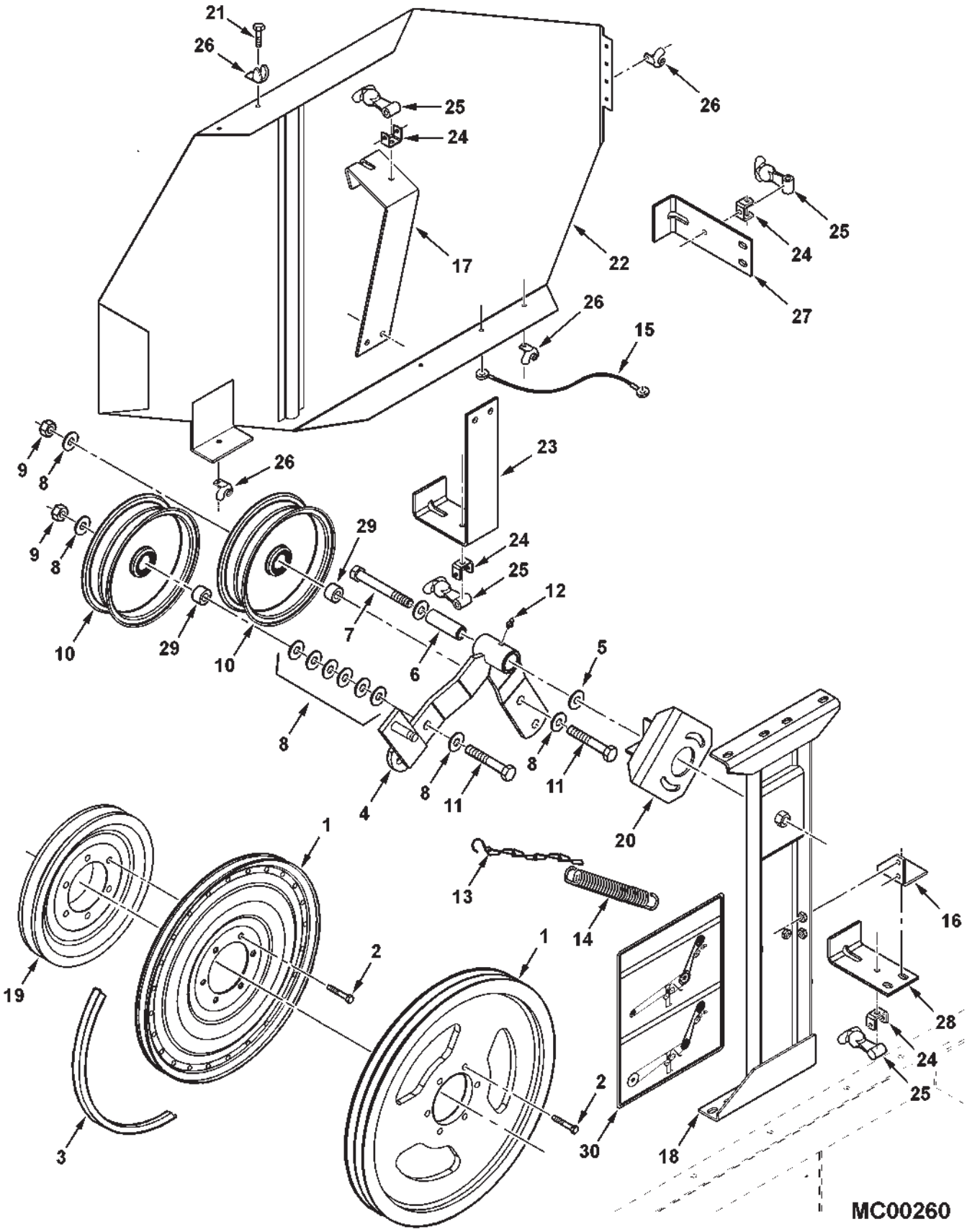

ITEM	NUMBER	QTY	DESCRIPTION
23	101069M1	2	BRACKET
	70921210	2	CAPSCREW, 3/8-16 X 1
	Y704734	2	NUT, HEX FLANGE TOP LOCK, 3/8-16
24	1787520W1	4	BRACKET, LATCH ANCHOR
	70921332	2	CAPSCREW, 5/16-18 X 3/4 GR5
	Y704726	2	NUT, HEX FLANGE TOP LOCK, 5/16-18
25	776682	4	LATCH, RUBBER
	Y703140	4	CAPSCREW, 1/4-20 X 1-3/4
	1703354	4	NUT, HEX FLANGE TOP LOCK, 1/4-20
26	8722910	4	CATCH, SHIELD
27	101065M1	1	BRACKET, SUPPORT
	70921210	2	CAPSCREW, 3/8-16 X 1
	Y704734	2	NUT, HEX FLANGE TOP LOCK, 3/8-16
28	101066M1	1	BRACKET, SUPPORT
	70921210	2	CAPSCREW, 3/8-16 X 1
	Y704734	2	NUT, HEX FLANGE TOP LOCK, 3/8-16
29	2451440W1	2	SPACER, IDLER (EFF. S/N HR87101)
30	71408765	1	DECAL, CHOPPER DRIVE (EFF. S/N HR87101)
-	71400065	1	KIT, STRAW CHOPPER, REDEKOP (FIELD INSTALLED)(PRIOR S/N HR87101)
-	71407158	1	KIT, STRAW CHOPPER, REDEKOP (FIELD INSTALLED)(EFF. S/N HR87101) (ORDER THRU DEALER CENTRAL)

MC00260
PR: 200

STRAW CHOPPER DRIVE KIT
HEAVY DUTY

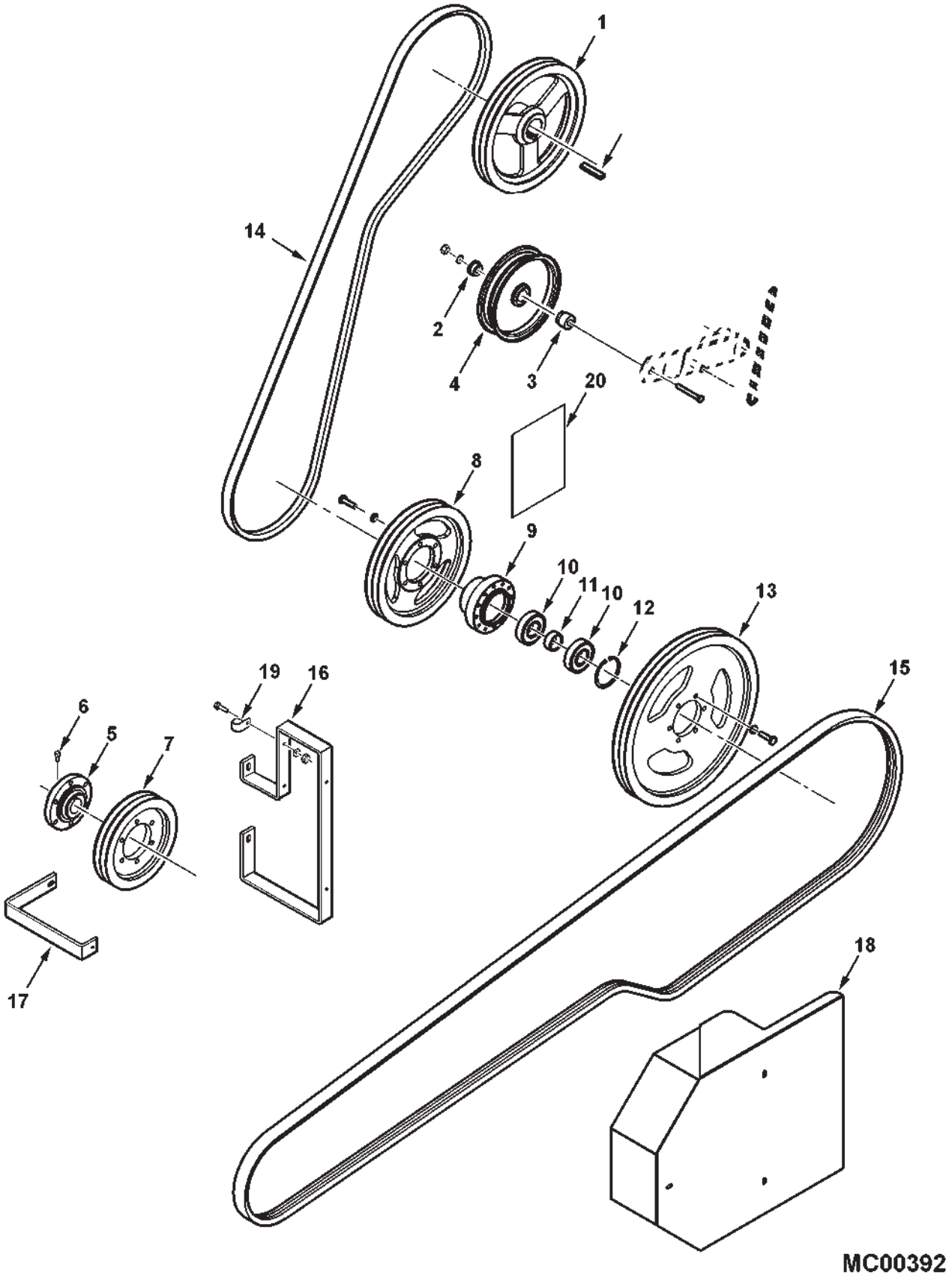

STRAW CHOPPER DRIVE KIT
HEAVY DUTY

ITEM	NUMBER	QTY	DESCRIPTION
-	700953657	AR	KIT, STRAW CHOPPER DRIVE (PRIOR S/N HR87101)
1	71406327	1	DRIVE SHEAVE, CHOPPER
2	71312602	1	SPACER, IDLER, .60 WIDE
3	71353127	1	SPACER, IDLER, 1.20 WIDE
4	71309767	1	IDLER, FLAT, 8 DIA
	70921671	1	CAPSCREW, 5/8-11 X 3-1/4 GR5
5	71406334	1	HUB, CHOPPER DRIVE
6	3009627X1	3	SETSCREW, SQ HD, M10-1.5 X 20
7	71406333	1	SHEAVE, CHOPPER, DRIVEN
	3001429X1	6	CAPSCREW, M10-1.5 X 35 CL8.8
	339376X1	6	LOCKWASHER, M10
8	71406328	1	SHEAVE, DRIVEN, JACKSHAFT
	3009495X1	6	CAPSCREW, M10-1.5 X 40 CL8.8
	339376X1	6	LOCKWASHER, M10
9	71406330	1	HUB, CHOPPER JACKSHAFT
10	354920X1	2	BEARING, BALL
11	2619180W1	1	SPACER, BEARING, JACKSHAFT
12	70925997	1	RING, RETAINING, INTERNAL
13	71406332	1	SHEAVE, DRIVE, JACKSHAFT
	3009495X1	6	CAPSCREW, M10-1.5 X 40 CL8.8
	339376X1	6	LOCKWASHER, M10
14	71406361	1	BELT, PRIMARY CHOPPER DRIVE
15	71406339	1	BELT, SECONDARY CHOPPER DRIVE
16	71409451	1	BRACKET, SHIELD, FRONT
17	71409452	1	BRACKET, SHIELD, REAR
18	71409453	1	SHIELD WLDMT, CHOPPER DR.
	7703457	3	CAPSCREW, 1/4-20 X 3/4 GR5
	70917377	3	WASHER, 1/4, WIDE
	705012	3	LOCKWASHER, 1/4 REG
19	700725918	2	J-CLIP, 5/16 TUBE X .281 HOLE
	7703457	2	CAPSCREW, 1/4-20 X 3/4 GR5
	70917377	2	WASHER, 1/4, WIDE
	705012	2	LOCKWASHER, 1/4 REG
20	71408765	1	DECAL, CHOPPER BELT DRIVE

MC00392
PR: t05e25l14b0001

STRAW CHOPPER HOUSING
REDEKOP

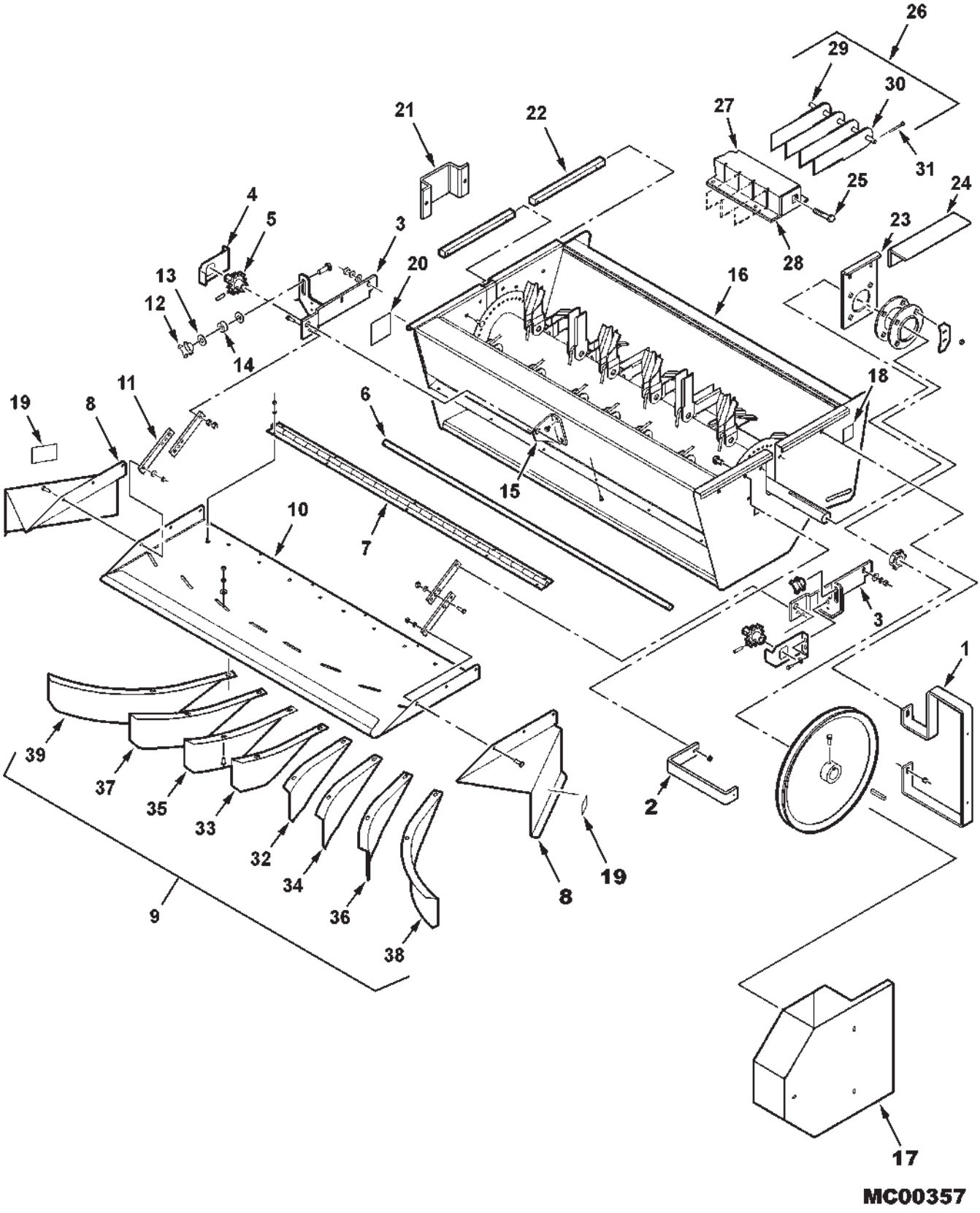

STRAW CHOPPER HOUSING
REDEKOP

ITEM	NUMBER	QTY	DESCRIPTION
1	116247W91	1	BRACKET, DRIVE SHIELD(PRIOR S/N HR87101)
	71409451	1	BRACKET, DRIVE SHIELD (EFF. S/N HR87101)
	70931350	2	BOLT, RD HD SQ NK, 3/8-16 X 1.0
	704247	2	LOCKNUT, HEX SERR FLANGE, 3/8-16
2	116246W91	1	BRACKET, DRIVE SHIELD(PRIOR S/N HR87101)
	71409452	1	BRACKET, DRIVE SHIELD (EFF. S/N HR87101)
	7700461	1	BOLT, RD HD SHT SQ NK, 5/16-18 X 1
	70931277	1	LOCKNUT, HEX SERR FLANGE, 5/16-18
3	71387842	1	BRACKET WELDMENT, CHOP/WINDROW (RH)
	71387846	1	BRACKET WELDMENT, CHOP/WINDROW (LH)
	70931350	4	BOLT, RD HD SQ NK, 3/8-16 X 1.0
	70917378	4	WASHER, FLAT 3/8
	705038	4	LOCKWASHER, 3/8
	70916950	4	HEXNUT, 3/8-16
4	71388967	2	SHIELD, SPROCKET
	7703457	4	CAPSCREW, 1/4-20 X 3/4
	700709601	4	WASHER, FLAT 1/4
	705012	4	LOCKWASHER, 1/4
	70916622	4	HEXNUT, 1/4-20
5	71386195	2	SPROCKET
	70922080	2	PIN, SPIROL, 5/16 X 1-3/8
6	71386199	1	SHAFT, CHOPPER/WINDROWER
7	71379210	1	HINGE, TAILPLATE
	70921958	12	CAPSCREW, 1/4-20 X 1/2
	705012	12	LOCKWASHER, 1/4
	70916622	12	HEXNUT, 1/4-20
8	71383736	1	EXTENSION, TAILPLATE (RH)
	71383737	1	EXTENSION, TAILPLATE (LH)
	70921332	4	CAPSCREW, 5/16-18 X 3/4
	70921333	2	CAPSCREW, 5/16-18 X 1.0
	Y705020	6	LOCKWASHER, 5/16
	70917372	6	HEXNUT, 5/16-18
9	71393439	1	KIT, DEFLECTOR (8 DEFLECTORS)
			(INCLUDES ITEMS 32-39)
	7700461	16	BOLT, RD HD SHT SQ NK, 5/16-18 X 1.0
	700709602	8	WASHER, 5/16 WIDE
	Y705020	16	LOCKWASHER, 5/16
	70917372	16	HEXNUT, 5/16-18
10	71379211	1	TAILPLATE
11	71378250	4	STRAP, TAILPLATE
	70921333	4	CAPSCREW, 5/16-18 X 1.0
	Y705020	4	LOCKWASHER, 5/16
	70917372	4	HEXNUT, 5/16-18
12	71379249	2	KNOB
	768226	2	BOLT, RD HD SQ NK, 1/2-13 X 1-3/4
13	70918431	4	WASHER, PLAIN WIDE 1/2
14	D49080090	2	WASHER, RUBBER
15	71387351	1	BRACKET, CHOP/WINDROW
	70924856	2	SCREW, HX WSH HD TAP'G 5/16-18 X 1/2

CONTINUED

STRAW CHOPPER HOUSING
REDEKOP

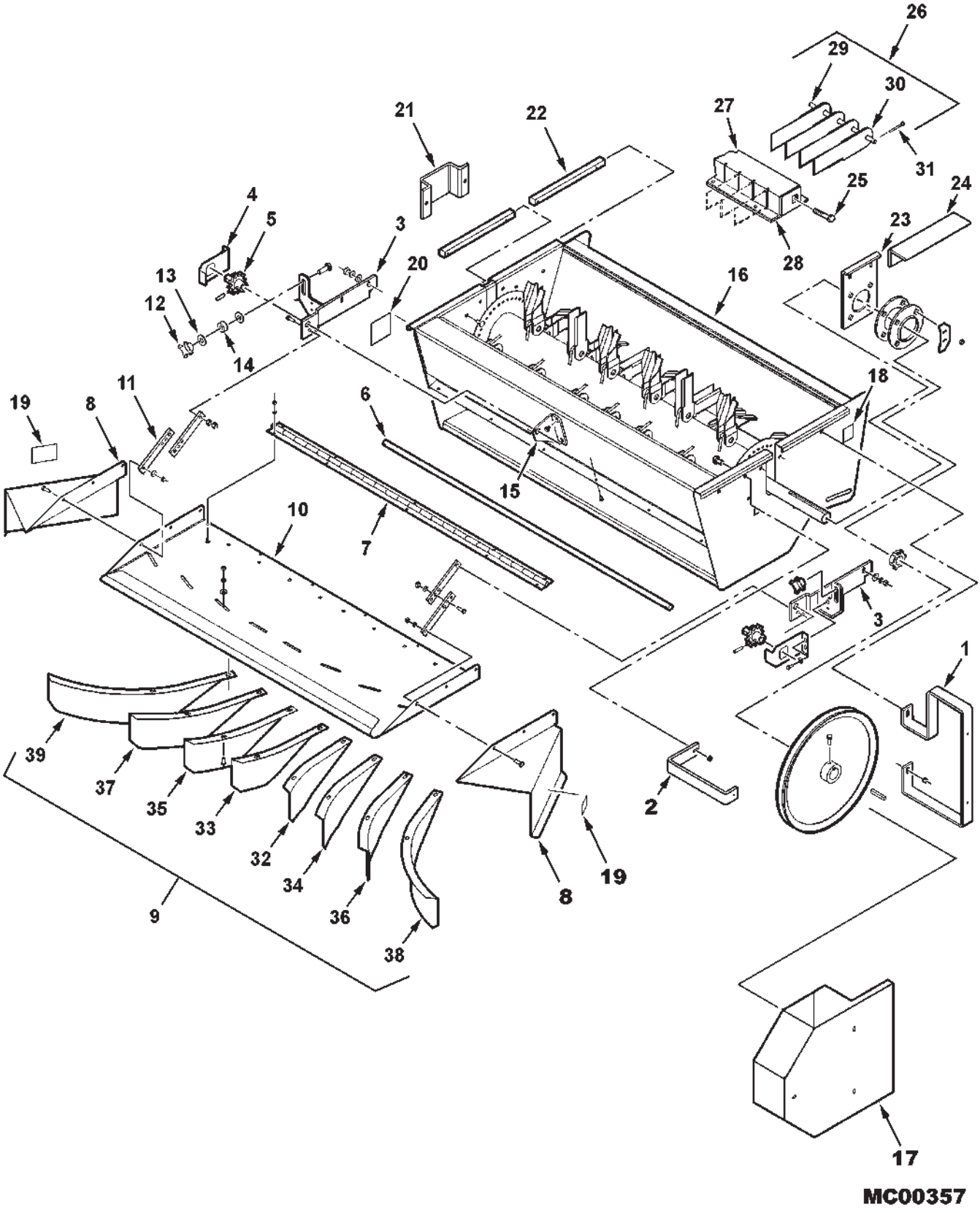

STRAW CHOPPER HOUSING
REDEKOP

ITEM	NUMBER	QTY	DESCRIPTION
16	71395239	1	CHOPPER HSG.& ROTOR ASY(INCL. ITS 21-31) (PRIOR S/N HR87101)
	71409828	1	CHOPPER HSG.& ROTOR ASY(INCL. ITS 21-31) (EFF. S/N HR87101)
	71395244	1	HOUSING WLMT, CHOPPER(PRIOR S/N HR87101)
	71409830	1	HOUSING WLMT, CHOPPER (EFF. S/N HR87101)
17	103342W91	1	SHIELD WLMT (PRIOR S/N HR87101)
	71409453	1	SHIELD WLMT (EFF. S/N HR87101)
	7703457	3	CAPSCREW, 1/4-20 X 3/4
	705012	3	LOCKWASHER, 1/4
	700709601	3	WASHER, 1/4, WIDE
18	111091W1	1	LABEL, DANGER
19	111737W1	2	LABEL, WARNING
20	105177W1	1	LABEL, CHOPPER KNIVES
21	116250W1	1	BRACKET, SHAFT COVER
	7700461	2	BOLT, RD HD SHT SQ NK, 5/16-18 X 3/4
	70931277	2	LOCKNUT, HEX SERR FLANGE, 5/16-18
	PZND1041V	2	OR, BOLT, RD HD SQ NK, M8-1.25 X 20
	3019124X1	2	NUT, HEX FLANGE, M8-1.25
22	116249W1	4	RUNNER, RAIL
	70937280	8	SCREW, PAN HD TAPPING, #8-32 X 3/4
	70937550	8	OR, SCREW, PAN HD TAPPING, #8-18 X 3/4
23	116248W91	2	PLATE, BEARING MOUNT
	7770282	4	BOLT, RD HD SHT SQ NK 5/16-18 X 1/2
	70931277	4	LOCKNUT, HX FLNG SERR, 5/16-18
24	71397989	1	BRACKET, CHOPPER (PRIOR S/N HR87101)
	7770456	2	BOLT, RD HD SHT SQ NK, 3/8-16 X 3/4
	704247	2	LOCKNUT, HEX SERR FLANGE, 3/8-16
	390809X1	2	OR, BOLT, RD HD SQ NK, M10-1.5 X 20
	3019125X1	2	NUT, HEX FLANGE, M10-1.5
25	68619	2	BOLT, RD HD SQ NK, 1/2-13 X 1-1/4 (PRIOR S/N HR87101)
	Y705046	2	LOCKWASHER, 1/2
	Y705624	2	WASHER, 1/2 NARROW
	704031	2	HEXNUT, 1/2-13
	385391X1	2	BOLT, RD HD SQ NK, M12-1.75 X 35 (EFF. S/N HR87101)
	3009695X1	2	NUT, HEX FLANGE, M12-1.75
	391212X1	2	WASHER, M12
26	71389455	1	KNIFE BAR ASY, CHOPPER (INCL. 27-31)
27	71389456	1	SUPPORT WLDMT, KNIFE
28	71389457	1	SUPPORT PLATE ASY, KNIFE BAR
	70930594	16	SCREW, HEX FLNG SERR, 1/4-20 X 3/4
	70931209	16	LOCKNUT, HEX SERR FLANGE, 1/4-20
29	71389458	1	ROD, KNIFE BAR
30	71382269	25	KNIFE, STATIONARY
31	70918447	2	COTTER PIN, 3/32 X 3/4
32	71406951	1	DEFLECTOR, RH #1
33	71406952	1	DEFLECTOR, LH #1
34	71406953	1	DEFLECTOR, RH #2
35	71406954	1	DEFLECTOR, LH #2
36	71406970	1	DEFLECTOR, RH #3
37	71406971	1	DEFLECTOR, LH #3
38	71406972	1	DEFLECTOR, RH #4
39	71406973	1	DEFLECTOR, LH #4

STRAW CHOPPER
ROTOR

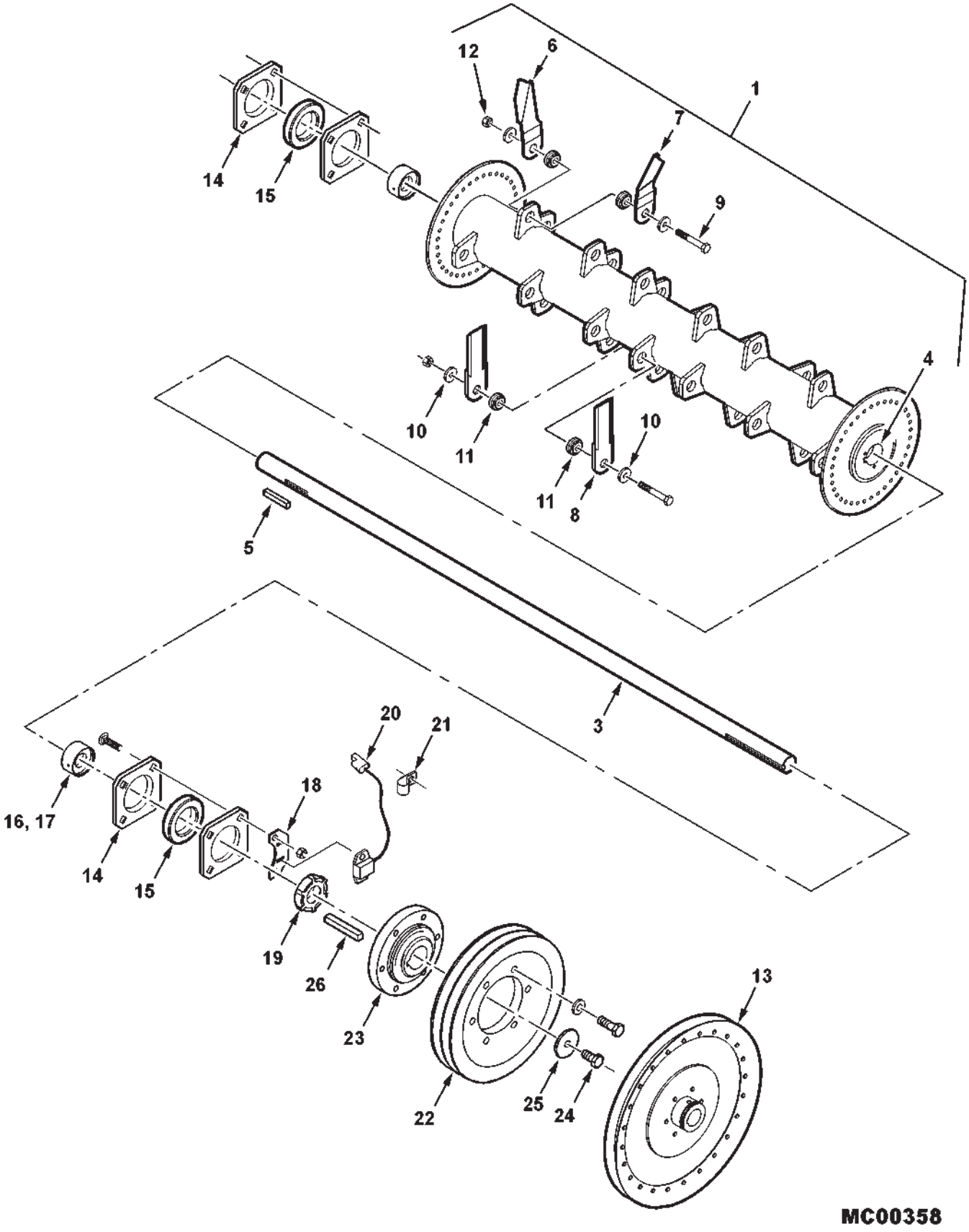

ITEM	NUMBER	QTY	DESCRIPTION
1	116876W91	1	ROTOR ASY, CHOPPER (INCL. IT 2-12) (PRIOR S/N HR87101)
	71409829	1	ROTOR ASY, CHOPPER (INCL. IT 6-12) (EFF. S/N HR87101)
2	-----	1	DRUM WLMT, ROTOR (ORDER ITEM 1)
3	116252W1	1	SHAFT,ROTOR, 60.5 IN.(PRIOR S/N HR87101) (NOT SUPERSEDED)
4	71383930	2	HUB, CHOPPER SHAFT (PRIOR S/N HR87101) (NOT SUPERSEDED)
5	49920X	1	KEY, 3/8 X 1/2 X 2 (PRIOR S/N HR87101) (NOT SUPERSEDED)
6	71382758	18	BLADE, PADDLE, LEFT
7	71382759	18	BLADE, PADDLE, RIGHT
8	71395250	16	BLADE, STRAIGHT
9	70932612	26	CAPSCREW, 3/8-16 X 2-1/2 GR8 (PRIOR S/N HR87101)
	3010842X1	26	CAPSCREW, M10-1.5 X 60 CL10.9 (EFF. S/N HR87101)
10	71382256	52	WASHER, HARD, CHOPPER BLADE
11	71382257	52	BUSHING, CHOPPER BLADE
12	70919439	26	NUT, NYLON LOCK, 3/8-16 (PRIOR S/N HR87101)
	3010442X1	26	NUT, HEX LOCK, M10-1.5 (EFF S/N HR87101)
13	116082W1	1	SHEAVE, DRIVEN (PRIOR S/N HR87101)
	2620190W1	1	KEY, SQUARE, 3/8 X 2.35 LG
	70923326	2	SETSCREW, SQ HD, 3/8-16 X 1
	70917421	2	JAM NUT, 3/8-16 UNC
14	17789	4	FLANGETTE, BEARING, 80MM
	70931809	6	BOLT, RD HD SQ NK, 1/2-13 X 1-1/4 (PRIOR S/N HR87101)
	70931810	2	BOLT, RD HD SQ NK, 1/2-13 X 1-3/4 (PRIOR S/N HR87101)
	Y705046	8	LOCKWASHER, 1/2
	704031	8	HEXNUT, 1/2-13
	385391X1	6	BOLT, RD HD SQ NK, M12-1.75 X 35 (EFF. S/N HR87101)
	3009340X1	2	BOLT, RD HD SQ NK, M12-1.75 X 45
	3009695X1	8	NUT, HEX FLANGE, M12-1.75
15	71122510	2	BEARING
16	116953W91	2	ANTI-WRAP WLDMT
17	70906852	2	SETSCREW, HEX SOCKET, 5/16-18 X 3/4
18	71315785	1	BRACKET, SENSOR
	70913744	2	JAM NUT, 1/2-13 UNC
19	71315780	1	COLLAR WLDMT, SENSING
20	71391021	1	SENSOR, 2 WIRE
	70931317	2	BOLT, RD HD SQ NK, 1/4-20 X 3/4
	705012	2	LOCKWASHER, 1/4
	70916622	2	NUT, 1/4-20 REG

CONTINUED

STRAW CHOPPER
ROTOR

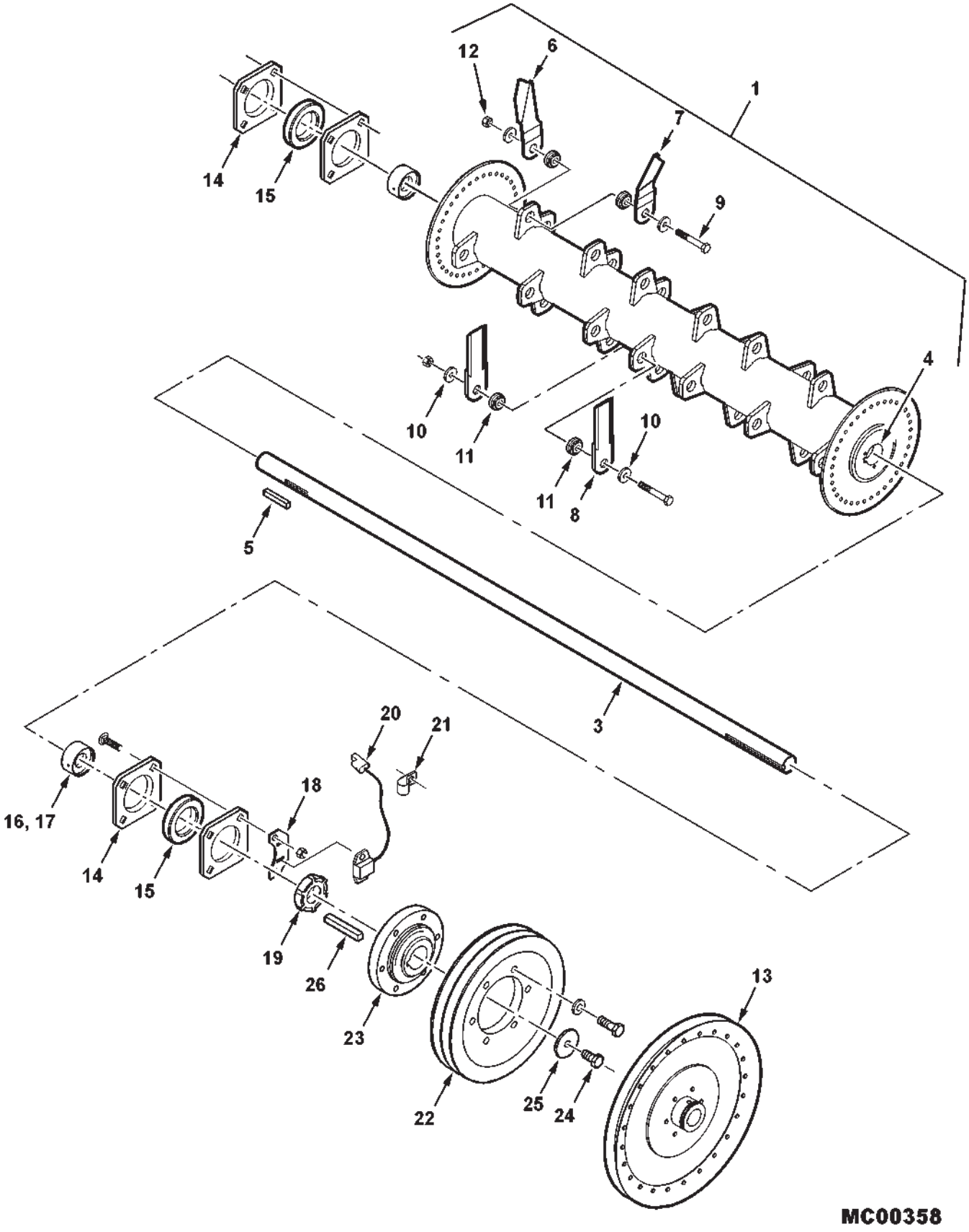

ITEM	NUMBER	QTY	DESCRIPTION
21	700725918	2	J-CLIP, OPEN, 5/16 X .281 HOLE
	7703457	2	CAPSCREW, 1/4-20 X 3/4
	705012	2	LOCKWASHER, 1/4
	70917377	2	WASHER, 1/4 WIDE
22	71406333	1	SHEAVE, CHOPPER,9.4 DIA(EFF S/N HR87101)
	339376X1	6	LOCKWASHER, 10M
	3001429X1	6	CAPSCREW, M10-1.5 X 35 CL8.8
23	71408762	1	HUB, CHOPPER SHEAVE (EFF. S/N HR87101)
	3009627X1	2	SETSCREW, SQ HD, M10-1.5 X 20
24	700708349	1	CAPSCREW, M10-1.5 X 25 CL8.8
25	339768X1	1	WASHER, 11 X 45 X 3.5 THK (METRIC)
26	61234	1	KEY, SQ, 3/8 X 2-3/4 LG
-	71383932	--	KIT, PADDLE BLADE (INCL. 4 PDLS & HDWR)
			(INCL. ITEMS 6,7,9,10,11,12)
-	71383934	--	KIT, STRAIGHT BLADE(INCL. 4 BLDS & HDWR)
			(INCL. ITEMS 8-12)

MC00358
PR: 206

STRAW CHOPPER HOOD & SUPPORTS

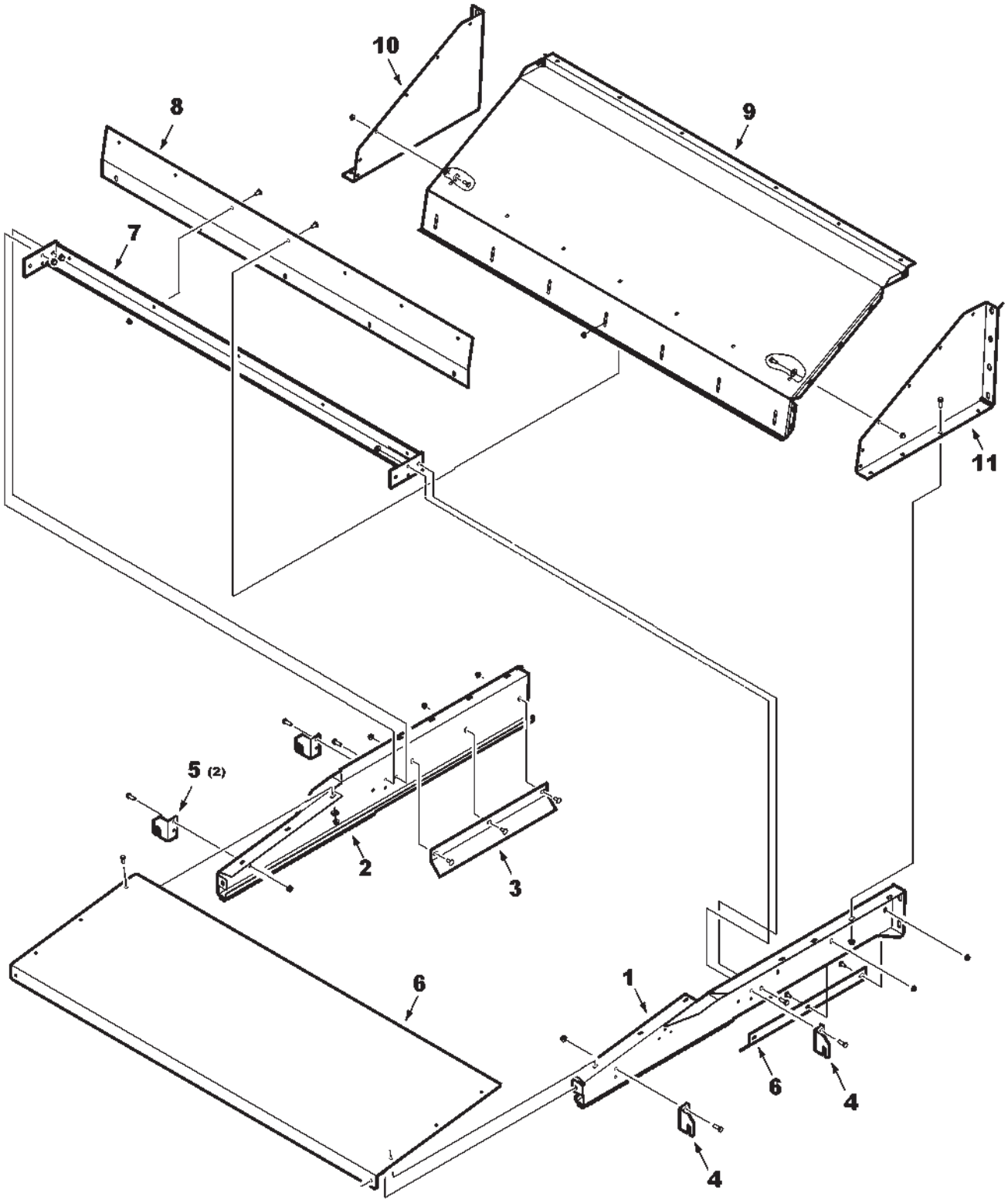

MC00261

STRAW CHOPPER HOOD & SUPPORTS

ITEM	NUMBER	QTY	DESCRIPTION
1	71387357	1	RAIL ASY, SIDE (RH)
2	71387355	1	RAIL ASY, SIDE (LH)
	70923114	4	CAPSCREW, 1/2-13 X 1 GR5
	Y704742	4	NUT, HEX FLNG TOP LOCK, 1/2-13
3	104035W1	2	DEFLECTOR
4	71379261	2	PLATE, STOP (RH)
	70921210	4	CAPSCREW, 3/8-16 X 1 GR5
	Y704734	4	NUT, HEX FLNG TOP LOCK, 3/8-16
5	71379260	2	PLATE, STOP (LH)
	70921210	4	CAPSCREW, 3/8-16 X 1
	Y704734	4	NUT, HEX FLNG TOP LOCK, 3/8-16
6	71386200	1	PANEL, REAR
	70921332	8	CAPSCREW, HEX, 5/16-18 X 3/4
	Y704726	8	NUT, HEX FLNG TOP LOCK, 5/16-18
7	71383499	1	ANGLE ASSEMBLY
	70921210	8	CAPSCREW, 3/8-16 X 1
	Y704734	8	NUT, HEX FLNG TOP LOCK, 3/8-16
8	104037W1	1	PANEL, COVER
	70921332	12	CAPSCREW, HEX, 5/16-18 X 3/4
	70917642	5	WASHER, 5/16
	Y704726	12	NUT, HEX FLNG TOP LOCK, 5/16-18
9	71387680	1	HOOD, TOP
	70921210	6	CAPSCREW HEX HEAD, 3/8-16 X 1
	Y704734	6	NUT, HEX FLNG TOP LOCK, 3/8-16 (PRIOR S/N HN87101)
	70916965	6	LOCKWASHER, 3/8 (EFF S/N HN87101)
10	103339W1	1	HOOD, SIDE, (LH)
	70921332	6	CAPSCREW, HEX, 5/16-18 X 3/4
	70917642	6	WASHER, 5/16
	Y704726	6	NUT, HEX FLNG TOP LOCK, 5/16-18
	70921210	4	CAPSCREW, 3/8-16 X 1
	Y704734	4	NUT, HEX FLNG TOP LOCK, 3/8-16
	70923114	3	CAPSCREW, 1/2-13 X 1 GR5
	70921176	1	CAPSCREW, 1/2-13 X 1-1/4 GR5
	Y704742	4	NUT, HEX FLNG TOP LOCK, 1/2-13
11	103338W1	1	HOOD, SIDE, (RH)
	70921332	6	CAPSCREW, HEX, 5/16-18 X 3/4
	70917642	6	WASHER, 5/16
	Y704726	6	NUT, HEX FLNG TOP LOCK, 5/16-18
	70921210	4	CAPSCREW, 3/8-16 X 1
	Y704734	4	NUT, HEX FLNG TOP LOCK, 3/8-16
	70923114	4	CAPSCREW, 1/2-13 X 1 GR5
	Y704742	4	NUT, HEX FLNG TOP LOCK, 1/2-13

MC00261
PR: 208

STRAW SPREADER
DRIVE

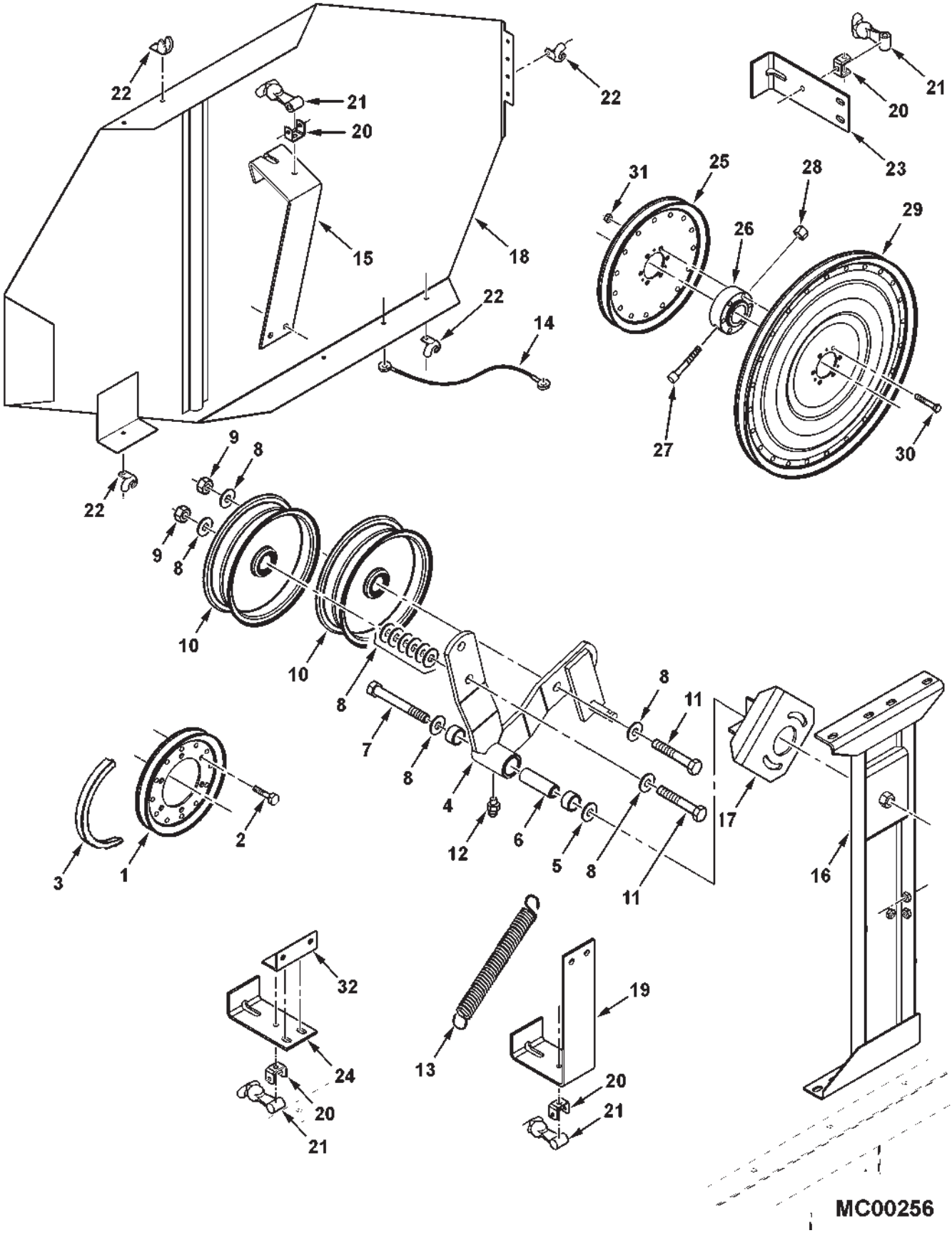

ITEM	NUMBER	QTY	DESCRIPTION
1	2628321W92	1	PULLEY, DRIVE
2	70923701	6	CAPSCREW, 3/8-16 X 2 GR5
	70916965	6	LOCKWASHER, 3/8
	70916950	6	NUT, 3/8-16, REG
3	1680230W1	1	BELT-SECONDARY DRIVE
4	71387307	1	ARM ASY, IDLER, W/ BUSHINGS
	1689170W1	2	BUSHING, 1 ID X 3/4 LG
5	70937480	1	WASHER, HARD, .66 X 2.25 X .165 TH
6	2441490W1	1	SLEEVE, 41/64 X 63/64 X 3-1/16
7	70925705	1	CAPSCREW, 5/8-11 X 5 GR5
8	70918432	17	WASHER, WIDE, 5/8
9	700703922	2	NUT, HEX FLANGE TOP LOCK, 5/8-11
10	31-2455700	2	IDLER, FLAT, 8-3/4 OD
11	70925702	2	CAPSCREW, 5/8-11 X 3-1/2 GR5
12	70914465	1	LUBE FITTING, 1/8-27 PTF, SPL EXTR SHORT
13	1579720W1	1	SPRING
14	112942W1	1	TETHER STRAP
15	71388256	1	BRACKET, SHIELD SUPPORT
16	71387848	1	STAND WLMT, IDLER (PRIOR S/N HR87101)
			(SERVICE W/ 71406368)
	71406368	1	STAND WLMT, IDLER (EFF. S/N HR87101)
			(REQUIRES 71406364 STOP WLMT,IT. 17)
	70921210	2	CAPSCREW, 3/8-16 X 1 GR5
	70921969	2	CAPSCREW, 3/8-16 X 1-1/2
	70917378	1	WASHER, 3/8, WIDE
	Y704734	4	NUT, HEX FLANGE TOP LOCK, 3/8-16
17	101411M91	1	STOP WLMT, IDLER (PRIOR S/N HR87101)
	70921210	2	CAPSCREW, 3/8-16 X 1 GR5
	70916965	2	LOCKWASHER, 3/8
	353771X1	2	WASHER, HEAVY HARD, 3/8
	71406364	1	STOP WLMT, IDLER (EFF. S/N HR87101)
	70923114	2	CAPSCREW, 1/2-13 X 1 GR5
	Y705046	2	LOCKWASHER, 1/2
	705541	2	WASHER, HARD, 1/2
18	71388736	1	SHIELD ASSEMBLY
19	101069M1	1	BRACKET
	70921210	2	CAPSCREW, 3/8-16 X 1 GR5
	Y704734	2	NUT, HEX FLANGE TOP LOCK, 3/8-16
20	1787520W1	4	BRACKET, LATCH ANCHOR
	70921332	4	CAPSCREW, 5/16-18 X 3/4 GR5
	Y704726	4	NUT, HEX FLANGE TOP LOCK, 5/16-18

CONTINUED

STRAW SPREADER
DRIVE

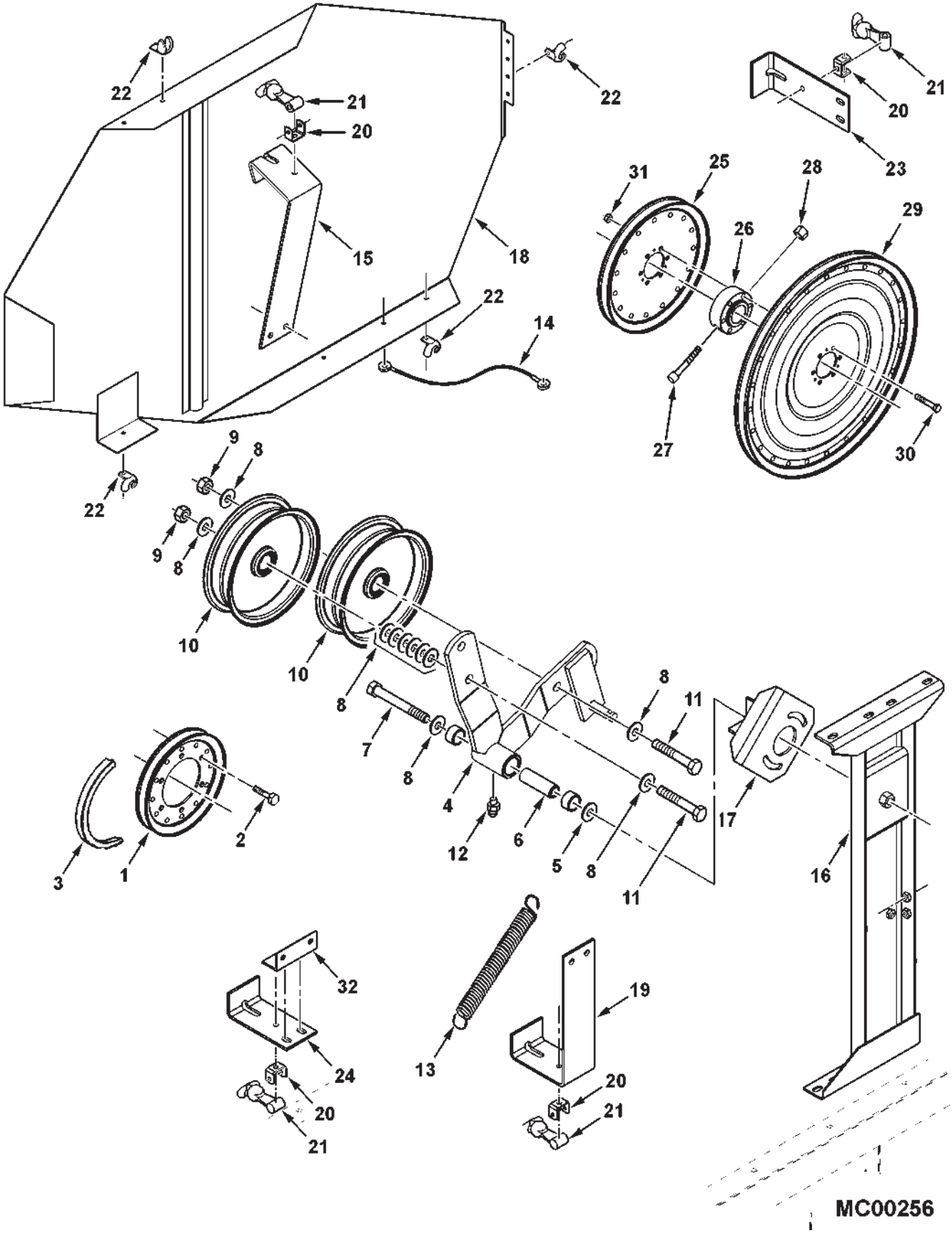

ITEM	NUMBER	QTY	DESCRIPTION
21	776682	4	LATCH, RUBBER
	70921962	4	CAPSCREW, 1/4-20 X 1-3/4 GR5
	1703354	4	NUT, HEX FLANGE TOP LOCK, 1/4-20
22	8722910	4	CATCH, SHIELD
	700705088	4	SCREW, PHILLIPS HD MACH, #10-24UNC X 3/4
	3725830M1	4	LOCKNUT, HEX SERR FLANGE, #10-24UNC
23	101065M1	1	BRACKET, SHIELD SUPPORT
	70921210	2	CAPSCREW, 3/8-16 X 1 GR5
	Y704734	2	NUT, HEX FLANGE TOP LOCK, 3/8-16
24	101066M1	1	BRACKET, SHIELD SUPPORT
	70921210	2	CAPSCREW, 3/8-16 X 1 GR5
	Y704734	2	NUT, HEX FLANGE TOP LOCK, 3/8-16
25	2631400W1	1	SHEAVE, DRIVEN, 10.00 OD
26	2573610W1	1	HUB
27	702670	1	BOLT, HEX SCKT HD, 3/8-16 X 2-3/4
28	10163	1	NUT, HEX CENTER LOCK, 3/8-16
29	2573370W1	1	SHEAVE, 16.88 OD
30	70921978	6	CAPSCREW, 5/16-18 X 2 GR5
31	Y704726	6	NUT, HEX FLANGE TOP LOCK, 5/16-18
32	71388717	1	ANGLE, SHIELD SUPPORT
	70921210	2	CAPSCREW, 3/8-16 X 1 GR5
	70916965	2	LOCKWASHER, 3/8
-	71400063	1	KIT, STRAW SPRDR, COMPLETE (PRIOR S/N HR87101)(ORDER THRU DEALER CENTRAL)
-	71408182	1	KIT, STRAW SPRDR,(CONVERSION OF CHOPPER TO SPREADER)(EFF. S/N HR87101) (ORDER THRU DEALER CENTRAL)

MC00256
PR: 210

STRAW SPREADER
COMPONENTS

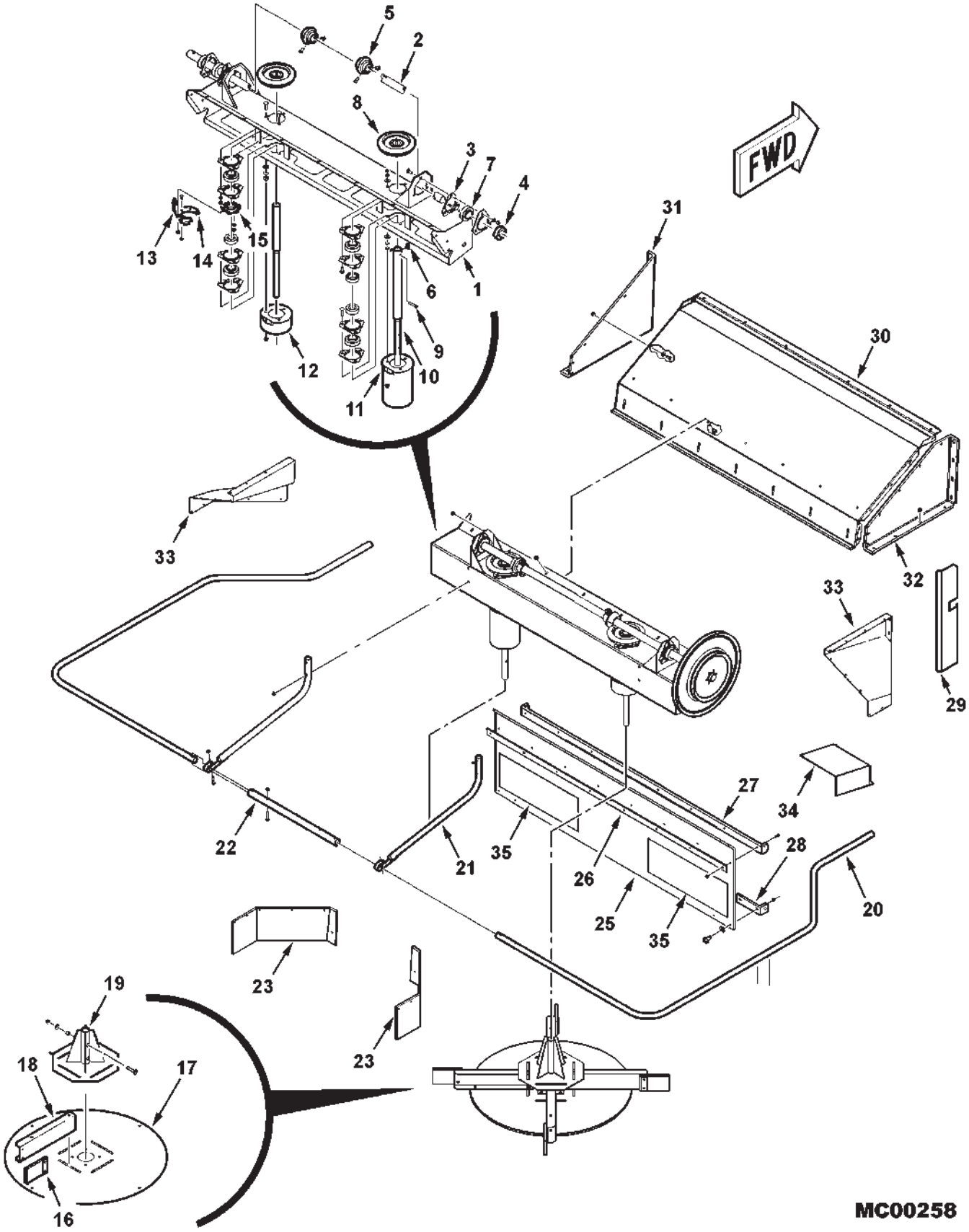

STRAW SPREADER
COMPONENTS

ITEM	NUMBER	QTY	DESCRIPTION
1	71395229	1	HOUSING
	70937294	1	GROMMET, RUBBER .312 X .750 X .156
	7700461	6	BOLT, RD HD SHT SQ NK, 5/16-18 X 3/4
	70921333	6	CAPSCREW, 5/16-18 X 1 GR5
	70917642	6	WASHER, 5/16 WIDE
	Y704726	12	NUT, HEX FLNG TOP LOCK, 5/16-18
2	71395232	1	SHAFT
3	71192243	12	FLANGE
	68759	10	BOLT, RHSSN, 3/8-16 X 1
	768036	8	BOLT, RHSSN, 3/8-16 X 1-1/2
	70916965	18	LOCKWASHER, 3/8
	70918266	9	WASHER, NARROW 3/8
	70916950	18	NUT, 3/8-16, REG
4	K4037	6	BEARING
5	71396226	2	GEAR, PINION 14T
	70920469	4	SETSCREW, SQ HD, 3/8-16 X 3/4
6	70905127	2	KEY, WOODRUFF, 5/16 X 1
7	K3999	5	COLLAR, LOCK
8	71393392	2	GEAR, DRIVEN, 35T
9	7771751	2	CAPSCREW, 5/16-18 X 3
	70923362	2	NUT, HEX CNTR LOCK, 5/16-18
10	71391576	1	SHAFT, SPREADER (LEFT)
	71391577	1	SHAFT, SPREADER (RIGHT)
11	71393389	1	CAN, ANTIWRAP (LEFT)
12	71393387	1	CAN, ANTIWRAP (RIGHT)
13	71391021	1	SENSOR, ASY 2 WIRE
14	71325553	1	BRACKET, MAGNETIC PICKUP
	70931317	2	BOLT, RD HD SHT SQ NK, 1/4-20 X 3/4
	70931209	2	LOCKNUT, HEX FLNG SERR, 1/4-20
	70931209	2	LOCKNUT, HEX FLNG SERR, 3/8-16
15	71393391	1	COLLAR, SENSING
16	71341450	8	PADDLE
	71341448	8	PLATE, BACKUP
	7700578	16	BOLT, RHSN, 5/16-18 X 1
	70923362	16	NUT, HEX CNTR LOCK, 5/16-18
17	71351200	2	DISK, LOWER
	70921965	8	CAPSCREW, 3/8-16 X 3/4
	70916965	8	LOCKWASHER, 3/8
	70916950	8	NUT, 3/8-16
18	71391579	8	BLADE
	7770456	16	BOLT, RHSSN, 3/8-16 X 3/4
	70917378	8	WASHER, 3/8, WIDE
	70916965	8	LOCKWASHER, 3/8
	70916950	8	NUT, 3/8-16

CONTINUED

STRAW SPREADER
COMPONENTS

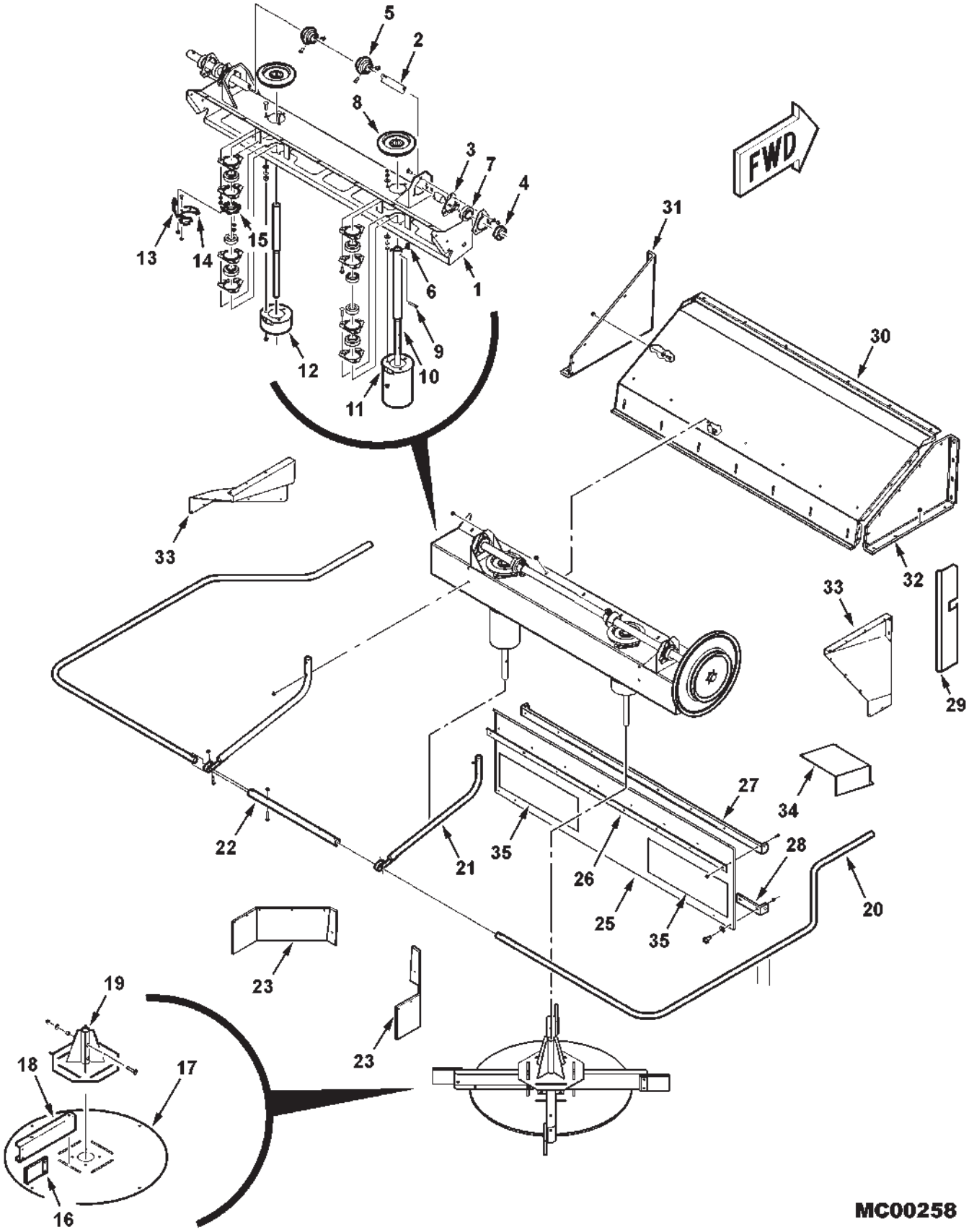

ITEM	NUMBER	QTY	DESCRIPTION
19	71407574	2	HUB
	7770456	8	BOLT, RHSSN, 3/8-16 X 3/4
	70917378	8	WASHER, WIDE 3/8
	70916965	8	LOCKWASHER, 3/8
	70916950	8	NUT, 3/8-16
	7701634	4	CAPSCREW, 3/8-16 X 2
	71345898	4	SPACER, HUB
	70917378	4	WASHER, 3/8
	Y704734	4	NUT, HEX FLANGE TOP LOCK, 3/8-16
20	2636890W1	2	PIPE, GUARD
	70922127	4	CAPSCREW, 5/16-18 X 1-3/4
	76695	8	WASHER, LARGE FENDER 5/16
	Y704726	4	NUT, HEX FLANGE TOP LOCK, 5/16-18
21	71391592	2	SUPPORT, GUARD
	70922127	6	CAPSCREW, 5/16-18 X 1-3/4
	Y704726	6	NUT, HEX FLANGE TOP LOCK, 5/16-18
22	1831580W1	1	TUBE, GUARD CONNECTOR
	70922127	4	CAPSCREW, 5/16-18 X 1-3/4
	Y704726	4	NUT, HEX FLANGE TOP LOCK, 5/16-18
23	71398421	2	CURTAIN, SIDE
	70921332	12	CAPSCREW, 5/16-18 X 3/4
	70917642	12	WASHER, 5/16
	Y704726	12	NUT, HEX FLANGE TOP LOCK, 5/16-18
25	71396227	1	CURTAIN, CTR
26	71396229	1	CURTAIN, ANGLE CTR
27	71396228	1	HANGER, CURTAIN CTR
	7703457	6	CAPSCREW, 1/4-20 X 3/4
	1703354	6	NUT, HEX FLANGE TOP LOCK, 1/4-20
	70921333	4	CAPSCREW, 5/16-18 X 1
	Y705608	8	WASHER, NARROW 5/16
	Y704726	4	NUT, HEX FLANGE TOP LOCK, 5/16-18
28	71395234	2	BRACKET, LOWER CURTAIN
	7703457	4	CAPSCREW, 1/4-20 X 3/4
	70917377	4	WASHER, WIDE 1/4
	1703354	4	NUT, HEX FLNG TOP LOCK, 1/4-20
	98-2107	2	PIN, COTTER .148
29	71398424	1	SHIELD, BELT
30	71387680	1	HOOD, TOP
	70921210	6	CAPSCREW, HEX HD, 3/8-16 X 1
	Y704734	6	NUT, HEX FLANGE TOP LOCK, 3/8-16 (PRIOR S/N HN87101)
	70916965	6	LOCKWASHER, 3/8 (EFF. S/N HN87101)

CONTINUED

STRAW SPREADER
COMPONENTS

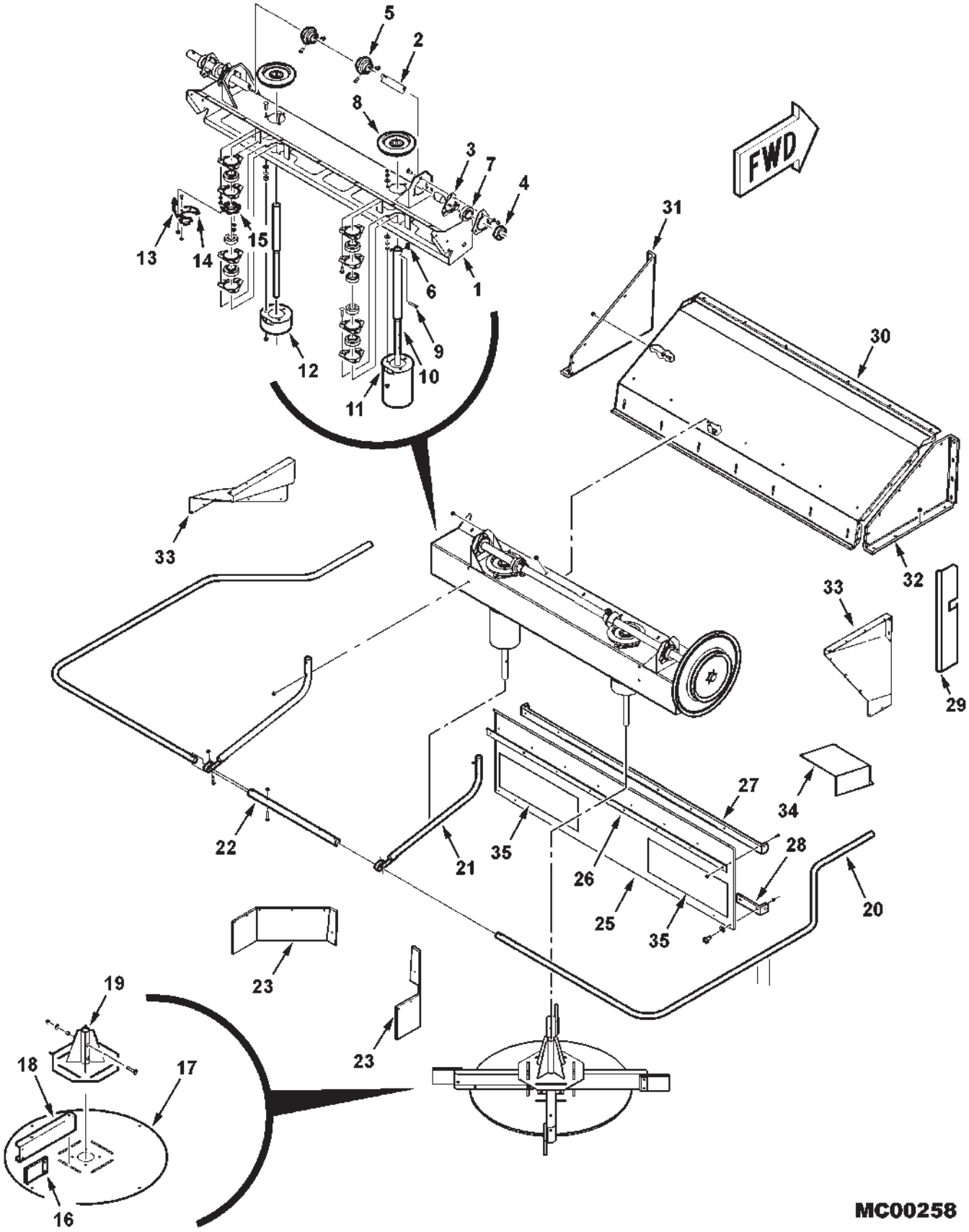

ITEM	NUMBER	QTY	DESCRIPTION
31	103339W1	1	HOOD SIDE, LEFT (REKORD)
	70921210	4	CAPSCREW, HEX, 3/8-16 X 1
	Y704734	4	NUT, HFTLN 3/8-16
	70921332	3	CAPSCREW 5/16-18 X 3/4
	70917642	3	WASHER, 5/16 WIDE
	Y704726	3	NUT, HEX FLNG TOP LOCK, 5/16-18
	70923114	3	CAPSCREW, 1/2-13 X 1 GR5
	70921176	1	CAPSCREW, 1/2-13 X 1-1/4 GR5
	Y704742	4	NUT, HEX FLNG TOP LOCK, 1/2-13
32	103338W1	1	HOOD SIDE, RIGHT (REKORD)
	70921210	4	CAPSCREW, HEX, 3/8-16 X 1
	Y704734	4	NUT, HFTLN 3/8-16
	70921332	3	CAPSCREW, 5/16-18 X 3/4
	70917642	3	WASHER, 5/16 WIDE
	Y704726	3	NUT, HEX FLNG TOP LOCK, 5/16-18
	70923114	4	CAPSCREW, 1/2-13 X 1 GR5
	Y704742	4	NUT, HEX FLNG TOP LOCK, 1/2-13
33	71397350	1	EXTENSION, CURTAIN (RH) (REVISED)
	71397349	1	EXTENSION, CURTAIN (LH) (REVISED)
	70921210	4	CAPSCREW, HEX, 3/8-16 X 1
	70917378	4	WASHER, WIDE PLAIN 3/8
	Y704734	4	NUT, HEX FLNG TOP LOCK, 3/8-16
34	71397348	1	SHIELD, SPREADER DRIVE SHEAVE
	70921210	3	CAPSCREW, HEX, 3/8-16 X 1
	Y704734	3	NUT, HEX FLNG TOP LOCK, 3/8-16
35	71409848	2	SHEET, WEAR (EFF. S/N HR87101)
	7703457	14	CAPSCREW, 1/4-20 X 3/4
	1703354	14	NUT, HEX FLANGE TOP LOCK, 1/4-20
-	2631700W1	1	LABEL, FAST (NOT ILL)
-	2631690W1	1	LABEL, SLOW (NOT ILL)

MC00258
PR: 214

CHAFF SPREADER
HYDRAULIC DRIVE

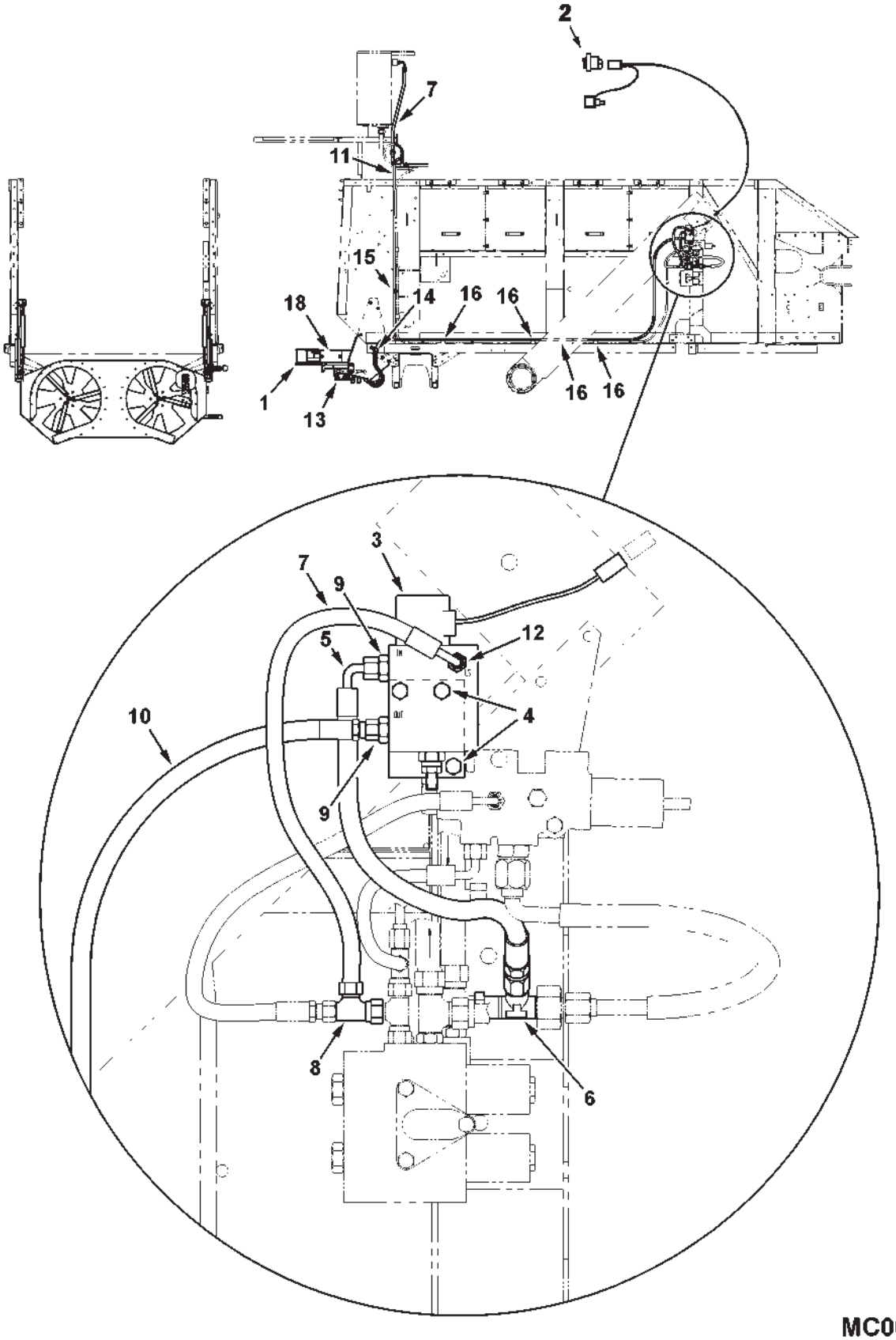

MC00263

CHAFF SPREADER
HYDRAULIC DRIVE

ITEM	NUMBER	QTY	DESCRIPTION
1	-----	1	CHAFF SPREADER ASSEMBLY (REKORD)
			(SERVICE WITH COMPONENTS)
2	71390101	1	SWITCH
3	71387798	1	VALVE, FLOW CONTROL (INCL. FOLLOWING)
	71389740	1	VALVE ASY., SOLENOID CARTRIDGE
	700726978	AR	SEAL KIT (FOR 71389740)
	71389741	1	COIL, 12V DC, W/DIODE
	71389742	1	VALVE CARTRIDGE, FLOW REGULATOR
	700724693	AR	SEAL KIT (FOR 71389742)
	71389743	1	CHECK VALVE
	700726979	AR	SEAL KIT (FOR 71389743)
	71397493	1	LOCK KIT, VALVE, W/ SCREW
4	71388098	1	PLATE, MOUNTING
	70921978	2	CAPSCREW, HEX 5/16-18 X 2
	70917372	2	NUT, HEX 5/16-18
	70917356	2	LOCKWASHER 5/16
5	71388099	1	HOSE ASSEMBLY, SUPPLY
6	70921298	1	TEE, SWIVEL RUN, 3/4-16 JIC
7	101590M1	1	HOSE ASSEMBLY
8	700701355	1	TEE, SWIVEL RUN
9	70922522	2	CONNECTOR, STR, 9/16-18 JIC X ORB
	70921885	2	O-RING, .078 X .468 ID
10	71388100	1	HOSE ASSEMBLY, PRESSURE
11	71388826	1	HOSE ASSEMBLY, RETURN
12	70923163	1	CONNECTOR, STR, 7/16-20 JIC X ORB
	70921883	1	O-RING, .072 X .351 ID
13	71388056	2	CONNECTOR, STRAIGHT
14	700717627	1	P-CLAMP, DOUBLE
	70921210	1	CAPSCREW, 3/8-16 X 1
	70916950	1	NUT, HEX 3/8-16
	70916965	1	LOCKWASHER, 3/8
15	70928656	1	P-CLAMP, 5/8 DIA X .406 HOLE
	70921210	1	CAPSCREW, 3/8-16 X 1
	70916950	1	NUT, HEX 3/8-16
	70916965	1	LOCKWASHER, 3/8
16	70937133	4	NYLON TIE, .30 X 15 LG
18	111737W1	3	LABEL, WARNING, CHOPPER
-	71400059	--	* CHAFF SPREADER, FIELD INST., COMPLETE
			*(ORDER THRU DEALER CENTRAL)

MC00263
PR: 218

CHAFF SPREADER
REKORD

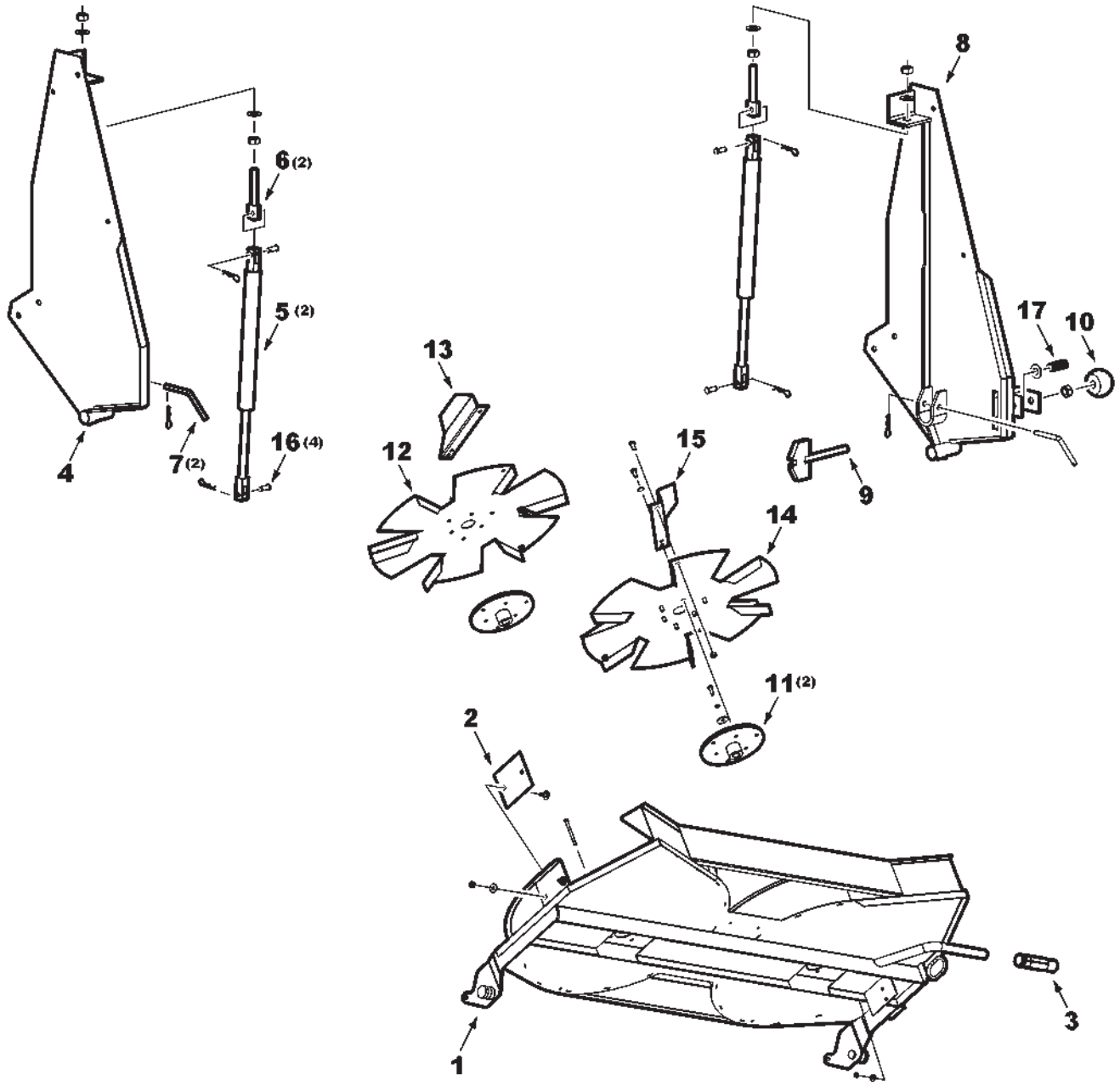

MC00262

CHAFF SPREADER
REKORD

ITEM	NUMBER	QTY	DESCRIPTION
1	71397173	1	HOUSING, SPREADER
2	71397380	2	WEAR PLATE
	71390252	4	CARRIAGE BOLT M8 X 16
	1440921X1	4	WASHER, PLAIN, M8 X 22
	3019124X1	4	LOCKNUT, M8
3	71389997	1	HANDLE, PLASTIC
4	71397394	1	SUPPORT PLATE WLMT, LH
	7772197	3	CAPSCREW, M8 X 25 LG
	1440921X1	6	WASHER, 8 MM
	3019124X1	3	LOCKNUT, M8
	700708349	2	CAPSCREW, M10 X 25 LG
	339025X1	4	WASHER, 10 MM
	1441932X1	2	LOCKNUT, M10
5	71390260	2	GAS STRUT
6	D49080047	2	YOKE, ADJUSTMENT
	339456X1	4	WASHER
	3009695X1	4	NUT, M12
7	71390259	2	PIN, BENT, SPECIAL
	70933339	2	RETAINER PIN, .094 X 1.62 LG
8	71397393	1	SUPPORT PLATE WLMT, RH
	7772197	3	CAPSCREW, M8 X 25 LG
	1440921X1	6	WASHER, 8 MM
	3019124X1	3	LOCKNUT, M8
	700708349	2	CAPSCREW, M10 X 25 LG
	339025X1	4	WASHER, 10 MM
	1441932X1	2	LOCKNUT, M10
9	71397391	1	LOCK
	391290X1	1	PIN, SPRING, 5 MM X 30 LG
	3009695X1	1	NUT, M12-1.75
	339456X1	1	WASHER, M12
10	71397390	1	KNOB
11	D49070008	2	HUB
	70950002	2	CAPSCREW, M6 X 20
	339375X1	2	LOCKWASHER
	391038X1	2	WASHER
12	71389066	1	DISC, LH
	3009920X1	6	CAPSCREW, M8 X 16
	353446X1	5	LOCKWASHER
	3019124X1	5	LOCKNUT, M8
13	71397378	3	BLADE, SPREADER LH
	3009920X1	3	CAPSCREW, M8 X 16
	3019124X1	3	LOCKNUT, M8
14	71389068	1	DISC, RH
	3009920X1	6	CAPSCREW, M8 X 16
	353446X1	5	LOCKWASHER
	3019124X1	5	LOCKNUT, M8
15	71397379	3	BLADE, SPREADER RH
	3009920X1	3	CAPSCREW, M8 X 16
	3019124X1	3	LOCKNUT, M8
16	70923093	4	PIN, CLEVIS, 5/16 X 15/16 LG
	70923086	4	RETAINER PIN, .072 X 1.09 LG
17	71397392	1	SPRING
-	71379811	2	DECAL, WARNING (NOT ILLUSTRATED)
-	D49100159	2	DECAL, STOP (NOT ILLUSTRATED)

MC00262
PR: 220

CHAFF SPREADER
REKORD, HYDRAULICS

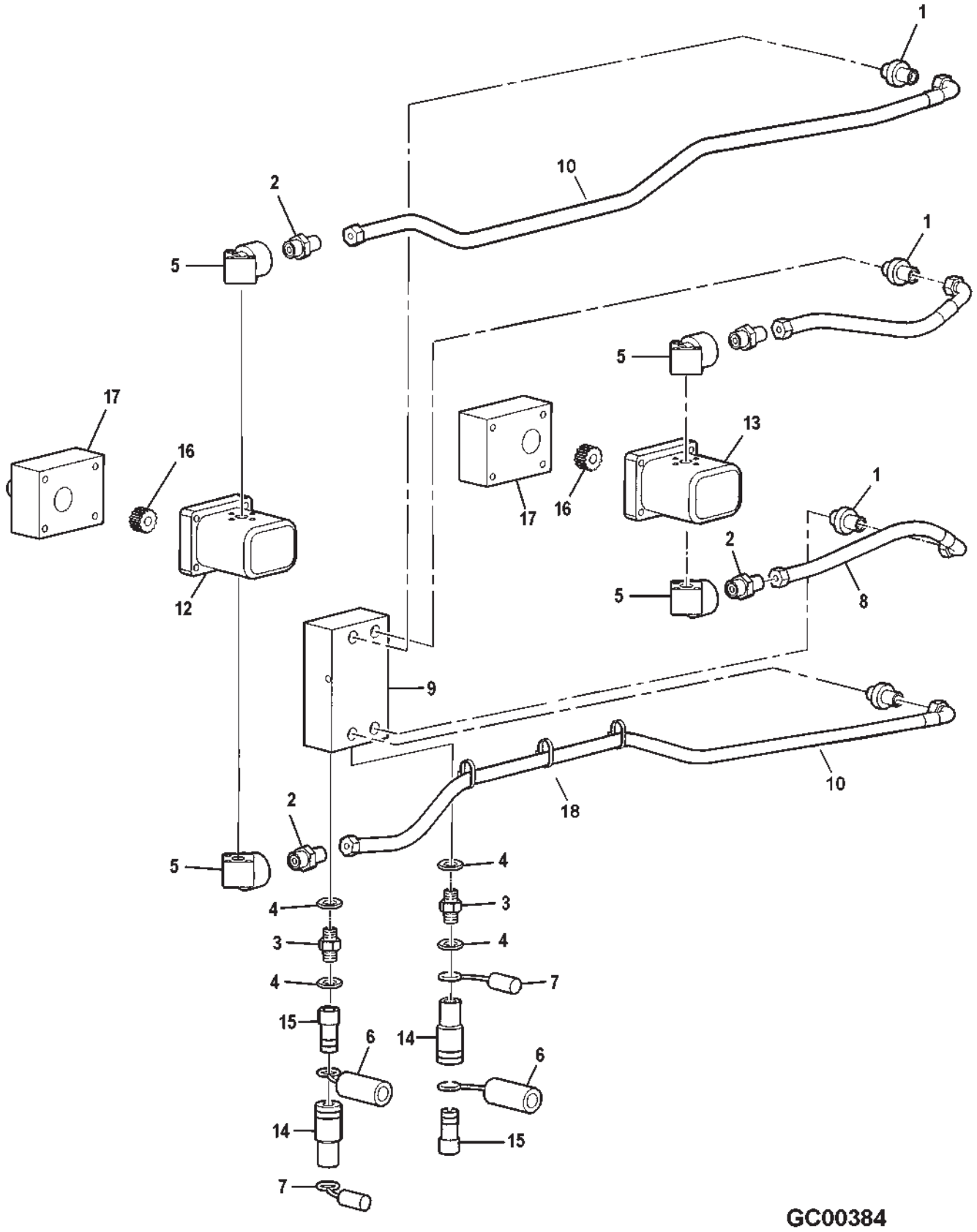

CHAFF SPREADER
REKORD, HYDRAULICS

ITEM	NUMBER	QTY	DESCRIPTION
1	71397381	4	ADAPTER
2	71397382	4	ADAPTER
3	71390265	2	COUPLER, FEM.
4	71390266	4	SEAL RING
5	71390272	4	ELBOW, 90 DEG FLANGE
6	71397383	2	DUST COVER
7	71397384	2	DUST COVER
8	71397385	2	HOSE ASY.
9	71390263	1	VALVE ASY.
	71390282	1	SEAL KIT (NOT SHOWN)
	71390280	1	BLOCK, VALVE (NOT SHOWN)
	71390281	1	DIVIDER, FLOW (NOT SHOWN)
	71390283	1	VALVE, CHECK (NOT SHOWN)
10	71397387	2	HOSE ASY.
12	71397388	1	MOTOR, HYDRAULIC, LH
	71390284	1	SEAL KIT (NOT SHOWN)
13	71397389	1	MOTOR, HYDRAULIC, RH
	71390284	1	SEAL KIT (NOT SHOWN)
14	71390267	2	COUPLING, QUICK DISCONNECT, FEM.
15	71390268	2	COUPLING, QUICK DISCONNECT, MALE
16	71390279	2	HUB, SPLINED
17	D49070025	2	BLOCK, SUPPORT
18	70925094	AR	TIE STRAP

GC00384
PR: 222

LOWER AUGER HOUSING AND FANNING MILL

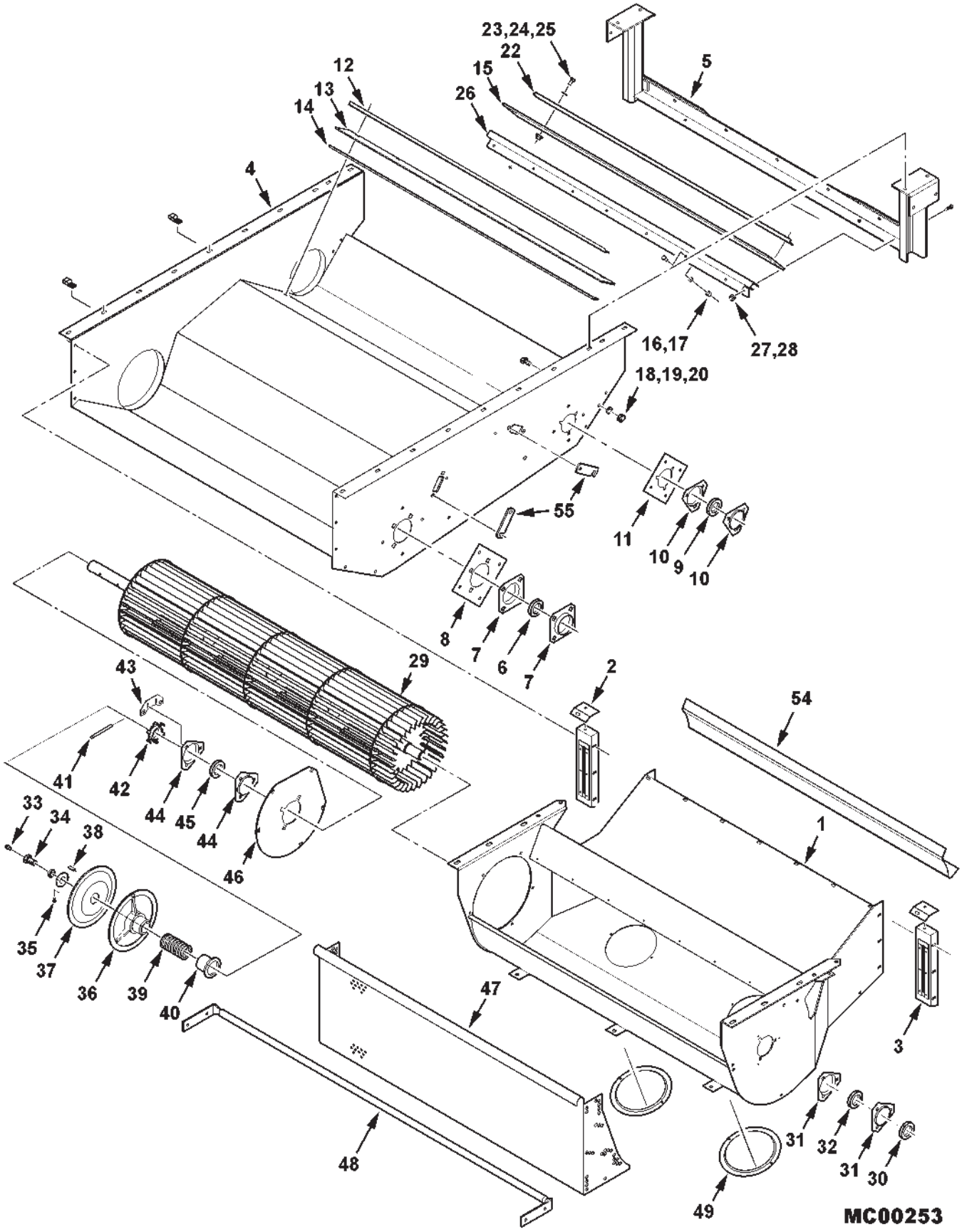

LOWER AUGER HOUSING AND FANNING MILL

ITEM	NUMBER	QTY	DESCRIPTION
1	71391327	1	HOUSING ASY., FAN (INCL. ITEM 54)
	71186166	3	RETAINER STRIP, CARR BOLT (NOT ILL.)
	70925160	3	POP-RIVET, 3/16 X .251-.375 GRIP
	701235	12	CAPSCREW, 1/2-13 X 1-1/2
	70918431	6	WASHER, FLAT, 1/2
	Y704742	12	NUT, HEX FLNG TOP LOCK, 1/2-13
	70921332	22	CAPSCREW, 5/16-18 X 3/4
	70917642	22	WASHER, FLAT, 5/16
	Y704726	22	NUT, HEX FLNG TOP LOCK, 5/16-18
2	2446920W1	1	PLATE, FILLER (RH)
	2446930W1	1	PLATE, FILLER (LH)
	70921332	2	CAPSCREW, 5/16-18 X 3/4
	70917642	2	WASHER, FLAT, 5/16
	Y704726	2	NUT, HEX FLNG TOP LOCK, 5/16-18
3	2446893W91	1	PANEL, FILLER (LH)
	2446903W91	1	PANEL, FILLER (RH)
4	71394970	1	HOUSING WLDMT, AUGER (PRIOR S/N HP87101)
	71403891	1	HOUSING WLDMT, AUGER (EFF. S/N HP87101)
	70927134	2	J-CLIP, 5/8 DIA X .406 HOLE
	70921969	20	CAPSCREW, 3/8-16 X 1-1/2
	Y704734	20	NUT, HEX FLNG TOP LOCK, 3/8-16
5	71395273	1	FRAME ASSY.
	70921210	4	CAPSCREW, 3/8-16 X 1.0
	70917378	4	WASHER, 3/8 WIDE
	Y704734	4	NUT, HEX FLNG TOP LOCK, 3/8-16
6	50468	1	BEARING, 1.50"
7	17789	2	FLANGE, BEARING
	68619	4	BOLT, RD HD SQ NECK, 1/2-13 X 1-1/4
	Y705046	4	LOCKWASHER, 1/2
	704031	4	HEXNUT, 1/2-13
8	2636000W1	1	PLATE (PRIOR S/N HP87101)(NOT USED EFF. S/N HP87101)
	70921965	4	CAPSCREW, 3/8-16 X 3/4
	Y704734	4	NUT, HEX FLNG TOP LOCK, 3/8-16
9	70590704	1	BEARING, 1.125" W/O COLLAR
10	71127313	2	FLANGE, BEARING
	68759	1	BOLT, RD HD SQ NECK, 3/8-16 X 1
	768036	2	BOLT, RD HD SQ NECK, 3/8-16 X 1-1/2
	70916965	3	LOCKWASHER, 3/8
	70916950	3	HEXNUT, 3/8-16
11	2636010W1	1	PLATE (PRIOR S/N HP87101)(NOT USED EFF. S/N HP87101)
	70921965	4	CAPSCREW, 3/8-16 X 3/4
	Y704734	4	NUT, HEX FLNG TOP LOCK, 3/8-16
12	2474140W1	1	ANGLE, SEAL CLAMPING (PRIOR S/N HP87101)
13	2474410W1	1	SEAL, REAR AUGER HSG.(PRIOR S/N HP87101)
14	2581690W1	1	RETAINER, SEAL (PRIOR S/N HP87101)
	70921333	7	CAPSCREW, HEX HD, 5/16-18 X 1
	70917642	7	WASHER, 5/16
	Y704726	7	NUT, HEX FLNG TOP LOCK, 5/16-18
15	71396453	1	SEAL, REAR AUGER HSG.
16	Y704734	7	NUT, HEX FLNG TOP LOCK, 3/8-16
17	70921965	7	CAPSCREW, 3/8-16 X 3/4
	70917378	7	WASHER, 3/8 WIDE

CONTINUED

LOWER AUGER HOUSING AND FANNING MILL

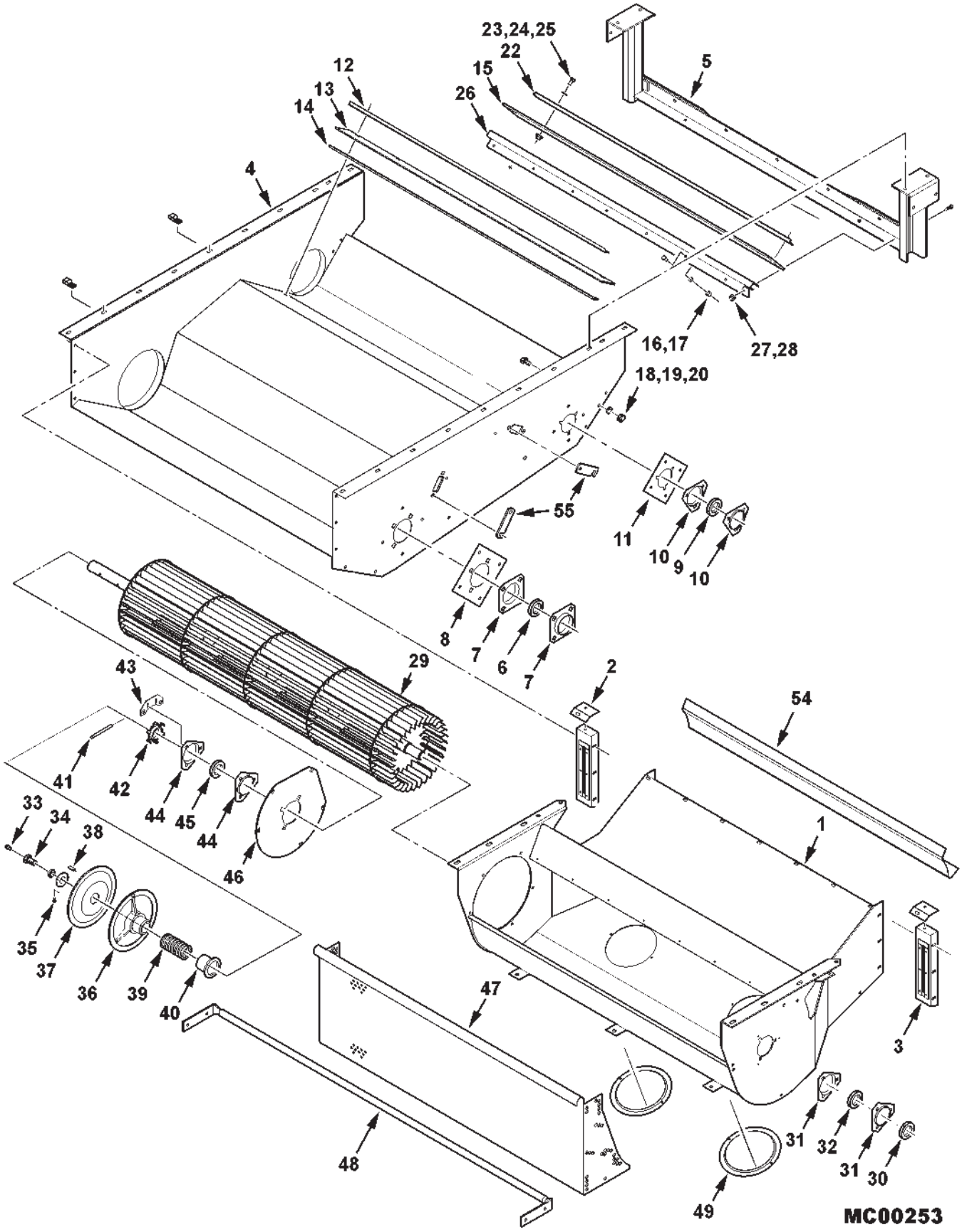

LOWER AUGER HOUSING AND FANNING MILL

ITEM	NUMBER	QTY	DESCRIPTION
18	70917372	4	NUT, 5/16-18 REG (PRIOR S/N HP87101)
19	70917356	4	LOCKWASHER, 5/16 (PRIOR S/N HP87101)
20	70921332	4	CPSCR, 5/16-18 X 3/4 (PRIOR S/N HP87101)
22	2474140W1	2	ANGLE, SEAL CLAMPING
23	70921332	7	CAPSCREW, 5/16-18 X 3/4
24	70917642	7	WASHER, 5/16 WIDE
25	Y704726	14	NUT, HEX FLNG TOP LOCK, 5/16-18
26	71395855	1	REINFORCEMENT
27	70921210	5	CAPSCREW, 3/8-16 X 1.0
28	Y704734	5	LOCKNUT, HEX FLNG 3/8-16
29	71391330	1	FAN ASY, SEPARATOR (INCL. ITEMS 50-53)
30	7710551	1	COLLAR, LOCK
31	71192243	2	FLANGE
	68759	3	BOLT, RD HD SH SQ NECK 3/8-16 X 1.0
	70916965	3	LOCKWASHER, 3/8
	70916950	3	HEXNUT, 3/8-16
32	71309117	1	BEARING, W/COLLAR, 1.250
33	70923219	1	FITTING, LUBE, 1/4-28 X 1/2
34	71395571	1	CAPSCREW, SPECIAL, 5/8-11 X 1-1/4
	70917373	1	LOCKWASHER, 5/8
	6555346	1	WASHER, 21/32
35	791319	1	PLUG, HX HD, 1/8-27
36	2442480W2	1	SHEAVE, OUTER
37	71395572	1	SHEAVE, INNER
38	71395573	1	KEY, 5/16 SQ. X 7-1/2
39	2440720W1	1	SPRING
40	71387375	1	BUSHING, FAN DRIVE
41	63834	1	PIN, SPIROL, 1/4 X 2-1/4
42	71315780	1	COLLAR, SENSING
43	71315785	1	BRACKET, SHAFT MONITOR
	70926838	2	SCREW, RD HD SQ NECK 1/2-13 X 1-1/2
	Y705046	2	LOCKWASHER, 1/2
	704056	4	NUT, HEX JAM, 1/2-13 GR2
44	17789	2	FLANGE, BEARING
	68619	2	SCREW, RD HD SQ NECK 1/2-13 X 1-1/4
	Y705046	2	LOCKWASHER, 1/2
	704031	2	HEXNUT, 1/2-13
45	71122510	1	BEARING, FLANGE W/COLLAR
46	71386400	1	PLATE, COVER
	70917642	6	WASHER, FLAT 5/16 WIDE
	Y705020	6	LOCKWASHER, 5/16
	70917372	6	HEXNUT, 5/16-18
47	71393824	1	SCREEN, LEAF
	70921965	3	CAPSCREW, 3/8-16 X 3/4
	Y705533	3	WASHER, FLAT 3/8 HARD
48	71393822B	1	SUPPORT, LEAF SCREEN
	70923114	4	CAPSCREW, 1/2-13 X 1.0
	705541	4	WASHER, FLAT 1/2 HARD
	Y704742	4	NUT, HEX FLNG TOP LOCK, 1/2-13
49	71376758P	2	COVER, INSPECTION
	705012	4	LOCKWASHER, 1/4
	70916622	4	HEXNUT, 1/4-20

CONTINUED

LOWER AUGER HOUSING AND FANNING MILL

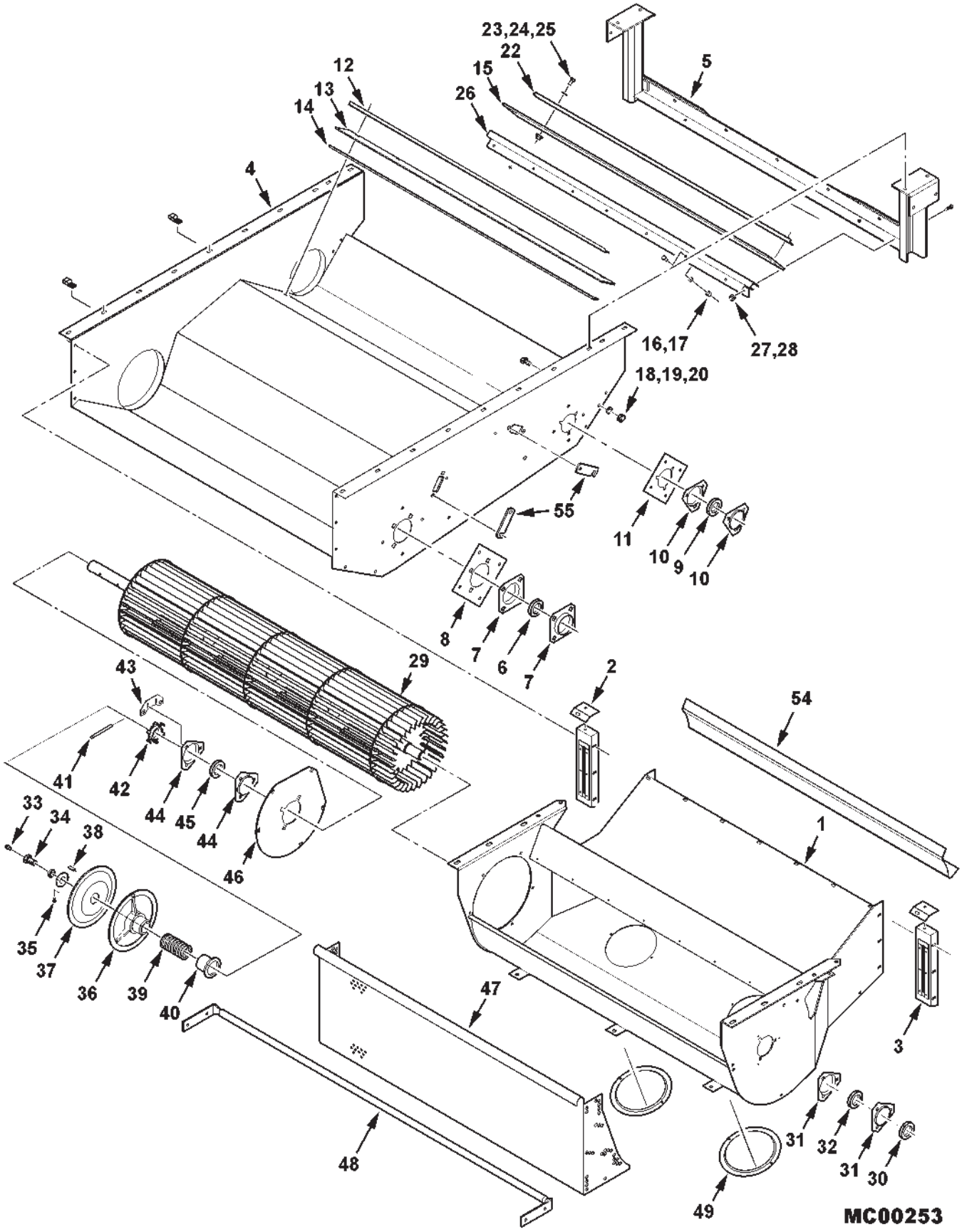

LOWER AUGER HOUSING AND FANNING MILL

ITEM	NUMBER	QTY	DESCRIPTION
50	71391331	1	SHAFT, FAN (NOT ILLUST'D)
51	71354636	4	HEAD ASY, FAN (NOT ILLUST'D)
	71373684	1	HEAD ASY, FAN LH (NOT ILLUST'D)
	7703838	10	CAPSCREW, 5/16-18 X 1-3/4
	Y705608	20	WASHER, 5/16 NARROW
	Y705020	10	LOCKWASHER, 5/16
	70917372	10	NUT, 5/16-18 REG
52	71412130	32	BLADE, FAN
53	71348314	3	RING, BLADE RETAINING (NOT ILLUST'D)
54	71400603	1	VORTEX PLATE, TRANSVERSE FAN
	70925160	16	POP-RIVET, 3/16 X .251-.375 GRIP
55	108202W1	2	STRAP (EFF. S/N HP87101)
	70917642	4	WASHER, 5/16, WIDE
	Y705020	4	LOCKWASHER, 5/16
	70917372	4	NUT, 5/16-18 REG

MC00253
PR: 224

VARIABLE SPEED FAN DRIVE

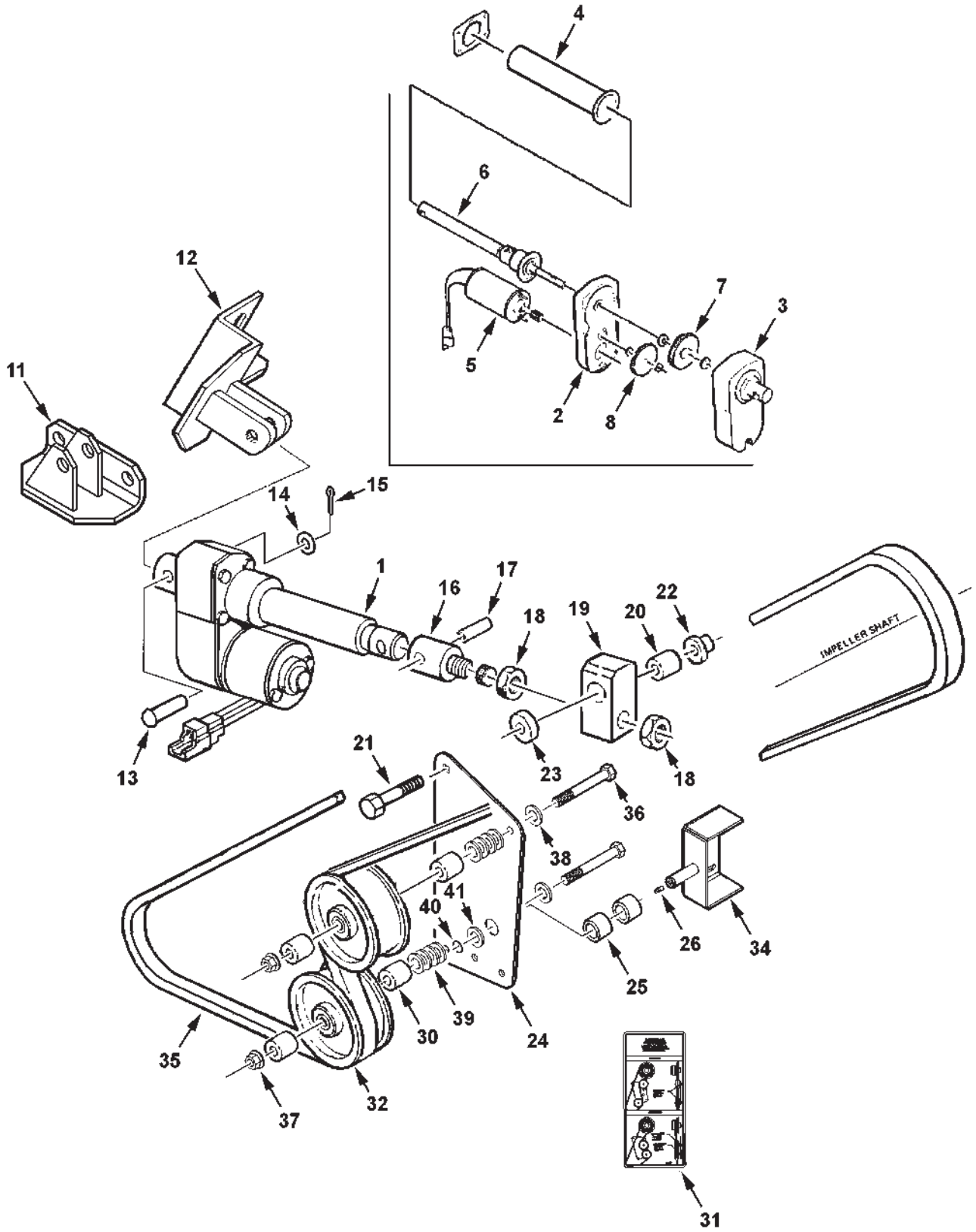

MC00255

VARIABLE SPEED FAN DRIVE

ITEM	NUMBER	QTY	DESCRIPTION
1	293817M91	1	ACTUATOR MOTOR ASY (INCL. ITEMS 2-8)
2	1068614M91	1	HOUSING ASSEMBLY, FRONT
3	700704854	1	HOUSING ASSEMBLY, REAR
4	1068617M1	1	COVER
5	103657W91	1	MOTOR
6	1068620M91	1	SCREW ASSEMBLY
7	700704927	1	CLUTCH ASSEMBLY
8	700711357	1	GEAR ASSEMBLY, INTERMEDIATE
	-----	1	*GASKET, COVER TUBE
	-----	1	*GASKET, HOUSING
	-----	1	*SEAL, MOTOR
	-----	1	*O-RING
	-----	1	*LIP, SEAL
11	71399477	1	BRKT. WLDMT, ANCHOR (EFF. S/N HP87101)
	70921176	2	CAPSCREW, 1/2-13 X 1-1/4 GR5
	Y704742	2	NUT, HEX FLNG TOP LOCK, 1/2-13 UNC
12	2588071W92	1	BRKT. WLDMT, ANCHOR (PRIOR S/N HP87101)
	70921210	2	CAPSCREW, 3/8-16 X 1 GR5
	Y704734	2	NUT, HEX FLNG TOP LOCK, 3/8-16
13	195412M1	1	PIN, CLEVIS, 1/2 X 2
14	Y705624	1	WASHER, NARROW, 1/2
15	70918455	1	PIN, COTTER, 1/8 X 1-1/4
16	71390093	1	ROD ASSEMBLY, CONTROL
17	70922770	1	PIN, SPRING, 1/2 X 1-3/4
18	70913160	2	NUT, 3/4-10 UNC, REG
19	2537720W1	1	BLOCK, PIVOT
20	2446310W1	1	SPACER, 11/16 X 63/64 X 9/16
21	70923111	1	CAPSCREW, 5/8-11 X 3 GR5
22	700703922	1	NUT, HEX FLNG TOP LOCK, 5/8-11 UNC
23	2464250W1	1	SPACER, 21/32 X 1-1/2 X 3/8
24	71394356B	1	PLATE WLDMT W/BUSH'S (PRIOR S/N HP87101)
	71399481	1	PLATE WLDMT W/BUSH'S (EFF. S/N HP87101)
25	831268M1	2	BUSHING, 3/4 X 7/8 X 3/4
26	70914687	1	LUBE FITTING, STR, 1/4-28 UNF
30	365098X1	4	SPACER, IDLER FAN DRIVE
31	71392776	1	DECAL, V-S FAN DRIVE
32	2545270W1	2	PULLEY, IDLER
34	71391526	1	BRACKET ASSEMBLY, PIVOT
	70921210	2	CAPSCREW, 3/8-16 X 1 GR5
	Y704734	2	NUT, HEX FLNG TOP LOCK, 3/8-16
35	71394352	1	BELT (SEE BELT LISTING)
36	70925705	2	CAPSCREW, 5/8-11 X 5 GR5
37	700703922	2	NUT, HEX FLNG TOP LOCK, 5/8-11 UNC
38	70918433	2	WASHER, 3/4, WIDE
39	70918432	8	WASHER, 5/8, WIDE
40	70927732	1	RETAINING RING, EXTERNAL
41	70923427	1	WASHER, .78 ID X 1.25 X .12 TH.
-	700704856	6	KIT, SEAL (INCLUDES * ITEMS)

MC00255
PR: 228

SEPARATOR PAN

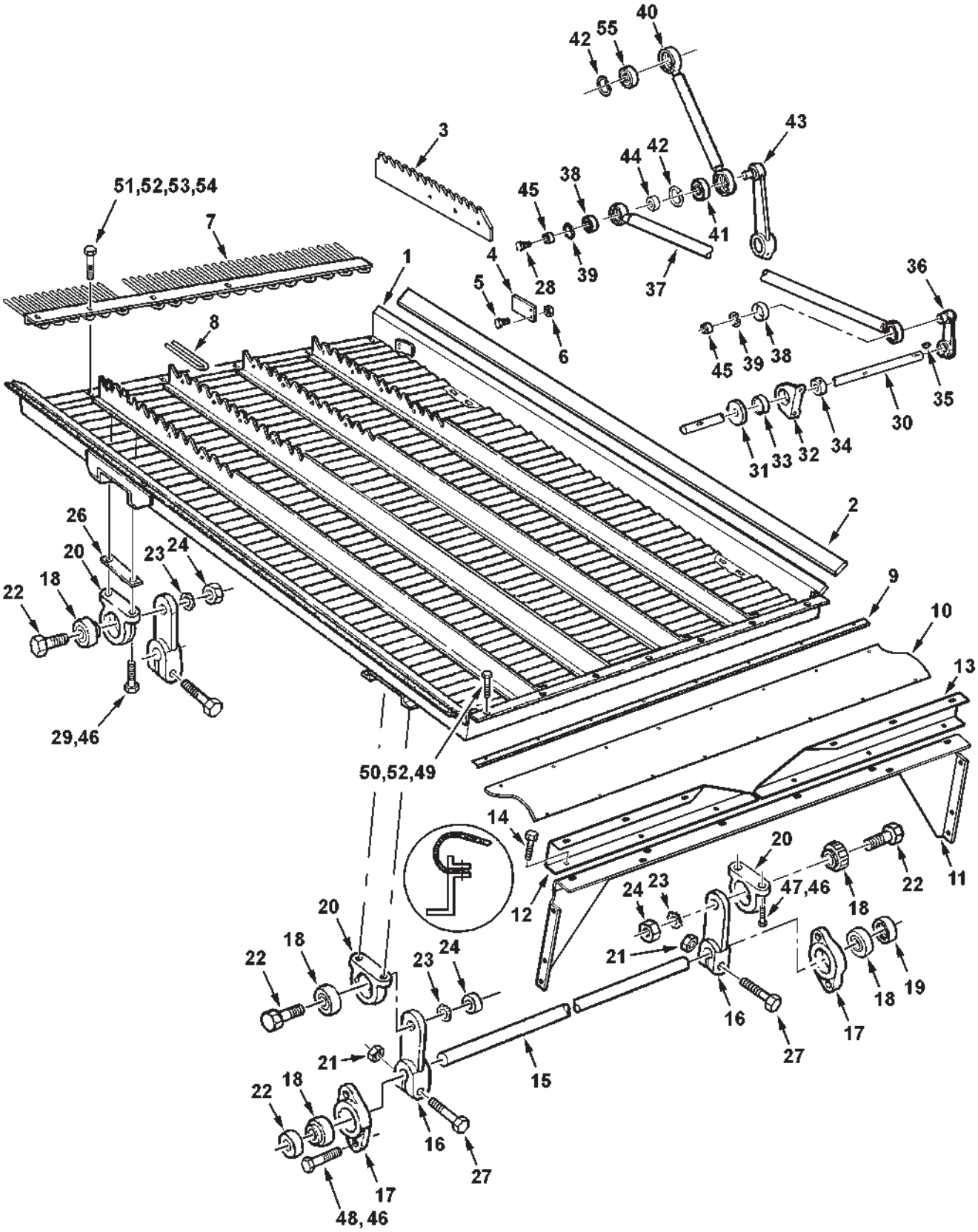

MC00015

SEPARATOR PAN

ITEM	NUMBER	QTY	DESCRIPTION
1	1817801W91	1	PAN ASSEMBLY, GRAIN
2	1817730W1	2	SEAL, RUBBER, 1-3/4" X 71-1/4" X 1/8"
3	71393440	4	EXTENSION, SEPARATOR PAN (ACCESSORY) (SEE SHOE SHAKER & SIEVES)
4	1157990W1	2	DEFLECTOR, SEPARATOR PAN
5	70921958	16	BOLT, HEX, 1/4-20 UNC X 1/2
6	70916622	16	NUT, HEX, 1/4-20 UNC
7	1520233W91	1	COMB ASSEMBLY
8	1114720W1	23	ROD, COMB
9	1505030W1	1	STRIP, CLAMPING
10	2618650W2	1	SEAL, SEPARATOR PAN, REAR
11	105050W91	1	BRACE ASSEMBLY, REAR
12	104920W2	1	CHANNEL, FILLER LH
13	104921W2	1	CHANNEL, FILLER RH
14	70927075	6	BOLT, CARRIAGE, 5/16-18 UNC X 1
15	2474660W1	1	SHAFT, REAR
16	2443420W1	2	ARM, REAR
17	1501060W1	2	HOUSING
18	71308770	6	BEARING, BALL
19	70522328	2	COLLAR, BEARING
20	2551250W1	4	HOUSING
21	Y704742	AR	NUT, HEX FLANGE LOCK, 1/2-13 UNC
22	1564540W1	4	BOLT, HEX SPECIAL, 7/8-9 UNC X 2
23	70929356	4	WASHER, LOCK EXTERNAL TOOTH, 7/8
24	375114X1	4	NUT, HEX JAM, 7/8-9 UNC
25	2443410W1	2	ARM, FRONT
26	1588480W1	2	PLATE
27	70921211	AR	BOLT, HEX, 1/2-13 UNC X 2-1/2
28	70923473	AR	BOLT, HEX 1/2-13 X 1-1/4 GR8
29	70921971	AR	BOLT, HEX, 3/8-16 UNC X 1-3/4
30	2615130W1	1	SHAFT, FRONT
31	2555310W1	2	SEAL, 1 X 2-1/2 X 1/4
32	1130100W1	2	HOUSING
33	70590709	1	BEARING, BALL, W/COLLAR
34	70533638	2	COLLAR, BEARING
35	70905128	3	KEY, WOODRUFF, 1/4 X 1
36	2615140W2	1	ARM
37	2615101W92	1	PITMAN ASSEMBLY
38	1109055	2	BEARING, BALL
39	22289X	2	RING, INTERNAL RETAINING
40	71396470	1	ARM WLDMT, PITMAN
41	1139003	1	BEARING, ARM (LOWER)
42	70927708	2	RING, INTERNAL SNAP
43	-----	1	ARM WLMT, SHOE SHAKER (SEE "SHAKER SHOE & SIEVES")
44	2615120W1	1	SPACER
45	60049M1	2	SPACER
46	Y704734	AR	NUT, HEX FLANGE LOCK, 3/8-16 UNC
47	70923220	AR	BOLT, CARRIAGE, 3/8-16 UNC X 1-1/4
48	70920415	AR	BOLT, HEX, 3/8-16 UNC X 1-1/4
49	Y704726	AR	NUT, HEX FLANGE TOP LOCK, 5/16-18 UNC
50	70921332	AR	BOLT, HEX, 5/16-18 UNC X 3/4
51	7700461	AR	BOLT, CARRIAGE, 5/16-18 UNC X 3/4
52	70917642	AR	WASHER, WIDE FLAT, 5/16
53	70917356	AR	WASHER, LOCK, 5/16
54	70917372	AR	NUT, HEX, 5/16-18 UNC
55	71396472	1	BEARING, ARM (UPPER)
56	71409415	AR	GAUGE, PITMAN ARM ASSEMBLY (ORDER THRU BATAVIA PARTS)(NOT ILLUSTRATED)

SHAKER SHOE AND SIEVES

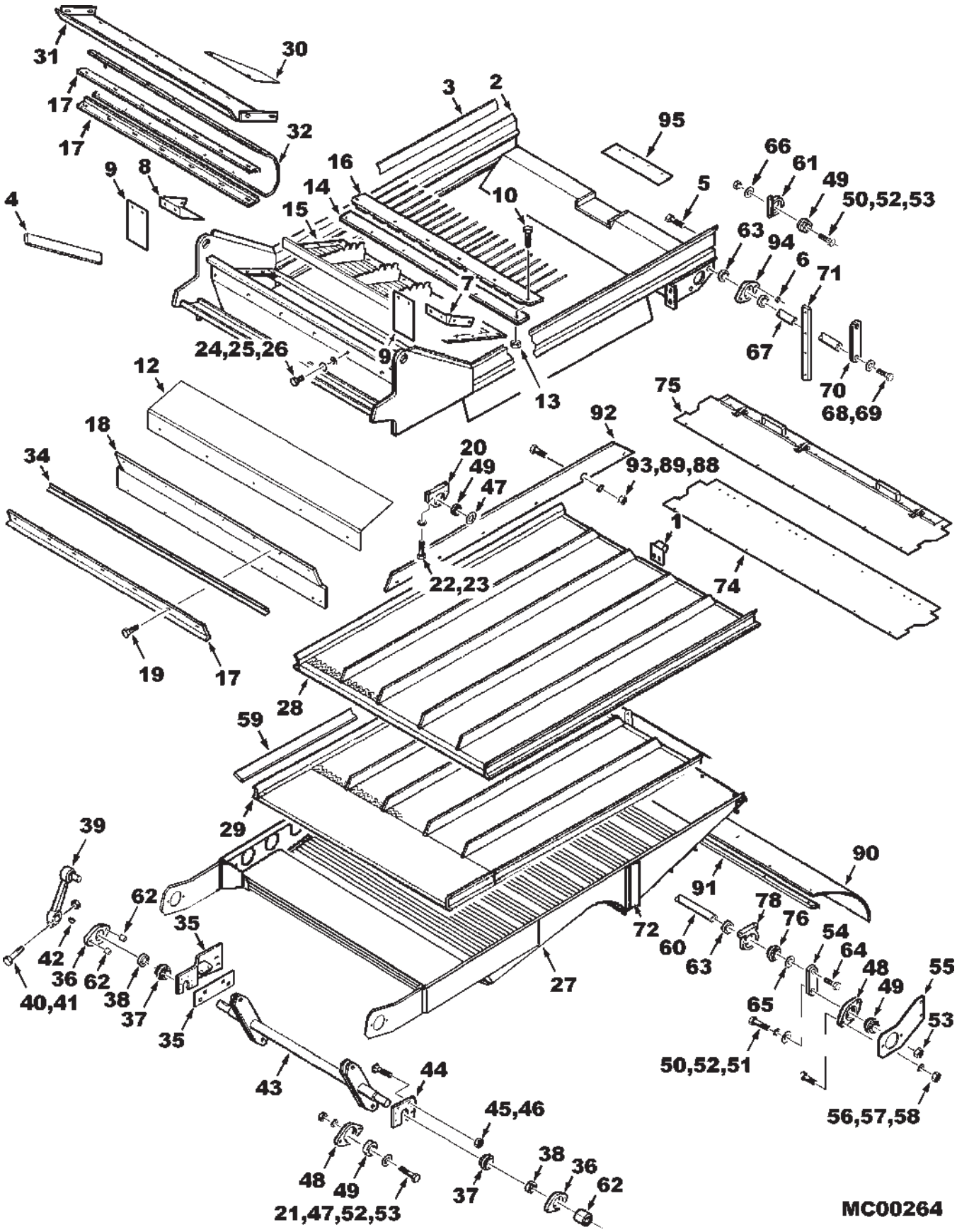

SHAKER SHOE AND SIEVES

ITEM	NUMBER	QTY	DESCRIPTION
1	-----	--	BUSHING, TIE ROD (CHALL. 670)
2	71401848B	1	FRAME WLDMT, CHAFFER & SIEVE
	70937253	48	RIVET, 3/16 X 7/16
3	71386394	2	SEAL, RUBBER, 1-19/64 X 71-45/64 X 1/8
	70937253	38	RIVET, 3/16 X 7/16
4	71394833	2	SEAL, RUBBER
	70937253	10	RIVET, 3/16 X 7/16
5	70920415	4	CAPSCREW, 3/8-16 UNC X 1-1/4
6	Y704734	4	NUT, HEX FLG TOP LOCK, 3/8-16
7	71395582	1	DEFLECTOR, LEFT
	70921332	2	CAPSCREW, 5/16-18 X 3/4
	70921333	1	CAPSCREW, 5/16-18 X 1.0
	7700578	2	BOLT, RD SQ NECK 5/16-18 X 1.0
	Y704726	5	NUT, HEX FLG TOP LOCK, 5/16-18
8	71395583	1	DEFLECTOR, RIGHT
	70921332	2	CAPSCREW, 5/16-18 X 3/4
	70921333	1	CAPSCREW, 5/16-18 X 1
	7700578	2	BOLT, RD SQ NECK 5/16-18 X 1
	Y704726	5	NUT, HEX FLG TOP LOCK, 5/16-18
9	71395589	2	EXTENSION, DEFLECTOR
10	70921333	6	BOLT, HEX, 5/16-18 UNC X 1-1/4
12	71395261	1	DAMPER, SEPARATOR PLATE
13	Y704726	12	NUT, HEX FLG TOP LOCK, 5/16-18
14	2559900W1	1	STRIP, RUBBER
15	71394957	1	PAN ASSEMBLY, CASCADE
16	2559763W91	1	COMB ASSEMBLY, CASCADE PAN
17	2474140W1	3	ANGLE, SEAL CLAMPING
18	71395576	1	SEAL, CHAFFER FRAME TO FAN HOUSING
19	70921332	7	CAPSCREW, 5/16-18 UNC X 3/4
	70917642	7	WASHER, 5/16 WIDE
20	71401429	2	HOUSING, BEARING (USES 1/2" CAPSCREWS)
21	1564540W1	4	BOLT, HEX SPECIAL, 7/8-9 UNC X 2
22	70922605	4	CAPSCREW, 3/8-16 X 1-1/4 GR8 (PRIOR S/N HN87101)
	70912278	4	CAPSCREW, HEX SOCK HD, 1/2-13 X 1-1/2 (EFF. S/N HN87101)
23	353771X1	4	WASHER, HVY HARDENED FLAT, 3/8 (PRIOR S/N HN87101)
	71406957	4	SPACER, .53 ID X 1.0 (EFF. S/N HN87101)
24	70921332	5	CAPSCREW, 5/16-18 UNC X 3/4
25	70917356	5	WASHER, LOCK, 5/16
26	70917642	5	WASHER, WIDE FLAT, 5/16
27	71394962	1	PAN ASY, LOWER SEPARATOR
28	71392698	1	CHAFFER, GRAIN UPPER (1-1/8 SPACING)
	71395865	1	CHAFFER, RICE UPPER (1-5/8 SPACING)
	71397999	1	CHAFFER, CORN UPPER (1-5/8 SPACING)
	71399014	1	KIT, AIRFOIL CHAFFER (ORD. DLR CENTRAL)
	71392681	1	CHAFFER, AIRFOIL
	7703416	3	CAPSCREW, 3/8-16 X 1-1/4 GR8
	Y704734	3	NUT, HEX FLANGE TOP LOCK, 3/8-16
	70918266	7	WASHER, 3/8 NARROW
29	71392696	1	SIEVE, GRAIN/RICE, LOWER
	71392697	1	SIEVE, CORN LOWER
	702514	3	CAPSCREW, 3/8-16 X 2-1/4 GR8
	Y704734	3	NUT, HEX FLANGE TOP LOCK, 3/8-16
	70918266	3	WASHER, 3/8 NARROW

CONTINUED

SHAKER SHOE AND SIEVES

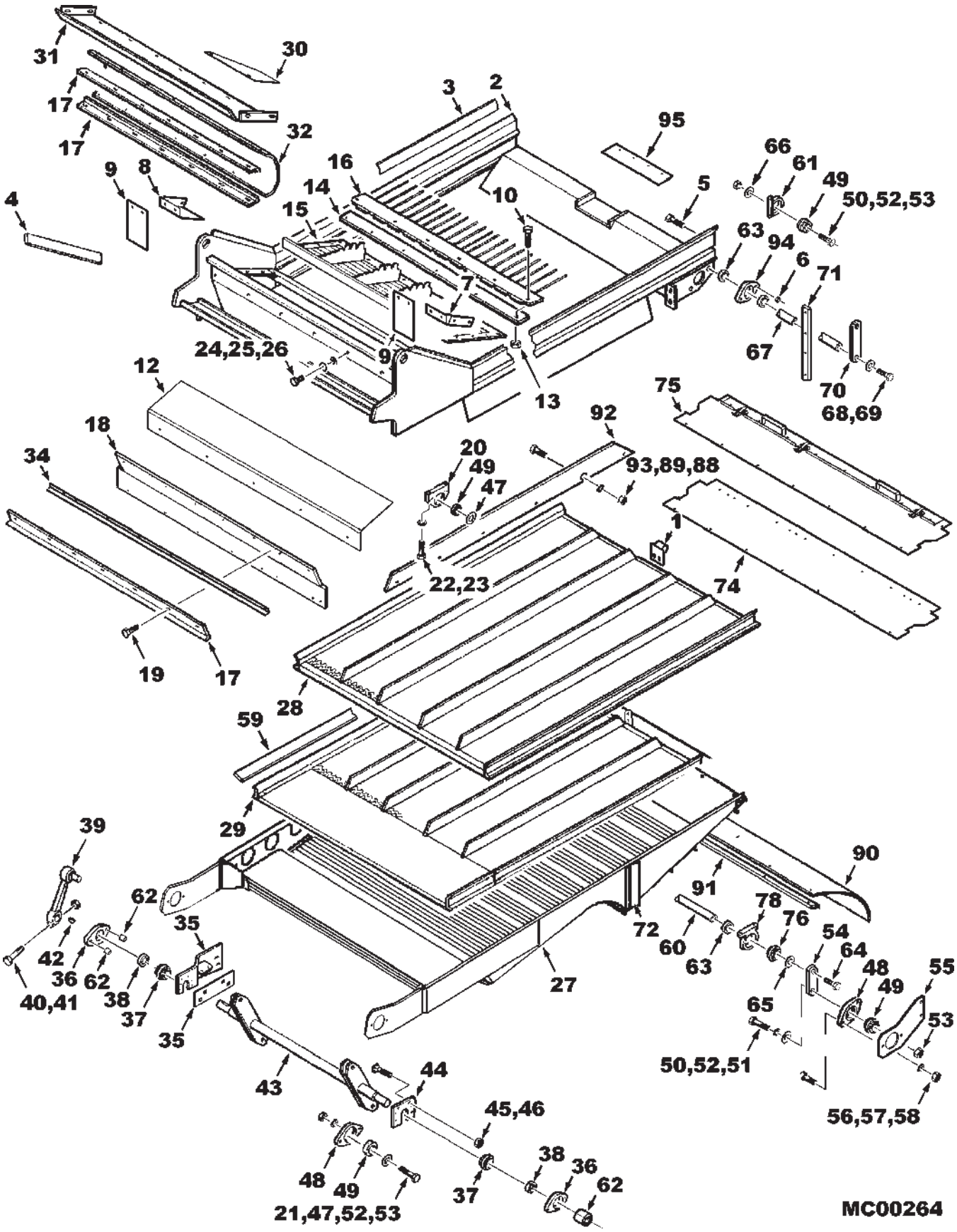

ITEM	NUMBER	QTY	DESCRIPTION
30	101126M1	2	SEAL, CORNER (PRIOR S/N HP87101)
	71406454	2	SEAL, CORNER (EFF. S/N HP87101)
	70921332	4	CAPSCREW, 5/16-18 X 3/4
	700709602	4	WASHER, 5/16, WIDE
	Y704726	4	NUT, HEX FLANGE TOP LOCK, 5/16-18
31	2615160W1	1	SHEET, DEFLECTOR
	70921965	4	CAPSCREW, 3/8-16 X 3/4
	70918266	4	WASHER, 3/8, NARROW
	Y704734	4	NUT, HEX FLANGE TOP LOCK, 3/8-16
32	2474130W1	1	SEAL, DEFLECTOR TO CASCADE PAN
	70921332	7	CAPSCREW, 5/16-18 X 3/4
	70923325	7	CAPSCREW, 5/16-18 X 7/8
	Y705608	14	WASHER, 5/16, NARROW
	Y704726	14	NUT, HEX FLANGE TOP LOCK, 5/16-18
34	2474120W1	1	ANGLE, STIFFENER
	70921332	9	CAPSCREW, 5/16-18 X 3/4 GR5
	Y704726	9	NUT, HEX FLG TOP LOCK, 5/16-18
35	71393543	1	SUPPORT ASSEMBLY, GRAIN ELEVATOR
	71400549	1	SPACER PLATE, ELEVATOR SUPPORT
	70926838	4	BOLT, RD HD SQ NECK, 1/2-13 X 1-1/2
	Y704742	4	NUT, HEX FLNG TOP LOCK, 1/2-13
36	2492063W91	2	BEARING & HOUSING ASY, SHAKER SHAFT
	2403570W1	2	HOUSING, BEARING
	70921024	4	CAPSCREW, 1/2-13 X 2.0
	Y704742	4	NUT, HEX FLNG TOP LOCK, 1/2-13
	70923014	2	LUBE FITTING, 1/8 NPT, 45 DEG
37	22602X	2	BEARING, WIDE INNER RACE W/COLLAR
38	14987	2	COLLAR, BEARING
39	2615181W91	1	ARM WLMT, SHOE SHAKER (SERVICE WITH 71409403 & 5/8 HRDWR)
	71409403	1	ARM WLMT, SHOE SHAKER (EFF. S/N HP87--- MID PROD'N RUN)
	70921210	1	CAPSCREW, 3/8-16 X 1.0
	6875314	1	WASHER, SPECIAL
40	70926155	1	CPSCR, 1/2-13 X 3 GR8(W/ 2615181W91 ARM)
	700708270	1	CPSCR, 5/8-11 X 3 GR8 (W/ 71409403 ARM)
41	368384X1	1	NUT, 1/2-13 REG (W/ 2615181W91 ARM)
	70923353	1	NUT,HX CNTR LOCK, 5/8-11(W/71409403 ARM)
	52233	1	WASHER, HARD, NRMB, .625 X 1 X .075 TH
42	70924906	1	KEY, WOODRUFF
43	71394960	1	SHAFT ASSEMBLY
44	2446400W1	1	PLATE, BEARING MOUNTING, LEFT
45	70931809	4	BOLT, CARRIAGE, 1/2-13 UNC X 1-1/4
46	Y704742	4	NUT, HEX FLANGE TOP LOCK, 1/2-13 UNC
47	364578X1	4	WASHER, .906 ID X 1.53 OD X .106
48	1501060W1	4	HOUSING, BEARING
49	71308770	12	BEARING, BALL, W/COLLAR
50	1564540W1	4	CAPSCREW, SPECIAL, 7/8-9 UNC X 2
51	70922285	2	WASHER, WIDE FLAT, 7/8
52	70929356	8	WASHER, LOCK EXTERNAL TOOTH, 7/8
53	375114X1	8	NUT, HEX JAM, 7/8-9 UNC
54	2400540W1	2	HANGER, BEARING
55	71394540	2	SUPPORT, REAR SIEVE
56	70920415	4	CAPSCREW, 3/8-16 X 1-1/4 GR5
57	70916965	4	WASHER, LOCK, 3/8
58	70916950	4	NUT, HEX, 3/8-16 UNC
59	71394119	2	SEAL, RUBBER
	70937253	30	RIVET, BLIND

CONTINUED

SHAKER SHOE AND SIEVES

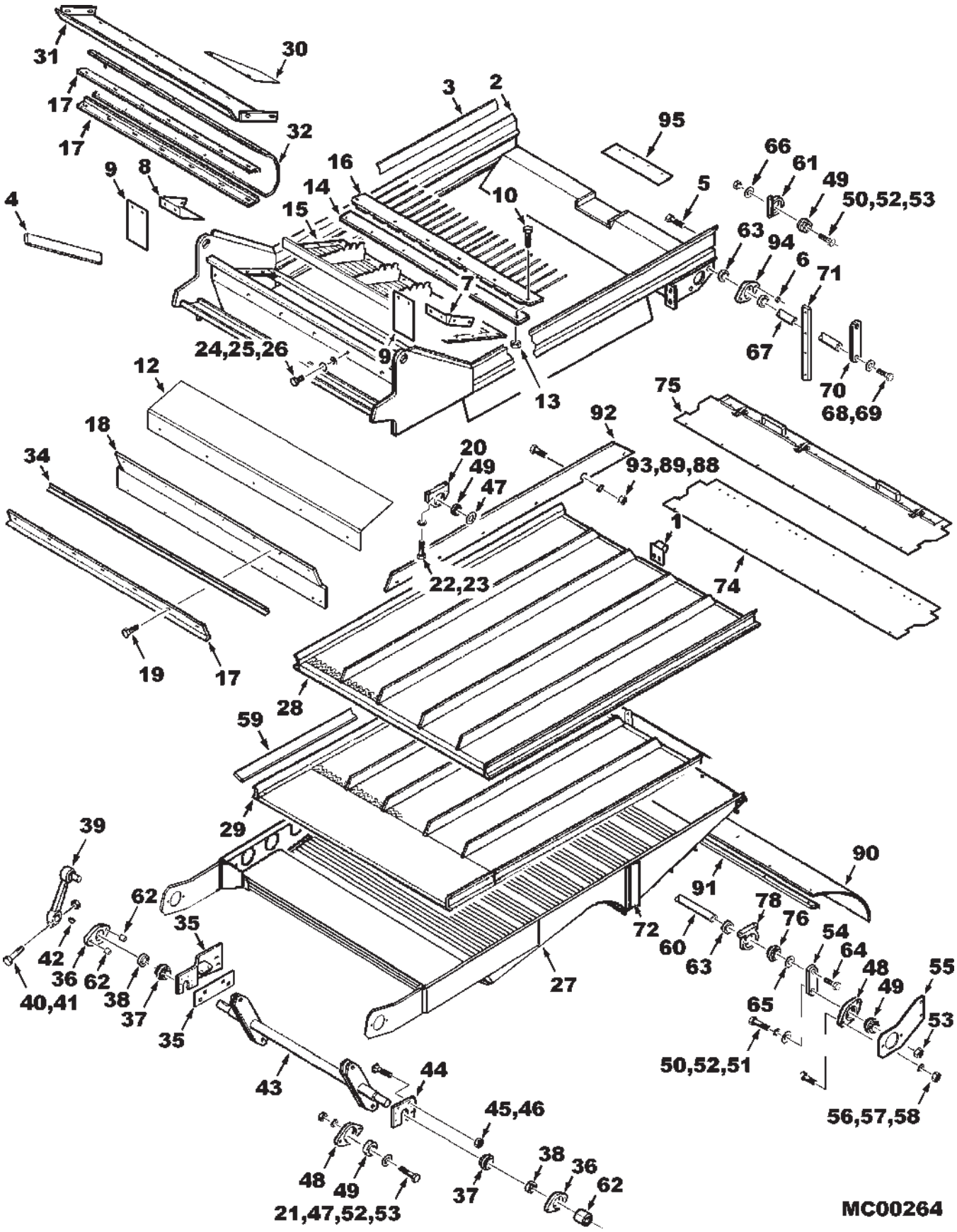

SHAKER SHOE AND SIEVES

ITEM	NUMBER	QTY	DESCRIPTION
60	71392692	1	ROD, TIE, REAR SHOE, 1.0 DIA
61	2551250W1	2	HOUSING, BEARING (SHALLOW)
	7701055	4	CAPSCREW, 3/8-16 X 1-3/4 GR5
	70917378	4	WASHER, 3/8 WIDE
	Y704734	4	NUT, HEX FLNG TOP LOCK, 3/8-16
62	71381213	4	SPACER
63	375028X1	4	COLLAR, BEARING, 1.0 ID
64	70923151	2	BOLT, HEX, 5/8-11 UNC X 1-1/4
65	70918432	2	WASHER, WIDE FLAT, 5/8
66	70923544	2	WASHER, 7/8 NARROW
67	71392694	1	ROD TIE, REAR CHAFFER, 1.0 DIA
68	70918268	8	WASHER, NARROW FLAT, 5/8
69	70924744	2	BOLT, HEX, 5/8-11 UNC X 1-1/2
70	71395266	2	BAR, BEARING MOUNTING
71	2629570W1	2	STRAP, REINFORCING
72	71394841	2	SEAL, RUBBER
74	71394967	2	SEAL, SEPARATOR DOOR
	Y764126	8	POP RIVET, 3/16 X 1/4
75	71394966	1	DOOR ASY., SEPARATOR
	71396456	1	ANGLE WLDMT, SEPARATOR DOOR
	71394969	1	STRIP, REINF.
	762975	3	CLAMP, OVER-CENTER
	64642	6	POP RIVET, 3/16 X 3/8
76	71308951	2	BEARING, BALL, W/COLLAR
78	71392691	2	BEARING & HOUSING ASY, (SHALLOW)
	2551250W1	2	HOUSING, BEARING (SHALLOW)
	70920415	4	CAPSCREW, 3/8-16 X 1-1/4 GR5
	70917378	4	WASHER, 3/8 WIDE
	Y704734	4	NUT, HEX FLNG TOP LOCK, 3/8-16
82	762975	3	CLAMP, LATCH
	64642	6	RIVET, 3/16 X 1/2
83	71393440	4	EXTNSN, SEPARATOR PAN (SEE SEPART'R PAN)
84	71396462	4	EXTENSION, CASCADE PAN
85	1157990W1	2	DEFLECTOR
88	70916622	24	NUT, 1/4-20 REG (ACCESSORY)
89	70916964	24	LOCKWASHER, 1/4 (ACCESSORY)
90	2608280W1	1	SEAL, SHOE
91	2608290W1	1	STRIP, SIEVE CLAMP
92	71392677	4	EXTENSION, CHAFFER RISER (ACCESSORY)
93	70921959	24	CAPSCREW, 1/4-20 X 5/8 GR5 (ACCESSORY)
94	71392693	2	BEARING & HOUSING ASY.
	1501060W1	2	HOUSING, BEARING
	71308951	2	BEARING, W/COLLAR
	70920415	4	CAPSCREW, 3/8-16 X 1-1/4 GR5
	Y704734	4	NUT, HEX FLNG TOP LOCK, 3/8-16
95	71393818	1	SEAL, REAR CHAFFER FRAME
	70937253	4	RIVET, BLIND
-	71400018	--	*KIT, SIDE HILL CHAFFER RISERS (INCL. ITEMS 83-85,92)
-	71400025	--	*KIT, RISER, AIR FOIL CHAFFER DIVIDER
-	71400019	--	*KIT, CHAFFER/SIEVE GRAIN (INCL ITEMS 28,29)
-	71400021	--	*KIT, CHAFFER/SIEVE CORN (INCL ITEMS 28,29)
-	71400023	--	*KIT, AIRFOIL CHAFFER (GRAIN & RICE)

*ORDER THRU DEALER CENTRAL

MC00264
PR: 232

PITMAN DRIVE

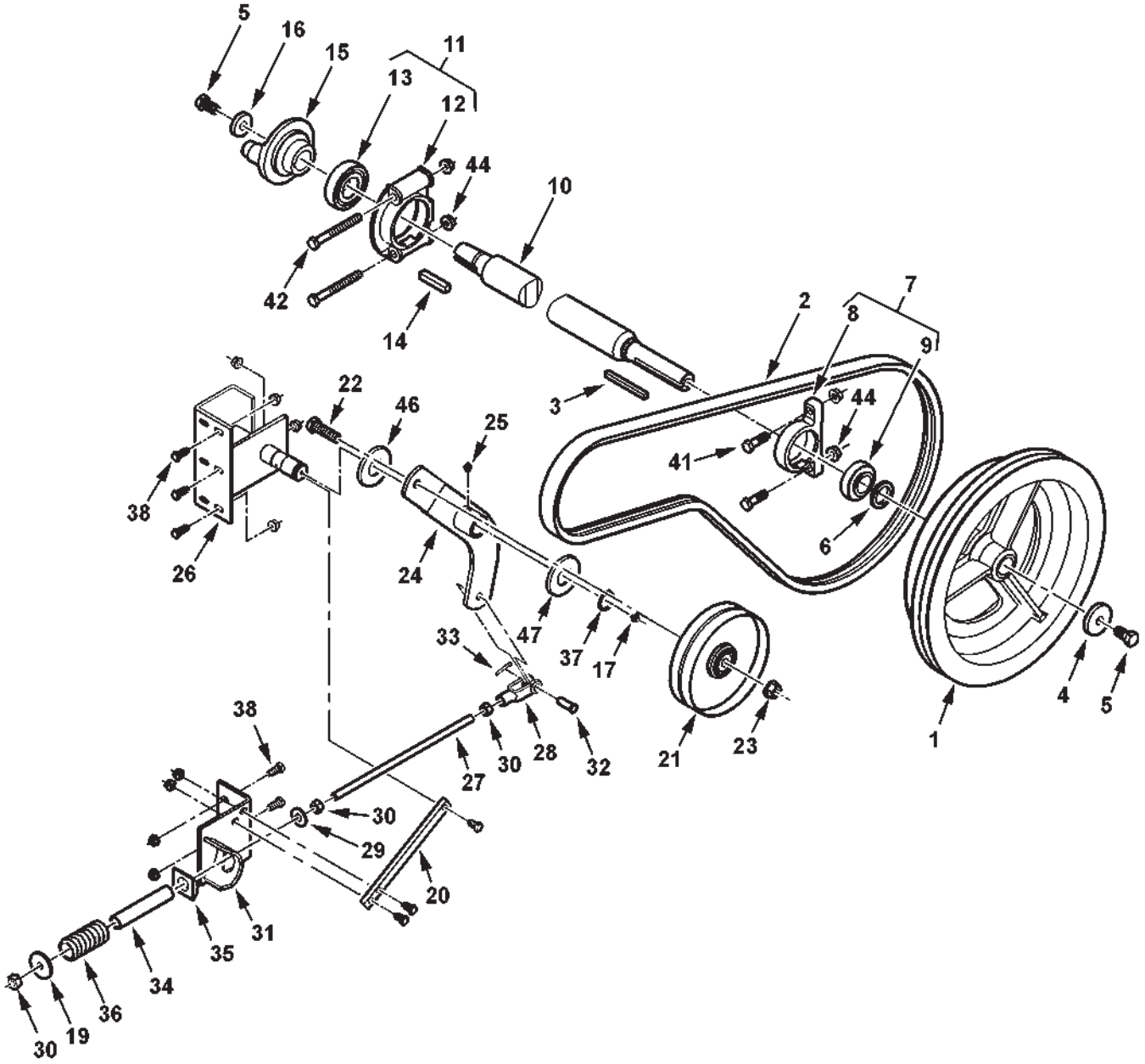

MC00378

PITMAN DRIVE

ITEM	NUMBER	QTY	DESCRIPTION
1	2449760W1	1	PULLEY, DRIVE
2	71390199	1	BELT (SEE BELT LISTING)
3	61523	1	KEY, SQ, 3/8 X 4
4	2407570W1	1	WASHER, 21/32 X 2-3/8 X 3/8
5	70923151	2	CAPSCREW, 5/8-11 X 1-1/4 GR5
6	2619570W1	1	SPACER, PITMAN SHEAVE
7	-----	1	BEARING & HSG ASY (ORDER ITEMS 8 & 9)
8	1605510W1	1	HOUSING
9	50021	1	BEARING BALL
10	2472260W1	1	SHAFT, PITMAN DRIVE
11	-----	1	BEARING & HSG ASY. (ORDER ITEMS 12 & 13)
12	2590650W1	1	HOUSING
13	31-1588410	1	BEARING
14	70918168	1	KEY, 3/8 X 3/8 X 1-3/4
15	71396469	1	HUB, PITMAN DRIVE
16	2476070W1	1	WASHER, 21/32 X 1-3/4 X 3/8
17	13811X	1	LUBE FITTING, STR, 1/4-28 TAPER THD
19	70923094	1	WASHER, FLAT, .531 X 2.0 X .180
20	71390853	1	STRAP, REINFORCEMENT
	70921210	3	BOLT, HEX, 3/8-16 UNC X 1.0
	Y704734	3	NUT, HEX FLANGE LOCK, 3/8-16 UNC
21	2614090W1	1	IDLER PULLEY, FLAT
22	70921360	1	CAPSCREW, 5/8-11 X 2-1/4 GR5
23	700703922	1	NUT, HEX FLANGE TOP LOCK, 5/8-11
24	2613771W91	1	IDLER ARM WLDMT, PITMAN
25	70914465	1	LUBE FITTING, 1/8-27 NPTF
26	71390851	1	BRACKET ASY, PIVOT
27	71382871	1	ROD, ALL THD, 1/2-13 X 14" LG
28	70937465	1	YOKE
29	70918431	1	WASHER, 1/2 WIDE
30	704031	3	NUT, 1/2-13 UNC, REG
31	71390196	1	BRACKET, PULLEY ROD ANCHOR
32	70929593	1	PIN, CLEVIS, 1/2 X 1-13/64
33	70918452	1	PIN, COTTER, 1/8 X 1.0
34	71382868	1	SPACER, SPRING
35	71356058	1	BLOCK, PIVOT
36	71382716	1	SPRING
37	70926957	1	RING, RETAINING
38	70921210	5	CAPSCREW, 3/8-16 X 1.0 GR5
40	Y704734	5	NUT, HEX FLANGE TOP LOCK, 3/8-16 UNC
41	70919089	2	CAPSCREW, 1/2-13 X 1-3/4 GR5
42	70925974	2	CAPSCREW, 1/2-13 X 4-1/2 GR8
44	Y704742	4	NUT, HEX FLANGE TOP LOCK, 1/2-13 UNC
46	104207W1	1	WASHER, SHIM, 1-1/4 X 1-3/4 X .030 TH
47	70937716	1	WASHER, 1-5/16 X 2-1/2 X .150 TH

MC00378
PR: 238

GRAIN ELEVATOR DRIVE
(PRIOR S/N HP87101)

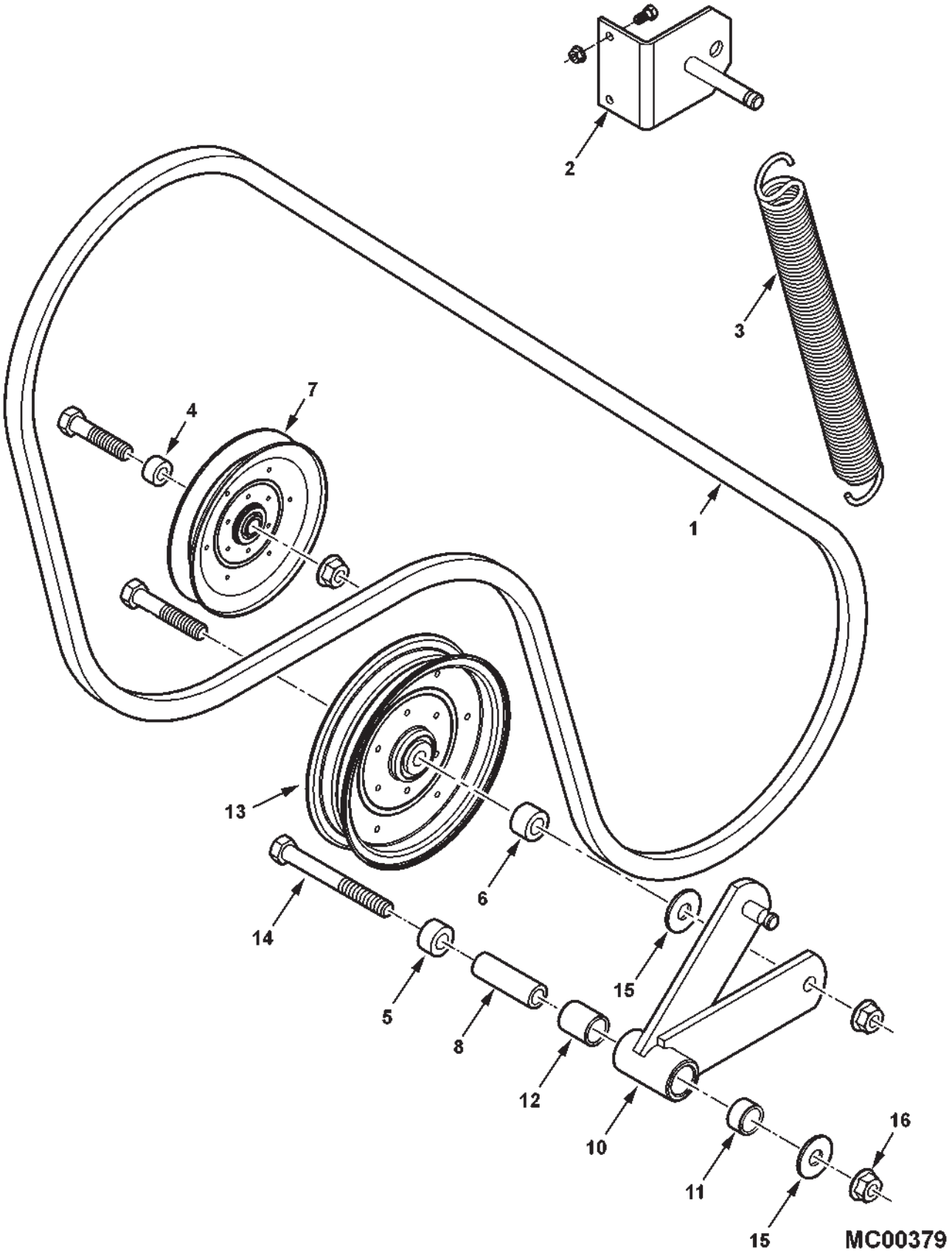

GRAIN ELEVATOR DRIVE
(PRIOR S/N HP87101)

ITEM	NUMBER	QTY	DESCRIPTION
1	227455M1	1	BELT, GRAIN ELEVATOR DRIVE
2	2620871W91	1	ANCHOR WLDMT, SPRING
	70921332	2	CAPSCREW, 5/16-18 X 3/4
	Y704726	2	NUT, HEX FLANGE TOP LOCK, 5/16-18
3	2620920W1	1	SPRING, GRAIN ELEVATOR DRIVE
4	360555X1	1	SPACER, 21/32 X 1-1/4 X 11/16 LG
5	151257M1	1	SPACER, 11/16 X 1-1/4 X 1-3/16 LG
6	2451440W1	1	SPACER, 11/16 X 1-1/4 X 13/16 LG
7	31-2446490	1	IDLER PULLEY, 7-5/16 OD
	70919434	1	CAPSCREW, 5/8-11 X 2-3/4
	70918432	1	WASHER, WIDE FLAT, 5/8
	700703922	1	NUT, HEX FLANGE TOP LOCK, 5/8-11
8	2441490W1	1	SLEEVE, .640 ID X .992 X 3.06 LG
10	2620853W91	1	ARM ASSEMBLY (INCL ITEMS 11 & 12)
11	1689170W1	1	BUSHING, 1 X 1-1/4 X 3/4
12	1742670W1	1	BUSHING, 1 X 1-1/4 X 1-1/2
13	2553560W1	1	IDLER, FLAT, 8-3/4 OD
	70925702	1	CAPSCREW, 5/8-11 X 3-1/2
	70918432	1	WASHER, WIDE FLAT, 5/8
	700703922	1	NUT, HEX FLANGE TOP LOCK, 5/8-11
14	70925706	1	CAPSCREW, 5/8-11 X 5-1/2 GR5
15	70918432	2	WASHER, WIDE FLAT, 5/8
16	700703922	1	NUT, HEX FLANGE TOP LOCK, 5/8-11
17	70914465	1	LUBE FITTING, 1/8-27 NPTF
-	71406309	AR	DRIVE KIT, CLEAN GRAIN (UPGRADE TO ELEV. DRIVE EFF. S/N HP87101)(INCLUDES STRAP 71407326, QTY 1, FOR STEP) (SERVICE COMP'TS ON FOLLOWING PAGE)

MC00379
PR: t05b15n00a0016

GRAIN ELEVATOR DRIVE
(EFF. S/N HP87101)

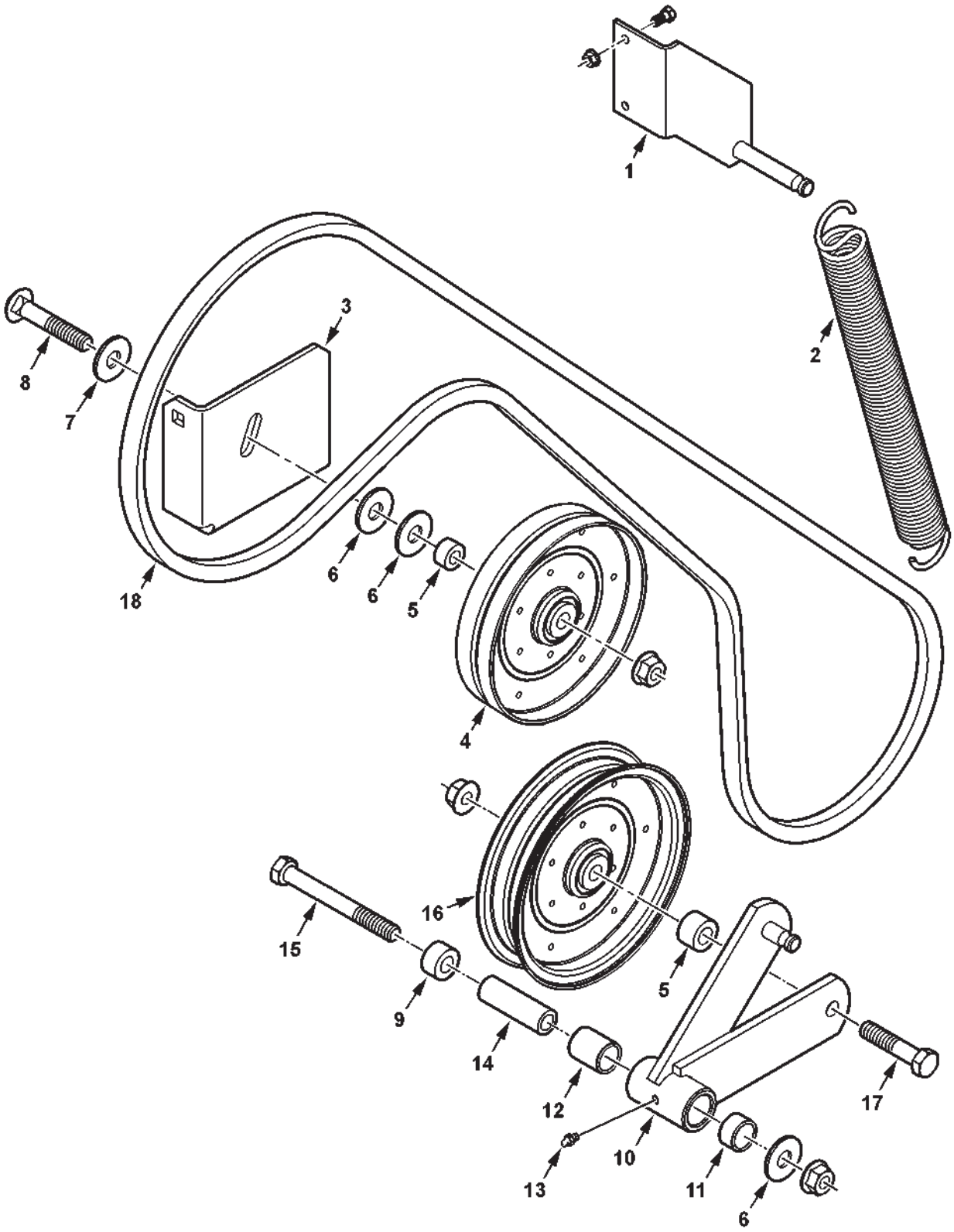

MC00380

GRAIN ELEVATOR DRIVE
(EFF. S/N HP87101)

ITEM	NUMBER	QTY	DESCRIPTION
1	71403684	1	ANCHOR WLDMT, SPRING
	70921332	2	CAPSCREW, 5/16-18 X 3/4 GR5
	Y704726	2	NUT, HEX FLANGE TOP LOCK, 5/16-18
2	1579720W1	1	SPRING, TENSION
3	71403680	1	SUPPORT BRACKET, IDLER
	68619	2	BOLT, RND HD SQ NECK, 1/2-13 X 1-1/4
	70928367	1	BOLT, RND HD SQ NECK, 1/2-13 X 1
	Y704742	3	NUT, HEX FLANGE TOP LOCK, 1/2-13
4	2614090W1	1	IDLER ASY, FLAT
5	2451440W1	2	SPACER, IDLER
6	70918432	3	WASHER, 5/8, WIDE
7	700709608	1	WASHER, 7/8, WIDE
8	364988X1	1	BOLT, RND HD SQ NECK, 5/8-11 X 3-1/2
	700703922	1	NUT, HEX FLANGE TOP LOCK, 5/8-11
9	151257M1	1	SPACER, .688 X 1.188 LG
10	2620853W91	1	ARM ASSEMBLY (INCL. ITEMS 11 & 12)
11	1689170W1	2	BUSHING, 1 X 1.24 X .75 LG (WAS QTY.1)
12	1742670W1	1	BUSHING, 1 X 1.24 X 1.50 LG (PRIOR S/N HP87---, MID-PROD'N RUN)
13	70914465	1	LUBE FITTING, 1/8-27 NPTF
14	2441490W1	1	SLEEVE, .640 ID X .992 X 3.06 LG
15	70925706	1	CAPSCREW, 5/8-11 X 5-1/2 GR5
	700703922	1	NUT, HEX FLANGE TOP LOCK, 5/8-11
16	2553560W1	1	IDLER, FLAT, 8-3/4 OD
17	70921671	1	CAPSCREW, 5/8-11 X 3-1/4 GR5
	700703922	1	NUT, HEX FLANGE TOP LOCK, 5/8-11
18	71403685	1	BELT, GRAIN ELEVATOR DRIVE

MC00380
PR: t05b15n00a0017

GRAIN ELEVATOR
LOWER

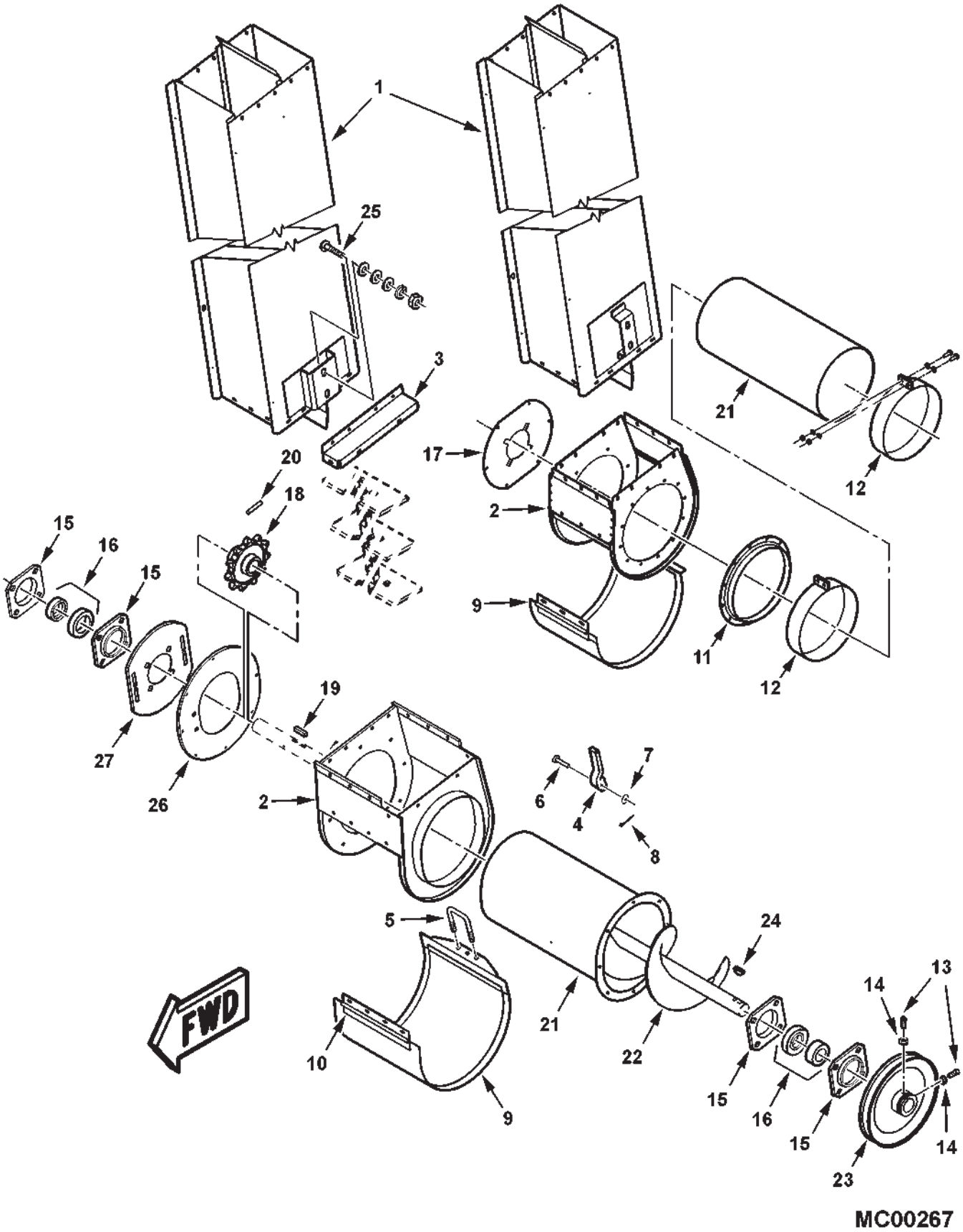

GRAIN ELEVATOR
LOWER

ITEM	NUMBER	QTY	DESCRIPTION
1	71393547	1	BODY & DECALS, ASY (PRIOR S/N HP87101) (DECALS- SEE "LABELS" SECTION)
	71400435	1	BODY WLMT, GR ELEV. (EFF. S/N HP87101)
	71409271	1	BODY WLMT,GR ELEV. RICE(EFF S/N HP87101)
	70931316	10	BOLT, RD HD SQ NECK 1/4-20 X 5/8
	705012	10	LOCKWASHER, 1/4 (PRIOR S/N HP87101)
	70917377	10	WASHER, 1/4, WIDE(PRIOR S/N HP87101)
	70916622	10	NUT, 1/4-20, REG (PRIOR S/N HP87101)
	70931209	10	LOCKNUT, HEX SERR FLANGE, 1/4-20 (EFF. S/N HP87101)
2	71393429	1	BOOT ASY. GR ELEV. (PRIOR S/N HP87101)
	71399994	1	BOOT WLMT, GR ELEV. (EFF. S/N HP87101)
	71409268	1	BOOT WLMT,GR ELEV. RICE(EFF S/N HP87101)
	70931316	14	BOLT, RD HD SQ NECK, 1/4-20 X 5/8
	705012	14	LOCKWASHER, 1/4
	70917377	14	WASHER, 1/4 WIDE (PRIOR S/N HP87101)
	70916622	14	NUT, 1/4-20, REG
3	71399807	1	FILLER WLMT, GR ELEV. (EFF. S/N HP87101)
	71409269	1	FILLER WLMT, GR ELEV. RICE (S/N HP87101)
	70931316	4	BOLT, RD HD SQ NK, 1/4-20 X 5/8
	70931317	4	BOLT, RD HD SQ NK, 1/4-20 X 3/4
	705012	8	LOCKWASHER, 1/4
	70916622	8	NUT, 1/4-20, REG
4	1799410W1	1	LATCH, DOOR
5	71197376	1	U-BOLT, LATCH (PRIOR S/N HP87101)
	70916622	4	NUT, 1/4-20, REG (PRIOR S/N HP87101)
	2476240W1	1	LATCH BOLT, DOOR (EFF. S/N HP87101)
	70916950	4	NUT, 3/8-16 (EFF. S/N HP87101)
6	70927523	1	PIN, CLEVIS, 5/16 X 1-1/2
7	70918265	1	WASHER, WIDE FLAT, 5/16
8	70918447	1	PIN, COTTER, 3/32 X 3/4
9	71393526	1	DOOR WLMT, LOWER (PRIOR S/N HP87101)
	71396467	--	DOOR WLMT, PERFORATED (ACCESSORY)(PRIOR S/N HP87101)
	71400431	1	DOOR WLDMT, LOWER (EFF. S/N HP87101)
	71410456	1	* DOOR WLMT,PERFORATED(EFF. S/N HP87101)
	71409265	1	DOOR WLMT, LOWER, RICE (EFF S/N HP87101)
	70931317	4	BOLT, RD HD SHT SQ NK, 1/4-20 X 3/4
	353769X1	4	WASHER, HARDENED, 1/4
	705012	4	LOCKWASHER, 1/4
	70916622	4	NUT, 1/4-20, REG
10	2412670W1	1	HINGE, DOOR (PRIOR S/N HP87101)
	71400432	1	HINGE, DOOR (EFF. S/N HP87101)
11	2554680W1	1	FLANGE, ELEVATOR (PRIOR S/N HP87101)
	70931316	12	BOLT, RD HD SQ NECK, 1/4-20 X 5/8
	70916964	12	LOCKWASHER, 1/4
	70916622	12	NUT, 1/4-20, REG
12	2555401W91	2	CLAMP ASY, TUBE (PRIOR S/N HP87101)
	700705614	4	CAPSCREW, 5/16-18 X 1-1/2 FULL THD
	70917642	4	WASHER, 5/16, WIDE
	70917356	4	LOCKWASHER, 5/16
	70917372	4	NUT, 5/16-18, REG

CONTINUED

GRAIN ELEVATOR
LOWER

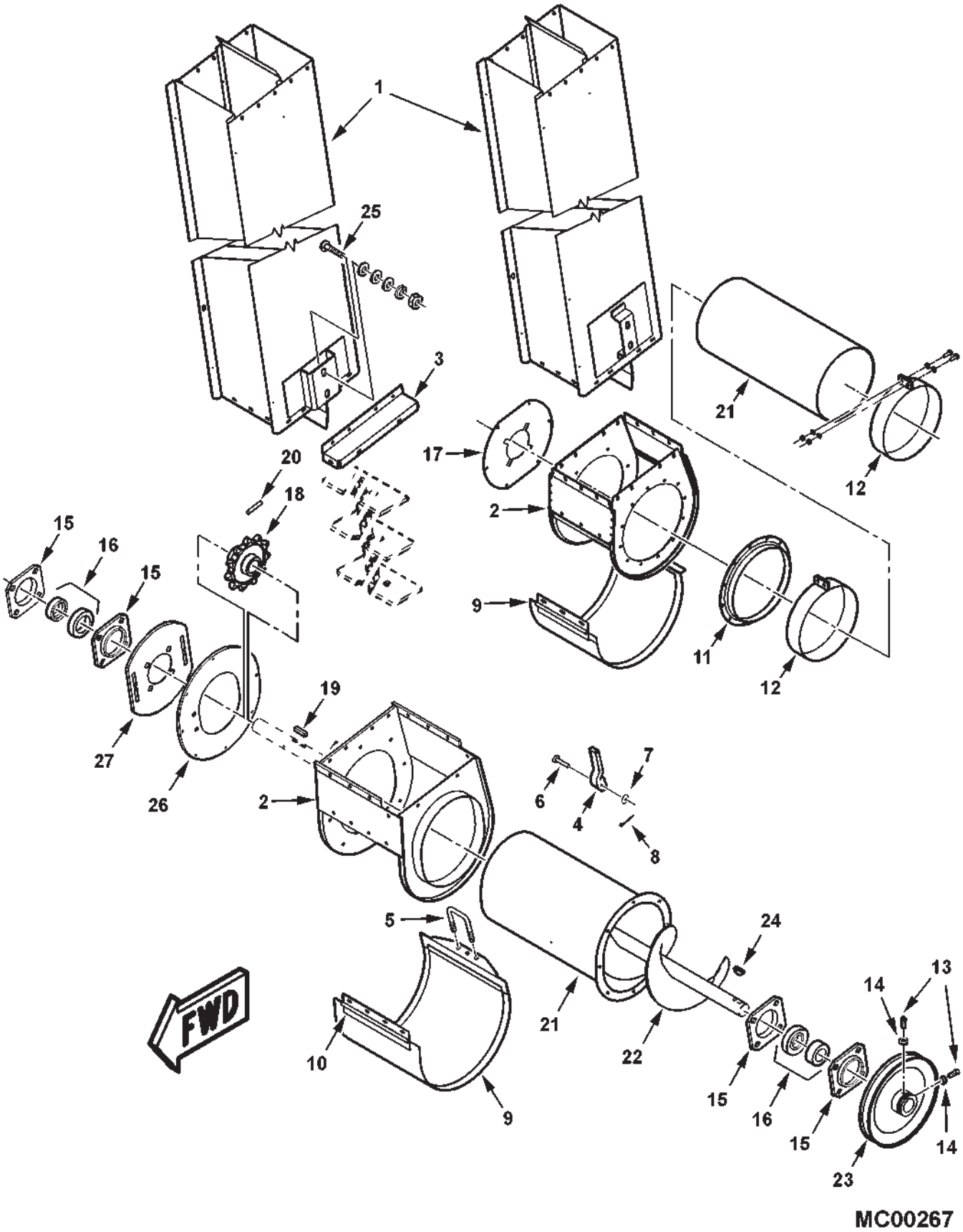

GRAIN ELEVATOR
LOWER

ITEM	NUMBER	QTY	DESCRIPTION
13	70923326	1	SETSCREW,SQ HD, 3/8-16 X 1 (QTY 2, PRIOR S/N HP87101)
	70920469	1	SETSCREW, SQ HD, 3/8-16 X 3/4 (EFF. S/N HP87101)
14	70916950	2	NUT, 3/8-16, REG (PRIOR S/N HP87101)
15	17789	4	FLANGE, BEARING
	70931809	8	BOLT, RND HD SQ NK, 1/2-13 X 1-1/4 (WAS QTY 7, PRIOR S/N HP87101)
	70931810	1	BOLT, RND HD SQ NK, 1/2-13 X 1-3/4 (PRIOR S/N HP87101)
	Y705046	8	LOCKWASHER, 1/2
	704031	8	NUT, 1/2-13, REG
16	50468	2	BEARING, BALL, W/COLLAR
	1720176	2	COLLAR
17	2571520W1	1	PLATE, BEARING MOUNT (PRIOR S/N HP87101)
	70931316	6	BOLT, RD HD SQ NECK, 1/4-20 X 5/8
	70916964	6	LOCKWASHER, 1/4
	70916622	6	NUT, 1/4-20, REG
18	2571510W1	1	SPROCKET, GRAIN ELEVATOR
19	61101	1	SQ. KEY, 1/4 X 1/4 X 1-3/4
20	70926977	1	PIN, COILED SPRING, 3/16 X 2-1/4
21	71393546	1	TUBE, BOTTOM,GR ELEV.(PRIOR S/N HP87101)
	71406260	1	TUBE WLMT,BTM, GR ELEV.(EFF.S/N HP87101)
	71409381	1	TUBE, BTM,GR ELEV. RICE(EFF.S/N HP87101)
	7700461	8	BOLT, RD HD SQ NK, 5/16-18 X 3/4
	70917356	8	LOCKWASHER, 5/16
	70917372	8	NUT, 5/16-18, REG
	70933988	8	SPEED NUT, THREAD GRIP, 5/16
22	71392700	1	AUGER ASY, (PRIOR S/N HP87101)
	71394534	1	AUGER ASY (CHROME)
23	108843W1	1	PULLEY, DRIVEN (PRIOR S/N HP87101)
	71403682	1	PULLEY, DRIVEN (EFF. S/N HP87101)
24	70911201	1	KEY, WOODRUFF, 3/8 X 1-1/4 DIA
25	701235	1	CPSCR, 1/2-13 X 1-1/2 (WAS QTY.2 PRIOR S/N HP87101)
	70921176	1	CPSCR, 1/2-13 X 1-1/4 (EFF. S/N HP87101)
	70931187	1	NUT, HEX SERR FLANGE, 1/2-13
	70936525	1	SPEED NUT, THREAD GRIP, 1/2
	705541	2	WASHER, HARD, 1/2 (WAS QTY.4)
	Y705046	1	LOCKWASHER, 1/2 (WAS QTY.2)
	704031	1	NUT, 1/2-13, REG (WAS QTY.2)
26	71400429	1	PLATE, BOOT COVER (EFF. S/N HP87101)
	71409267	1	PLATE, BOOT COVER, RICE(EFF S/N HP87101)
	70931317	8	BOLT, RD HD SQ NK, 1/4-20 X 3/4
	705012	8	LOCKWASHER, 1/4
	70916622	8	NUT, 1/4-20, REG
27	71400430	1	PLATE, BRG (EFF. S/N HP87101)
	71409266	1	PLATE, BRG, RICE (EFF. S/N HP87101)
	70922786	4	BOLT, RD HD SQ NK, 3/8-16 X 1 GR5
	Y705533	4	WASHER, HARD, 3/8
	70916965	4	LOCKWASHER, 3/8
	70916950	4	NUT, 3/8-16, REG
-	71393534	1	CHAIN ASY. (NOT ILL)(SEE CHAINS, DRIVE)
-	700704010	AR	SILICONE SEALANT, BLACK, 10.2 OZ
-	71407048	AR	* KIT,PERF. ELEV DOORS(EFF. S/N HP87101) (ORDER FROM BATAVIA PARTS)

MC00267
PR: 242

GRAIN ELEVATOR
HEAD ASSEMBLY

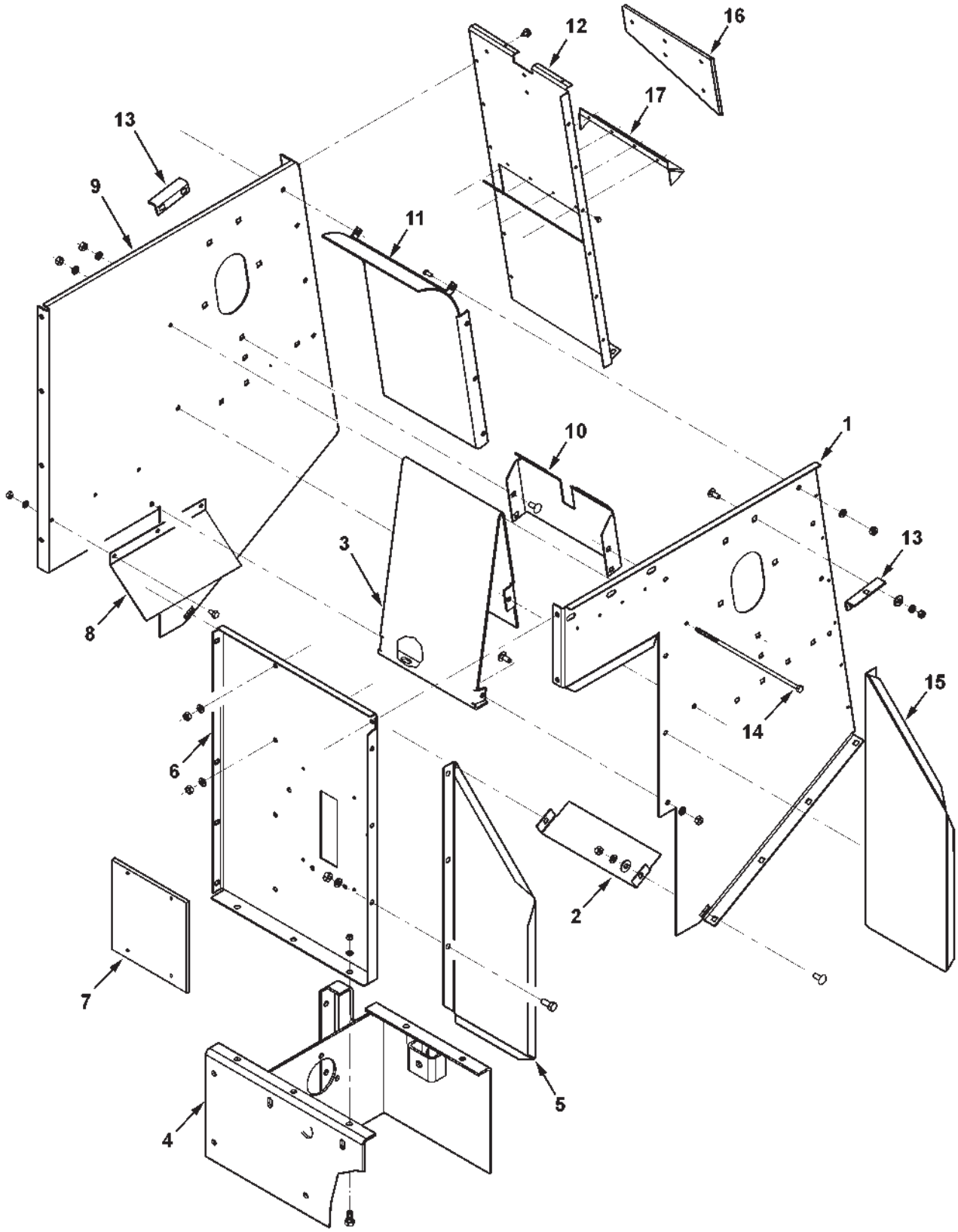

MC00270

GRAIN ELEVATOR
HEAD ASSEMBLY

ITEM	NUMBER	QTY	DESCRIPTION
1	71393268	1	PANEL, GRAIN HEAD SIDE (LH)
	7700461	6	BOLT, RD HD SQ NECK 5/16-18 X 3/4
	70917642	2	WASHER, FLAT 5/16
	Y705020	6	LOCKWASHER, 5/16
	70917372	6	HEXNUT, 5/16-18
2	71393273	1	SEAL, ELEVATOR
3	71393274	1	DIVIDER, GRAIN HEAD
4	71393269	1	SUPPORT ASY., BIN LOADER DRIVE
	70921965	5	CAPSCREW, 5/16-18 X 3/4
	70916965	5	LOCKWASHER, 3/8
	70916950	5	HEXNUT, 3/8
5	71393264	1	EXTENSION, FRONT
	70921332	6	CAPSCREW, 5/16-18 X 3/4
	Y705020	6	LOCKWASHER, 5/16
	70917372	6	HEXNUT, 5/16-18
6	71393263	1	PANEL, GRAIN HEAD FRONT
	70921333	1	CAPSCREW, 5/16-18 X 1.0
	70921332	5	CAPSCREW, 5/16-18 X 3/4
	Y705020	6	LOCKWASHER, 5/16
	70917372	6	HEXNUT, 5/16-18
7	71389842	1	COVER PLATE, ELEV. HEAD, FRONT (NON-FIELDSTAR)
	70924837	4	RIVET
8	71368598	1	DEFLECTOR, BIN LOADER
	70921958	3	CAPSCREW, 1/4-20 X 1/2
	705012	3	LOCKWASHER, 1/4
	70916622	3	HEXNUT, 1/4-20
9	71393265	1	PANEL, GRAIN HEAD (RH)
10	71393405	1	EXTENSION, CENTERBOARD
	7700461	4	BOLT, RD HD SQ NECK 5/16-18 X 3/4
	Y705020	4	LOCKWASHER, 5/16
	70917372	4	HEXNUT, 5/16-18
11	71400915	1	BACK WLMT, ELEV. HEAD(PRIOR S/N HR87101)
	71408514	1	BACK WLMT, ELEV. HEAD (EFF. S/N HR87101)
	70921332	8	CAPSCREW, 5/16-18 X 3/4
	Y705020	8	LOCKWASHER, 5/16
	70917372	8	HEXNUT, 5/16-18
12	71393401	1	REAR PANEL, BIN LDR (PRIOR S/N HN87101)
	71401452	1	REAR PANEL, BIN LDR (EFF. S/N HN87101 - HN87999)
	71406849	1	REAR PANEL, BIN LDR (EFF. S/N HP87101)
	70925991	12	SCR,HX WSHR HD,TAPPING, 1/4-14 X 1/2
13	71327984	2	BRACKET, DRAW BOLT
	70922786	4	BOLT, RD HD SQ NECK 3/8-16 X 1.0
	70916965	4	LOCKWASHER, 3/8
	70916950	4	HEXNUT, 3/8
14	354273X1	1	SCREW, CAP, 1/4-20 X 10.0
	705012	1	LOCKWASHER, 1/4
	70916622	1	HEXNUT, 1/4
15	71393402	1	EXTENSION, REAR
16	71401381	1	PLATE, FILLER (NON-FIELDSTAR)(EFF. S/N HN87101)
	7703457	5	CAPSCREW, 1/4-20 X 3/4
	70937101	5	NUT, PUSH-ON, 1/4
	700709601	5	WASHER, 1/4 WIDE
	705012	5	LOCKWASHER, 1/4
	704007	5	NUT, 1/4-20
17	71408501	1	HOOD, RECIRCULATION (EFF. S/N HP87101)
	700717635	4	POP-RIVET, 3/16 X .126-.250 GRIP

GRAIN ELEVATOR
BIN FILL AUGER

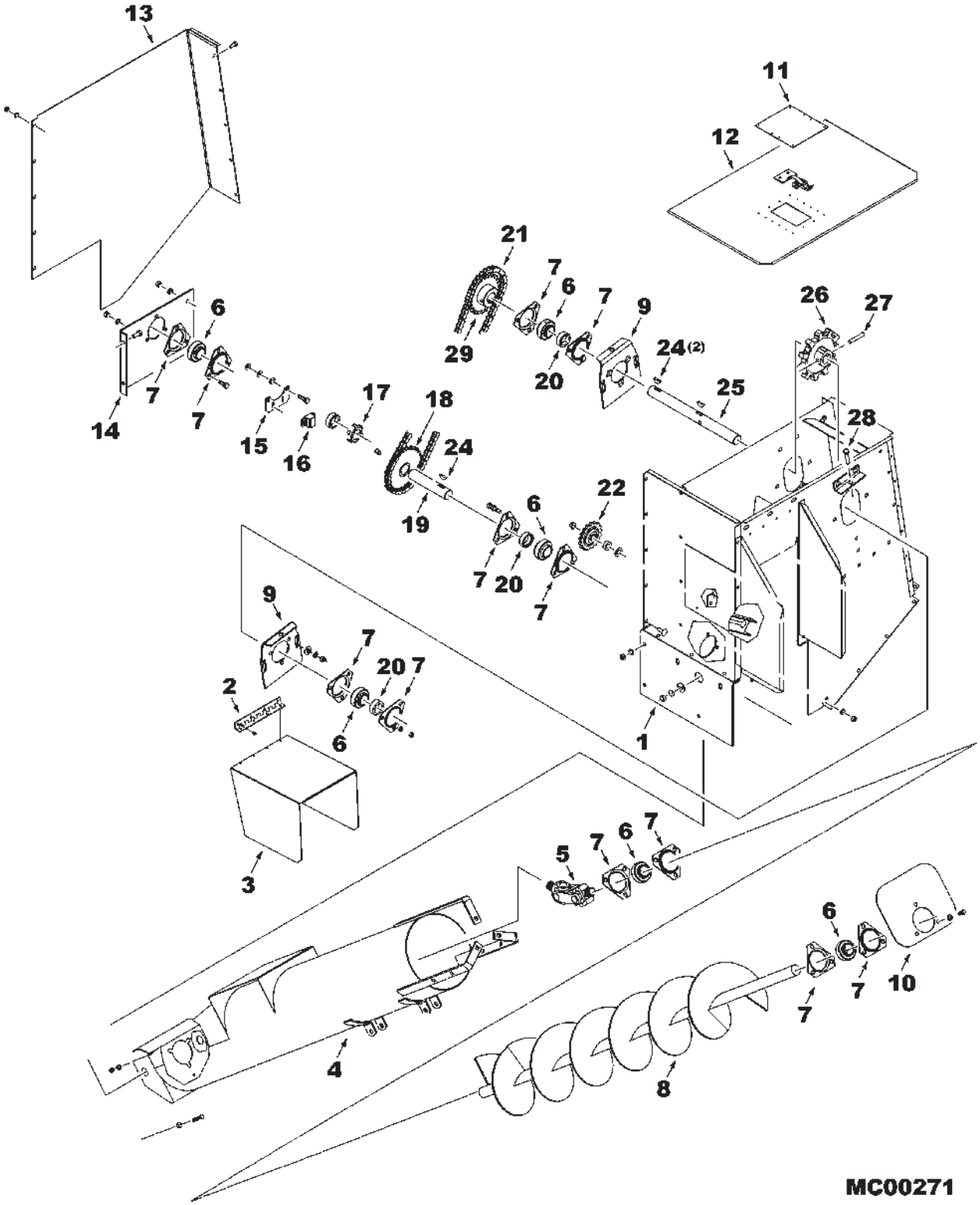

GRAIN ELEVATOR
BIN FILL AUGER

ITEM	NUMBER	QTY	DESCRIPTION
1	-----	1	HEAD ASY, CLEAN GRAIN ELEVATOR (REFERENCE ONLY, SEE BREAKDOWN)
2	71373693	1	HINGE, ELEVATOR BOOT
	70924837	4	RIVET, 3/16 X .277
	700717635	4	RIVET, 3/16 X .402
3	71376042	1	COVER, HINGED
4	71362970	1	TUBE WLDMT, BIN LOADER
	70921176	2	CAPSCREW, 1/2-13 X 1-1/4
	70918431	4	WASHER, 1/2 WIDE
	71188949	2	SPACER
	Y705046	2	LOCKWASHER, 1/2
	704031	2	NUT, 1/2-13 REG
5	71395998	1	U-JOINT ASY., DOUBLE PIVOT
	71124448	2	YOKE
	71396653	2	JOURNAL ASY, U-JOINT
6	71308995	6	BEARING, W/ COLLAR
7	71127313	12	FLANGE
	Y707042	6	BOLT, PLOW 3/8-16 X 1.0
	70922786	7	BOLT, RHSN 3/8-16 X 1.0
	70916965	7	LOCKWASHER, 3/8
	70916950	7	NUT, 3/8-16 REG
8	71388940	1	AUGER, BIN LOADER (CHROME)
9	71393419	2	SUPPORT, BEARING
	70922786	4	BOLT, RHSN 3/8-16 X 1.0
	70917378	4	WASHER, FLAT 3/8
	70916965	4	LOCKWASHER, 3/8
	70916950	4	NUT, 3/8-16 REG
10	71393403B	1	PLATE, DEFLECTOR
	70923220	3	BOLT, RHSN 3/8-16 X 1-1/4
	70916965	3	LOCKWASHER, 3/8
	70917378	3	WASHER, FLAT 3/8
	70916950	3	NUT, 3/8-16 REG
11	71393404	1	PLATE, COVER (NON-FIELDSTAR)(PRIOR S/N HN87101)
	70924799	8	RIVET, 1/8 X .250
12	71395976B	1	TOP COVER ASY,BIN LDR(PRIOR S/N HN87101)
	71401453	1	TOP COVER ASY, BIN LDR (EFF. S/N HN87101 TO HP87999)
	71409402	1	TOP COVER ASY, BIN LDR(EFF. S/N HR87101)
	-----	1	TOP COVER, BIN LDR (ORDER COVER ASY)
	762975	1	CLAMP, OVER-CENTER LATCH
	71344833	1	SEAL, RUBBER
	700717635	4	POP-RIVET, 3/16 X .126-.250 GRIP
	70917380	2	WASHER, .219 ID X .50 OD X 18 GA
13	71393258	1	SHIELD, DRIVE CHAIN, BIN LOADER
	7883317	5	SCREW, HEX WSHR HD, 5/16-18 X 1/2
	7700461	5	BOLT, RND HD SQ NK, 5/16-18 X 3/4
	70917642	5	WASHER, FLAT 5/16
	Y705020	5	LOCKWASHER, 5/16
	70917372	5	NUT, 5/16-18 REG
	70933988	5	NUT, SPEED 5/16
14	71393259	1	SUPPORT, LOADER END
	70921210	4	CAPSCREW, 3/8-16 X 1.0
	70916965	4	LOCKWASHER, 3/8
	70916950	4	NUT, 3/8-16 REG

CONTINUED

GRAIN ELEVATOR
BIN FILL AUGER

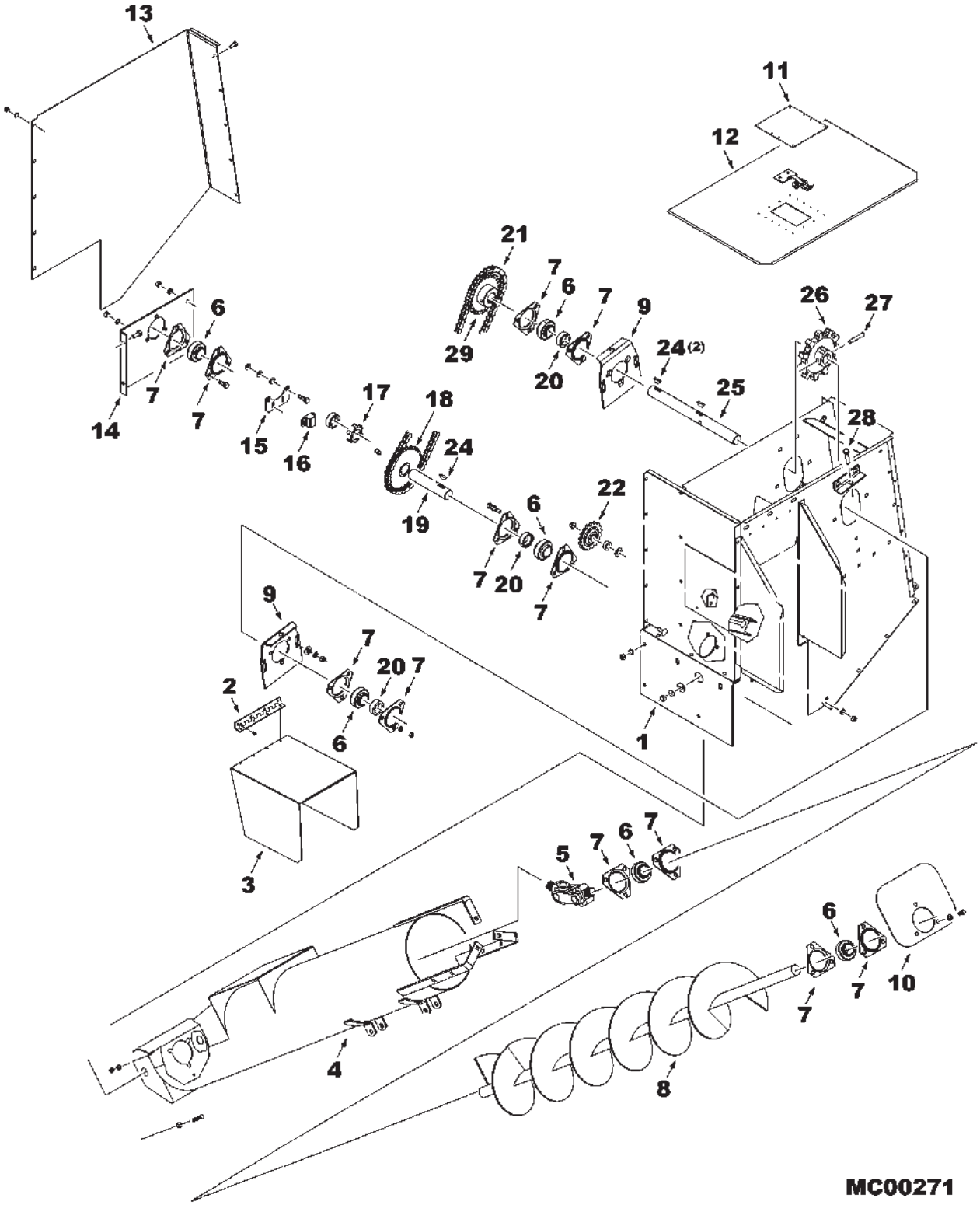

GRAIN ELEVATOR
BIN FILL AUGER

ITEM	NUMBER	QTY	DESCRIPTION
15	71188145	1	BRACKET, SHAFT
	70923220	2	BOLT, RHSN 3/8-16 X 1-1/4
	Y705533	6	WASHER, FLAT 3/8
	70916965	2	LOCKWASHER, 3/8
	70916950	2	NUT, 3/8-16 REG
16	71391021	1	SENSOR
	70931317	2	BOLT, RD HD,SHT SQ NK, 1/4-20 X 3/4
	705012	2	LOCKWASHER, 1/4
	70916622	2	NUT, 1/4-20 REG
17	71194367	1	COLLAR WLDMT, SENSING
18	71393260	1	SPROCKET WLDMT, 28 TEETH (QTY 2, PRIOR S/N HN87101)
	70920469	2	SETSCREW, SQ HD, 3/8-16 X 3/4
19	71393262	1	SHAFT, DRIVE
20	700717212	3	COLLAR, 1-1/4 ID
21	-----	1	CHAIN,BIN LOADER,#50 (SEE"CHAINS,DRIVE")
22	7087398	1	SPROCKET, IDLER
	70929095	1	BOLT, RDHD, SQNK 1/2-13 X 2-1/4
	70924113	1	WASHER, FLAT SQ HOLE
	6522940	1	SPACER
	Y704742	1	LOCKNUT, 1/2-13
24	29780X	3	KEY, WOODRUFF, 1/4 X 1.0
25	71393261	1	SHAFT, UPPER ELEVATOR
26	2412960W1	1	SPROCKET, DRIVE
27	70916767	1	ROLL PIN, 3/8 X 2 LG
28	70937727	2	CAPSCREW, 3/8-16 X 3-1/4
	70916950	2	NUT, 3/8-16 REG
29	71401462	1	SPROCKET, WLDMT, 38 TEETH
	70920469	2	SETSCREW, SQ HD, 3/8-16 X 3/4

MC00271
PR: 248

RETURN ELEVATOR
LOWER
(PRIOR S/N HP87101)

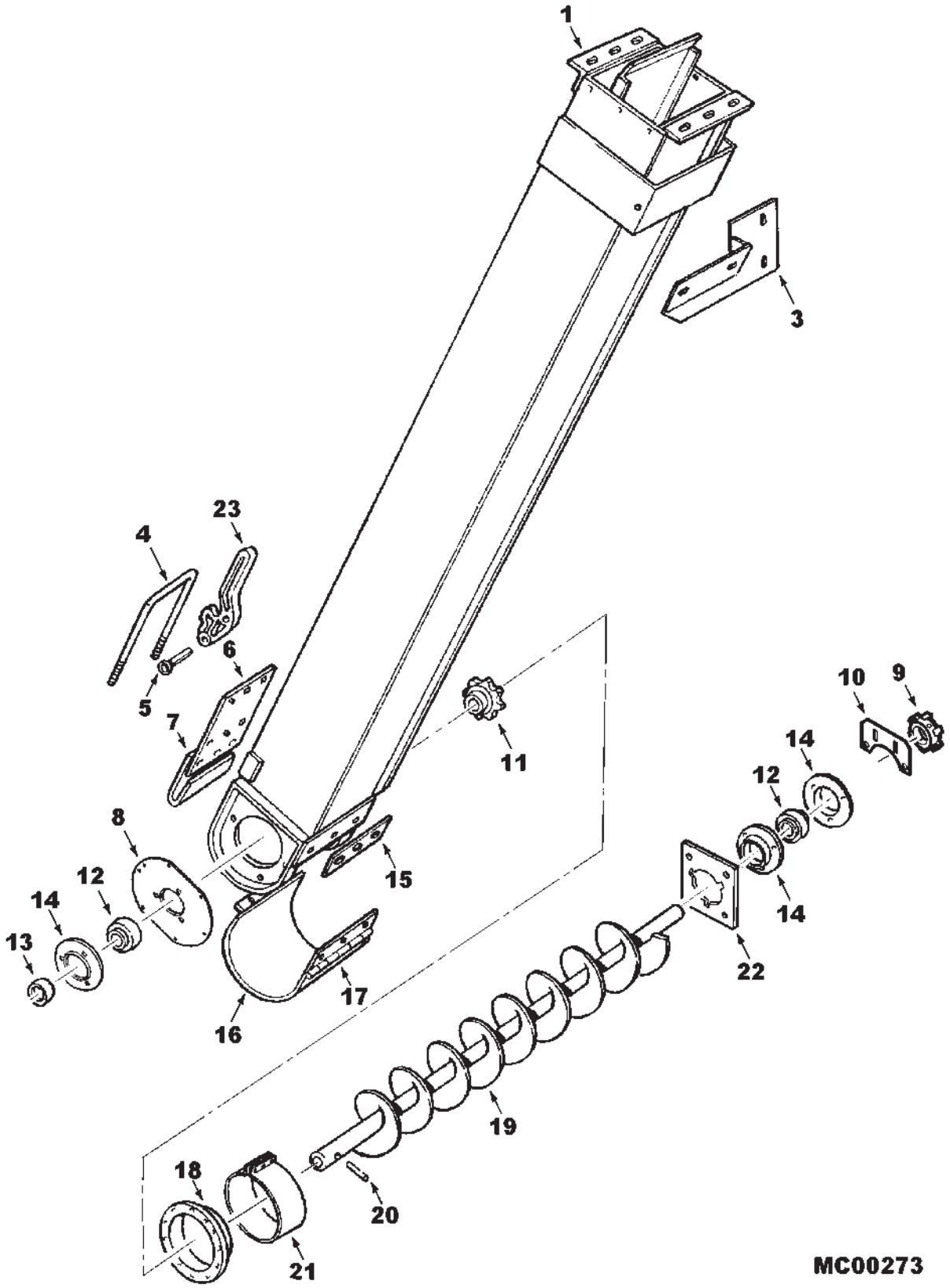

RETURN ELEVATOR
LOWER
(PRIOR S/N HP87101)

ITEM	NUMBER	QTY	DESCRIPTION
1	71396124	1	BODY ASSEMBLY, RETURN ELEVATOR
	70921210	2	CAPSCREW, 3/8-16 X 1 GR5
	70917378	2	WASHER, 3/8, WIDE
	Y704734	2	NUT, HEX FLANGE TOP LOCK, 3/8-16
3	2620021W91	1	SUPPORT ASSEMBLY, RETURN ELEVATOR
	70921210	2	CAPSCREW, 3/8-16 X 1 GR5
	70923114	2	CAPSCREW, 1/2-13 X 1 GR5
	70917378	2	WASHER, 3/8, WIDE
	Y704734	2	NUT, HEX FLANGE TOP LOCK, 3/8-16
	Y704742	2	NUT, HEX FLANGE TOP LOCK, 1/2-13
4	1651910W1	1	U BOLT, LATCH
	70916950	4	NUT, 3/8-16, REG
5	70927523	1	PIN, CLEVIS, 5/16 X 1-1/2
6	2555180W1	1	PLATE, WEAR
	70931316	8	BOLT, RD HD SQ NECK, 1/4-20 X 5/8
	70916964	8	LOCKWASHER, 1/4
	70916622	8	NUT, 1/4-20, REG
7	2555170W1	1	STRIP, SUPPORT
8	1510740W1	1	PLATE, BEARING
9	71390672	1	WHEEL, SENSOR (W/COLLAR)
10	71188145	1	BRACKET, SHAFT MONITOR
	70916950	2	NUT, 3/8-16, REG
11	W9863030	1	SPROCKET, AUGER, 8 TEETH
12	70590704	2	BEARING, BALL, W/O COLLAR
13	K3518	1	COLLAR, 1.125
14	71127313	3	FLANGE, BEARING
	70931350	3	BOLT, RD HD SQ NECK, 3/8-16 X 1
	70931348	3	BOLT, RD HD SQ NECK, 3/8-16 X 3/4
	70916965	3	LOCKWASHER, 3/8
	70916950	6	NUT, 3/8-16, REG
15	2555190W1	1	STRIP, FILLER
	70931317	3	BOLT, RD HD SQ NECK, 1/4-20 X 3/4
	70917377	3	WASHER, 1/4, WIDE
	70916964	3	LOCKWASHER, 1/4
	70916622	3	NUT, 1/4-20 REG
16	2555211W91	1	DOOR ASSEMBLY, AUGER (PLAIN)
	2555231W91	1	DOOR ASSEMBLY, AUGER (PERF.)(ACCESSORY)
17	2555200W1	1	HINGE, DOOR
18	2555130W1	1	FLANGE
	70931316	12	BOLT, RD HD SQ NECK, 1/4-20 X 5/8
	70916964	12	LOCKWASHER, 1/4
	70916622	12	NUT, 1/4-20, REG

CONTINUED

RETURN ELEVATOR
LOWER
(PRIOR S/N HP87101)

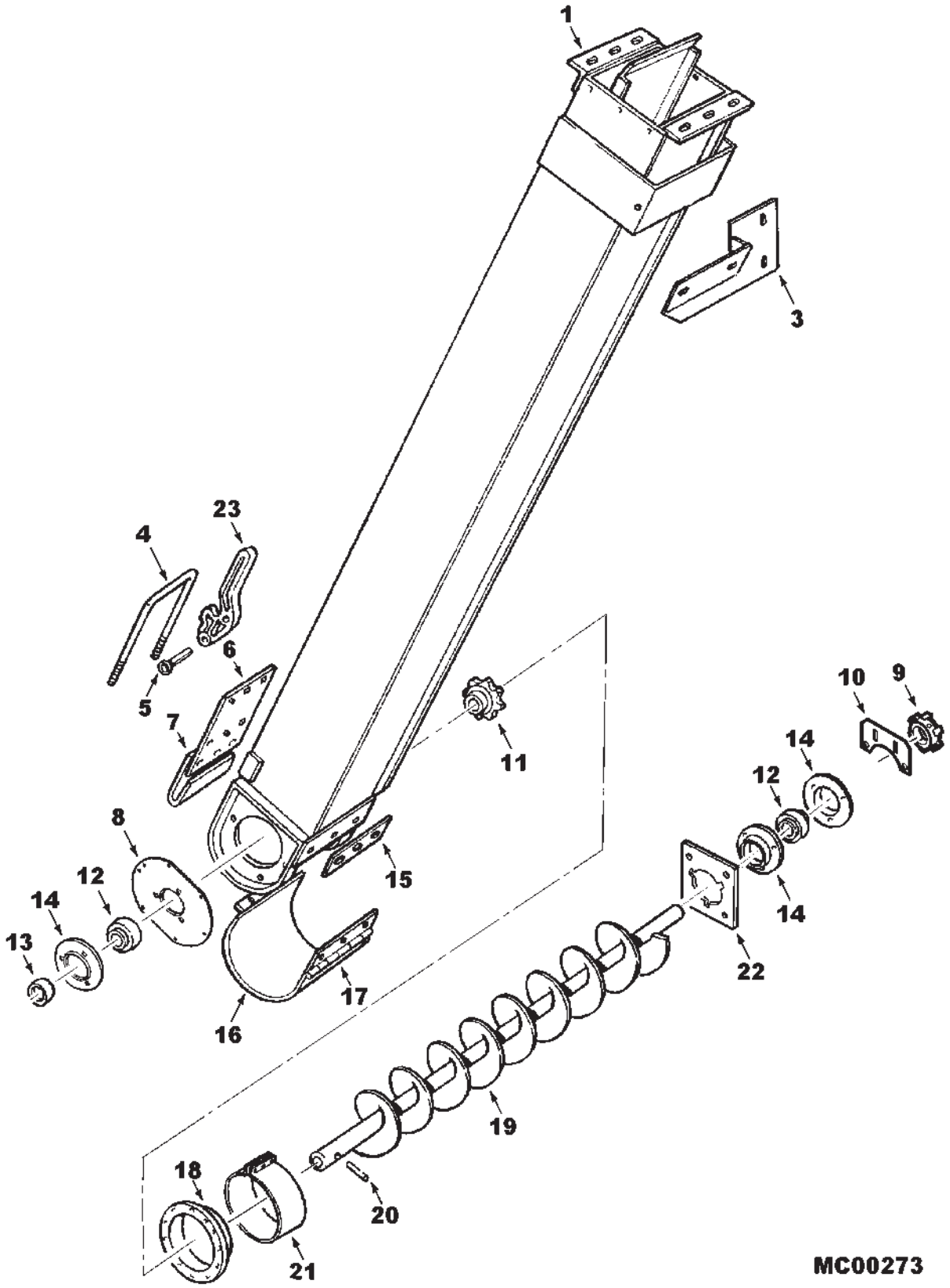

RETURN ELEVATOR
LOWER
(PRIOR S/N HP87101)

ITEM	NUMBER	QTY	DESCRIPTION
19	71389851	1	AUGER WLDMT, BOTTOM (STD)
	71391339	1	AUGER WLDMT, BOTTOM (CHROME)
20	70915500	1	PIN, ROLL, 3/8 X 1-3/4
21	2591531W91	1	CLAMP ASSEMBLY, RETURN ELEVATOR
	373159X1	3	SCREW, PAN HEAD, 5/16-18 X 1-1/2
	70917642	3	WASHER, 5/16, WIDE
	70917356	3	LOCKWASHER, 5/16
	70917372	3	NUT, 5/16-18, REG
22	2636010W1	1	PLATE, RETURN ELEVATOR
	70921965	4	CAPSCREW, 3/8-16 X 3/4 GR5
	Y704734	4	NUT, HEX FLANGE TOP LOCK, 3/8-16
23	1799410W1	1	LATCH, DOOR
	Y705608	1	WASHER, 5/16, NARROW
	70918447	1	PIN, COTTER, 3/32 X 3/4
24	2615233W92	1	CHAIN ASY.(NOT ILL.)(SEE "CHAINS,DRIVE")

MC00273
PR: 252

RETURN ELEVATOR
LOWER
(EFF. S/N HP87101)

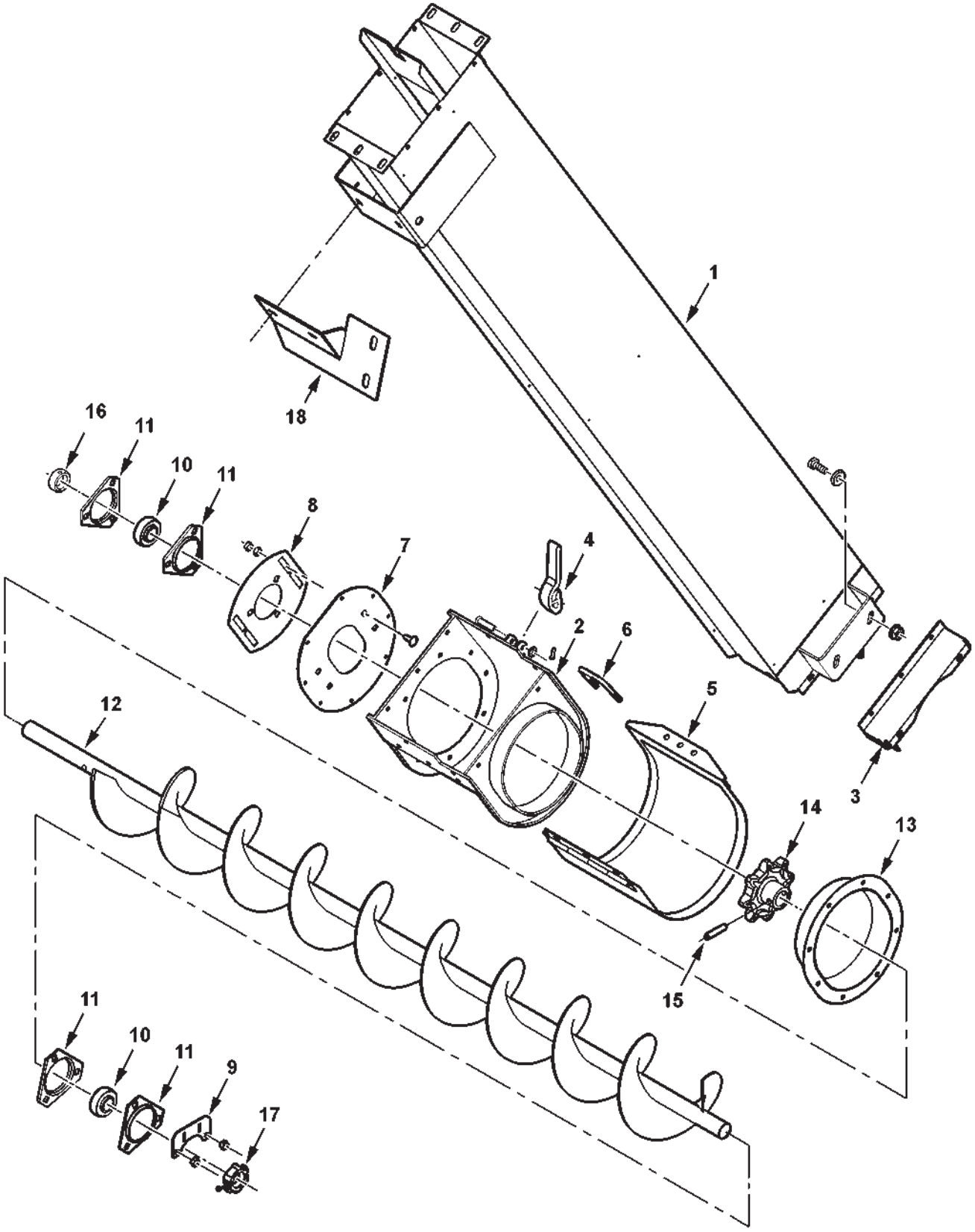

RETURN ELEVATOR
LOWER
(EFF. S/N HP87101)

ITEM	NUMBER	QTY	DESCRIPTION
1	71401212	1	BODY WLMT, RETURN ELEV.
	71409374	1	BODY WLMT, RETURN, RICE(EFF.S/N HP87101)
	70921966	2	CAPSCREW, 3/8-16 X 7/8 GR5
	Y705533	2	WASHER, 3/8, HARDENED
	70928352	2	LOCKNUT, LARGE SERR FLANGE, 3/8-16
2	71399985	1	BOOT WLMT, LOWER RETURNS
	71409380	1	BOOT WLMT, LOWER RET, RICE (S/N HP87101)
	70931316	5	BOLT, RD HD SQ NECK, 1/4-20 X 5/8
	70916964	5	LOCKWASHER, 1/4
	70916622	5	NUT, 1/4-20, REG
3	71399802	1	FILLER WLMT, BOOT, RETURN ELEV.
	71409384	1	FILLER WLMT, BOOT, RICE(EFF.S/N HP87101)
	70931316	3	BOLT, RD HD SQ NECK, 1/4-20 X 5/8
	70931317	4	BOLT, RD HD SQ NECK, 1/4-20 X 3/4
	70916964	7	LOCKWASHER, 1/4
	70916622	7	NUT, 1/4-20, REG
4	1799410W1	1	LATCH, DOOR
	70927523	1	PIN, CLEVIS, 5/16 X 1-1/2
	Y705608	1	WASHER, 5/16, NARROW
	70918447	1	PIN, COTTER, 3/32 X 3/4
5	71401224	1	DOOR WLMT, BOTTOM, W/HINGE
	71410458	1	* DOOR WLMT,PERFORATED (EFF.S/N HP87101)
	71409382	1	DOOR WLMT, BTM, RICE (EFF. S/N HP87101)
	2412670W1	1	HINGE, ELEV. DOOR
	70931317	3	BOLT, RD HD SQ NECK, 1/4-20 X 3/4
	353769X1	3	WASHER, 1/4, HARDENED
	70916964	3	LOCKWASHER, 1/4
	70916622	3	NUT, 1/4-20, REG
6	2476240W1	1	LATCH BOLT, DOOR
	70916950	4	NUT, 3/8-16, REG
7	71401220	1	PLATE, COVER, RETURN BOOT
	71409379	1	PLATE, COVER, BOOT,RICE(EFF.S/N HP87101)
	70931317	8	BOLT, RD HD SQ NECK, 1/4-20 X 3/4
	70916964	8	LOCKWASHER, 1/4
	70916622	8	NUT, 1/4-20, REG
8	71401221	1	PLATE, BRG, RETURN BOOT
	71409370	1	PLATE, BRG, BOOT, RICE (EFF.S/N HP87101)
	70931350	4	BOLT, RD HD SQ NECK, 3/8-16 X 1
	Y705533	4	WASHER, 3/8, HARDENED
	70916965	4	LOCKWASHER, 3/8
	70916950	4	NUT, 3/8-16, REG
9	71188145	1	BRACKET, SHAFT MONITOR
	70916950	2	NUT, 3/8-16, REG
10	70590704	2	BEARING, BALL, 1.125, W/O COLLAR

CONTINUED

MC00381
PR: t05b15n00a0018

RETURN ELEVATOR
LOWER
(EFF. S/N HP87101)

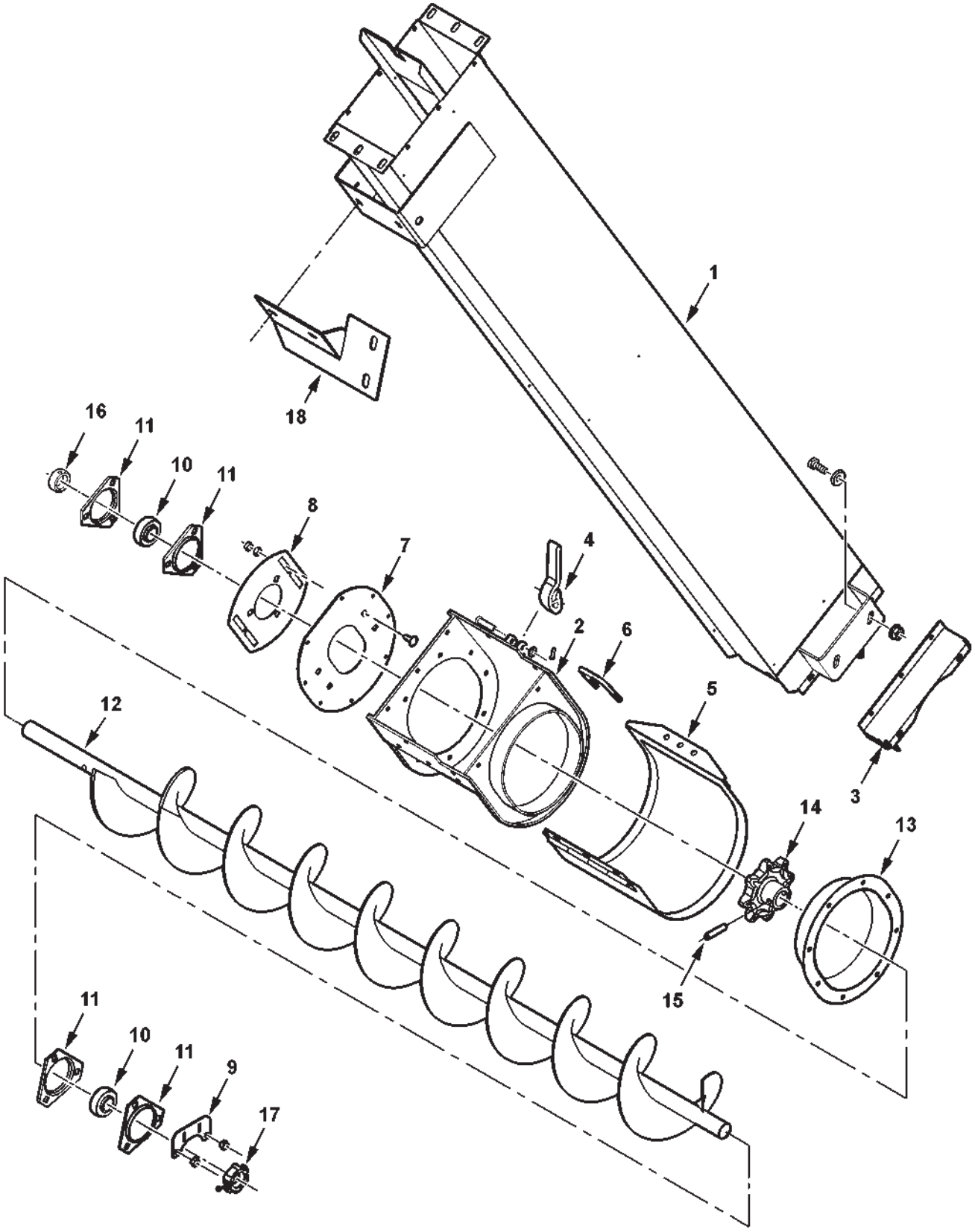

RETURN ELEVATOR
LOWER
(EFF. S/N HP87101)

ITEM	NUMBER	QTY	DESCRIPTION
11	71127313	4	FLANGETTE, BEARING
	Y707042	3	PLOW BOLT, 3/8-16 X 1 GR5 (RH SIDE)
	70916965	3	LOCKWASHER, 3/8
	70916950	3	NUT, 3/8-16, REG
12	71391339	1	AUGER WLDMT, CHROME, BOTTOM RETURN
13	71401208	1	EXTENSION WLMT, RH AUGER TROUGH
	71409371	1	EXT'N WLMT, RH TROUGH, RICE(S/N HP87101)
	7700461	8	BOLT, RD HD SQ NECK, 5/16-18 X 3/4
	70917356	8	LOCKWASHER, 5/16
	70917372	8	NUT, 5/16-18, REG
14	W9863030	1	SPROCKET, BOTTOM AUGER
15	70915500	1	ROLL PIN, 3/8 X 1-3/4
16	K3518	1	COLLAR, 1.125
17	71390672	1	COLLAR WLDMT, SENSING
18	2620021W91	1	SUPPORT ASSEMBLY, RETURN ELEVATOR
	70921210	2	CAPSCREW, 3/8-16 X 1 GR5
	70923114	2	CAPSCREW, 1/2-13 X 1 GR5
	Y705533	2	WASHER, HARD, .406 X .81 X .065 TH
	705541	2	WASHER, HARD, .53 X 1.06 X .13 TH
	Y704734	2	NUT, HEX FLANGE TOP LOCK, 3/8-16
	Y704742	2	NUT, HEX FLANGE TOP LOCK, 1/2-13
19	71406795	1	CHAIN ASY.(NOT ILL.)(SEE "CHAINS,DRIVE")
-	700704010	AR	SILICONE SEALANT, BLACK, 10.2 OZ
-	71407048	AR	* KIT,PERF. ELEV DOORS(EFF. S/N HP87101)
			(ORDER FROM BATAVIA PARTS)

MC00381
PR: t05b15n00a0018

RETURN ELEVATOR
UPPER

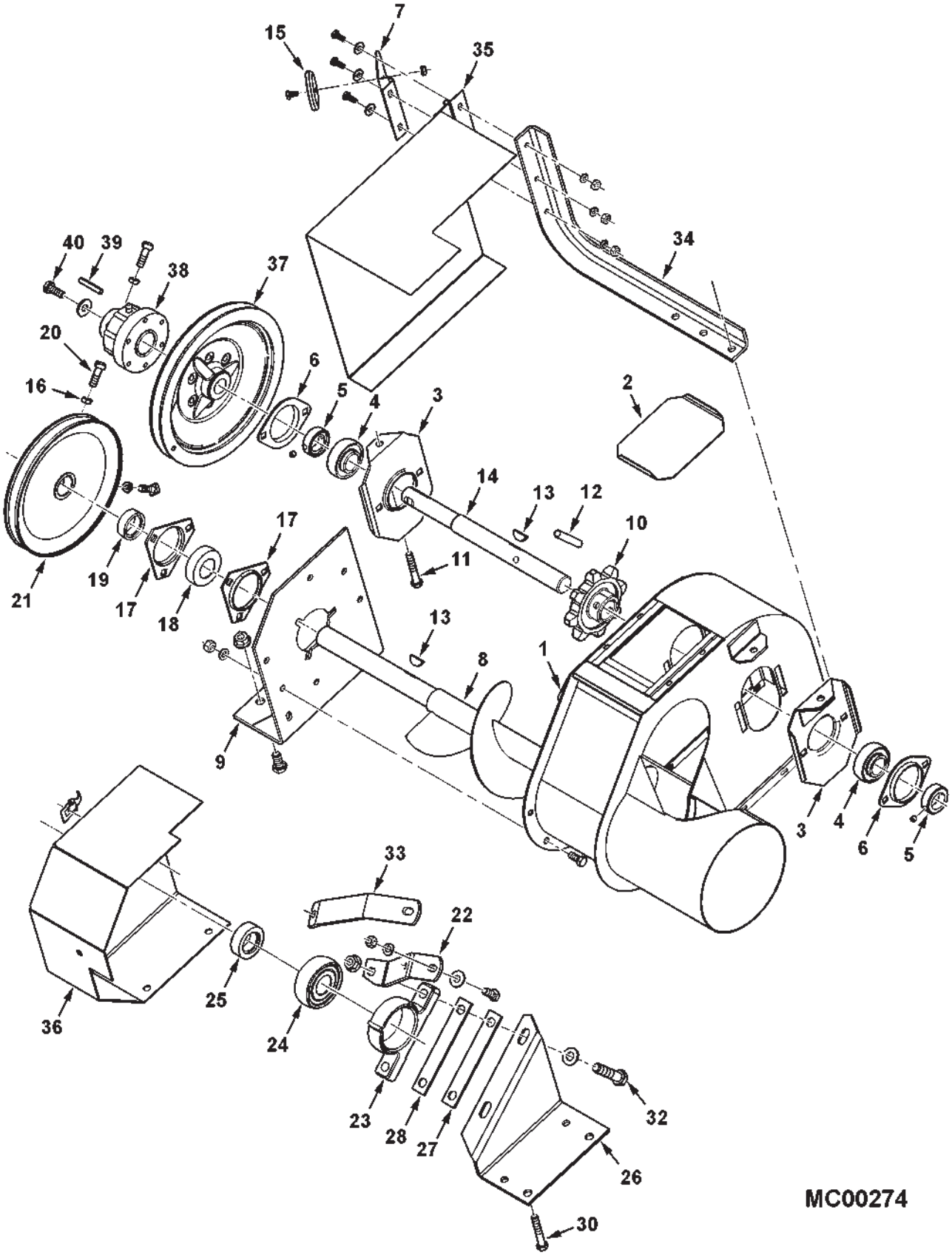

RETURN ELEVATOR
UPPER

ITEM	NUMBER	QTY	DESCRIPTION
1	71396110	1	HEAD ASY., RETURN
	70931317	6	BOLT, RD HD,SHT SQ NK, 1/4-20 X 3/4
	705012	6	LOCKWASHER, 1/4
	70917377	6	WASHER, 1/4, WIDE
	70916622	6	NUT, 1/4-20, REG
	70921210	6	CAPSCREW, 3/8-16 x 1 GR5
	Y705533	6	WASHER, 3/8, HARDENED
	Y704734	6	NUT, HEX FLANGE TOP LOCK, 3/8-16
2	2441970W1	1	DOOR, INSPECTION
3	1510831W91	2	PLATE ASSEMBLY, SUPPORT
4	70590704	2	BEARING, BALL, W/O COLLAR
5	K3518	2	COLLAR, BEARING
6	Y710293	2	FLANGE, BEARING
	70931350	4	BOLT, RD HD,SHT SQ NK, 3/8-16 X 1
	70916965	4	LOCKWASHER, 3/8
	70916950	4	NUT, 3/8-16, REG
7	71397152	1	BRACKET, MAGNET
8	71385680	1	TOP AUGER ASSEMBLY
9	2553251W91	1	SUPPORT ASSEMBLY, BEARING
	70921966	6	CAPSCREW, 3/8-16 x 7/8 GR5
	70916965	6	LOCKWASHER, 3/8
	70916950	6	NUT, 3/8-16, REG
10	9863040W1	1	SPROCKET, CONVEYOR DRIVE, 8 TEETH
11	873141	2	CAPSCREW, FULL THRD, 3/8-16 X 2-1/2
	70916950	2	NUT, 3/8-16, REG
	Y704734	2	NUT, HEX FLANGE TOP LOCK, 3/8-16
12	70915500	1	PIN, ROLL, 3/8 X 1-3/4
13	29780X	2	KEY, WOODRUFF, 1/4 X 1
14	71390185	1	SHAFT, HEAD, 11 1/2
15	71397153	1	CUP ASY., MAGNETIC
	70921958	1	CAPSCREW, 1/4-20 X 1/2
	70934479	1	NUT, HEX TOP LOCK, 1/4-20
16	70917421	2	JAM NUT, HEX, 3/8-16
17	71127313	2	FLANGETTE, BEARING
	768432	3	BOLT, RD HD SQ NECK, 3/8-16 X 7/8
	70916965	3	LOCKWASHER, 3/8
	70916950	3	NUT, 3/8-16, REG
18	71308984	1	BEARING, BALL W/COLLAR
19	700717212	AR	COLLAR, BEARING
20	70923530	2	SETSCREW, SQ HEAD, 3/8-16 X 1-1/4
21	2553320W1	1	PULLEY, DRIVEN, 9.0 DIA
22	71384922	1	STRAP, BEARING
	70921966	1	CAPSCREW, 3/8-16 X 7/8 GR5
	70917378	1	WASHER, 3/8, WIDE
	70916965	1	LOCKWASHER, 3/8
	70916950	1	NUT, 3/8-16, REG
23	1605510W1	1	HOUSING, BEARING
24	10033	1	BEARING, BALL (W/O COLLAR)
25	7710551	1	COLLAR

CONTINUED

RETURN ELEVATOR
UPPER

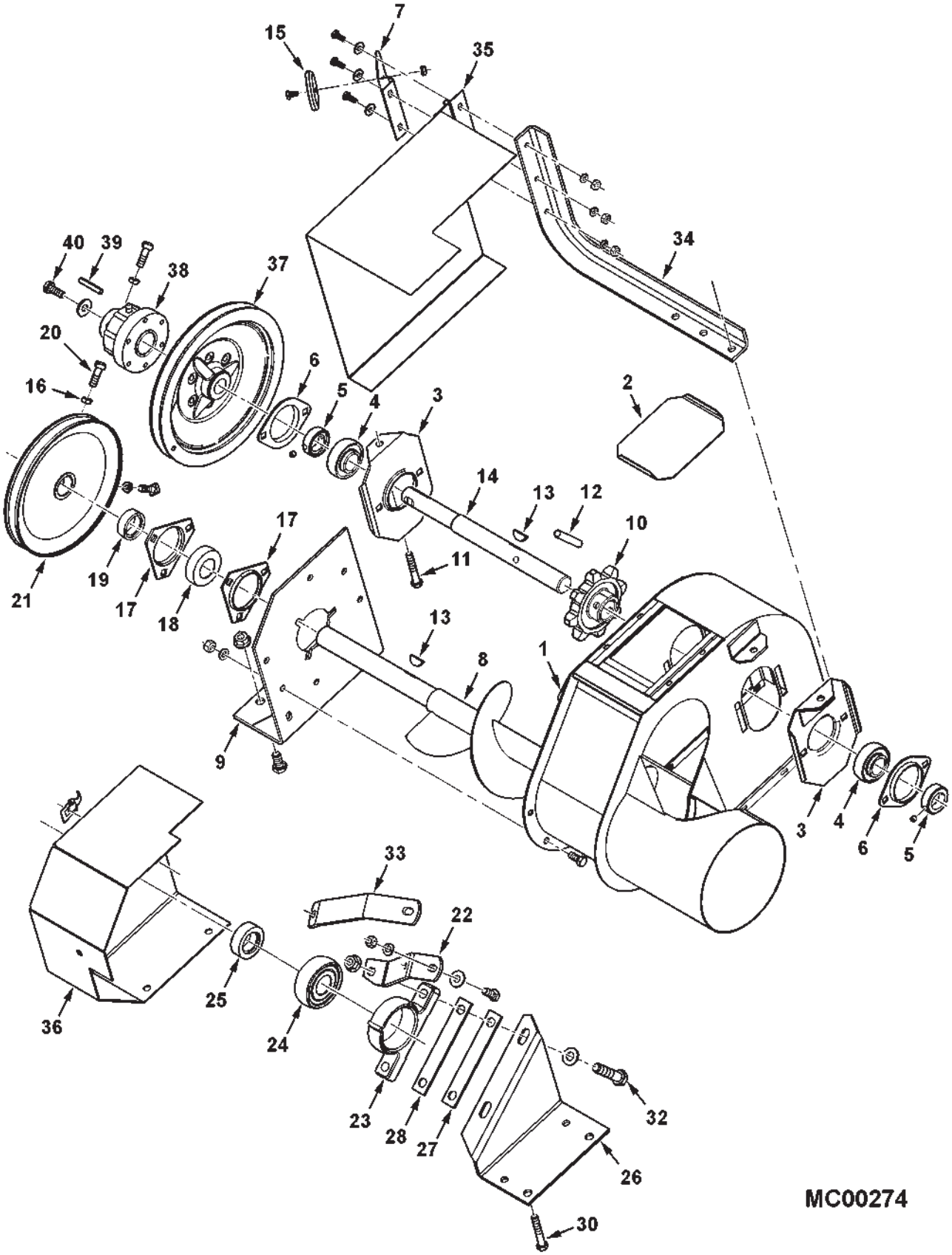

RETURN ELEVATOR
UPPER

ITEM	NUMBER	QTY	DESCRIPTION
26	2553271W92	1	PLATE ASSEMBLY
27	2553300W1	AR	SHIM, .060 TH
28	2553290W1	AR	SHIM, .125 TH
30	70923114	2	CAPSCREW, 1/2-13 X 1 GR5
	Y704742	2	NUT, HEX FLANGE TOP LOCK, 1/2-13
32	70922645	2	CAPSCREW, 1/2-13 X 2-1/4 GR5
	Y705624	2	WASHER, 1/2 NARROW
	Y704742	2	NUT, HEX FLANGE TOP LOCK, 1/2-13
33	71410879	1	BRACE STRAP, TOP (EFF. S/N HR87101)
	70920415	1	CAPSCREW, 3/8-16 X 1-1/4 GR5
	Y705533	1	WASHER, 3/8, HARDENED
	Y704734	1	NUT, HEX FLANGE TOP LOCK, 3/8-16
34	101158M1	1	ANGLE, SHIELD
35	71385690	1	UPPER SHIELD ASY.
	7703457	3	CAPSCREW, 1/4-20 X 3/4
	353769X1	3	WASHER, 1/4, HARDENED
	70916964	3	LOCKWASHER, 1/4
	70916622	3	NUT, 1/4, REG
36	71387325	1	LOWER SHIELD ASY.
	70921210	2	CAPSCREW, 3/8-16 X 1 GR5
	Y704734	2	NUT, HEX FLANGE TOP LOCK, 3/8-16
	70537291	1	SNAP, FASTENER
	700717635	1	RIVET
37	71385802	1	SHEAVE ASY.(INCL. BUSHING & LUBE FTG)
	70921332	6	CAPSCREW, 5/16-18 X 3/4 GR5
	70917356	6	LOCKWASHER, 5/16
	71157144	1	BUSHING
	13811X	1	LUBE FTG, STR, 1/4-28 TAPER THD
38	71380994	1	LIMITER, TORQUE
	70923326	2	SETSCREW, SQ HD, 3/8-16 X 1
	70917421	2	JAM NUT, 3/8-16
39	61085	1	KEY, SQUARE, 1/4 X 1-1/2
40	70921965	1	CAPSCREW, 3/8-16 X 3/4 GR5
	Y705533	1	WASHER, 3/8, HARDENED

MC00274
PR: 256

STAINLESS STEEL ELEVATOR PACKAGE
RICE

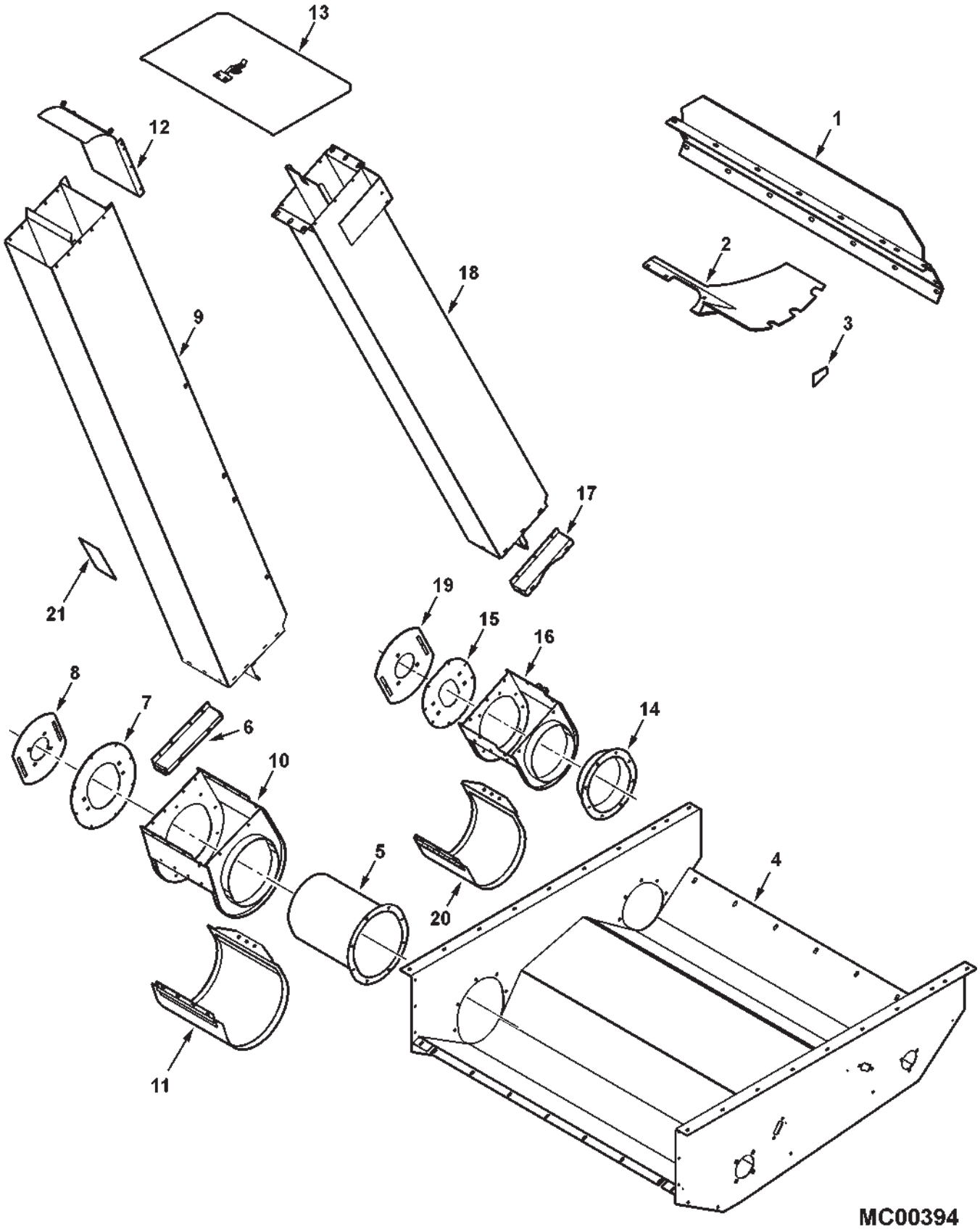

STAINLESS STEEL ELEVATOR PACKAGE

RICE

ITEM	NUMBER	QTY	DESCRIPTION
-	71409418	AR	PACKAGE, STAINLESS STEEL ELEVATOR (INCLUDES FOLLOWING)
1	71409282	1	FLOOR WLMT, INLET
2	71409287	1	PATCH WLMT, RETURN INLET
3	71409284	6	CAP PLATE, CYL. BAR END
4	71403891	1	AUGER HOUSING WLMT (PRIOR S/N HR87101)
5	71409381	1	EXTENSION WLDMT, RH GRAIN AUGER TROUGH
6	71409269	1	FILLER WLDMT, BOOT, GRAIN ELEV.
7	71409267	1	COVER PLATE, GRAIN ELEV. BOOT
8	71409266	1	PLATE, BEARING, GRAIN ELEV. BOOT
9	71409271	1	BODY WLDMT, GRAIN ELEV.
10	71409268	1	BOOT WLDMT, GRAIN ELEV.
11	71409265	1	LOWER DOOR WLMT, GRAIN ELEV.
12	71408514	1	BACK PLATE WLMT, ELEV. HEAD
13	71409402	1	COVER ASY, GRAIN BIN LOADER
14	71409371	1	EXTENSION WLMT, RETURN AUGER TROUGH
15	71409379	1	COVER PLATE, RETURN ELEV. BOOT
16	71409380	1	BOOT WLMT, RETURN ELEV.
17	71409384	1	FILLER WLMT, RETURN ELEV. BOOT
18	71409374	1	BODY WLMT, RETURN ELEV., RICE
19	71409370	1	PLATE, BEARING, RETURN ELEV. BOOT
20	71409382	1	DOOR WLMT, RETURN ELEV.
21	111743W1	2	DECAL, WARNING, ELEVATOR
22	71379129	2	DECAL, WARNING, FALLING OFF (NOT ILLUS.)
23	71379126	1	DECAL, WARNING, HIGH PRESSURE FLUID (NOT ILLUS.)
24	71394175	1	DECAL, VALVE STACK (NOT ILLUS.)

MC00394
PR: t05e25l14b0002

RETURN ELEVATOR DRIVE

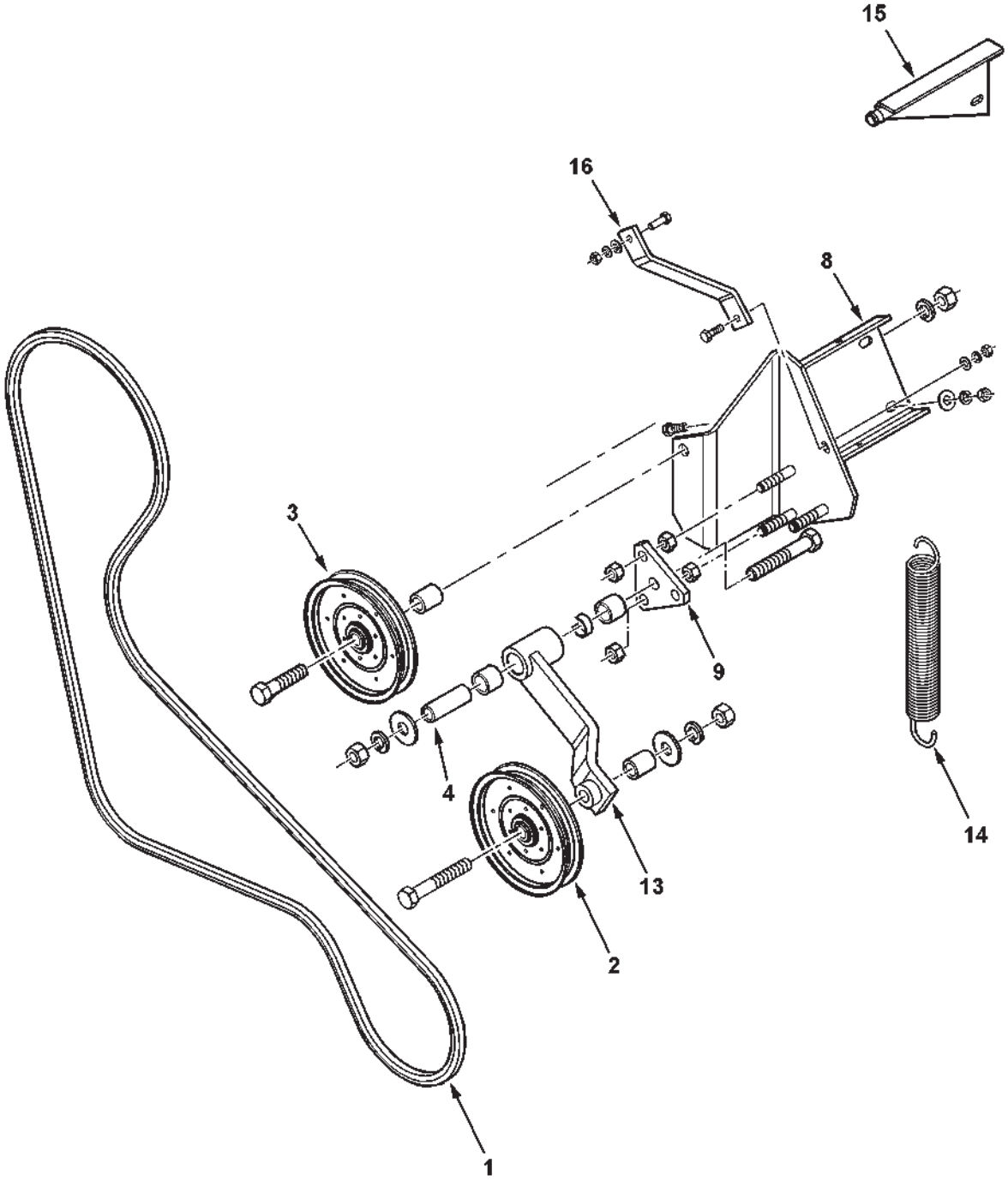

RETURN ELEVATOR DRIVE

ITEM	NUMBER	QTY	DESCRIPTION
1	71385801	1	BELT, RETURN ELEVATOR DRIVE
2	2447080W1	1	SHEAVE IDLER
	70925703	1	CAPSCREW, 5/8 X 4.0
	70918432	1	WASHER, 5/8 NOM - 10 GA
	6136964	1	SPACER
	70917373	1	LOCKWASHER, 5/8
	70932665	1	NUT, 5/8-11
3	2447080W1	1	SHEAVE IDLER
	7701683	1	CAPSCREW, 5/8-11 X 3
	6136964	1	SPACER
	70932665	2	NUT, 5/8-11
	70917373	2	LOCKWASHER, 5/8
4	71356061	1	SLEEVE, HARD, IDLER PIVOT
	70925703	1	CAPSCREW, 5/8 X 4.0
	70918432	2	WASHER, 5/8 NOM - 10 GA
	70917373	1	LOCKWASHER, 5/8
	70932665	1	NUT, 5/8-11
8	71385694	1	SUPPORT WELDMENT
	70920415	2	CAPSCREW, 3/8-16 X 1-1/4
	70917378	2	WASHER, 3/8
	70916965	2	LOCKWASHER, 3/8
	70916950	2	NUT, 3/8-16
9	71182840	1	PLATE MOUNTING
	70913744	6	NUT, JAM 1/2-13
13	71385697	1	IDLER, ARM W/BUSHINGS
	71356060	2	BUSHING
	71197117	1	SPACER
	70915019	1	FITTING LUBE 1/4-28 X 90 DEG.
	2634840W1	1	DECAL, GREASE (10HR)(PRIOR HR87101)
14	1579720W1	1	SPRING
15	2636631W91	1	ANCHOR WELDMENT, SPRING
	70920415	2	CAPSCREW, 3/8-16 X 1-1/4
	70917378	2	WASHER, 3/8
	70916965	2	LOCKWASHER, 3/8
	70916950	2	NUT, 3/8-16
16	71384912	1	BRACE
	70921333	2	CAPSCREW, 5/16-18 X 1.0
	700709602	2	WASHER, 5/16
	70917356	2	LOCKWASHER, 5/16
	70917372	2	NUT, 5/16-18

71385700
PR: 260

UNLOADING AUGER
LOWER

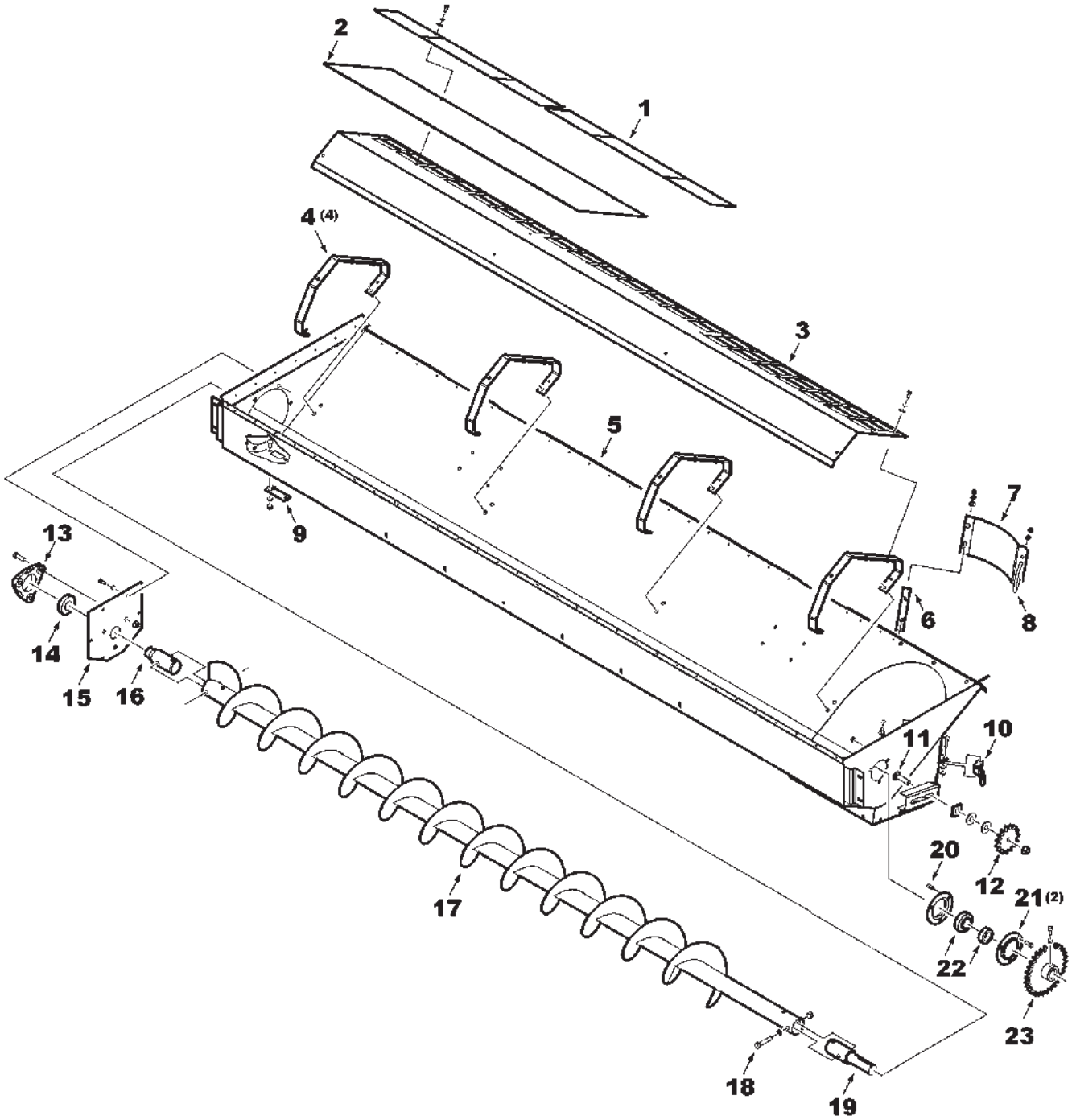

MC00276

UNLOADING AUGER
LOWER

ITEM	NUMBER	QTY	DESCRIPTION
1	71391975	2	PLATE, SLIDING COVER
	372729X1	4	SCREW, SELF-TAP 5/16-18 X 3/4
	70917356	4	LOCKWASHER, 5/16
	70917642	4	WASHER, FLAT 5/16
2	71396662C	1	THROTTLE, CROSS AUGER
3	71391974	1	COVER, AUGER
	372729X1	12	SCREW, SELF-TAP 5/16-18 X 3/4
	70917356	12	LOCKWASHER, 5/16
4	71390364	4	BRACKET, COVER
	70927477	12	SCREW, SELF-TAP 5/16-18 X 1.0
5	71400922C	1	TROUGH & BOOT WLDMT
6	2476230W1	1	SPACER
7	2476203W1C	1	DOOR ASY.
	68759	2	SCREW, RHSSN 3/8-16 X 1.0
	70917378	2	WASHER, FLAT 3/8
	70916965	2	LOCKWASHER, 3/8
	70916950	2	HEXNUT, 3/8-16
8	2476240W1	1	LATCH, BOLT
	70916950	4	HEXNUT, 3/8-16
9	108202W1	1	STRAP
	360503X1	2	SCREW, RHSSN 5/16-18 X 1.0
	70917642	2	WASHER, FLAT 5/16
	70917356	2	LOCKWASHER, 5/16
	70917372	2	HEXNUT, 5/16-18
10	1799410W1	1	LATCH
	70927523	1	PIN, OVAL HD, 5/16 X 1-1/2
	70918265	1	WASHER, FLAT 5/16
	70918447	1	PIN, COTTER 3/32 X 3/4
11	70926694	1	BOLT, RD HD SQ NK, 5/8-11 X 2-1/2
	510060W1	1	SPACER
	70918432	2	WASHER, FLAT 5/8
	700703922	1	LOCKNUT, 5/8-11
12	71378873	1	SPROCKET, IDLER 15T
13	1508070W1	1	HOUSING, BEARING
	701235	3	CAPSCREW, 1/2-13 X 1-1/2
	Y704742	3	LOCKNUT, 1/2-13
14	831822M1	1	BEARING
15	71391135	1	PLATE, BEARING
	372729X1	6	SCREW, SELF-TAP 5/16-18 X 3/4
	70917356	6	LOCKWASHER, 5/16
16	71391140	1	SHAFT, STUB (RH)
17	71392675	1	AUGER, CROSS (STD)
	71394318	1	AUGER, CROSS (CHROME)
18	70923320	4	CAPSCREW, 1/2-13 X 3.0
	71354345	4	SPACER
	Y704742	4	LOCKNUT, 1/2-13

CONTINUED

UNLOADING AUGER
LOWER

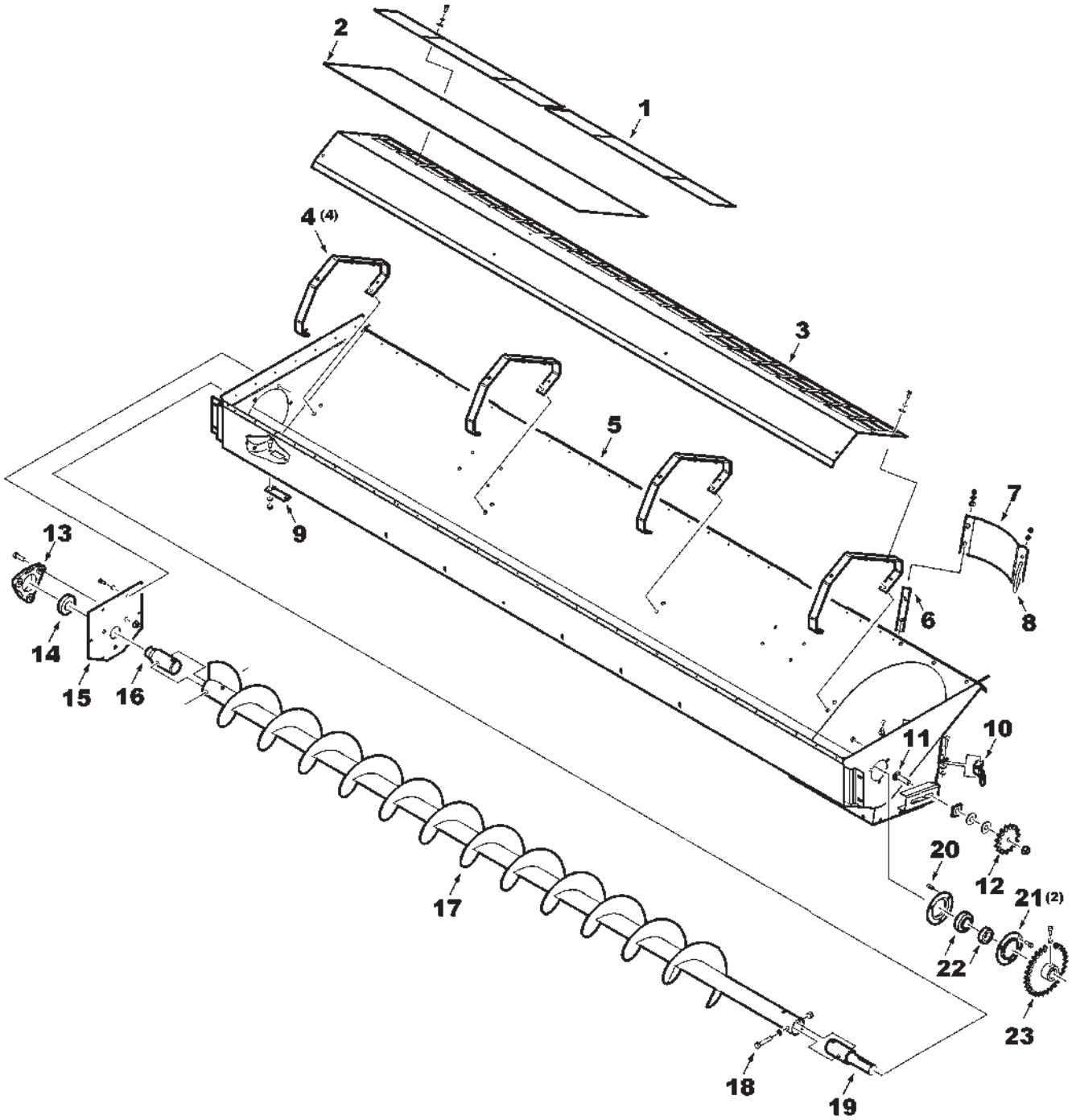

MC00276

UNLOADING AUGER
LOWER

ITEM	NUMBER	QTY	DESCRIPTION
19	71391141	1	SHAFT, STUB (LH)
20	Y761312	1	KEY, 5/16 X 2-1/2
21	700717509	2	FLANGE, BEARING
	68759	3	SCREW, RHSSN 3/8-16 X 1.0
	70916950	3	HEXNUT, 3/8-16
	70916965	3	LOCKWASHER, 3/8
22	50021	1	BEARING, BALL W/COLLAR
	70527219	1	COLLAR, BRG., 1-3/8 ID X 2-3/16 OD
23	71391133	1	SPROCKET, 42T
	70923326	2	SETSCREW, 3/8-16 X 1.0
	70917421	2	JAMNUT, 3/8-16

NOTE:FOR CHAIN SEE DRIVE CHAINS LISTING

MC00276
PR: 262

UNLOADING AUGER
VERTICAL
PRIOR S/N HN87101

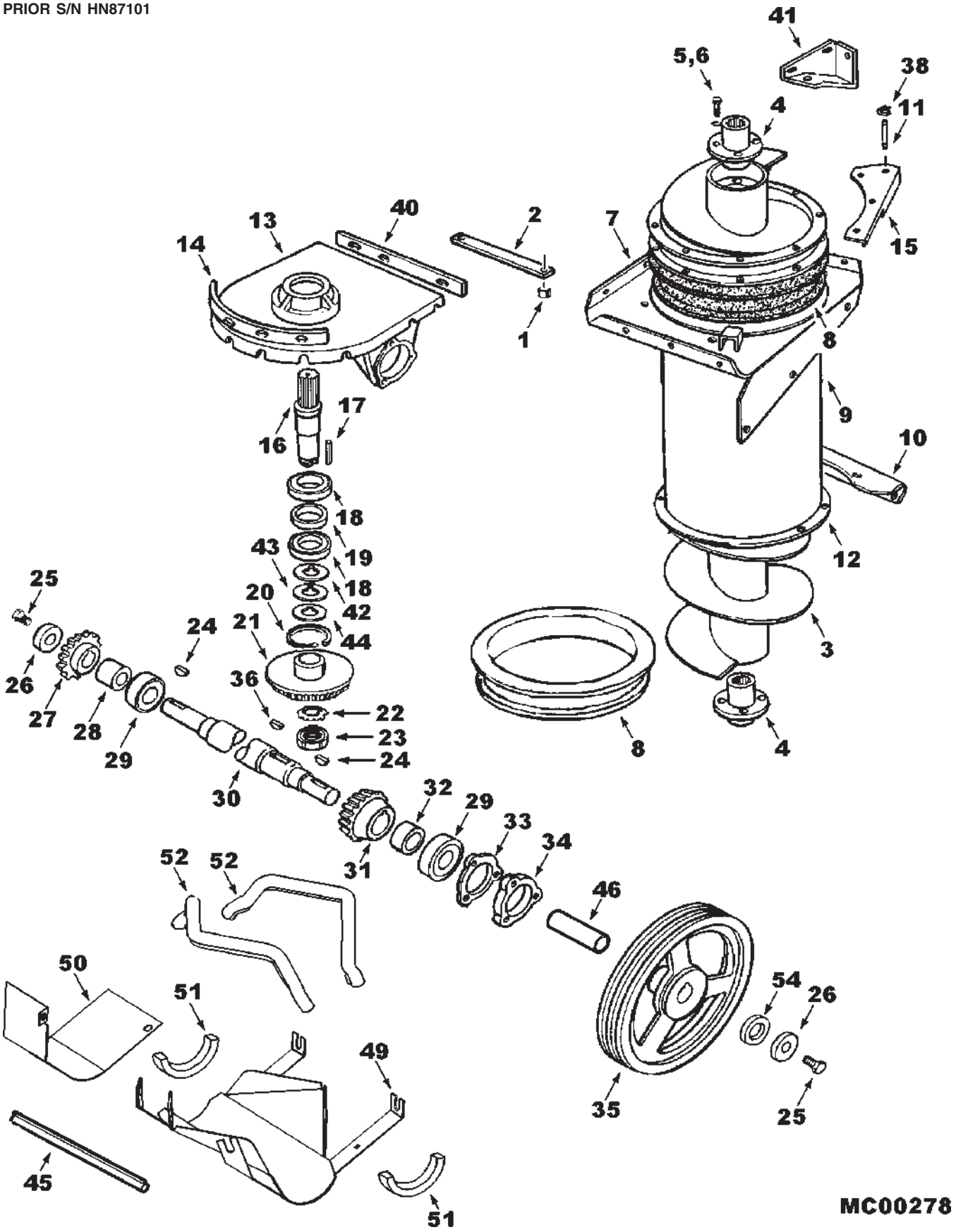

UNLOADING AUGER
VERTICAL
PRIOR S/N HN87101

ITEM	NUMBER	QTY	DESCRIPTION
1	1786320W1	4	SPACER, .49 X .68 OD X .59 LG
2	2493000W1	2	STRAP, HOLD DOWN, 1 X 12 X 3/8
	70921971	4	CAPSCREW, 3/8-16 X 1-3/4
	70918431	4	WASHER, 1/2 WIDE
	Y704734	4	NUT, HEX FLNG TOP LOCK, 3/8-16
3	71390926	1	AUGER ASSEMBLY, UNLOADER
	71391336	1	AUGER ASSEMBLY, UNLOADER (CHROME)
4	2526120W1	2	HUB, VERTICAL AUGER
5	70920328	8	CAPSCREW, 1/2-13 X 1-1/2 GR5
6	Y705046	8	LOCKWASHER, 1/2
7	71390360	1	GUIDE ASSEMBLY
	70921333	6	CAPSCREW, 5/16-18 X 1 GR5
	Y704726	6	NUT, HEX FLNG TOP LOCK, 5/16-18
	70921210	6	CAPSCREW, 3/8-16 X 1 GR5
	Y704734	6	NUT, HEX FLNG TOP LOCK, 3/8-16
8	104021W1	2	STRIP, WEAR
9	112977W92C	1	TUBE WLDMT, VERTICAL, UNLOADER
10	2601260W1	1	BRACKET, TUBE SUPPORT
	70923220	3	BOLT, RD HD SQ NK, 3/8-16 X 1-1/4
	70917378	3	WASHER, 3/8 WIDE
	Y704734	3	NUT, HEX FLNG TOP LOCK, 3/8-16
11	108575W1	2	PIN, 5/8 X 2 3/4
12	2438160W1	1	RING, LOWER GUIDE
	70931350	2	BOLT, RD HD SQ NK, 3/8-16 X 1 GR5
	70931942	2	SPEED NUT, 3/8
	Y704734	2	NUT, HEX FLNG TOP LOCK, 3/8-16
13	2486140W1	1	HOUSING, VERTICAL AUGER
14	71379825	AR	SHIM, RADIUS, .060 TH (QTY 2 AVE.)
	7701055	2	CAPSCREW, 3/8-16 X 1-3/4
	70921969	12	CAPSCREW, 3/8-16 X 1-1/2
	70917378	28	WASHER, 3/8 WIDE
	Y704734	14	NUT, HEX FLNG TOP LOCK, 3/8-16
15	112716W92	1	BRACKET ASY, CYLINDER PIVOT
	70921176	4	CAPSCREW, 1/2-13 X 1-1/4
	Y704742	4	NUT, HEX FLNG TOP LOCK, 1/2-13
16	2486150W1	1	SHAFT, OUTPUT
17	70903082	1	KEY, SQUARE, 3/8 X 3/8 X 2
18	352976X1	2	BEARING, BALL
19	2486160W1	1	SPACER, 1.59 X 2.0 X .67 LG
20	70925997	1	RING, INTERNAL SNAP
21	2486170W2	1	GEAR, UNLOADER, 35T
22	70932997	1	LOCKWASHER, EXTERNAL TOOTH, 1-3/8
23	70932996	1	LOCKNUT, BALL BEARING, 1-3/8-18UNEF
24	355485X1	2	KEY, WOODRUFF, 5/16 X 2-1/8
25	70921176	2	CAPSCREW, 1/2-13 X 1-1/4 GR5
26	2485470W1	2	WASHER, 17/32 ID X 2 X 3/8 TH
27	71391131	1	SPROCKET WLDMT, DRIVE, 15 TEETH

CONTINUED

UNLOADING AUGER
VERTICAL
PRIOR S/N HN87101

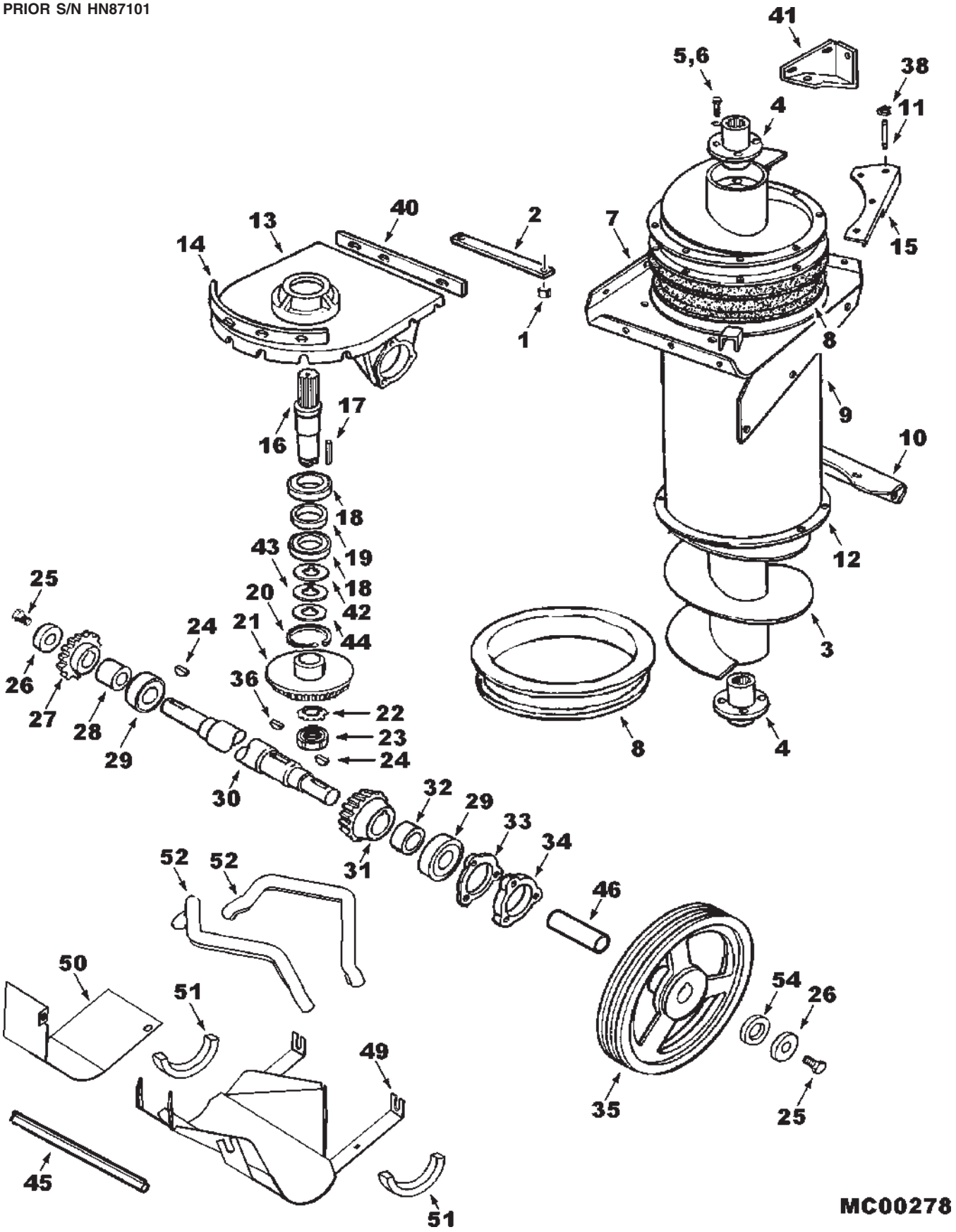

UNLOADING AUGER
VERTICAL
PRIOR S/N HN87101

ITEM	NUMBER	QTY	DESCRIPTION
28	71397246	1	SPACER, 1.44 ID X 1.75 OD X 1.82 LG
29	354920X1	2	BEARING, BALL
30	71392781	1	SHAFT, INPUT - UNLOADER
31	2460840W2	1	GEAR, PINION, 16T
32	2493870W1	1	SPACER, 1.52 ID X 1.88 OD X .763 LG
33	1500050W1	AR	SHIM, RED, PLASTIC, .002
33	1500060W1	AR	SHIM, BLUE, PLASTIC, .005
33	1500070W1	AR	SHIM, BROWN, PLASTIC, .010
34	2452270W1	1	CAP, BEARING
	70923701	1	CAPSCREW, 3/8-16 X 2
	70922130	2	CAPSCREW, 3/8-16 X 2-1/4
	Y704734	3	NUT, HEX FLNG TOP LOCK, 3/8-16
35	71390860	1	PULLEY, VERTICAL AUGER
36	W937119	1	KEY, WOODRUFF, 3/8 X 2 1/8
38	377690X1	4	RING, RETAINING
40	71379824	AR	SHIM, SIDE, UNLDR BOOT, .060 (2 AVE.)
41	112720W91	1	BRACKET WLMT,CYL.(PRIOR MID S/N HN87---)
	71403919	1	BRACKET WLMT, CYL.(EFF. MID S/N HN87---)
	70921210	1	CAPSCREW, 3/8-16 X 1 GR5
	70921969	1	CAPSCREW, 3/8-16 X 1-1/2 GR5 (PRIOR MID S/N HN87---)
	70920415	1	CPSCR, 3/6-16 X 1-1/4 GR5 (EFF. MID S/N HN87---)
	70917378	2	WASHER, 3/8 WIDE
	Y704734	2	NUT, HEX FLANGE TOP LOCK, 3/8-16
	701235	1	CAPSCREW, 1/2-13 X 1-1/2 GR5
	70923114	1	CAPSCREW, 1/2-13 X 1 GR5
	Y704742	2	NUT, HEX FLANGE TOP LOCK, 1/2-13
42	104740W1	AR	SHIM, .005
43	104741W1	AR	SHIM, .010
44	104742W1	AR	SHIM, .020
45	71395983	1	SEAL, CHAIN COVER
46	71392782	1	SPACER, SLEEVE
49	71391435	1	COVER WLDMT, UNLOADER GEARS
50	71393854	1	COVER, CHAIN
	7700461	3	BOLT, RD HD SQ NK, 5/16-18 X 3/4
	70917372	3	NUT, 5/16-18 REG
	70917356	3	LOCKWASHER, 5/16
	700709602	3	WASHER, 5/16 WIDE
51	71391441	2	FOAM STRIP-ADHESIVE BACK
52	71393916	2	SEAL, GEAR COVER
53	-----	1	CHAIN, UNL DRIVE (SEE "CHAINS, DRIVE")
54	-----	1	SPACER (670 ONLY)
-	79014728	AR	GREASE
-	70937715	AR	LUBE, DRY FILM, 3M-TFE, SPRAYON

MC00278
PR: 264

UNLOADING AUGER
VERTICAL
EFFECTIVE S/N HN87101

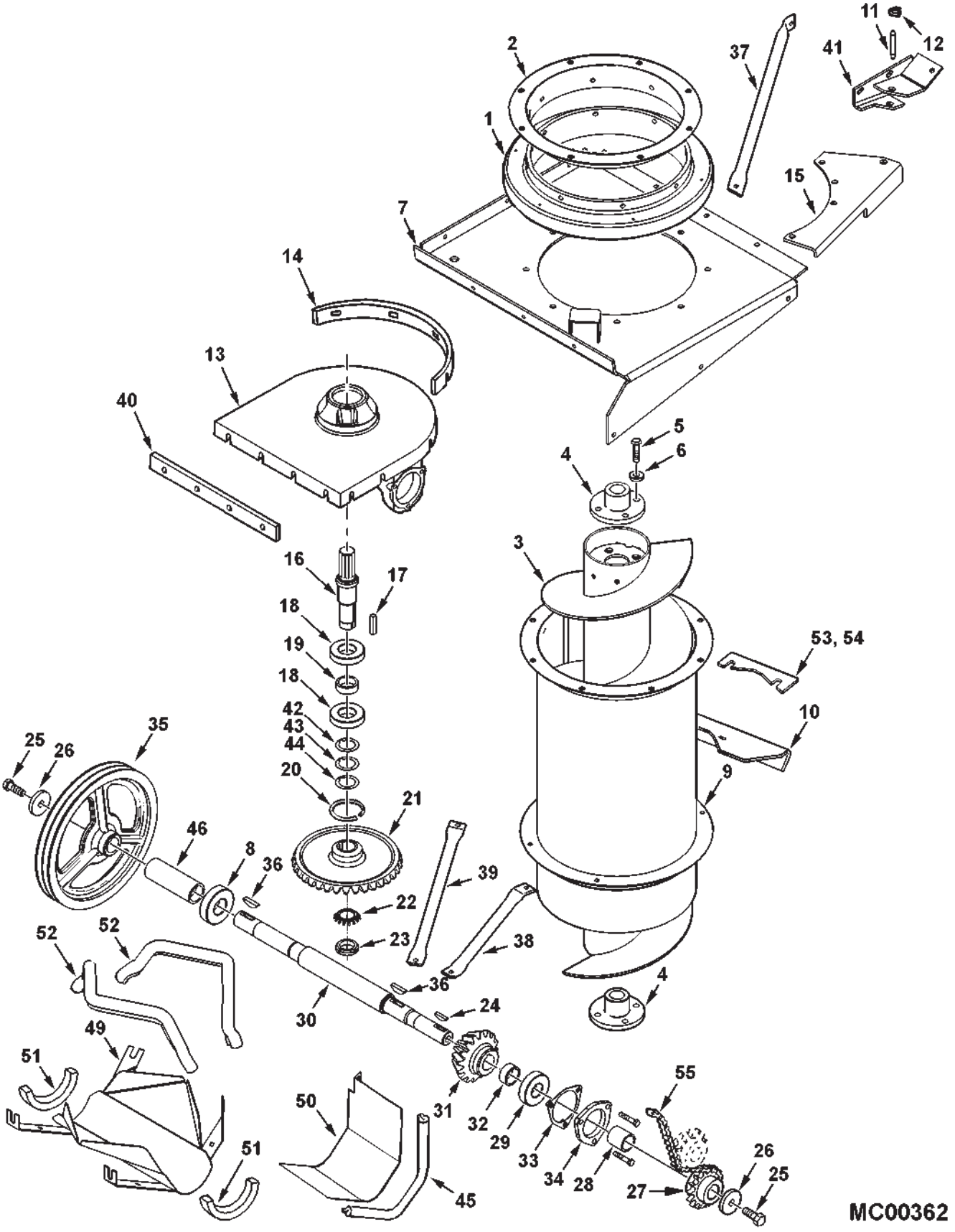

UNLOADING AUGER
VERTICAL
EFFECTIVE S/N HN87101

ITEM	NUMBER	QTY	DESCRIPTION
1	71399662P	1	SWIVEL ASY, UNLOADER
	-----	1	RACE, SWVL, OUTER (ORDER SWIVEL ASY)
	71382933	1	RACE, SWIVEL, INNER
	70917580	AR	BALL, 1/2" (FULL QTY 112)
	77057	5	LUBE FTG, 90 DEG ELB, 1/4-28 TAPER
	70921176	8	CAPSCREW, 1/2-13 X 1-1/4 GR5
	Y705046	8	LOCKWASHER, 1/2
2	71399661	1	RING, ELBOW ADAPTER
	70934842	9	SCR,HEX SCKT FLAT HD, 3/8-16 X 1-1/4
	70916950	9	NUT, 3/8-16 REG
3	71399858	1	AUGER ASY, UNLOADER, W/HUBS
	71399861	1	AUGER ASY, CHROME, UNLOADER, W/HUBS
4	2526120W1	2	HUB, VERTICAL AUGER
5	70920328	8	CAPSCREW, 1/2-13 X 1-1/2 GR5
6	Y705046	8	LOCKWASHER, 1/2
7	71399656	1	GUIDE WLDMT, UNLOADER, UPPER
	70921333	6	CAPSCREW, 5/16-18 X 1 GR5
	Y704726	6	NUT, HEX FLNG TOP LOCK, 5/16-18
	70921210	6	CAPSCREW, 3/8-16 X 1 GR5
	Y704734	6	NUT, HEX FLNG TOP LOCK, 3/8-16
8	832982M1	1	BEARING, BALL, CYLINDRICAL
9	71399654	1	TUBE WLDMT, VERTICAL, UNLOADER
	70921176	8	CAPSCREW, 1/2-13 X 1-1/4 GR5
	Y705046	8	LOCKWASHER, 1/2
	768036	2	BOLT, RHSN, 3/8-16 X 1-1/2(FULL THD)
	70931942	2	SPEED NUT, 3/8
	Y704734	2	NUT, HEX FLNG TOP LOCK, 3/8-16
10	71399675C	1	BRACKET, TUBE SUPPORT
	70923220	3	BOLT, RD HD SQ NK, 3/8-16 X 1-1/4
	70917378	3	WASHER, 3/8 WIDE
	Y704734	3	NUT, HEX FLNG TOP LOCK, 3/8-16
11	108575W1	2	PIN, 5/8 X 2-3/4
12	377690X1	4	RETAINING RING, EXTERNAL
13	71397248	1	HOUSING, GEAR, UNLOADER
14	71379825	AR	SHIM, RADIUS, .060 TH (QTY 2 AVE.)
	7701055	2	CAPSCREW, 3/8-16 X 1-3/4 GR5
	70921969	12	CAPSCREW, 3/8-16 X 1-1/2 GR5
	70917378	28	WASHER, 3/8 WIDE
	Y704734	14	NUT, HEX FLNG TOP LOCK, 3/8-16
15	112716W92	1	BRACKET ASY, CYLINDER PIVOT
	70921176	4	CAPSCREW, 1/2-13 X 1-1/4
	Y704742	4	NUT, HEX FLNG TOP LOCK, 1/2-13
16	2486150W1	1	SHAFT, OUTPUT, 8-7/16 LG
17	70903082	1	KEY, GEAR, 3/8 X 3/8 X 2
18	352976X1	2	BEARING, BALL
19	2486160W1	1	SPACER, 1-39/64 X 2 X 21/32 LG
20	70925997	1	RING, INTERNAL SNAP, 3-17/32 X 7/64
21	2486170W2	1	GEAR, UNLOADER, 35T
22	70932997	1	LOCKWASHER, EXTERNAL TOOTH, 1-3/8
23	70932996	1	LOCKNUT, BALL BEARING, 1-3/8-18UNEF

CONTINUED

UNLOADING AUGER
VERTICAL
EFFECTIVE S/N HN87101

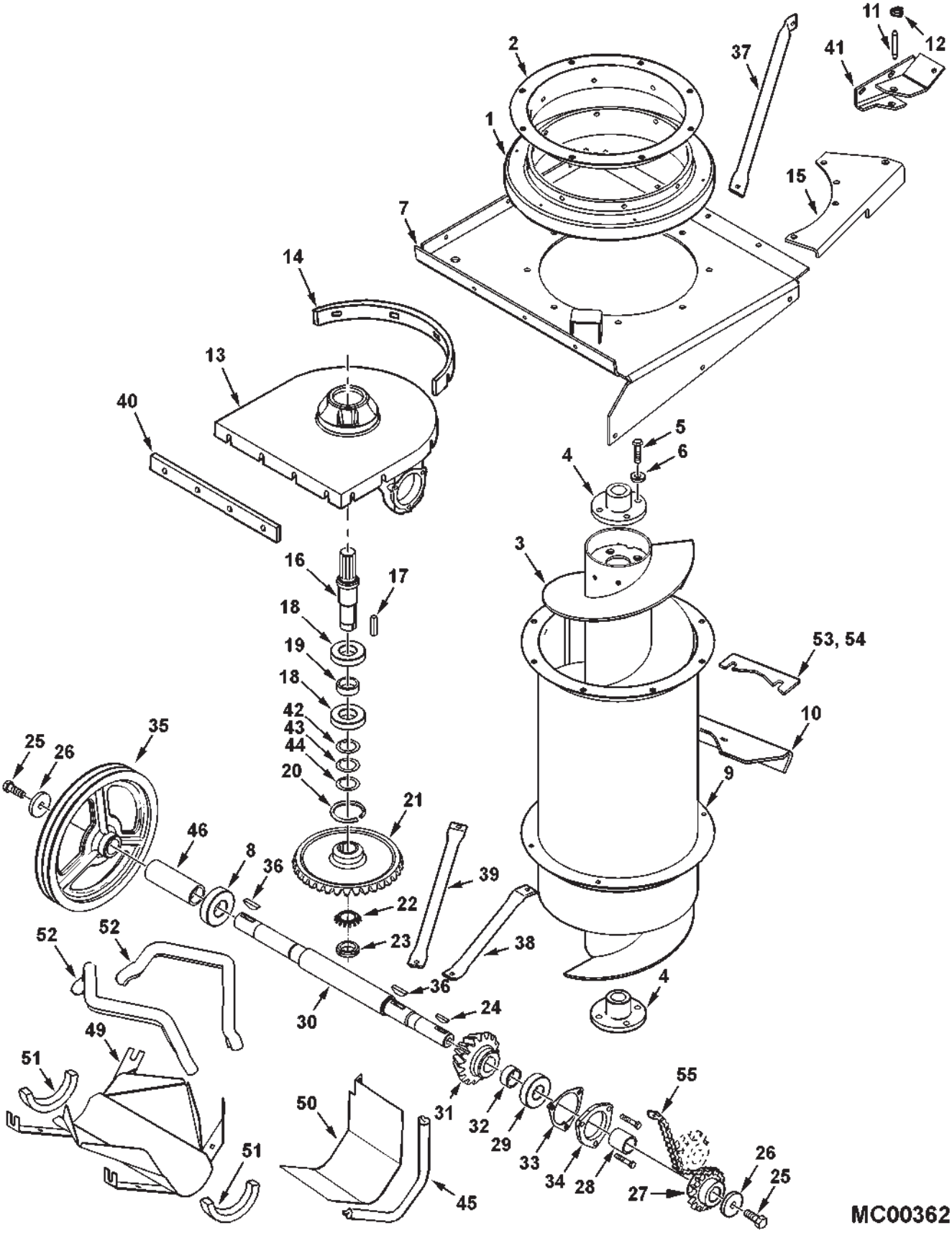

UNLOADING AUGER
VERTICAL
EFFECTIVE S/N HN87101

ITEM	NUMBER	QTY	DESCRIPTION
24	355485X1	1	KEY, WOODRUFF, 5/16 X 2-1/8
25	70923112	2	CAPSCREW, 5/8-11 X 1-3/4 GR5
26	2407570W1	2	WASHER, .656 X 2.37 OD X .375 TH
27	71391131	1	SPROCKET ASY, DRIVE, 20 TEETH
28	71397246	1	SPACER, 1.44 ID X 1.75 OD X 1.82 LG
29	354920X1	1	BEARING, BALL
30	71397247	1	SHAFT, INPUT
31	2460840W2	1	GEAR, PINION, 16T
32	2493870W1	1	SPACER, 1.52 ID X 1.88 OD X .763 LG
33	1500050W1	AR	SHIM, RED, PLASTIC, .002
33	1500060W1	AR	SHIM, BLUE, PLASTIC, .005
33	1500070W1	AR	SHIM, BROWN, PLASTIC, .010
34	2452270W1	1	CAP, BEARING
	70920415	3	CAPSCREW, 3/8-16 X 1-1/4
35	71397244	1	SHEAVE, DRIVEN, UNLOADER
36	W937119	2	KEY, WOODRUFF, 3/8 X 2 1/8
37	71399674	1	BRACE, SWING CYLINDER
38	71399665	1	BRACE,VERT AUGER TUBE(PRIOR S/N HR87101)
	71408989	1	* STRAP, BRACE
	71408990	1	* STRAP, BRACE
	70920415	3	* CAPSCREW, 3/8-16 X 1-1/4 GR5
	70917378	3	* WASHER, 3/8 WIDE
	Y704734	3	* NUT, HEX FLANGE TOP LOCK, 3/8-16
	70921210	2	CAPSCREW, 3/8-16 X 1 GR5
	Y704734	2	NUT, HEX FLNG TOP LOCK, 3/8-16
39	71399666	1	BRACE, VERTICAL AUGER TUBE
	70921210	2	CAPSCREW, 3/8-16 X 1 GR5
	Y704734	2	NUT, HEX FLNG TOP LOCK, 3/8-16
40	71379824	AR	SHIM, SIDE, UNLDR BOOT, .060 (2 AVE.)
41	112720W91	1	BRACKET WLDMT, CYLINDER ANCHOR
	70921210	2	CAPSCREW, 3/8-16 X 1 GR5
	70921969	1	CAPSCREW, 3/8-16 X 1-1/2 GR5
	70917378	2	WASHER, 3/8 WIDE
	705038	3	LOCKWASHER, 3/8
	70916950	3	NUT, 3/8-16 REG
42	104740W1	AR	SHIM, .005
43	104741W1	AR	SHIM, .010
44	104742W1	AR	SHIM, .020
45	71395983	1	SEAL, CHAIN COVER
46	71397245	1	SPACER, SLEEVE
49	71391435	1	COVER WLDMT.-UNLOADER GEARS
50	71393854	1	COVER, CHAIN
	7700461	3	BOLT, RD HD SQ NK, 5/16-18 X 3/4
	70917372	3	NUT, 5/16-18 REG
	70917356	3	LOCKWASHER, 5/16 REG
	700709602	3	WASHER, 5/16 WIDE
51	71391441	2	FOAM STRIP-ADHESIVE BACK
52	71393916	2	SEAL, GEAR COVER
53	71411452	AR	SHIM, .127 TH (EFF. S/N HR87101)
54	71411453	AR	SHIM, .071 TH (EFF. S/N HR87101)
55	-----	1	CHAIN, UNLDR DRIVE (SEE "CHAINS DRIVE")
-	79014728	AR	GREASE

* EFF. S/N HR87101

MC00362
PR: 286

UNLOADING AUGER
UPPER

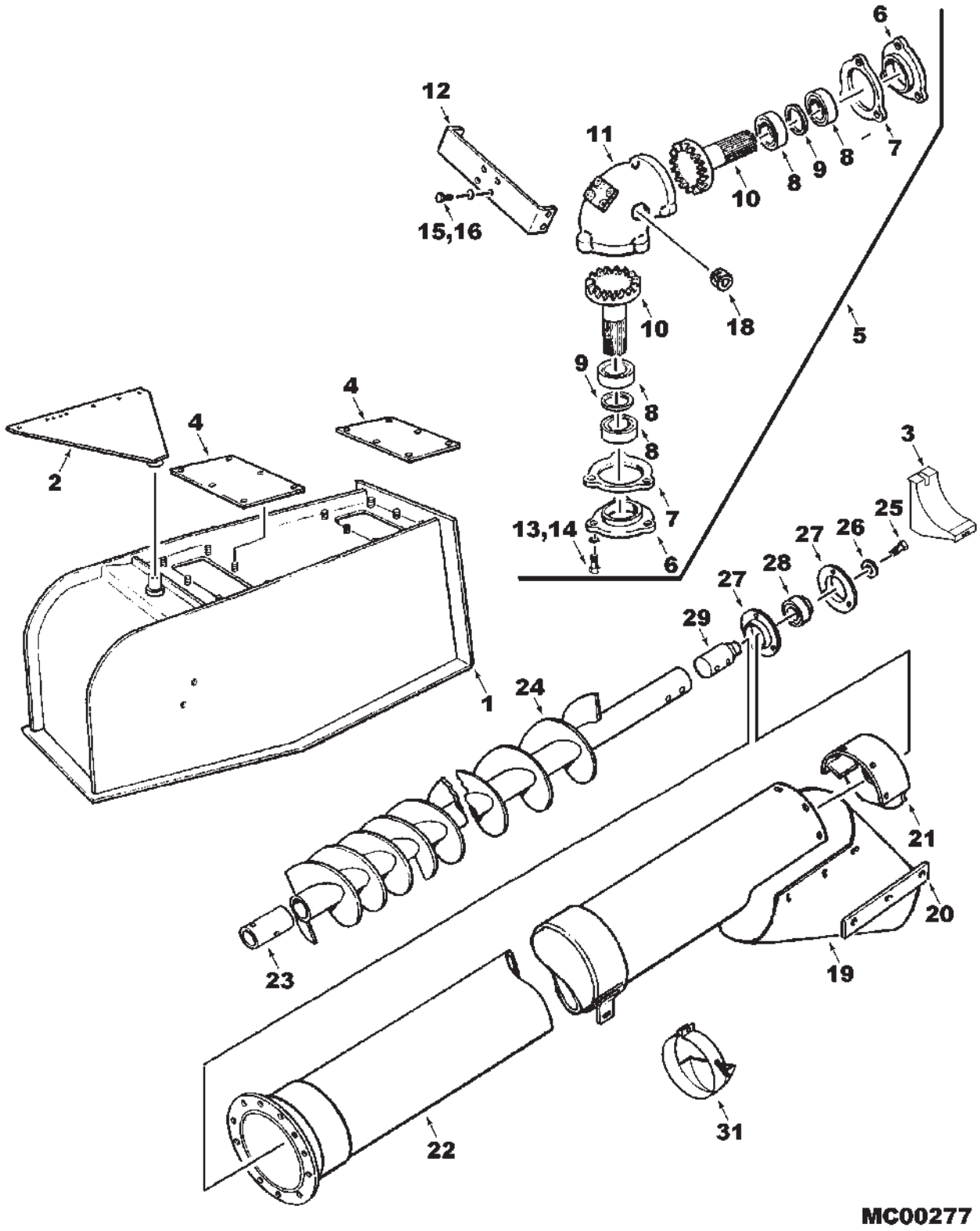

UNLOADING AUGER
UPPER

ITEM	NUMBER	QTY	DESCRIPTION
1	2450441W4	1	ELBOW WLDMT, UNLDR (PRIOR S/N HN87101)
	71399658	1	ELBOW WLDMT, UNLDR (EFF. S/N HN87101)
	70921210	4	CAPSCREW, 3/8-16 X 1
	70918830	1	SCREW, HX SKT FLAT HD, 3/8 X 1
	Y704734	5	NUT, HEX FLNG TOP LOCK, 3/8-16
2	71390357	1	PLATE, ASY, PIVOT
	70921210	5	CAPSCREW, 3/8-16 X 1
	70916950	5	NUT, HEX, 3/8
3	71390756	1	SADDLE WLDMT, UNLOADER TUBE
4	1736870W1	1	PLATE, COVER (QTY 2, PRIOR S/N HN87101)
	71400919	1	PLATE, COVER (EFF. S/N HN87101)
	Y704734	14	NUT, HEX FLNG TOP LOCK, 3/8-16
5	2414623W1	1	GEARBOX ASSEMBLY
	79017915	AR	GREASE, MOBILE HP, 14 OZ.
	79021671	AR	PIPE SEALANT
6	1737620W1	2	CAP, GEAR BOX
7	1714410W1	AR	SHIM, .005
	1714400W1	AR	SHIM, .010
	1712530W1	AR	SHIM, .020
8	354920X1	4	BEARING, BALL
9	1714430W1	2	SPACER, BEARING
10	2414640W1	2	GEAR, BEVEL, 18T
11	2414630W2	1	HOUSING, GEAR BOX
	70920328	4	CAPSCREW, 1/2 X 1-1/2
	353773X1	4	WASHER, HEAVY HARD, 1/2
	Y704742	4	NUT, HEX FLNG TOP LOCK, 1/2-13
12	2450500W1	1	SUPPORT, GEAR BOX
13	70923325	6	CAPSCREW, 5/16-18 X 7/8
14	70917356	6	WASHER, LOCK, 5/16
15	70921210	4	CAPSCREW, 3/8-16 X 1
16	70916965	4	WASHER, LOCK, 3/8
18	356044X1	1	PLUG, PIPE HEX SOCKET, 1-11 1/2
19	71400385	1	SPOUT, RUBBER
	70921333	2	CAPSCREW, 5/16-18 X 1
	70917642	4	WASHER, 5/16
	Y704726	2	NUT, HEX FLNG TOP LOCK, 5/16-18
20	1599410W1	2	STRAP, REINFORCEMENT
	70921210	6	CAPSCREW, 3/8-16 X 1
	70917378	6	WASHER, 3/8 WIDE
	Y704734	6	NUT, HEX FLNG TOP LOCK, 3/8-16
21	1721491W2C	1	CAP ASSEMBLY, END
	70921965	3	CAPSCREW, 3/8-16 X 3/4
	70917378	2	WASHER, 3/8 WIDE
	Y704734	3	NUT, HEX FLNG TOP LOCK, 3/8-16
22	71396414	1	TUBE WLDMT, HORIZ. (PRIOR S/N HN87101)
	71399669	1	TUBE WLDMT, HORIZ. (EFF. S/N HN87101)
	70921210	12	CAPSCREW, 3/8-16 X 1
	70916965	6	LOCKWASHER, 3/8
	Y704734	6	NUT, HEX FLNG TOP LOCK, 3/8-16

CONTINUED

UNLOADING AUGER
UPPER

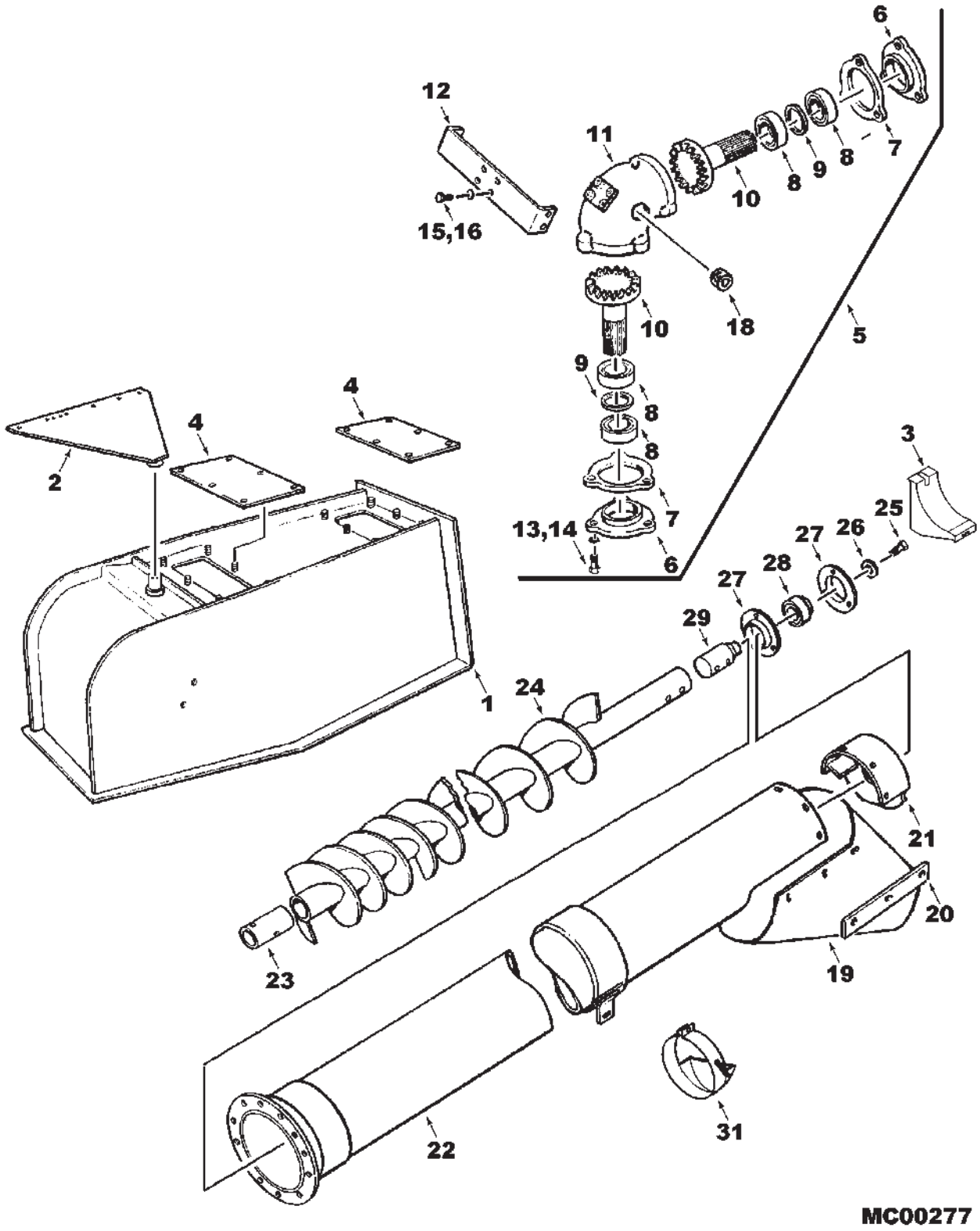

UNLOADING AUGER
UPPER

ITEM	NUMBER	QTY	DESCRIPTION
23	1736510W1	1	COUPLER, DRIVE
	70920990	2	CAPSCREW, 1/2-13 X 3-1/2
	Y705046	2	LOCKWASHER, 1/2
	704031	2	NUT, 1/2-13 REG
24	71390929	1	AUGER ASY, (INCL ITEMS 23 & 29) (PRIOR S/N HN87101)
	71399854	1	AUGER ASY, (INCL ITEMS 23 & 29) (EFF. S/N HN87101)
25	70926126	1	CAPSCREW, 3/4-10 X 1-1/4
	70919332	1	LOCKWASHER, 3/4
26	1716190W1	1	SPACER, 25/32 X 1-5/8 X 1/4 TH
27	700717509	2	FLANGETTE
	70931350	3	BOLT, RHSN, 3/8-16 X 1
	Y704734	3	NUT, HEX FLNG TOP LOCK, 3/8-16
28	831822M1	1	BEARING, BALL
29	1737660W1	1	SHAFT, STUB
	70920990	2	CAPSCREW, 1/2-13 X 3-1/2
	Y705046	2	LOCKWASHER, 1/2
	704031	2	NUT, 1/2-13
31	294148M91	1	SPILL SAVER
	79019067	2	SPRINGS
	70936104	1	CAPSCREW, 5/16-18 X 2-3/4 FULL THD.
	70917642	1	WASHER, FLAT, 5/16
	70923362	1	NUT, HEX CNTR LOCK, 5/16-18
	71378014	1	KIT, SPILL SAVER (ORDER THRU DEALER CENTRAL)
-	700707823	AR	SILICONE

MC00277
PR: 268

UNLOADER DRIVE

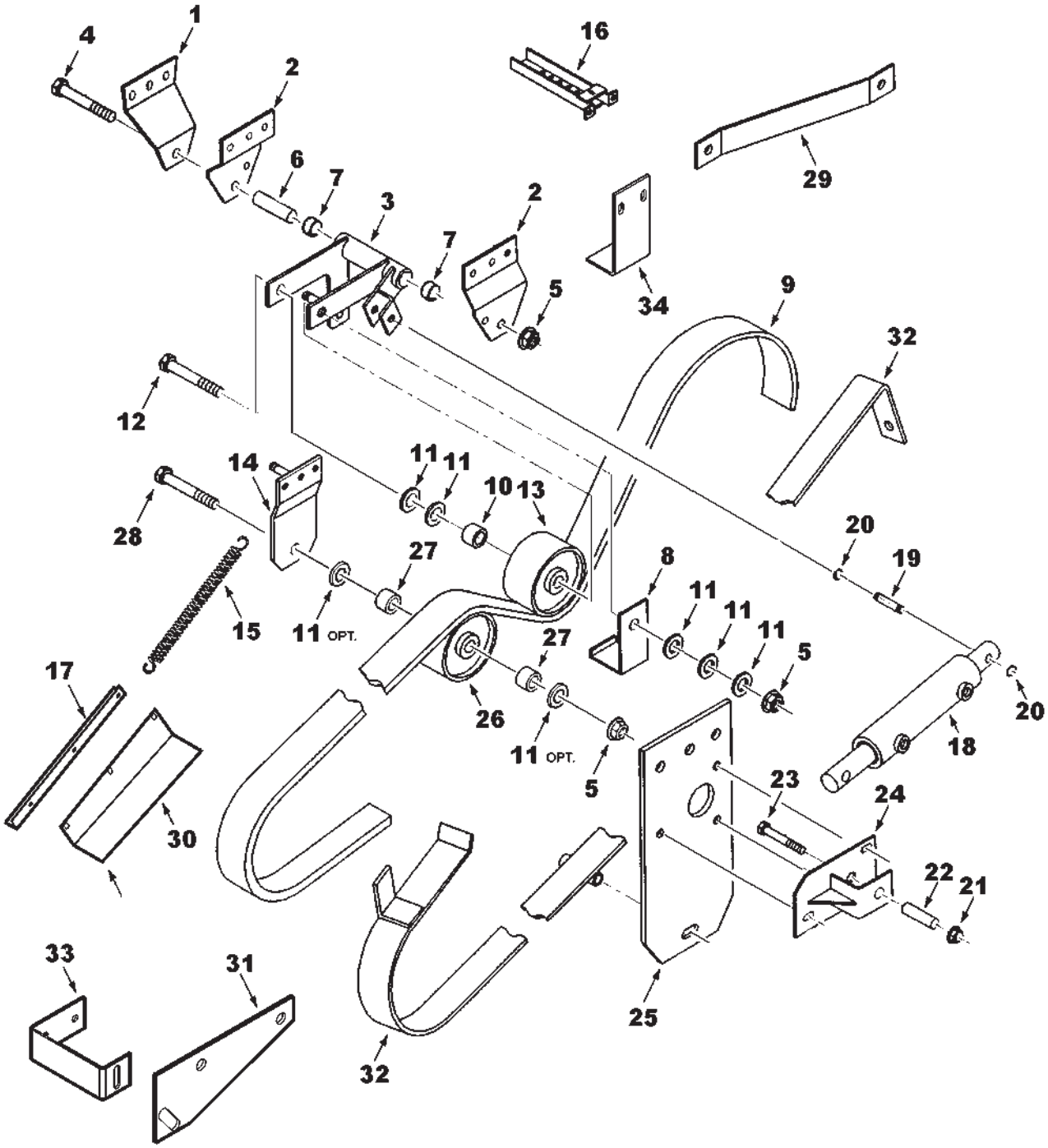

UNLOADER DRIVE

ITEM	NUMBER	QTY	DESCRIPTION
1	71388739	1	PLATE
2	108592W1	2	PLATE
	70921210	6	CAPSCREW, 3/8-16 X 1 GR5
	Y704734	6	NUT, HEX FLNG TOP LOCK, 3/8-16
3	108586W91	1	IDLER ARM ASY (PRIOR S/N HP87101)
			(SERVICE W/ 71403710)
	71403710B	1	IDLER ARM ASY
4	112774W1	1	BOLT, HEX SPECIAL, 5/8-11 X 7
5	700703922	3	NUT, HEX FLNG TOP LOCK, 5/8-11
6	2624230W1	1	SLEEVE, IDLER PIVOT
7	1689170W1	2	BUSHING, STEEL
8	108602W1	1	STRAP, BELT GUIDE (PRIOR S/N HP87101)
	71403712	1	STRAP, BELT GUIDE (EFF. S/N HP87101)
9	101102M1	1	BELT (SEE BELT LISTING)
10	368615X1	1	SPACER
11	70918432	6	WASHER, 5/8 WIDE
12	70923501	1	CAPSCREW, 5/8-11 X 3-3/4 GR5
13	1797450W1	1	IDLER, FLAT, 6.5 DIA (PRIOR S/N HP87101)
	2545270W1	1	IDLER, FLAT, 6.5 DIA (EFF. S/N HP87101)
14	108597W91	1	PLATE ASSEMBLY, INNER IDLER SUPPORT
15	101276M2	1	SPRING
16	2629511W93	1	CHANNEL ASSEMBLY
	70921210	9	CAPSCREW, 3/8-16 X 1 GR5
	Y704734	9	NUT, HEX FLNG TOP LOCK, 3/8-16
	70917378	7	WASHER, 3/8 WIDE
17	71392779	1	SUPPORT, UPPER GUIDE
	70921210	3	CAPSCREW, 3/8-16 X 1 GR5
	Y704734	3	NUT, HEX FLNG TOP LOCK, 3/8-16
	70917378	3	WASHER, 3/8 WIDE
18	108275W91	1	HYDRAULIC CYLINDER
	71389522	AR	SEAL KIT
19	108575W1	1	PIN, 5/8 X 2.28
20	377690X1	2	RING, RETAINING
21	Y704742	1	NUT, HEX FLNG TOP LOCK, 1/2-13
22	108601W1	1	SPACER
23	70923240	1	CAPSCREW, 1/2-13 X 2-3/4 GR5
24	108593W91	1	ANCHOR BRACKET
	70921210	3	CAPSCREW, 3/8-16 X 1 GR5
	Y704734	3	NUT, HEX FLNG TOP LOCK, 3/8-16
25	108599W1	1	PLATE, OUTER IDLER SUPPORT
	70921210	3	CAPSCREW, 3/8-16 X 1 GR5
	Y704734	3	NUT, HEX FLNG TOP LOCK, 3/8-16

CONTINUED

UNLOADER DRIVE

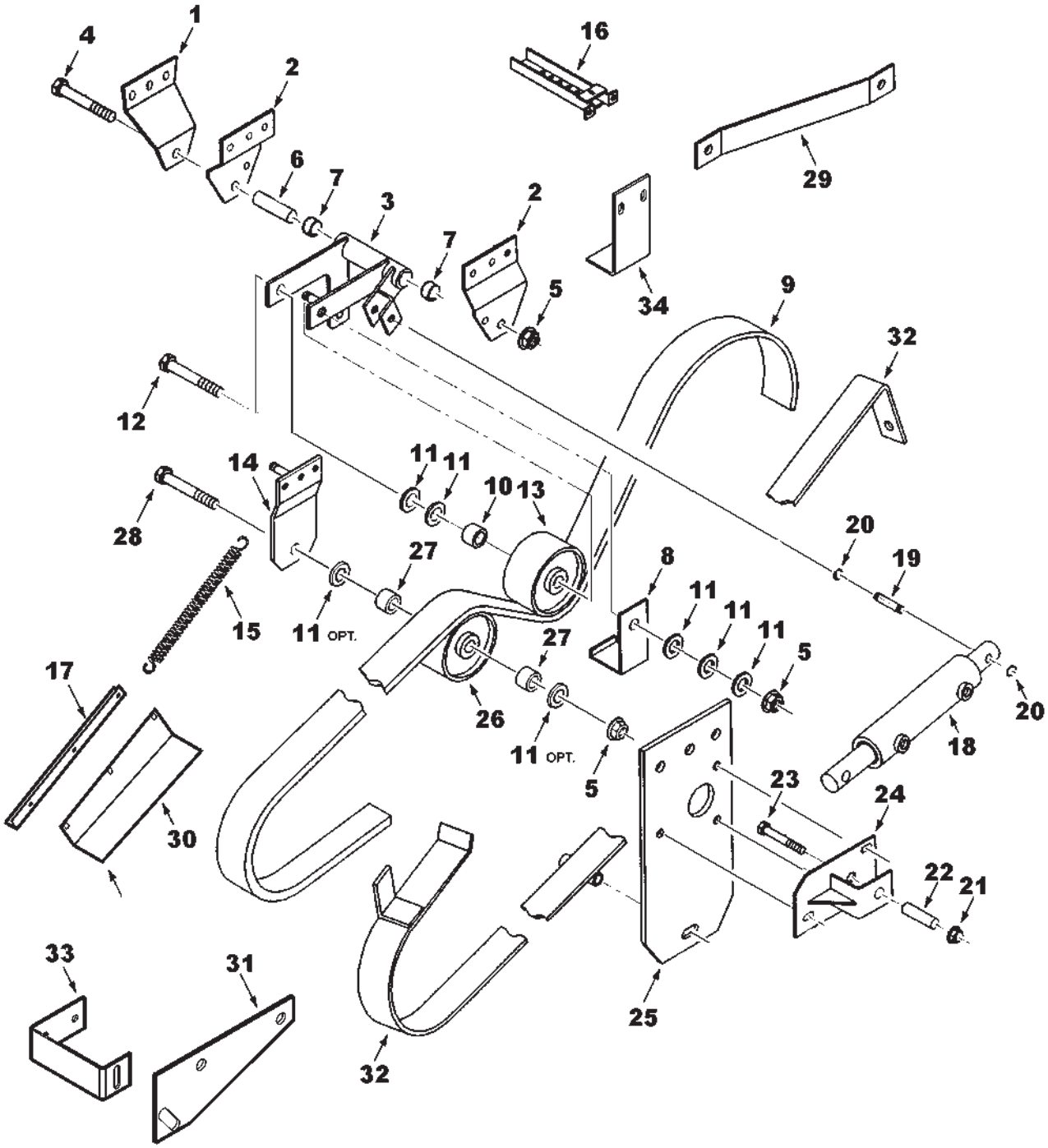

ITEM	NUMBER	QTY	DESCRIPTION
26	2545270W1	1	IDLER, FLAT, 6.5 DIA
27	365098X1	2	SPACER
28	70926165	1	BOLT, HEX, 5/8-11 X 4-1/2 GR5
29	108600W1	1	STRAP
30	2635460W1	1	GUIDE, BELT
	70921965	3	CAPSCREW, 3/8-16 X 3/4 GR5
	70916965	3	LOCKWASHER, 3/8
	70916950	3	HEX NUT, 3/8-16
	70917378	3	WASHER, 3/8, WIDE
31	101575M1	1	PLATE
	70921210	1	CAPSCREW, 3/8-16 X 1 GR5
	70917378	1	WASHER, 3/8, WIDE
	70916965	1	LOCKWASHER, 3/8
	70916950	1	HEX NUT, 3/8-16
32	71390191	1	GUIDE, BELT
	70921332	2	CAPSCREW, 5/16-18 X 3/4
	70917642	2	WASHER, 5/16, WIDE
	Y704726	2	NUT, HEX FLNG TOP LOCK, 5/16-18
	70923504	1	CAPSCREW, 3/8 X 4-1/2
	70917378	AR	WASHER, 3/8 WIDE
	Y704734	1	NUT, HEX FLNG TOP LOCK, 3/8-16
33	71392778	1	SUPPORT, LOWER GUIDE
	70921210	1	CAPSCREW, 3/8-16 X 1.0 GR5
	70917378	2	WASHER, 3/8 WIDE
	705038	1	LOCKWASHER, 3/8
	70916950	1	HEX NUT, 3/8-16
34	2635230W1	1	GUIDE BRKT, TOP, BELT(PRIOR S/N HN87101)
	71400669	1	GUIDE PLATE, BELT (EFF. S/N HN87101)
	70921210	2	CAPSCREW, 3/8-16 X 1 GR5
	Y704734	2	NUT, HEX FLNG TOP LOCK, 3/8-16

MC00279
PR: 272

GRAIN BIN
LOWER STRUCTURE

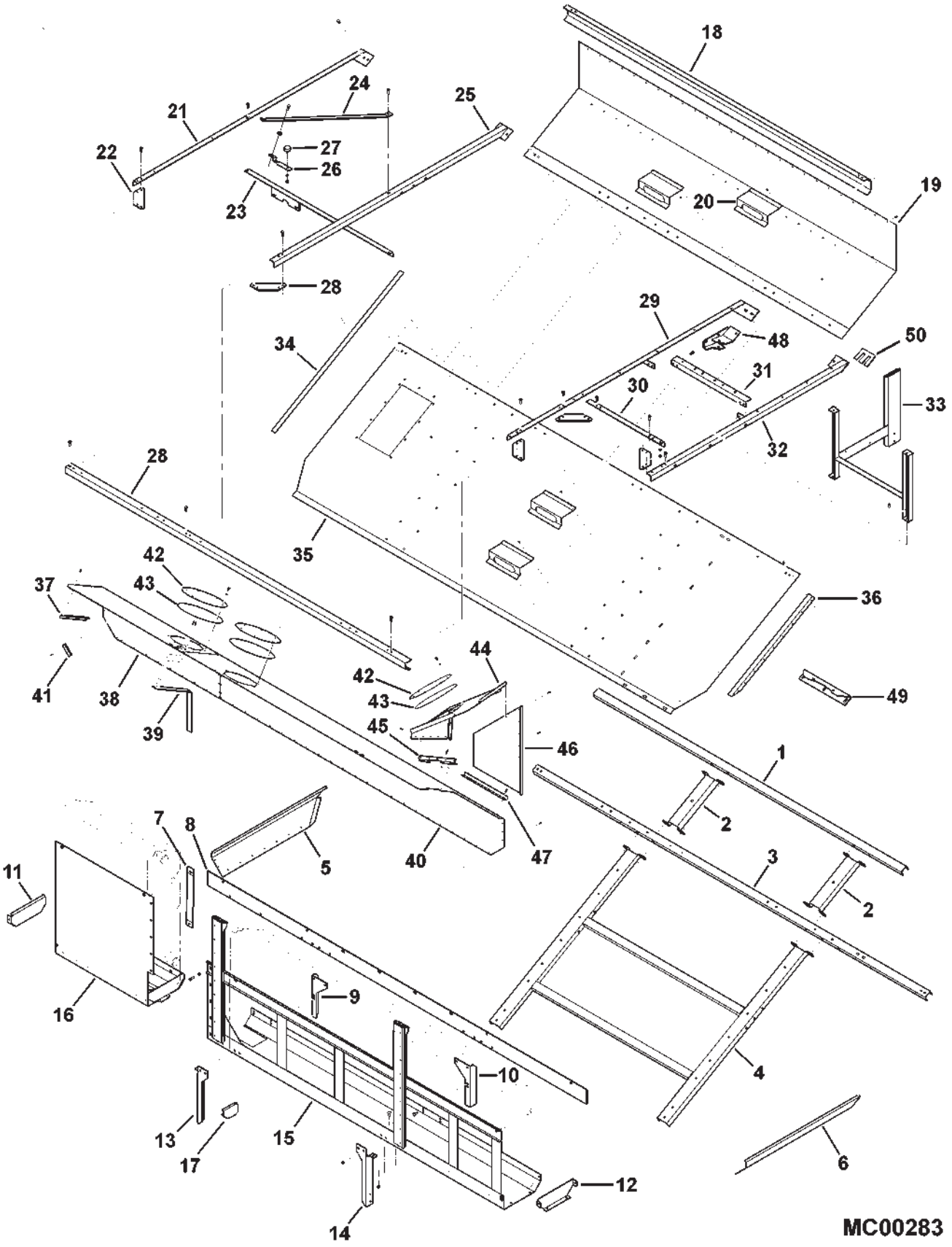

GRAIN BIN
LOWER STRUCTURE

ITEM	NUMBER	QTY	DESCRIPTION
1	71391143	1	CHANNEL, FLOOR UPPER
2	71407327P	2	EXTENSION, UPPER FLOOR CHANNEL
	70921210	8	CAPSCREW, 3/8-16 X 1.0
	70917378	8	WASHER, FLAT 3/8
	705038	8	LOCKWASHER, 3/8
	70916950	8	HEXNUT, 3/8-16
3	71403918	1	CHANNEL, BIN FLOOR
4	71393416	1	CHANNEL WLDMT, FLOOR
	70921210	6	CAPSCREW, 3/8-16 X 1.0
	70917378	6	WASHER, FLAT 3/8
	705038	6	LOCKWASHER, 3/8
	70916950	6	HEXNUT, 3/8-16
5	71391951	1	SHEET, RH GRAIN BIN
	700717635	7	RIVET, 3/16 X 13/32
6	71391850	1	SHEET, LH GRAIN BIN
	700717635	7	RIVET, 3/16 X 13/32
7	71393414	2	STRAP, TANK HANGER (RH)
	70922786	4	BOLT, RHSN 3/8-16 X 1.0
	70917378	4	WASHER, FLAT 3/8
	705038	4	LOCKWASHER, 3/8
	70916950	4	HEXNUT, 3/8-16
8	71393413	1	PLATE, SUPPORT
	70922786	10	BOLT, RHSN 3/8-16 X 1.0
	70917378	10	WASHER, FLAT 3/8
	705038	10	LOCKWASHER, 3/8
	70916950	10	HEXNUT, 3/8-16
9	71391939	1	SUPPORT, TANK, RH REAR
	7700461	2	BOLT, RHSN 5/16-18 X 3/4
	Y704726	2	LOCKNUT, HEX FLANGE 5/16-18
10	71391938	1	SUPPORT, TANK, LH REAR
	7700461	2	BOLT, RHSN, 5/16-18 X 3/4
	Y704726	2	LOCKNUT, HEX FLANGE 5/16-18
11	71391946	1	END PLATE, RH FUEL TANK
	Y702951	4	SCREW, SELF-TAP, 3/8-16 X 3/4
12	71391947	1	END PLATE, RH FUEL TANK
	Y702951	4	SCREW, SELF-TAP, 3/8-16 X 3/4
13	71393918	1	POST, TANK RH FRONT
	7700461	1	BOLT, RHSN, 5/16-18 X 3/4
	Y704726	1	LOCKNUT, HEX FLANGE 5/16-18
	7770456	2	BOLT, RHSN 3/8-16 X 3/4
	Y704734	2	LOCKNUT, HEX FLANGE 3/8-16
14	71393917	1	POST, TANK LH FRONT
	7700461	1	BOLT, RHSN 5/16-18 X 3/4
	Y704726	1	LOCKNUT, HEX FLANGE 5/16-18
	7770456	2	BOLT, RHSN 3/8-16 X 3/4
	Y704734	2	LOCKNUT, HEX FLANGE 3/8-16
15	71406761	1	SUPPORT WLDMT, LH FUEL TANK
16	71391935	1	SUPPORT WLDMT, RH FUEL TANK
	70921210	5	CAPSCREW, 3/8-16 X 1.0
	705038	5	LOCKWASHER, 3/8
	70917378	5	WASHER, FLAT 3/8

CONTINUED

GRAIN BIN
LOWER STRUCTURE

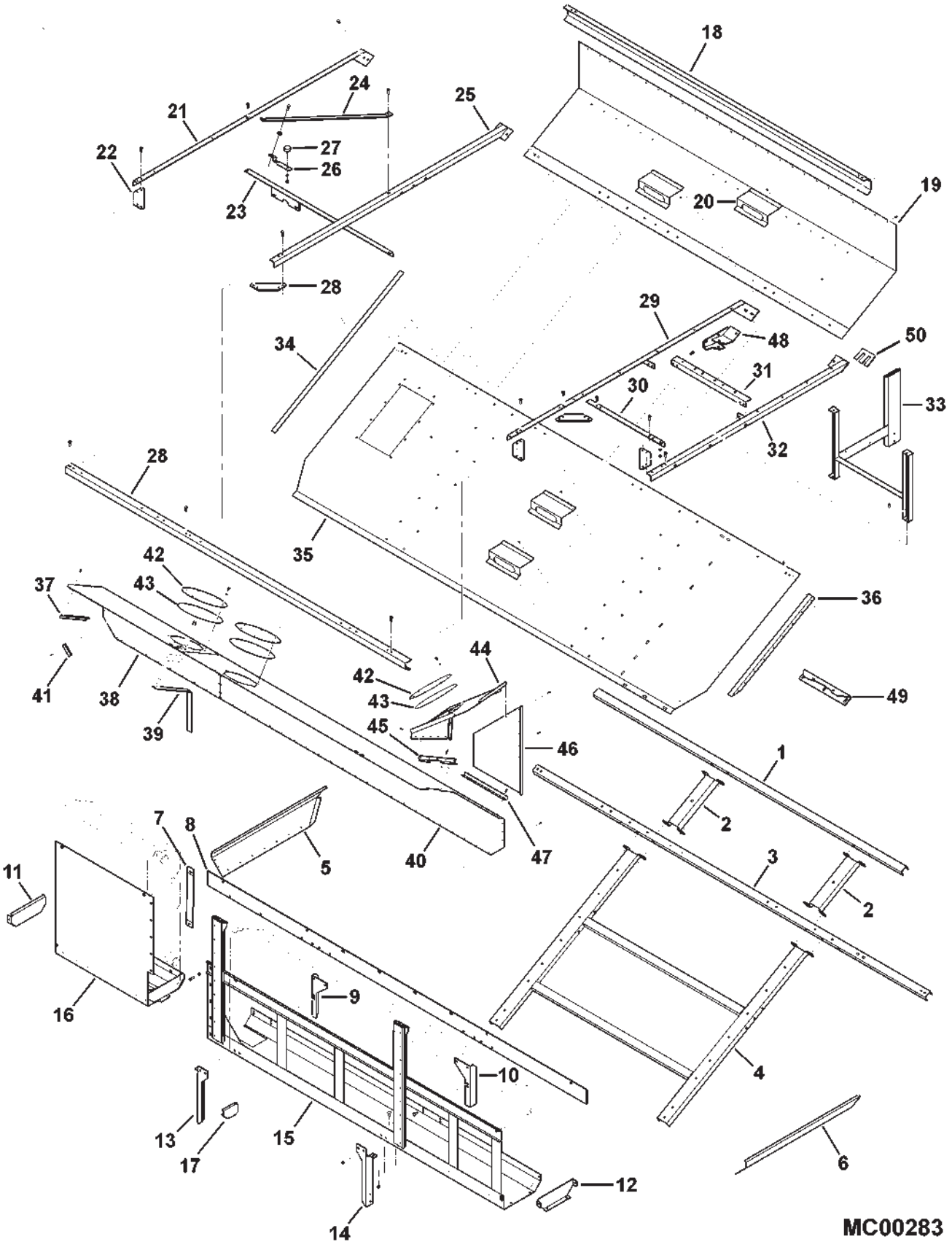

GRAIN BIN
LOWER STRUCTURE

ITEM	NUMBER	QTY	DESCRIPTION
17	71391948	1	END BRKT, LH TANK INSIDE
	Y702951	2	SCREW, SELF-TAP 3/8-16 X 3/4
18	71392620	1	CHANNEL, UPPER FRAME, REAR
	70925160	26	RIVET, 3/16 X .527
19	71391849	1	PANEL, UPPER REAR FLOOR
	700717635	AR	RIVET, 3/16 X .402
	70921210	2	CAPSCREW, 3/8-16 X 1.0
	705038	2	LOCKWASHER, 3/8
	70916950	2	HEXNUT, 3/8-16
	70923114	1	CAPSCREW, 1/2-13 X 1 GR5 (EFF. S/N HP87101)
20	71394681	4	STEP
	70925160	12	RIVET, 3/16 X .527
	700717635	12	RIVET, 3/16 X .402
	71394321	AR	TAPE, ANTI-SKID
21	71392657	1	ANGLE, MID-FRAME
	70921210	AR	CAPSCREW, 3/8-16 X 1.0
	70917378	AR	WASHER, FLAT 3/8
	705038	AR	LOCKWASHER, 3/8
	70916950	AR	HEXNUT, 3/8-16
22	71392616	5	GUSSET, FRAME
23	71391147	1	ANGLE, TOP HEAD SUPPORT
24	71394322	1	STRAP
25	71392656	1	ANGLE, CENTER
	70921210	AR	CAPSCREW, 3/8-16 X 1.0
	70917378	AR	WASHER, FLAT 3/8
	705038	AR	LOCKWASHER, 3/8
	70916950	AR	HEXNUT, 3/8-16
26	71394323	1	STRAP, WINDOW HOOK
	70921965	1	CAPSCREW, 3/8-16 X 3/4
	71391654	1	WASHER, NYLON
	Y704734	1	LOCKNUT, FLANGE 3/8-16
27	70547934	1	STOP, RUBBER
	705038	1	LOCKWASHER, 3/8
	70916950	1	HEXNUT, 3/8-16
28	71391956	1	CHANNEL, MID-FRAME FRONT
	70921210	20	CAPSCREW, 3/8-16 X 1.0
	705038	20	LOCKWASHER, 3/8
	70916950	20	HEXNUT, 3/8-16
29	71403922	1	ANGLE WLDMT, LEFT INNER, MID-FRAME
	70923114	1	CAPSCREW, 1/2-13 X 1 GR5
	Y704742	1	NUT, HEX FLNG TOP LOCK, 1/2-13
30	71392611	1	ANGLE, FRONT SUPPORT
	70921210	AR	CAPSCREW, 3/8-16 X 1.0
	703603	AR	CAPSCREW, 3/8-16 X 1-1/2
	70917378	AR	WASHER, 3/8, WIDE
	705038	AR	LOCKWASHER, 3/8
	70916950	AR	HEXNUT, 3/8-16

CONTINUED

GRAIN BIN
LOWER STRUCTURE

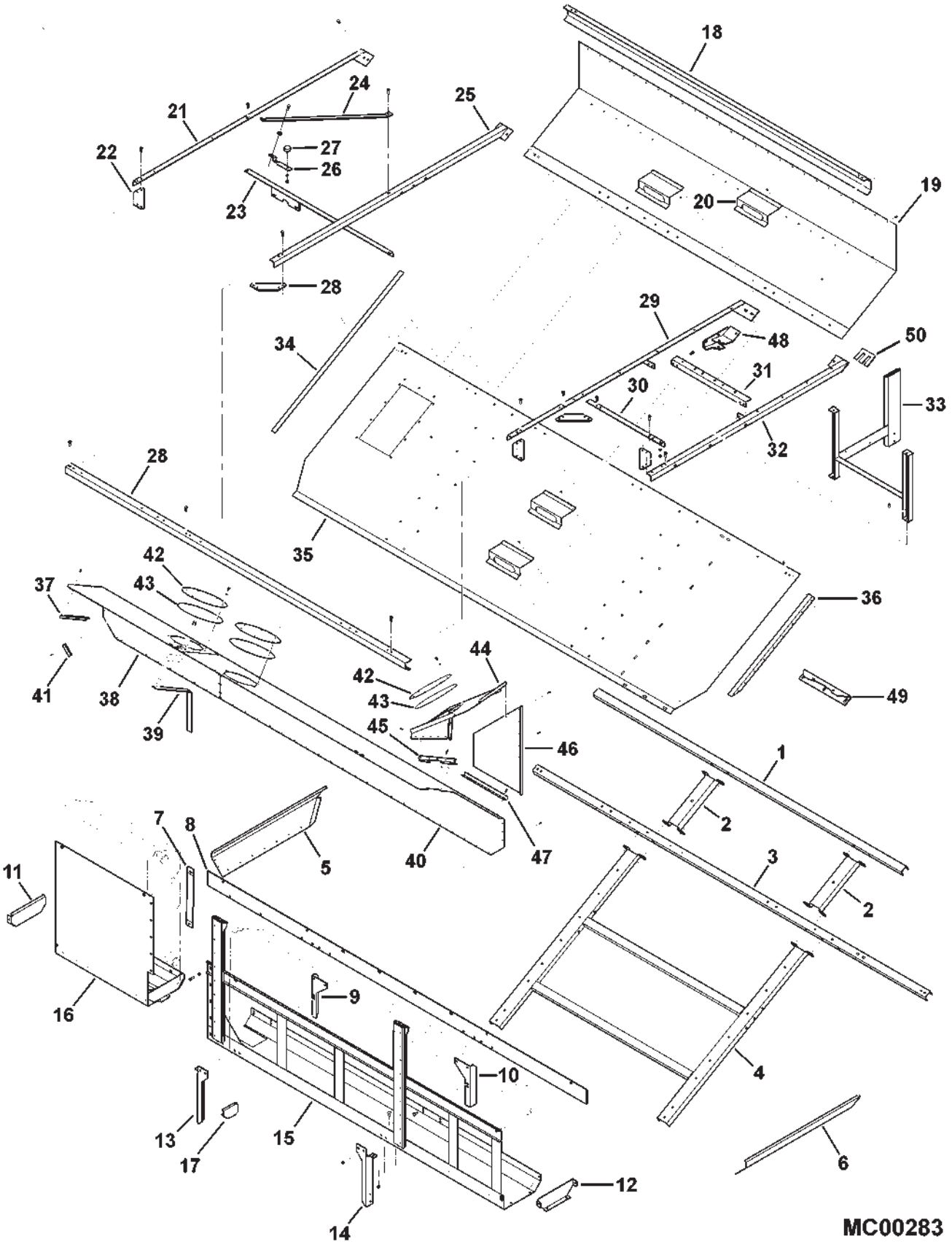

GRAIN BIN
LOWER STRUCTURE

ITEM	NUMBER	QTY	DESCRIPTION
31	71392610	1	ANGLE, REAR SUPPORT
	70921210	4	CAPSCREW, 3/8-16 X 1.0
	705038	4	LOCKWASHER, 3/8
	70916950	4	HEXNUT, 3/8-16
32	71392654	1	ANGLE, MID-FRAME OUTER
33	71391957	1	SUPPORT WLDMT, CORNER (LH)
	70921210	3	CAPSCREW, 3/8-16 X 1.0
	705038	3	LOCKWASHER, 3/8
	70916950	3	HEXNUT, 3/8-16
34	71390157	1	ANGLE, UPPER MOUNTING (RH)
35	71391848	1	PANEL, FLOOR LOWER
36	71390152	1	ANGLE, MID-PANEL MOUNTING (LH)
	70924837	9	RIVET, 3/16 X .277
37	71391954	1	ANGLE, SIDE, GRAIN BIN
	700717635	4	RIVET, 3/16 X .402
38	71391968	1	COVER, F/TANK (RH)
39	71392605	1	SUPPORT STRAP, FUEL TANK COVER
	700717635	AR	RIVET, 3/16 X .402
40	71391967	1	COVER, LH F/TANK
	70925160	28	RIVET, 3/16 X .527
41	71391146	2	ANGLE, SHEET TIE
	700717635	8	RIVET, 3/16 X .402
42	71376312	3	COVER, ACCESS
	7703457	18	CAPSCREW, 1/4-20 X 3/4
	705012	18	LOCKWASHER, 1/4
	70928705	18	NUT, RETAINER 1/4-20 TYPE J
43	71323575	3	SEAL, COVER
44	71391970	1	TOP COVER, FILLER NECK
45	71391972	1	ANGLE, TOP FILLER NECK
46	71391969	1	COVER, SIDE FILLER NECK
	700717635	13	RIVET, 3/16 X .402
47	71391971	1	ANGLE, SIDE FILLER NECK
	700717635	9	RIVET, 3/16 X .402
48	71403919	1	BRACKET WLDMT, UNLOADER CYL.
	70921210	1	CAPSCREW, 3/8-16 X 1 GR5
	70920415	1	CAPSCREW, 3/8-16 X 1-1/4 GR5
	70917378	2	WASHER, 3/8 WIDE
	Y704734	2	NUT, HEX FLNG TOP LOCK, 3/8-16
	701235	1	CAPSCREW, 1/2-13 X 1-1/2 GR5
	Y704742	1	NUT, HEX FLNG TOP LOCK, 1/2-13
49	2601260W1	1	BRKT,LOWER TUBE SUPPT(PRIOR S/N HN87101)
	71399675R	1	BRKT,LOWER TUBE SUPPT (EFF. S/N HN87101)
	70923220	3	BOLT, RD HD SQ NK, 3/8-16 X 1-1/4
	70917378	3	WASHER, 3/8 WIDE
	Y704734	3	NUT, HEX FLNG TOP LOCK, 3/8-16
50	71401461	AR	SHIM (QTY 2 AVE.)

MC00283
PR: 276

GRAIN BIN
UPPER STRUCTURE & MOUNTS

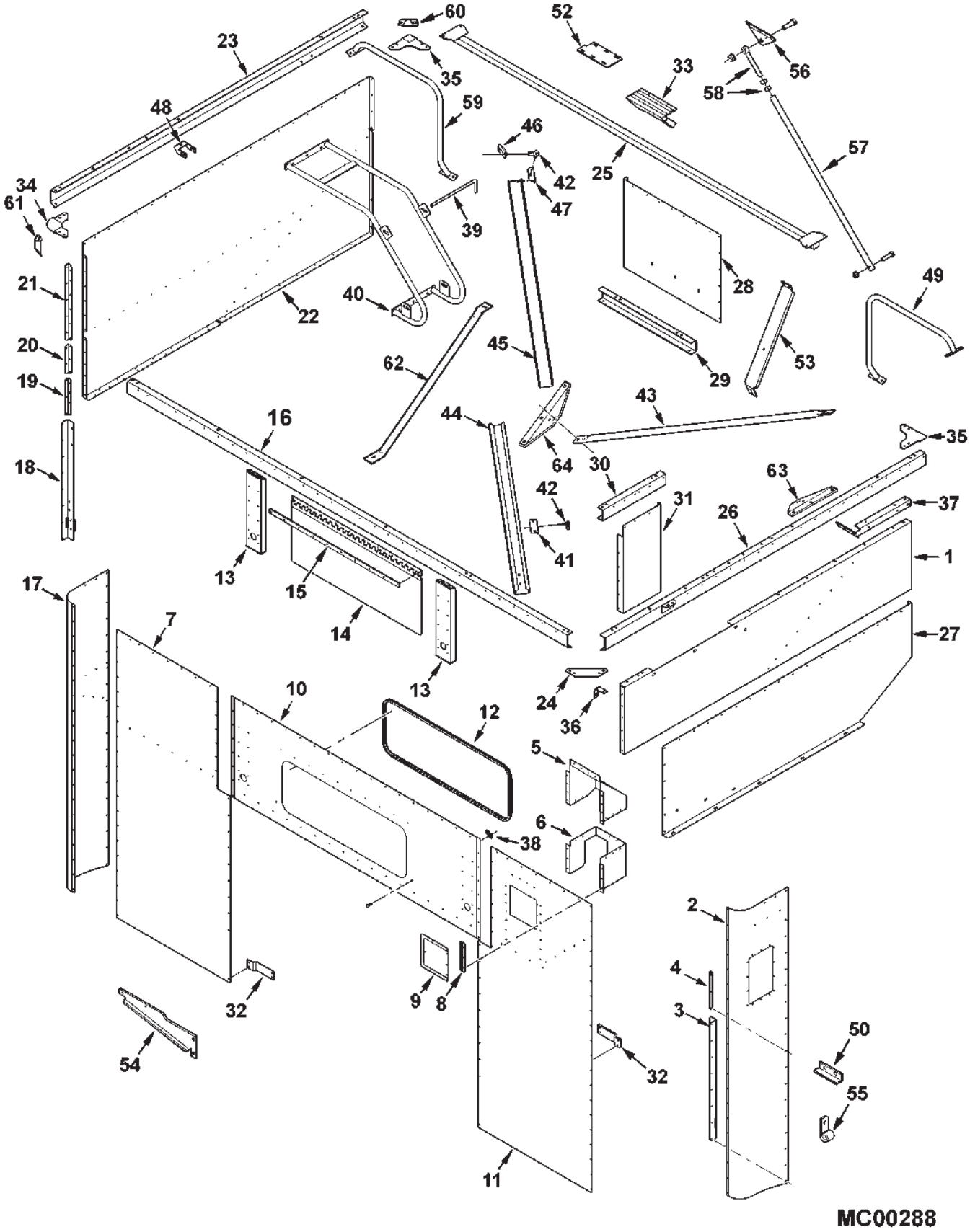

GRAIN BIN
UPPER STRUCTURE & MOUNTS

ITEM	NUMBER	QTY	DESCRIPTION
1	71391960C	1	PANEL, MID (LH)
	70924837	AR	RIVET, 3/16 X .277
	70921210	5	CAPSCREW, 3/8-16 X 1.0
	70917378	2	WASHER, 3/8 WIDE
	705038	4	LOCKWASHER, 3/8
	70916950	4	HEXNUT, 3/8-16
2	71392664	1	PANEL, CORNER (LH)
	700717635	AR	RIVET, 3/16 X .402
	70924837	AR	RIVET, 3/16 X .277
	706176	4	SCREW, TRUSS HD MACH, 5/16-18 X 3/4
	70917642	4	WASHER, 5/16 WIDE
	Y705020	4	LOCKWASHER, 5/16 REG
	70917372	4	NUT, 5/16-18 REG
3	71395996	1	ANGLE, FLANGE LOWER (LH)
	70922786	4	BOLT, RHSN 3/8-16 X 1.0
	70917378	4	WASHER, 3/8 WIDE
	705038	4	LOCKWASHER, 3/8
	70916950	4	HEXNUT, 3/8-16
4	71391150	1	ANGLE, FLANGE UPPER (LH)
	700717635	AR	RIVET, 3/16 X .402
5	71376324	1	SHIELD, BIN SAMPLE, UPPER
	700717635	AR	RIVET, 3/16 X .402
6	71391966	1	SHIELD, BIN SAMPLE, LOWER
	700717635	AR	RIVET, 3/16 X .402
7	71392602	1	PANEL, FRONT (RH)
	700717635	AR	RIVET, 3/16 X .402
8	71373513	1	HINGE, DOOR
9	71376349	1	DOOR
	700717635	3	RIVET, 3/16 X .402
	71190960	1	KNOB, DOOR
10	71391953	1	PANEL, GRAIN BIN FRONT
11	71392601	1	PANEL, FRONT (LH)
	700717635	AR	RIVET, 3/16 X .402
	70924837	AR	RIVET, 3/16 X .277
12	71393257	1	SEAL, WINDOW TRIM
13	71390148	2	SUPPORT, FRT BIN VERTICAL
	70921210	8	CAPSCREW, 3/8-16 X 1.0
	705038	8	LOCKWASHER, 3/8
	70916950	8	HEXNUT, 3/8-16
14	71393411	1	GLASS ASY., GRAIN BIN
	70924283	10	RIVET
	71393410	1	PIN, HINGE
15	71390764	1	SPACER, HINGE
16	71392618	1	CHANNEL, UPPER FRAME FRONT
	70921210	29	CAPSCREW, 3/8-16 X 1.0
	705038	29	LOCKWASHER, 3/8
	70916950	29	HEXNUT, 3/8-16
17	71392663	1	PANEL, CORNER (RH)
	700717635	AR	RIVET, 3/16 X .402
18	71395997	1	ANGLE, FLANGE LOWER (RH)
19	71393253	1	ANGLE, FLANGE MID-LOWER (RH)
	700717635	3	RIVET, 3/16 X .402
20	71393252	1	ANGLE, FLANGE MID-UPPER (RH)

CONTINUED

GRAIN BIN
UPPER STRUCTURE & MOUNTS

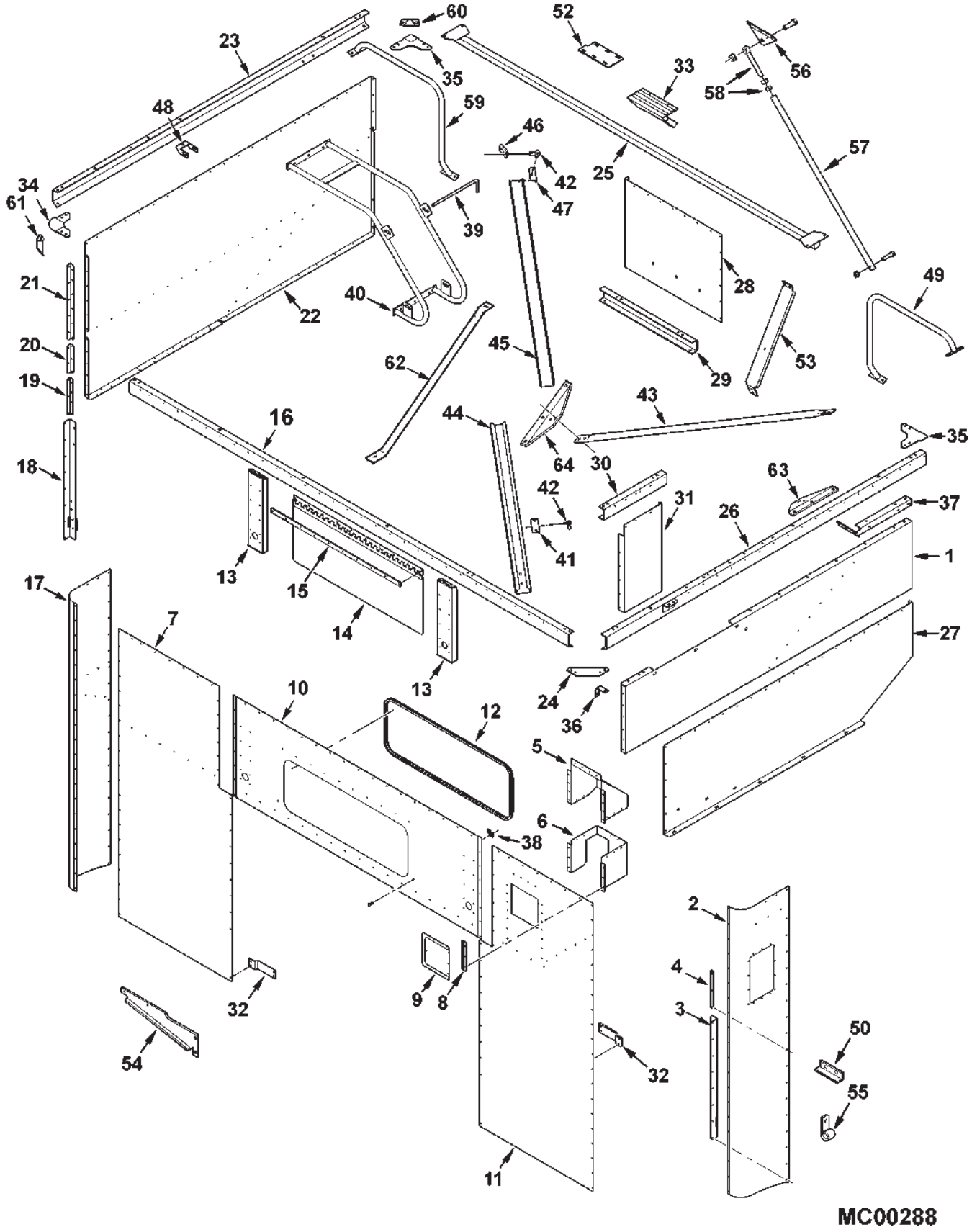

GRAIN BIN
UPPER STRUCTURE & MOUNTS

ITEM	NUMBER	QTY	DESCRIPTION
21	71393251	1	ANGLE, FLANGE UPPER (RH)
	700717635	6	RIVET, 3/16 X .402
22	71391964	1	PANEL, UPPER GRAIN BIN (RH)
	700717635	AR	RIVET, 3/16 X .402
	70924837	AR	RIVET, 3/16 X .277
23	71392624	1	CHANNEL, UPPER FRAME OUTER (RH)
24	71392616	4	GUSSET, FRAME
25	71396664C	1	BRACE
26	71392658	1	CHANNEL, UPPER FRAME INNER (LH)
27	71391961	1	PANEL, UPPER REAR (LH)
	700717635	AR	RIVET, 3/16 X .402
	70924837	AR	RIVET, 3/16 X .277
	70921965	5	CAPSCREW, 3/8-16 X 3/4
	70917378	5	WASHER, 3/8 WIDE
	705038	5	LOCKWASHER, 3/8
	70916950	5	HEXNUT, 3/8-16
28	71391962	1	PANEL, DIVISION (LH)
	700717635	AR	RIVET, 3/16 X .402
29	71392621	1	CHANNEL, UPPER FRAME SUPPORT
	70921210	2	CAPSCREW, 3/8-16 X 1.0
	705038	2	LOCKWASHER, 3/8
	70916950	2	HEXNUT, 3/8-16
30	71392622	1	CHANNEL, UPPER FRAME OUTER (LH)
31	71391963	1	PANEL, FRONT UPPER (LH)
	700717635	AR	RIVET, 3/16 X .402
	70924837	AR	RIVET, 3/16 X .277
	70921210	1	CAPSCREW, 3/8-16 X 1.0
	705038	1	LOCKWASHER, 3/8
	70916950	1	HEXNUT, 3/8-16
32	71394325	2	SUPPORT, FRONT PANEL (660 ONLY)
	700129058	2	SPACER (670 ONLY)
	7703457	AR	CAPSCREW, 1/4-20 X 3/4
	1703354	AR	NUT, HEX FLANGE TOP LOCK, 1/4-20
33	71394688	1	STEP ASY., GRAIN BIN
	7703457	4	CAPSCREW, 1/4-20 X 3/4
	1703354	4	HEXNUT, 1/4-20
	71394321	AR	TAPE, ANTI-SKID
34	71394420	1	BRACE, CORNER ROUND
35	71394419	2	BRACE, CORNER SQUARE
36	71395992C	1	BRACKET, FUEL TANK VENT
37	2633681W2	1	SUPPORT
	70921332	5	CAPSCREW, 5/16-18 X 3/4
	70917642	2	WASHER, 5/16 WIDE
	70917356	5	LOCKWASHER, 5/16
	70917372	5	HEXNUT, 5/16-18
38	108610W1	2	CLIP, GLASS RETAINER
	70931449	2	WASHER, 13/32 ID X 1-1/8 OD 7GA
	70937101	2	SPEEDNUT, THRD GRIP 1/4
	7770167	2	BOLT, RD HD SQ NK 1/4-20 X 1.0
	705707	2	WASHER, FLAT 1/4
	705012	2	LOCKWASHER, 1/4
	70916952	2	NUT, WING 1/4-20

CONTINUED

GRAIN BIN
UPPER STRUCTURE & MOUNTS

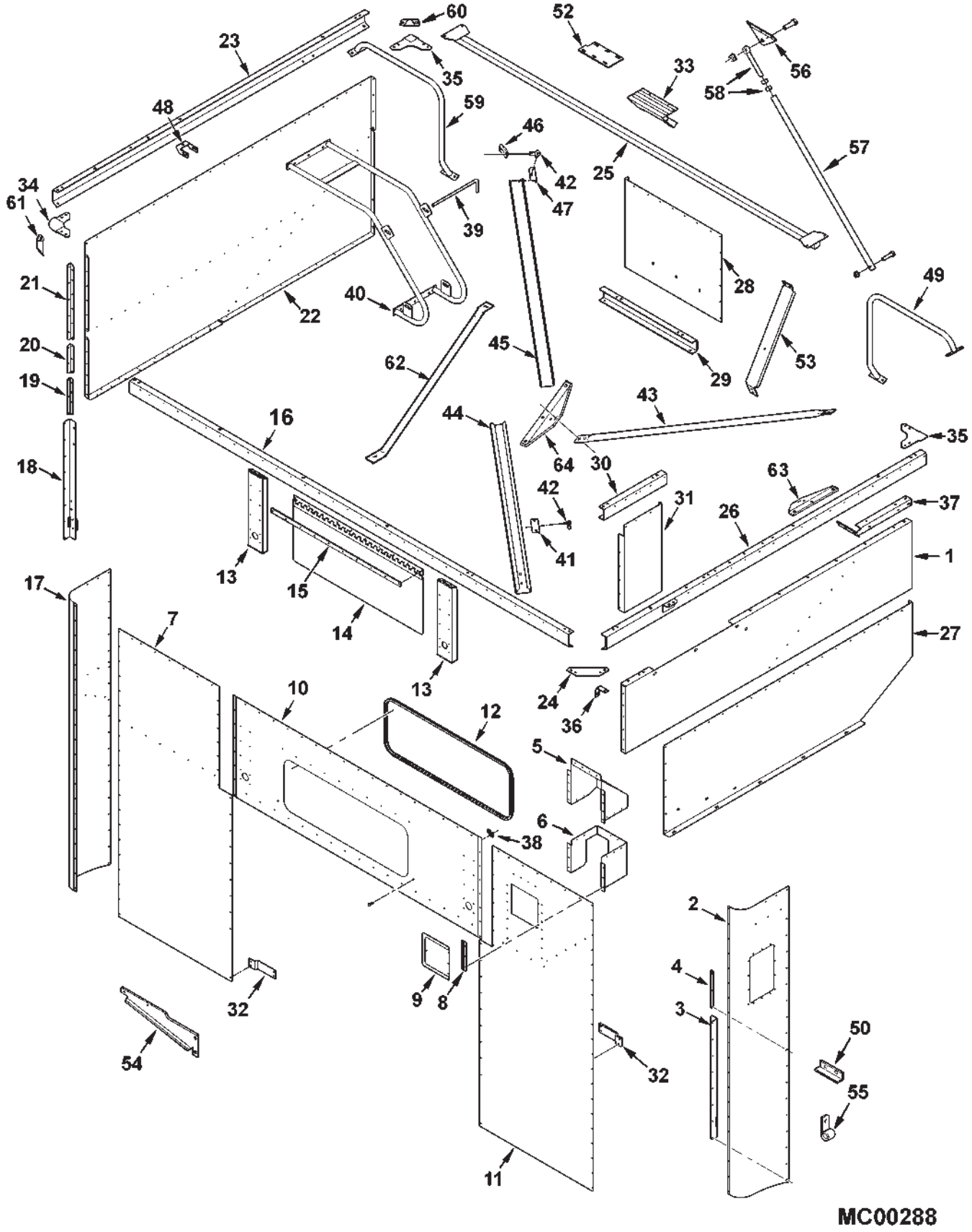

GRAIN BIN
UPPER STRUCTURE & MOUNTS

ITEM	NUMBER	QTY	DESCRIPTION
39	71390384	1	ROD, BIN FILL AUGER
	70918431	1	WASHER, FLAT 1/2
	70936348	1	PIN, CLEVIS
40	71393901	1	RETAINER, AUGER
	70921210	6	CAPSCREW, 3/8-16 X 1 GR5
	70917378	6	WASHER, 3/8 WIDE
	705038	6	LOCKWASHER, 3/8
	70916950	6	NUT, 3/8-16 REG
41	71393907	1	SUPPORT ANGLE, LOWER CHANNEL
42	71326336	2	JOINT, BALL
43	71408830	1	CROSS BRACE (YR 2005 FIELD CAMPAIGN)
	70921210	4	CAPSCREW, 3/8-16 X 1 GR5
	70917378	4	WASHER, 3/8 WIDE
	Y704734	4	NUT, HEX FLANGE TOP LOCK, 3/8-16
44	71393425P	1	TRAY, LOWER SAMPLE
45	71393424B	1	TRAY, UPPER SAMPLE
46	71393908	1	ANCHOR, SAMPLE TRAY
47	71393909	1	SUPPORT ANGLE, UPPER
48	102903M91	12	HINGE ASY.
	7771769	12	CAPSCREW, 1/2-13 X 3/4
49	71393873	1	RAIL WLDMT, LEFT BIN EXT'N SUPPORT
	70921210	4	CAPSCREW, 3/8-16 X 1.0
	705038	4	LOCKWASHER, 3/8
	70916950	4	NUT, 3/8-16 REG
50	71397111	1	ANGLE
51	70937685	1	J-CLIP, 3/8 DIA X .406 MTG HOLE
52	71394920	1	PLATE, ENG. COVER
	7883408	3	SCREW, HX FLANGE, 3/8-16 X 1-1/4 GR8
	704247	3	LOCKNUT, HEX SERR FLANGE, 3/8-16
53	71393913	2	SUPPORT, REAR GRAIN BIN
	70921210	8	CAPSCREW, 3/8-16 X 1.0
	Y704734	8	NUT, HEX FLANGE TOP LOCK, 3/8-16
54	71405933B	1	PLATE, RT TANK SUPPORT
	70921210	4	CAPSCREW, 3/8-16 X 1.0
	Y704734	4	NUT, HEX FLANGE TOP LOCK, 3/8-16
55	70936314	1	J-CLIP, 1/2 DIA X .406 MTG. HOLE
56	71397122	1	ANCHOR
	70921210	3	CAPSCREW, 3/8-16 X 1.0
	Y704734	3	NUT, HEX FLANGE TOP LOCK, 3/8-16
57	71397121	1	BRACE (PRIOR S/N HR87101)
	71397124	1	BRACE (EFF. S/N HR87101)
	7701659	1	CAPSCREW, 5/8-11 X 2-1/2
	70918432	3	WASHER, 5/8, WIDE (QTY. 1 PRIOR S/N HR87101)
	700703922	1	NUT, HEX FLANGE TOP LOCK, 5/8-11
58	71343344	1	EYEBOLT
	7702145	1	CAPSCREW, 3/4-10 X 2-1/2
	70918433	3	WASHER, 3/4, WIDE (EFF. S/N HR87101)
	700703923	1	NUT, HEX FLANGE TOP LOCK, 3/4-10
	70913160	2	NUT, 3/4-10 REG

CONTINUED

GRAIN BIN
UPPER STRUCTURE & MOUNTS

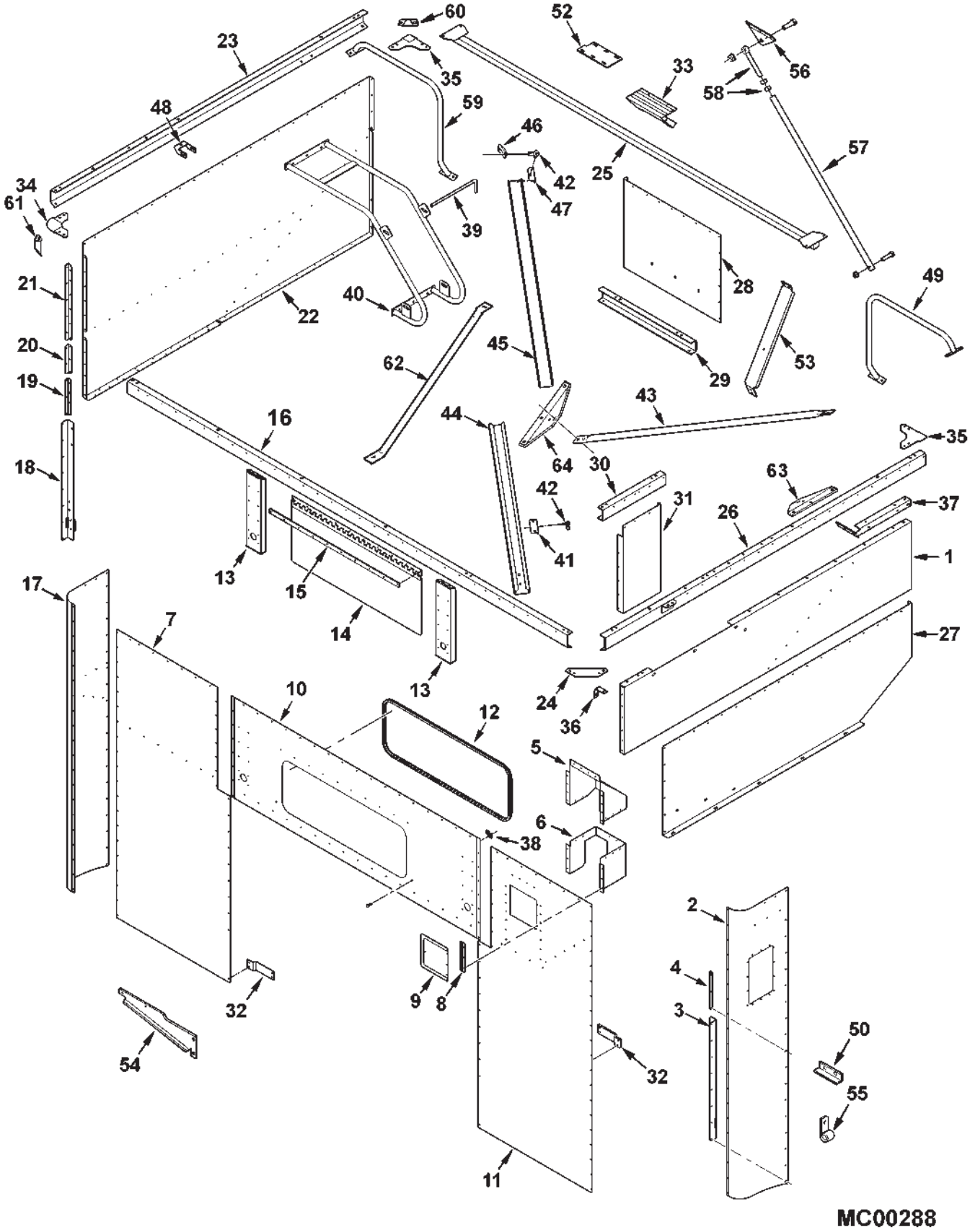

GRAIN BIN
UPPER STRUCTURE & MOUNTS

ITEM	NUMBER	QTY	DESCRIPTION
59	71393875	1	RAIL WLDMT, RT BIN EXT'N SUPPORT
	70921210	4	CAPSCREW, 3/8-16 X 1.0
	705038	4	LOCKWASHER, 3/8
	70916950	4	NUT, 3/8-16 REG
60	71399270P	3	GUSSET, CORNER (EFF. S/N HN87101)
61	71399271P	1	GUSSET, CORNER (EFF. S/N HN87101)
	70921210	8	CAPSCREW, 3/8-16 X 1.0
	Y704734	8	NUT, HEX FLNG TOP LOCK, 3/8-16
	70917378	4	WASHER, 3/8 WIDE
62	71403618B	1	BRACE, UNLOADER (EFF. S/N HN87101)
	70920415	2	CAPSCREW, 3/8-16 X 1-1/4
	705038	2	LOCKWASHER, 3/8
	70916950	2	NUT, 3/8-16 REG
63	71408827	1	BRACKET, X-BRACE, UPPER (YR 2005 FIELD CAMPAIGN)
	70920415	3	CAPSCREW, 3/8-16 X 1-1/4 GR5
	70917378	3	WASHER, 3/8 WIDE
	Y704734	3	NUT, HEX FLANGE TOP LOCK, 3/8-16
64	71408828	1	BRACKET, X-BRACE, LOWER (YR 2005 FIELD CAMPAIGN)
	70928635	3	SCR,HEX WSHR HD TAPPING, 3/8-16 X 1-1/4

MC00288
PR: 282

BIN EXTENSIONS

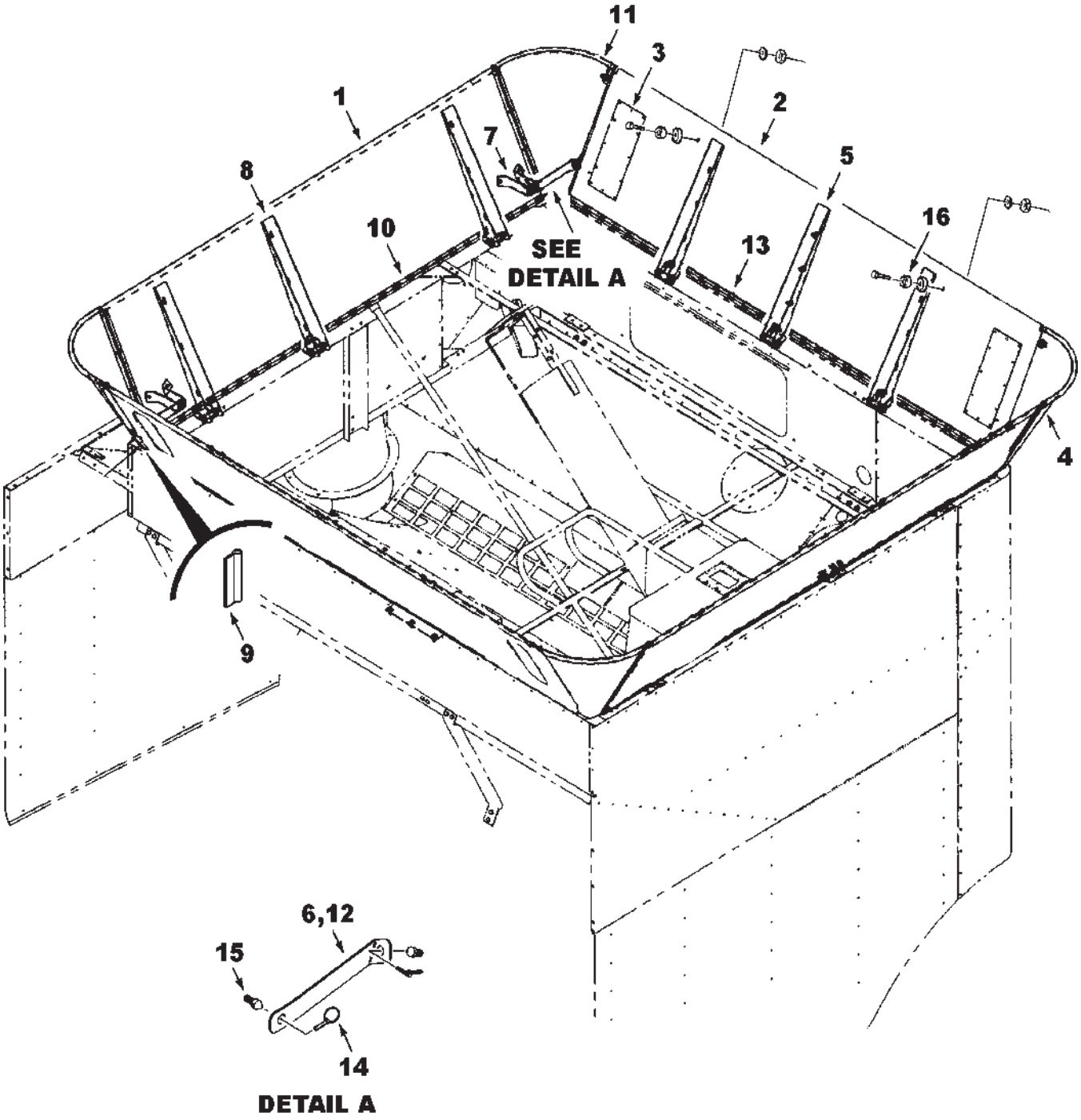

MC00290

ITEM	NUMBER	QTY	DESCRIPTION
1	71396404B	2	PANEL ASY., SIDE (W/HINGES)
	71393870	4	HINGE
	700717635	16	RIVET, 3/16 DIA X .25
2	71396403B	2	PANEL ASY., END (INCL. ITEM 3)
3	71376350B	4	PANEL, WINDOW
	70924837	48	RIVET, 3/16 X 9/32
4	71393867B	2	CORNER WLDMT, RF & LR
	700721915	8	RIVET, 3/16 DIA X .406, BLACK
5	71393868	6	CHANNEL, HINGE, FRONT & REAR
	7772767	6	CAPSCREW, 3/8-16 X 3-1/2
	700129071	6	SPACER, .531 OD X .875 ID
	Y704734	6	LOCKNUT, HEX FLANGE, 3/8-16
	700721916	18	SCR, TRUSS HD, 5/16-18 X 1.0, BLACK
	70917378	18	WASHER, FLAT 3/8 WIDE
	70917356	18	LOCKWASHER, 5/16
	70917372	18	NUT, 5/16-18 REG
6	71395386	2	STRAP, CORNER SUPPORT, RF & LR
7	71393871B	4	BRACKET, HINGE MOUNTING
	700721916	8	SCR, TRUSS HD, 5/16-18 X 1.0, BLACK
	Y705020	8	LOCKWASHER, 5/16 REG
	70917372	8	NUT, 5/16-18 REG
8	71393869B	6	CHANNEL, HINGE, SIDES
	7772767	6	CAPSCREW, 3/8-16 X 3-1/2
	700129071	6	SPACER, .531 OD X .875 ID
	Y704734	6	LOCKNUT, HEX FLANGE, 3/8-16
	700721916	18	SCR, TRUSS HD, 5/16-18 X 1.0, BLACK
	70917378	18	WASHER, FLAT, 3/8 WIDE
	70917356	18	LOCKWASHER, 5/16
	70917372	18	NUT, 5/16-18 REG
9	71395390	4	SEAL, CORNER
10	71395388	2	SEAL, SIDE
11	71394418P	2	CORNER WLDMT, LF & RR
	700721915	8	RIVET, 3/16 DIA X .406, BLACK
12	71395387	2	STRAP, CORNER SUPPORT, LF & RR
13	71395389	2	SEAL, FRONT & REAR PANEL
14	863415	12	PIN, KLIK
	705632	8	WASHER, FLAT 5/8
15	1656110W2	12	PIN, SHIELD LOCK
	70916950	12	NUT, 3/8-16 REG
	705038	12	LOCKWASHER, 3/8
	70917378	12	WASHER, FLAT, 3/8 WIDE
16	72509675	4	BUMPER, RUBBER
	7703473	4	CAPSCREW, 1/4-20 X 1-1/4
	700134393	4	SPACER, .47 TH
	705012	4	LOCKWASHER, 1/4
	704007	4	NUT, 1/4-20 REG

MC00290
PR: 288

FUEL TANKS

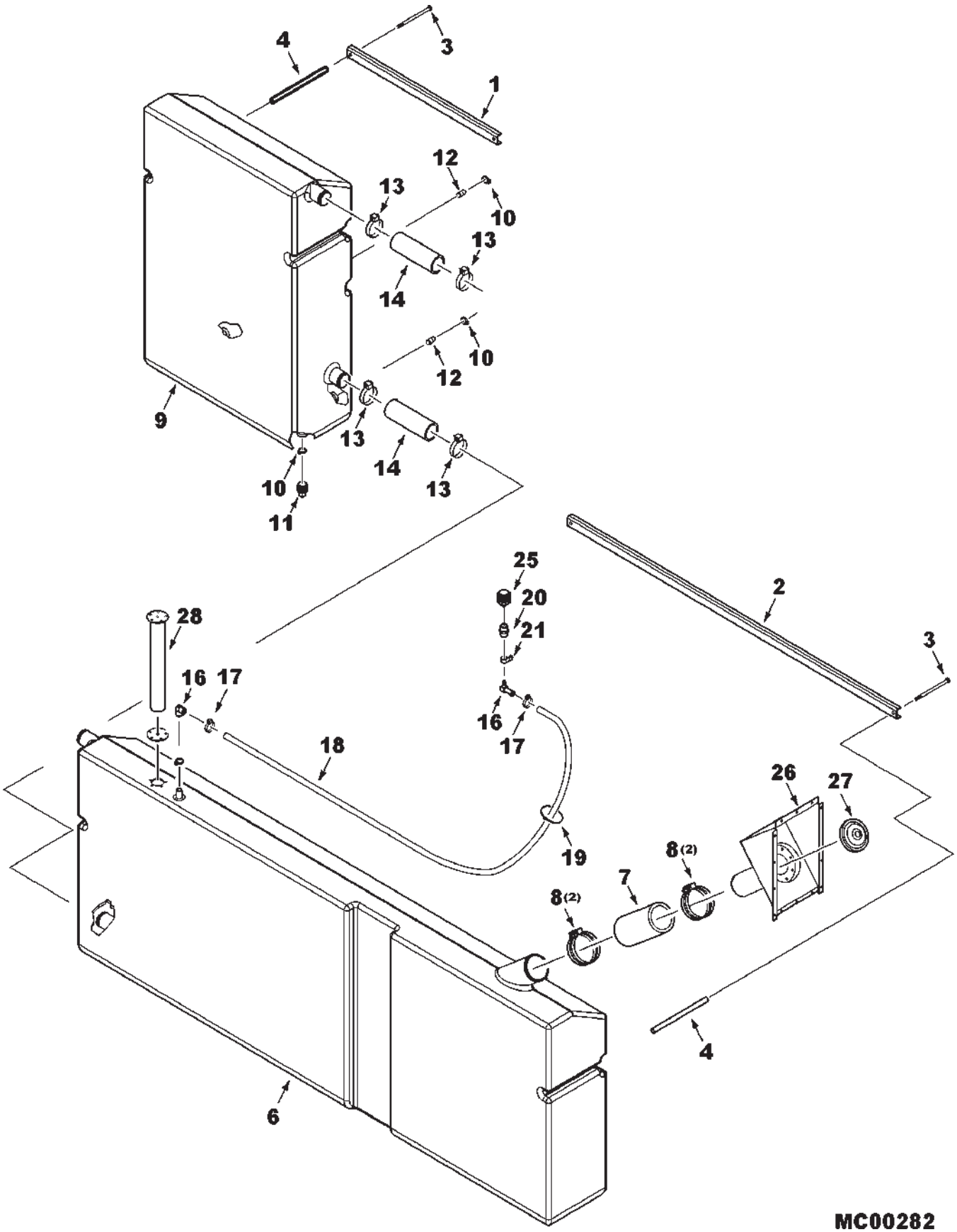
4
3
1
12
13
10
13
14
10
12
9
13
14
10
13
11
25
20
21
2
28
3
16
17
16
17
18
26
27
19
8(2)
7
8(2)
4
6
MC00282

ITEM	NUMBER	QTY	DESCRIPTION
1	71389785	1	CHANNEL, TANK RETAINING (RH)
2	71389784	1	CHANNEL, TANK RETAINING (LH)
3	70937179	4	SCREW, CAP, 3/8-16 X 11.0
	705038	4	LOCKWASHER, 3/8
4	71390914	4	SPACER
6	71388751	1	TANK, FUEL (LH)
7	71390241	1	HOSE, FILLER NECK COUPLER
8	3725988M1	4	CLAMP, #60, 3-3/8 TO 4-1/4
9	71388752	1	TANK, FUEL (RH)
10	7020027	3	CLAMP, HOSE, WORM DR, .81-1.50
11	70905262	1	PLUG, SQ HD, 3/4 NPT
12	70901828	2	BUSHING, 3/4 X 1/2 NPT
	700704010	1	SILICONE SEALANT, BLACK, 10.2 OZ.
13	720649	4	CLAMP, HOSE, WORM DR, 2.0-3.0
14	71390242	2	HOSE, COUPLER
16	70931226	2	FITTING, 90DEG. PUSH-ON HOSE
	7020027	1	CLAMP, HOSE, WORM DR, .81-1.50
17	70921910	2	CLAMP, HOSE, WORM DR, .44-.78
18	71390248	1	HOSE, VENT
19	70925442	1	TIE, SELF-LOCK .184 X 14.0
20	70922863	1	COUPLER, 1/4-18 NPTF
21	70936747	1	CLAMP, .750 TUBE X .281
	7703457	1	CAPSCREW, 1/4-20 X 3/4
	705012	1	LOCKWASHER, 1/4
	704007	1	NUT, 1/4-20 REG
25	71186814	1	BREATHER
26	71391932	1	INLET, FUEL
27	71391625	1	CAP, FUEL FILLER
28	71407293	1	SENDER, FUEL LEVEL W/ GASKET (SEE "ELECTRICAL, GRAIN BIN"

MC00282
PR: 290

ENGINE COVERS

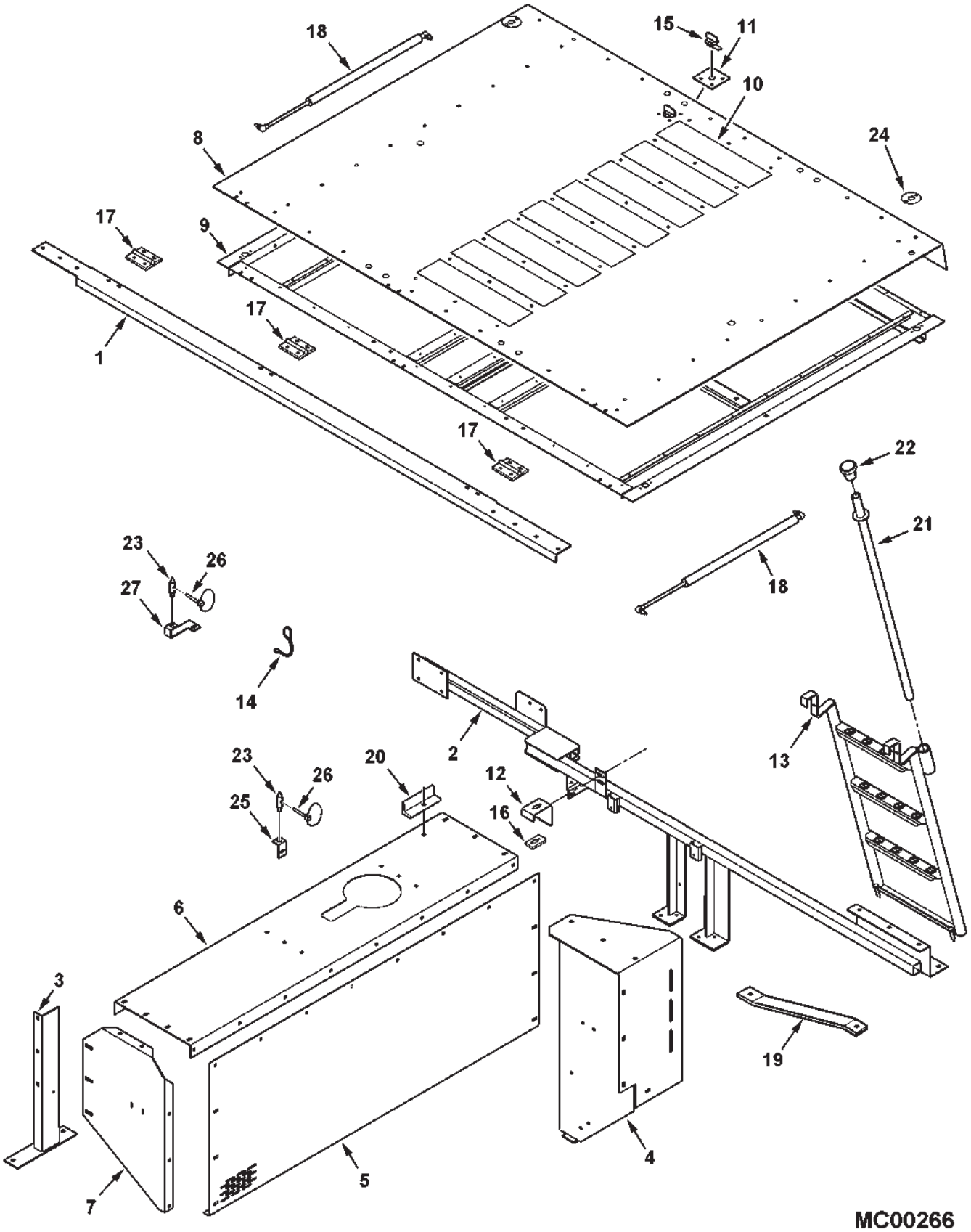

ITEM	NUMBER	QTY	DESCRIPTION
1	71390755	1	CROSS MEMBER, FRONT ENGINE
	7700461	3	BOLT, RD HD SQ NK, 5/16-18 X 3/4
	70917642	3	WASHER, 5/16 WIDE
	70917356	3	LOCKWASHER, 5/16
	70917372	3	NUT, 5/16-18
2	71398202	1	CROSS MMBR WLMT,REAR (PRIOR S/N HN87101)
	71400912	1	CROSS MMBR WLMT,REAR (EFF. S/N HN87101 - HP87999)
	71410786	1	CROSS MMBR WLMT,REAR (EFF. S/N HR87101
	7700461	8	BOLT, RD HD SQ NK, 5/16-18 X 3/4
	70917642	8	WASHER, 5/16 WIDE
	70917356	8	LOCKWASHER, 5/16
	70917372	8	NUT, 5/16-18
3	71387962	1	SUPPORT WLDMT., LH FRONT ENGINE
	70921176	2	CAPSCREW, 1/2-13 X 1-1/4
	Y705046	2	LOCKWASHER 1/2
	704031	2	NUT, 1/2-13
4	71395372	1	SUPPORT WLDMT., LH REAR ENGINE
	70921333	2	CAPSCREW, 5/16-18 X 1
	70917642	2	WASHER, 5/16 WIDE
	70917356	2	LOCKWASHER 5/16
	70917372	2	NUT, 5/16-18
	68759	3	BOLT, RHSN 3/8-16 X 1
	70916965	3	LOCKWASHER 3/8
	70916950	3	NUT, 3/8-16
5	-----	--	NOT USED (SEE SIDE SHIELDS, LEFT SIDE)
6	71390762	1	TOP, LH ENGINE ENCLOSURE
	7700461	7	BOLT, RHSN 5/16-18 X 3/4
	7700578	2	BOLT, RHSN 5/16-18 X 1
	70917642	9	WASHER, 5/16 WIDE
	70917356	9	LOCKWASHER, 5/16
	70917372	9	NUT, 5/16-18
7	71395375	1	FRONT, LH ENGINE ENCLOSURE
	68759	3	BOLT, RHSN 3/8-16 X 1
	70917378	3	WASHER, 3/8 WIDE
	70916965	3	LOCKWASHER, 3/8
	70916950	3	NUT, 3/8-16
8	71392846	1	SHEET ASY, W/DECALS (PRIOR S/N HN87101)
	71400911C	1	SHEET ASY, W/DECALS (EFF. S/N HN87101 - HP87999)
	71405950C	1	SHEET ASY, W/DECALS (EFF. S/N HR87101
	71379132	2	DECAL, WARNING ENGINE
	700721197	65	RIVET, 3/16 X .063-.125 GRIP, YELLOW
9	71392847	1	FRAME WLMT, ENG COVER(PRIOR S/N HR87101)
	71405945	1	FRAME WLMT, ENG COVER (EFF. S/N HR87101)
	68759	2	BOLT, RD HD SQ NK, 3/8-16 X 1
	70916965	2	LOCKWASHER, 3/8
	70916950	2	NUT, 3/8-16 REG
10	71388938	8	TAPE, ANTI-SKID

CONTINUED

ENGINE COVERS

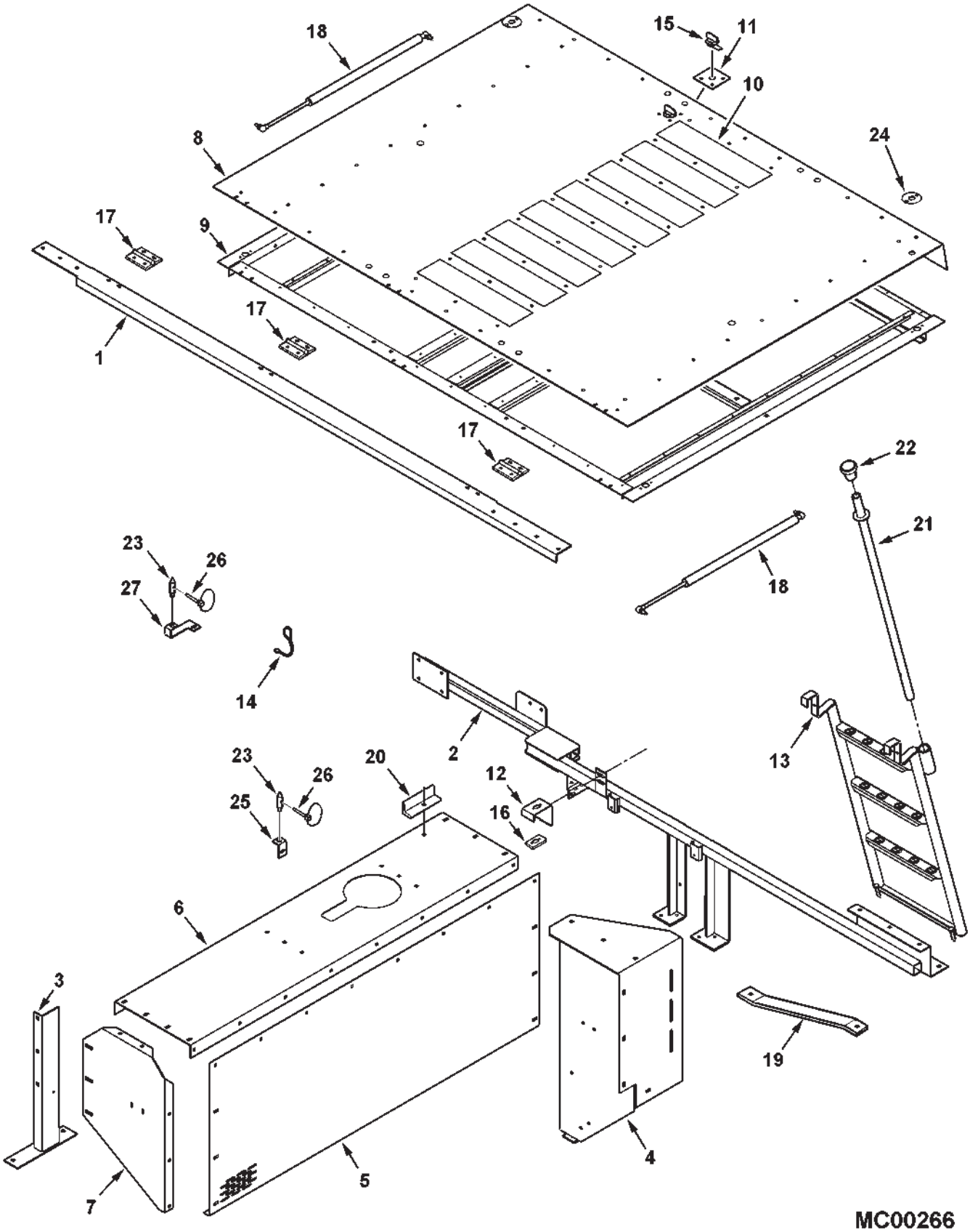

ITEM	NUMBER	QTY	DESCRIPTION
11	71388942	1	REINF PLATE, LATCH
	700721197	4	RIVET, 3/16 X .063-.125 GRIP, YELLOW
12	71388944	1	RECEIVER BRKT WLDMT, ENGINE HOOD
	68759	2	BOLT, RHSN 3/8-16 X 1
	70917378	2	WASHER, 3/8 WIDE
	70916965	2	LOCKWASHER, 3/8
	70916950	2	NUT, 3/8-16
13	71393476	1	LADDER WLMT (PRIOR S/N HN87101)(SERVICE WITH 71400913)
	71400913	1	LADDER WLMT (EFF. S/N HN87101 -HP87999)
	71410375	2	LADDER WLMT (EFF. S/N HR87101)
	70937714	2	PIN,CLEVIS RETAINR, W/RING .25 X 2.5
14	71390770	2	CABLE, LANYARD, 6 LG (PRIOR S/N HN87101)
	70934892	2	PIN, CLEVIS RETNR, W/RING .19 X 1.3 (PRIOR S/N HN87101)
	70931820	2	SCREW, TAPPING #10-16 X 1/2
15	700714706	1	LATCH, QUARTER TURN
16	700714529	1	RECEIVER, LATCH
	70924837	2	RIVET, 3/16 X 9/32
17	71345822	3	HINGE
	7703457	12	CAPSCREW, 1/4-20 X 3/4
	70917377	12	WASHER, 1/4 WIDE
	705012	12	LOCKWASHER, 1/4
	70916622	12	NUT, 1/4-20
18	71305916	2	GAS SPRING
	71307131	2	STUD/BALL
	71307132	2	CLIP/BALL STUD
	70917356	4	LOCKWASHER, 5/16
	70917372	4	NUT, 5/16-18
19	71395376	1	STRAP, SUPPORT
	70921210	1	CAPSCREW, 3/8-16 X 1
	Y704734	1	NUT, HX FLNG TOP LOCK, 3/8-16
	70923114	1	CAPSCREW, 1/2-13 X 1
	Y704742	1	LOCKNUT, HEX FLNG TOP, 1/2-13
20	71390759C	2	HOLD DOWN ASY (PRIOR S/N HN87101)
	70921210	2	CAPSCREW, 3/8-16 X 1
21	71400736	1	HANDLE WLDMT, ASSIST (EFF. S/N HN87101)
	70937714	1	PIN, CLEVIS RETNR, W/RING, .25 X 2.5
	70916937	1	PIN, SPRING, 1/4 X 1-1/4
22	71379254	1	TIP, CRUTCH (EFF. S/N HN87101)
23	1656110W2	2	PIN, SHIELD LOCK (EFF. S/N HN87101)
	70916965	2	LOCKWASHER, 3/8
	70916950	2	NUT, 3/8-16 REG
24	71400739	2	PLATE, PIN RECEIVER (EFF. S/N HN87101)
	700717635	4	RIVET, .188 X .126-.250
25	71400738	2	ANGLE, ENGINE COVER (EFF. S/N HN87101)
	70921965	2	CAPSCREW, 3/8-16 X 3/4
	70916950	1	NUT, 3/8-16 REG
26	863415	2	PIN, KLIK 3/16 X 1 W/CHAIN & COTTER (EFF. S/N HN87101)
27	71406414	1	BRKT, ENG COVER HOLD DOWN (EFF. S/N HR87101)

REAR DECK AND LADDER

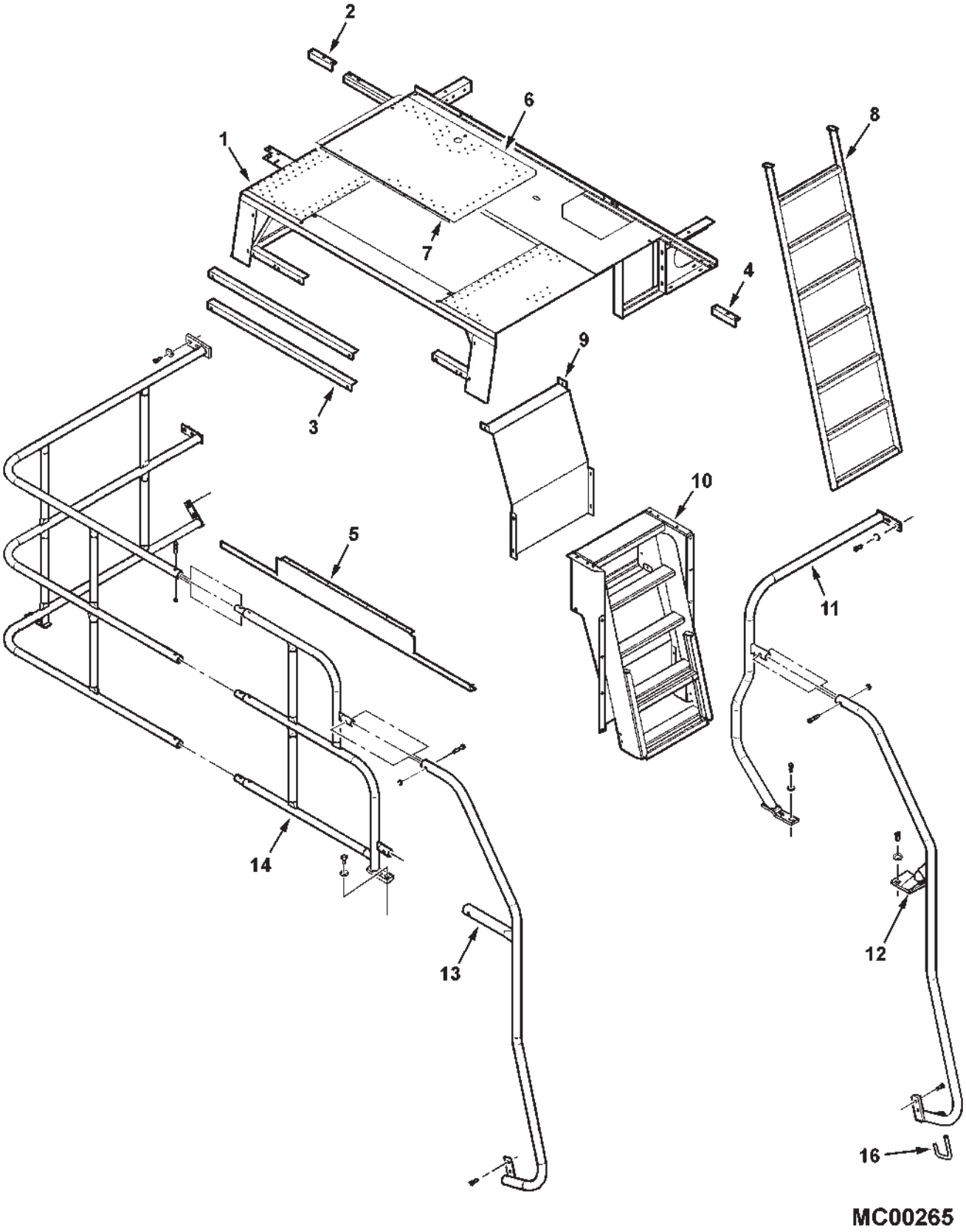

ITEM	NUMBER	QTY	DESCRIPTION
1	71395359	1	DECK & FLOOR WLMT, RR(PRIOR S/N HR87101)
	71410993	1	DECK & FLOOR WLMT, RR (EFF. S/N HR87101)
	70921210	5	CAPSCREW, 3/8-16 X 1
	70917378	5	WASHER, 3/8
	70916965	5	LOCKWASHER, 3/8
	70916950	5	NUT, 3/8-16
	701235	6	CAPSCREW, 1/2-13 X 1-1/2
	70918431	12	WASHER, WIDE 1/2
	Y705046	6	LOCKWASHER, 1/2
	704031	6	NUT, 1/2-13
2	-----	--	ANGLE, SHIELD SUP'T(SEE LH SIDE SHIELDS)
3	2635250W1C	2	ANGLE, REAR DECK
	373136X1	2	TRUSS SCREW, 5/16-18 X 1
	70921332	2	CAPSCREW, 5/16-18 X 3/4
	Y705020	4	LOCKWASHER, 5/16
	70917372	4	NUT, HEX 5/16-18
4	-----	--	BRKT, SIDE SHIELD (SEE RH SIDE SHIELDS)
	70921210	6	CAPSCREW, HEX, 5/16-18 X 1
	70917642	6	WASHER, FLAT, 5/16
	Y704726	6	NUT, LOCK, FLANGE, 5/16-1
5	71393494	1	TRIM REAR, REAR DECK
	70918249	2	MACHINE SCREW, CRTH 5/16-18 X 3/4
	Y705020	2	LOCKWASHER, 5/16
	70917372	2	NUT, HEX 5/16-18
6	71393492	1	DOOR, ROTOR DRIVE ACCESS
	70918249	1	SCREW, TRUSS HD, MACH, 5/16-18 X 3/4
7	71393493	1	HINGE, PIANO, 34"
	70937253	14	RIVET, BLIND
8	71386773	1	REAR LADDER WLDMT
9	71391831	1	SHIELD, REAR LADDER
	71379129	1	DECAL, WARNING FALLING
	71379127	1	DECAL, WARNING SPREADER
	70921332	4	CAPSCREW, 5/16-18 X 3/4
	70917642	4	WASHER, WIDE 5/16
	Y705020	4	LOCKWASHER, 5/16
10	71391835	1	SUPPORT WLDMT, REAR LADDER
	70921210	6	CAPSCREW, 3/8-16 X 1
	70916965	6	LOCKWASHER, 3/8
	70916950	6	NUT, HEX 3/8-16
	70921332	6	CAPSCREW, 5/16-18 X 3/4
	Y705020	6	LOCKWASHER, 5/16
	70917372	6	NUT, HEX 5/16-18

CONTINUED

REAR DECK AND LADDER

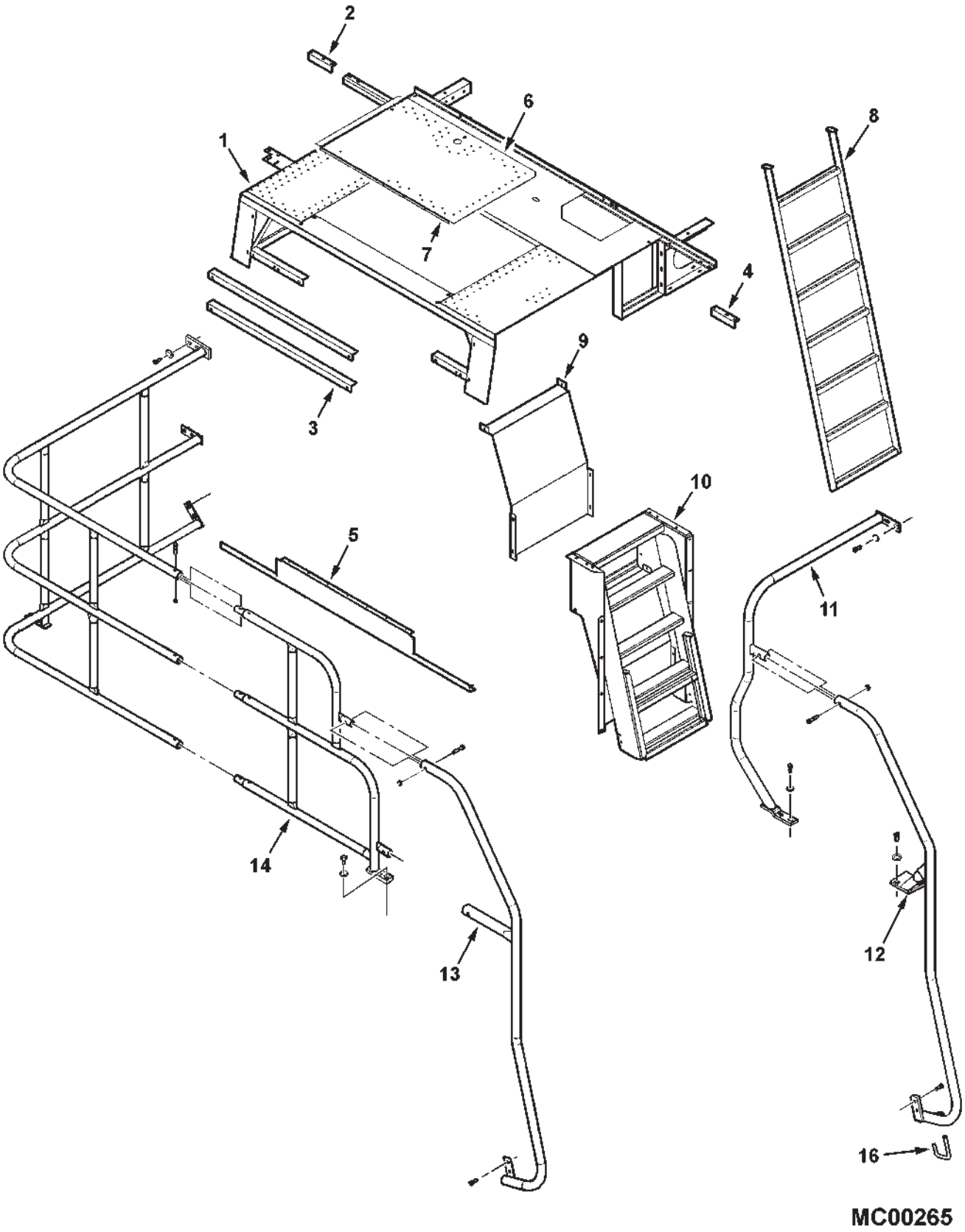

ITEM	NUMBER	QTY	DESCRIPTION
11	71393992	1	HANDRAIL, RIGHT REAR DECK
	70921210	4	CAPSCREW, 3/8-16 X 1
	70916965	4	LOCKWASHER, 3/8
	70916950	4	NUT, HEX 3/8-16
	70917378	4	WASHER, WIDE 3/8
12	71393995	1	GRAB RAIL, RIGHT
	70921210	4	CAPSCREW, 3/8-16 X 1
	70921971	1	CAPSCREW, 3/8-16 X 1-3/4
	70916965	4	LOCKWASHER, 3/8
	70916950	4	NUT, HEX 3/8-16
	70917378	2	WASHER, WIDE 3/8
	7704141	1	NUT, HTLN 3/8-16
13	71393994	1	GRAB RAIL, LEFT
	70921210	2	CAPSCREW, 3/8-16 X 1
	70921971	2	CAPSCREW, 3/8-16 X 1-3/4
	70916965	2	LOCKWASHER, 3/8
	70916950	2	NUT, HEX 3/8-16
	7704141	2	NUT, HTLN 3/8-16
14	71393984	1	HANDRAIL, CENTER REAR DECK
	70921210	2	CAPSCREW, 3/8-16 X 1
	70917378	2	WASHER, WIDE 3/8
15	71390789	1	HANDRAIL, LEFT REAR DECK
	70921210	8	CAPSCREW, 3/8-16 X 1
	70921971	3	CAPSCREW, 3/8-16 X 1-3/4
	70916965	8	LOCKWASHER, 3/8
	70916950	8	NUT, HEX 3/8-16
	70917378	8	WASHER, WIDE 3/8
	7704141	3	NUT, HTLN 3/8-16
16	2632690W1	1	ROD, LADDER SUPPORT
	70918431	1	WASHER, 1/2
	354068X1	1	COTTER PIN

MC00265
PR: 296

SIDE SHIELDS
LEFT FRONT AND MIDDLE

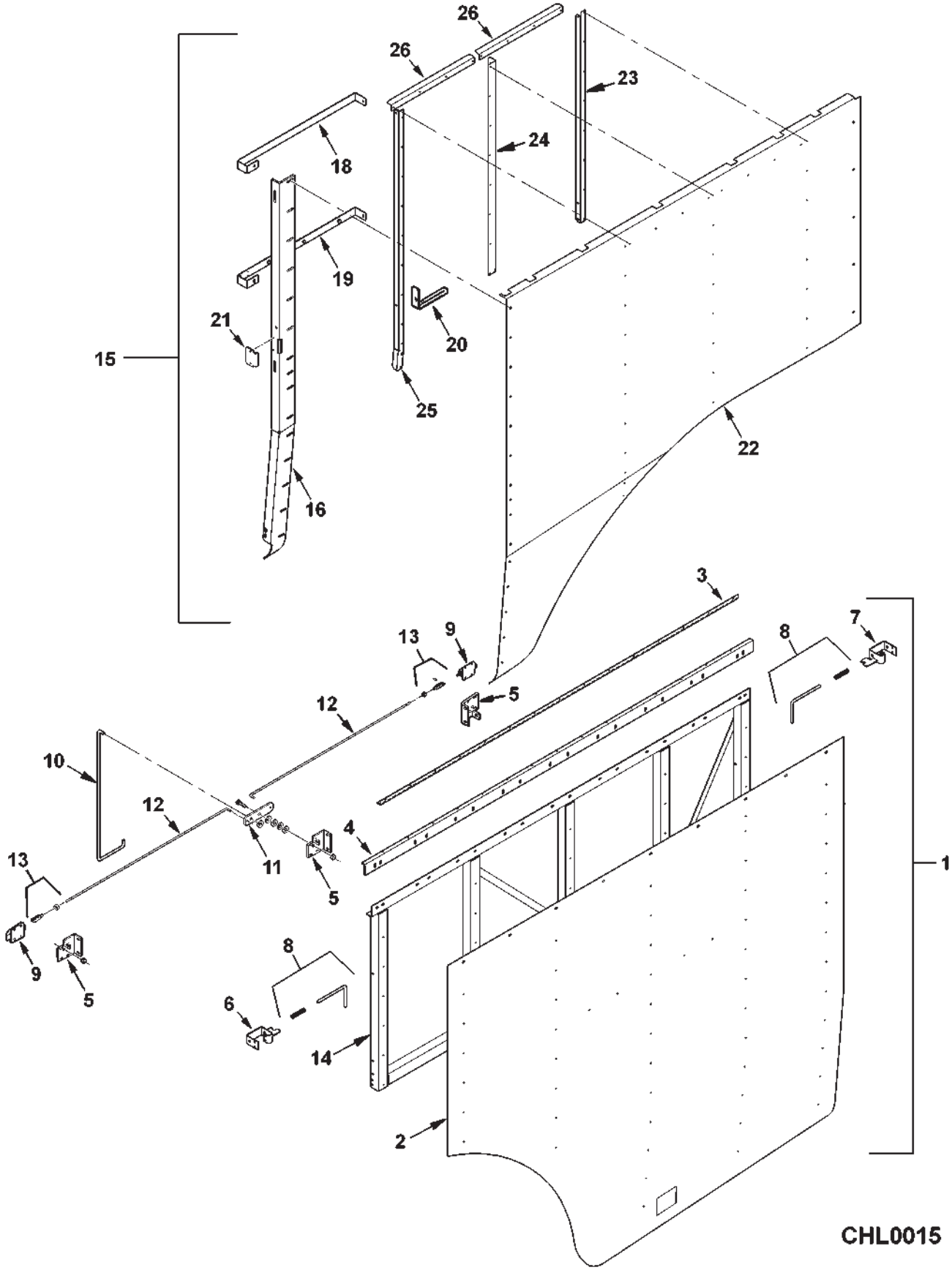

SIDE SHIELDS
LEFT FRONT AND MIDDLE

ITEM	NUMBER	QTY	DESCRIPTION
1	71398915C	1	SHIELD ASY, LEFT FRONT(INCL. ITEMS 2-14)
	700721197	15	POP-RIVET, 3/16 X .063-.125, YELLOW
2	71398924C	1	SHIELD PANEL, LEFT FRONT
	700721854	9	SCREW, TRUSS HD, MACH, 5/16-18 X 5/8
	70931277	9	NUT, HEX SERR FLNG, 5/16-18
	700717635	57	POP-RIVET, .188 X .126-.25
	70917380	15	WASHER, 3/16
3	71349763	1	HINGE, LEFT SHIELD
4	71398453C	1	ANGLE, SHIELD HANGER
	700717635	15	POP-RIVET, .188 X .126-.25
5	71394874P	3	MOUNT BRACKET, LATCH
	7883267	9	SCREW,HEX WSHR HD MACH, 1/4-20 X 1/2
	70931209	9	NUT, HEX SERR FLNG, 1/4-20
6	71399199	1	BRACKET WLDMT, LEFT
	7703457	4	CAPSCREW, 1/4-20 X 3/4
	1703354	4	NUT, HEX FLNG TOP LK, 1/4-20
7	71399198	1	BRACKET WLDMT, RIGHT
	7703457	4	CAPSCREW, 1/4-20 X 3/4
	1703354	4	NUT, HEX FLNG TOP LK, 1/4-20
8	71399326	2	PIN, LATCH
	Y58040	2	SPRING, COMPRESSION
	70924764	2	PIN, SPRING, 1/8 X 3/4
9	71395354	2	LATCH ASY, SHIELD
	700705088	8	SCREW, PAN HD MACH, #10-24 X 3/4
	70917380	8	WASHER, #10
	705004	8	LOCKWASHER, #10
	Y704072	8	NUT, #10-24
10	71398925	1	ROD, RELEASE HANDLE, LEFT
	70917378	1	WASHER, 3/8 WIDE
	62026	1	COTTER PIN, 1/16 X 3/4
11	71395353	1	PIVOT, FRONT LATCH
	70920415	1	CAPSCREW, 3/8-16 X 1-1/4
	70917378	6	WASHER, 3/8 WIDE
	Y704635	1	NUT, CENTER LOCK, 3/8-16
12	71396401	2	ROD, LATCH
	70917380	2	WASHER, #10
	62026	2	COTTER PIN, 1/16 X 3/4
13	70929595	2	YOKE, #10-32
	Y704445	2	NUT, #10-32
	70929591	2	CLEVIS PIN, 3/16 X .58 LG
	62026	2	COTTER PIN, 1/16 X 3/4
14	71398916C	1	FRAME WLDMT, LEFT SHIELD
15	71398881C	1	SHIELD ASY, LEFT CNTR (INCL ITEMS 16-26)
16	71398900	1	REINF. ANGLE, DOOR STOP
	700721198	15	SCREW, TRUSS HD, MACH, 5/16-18 X 1
	700709602	15	WASHER, 5/16 WIDE
	Y705020	15	LOCKWASHER, 5/16
	70917372	15	NUT, 5/16-18

CONTINUED

SIDE SHIELDS
LEFT FRONT AND MIDDLE

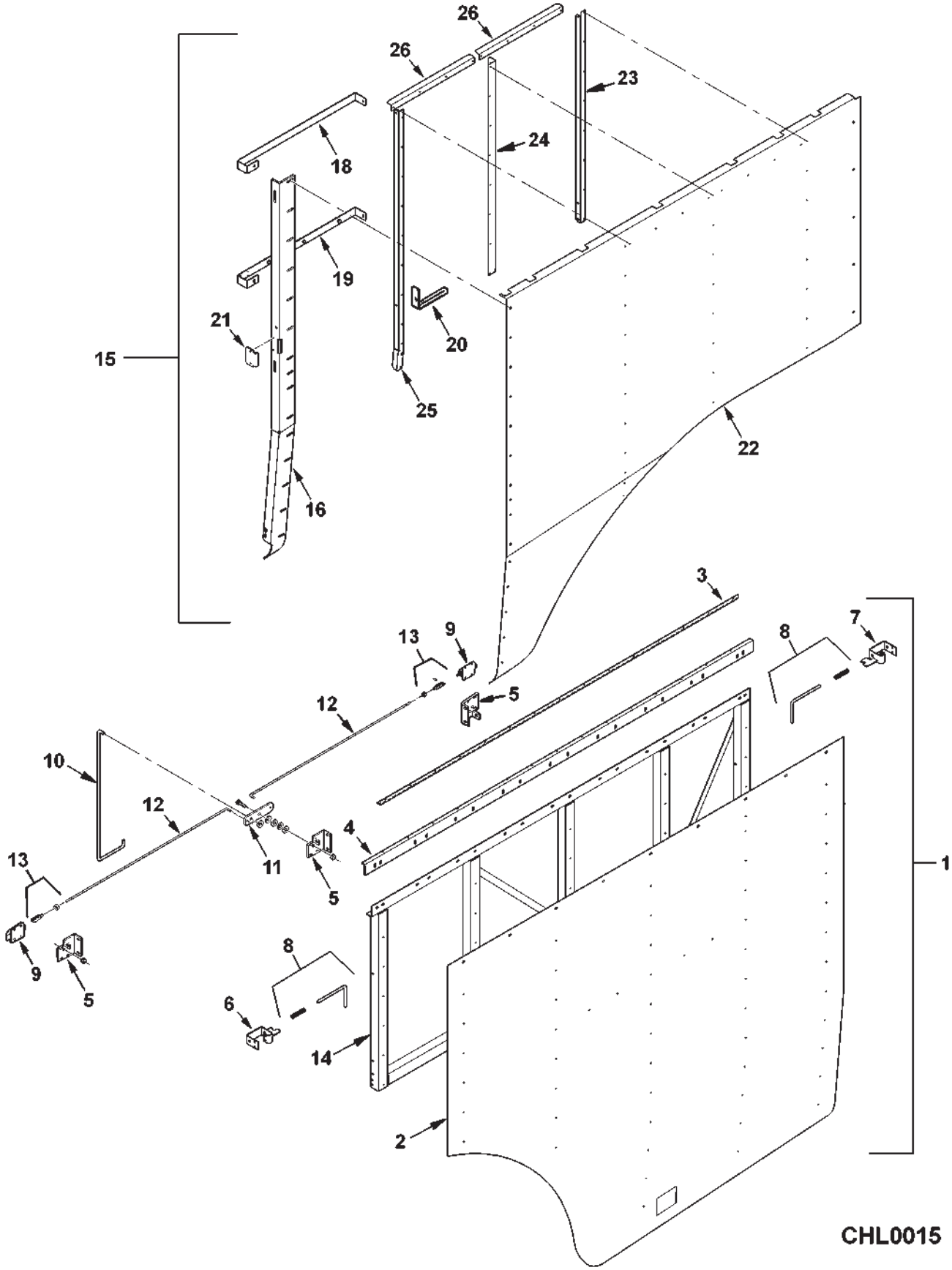

SIDE SHIELDS
LEFT FRONT AND MIDDLE

ITEM	NUMBER	QTY	DESCRIPTION
18	71398958C	1	STRAP, UPPER HANGER
	7703457	1	CAPSCREW, 1/4-20 X 3/4
	700709601	1	WASHER, 1/4 WIDE
	705012	1	LOCKWASHER, 1/4
	704007	1	NUT, 1/4-20
19	71398959C	1	STRAP WLDMT, CATCH
20	71393977C	1	BRACKET, J-BOLT HANGER
	70927401	1	CAPSCREW, 1/4-20 X 1
	700709601	2	WASHER, 1/4 WIDE
	705012	1	LOCKWASHER, 1/4
	704007	1	NUT, 1/4-20
21	71395351	1	PLATE, STRIKER, SHIELD LATCH
	700717635	2	POP-RIVET, 3/16 X .126-.250
22	71398882	1	SHIELD PANEL, LEFT CENTER
	70924837	33	POP-RIVET, 3/16 X .063-.125
23	71392837	1	ANGLE, STIFFENER
24	71398883C	1	ANGLE, SHIELD REINF
25	71398947C	1	ANGLE, SHIELD REINF
	70917380	2	WASHER, 3/16
	700717635	2	POP-RIVET, 3/16 X .126-.250
26	71399330C	2	ANGLE, SHEET REINF.

CHL0015
PR: 300

SIDE SHIELDS
LEFT SIDE

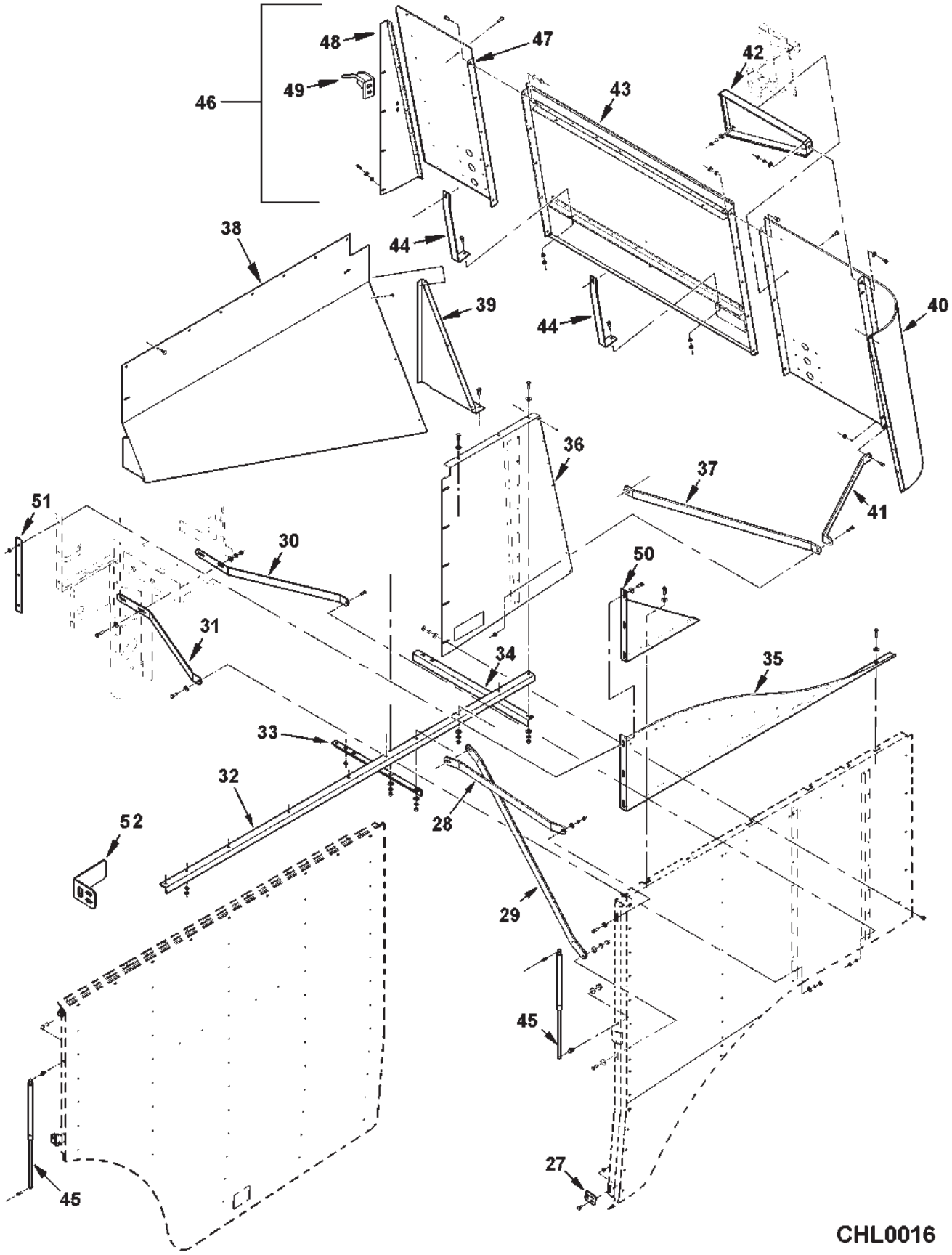

SIDE SHIELDS
LEFT SIDE

ITEM	NUMBER	QTY	DESCRIPTION
27	71399329	1	PLATE, LATCH
	7700461	2	BOLT,RD HD SHRT SQ NK, 5/16-18 X 3/4
	Y704726	2	NUT, HEX FLNG TOP LK, 5/16-18
28	71398911B	1	STRAP, LH DOOR BRACE
	70921333	1	CAPSCREW, 5/16-18 X 1
	700709602	2	WASHER, 5/16 WIDE
	Y705020	1	LOCKWASHER, 5/16
	70917372	1	NUT, 5/16-18
29	71398964C	1	STRAP, LH DOOR BRACE
	70921333	1	CAPSCREW, 5/16-18 X 1
	700709602	2	WASHER, 5/16 WIDE
	Y705020	1	LOCKWASHER, 5/16
	70917372	1	NUT, 5/16-18
30	71399190	1	STRAP, LH SHIELD BRACE
	7703499	1	CAPSCREW, 5/16-18 X 3/4
	Y705020	1	LOCKWASHER, 5/16
	70917372	1	NUT, 5/16-18
31	71398896	1	STRAP, LH SHIELD BRACE
	70921333	1	CAPSCREW, 5/16-18 X 1
	700709602	2	WASHER, 5/16 WIDE
	Y705020	1	LOCKWASHER, 5/16
	70917372	1	NUT, 5/16-18
	703603	1	CAPSCREW, 3/8-16 X 1-1/2
	705038	1	LOCKWASHER, 3/8
	70917378	1	WASHER, 3/8 WIDE
	70916950	1	NUT, 3/8-16
32	71398891C	1	ANGLE, SIDE SHIELD SUPPORT
33	71398892C	1	ANGLE, CENTER SHIELD SUPPORT
	70921333	2	CAPSCREW, 5/16-18 X 1
	700709602	2	WASHER, 5/16 WIDE
	Y704726	2	NUT, HEX FLNG TOP LK, 5/16-18
34	71398893C	1	ANGLE, REAR SHIELD SUPPORT
	70921333	2	CAPSCREW, 5/16-18 X 1
	700709602	2	WASHER, 5/16 WIDE
	Y704726	2	NUT, HEX FLNG TOP LK, 5/16-18
35	71398878C	1	SHIELD ASY, TOP LEFT
	71398880C	1	REINF, SHIELD, TOP LEFT
	700721197	9	POP-RIVET, 3/16 X .063-.125, YELLOW
	70921210	3	CAPSCREW, 3/8-16 X 1
	70920415	7	CAPSCREW, 3/8-16 X 1-1/4
	705038	10	LOCKWASHER, 3/8
	70917378	11	WASHER, 3/8 WIDE
	70916950	10	NUT, 3/8-16

CONTINUED

SIDE SHIELDS
LEFT SIDE

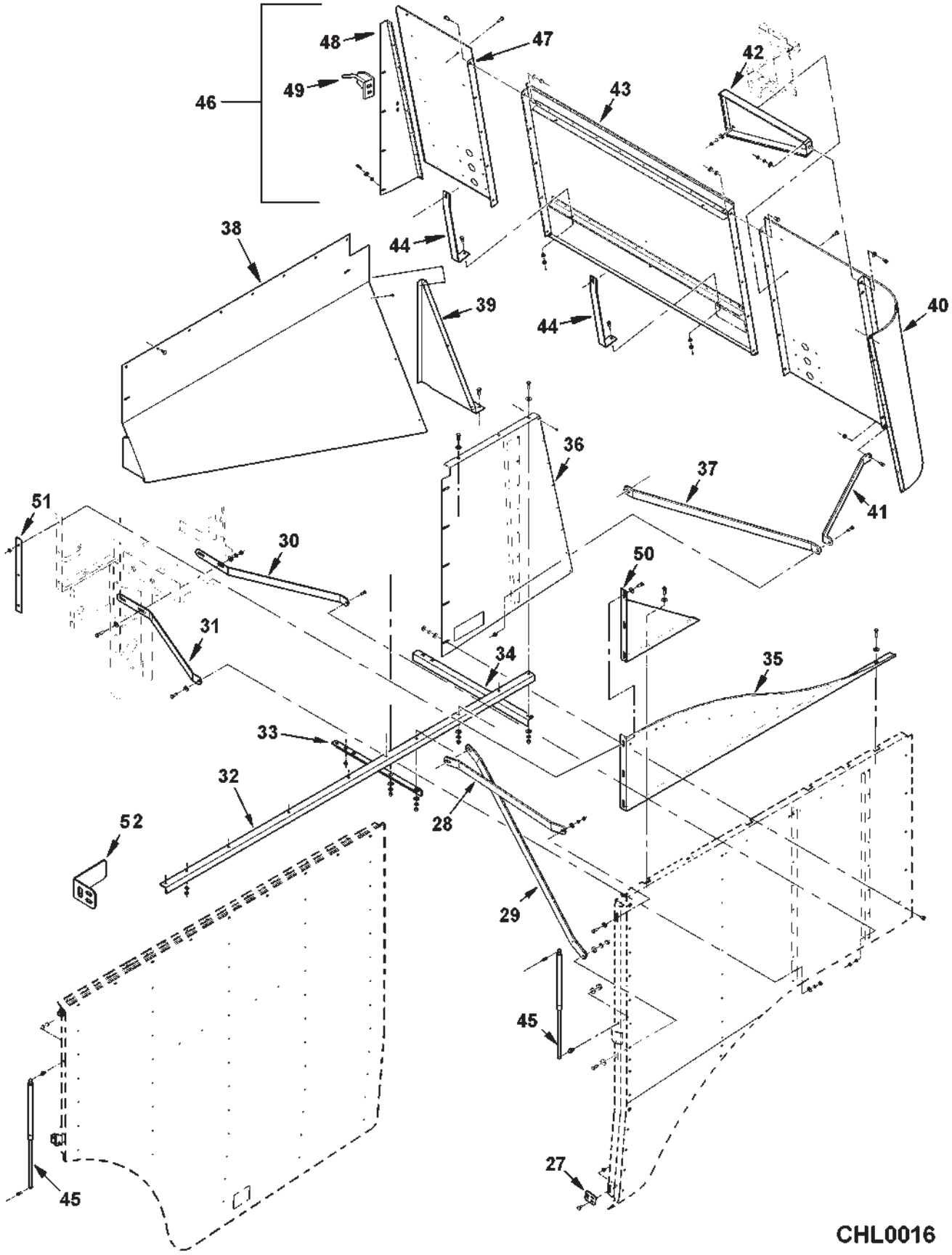

SIDE SHIELDS
LEFT SIDE

ITEM	NUMBER	QTY	DESCRIPTION
36	71398884C	1	SHIELD ASY, LEFT REAR
	71379127	1	DECAL, WARNING, STRAW SPREADER
	71395385C	1	STIFFENER, SHIELD, LEFT REAR
	700721197	8	POP-RIVET, 3/16 X .063-.125, YELLOW
	70921210	2	CAPSCREW, 3/8-16 X 1
	70920415	1	CAPSCREW, 3/8-16 X 1-1/4
	705038	3	LOCKWASHER, 3/8
	70917378	4	WASHER, 3/8 WIDE
	70916950	3	NUT, 3/8-16
	700721854	4	SCR,TRUSS HD MACH,5/16-18 X 5/8 YLLW
	700721916	1	SCR,TRUSS HD MACH, 5/16-18 X 1 BLACK
	700709602	5	WASHER, 5/16 WIDE
	Y705020	5	LOCKWASHER, 5/16
	70917372	5	NUT, 5/16-18
37	71398899B	1	STRAP, REAR SHIELD BRACE
	70921333	1	CAPSCREW, 5/16-18 X 1
	Y704726	1	NUT, HEX FLNG TOP LK, 5/16-18
38	71398889	1	BAFFLE, LEFT ENGINE
	7700461	11	BOLT,RD HD SHRT SQ NK, 5/16-18 X 3/4
	700709602	11	WASHER, 5/16 WIDE
	Y705020	11	LOCKWASHER, 5/16
	70917372	11	NUT, 5/16-18
39	71398890C	1	GUSSET, LEFT ENGINE BAFFLE
	700721197	3	POP-RIVET, 3/16 X .063-.125, YELLOW
	70921965	2	CAPSCREW, 3/8-16 X 3/4
	705038	2	LOCKWASHER, 3/8
	70917378	2	WASHER, 3/8 WIDE
	70916950	2	NUT, 3/8-16
40	71398886C	1	SHIELD ASY, LEFT REAR CORNER
	71398883C	1	REINF, SHIELD, LEFT CENTER
	700721197	16	POP-RIVET, 3/16 X .063-.125, YELLOW
	70921965	5	CAPSCREW, 3/8-16 X 3/4
	705038	2	LOCKWASHER, 3/8
	70916950	2	NUT, 3/8-16
41	71399191B	1	STRAP, REAR SHIELD BRACE
	7703499	1	CAPSCREW, 5/16-18 X 3/4
	Y704726	1	NUT, HEX FLNG TOP LK, 5/16-18
42	71398888C	1	SUPPORT BRKT, LEFT REAR SHIELD
	7703499	1	CAPSCREW, 5/16-18 X 3/4
	700721198	2	SCR,TRUSS HD MACH,5/16-18 X 1 YELLOW
	700709602	4	WASHER, 5/16 WIDE
	Y705020	3	LOCKWASHER, 5/16
	70917372	3	NUT, 5/16-18
43	71392835C	1	SHIELD ASY, REAR
	71379127	1	DECAL, WARNING, STRAW SPREADER
	71392829	2	ANGLE, STIFFENER
	70924837	20	POP-RIVET, 3/16 X .063-.125
44	71394867C	2	STRAP, REAR SHIELD SUPPORT
	70921965	2	CAPSCREW, 3/8-16 X 3/4
	705038	2	LOCKWASHER, 3/8
	70916950	2	NUT, 3/8-16
45	71398961	2	GAS SPRING (PRIOR S/N HN87101)
	700723358	2	GAS SPRING(HIGH FORCE)(EFF. S/N HN87101)
	71339847	4	BALL STUD, 10 MM
	Y705020	4	LOCKWASHER, 5/16
	70917372	4	NUT, 5/16-18

CONTINUED

SIDE SHIELDS
LEFT SIDE

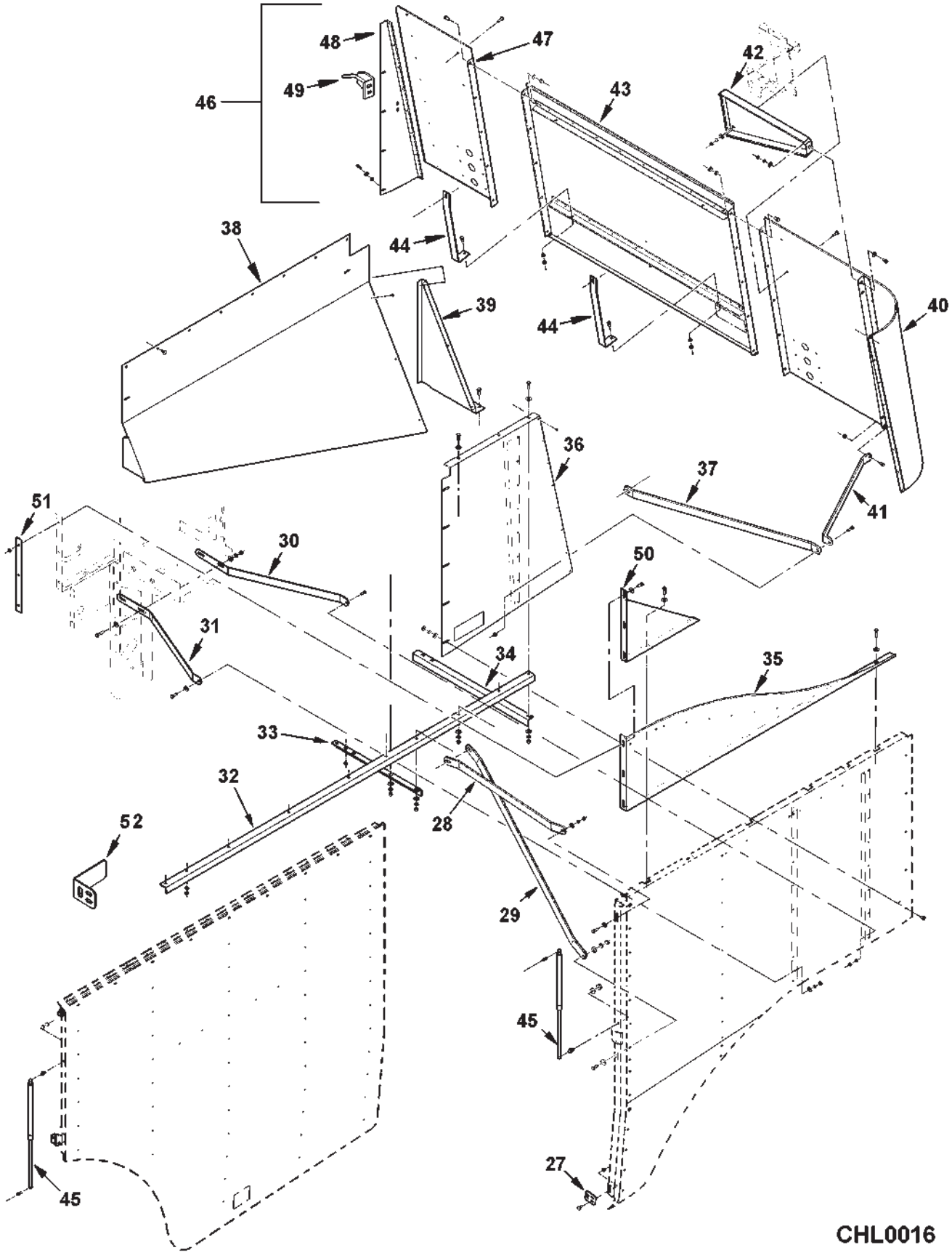

SIDE SHIELDS
LEFT SIDE

ITEM	NUMBER	QTY	DESCRIPTION
46	-----	1	SHIELD ASY, RH RR (SERV. W/ITEMS 47-49)
	70921965	5	CAPSCREW, 3/8-16 X 3/4
	705038	5	LOCKWASHER, 3/8
	70916950	5	NUT, 3/8-16
	700721198	2	SCR,TRUSS HD MACH,5/16-18 X 1 YELLOW
	700709602	2	WASHER, 5/16 WIDE
	Y705020	6	LOCKWASHER, 5/16
	70917372	2	NUT, 5/16-18
	7703499	1	CAPSCREW, 5/16-18 X 3/4
	Y705525	4	WASHER, HARD, 5/16
47	71399177C	1	SHIELD, RIGHT REAR
48	71399178C	1	SUPPORT BRKT, RIGHT REAR SHIELD
	700717635	8	POP-RIVET, 3/16 X .126-.250
49	71399179	1	BOLT WLDMT
	68759	2	BOLT, RD HD SHRT SQ NK, 3/8-16 X 1
	700711238	2	NUT, HEX FLANGE, 3/8-16
50	71400460	1	GUSSET, SHIELD, LEFT
51	71400461	1	STRAP, REINF.
52	71399341	1	SUPPORT ANGLE, DOOR
	7700461	2	BOLT,RD HD SHRT SQ NK, 5/16-18 X 3/4
	Y704726	2	NUT, HEX FLNG TOP LK, 5/16-18

CHL0016
PR: 304

SIDE SHIELDS
RIGHT FRONT AND MIDDLE

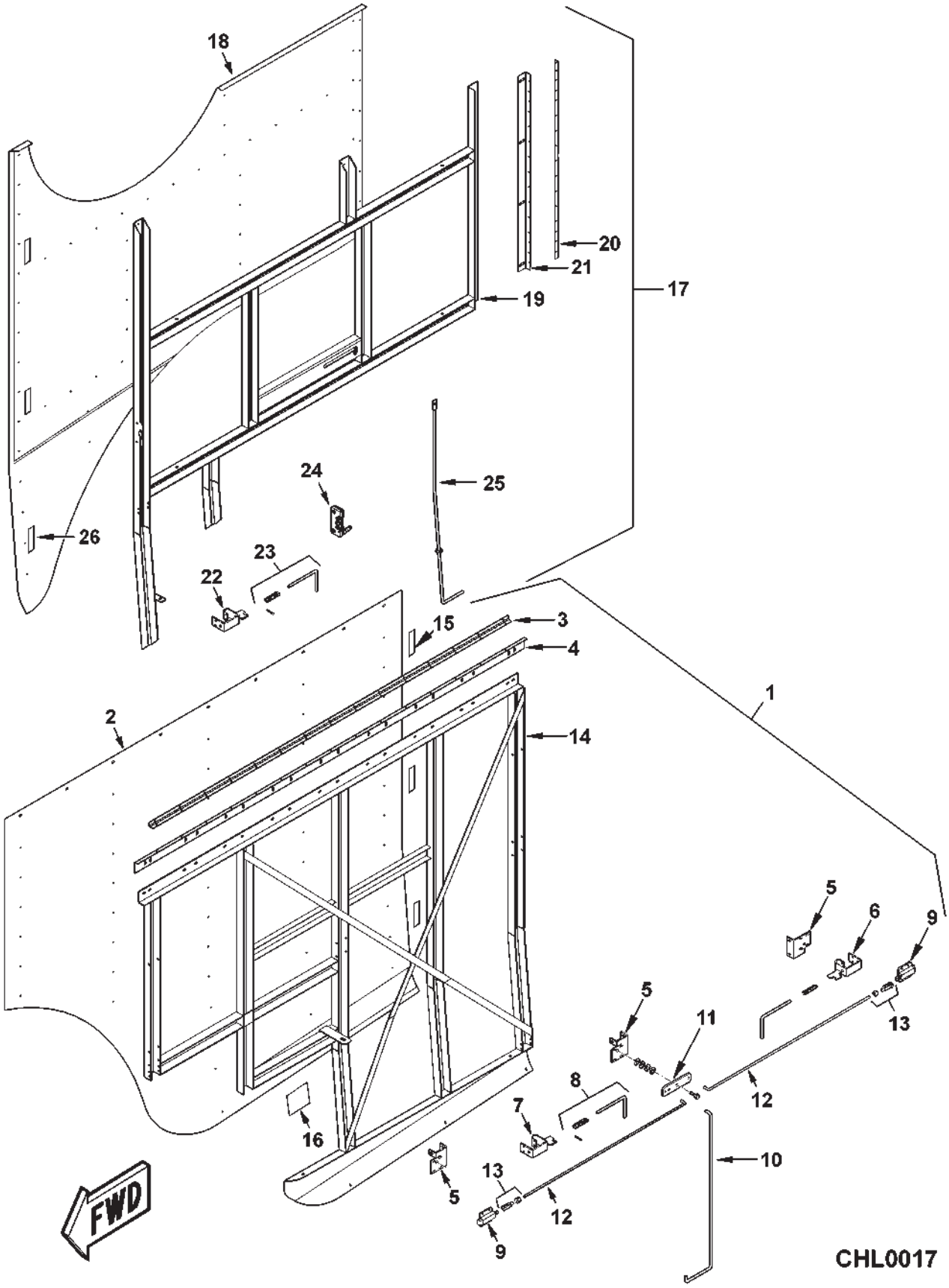

SIDE SHIELDS
RIGHT FRONT AND MIDDLE

ITEM	NUMBER	QTY	DESCRIPTION
1	71398926C	1	SHIELD ASY,RIGHT FRONT(INCL. ITEMS 2-16)
	700721197	15	POP-RIVET, 3/16 X .063-.125, YELLOW
2	71398932C	1	SHIELD, RIGHT FRONT
	700721854	9	SCREW, TRUSS HD, MACH, 5/16-18 X 5/8
	70931277	9	NUT, HEX SERR FLNG, 5/16-18
	700717635	57	POP-RIVET, .188 X .126-.25
	70917380	15	WASHER, 3/16
3	71349763	1	HINGE, LEFT SHIELD
4	71398453C	1	ANGLE, SHIELD HANGER
	700717635	15	POP-RIVET, .188 X .126-.25
5	71394874P	3	MOUNT BRACKET, LATCH
	7883267	9	SCREW,HEX WSHR HD MACH, 1/4-20 X 1/2
	70931209	9	NUT, HEX SERR FLNG, 1/4-20
6	71399199	1	BRACKET WLDMT, LEFT
	7703457	4	CAPSCREW, 1/4-20 X 3/4
	1703354	4	NUT, HEX FLNG TOP LK, 1/4-20
7	71399198	1	BRACKET WLDMT, RIGHT
	7703457	4	CAPSCREW, 1/4-20 X 3/4
	1703354	4	NUT, HEX FLNG TOP LK, 1/4-20
8	71399326	2	PIN, LATCH
	Y58040	2	SPRING, COMPRESSION
	70924764	2	PIN, SPRING, 1/8 X 3/4
9	71395354	2	LATCH ASY, SHIELD
	700705088	8	SCREW, PAN HD MACH, #10-24 X 3/4
	70917380	8	WASHER, #10
	705004	8	LOCKWASHER, #10
	Y704072	8	NUT, #10-24
10	71399197	1	ROD, RELEASE HANDLE, LEFT
	70917378	1	WASHER, 3/8 WIDE
	62026	1	COTTER PIN, 1/16 X 3/4
11	71395353	1	PIVOT, FRONT LATCH
	70920415	1	CAPSCREW, 3/8-16 X 1-1/4
	70917378	6	WASHER, 3/8 WIDE
	Y704635	1	NUT, CENTER LOCK, 3/8-16
12	71396401	2	ROD, LATCH
	70917380	2	WASHER, #10
	62026	2	COTTER PIN, 1/16 X 3/4
13	70929595	2	YOKE, #10-32
	Y704445	2	NUT, #10-32
	70929591	2	CLEVIS PIN, 3/16 X .58 LG
	62026	2	COTTER PIN, 1/16 X 3/4
14	71398927	1	FRAME WLDMT, RIGHT FRONT SHIELD
15	700720676	3	TAPE, SINGLE SIDED
16	71379128	1	DECAL, WARNING
17	71399344P	1	SHIELD ASY, RIGHT CNTR(INCL ITEMS 18-26)
	70921210	4	CAPSCREW, 3/8/16 X 1
	Y705533	4	WASHER, 3/8 HARD
18	71399342C	1	SHIELD, RIGHT MIDDLE
	70917380	5	WASHER, #10 NARROW
	700717635	59	POP RIVET, 3/16 X .126-.250
19	71399343	1	FRAME WLDMT, RIGHT MIDDLE SHIELD

CONTINUED

SIDE SHIELDS
RIGHT FRONT AND MIDDLE

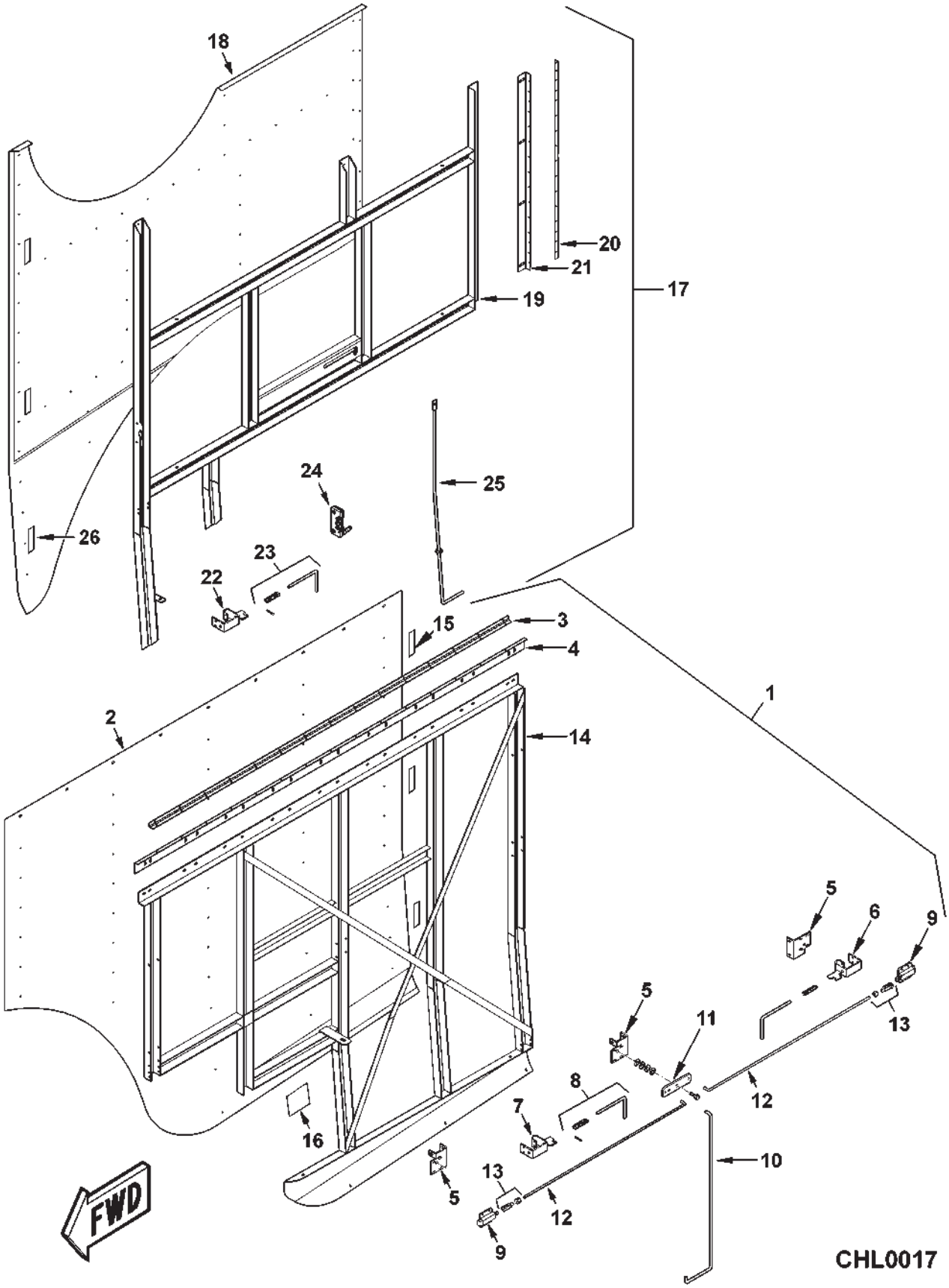

SIDE SHIELDS
RIGHT FRONT AND MIDDLE

ITEM	NUMBER	QTY	DESCRIPTION
20	71393493	1	HINGE, PIANO, 34" (PRIOR S/N HN87101)
	70924837	7	POP RIVET, 3/16 X .063-.125
	71399348	1	HINGE, PIANO, 38" (EFF. S/N HN87101)
	700717635	15	POP RIVET, 3/16 X .126-.250
21	71398906C	1	ANGLE, SHIELD, RH (PRIOR S/N HN87101)
	71399347P	1	ANGLE, SHIELD, RH (EFF. S/N HN87101)
	700717635	15	POP RIVET, 3/16 X .126-.250
22	71399333	1	LATCH WLDMT, MIDDLE SHIELD
	7703457	4	CAPSCREW, 1/4-20 X 3/4
	1703354	4	NUT, HEX FLNG TOP LK, 1/4-20
23	71399331	1	PIN, LATCH
	Y58040	1	SPRING, COMPRESSION
	70924764	1	PIN, SPRING, 1/8 X 3/4
24	71398942	1	LATCH, SIDE SHIELD
	7703473	4	CAPSCREW, 1/4-20 X 1-1/4
	1703354	4	NUT, HEX FLNG TOP LK, 1/4-20
25	71398944	1	HANDLE WLDMT, SHIELD RELEASE
	700711230	1	SCREW, PAN HD MACH, #10-32 X 3/4
	70917380	1	WASHER, #10
	3725885M1	1	NUT, HEX FLNG TOP LK, #10-32
	700703267	1	SPRING, COMPRESSION
	70917378	1	WASHER, 3/8 WIDE
26	700720676	3	TAPE, SINGLE SIDED, BLACK

CHL0017
PR: 308

SIDE SHIELDS
RIGHT SIDE

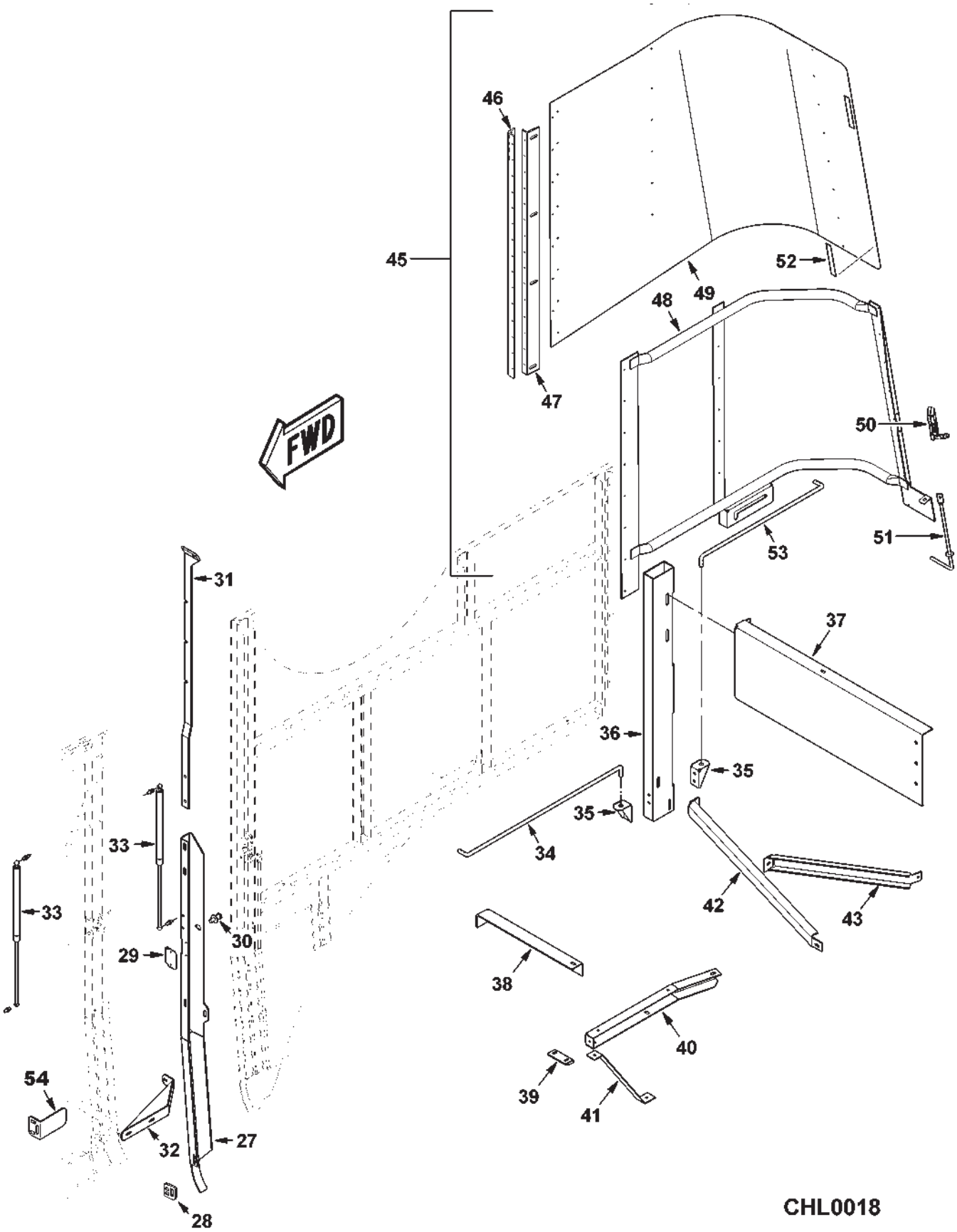

SIDE SHIELDS
RIGHT SIDE

ITEM	NUMBER	QTY	DESCRIPTION
27	71398914P	1	SUPPORT, RIGHT, SHIELD
28	71399329	1	PLATE, LATCH
	7700461	2	BOLT,RD HD SHRT SQ NK, 5/16-18 X 3/4
	Y704726	2	NUT, HEX FLNG TOP LK, 5/16-18
29	71395351	1	PLATE, STRIKER, SHIELD LATCH
	700721204	2	POP RIVET, 3/16 X .126-.250 YELLOW
30	71398945	1	STRIKER BOLT, 7/16-14 UNC
	Y704452	1	NUT, HEX FLNG TOP LK, 7/16-14
31	71394865C	1	STRAP, SHIELD SUPPORT, RIGHT
	70921210	2	CAPSCREW, 3/8-16 X 1
	Y705533	2	WASHER, 3/8 HARD
	Y704734	2	NUT, HEX FLNG TOP LK, 3/16-16
	70921965	4	CAPSCREW, 3/8-16 X 3/4
	70917378	4	WASHER, 3/8 WIDE
	705038	4	LOCKWASHER, 3/8 REG
	70916950	4	NUT, HEX 3/8-16 REG
32	71399195C	1	STRAP WLDMT, RIGHT
	7703499	2	CAPSCREW, 5/16-18 X 3/4
	70921333	1	CAPSCREW, 5/16-18 X 1
	Y705525	3	WASHER, 5/16 HARD
	Y704726	3	NUT, HEX FLNG TOP LK, 5/16-18
33	71398961	2	GAS SPRING (PRIOR S/N HN87101)
	700723358	2	GAS SPRING(HIGH FORCE)(EFF. S/N HN87101)
	71339847	4	BALL STUD, 10 MM
	Y705020	4	LOCKWASHER, 5/16
	70917372	4	NUT, 5/16-18
34	71398912	1	ROD, RIGHT SHIELD
	62075	4	COTTER PIN, 1/8 X 3/4
	700711557	4	WASHER, 1/2 WIDE, HARD
35	71398913	2	SUPPORT BRKT, RIGHT SHIELD
	70921210	4	CAPSCREW, 3/8-16 X 1
	Y705533	4	WASHER, 3/8 HARD
36	71398901	1	SUPPORT WLDMT, RIGHT SHIELDS
37	71398877C	1	SUPPORT BRKT, RIGHT SIDE SHIELD
	7701188	3	CAPSCREW, 1/2-13 X 1-1/4
	Y704742	3	NUT, HEX FLNG TOP LK, 1/2-13
	70921210	4	CAPSCREW, 3/8-16 X 1
	700702916	3	WASHER, 3/8 WIDE, HARD
	Y704734	4	NUT, HEX FLNG TOP LK, 3/8-16
38	71399196C	1	BRACE ANGLE, RIGHT
	70921210	1	CAPSCREW, 3/8-16 X 1
	Y704734	1	NUT, HEX FLNG TOP LK, 3/8-16
	7703499	1	CAPSCREW, 5/16-18 X 3/4
	Y704726	1	NUT, HEX FLNG TOP LK, 5/16-18
39	71399187C	1	ANGLE, SHIELD
	70921333	2	CAPSCREW, 5/16-18 X 1
	Y705525	2	WASHER, 5/16 HARD
	Y704726	2	NUT, HEX FLNG TOP LK, 5/16-18
40	71399185C	1	BRACE CHANNEL, RIGHT
	70921210	2	CAPSCREW, 3/8-16 X 1
	Y704734	2	NUT, HEX FLNG TOP LK, 3/8-16
	70917378	1	WASHER, 3/8 WIDE
	70921333	1	CAPSCREW, 5/16-18 X 1
	Y704726	1	NUT, HEX FLNG TOP LK, 5/16-18
41	71399186C	1	STRAP, SHIELDS

CONTINUED

SIDE SHIELDS
RIGHT SIDE

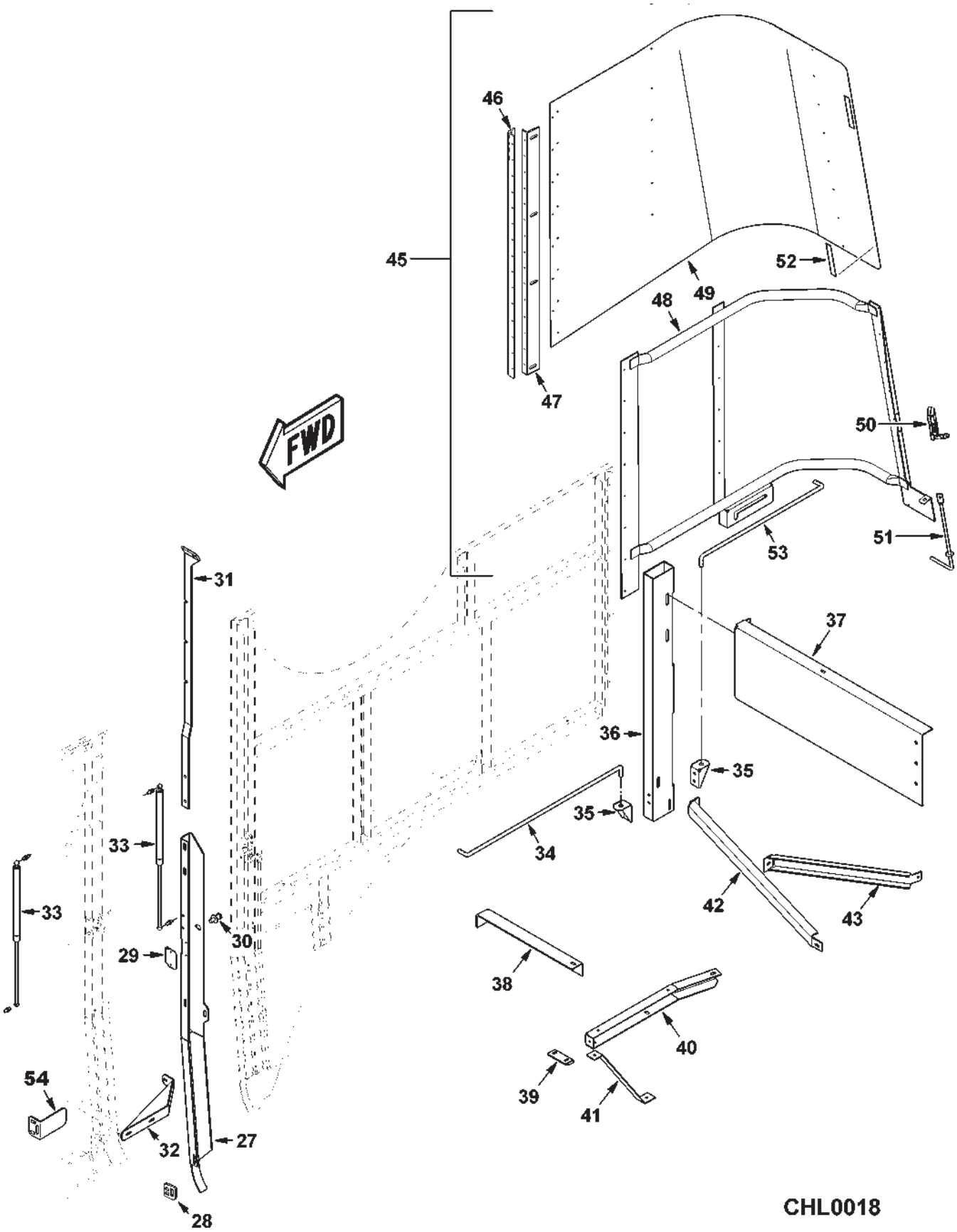

SIDE SHIELDS
RIGHT SIDE

ITEM	NUMBER	QTY	DESCRIPTION
42	71398907C	1	CHANNEL, RIGHT SUPPORT
	70920415	1	CAPSCREW, 3/8-16 X 1-1/4
	Y704734	1	NUT, HEX FLNG TOP LK, 3/8-16
	70921333	1	CAPSCREW, 5/16-18 X 1
	Y705525	1	WASHER, 5/16 HARD
	Y704726	1	NUT, HEX FLNG TOP LK, 5/16-18
43	71398908C	1	CHANNEL, RIGHT SUPPORT
	70921333	2	CAPSCREW, 5/16-18 X 1
	Y705525	2	WASHER, 5/16 HARD
	Y704726	2	NUT, HEX FLNG TOP LK, 5/16-18
45	71398965C	1	CORNER SHIELD ASY, RIGHT REAR (INCL. ITEMS 46-52)
	7883382	4	SCREW, HEX WSHR HD, 3/8-16 X 1
	70917378	4	WASHER, 3/8 WIDE
46	71393493	1	HINGE, PIANO, 34" (PRIOR S/N HN87101)
	70924837	7	POP RIVET, 3/16 X .063-.125
	71399348	1	HINGE, PIANO, 38" (EFF. S/N HN87101)
	700717635	15	POP RIVET, 3/16 X .126-.250
47	71398906C	1	ANGLE,CORNR SHLD, RH (PRIOR S/N HN87101)
	71399347P	1	ANGLE,CORNR SHLD, RH (EFF. S/N HN87101)
	700717635	15	POP RIVET, 3/16 X .126-.250
48	71398967	1	CORNER FRAME WLDMT, RIGHT REAR
49	71398966C	1	CORNER SHIELD, RIGHT REAR
	700717635	21	POP RIVET, 3/16 X .126-.250
50	71398942	1	LATCH, SIDE SHIELD
	7703473	4	CAPSCREW, 1/4-20 X 1-1/4
	1703354	4	NUT, HEX FLNG TOP LK, 1/4-20
51	71398974	1	ROD WLDMT, SHIELD RELEASE
	700703267	1	SPRING, COMPRESSION
	700711230	1	SCREW, PAN HD MACH, #10-32 X 3/4
	70917380	1	WASHER, #10
	3725885M1	1	NUT, HEX FLNG TOP LK, #10-32
52	700720676	2	TAPE, SINGLE SIDED, BLACK
53	700159550	1	ROD, DOOR HOLD
	62075	4	COTTER PIN, 1/8 X 3/4
	700711557	4	WASHER, 1/2 WIDE, HARD
54	71399341	1	SUPPORT ANGLE, DOOR
	7700461	2	BOLT, RD HD SHT SQ NK, 5/16-18 X 3/4
	Y704726	2	NUT, HEX FLNG TOP LK, 5/16-18

MUD SHIELDS
RIGHT SIDE

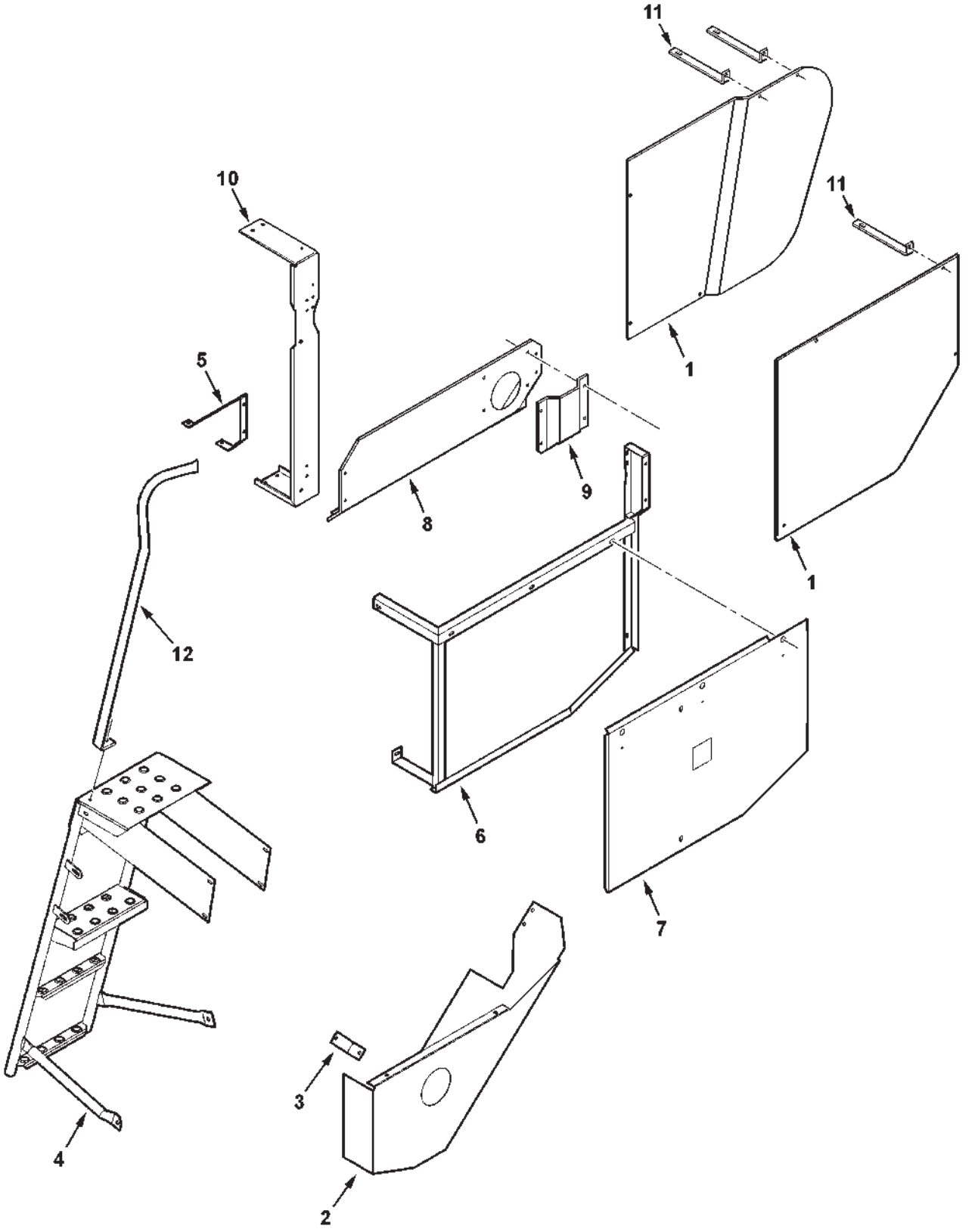

MC00272

MUD SHIELDS
RIGHT SIDE

ITEM	NUMBER	QTY	DESCRIPTION
1	71390910	1	SHIELD, RIGHT FRONT (PRIOR S/N HP87101)
	71401643	1	SHIELD, MUD, RIGHT (EFF. S/N HP87101)
	70921210	4	CAPSCREW, 3/8-16 X 1 GR5
	70917378	4	WASHER, 3/8, WIDE
	70916965	4	LOCKWASHER, 3/8
	70916950	4	NUT, 3/8-16 REG
2	71391112	1	SHIELD, RIGHT, LOWER FAN
	70921210	2	CAPSCREW, 3/8-16 X 1 GR5
	70917378	2	WASHER, 3/8, WIDE
	70916965	2	LOCKWASHER, 3/8
	70916950	2	NUT, 3/8-16 REG
3	71395991	1	ANGLE BRACKET, R.H. FAN SHIELD
	70921210	2	CAPSCREW, 3/8-16 X 1 GR5
	70917378	2	WASHER, 3/8, WIDE
	Y704734	2	NUT, HEX FLANGE TOP LOCK, 3/8-16
4	71403624B	1	LADDER WLMT, INSPECTION
	70921210	4	CAPSCREW, 3/8-16 X 1 GR5
	70917378	8	WASHER, 3/8, WIDE
	70916965	4	LOCKWASHER, 3/8
	70916950	4	NUT, 3/8-16 REG
5	71395984	1	BRACKET WLDMT
	70921210	2	CAPSCREW, 3/8-16 X 1 GR5
	70916965	2	LOCKWASHER, 3/8
	70916950	2	NUT, 3/8-16 REG
6	71393924	1	FRAME WLDMT, RIGHT SHIELD
	701235	1	CAPSCREW, 1/2-13 X 1-1/2
	70918431	1	WASHER, 1/2 NOM
	Y705046	1	LOCKWASHER, 1/2
	704031	1	NUT, 1/2-13
7	71391620	1	MUD SHIELD WLDMT, RIGHT REAR
	111670W1	1	DECAL, WARNING
	863415	3	PIN, KLIK
	1656110W2	3	PIN, SHIELD LOCK
	70921333	2	CAPSCREW, 5/16-18 X 1 GR5
	70917642	2	WASHER, 5/16
	Y705020	2	LOCKWASHER, 5/16
	70917372	2	NUT, 5/16-18
	70921210	4	CAPSCREW, 3/8-16 X 1 GR5
	70917378	4	WASHER, 3/8, WIDE
	70916965	4	LOCKWASHER, 3/8
	70916950	4	NUT, 3/8-16 REG
8	71397303	1	SHIELD WLDMT, RIGHT UPPER
	7883325	5	SCR, HEX WSHR HD MACH, 5/16-18 X 3/4

CONTINUED

MUD SHIELDS
RIGHT SIDE

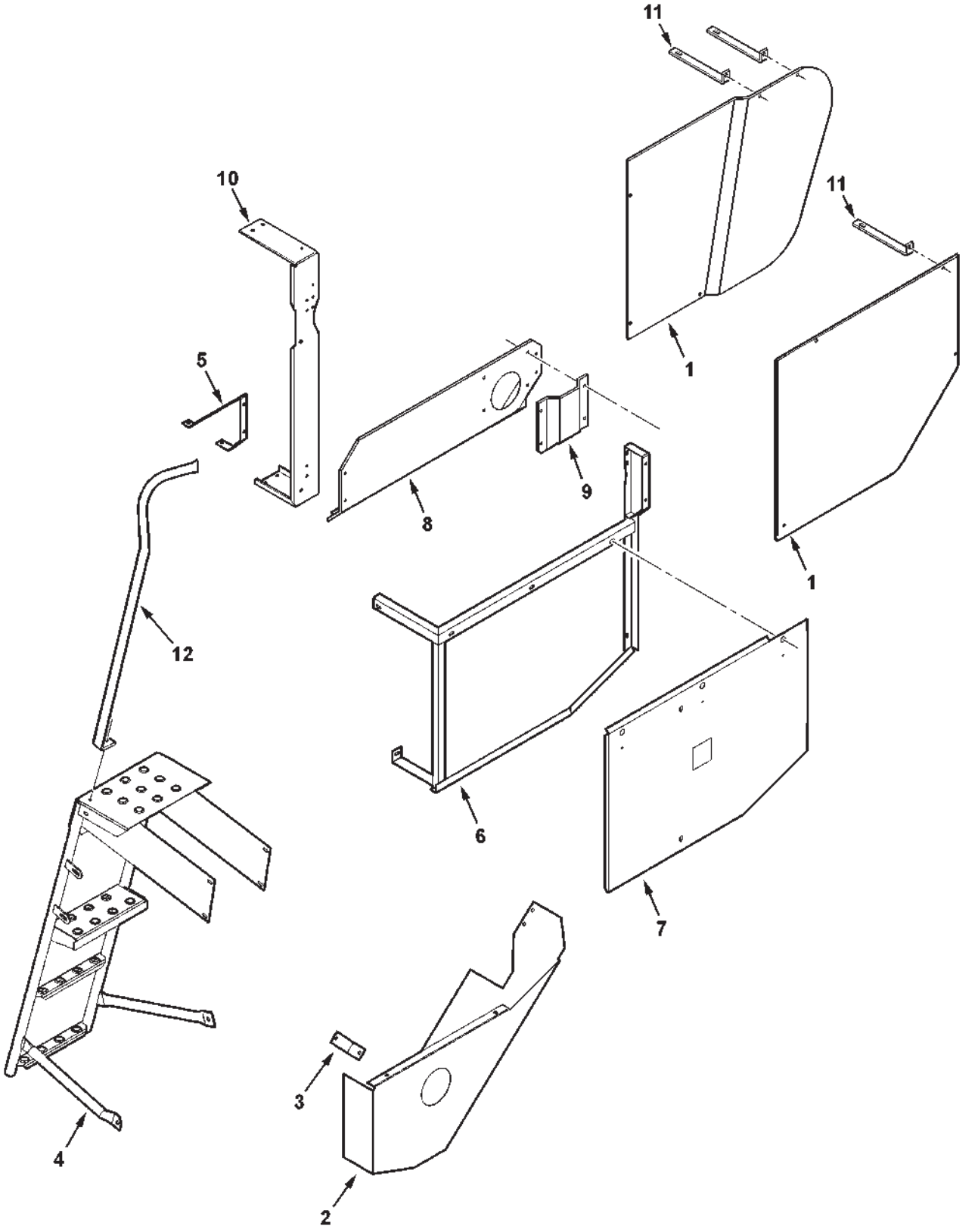

MC00272

MUD SHIELDS
RIGHT SIDE

ITEM	NUMBER	QTY	DESCRIPTION
9	71395993	1	SHIELD, RH, BEATER SHAFT
	360503X1	4	BOLT, RD HD SQ NECK,- 5/16-18 X 1
	Y705020	4	LOCKWASHER, 5/16
	70917372	4	NUT, 5/16-18
	70933988	4	SPEED NUT, 5/16
10	71391113	1	CHANNEL, RH MUDSHIELD(PRIOR S/N HP87101)
	71401661	1	CHANNEL, RH MUDSHIELD (EFF. S/N HP87101)
	70921210	4	CAPSCREW, 3/8-16 X 1 GR5
	70917378	2	WASHER, 3/8, WIDE
	70916965	4	LOCKWASHER, 3/8
	70916950	4	NUT, 3/8-16 REG
11	71390911	1	STRAP, STANDOFF, FRT (PRIOR S/N HP87101)
	71401645	2	STRAP, STANDOFF, FRT (EFF. S/N HP87101)
	70921210	2	CAPSCREW, 3/8-16 X 1 GR5
	70916965	2	LOCKWASHER, 3/8
	70916950	2	NUT, 3/8-16 REG
12	71398721	1	HANDRAIL (EFF. S/N HN87101)
	7701634	2	CAPSCREW, 3/8-16 X 2 GR5
	70921210	1	CAPSCREW, 3/8-16 X 1 GR5
	Y704734	3	NUT, HEX FLANGE TOP LOCK, 3/8-16

MC00272
PR: 316

MUD SHIELDS
LEFT SIDE
(PRIOR S/N HP87101)

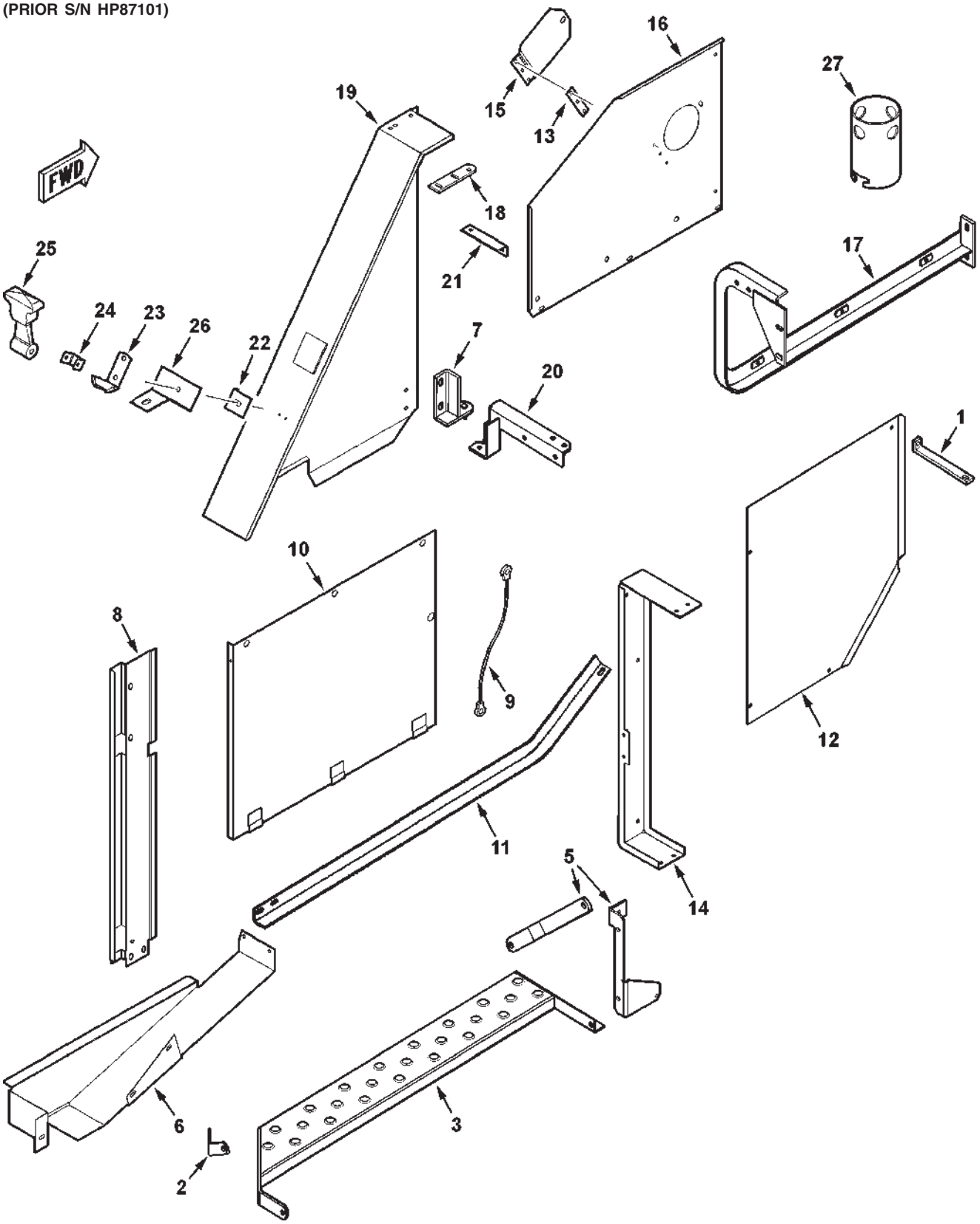

MC00359

MUD SHIELDS
LEFT SIDE
(PRIOR S/N HP87101)

ITEM	NUMBER	QTY	DESCRIPTION
1	71390911	1	STRAP, STANDOFF, FRONT SHIELD
	70920415	2	CAPSCREW, 3/8-16 X 1-1/4
	70916965	2	LOCKWASHER, 3/8
	70916950	2	NUT, 3/8-16
2	71393919	1	STRAP, STEP SUPPORT, PROCESSOR
3	71399870	1	STEP WLDMT, LEFT, PROCESSOR (SERVICE W/ 71399870)
	71399870	1	STEP WLDMT, LEFT, PROCESSOR (MUST USE 71400383 STRAP, ITEM 5)
	70921176	3	CAPSCREW, 1/2-13 X 1-1/4
	Y705046	3	LOCKWASHER, 1/2
	704031	3	NUT, 1/2-13
	70921965	2	CAPSCREW, 3/8-16 X 3/4 GR5
	70917378	2	WASHER, 3/8 NOM
	70916965	2	LOCKWASHER, 3/8
	70916950	2	NUT, 3/8-16
4	71391181	1	SUPPORT, FRONT, PROCESSOR STEP
5	71391179	1	STRAP, PROCESSOR STEP (SERVICE W/ 71400383)
	71400383	1	STRAP, PROCESSOR STEP
	70921176	4	CAPSCREW, 1/2-13 X 1-1/4
	Y705046	4	LOCKWASHER, 1/2
	704031	4	NUT, 1/2-13
6	71390913	1	SHIELD, ELEVATOR DRIVE, LEFT
	70921210	2	CAPSCREW, 3/8-16 X 1 GR5
	70917378	2	WASHER, 3/8 NOM
	70916965	2	LOCKWASHER, 3/8
	70916950	2	NUT, 3/8-16
7	101218M91	1	HINGE BRKT WLDMT, LOWER
	70918452	1	PIN, COTTER, 3/32 X 3/4
	70921210	2	CAPSCREW, 3/8-16 X 1 GR5
	70917378	2	WASHER, 3/8 NOM
	70916965	2	LOCKWASHER, 3/8
	70916950	2	NUT, 3/8-16
8	71388912	1	SUPPORT, LEFT SHIELD
	70921210	2	CAPSCREW, HEX, 3/8-16 X 1
	70917378	2	WASHER, WIDE FLAT, 3/8
	70916965	2	LOCKWASHER, 3/8
	70916950	2	NUT, HEX, 3/8-16 UNC

CONTINUED

MUD SHIELDS
LEFT SIDE
(PRIOR S/N HP87101)

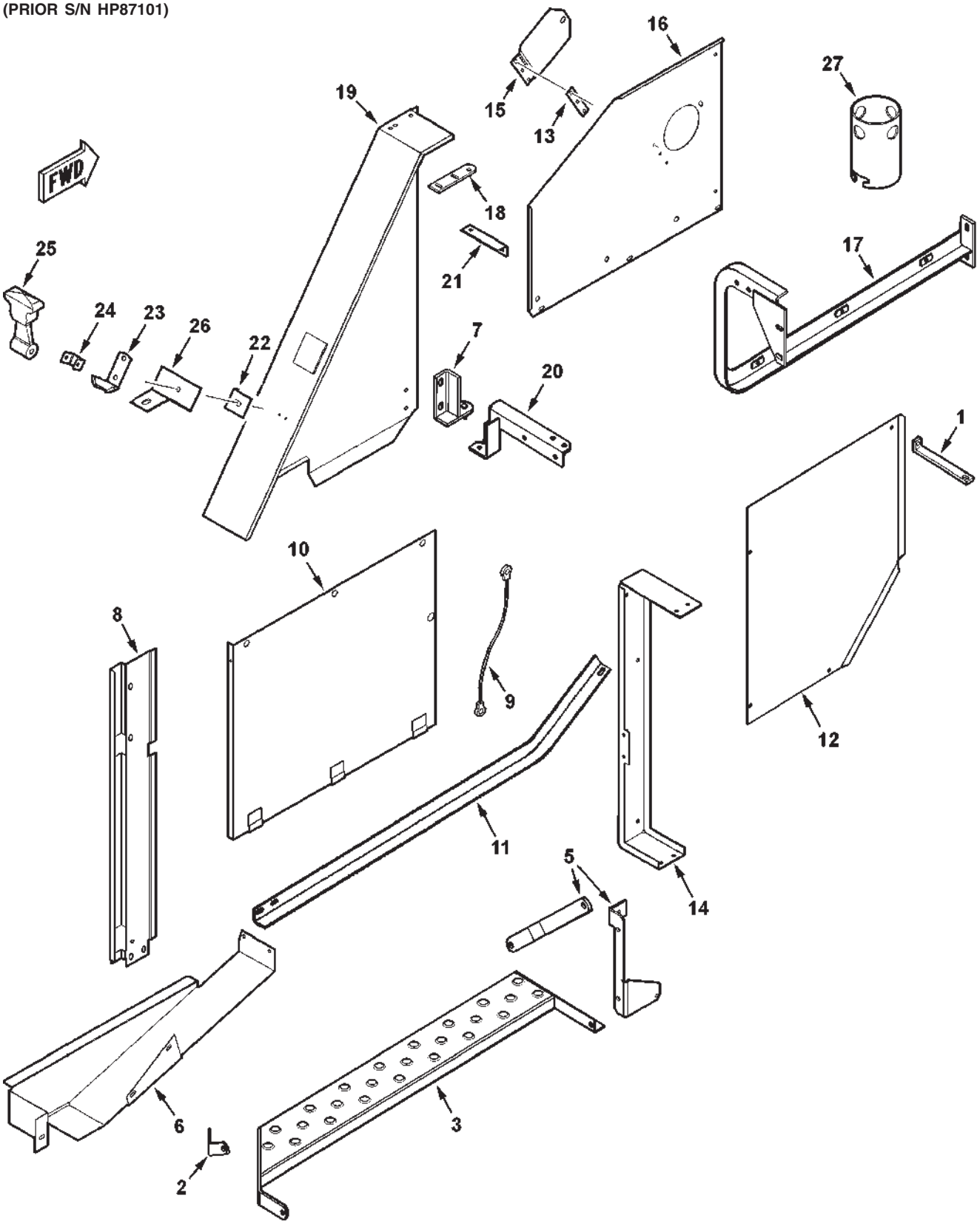

MC00359

MUD SHIELDS
LEFT SIDE
(PRIOR S/N HP87101)

ITEM	NUMBER	QTY	DESCRIPTION
9	112942W1	1	TETHER STRAP, 28IN.
	7703457	1	CAPSCREW, 1/4-20 X 3/4
	70917377	1	WASHER, 1/4 NOM
	1703354	1	FLANGE NUT, 1/4-20
10	71394303	1	SHIELD WLDMT, LEFT
	111670W1	1	DECAL, WARNING
	70921210	4	CAPSCREW, 3/8-16 X 1 GR5
	70917378	4	WASHER, 3/8 NOM
	70916965	4	LOCKWASHER, 3/8
	70916950	4	NUT, 3/8-16
11	102158M1	1	ANGLE, SHIELD SUPPORT
	70921210	1	CAPSCREW, HEX, 3/8-16 X 1
	70917378	1	WASHER, WIDE FLAT, 3/8
	70916965	1	LOCKWASHER, 3/8
	70916950	1	NUT, HEX, 3/8-16 UNC
12	71390909	1	SHIELD, LEFT FRONT
	70921965	1	CAPSCREW, 3/8-16 X 3/4 GR5
	70921210	2	CAPSCREW, HEX, 3/8-16 X 1
	70916965	3	LOCKWASHER, 3/8
	70916950	2	NUT, HEX, 3/8-16 UNC
13	2555190W1	1	SPACER, DOOR
14	71404306B	1	CHANNEL, LEFT MUD SHIELD
	70921210	4	CAPSCREW, 3/8-16 X 1 GR5
	70916965	4	LOCKWASHER, 3/8
	70916950	4	NUT, 3/8-16
15	104916W91	1	COVER WLDMT, LEFT SHIELD
	1656110W2	1	PIN, SHIELD LOCK
	863415	1	PIN, KLIK
	70917378	1	WASHER, WIDE FLAT, 3/8
	70916965	1	LOCKWASHER, 3/8
	70916950	1	NUT, HEX, 3/8-16 UNC
	7703457	3	CAPSCREW, 1/4-20 X 3/4
	70917377	3	WASHER, 1/4 NOM
	705012	3	LOCKWASHER, 1/4
	70916622	3	NUT, 1/4-20
16	71391624	1	SHIELD, UPPER LEFT
	863415	3	PIN, KLIK
	1656110W2	3	PIN, SHIELD LOCK
	70921965	3	CAPSCREW, 3/8-16 X 3/4 GR5
	70921210	4	CAPSCREW, 3/8-16 X 1 GR5
	70917378	8	WASHER, 3/8 NOM
	70916965	10	LOCKWASHER, 3/8
	70916950	10	NUT, 3/8-16

CONTINUED

MUD SHIELDS
LEFT SIDE
(PRIOR S/N HP87101)

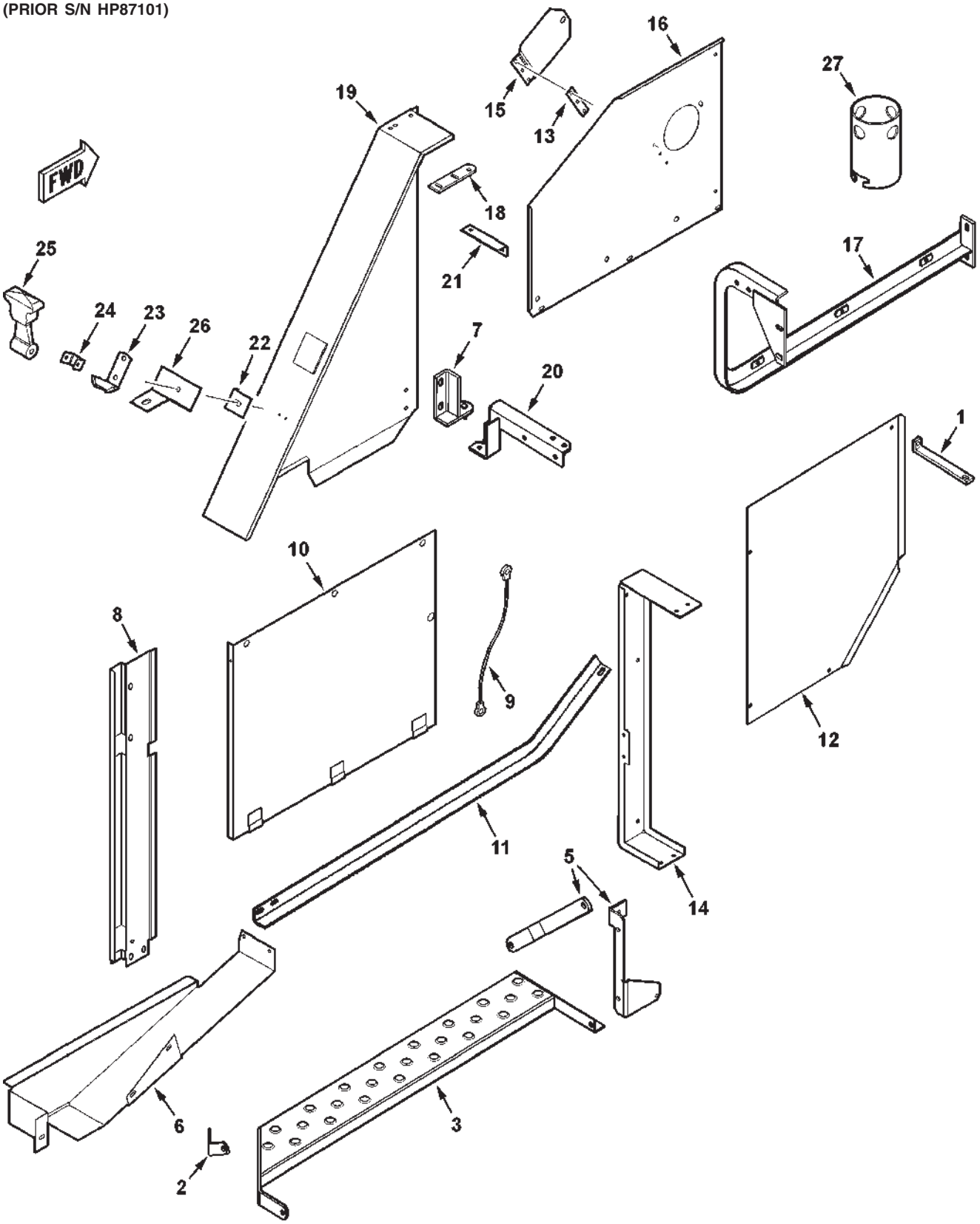

MC00359

MUD SHIELDS
LEFT SIDE
(PRIOR S/N HP87101)

ITEM	NUMBER	QTY	DESCRIPTION
17	71393923	1	ANGLE WLDMT, LEFT MUD SHIELD
	70921210	2	CAPSCREW, 3/8-16 X 1 GR5
	70917378	2	WASHER, 3/8 NOM
	70916965	2	LOCKWASHER, 3/8
	70916950	2	NUT, 3/8-16
18	101221M92	1	HINGE WLDMT, UPPER
	70918452	1	COTTER PIN
19	71394306	1	GUARD WLDMT, DRIVE
	70921210	2	CAPSCREW, 3/8-16 X 1 GR5
	70917378	2	WASHER, 3/8 NOM
	70916965	2	LOCKWASHER, 3/8
	70916950	2	NUT, 3/8-16
20	71393921	1	SUPPORT WLDMT, LH SHIELD
21	102237M1	1	ANGLE, LH SHIELD
	70921210	2	CAPSCREW, HEX, 3/8-16 X 1
	70917378	2	WASHER, WIDE FLAT, 3/8
	70916965	2	LOCKWASHER, 3/8
	70916950	2	NUT, HEX, 3/8-16 UNC
22	101232M1	1	STOP BRACKET, GUARD
23	7025075	1	BRACKET, CATCH
	70916079	2	SCREW, RND HD MACH, #10-24 X 3/8
	705004	2	LOCKWASHER, #10
	70916621	2	NUT, #10-24 UNC
24	1787520W1	1	ANCHOR BRACKET, RUBBER LATCH
	70921332	1	CAPSCREW, 5/16-18 X 3/4
	Y705020	1	LOCKWASHER, 5/16
	70917372	1	NUT, 5/16-18 REG
25	776682	1	HOOK, RUBBER
	70921962	1	CAPSCREW, 1/4-20 X 1-3/4
	1703354	1	NUT, HEX FLANGE TOP LOCK, 1/4-20
26	101231M1	1	BRACKET, LATCH
	70920415	1	CAPSCREW, 3/8-16 X 1-1/4 GR5
	70919378	1	WASHER, 3/8, WIDE
	Y704734	1	NUT, 3/8-16 REG
27	104500W1	1	TUBE, BEATER UNPLUG

MC00359
PR: 320

MUD SHIELDS
LEFT SIDE
(EFF. S/N HP87101)

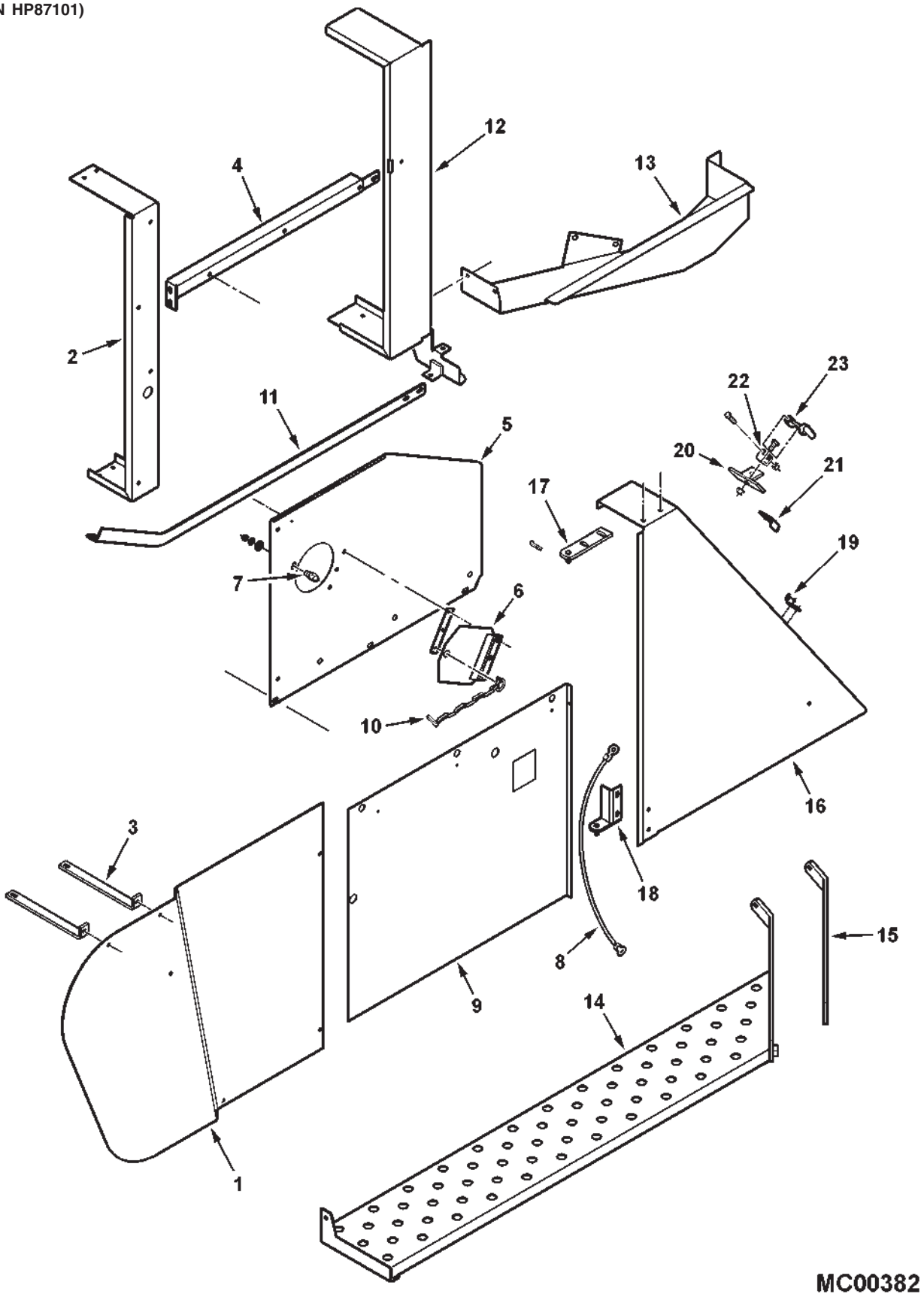

MUD SHIELDS
LEFT SIDE
(EFF. S/N HP87101)

ITEM	NUMBER	QTY	DESCRIPTION
1	71408217	1	MUD SHIELD, LEFT FRONT
	70921210	2	CAPSCREW, 3/8-16 X 1 GR5
	70921332	2	CAPSCREW, 5/16-18 X 3/4 GR5
	70917642	2	WASHER, 5/16, WIDE
	70917378	2	WASHER, 3/8, WIDE
	Y704726	2	NUT, HEX FLANGE TOP LOCK, 5/16-18
	Y704734	2	NUT, HEX FLANGE TOP LOCK, 3/8-16
2	71404306B	1	CHANNEL, LEFT MUD SHIELD
	70921210	4	CAPSCREW, 3/8-16 X 1 GR5
	Y704734	4	NUT, HEX FLANGE TOP LOCK, 3/8-16
3	71401645	2	STRAP, STANDOFF, MUD SHIELD
	70921210	2	CAPSCREW, 3/8-16 X 1 GR5
	70917378	2	WASHER, 3/8, WIDE
	Y704734	2	NUT, HEX FLANGE TOP LOCK, 3/8-16
4	71401470	1	ANGLE WLDMT, LEFT MUD SHIELD
	70921210	2	CAPSCREW, 3/8-16 X 1 GR5
	70921965	1	CAPSCREW, 3/8-16 X 3/4 GR5
	70917378	1	WASHER, 3/8, WIDE
	Y704734	3	NUT, HEX FLANGE TOP LOCK, 3/8-16
5	71391624	1	SHIELD, UPPER LEFT
	70921210	2	CAPSCREW, 3/8-16 X 1 GR5
	70921965	3	CAPSCREW, 3/8-16 X 3/4 GR5
	705038	3	LOCKWASHER, 3/8
	70917378	3	WASHER, 3/8, WIDE
	Y704734	2	NUT, HEX FLANGE TOP LOCK, 3/8-16
6	104916W91	1	COVER WLDMT, LEFT SHIELD
	2555190W1	1	SPACER, DOOR
	7703457	3	CAPSCREW, 1/4-20 X 3/4
	70917377	3	WASHER, 1/4, WIDE
	1703354	3	NUT, HEX FLANGE TOP LOCK, 1/4-20
7	1656110W2	4	PIN, SHIELD LOCK
	70917378	4	WASHER, 3/8, WIDE
	705038	4	LOCKWASHER, 3/8
	70916950	4	NUT, 3/8-16 REG
8	112942W1	1	TETHER STRAP, 28IN.
	7703457	1	CAPSCREW, 1/4-20 X 3/4 GR5
	70917377	1	WASHER, 1/4, WIDE
	1703354	1	NUT, HEX FLANGE TOP LOCK, 1/4-20
9	71394303	1	SHEET WLMT, LEFT, W/ DECAL
10	863415	4	PIN-KLIK, W/ CHAIN
11	71404305	1	ANGLE, BOTTOM SUPPORT, LH
	70921210	1	CAPSCREW, 3/8-16 X 1 GR5
	70921965	1	CAPSCREW, 3/8-16 X 3/4 GR5
	70917378	1	WASHER, 3/8, WIDE
	Y704734	2	NUT, HEX FLANGE TOP LOCK, 3/8-16

CONTINUED

MUD SHIELDS
LEFT SIDE
(EFF. S/N HP87101)

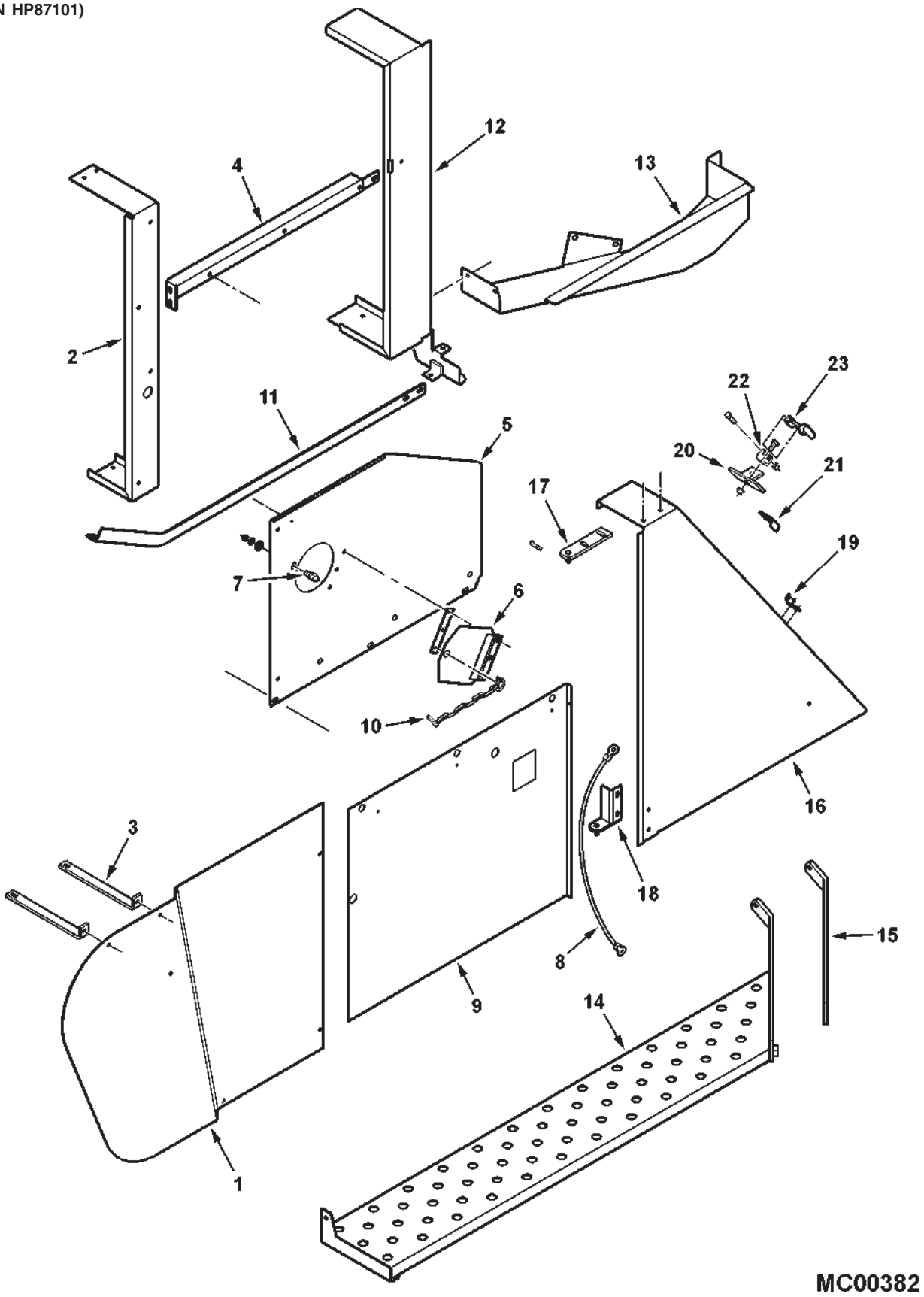

MUD SHIELDS
LEFT SIDE
(EFF. S/N HP87101)

ITEM	NUMBER	QTY	DESCRIPTION
12	71401468	1	CHANNEL WLDMT, LEFT
	70921210	2	CAPSCREW, 3/8-16 X 1 GR5
	70921965	1	CAPSCREW, 3/8-16 X 3/4 GR5
	70917378	2	WASHER, 3/8, WIDE
	Y704734	3	NUT, HEX FLANGE TOP LOCK, 3/8-16
13	71390913	1	SHIELD, ELEVATOR DRIVE, LEFT
	70921210	2	CAPSCREW, 3/8-16 X 1 GR5
	70921965	3	CAPSCREW, 3/8-16 X 3/4 GR5
	70917378	3	WASHER, 3/8, WIDE
	Y704734	5	NUT, HEX FLANGE TOP LOCK, 3/8-16
14	71401463	1	STEP WLDMT, LEFT, PROCESSOR
	70921965	3	CAPSCREW, 3/8-16 X 3/4 GR5
	Y704734	3	NUT, HEX FLANGE TOP LOCK, 3/8-16
	70921176	1	CAPSCREW, 1/2-13 X 1-1/4 GR5
	Y704742	1	NUT, HEX FLANGE TOP LOCK, 1/2-13
15	71393919	1	STRAP, STEP SUPPORT, PROCESSOR
	70921176	2	CAPSCREW, 1/2-13 X 1-1/4 GR5
	Y704742	2	NUT, HEX FLANGE TOP LOCK, 1/2-13
16	71404303	1	GUARD, DRIVES, W/ DECAL
17	101221M92	1	HINGE WLDMT, UPPER GUARD
18	101218M91	1	HINGE WLDMT, LOWER GUARD
	70921210	4	CAPSCREW, 3/8-16 X 1 GR5
	70917378	4	WASHER, 3/8, WIDE
	Y704734	4	NUT, HEX FLANGE TOP LOCK, 3/8-16
19	7025075	1	BRACKET, CATCH
	70916080	2	SCREW, RND HD MACH, #10-24 X 1/2
	705004	2	LOCKWASHER, #10
	70916621	2	NUT, HEX, #10-24 UNC
20	101231M1	1	BRACKET, LATCH
	70920415	1	CAPSCREW, 3/8-16 X 1-1/4 GR5
	70917378	1	WASHER, 3/8, WIDE
	Y704734	1	NUT, HEX FLANGE TOP LOCK, 3/8-16
21	101232M1	1	STOP BRACKET, GUARD
22	1787520W1	1	ANCHOR BRACKET, RUBBER LATCH
	70921332	1	CAPSCREW, 5/16-18 X 3/4 GR5
	Y704726	1	NUT, HEX FLANGE TOP LOCK, 5/16-18
23	776682	1	HOOK, RUBBER
	70921962	1	CAPSCREW, 1/4-20 X 1-3/4
	1703354	1	NUT, HEX FLANGE TOP LOCK, 1/4-20

MC00382
PR: t05b15n00a0019

STEERING & HEADER FUNCTIONS

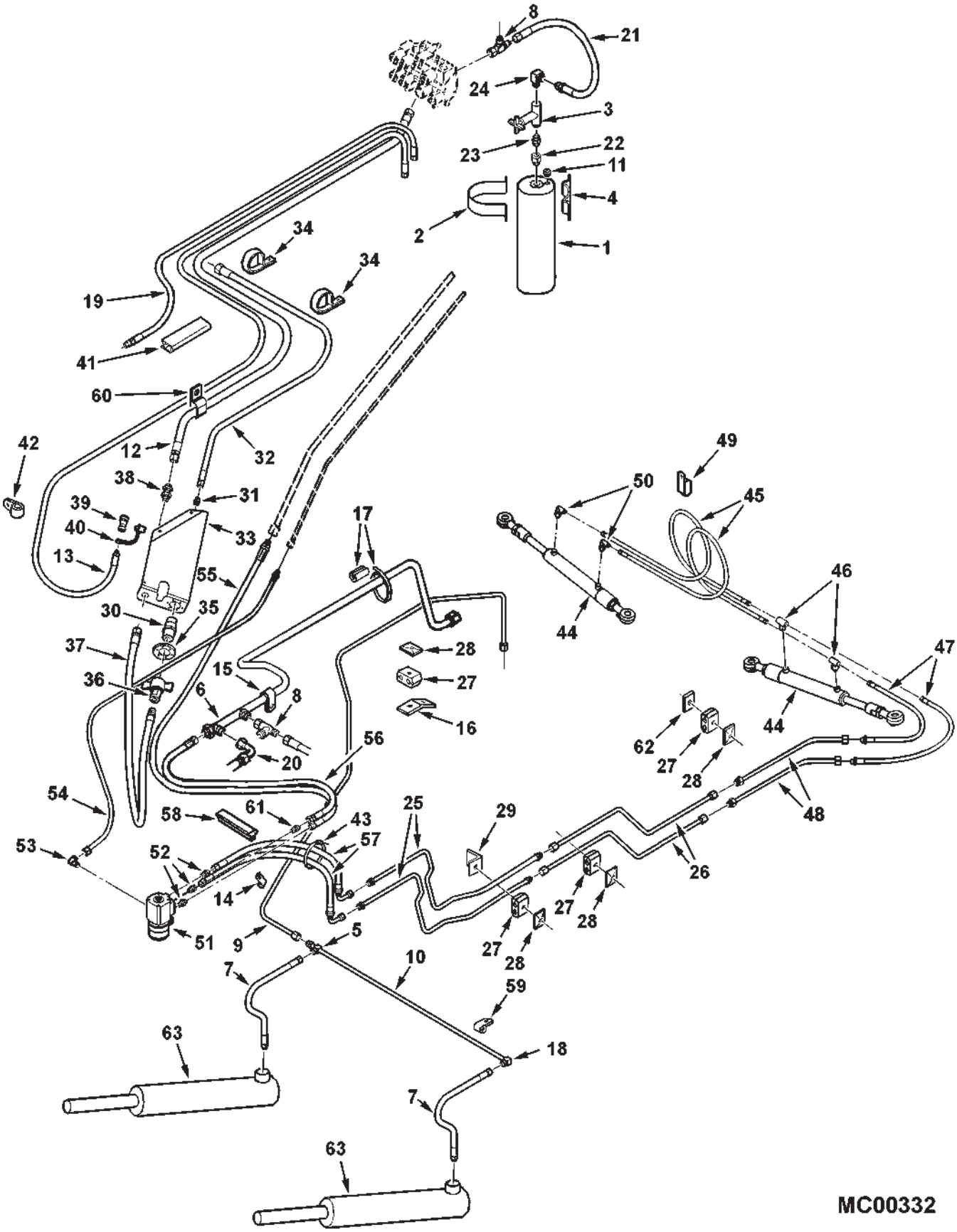

ITEM	NUMBER	QTY	DESCRIPTION
1	700712632	1	ACCUMULATOR
2	101705M1	2	BRACKET, ACCUMULATOR
	70921977	4	CAPSCREW, 5/16-18 X 1-1/4
	700709602	4	WASHER, PLAIN WIDE, 5/16
	Y705046	4	LOCKWASHER, 5/16
	70917372	4	NUT, HEX 5/16-18
3	71334329	1	VALVE ASY, BALL
4	101698M1	2	PAD, ACCUMULATOR
5	-----	--	TEE, UNION, 3/4-16 JIC (670 ONLY)
6	71399144	1	TUBE ASY, VALVE RETURN
7	101589M91	2	HOSE ASY., HEADER & ACCUMULATOR
	70921349	2	O-RING, .087 X .644 ID
8	70921298	2	TEE, SWIVEL RUN, 3/4-16 JIC
9	71391236	1	TUBE ASY, HEADER LIFT (PRIOR MID. S/N HN87---)(SERVICE W/71400691)
	71400691	1	TUBE ASY,HDR LIFT (EFF. MID S/N HN87---)
10	116479W1	1	TUBE ASY., HEADER LIFT FRT.
11	357194X1	1	PLUG, HEX HD, 9/16-18 ORB
	70921885	1	O-RING, .078 X .468 ID
12	71394173	1	HOSE ASY., REEL DRIVE, 1/2 ID
13	116482W1	1	HOSE ASY., REEL LIFT, 3/8 ID
14	70925617	1	CLAMP, .500 TUBE X .406 HOLE
	70921333	1	CAPSCREW, 5/16-18 X 1
	700709602	1	WASHER, PLAIN WIDE, 5/16
	Y705046	1	LOCKWASHER, 5/16
	70917372	1	NUT, HEX 5/16-18
15	70926049	1	CLAMP, .750 TUBE X .406 HOLE
	70921333	1	CAPSCREW, 5/16-18 X 1
	700709602	1	WASHER, PLAIN WIDE, 5/16
16	112972W1	1	STRAP, TUBE SUPPORT
	70921332	1	CAPSCREW, 5/16-18 X 3/4
	Y705046	1	LOCKWASHER, 5/16
	70917372	1	NUT, HEX 5/16-18
17	103600W1	1	SLEEVE, SPLIT
	70937133	1	TIE, SELF LOCKING, .300 X 14.5
18	-----	--	ELBOW, 90 DEG, 3/4-16 JIC (670 ONLY)
19	-----	1	HOSE ASY, SUPPLY (SEE "HEADER REVERSER")
20	-----	1	HOSE ASY, RETURN (SEE "HEADER REVERSER")
21	71393843	1	HOSE ASY, ACCUMULATOR
22	700705119	1	REDUCER, 1-1/16-12 ORB X 3/4-16 ORB FEM
	70921206	1	O-RING, .116 X .924 ID
23	70933454	1	CONNECTOR, STR. 3/4-16 ORB X 1/2 NPTF
	70921349	1	O-RING, .087 X .644 ID
24	70919195	1	ELBOW, 90 DEG, 3/4-16 JIC X 1/2 NPTF
25	71398227	2	TUBE ASY, STEERING FRT.
26	101596M92	2	TUBE ASY, STEERING, 1/2
27	148022M1	9	CLAMP PAIR, DOUBLE, 1/2 X 1/2 DIA
28	101646M1	9	COVER PLATE
	7701485	7	CAPSCREW, 1/4-20 X 2
	70921159	2	CAPSCREW, 1/4-20 X 2-1/4
	705012	9	LOCKWASHER, 1/4
	704007	9	NUT, HEX 1/4-20

CONTINUED

STEERING & HEADER FUNCTIONS

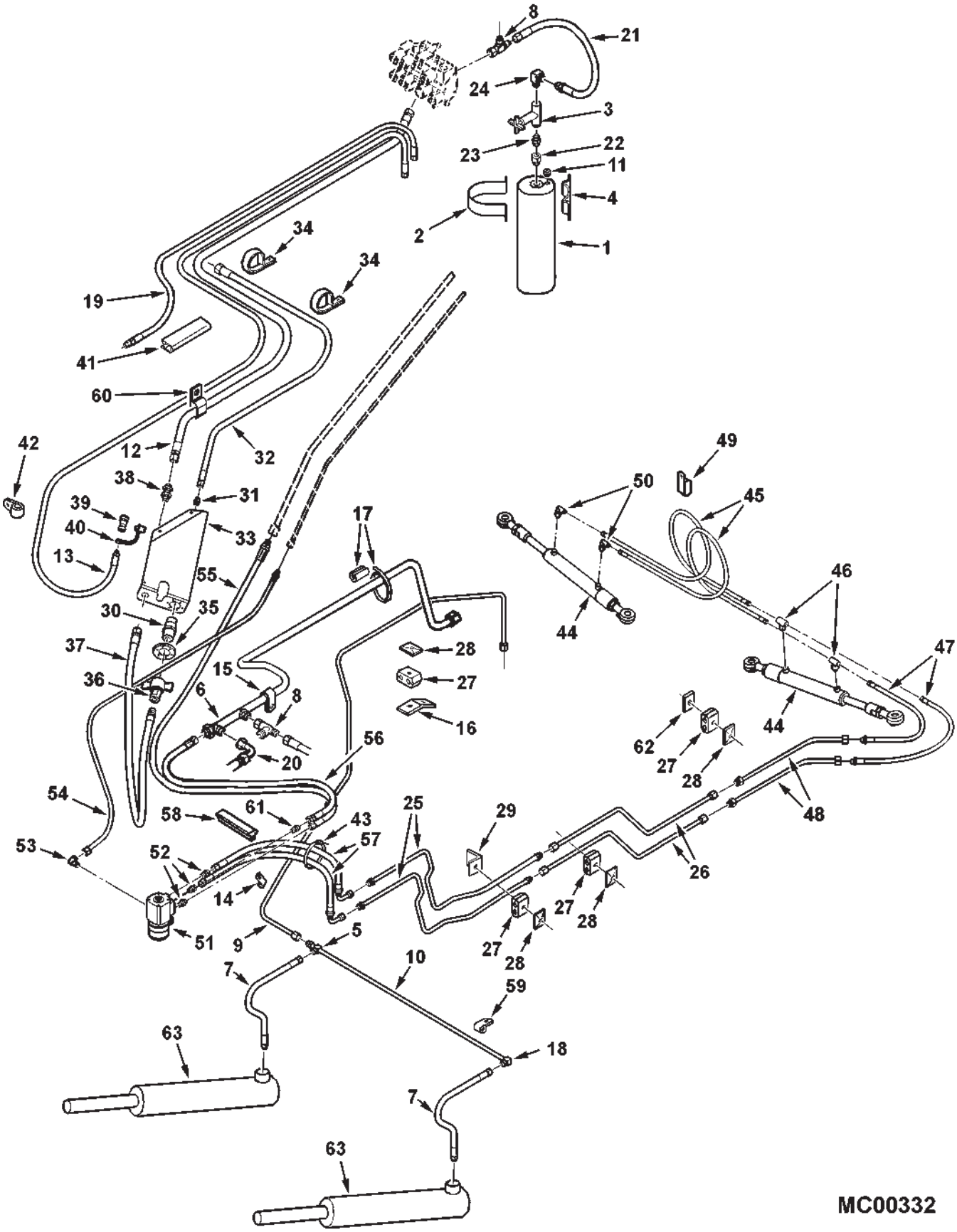

ITEM	NUMBER	QTY	DESCRIPTION
29	101832M1	2	BRACKET, ANGLE
	70921210	2	CAPSCREW, 3/8-16 X 1
	705038	2	LOCKWASHER, 3/8
	70916950	2	NUT, HEX 3/8
30	71365883	1	COUPLING, HYDRAULIC
31	70919128	1	CONNECTION, 3/4-16 JIC X 1/2 NPTF
32	71392881	1	HOSE ASY., REEL RETURN
33	71399119	1	BRACKET, HYD. HOSE DISCONNECT
	70921210	2	CAPSCREW, 3/8-16 X 1
	705038	2	LOCKWASHER, 3/8
	70916950	2	NUT, HEX 3/8-16
34	70936467	2	CLAMP, 1-5/8 TUBE X .406 HOLE (PRIOR S/N HP87101)
	7041015	2	CLAMP, 2-1/4 X .531 HOLE(EFF S/N HP87101
35	71365880	1	FLANGE, HYD. COUPLER
	70925160	6	RIVET
36	71358564	1	COUPLER, HYDRAULIC
37	71362149	1	HOSE ASY, REEL SPEED
38	7846777	1	BULKHEAD UNION, 7/8-14 JIC
39	71328362	1	COUPLING, HALF
40	71328365	1	DUSTCAP, FEMALE
41	71389754	1	MOULDING, EDGE (PRIOR S/N HP87101)
42	70926850	1	CLAMP, .625 TUBE X .281 HOLE
	7703457	1	CAPSCREW, 1/4-20 X 3/4
	705012	1	LOCKWASHER, 1/4
	704007	1	NUT, HEX 1/4-20
43	70937133	3	TIE, SELF LOCKING, .300 X 14.5
44	71365245	2	CYLINDER ASY, STEERING (STD AXLE)
45	71394146	2	HOSE, HYDRAULIC (STD AXLE)
	70925442	2	CABLE TIE
46	70923894	2	TEE, 9/16-18 ORB BRANCH X 9/16-18 JIC
	70921885	2	O-RING, .078 X .468 ID
47	71394151	2	HOSE ASY., 3/8 X 26" LG (STD AXLE)
48	71394150	2	TUBE ASY, STEERING REAR (STD AXLE)
49	70928148	1	CLAMP, 3/4 TUBE X .406 HOLE (STD AXLE)
	372729X1	1	SCR,HEX WSHR HD,TAPPG, 5/16-18 X 3/4
50	70922523	2	ELBOW, 90 DEG, 9/16-18 JIC X 9/16-18 ORB
	70921885	2	O-RING, .078 X .468 ID
51	71392876	1	STEERING CONTROL UNIT
			(NOTE: INDIVIDUAL COMPONENTS NOT SERVICED EXCEPT FOR SEAL KIT.)
-	71391083	AR	SEAL KIT, STEERING CONTROL UNIT
52	360202X91	3	CONNECTOR, 9/16-18 JIC X 3/4-16 ORB
	70921349	AR	O-RING, .087 X .644 ID
53	70922571	1	ELBOW, 90 DEG, 7/16-20 JIC X 7/16-20 ORB
	70921883	AR	O-RING, .072 X .351 ID
54	71392872	1	HOSE ASY., LOAD SENSE TO SCU
	70937133	3	TIE, SELF LOCKING, .300 X 14.5
55	71398981	1	HOSE ASY., PRESSURE TO SCU
56	71398980	1	HOSE ASY., RETURN, SCU TO TANK
57	71392875	2	HOSE ASY., SCU FRONT
58	71387797	2	EDGE PROTECTOR

CONTINUED

STEERING & HEADER FUNCTIONS

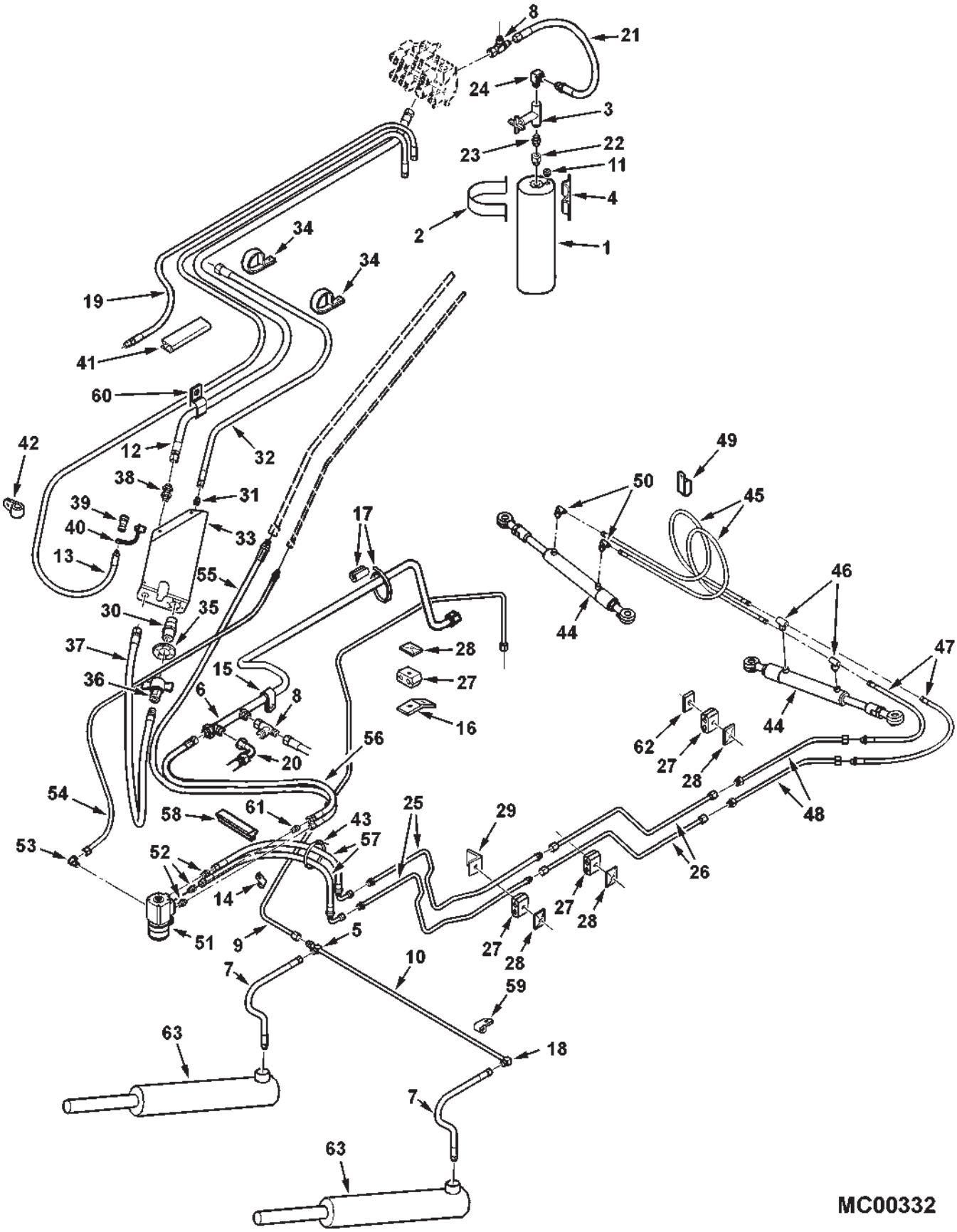

ITEM	NUMBER	QTY	DESCRIPTION
59	70925617	4	CLAMP, .500 TUBE X .406 HOLE
	7703457	4	CAPSCREW, 1/4-20 X 3/4
	700709601	4	WASHER, WIDE PLATED, 1/4
	705012	4	LOCKWASHER, 1/4
	704007	4	NUT, HEX 1/4-20
60	70936473	2	CLAMP,DOUBLE, 7/8 DIA X .406 HOLE (PRIOR S/N HP87101)
	7041015	3	CLAMP, 2-1/4 X .531 HOLE(EFF S/N HP87101
	70921210	1	CAPSCREW, 3/8-16 X 1
	705038	1	LOCKWASHER, 3/8
	70916950	1	NUT, HEX 3/8-16
61	846337	1	CONNECTOR, MALE, 3/4-16 JIC X ORB
62	71404450	2	SPACER (EFF. S/N HP87101)
63	-----	2	CYLINDER, HEADER LIFT (SEE BREAKDOWN)

MC00332
PR: 326

STEERING CYLINDER
STD. ADJUSTABLE AXLE
(PRIOR S/N HP 87101)

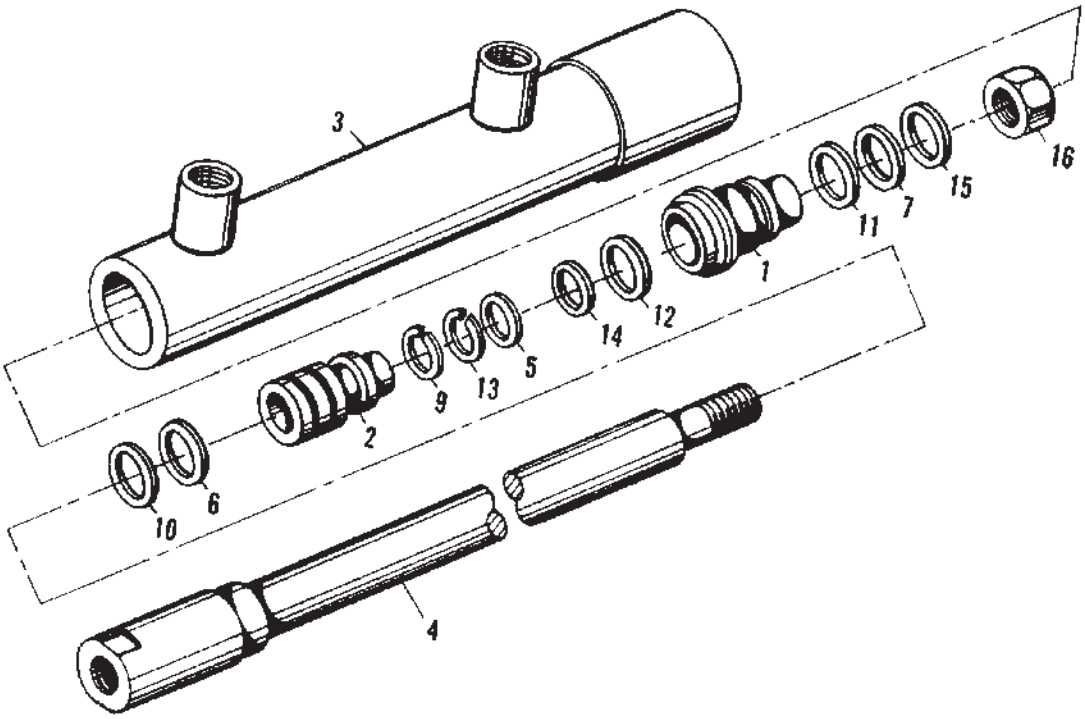

STEERING CYLINDER
STD. ADJUSTABLE AXLE
(PRIOR S/N HP 87101)

ITEM	NUMBER	QTY	DESCRIPTION
-	71365245	AR	CYLINDER ASY., POWER STEERING (COMPLETE)
1	71366126	1	PISTON
2	71365102	1	BEARING
3	-----	1	BARREL ASY. (NOT SERVICED, ORDER COMPLETE ASY.)
4	71366127	1	ROD ASY., PISTON
5	-----	1	* WASHER, BACK UP
6	-----	1	* SEAL
7	-----	1	* RING, SLIPPER
9	-----	1	* RING, RETAINING
10	-----	1	* SEAL, WIPER
11	-----	1	* O-RING
12	-----	1	* O-RING
13	-----	1	* RING, LOCK
14	-----	1	* O-RING
15	-----	1	* RING, WEAR
16	10171	1	NUT
-	71365114	AR	KIT, SEAL (INCLS. * ITEMS)

* SERVICED ONLY IN SEAL KIT

71365245
PR: 330

STEERING CYLINDER

STD. ADJUSTABLE AXLE
(EFF. S/N HP87101)

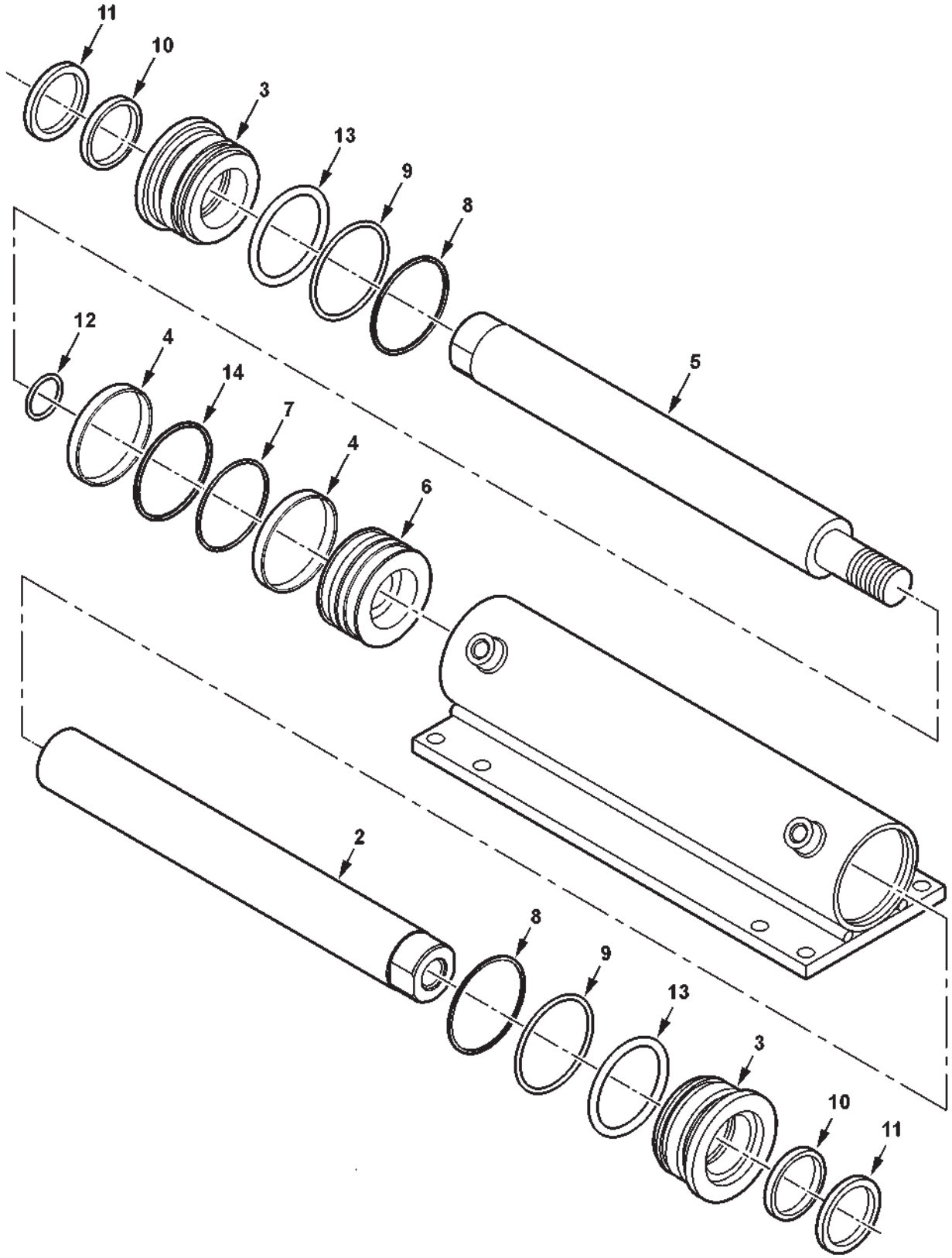

MC00360

STEERING CYLINDER
STD. ADJUSTABLE AXLE
(EFF. S/N HP87101)

ITEM	NUMBER	QTY	DESCRIPTION
-	71400719	AR	CYLINDER ASY, STEERING (COMPLETE)
1	71396618	1	HOUSING, CYL.
2	71406296	1	ROD, CYL. INT'L THD
3	71396620	2	HEAD
4	71396621	2	RING, WEAR
5	71406297	1	ROD, CYL. EXT'L THD
6	71396623	1	PISTON
7	-----	1	* O-RING
8	-----	2	* O-RING
9	-----	2	* RING, BACKUP
10	-----	2	* U-CUP SEAL
11	-----	2	* WIPER SEAL
12	-----	1	* O-RING
13	-----	2	* RETAINING WIRE
14	-----	1	* SEAL, PISTON
-	71396624	AR	SEAL KIT (INCL. * ITEMS)

* SERVICED ONLY IN SEAL KIT

MC00360
PR: t05b15n00a0020

STEERING CYLINDER
RWA AXLE

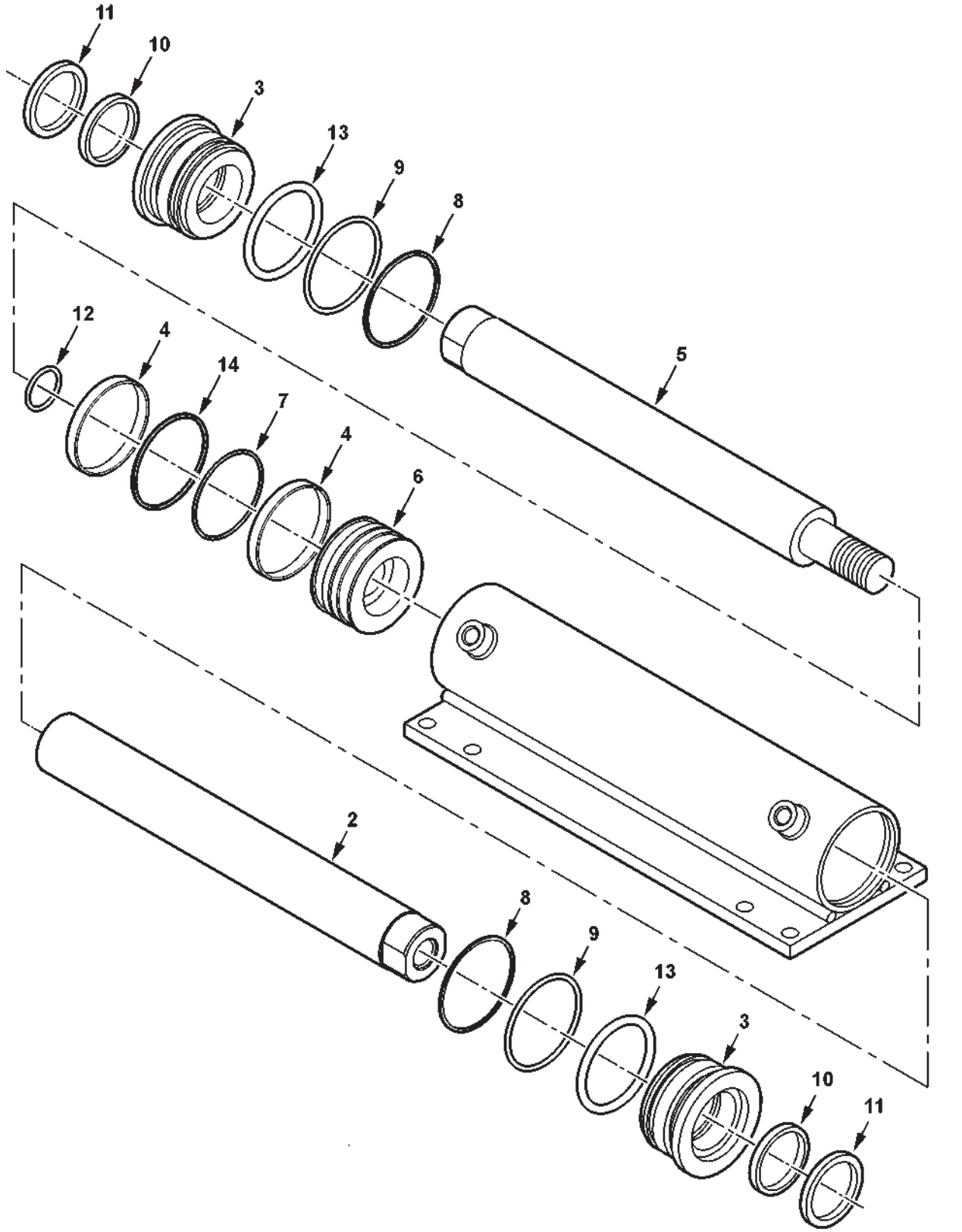

MC00360

STEERING CYLINDER
RWA AXLE

ITEM	NUMBER	QTY	DESCRIPTION
-	71396617	AR	CYLINDER ASY, RWA STEERING (COMPLETE)
1	71396618	1	HOUSING, CYL.
2	71396619	1	ROD, CYL. INT'L THD
3	71396620	2	HEAD
4	71396621	2	RING, WEAR
5	71396622	1	ROD, CYL. EXT'L THD
6	71396623	1	PISTON
7	-----	1	* O-RING
8	-----	2	* O-RING
9	-----	2	* RING, BACKUP
10	-----	2	* U-CUP SEAL
11	-----	2	* WIPER SEAL
12	-----	1	* O-RING
13	-----	2	* RETAINING WIRE
14	-----	1	* SEAL, PISTON
-	71396624	AR	SEAL KIT (INCL. * ITEMS)

* SERVICED ONLY IN SEAL KIT

MC00360
PR: 332

ACCUMULATOR
PARKER

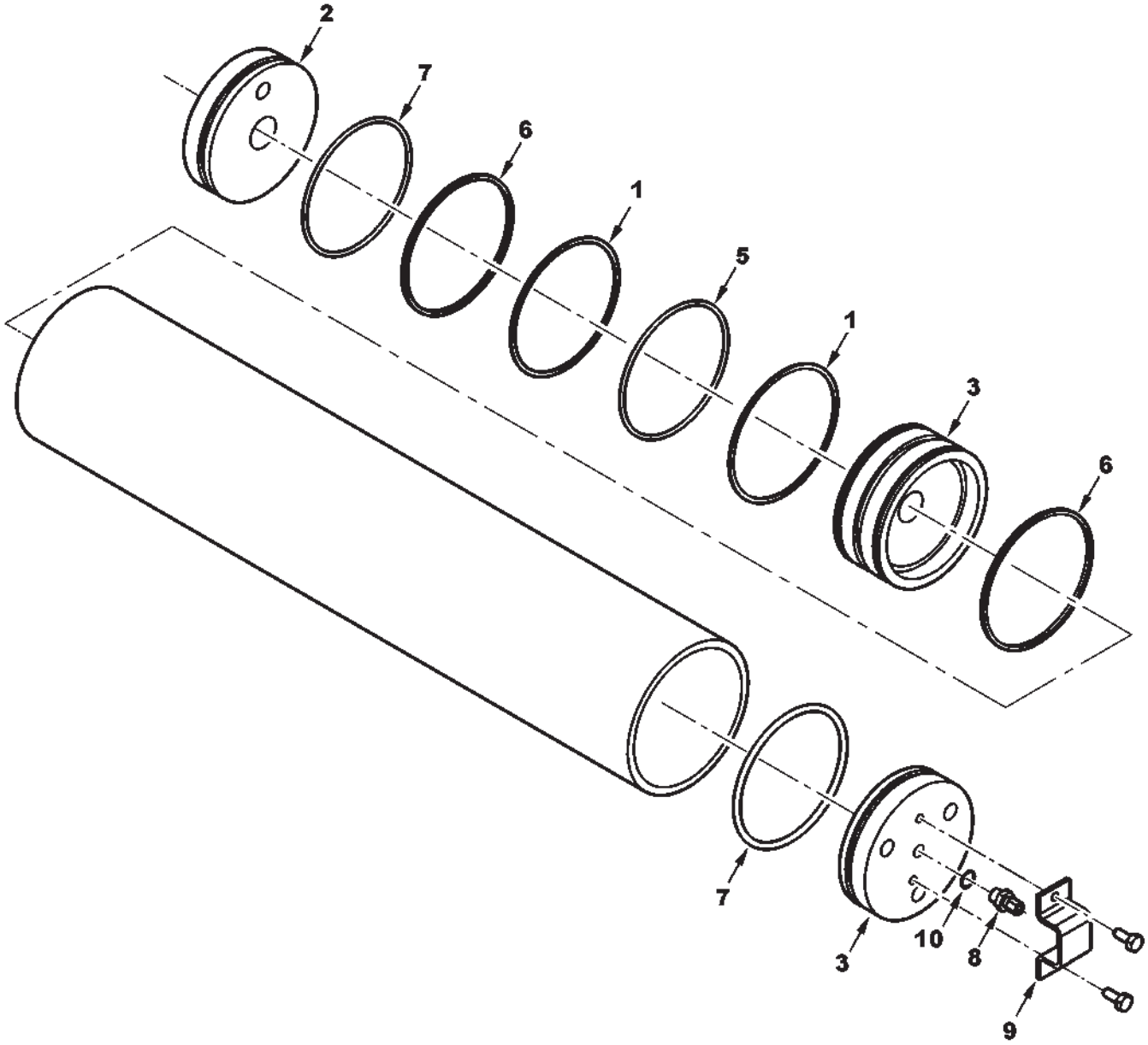

71370918

ACCUMULATOR
PARKER

ITEM	NUMBER	QTY	DESCRIPTION
-	700712632	AR	ACCUMULATOR ASY. (INCL. DECALS & ITEMS 1-10)
1	-----	2	RING, TEFLON (BACKUP)
2	700712651	1	CAP, HYDRAULIC
3	700712652	1	CAP, GAS
4	700710957	1	PISTON
5	-----	1	V, O-RING
6	-----	2	RING, TEFLON, PISTON
7	-----	2	SEAL, BODY END
8	72507231	1	VALVE, GAS
	700710959	1	CORE, GAS VALVE
9	700710960	1	PROTECTOR, VALVE
10	-----	1	O-RING, VALVE
-	700710961	AR	KIT, SEAL (INCL. ITEMS 1, 5-8 & 10)

71370918
PR: t04g15m01d0001

HEADER LIFT CYLINDERS

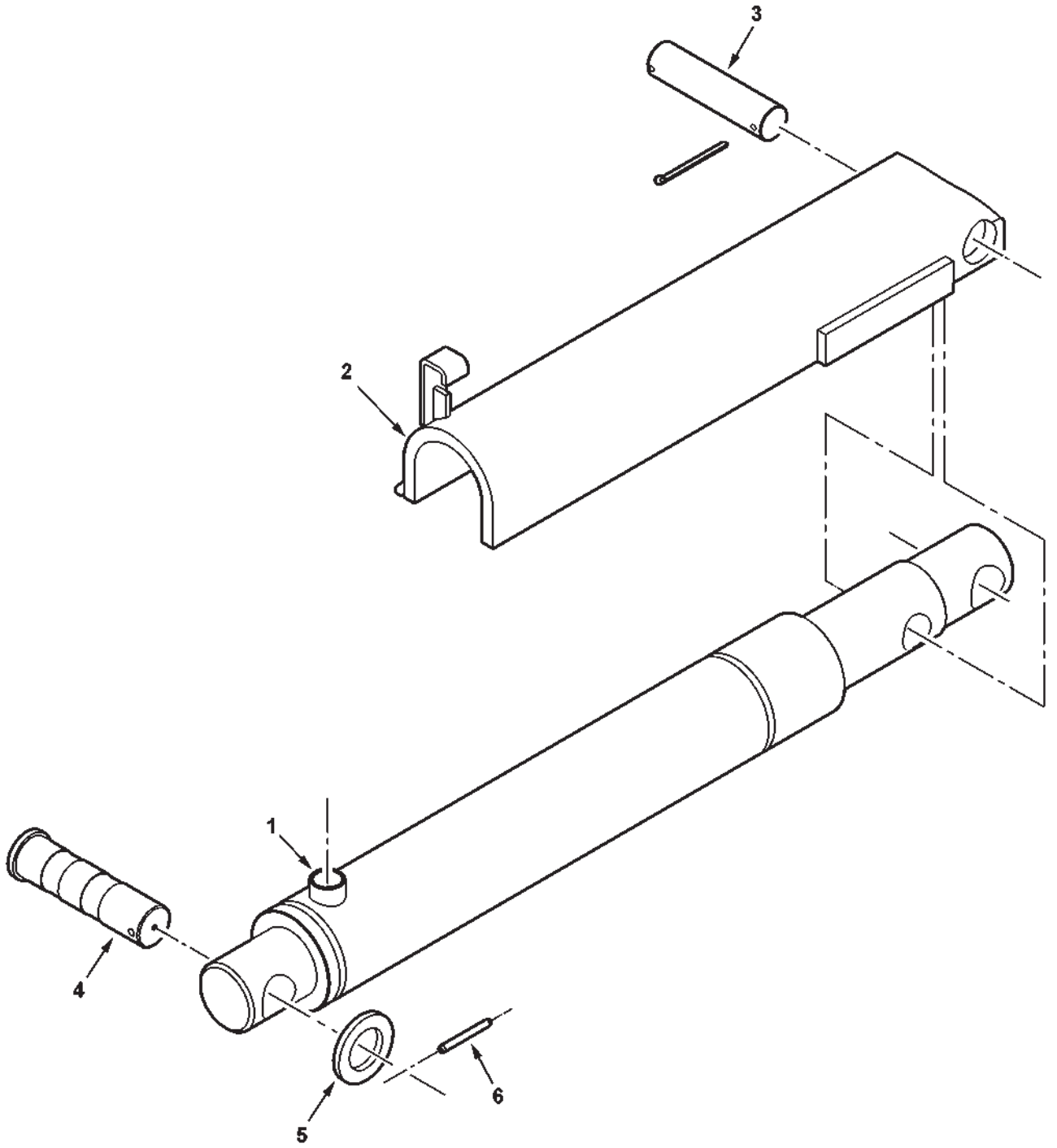

MC00105

HEADER LIFT CYLINDERS

ITEM	NUMBER	QTY	DESCRIPTION
1	116626W1	2	HYDRAULIC CYLINDER, 3"
	71384407	1	PISTON ROD
	71384406	1	BARREL ASSEMBLY
	71384414	1	SEAL KIT
	116627W1	2	HYDRAULIC CYLINDER, 2-3/4"
	71384412	1	PISTON ROD
	71384411	1	BARREL ASSEMBLY
	71384413	1	SEAL KIT
2	116757W1	1	STOP WLDMT, 2-3/4 DIA CYL.
	116759W1	1	STOP WLDMT, 3 DIA CYL.
3	71364024	1	PIN, SAFETY STOP
	70919431	2	COTTER PIN, 3/16 X 2-1/2
4	71364016	4	PIN, HYD. CYLINDER
5	70933818	4	WASHER, 1.53 ID X 2.5 X .25
6	70926243	4	PIN, SPIROL, .25 X 2.25
	70910815	AR	WIRE, 16 GA. (CUT TO LENGTH)

MC00105
PR: 334

UNLOADER SWING CYLINDER

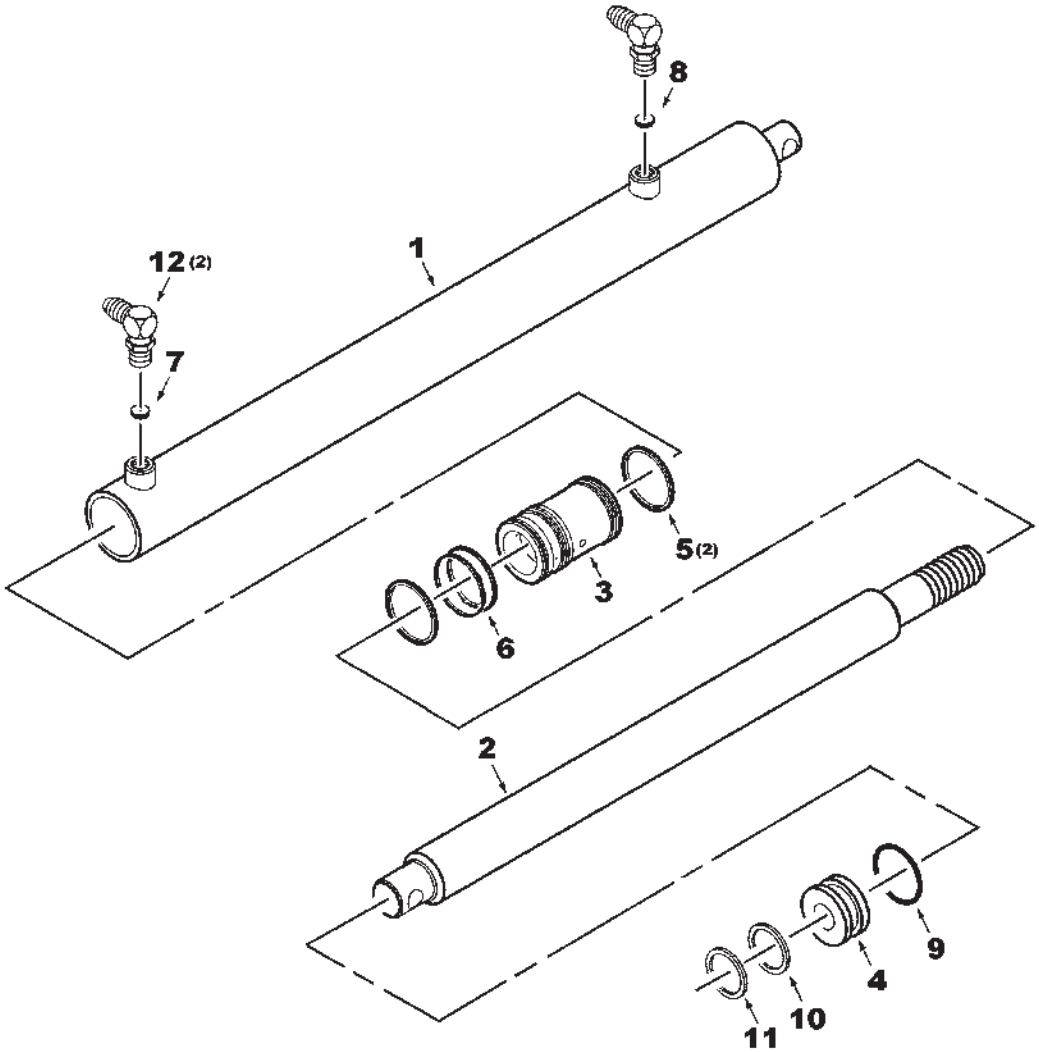

MC00106A

UNLOADER SWING CYLINDER

ITEM	NUMBER	QTY	DESCRIPTION
-	112785W92	1	CYLINDER ASY, UNLDR SWING (PRIOR S/N HN87101)
-	71399143	1	CYLINDER ASY, UNLDR SWING (EFF. S/N HN87101)
-	71377945	1	SEAL PKG. (INCL. ITEMS 5,6,9,10,11)
1	116147W91	1	BARREL ASSEMBLY
2	116146W1	1	PISTON ROD
3	116145W1	1	PISTON
4	116143W1	1	HEAD PLATE
5	-----	2	RING, PISTON CAST
6	-----	1	SEAL RING W/ EXPANDER RING, PISTON
7	116149W1	1	ORIFICE PL, THREADED, .0469 DIA. (PRIOR S/N HN87101)
	71401738	1	ORIFICE PL, THREADED, .040 DIA. (EFF. S/N HN87101)
8	116148W1	1	ORIFICE PL, THREADED, .0595 DIA. (PRIOR S/N HN87101)
	71401738	1	ORIFICE PL, THREADED, .040 DIA. (EFF. S/N HN87101)
9	70924114	1	O-RING, .139 X 1.734 ID
10	-----	1	ROD SEAL
11	-----	1	WIPER SEAL
12	70925011	2	ELBOW, 9/16-18 ORB X 7/16-20, 37 DEG FLR
	70921885	2	O-RING, .078 X .468 ID

MC00106A
PR: 336

PRIORITY VALVE

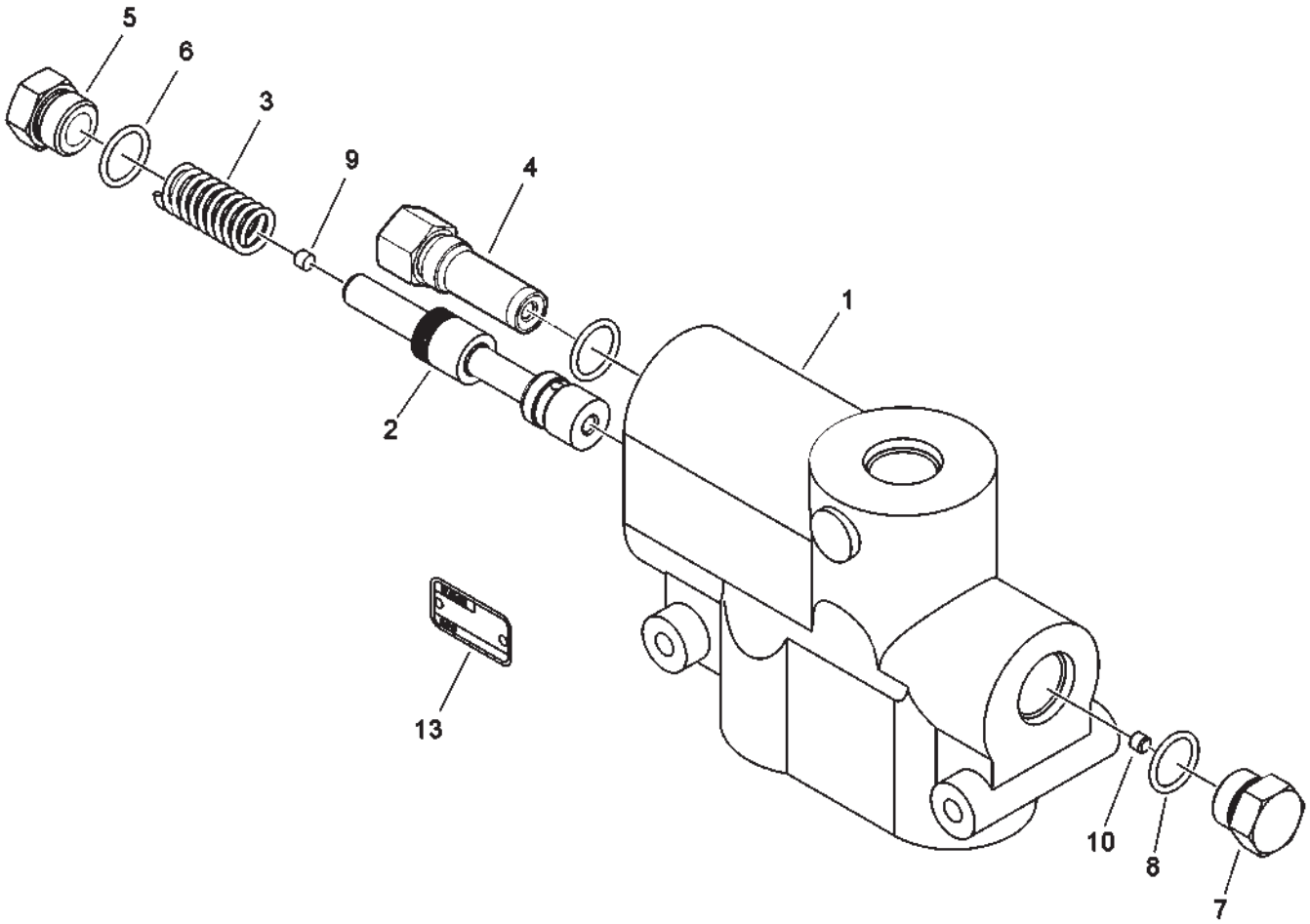

PRIORITY VALVE

ITEM	NUMBER	QTY	DESCRIPTION
-	71391453	1	PRIORITY VALVE ASY
1	-----	1	BODY (NOT SERVICED)
2	71392852	1	SPOOL
3	71392853	1	SPRING (150 PSI)
4	734590	1	VALVE, RELIEF
5	71392854	1	PLUG, ORIFICE
6	70913719	1	O-RING
7	71392855	1	PLUG
8	70913719	1	O-RING
9	71392856	1	SCREW, ORIFICE
10	71392857	1	SCREW, ORIFICE
13	-----	1	NAME PLATE (NOT SERVICED)

71391453
PR: 338

CONTROL VALVE STACK

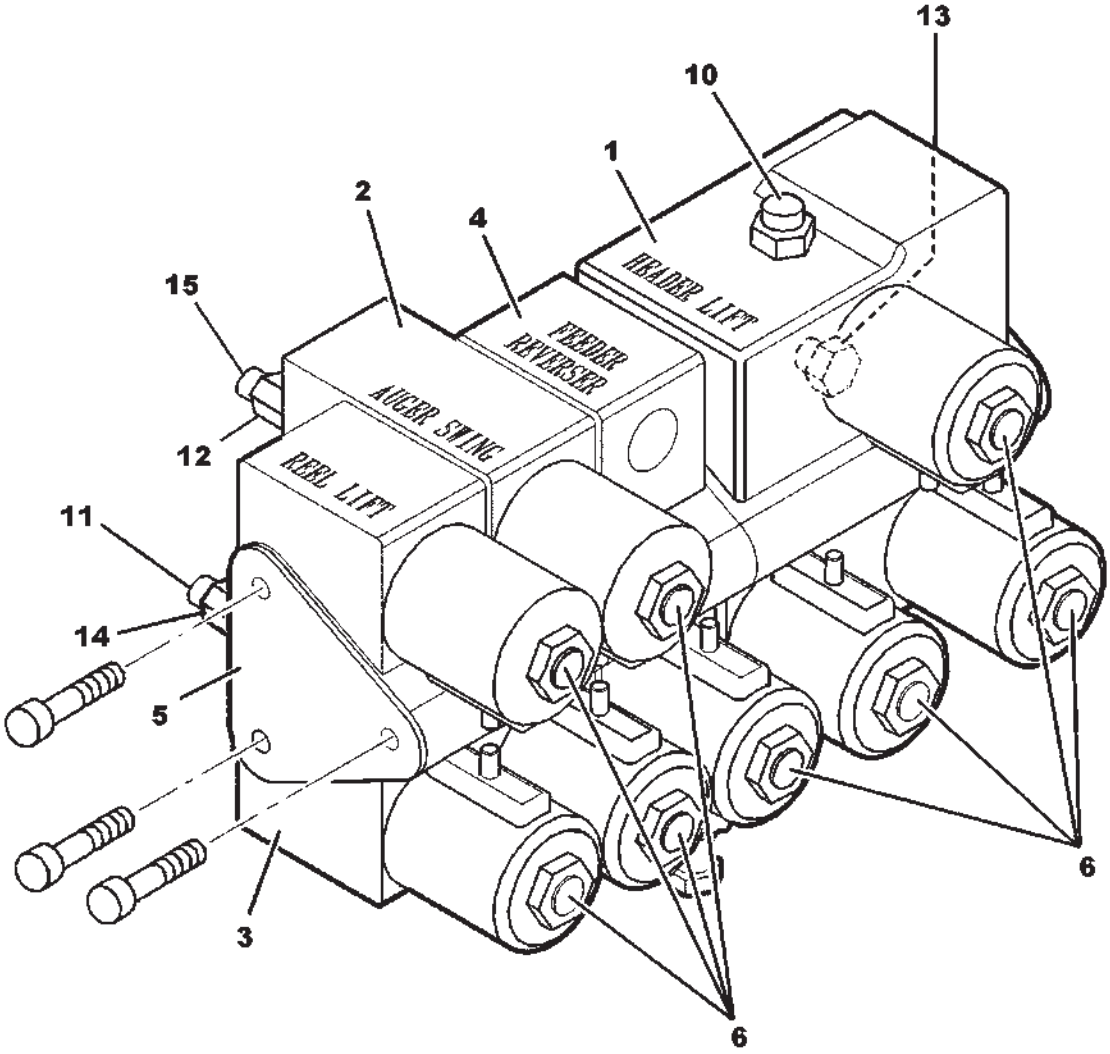

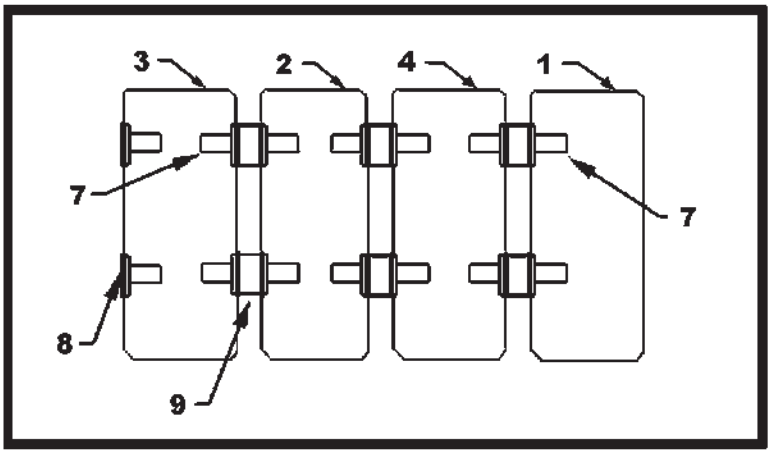

TUBE & PLUG ASSEMBLY

MC00210A

CONTROL VALVE STACK

ITEM	NUMBER	QTY	DESCRIPTION
-	71389737	1	VALVE STACK ASSEMBLY
1	71379325	1	VALVE ASSEMBLY, HEADER CLOSED CTR.
2	116465W91	1	VALVE ASSEMBLY, UNLOADER SWING
3	103766W92	1	VALVE ASSEMBLY, REEL LIFT
4	71386557	1	VALVE ASY, FEEDER REVERSER
	70935781	1	ELBOW, 90 DEG, 3/4-16 JIC X ORB, M
	70921349	1	O-RING, .087 X .644 ID
5	103764W1	1	END PLATE
	71379306	3	BOLT, HEX 1/4-20 X 5-13/16 LG
	70921880	3	WASHER, LOCK EXT. TOOTH 1/4
6	71188504	AR	COIL, 6VDC W/DIODE
	71188503	AR	COVER, COIL
	70915314	AR	NUT, STAMPED 1/2-20
7	1052370M91	6	THRU TUBE ASSEMBLY
	70924048	2	O-RING, .070 X .364 ID
8	103759W91	2	PLUG TUBE ASSEMBLY
	70924048	2	O-RING, .070 X .364 ID
9	104145W91	1	PLUG TUBE ASSEMBLY
	70927903	2	O-RING, .070 X .176 ID
10	70923163	1	STR. CONNECTOR, 7/16-20 JIC X ORB, MALE
	70921883	1	O-RING, .072 X .351 ID
11	70922523	1	ELBOW, 90 DEG, 9/16-18 JIC X ORB, MALE
	70921885	1	O-RING, .078 X .468 ID
12	70930777	2	REDUCER, 3/4-16 ORB X 9/16-18 ORB, FEM
	70921349	2	O-RING, .087 X .644 ID
13	70923717	2	CONNECTOR, STR, 3/4-16 JIC X 7/8-14 ORB
	70921205	2	O-RING, .097 X .755 ID
14	103778W91	1	EXPANDER, 7/16-20 ORB X 9/16-18 ORB, FEM
	70921883	1	O-RING, .072 X .351 ID
15	70925011	2	ELBOW, 90 DEG, 7/16-20 JIC X 9/16-18 ORB
	70921885	2	O-RING, .078 X .468 ID

MC00210A
PR: 340

HEADER LIFT VALVE

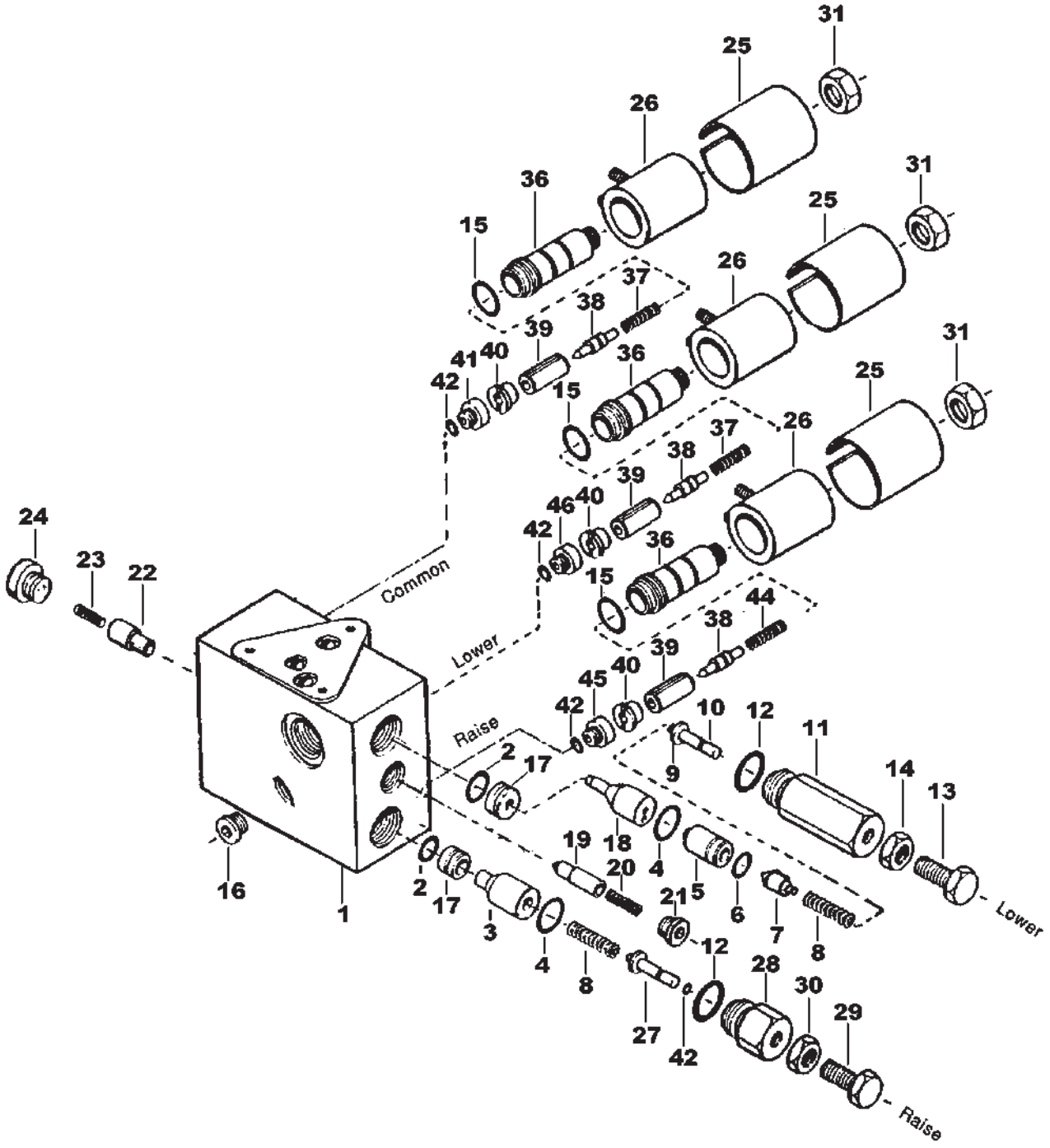

HEADER LIFT VALVE

ITEM	NUMBER	QTY	DESCRIPTION
-	71379325	1	VALVE ASSEMBLY, HEADER LIFT
1	-----	1	BODY (ORDER VALVE ASY, HEADER LIFT)
	1052370M91	2	TUBE/SPACER ASY.
	70924048	4	O-RING, .070 X .364 ID
	104145W91	1	PLUG
	70927903	2	O-RING, .070 X .176 ID
2	70926542	2	O-RING, .070 X .551 ID
3	103745W1	1	POPPET, RAISE
4	70923945	2	O-RING, .070 X .739 ID
5	103746W1	1	RETAINER, DASHPOT
6	70923846	1	O-RING, .070 X .489 ID
7	103797W1	1	POPPET, DASHPOT
8	1052337M1	2	SPRING
9	111089W1	1	STOP, ADJUSTABLE
10	70923943	1	O-RING, .070 X .114 ID
11	1052351M1	1	PLUG, ADJUSTING
12	70921205	2	O-RING, 90 DUR, .097 X .755 ID
13	353538X1	1	BOLT, HEX, 3/8-24 X 1
14	70916602	1	NUT, HEX, 3/8-24
15	70935902	3	O-RING (VITON) .070 X .801 ID
16	70935830	1	PLUG, INT. HEX, 9/16-18 ORB
	70921885	1	O-RING, .078 X .468 ID
17	1052349M1	2	ORIFICE, FLOW
18	103747W1	1	POPPET, LOWER
19	103753W1	1	POPPET
20	1052394M1	1	SPRING, PLUG
21	70928605	1	PLUG, HEX SOCKET, 7/16-20 ORB
	70921883	1	O-RING, .072 X .351 ID
22	104128W1	1	POPPET
23	103789W1	1	SPRING
24	104130W91	1	PLUG ASSEMBLY
	70921881	1	O-RING, .064 X .239 ID
25	71188503	3	COVER, COIL
26	71188504	3	COIL
27	103796W1	1	ADJUSTABLE VALVE STOP
28	103754W1	1	CAP, END
29	70921333	1	BOLT, HEX, 5/16-18 UNC X 1
30	70917372	1	NUT, HEX 5/16-18 UNC
31	70915314	3	NUT, STAMPED, 1/2-20
36	104139W91	3	SLEEVE ASSEMBLY
37	71174718	2	SPRING, PLUG
38	71176951	3	POPPET
39	71365101	3	ARMATURE
40	71176964	3	POLE PIECE
41	1052341M1	1	ORIFICE, .104
42	70926356	4	O-RING, .070 X .239 ID
43	71176962	3	WASHER
44	1073032M1	1	SPRING, PLUG (RAISE ONLY)
45	71184415	1	ORIFICE, .055 (RAISE ONLY)
46	71184418	1	ORIFICE, .040 (LOWER ONLY)

MC00233
PR: 342

REEL LIFT VALVE

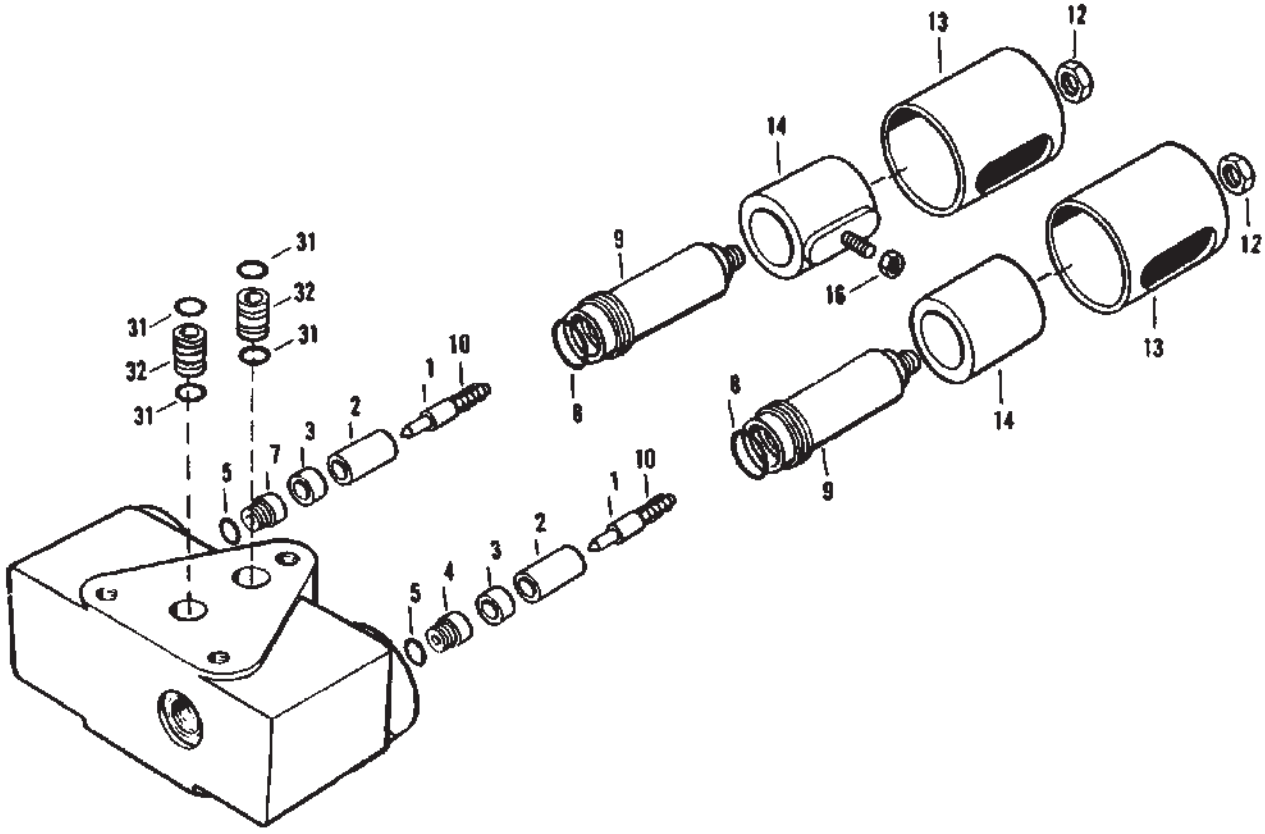

MC00112

REEL LIFT VALVE

ITEM	NUMBER	QTY	DESCRIPTION
-	103766W92	2	REEL LIFT VALVE ASSEMBLY
1	71176951	2	POPPET
2	71176963	2	ARMATURE
3	71176964	2	POLE PIECE
4	71184418	1	ORIFICE, .040, RAISE
5	70926356	2	O-RING, .070 X .239 ID
7	1052384M1	1	ORIFICE, .048, LOWER
8	70930897	2	O-RING, .070 X .801 ID
9	1052359M91	2	SLEEVE ASSEMBLY
10	1073032M1	2	SPRING
12	353438X1	2	PALNUT
13	71188503	2	COVER, COIL
14	71188504	2	COIL
16	1500268M1	2	NUT, HEX BRASS, #10-32 UNF
31	70924048	4	O-RING, .070 X .364 ID
32	1052370M91	2	THRU-TUBE ASSEMBLY (INCL. 2 OF ITEM 31)

MC00112
PR: 344

FEEDER REVERSER VALVE

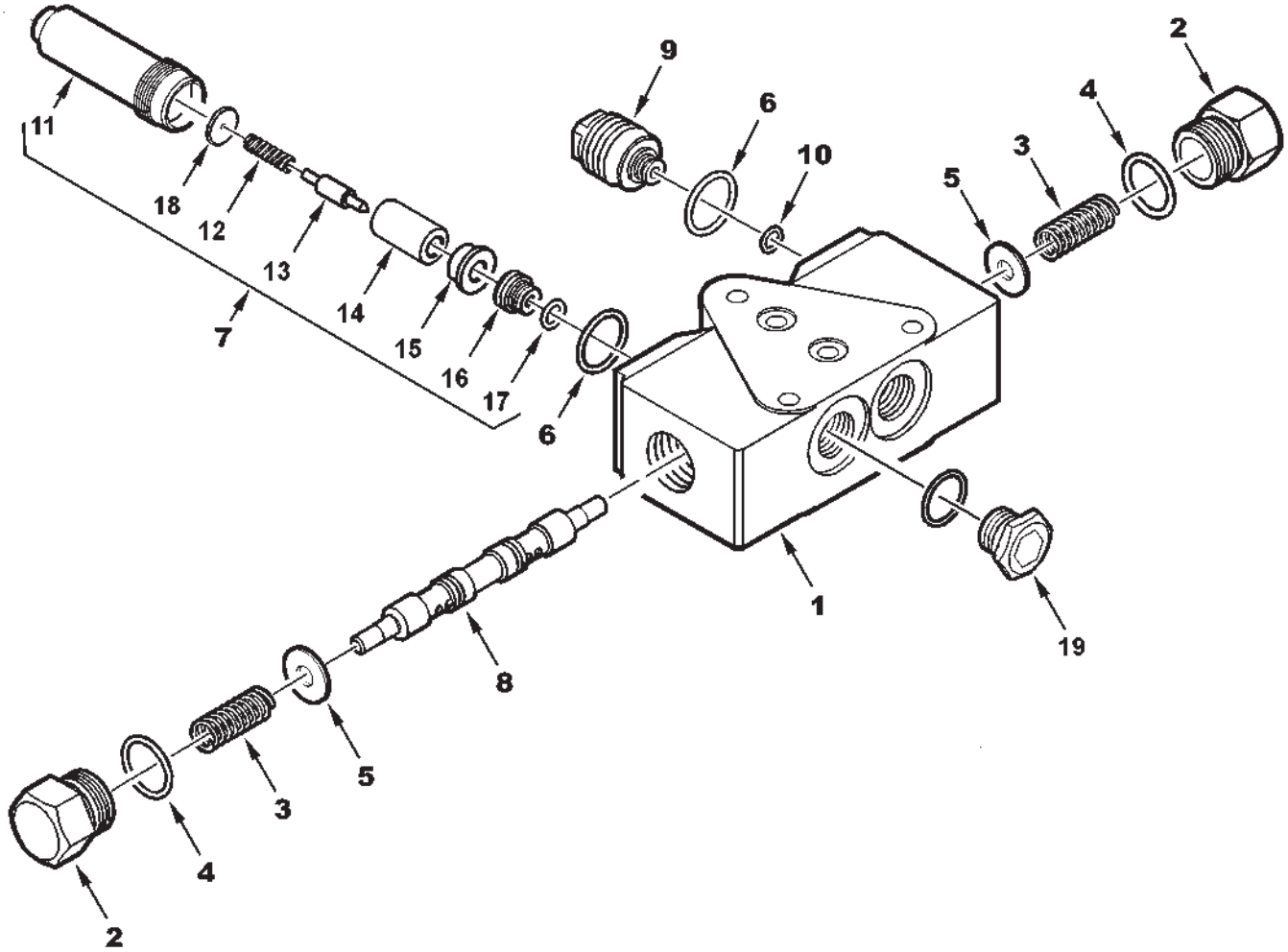

FEEDER REVERSER VALVE

ITEM	NUMBER	QTY	DESCRIPTION
-	71389747	--	VALVE ASY. FEEDER REVERSER, W/COIL (INCL. FOLLOWING 4 ITEMS)
-	71188504	1	COIL, 6V, W/DIODE
-	71188503	1	COVER, COIL
-	70915314	1	NUT, STAMPED, 1/2-20
-	71386557	1	VALVE ASY. FEEDER REVERSER, W/O COIL (INCL. ITEMS 1-10)
1	-----	--	BODY, VALVE (ORDER COMPLETE ASSEMBLY)
2	71184401	2	END CAP, HEX
3	71184409	2	SPRING
4	70921205	2	O-RING, .097 X .755 ID
5	71300327	2	RETAINER, SPRING
6	70935902	2	* O-RING, VITON, .070 X .801 ID
7	71374785	1	PILOT ASY, NORMALLY CLOSED (INCL. ITEMS 11-18)
8	71502674	1	SPOOL
9	71386572	1	PLUG, STACK
10	70926356	1	O-RING, .070 X .239 ID
11	104139W91	1	SLEEVE ASY, THREADED
12	71174718	1	SPRING
13	71361243	1	* POPPET, NORM. CLOSED
14	71365101	1	ARMATURE
15	71176964	1	POLE PIECE
16	71184418	1	* ORIFICE, .040 DIA
17	70926356	1	* O-RING, .070 X .239 ID
18	71176962	1	WASHER
19	70927999	1	PLUG, HEX SOCKET HD, 3/4-16 ORB
	70921349	1	O-RING, .087 X .644 ID
-	71361312	AR	POPPET KIT, PILOT ASY (INCL ITEMS W/ *)

71386557
PR: 346

UNLOADER SWING VALVE

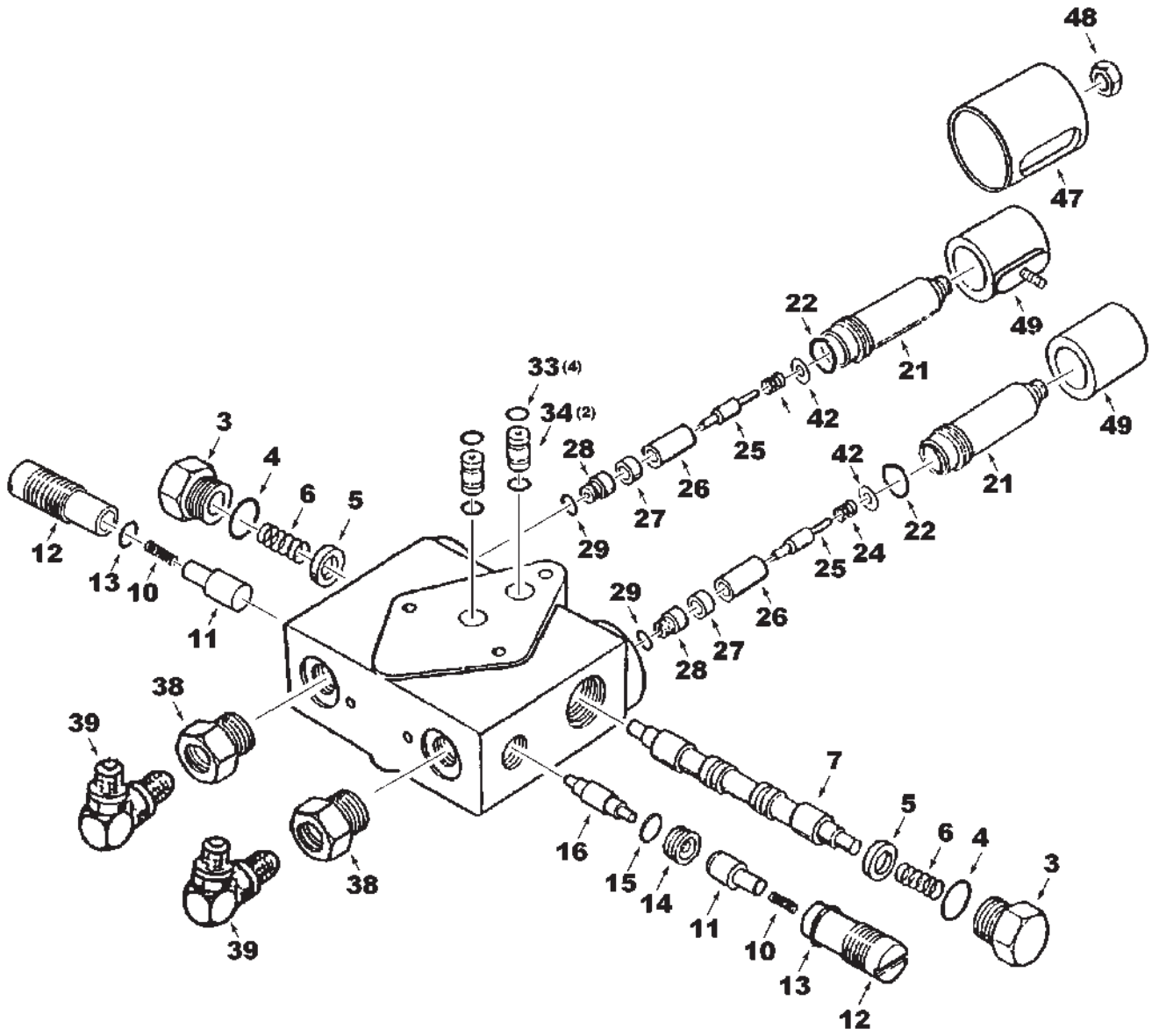

MC00114

UNLOADER SWING VALVE

ITEM	NUMBER	QTY	DESCRIPTION
-	116465W91	1	VALVE, MODULE ASSEMBLY
2	-----	1	BODY, VALVE (ORDER VALVE, MODULE ASY.)
3	105068W1	2	PLUG, VALVE CAP
4	70921205	2	O-RING, .097 X .755 ID
5	1052390M1	2	RETAINER, SPRING
6	71374794	2	SPRING, SPOOL
7	105076W1	1	SPOOL, VALVE
10	71374790	2	SPRING
11	105085W1	2	POPPET
12	105084W1	2	END CAP, RETAINER
13	70927974	2	O-RING, .103 X .612 ID
14	1055944M1	2	SEAT
15	70923841	2	O-RING, .070 X .489 ID
16	71374793	1	SPOOL, SHUTTLE
21	105077W1	2	SLEEVE ASSEMBLY
22	70935902	2	O-RING, .070 X .801 ID, VITON
24	1052358M1	2	SPRING, POPPET
25	1052393M1	2	POPPET
26	105078W1	2	ARMATURE
27	71176964	2	POLE PIECE
28	71184418	2	ORIFICE, .040
29	70926356	2	O-RING, .070 X .239 ID
33	70924048	6	O-RING, .070 X .364 ID
34	1052370M91	2	THRU-TUBE ASSEMBLY (INCL. 2 OF ITEM 33)
38	70930777	2	REDUCER, 3/4-16 ORB M X 9/16-18 ORB FEM
	70921349	2	O-RING, .087 X .644 ID
39	70925011	2	ELBOW, 90 DEG, 9/16-18 ORB X 7/16-20 JIC
	70921885	2	O-RING, .078 X .468 ID
42	1052408M1	2	WASHER, BRASS
47	71188503	2	COVER, COIL
48	70915314	2	PALNUT, 1/2-20
49	71188504	2	COIL
50	364076X1	1	BOLT, HEX, 1/4-20 UNC X 3-1/2
			(NOT ILLUSTRATED)

MC00114
PR: 348

REEL DRIVE VALVE

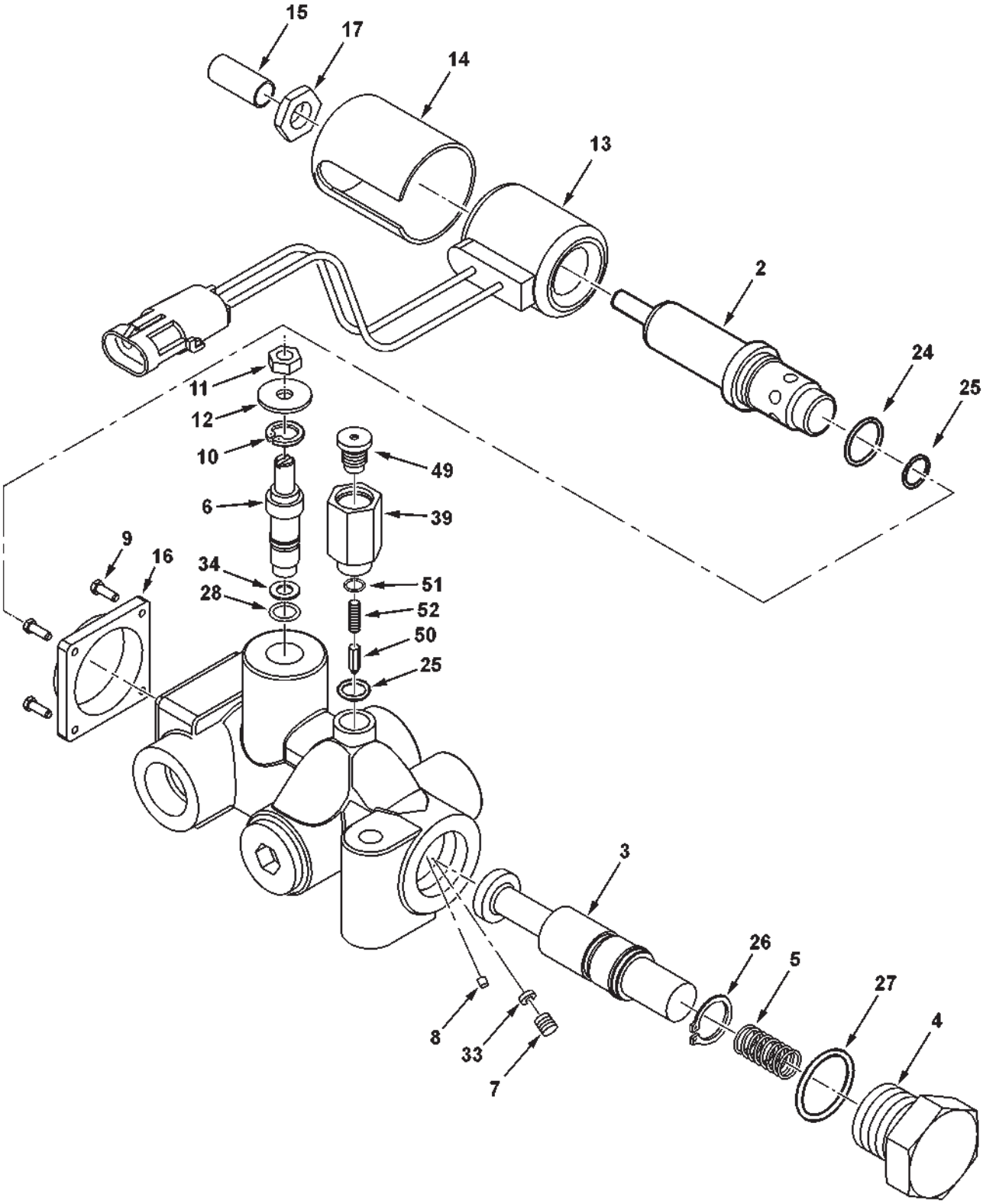

MC00111A

REEL DRIVE VALVE

ITEM	NUMBER	QTY	DESCRIPTION
-	104135W91	1	VALVE ASSEMBLY, REEL DRIVE
1	-----	1	BODY (ORDER VALVE ASY, REEL DRIVE) (NOT ILLUSTRATED)
2	71361368	1	BODY/BUSHING ASSEMBLY
3	104502W1	1	SPOOL
4	104503W1	1	CAP, SPRING
5	71361357	1	SPRING
6	104505W1	1	PINTEL, MANUAL OVERRIDE
7	71361361	1	ORIFICE ASSEMBLY.025
8	71302422	1	ORIFICE .031
9	71361355	4	BOLT, HEX SOCKET #10-32 UNF X 1/2
10	104512W1	1	RING, RETAINING
11	353919X1	1	NUT, HEX JAM 1/4-28 UNF
12	70917377	1	WASHER, WIDE FLAT 1/4
13	71361358	1	COIL, CONNECTOR ASSEMBLY
14	71188503	1	COVER
15	71362539	1	CAP, PROTECTOR
16	71361359	1	PLATE, MOUNTING
17	353438X1	1	PALNUT
18	70924622	1	PLUG, HEX SOCKET HD, 7/8-14 ORB
	70921205	1	O-RING, .097 X .755 ID
24	70921205	1	O-RING, .097 X .755 ID
25	70921885	2	O-RING, .078 X .468 ID
26	71361367	1	RING, RETAINING
27	70921206	1	O-RING, .116 X .924 ID
28	70923558	1	O-RING, .070 X .239, 75 DURO
33	104510W1	1	SCREEN
34	71361364	1	RING, BACK-UP
39	104508W1	1	CAP, LOAD SENSE END
49	104509W1	1	CAP, END
50	104128W1	1	POPPET
51	70921881	1	O-RING, .064 X .239 ID
52	103789W1	1	SPRING

MC00111A
PR: 350

ROTARY SCREEN VALVE & MOTOR

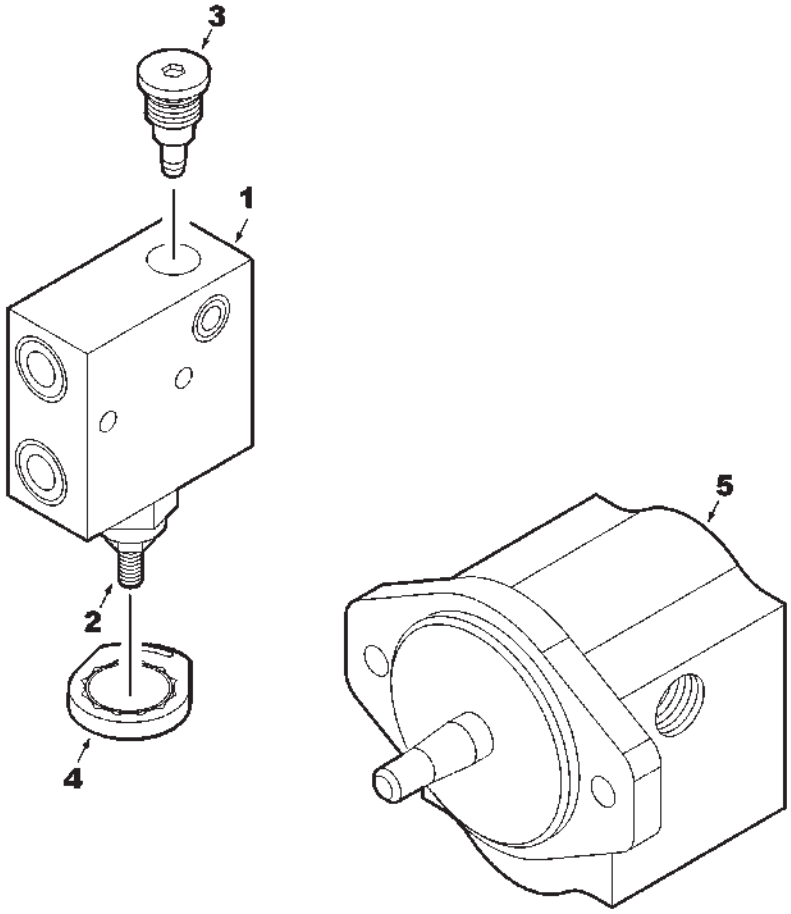

MC00337

ROTARY SCREEN VALVE & MOTOR

ITEM	NUMBER	QTY	DESCRIPTION
1	71396267	1	VALVE, ROTARY SCREEN (INCL ITEMS 2,3,4)
2	71397492	1	CARTRIDGE ASY., FLOW REGULATOR
-	700724693	AR	SEAL KIT, FOR ITEM 2
3	71389743	1	CARTRIDGE ASY., CHECK VALVE
-	700726979	AR	SEAL KIT, FOR ITEM 3
4	71397493	1	LOCK KIT, W/ SCREW
5	71396755	1	HYDRAULIC MOTOR (NOTE: INDIVIDUAL COMPONENTS ARE NOT SERVICED EXCEPT FOR SEAL KIT.)
-	71396758	1	SEAL KIT, HYDRAULIC MOTOR

MC00337
PR: 352

ROTARY SCREEN MOTOR LINES

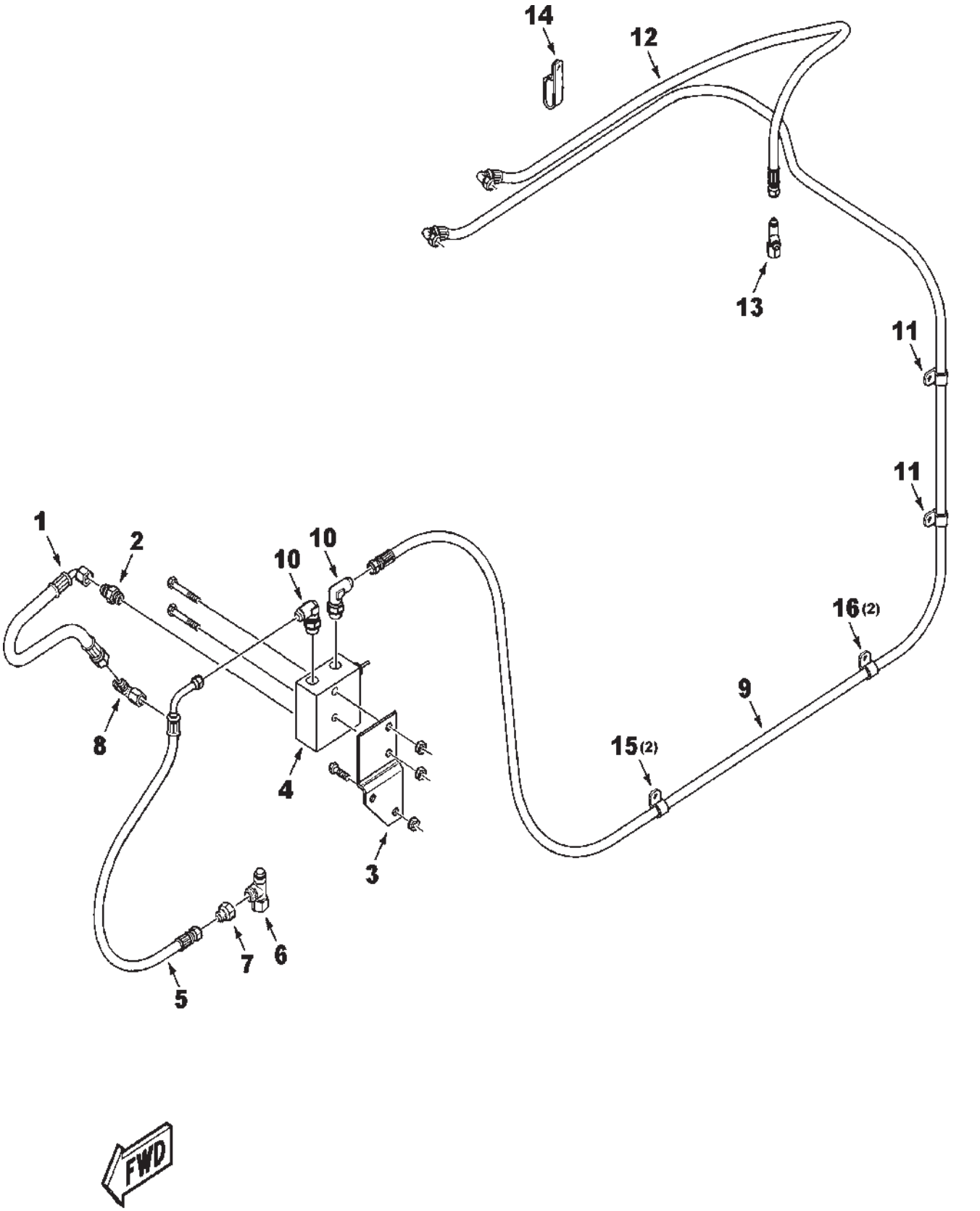

MC00335

ROTARY SCREEN MOTOR LINES

ITEM	NUMBER	QTY	DESCRIPTION
1	71373538	1	HOSE ASY., LOAD SENSE
2	700701356	1	STR CONNECTOR, 7/16-20, JIC X ORB
	70921883	1	O-RING, .072 X .351 ID
3	71396264	1	BRACKET, ROTARY SCREEN VALVE
	70921333	2	CAPSCREW, 5/16-18 X 1
	70917356	2	LOCKWASHER, 5/16
	70917372	2	NUT, HEX 5/16-18
4	71396267	1	VALVE, ROTARY SCREEN
	70921978	2	CAPSCREW, 5/16-18 X 2 GR5
	70917356	2	LOCKWASHER, 5/16
	70917372	2	NUT, HEX 5/16-18
5	700719105	1	HOSE ASY., ROTARY SCREEN SUPPLY
6	70925468	1	TEE, SWIVEL RUN, 7/8-14 JIC
7	70930224	1	REDUCER FTG., 7/8-14 JIC X 9/16-18 JIC
8	700701355	1	TEE, SWIVEL RUN, 7/16-20 JIC
9	71396265	1	HOSE ASY., PRESS. TO ROTARY SCR BLKHD
10	70922523	2	ELBOW, 90 DEG 9/16-18, JIC X ORB
	70921884	2	O-RING, .078 X .468 ID
11	70925619	2	CLAMP, .69 DIA X .406 HOLE
	Y702951	2	CAPSCREW, 3/8-16 X 3/4 LG
	705038	2	LOCKWASHER, 3/8
	70916950	2	NUT, HEX 3/8-16
12	71396266	1	HOSE ASY., ROTARY SCREEN BLKHD TO TANK
	70937133	2	TIE, SELF LOCKING, .300 X 14.5
13	70921298	1	TEE, SWIVEL RUN, 3/4-16 JIC
14	70928148	1	CLAMP, DOUBLE .750 TUBE X .406 HOLE
	Y702951	1	CAPSCREW, 3/8-16 X 3/4 LG
	705038	1	LOCKWASHER, 3/8
	70916950	1	NUT, HEX 3/8-16
15	70927134	2	J-CLIP, .62 X .406 HOLE
16	70937682	2	J-CLIP, .75 X .656 HOLE

MC00335
PR: 354

HYDRAULIC PUMP & LINES

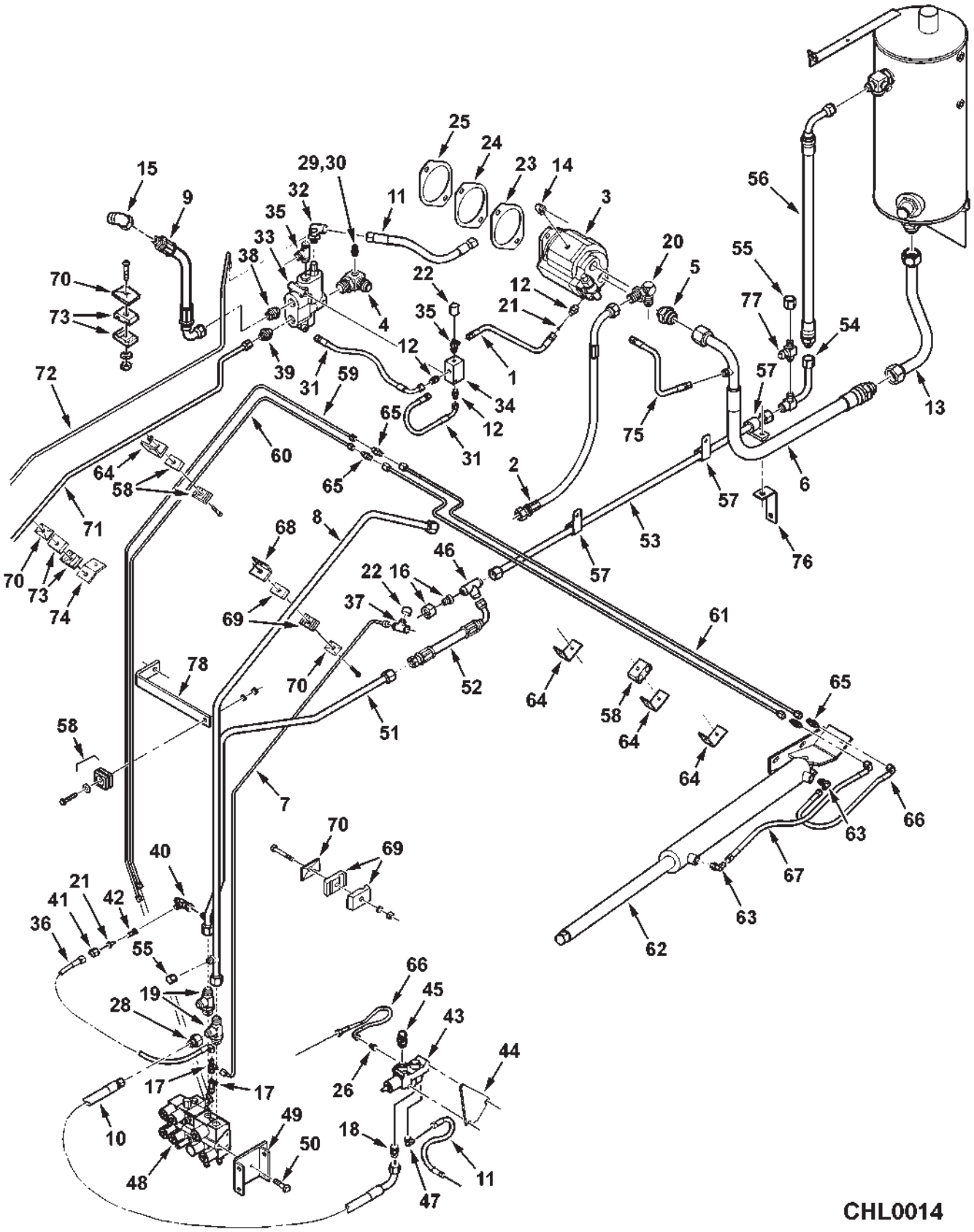

HYDRAULIC PUMP & LINES

ITEM	NUMBER	QTY	DESCRIPTION
1	71392879	1	HOSE ASY, PUMP LS, 1/4
2	71392882	1	HOSE ASY, PUMP PRESSURE
3	71396996	1	PUMP, HYDRAULIC PISTON
	393761X1	2	CAPSCREW, M12-1.75 X 95
4	72526244	1	ELBOW, 90 DEG SPL, 1-5/16-12 JIC X ORB
	70921214	1	O-RING, .116 X 1.17 ID
5	70923343	1	STR CONN, 1-5/8-12 JIC X 1-5/8-12 ORB
	70921235	1	O-RING, .118 X 1.475 ID
6	71388875	1	HOSE ASY, PUMP SUCTION
7	112041W1	1	TUBE ASY, VALVE, LS (PRIOR MID. S/N
8	71394168	1	TUBE ASY, PRESS TO VALVE (PRIOR MID. S/N
9	101588M1	1	HOSE ASY, PRIORITY VALVE OUT, 5/8
10	112050W1	1	HOSE ASY, PRESS TO REEL DRIVE VALVE
11	101650M1	2	HOSE ASY, PRIORITY VALVE RETURN
12	700701356	3	STR CONN, 7/16-20 JIC X 7/16-20 ORB
	70921883	1	O-RING, .072 X .35 ID
13	-----	--	TUBE ASY, (670 ONLY)
14	70922523	1	ELBOW,90 DEG, 9/16-18 JIC X 9/16-18 ORB
	70921885	1	O-RING, .078 X .468 ID
15	70919624	1	ELBOW,90 DEG, 1-1/16-12, MALE X SWIV FEM (PRIOR MID. S/N HN87)(USED W/ TUBE ASY. 71394168)
16	70925852	1	REDUCER, 1-1/16-12 JIC X 9/16-18 MALE
	70919197	1	TUBE NUT, 1-1/16-12
17	700701355	2	TEE, SWIVEL RUN, 7/16-20 JIC
18	70921326	1	STR CONN, 7/8-14 JIC X ORB
	70921205	1	O-RING, .097 X .755 ID
19	70922181	2	TEE, ADJ ORB RUN, 1-1/16-12 JIC X ORB
	70921206	2	O-RING, .116 X .924 ID
20	70922632	1	ELBOW,90 DEG, 1-1/16-12 JIC X 1-5/16 ORB (PRIOR S/N HR87101)
	70935768	1	STR CONN, 1-1/16-12 X 1-5/16-12 ORB (EFF. S/N HR87101)
	70921214	1	O-RING, .116 X 1.17 ID
21	286501M1	2	CONE FILTER, 1/4
22	700715848	2	CAP, 7/16-20 JIC
23	9H-8872	1	GASKET (CAT: SUPPLIED)
24	7C-1289	1	ADAPTOR (CAT: SUPPLIED)
25	135-9819	1	SEAL (CAT: SUPPLIED)
26	70926292	1	STR CONN, 7/16-20 JIC X 9/16-18 ORB
	70921885	1	O-RING, .078 X .468 ID
28	700701744	1	REDUCER, 1-1/16-12 JIC X 3/4-16 MALE
29	71379303	1	COUPLER, DIAGNOSTIC
30	71379304	1	DUST CAP, HYD COUPLER
31	116640W1	2	HOSE ASY, SHUTTLE VALVE
32	70930510	1	ELBOW,90 DEG, 9/16-18 JIC X 7/16-20 ORB
	70921883	1	O-RING, .072 X .35 ID
33	71391453	1	VALVE, PRIORITY FLOW DIVIDER
	772418	1	CAPSCREW, 5/16-18 X 3-1/2 GR5
	873026	1	CAPSCREW, 5/16-18 X 4-1/2 GR5
	70917372	1	NUT, 5/16-18 REG
	70917356	1	LOCKWASHER, 5/16 REG

CONTINUED

HYDRAULIC PUMP & LINES

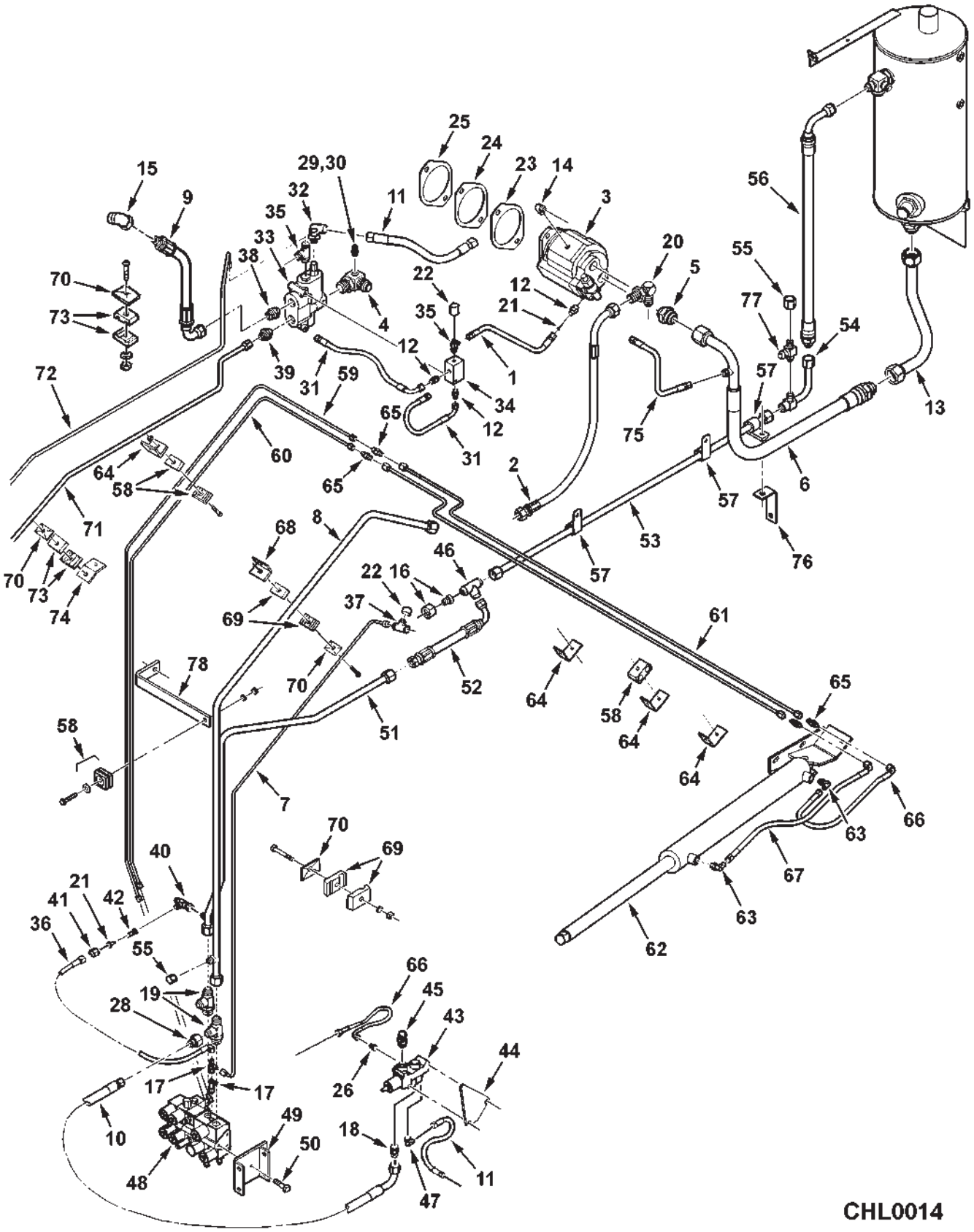

ITEM	NUMBER	QTY	DESCRIPTION
34	72525468	1	VALVE, SHUTTLE
35	70924783	2	TEE, ADJ ORB RUN, 7/16-20 JIC X ORB
	70921883	1	O-RING, .072 X .35 ID
36	71373538	1	HOSE ASY, LS DRAIN, 1/4
37	700701350	1	TEE, UNION, 7/16-20 JIC
38	70935768	1	STR CONN, 1-1/16-12 X 1-5/16-12 ORB
	70921214	1	O-RING, .116 X 1.17 ID
39	700701753	1	STR CONN, 3/4-16 JIC X 1-1/16-12 ORB
	70921206	1	O-RING, .116 X .924 ID
40	70921297	1	TEE, SWIVEL RUN, 9/16-18 JIC
41	846204	1	TUBE NUT, 9/16-18
42	116644W1	1	FITTING, ORIFICE, 7/16-20 JIC
43	104135W91	1	VALVE, REEL DRIVE
	70921719	2	CAPSCREW, 5/16-18 X 2-1/2 GR5
	70917372	2	NUT, 5/16-18 REG
	70917356	2	LOCKWASHER, 5/16 REG
44	71386414	1	PLATE, VALVE MTG
	70921332	2	CAPSCREW, 5/16-18 X 3/4 GR5
	70917372	2	NUT, 5/16-18 REG
	70917356	2	LOCKWASHER, 5/16 REG
45	70921327	1	ELBOW, 90 DEG, 7/8-14 JIC X ORB
	70921205	1	O-RING, .097 X .755 ID
46	700701814	1	TEE, UNION, 1-1/16-12 JIC
47	70922523	1	ELBOW, 90 DEG, 9/16-18 JIC X 9/16-18 ORB
	70921885	1	O-RING, .078 X .468 ID
48	-----	1	VALVE STACK ASY (SEE BREAKDOWN)
49	108910W91	1	BRACKET WLDMT, VALVE
	7701188	4	CAPSCREW, 1/2-13 X 1-1/4 GR5
	Y705046	4	LOCKWASHER, 1/2 REG
	704031	4	NUT, 1/2-13 REG
50	70927340	3	CAPSCREW, 1/4-20 X 3/4 GR8
	353769X1	3	WASHER, HARD, 1/4
51	112174W1	1	TUBE ASY, RETURN (PRIOR S/N HR87101)
	700727622	1	TUBE ASY, RETURN (EFF. S/N HR87101)
52	71394174	1	HOSE ASY, RETURN (PRIOR S/N HR87101)
	700727621	1	HOSE ASY, RETURN (EFF. S/N HR87101)
53	2629720W1	1	TUBE ASY, RETURN TO TANK
54	71388085	1	TUBE ASY, RETURN TO TANK
55	70923737	2	CAP, 3/4-16 JIC
56	71388086	1	HOSE ASY, RETURN TO TANK, 3/4
57	70926049	3	CLAMP, 3/4 DIA X .406 HOLE
	Y702951	2	SCR,HX WSHR HD,TAPPING, 3/8-16 X 3/4
	70921977	1	CAPSCREW, 5/16-18 X 1-1/4 GR5
	Y705608	1	WASHER, 5/16 NARROW
	Y704726	1	NUT, HEX FLANGE TOP LOCK, 5/16-18
58	148039M1	5	CLAMP PAIR, DOUBLE, 1/4 X 1/4 DIA
	70922837	5	CAPSCREW, 1/4-20 X 1-1/2
	700709601	6	WASHER, WIDE, 1/4
	704007	5	NUT, 1/4-20 REG
	705012	5	LOCKWASHER, 1/4 REG
59	112043W1	1	TUBE ASY, UNLDR SWING, VALVE LOWER, 1/4 (PRIOR MID. S/N HN87...)(SERVICE W/71401728)
	71401728	1	TUBE ASY, UNLDR SWING, VALVE LOWER, 1/4 (EFF. MID. S/N HN87)

CONTINUED

HYDRAULIC PUMP & LINES

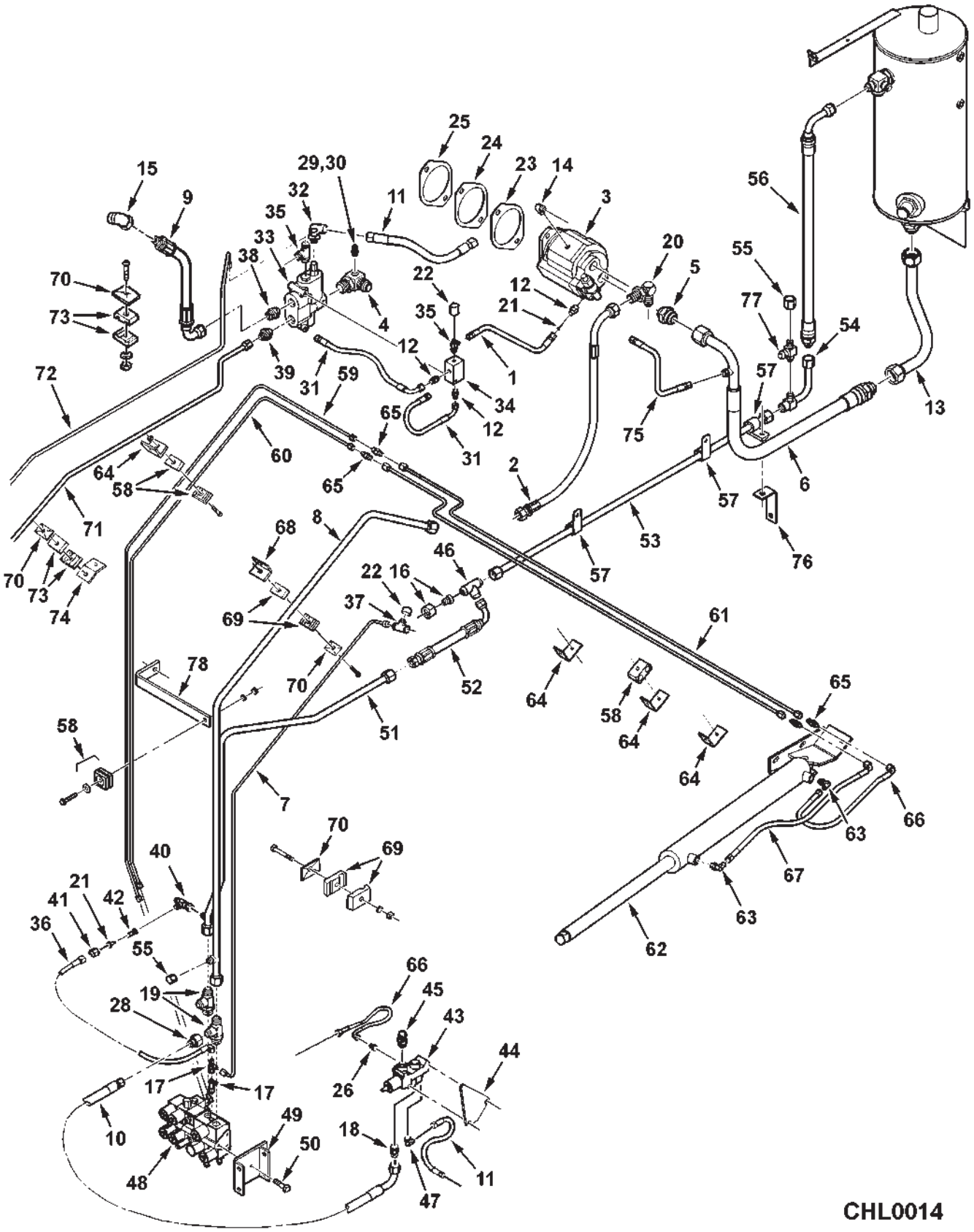

CHL0014

ITEM	NUMBER	QTY	DESCRIPTION
60	112044W1	1	TUBE ASY, UNLDR SWING, VALVE UPPER, 1/4 (PRIOR MID. S/N HN87...)(SERVICE W/71401727)
	71401727	1	TUBE ASY, UNLDR SWING, VALVE UPPER, 1/4 (EFF. MID. S/N HN87)
61	71401729	2	TUBE ASY, UNLDR SWING
62	112785W92	1	HYD CYLINDER, UNLDR SWING (SEE BREAKDWN) (PRIOR S/N HN87101)
	71399143	1	HYD CYLINDER, UNLDR SWING (SEE BREAKDWN) (EFF. S/N HN87101)
63	700701834	2	ELBOW,90 DEG, 7/16-20 JIC X 9/16-18 ORB
	70921885	2	O-RING, .078 X .468 ID
64	101618M1	3	ANGLE BRACKET
	71398203	1	ANGLE BRACKET, LONG
	7703457	4	CAPSCREW, 1/4-20 X 3/4 GR5
	705012	4	LOCKWASHER, 1/4 REG
	704007	4	NUT, 1/4-20 REG
65	70919214	4	UNION CONN, 7/16-20 JIC
66	101590M1	1	HOSE ASY, 1/4
67	101598M1	1	HOSE ASY, 1/4
68	101643M91	1	ANGLE BRACKET
	70921332	1	CAPSCREW, 5/16-18 X 3/4 GR5
	70917372	1	NUT, 5/16-18 REG
	70917356	1	LOCKWASHER, 5/16 REG
69	101752M1	2	CLAMP PAIR, DOUBLE, 3/4 X 1/4 DIA
	70921159	1	CAPSCREW, 1/4-20 X 2-1/4 GR5
	7701485	1	CAPSCREW, 1/4-20 X 2 GR5
	705012	2	LOCKWASHER, 1/4 REG
	704007	1	NUT, 1/4-20 REG
70	101646M1	4	COVER PLATE
71	71391246	1	TUBE ASY, STEERING SUPPLY, 1/2
72	71391252	1	TUBE ASY, STRG LS, 1/4
73	101751M1	2	CLAMP PAIR, DOUBLE, 1/2 X 1/4 DIA
	7701485	2	CAPSCREW, 1/4-20 X 2 GR5
	705012	2	LOCKWASHER, 1/4 REG
	704007	2	NUT, 1/4-20 REG
74	112972W1	1	STRAP, TUBE SUPPORT
	70921332	1	CAPSCREW, 5/16-18 X 3/4 GR5
	70917372	1	NUT, 5/16-18 REG
	70917356	1	LOCKWASHER, 5/16 REG
75	71388081	1	HOSE ASY, DRAIN
76	71398139	1	ANGLE BRKT, TUBE SUPP'T(EFF S/N HR87101)
77	70921298	1	TEE, SWIVEL RUN, 3/4-16 JIC
78	71412116	1	STRAP, TUBE SUPPORT (EFF. S/N HR87101)
	70921333	1	CAPSCREW, 5/16-18 X 1 GR5
	70917642	1	WASHER, 5/16, WIDE
	Y704726	1	NUT, HEX FLANGE TOP LOCK, 5/16-18

HYDRAULIC PUMP

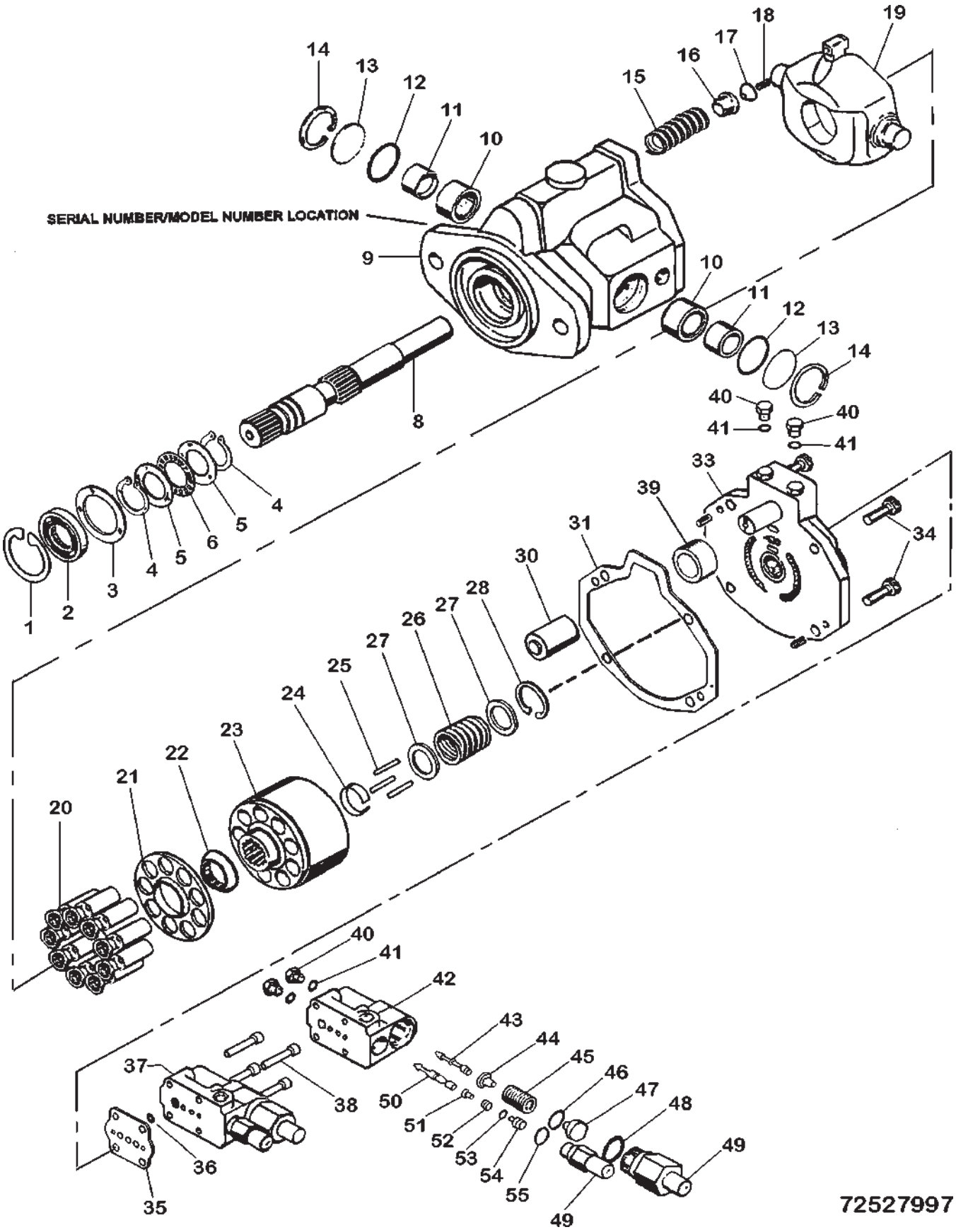

HYDRAULIC PUMP

ITEM	NUMBER	QTY	DESCRIPTION
-	71396996	1	PUMP ASSEMBLY
1	70927700	1	RING, RETAINING
2	70269723	1	SEAL, SHAFT
3	70269722	1	WASHER
4	72528008	2	RING, RETAINING
5	70933255	2	RACE, THRUST BEARING
6	70930441	1	BEARING, THRUST
7	72528004	1	COMPENSATOR
8	104456W1	1	SHAFT, DRIVE
9	72528022	1	HOUSING
10	71012174	2	BEARING, THRUST
11	700719785	2	RACE, INNER
12	70924791	2	O-RING, .103 X 1.424 ID, 75 DUR.
13	700719782	2	COVER, TRUNNION
14	7035983	2	RING, RETAINING
15	700719780	1	SPRING
16	700719784	1	COLLAR, SPRING
17	700719783	1	BUTTON, PIVOT
18	72528006	1	PIN, ROLL
19	72528024	1	CAMPLATE
20	-----	1	*KIT, PISTON (INCL. 9 PISTONS)
21	-----	1	*SPIDER
22	-----	1	*PIVOT, SPIDER
-	-----	--	*(SERVICE WITH #700706490 KIT ASY.)
23	700706490	1	KIT ASY., ROTATING
24	70267150	1	KEEPER, PIN
25	70267148	3	PIN, LOADING
26	70267155	1	SPRING
27	70261383	2	WASHER
28	355602X1	1	RING, RETAINING
30	72528025	1	PISTON
31	70267132	1	GASKET
33	700721382	1	BACKPLATE ASY
34	70920415	4	CAPSCREW, 3/8-16 X 1-1/4
35	70270210	1	GASKET
36	72528012	1	O-RING
37	700721383	1	COMPENSATOR ASY.
38	103714W1	4	CAPSCREW
39	-----	1	SPACER (NOT USED)
40	70935836	1	PLUG
41	70921882	1	O-RING, .064 X .301 ID, 90 DUR.
42	-----	1	BODY (NOT SERVICED)
43	-----	1	SPOOL, PRESSURE (NOT SERVICED)
44	70272357	1	CAP, SPRING PIVOT
45	70267167	1	SPRING
46	70935118	1	O-RING, VITON, .103 X .549 ID, 75 DUR.
47	70272358	1	FOLLOWER, FLOW SPRING
48	70935847	1	O-RING, VITON, .103 X .862 ID, 75 DUR.
49	-----	1	ADJUSTMENT CAP, PRESSURE (NOT SERVICED)
50	70272355	1	SPOOL, FLOW
51	70272361	1	PIVOT, SPRING
52	70272365	1	SPRING
53	70936498	1	O-RING, VITON, .070 X .208 ID, 90 DUR.
54	70272360	1	FOLLOWER, FLOW SPRING
55	70928488	1	O-RING, VITON, .078 X .468 ID, 90 DUR.

72527997
PR: 362

UNLOADER ENGAGE LINES

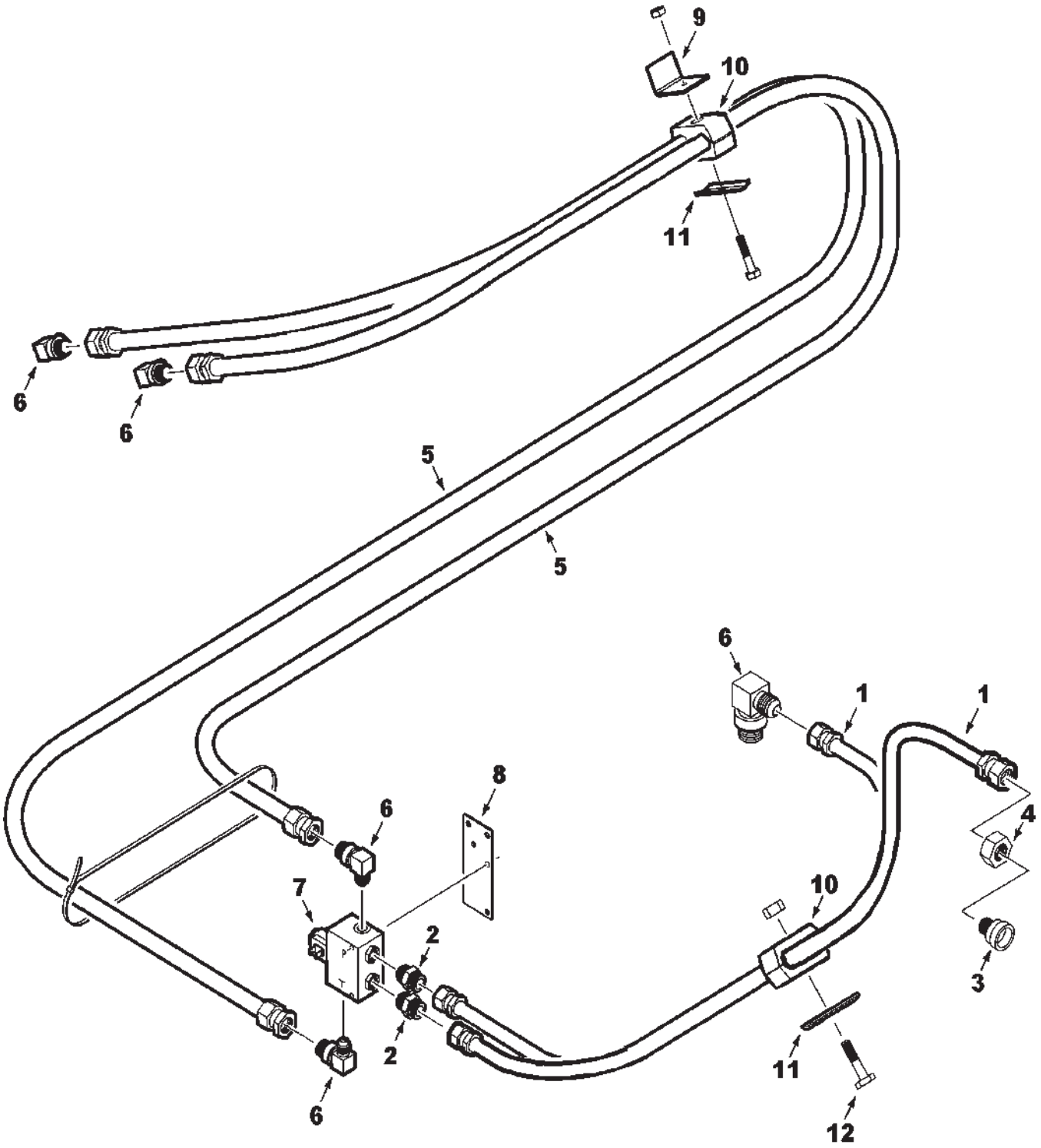

MC00342

UNLOADER ENGAGE LINES

ITEM	NUMBER	QTY	DESCRIPTION
1	112027W1	2	HOSE ASY, 3/8 X 45"
2	846634	2	CONNECTOR, STRAIGHT, 9/16-18 JIC X ORB
	70921885	AR	O-RING, .078 X .468 ID
3	70925852	1	REDUCER FTG., 1-1/16-12 X 9/16-18 JIC
4	70919197	1	TUBE NUT, 1-1/16-12
5	71373403	2	HOSE ASY, 3/8 X 90"
	70937133	1	NYLON TIE, .30 X 14.5 LG
6	70922523	5	ELBOW, 90 DEG, 9/16-18, JIC X ORB
	70921885	AR	O-RING, .078 X .468 ID
7	108531W91	1	VALVE ASY. (SERVICE WITH 71407956)
	71407956	1	VALVE ASY.
	7701964	2	CAPSCREW, 1/4-20 X 2-1/2
	705012	2	LOCKWASHER, 1/4
	704007	2	NUT, 1/4 REG
8	108925W1	1	PLATE, VALVE MOUNT
	70921332	2	CAPSCREW, 5/16-18 X 3/4
	Y704726	2	LOCKNUT, HEX FLNG. TOP LOCK 5/16-18
9	101832M1	1	ANGLE BRACKET
	70921965	1	CAPSCREW, 3/8-16 X 3/4 GR5
	705038	1	LOCKWASHER, 3/8
	70916950	1	NUT, 3/8-16 REG
10	148203M1	2	CLAMP PAIR, 5/8 DIA DOUBLE, BATT. CABLE
11	101646M1	2	COVER PLATE
	7701485	1	CAPSCREW, 1/4-20 X 2 GR5
	705012	1	LOCKWASHER, 1/4
	704007	1	NUT, 1/4 REG
12	7703507	1	CAPSCREW, 5/16-18 X 2 GR5
	70917356	1	LOCKWASHER, 5/16
	70917372	1	NUT, 5/16 REG

MC00342
PR: 364

UNLOADER ENGAGE VALVE

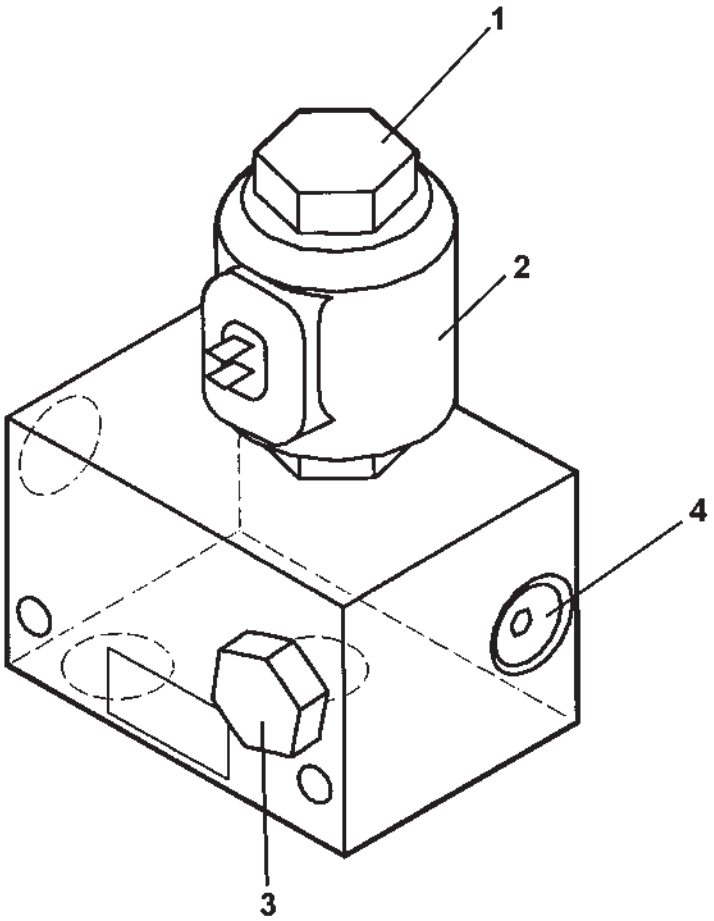

MC00061

UNLOADER ENGAGE VALVE

ITEM	NUMBER	QTY	DESCRIPTION
-	108531W91	1	VALVE, MODULE ASSEMBLY
1	71389729	1	CARTRIDGE, SOLENOID
2	853288	1	COIL
3	71389731	1	VALVE, CHECK
4	71389732	1	PLUG, ORIFICE, .052
-	71389733	1	KIT, SEAL REPAIR
-	71407956	1	VALVE ASSEMBLY
1	700720621	1	CARTRIDGE, VALVE
2	71407957	1	COIL, 12V DC
3	700720917	1	VALVE, CHECK
4	71407958	1	PLUG, ORIFICE, .052

MC00061
PR: 366

RESERVOIR & FILTER

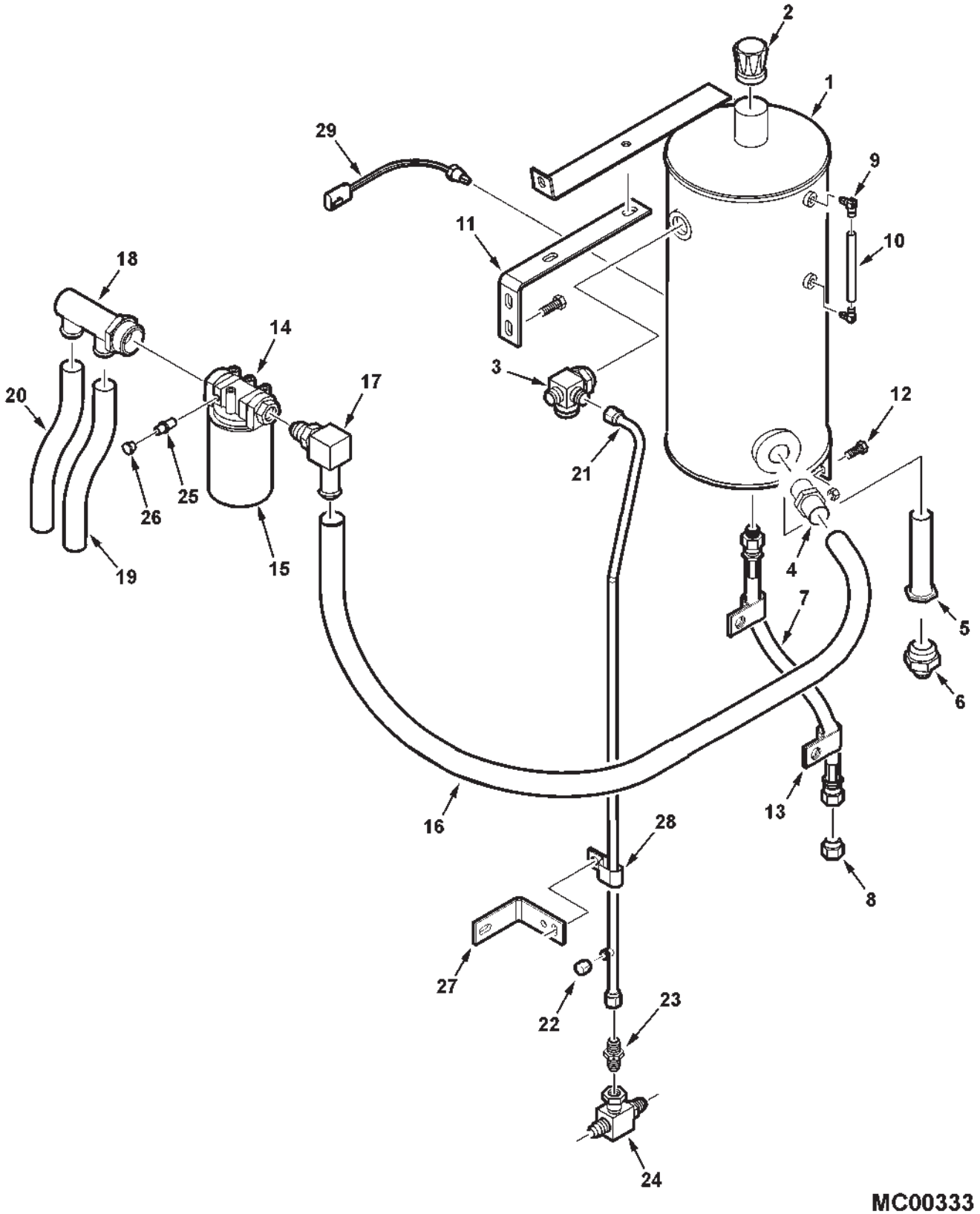

ITEM	NUMBER	QTY	DESCRIPTION
1	112932W91	1	RESERVOIR WLMT, HYD (PRIOR S/N HR87101)
	71410480	1	RESERVOIR WLMT, HYD (EFF. S/N HR87101)
2	112887W1	1	CAP, BREATHER
3	2629073W91	1	FITTING, MANIFOLD RETURN
	70921235	1	O-RING, .118 X 1.475 ID
4	70929257	1	CONNECTOR, 1-7/8-12 ORB X 1-1/2 TUBE
	70921887	1	O-RING, .118 X 1.720 ID
5	112858W91	1	STRAINER ASY.
	70921888	1	O-RING, .118 X 2.337 ID
6	112890W91	1	STR CONN, 1-7/8-12 ORB X 1-5/8-12 JIC
	70921887	1	O-RING, .118 X 1.720 ID
7	108541W1	1	HOSE ASY., OIL DRAIN
8	700712973	1	PLUG, 3/4-16 UNF, JIC
9	133828M91	2	ELBOW, 90 DEG. 3/8 NPTF X 1/2 TUBE
10	133827M1	1	TUBE, NYLON
11	71385998	1	SUPPORT, RESERVOIR (PRIOR S/N HR87101)
	70921210	4	CAPSCREW, 3/8-16 X 1.0
	70917378	2	WASHER, FLAT 3/8
	Y704734	4	NUT, HEX FLANGE TOP LOCK, 3/8-16
12	70921210	2	CAPSCREW, 3/8-16 X 1.0
	Y704734	2	NUT, HEX FLANGE TOP LOCK, 3/8-16
13	70927134	2	J-CLIP, 5/8 X .406 HOLE
	70921210	2	CAPSCREW, 3/8-16 X 1.0
	705038	2	LOCKWASHER, 3/8
	70916950	2	NUT, 3/8-16 REG
14	104308W1	1	HEAD, FILTER
	70921332	1	CAPSCREW, 5/16-18 X 3/4
	70921333	1	CAPSCREW, 5/16-18 X 1
	700709602	1	WASHER, 5/16 WIDE
	70917356	2	LOCKWASHER, 5/16
15	104309W91	1	ELEMENT, FILTER

CONTINUED

RESERVOIR & FILTER

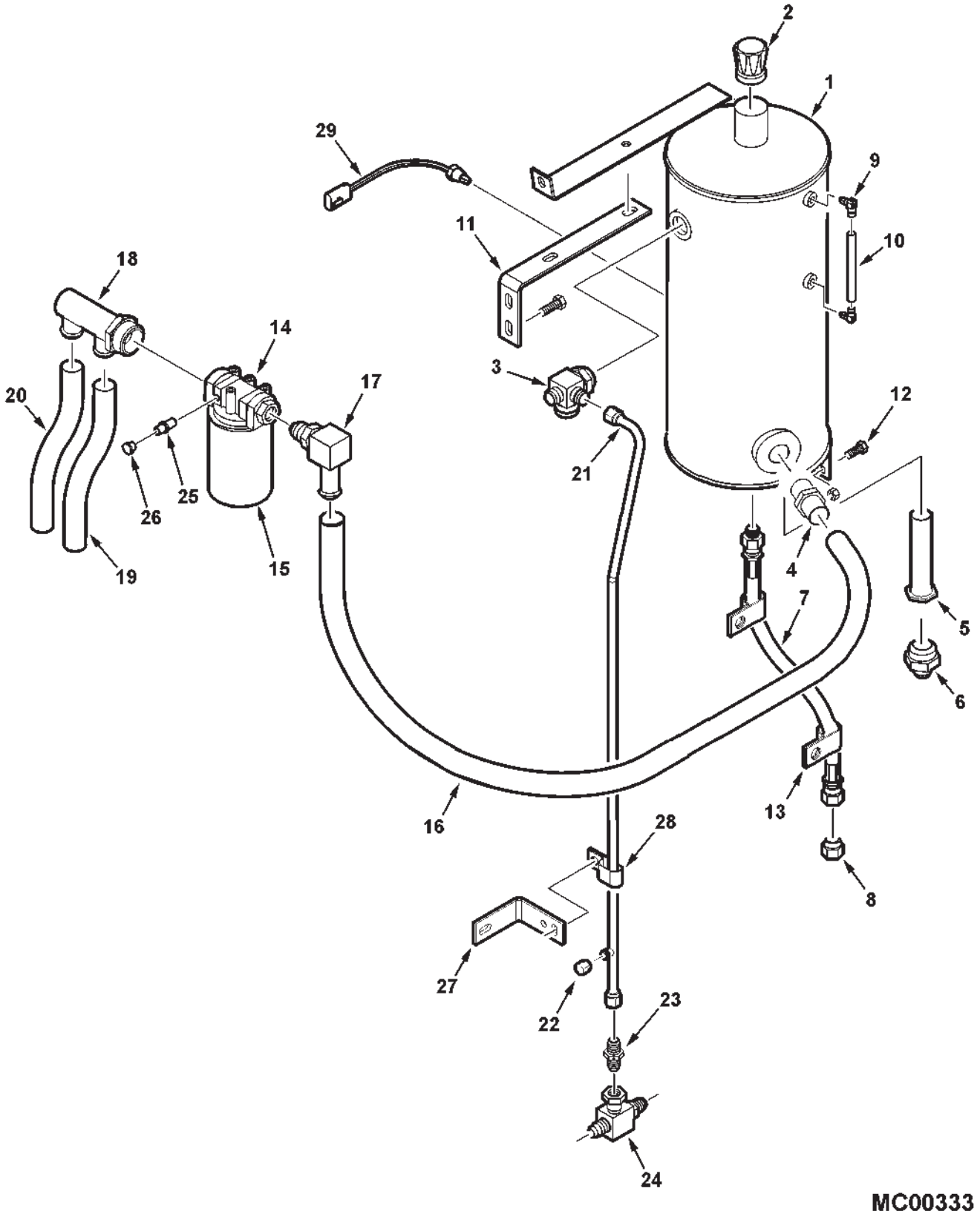

ITEM	NUMBER	QTY	DESCRIPTION
16	71392194	1	HOSE, 1-1/2 ID
	720656	2	CLAMP, HOSE, 1.31-2.25 RANGE
17	70930879	1	ELBOW,90 DEG, 1-7/8-12 ORB X 1-1/2 TUBE
	70921887	1	O-RING, .118 X 1.720 ID
18	104156W91	1	FITTING, MANIFOLD, 1-7/8-12 X 1-1/4 TUBE
	70921887	1	O-RING, .118 X 1.720 ID
19	2630210W2	1	HOSE, 1-1/4 ID, PROPEL SUCTION
	70921912	2	CLAMP, HOSE, 1.06-2.0 RANGE
	70925442	1	TIE, SELF LOCKING .184 X 14.19
20	112016W1	1	HOSE, 1-1/4 ID, ROTOR SUCTION
	70921912	2	CLAMP, HOSE, 1.06-2.0 RANGE
21	108247W1	1	TUBE ASY, BYPASS (PRIOR S/N HR87101)
	71391656	1	TUBE ASY, BYPASS (EFF. S/N HR87101)
22	70923737	1	CAP, 3/4-16 JIC
23	71388058	1	VALVE, BYPASS CHECK (PRIOR S/N HR87101)
	71391238	1	VALVE, BYPASS CHECK (EFF. S/N HR87101)
24	2629080W1	1	FITTING, SPECIAL 1-1/4 JIC
25	70919171	1	CONNECTOR, MALE, 1/8 NPTF X 7/16-20 JIC
26	700715848	2	CAP, 7/16-20 JIC
27	71388093	1	STRAP, SUPPORT
	70921210	1	CAPSCREW, 3/8-16 X 1.0
	70916950	1	NUT, 3/8-16 REG
	70917378	1	WASHER, 3/8 WIDE
28	70926049	1	CLAMP,3/4 X .406 HOLE(PRIOR S/N HR87101)
	WR519751	1	CLAMP,1-3/8 X .406 HOLE(EFF S/N HR87101)
	70921332	1	CAPSCREW, 5/16-18 X 3/4 LG
	70917642	1	WASHER, 5/16 WIDE
	70917356	1	LOCKWASHER, 5/16
	70917372	1	NUT, 5/16-18 REG
29	71391418	1	SENSOR, OIL LEVEL W/WIRES

MC00333
PR: 368

ROTOR PUMP AND MOTOR LINES

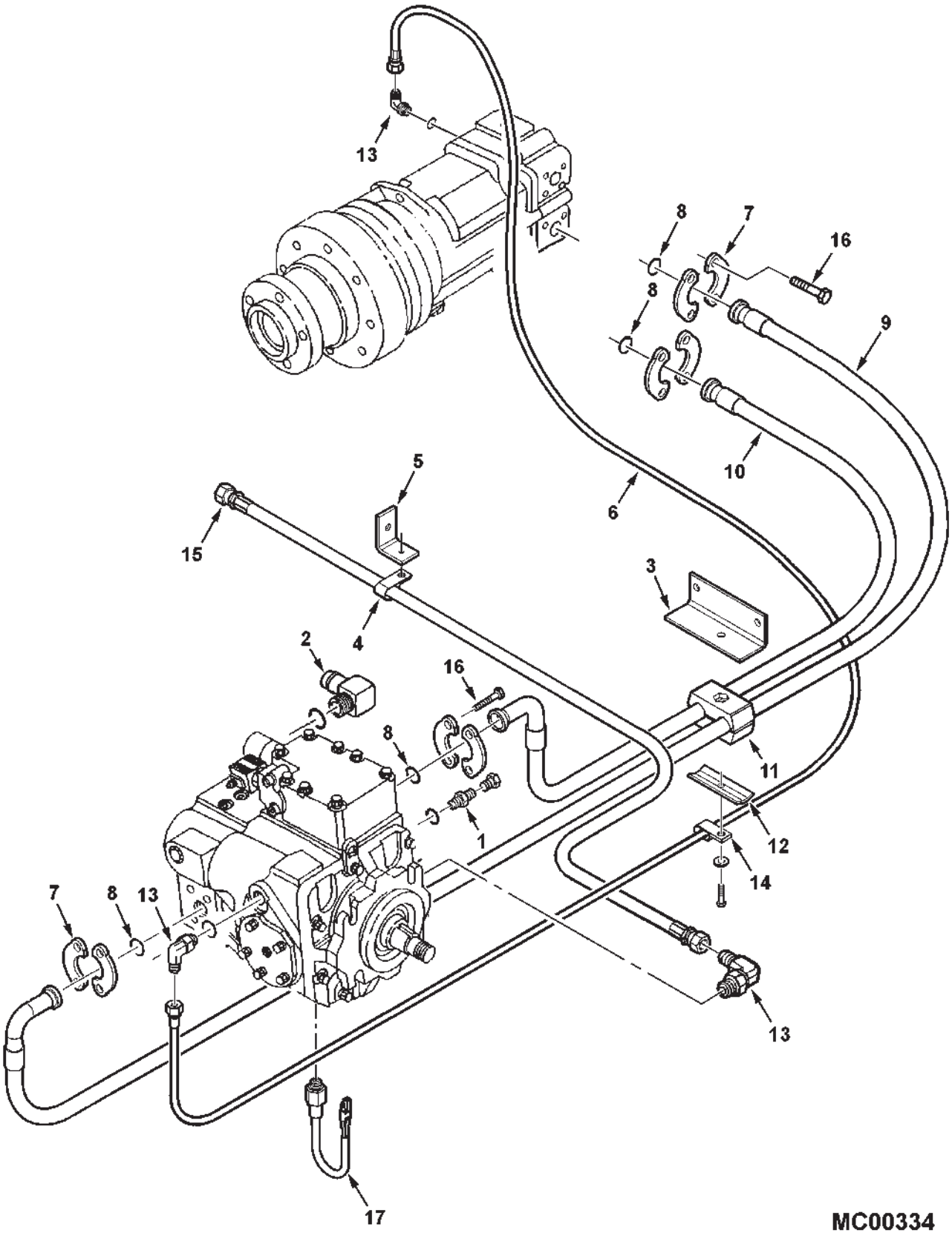

ROTOR PUMP AND MOTOR LINES

ITEM	NUMBER	QTY	DESCRIPTION
1	70926292	1	STR CONN, 7/16-20 JIC X 9/16-18 ORB
	70921885	1	O-RING, .078 X .468 ID
	70921467	1	CAP, 7/16-20 JIC
2	8046955	1	ELBOW, 90 DEG, 1-5/8-12 ORB X 1-1/4 STEM
	70921235	1	O-RING, .118 X 1.475 ID
3	2630960W1	1	ANGLE, SUPPORT
	70921966	2	CAPSCREW, 3/8-16 X 7/8
	70916965	2	LOCKWASHER, 3/8
	70916950	2	HEXNUT, 3/8-16
4	293888M1	1	J-CLIP, 1.0 X .344 HOLE
	7703457	1	CAPSCREW, 1/4-20 X 3/4 GR5
	704007	1	NUT, 1/4-20 REG
	705012	1	LOCKWASHER, 1/4
	70917377	1	WASHER, 1/4 WIDE
5	101618M1	1	ANGLE
6	71388839	1	HOSE ASY, CASE DRAIN
7	700701354	8	CLAMP, SPLIT FLANGE
8	70926533	4	O-RING, .139 X 1.296 ID, 90 DUR
9	103288M2	1	HOSE ASY, 1" X 100R15 X 87 LG
10	103287M2	1	HOSE ASY, 1" X 100R15 X 74 LG
11	101841M1	1	CLAMP PAIR, DOUBLE, 1-1/2 DIA
	70926106	1	CAPSCREW, 5/16 X 3-1/4
	70917356	1	LOCKWASHER, 5/16
	70917372	1	NUT, 5/16-18 REG
12	101842M1	1	COVER PLATE
13	70921203	3	ELBOW, 90 DEG, 1-1/16-12 ORB X JIC
	70921206	3	O-RING, .116 X .924 ID
14	70936778	1	J-CLIP, 3/4 X .406 HOLE
15	112020W1	1	HOSE ASY
16	70923027	16	CAPSCREW, 7/16-14 UNC X 1-3/4 GR5
17	71389746	1	SWITCH, ROTOR PRESSURE
	70921885	1	O-RING, .078 X .468 ID

MC00334
PR: 370

PROPEL PUMP AND MOTOR LINES

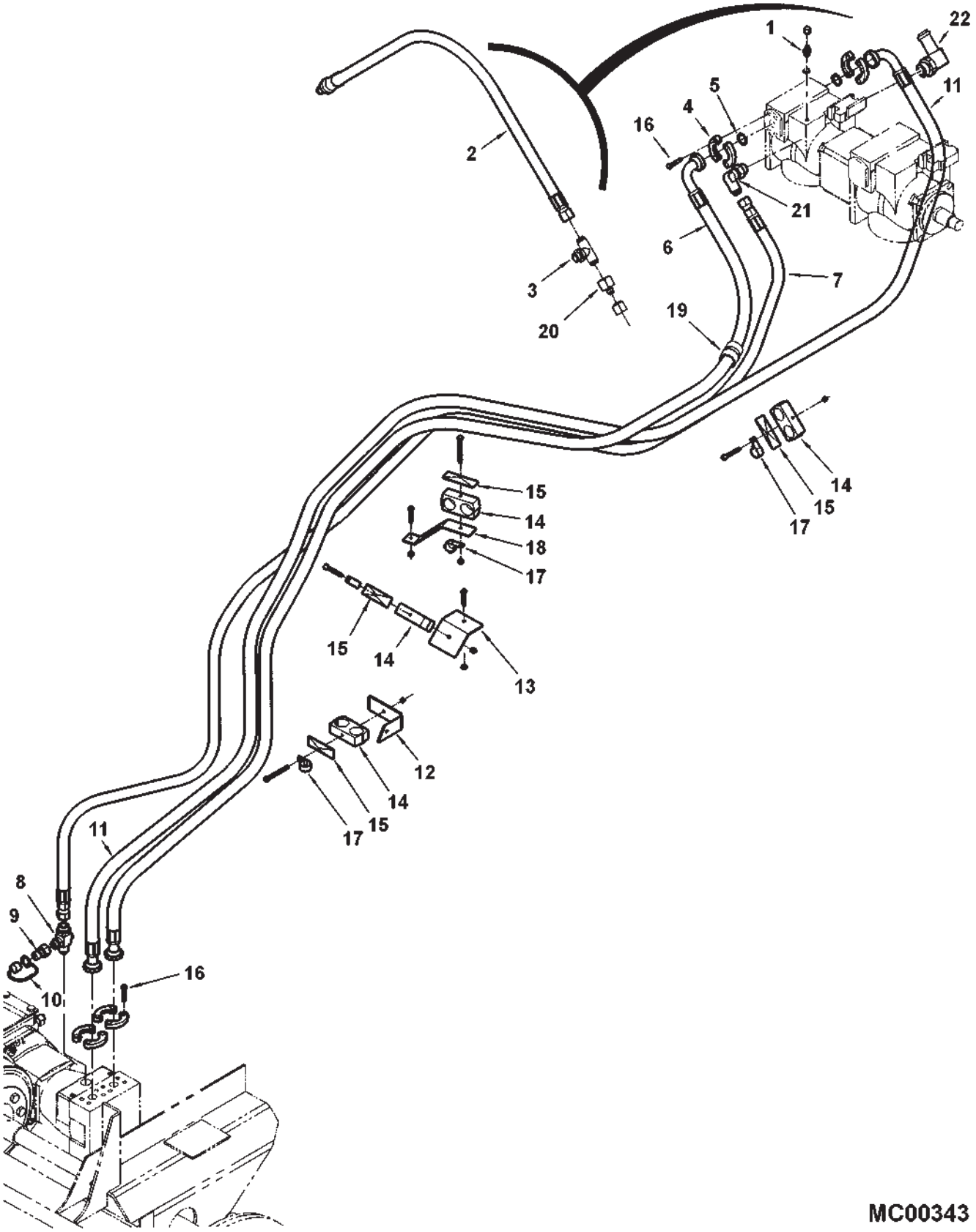

PROPEL PUMP AND MOTOR LINES

ITEM	NUMBER	QTY	DESCRIPTION
1	70926292	1	CONN, STR, 7/16-20 JIC X 9/16-18 ORB
	70921885	1	O-RING, .078 X .468 ID
	70921467	1	CAP, 7/16-20 JIC
2	112019W1	1	HOSE ASY, PUMP DRAIN
3	70921318	1	TEE, ORB BRANCH, 1-1/16-12 JIC
	70921206	1	O-RING, .116 X .924 ID
4	700701354	8	CLAMP HALF, SPLIT FLANGE, 1"
5	70926533	4	O-RING, .139 X 1.296 ID, 90 DUR
6	71388092	1	HOSE ASY, 1" X 100R15 X 184" LG
7	71388060	1	HOSE ASY, CASE DRAIN, .75 ID X 181"
8	71391657	1	FITTING, CROSS
	70921205	1	O-RING, .097 X .755 ID
	70921206	1	O-RING, .116 X .924 ID
9	71377941	1	COUPLER, MALE
10	3304008M1	1	CAP, DUST
11	71388059	1	HOSE ASY, 1" X 100R15 X 196" LG
12	101844M1	1	BRACKET, HOSE SUPPORT
	70921333	1	CAPSCREW, 5/16-18 X 1
	70917356	1	LOCKWASHER, 5/16
	70917372	1	NUT, 5/16-18 REG
13	101843M1	1	BRACKET, HOSE SUPPORT
	70921333	1	CAPSCREW, 5/16-18 X 1
	70917356	1	LOCKWASHER, 5/16
	70917372	1	NUT, 5/16-18 REG
14	101841M1	4	CLAMP PAIR, DOUBLE, 1-1/2 DIA
	70926106	4	CAPSCREW, 5/16 X 3-1/4
	70917356	4	LOCKWASHER, 5/16
	70917372	4	NUT, 5/16-18 REG
15	101842M1	4	COVER PLATE
16	70923027	16	CAPSCREW, 7/16-14 UNC X 1-3/4 GR5
17	293888M1	4	J-CLIP, 1.0 X .344 HOLE
18	71377939	1	STRAP, SUPPORT
19	116159W1	1	SPLIT SLEEVE
	70925442	1	NYLON TIE
20	70925852	1	REDUCING ADPTR, 1-1/16-12 X 9/16-18 JIC
	70919197	1	NUT, 1-1/16-12, 37 DEG FLARE
21	70921203	1	ELBOW, 90 DEG, 1-1/16-12 ORB X JIC
	70921206	1	O-RING, .116 X .924 ID
22	70931240	1	ELBOW,90 DEG, 1-5/16-12 ORB X 1-1/4 STEM
	70921214	1	O-RING, .116 X 1.171 ID

MC00343
PR: 372

GREASE LINES

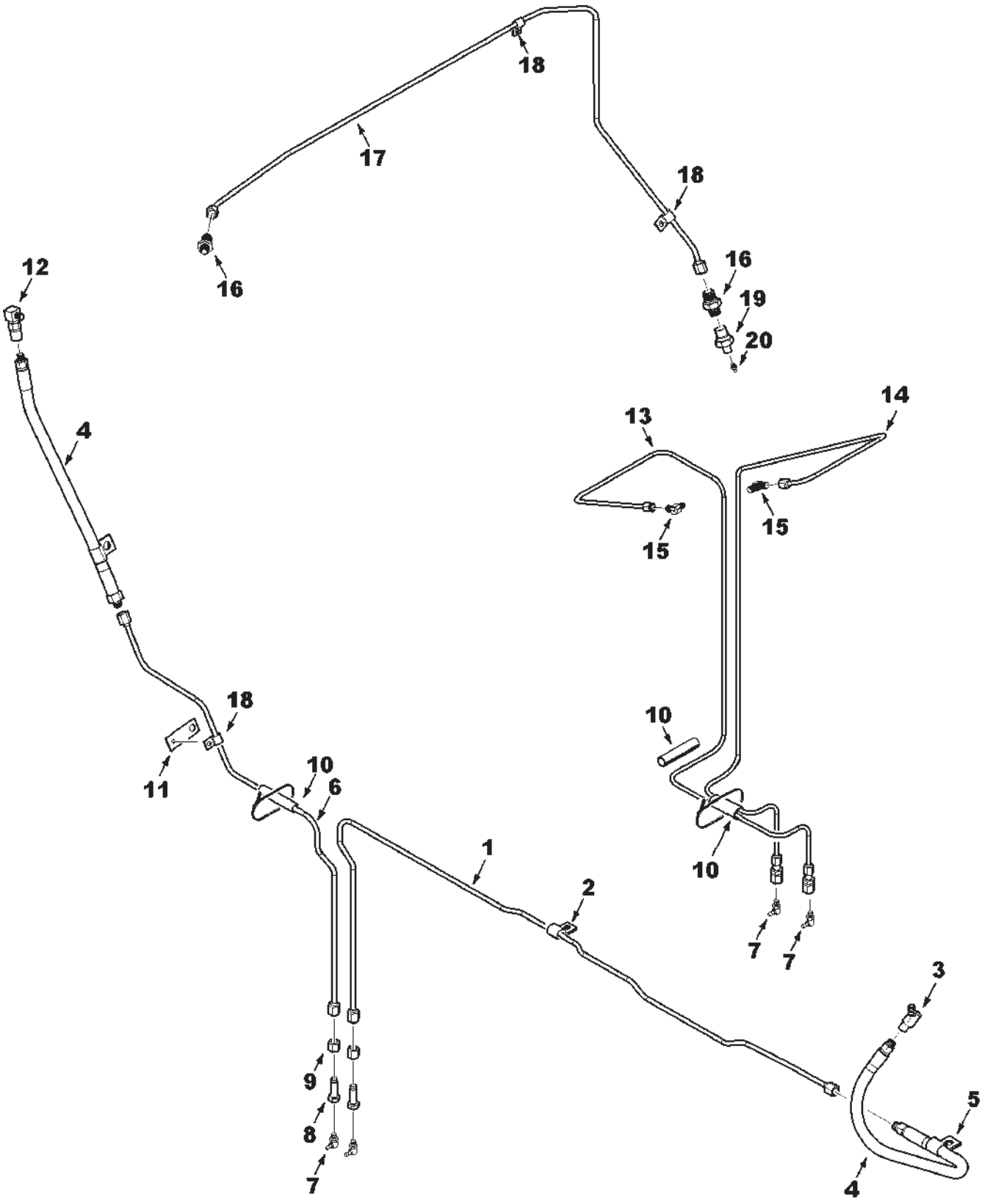

MC00339

GREASE LINES

ITEM	NUMBER	QTY	DESCRIPTION
1	71390866	1	TUBE ASY, ROTOR DRIVE IDLER
2	70928654	1	CLAMP, 1/4 TUBE X .406 HOLE
3	70920655	1	ELBOW, 45 DEG, 1/8 NPTF M X 1/8 NTPF FEM
4	71390863	2	HOSE ASY, LUBE
5	70928656	2	CLAMP, 5/8 TUBE X .406 HOLE
	70921965	1	CAPSCREW, 3/8-16 X 3/4
	Y704734	1	NUT, HEX FLNG TOP LOCK, 3/8-16
6	71392766	1	TUBE ASY, C'SHAFT DRIVE IDLER
7	70915276	4	LUBE FITTING, 90 DEG, 1/8 NPTF
8	940134W1	4	BLKHD CONN, 7/16-20 JIC M X 1/8 NPT FEM
9	356612X1	4	NUT, LARGE HEX, 7/16-20
10	2556880W1	3	BOOT, TUBE PROTECTOR
	70925442	3	TIE, SELF LOCKING .184 X 14.19
11	71390867	1	SUPPORT, TUBE CLAMP
12	70923690	1	ELBOW, 90 DEG. 1/8-27 NPTF MALE X FEM
13	71386353	1	TUBE ASY, BEATER IDLER
14	71398337	1	TUBE ASY, UNLOADER IDLER
15	70919173	2	ELBOW, 90 DEG, 1/8-27 NPTF X 7/16-20 JIC
16	70919171	2	STR CONN, 1/8-27 NPTF X 7/16-20 JIC
17	71389751	1	TUBE ASY, FRONT ROTOR(PRIOR S/N HP87101)
	71400654	1	TUBE ASY, FRONT ROTOR (EFF. S/N HP87101)
18	70926919	3	CLAMP, 1/4 TUBE X .281 HOLE (PRIOR S/N HP87101)
	7703457	3	CAPSCREW, 1/4-20 X 3/4
	704007	3	NUT, 1/4-20
	705012	3	LOCKWASHER, 1/4
	70928654	1	CLAMP, 1/4 TUBE X .406 HOLE (EFF. S/N HP87101)
	70921210	1	CAPSCREW, 3/8-16 X 1 GR5
	70917378	2	WASHER, 3/8 WIDE
	705038	1	LOCKWASHER, 3/8
	70916950	1	NUT, 3/8-16 REG
19	70922862	1	COUPLING, FEM, 1/8-27 NPTF
20	70914465	1	LUBE FITTING, 1/8-27 NPT, SPL XTRA SHORT

MC00339
PR: 374

HYDROSTATIC TANDEM PUMPS

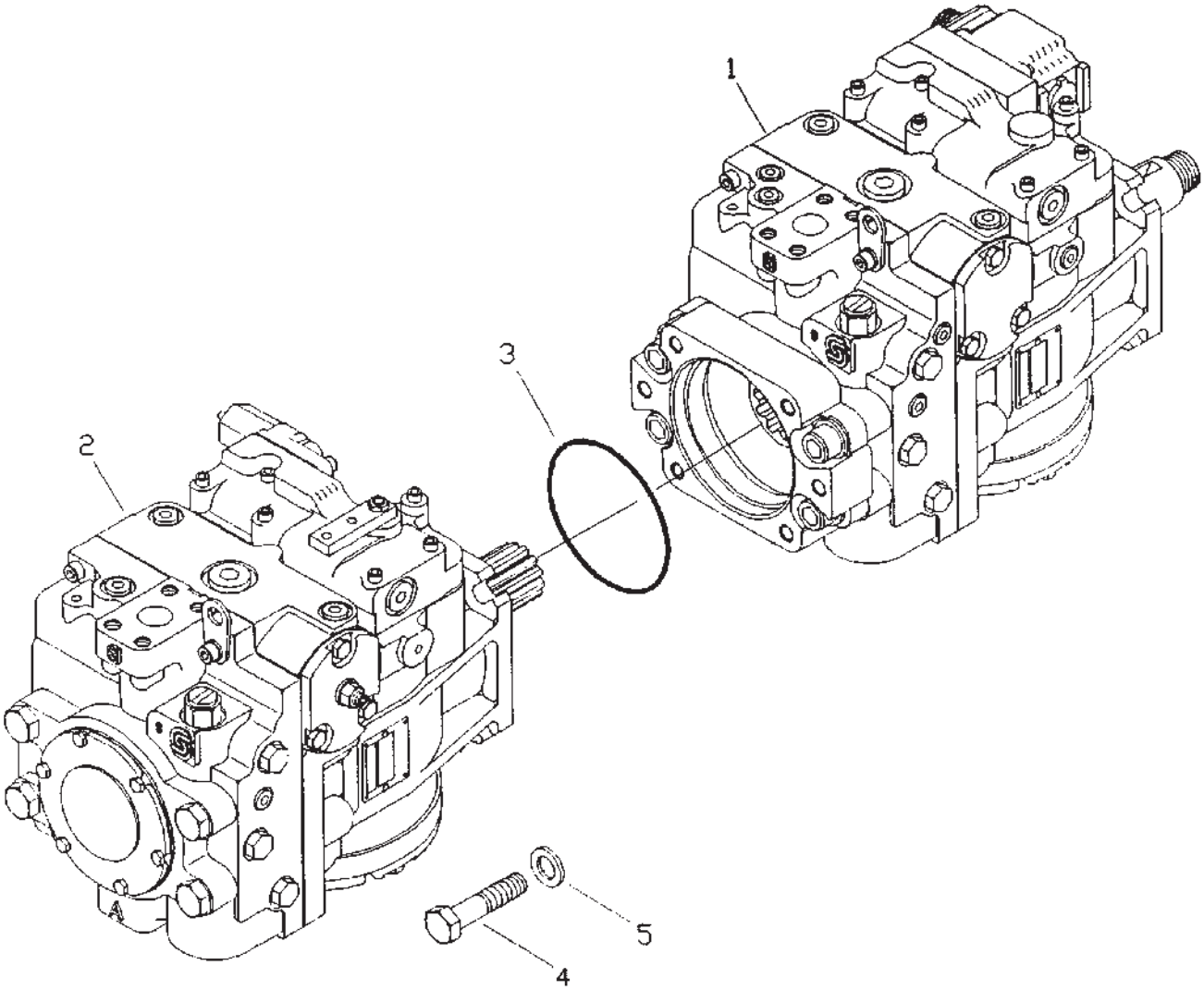

MC00052

ITEM	NUMBER	QTY	DESCRIPTION
-	71389518	1	PUMP, TANDEM (100CC & 75CC DISPL.)
1	71386574	1	PUMP, ROTOR, (100CC DISPL.)
2	71389750	1	PUMP, PROPEL (75CC DISPL.)
3	1081727M1	1	O-RING
4	116281W1	4	SCREW
5	116282W1	4	WASHER

MC00052
PR: 376

PROPEL PUMP
COMPONENTS, 1 OF 4

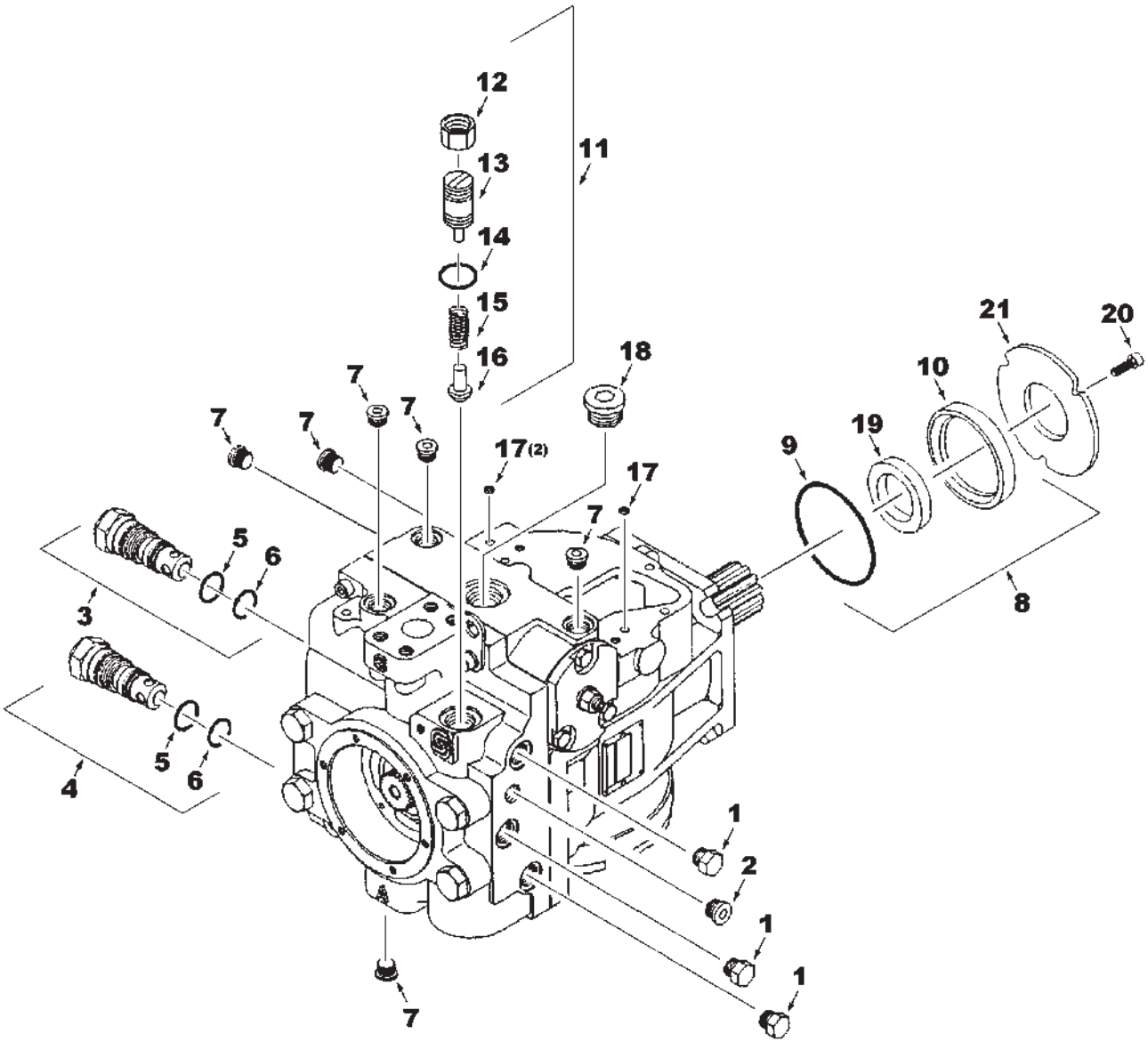

MC00053

PROPEL PUMP
COMPONENTS, 1 OF 4

ITEM	NUMBER	QTY	DESCRIPTION
1	71374831	3	PLUG
2	70928605	1	PLUG
3	1081707M91	1	MULTI-FUNCTION VALVE KIT
4	1081707M91	1	MULTI-FUNCTION VALVE KIT
5	70923808	1	O-RING
6	70930897	1	O-RING
7	1077604M1	1	PLUG
8	1081693M91	1	SHAFT SEAL ASSEMBLY
9	1081696M1	1	O-RING
10	1081694M1	1	SEAL CARRIER
11	71374918	1	CHARGE RELIEF VALVE KIT
12	1077651M1	1	NUT
13	1077631M91	1	CHARGE RELIEF VALVE PLUG
14	1077648M1	1	O-RING
15	71374859	1	SPRING
16	71374886	1	CHARGE RELIEF POPPET
17	71355339	3	CONTROL FILTER SCREEN
18	1077605M1	1	PLUG
19	1081695M1	1	LIP SEAL
20	71374840	3	METRIC SCREW
21	1081697M1	1	RETAINING PLATE

MC00053
PR: 378

PROPEL PUMP
COMPONENTS, 2 OF 4

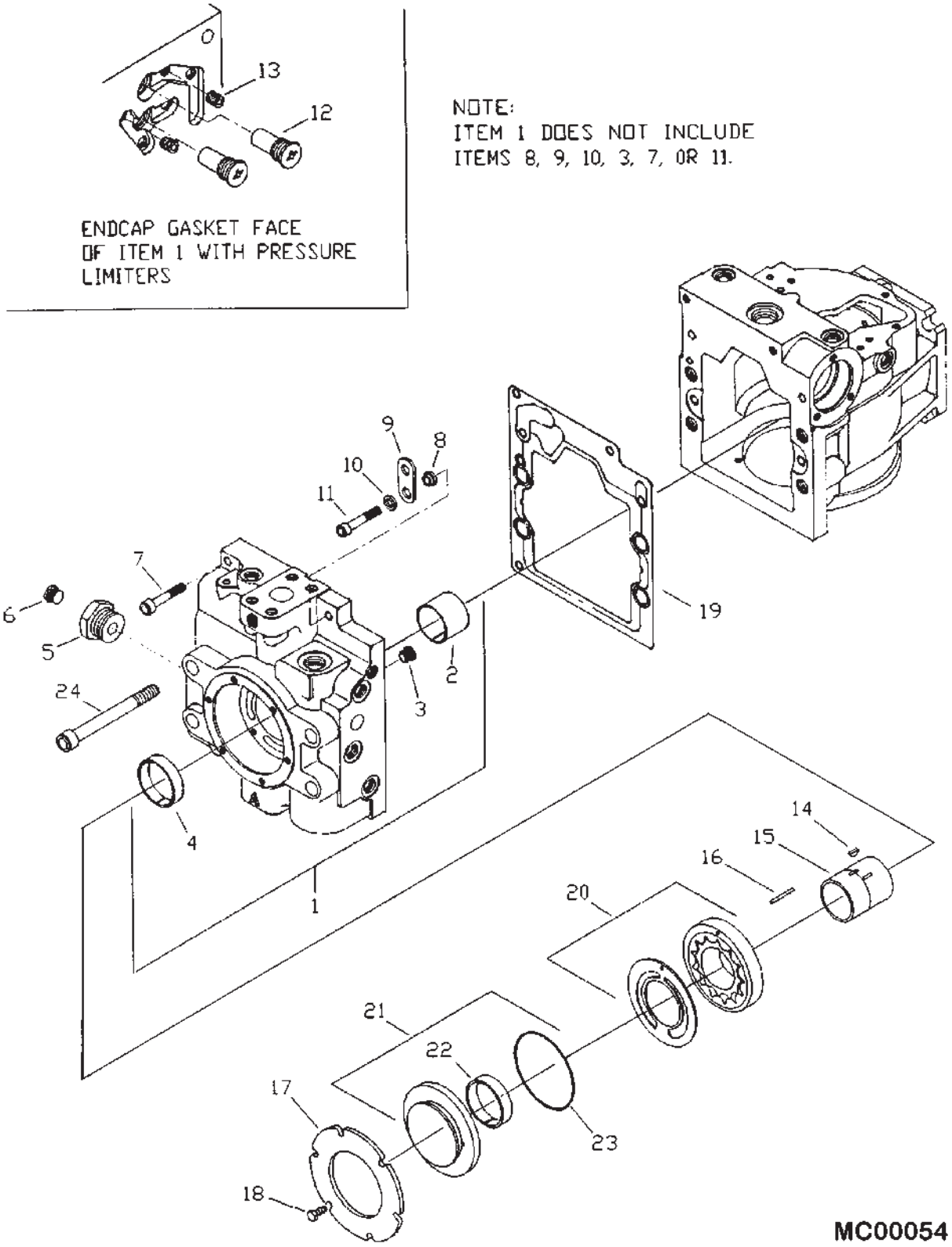

PROPEL PUMP
COMPONENTS, 2 OF 4

ITEM	NUMBER	QTY	DESCRIPTION
1	1081685M91	1	END CAP ASSEMBLY, SIDE PORTS
2	1081686M1	1	JOURNAL BEARING
3	70928605	1	PLUG
4	71374894	1	BUSHING
5	1081706M1	1	REDUCER
6	1077604M1	1	PLUG
7	71374900	1	SCREW
8	71374895	1	LIFTING BRACKET SPACER
9	71374896	1	LIFTING BRACKET
10	71374897	1	WASHER
11	71374900	1	SCREW
12	71374870	2	CHECK VALVE
13	1077684M1	2	PLUG
14	1077656M1	1	KEY
15	71374852	1	CHARGE PUMP SHAFT
16	1081689M1	1	PIN
17	71374853	1	RETAINING PLATE
18	1077658M1	6	SCREW
19	1081687M1	1	END CAP GASKET
20	1081688M91	1	CHARGE PUMP SET
21	71374895	1	CHARGE PUMP COVER ASSEMBLY
22	71374894	1	BUSHING
23	1077661M1	1	O-RING
24	1081690M1	4	SCREW

MC00054
PR: 380

PROPEL PUMP
COMPONENTS, 3 OF 4

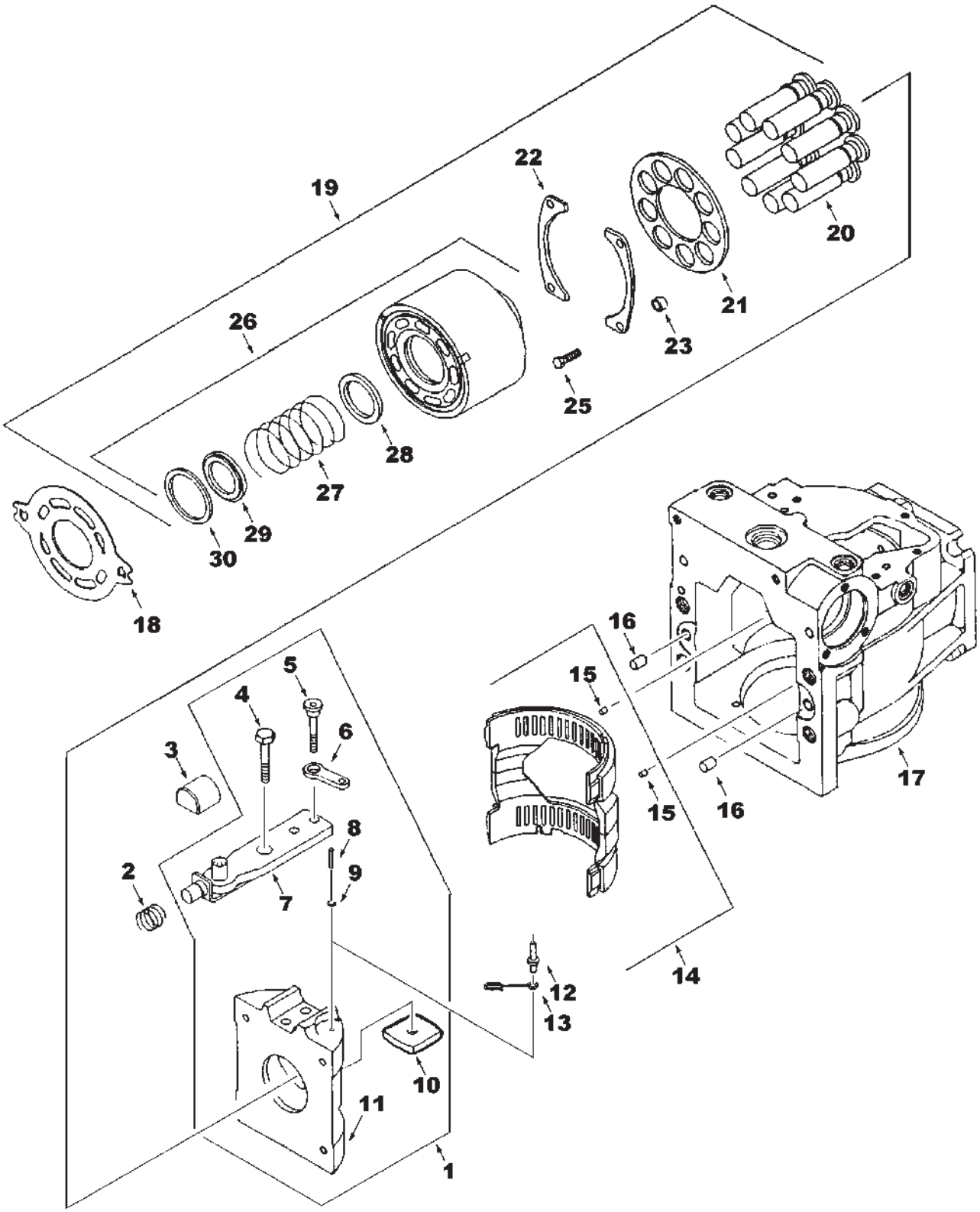

MC00055

PROPEL PUMP
COMPONENTS, 3 OF 4

ITEM	NUMBER	QTY	DESCRIPTION
1	1081667M91	1	VARIABLE SWASHPLATE ASSEMBLY
2	1081674M1	1	SPRING
3	1081684M1	1	SLIDER BLOCK
4	1081670M1	1	SCREW
5	1081671M1	1	SCREW
6	1081672M1	1	FEEDBACK LINK
7	1081668M91	1	SERVO ARM ASSEMBLY
8	71374884	1	SPIRAL PIN
9	71374883	1	WASHER
10	71374881	1	SWASHPLATE GUIDE
11	1081669M1	1	VARIABLE SWASHPLATE
12	71374885	1	PIN
13	1081673M1	1	CAGE LOCATOR LINK
14	1081656M1	1	BEARING
15	1077602M1	2	PIN
16	71355340	2	PIN
17	1081655M1	1	VARIABLE HOUSING
18	1081666M1	1	VALVE PLATE
19	1081712M91	1	CYLINDER BLOCK KIT
20	1081662M91	9	WELDED PISTON ASSEMBLY
21	1081663M1	1	SLIPPER GUIDE
22	1081664M1	2	SLIPPER GUIDE BEARING
23	1081665M1	4	SPACER
24	1077615M1	4	WASHER
25	1077616M1	4	SCREW
26	1081657M91	1	CYLINDER BLOCK ASSEMBLY
27	1081658M1	1	SPRING
28	1081659M1	1	SPRING SEAT
29	1081660M1	1	SPRING RETAINER
30	1081661M1	1	RETAINING RING

MC00055
PR: 382

PROPEL PUMP
COMPONENTS, 4 OF 4

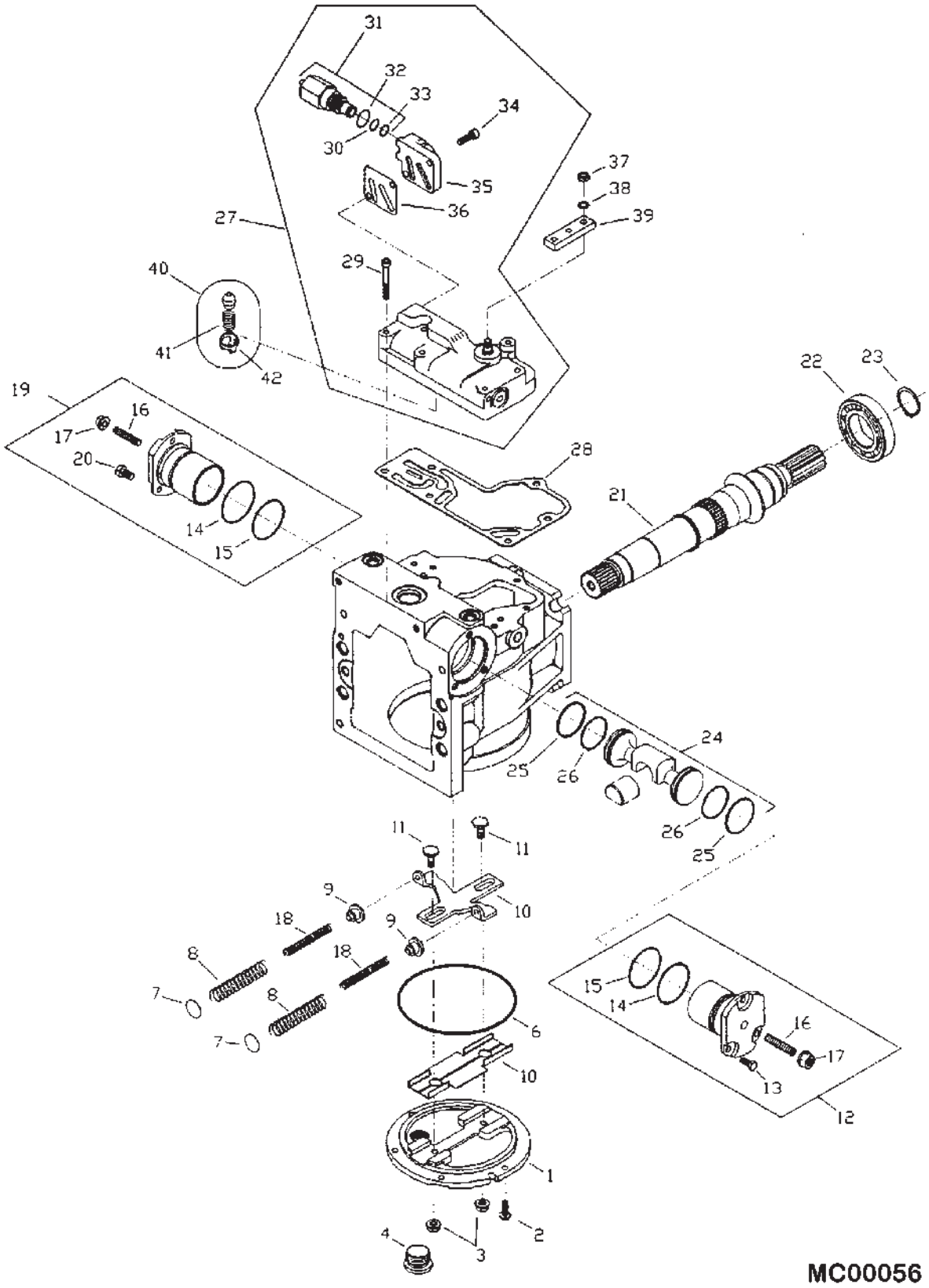

PROPEL PUMP
COMPONENTS, 4 OF 4

ITEM	NUMBER	QTY	DESCRIPTION
1	1081675M1	1	SIDE COVER
2	71374890	6	SCREW
3	1077627M1	2	NUT
4	1077605M1	1	PLUG
5	1081683M91	1	SIDE COVER INSERT ASSEMBLY (NOT ILLUS.)
6	1081680M1	1	O-RING
7	1081678M1	2	SHIM
8	1081681M1	2	HELICAL COMPRESSION SPRING
9	1081677M1	2	SPRING SEAT
10	1081676M1	1	LEVELER ASSEMBLY
11	71374961	2	GUIDE POST
12	1081708M91	1	SERVO CYLINDER KIT
13	1077638M1	3	SCREW
14	1081709M1	1	O-RING
15	1081710M1	1	O-RING
16	1081711M1	1	SET SCREW
17	1077627M1	1	NUT, M8
18	1081682M1	2	HELICAL COMPRESSION SPRING
19	1081708M91	1	SERVO CYLINDER KIT
20	1077638M1	3	SCREW
21	1081691M1	1	SHAFT, 14 TOOTH SPLINE
22	1081692M1	1	ROLLER BEARING
23	71355384	1	RETAINING RING
24	1081713M91	1	SERVO PISTON KIT
25	1081715M1	2	PISTON RING
26	1081714M1	2	O-RING
27	71374863	1	MDC KIT, W/O NEUTRAL START (DOES NOT INCLUDE ITEMS 30-36)
28	1081699M1	1	CONTROL GASKET
29	1077673M1	6	SCREW
30	1081702M1	1	O-RING
31	1081700M1	1	SHUNT VALVE
32	AG133717	1	O-RING
33	1081701M1	1	BACK UP RING
34	1081705M1	2	SCREW
35	1081703M1	1	MANIFOLD
36	1081704M1	1	GASKET
37	71374867	1	NUT
38	71374866	1	TOOTHLOCK WASHER
39	71374865	1	CONTROL SHAFT HANDLE
40	71374907	1	CONTROL ORIFICE KIT .032
41	71374908	1	SPRING
42	71374909	1	SPRING RETAINER

MC00056
PR: 384

ROTOR PUMP
COMPONENTS, 1 OF 4

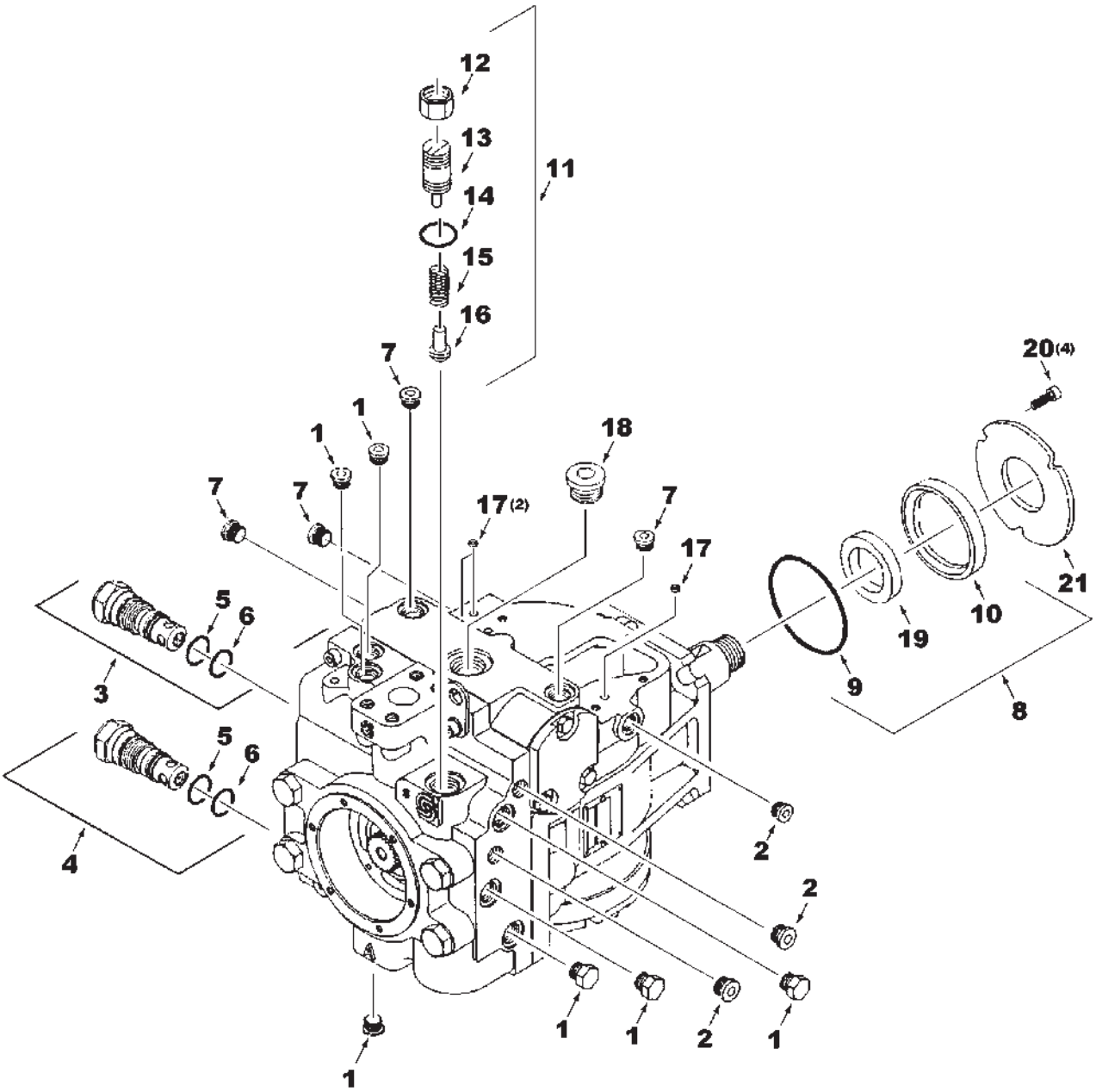

MC00057

ROTOR PUMP
COMPONENTS, 1 OF 4

ITEM	NUMBER	QTY	DESCRIPTION
-	71386574	--	PUMP, ROTOR (100CC DISPL.)
1	71374831	6	PLUG
2	70928605	3	PLUG
3	1081707M91	1	MULTI-FUNCTION VALVE KIT
4	1081707M91	1	MULTI-FUNCTION VALVE KIT
5	70923808	2	O-RING
6	70930897	2	O-RING
7	1077604M1	4	PLUG
8	71374967	1	SHAFT SEAL ASSEMBLY
9	942253	1	O-RING
10	-----	1	CARRIER, SEAL (ORDER SEAL ASY, IT.8)
11	71374918	1	KIT, CHARGE RELIEF VALVE (INCL IT.12-16)
12	1077651M1	1	NUT
13	1077631M91	1	CHARGE RELIEF VALVE PLUG
14	70928486	1	O-RING, VITON, .097 X .755 ID
15	71374859	1	SPRING
16	71374836	1	CHARGE RELIEF POPPET
17	71355339	3	CONTROL FILTER SCREEN
18	1077605M1	1	PLUG
19	1077666M1	1	LIP SEAL
20	71374840	4	SCREW, SOCKET HD, M6
21	1081733M1	1	RETAINING PLATE

MC00057
PR: 386

ROTOR PUMP
COMPONENTS, 2 OF 4

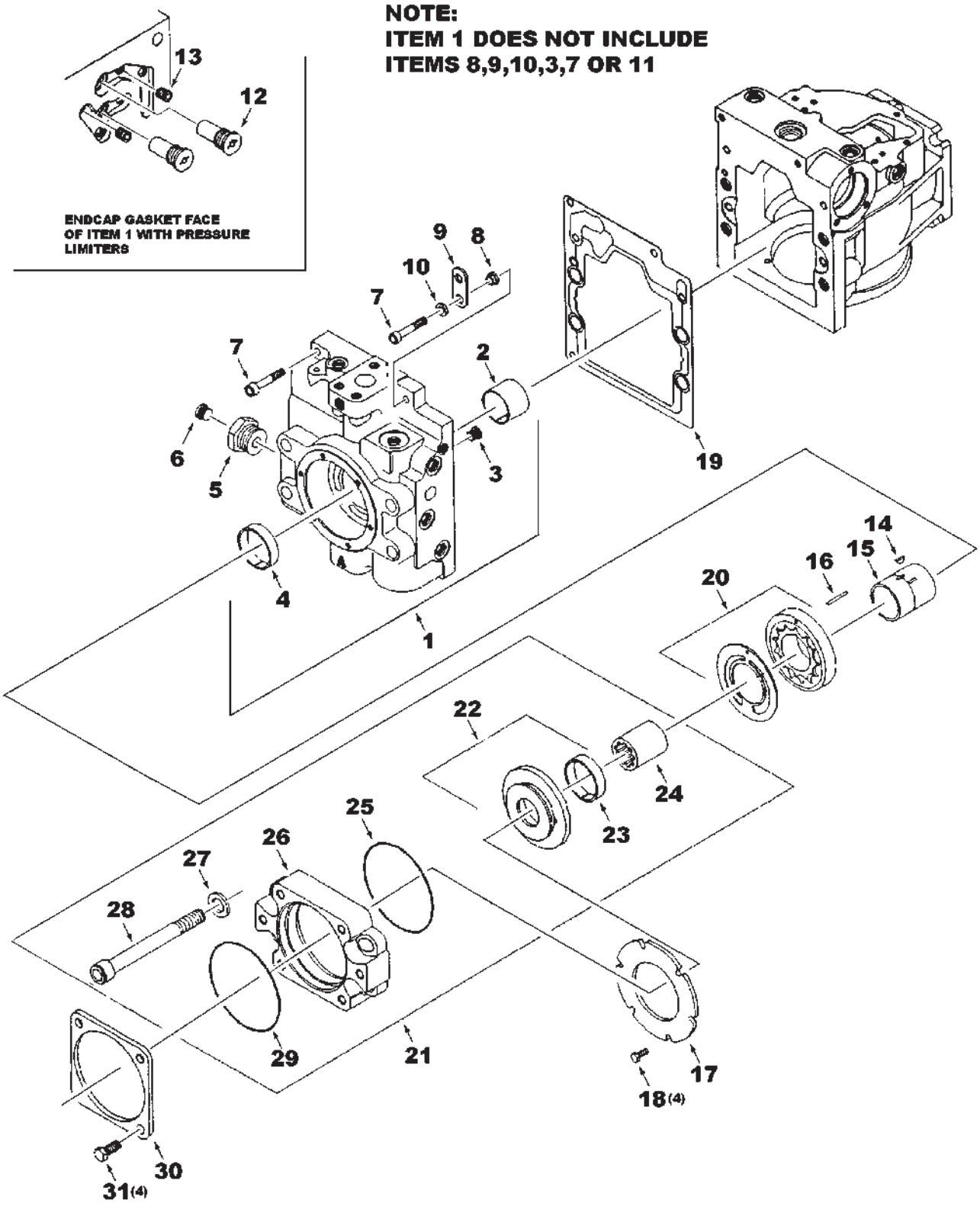

MC00058

ROTOR PUMP
COMPONENTS, 2 OF 4

ITEM	NUMBER	QTY	DESCRIPTION
1	1077639M92	1	END CAP ASSEMBLY, SIDE PORTS
2	71374834	1	JOURNAL BEARING
3	70928605	1	PLUG
4	71374894	1	BUSHING
5	1081706M1	1	PLUG
6	1077604M1	1	PLUG
7	71374900	1	SCREW
8	71374895	1	LIFTING BRACKET SPACER
9	71374896	1	LIFTING BRACKET
10	71374897	1	WASHER
11	71374900	1	SCREW
12	71374870	2	PLUG
13	1077684M1	2	PLUG
14	1077656M1	1	KEY
15	71374852	1	CHARGE PUMP SHAFT
16	1077654M1	1	PIN
17	71374853	1	RETAINING PLATE
18	1077658M1	6	SCREW
19	71374898	1	END CAP GASKET
20	1081720M91	1	CHARGE PUMP STE
21	1081721M1	1	AUX. MOUNTING FLANGE, 'C' 14T
22	1081723M1	1	CHARGE PUMP COVER ASSEMBLY, LH
23	71374894	1	BUSHING
24	1081722M1	1	COUPLING
25	70926762	1	O-RING
26	1081724M1	1	FLANGE ADAPTOR
27	1081725M1	4	WASHER
28	1081726	4	SOCKET HEAD SCREW
29	1081727M1	1	O-RING
30	1081728M1	1	FLANGE COVER
31	1081729M1	4	SCREW

MC00058
PR: 388

ROTOR PUMP
COMPONENTS, 3 OF 4

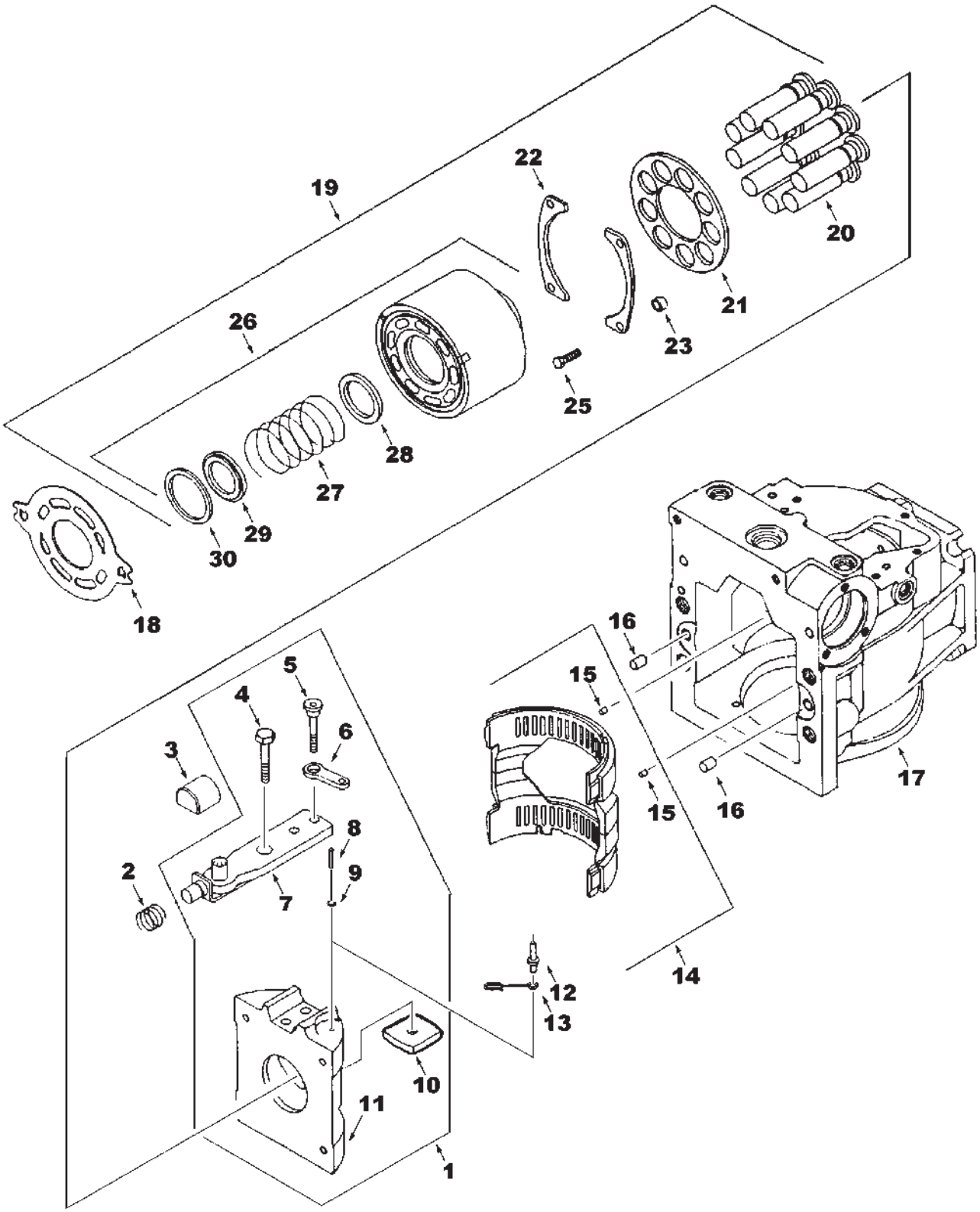

MC00055

ROTOR PUMP
COMPONENTS, 3 OF 4

ITEM	NUMBER	QTY	DESCRIPTION
1	71374876	1	VARIABLE SWASHPLATE ASSEMBLY
2	71374886	1	SPRING
3	1077635M2	1	SLIDER BLOCK
4	71374880	1	SCREW
5	71374882	1	SCREW
6	1081718M1	1	FEEDBACK LINK
7	71374877	1	SERVO ARM ASSEMBLY
8	71374884	1	SPIRAL PIN
9	71374883	1	WASHER
10	71374881	1	SWASHPLATE GUIDE
11	71374879	1	VARIABLE SWASHPLATE
12	71374835	1	PIN
13	71374875	1	CAGE LOCATOR LINK
14	71374340	1	BEARING
15	1077602M1	2	PIN
16	71355340	2	PIN
17	71374958	1	VARIABLE HOUSING
18	71374959	1	VALVE PLATE, 0.5 DEG.
19	1081712M91	1	CYLINDER BLOCK KIT
20	71374846	9	WELDED PISTON ASSEMBLY
21	71374847	1	SLIPPER GUIDE
22	71374904	2	SLIPPER GUIDE BEARING
23	71374905	4	SPACER
24	1077615M1	4	WASHER
25	1077616M1	4	SCREW
26	71374842	1	CYLINDER BLOCK ASSEMBLY
27	71374844	1	SPRING
28	71374843	1	SPRING SEAT
29	71374845	1	SPRING RETAINER
30	1077611M1	1	RETAINING RING

MC00055
PR: 390

ROTOR PUMP
COMPONENTS, 4 OF 4

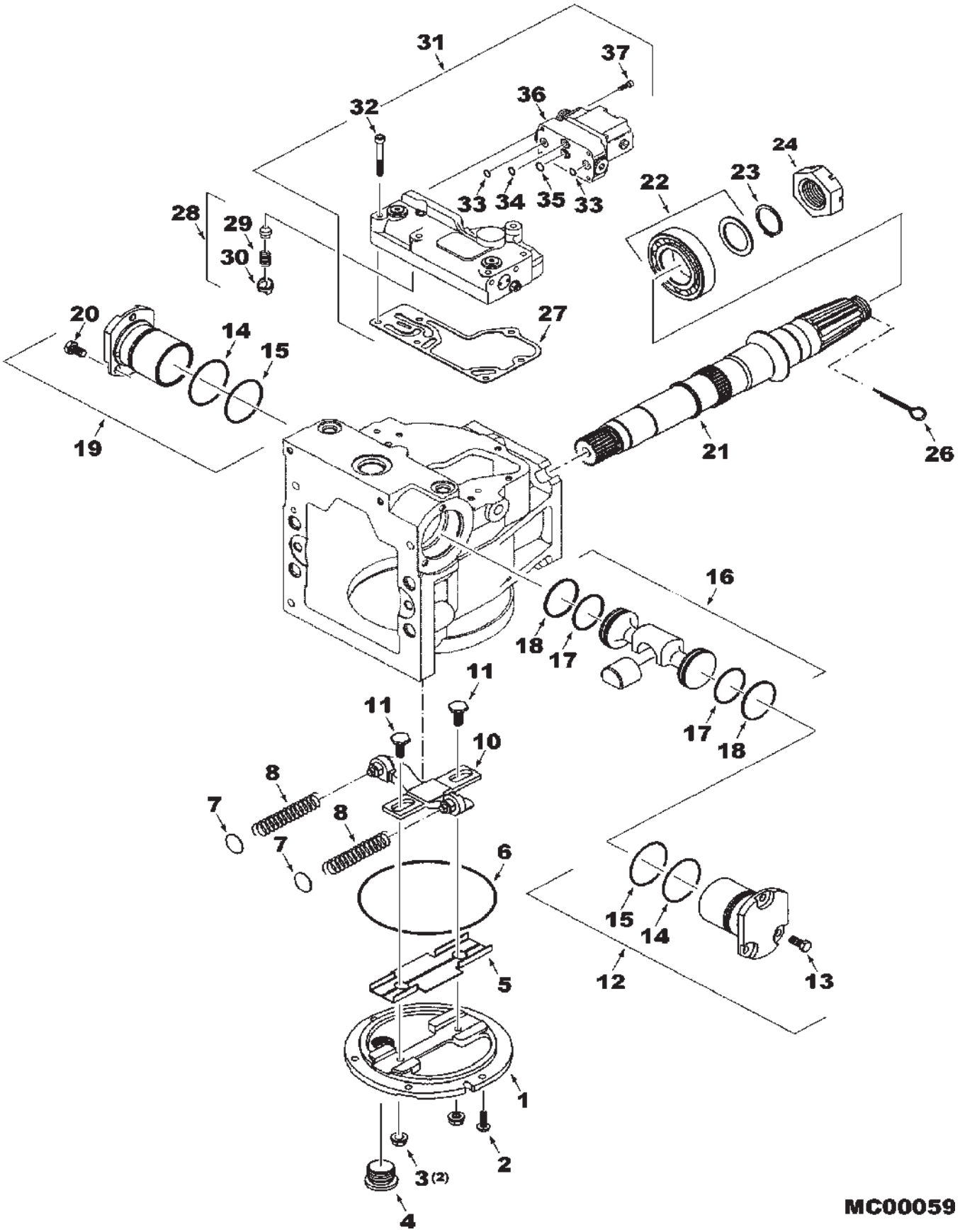

ROTOR PUMP
COMPONENTS, 4 OF 4

ITEM	NUMBER	QTY	DESCRIPTION
1	71374960	1	SIDE COVER
2	71374890	6	SCREW
3	1077627M1	2	NUT
4	1077605M1	1	PLUG
5	71374962	1	SIDE COVER INSERT ASSEMBLY
6	1077628M1	1	O-RING
7	1077685M1	2	SHIM
8	71374891	2	HELICAL COMPRESSION SPRING
9	1077624M1	2	SPRING SEAT
10	71374888	1	LEVELER ASSEMBLY
11	71374961	2	GUIDE POST
12	71374901	1	SERVO CYLINDER KIT
13	1077638M1	3	SCREW
14	1077636M1	1	O-RING
15	1077637M1	1	O-RING
16	1081737M91	1	SERVO PISTON KIT
17	1077633M1	2	O-RING
18	71358545	2	PISTON RING
19	71374901	1	SERVO CYLINDER KIT
20	1077638M1	3	SCREW
21	71374860	1	SHAFT, TAPERED SPLINE
22	71374952	1	ROLLER BEARING
23	1077664M1	1	RETAINING RING
24	71160379	1	SLOTTED NUT
26	1081731M1	1	COTTER PIN
27	1081699M1	1	CONTROL GASKET
28	837853M91	1	CONTROL ORIFICE KIT .026
29	71374908	1	SPRING
30	71374909	1	SPRING RETAINER
31	1081734M91	1	EDC
32	1077673M1	6	SCREW
33	1077675M1	2	O-RING
34	1077676M1	1	O-RING
35	1077677M1	1	O-RING
36	1081735M91	1	PCP
37	1077678M1	4	SCREW

MC00059
PR: 392

MOTOR, HYDRO PROPEL & ROTOR
COMPONENTS

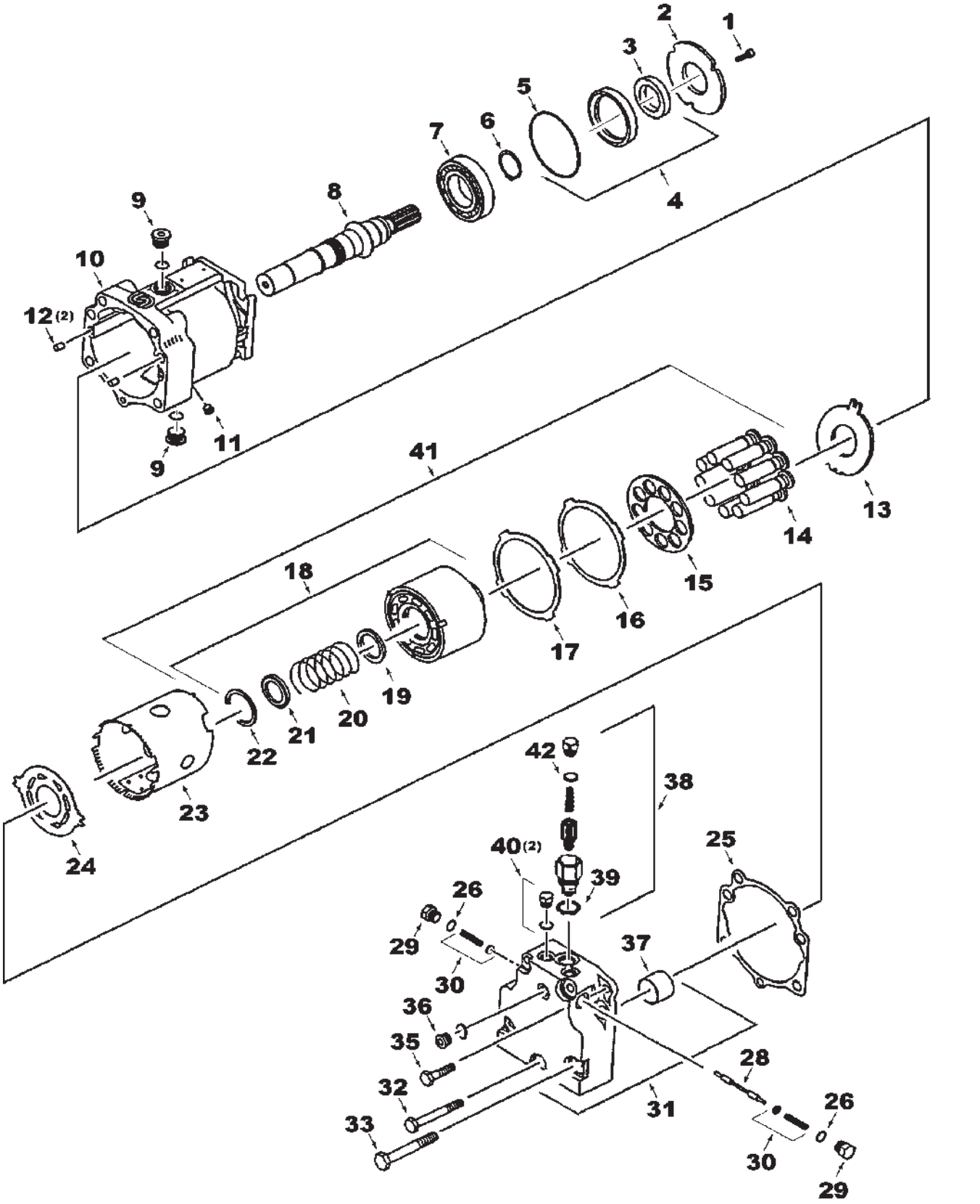

ITEM	NUMBER	QTY	DESCRIPTION
-	71392870	1	MOTOR, FIXED DISPL, 100cc
-	71374968	AR	OVERHAUL SEAL KIT (INCL ITEMS 3,5,25,39)
1	71374840	4	SCREW, SOCKET HEAD, M6 X 20
2	71397487	1	PLATE, RETAINER
3	1077666M1	1	SEAL
4	71374967	1	CARRIER & SEAL ASY.(INCL. ITEMS 3 & 5)
5	942253	1	O-RING
6	1077664M1	1	RING
7	71396137	1	BEARING, ROLLER
8	71397486	1	SHAFT, 23T
9	1077605M1	2	PLUG
	70935175	2	O-RING, .116 X .924 ID, VITON
10	71397478	1	HOUSING, FIXED
11	700725864	1	PLUG
	70928488	1	O-RING, .078 X .468 ID, VITON
12	71355340	2	PIN
13	71374970	1	PLATE, THRUST
14	71374846	9	PISTON, WELDED
15	71374847	1	RETAINER, SLIPPER
16	71374848	1	RETAINER, SLIPPER GUIDE
17	71374849	1	RETAINER, SLIPPER GUIDE SHIM
18	71374842	1	CYLINDER BLOCK ASY. (INCL ITEMS 19-22)
19	71374843	1	SEAT, SPRING
20	71374844	1	SPRING
21	71374845	1	RETAINER, SPRING
22	1077611M1	1	RING, RETAINING
23	71374827	1	TUBE, HOLDDOWN
24	71374828	1	PLATE, VALVE
25	71397481	1	GASKET, END CAP
26	70928488	2	O-RING, .078 X .468 ID, VITON
28	1077960M1	1	SPOOL, SHUTTLE
29	71397485	2	PLUG, SPECIAL
30	71397484	2	SPRING GUIDE ASY
31	71397480	1	END CAP ASY., TWIN PORTS
32	71397483	1	SCREW
33	1077695M1	4	SCREW
35	1077696M1	2	SCREW
36	700725864	1	PLUG
	71397482	1	O-RING
37	71374834	1	BEARING, JOURNAL
38	71396169	1	CARTRIDGE ASY, CHARGE RELIEF
39	70928486	1	O-RING, VITON, .097 X .755 ID
40	71374831	2	PLUG
	71397482	1	O-RING
41	71374841	1	KIT, CYLINDER BLOCK, W/PISTONS (INCL. ITEMS 14-18)
42	70928488	1	O-RING, .078 X .468 ID, VITON

GC00377
PR: 394

FINAL DRIVE
S39

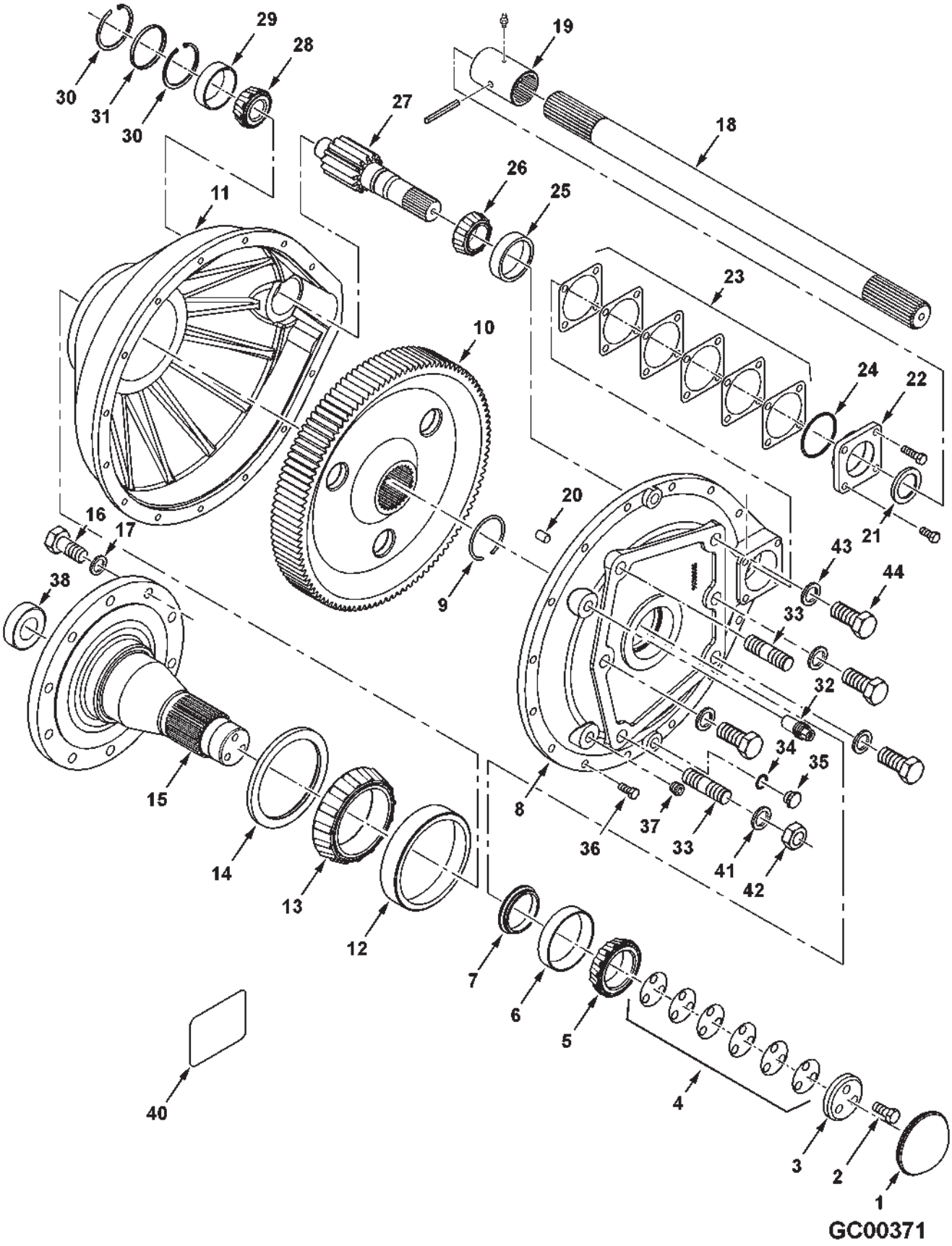

ITEM	NUMBER	QTY	DESCRIPTION
-	71408701	2	FINAL DRIVE ASY. S39 (INCL. 1 PINT OIL)
1	71304261	2	CAP, BEARING
2	70950388	6	CAPSCREW, M16-2.0 X 40; C10.9, PHOS.
3	71391572	2	WASHER - AXLE (HARDENED)
4	71304262	2	SHIM, .005
	71304263	2	SHIM, .007
	71304264	2	SHIM, .010
5	70930884	2	CONE, BEARING
6	70930883	2	CUP, BEARING
7	71304266	2	SPACER, AXLE
8	-----	2	HOUSING, INNER (PRIOR S/N HR87101) (ORDER HOUSING ASY ITEM 11)
	79021649	AR	SILMATE, RTV, (13 OZ. TUBE)
9	71304267	2	RING, SNAP, ROUND
10	71389647	2	GEAR, FINAL DRIVE
11	-----	2	HOUSING, OUTER (PRIOR S/N HR87101)
	71406280	2	HOUSING ASY, S39H (EFF. S/N HR87101) (INCL. ITEMS 8, 20, 36)
12	7713860	2	CUP, BEARING
13	71314481	2	CONE, BEARING
14	7744477	2	SEAL, OIL
15	71327595	2	AXLE
16	70925806	20	CAPSCREW 7/8-9 NC X 3 GR8
17	705665	20	WASHER, HARD .94 ID X 1.75 OD
18	71309514	1	SHAFT, DRIVE, LH
	71309515	1	SHAFT, DRIVE, RH
19	71310379	4	COUPLING (2 REQD W/AXLE RISERS)
	71395825	2	COUPLING, OUTER, (W/AXLE RISERS)
	13811X	4	LUBE FTG, STR, 1/4-28 TAPER THD
	Y763318	4	PIN, SPIROL (2 REQD W/AXLE RISERS)
	70925459	2	PIN, SPIROL (W/AXLE RISERS)
	70923219	4	ZERK, GREASE
	-----	4	WIRE, LOCK (CAN USE 70910815; CUT TO LENGTH)

CONTINUED

FINAL DRIVE
S39

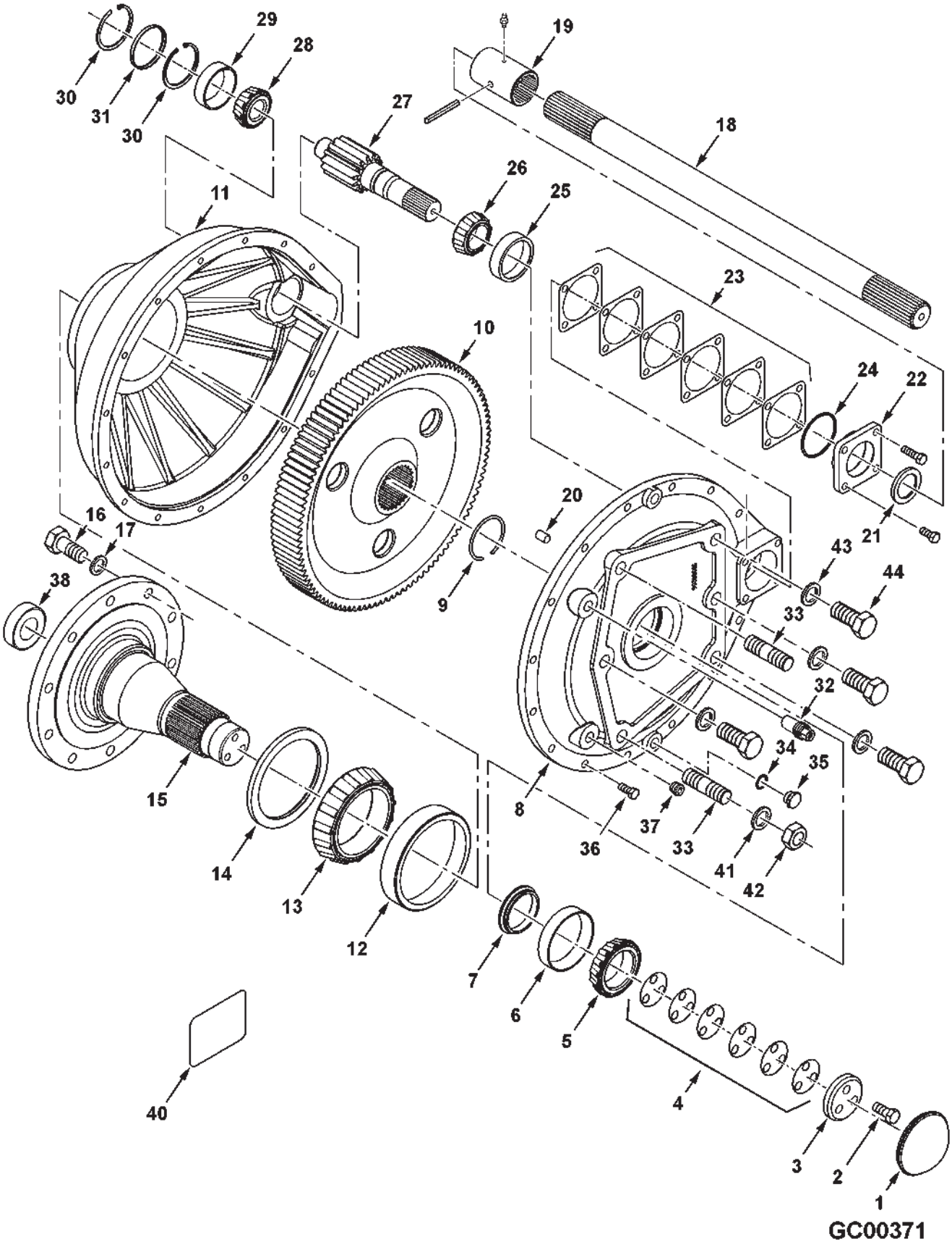

ITEM	NUMBER	QTY	DESCRIPTION
20	70926551	6	PIN, DOWEL, 1/2 X 1
21	700717365	2	SEAL, OIL
22	71304292	2	RETAINER, BEARING
	70950377	4	CAPSCREW M12-1.75 X 30 LG C10.9
	70950417	4	CAPSCREW M12-1.75 X 80 LG C10.9
23	71166170	4	SHIM, .005
	71166171	4	SHIM, .007
	71166172	4	SHIM, .010
24	70923816	2	O-RING, .139 X 3.23 ID
25	71162782	2	CUP, BEARING
26	71162781	2	CONE, BEARING
27	71389619	2	PINION, FINAL DRIVE, 14T
28	70210011	2	CONE, BEARING
29	70210012	2	CUP, BEARING
30	Y52894	4	RING, RETAINING, INT.
31	71304271	2	PLUG, HOLE
32	71340437	2	VENT ASY, W/ FILTER
33	71311456	4	STUD, 1-1/8-7
34	71183757	4	GASKET, PLUG
35	71369299	4	PLUG, MAGNETIC DRAIN
36	5000017X1	28	CAPSCREW, M14-2.0 X 40, C10.9, BLK PHOS.
37	3008469	2	PLUG, PIPE, 3/4 NPTF
38	71370926	20	SPACER, WHEEL BOLT .91 ID X 2.0 X 1.0
40	71348455	2	DECAL - TORQUE, 600 FT.LB.
41	71339238	4	WASHER, SPECIAL
42	7704778	4	NUT, 1-1/8-7 REG. GR5
43	70933817	8	CAPSCREW, 1-1/8-7 X 2-1/2 GR 8
44	71339238	8	WASHER, SPECIAL
-	79021676	AR	LOCTITE, PRIMER N (6 OZ)
-	79021669	AR	LOCTITE, THREADLOCKER (10 ML)

GC00371
PR: 396

FINAL DRIVE
4" AXLE RISERS

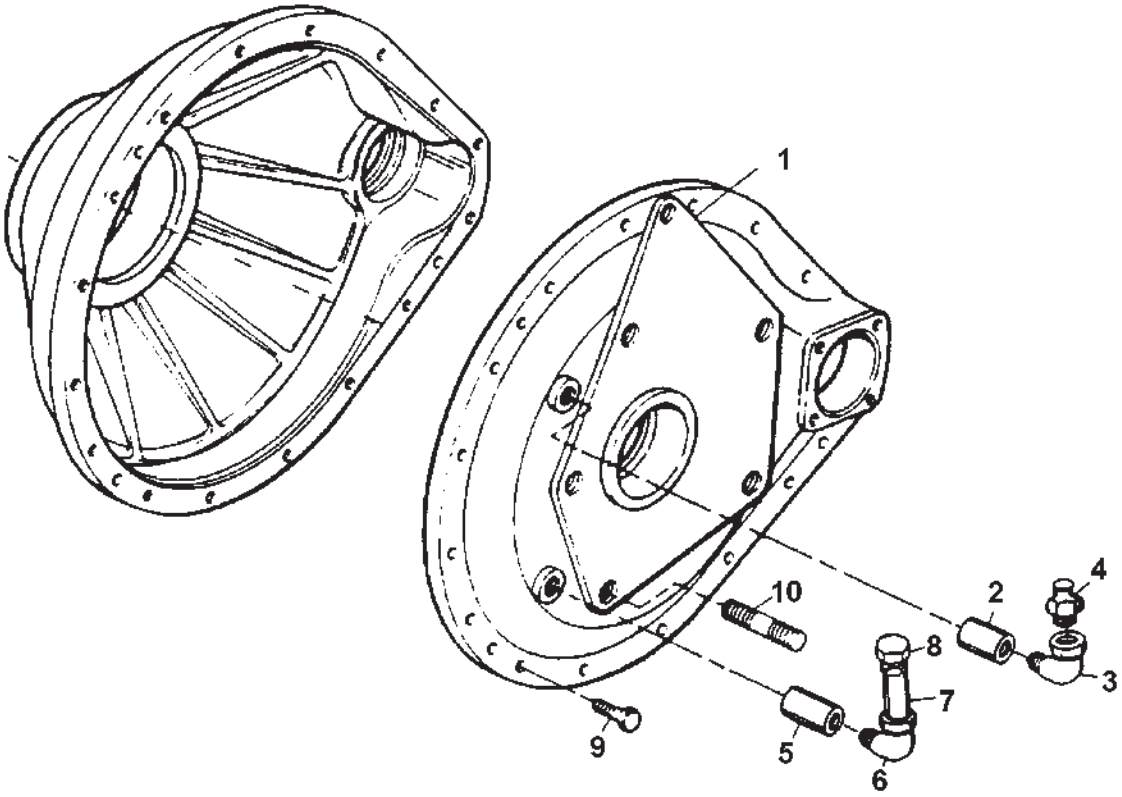

GC00160

FINAL DRIVE
4" AXLE RISERS

ITEM	NUMBER	QTY	DESCRIPTION
1	71375751	1	RISER,FINAL DRIVE, LH
	71375752	1	RISER,FINAL DRIVE, RH
	71369307	2	BREATHER PLUG
2	70912094	2	BUSHING, PIPE 3/4 X 1/8
3	70923690	2	ELBOW, 90 D, STREET 1/8
4	7751605	2	VENT, BREATHER
5	70901840	2	BUSHING, PIPE 3/4 X 1/4
6	70921419	2	ELBOW, 90 D, STREET 1/4
7	70901480	2	NIPPLE, PIPE 1/4 X 2" LG
8	71312323	2	CAP, 1/4 NPT
9	70933817	12	CAPSCREW, 1-1/8-7 X 2-1/2 GR8
10	71311456	4	STUD, 1.125-7
-	79021676	AR	LOCTITE, PRIMER N (6 OZ)
-	79021669	AR	LOCTITE, THREADLOCKER (10 ML)
-	71400006	--	KIT, 4" AXLE RISER (ORDER THRU DEALER CENTRAL)

GC00160
PR: 400

TRANSMISSION, GEAR
PRESSURE LUBE & HYDRO MOTOR

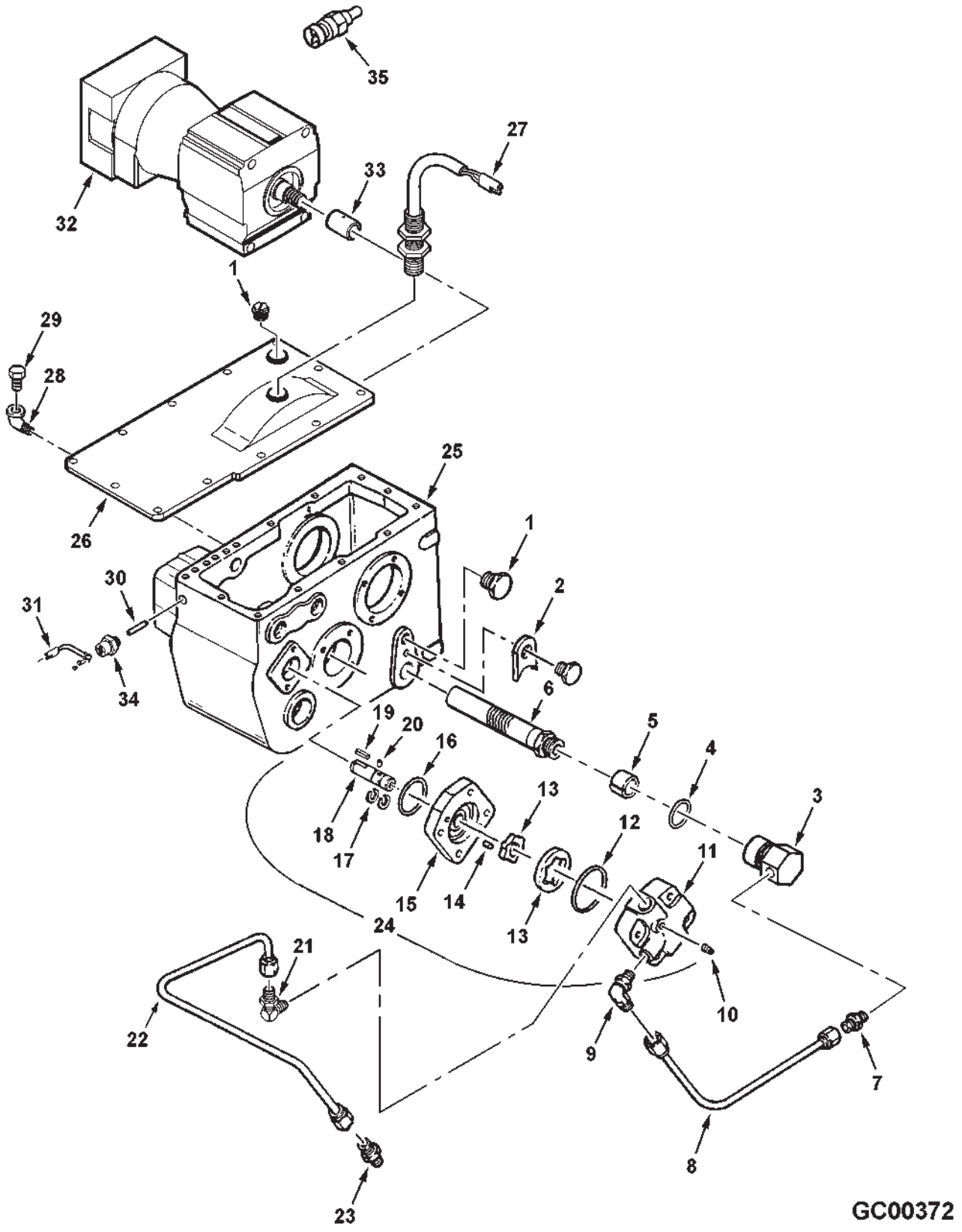

TRANSMISSION, GEAR
PRESSURE LUBE & HYDRO MOTOR

ITEM	NUMBER	QTY	DESCRIPTION
-	71377420	--	TRANS. ASY (W/O BRAKES. W/BUILT-IN MOTOR ADAPTER)(SERVICE W/ 71406300)
-	71398354	--	TRANS. ASY (W/O BRAKES)(EFF S/N HM87101 MID-YEAR)(SERVICE W/ 71406300)
-	71406300	--	TRANS. ASY (W/O BRAKES)(EFF S/N HP87101)
	7701659	2	CAPSCREW, 5/8-11 X 2-1/2 GR5
	7701683	2	CAPSCREW, 5/8-11 X 3 GR5
	70924272	4	WASHER, .656 X 1 X 12 GA.
1	70225441	2	PLUG, OIL LEVEL
	70226012	2	GASKET
2	71183535	1	RETAINER, FILTER
	7884570	1	CAPSCREW, M12-1.75 X 20
	700708343	1	LOCKWASHER, M12
3	71183746	1	MANIFOLD, LUBE SCREEN
4	70925919	1	O-RING, VITON, .139 X 1.484 ID, 75 DUR.
5	71183828	1	MAGNET, PARTICAL
6	71183747	1	SCREEN ASY.
7	846337	1	CONNECTOR, STR, 3/4-16 JIC X ORB
	70921349	1	O-RING, .087 X .644 ID
8	71183750	1	TUBE ASY., FILTER TO PUMP
9	70935781	1	ELBOW, 90 DEG, 3/4-16 JIC X ORB
	70921349	1	O-RING, .087 X .644 ID
10	70901651	1	PLUG, PIPE
11	71184147	1	HOUSING, PUMP
12	70924186	1	O-RING, 75 DURO, .070 X 2.61 ID, UDN -38
13	71335782	1	GEROTOR, INNER & OUTER
14	Y730804	2	PIN, DOWEL,1/4 X 1/2
15	71184148	1	COVER, REAR
16	70930911	1	O-RING, 75 DURO .103 X 2.30 ID, UDN -141
17	1026105M1	2	RING, RETAINING
18	71335783	1	SHAFT ASY. DRIVE
19	71184145	1	KEY
20	71335784	1	PIN
21	70922523	1	ELBOW, 90 DEG, 9/16-18 ORB X JIC
	70921885	1	O-RING, .078 X .468 ID
22	71377419	1	TUBE ASY., PUMP TO SHAFT
23	70919062	1	CONNECTOR, 9/16-18 JIC X 1/4 NPT
24	71406298	1	PUMP ASY.
	700721684	2	CAPSCREW, SPL HD, M10-1.50 X 45
25	71377709	1	HOUSING, TRANS.
26	71377531	1	COVER, TRANS.
	70950052	12	CAPSCREW, FULL THD, M12-1.75 X 30
27	71389818	1	SENSOR, GND SPEED
28	70923690	1	ELBOW, STREET 1/8 NPT
29	7751605	1	VENT, BREATHER
30	71342217	1	PIN, SWITCH
31	71385907	1	WIRE, START SWITCH
32	71392870	1	MOTOR, FIXED
	701235	4	CAPSCREW, 1/2-13 X 1-1/2 GR5
	70923858	4	WASHER, .53 X 1.25 X .180
33	71390855	1	COUPLER, MOTOR TO INPUT
	7773856	1	CAPSCREW, 1/4-20 X 2-3/4 GR5
	31752	1	LOCKNUT, 1/4-20
34	71342216	1	SWITCH, START
35	71393718	1	SENSOR, HYDRO MOTOR TEMPERATURE
	70936326	1	O-RING, .072 X .414 ID, VITON

GC00372
PR: 402

TRANSMISSION, GEAR
INPUT SHAFT & GEARS

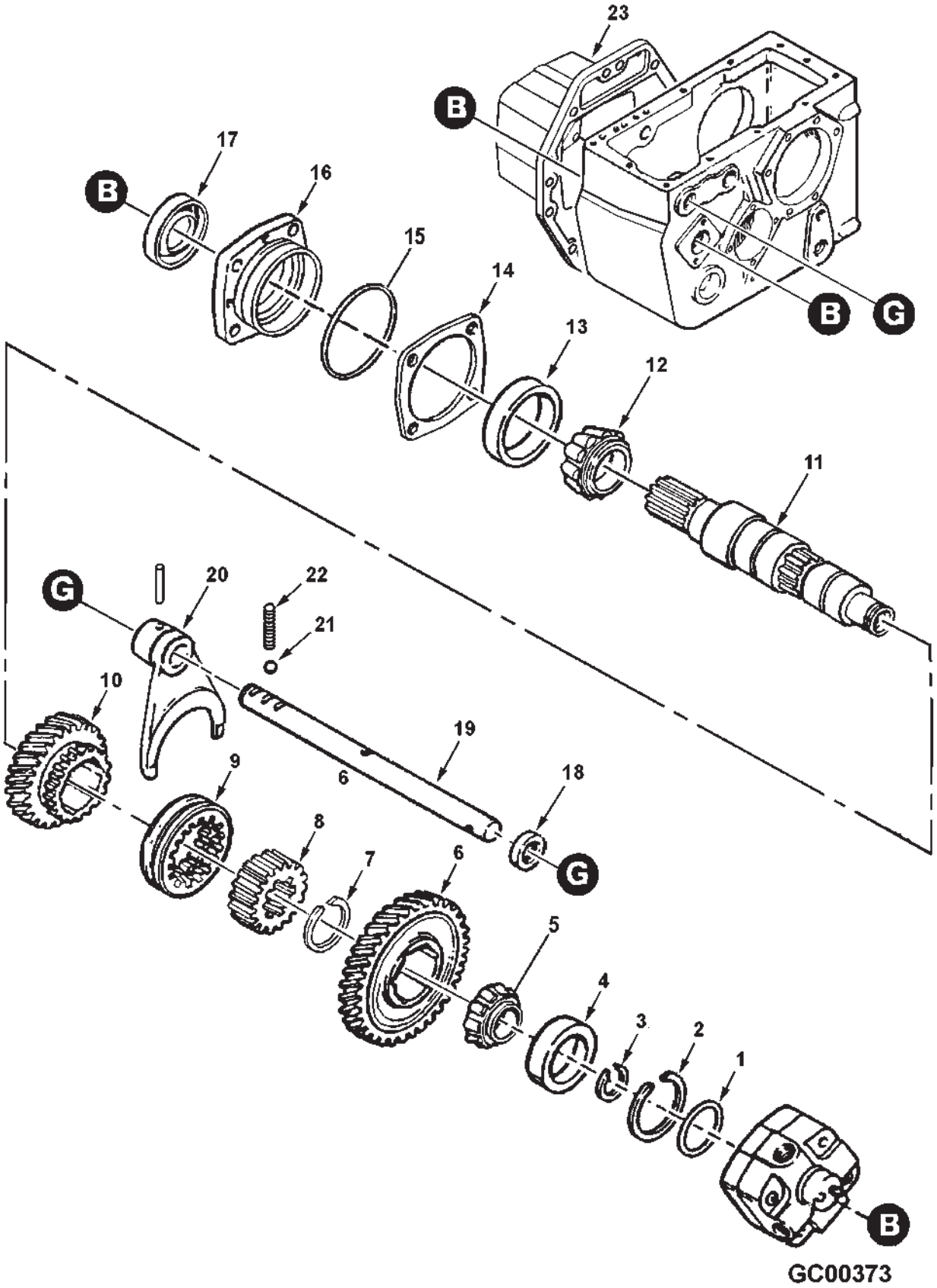

TRANSMISSION, GEAR
INPUT SHAFT & GEARS

ITEM	NUMBER	QTY	DESCRIPTION
1	70930911	1	O-RING, 75 DURO .103 X 2.30, UDN -141
2	71184144	1	SNAP RING
3	71184133	AR	SNAP RING, .071 THICK
	71302467	AR	SNAP RING, .072 THICK
	71302468	AR	SNAP RING, .073 THICK
	71184134	AR	SNAP RING, .074 THICK
	71302469	AR	SNAP RING, .075 THICK
	71302470	AR	SNAP RING, .076 THICK
	71184135	AR	SNAP RING, .077 THICK
	71302471	AR	SNAP RING, .078 THICK
4	834581M1	1	CUP, BEARING
5	834580M1	1	CONE, BEARING
6	71377408	1	GEAR, DRIVE, 39 T
7	71183839	1	RING, RETAINING
8	71160040	1	COLLAR
9	71195328	1	COUPLING
10	71377407	1	GEAR, DRIVE, 27 T
11	71399521	1	SHAFT, INPUT
12	74254700	1	CONE, BEARING
13	74254699	1	CUP, BEARING
14	71186745	AR	SHIM, .002 THICK
	71186746	AR	SHIM, .003 THICK
	71175961	AR	SHIM, .005 THICK
	71175962	AR	SHIM, .007 THICK
	71175963	AR	SHIM, .010 THICK
15	70923816	1	O-RING, 75 DURO .139 X 3.234, UDN -236
16	71190292	1	CARRIER, BEARING
	700708349	4	CAPSCREW, M10-1.5 X 25 C8.8
17	71162565	1	SEAL, OIL
18	71160303	1	SEAL, OIL
19	71377548	1	RAIL, SHIFT, 1,2,3 & 4
20	71300509	1	FORK, 1,2,3 & 4
	70923404	1	PIN, COILED SPRING, 5/16 X 1-1/2
21	70917579	1	BALL .4375 DIA
22	71160067	1	SPRING, DETENT
23	71377710	1	HOUSING, MOTOR ADAPTER
	70926551	3	PIN, DOWEL, 1/2 X 1
	70950052	10	CAPSCREW, ,M12-1.75 X 30 C8.8
-	79021676	AR	LOCTITE, PRIMER N (6 OZ)
-	79021669	AR	LOCTITE, THREADLOCKER (10 ML)

GC00373
PR: 404

TRANSMISSION, GEAR
INTERMEDIATE & MAIN SHAFT

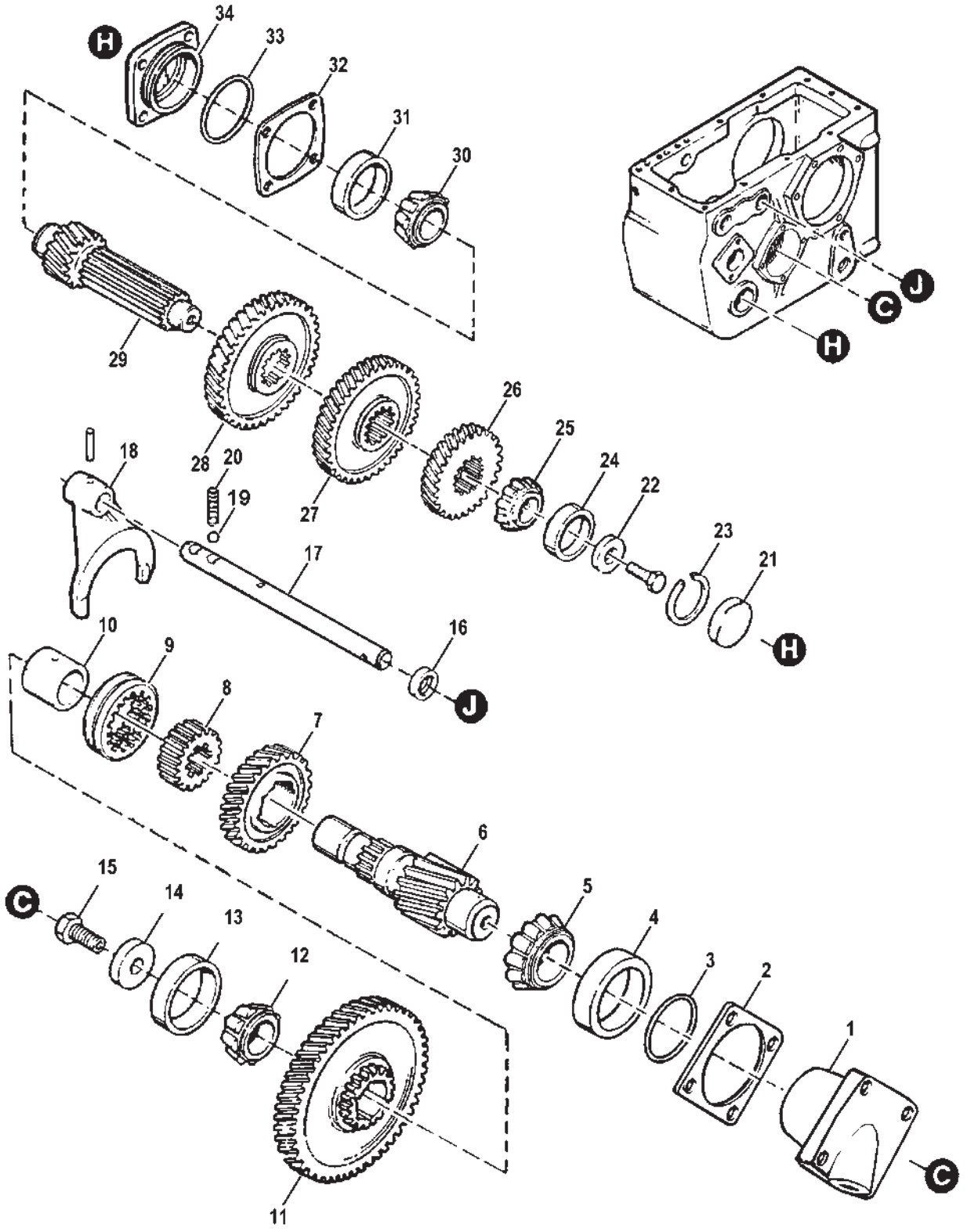

GC00374

TRANSMISSION, GEAR
INTERMEDIATE & MAIN SHAFT

ITEM	NUMBER	QTY	DESCRIPTION
1	71377415	1	CARRIER, BEARING, MAIN SHAFT
	70950052	4	CAPSCREW, M12-1.75 X 30 C8.8
2	71377712	AR	SHIM, MAIN SHAFT .002
	71377713	AR	SHIM, MAIN SHAFT .003
	71377714	AR	SHIM, MAIN SHAFT .005
	71377715	AR	SHIM, MAIN SHAFT .007
	71377716	AR	SHIM, MAIN SHAFT .010
3	70923818	1	O-RING, 75 DURO .139 X 3.98, UDN -242
4	71377722	1	CUP, BEARING
5	71377723	1	CONE, BEARING
6	71377418	1	SHAFT, MAIN
7	71377416	1	GEAR, DRIVEN 40T
8	71160040	1	COLLAR
9	71195328	1	COUPLING
10	71377711	1	BUSHING, GEAR
11	71377417	1	GEAR, DRIVEN 62T
12	71377535	1	CONE, BEARING
13	71377534	1	CUP, BEARING
14	71177386	1	WASHER, MAINSHAFT
15	7772312	1	CAPSCREW, M16-2.0 X 40 C8.8
16	71160303	1	SEAL, OIL
17	71377549	1	RAIL, SHIFT, HI, LO RANGE
18	71300507	1	FORK, HI, LO RANGE
	70923404	1	PIN, COILED SPRING, 5/16 X 1-1/2
19	70917579	1	BALL .4375 DIA
20	71160067	1	SPRING, DETENT
21	71317628	1	PLUG
22	71177385	1	WASHER
	70950052	1	CAPSCREW, M12-1.75 X 30 C8.8
23	71184144	1	RING, SNAP
24	834581M1	1	CUP, BEARING
25	834580M1	1	CONE, BEARING
26	71377411	1	GEAR, DRIVEN 32T
27	71377412	1	GEAR, DRIVE 42T
28	71377413	1	GEAR, DRIVEN 45T
29	71377414	1	COUNTERSHAFT W/ GEAR 20T
30	70228509	1	CONE, BEARING
31	712208	1	CUP, BEARING
32	71186745	AR	SHIM, .002 THICK
	71186746	AR	SHIM, .003 THICK
	71175961	AR	SHIM, .005 THICK
	71175962	AR	SHIM, .007 THICK
	71175963	AR	SHIM, .010 THICK
33	70923816	1	O-RING, 75 DURO .139 X 3.234, UDN -236
34	71377410	1	CARRIER, BEARING
	700708349	4	CAPSCREW, M10-1.50 X 25 C8.8
-	79021676	AR	LOCTITE, PRIMER N (6 OZ)
-	79021669	AR	LOCTITE, THREADLOCKER (10 ML)

GC00374
PR: 406

TRANSMISSION, GEAR
DIFFERENTIAL

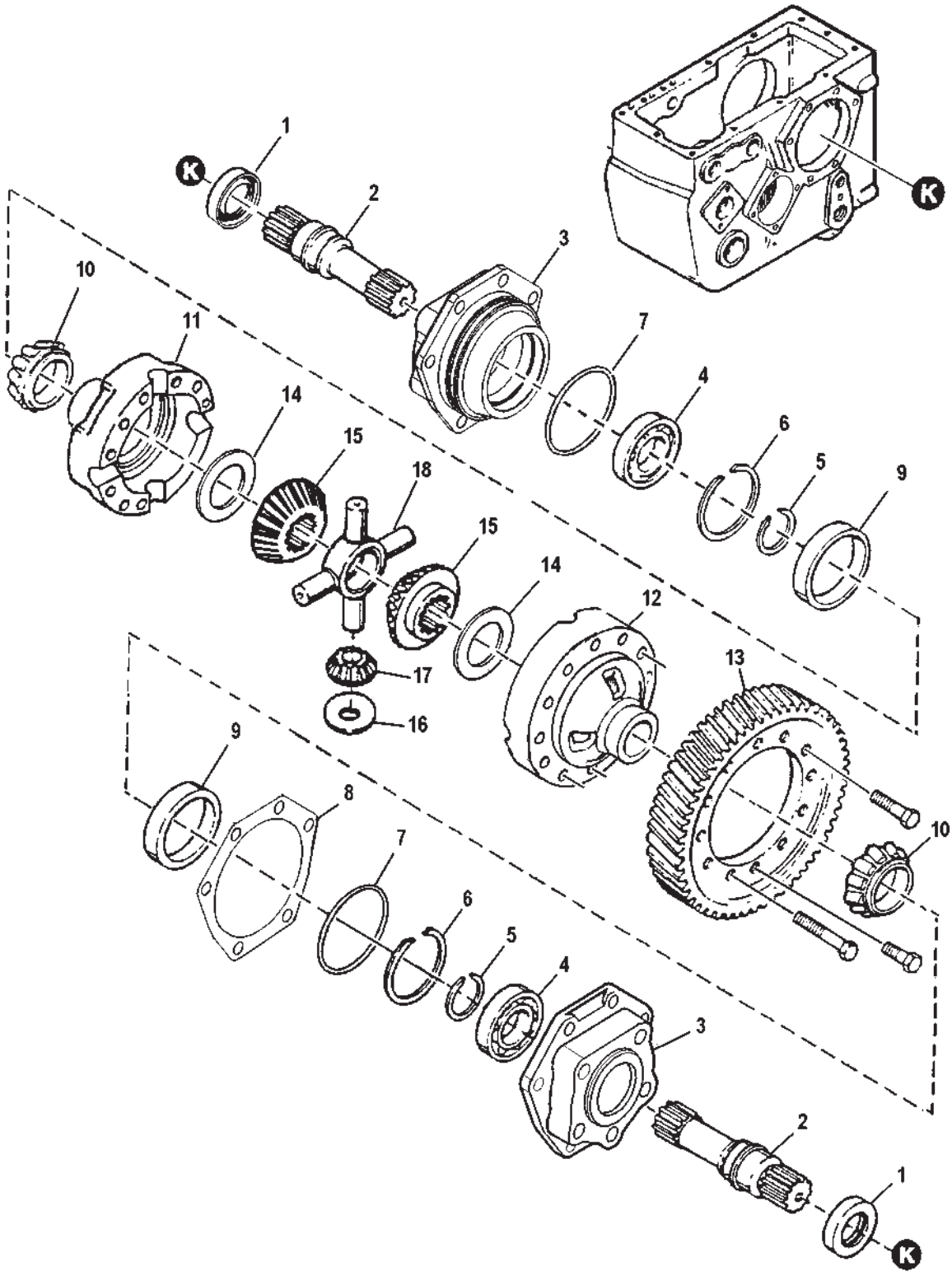

GC00375

TRANSMISSION, GEAR
DIFFERENTIAL

ITEM	NUMBER	QTY	DESCRIPTION
1	71359538	2	SEAL, OIL
2	71390887	2	SHAFT, DIFF OUTPUT
3	71390888	2	CARRIER, BEARING
	7772312	12	CAPSCREW, M16-2 X 40 C8.8
4	1109070	2	BEARING, BALL
5	71160055	2	RING, RETAINING
6	70927321	2	RING, RETAINING
7	70923594	2	O-RING, 75 DURO .139 X 5.98, UDN -258
8	71377717	AR	SHIM, DIFF .002
	71377718	AR	SHIM, DIFF .003
	71377719	AR	SHIM, DIFF .005
	71377720	AR	SHIM, DIFF .007
	71377721	AR	SHIM, DIFF .010
9	70930426	2	CUP, BEARING
10	70930424	2	CONE, BEARING
11	71386867	1	HOUSING, DIFF, PLAIN HALF (1/2" CPSCRWS) (SERVICED W/71398356 HOUSG ASY, BOTH HALVES)(MUST USE 71398330 RING GEAR)
	71398328	1	HOUSING, DIFF, PLAIN HALF (M14 CPSCRWS) (SERVICED W/71398356 HSG ASY, BOTH HLVS)
12	71386866	1	HOUSING, DIFF, GEAR HALF (1/2" CPSCRWS) (SERVICED W/71398356 HOUSG ASY, BOTH HALVES)(MUST USE 71398330 RING GEAR)
	71398329	1	HOUSING, DIFF, GEAR HALF (M14 CPSCRWS) (SERVICED W/71398356 HSG ASY, BOTH HLVS)
13	71347780	1	GEAR, RING, 70T (PRIOR S/N HM87101, MID-YEAR)
	70927469	4	CAPSCREW, 1/2-13 X 2-1/4 GR8
	70923154	4	CAPSCREW, 1/2-13 X 1-1/2 GR8
	70926157	8	CAPSCREW, 1/2-13 X 3-3/4 GR8
	70928178	16	WASHER, HARD, .531 X 1.0 X .109
	71398330	1	GEAR, RING, 70T (EFF. S/N HM87101, MID-YEAR)
	70950490	12	CAPSCREW, M14-2.0 X 100, CL10.9
	70950382	4	CAPSCREW, M14-2.0 X 35, CL10.9
	70926192	16	WASHER, HARD, .562 ID X 1.25 X .120
	79021676	AR	LOCTITE, PRIMER N (6 OZ)
	79021669	AR	LOCTITE, THREAD LOCKER (10 ML)
14	71160085	2	WASHER, THRUST, SIDE GEAR
15	71344598	2	GEAR, SIDE
16	71347782	4	WASHER, THRUST, PINION
17	71344597	4	PINION
18	71347777	1	SPIDER, DIFFERENTIAL
-	71398327	--	DIFFERENTIAL ASY. (INCLS. ITEMS 10-18)
-	71398356	--	HOUSING ASY. (NOT ILL.)(INCL. ITEM 11, 71398328 & ITEM 12, 71398329)

GC00375
PR: 408

DRUM BRAKES
SERVICE & PARKING

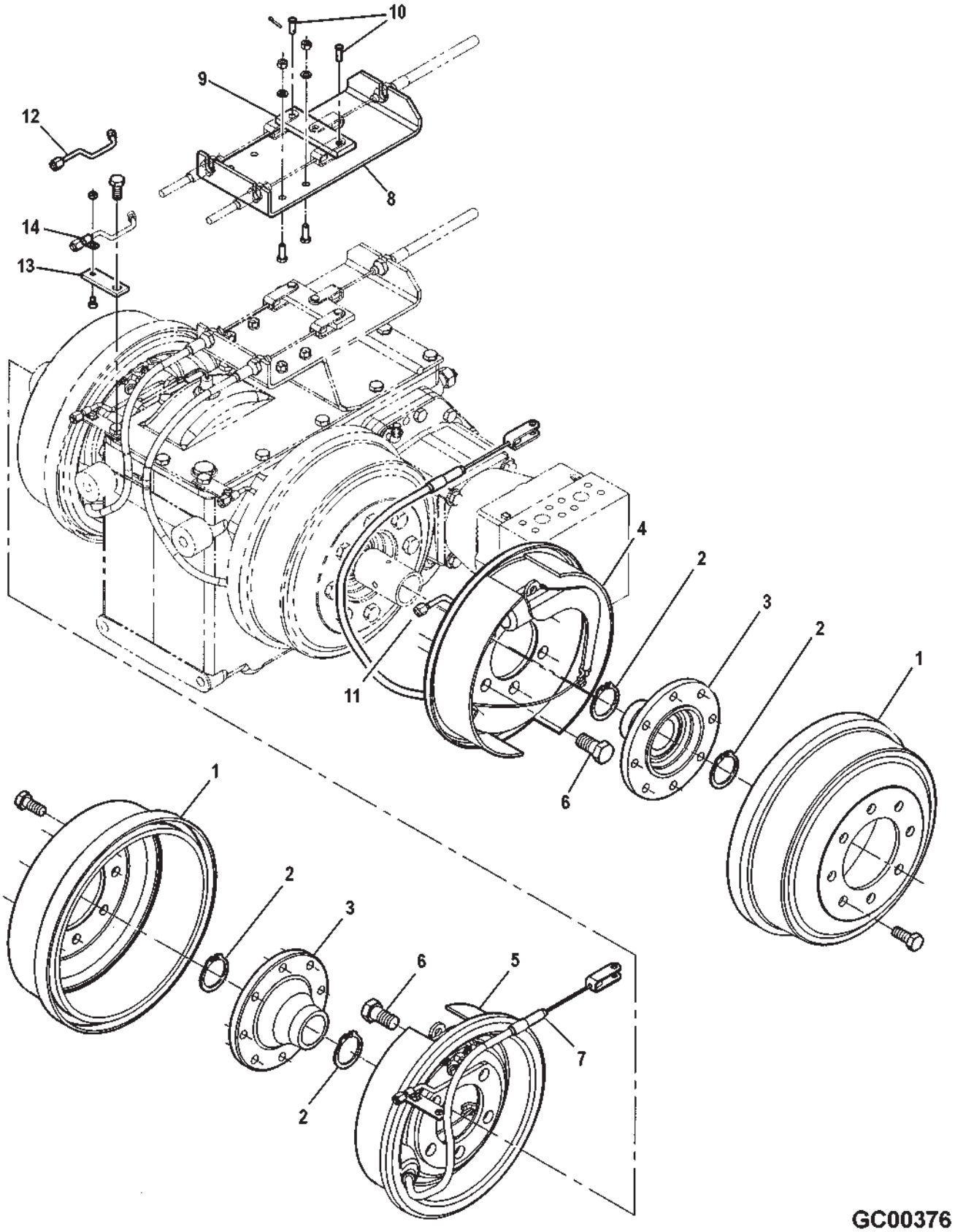

ITEM	NUMBER	QTY	DESCRIPTION
1	71392787	2	DRUM, BRAKE
	7771785	16	CAPSCREW, 5/8-11 X 1 GR5
2	70937676	4	RING, RETAINING, INTERNAL
3	71392788	2	HUB, BRAKE DRUM
4	71389232	1	BRAKE ASY. LH
5	71389233	1	BRAKE ASY. RH
	71395151	1	WHEEL CYL. KIT LH
	71395160	1	WHEEL CYL. KIT RH
	71395157	4	BOLT, WHEEL CYL. MOUNTING
	71395158	2	BRAKE SHOE KIT (1 PER SIDE)
	71395159	2	BACKING PLATE WELD ASY
	71395163	4	LINK, CONNECTING, WHEEL CYL.
	71395152	2	SPRING KIT
	71395153	1	ADJUSTER KIT, LH
	71395161	1	ADJUSTER KIT, RH
	71395154	1	PARK BRAKE KIT, LH
	71395162	1	PARK BRAKE KIT, RH
	71395155	2	WASHER, SPRING
	71376446	2	NUT
6	70950394	10	CAPSCREW, M20-2.5 X 45, C10.9
	79021676	AR	LOCTITE, PRIMER N (6 OZ)
	79021669	AR	LOCTITE, THREAD LOCKER (10 ML)
7	71389230	2	CABLE ASY, PARK BRAKE
8	71389229	1	BRACKET, PARK BRAKE CABLES
	70921210	4	CAPSCREW, 3/8-16 X 1 GR5
	705038	4	LOCKWASHER, 3/8
	70916950	4	NUT, REG 3/8-16
9	71389235	1	BAR, EQUALIZER
10	763300	3	PIN, CLEVIS 5/16 X 1 LG
	70918452	2	PIN, COTTER 1/8 X 1
11	71396558	1	TUBE ASY, BRAKE, LH
12	71389230	1	TUBE ASY, BRAKE, RH
13	71390867	2	STRAP, TUBE SUPPORT
	70950453	2	CAPSCREW, M12 X 1.75 X 35
	Y705624	8	WASHER, NARROW 1/2
14	70926919	2	CLAMP, 1/4 X .281 HOLE
	70921958	2	CAPSCREW, 1/4-20 X 1/2 LG GR5
	70916622	2	NUT, REG, 1/4-20

GC00376
PR: 410

DRUM BRAKES
LINES & FITTINGS

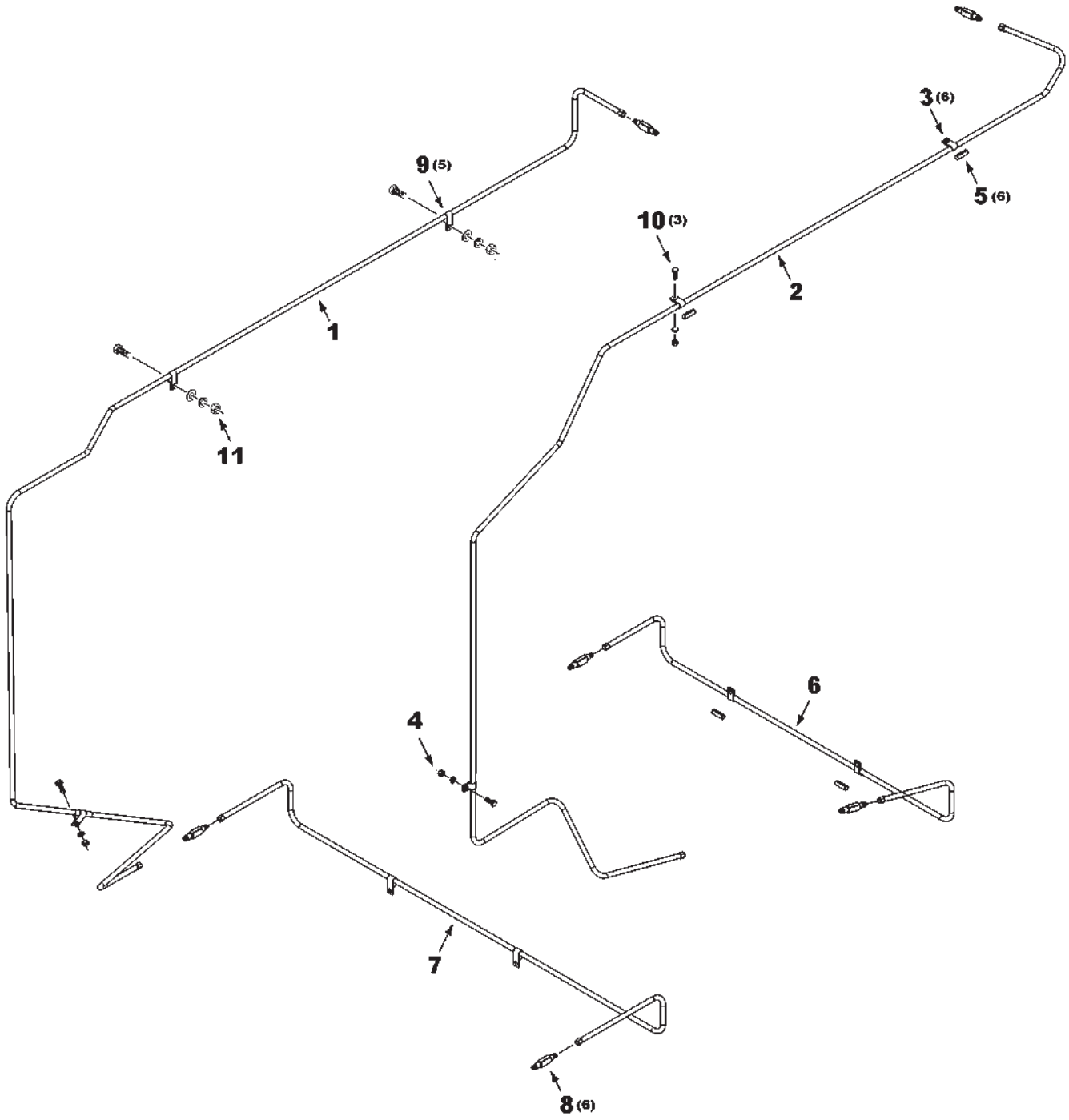

MC00344

ITEM	NUMBER	QTY	DESCRIPTION
1	71398223	1	TUBE ASY, UPPER LEFT BRAKE
2	71398224	1	TUBE ASY, UPPER RIGHT BRAKE
3	70925617	6	CLAMP, 1/2 X .406 HOLE
4	70921210	2	CAPSCREW, 3/8-16 X 1 GR5
	705038	2	LOCKWASHER, 3/8
	70916950	2	NUT, 3/8-16 REG
5	2556880W1	6	RUBBER SLEEVE, 1/4 ID
6	71398226	1	TUBE ASY, LOWER RIGHT BRAKE
7	71393849	1	TUBE ASY, LOWER LEFT BRAKE
8	70919214	6	CONN, UNION, 1/4 JIC
9	70926919	5	CLAMP, 1/4 X .281 HOLE
10	7703457	3	CAPSCREW, 1/4-20 X 3/4 GR5
	705012	3	LOCKWASHER, 1/4
	700709601	3	WASHER, 1/4 WIDE
	704007	3	NUT, 1/4 REG
11	7703473	1	CAPSCREW, 1/4-20 X 1-1/4 GR5
	705012	1	LOCKWASHER, 1/4
	700709601	1	WASHER, 1/4 WIDE
	704007	1	NUT, 1/4 REG

MC00344
PR: 412

MAIN FRAME AND AXLE SUPPORTS

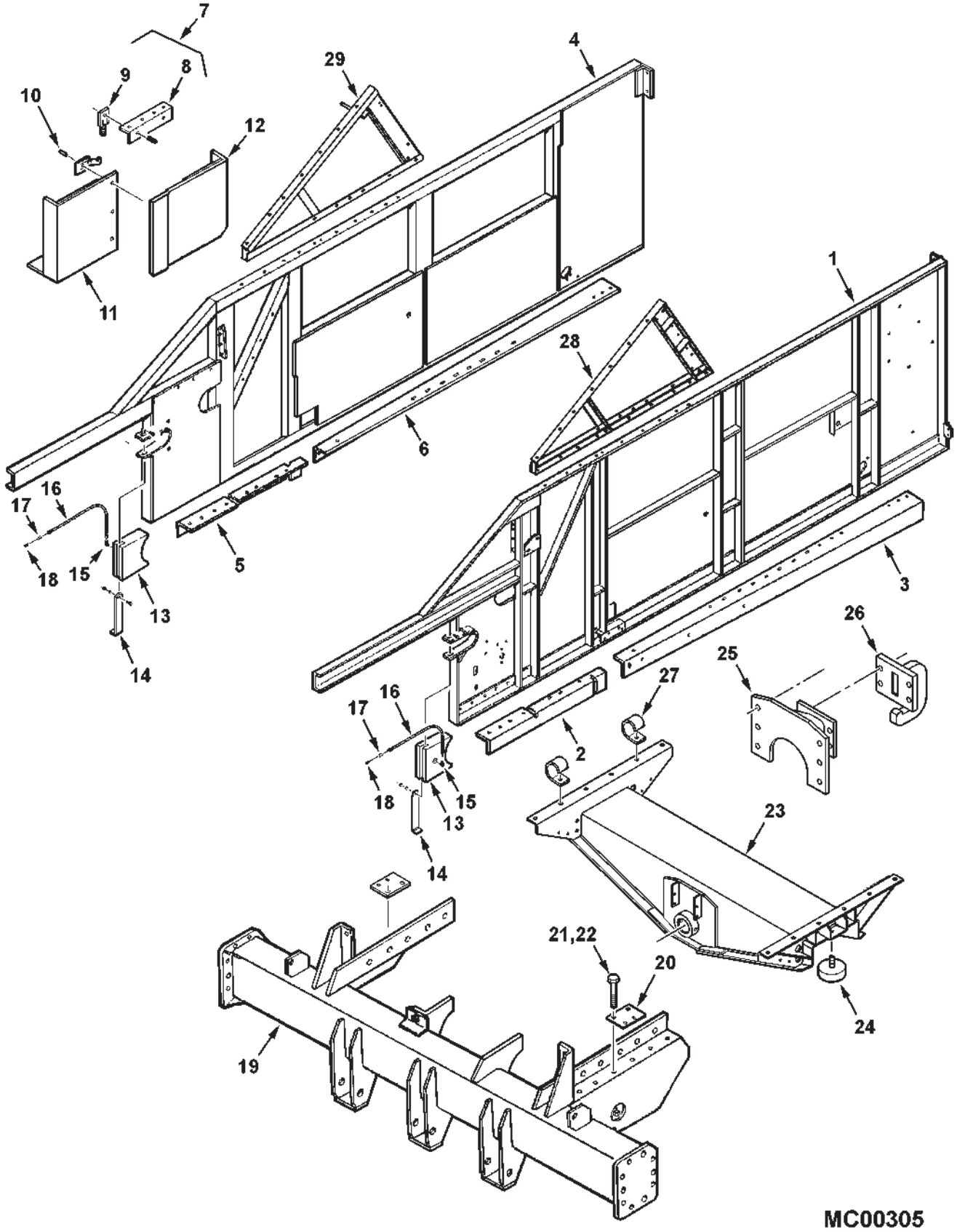

MAIN FRAME AND AXLE SUPPORTS

ITEM	NUMBER	QTY	DESCRIPTION
1	71390292	1	FRAME & SHEET WLMT,LH(PRIOR S/N HP87101)
	71403880	1	FRAME & SHEET WLMT,LH (EFF. S/N HP87101)
2	71409947	1	SUPPORT WLDMT, LH FRONT FRAME
3	71395585	1	ANGLE, LH FRAME SUPPORT
4	71390502	1	FRAME & SHEET WLMT, RH
5	71409942	1	SUPPORT WLDMT, RH FRONT FRAME
6	71395586	1	ANGLE, RH FRAME SUPPORT
7	2580593W91	8	ANGLE ASY., ACCESS DOOR
			(INCL. ITEMS 8-10)
8	2580580W1	8	ANGLE, DOOR FRAME
9	70537291	16	FASTENER
10	70924837	16	RIVET
11	2631433W91	4	DOOR ASY, SIDE FRAME, W/FASTENERS(IT. 9)
	2616141W91	4	DOOR WLDMT, SIDE FRAME
12	2616131W91	4	DOOR WLDMT, SIDE FRAME
13	71395332	2	BLOCK, PIVOT FEEDER LOCK
14	2513840W1	2	PIN, PIVOT LOCK BRACKET
	70921210	2	CAPSCREW, 3/8-16 X 1 GR5
	705038	2	LOCKWASHER, 3/8
	70916950	2	NUT, REG, 3/8-16 G2
15	70923690	2	ELBOW, STREET, 1/8
16	71365312	2	HOSE, GREASE
	70925097	2	CLAMP, .562 TUBE X .406 HOLE
17	70901763	2	COUPLING
18	70922887	2	FITTING, GREASE, 1/8
19	71389250	1	FRONT AXLE ASSEMBLY
	70923111	2	CAPSCREW, 5/8-11 X 3
	7701659	2	CAPSCREW, 5/8-11 X 2-1/2
	70924272	4	WASHER, 21/32 X 1 X 12GA.
20	102038M1	2	PLATE
	700706419	4	CAPSCREW, 3/4-10 X 2 GR8
	700703923	4	NUT, HEX FLNG TOP LOCK, 3/4-10
21	70926127	16	CAPSCREW, HEX, 3/4-10 X 1-3/4 GR5
22	700703923	16	NUT, HEX FLNG TOP LOCK, 3/4-10
23	71389601	1	SUPPORT WLMT, RR AXLE(PRIOR S/N HP87101)
	71406471	1	SUPPORT WLMT, RR AXLE (EFF. S/N HP87101)
	70923112	12	CAPSCREW, 5/8-11 X 1-3/4 GR5
	700703922	12	NUT, HEX FLNG TOP LOCK, 5/8-11
24	71355063	2	STOP, STEERING AXLE
	Y705046	2	WASHER, LOCK, 1/2
	704031	2	NUT, 1/2-13
25	71404357	1	HITCH WLDMT (EFF. S/N HP87101)
	70921360	6	CAPSCREW, 5/8-11 X 2-1/4 GR5
26	71404359	1	HOOK WLDMT (EFF. S/N HP87101)
	70921360	4	CAPSCREW, 5/8-11 X 2-1/4 GR5
	700703922	4	NUT, HEX FLANGE TOP LOCK, 5/8-11
27	70937682	2	J-CLIP, 3/4 DIA X .656 HOLE
28	71390179	1	FRAME WLMT, LH BIN SUPPORT
	70920415	6	CAPSCREW, 3/8-16 X 1-1/4 GR5
	70921965	6	CAPSCREW, 3/8-16 X 3/4 GR5
	70917378	11	WASHER, WIDE, 3/8
	Y704734	12	NUT, HEX FLANGE TOP LOCK, 3/8-16
29	71393236	1	FRAME WLMT, RH BIN SUPPORT
	70920415	10	CAPSCREW, 3/8-16 X 1-1/4 GR5
	70921965	6	CAPSCREW, 3/8-16 X 3/4 GR5
	70917378	15	WASHER, WIDE, 3/8
	Y704734	16	NUT, HEX FLANGE TOP LOCK, 3/8-16

MC00305
PR: 414

REAR AXLE & WHEELS

ADJUSTABLE TREAD
(PRIOR S/N HP87101)

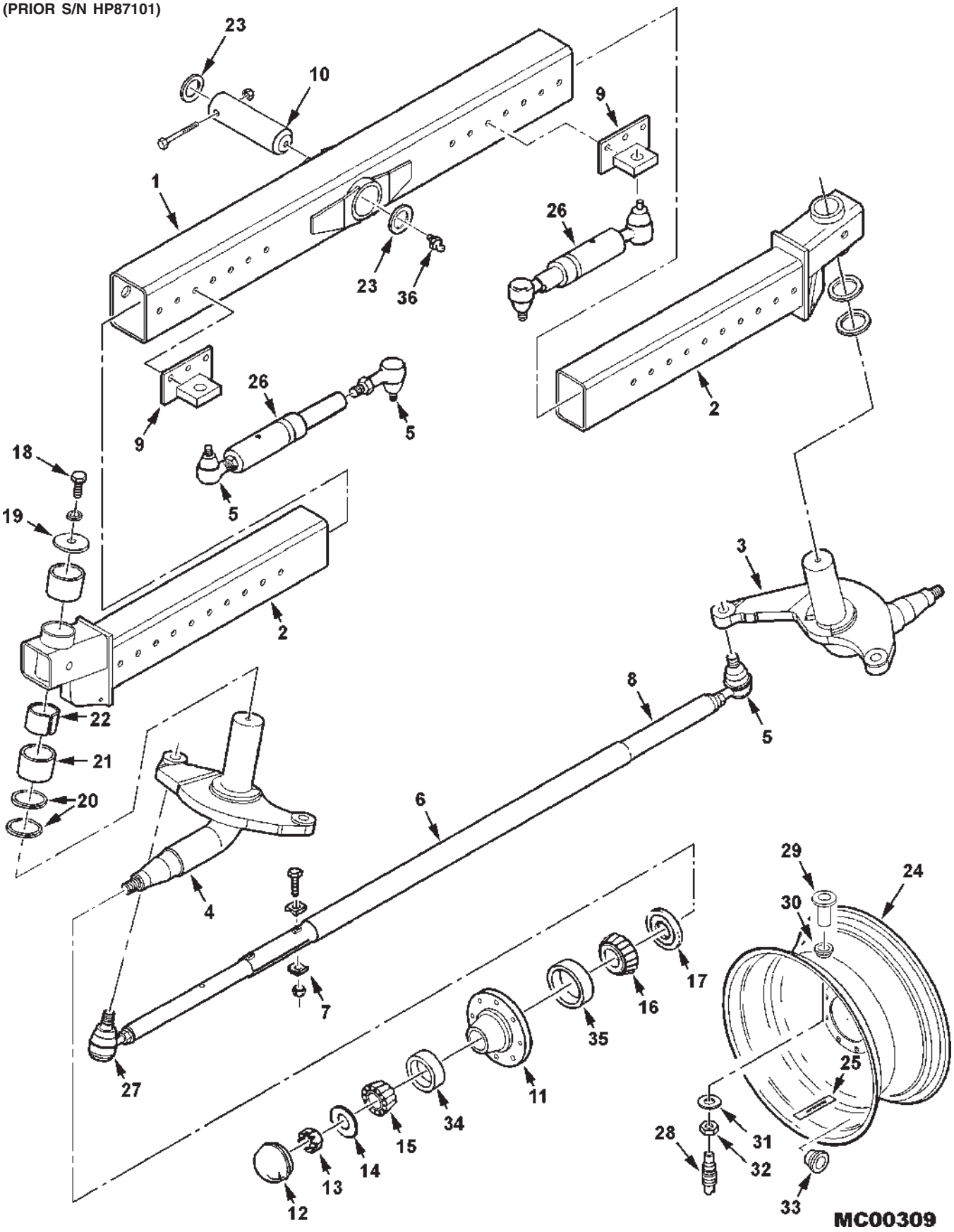

REAR AXLE & WHEELS
ADJUSTABLE TREAD
(PRIOR S/N HP87101)

ITEM	NUMBER	QTY	DESCRIPTION
1	71389394	1	AXLE ASY, CENTER SECTION, W/BUSHINGS (PRIOR S/N HP87101)
	2441250W1	2	BUSHING
2	71389381	2	EXTENSION ASY., ADJUSTABLE AXLE (INCL. ITEMS 21 & 22)
	13811X	2	LUBE FTG, STR, 1/4-28 TAPER THD
	70922890	4	CAPSCREW, 3/4-10 X 7 GR5
	71359841	4	SPACER, BOLT
	7774466	4	NUT, HEX FLNG SERR LOCK, 3/4-10
3	71389386	1	SPINDLE ASY., RH
4	71389385	1	SPINDLE ASY., LH
5	71307626	5	SOCKET ASY, RH W/RH THREADS (INCL. SLOTTED NUT, BOOT & LUBE FTG)
	71403681	5	BOOT, RUBBER
	70925731	2	LUBE FTG, 45 DEG, 1/4-28 TAPER
	13811X	3	LUBE FTG, STR, 1/4-28 TAPER THD
	70921295	5	NUT, SLOTTED HEX, 7/8-14UNF
	70925719	5	PIN, COTTER, 1/8 X 2
	70923356	5	NUT, JAM, 1-1/8-12UNF
6	71389356	1	TIE ROD ASY, ADJUSTABLE
7	6661624	4	WASHER, CLAMP
	70929019	2	CAPSCREW, 3/8-16 X 3
	7704141	2	NUT, TOP LOCK, 3/8-16
8	71359772	1	ROD, ADJUSTABLE
9	71389362	2	ANCHOR ASY.
	70936419	6	CAP, 3/4-10 X 7-1/2 GR5
	71359841	6	SPACER, BOLT
	7774466	6	NUT, HEX FLNG SERR LOCK, 3/4-10
10	2625050W1	1	PIN, REAR AXLE PIVOT
	70920272	1	CAPSCREW, 1/2-13 X 5 GR5
	704858	1	NUT, HEX TOP LOCK, 1/2-13
11	71338308	2	HUB ASY. (INCL. ITEMS 34 & 35)
	70927529	16	CAPSCREW, 5/8-18 X 1-3/4 GR5
	70937005	16	WASHER, HARD, .66 X 1.31 X .25 TH
12	26674	2	CAP, HUB
13	704692	2	NUT, SLOTTED, 1-14 GR2
	70922002	2	PIN, COTTER, 3/16 X 2
14	70936306	2	WASHER, HARD, 1.062 X 2.25 X .25 TH
15	850182M1	2	CONE, BEARING, OUTER
16	71334989	2	CONE, BEARING, INNER
17	71334988	2	SEAL

CONTINUED

REAR AXLE & WHEELS

ADJUSTABLE TREAD
(PRIOR S/N HP87101)

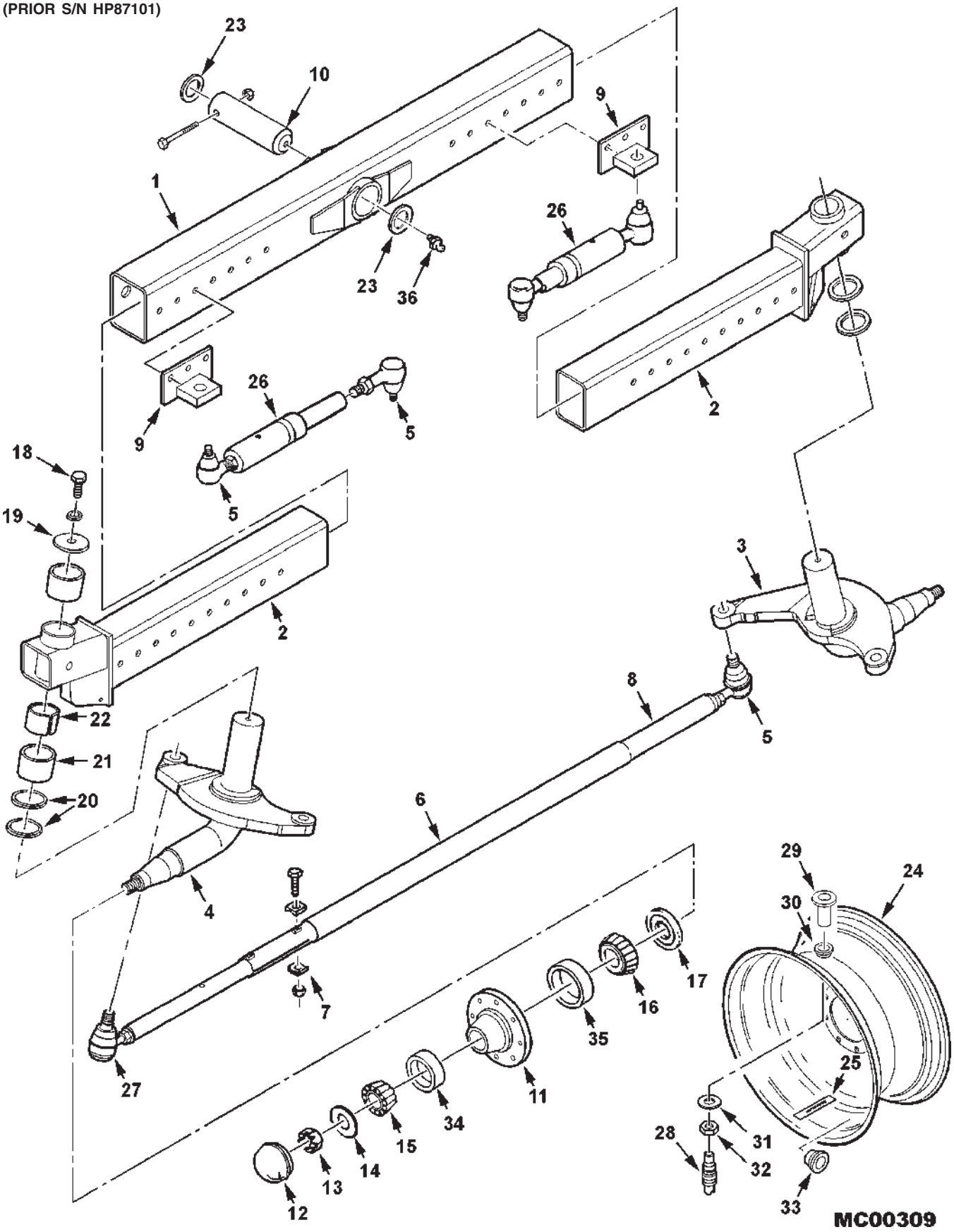

REAR AXLE & WHEELS
ADJUSTABLE TREAD
(PRIOR S/N HP87101)

ITEM	NUMBER	QTY	DESCRIPTION
18	70923114	2	CAPSCREW, 1/2-13 X 1 GR5
	Y705046	2	WASHER, LOCK, 1/2
19	71338789	2	WASHER
20	71334986	4	WASHER, THRUST
21	71354306	4	BUSHING
22	71338799	2	SPACER
23	2441340W1	2	WASHER, TRUST
24	71372132	2	WHEEL RIM, 14.9 X 24 TIRE
	71372133	2	WHEEL RIM, 16.9 X 24 TIRE
	71399115	2	WHEEL RIM, 16.9 X 26 TIRE
25	71338651	2	DECAL, 150 FT LB TORQUE
26	71365245	2	CYLINDER ASY., STEERING
27	71359545	1	SOCKET ASY, W/LH THREADS (INCL. SLOTTED NUT, BOOT & LUBE FTG)
	71403681	1	BOOT, RUBBER
	13811X	1	LUBE FTG, STR, 1/4-28 TAPER THD
	70921295	1	NUT, SLOTTED HEX, 7/8-14UNF
	70925719	1	PIN, COTTER, 1/8 X 2
	70937534	1	NUT, JAM, 1-1/8-12UNF LH
28	71170388	2	VALVE HOUSING & CORE ASY, W/ CAP
29	7027469	2	VALVE ASY, CLAMP-IN (COMPLETE)(INCL ITEMS 28, 30, 31, 32)(TUBELESS TIRE)
30	71170390	2	GROMMET, TUBELESS TIRE
31	71175919	2	WASHER, TUBELESS TIRE
32	71175918	2	NUT, TUBELESS TIRE
33	539651M1	2	PLUG, RIM HOLE, TUBELESS TIRE
34	850181M1	1	CUP, BEARING, OUTER
35	195160M1	1	CUP, BEARING, INNER
36	13887X	1	LUBE FITTING, STR, 1/4-18 PTF

MC00309
PR: 416

REAR AXLE & WHEELS

ADJUSTABLE TREAD
(EFF. S/N HP87101)

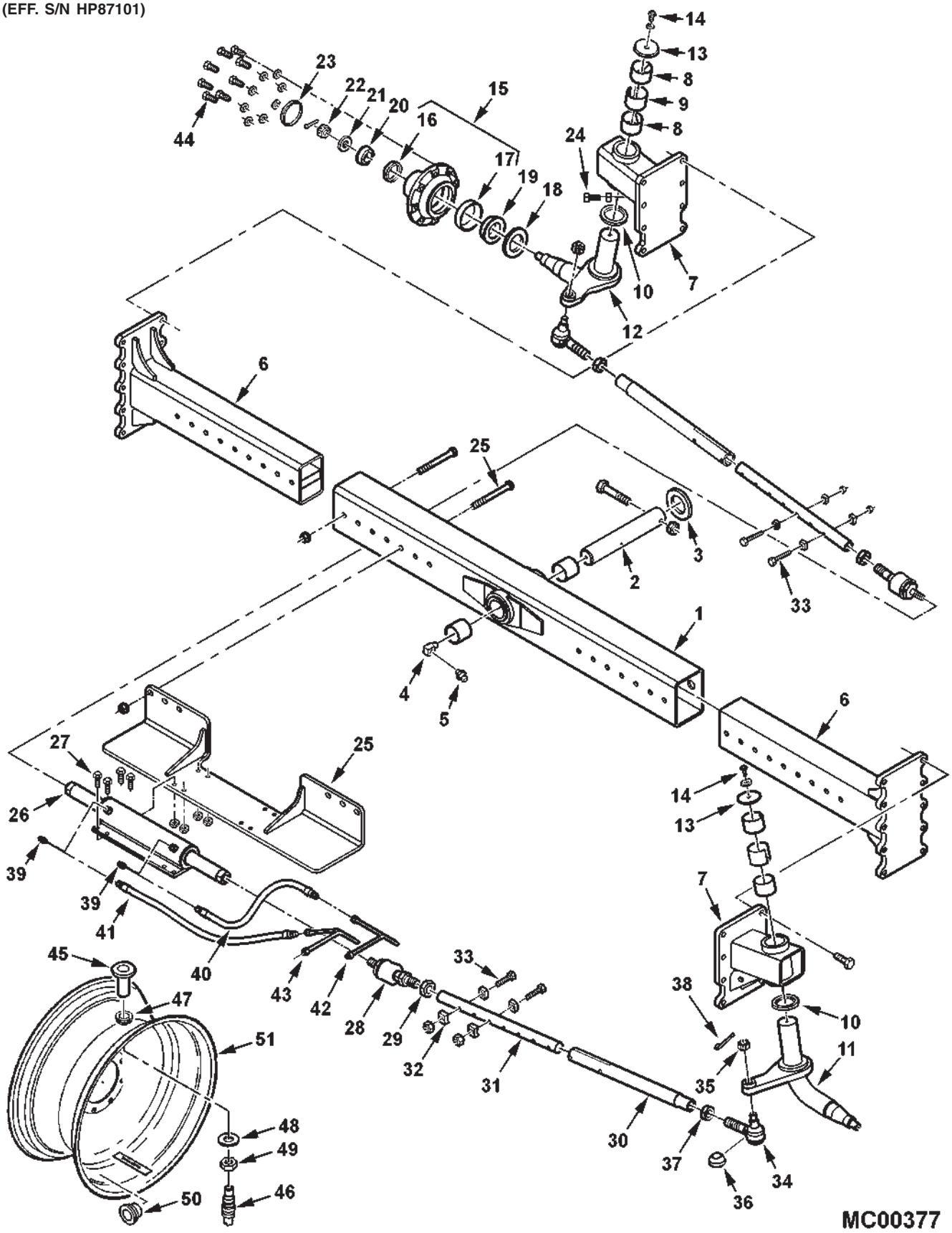

REAR AXLE & WHEELS
ADJUSTABLE TREAD
(EFF. S/N HP87101)

ITEM	NUMBER	QTY	DESCRIPTION
1	71406788	1	AXLE ASY, CENTER SECTION, W/BUSHINGS
	2441250W1	2	BUSHING, PIVOT
2	2625050W1	1	PIN, REAR AXLE PIVOT
	70920272	1	CAPSCREW, 1/2-13 X 5 GR5
	704858	1	NUT, HEX TOP LOCK, 1/2-13
3	2441340W1	2	WASHER, THRUST
4	70925863	1	ELBOW,90 DEG, 1/4 NPTF X 1/4-18 NPTF FEM
5	13887X	1	LUBE FITTING, STR, 1/4-18 PTF
6	71400705	2	EXTENSION WLDMT, ADJUSTABLE AXLE
	70922890	8	CAPSCREW, 3/4-10 X 7 GR5
	71359841	8	SPACER, HARD
	7774466	8	NUT, HEX FLNG SERR LOCK, 3/4-10
7	71400701	2	HOUSING WLDMT, SPINDLE, W/BUSHINGS
	13811X	2	LUBE FTG, STR, 1/4-28 TAPER THD
	70925872	16	CAPSCREW, 3/4-10 X 2-1/4 GR5
8	71354306	4	BUSHING, SPINDLE
9	71338799	2	SPACER, BUSHING
10	71334986	4	WASHER, THRUST
11	71400698	1	SPINDLE, WLDMT, LEFT
12	71400693	1	SPINDLE, WLDMT, RIGHT
13	71338789	2	WASHER, .531 ID X 3.4 X .229 TH.
14	70923114	2	CAPSCREW, 1/2-13 X 1 GR5
	Y705046	2	LOCKWASHER, 1/2
15	71338308	2	HUB ASY. (INCL. ITEMS 16 & 17)
16	850181M1	1	CUP, BEARING, OUTER
17	195160M1	1	CUP, BEARING, INNER
18	71334988	2	SEAL, HUB
19	71334989	2	CONE, BEARING, INNER
20	850182M1	2	CONE, BEARING, OUTER
21	70936306	2	WASHER, HARD, 1.062 X 2.25 X .25 TH
22	704692	2	NUT, SLOTTED, 1-14 UNF GR2
	70922002	2	PIN, COTTER, 3/16 X 2
23	26674	2	CAP, HUB
24	70926127	2	CAPSCREW, 3/4-10 X 1-3/4 GR5
	70913160	2	NUT, 3/4-10 REG

CONTINUED

MC00377
PR: t05b15n00a0021

REAR AXLE & WHEELS

ADJUSTABLE TREAD
(EFF. S/N HP87101)

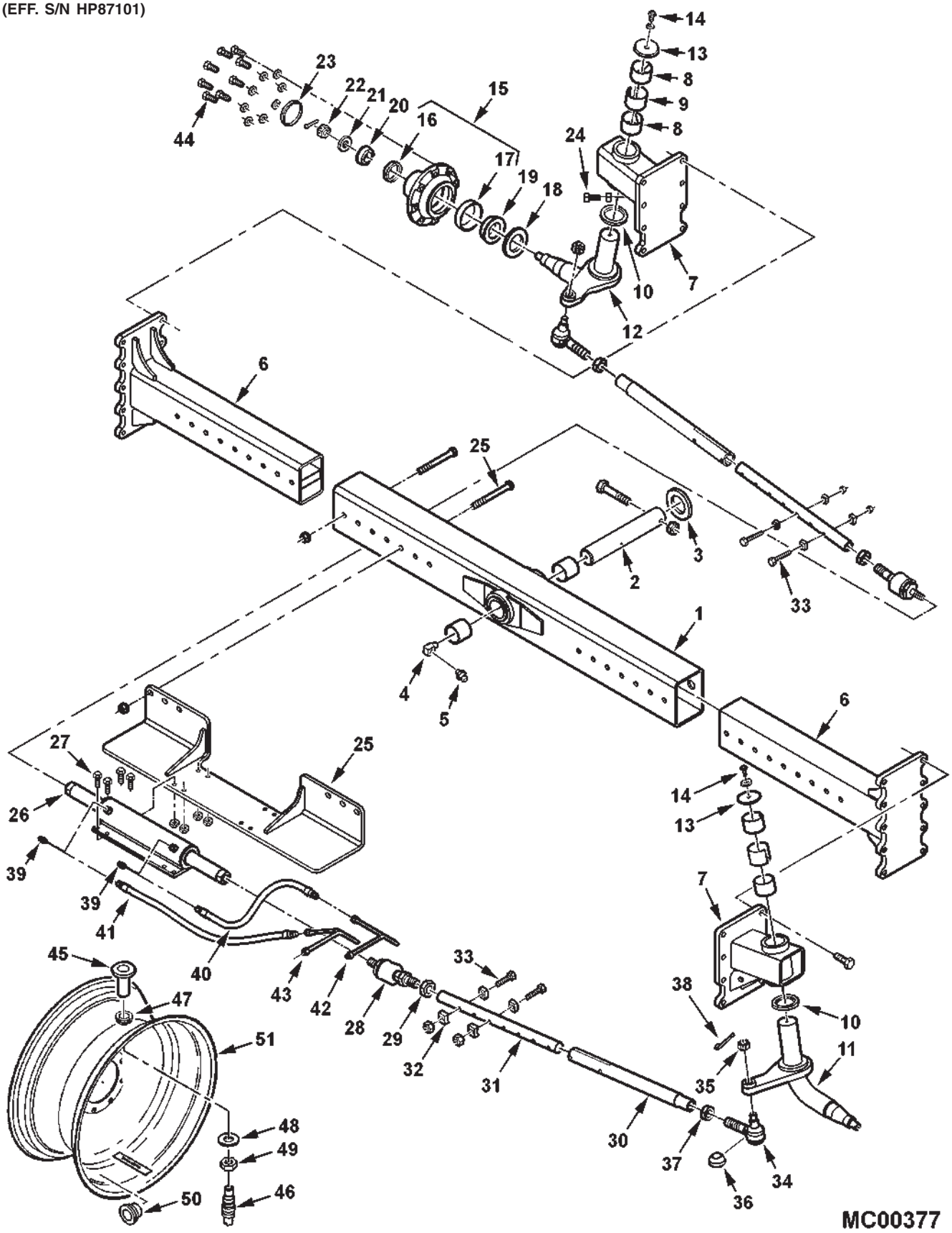

REAR AXLE & WHEELS
ADJUSTABLE TREAD
(EFF. S/N HP87101)

ITEM	NUMBER	QTY	DESCRIPTION
25	71400716	1	SUPPORT WLDMT, CYLINDER
	70936419	6	CAPSCREW, 3/4-10 X 7-1/2 GR5
	7774466	6	NUT, HEX FLNG SERR LOCK, 3/4-10
26	71400719	1	CYLINDER, STEERING (SEE BREAKDOWN)
27	70919089	8	CAPSCREW, 1/2-13 X 1-3/4 GR5
	Y704742	8	NUT, HEX FLANGE TOP LOCK, 1/2-13
28	71403691	2	BALL JOINT, IN-LINE (INCLUDES BOOT)
	71406302	AR	BOOT KIT, BALL JOINT
29	70923230	2	NUT, HEX JAM, 1-1/4-12 UNF
30	71400711	2	TUBE WLDMT, ADJUSTABLE TIE ROD
31	71400710	2	ROD, ADJUSTABLE TIE
32	6661624	8	WASHER, CLAMP, .390 HOLE
33	70922918	4	CAPSCREW, 3/8-16 X 3-1/4 GR5
	7704141	4	NUT, HEX TOP LOCK, 3/8-16
34	71403690	2	SOCKET ASY, LH THREAD (INCL. IT 35 & 36)
35	70921295	2	NUT, SLOTTED HEX, 7/8-14 UNF
36	71406301	2	SEAL, DIRT
37	70930889	2	NUT, HEX JAM, 1-1/4-12 UNF, LH THD.
38	70925721	2	COTTER PIN, 5/32 X 2
39	70922523	2	ELBOW, 90 DEG, 9/16-18 JIC X ORB MALE
	70921885	2	O-RING, .078 X .468 ID
40	71395172	1	HOSE ASY, STRG CYL.
41	71395173	1	HOSE ASY, STRG CYL.
42	71398228	1	TUBE ASY, STEERING, UPPER
43	71395789	1	TUBE ASY, STEERING, LOWER
44	353613X1	16	CAPSCREW, 5/8-18 X 1-3/4 GR5
	70937005	16	WASHER, HARD, .656 X 1.31 X .095 TH
45	7027469	2	VALVE ASY, CLAMP-IN (TUBELESS)(COMPLETE) (INCL. ITEMS 46, 47, 48, 49)
46	71170388	2	VALVE HOUSING & CORE ASY, W/ CAP
47	71170390	2	GROMMET, TUBELESS TIRE
48	71175919	2	WASHER, TUBELESS TIRE
49	71175918	2	NUT, TUBELESS TIRE
50	539651M1	2	PLUG, RIM HOLE, TUBELESS TIRE
51	71372132	2	WHEEL RIM, 14.9 X 24 TIRE
	71372133	2	WHEEL RIM, 16.9 X 24 TIRE
	71399115	2	WHEEL RIM, 16.9 X 26 TIRE

MC00377
PR: t05b15n00a0021

REAR AXLE & WHEELS
REAR WHEEL ASSIST

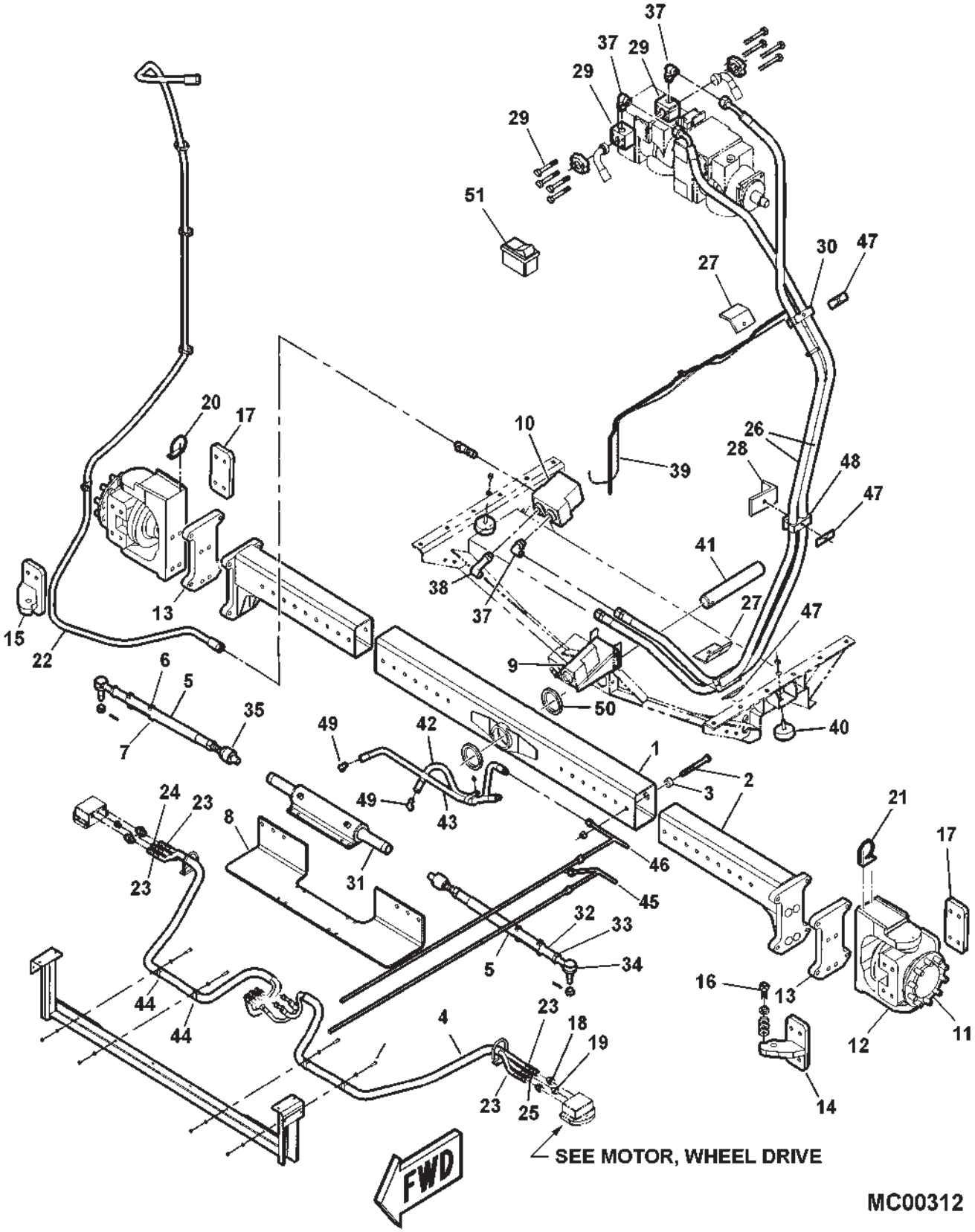

ITEM	NUMBER	QTY	DESCRIPTION
1	71389394	1	CENTER BEAM ASY, W/ BUSHING
	2441250W1	2	BUSHING
2	71397196	2	EXTENSION ASY.
	100801	8	CAPSCREW, 3/4-10 X 7 GR 8
	70927879	6	CAPSCREW, 3/4-10 X 7-1/2 GR 8
	71397179	14	NUT, HEX FLNG SERR LOCK, 3/4-10
3	112253W1	8	SPACER SLEEVE, HARDENED
4	71397181	2	SLEEVE, CORDURA-PROTECTIVE
5	71397199	2	TIE ROD WLDMT, OUTER
	70924746	4	CAPSCREW, 1/2-13 X 3-1/2 GR8
	71397205	4	NUT, LOCK, 1/2-13
6	71359864	4	CLAMP HALF, TIE ROD
7	71359865	4	SPACER, TIE ROD BOLT, 7/8 OD X .53 ID
8	71397198	1	MOUNT WLDMT, CYLINDER
9	71397204	1	BRACKET, VALVE
	70921210	4	CAPSCREW, 3/8-16 X 1 GR5
	Y704734	4	NUT, HEX FLNG. TOP LOCK 3/8-16
10	71396625	1	VALVE ASY.
	70923470	2	CAPSCREW, 3/8-16 X 1-1/2 GR8
	705038	2	LOCKWASHER, 3/8 REG
11	71396580	2	MOTOR, WHEEL DRIVE, 1250CC
			(SEE WHEEL MOTOR UNIT FOR BREAKDOWN)
12	71397193	2	C-FRAME
	70950420	16	CAPSCREW, M20-2.5 X 80
	70934704	16	WASHER, 3/4 HARD
	71397186	8	DOWEL PIN
13	71397197	2	ENDPLATE
14	71397202	1	EAR WLDMT, TIE ROD (LH)
	71397187	4	CAPSCREW, M20-2.5 X 40, CL 10.9
	70934704	4	WASHER, 3/4 HARD
	71397186	2	DOWEL PIN
15	71397203	1	EAR WLDMT, TIE ROD (RH)
	71397187	4	CAPSCREW, M20-2.5 X 40, CL 10.9
	70934704	4	WASHER, 3/4 HARD
	71397186	2	DOWEL PIN
16	7771629	2	CAPSCREW, 5/8-11 X 2 GR8
	71397180	12	WASHER, HEAVY FLAT, 5/8
	364377X1	2	NUT, JAM 5/8-11 GR5
17	71397185	2	PLATE, MOUNT
	71397187	8	CAPSCREW, M20-2.5 X 40, CL 10.9
	70934704	8	WASHER, 3/4 HARD

CONTINUED

REAR AXLE & WHEELS
REAR WHEEL ASSIST

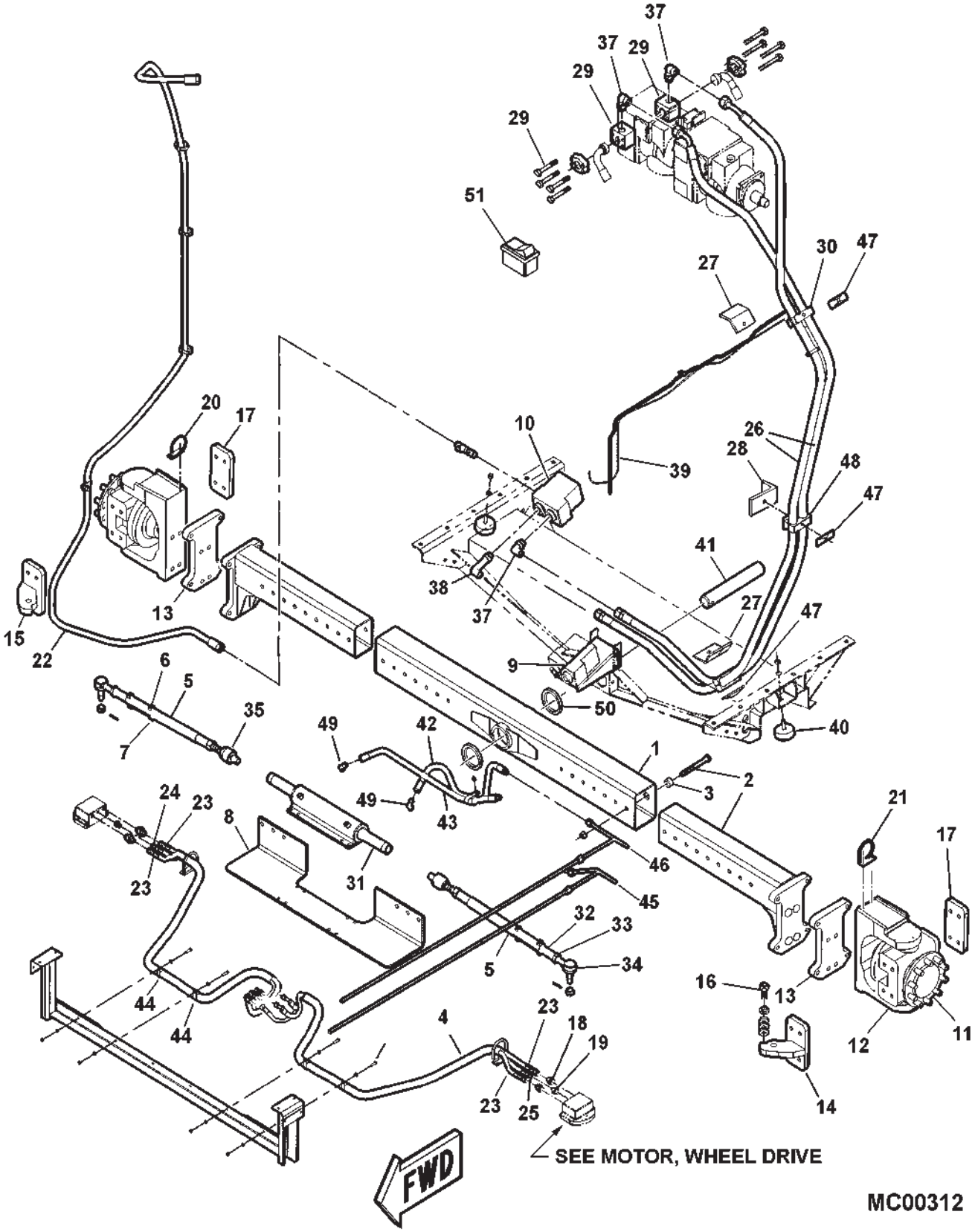

ITEM	NUMBER	QTY	DESCRIPTION
18	70924296	4	ADAPTER, 1-1/16-12 ORB X 3/4-16 JIC
	70921206	1	O-RING, .116 X .924 ID
19	360202X91	2	ADAPTER, 3/4-16 ORB X 9/16-18 JIC
	70921349	1	O-RING, .087 X .644 ID
20	71397190	1	GUIDE, HOSE (RH)
21	71397191	1	GUIDE, HOSE (LH)
	71396601	4	CAPSCREW, SOCKET HD, M10-1.5 X 25
22	71395787	1	HOSE ASY., RWA TO RESERVIOR, 180" LONG
	70925442	5	TIE, SELF LOCKING
	70925621	1	CLAMP, 1.0 TUBE X .406 HOLE
	70921210	1	CAPSCREW, 3/8-16 X 1 GR5
	705038	1	LOCKWASHER, 3/8
	70916950	1	NUT, REG 3/8-16
23	1077183M91	4	HOSE ASY. (HI-PRESSURE) (O.L. 69")
24	112283W1	1	HOSE ASY., DRAIN (O.L. 71") (RH)
25	71397189	1	HOSE ASY., DRAIN (O.L. 67") (LH)
26	71384279	2	HOSE ASY, PUMP PRESSURE (O.L. 132")
27	101843M1	2	BRACKET, STEERING HOSE
	70921210	2	CAPSCREW, 3/8-16 X 1 GR5
	705038	2	LOCKWASHER, 3/8
	70916950	2	NUT, REG 3/8-16
28	71384284	1	BRACKET, CLAMP
	70921210	1	CAPSCREW, 3/8-16 X 1 GR5
	705038	1	LOCKWASHER, 3/8
	70916950	1	NUT, REG 3/8-16
29	71395167	2	ADAPTOR, MANIFOLD BLOCK
	70926533	2	O-RING .139 X 1.296 ID, VITON
	773697	8	CAPSCREW, 7/16-14 X 4
30	102028M1	1	CLAMP, DOUBLE, 1-1/4 DIA
31	71396617	1	CYLINDER ASY, STEERING (SEE BREAKDOWN)
	70921898	8	CAPSCREW, 1/2-13 X 2 GR8
	Y705624	8	WASHER, 1/2 NARROW
	Y704742	8	NUT, HEX FLNG TOP LOCK, 1/2-13
32	71397201	2	TUBE, INNER TIE ROD
33	71397184	2	NUT, JAM 1-1/4-12 LH
34	71397195	2	END, TIE ROD LH
	-----	2	NUT, SLOTTED HEX
	70925719	2	PIN, COTTER, 1/8 X 2
35	71397192	2	SOCKET, INLINE
36	71397194	2	NUT, JAM M30-1.5
37	71355395	3	ELBOW, 90 DEG. -12 ORB X -12 ORFS
	70923843	3	O-RING, .070 X .739 ID
	70921206	3	O-RING, .116 X .924 ID

CONTINUED

REAR AXLE & WHEELS
REAR WHEEL ASSIST

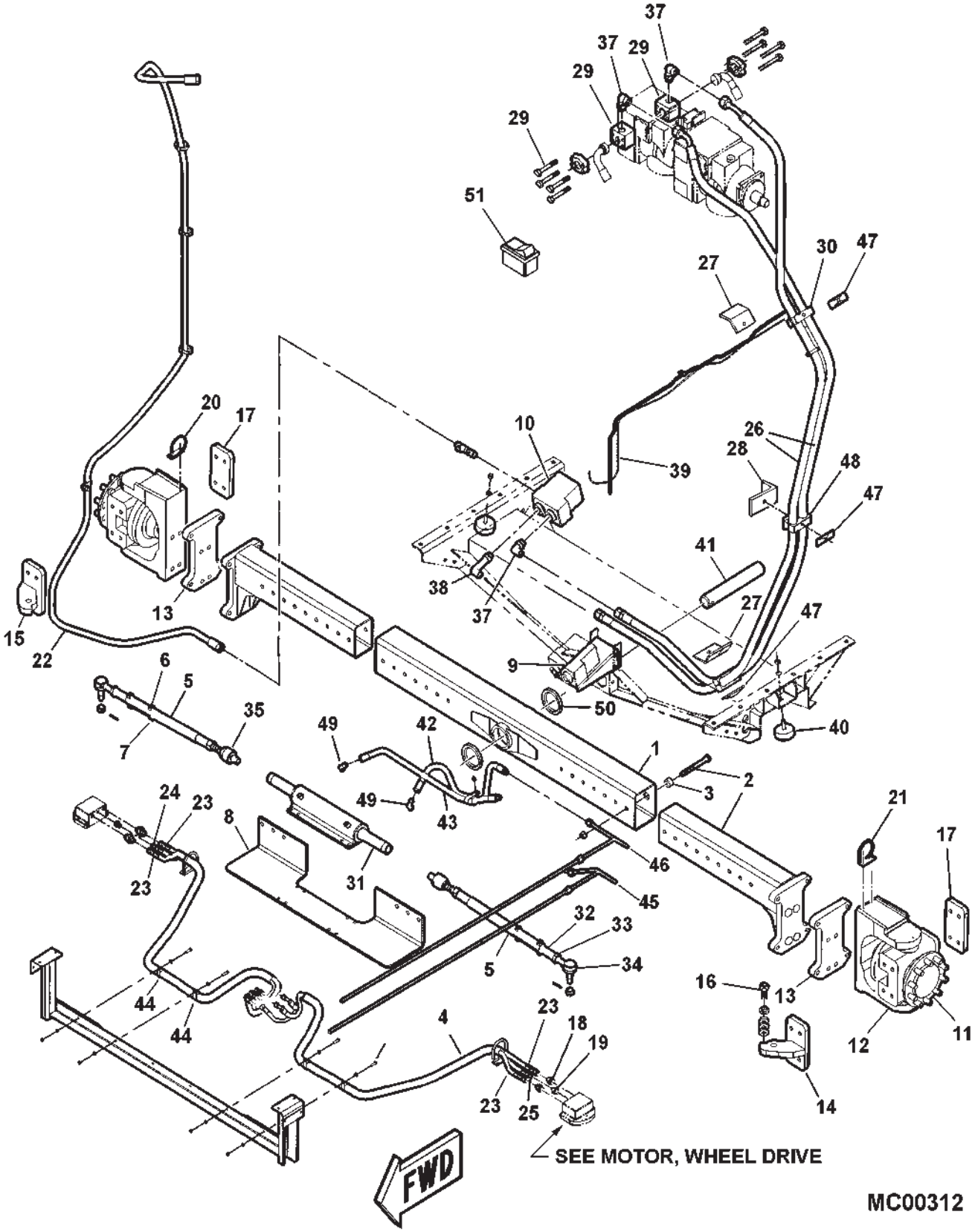

ITEM	NUMBER	QTY	DESCRIPTION
38	71359897	1	ELBOW, 90 DEG., LONG
	70923843	1	O-RING, .070 X .739 ID
	70921206	1	O-RING, .116 X .924 ID
39	102367M1	1	WIRE ASY, 147" LONG
	70925442	6	TIE, SELF LOCKING
40	71355063	2	STOP, PIVOT
	Y705046	2	WASHER, LOCK, 1/2
	704031	2	NUT, 1/2-13
41	2625050W1	1	PIN, REAR AXLE PIVOT
	70920272	1	CAPSCREW, 1/2-13 X 5 GR5
	704858	1	NUT, HEX TOP LOCK, 1/2-13
42	71395173	1	HOSE ASY., STEERING CYL. 41.5" (LH)
43	71395172	1	HOSE ASY., STEERING CYL. 29.4" (RH)
44	70929785	4	CLAMP, 2.00 TUBE X .531 HOLE
	70921210	2	CAPSCREW, 3/8-16 X 1 GR5
	70920415	2	CAPSCREW, 3/8-16 X 1-1/4 GR5
	705038	4	LOCKWASHER, 3/8
	70916950	4	NUT, REG 3/8-16
45	71395789	1	TUBE ASY., STEERING (RH)
46	71398228	1	TUBE ASY., STEERING (LH)
	70929872	1	CLAMP, .875 TUBE X .406 HOLE
	70921210	1	CAPSCREW, 3/8-16 X 1 GR5
	705038	1	LOCKWASHER, 3/8
	70916950	1	NUT, REG 3/8-16
47	101842M1	3	COVER PLATE, DOUBLE HYD HOSE
	70926106	3	CAPSCREW, 5/16-18 X 3-1/4
	7704117	3	NUT, HEX TOP LOCK, 5/16-18
48	101841M1	2	CLAMP PAIR, DOUBLE, 1-1/2 DIA
49	70922523	2	ELBOW, 90 DEG, 9/16-18 JIC X 9/16-18 ORB
	70921885	AR	O-RING, .078 X .468
50	2441340W1	2	WASHER, THRUST
51	71387414	1	SWITCH, RWA, ON/OFF
52	71390186	2	WHEEL, 26 X DW16, 10 BOLT
			(FOR 18.4 X 26 TIRE)
	71359851	20	LUG NUT, M20
53	71184188	2	DECAL, NUT TORQUE, (400 FT.LB.)
54	539651M1	2	PLUG ASY, RIM HOLE (FOR TUBELESS TIRE)
55	7027469	2	VALVE ASY, CLAMP-IN (COMPLETE)(INCL.
56	71170388	2	VALVE HOUSING & CORE ASY W/ CAP
57	71175919	2	WASHER, ADAPTER HSG. (FOR TUBELESS TIRE)
58	71175918	2	NUT, ADAPTER HSG. (FOR TUBELESS TIRE)
-	71400002	AR	* KIT, RWA AXLE ASY. (FIELD INSTALLED)
			* ORDER THRU DEALER CENTRAL

MC00312
PR: 420

REAR WHEEL ASSIST
WHEEL MOTOR UNIT

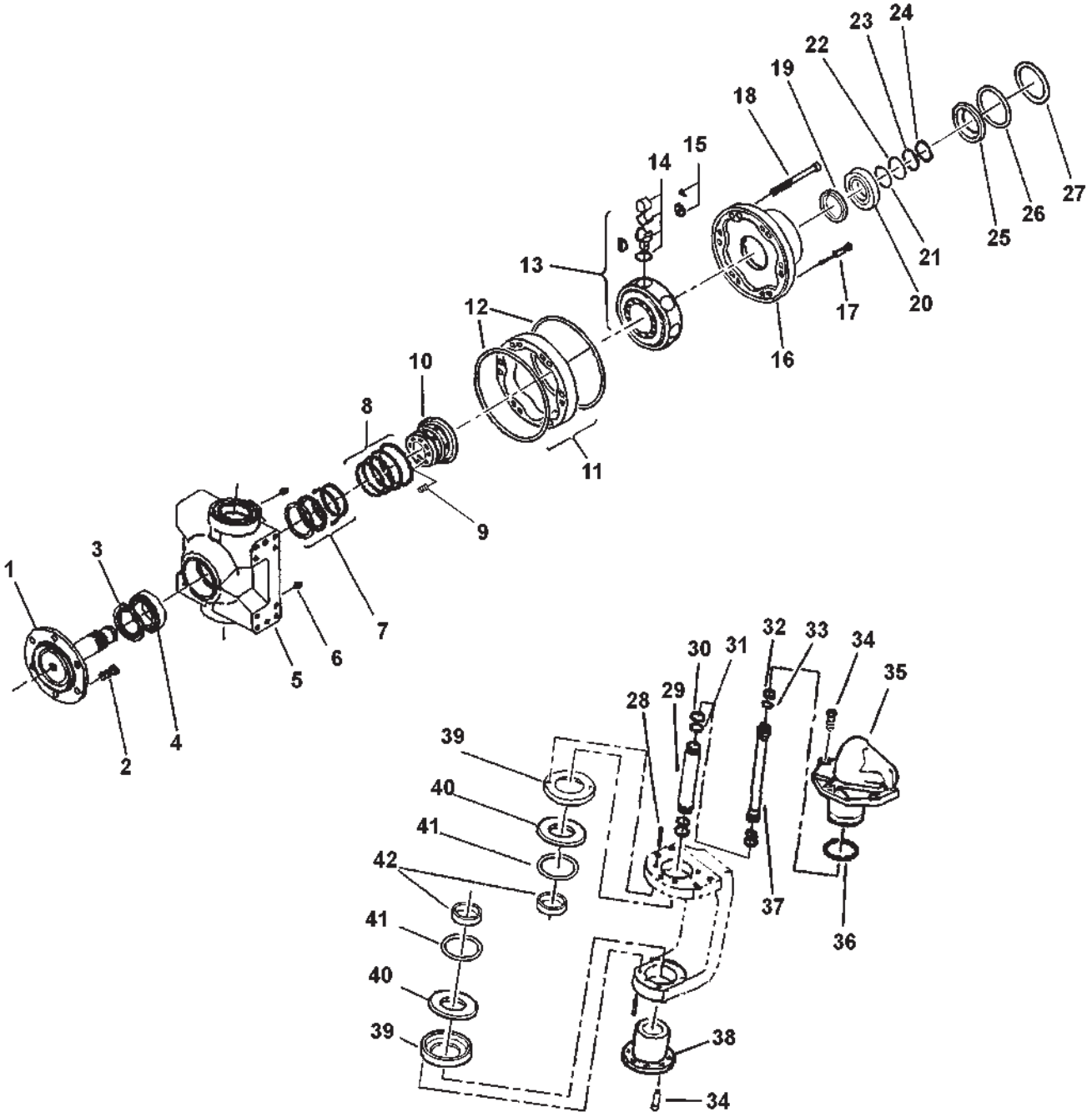

MC00316

ITEM	NUMBER	QTY	DESCRIPTION
-	71396580	AR	MOTOR, RWA, 1250 CC
1	71396597	1	SHAFT, WHEEL HUB
2	71359912	10	STUD, M20
3	71396590	1	DEFLECTOR, GREASE SEAL
4	71359946	1	BEARING, OUTER
5	71396584	1	SUPPORT, BEARING
6	71396596	2	FITTING, GREASE
7	71396585	1	SEAL, SHAFT, INNER
8	1081158M91	1	SEAL KIT, DISTRIBUTOR
9	1081159M1	8	SPRING
10	71359922	1	DISTRIBUTOR, VALVE BLOCK
11	1081151M1	1	CAM RING, (INCL. ITEM 12)
12	71359927	2	O-RING
13	112202W91	1	CYLINDER BLOCK ASY.
14	71396614	10	PISTON KIT
15	112204W91	1	PISTON RETAINER KIT (SERVICES 10 PISTONS)
16	71396598	2	SAFETY PIN
17	71396593	1	HOUSING BACK
18	71396595	14	CAPSCREW, SOCKET HEAD, M12 X 75
19	71396592	1	SPACER
20	71396586	1	BEARING, INNER
21	71396587	1	SHIM PACK
22	71396591	1	SPACER, BEARING
23	71396588	2	RETAINING RING, SPLIT
24	71396589	1	SNAP RING
25	71396581	1	COVER PLATE
26	71396583	1	O-RING
27	71396582	1	SNAP RING
28	71396605	8	CAPSCREW, SOCKET HEAD, M6 X 35
29	71396606	1	PIPE, OUTER
30	71396611	2	RING, BACK-UP, OUTER PIPE
31	71396610	2	O-RING, OUTER PIPE
32	71396613	2	RING, BACK-UP, INNER PIPE
33	71396612	2	O-RING, INNER PIPE
34	71396601	9	CAPSCREW, SOCKET HEAD, M10 X 25
35	71396599	1	PIN, TOP
36	71396608	1	SEAL, TOP PIN
37	71396607	1	PIPE, INNER
38	71396600	1	PIN, BOTTOM
39	71396604	2	SEAL, COVER, PROTECTOR
40	71396603	2	WASHER, TRUST
41	71396609	2	SEAL
42	71396602	2	BUSHING
-	71396594	1	SHIM (NOT ILLUSTRATED)
-	71396615	AR	SEAL KIT (INCL. ITEMS 3, 7, 8, 12 21, 26)
-	71396616	AR	BEARING KIT, KIN PIN (INCL. ITEMS 36, 40, 41, 42)

MC00316
PR: 426

REAR WHEEL ASSIST
SELECTOR VALVE & FLOW DIVIDER

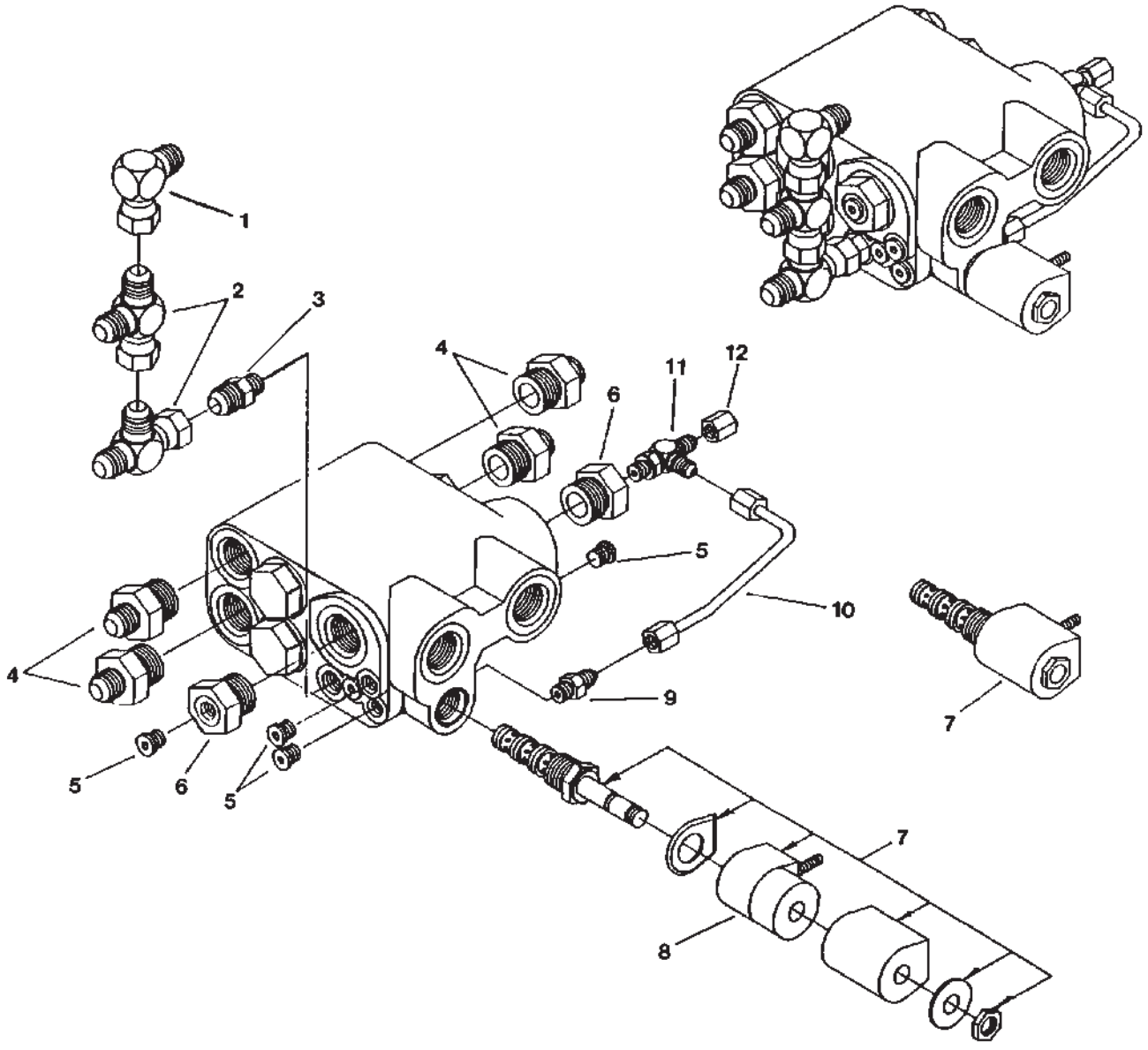

MC00074

ITEM	NUMBER	QTY	DESCRIPTION
-	71396625	1	VALVE ASSEMBLY
1	70921279	1	ELBOW, SWIVEL, 3/4-16 37 DEG. FLARE
2	70921298	2	TEE, SWIVEL RUN, 3/4-16 37 DEG. FLARE
3	70924403	1	CONN, STR. 9/16-18 ORB X 3/4-16 JIC
	70921885	1	O-RING, .078 X .468 ID
4	70924296	4	CONN. STR. 1-1/16-12 ORB X 3/4-16 JIC
	70921206	4	O-RING, .116 X .924 ID
5	70928605	4	PLUG, HEX SOCKET, 7/16-20 ORB-M
	70921883	4	O-RING, .072 X .351 ID
6	1077239M91	2	REDUCER, ORB, 1-1/16-12 M X 7/16-20 FEM.
	70921206	2	O-RING, .116 X .924 ID
7	71359890	1	SOLENOID CARTRIDGE VALVE
8	71359891	1	SOLENOID COIL
9	70923163	1	CONN. STR. 7/16-20 JIC X ORB MALE
	70921883	1	O-RING, .072 X .351 ID
10	71359889	1	TUBE ASY, PILOT PRESSURE
11	70924783	1	TEE, ADJ. RUN, 7/16-20 JIC X ORB
	70921883	1	O-RING, .072 X .351 ID
12	70921467	1	CAP, HEX, 7/16-20 JIC FEM.
	1077240M91	1	PLUG, HEX SOCKET, 7/16-20 ORB
	1077238M91	AR	PLUG, MODIFIED, 3/4-16 ORB
	70922874	AR	PLUG, HEX SOCKET, 5/16-24 ORB
-	112235W91	--	KIT, SEAL, ET-II ORB O-RINGS

MC00074
PR: 428

WHEELS
DRIVE

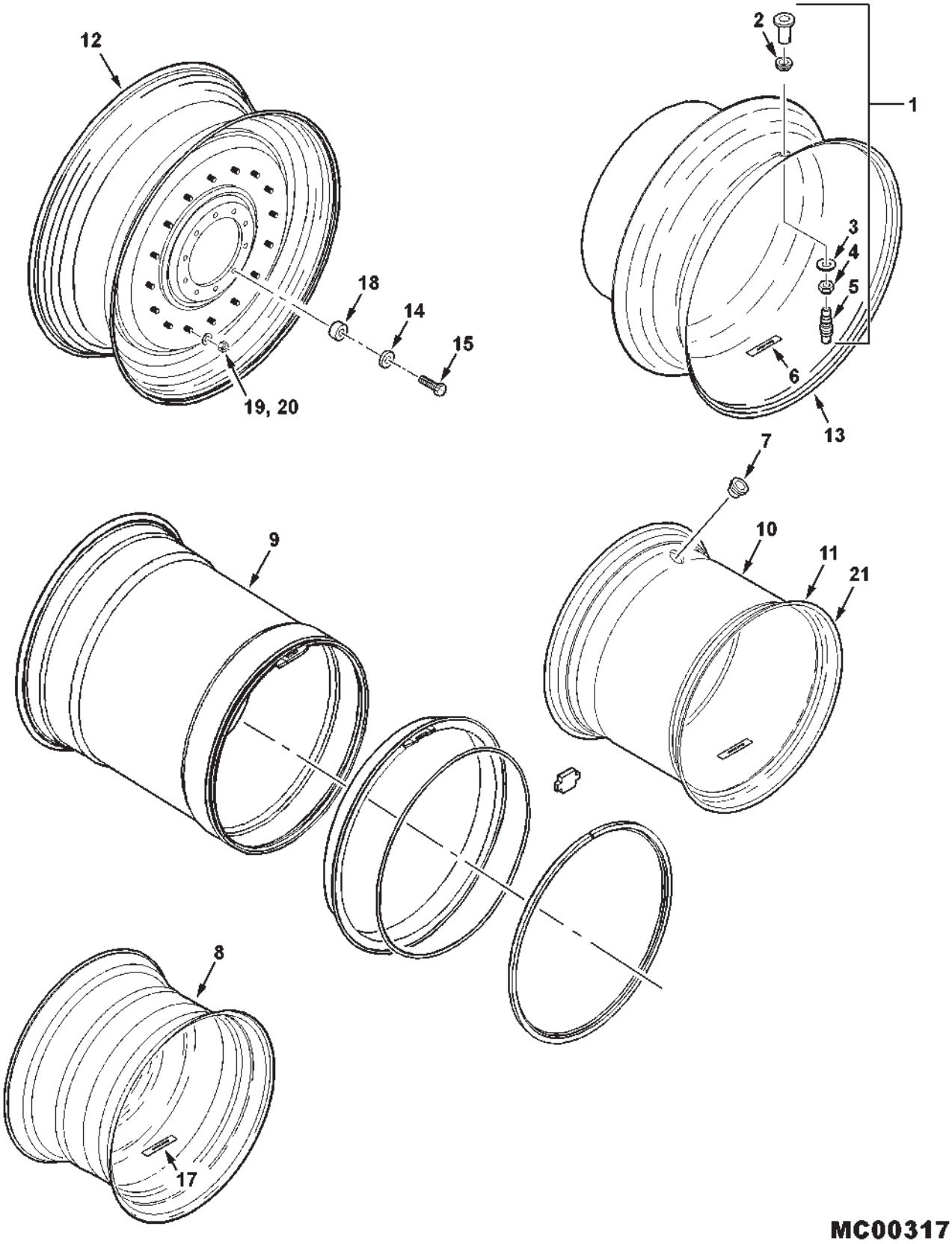

ITEM	NUMBER	QTY	DESCRIPTION
1	7027469	2	VALVE ASY, CLAMP-IN (COMPLETE)(INCL ITEMS 2, 3, 4, 5)(TUBELESS TIRE)
	71169204	AR	PLUG ASY (USED IN PLACE OF ITEM 5)
2	71170390	2	GROMMET, RIM
3	71175919	2	WASHER, ADAPTER HSG
4	71175918	2	NUT, ADAPTER HSG
5	71170388	2	VALVE HOUSING & CORE ASY, W/ CAP
6	71184188	2	DECAL, TORQUE (400 FT. LBS.)
7	539651M1	1	PLUG, RIM HOLE (FOR TUBELESS TIRE)
8	71328912	2	WHEEL - FOR 16.9 X 34 TIRE
9	71396374	2	WHEEL ASY, 32 X 36DWW -FOR 73X44X32 TIRE & 1050/50R-32 TIRE. (INCL. FOLLOWING, LESS VALVE ASY)
	71398241	2	WHEEL, LESS COMPONENTS
	71398242	2	RING, DRIVER, 32"
	71398243	2	LOCKRING, 32"
	71398244	2	O-RING, 32"
	71398245	2	DRIVER KEY
	71401733	2	VALVE STEM ASY, CLAMP-IN
10	71361406	2	WHEEL - FOR 30.5L X 32 TIRE
11	71361406	2	WHEEL - FOR 800/65R-32 TIRE
	71401735	2	WHEEL - FOR 900/60R-32 TIRE
12	71384878	2	WHEEL, INNER DUAL - FOR 18.4R-42 TIRE (INCLS STUD, PRESS-IN, 16 PER WHEEL)
	71398211	2	WHEEL, INNER DUAL - FOR 20.8R-38 TIRE (INCLS STUD, PRESS-IN, 16 PER WHEEL)
	71396348	2	WHEEL, INNER DUAL - FOR 20.8R-42 TIRE (INCLS STUD, PRESS-IN, 16 PER WHEEL)
	71388713	32	STUD, WHEEL (PRESS-IN) 3/4-16 UNF
13	71384879	2	WHEEL, OUTER DUAL - FOR 18.4R-42 TIRE
	71398212	2	WHEEL, OUTER DUAL - FOR 20.8R-38 TIRE
	71396349	2	WHEEL, OUTER DUAL - FOR 20.8R-42 TIRE
14	705665	20	WASHER, HARD, 7/8 WIDE
15	70925806	20	CAPSCREW, 7/8-9 X 3" GR8
17	71348455	2	DECAL, TORQUE, INNER WHEEL (600FT.-LBS)
18	71370926	20	SPACER, WHEEL BOLT (INNER WHEEL)
19	70936298	32	NUT, HVY HEX, 3/4-16UNF GR8
20	Y705566	32	WASHER, HARD, .812 X 1.50 X 9 GA
21	71370934	4	WHEEL, DUAL - FOR 24.5-32 TIRES
	71404432	2	SPACER SPOOL, 19.5" WIDE (NOT ILLUST'D)
	700724394	20	CAPSCREW, 7/8-9 X 3-3/4 GR8
	700724395	20	CAPSCREW, M22 X 2.25 X 65 MM CL 10.9
	71404430	1	PLATE,SPACER, 1" (DECK EXT'N)(NOT ILLUS)

MC00317
PR: 430

BELTS
LEFT

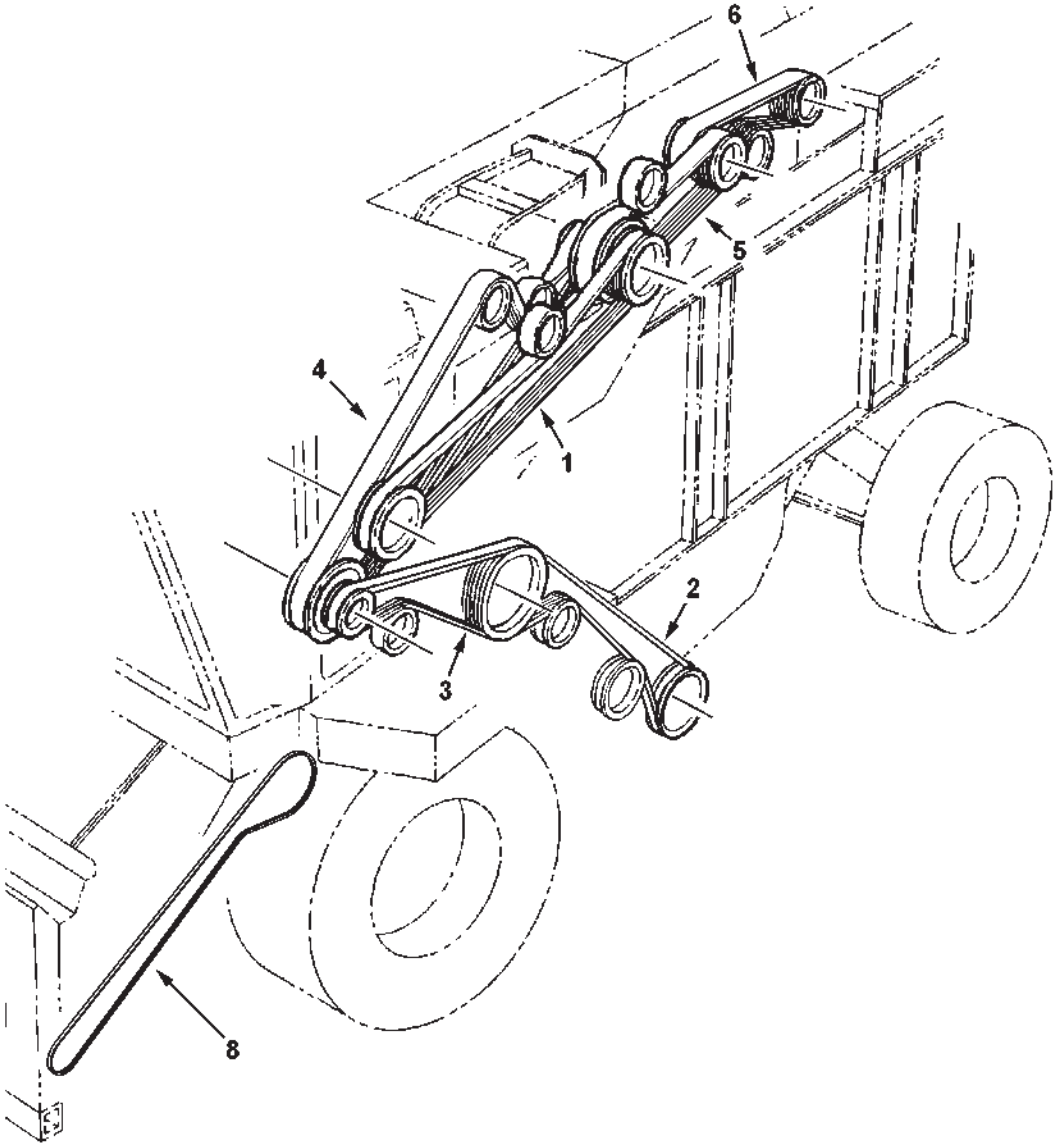

MC00389

BELTS
LEFT

ITEM	NUMBER	QTY	DESCRIPTION
1	101102M1	1	BELT, UNLOADER, 149.3"
2	227455M1	1	BELT,GRAIN ELEV, 130"(PRIOR S/N HP87101)
	71403685	1	BELT,GRAIN ELEV,129.5"(EFF. S/N HP87101)
3	71390199	1	BELT, SHAKER SHOE PITMAN, 100.8"
4	71386352	1	BELT, BEATER, 175.3"
5	71390188	1	BELT, MAIN COUNTERSHAFT, 143.0"
6	71396569	1	BELT, TANDEM PUMP, 90.2"
8	71398388	1	BELT, HDR C'SHAFT TO PIVOT SHAFT, 195.5" (EFF. S/N HP87101)

MC00389
PR: 432

BELTS
RIGHT

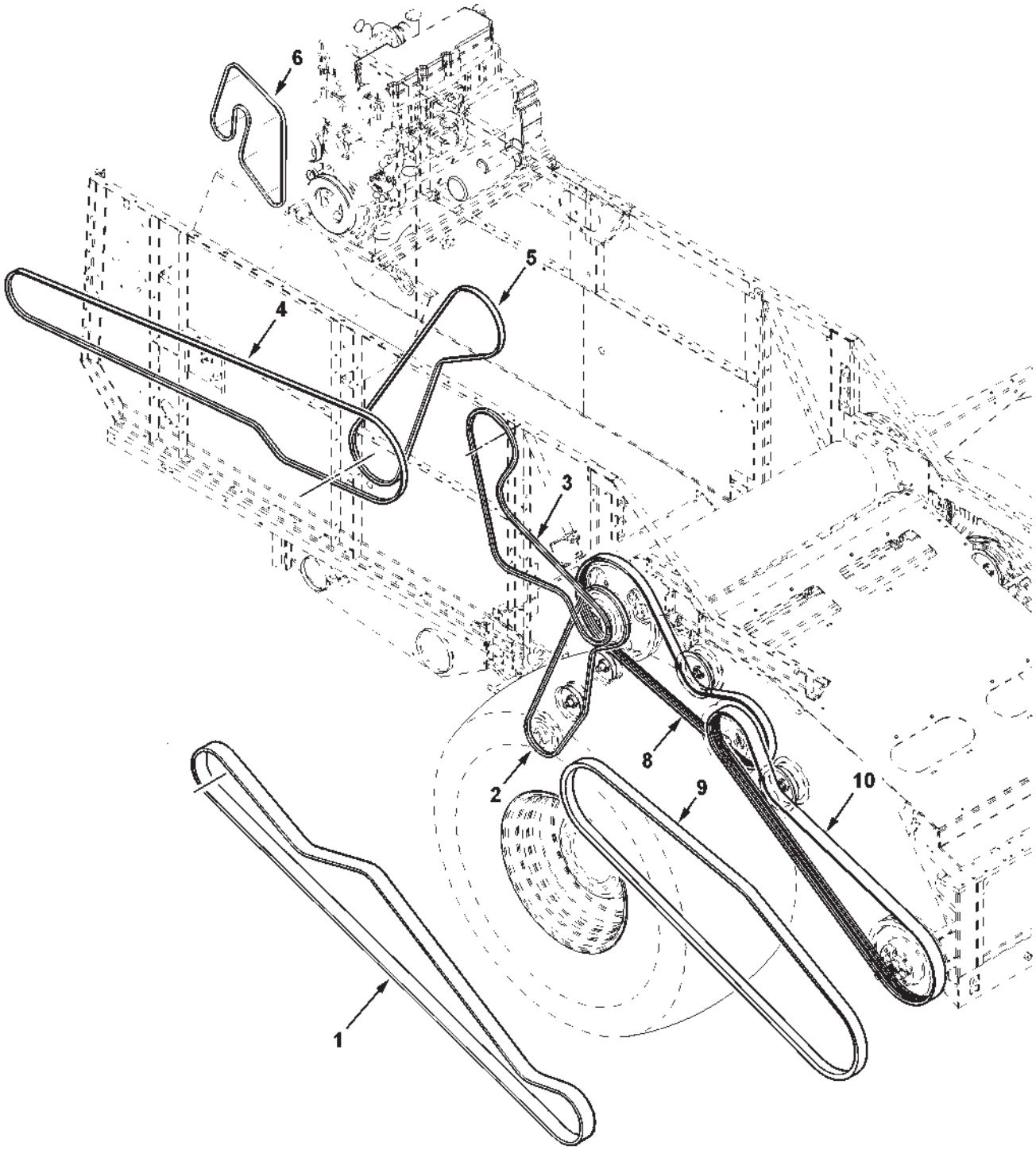

CHL0019

BELTS
RIGHT

ITEM	NUMBER	QTY	DESCRIPTION
1	71379105	1	BELT, BEATER TO HDR C'SHAFT, 4-V, 217.0" (PRIOR S/N HP87101)
2	71394352	1	BELT, V/S FAN, 115"
3	71385801	1	BELT, RETURN ELEVATOR, 109.6"
4	71388712	1	BELT, CHOPPER SECONDARY, 213.75" (PRIOR S/N HR87101)
	71406339	1	BELT, CHOPPER SECONDARY, 214.2" (EFF. S/N HR87101)
	1680230W1	1	BELT, SPREADER, 233.2"
5	227455M1	1	BELT, SPREADER JACKSHAFT, 130"
	71385837	1	BELT, CHOPPER PRIMARY, 123.75" (PRIOR S/N HR87101)
	71406361	1	BELT, CHOPPER PRIMARY, 136.5" (EFF. S/N HR87101)
6	227-1364	1	BELT, ALTR'R AND COMPR'R (SOURCE: CAT)
8	71398384	1	BELT,BEATER TO FEEDR HOUSE JKSHAFT, 136" (EFF. S/N HP87101)
9	71399505	1	BELT, V.S. TO HEADER C'SHAFT, HM, 157.5" (EFF. S/N HP87101)
10	71399519	1	BELT, JKSHAFT TO HDR C'SHAFT, 3-V,160.5" (EFF. S/N HP87101)

CHL0019
PR: 434

CHAINS
DRIVE

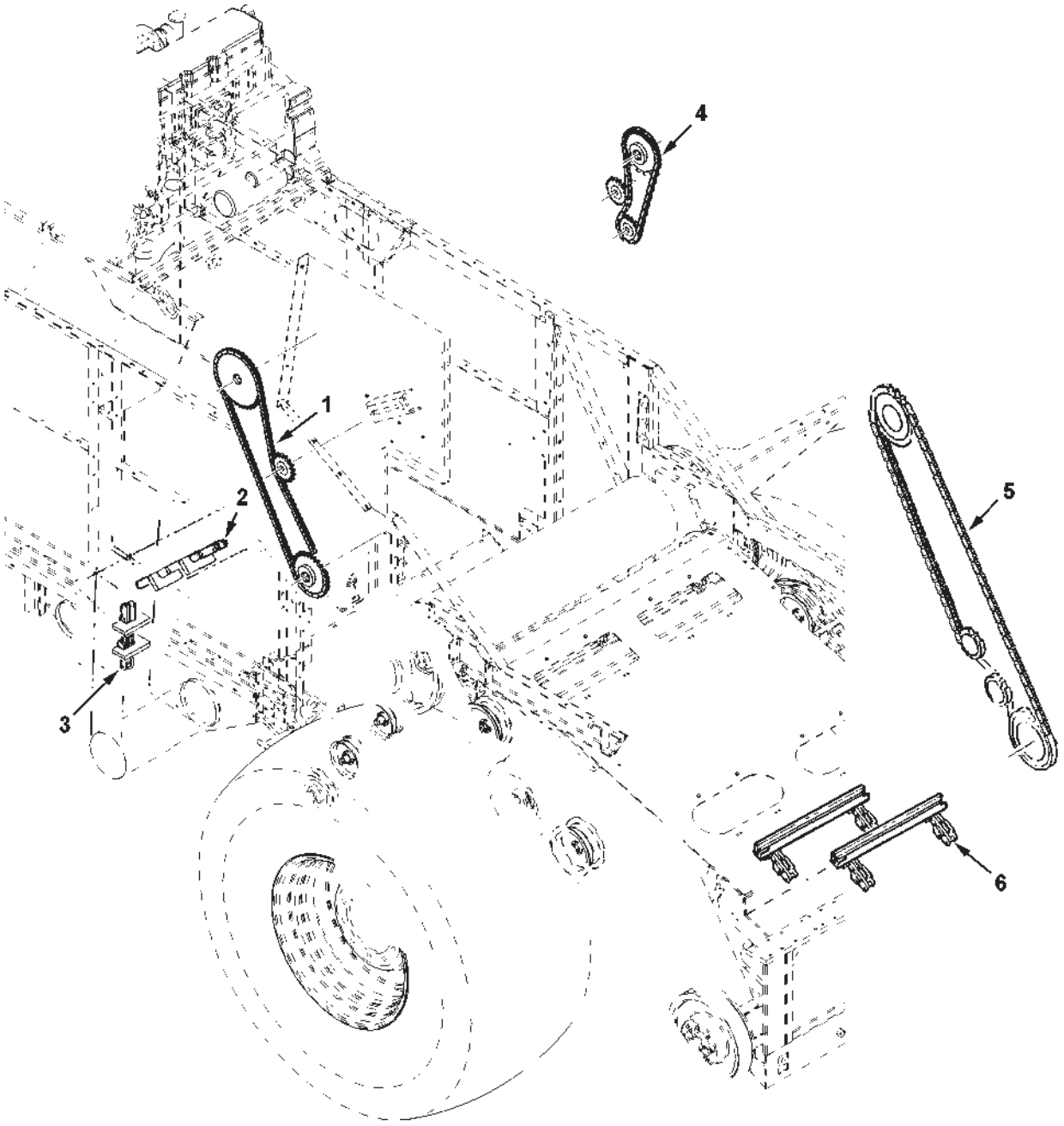

MC00322

CHAINS
DRIVE

ITEM	NUMBER	QTY	DESCRIPTION
1	Y851774	1	CHAIN ASY, BIN FILL, #50, 101 PITCHES, (PLUS 1 CONNECTR)(PRIOR S/N HN87101)
	-----	1	CHAIN #50, 109 PITCHES (USE 107 LINKS OF BULK CHAIN, PLUS 1 CONNECTOR #50 & 1 OFFSET LINK #50 (EFF. S/N HN87101)
	840327M91	1	CHAIN #50, 5/8 PITCH, BULK (10 FT)
	70913682	1	LINK, CONNECTOR, #50
	70913680	1	LINK, OFFSET, #50
2	2615233W92	1	CHAIN ASY, RETURN ELEV. (119 LINKS) (PRIOR S/N HP87101)
	71406795	1	CHAIN ASY, RETURN ELEV. (118 LINKS) (EFF. S/N HP87101)
	70927035	AR	LINK, OFFSET
	70927034	AR	LINK, ROLLER
	329951M91	AR	LINK, CONNECTOR
	2605880W91	29	LINK, ATTACHING, PAIR
	W1511670	29	CUP, FLIGHT
	70921333	58	CAPSCREW, 5/16-18 X 1
	70923362	58	NUT, CENTER LOCK, 5/16-18
	70917642	58	WASHER, 5/16, WIDE
	2635690W1	58	SPACER
3	71393534	1	CHAIN ASY., GRAIN ELEVATOR
	71393533	1	CHAIN ASY, LESS SCRAPERS
	71149388	AR	LINK, ATTACHING
	70927034	AR	LINK, ROLLER
	70927035	AR	LINK, OFFSET
	71364946	37	SCRAPER, CHAIN, GR ELEV
	70927401	74	CAPSCREW, 1/4-20 X 1.0
	700709601	74	WASHER, FLAT 1/4
	Y704395	74	LOCKNUT, 1/4-20
4	-----	1	CHAIN, UNLOADER DR, #60, 70 PITCHES (USE 69 LINKS OF BULK CHAIN AND 1 CONNECTOR)
	70921050	AR	CHAIN, #60, 3/4 PITCH, BULK (10 FT)
	70914584	AR	LINK, CONNECTOR, #60
5	71149992	1	CHAIN ASY., FEEDER DRIVE, #60 (PRIOR S/N HP87101)
	70914584	AR	LINK, CONNECTOR, #60
6	71449007	1	CHAIN ASY, FEEDER CONVEYOR, W/SLATS (PRIOR S/N HP87101)
	71149999	1	CHAIN ASY, CENTER(PRIOR S/N HP87101)
	71449001	2	CHAIN ASY., SIDE (PRIOR S/N HP87101)
	71449018	1	CHAIN ASY, FEEDER CONVEYOR, W/SLATS (EFF. S/N HP87101)
	71449016	1	CHAIN ASY, CENTER (EFF. S/N HP87101)
	71449015	2	CHAIN ASY., SIDE (EFF. S/N HP87101)
	71149894	AR	LINK, ATTACHING
	70937300	AR	LINK, ROLLER
	71149896	AR	LINK, OFFSET, INCL. PIN & LOCKNUT
	71149895	AR	LINK, COUPLING
	70920397	AR	NUT, NYLON LOCK, 1/4-20
	71395877	28	SLAT, FEEDER CHAIN
	70937603	112	CAPSCREW, LOCKING, 1/2-13 X 3/4 GR8
	70928512	112	NUT, 1/2-13 REG GR8

BEACON LIGHT

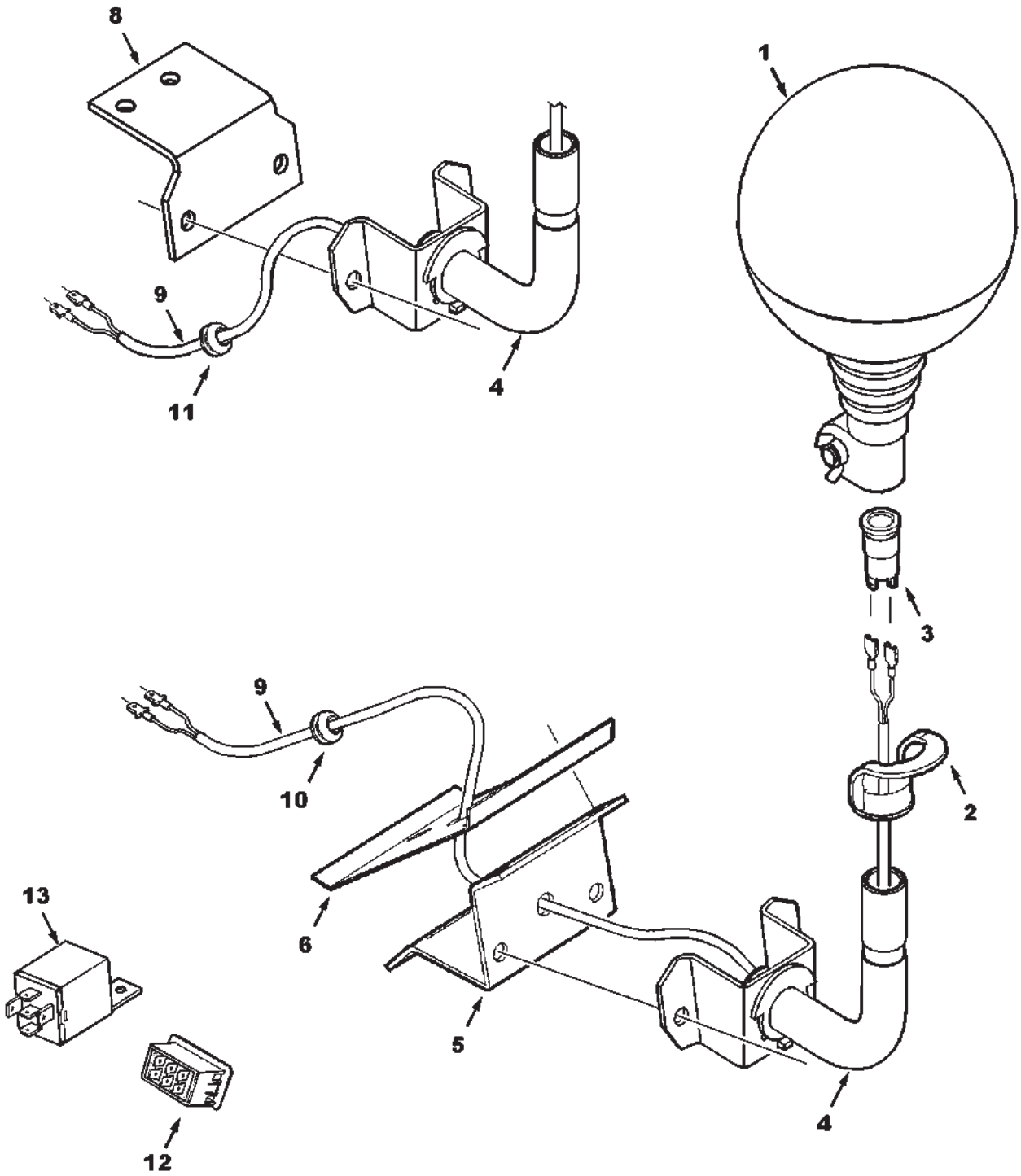

MC00364

BEACON LIGHT

ITEM	NUMBER	QTY	DESCRIPTION
-	71395048	1	KIT, BEACON LIGHT
1	3715144M92	2	BEACON
2	3617860M1	2	PLUG, BEACON
3	3617859M1	2	CAP, BEACON
4	3778093M91	2	SUPPORT, BEACON
	7883382	4	SCREW, HEX WSHR HD, 3/8-16 X 1
	70931211	4	LOCKNUT, SERRATED FLANGE, 3/8-16
5	71391403	1	BRACKET, BEACON MTG. (FRONT)
	7883382	3	SCREW, HEX WSHR HD, 3/8-16 X 1
	70931211	3	LOCKNUT, SERRATED FLANGE, 3/8-16
6	71391404	1	PLATE, BACKUP (FRT)
8	71388391	1	BRACKET, BEACON MTG. (REAR)
9	71395830	2	HARNESS, BEACON LIGHT (FRT & REAR)
10	70923510	1	GROMMET, RUBBER, .375 ID X 3/4 OD (FRT)
11	7827629	1	GROMMET, RUBBER, .375 ID X 5/8 OD (REAR)
12	71387419	1	SWITCH, BEACON LIGHT

MC00364
PR: 464

RECOMMENDED DEALER STOCK

RECOMMENDED DEALER STOCK

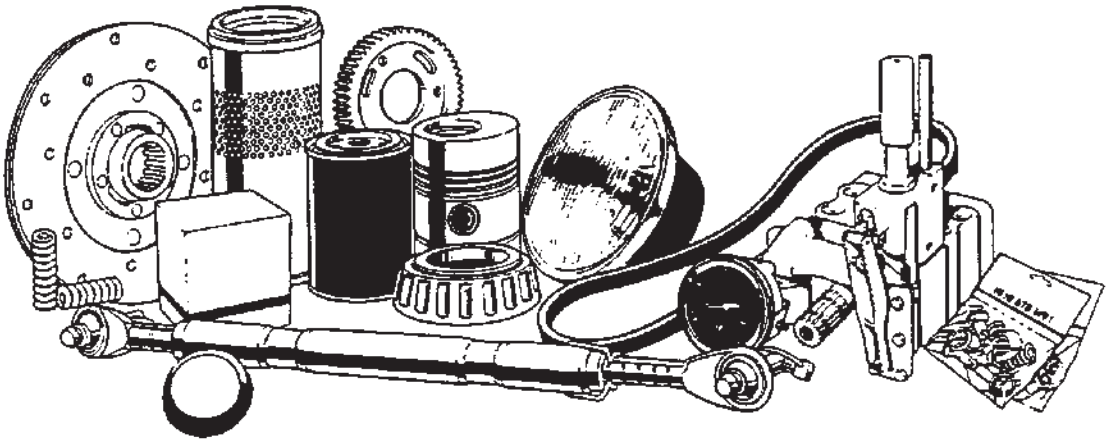

ITEM	NUMBER	QTY	DESCRIPTION
-	71315999	2	ABSORBER, SHOCK
-	71391153	1	AIR FILTER
-	71396957	1	ALTERNATOR, 150 AMP (LEECE NEVILLE)
-	RE210066	1	ANTENNA
-	79018975	4	BATTERY, GROUP 31
-	22602X	2	BEARING
-	71306656	2	BEARING
-	71306660	2	BEARING
-	833059M1	2	BEARING
-	50021	2	BEARING
-	50468	2	BEARING
-	711770	4	BEARING
-	31-1588410	2	BEARING
-	354920X1	2	BEARING
-	831822M1	2	BEARING
-	K4037	2	BEARING
-	71335184	2	BEARING ASY. 1.75
-	71308770	2	BEARING KIT
-	71308951	4	BEARING KIT
-	70590709	2	BEARING, BALL, W/COLLAR
-	71398331	2	BEARING, BALL
-	1109055	2	BEARING, BALL
-	1138480	2	BEARING, BALL
-	1139003	1	BEARING, BALL
-	71154722	2	BEARING, BALL
-	71195913	2	BEARING, BALL
-	10033	2	BEARING, BALL, W/O COLLAR
-	70590704	1	BEARING, BALL, W/O COLLAR
-	8050866	1	BEARING, CAM FOLLOWER
-	71122510	2	BEARING, FLANGE
-	71309117	2	BEARING, FLANGE
-	71308984	6	BEARING, W/ COLLAR
-	71396569	1	BELT, TANDEM PUMPS
-	71386352	1	BELT, BEATER DRIVE
-	71385837	1	BELT, CHOPPER PRIMARY, 123.75"
-	71406361	1	BELT, CHOPPER PRIMARY, 136.5"
-	71379105	1	BELT, FEEDER DRIVE
-	71390188	1	BELT, MAIN C'SHAFT
-	71390199	1	BELT, PITMAN DRIVE
-	71385801	1	BELT, RETURN ELEV.
-	71396754	1	BELT, ROTARY SCREEN DRIVE (69.89")
-	227-1364	1	BELT, ALTR'R AND COMPR'R (SOURCE: CAT)
-	71388712	2	BELT, CHOPPER SECONDARY, 213.75"
-	71406339	1	BELT, CHOPPER SECONDARY, 214.2"
-	1680230W1	1	BELT, SPREADER, (233.2")
-	227455M1	2	BELT, SPREADER/GRAIN ELE.
-	101102M1	2	BELT, UNLOADER
-	71394352	1	BELT, VARIABLE
-	71397378	3	BLADE, CHAFF SPRDR LH
-	71397379	3	BLADE, CHAFF SPRDR RH
-	71387297	1	BLADE, WIPER
-	71313115	2	BREATHER, ASY.

CONTINUED

RECOMMENDED DEALER STOCK

RECOMMENDED DEALER STOCK

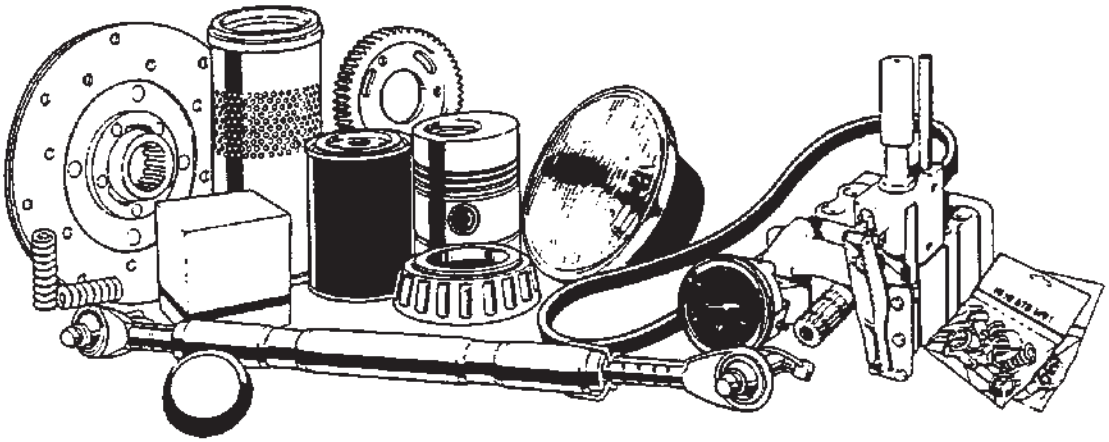

ITEM	NUMBER	QTY	DESCRIPTION
-	1018729M1	10	BULB (1156)
-	70928348	10	BULB (1157)
-	71397443	3	BULB, (EVANS/TEMPCON)
-	700725576	2	BULB, 12V, 60W, 9005U
-	700722351	2	BULB, HALOGEN, 12V (GE #862)
-	700708648	2	BUMPER, RUBBER
-	1689170W1	2	BUSHING
-	1742670W1	2	BUSHING
-	52175	2	BUSHING
-	71356060	3	BUSHING
-	71370121	2	BUSHING, ARM
-	71157144	4	BUSHING, BRONZE
-	112887W1	2	CAP, BREATHER, HYD RESERVOIR
-	71391625	1	CAP, FUEL FILL
-	71400413	1	CAP, RADIATOR
-	71449007	1	CHAIN ASY, FEEDER CONVEYOR, W/SLATS
-	71449018	1	CHAIN ASY, FEEDER CONVEYOR, W/SLATS
-	71149999	1	CHAIN ASY, CENTER
-	71449001	2	CHAIN ASY, SIDE
-	Y851774	1	CHAIN ASY, BIN LOADER
-	71149992	1	CHAIN ASY, FEEDER DRIVE
-	71393534	1	CHAIN ASY, GRAIN ELEVATOR W/SCRAPERS
-	2615233W92	1	CHAIN ASY, RETURN ELEVATOR W/SCRAPERS
-	70921050	1	CHAIN ASY, UNLDR DRIVE, BULK 10'
-	71188504	1	COIL, 6VDC W/DIODE, VALVE
-	375028X1	2	COLLAR
-	70533638	2	COLLAR, BEARING
-	700717212	2	COLLAR, LOCK
-	71396715	1	COMPRESSOR ASY, A/C, W/CLUTCH
-	286501M1	1	CONE FILTER, 1/4
-	70228509	2	CONE, BEARING
-	74254700	2	CONE, BEARING
-	360202X91	1	CONNECTOR
-	74254699	2	CUP, BEARING
-	712208	2	CUP, OUTER BEARING
-	W1511670	10	CUP, FLIGHT, RETURN ELEV
-	71378577	1	CYL BAR, LONG, .75 CHROME
-	71371526	2	CYL BAR, REVERSE, .75 CHROME
-	71371520	8	CYLINDER BAR, .75 CHROME
-	71369761	1	DRYER, RECEIVER
-	71368961	8	ELEMENT, AIR CLEANER
-	104309W91	2	ELEMENT, FILTER, HYD OIL
-	133-5673	1	ELEMENT, PRMRY FUEL FLTR/WATER SEPR'TOR
-			(PRIOR S/N HR87101)
-	141-0284	1	KIT, FUEL FILTER & WATER SEPARATOR
-			(PRIOR S/N HR87101)
-	CH1R-0771	3	FILTER ELEMENT ASY,FUEL(EFF S/N HR87101)
-	2497273W91	1	ELEMENT, THRESHING (SET OF 3)
-	71393893	1	FILTER, AIR/PRI
-	71368962	4	FILTER ELEMENT, AIR, SAFETY
-	1R-0751	1	FILTER ASY, FUEL, CAT
-	1R-0716	1	FILTER ASY, OIL, CAT
-	71396596	2	FITTING, GREASE
-	13811X	10	LUBE FTG, STR, 1/4-28 TAPER THD
-	71394133	2	FITTING, LUBE (M8 X 1)

CONTINUED

RECOMMENDED DEALER STOCK

RECOMMENDED DEALER STOCK

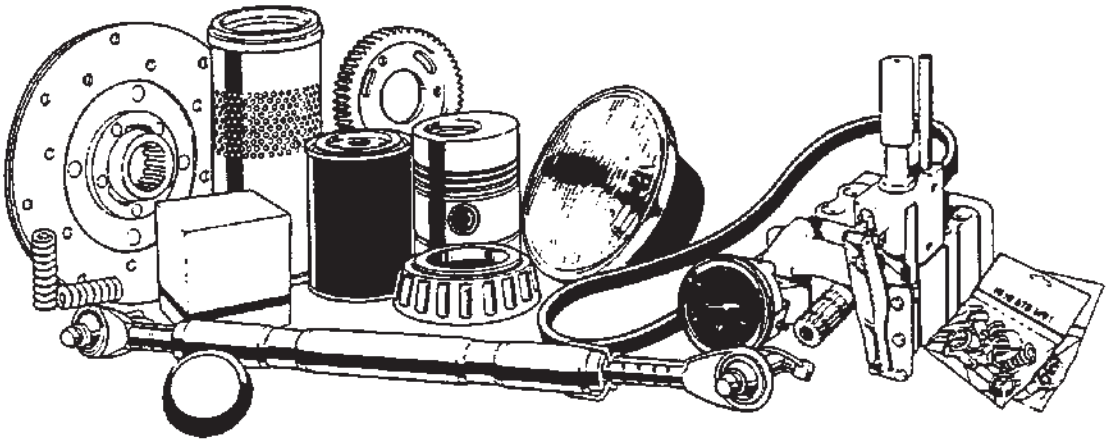

ITEM	NUMBER	QTY	DESCRIPTION
-	71127313	4	FLANGE, BEARING
-	71130258	1	FLANGE, BEARING
-	71133361	4	FLANGE, BEARING
-	71192243	2	FLANGE, BEARING
-	71370634	2	FLANGETTE/72MM
-	71393101	8	FLIGHT, WEAR, FRONT BEATER
-	70937606	5	FUSE, 10 AMP
-	70935427	5	FUSE, 15 AMP
-	70937607	5	FUSE, 15 AMP
-	70937608	5	FUSE, 20 AMP
-	70937609	5	FUSE, 25AMP
-	70937610	5	FUSE, 30 AMP
-	70937605	5	FUSE, 5 AMP
-	700721620	5	FUSE, BLADE,3 A
-	70226012	5	GASKET, DRAIN PLUG
-	79017915	6	GREASE, MOLY 14 OZ
-	71314321	2	HOLDER, BRUSH
-	2545270W1	2	IDLER, BELT, 6.5" DIA, FLAT
-	2553560W1	1	IDLER, BELT, 8.0" DIA, FLAT
-	31-2455700	2	IDLER, BELT, 8.0" DIA, FLAT
-	71308156	2	IDLER, BELT, 8.0" DIA, FLAT
-	71388217	1	IDLER, BELT, 8.0" DIA, FLAT
-	71309768	1	IDLER, FLAT 8"
-	31-2446490	1	IDLER, V-BELT, 7-5/16 OD
-	2554761W91	12	IMPELLER WLDMT
-	71396653	2	JOURNAL ASY, U-JOINT
-	29780X	4	KEY
-	71393474	2	KEY, DOOR
-	700721405	2	KEY, IGNITION (QTY 2 W/RING)
-	71374968	1	KIT, OVERHAUL SEAL
-	71382269	2	KNIFE, STATIONARY
-	700714706	1	LATCH, 90 DEGREE
-	70927034	4	LINK, CHAIN ROLLER
-	70937300	4	LINK, CHAIN ROLLER
-	71149894	4	LINK, CHAIN/ATTACTHING
-	70927036	6	LINK, CHAIN/COUPLING
-	71149895	6	LINK, CHAIN/COUPLING
-	70927035	6	LINK, CHAIN/OFFSET
-	71149896	4	LINK, CHAIN/OFFSET
-	K3999	4	LINK, COLLAR
-	70913682	4	LINK, CONN-CLIP
-	70914584	6	LINK, CONN-CLIP
-	70915276	4	LUBE FTG, 90 DEG, 1/8 NPT
-	70914465	2	LUBE FTG, STR, 1/8-27 SPL EXTRA SHORT
-	72507682	1	LUBRICANT, A/C
-	70925284	1	NUT, NYLON LOCK, 1-1/2-12 UNF
-	71383932	1	PADDLE BLADE KIT, CHOPPER
-	71341450	8	PADDLE, SPREADER
-	70934892	2	PIN, CLEVIS RETAINER, W/RING
-	71306949	5	PLUG
-	71369762	1	REFRIGERANT
-	72160919	1	RELAY, DIFFERENTIAL
-	71396971	4	RELAY, PCB 20 AMP
-	71396970	4	RELAY, PCB 40 AMP

CONTINUED

RECOMMENDED DEALER STOCK

RECOMMENDED DEALER STOCK

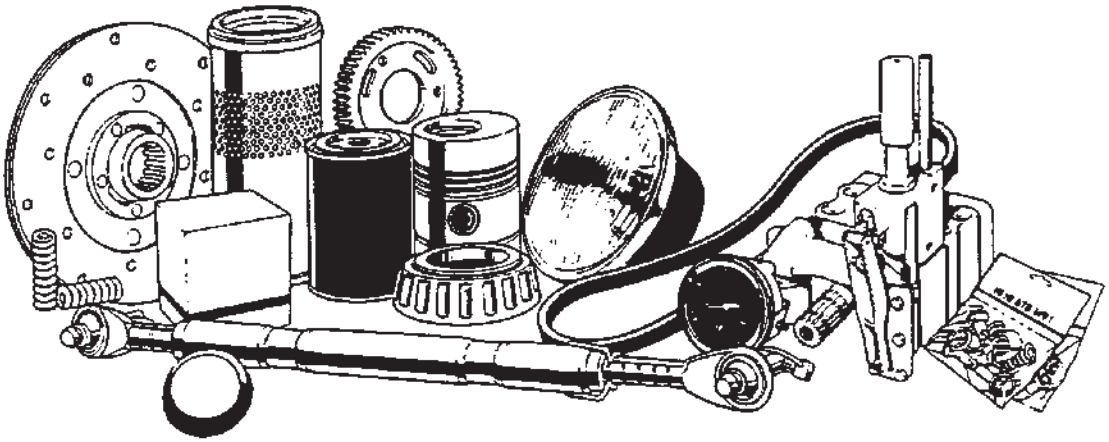

RECOMMENDED DEALER STOCK

ITEM	NUMBER	QTY	DESCRIPTION
-	105495W1	1	ROD
-	1114720W1	1	ROD
-	71364946	10	SCRAPER, CHAIN, GR. ELEV
-	71391021	1	SENSOR
-	71375911	1	SENSOR, BIN LEVEL
-	71407293	1	SENDER, FUEL LEVEL W/GSKT
-	71389818	1	SENSOR, GND SPEED
-	71393718	1	SENSOR, HYDRO TEMP
-	71376825	2	SENSOR, POSITION
-	71383914	1	SENSOR, ROTOR SPEED
-	71391869	1	SENSOR, ROTARY POSITION
-	71356061	1	SLEEVE, HARD, IDLER PIVOT
-	71395877	20	SLAT, FEEDER CHAIN
-	101276M2	1	SPRING
-	2440720W1	1	SPRING
-	2620920W1	1	SPRING
-	2627000W1	1	SPRING
-	71375335	1	SPRING, FEED
-	71305916	1	SPRING, GAS
-	71197323	1	SPRING, HEADER DRIVE
-	7087398	1	SPROCKET, 17T-5
-	71378873	2	SPROCKET, IDLER
-	71370496	2	STOP, ARM
-	71383934	1	STRAIGHT BLADE KIT, CHOPPER
-	71325523	1	SWITCH, IGNITION
-	70925094	25	TIE, CABLE 7-5
-	70937133	25	TIE, CABLE, 14-1
-	71395998	1	U-JOINT ASY, DOUBLE PIVOT
-	71408211	1	VALVE ASY., WATER
-	30-3076830	1	VALVE, WATER SHUT-OFF
-	2498390W1	2	VANE, GUIDE, 3 HOLE
-	2467230W1	6	VANE, GUIDE, 5 HOLE
-	2467220W1	12	VANE, GUIDE, 7 HOLE
-	71397380	2	WEAR PLATE, CHAFF SPRDR
-	70937465	1	YOKE, END-ROD

RDL
PR: 442

Contents

DECALS & LABELS
4
LABELS 4
DECALS & LABELS
6
LABELS 6
ENGINE
8
ENGINE & MOUNTS 8
ENGINE
10
ENGINE & MOUNTS 10
ENGINE
12
ENGINE & MOUNTS 12
ENGINE
14
ENGINE & MOUNTS 14
ENGINE
16
AIR INTAKE & EXHAUST 16
ENGINE
18
AIR INTAKE & EXHAUST 18
ENGINE
20
AIR INTAKE & EXHAUST 20
ENGINE
22
AIR INTAKE & EXHAUST 22
ENGINE
24
MAIN ENGINE DRIVES 24
ENGINE
26
MAIN ENGINE DRIVES 26
ENGINE
28
COOLING SYSTEM 28
ENGINE
30
COOLING SYSTEM 30
ENGINE
32
COOLING SYSTEM 32
ENGINE
34
COOLING SYSTEM 34
ENGINE
36
COOLING SYSTEM 36
ENGINE
38
COOLING SYSTEM 38
ENGINE
40
RADIATOR SLINGER 40
ENGINE
42
ROTARY SCREEN 42
ENGINE
44
ROTARY SCREEN 44
ENGINE
46
FUEL LINES 46
ENGINE

48
FUEL LINES 48
..... ENGINE
50
FUEL LINES 50
..... ENGINE
52
FUEL LINES 52
..... ENGINE
54
FUEL LINES 54
..... CAB
56
FRAME & MOUNTING 56
..... CAB
58
WINDOWS AND DOORS 58
..... CAB
60
LH DOOR 60
..... CAB
62
INTERIOR COVERINGS & TRIM 62
..... CAB
64
INTERIOR COVERINGS & TRIM 64
..... CAB
66
PLATFORM 66
..... CAB
68
PIVOTING LADDER LH 68
..... CAB
70
DECK EXTENSION 70
..... CAB
72
STAIRCASE LADDER & PLATFORM 72
..... CAB
74
STAIRCASE LADDER & PLATFORM 74
..... CAB
76
MIRRORS & EXTREMITY LIGHTS 76
..... CAB
78
WINDSHIELD WIPER 78
..... CAB
80
ROOF & INTERIOR/EXTERIOR LIGHTS 80
..... CAB
82
CONSOLE - SEAT 82
..... CAB
84
CONSOLE - SEAT 84
..... CAB
86
CONTROL 86
..... CAB
88
BRAKE MASTER CYLINDER 88
..... CAB
90
CONTROL 90
..... CAB
92
CONTROL 92
..... CAB
94
CONTROL 94
..... CAB

96
STEERING COLUMN 96
..... CAB
98
SEAT 98
..... CAB
100
SEAT 100
..... CAB
102
SEAT 102
..... CAB
104
SEAT 104
..... CAB
106
SEAT 106
..... CAB
108
HVAC 108
..... CAB
110
HVAC 110
..... CAB
112
HVAC 112
..... CAB
114
HVAC 114
..... CAB
116
HVAC 116
..... CAB
118
AIR CONDITIONER 118
..... CAB
120
AIR CONDITIONER 120
..... CAB
122
HEATER LINES 122
..... ELECTRICAL
124
FEEDER ELECTRICAL 124
..... ELECTRICAL
126
ELECTRICAL HARNESSES & SWITCHES 126
..... ELECTRICAL
128
ENGINE & BATTERY WIRING 128
..... ELECTRICAL
130
ENGINE & BATTERY WIRING 130
..... ELECTRICAL
132
ENGINE & BATTERY WIRING 132
..... ELECTRICAL
134
ENGINE & BATTERY WIRING 134
..... ELECTRICAL
136
ALTERNATOR - 150 AMP 136
..... ELECTRICAL
138
CAB COMPONENTS 138
..... ELECTRICAL
140
CAB COMPONENTS 140
..... ELECTRICAL
142
CAB COMPONENTS 142
..... ELECTRICAL

144
CAB COMPONENTS 144
..... ELECTRICAL
146
CAB COMPONENTS 146
..... ELECTRICAL
148
MONITORING SYSTEMS 148
..... ELECTRICAL
150
HARNESSES & LIGHTING 150
..... ELECTRICAL
152
ELECTRICAL HARNESSES 152
..... ELECTRICAL
154
BEACON LIGHTS 154
..... ELECTRICAL
156
HIGH INTENSITY LIGHTING 156
..... ELECTRICAL
158
SERVICE CONNECTORS 158
..... ELECTRICAL
160
SERVICE CONNECTORS 160
..... FEEDER
162
HOUSING 162
..... FEEDER
164
HOUSING 164
..... FEEDER
166
HOUSING & SHIELDS 166
..... FEEDER
168
HOUSING & SHIELDS 168
..... FEEDER
170
HOUSING & SHIELDS 170
..... FEEDER
172
JACK 172
..... FEEDER
174
FEED FLOOR 174
..... FEEDER
176
PIVOT SHAFT 176
..... FEEDER
178
PIVOT SHAFT 178
..... FEEDER
180
LH PIVOT DRIVE 180
..... FEEDER
182
RH DRIVE 182
..... FEEDER
184
JACKSHAFT DRIVE 184
..... FEEDER
186
JACKSHAFT & V.S. IDLER 186
..... FEEDER
188
HYDRAULIC LINES 188
..... FEEDER
190
JACKSHAFT & C'SHAFT DRIVE IDLER 190
..... FEEDER

192
COUNTERSHAFT 192
..... FEEDER
194
COUNTERSHAFT 194
..... FEEDER
196
LATCH 196
..... FEEDER
198
CONVEYOR 198
..... FEEDER
200
CONVEYOR 200
..... FEEDER
202
HEADER REVERSER 202
..... FEEDER
204
HEADER REVERSER 204
..... FEEDER
206
REVERSER MOTOR & CLUTCH 206
..... FEEDER
208
REVERSER MOTOR 208
..... FEEDER
210
REVERSER MOTOR 210
..... LATERAL TILT
212
HOUSING 212
..... LATERAL TILT
214
HOUSING 214
..... LATERAL TILT
216
ANCHORS & SENSOR 216
..... LATERAL TILT
218
HYDRAULIC CYLINDER 218
..... LATERAL TILT
220
HYDRAULICS 220
..... LATERAL TILT
222
VALVE & CONTROL 222
..... PROCESSOR
224
FRONT BEATER 224
..... PROCESSOR
226
MAIN COUNTERSHAFT 226
..... PROCESSOR
228
MAIN COUNTERSHAFT 228
..... PROCESSOR
230
FRONT BEATER 230
..... PROCESSOR
232
INLET HOUSING AND STONE TRAP 232
..... PROCESSOR
234
INLET HOUSING AND STONE TRAP 234
..... PROCESSOR
236
CONCAVE & CONTROLS 236
..... PROCESSOR
238
CONCAVE & CONTROLS 238
..... PROCESSOR

240
CONCAVE & CONTROLS 240
..... PROCESSOR
242
POWER CONCAVE CONTROL 242
..... PROCESSOR
244
REAR ROTOR HOUSING 244
..... PROCESSOR
246
REAR ROTOR HOUSING 246
..... PROCESSOR
248
SEPARATOR GRATES 248
..... PROCESSOR
250
SEPARATOR GRATES 250
..... PROCESSOR
252
SEPARATOR GRATE SUPPORTS 252
..... PROCESSOR
254
ROTOR 254
..... PROCESSOR
256
ROTOR 256
..... PROCESSOR
258
ROTOR DRIVE 258
..... PROCESSOR
260
ROTOR DRIVE 260
..... CHOPPER & SPREADER
262
JACKSHAFT DRIVE 262
..... CHOPPER & SPREADER
264
JACKSHAFT DRIVE 264
..... CHOPPER & SPREADER
266
STRAW CHOPPER DRIVE 266
..... CHOPPER & SPREADER
268
STRAW CHOPPER DRIVE 268
..... CHOPPER & SPREADER
270
STRAW CHOPPER DRIVE KIT 270
..... CHOPPER & SPREADER
272
STRAW CHOPPER HOUSING 272
..... CHOPPER & SPREADER
274
STRAW CHOPPER HOUSING 274
..... CHOPPER & SPREADER
276
STRAW CHOPPER 276
..... CHOPPER & SPREADER
278
STRAW CHOPPER 278
..... CHOPPER & SPREADER
280
STRAW CHOPPER HOOD & SUPPORTS 280
..... CHOPPER & SPREADER
282
STRAW SPREADER 282
..... CHOPPER & SPREADER
284
STRAW SPREADER 284
..... CHOPPER & SPREADER
286
STRAW SPREADER 286
..... CHOPPER & SPREADER

288
STRAW SPREADER 288
..... CHOPPER & SPREADER
290
STRAW SPREADER 290
..... CHOPPER & SPREADER
292
CHAFF SPREADER 292
..... CHOPPER & SPREADER
294
CHAFF SPREADER 294
..... CHOPPER & SPREADER
296
CHAFF SPREADER 296
..... SEPARATOR
298
LOWER AUGER HOUSING AND FANNING MILL 298
..... SEPARATOR
300
LOWER AUGER HOUSING AND FANNING MILL 300
..... SEPARATOR
302
LOWER AUGER HOUSING AND FANNING MILL 302
..... SEPARATOR
304
VARIABLE SPEED FAN DRIVE 304
..... SEPARATOR
306
SEPARATOR PAN 306
..... SEPARATOR
308
SHAKER SHOE AND SIEVES 308
..... SEPARATOR
310
SHAKER SHOE AND SIEVES 310
..... SEPARATOR
312
SHAKER SHOE AND SIEVES 312
..... SEPARATOR
314
PITMAN DRIVE 314
..... SEPARATOR
316
GRAIN ELEVATOR DRIVE 316
..... SEPARATOR
318
GRAIN ELEVATOR DRIVE 318
..... GRAIN BIN & ELEVATOR
320
GRAIN ELEVATOR 320
..... GRAIN BIN & ELEVATOR
322
GRAIN ELEVATOR 322
..... GRAIN BIN & ELEVATOR
324
GRAIN ELEVATOR 324
..... GRAIN BIN & ELEVATOR
326
GRAIN ELEVATOR 326
..... GRAIN BIN & ELEVATOR
328
GRAIN ELEVATOR 328
..... GRAIN BIN & ELEVATOR
330
RETURN ELEVATOR 330
..... GRAIN BIN & ELEVATOR
332
RETURN ELEVATOR 332
..... GRAIN BIN & ELEVATOR
334
RETURN ELEVATOR 334
..... GRAIN BIN & ELEVATOR

336
RETURN ELEVATOR 336
..... GRAIN BIN & ELEVATOR
338
RETURN ELEVATOR 338
..... GRAIN BIN & ELEVATOR
340
RETURN ELEVATOR 340
..... GRAIN BIN & ELEVATOR
342
STAINLESS STEEL ELEVATOR PACKAGE 342
..... GRAIN BIN & ELEVATOR
344
RETURN ELEVATOR DRIVE 344
..... GRAIN BIN & ELEVATOR
346
UNLOADING AUGER 346
..... GRAIN BIN & ELEVATOR
348
UNLOADING AUGER 348
..... GRAIN BIN & ELEVATOR
350
UNLOADING AUGER 350
..... GRAIN BIN & ELEVATOR
352
UNLOADING AUGER 352
..... GRAIN BIN & ELEVATOR
354
UNLOADING AUGER 354
..... GRAIN BIN & ELEVATOR
356
UNLOADING AUGER 356
..... GRAIN BIN & ELEVATOR
358
UNLOADING AUGER 358
..... GRAIN BIN & ELEVATOR
360
UNLOADING AUGER 360
..... GRAIN BIN & ELEVATOR
362
UNLOADER DRIVE 362
..... GRAIN BIN & ELEVATOR
364
UNLOADER DRIVE 364
..... GRAIN BIN & ELEVATOR
366
GRAIN BIN 366
..... GRAIN BIN & ELEVATOR
368
GRAIN BIN 368
..... GRAIN BIN & ELEVATOR
370
GRAIN BIN 370
..... GRAIN BIN & ELEVATOR
372
GRAIN BIN 372
..... GRAIN BIN & ELEVATOR
374
GRAIN BIN 374
..... GRAIN BIN & ELEVATOR
376
GRAIN BIN 376
..... GRAIN BIN & ELEVATOR
378
GRAIN BIN 378
..... GRAIN BIN & ELEVATOR
380
BIN EXTENSIONS 380
..... GRAIN BIN & ELEVATOR
382
FUEL TANKS 382
..... SHIELDS

384
ENGINE COVERS 384
..... SHIELDS
386
ENGINE COVERS 386
..... SHIELDS
388
REAR DECK AND LADDER 388
..... SHIELDS
390
REAR DECK AND LADDER 390
..... SHIELDS
392
SIDE SHIELDS 392
..... SHIELDS
394
SIDE SHIELDS 394
..... SHIELDS
396
SIDE SHIELDS 396
..... SHIELDS
398
SIDE SHIELDS 398
..... SHIELDS
400
SIDE SHIELDS 400
..... SHIELDS
402
SIDE SHIELDS 402
..... SHIELDS
404
SIDE SHIELDS 404
..... SHIELDS
406
SIDE SHIELDS 406
..... SHIELDS
408
SIDE SHIELDS 408
..... SHIELDS
410
MUD SHIELDS 410
..... SHIELDS
412
MUD SHIELDS 412
..... SHIELDS
414
MUD SHIELDS 414
..... SHIELDS
416
MUD SHIELDS 416
..... SHIELDS
418
MUD SHIELDS 418
..... SHIELDS
420
MUD SHIELDS 420
..... SHIELDS
422
MUD SHIELDS 422
..... HYDRAULICS
424
STEERING & HEADER FUNCTIONS 424
..... HYDRAULICS
426
STEERING & HEADER FUNCTIONS 426
..... HYDRAULICS
428
STEERING & HEADER FUNCTIONS 428
..... HYDRAULICS
430
STEERING CYLINDER 430
..... HYDRAULICS

432
STEERING CYLINDER 432
..... HYDRAULICS
434
STEERING CYLINDER 434
..... HYDRAULICS
436
ACCUMULATOR 436
..... HYDRAULICS
438
HEADER LIFT CYLINDERS 438
..... HYDRAULICS
440
UNLOADER SWING CYLINDER 440
..... HYDRAULICS
442
PRIORITY VALVE 442
..... HYDRAULICS
444
CONTROL VALVE STACK 444
..... HYDRAULICS
446
HEADER LIFT VALVE 446
..... HYDRAULICS
448
REEL LIFT VALVE 448
..... HYDRAULICS
450
FEEDER REVERSER VALVE 450
..... HYDRAULICS
452
UNLOADER SWING VALVE 452
..... HYDRAULICS
454
REEL DRIVE VALVE 454
..... HYDRAULICS
456
ROTARY SCREEN VALVE & MOTOR 456
..... HYDRAULICS
458
ROTARY SCREEN MOTOR LINES 458
..... HYDRAULICS
460
HYDRAULIC PUMP & LINES 460
..... HYDRAULICS
462
HYDRAULIC PUMP & LINES 462
..... HYDRAULICS
464
HYDRAULIC PUMP & LINES 464
..... HYDRAULICS
466
HYDRAULIC PUMP 466
..... HYDRAULICS
468
UNLOADER ENGAGE LINES 468
..... HYDRAULICS
470
UNLOADER ENGAGE VALVE 470
..... HYDRAULICS
472
RESERVOIR & FILTER 472
..... HYDRAULICS
474
RESERVOIR & FILTER 474
..... HYDRAULICS
476
ROTOR PUMP AND MOTOR LINES 476
..... HYDRAULICS
478
PROPEL PUMP AND MOTOR LINES 478
..... HYDRAULICS

480
GREASE LINES 480
..... TRANSMISSION & AXLES
482
HYDROSTATIC TANDEM PUMPS 482
..... TRANSMISSION & AXLES
484
PROPEL PUMP 484
..... TRANSMISSION & AXLES
486
PROPEL PUMP 486
..... TRANSMISSION & AXLES
488
PROPEL PUMP 488
..... TRANSMISSION & AXLES
490
PROPEL PUMP 490
..... TRANSMISSION & AXLES
492
ROTOR PUMP 492
..... TRANSMISSION & AXLES
494
ROTOR PUMP 494
..... TRANSMISSION & AXLES
496
ROTOR PUMP 496
..... TRANSMISSION & AXLES
498
ROTOR PUMP 498
..... TRANSMISSION & AXLES
500
MOTOR, HYDRO PROPEL & ROTOR 500
..... TRANSMISSION & AXLES
502
FINAL DRIVE 502
..... TRANSMISSION & AXLES
504
FINAL DRIVE 504
..... TRANSMISSION & AXLES
506
FINAL DRIVE 506
..... TRANSMISSION & AXLES
508
TRANSMISSION, GEAR 508
..... TRANSMISSION & AXLES
510
TRANSMISSION, GEAR 510
..... TRANSMISSION & AXLES
512
TRANSMISSION, GEAR 512
..... TRANSMISSION & AXLES
514
TRANSMISSION, GEAR 514
..... TRANSMISSION & AXLES
516
DRUM BRAKES 516
..... TRANSMISSION & AXLES
518
DRUM BRAKES 518
..... TRANSMISSION & AXLES
520
MAIN FRAME AND AXLE SUPPORTS 520
..... TRANSMISSION & AXLES
522
REAR AXLE & WHEELS 522
..... TRANSMISSION & AXLES
524
REAR AXLE & WHEELS 524
..... TRANSMISSION & AXLES
526
REAR AXLE & WHEELS 526
..... TRANSMISSION & AXLES

528
REAR AXLE & WHEELS 528
..... TRANSMISSION & AXLES
530
REAR AXLE & WHEELS 530
..... TRANSMISSION & AXLES
532
REAR AXLE & WHEELS 532
..... TRANSMISSION & AXLES
534
REAR AXLE & WHEELS 534
..... TRANSMISSION & AXLES
536
REAR WHEEL ASSIST 536
..... TRANSMISSION & AXLES
538
REAR WHEEL ASSIST 538
..... TRANSMISSION & AXLES
540
WHEELS 540
..... DRIVES
542
BELTS 542
..... DRIVES
544
BELTS 544
..... DRIVES
546
CHAINS 546
..... ACCESSORIES
548
BEACON LIGHT 548
..... RECOMMENDED DEALER STOCK
550
RECOMMENDED DEALER STOCK 550
..... RECOMMENDED DEALER STOCK
552
RECOMMENDED DEALER STOCK 552
..... RECOMMENDED DEALER STOCK
554
RECOMMENDED DEALER STOCK 554
..... RECOMMENDED DEALER STOCK
556
RECOMMENDED DEALER STOCK 556