Operation Manual

S/BV6/8/9M628

0297 7945 en

Engine Serial Number: | | | | | | | | | | | |

Please enter engine serial number here. In this way, questions concerning Customer Service, Repairs and Spare Parts can be more easily dealt with.

In view of continuos design improvements or changes, the technical specifications and the illustrations shown in this Operation Manual are subject to alteration. Reprinting and reproduction, in part or in whole, are subject to our written approval.

DEUTZ®

This Operation Manual is destined for the following engine:

- Engine model: ☐☐☐☐☐☐☐☐☐☐☐☐
- Type of application: ☐☐☐☐☐☐☐☐☐☐☐☐☐☐☐☐☐☐☐☐☐☐☐☐☐
- Name of installation: ☐☐☐☐☐☐☐☐☐☐☐☐☐☐☐☐☐☐☐☐☐☐☐☐☐
- Power: ☐☐☐☐☐ kW
- Speed: ☐☐☐☐ / rpm
- Date of commissioning: ☐☐ . ☐☐ . ☐☐☐☐

Please enter the relevant data here. This you will facilitate dealing with questions concerning customer service, repairs and spare parts.

☞ Give these data to the respective SERVICE dealership whenever you are asking for service performance.

DEUTZ AG
Service engineering
Service documentation
Deutz-Mülheimer Straße 147-149
D - 51057 Köln
Tel. (0221) 822 - 0
Fax (0221) 822 - 5358
Telex 8812 - 0 khd d
http://www.deutz.de

Printed in Germany
All rights reserved
3st edition, 10/2001
Order No.: 0297 7945 en

- Please read all the information contained in this manual, and follow the instructions carefully. You will avoid accidents, retain the manufacturer's warranty, and will be able to use a fully functional and operational engine.

- This engine has been built solely for the purpose appropriate to the scope of delivery concerned, as defined by the equipment manufacturer (intended use). Any other use shall be construed as not intended. The manufacturer shall not be liable for any damage resulting therefrom; all risks involved shall be borne solely by the user.

- The term „intended use" shall also include compliance with the operating, maintenance and repair conditions specified by the manufacturer. The engine may be used, maintained and repaired only by persons who are familiar with the work concerned and who have been properly informed of the risks involved.

- Make sure that these operating instructions are available to everyone involved in operating, maintaining, and repairing the engine, and that they have all understood the contents.

- Non-compliance with these operating instructions may result in engine malfunctions and even damage or injury to persons; the manufacturer will accept no liability in such cases.

- Proper maintenance and repair work depends on the availability of all requisite equipment, tools and special implements, all of which must be in perfect condition.

- Engine parts like springs, brackets, elastic holding rings, etc., involve increased risk of injury if not handled properly.

- The relevant accident prevention regulations and other generally recognized rules relating to safety engineering and health and safety at work must all be complied with.

- Maximized cost-efficiency, reliability and long lifetime are assured only if original parts from DEUTZ AG are used.

- Engine repairs must correspond to the intended use. In the event of modification work, only parts approved by the manufacturer for the purpose concerned may be used. Unauthorized changes to the engine will preclude any liability of the manufacturer for resultant damage.

  The warranty expires in case of nonobservance of these regulations!

Dear customer,

The engines of the DEUTZ brand have been developed for a broad spectrum of applications. A comprehensive range of different variants ensures that special requirements can be met for the individual case involved.

Your engine has been equipped to suit your own particular installation, and accordingly not all of the devices and components described in these operating instructions will actually be fitted to your engine.

We have endeavoured to present the differences involved as clearly as possible, to make it easier for you to find the operating and maintenance instructions you need for your own particular engine.

Please read this manual before you start up your engine, and follow the operating and maintenance instructions meticulously.

If you have any questions, just get in touch with us, and we will be pleased to answer them for you.

Yours sincerely,
DEUTZ AG

 © 0199

DEUTZ engines
are the culmination of long years filled with research and development work. The in-depth know-how thus acquired, in conjunction with high standards of quality, is your guarantee for engines manufactured for long lifetime, high reliability and low fuel consumption. And of course, stringent criteria of environment-friendliness are met as well.

Care and maintenance
are crucial factors in ensuring that your engine satisfactorily meets the requirements involved. Compliance with the specified maintenance intervals and meticulous performance of care and maintenance work are therefore absolutely essential. Special attention must be paid to any more critical operating conditions deviating from the norm.

DEUTZ AG
In the event of malfunctions, or if you need spare parts, please contact one of our responsible service agencies. Our trained and qualified staff will ensure fast, professional rectification of any damage, using original parts. Original parts from DEUTZ AG have always been manufactured to the very latest state-of-the-art.
You will find details of our after-sales service at the end of these operating instructions.

Careful when the engine is running!
Carry out maintenance or repair jobs only when the engine is at a standstill. If you remove any protective features, fit them back in position after completing your work. Always wear tight-fitting clothing if you are working on the engine while it is running.

Safety
You will find this symbol next to all safety instructions. Follow these meticulously. Pass on all safety instructions to your operating staff as well. In addition, comply with the statutory general safety and accident prevention regulations applying in your country.

Instruction
You will find this symbol next to instructions of a general nature.
Follow these instructions carefully.

Asbestos
The seals and gaskets used in this engine are asbestos-free. Please use the appropriate spare parts for maintenance and repair jobs.

This page intentionally left blank.

 © 0199

Table of Contents 0

Inhaltsverzeichnis
Indice
Table des matières
Indice
Inhoudsopgave
Оглавление

Guide to this Manual 1

Hinweise zur Benutzung der Betriebsanleitung
Avvertenze per l‘utilizzo delle istruzioni per l‘uso
Indications relatives à l’utilisation des instructions de service
Indicaciones para el manejo de las Instrucciones de Operación
Aanwijzingen voor het gebruik van de handleiding
Указания по пользованию настоящей Указания по пользованию настоящей

Layout and Description of Engine 2

Aufbau und Funktion des Motors
Struttura e funzioni del motore
Constitution et fonctionnement du moteur
Construcción y funciones de partes del motor
Samenstelling en werkwijze van de motor
Конст укция и функция двигателя

Specification Data 3

Technische Angaben
Indicazioni tecniche
Données techniques
Datos técnicos
Technische gegevens
Тенические данные

Operating the Engine 4

Anleitung zum Betrieb des Motors
Istruzioni per il servizio del motore
Instructions relatives à l’emploi du moteur
Instrucciones para la operación del motor
Handleiding betreffende het werken met de motor
Инст укця по эксплуатации двигателя

Engine Operating Media 5

Einweisung in die Arbeitssysteme der Motorbetriebsstoffe
Introduzioni ai sistemi operativi del materiali di esercizio del motore
Instructions concernant les systèmes opératoires des carburants-moteur
Aclaraciones para los sistemas de medios de servicio para el motor
Instructies betreffende brandstof-, smeerolie- en koelsysteem
Пояснения к системаи эксплуатацион-ных мате иалов длв двигателей

Engine Operating Media Treatment 6

Vorschriften über Betriebsstoffe
Prescrizioni relative a mezi di esercizio
Prescriptions applicables aux carburants
Prescripciones para medios de servicio
Voorschriften inzake brandstof-, smeerolie- en koelmiddel
П едписания по эксплуатацион мате иалам

Trouble-shooting 7

Betriebsstörungen und ihre Beseitigung
Disfunzioni di esercizio e loro eliminazione
Pannes et leurs remèdes
Perturbaciones de servicio y su eliminación
Bedrijffstoringen en het verhelpen daarvan
Неисп авности и их уст анение

Maintenance Schedules and List of Job Cards 8

Instandhaltungs- Intervallpläne und Arbeitskartenübersicht
Schemi degli intervalli di manutenzione, visione d‘insieme delle schede di lavoro
Plans des intervalles d’entretien et vue d’ensemble sur les fiches de travail
Tables de mantenimiento periódico y recopilación de fichas de trabajo
Onderhoudsschema en werkkaarten
Г афик инте валов техобслуживания и обзо абЧих ка т

Job Cards JC

Arbeitskarten AK
Schede di lavoro SL
Cartes de travail CT
Fichas de trabajo FT
Werkkaarten WK
РабоЧие ка ты AK

Table of Contents 0

Inhaltsverzeichnis
Indice
Table des matières
Indice
Inhoudsopgave
Оглавление

Guide to this Manual 1

Hinweise zur Benutzung der Betriebsanleitung
Avvertenze per l‘utilizzo delle istruzioni per l‘uso
Indications relatives à l’utilisation des instructions de service
Indicaciones para el manejo de las Instrucciones de Operación
Aanwijzingen voor het gebruik van de handleiding
Указания по пользованию настоящей Указания по пользованию настоящей

Layout and Description of Engine 2

Aufbau und Funktion des Motors
Struttura e funzioni del motore
Constitution et fonctionnement du moteur
Construcción y funciones de partes del motor
Samenstelling en werkwijze van de motor
Конст укция и функция двигателя

Specification Data 3

Technische Angaben
Indicazioni tecniche
Données techniques
Datos técnicos
Technische gegevens
Тенические данные

Operating the Engine 4

Anleitung zum Betrieb des Motors
Istruzioni per il servizio del motore
Instructions relatives à l’emploi du moteur
Instrucciones para la operación del motor
Handleiding betreffende het werken met de motor
Инст укця по эксплуатации двигателя

Engine Operating Media 5

Einweisung in die Arbeitssysteme der Motorbetriebsstoffe
Introduzioni ai sistemi operativi del materiali di esercizio del motore
Instructions concernant les systèmes opératoires des carburants-moteur
Aclaraciones para los sistemas de medios de servicio para el motor
Instructies betreffende brandstof-, smeerolie- en koelsysteem
Пояснения к системаи эксплуатацион-ных мате иалов длв двигателей

Engine Operating Media Treatment 6

Vorschriften über Betriebsstoffe
Prescrizioni relative a mezi di esercizio
Prescriptions applicables aux carburants
Prescripciones para medios de servicio
Voorschriften inzake brandstof-, smeerolie- en koelmiddel
П едписания по эксплуатацион мате иалам

Trouble-shooting 7

Betriebsstörungen und ihre Beseitigung
Disfunzioni di esercizio e loro eliminazione
Pannes et leurs remèdes
Perturbaciones de servicio y su eliminación
Bedrijffstoringen en het verhelpen daarvan
Неисп авности и их уст анение

Maintenance Schedules and List of Job Cards 8

Instandhaltungs- Intervallpläne und Arbeitskartenübersicht
Schemi degli intervalli di manutenzione, visione d‘insieme delle schede di lavoro
Plans des intervalles d’entretien et vue d’ensemble sur les fiches de travail
Tables de mantenimiento periódico y recopilación de fichas de trabajo
Onderhoudsschema en werkkaarten
Г афик инте валов техобслуживания и обзо абЧих ка т

Job Cards JC

Arbeitskarten AK
Schede di lavoro SL
Cartes de travail CT
Fichas de trabajo FT
Werkkaarten WK
РабоЧие ка ты AK

Table of Contents

Inhaltsverzeichnis
Indice
Table des matières
Indice
Inhoudsopgave
Оглавление

0

Table of Contents

Inhaltsverzeichnis
Indice
Table des matières
Indice
Inhoudsopgave
Оглавление

1 Guide to this Manual

1.1 General

1.2 Trouble - shooting

1.3 Planned Mainenance

1.4 Identification of Spare Parts

1.5 Specification Data

1.6 Job Card No.

1.7 Standard Tools

1.8 Special Tools

1.9 Index of DEUTZ Assembly Groups

2 Layout and Description of Engine

2.1 01 Cylinder Head
2.2 02 Crankshaft System
2.3 03 Engine Frame
2.4 04 Timing System
2.5 05 Speed Control System
2.6 06 Exhaust / Turbocharging System
2.7 07 Fuel System
2.8 08 Lubricating Oil System
2.9 09 Cooling Water System
2.10 10 Pneumatic System
2.11 11 Engine Protective System
2.12 12 Engine Auxiliaries
2.13 13 Engine Assemblies and Subassemblies
2.14 14 Cutaway View of Engine

© 1199

3 Specification Data

3.1 Model Designation

3.2 Designation of Engine Ends and Sides and Related Definitions

3.3 Basic Data
3.3.1 Design Data
3.3.2 Operating Data
3.3.3 Setting Data for Saftey Switches

3.4 Weights of Main Engine Components

3.5 Tightening Specification for Heavy - duty Screwed Joints
3.5.1 Tightening Schedule
3.5.2 /3. Tightening Instructions
3.5.4 Hydraulic Tool for Annular Nuts

3.6 List of Compounds (Sealing, Locking, Lubricating, Heat Conduction)

3.7 Use of Liquid Nitrogen

3.8 Dye Checking of Metal Surfaces with Distillate Fuel

4 Operating the Engine

4.1 Preparatory Work before Operating the Engine with Distillate Fuel
4.1.1 Preparatory Work before Operating the Engine with Heavy Fuel or MDF Blend
4.2 Running the Engine with Destillate Fuel
4.2.1 Running the Engine with Heavy Fuel or MDF Blend
4.3 Attendance in Service
4.4 Stopping the Engine Running on Destillate Fuel
4.4.1 Stopping the Engine Running on Heavy Fuel or MDF Blend
4.5 Checking Combustion by Indicator Diagrams
4.6 Run- in instructions
4.6.1 Drive type ”Fixed-pitch propeller and comparable drives ”
4.6.2 Drive type ”C.P. propeller with shaft generator, electric generators and comparable drives”
4.7 Running the Engine with Defective Turbocharger
4.8 Emergency Operation

5 Engine Operating Media Systems

5.1 Fuel System
5.2 Lubrication Oil System
5.3 Cooling Water System
5.4 Pneumatic System
5.5 Injection Pump Plunger Sealing System
5.6 Injection Nozzle Cooling
5.7 Symbols Used in Piping Diagrams 0

© 0884

6 Engine Operating Media

7 Trouble - shooting

7.1 Summary of Potential Troubles
7.2 General
7.3 Trouble Chart

8 Maintenance Schedules, List of Job Cards and Job Cards

8.1 Summary of Maintenance Schedules

8.1.1 Initial Maintenance jobs

8.1.1.1 - **Engines running in countinuos operation,** e.g. marine engines, >300 hour / year

8.1.1.2 - **Engines running in standby operation,** e.g. emrgency generating sets, < 300 hours / year

8.1.2 Daily maintenance jobs
These jobs are described in Section 4.3, as well as in the Brief instructions under Section * ”Monitoring of Engine Operation”.

8.1.3 Periodic maintenance jobs for engines running in continuous operation > 300 hours / year, e.g. marine engines.
This schedule forms part of Brief Instructions*

8.1.4 Periodic maintenance jobs for engines running in continuous operation < 300 hour / year, wich are exclusively or most of the time in standby mode, e.g. emergency generating sets.
This schedule forms part of Brief Instructions*.

8.2 List of Job Cards
by maintenance groups

8.3 Job Cards
by maintenance groups

01.00.00 Cylinder Head
02.00.00 Crankshaft System
03.00.00 Engine Frame
04.00.00 Timing System
05.00.00 Speed Control System
06.00.00 Exhaust and Turbocharging System
07.00.00 Fuel System
08.00.00 Lubricating Oil System
09.00.00 Cooling Water System
10.00.00 Pneumatic System
11.00.00 Engine Protective system
12.00.00 Engine Auxiliaries

9 Appendix
Brief Instructions

* The Brief Instructions are attached to this Operating Manual

© 0996

This page intentionally left blank.

Guide to this Manual

1

Hinweise zur Benutzung der Betriebsanleitung
Avvertenze per l‘utilizzo delle istruzioni per l‘uso
Indications relatives à l’utilisation des instructions de service
Indicaciones para el manejo de las Instrucciones de Operació
Указания по пользованию настоящей Указания по пользованию настоящей

1 Guide to this Manual

Hinweise zur Benutzung der Betriebsanleitung
Avvertenze per l‘utilizzo delle istruzioni per l‘uso
Indications relatives à l’utilisation des instructions de service
Indicaciones para el manejo de las Instrucciones de Operació
Указания по пользованию настоящей Указания по пользованию настоящей

1 Guide to this Manual

1.1 General

Surely you expect high degrees of reliability and availibility of your DEUTZ engine as prerequisites for its economical application. Great importance was attached to these properties in the course of the engine's development. However, these properties can be upheld during the engine's entire lifespan **only, if the maintenance and servicing jobs described in this Manual are carried out punctually and fully.**

It is therefore essential that you become well acquainted with the contents of this Manual not only before commissioning the new engine, but also to use it **as a source of information for maintaining the high value of the machine.**

All safety precautions and regulations have been observed in the design, choice of materials, and manufacture of your engine. **This high degree of safety and reliability will be maintained, if the servicing jobs are fully performed according to schedule by properly trained personnel, and if all guards and protective devices removed for carrying out work on the engine are afterwards refitted.**

When servicing, it is essential to observe the relevant regulations regarding accident prevention and general safety.

The **Maintenance Schedules** give information concerning the work involved at the prescribed intervals.

The **Job Cards** (Section 8) **give detailed instructions for carrying out the work.** The Job Cards are arranged in accordance with Maintenance Groups as per the PLanned Maintenance System 333*. On Page 1-0-05 is an alphabetical Index of DEUTZ Assembly Groups together with the relevant Job Card Nos. and Maintenance Groups.

* Institut für Schiffsbetriebsforschung, Flensburg

© 0884

1.2 Trouble-shooting

Should troubles and faults of any kind arise on the engine, please refer to Section 7, "Trouble-shooting".

The Trouble Chart lists various potential causes for a certain fault, gives brief instructions for providing possible remedies, and refers to the Manual Section concerned and the Job Cards containing further details for carrying out the work involved.

1.3 Planned Maintenance

Keep a regular record of the engine's running hours and observe the schedule for maintenance and servicing accordingly

The Maintenance Schedule contains details of the maintenance work involved and the relevant Job Card Nos.

Carry out the work detailed on the Job Card.

1.4 Ordering of Spare Parts

The Spare Parts Catalogue associated with this Instruction Manual contains the Part Nos. for the ordering of parts, and also design details , where necessary.

The Spare Parts Catalogue is arranged in accordance with DEUTZ Assembly Group Nos. These DEUTZ Assembly Group Nos. are also to be found in the Filing No. (not Job Card No.!) in the heading of the Job Cards. The number appearing between the hyphens, for example in the case of 0178-08-501 1110, the -08-, is the DEUTZ Assembly Group No.

For detailed information on spare parts identification, please refer to the introductory lines of the Spare Parts Catalogue.

1.5 Specification Data

Design data, operating data, and setting data for monitoring equipment are not given in the Job Cards. Please refer to Section 3, "Specification Data".

© 0884

1.6 Job Card No.

In addition to the Filing No., each card is provided with a Job Card No.

Typical Job Card No.: 01.02.03, where:

01 = Maintenance Group = cylinder head

02 = Subassembly = rocker arm bearings

03 = Serial No. of card

1.7 Standard Tools

Standard tools are those tools which are normally included in a workshop tool box.

Hammer	Chisel
1 set of box wrenches	1 set of ordinary wrenches
Screwdriver	Small water tube pliers
Nippers	Combination pliers
Scriber	Tape rule
Various files	Iron saw
Centre punch	Mandrel
Socket-head wrench	Hex. wrench
Three-square scraper	Non-fraying rags
Wire brush	Grease gun
	Rubber mallet

1.8 Special Tools

Special fitting tools and devices, normally supplied along with the engine, are listed in the associated Spare Parts Catalogue under the Assembly Group No. 49.

1.8.1 These tools are available from your local Deutz distributor.

© 0884

This page intentionally left blank

1.9 Index of DEUTZ Assembly Groups as Incorporated in System 333 - Job Cards, Maintenance Groups

Assembly Group	Job Card	Maintenance Group
06 Big end/-bearing	02.03.02 02.03.03 02.04.01 02.05.01 02.06.01	02 Crankshaft system
10 Camshaft	04.05.01 04.06.01	04 Timing system
10 Camshaft bearing	04.01.01	04 Timing system
58 Charge air cooler	06.04.01 06.04.02	06 Exhaust / Turbocharging system
32 Charge air system	06.02.01	06 Exhaust / Turbocharging system
48 Charge air water detector	11.06.01	11 Engine protective system
37 Coolant circulation pump	09.07.01/02	09 Cooling water system
37 Cooling water system draining	09.00.01	09 Cooling water system
48 Crankcase oil mist detector	11.05.01	11 Engine protective system
01 Crankcase relief valve	03.01.01	03 Engine frame
05 Crankshaft coupling flange	04.16.01	04 Timing system
05 Crankshaft gear	04.11.01	04 Timing system
05 Crankshaft gear	02.01.01 03.08.01	02 Crankshaft system
05 Crankshaft deflection gauging	02.02.01	02 Crankshaft system
08 Cylinder head	01.04.01 01.08.01 01.09.01	01 Cylinder head
04 Cylinder liner	01.05.04 03.02.01 03.02.03 03.03.01 03.04.01 03.05.01 03.06.01	03 Engine frame
32 Dirt collector	10.03.02	10 Pneumatic system
41 Exhaust elbow	06.01.03	06 Exhaust / turbocharging system
41 Exhaust manifold	06.01.01	06 Exhaust / turbocharging system

© 0885

Guide to this Manual

Assembly Group	Job Card	Maintenance Group
08 Exhaust valve	01.01.01 01.05.01 01.05.04 01.05.05 01.07.01	01 Cylinder head
05 Flywheel	04.09.01	11 Engine protective system
46 Foundation bolts	03.07.01	03 Engine frame
20 Fuel feed pump	07.11.01	07 Fuel system
20 Fuel filter	07.03.02 07.10.01	07 Fuel system
29 Hydr. governor drive	05.04.01	05 Speed control system
29 Hydr. governor linkage	05.04.14	05 Speed control system
27 Hydr. speed governor	05.00.01 05.03.11 05.03.12 05.03.14	05 Speed control system
08 Inlet valve	01.01.01 01.05.01 01.05.04 01.05.05 01.07.01	01 Cylinder head
21 Injection piping	07.03.01 07.03.02	07 Fuel system
17 Injection pump	07.01.01 07.02.01/03/04/05/06/07 07.05.01	07 Fuel system
18 Injection pump removal / refitment	07.04.01	04 Timing system
22 Intake air cleaner	06.03.11	06 Exhaust / turbocharging system
19 Injector removal / refitment	07.07.01 07.08.01 07.09.01	07 Fuel system
15 Lube oil centrifuge	08.13.01	08 Lubricating oil system
15 PLube oil filter	08.09.01 08.10.01 08.20.02	08 Lubricating oil system
14 Lube oil pump	08.01.01	08 Lubricating oil system
14 Lube oil pressure-stat	08.11.01	08 Lubricating oil system
15 Lube oil system	08.02.01	08 Lubricating oil system

© 0885

Assembly Group	Job Card	Maintenance Group
02 Main bearing	02.03.02 02.03.03 02.04.01 02.07.01 02.08.01	02 Crankshaft system
48 Oil level float switch	11.07.01	11 Engine protective system
48 Overspeed switch	11.03.01	11 Engine protective system
07 Piston coolant nozzle	02.15.01	02 Crankshaft system
07 Piston pin	02.12.01	02 Crankshaft system
07 Piston pin brush	02.13.01	02 Crankshaft system
07 Piston / rings	02.09.01 02.10.01 02.10.02 02.10.04 02.11.01 02.14.01	02 Crankshaft system
32 Pneumatic system	10.01.01	10 Pneumatic system
32 Pressure reducer station	10.06.01	10 Pneumatic system
48 Pressure switch	11.01.02	11 Engine protective system
11 Rocker arm	01.02.02 01.02.03	01 Cylinder head
31 Safety valve	01.12.01	01 Cylinder head
32 Starting air master valve	10.03.01 10.03.91	10 Pneumatic system
30 Starting pilot air distributor	01.02.01	10 Pneumatic system
31 Starting valve	10.11.01 01.11.02 01.05.04	01 Cylinder head
48 Temperature switch	11.01.01	11 Engine protective system
51 Thermocouples	11.01.05	11 Engine protective system
09 Timing gear train	04.04.01 04.08.01	04 Timing system
09 Timing gear train	04.04.01 04.13.01	04 Timing system
43 Turbocharger	06.05.01 06.06.01 06.12.01 06.13.01 06.13.02	06 Exhaust / turbocharging system

© 0885

Assembly Group	Job Card	Maintenance Group
11 Valve drive, bottom	04.02.01	04 Timing system
11 Valve drive, top	01.02.02	01 Cylinder head
08 Valve guide clearance	01.06.01	01 Cylinder head
08 Valve rotator	01.03.01 01.03.02	01 Cylinder head
16 Valve seat lubrication	08.14.01	08 Lubricating oil system
08 Valve seat ring	01.07.01 01.03.01	01 Cylinder head
34 Vibration damper	12.01.01 12.01.02/03	12 Engine auxiliaries

© 0885

Layout and Description of Engine

2

Aufbau und Funktion des Motors
Struttura e funzioni del motore
Constitution et fonctionnement du moteur
Construcción y funciones de partes del motor
Samenstelling en werkwijze van de motor
Конст укция и функция двигателя

2 Layout and Description of Engine

Aufbau und Funktion des Motors
Struttura e funzioni del motore
Constitution et fonctionnement du moteur
Construcción y funciones de partes del motor
Samenstelling en werkwijze van de motor
Конст укция и функция двигателя

2 Layout and Description of Engine

2.1 01 Cylinder Head

The Head iß held down on the crankcase through 4 hydraulically tightened studs.

Fitted in the head are 2 inlet valves, 2 exhaust valves, one fuel injector, a starting valve, an indicator valve and, if required, a relief valve.

The exhaust valves are equipped with rotators, the inlet valves with a seat lubrication to reduce wear. In fact, oil is injected in a metered amount into the charge air, so this seat lubrication requires no servicing. Injector and inlet/exhaust valves plus drive are protected by a rocker chamber cover. Coolant transfer from crankcase to head is made through plugged pipes within the head contour.

2.2 02 Crankshaft System

The drop-forged crankshaft is fitted in the crankcase in underslung arrangement. Main journals and crankpins are hardened and carried in complex-metal bearing shells. As required by the rated engine spee, the shaft is fitted with balance weights to reduce mass forces.

The bearing caps are secured to the crankshaft by 2 vertical and 2 horizontal bolts, the former ones being tightened jointly by a hydraulic tool.

The flywheel is flanged to the shaft‘s driving end, the flange being fitted on the shaft by hydraulic shrinkage. Power for secundary drives can be taken off from the shaft‘s free end.

The drop-forged connecting rod big end is split in straight (horizontal) arrangement, while the small end is of the stepped type.

The two-piece pistons are fitted with 3 compression rings and one oil control ring. The former rings are located in the steel top, the oil ring in the piston skirt above the full-float piston pin.

2.3 03 Engine Frame

The crankcase is a single-piece casting. Large doors permit easy access to all motion parts. Some doors may optionally be provided with relief valves safeguarding the engine in the case of crankcase of explosions.

The standard deep ”wet-type” oil sump represents the engine‘s lube oil reservoir, from which oil is forced into the lubricating circuit by a special delivery pump. Where high or low-level tanks are utilized for oil reservoir, use is made of a flat ”dry-type” sump with connections for an oil drain (to the low-level tank) or a special suction pump (to the high-level tank) respectively.

The cylinder liner is located in the crankcase at top and bottom. The liner flange is seated on a highly waer-resistant ring pressed into the crankcase. The water jackets are sealed by one ”watercooled” Viton 0-seals at the bottom. The head/liner gasket is a steel ring.

© 0883

2.4 04 Timing System

ILocated at the engine‘s driving end and driven from a big gear on the crankshaft, the timing gear train drives, through idler gears, the camshaft, injection pumps and governor.

As determined by the engine‘s firing order, the camshaft, carried in bearing bushes, actuates the inlet and exhaust valves as well as the starting pilot air distributor, The shaft is split in two halves and can be pulled out of the engine lengthwise. Cams and bearing points are surface-hardened.

The pump chest at the engine‘s free end can mount, besides the standard lube oil delivery pump, one oil suction pump and 2 cooling water pumps. The pumps are gear-driven, i.e. the oil pumps direct and the coolant pumps through flexible couplings.

2.5 05 Speed Control System

The Engine is controlled by hydraulic governor which, through the injection pump‘s control rod, automatically meters the amount of fuel to be injected as a function of engine load.

Overall engine control is by an engine-mounted panel or seperately installed local or remote control units.

Emergency engine shutdown is possible by an automatic system or manually on the speed governor direct.

2.6 06 Exhaust / Turbocharging System

The non-insulated exhaust manifold running along the engine is lagged by an easily removable and multisplit casing. Only the water-cooled exhaust elbows from cylinder head to manifold are located outside this casing. Being connected through sliding pieces with 0-seals, the water jackets of the exhaust elbows form the cooling water manifold for the engine.

The engines are fitted with BBC turbochargers connected to the engine‘s cooling system. The compressors of these turbochargers are cleaned by a scavenging device. The charge air is cooled by water in special units.

The charge air pipe is divided into single sections for each cylinder. These sections are likewise connected through sliding pieces with 0-seals.

This new concept of exhaust manifold with cooled elbows and integral water manifold, the division of the charge air pipe, the plug-type water transfer pipes between cylinder head and crankcase and, last not least, the use of hydraulic tools for tightening the cylinder head studs/nuts significantly improve the ease in dismantling and refitting components at the engine top.

© 0883

2.7 07 Fuel System (see also 5.1)

The following integral in-line injection pumps are provided:

6 and 8-cylinder models:	2 pumps with 3 and 4 elements respectively
9-cylinder model:	3 pumps with 3 elements each

The type of pumps chosen and the connection of the injection piping to the cylinder head sideways gave the advantage of very short injection piping.

Pump lubrication is connected to the regular motor oil circuit. In the case of engines running on intermediate fuels a sealing-oil system prevents the lube oil from being diluted by fuel.

The multi-orifice injection nozzle is located in the middle of the cylinder head and connected to the latter by a lateral injection line.

The fuel feed pump is mounted on one injection pump. Fuel cleaning is through a change-over type duplex filter.

In the case of engines running on heavy fuel, the feed pump is installed seperately. The change-over duplex filter can be preheated by having the transferred, preheated fuel flow through the filter. If available, the injection nozzles are cooled with engine lube oil or gas oil or - in exceptional cases - even with engine coolant.

2.8 08 Lubricating Oil System (see also 5.2)

From the oil sump, or the low- or high-level oil tank, as provided, the engine mounted delivery-type oil pump forces the oil through the oil-cooler, usually also engine-mounted, and the combined oil filter (paper filter followed by edge filter) into the oil gallery integrally cast inside the crankcase.

From this gallery the oil flows on through passages in the crankcase wall to crankshaft journals and crankpins and to the nozzles provided for cooling the pistons. Passages in the crankcase front, wich are connected to the oil gallery, supply the timing gear train.

Additional bypass oil filtration is by two centrifuges attached to the crankcase doors.

Connections are also available for standby oil pumps and the electric priming pump.

2.9 09 Cooling Water System (see also 5.3)

As requiered by the particular engine application, the following standard systems can be provided:

1. Single-Circuit: This circuit serves actual engine plus lube oil and charge air cooler. The water is cooled in a separate tubular heat exchanger.

2. Double-Circuit: One cooling circuit is provided for the engine, a second one for oil and charge air cooler. The coolant heat dissipated is a separate tubular heat exchanger.

3. Triple-Circuit: This system is primarily used for water cooling by radiator. Engine, oil cooler and charge cooler have a circuit of their own.

Optionally available are various versions of the above two systems

© 1296

2.10 10 Pneumatic System (see also 5.4)

The engine is started by compressed air through starting valves in the cylinder heads, the valves being opened by pilot air from a distributor in the correct firing order. Starting air release is normally at 30 bar.

2.11 11 Engine Protective System

All engine operating media can be monitored by temperature and/or pressure switches which energize alarm and/or shutdown devices. In addition, all essential temperatures and pressures are indicated by gauges provided on panels that are either engine-mounted or seperately installed.

The exhaust temperature is indicated either by pointer thermometers or through thermocouples, which can optionally and locally be connected to a pyrometer system.

If necessary, a crankcase oil mist detector can also be provided.

2.12 12 Engine Auxiliaries

Provided for this engine family is an external vibration damper either of the viscous or rubber type. The 6-cylinder model is also available without this damper.

© 1083

2.13 Engine Assemblies and Subassemblies (as for the relevant location, please refer to Section 2.14)

Assy Group No.	Description
01	Exhaust manifold
02	Exhaust thermometre
03	Charge air cooler
04	Measuring instrument panel
05	Charge air pipe
06	Fuel piping
07	Engine control unit
08	Fuel filter
09	Lube oil filter
10	Lube oil filter combination
11	Fuel injection pump
12	Vibration damper
13	Cylinder liner
14	Oil dipstick
15	Connecting rod
16	Crankshaft
17	Speed governor drive
18	Oil pan
19	Flywheel
20	Timing gear train
21	Piston
22	Starting pilot air distributor
23	Camshaft
24	Air intake silencer
25	Exhaust valve
26	Pushrods
27	Exhaust turbocharger
28	Injector
29	Cylinder head
30	Valve drive

© 1296

2.14 Cutaway View of Engine

(8-cyl. engine)

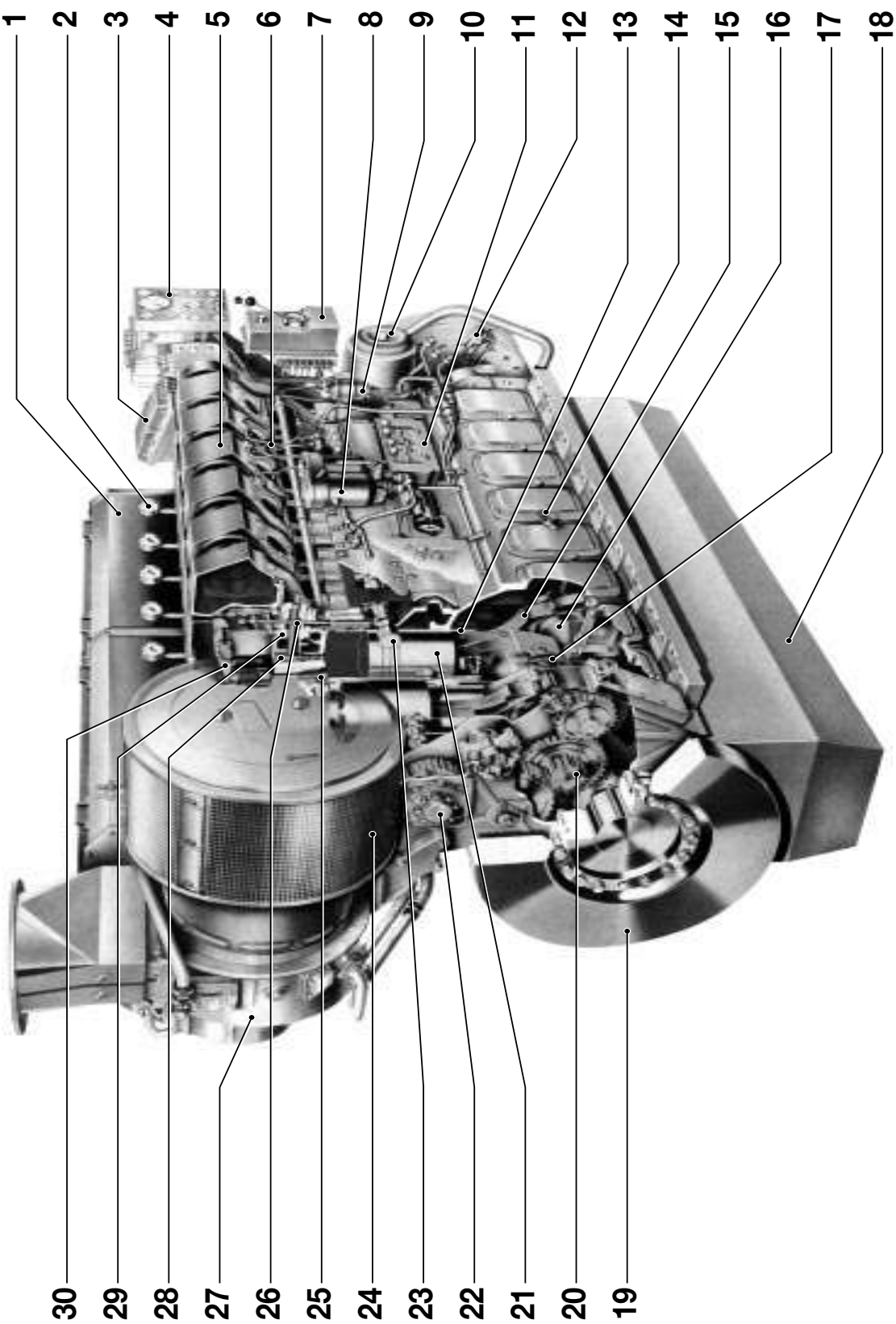

51452 | 2 | ©

Specification Data

Technische Angaben
Indicazioni tecniche
Données techniques
Datos técnicos
Technische gegevens
Тенические данные

3

3 Specification Data

Technische Angaben
Indicazioni tecniche
Données techniques
Datos técnicos
Technische gegevens
Тенические данные

3 Specification Data

3.1 Model Designation: S/BV 6/8/9 M 628

S	=	Marine (uni-direction)
B	=	Turbocharged
V	=	Four stroke cycle
6/8/9	=	6, 8 or 9 cylinders

M	=	Water cooled
6	=	Generation No.
28	=	Piston stroke in cm

3.2 Designations of engine sides, cylinders and rotation direction

Viewed towards the drive-side coupling flange of the engine.

1	**AS**	**Drive side**	Coupling side KS
2	**LS**	**Left side**	
3	**FS**	**Free side**	Opposite side to coupling KGS
4	**RS**	**Right side**	

Cylinder designation

The cylinders are counted and designated from the drive side "AS"

Rotation direction

The anticlockwise rotation direction is designated "left rotation" and clockwise is designated "right rotation".

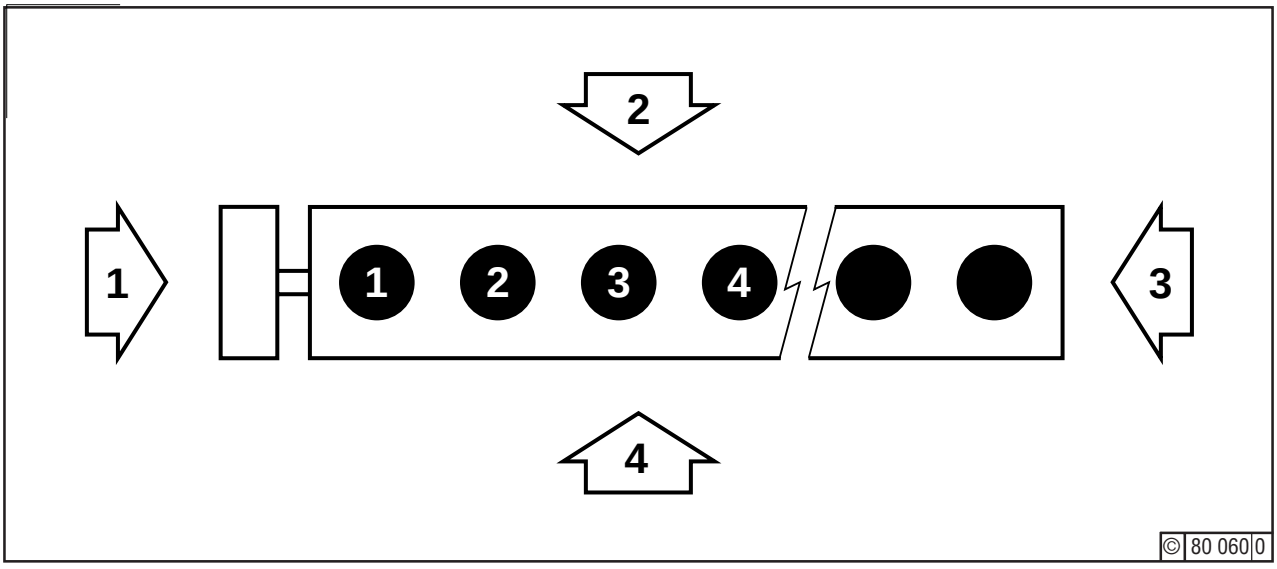

3.3 Basic Data

Power and speed	see acceptance test sheets
Bore	240 mm
Stroke	280 mm
Capacity per cylinder	12,66 litres
Total capacity: 6 cylinder	75,66 litres
8 cylinder	101,28 litres
9 cylinder	113,94 litres
Compression ratio	13 : 1

3.3.1 Design Data

01 Cylinder Head

Safety valve opens at	170 ± 5 bar

02 Crankshaft System

Crankshaft

main jounal dia.	210 mm
running width of main bearing	70 mm
crankpin dia.	175 mm
running width of big-end bearings	61 mm

Piston

Material, top	heat-treated steel with hardened grooves
skirt	forget light alloy
Pin dia.	105 mm
No.of compression rings	3
No. of oil control rings	1
Mean piston speed	9,33 m/s a t 1000/min

Connecting rod

Length	504 mm
Running width of small-end bush	108 mm/56 mm

03 Engine frame

Material	ductile iron
Cylinder spacing	370 mm

04 Timing system

Firing order

6-cyl. model, CL rotation:	1- 4 - 2 - 6 - 3 - 5
6-cyl. model, CCL rotation:	1- 5 - 3 - 6 - 2 - 4
8-cyl. model, CL rotation:	1- 3 - 2 - 5 - 8 - 6 - 7 - 4
8-cyl. model, CCL rotation:	1- 4 - 7 - 6 - 8 - 5 - 2 - 3
9-cyl. model, CL rotation	1- 3 - 5 - 7 - 9 - 8 - 6 - 4 - 2
9-cyl. model, CCL rotation	1- 2 - 4 - 6 - 8 - 9 - 7 - 5 - 3

Valve Timing (deg. crank angle)

© 0491

Inlet valve opens	43,5° KW	p. PMS	0,2 mm clearance, engine cold
Inlet valve closes	23,6° KW	d. PMS	
Exhaust valve opens	52,9° KW	p. PMS	0,5 mm clearance, engine cold
Exhaust valve closes	38,9° KW	d. PMS	
Starting valve opens	11° bTDC		
Starting valve closes	40° bBDC		

05 Speed Control System

Lowest idling speed	≤ 800	801 - 900	901 - 1000/min
at full engine speed	200	225	250/min

Lowest firing speed 80/min

06 Exhaust / Turbocharging System

Charge air cooler see acceptance test sheet

07 Fuel System

Injection lines 10 mm O.D.
4 mm bore

3.3.2 Operating Data

06 Exhaust / Turbocharging System
Turbocharging System

Charge air temperature at engine inlet see acceptance test sheet

Max. intake resistance 25 mbar (250 mm of water)

Exhaust System
On the 8- and 9-cylinder models, the cylinder next to the turbocharger goes to the multi-pulse unit direct, so the exhaust temperatures of this cylinder are somewhat lower (see acceptance test sheet).

Exhaust teperature after turbine see acceptance test sheet

Max. backpressure 25 mbar
Perm. deviation of individual temperatu res
from mean value of all cylinders:

100 % rated power	± 25 °C
75 % rated power	± 30 °C
50 % rated power	± 50 °C

© 0491

07 Fuel System

Fuel grade	See Section 6 . 3
Fuel consumption	See acceptance test sheet
Filter mesh	7 - 60 µm
Fuel pressure at inj. pump inlet at rated speed	3,0 - 4, 5 bar
Fuel temperature at inj. pump inlet	See Section 6
Injection nozzle opening pressure	350 + 10 bar
Type of nozzles	See acceptance test sheet
Combustion pressure	See acceptance test sheet
Permissible deviation of individual indicated firing pressure from mean value of all cylinders	+ 4 bar
Delivery of separate fuel feed pump at 5 + 2,5 bar backpressure:	6-cyl. engine: 1,3 + 1,0 m^3/h 8-cyl. engine: 1,8 + 0,6 m^3/h 9-cyl. engine: 2,0 + 0,4 m^3/h

08 Lubricating Oil System

Oil grade	See Section 6 . 2
Filter mesh:	
- paper cartridge	30 µm
- edge filter	50 µm
Oil temperature at engine inlet:	
(oil cooler preceding charge air cooler)	max. 65 °C
(charge air cooler preceding oil cooler)	max. 75 °C
Min. oil pressure after filter:	
- rated speed, engine hot	3,5 bar
- at lowest idling speed	1,0 bar
Priming pressure after filter:	
- before starting regular engine	0,35 bar
- engine (stationary) on standby duty	≥ 0,35 bar (held for 3 minutes every hour)

Min. priming oil pumping at 3 bar delivery pressure (values in brackets are possible in case of lube oil temperatures below 50° C)

6-cyl.	8-cyl.	9-cyl.
4 m^3/h (2,5 m^3/h)	5 m^3/h (3 m^3/h)	6 m^3/h (3,5 m^3/h)

Sealing-oil pressure in injection pumps	min. 1 bar higher than fuel pressure
Delivery pressure of mounted sealing oil pump	min. 5 bar
Separate sealing-oil pump (with intermediate fuel operation):	
Delivery pressure:	9 - 10 bar

Sealing-oil delivery

	6-cyl.	8-cyl.	9-cyl.
- min.	0,15 l/h	0,2 l/h	0,25 l/h
- max.	0,6 l/h	0,6 l/h	0,6 l/h

level tanks:		
- distillate, MDF blend	min. 0,7	l/kW
- heavy fuel	≥ 0,82	l/kW
Lube oil consumption	1	g/kWh
Min. oil capacity of standby engines	0,2	l/kW

© 1186

Separate standby oil pump:

- capacity	6-cyl.: 24 - 30 m³/h 8-cyl.: 30 - 35 m³/h 9-cyl.: 35 - 40 m³/h
- Pressure	5 bar

Oil Sump Inclinations and Capacities

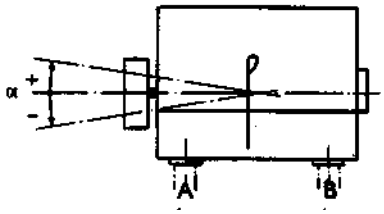

Connections for low-level tank

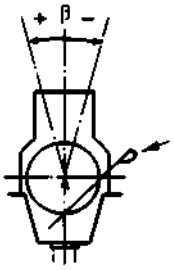

Dipstick with
3 marks

© 51 201 0

Max. engine installation angle	α ± = 3°
Max. sump inclination (incl. installation angle)	α ± = 10°
Max. permanent inclination	β ± = 22,5°
Max. temporary inclination (starting 22°, turbocharger will lose some oil)	β ± = 30°

				6-cyl.	8-cyl	9-cyl
Oil capacity of deep oil sump (litres) 2)	oil level max.	Top mark	α = 0° β = 0° *3	615	800	895
		Medium mark	α = ±10° *1 β = 0° *3	525	680	760
	oil level min	Bottom mark	α = ±10° β = 0°	405	525	590

*1) Where sump inclinations α ± are below 10°, the oil level can be kept at a corresponding level between the top and medium dipstick mark to ensure maximum oil supply to the engine and hence increase oil change intervals . (1° less inclination allows for approx. 10 mm higher level above medium mark.)

*2) Sump lubrication for heavy fuel requires min. 0,82 lit/kW

*3) Due to inclined dipstick, correct maximum distance can be obtained only with β = 0°.

		6-cyl.	8-cyl.	9-cyl.
Connection for low-level tank ("dry" sump)	Drain A or B for inclinations $\alpha \pm \leq$	10°	8%	7°
	Drain A and B for inclinations $\alpha \pm$		> 8° - 10°	> 7° - 10°

Oil Delivery Rate for Valve Seat Lubrication

Rated Engine Speed 1/min.	Delivery in drops / 4 min 6-cyl.	8-cyl.	9-cyl.
1000	42	56	63
900	37	50	56
800	34	45	50
750	32	42	47
720	30	40	45
Admissible deviation ± 4 gocce/4 min			

09 Cooling Water System

Water quality	see Section 6
Engine system capacity	6-cyl.: 225 litres 8-cyl.: 275 litres 9-cyl.: 300 litres
Max. coolant temperature at engine outlet during full-load operation	
(In case of 2-stage charge air cooler, measured at cooler inlet)	
- with single-circuit cooling system	80°C
- with two- and three-circuit cooling system	85°C
Temperature difference between full load and idling operation (at engine outlet)	8 - 12 °C
Temperature difference between cooling water at engine inlet and engine outlet under full load conditions	8 - 12 °C
(In case of 2-stage charge air cooler, measured at cooler inlet)	
Cooling water preheating temperature	
- for standby duty	50 °C
- for engines starting with blended fuel	
- viscosity ≤ 180 mm²/s at 50°C (cSt)	50 °C
- viscosity > 180 mm²/s at 50°C (cSt)	70 °C
- viscosity ≥ 380 mm²/s at 50°C (cSt)	80 °C
- for all other engines	25 °C
Max. coolant temperature at charge air cooler inlet	50 °C
Max. coolant temperature at built-on oil cooler inlet	45 °C
Max. raw water temperature at heat exchanger inlet	32 °C
Max. coolant pressure at engine inlet with built-on or separate pump	~ 4 bar
Coolant temperature at injection nozzle inlet approx.	85°C
Min. pressure of separate injection nozzle coolant pump	3 bar

© 0885

10 Pneumatic System

Air receiver capacity	see Classification Societies (min. 125 lit.)
Max. starting pressure	30 bar
Min. starting pressure	10 bar

© 0883

3.3.3 Setting data for monitoring equipment

Minimum equipment	marine propulsion engines		auxiliary marine	stationary engines
			Data in “bar”	
Pressure monitor	engine speed			
(referring to dropping pressure)	≤ 600/min	> 600/min		
lube oil pressure:				
initial alarm	–	–	2,0	–
main alarm (engine stop)	1,0	2,0	1,8	2,0
Temperature monitor			Data in „°C“	
circ. cool. water temp				
circuit I	85		85	85
charge air temp., max.	65		65	65
Other monitors			rated speed	
overspeed protection	110 %n_1		110 %n_1	110 %n_1

Further setting data may be obtained from the gauge point list which is included in the engine documentation.

This page intentionally left blank

3.3.4 Arrangement of Electrical Equipment

Measuring point No. as per separately supplied list of measuring points	Function / description of the equipment or of the gauge point
1.3.1	Fuel supply pressure
1.3.3	Pme monitoring
1.3.4	Full load (overload) monitoring
1.3.7	Fuel rack travel indicator
1.3.8	Monitoring of shielded injection pipings
2.3.1	Speed switch - pressure monitor bridging
2.3.2	Lube oil pressure n $\leq$ 600 l/min
2.3.3	Lube oil pressure n > 600 l/min
2.3.4	Lube oil pressure
2.3.5	Lube oil temperature
2.3.7	Min. lube oil temperature
2.3.8	Differential pressure lube oil filter
2.3.9	Level - lube oil pan
2.4.1	Lube oil pressure
2.4.6	Lube oil temperature
2.4.8	Seal oil pressure
2.4.10	Lube oil pressure start inhibitor
2.4.11	Level - lube oil pan, stand-by pump ON
2.6.3	Lube oil temperature
3.3.2	Engine jacket water temperature
3.3.3	Engine jacket water pressure, circuit I
3.3.4	Raw water pressure
3.3.5	Min. engine jacket water temperature
3.3.7	Engine jacket water, circuit II
3.3.10	Speed switch - pressure monitor bridging
3.4.4	Engine jacket water temperature
3.6.4	Engine jacket water temperature
4.3.1	Max. charge air temperature
4.3.2	Min. charge air temperature
4.3.3	Water detector in charge air pipe
4.6.2	Charge air temperature
5.4.1	Exhaust gas temperature per cylinder
5.4.3	Exhaust gas temperature after turbine
6.3.1	Failure crankcase monitoring system
6.4.5	Crankcase monitoring system
7.3.1	Starting air pressure
7.3.2	Control air pressure
7.3.3	Malfunction of start air interlock (engine fails to start)
7.3.4	Switch - speed setting output
7.3.5	Switch - speed setting input
7.3.6	Switch - engine remote control unit (BVM)
7.3.6	Control unit indicator, engine-mounted/remote (SBVM)
7.3.9	Signal lamp - remote control ON
7.3.10	3/2 -way valve change-over safeguard

© 0685

Measuring point No. as per separately supplied list of measuring points	Function / description of the equipment or of the gauge point
7.3.14	Tacho-generator monitor
7.5.8	Solenoid - emergency shutdown
7.5.9	Starting solenoid, 3/2-way valve
7.5.10	Pushbutton - delocking emergency stop
7.5.12	Speed control monitor
7.5.14	Pushbutton - stop
7.5.15	Solenoid - emergency shutdown
7.5.16	Solenoid - stop
7.5.17	Electr. 3-way valve (start inhibitor)
7.5.20	Pushbutton - start
8.1.1	Tacho-generator
8.1.2	Speed indicator

© 0685

3.3.4.1 Exhaust Turbocharger at Driving End

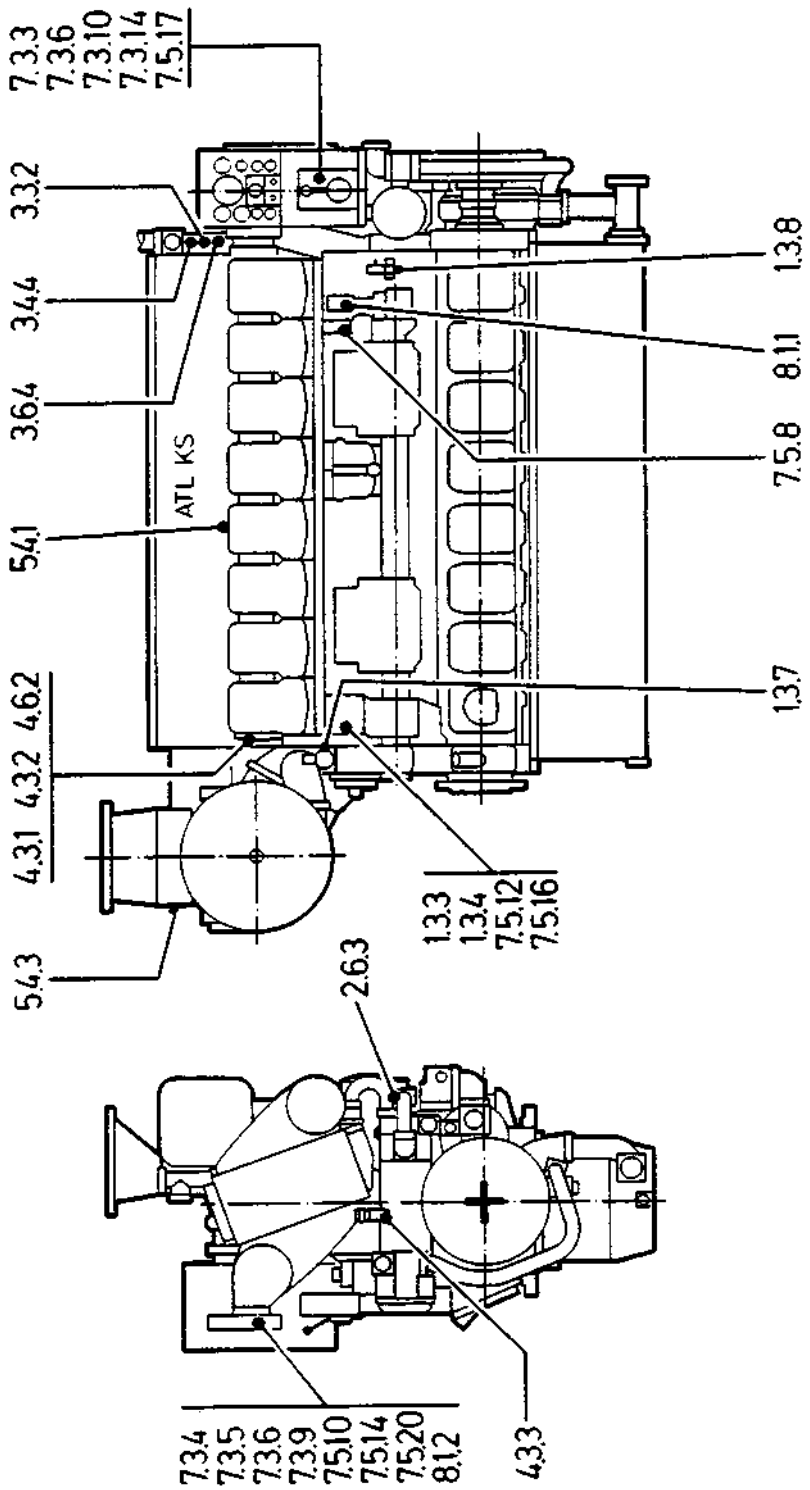

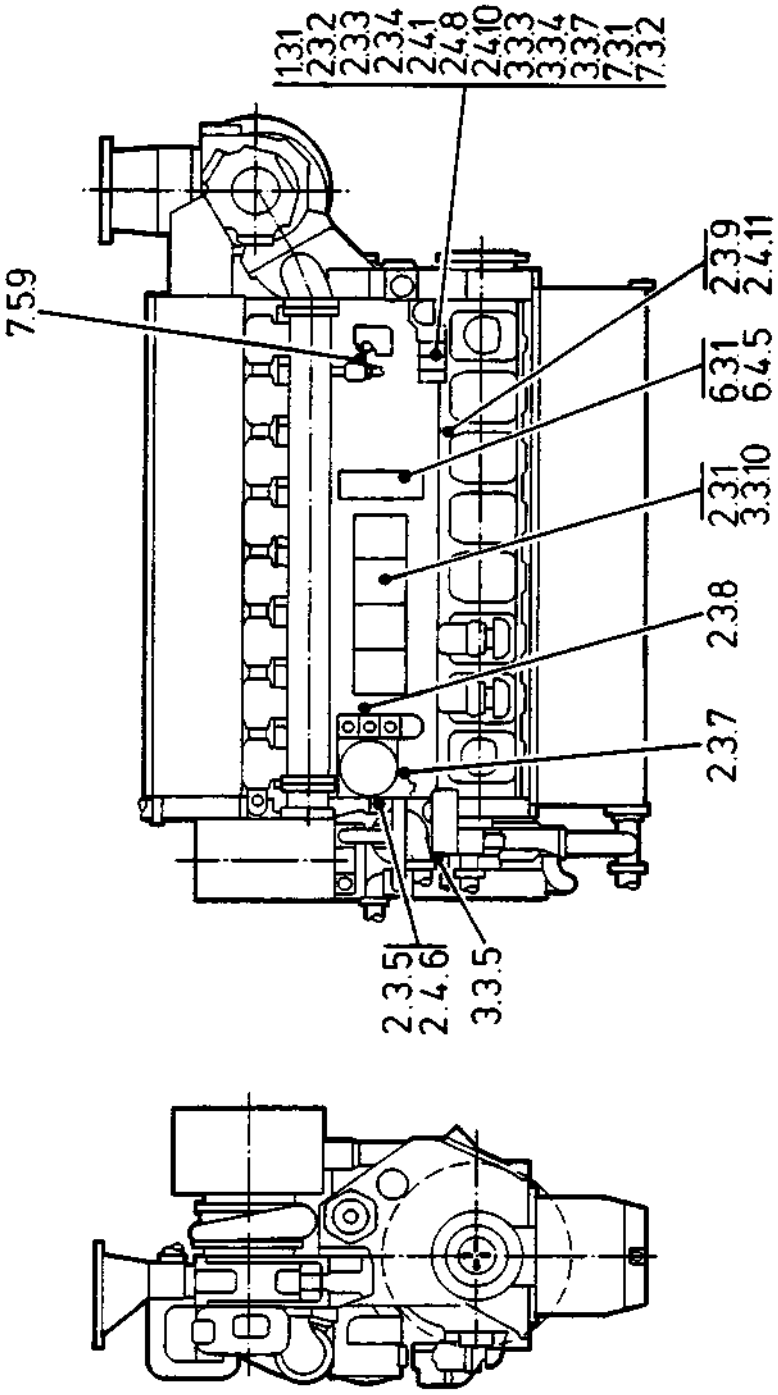
1.3.1
2.3.2
2.3.3
2.3.4
2.4.1
2.4.8
2.4.10
3.3.3
3.3.4
3.3.7
7.3.1
7.3.2
7.5.9
2.3.9
2.4.11
6.3.1
6.4.5
2.3.1
3.3.10
2.3.8
2.3.7
2.3.5
2.4.6
3.3.5
25 438 2 ©

© 0984

3.3.4.2 Exhaust Turbocharger at Free End

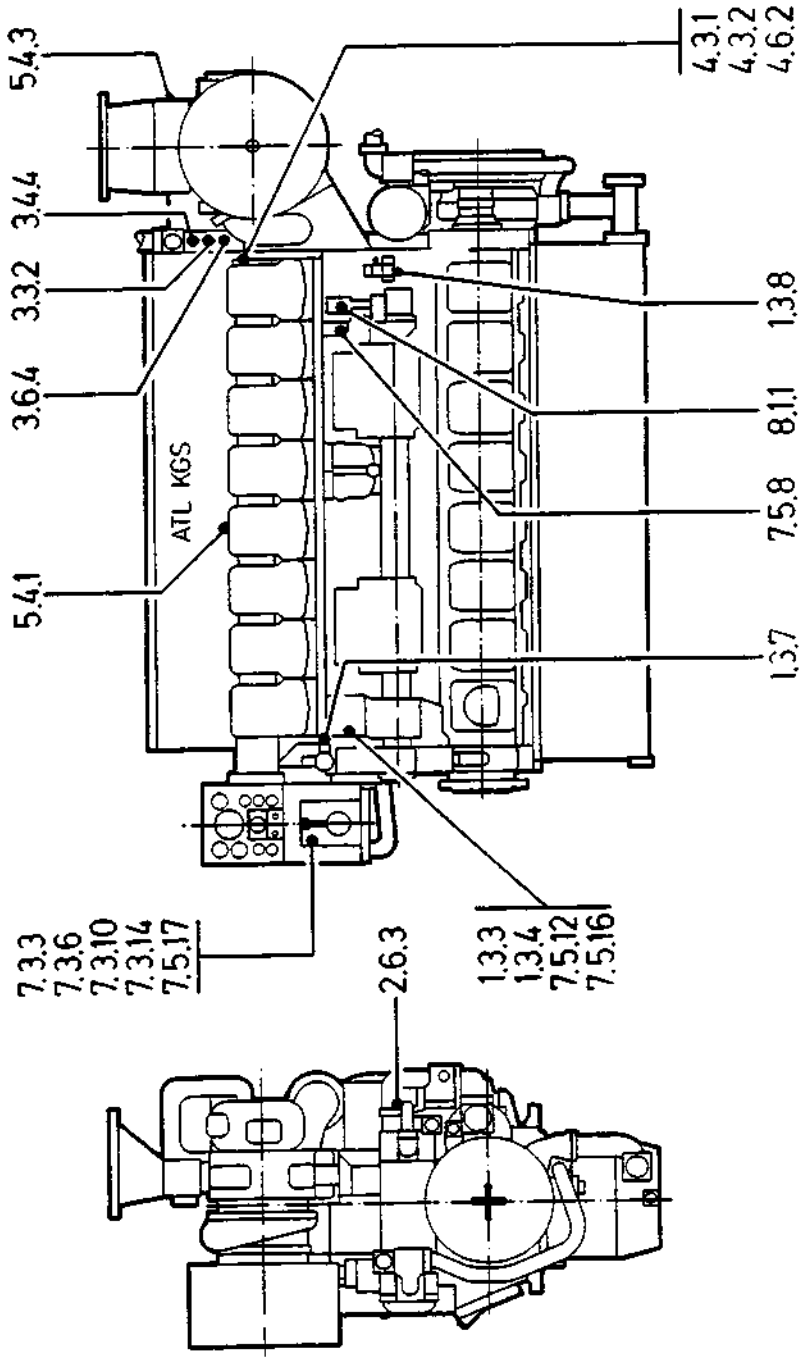

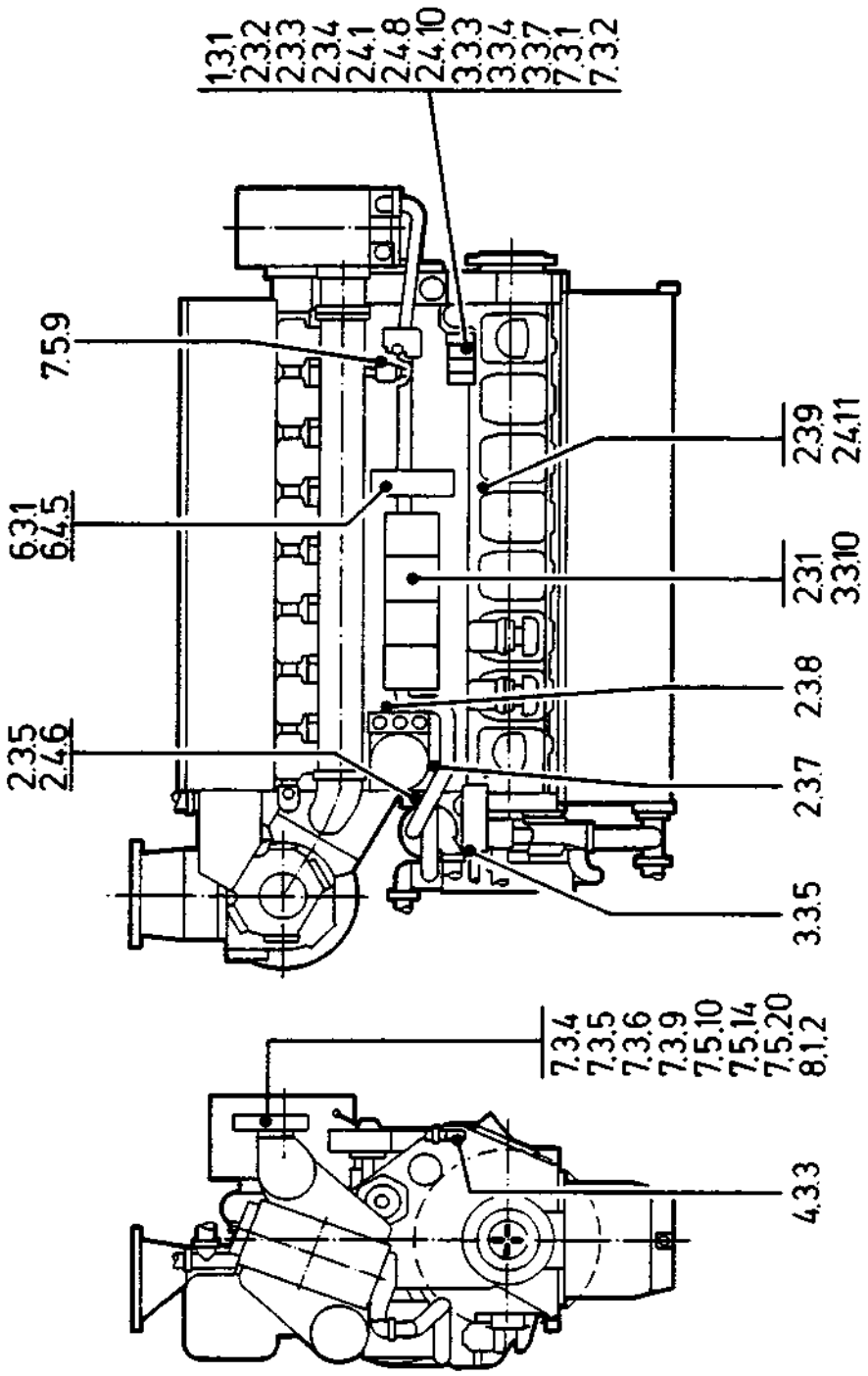
1.3.1
2.3.2
2.3.3
2.3.4
2.4.1
2.4.8
2.4.10
3.3.3
3.3.4
3.3.7
7.3.1
7.3.2
7.5.9
6.3.1
6.4.5
2.3.5
2.4.6
2.3.9
2.4.11
2.3.1
3.3.10
2.3.8
2.3.7
3.3.5
7.3.4
7.3.5
7.3.6
7.3.9
7.5.10
7.5.14
7.5.20
8.1.2
4.3.3

25 440 2 ©

© 0984

3.4 Weight of Engine Components

(approx. kg per unit)

No.	Description	6-cyl.	8-cyl.	9-cyl.
1	Engine with flywheel	9500	11500	13400
2	Crankcase w/o main bearing cap Crankcase w.main bearing cap	2080 2310	2617 2920	3700 4030
3	Oil tank ...(wet sump) Oil tank ...(dry sump)	365 320	430 380	470 410
4	Cylinder liner	58	58	58
5	Crankshaft w/o balance weights	790	995	1097
6	Balance weights w. bolts and washers	23	23	23
7	Flywheel dia. Ø 930 x 86 Ø 970 x 130 Ø 990 x 240 Ø 1140 x 277	199 or 480 1452	252 or or 1040 or	305 505 1572
8	Bearing (top and bottom shell) 1 main bearing 1 big end bearing	 2 1	 2 1	 2 1
9	Connecting rod	36,5	36,5	36,5
10	Piston without piston rings	22	22	22
11	Gudgeon pin	10,8	10,8	10,8
12	Cylinder head (compl.)	120	120	120
13	Inlet or exhaust valves	1	1	1
14	Injection valve	3,3	3,3	3,3
15	Viscous-type vibration damper Ø 490 x 85 Ø 620 x 100 Ø 640 x 120		 104 200 255	
16	Extra weights (dia. x width) Ø 538 x 55 Ø 680 x 42,5		90 108	
17	Torsional vibration damper, rubber-type (dia. x width) Ø 675 x 130 – Ø 680 x 153	 145 -	 - 230	 - 230
18	Turbocharger VTR 214 w/o intake air silencer VTR 251	230 -	230 360	- 360

© 1296

Specification Data

DEUTZ®

Item	Description	ca. kg			
19	**Coupling**	**Series**			
	Size	**1120**	**1121**	**1300**	**1301**
	EZR 1232	133	142	181	188
	EZR 1412 EZR 1422	217	220	305	307
	EZR 1712 EZR 1722	373	378	479	484
	EZR 2012	594	603	736	753
20	**Coupling**	**Series**			
	Size	**2100**	**2101**	**2200**	**2201**
	Rato-S 1811 Rato-S 1812	141	170	141	178
	Rato-S 2011 Rato-S 2012	169	207	169	216
	Rato-S 2211 Rato-S 2212	205	250	205	261
	Rato-S 2411 Rato-S 2412	275	330	275	346
	Rato-S 2521 Rato-S 2522	318	372	339	394
	Rato-S 2611 Rato-S 2612	334	402	334	420
	Rato-S 2721 Rato-S 2722	387	455	412	481
	Rato-S 2811 Rato-S 2812	421	505	421	530
	Rato-S 2921 Rato-S 2922	478	562	511	597

© 1185

Item	Description	6-cyl. ca. kg	8-cyl. ca. kg	9-cyl ca. kg
21	Charge air piping (section per cylinder)	23	23	23

© 1185

This page intentionally left blank

© 0491

3.5 Tightening Specification for Heavy-Duty Screwed Joints

3.5.1 Table

Line No.	Constr. group	Joints tightened by hydraulic tool	Thread	Oil pressure bar	Remarks
01	01	Crankcase / cylinder head	M 33 x 2	835 bar	Job 01.09.01
02	01	Crankcase / bearing cap (vertical)	M 33 x 2	1030 bar	Section 3.5.2, Job 02.08.01

Line No.	N. cost-group	Joints tightened by wrench	Thread	Preload torque Nm	Tightening torque Nm	Tightening angle ∡ °	Remarks
03	01	Crankcase / bearing cap (horizontal)	M 22 x 2	70 Nm	-	210 °	-
04	06	Big end / cap	M 20 x 1,5	70 Nm	-	240 °	1° phase 90 ° 2° phase 90 ° 3° phase 60 °
05 06	05	Crankshaft / counterweights	M 27 x 2	130 Nm	-	90 °	-
07	11	Rocker bracket / cylinder head	M 14 x 1,5	30 Nm	-	150 °	1° phase 30 ° 2° phase 60 ° 3° phase 60 °
08	11	Rocker shaft / rocker bracket / cylinder head	M 16 x 1,5	30 Nm	-	240 °	1° phase 60 ° 2° phase 90 ° 3° phase 90 °
09	09	Timing chest / crankcase	M 14	-	112 Nm	-	-
10	17	Injection pump top / base	M 12	30 Nm	-	90 °	-
11	17	Injection pump: element fastening	M 12	85 Nm	-	60 °	-
12	17	Injection pump: cramshaft / gear	M 14 x 1,5	30 Nm	-	60 °	non greased
13	17	Injection pump / crankcase	M 12	30 Nm	-	90 °	-
14	18	Injection pump drive / clutch disc	M 20 x 1,5	130 Nm	-	90 °	-
15	18	Injection pump drive / cramshaft	M 14 x 1,5	30 Nm	-	90 °	-
16	09	Injection pump drive / gear	M 16 x 1,5	30 Nm	-	90 °	-
17 18	34	Vibration damper / crankshaft	M 24 x 2	130 Nm	-	90 °	-
19	37	Water pump / shaft	M 16 x 1,5	50 Nm	-	120 °	-
20	43	Turbocharger bracket / crankcase	M 16 x 1,5	-	250 Nm	-	-
21	14	Crankshaft / gear	M 10	-	50 Nm	-	-
22	14	Gear / oil pump drive dell'olio lubrificante	M 16	50 Nm	-	90 °	-
23	19	Injector fastening	M 16 x 1,5	-	120 Nm	-	-
24	05	Flywheel / crankshaft	M30 x 2 x 100	128 Nm	-	75 °	1° phase 45 ° 2° phase 30 °
			M30 x 2 x 200	128 Nm	-	150 °	1° phase 90 ° 2° phase 60 °

© 0992

Specification Data

Line No.	Constr. group	Joints tightened by wrench		Thread	Preload torque Nm	Tightening torque Nm	Tightening angle ∡ °	Remarks
25	05	Crankshaft / gear		M 12	-	120 Nm	-	-
26	10	Drive gear / camshaft		M 10	-	70 Nm	-	-
27	10	Camshaft / camshaft		M 10	-	70 Nm	-	-
28	01	Crankcase door		M 10 x 30	-	70 Nm	-	-
29	14	Pump chest fastening		M 12	-	75 Nm	-	-
30	30	Starting control shaft / camshaft		M 14 x 1,5	30 Nm	-	90 °	-
31	21	Injection line / cap nut			30 Nm	-	30 °	-
32	09	Timing chest / crankcase		M 16 x 1,5	-	250 Nm	-	-
33				M 20 x 2	-	280 Nm	-	-
35	58	Charge air cooler bracket / crankcase		M 16 x 1,5	-	250 Nm	-	-
36				M 12 x 1,25	-	108 Nm	-	-
37				M 10	-	70 Nm	-	-
38	22	Air cleaner (long bolts)	ATL VTR 251	M 10	30 Nm	-	240 °	1° phase 180 ° 2° phase 60 °
39			ATL VTR 201	M 10	30 Nm	-	150 °	1° phase 90 ° 2° phase 60 °
40	09	Gear pivot pins		M 16 x 1,5	-	130 Nm	-	-
41				M 20 x 2	-	280 Nm	-	-
42	63	Flexible coupling (c/w adapter flange) / flywheel	EZ 121 S EZ 135 S	M 14	20-30 Nm	-	60 °	1° phase 30 ° 2° phase 30 °
43			EZ 142 S EZ 166 S	M 18 x 1,5	40 Nm	-	90 °	1° phase 30 ° 2° phase 60 °
44			EZ 171 S EZ 195 S	M 22 x 1,5	69 Nm	-	120 °	1° phase 60 ° 2° phase 60 °
45			EZ 201 S	M 27 x 2	128 Nm	-	60 °	1° phase 30 ° 2° phase 30 °
47	52	Generator		M 30 x 2	128 Nm	-	90 °	1° phase 30 ° 2° phase 60 °
48	34	Vibration damper / crankshaft		M 24 x 2	130 Nm	-	120 °	D. with extra mass
49	27	Governor drive / bevel gear		M 24 x 1,5	70 Nm	-	90 °	-
50	19	Injector / nozzle nut		M 28 x 1,5	-	120 Nm	-	-
51	63	Flexible coupling (without adapter flange) / flywheel	EZ 121 S EZ 135 S	M 14	20 -30 Nm	-	60 °	1° phase 30 ° 2° phase 30 °
52			EZ 142 S EZ 166 S	M 18 x 1,5	40 Nm	-	90 °	1° phase 60 ° 2° phase 30 °
53			EZ 171 S EZ 195 S	M 22 x 1,5	68 Nm	-	150 °	1° phase 90 ° 2° phase 60 °
54			EZ 201 S	M 27 x 2	128 Nm	-	120 °	1° phase 60 ° 2° phase 60 °

© 0883

Line No.	Constr. group	Joints tightened by wrench	Thread	Preload torque Nm	Tightening torque Nm	Tightening angle ∡ °	Remarks
55	34	Vibration damper / rubber element	M 10 x 20	-	60 Nm	-	-
56			M 10 x 25	-	60 Nm	-	-
57			M 12 x 140	-	170 Nm	-	-
58			M 14 x 35	-	220 Nm	-	-
59			M 14 x 50	-	220 Nm	-	-
60	29	Control rod / connecting linkage	M 8 x 30	-	40^{+5} Nm	-	-
61	10	Camshaft / guide plate	M 10	-	50 Nm	-	-
62	43	Turbocharger assembly	M 14 x 80	-	125 Nm	-	-
63			M 16 x 40	-	280 Nm	-	-
64			M 16 x 45	-	190 Nm	-	-
65			M 16 x 50	-	280 Nm	-	-
66			M 16 x 80	-	280 Nm	-	-
67			M 16 x 90	-	280 Nm	-	-
68			M 16 x 170	-	280 Nm	-	-
69			M 20x 1,2x45	-	700 Nm	-	-
70			M 20x1,5x50	-	430 Nm	-	-
71			M 20x1,5x65	-	300 Nm	-	-
72			M 20 x 50	-	380 Nm	-	-
73			M 20 x 160	-	380 Nm	-	-
74	16	Piston cooling oil nozzles	M 12 x 40	-	135 Nm	-	-
75	47	Resilient bearing element / base plate	M 27	-	1000 Nm	-	-
76	01	Crankcase / base plate	M 22 x 1,5	-	900^{+20} Nm	-	-

© 0599

3.5.2 Legend for Items 2 and 3

- Preload studs I and II hydraulically with max. 100 bar.
- Preload studs III and IV mechanically with 70 Nm.
- Tighten studs III and IV alternately through 90° + 90° + 30° = 210°.
- Tighten bolts I and II hydraulically to max. 1030 bar.
  Screw nuts in place and tighten until aquarely seated.
- Lower hydraulic pressure to 0 bar, so nut will becompletely tight.
- Reincrease pressure to 1030 bar and tighten nuts until squarely seated.

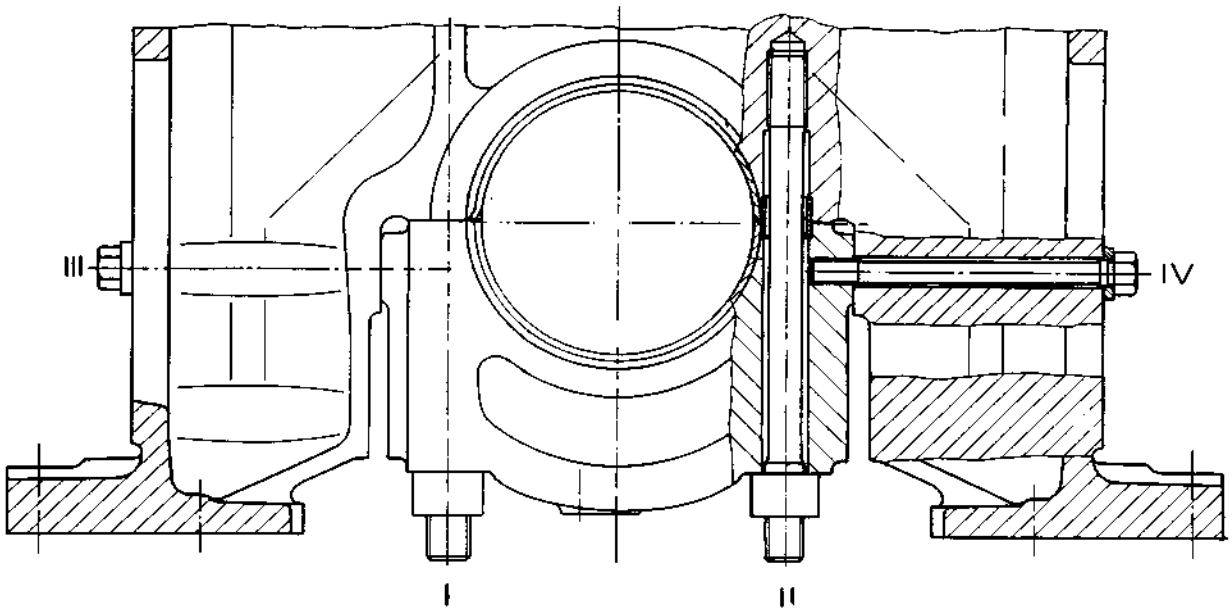

© 51 202 0

3.5.3 Tightening Procedure

Proceed by applying lube oil or other compound to threads according to information given in the job cards.

Phase 1: Screw the bolts (screws, nuts) in place
Phase 2: Preload the bolts (screws, nuts)

- **Torques up to 30 Nm**
  Hold socket wrench with tommy bar, hands being closed together and preload bolts evenly (alternately and crosswise, where applicable).
  When using a plain or box wrench, the thumb should touch the wrench.

- **Torques above 30 Nm**
  Preload bolts by torque wrench to the torque tabulated (crosswise and in stages, where applicable).
  If a standard tool must be used, see adjoining figure and table below with typical values

Phase 3

- **Tighten the bolts (srews, nuts)**
  Tighten bolts evenly to the tabulated angle (alternately and crosswise, where applicable). Use extension, if necessary. Where several bolts are involved and the angle is greater than 60°, tighten in stages of max. 60°.

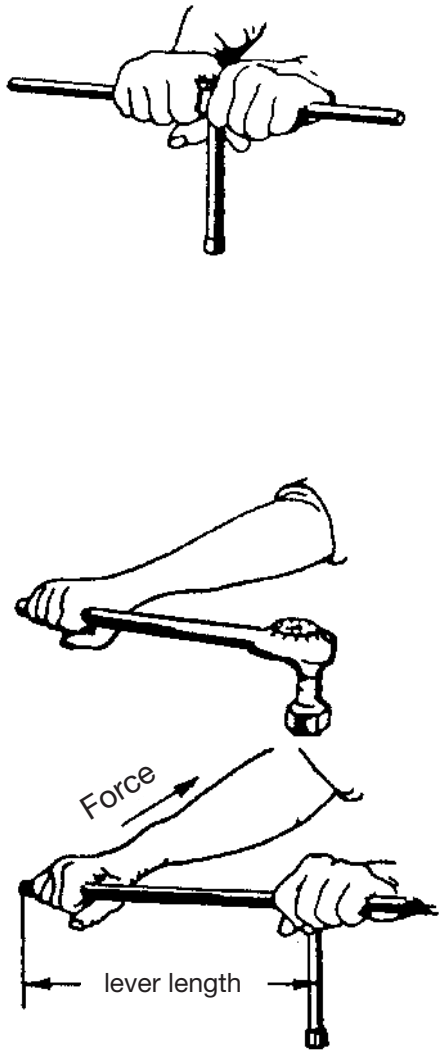

© 51 203 0

Preloading torque Nm	Lever Length mm	Force N
30	500	60
40	500	80
70	1000	70
130	1000	130

⚠ Do not simply back overtightened bolts, but release them comletely and tighten again as specified.

Should necking of shank be found after several tightening procedures, renew bolt.

3.5.4 Information on the Hydraulic Tool for Annular Nuts

For equipment design, oil filling and bleeding procedures see Job Card No. 02.16.02, which also gives a list of hydraulic oils recommended.

© 0685

3.6 Sealing, Locking, Lubrication and Heat Conductor Compounds

Designation	Description	Application condition	Use	Remarks	Equivalent product
Sealing compounds:					
It-Ö	Asbestos with loil-resistant bonding agent	1,5 mm thick	lube oil, gas oil		
Asbestos	Serpentine type	2,0 mm thick	Combustion gases		
Gi Deutz 2b	Rubber (natural or synthetic)		Water -20 to +110 °C with anti-freeze and anti-corrosive		
Deutz DW 5	Paper	0,3 mm thick	Air, water, lube oil, gas oil		
Deutz DW 20	Leather board	1,5 mm thick	Water up to 65 °C lube oil, gas oil		
Deutz DW 30	Gasket		Exhaust system		Deva metal from Deventer
Deutz DW 40	Gasket	Asbestos w. artif. resin	Exhaust piping		Reinz 4402 or Ferrolastic from Diring
Deutz DW 47	Amine-hardening compound	Silicone India rubber	Tough-elastic engine frame joints		Silastik Q3-3305, black from Fa. DOW-CORNING, Düsseldorf
Deutz DW 48	Compound	Silicone vulcanisate	Touch-elastic joints		Silastik 732 RTV from Dow-Corning, Brussels and Terrostat 33, black, from Teroson GmbH.,Heidel-berg
Deutz DW 49	Compound		Core hole plugs	Fire risk	Compound No. 54 from Sonderhoff, Cologne
Deutz DW 50	Compound	Liquid seal	Pump cases etc. Teroson fluid	Fire risk	Curil or
Deutz DW 51	Compound	Liquid seal		Fire risk	Compound Sigma from Sonderhoff, Cologne
Locking Compounds:					
Deutz DW 55	Liquid single-component plastics hardening on metal under air exclusion	Low viscosity agent becoming very tight	Threads up to M 16, bearings, bushes gears, pins etc.		Loctite 601
Deutz DW 56		High viscosity agent becoming very tight	Threads from M 10, esp. studs, surfaces		Loctite AVX
Deutz DW 57	.	Low-viscosity agent easily removable	Threads up to M14 (adjusting screws)		Loctite 221
Deutz DW 59		Medium-viscosity agent becoming very tight	Threads and surfaces		Loctite 270
Deutz DW 60		High-viscosity agent becoming medium tight	Threads and faces hydr. and pneum.		Loctite CVX
Deutz DW 61	Activator		Only with DW 56 and DW 60 for non-metallic and surface treated components	non-corrosive	Locquic T

Specification Data

Designation	Description	Application Condition	Use	Remarks	Equivalent Product
Lubricating Compounds:					
Deutz S1	Heat-resistant	Compound or spray	Prevention of thread seizure (e.g. exhaust system)		„Never Seez“ from P.H. Weidling & Sohn KG
Deutz S2	Special compound	Sliding compound	Hydraulic system sliding seals, waisted bolts / studs		Molycote G-n rapid
Deutz S4	Molybdic sulfide	Compound	Reduces / prevents friction and resultant corrosion of tight-fit components. For temperatures -40 °C to +450 °C.	Initially clean components w. per- or tri-chlorethylene apply compound very "thin": some 0,005 mm	DOW-CORNING, Düsseldorf or Van Laar, Ratingen
Deutz F2	Synthetic silicone compound		Electric insulating compound for plug/socket connections in ignition systems		Molykote special compound G-n rapid
Deutz F5	Acid-free lubricant		Multi-purpose grease for all bearings, -30 to +120 °C		
MOLYKOTE Longterm 2	Extra-high pressure grease, extremely adhesive, good corrosion buona protezione inhibitor		Bearings, splines and couplings for temperatures -25 to +110 °C		
Heat Conductor Compounds:					
Deutz P1	Cond. compound: copper w. oil-containing bonding agent		Temperature switches		Heat compound from Stein & Sohn, Hamburg

© 0883

3.7 Use of Liquid Nitrogen

☞ Fitment of metal parts with the aid of liquid nitrogen can be carried out only in a workshop.

⚠ Beware of liquid nitrogen coming into contact with the skin. Never touch undercooled parts with bare hands. Use pliers or other suitable tool when placing parts into liquid nitrogen.

Application of liquid nitrogen
For minor work of short duration it will be sufficient to have two concentric containers of varying diameter placed into each other and to have the clearance between the two containersfilled with the mineral wool, cork meal or sand.

To begin with, pour the nitrogen into the special basin and then dip the parts into this liquid. The start of the undercooling process is indicated by heavy "boiling". Bubbles will form until the parts have assumed the nitrogen temperature of - 196° C. Once no more bubbles form, the part is ready for fitment.

Quantity of nitrogen needed
Under normal conditions, one kilogram of metal to be cooled from +15° to -196° C requires the following quantity of liquid nitrogen:

Steel	0,60	litres
Aluminium	0,96	litres
Bronze, copper, brass	0,45	litres
Cast iron	0,66	litres

© 0883

This page intentionally left blank

© 0984

3.8 Dye Checking of Metal Surfaces

The dye checking process for detecting metal surface flaws requires the following agents:

Detergent (trichlorethylene),
Diffusion fluid (red),
Developer(white)

Cleaning the part

- Apply the detergent at least one hour before applying the diffusion fluid to ensure that any grease is removed from the metal surface and its flaws (cracks, fissures, etc.) (Fig. 1) (see safety instruction, page 3-6-02)

Applying the diffusion Fluid

- Apply fluid by spraying gun, hair brush or by dipping part into the directionsfor use (Fig. 2).
- Wash off surface by water, so fluid will remain in the flaws only (Fig. 3).
- Wipe surface clean with a dry rag.

Applying the developer

- Once the surface is dry, apply on a thin film of developer by spray gun or hair brush.
- Let developer dry for one or two minutes.
- The "blotting paper effect" of the white developer will make the red fluid become visible in the flaws (Fig. 4).

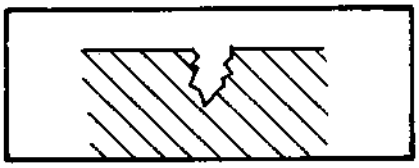

Fig. 1

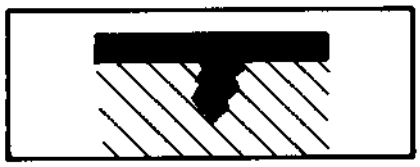

Fig. 2

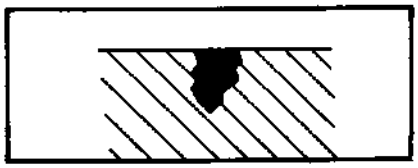

Fig. 3

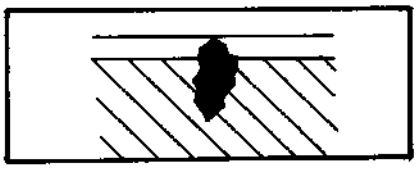

Fig. 4

© 25 459 1

Appraisal

- Red lines in the white film indicate cracks.
- Red dots indicate pittings or porosity.

☞ Hair cracks may need some hours to become visible.

A red dotted line is caused by:

- hair cracks,
- metal fatigue marks,
- non-continuous cracks.

⚠ Trichlorethylene is toxic. Ensure adequate ventilation of the workshop. Do not inhale vapours. Wear protective clothing (such as goggles, gloves) when working with trichlorethylene.

© 0883

Operating the Engine

4

Anleitung zum Betrieb des Motors
Istruzioni per il servizio del motore
Instructions relatives à l'emploi du moteur
Instrucciones para la operación del motor
Handleiding betreffende het werken met de motor
Инст укця по эксплуатации двигателя

4 Operating the Engine

Anleitung zum Betrieb des Motors
Istruzioni per il servizio del motore
Instructions relatives à l'emploi du moteur
Instrucciones para la operación del motor
Handleiding betreffende het werken met de motor
Инст укця по эксплуатации двигателя

4.1 Preparations for Operating the Engine on Distillate Fuel

(see also sections 7, 8.2, 8.3 and "Summerized Instructions" hereto)

A Commissioning Run-in Engines Following a Brief Idle Period
B Commisioning Engines Following Overhaul Including Replacements of Pistons, Cylinder Liner or Bearings
C Commisioning New Engines or Run-in Engines Following a Prolonged Idle Period (over 3 months)

Item	Job		A	B	C	Reference
1	Depreservation	Remove all preserving agent inside and outside of engine			●	section 6
2	Cylinder head	Check inlet and exhaust valve clearance		●	●	Job 01.01.01
		Check that inlet and exhaust valves move freely in their guides			●	
3	Foundation bolts	Inspect / tighten to the instructions of the building contractor			●	Job 03.07.01
4	Speed control system	Check that control rod moves freely			●	Job 07.01.01
		Check oil level in hydraulic governor		●		Job 05.03.11
		Check oil of hydraulic governor			●	Job 05.03.11
		Bleed hydraulic governor			●	Job 05.03.12
5	Exhaust / turbocharging system	Check oil level in turbocharger		●	●	Job 06.05.01
		Inspect turbocharger			●	Job 06.06.01

© 0486

Item	Job		A	B	C	Reference
6	Fuel system	Clean fuel service tank		●		
		Top up fuel service tank		●	●	
		Clean fuel filter		●	●	Job 07.10.01
		Test fuel injectors		●	●	Job 07.08.01
		Check oil level in sealing oil tank		●	●	
		Drain fuel service tank		●	●	
		Open shut-off valve of fuel service tank and switch on fuel feed pump (if installed)	●	●	●	
		Bleed fuel system		●	●	Job 07.03.02
7	Lube oil system	Top up lube oil reservoir			●	
		Check up lube oil reservoir	●	●	●	
		Service lube oil filter combination		●	●	Job 08.10.01
		Switch on priming pump and keep priming pressure for min. 3 minutes	●	●	●	≥ 0,35 bar
		Switch on priming pump (if standby oil pump)	●	●	●	
8	Cooling water system	Top up water level			●	
		Check up water level in header tank	●	●	●	
		Bleed water system, if need be		●	●	

© 0185

Item	Job		A	B	C	Reference
8	Cooling water system	Treat water with additives		●	●	Section 6.4
		Open valves in all water pipework and check for correct valve pos.			●	
		Switch on water preheater, if provided		●	●	
		Standby sets: Check that preheating temperature (if provided)	●	●	●	Section 3.3.2
		Clean separate raw water filter (if provided)	●	●	●	
9	Pneumatic system	Check that master and starting valves move freely		●	●	Job 01.11.01 Job 10.03.01
		Drain condensate from dust coll.		●	●	Job 10.03.02
		Drain condensate from pressure reducer station		●	●	Job 10.06.01
		Clean / install running -in screen upstream of master valve		●	●	Job 10.03.91
		Drain water from air receivers	●	●	●	Job 10.01.01
		Check pressure in air receivers	●	●	●	Job 10.01.01
10	Engine protective system	Separate pumps: check pressures / temperatures in operating media (fuel etc.)	●	●	●	
		Test audible and visual alarms	●	●	●	

© 0585

This page intentionally left blank

4.1.1 Preparation for Operating the Engine on blended Fuel (heavy Fuel)

(see also sections 7, 8.2, 8.3 and "Summarized Instructions" hereto).

A Commissioning run-in engines following a brief idle period

B Commissioning engines following overhaul including replacements of pistons, cylinder liner or bearings

C Commissioning new engines or run-in engines following a prolonged idle period (over 3 months)

Item	Job		A	B	C	Reference
1	Depreservation	Remove all preserving agent linside and outside of engine			●	Section 6.5
2	Cylinder head	Check inlet and exhaust valve clearance		●	●	Job 01.01.01
		Check that inlet and exhaust valves move freely in their guides			●	
3	Foundation bolts	Inspect / tighten to the instruction of the building contractor			●	Job 03.07.01
4	Speed control system	Check that control rod moves freely			●	Job 07.01.01
		Check oil level in hydraulic governor				Job 05.03.11
		Change oil in hydraulic governor			●	Job 05.03.11
		Bleed hydraulic governor			●	Job 05.03.12
5	Exhaust / turbocharging system	Check oil level in turbocharger		●	●	Job 06.05.01
		Inspect turbocharger			●	Job 06.06.01
		Check scavenging water quantity		●	●	Job 06.13.03

© 0486

Item	Job		A	B	C	Reference
6	Fuel system	Clean fuel service tank			●	
		Top up fuel service tank		●	●	
		Clean fuel filter		●	●	Job 07.10.01
		Test fuel injectors		●	●	Job 07.08.01
		Check oil level in sealing oil tank		●	●	
		Preheat fuel service tank	●	●	●	Section 6.3
		Drain fuel service tank	●	●	●	
		Open shut-off valve of fuel service tank	●	●	●	
		Switch on sealing oil pump	●	●	●	
		Switch on fuel feed pump as 6+2 bar sealing oil pressure has been obtained	●	●	●	
		Heat separate f uel filter if engine has been stopped on heavy fuel	●	●	●	Section 6.3
		Inserire l'impianto di regolazione della viscosità.	●	●	●	Section 6.3
		Bleed fuel system	●	●	●	Job 07.03.02
7	Lube oil system	Switch on standby oil pump if used for priming pump			●	
		Top up lube oil reservoir	●	●	●	
		Check level in lube oil reservoir		●	●	
		Clean lube oil filter	●	●	●	08.10.01
		Switch on priming pump and keep min. 0,35 bar pressure for min. 3 minutes	●	●	●	

© 0883

Item	Job		A	B	C	Reference
8	Cooling water system	Top up water level			●	
		Check water level in header tank	●	●	●	
		Bleed water system if necessary		●	●	
		Treat water with additives		●	●	Section 6.4
		Clean separate raw water filter (if provided)			●	
		Open valves in all water pipework and check for correct valve positions		●	●	
		Switch on water preheater	●	●	●	
		Switch on injection valve water preheater (if provided)	●	●	●	Section 6.3
		Switch on injection valve coolant pump	●	●	●	
9	Pneumatic system	Check that master and starting valves move freely		●	●	Job 01.11.01 Job 10.03.01
		Drain condensate from dust coll.		●	●	Job 10.03.02
		Drain condensate from pressure reducer station		●	●	Job 10.06.01
		Clean / install running-in screen upstream of master valve		●	●	Job 10.03.91
		Drain water from air receivers	●	●	●	Job 10.01.01
		Check pressure in air receivers	●	●	●	Job 10.01.01

© 0185

Item	Job		A	B	C	Reference
10	Engine protective system	Separate pumps: check pressures / temperatures in operating media (fuel etc.)	●	●	●	
		Test audible and visual alarms	●	●	●	

© 0883

4.2 Running the Engine on Distillate Fuel

Item	Procedure	A	B	C	Reference
1	Open indicator valves	●	●	●	
2	Turn engine over twice by barring gear, but not later than 1 hour after prelubricating, otherwise repeat prelubricating		●	●	
3	Place speed control in lowest possible position		●	●	Section 3.3.1
4	Keep assistance ready at the emergency stop drive		●	●	Job 05.00.01
5	With air receivers closed, move engine control lever from "Stop" to "Start" position. Slowly open air shut-off valves and - with indicator valves opened - briefly turn engine over. Close air receivers, move control lever back to "Stop" position and close indicator valves	●	●	●	
6	Open air receiver fully	●	●	●	
7	Move local control lever from "Stop" to "Start" position and - when firing speed is attained - move on to "Run" position	●	●	●	Section 3.3.1
8	Should the engine fail to fire at the end of some 3 seconds, wait for a while and repeat starting attempt. If several such starting attempts are unsuccessful, trace cause of trouble and remedy.	●	●	●	Section 7
9	Switch off water preheater (if provided) at temperature specified	●	●	●	Section 3.3.2
10	Where the standby lube oil pump is used for priming, switch off pump once idling speed is reached or when the starting inhibitor, if provided, releases	●	●	●	
11	Raise engine speed slowly	●		●	

© 0185

Item	Procedure	A	B	C	Reference
12	Run in engine		●		Section 4.6
13	Once working temperature is reached, put engine on load	●	●	●	Acceptance documents

☞ On stationary engines use start and stop button respectively for items 5 and 7.

© 0883

4.2.1 Running the Engine on Blended Fuel (Heavy Fuel)

Item	Procedure	A	B	C	Reference
1	Open indicator valves	●	●	●	
2	Turn engine over twice by barring gear, but not later than 1 hour after prelubricating, otherwise repeat prelubricating		●	●	
3	Place speed control in lowest possible position		●	●	Section 3.3.1
4	Keep assistance ready at the emergency device		●	●	Job 05.00.01
5	With air receivers closed, move engine control lever from "Stop" to "Start" position. Slowly open air shut-off valves and - with indicator valves opened - briefly turn engine over. Close air receivers, move control lever back to "Stop" position and close indicator valves	●	●	●	
6	Open air receiver fully	●	●	●	
7	Move local control lever from "Stop" to "Start" position and - when firing speed is attained - move on to "Run" position	●	●	●	Section 3.3.1
8	Should the engine fail to fire at the end of some 3 seconds, wait for a while and repeat starting attempt. If several such starting attempts are unsuccessful, trace cause of trouble and remedy.	●	●	●	Section 7
9	Where the standby lube oil pump is used for priming, switch off pump once idling speed is reached or when the starting inhibitor, if provided, releases	●	●	●	
10	Operate engine at high speed with some 25% power, raising to some 60% power	●		●	

© 0486

Item	Procedure	A	B	C	Reference
11	Run in engine		●		Section 4.6
12	Switch off coolant preheater (upon attaining appropriate temperature)	●	●	●	Section 3.3.2
13	Switch off separate preheated filter	●	●	●	
14	Switch off injector preheater (if provided).	●	●	●	Section 3.3.2
15	Once working temperature is reached, put the engine on load	●	●	●	

☞ On stationary engines use start and stop button respectively for items 5 and 7.

© 0885

4.3 Attendance in Service

Record readings right from the start, unless automatically printed where periodically unattended service is provided.
See also section 3.3.

Item	Daily Checks and Servicing Jobs		Reference (Section 8.3)	Reading
1	General	Listen to running noise		
		Check colour of exhaust	Section 7	
		Inspect entire engine for leaks, especially external pipework		
		Compare engine operating data with acceptance documents		
2	Temperatures	Lube oil temperature at engine inlet	Section 3.3.2	max. 65 °C max. 75° C
		Water temperature a t engine outlet	Section 3.3.2	max. 80 °C max. 85 °C
		Water temperature differential at engine inlet / outlet		8 - 12 °C
		Fuel temperature in injection pump	Section 6.3	
		Charge air temperature at engine inlet (full load)	Acceptance documents	
		Exhaust temperature at turbine outlet	Acceptance documents	
3	Pressures	Lube oil pressure at filter outlet (engine hot, rated speed)		≥ 3,5 bar
		Sealing oil pressure in injection pumps	Section 3.3.2	

© 0885

Item	Daily Check and Servicing Jobs		Reference (section 8.3)	Reading
3	Pressures	Water pressure at engine inlet		~ 4 bar
		Fuel pressure at injection pump inlet		3,0 + 1,5 bar
		Charge air pressure	Acceptance documents	
		Starting air pressure, max / min		30/10 bar
		Raw water pressure		
4	Speed control system	Check oil level in hydraulic governor	05.03.11	
5	Exhaust / turbocharging system	Clean turbocharger air side	06.12.01	
		Check exhaust mean temperatures (differences between cylinders are irrelevant for power output). Check limit temperatures	Acceptance documents section 3.3.2	
		Check oil level in turbocharger	06.05.01	
6	Fuel system	Drain water from fuel tank		
		Check fuel level in service tank		
		Check flow switch for monitoring shielded injection lines (if provided)	11.01.03	
7	Lube oil system	Check oil levels		
		Service wire coil edge-type filter	08.09.01	
		Check service gauge of oil filter	08.10.01	
		Inspect valve seat lubrication	08.14.01	

© 0185

Item	Daily Checks and Servicing Jobs		Acceptance documents	Reading
8	Cooling system	Check coolant level in hydraulic governor		
9	Pneumatic system	Charge air receivers and drain condensate after cool-down		
		Drain condensate from dust collector	10.03.02	
		Drain condensate from pressure reducer station	10.06.01	

© 0285

This page intentionally left blank

4.4 Stoppage / Layoff of Engine Running on Distillate Fuel

A Short period (Engine remains readily available)

B Prolonged Period

C Period exceeding 3 months

Item	Job	A	B	C
1	To prevent heat accumulation, let engine idle for 10 minutes or so before shutting down from prolonged full-load service. Where separate oil and coolant pumps are provided, keep them going for 10 minutes following engine shutdown.	●	●	●
2	Stop engine	●	●	●
3	Close shut-off valve of air receiver		●	●
4	Close shut-off valves of fuel service tank		●	●
5	Close shut-off valves before and after water colle		●	●
6	When frost is imminent, switch on water preheater, unless an anti-freeze has been added, or drain **all** water from engine and attachments (see Job Card 09.00.01)		●	
7	Drain **all** water from engine and attachments (see Job Card 09.00.01)			●
8	Drain **all** lubricating oil from engine and attachments (except speed governor)			●
9	Preserve engine (section 6.5)			●
10	While the engine is out of service, switch on standby lube oil pump once a week, open indicator valves and turn engine over. (This applies only in the case of vibration of the shut-down engine, e.g. due to other engines in service)		●	

© 0185

This page intentionally left blank

4.4.1 Stoppage / Layoff of Engine Running on Heavy Fuel or MDF Blend

A Short Period (Engine remains readily available)

B Prolonged Period

C Period exceeding 3 months

Item	Job	A	B	C
1	When operating with blended fuel ≤ **380 mm²/s (cSt) / 50 °C** , we recommend running the engine for at least 1 hour with distillate fuel before shutdown		●	●
	When operating with blended fuel **> 380 mm²/s (cSt) / 50° C** , the engine **must** be run for at least 1 hour with distillate fuel before shut-down - longer than 72 hours - until the fuel system is completely filled with distillate fuel.			
2	To prevent heat accumulation, let engine idle for 5 minutes or so before shutting it down from prolonged full-load service. Where separate oil and coolant pumps are provided, keep them going for 5 minutes following shut-down.	●	●	●
3	Stop engine	●	●	●
4	Switch off viscosity control, injector coolant pump, fuel feed pump and fuel plunger sealing oil pump		●	●
5	Close shut-off valve of air receiver		●	●
6	Close shut-off valve of fuel service tank		●	●
7	Close shut-off valves before and after water cooler		●	●
8	When frost is imminent, switch on water preheater, unless an anti-freeze has been added, or drain **all** water from engine and attachments (see Job 09.00.01)		●	
9	Drain **all** water from engine and attachments (see Job 09.00.01)			●

© 0885

Item	Job	A	B	C
10	Drain lube oil completely from engine, accassories, pipings and fittings (but not from speed governor).			●
11	Preserve engine (section 6.5)			●
12	When engine is out of service, switch on standby lube oil pump once a week, open indicator valves and turn engine over. (This applies only in the case of vibration of the shut-down engine, e.g. due to other engines in service)		●	

© 0885

4.5 Taking Combustion Indicator Diagrams

☞ Be sure closely to observe the instructions issued by the indicator manufacturer, or readings are liable to be incorrect.
The instrument recommended by us is the Mahaik torsionspring indicator, type S, plunger 1/2, with the following springs:

Max. combustion pressure	Spring
100 bar	F 100 bar No. 50
120 bar	F 120 bar No. 60
140 bar	F 140 bar No. 70
160 bar	F 160 bar No. 80

Pressures see acceptance records.

Taking Indicator Diagrams
Thoroughly blow through the indicator valves to prevent any carbon particles entering the gauge. Then screw indicator firmly in its place.

Put indicator paper on the recording drum and draw the zero line.

Open indicator valve and slowly turn drum from recording the combustion pressures

For recording the compression pressure, cut out injection pump (Job Card 07.01.01) and check that control rod of the injection pump does not abut at its load limit.

The following data should be entered upon the diagram:

Date, spring scale, cylinder No., corresponding exhaust temperature, control rod position, speed and charge air pressure.

Assessing the Readings
Compare readings with the values given in the Acceptance Record.

© 0185

This page intentionally left blank

4.6 Run-in Instructions

Engines which leave the manufacturer's works have been run in; thus run-in at site is not necessary.

Following servicing work on main and big-end bearings, pistons, piston rings and cylinder liners the engine must be run in again.

The following run-in programs apply to the different drive types:

4.6.1 Drive type "Fixed-pitch propeller and comparable drives"

(Engine load is mainly dependent on speed, n = variable)

- Start engine, sections 4.1 and 4.2, and run at low speed for 5 minutes.
- Stop engine, section 4.4.
- Check bearings and crankshaft.

⚠ If the engine has warmed up noticeably, the cause **must be locked for** immediately and remedied.

- Start engine again and r un at low speed for 30 minutes.
- Stop engine again.
- Check bearings and crankshaft.

⚠ If the engine has warmed up noticeably, the cause **must be locked for** immediately and remedied.

- Start engine again and increase speed gradually according to the following table.

Run-in time in minutes	Engine speed in % of rated speed	
60	35	
30	45	
60	55	
15	35	
45	70	⚠ With propeller drives, this part of the program **must not be run with the vessel tied on!**
15	55	
45	80	
15	65	
45	90	
15	70	
45	95	

- Check engine operating data and compare with those of repair / acceptance test record. In case of major deviations cause must be locked for and remedied.

⚠ During the following 24 hours engine should not be run with control rod set to fuel stop and reduced speed, nor with overload, in order to intensify run-in effect.

© 0996

4.6.2 Drive type "C.P. propeller with shaft generator, electric generators and comparable drives"
(Engine load adjustable independent of speed, n = constant)

- Start engine, sections 4.1 and 4.2, and run at low speed for 5 minutes.
- Stop engine, section 4.4.
- Check bearings and crankshaft.

⚠ If the engine has warmed up noticeably, the cause **must be locked for** immediately and remedied.

- Start engine again and r un at low speed for 30 minutes.
- Stop engine again.
- Check bearings and crankshaft.

⚠ If the engine has warmed up noticeably, the cause **must be locked for** immediately and remedied

- Start engine again and increase speed gradually according to the following table.

Run-in time in minutes	Engine speed in % of rated speed	Engine power in % of rated power	
60	30 - 50	bis 5	
30	50	5 - 10	
60	100	bis 20	
15	30 - 50	bis 5	
45	100	30 - 40	With propeller drives, this part of the program **must not be run with the vessel tied on!**
15	100	bis 25	
45	100	50 - 60	
15	100	20 - 30	
45	100	80 - 90	
15	100	30 - 40	
45	100	80 - 90	

- Check engine operating data and compare with those of repair / acceptance test record. In case of major deviations cause must be locked for and remedied.

⚠ During the following 24 hours engine should not be run with control rod set to fuel stop and reduced speed, nor with overload, in order to intensify run-in effect.

© 0996

4.7 Running the Engine with Defective Turbocharger

If blades of the turbocharger rotor are warped or broken (indicated primarily by turbocharger vibration or abnormal noise) or if bearings have run hot, it will be recommendable to take the turbocharger out of service (BBC instruct.). In this case it will be necessary to reduce engine speed / power substantially to **make sure that the exhaust temperatures at full load as stated in the acceptance test sheet will not be exceeded**. The remaining b.m.e.p will be 4,5 bar only.

This applies both to engines with a single turbocharger and engines with several turbochargers where not all rotors have been inactivated.

The following table of maximum obtainable speeds / loads as a function of the b.m.e.p. of the rated power (Acceptance documents) fixed-pitch propeller. BRAKE MEAN EFFECTIVE PRESSURE

Max. Obtainable Speeds / Outputs with Inactivated Turbocharger		
B.m.e.p. of rated power (Accepted documents) bar	Obtainable speed in % of rated speed approx.	Obtainable power in % of rated power approx.
11	64	26
14	56,5	18
16	53	15
18	50	12,5
20	47,5	11,5

This page intentionally left blank

4.8 Emergency Operation

4.8.1 Engine Operation by Use of the Emergency Operation Device

In case of failure of the engine operating device (control console or remote control), the engine can be started and shut down by hand.

☞ The specifications as per sections 4.1 to 4.4. are to be observed here. To avoid faulty switchings, the lever at the pressure reducing unit (control console or remote control) is to be put in the position shown in Fig.1.

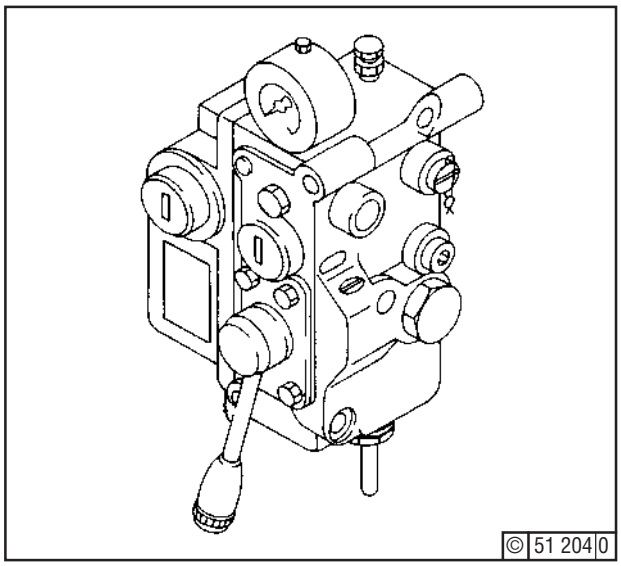

Fig. 1

4.8.1.1 Starting the Engine

Pull out locking device at knurled nut (1) - Fig. 2 -, and pull lever down. If the engine does not start after approx. 3 seconds, repeat starting procedure.

If the engine fails to start after repeated starting attempts, determine the cause and remedy.

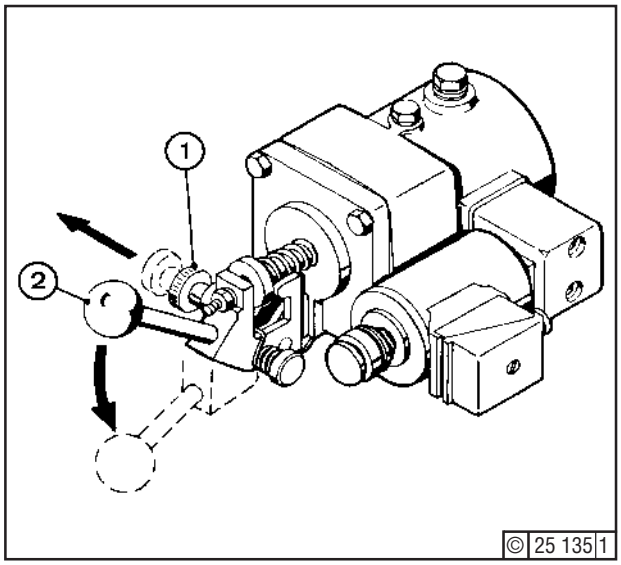

Fig. 2

4.8.1.2 Speed Setting

The speed is to be set in accordance with the manufacturer's instructions.

4.8.2 Engine Shutdown

The engine is shut down by pressing the shutdown button, see the instructions of the governor manufacturer.

Furthermore, the engine can be shut down by using an open-end spanner (5) at the lever of the governor shaft (6) which is to be turned in the direction of the driving end. This method can be applied, provided that the governor linkage is set correctly (see Fig. 3).

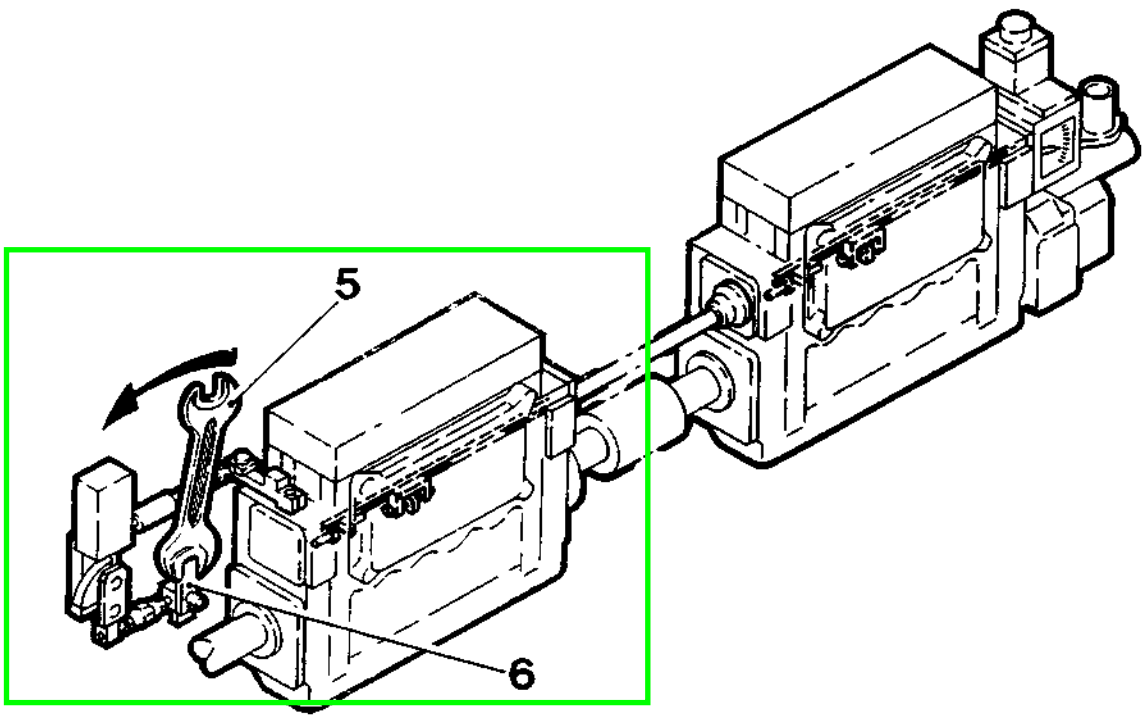

© 25 281 1

Fig. 3

Engine Operating Media

Einweisung in die Arbeitssysteme der Motorbetriebsstoffe
Introduzioni ai sistemi operativi del materiali di esercizio del motore
Instructions concernant les systèmes opératoires des carburants-moteur
Aclaraciones para los sistemas de medios de servicio para el motor
Instructies betreffende brandstof-, smeerolie- en koelsysteem
Пояснения к системаи эксплуатацион-ных мате иалов длв двигателей

5 Engine Operating Media

Einweisung in die Arbeitssysteme der Motorbetriebsstoffe
Introduzioni ai sistemi operativi del materiali di esercizio del motore
Instructions concernant les systèmes opératoires des carburants-moteur
Aclaraciones para los sistemas de medios de servicio para el motor
Instructies betreffende brandstof-, smeerolie- en koelsysteem
Пояснения к системаи эксплуатацион-ных мате иалов длв двигателей

5 Engine Media Systems

5.1 Fuel System
5.1.1 Legend for Piping Diagrams
5.1.2 Piping Diagram for Distillate Fuel and MDF Blend
5.1.3 Piping Diagram for Heavy Fuel

5.2 Lubricating Oil System
5.2.1 Legend for Piping Diagrams
5.2.2 Deep ("Wet") Sump
5.2.3 High-Level Tank ("Dry Sump")
5.2.4 Low-Level Tank ("Dry Sump")

5.3 Cooling Water System
5.3.1 Legend for Piping Diagrams
5.3.2 Single-Circuit System
5.3.3 Double-Circuit System
5.3.4 Triple-Circuit System

5.4 Pneumatic System
5.4.1 Legend for Piping Diagrams
5.4.2 Starting / Control / Pilot Air

5.5 Sealing Oil System
5.5.1 Legend for Piping Diagrams
5.5.2 Fuel Conveyer Pump mounted on the Engine
5.5.3 Fuel Conveyer Pump not mounted on the Engine

5.6 Injection Nozzle Cooling

5.7 Legend for Symbols Used in Piping Diagrams (acc. to DIN)

© 0583

This page intentionally left blank

5.1 Fuel System

© 0583

5.1 Fuel System

5.1.1 Legend for Piping Diagrams

5.1.1.1 Engine Components

	F	16.2	Piping panel for pressure monitoring
*)	K	1	Fuel transfer pump
	K	9	Fuel feed pump
*)	K	10	Microfilter
	K	11	Injection pumps
*)	K	37	Flow switch for shielded injection lines

5.1.1.2 Engine Pipe Connections

	H	375	Connection for pressure monitoring
*)	H	401	Suction pipe on fuel transfer pump
*)	H	402	Delivery pipe on fuel transfer pump
	H	404	Suction pipe on feed pump
	H	405	Overflow pipe, microfilter to injection pump
	H	406	Return flow from injectors
*)	H	408	Delivery pipe from standby feed pump
*)	H	410	Feed to microfilter
*)	H	413	Feed pipe on injection pump (separate filter)
*)	H	417	Backleakage pipe from shielded injection pipes
*)	H	418	Drain from backleakage sump

*) optional

Legend for symbols see section 5.7

© 0885

5.1.2 Piping Diagram for Distillate Fuel

5.1.2.1 Built-on Fuel Feed Pump

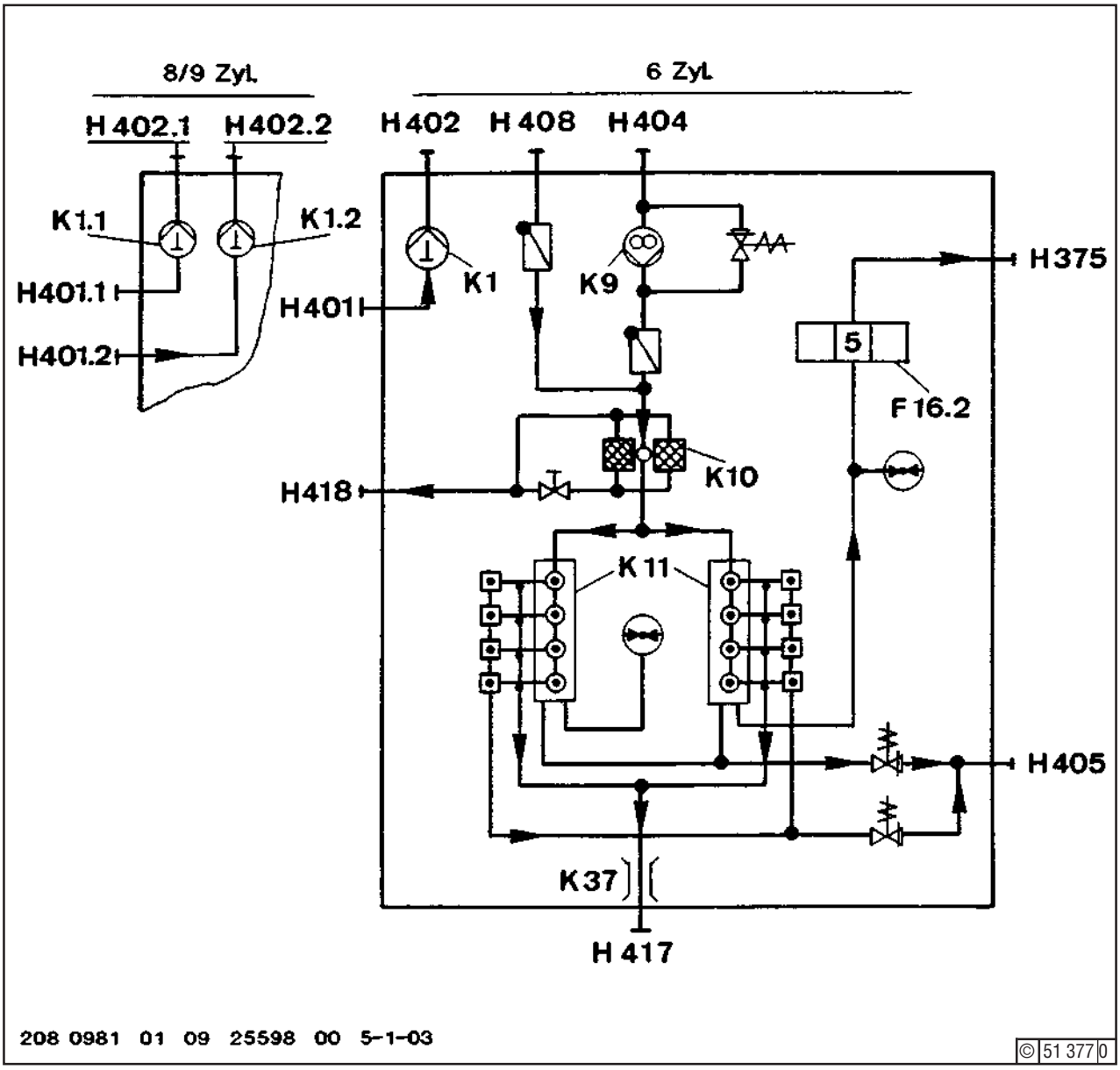

5.1.2 Piping Diagram for Distillate Fuel

5.1.2.2 Built-on Fuel Feed Pump

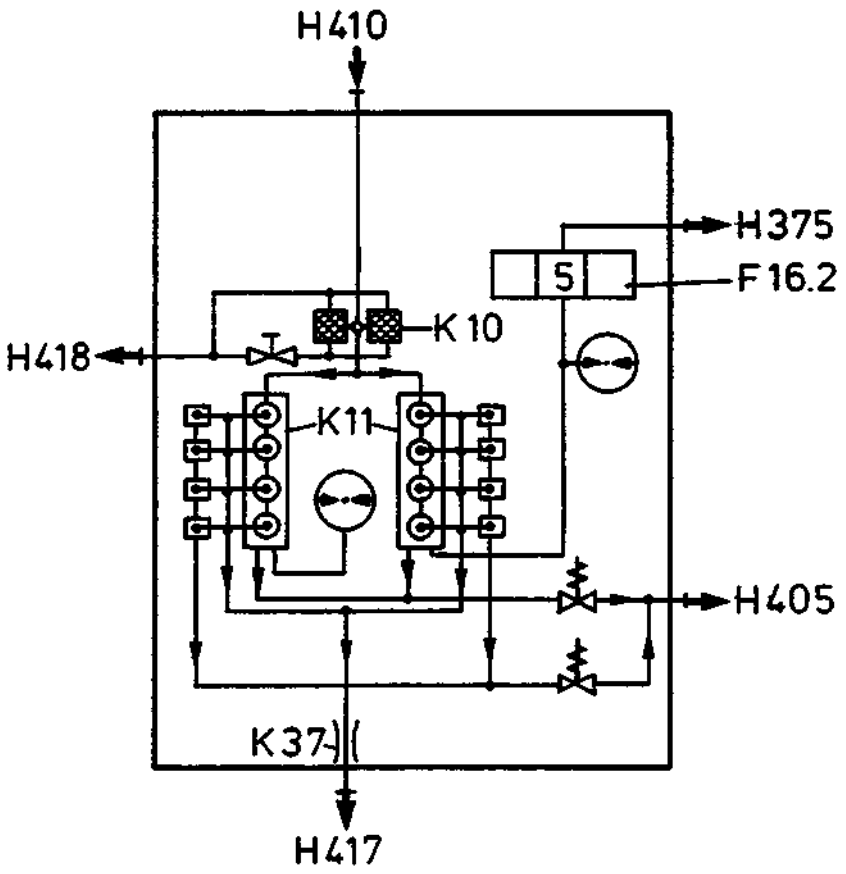

© 51 378 0

5.1.3 Piping Diagram for Blended Fuel (Heavy Fuel)

5.1.3.1 Fuel System Open

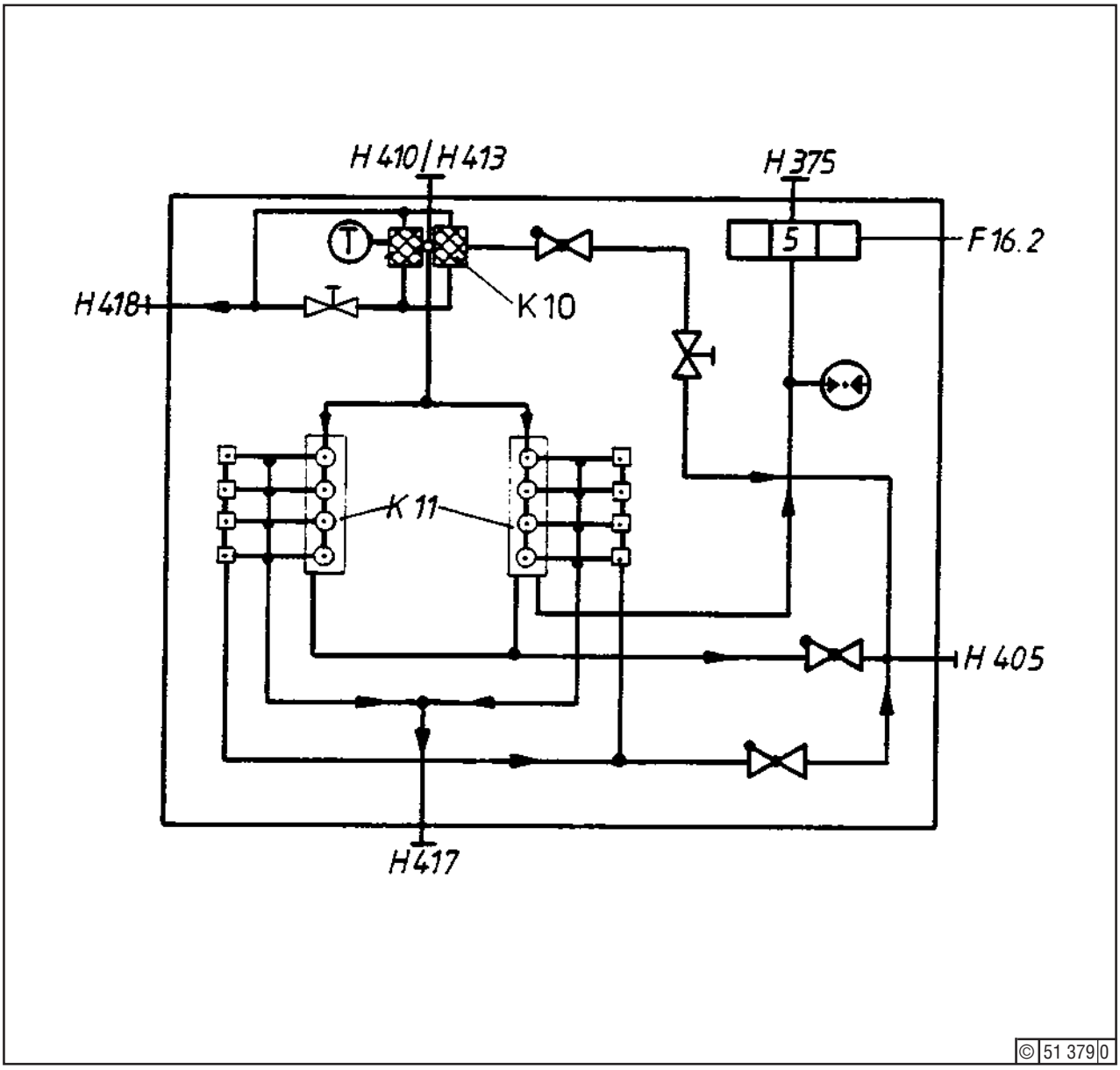

5.1.3 Piping Diagram for Blended Fuel (Heavy Fuel)

5.1.3.2 Fuel System Closed

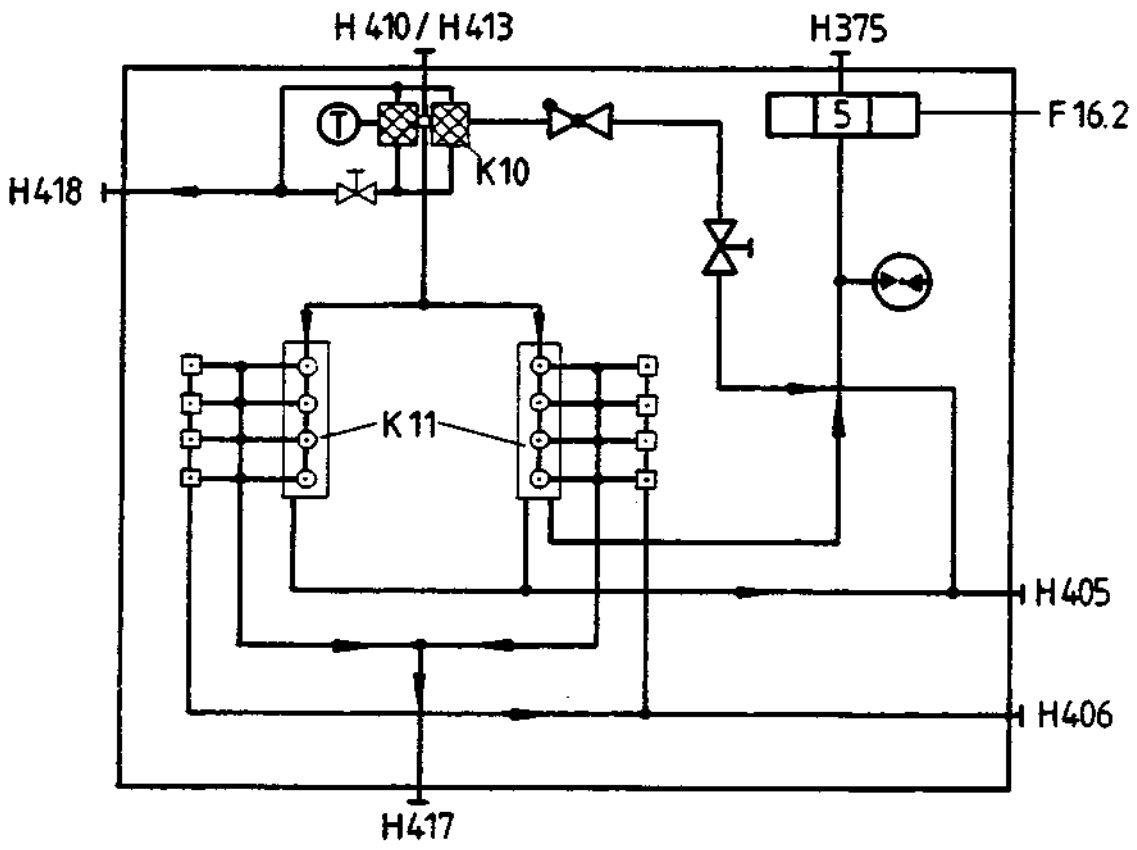

© 51 380 0

5.2 Lubricating Oil System

5.2 Lubricating Oil System

5.2.1 Legend for Piping Diagrams

5.2.1.1 Engine Components

	F 16.2	Piping panel for pressure monitoring
	S 2	Suction pump
	S 4	Delivery pump
	S 7	Oil cooler
	S 8	Edge filter
*)	S 22	Oil centrifuge
	S 33	Microfilter in full flow
	S 35	Pressure monitor
	S 37	Thermometer
	S 40	Temperature monitor
	S 57	Level sensor
	S 62	Check valve
	S 63	Oil distributor

5.2.1.2 Engine Pipe Connections

	H 375	Connection for pressure monitoring
	H 601	Drain from oil sump
	H 604	Delivery pipe on suction pump
	H 605	Suction pipe on delivery pump
	H 608	Inlet into filter from separate cooler
*)	H 609	Suction pipe to standby pump
*)	H 610	Delivery pipe from standby pump
*)	H 617	Suction pipe from pump on separator
*)	H 618	Delivery pipe from pump on separator
	H 620	Delivery pipe to delivery pump
	H 622	Engine inlet
	H 627	Suction pipe to priming unit
	H 628	Delivery pipe to priming unit
	H 632	From self-cleaning oil filter
	H 633	To self-cleaning oil filter
	H 634	Dirty oil drain from combined edge / microfilter
	H 635	Oil return in oil sump
	H 644	Connection for removing residual oil
*)	H 657	Clean-oil supply

*) optional

Legend for symbols see section 5.7

© 0686

5.2.2 Oil Sump Lubrication

5.2.2.1 Built-on Oil Cooler

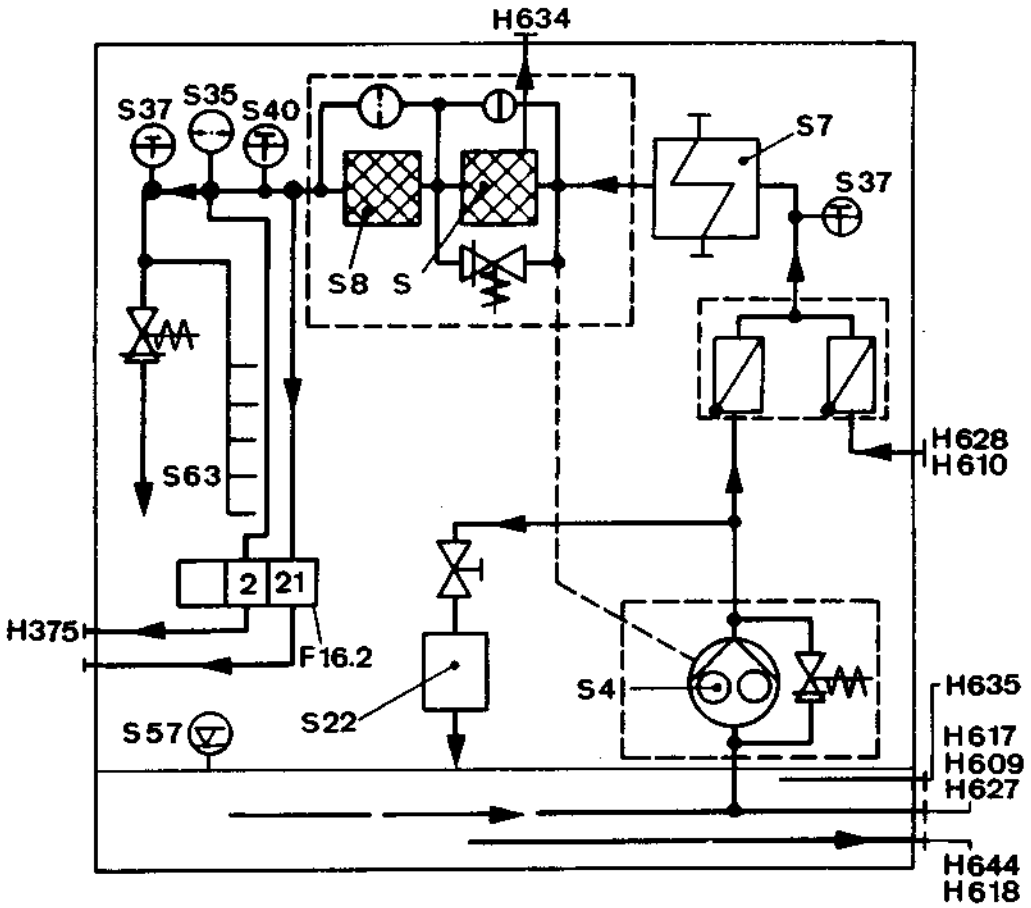

0208 0980 01 07 50143 5-2-03

© 51 209 0

This page intentionally left blank

© 0883

5.2.2 Oil Sump Lubrication

5.2.2.1 Built-on Oil Cooler

5.2.2.1.1 Self-Cleaning Filter Incorporated in Engine Oil System

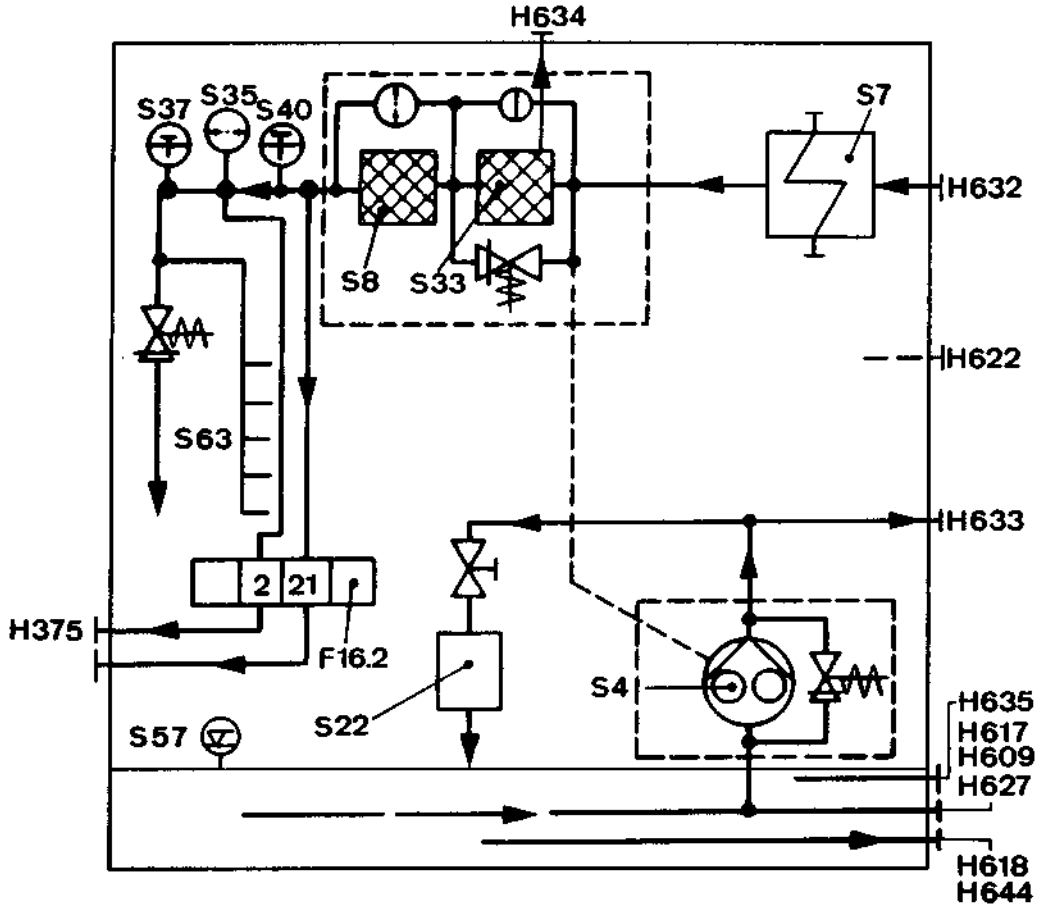

0208 0980 06 07 50148 5-2-05

© 51 210 0

This page intentionally left blank

© 0984

5.2.2 Oil Sump Lubrication

5.2.2.1 Separate Oil Cooler

5.2.2.1.1 With or w/o Self-Cleaning Filter Incorporated in Engine Oil System

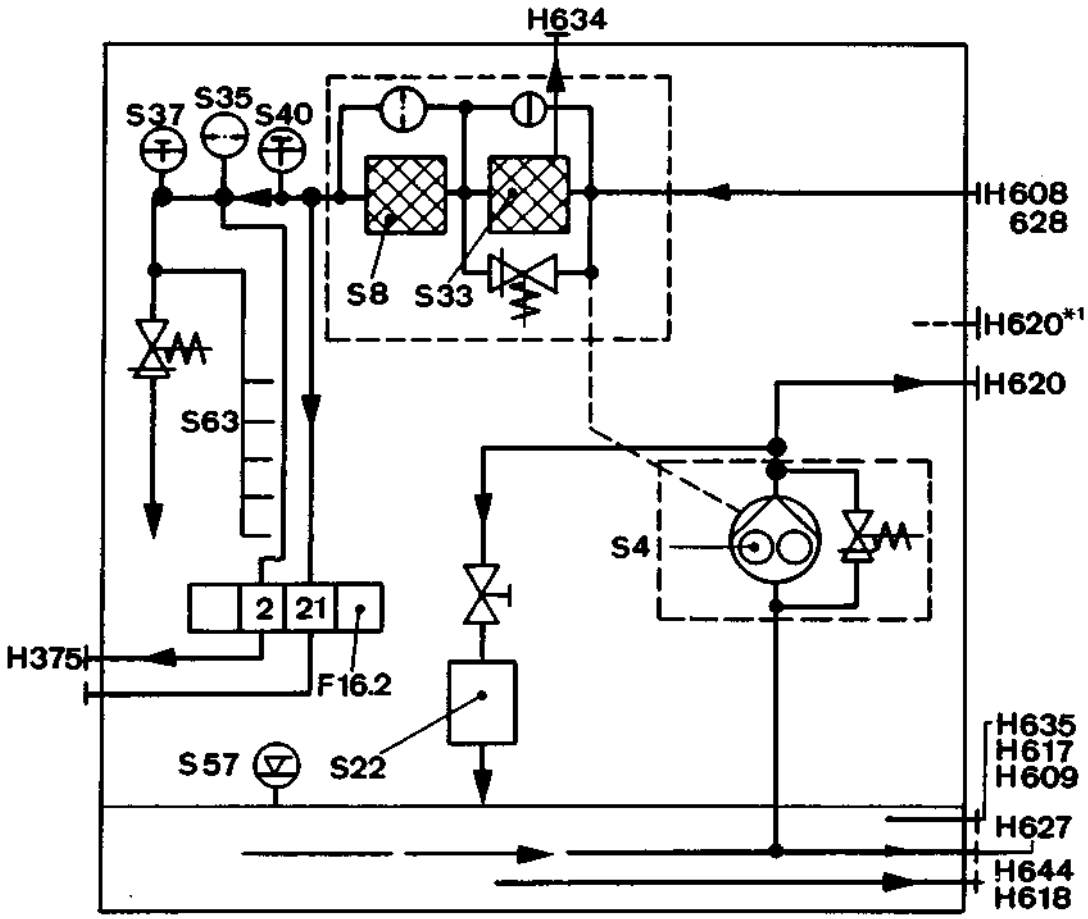

0208 0980 02 07 50144 5-2-07

© 51 211 0

This page intentionally left blank

© 0883

5.2.3 High-Level Tank ("Dry Sump")

5.2.3.1 Built-on Oil Cooler

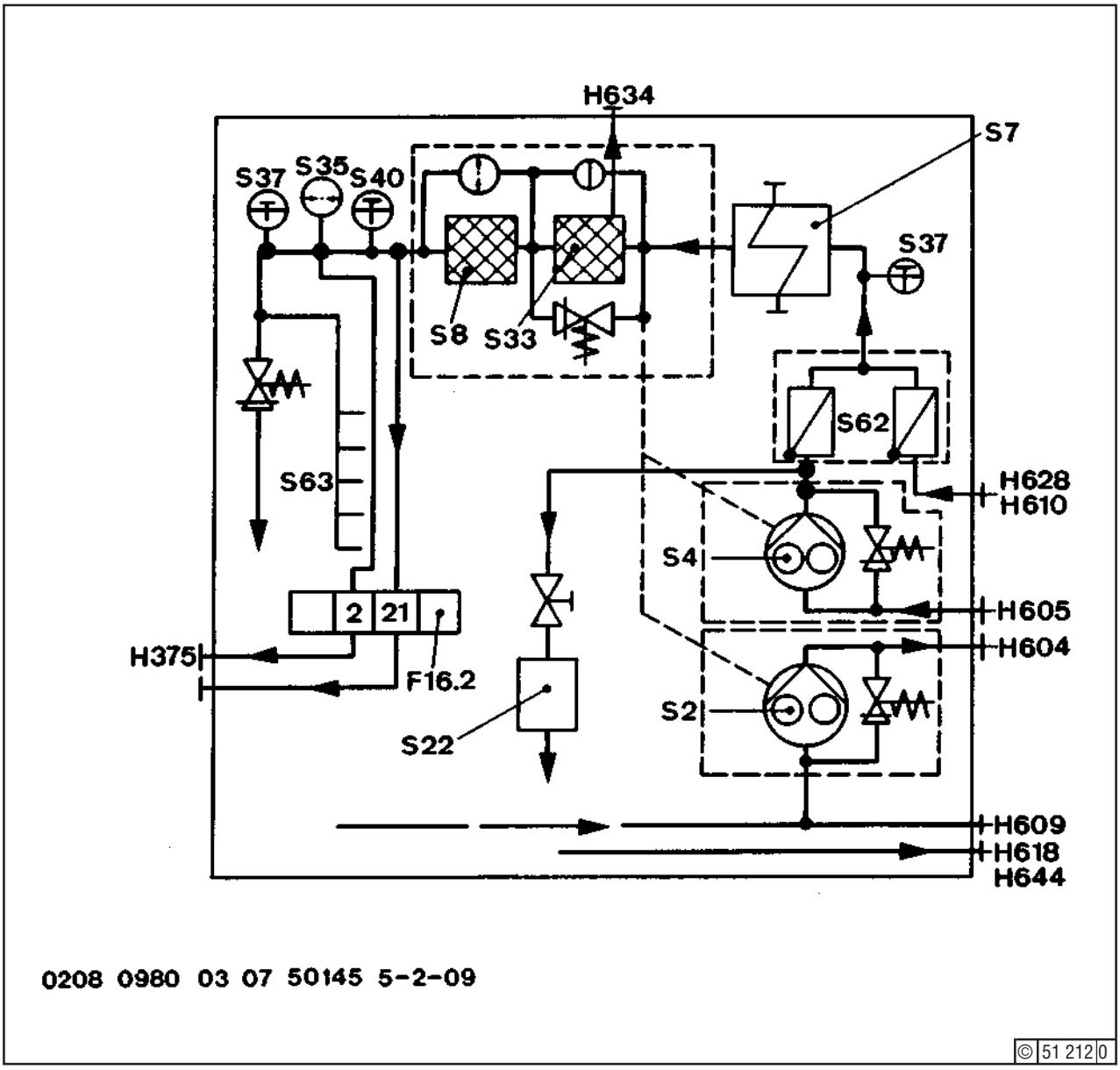

This page intentionally left blank

5.2.3 High-Level Tank ("Dry Sump")

5.2.3.1 Built-on Oil Cooler

5.2.3.1.1 With Self-Cleaning Filter Incorporated in Engine Oil System

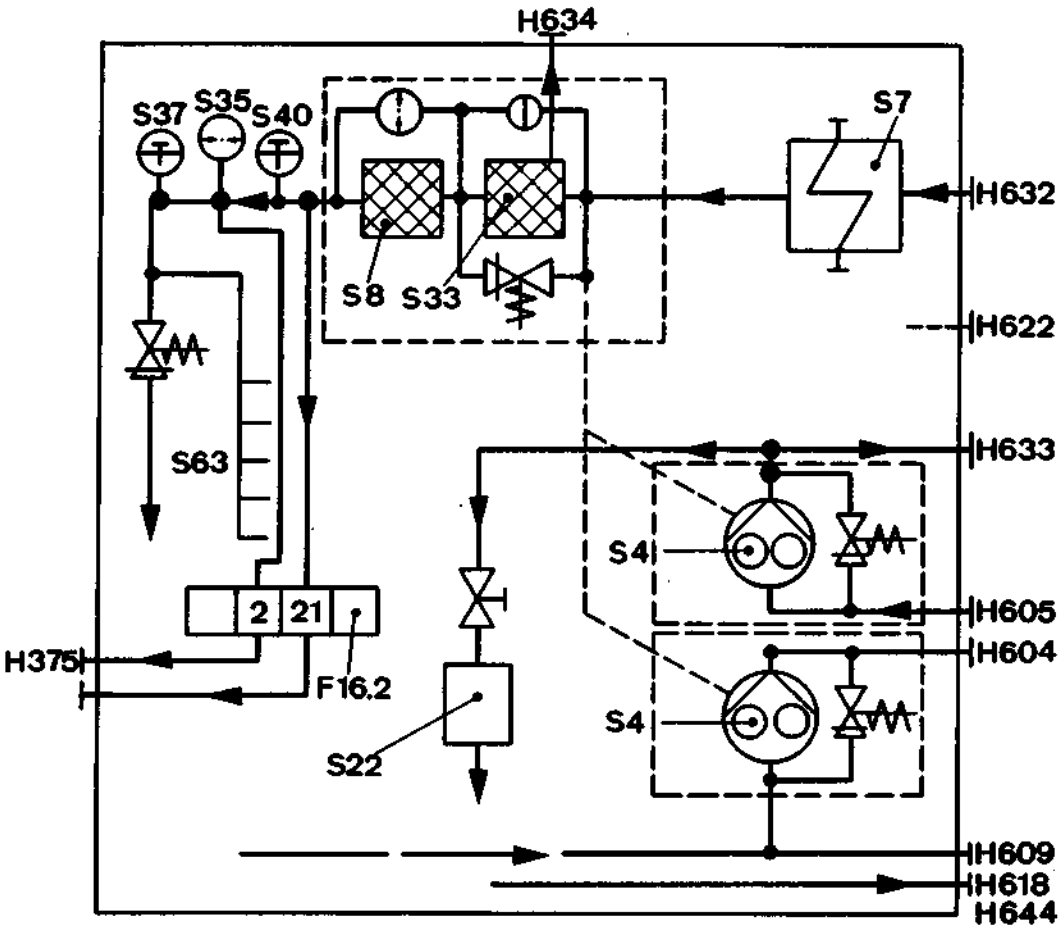

0208 0980 07 07 50149 5-2-11

© 51 213 0

This page intentionally left blank

5.2.4 Low-Level Tank ("Dry Sump")

5.2.4.1 Built-on Oil Cooler

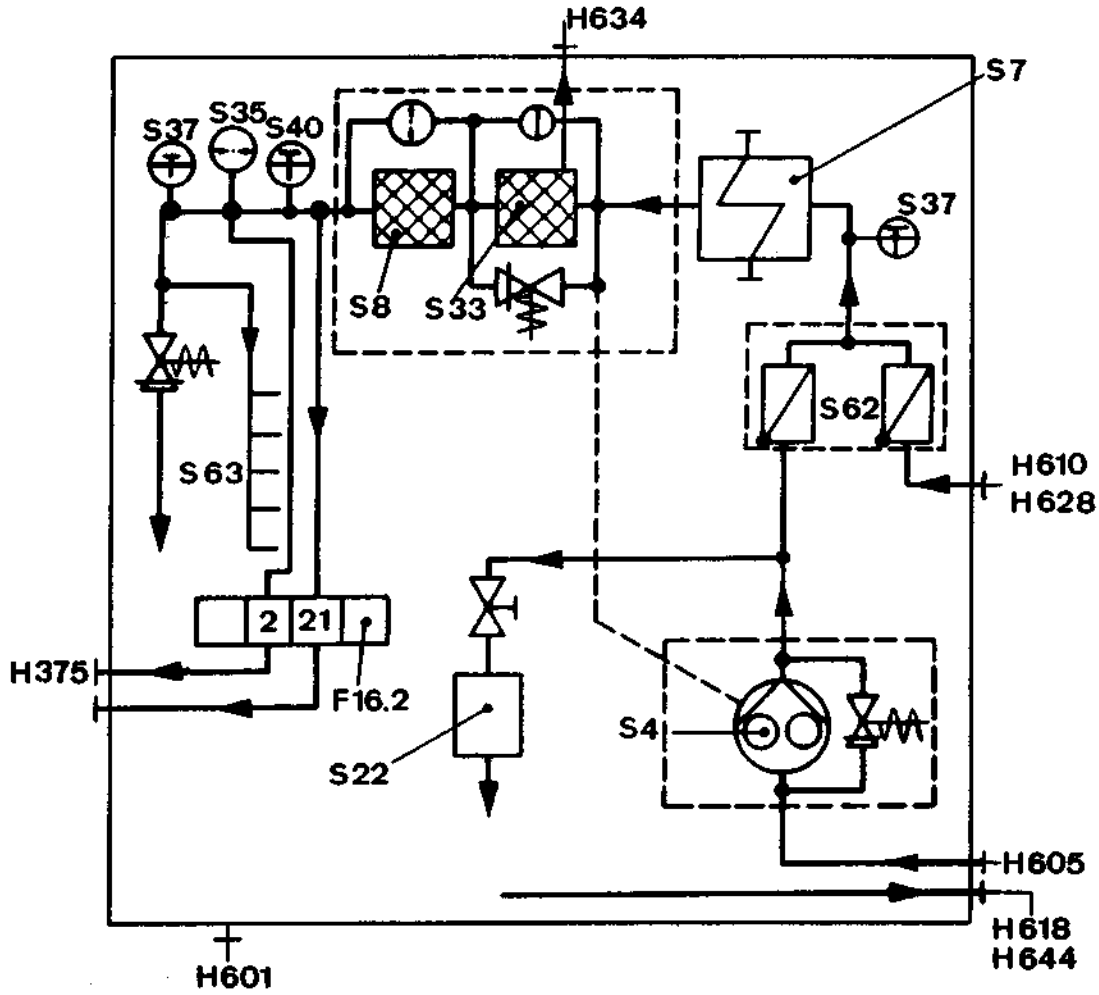

0208 0980 04 07 50146 5-2-13

© 51 214 0

This page intentionally left blank

5.2.4 Low-Level Tank ("Dry Sump")

5.2.4.1 Built-on Oil Cooler

5.2.4.1.1 Self-Cleaning Filter Incorporated in Engine Oil System

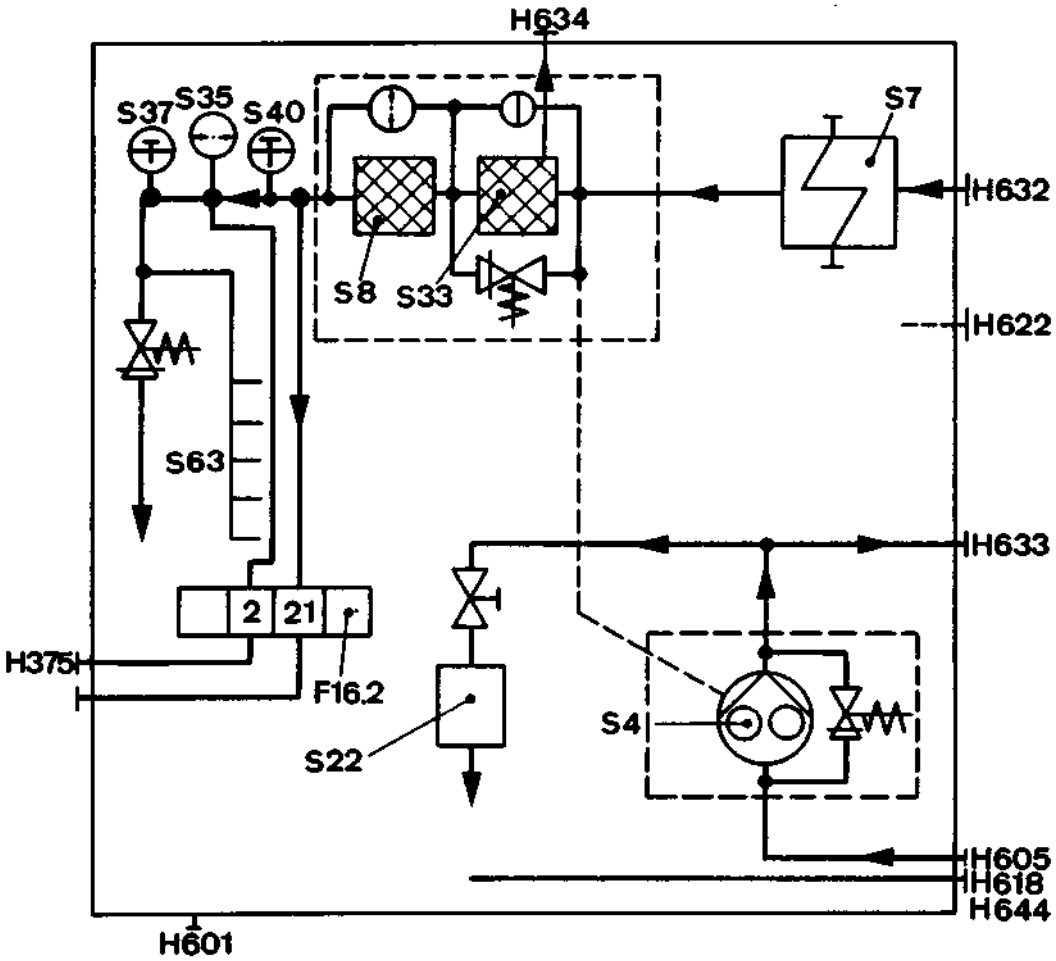

0208 0980 08 07 50150 5-2-15

© 51 215 0

This page intentionally left blank

5.2.4 Low-Level Tank ("Dry Sump")

5.2.4.2 Separate Oil Cooler

5.2.4.2.1 With or w/o Self-Cleaning Filter Incorporated in Engine Oil System

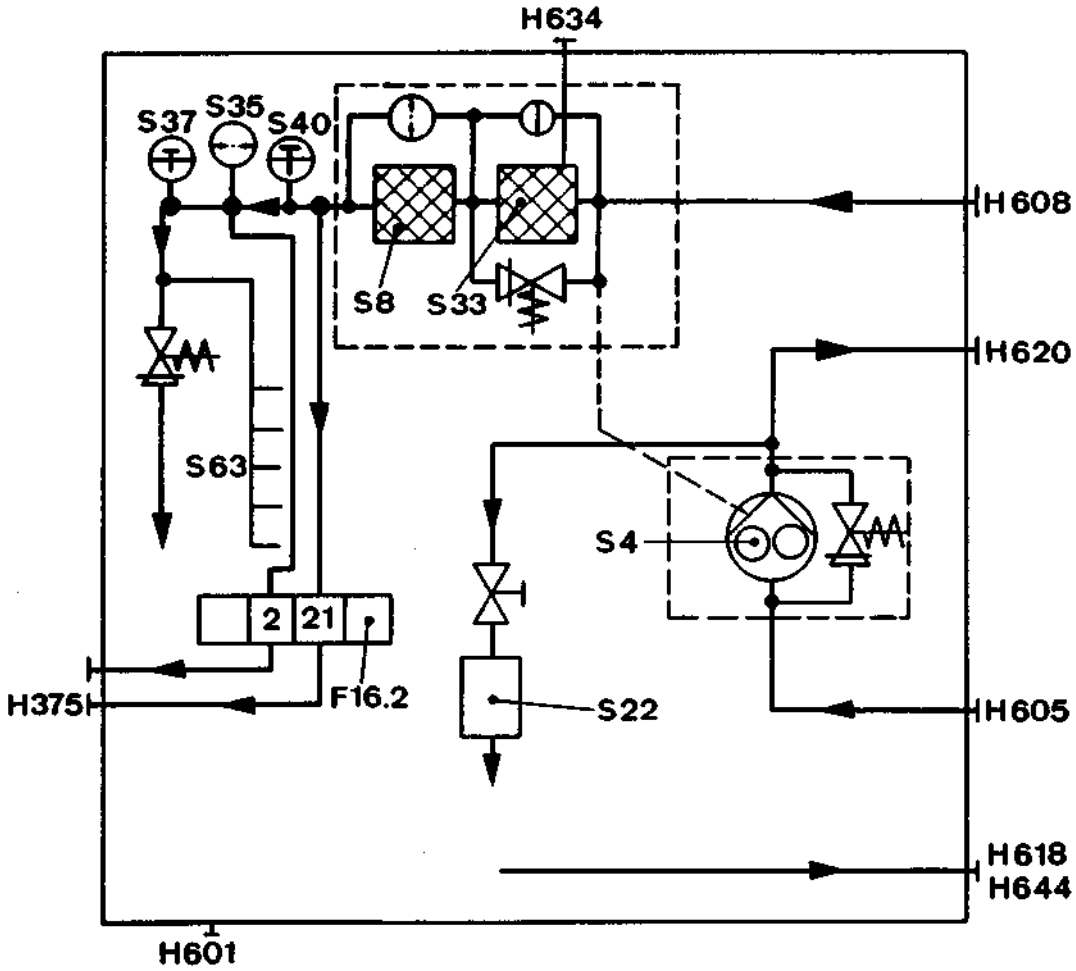

0208 0980 05 07 50147 5-2-17

© 51 216 0

This page intentionally left blank

5.3 Cooling Water System

© 0583

5.3 Cooling Water System

5.3.1 Legend for Piping Diagrams

5.3.1.1 Engine Components

	A 4	Turbocharger
	F. 16.2	Piping panel for pressure monitoring
	L 2	Charge air cooler
*)	R 5	Raw water pump
	S 7	Oil cooler
	U 1	Water collecting pipe
	U 2	Water pump
	U 6	Water distributing pipe
	U 9	Pressure gauge
	U 15	Temperature monitor
	U 16	Bleeder (automatic)
	U 22	Pressure monitor
	U 34	CHeck valve
	U 43	Thermometer

5.3.1.2 Engine Pipe Connections

*)	H 101	Suction pipe on raw water pump
*)	H 102	Delivery pipe on raw water pump
	H 109	Feed to charge air cooler
	H 110	Discharge from charge air cooler
	H 117	Breather pipe
	H 201	Suction pipe on fresh water pump
	H 202	Delivery pipe on raw water pump
	H 204	Feed to distributing pipe
*)	H 206	Delivery pipe from standby fresh water pump
	H 207	Discharge from collecting pipe
	H 209	Breather pipe from engine
*)	H 210	Compensation pipe from header tank
	H 213	Preheating pipe (feed)
	H 214	Preheating pipe (discharge)
	H 222	Breather pipe from charge air cooler
	H 223	Feed to charge air cooler
	H 224	Discharge from charge air cooler
*)	H 226	Feed to injector water cooler
	H 228	Connection for breather pipe on turbocharger
	H 234	Suction pipe on L.T. water pump
*)	H 235	Delivery pipe from standby L.T. water pump
*)	H 237	Breather pipe from L.T. charge air cooler
*)	H 238	Discharge from H.T. charge air cooler
*)	H 239	Connection: Bypass of L.T. charge air coolers
*)	H 240	L.T. compensation pipe
	H 251	Supply to oil cooler
	H 252	Discharge from oil cooler
	H 253	Delivery pipe on L.T. water pump
	H 375	Connection for pressure monitoring

*) optional

Legend for symbols see section 5.7.

© 1186

5.3.2 Single-Circuit Cooling System

5.3.2.1 Built-On Oil Cooler before Single-Stage Air Cooler

5.3.2.1.1 Built-On Coolant Pump, Raw Water Pump can be Mounted

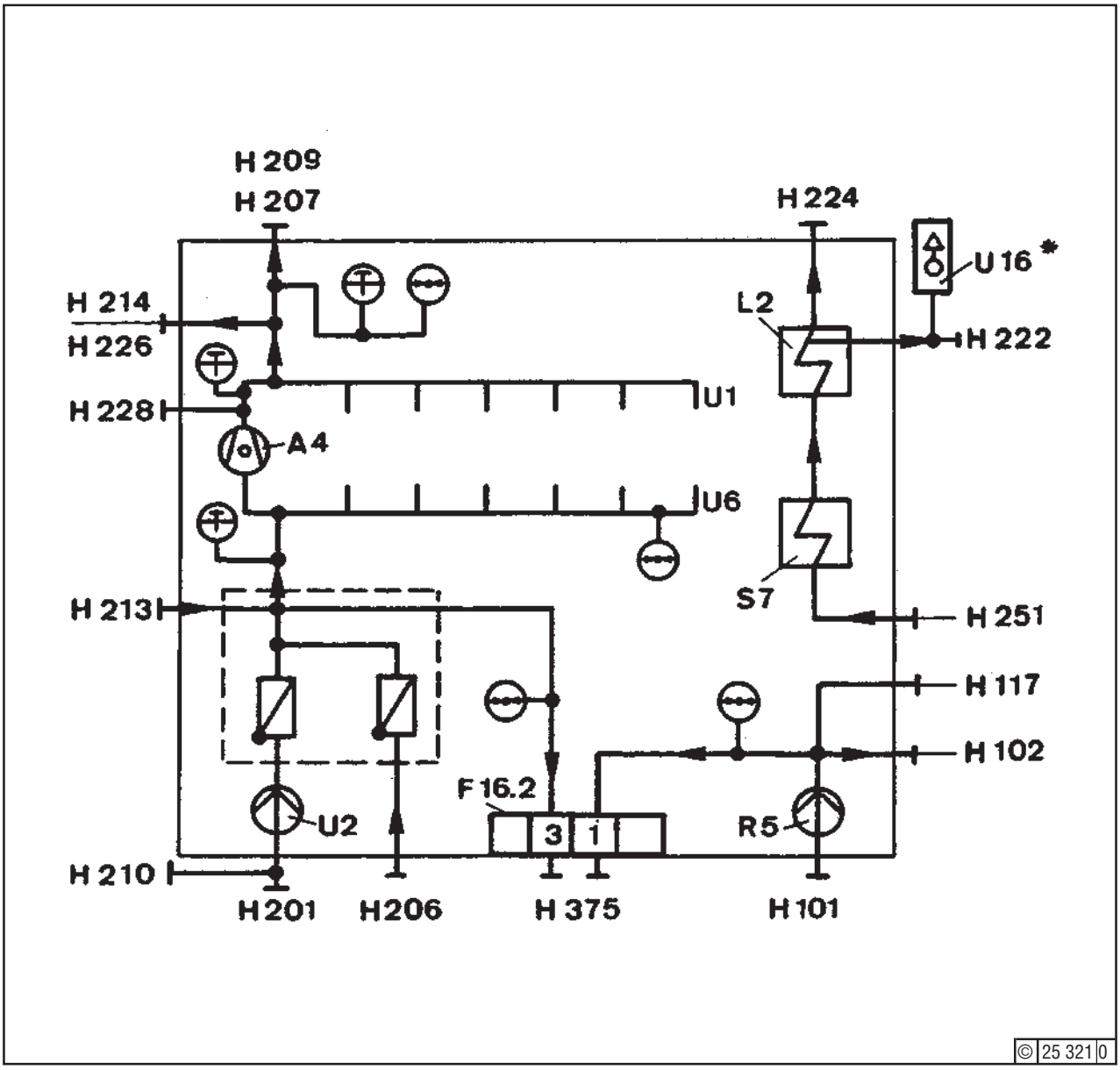

* On SBVM only H 222
On BVM optionally H 222 or U 16

This page intentionally left blank

5.3.2 Single-Circuit Cooling System

5.3.2.1 Built-On Oil Cooler before Single-Stage Charge Air Cooler

5.3.2.1.2 Separate Coolant Pump, Raw Water Pump can be Mounted

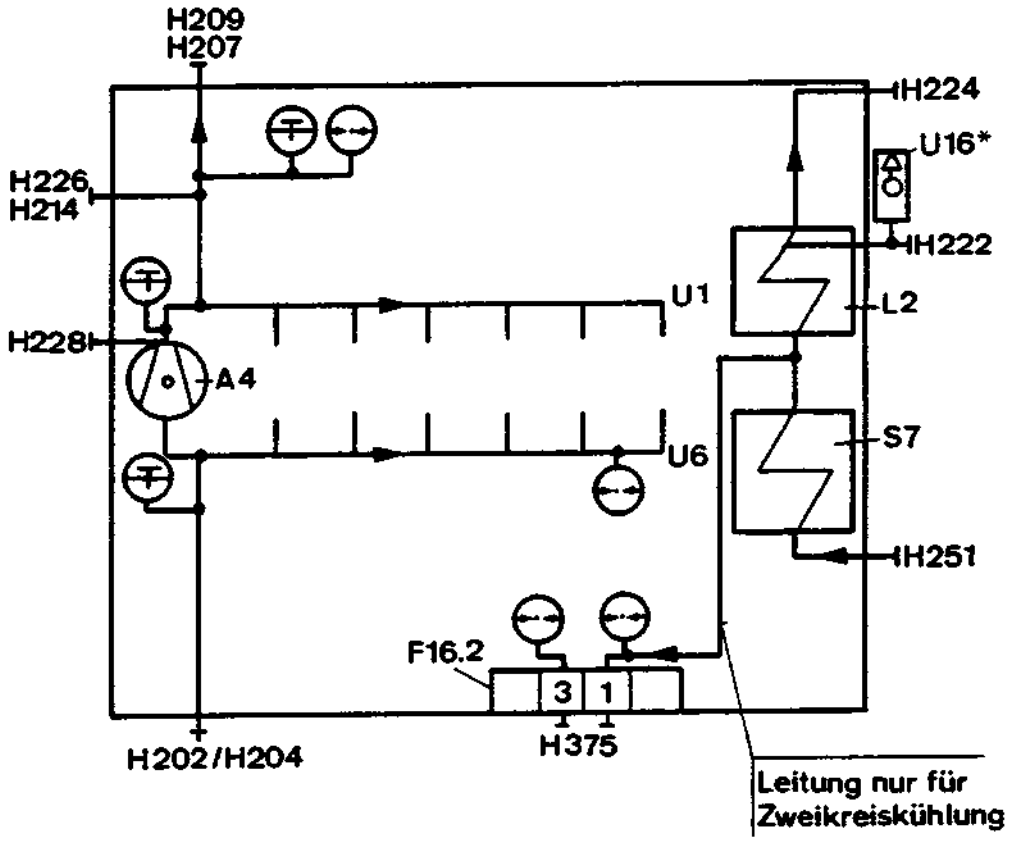

0208 0979 03 10 50153 5-3-05

© 51 381 0

* On SBVM only H 222
On BVM optionally H 222 or U 16

This page intentionally left blank

5.3.3 Single-Circuit Cooling System

5.3.3.1 Built-On Oil Cooler before Single-Stage Charge Air Cooler

5.3.3.1.1 Two Built-On Coolant Pumps

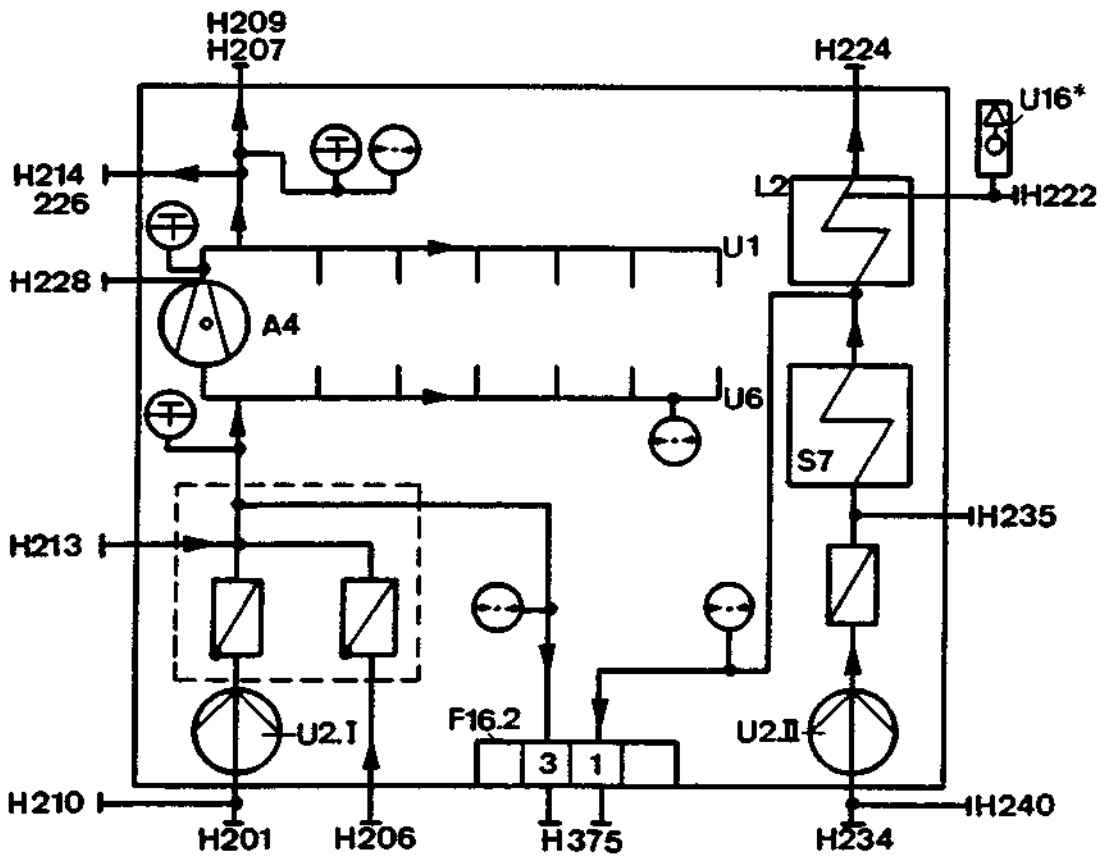

* On SBVM only H 222
On BVM optionallyH 222 or U 16

This page intentionally left blank

5.3.3 Double-Circuit Cooling System

5.3.3.1 Built-On Oil Cooler before Single-Stage Charge Air Cooler

5.3.3.1.2 Separate Coolant Pumps

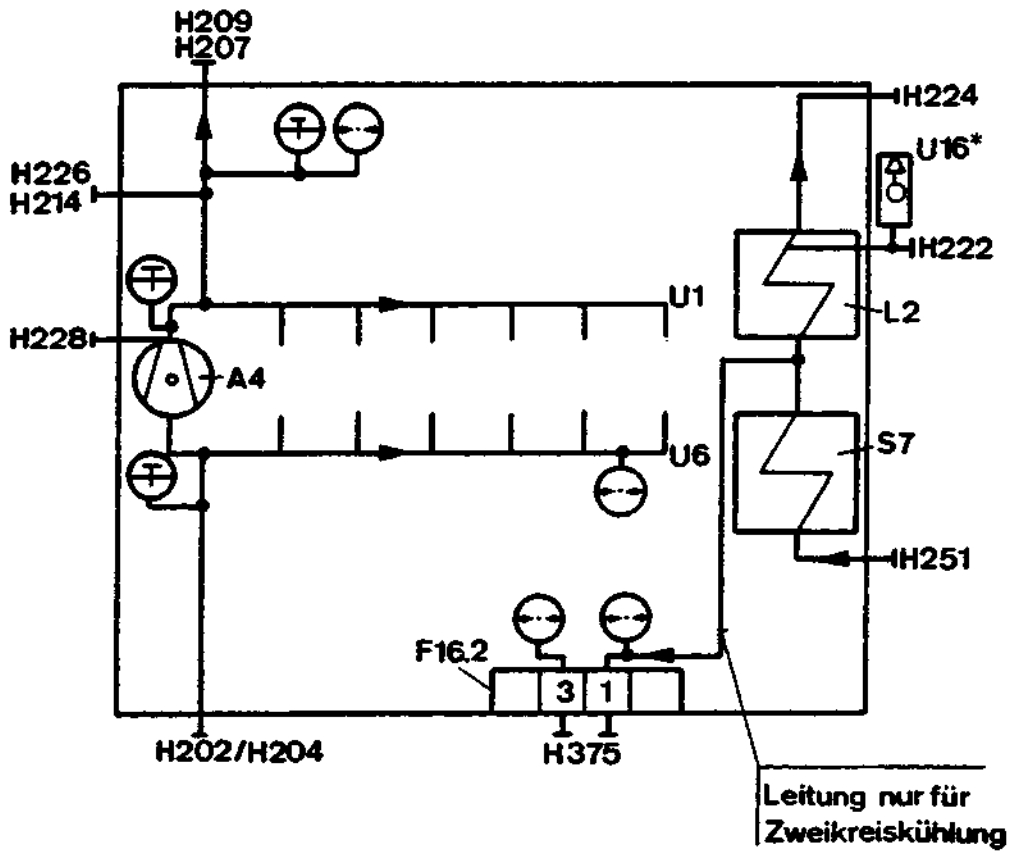

0208 0907 07 10 50157 5-3-09

© 51 383 0

* On SBVM only H 222
On BVM optionally H 222 or U 16

This page intentionally left blank

5.3.3 Double-Circuit Cooling System

5.3.3.2 Built-On Oil Cooler behind Two-Stage Charge Air Cooler, with Disconnection of L.T. Circuit

5.3.3.2.1 Two Built-On Coolant Pumps

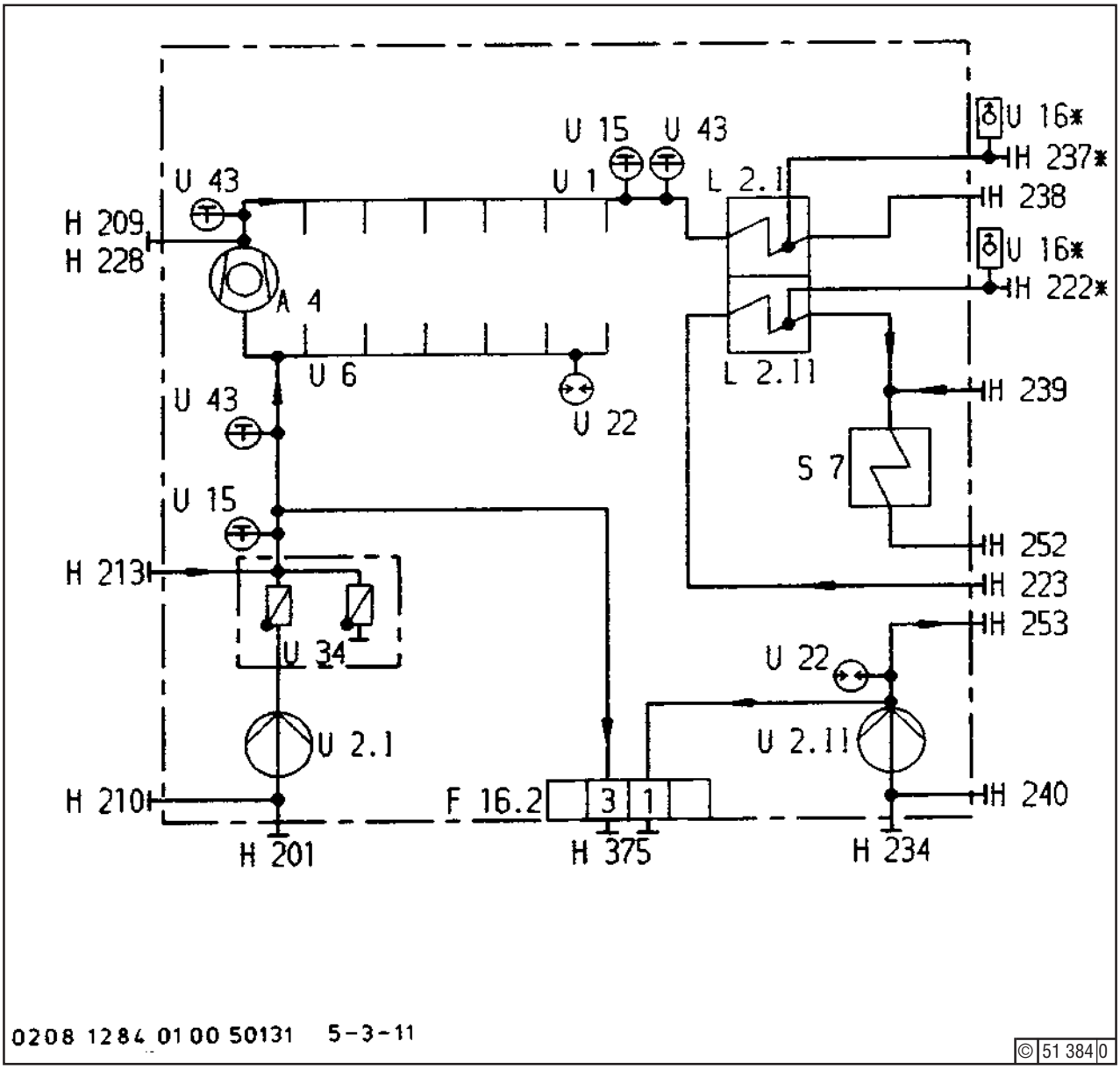

* On SBVM only H 222 resp. H 237
On BVM optionally H 222 resp. H 237 or U 16

This page intentionally left blank

5.3.3 Double-Circuit Cooling System

5.3.3.2 Built-On Oil Cooler behind Two-Stage Charge Air Cooler, with Disconnection of L.T. Circuit

5.3.3.2.1 Separate Coolant Pumps

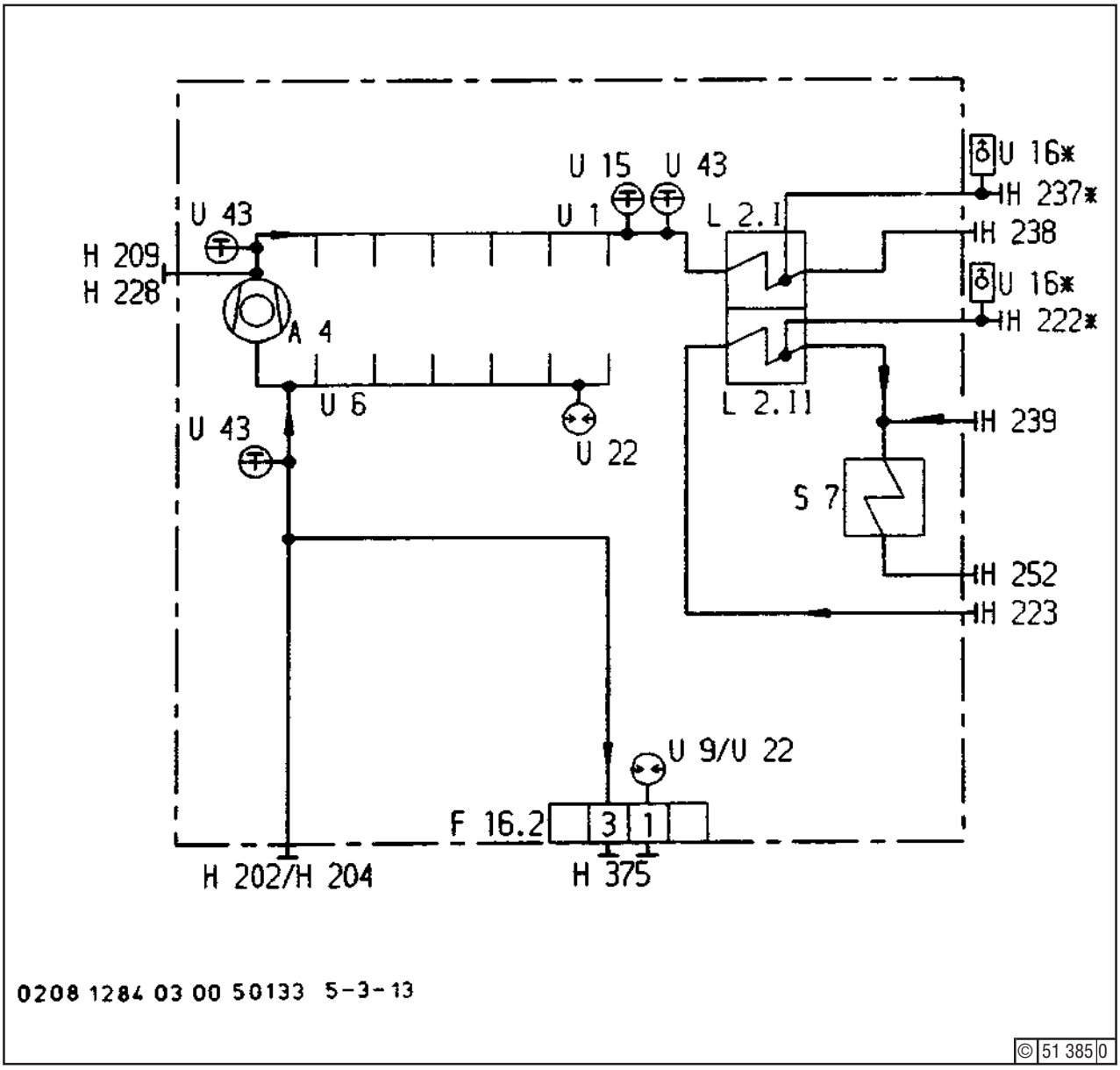

* On SBVM only H 222 resp. H 237
On BVM optionally H 222 resp. H 237 or U 16

This page intentionally left blank

5.3.4 Double-Circuit Cooling System

5.3.4.1 Two-Stage Charge Air Cooler, without Disconnection of L.T. Circuit, Separate Oil Cooler

5.3.4.1.1 Two Built-On Coolant Pumps

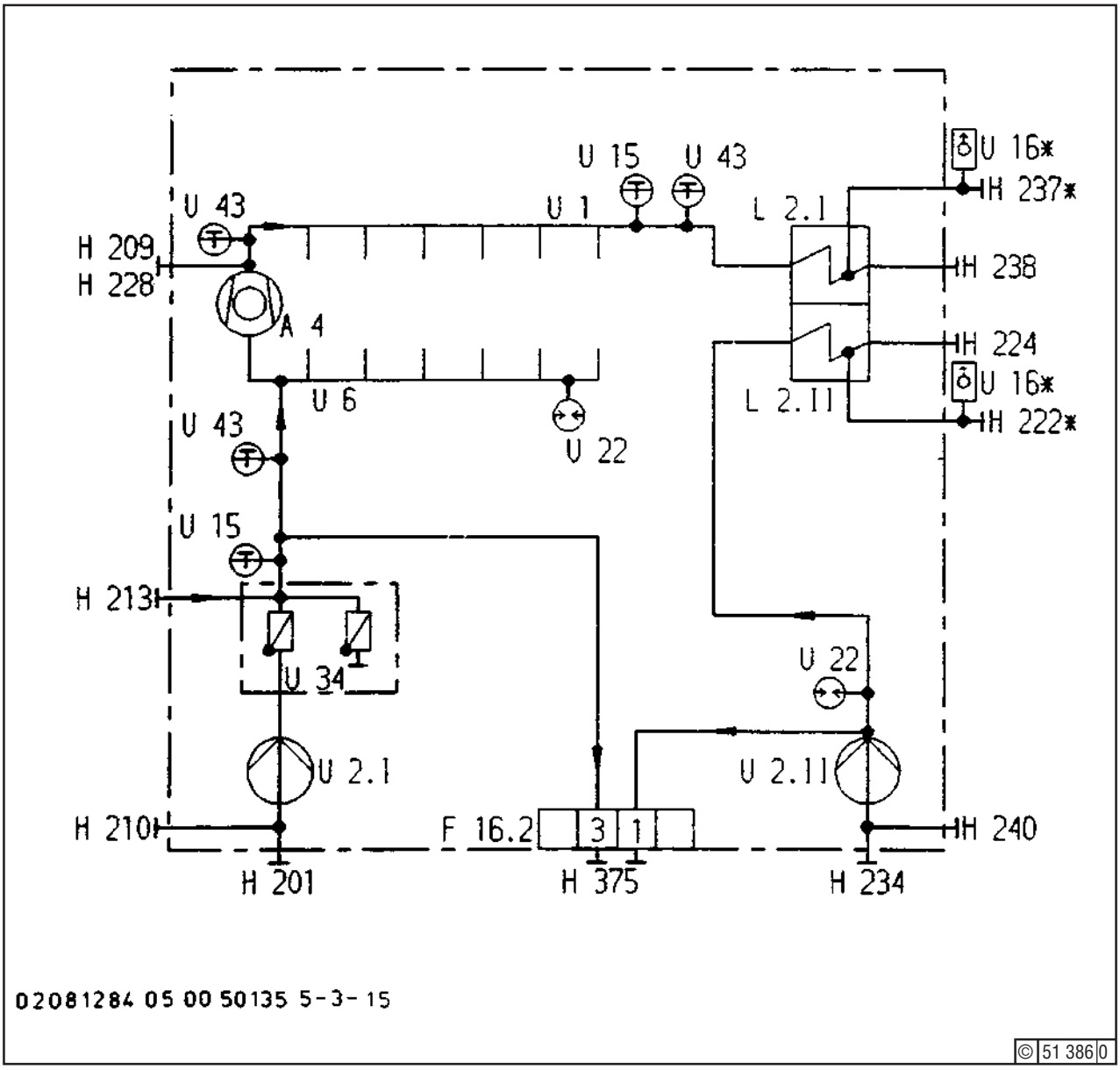

* On SBVM only H 222 resp. H 237
On BVM optionally H 222 resp. H 237 or U 16

This page intentionally left blank

5.3.4 Triple-Circuit Cooling System

5.3.4.1 Two-Stage Charge Air Cooler, without Disconnection of L.T. Circuit, Separate Oil Cooler

5.3.4.1.2 Separate Coolant Pumps

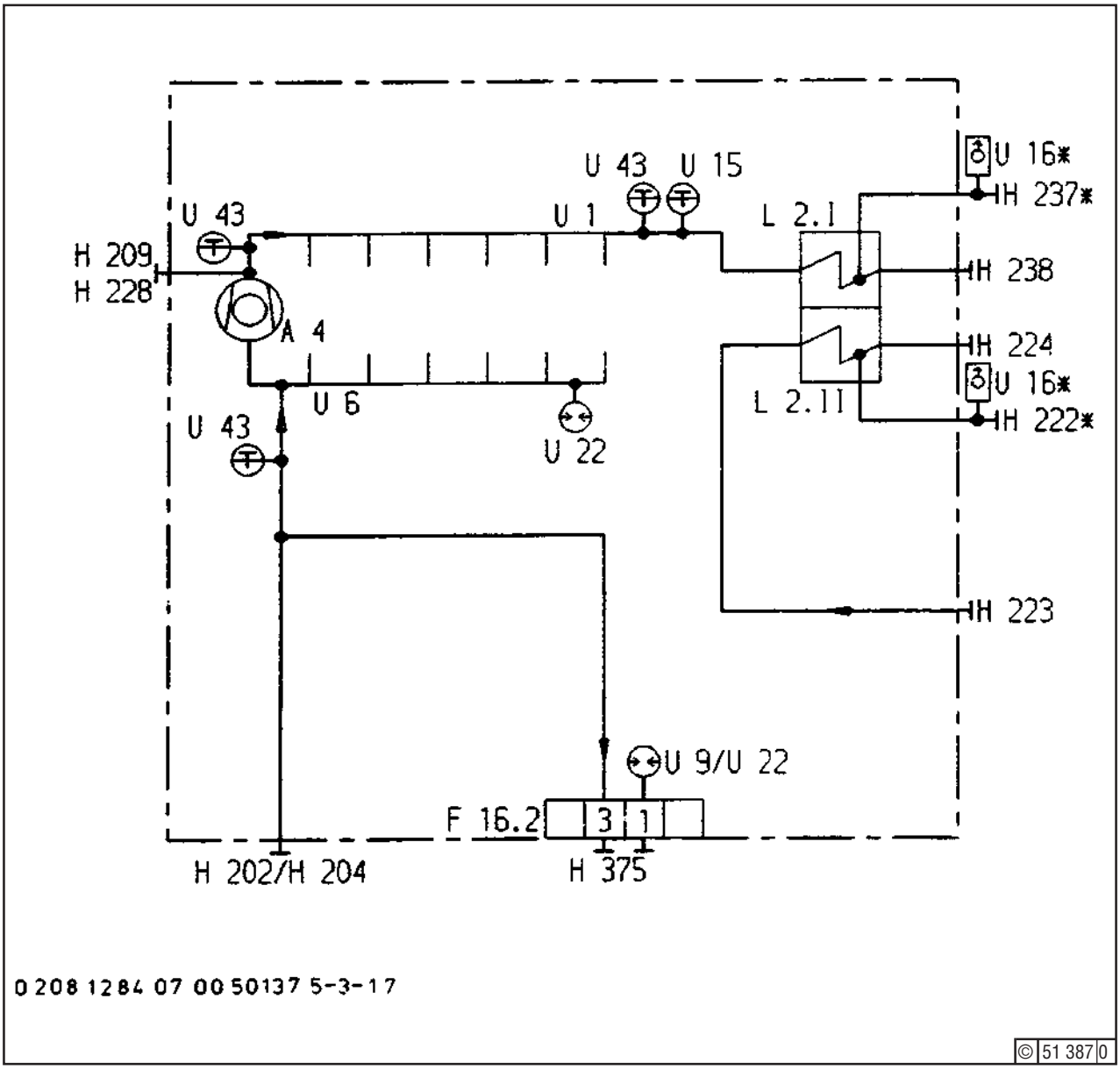

* On SBVM only H 222 resp. H 237
On BVM optionally H 222 resp. H 237 or U 16

This page intentionally left blank

5.3.4 Triple-Circuit Cooling System

5.3.4.2 Two-Stage Charge Air Cooler, without Disconnection of L.T. Circuit, Separate Oil Cooler

5.3.4.2.1 Two Built-On Coolant Pumps

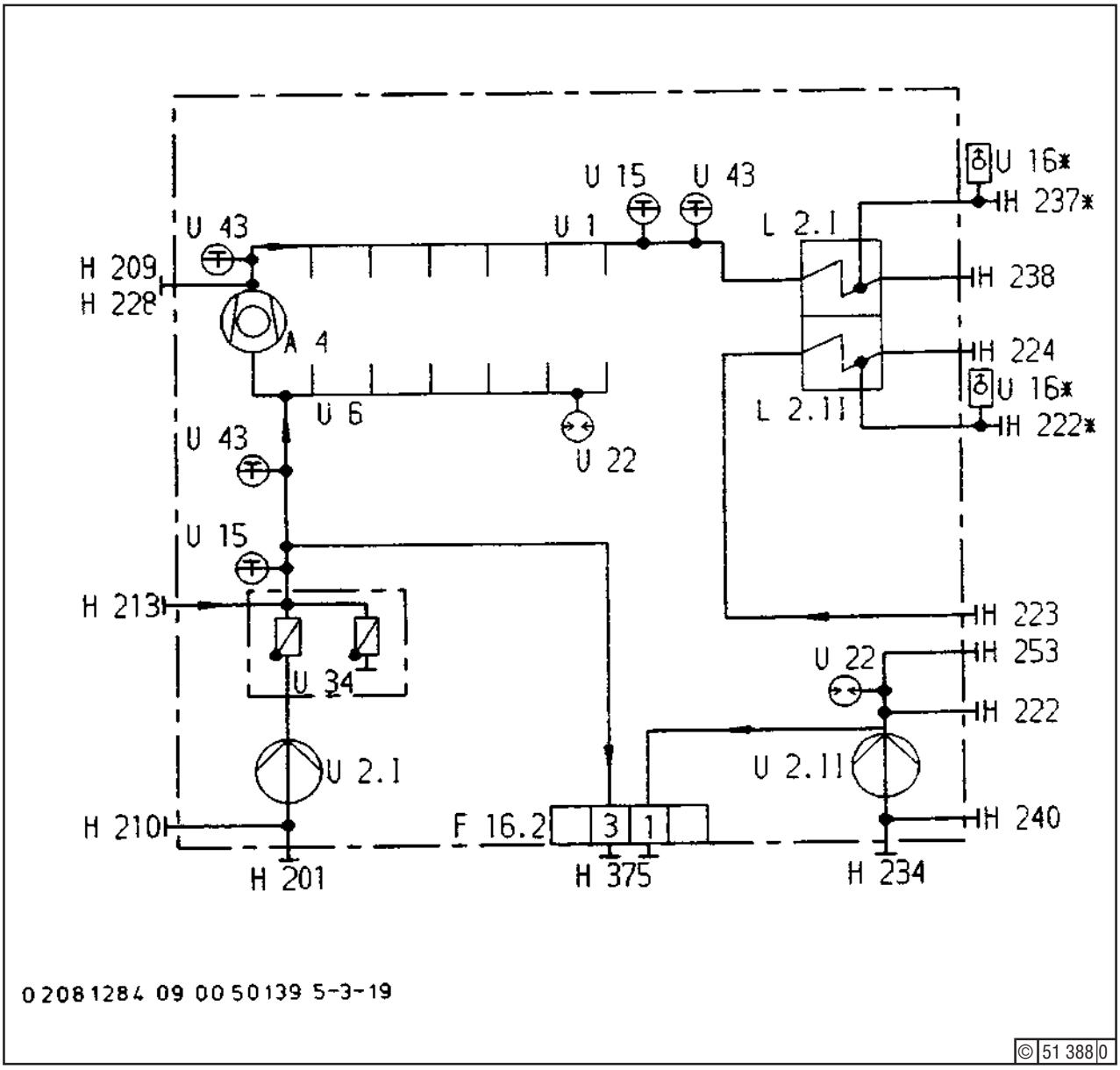

* On SBVM only H 222 resp. H 237
On BVM optionally H 222 resp. H 237 or U 16

This page intentionally left blank

5.3.4 Triple-Circuit Cooling System

5.3.4.2 Two-Stage Charge Air Cooler, without Disconnection of L.T. Circuit, Separate Oil Cooler

5.3.4.2.2 Separate Coolant Pumps

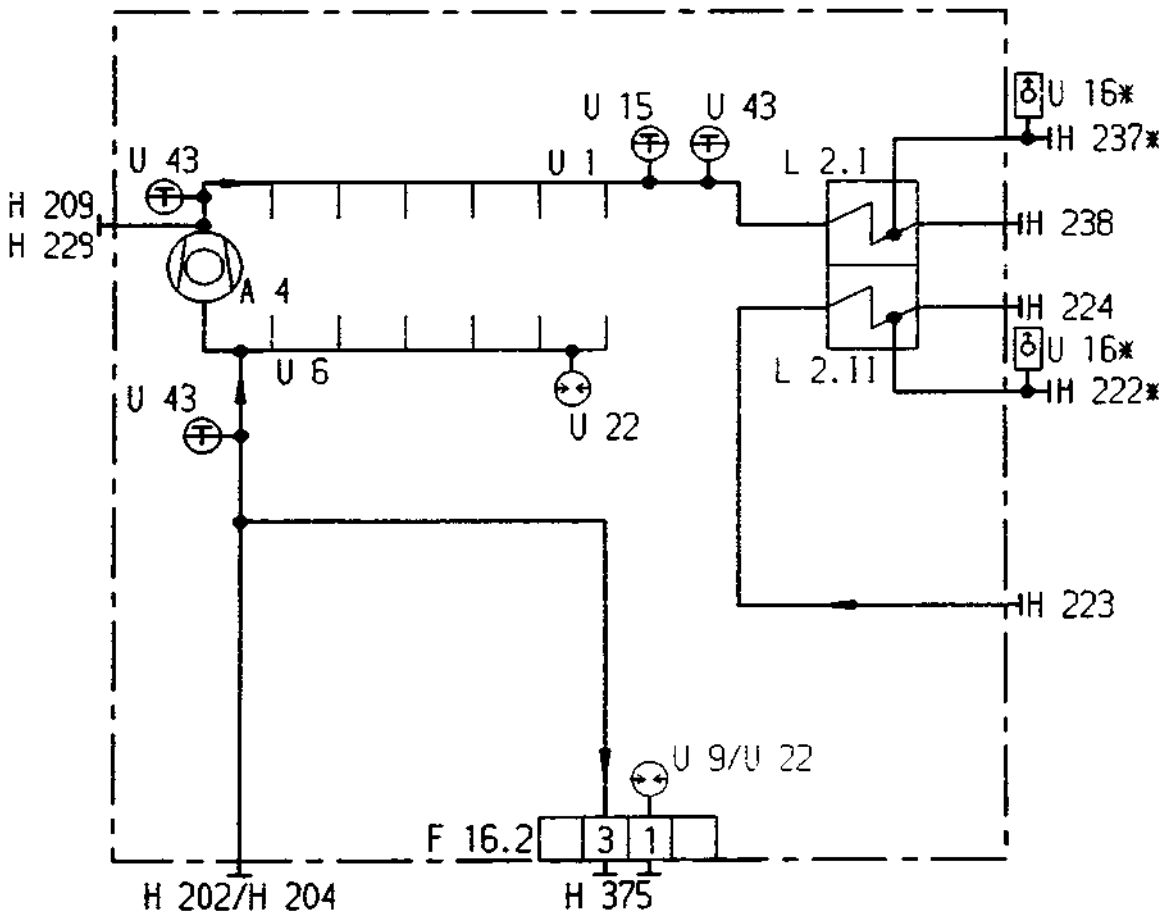

© 51 389 0

* On SBVM only H 222 resp. H 237
On BVM optionally H 222 resp. H 237 or U 16

This page intentionally left blank

5.4 Pneumatic System

© 0686

5.4 Pneumatic System

5.4.1 Legend for Piping Diagrams

5.4.1.1 Engine Components

	D 6	Starting air master valve
	D 8	Starting pilot air distributor
	D 54	Quick-release valve
	F 1	Engine control unit
	F 5	Governor
	F 16.1	Piping panel for pneumatic system
	F 16.2	Piping panel for pressure monitoring
	F 34	Booster
*)	S 56	Crankcase oil mist detector
	K 11	Injection pump

5.4.1.2 Engine Pipe Connections

	H 302	Starting air pipe
*)	H 371	Connections for remote control unit
	H 375	Connections for pressure monitoring
*)	H 702.2	Crankcase breather

*) optional

Legend for symbols see section 5.7.

© 0285

5.4 Pneumatic System

5.4.2 Starting / Control / Pilot Air

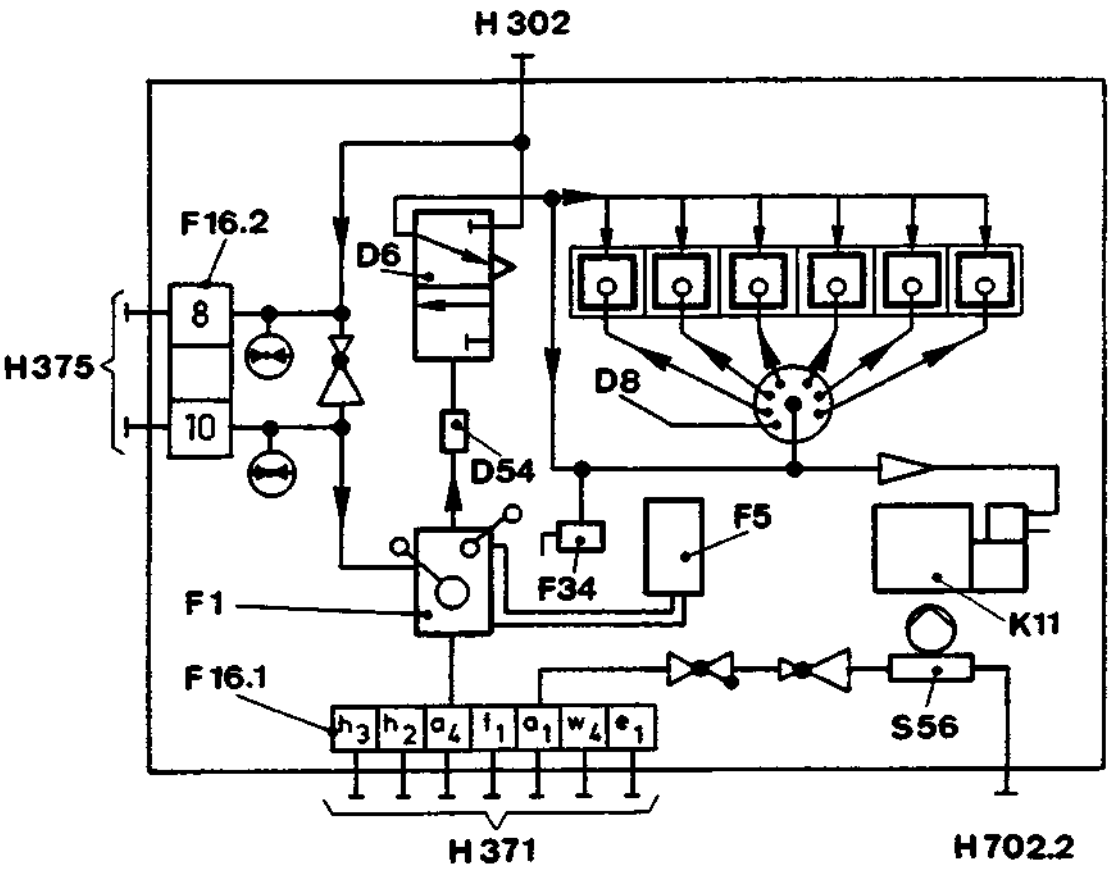

208 0982 01 03 25587 00 5-4-03

© 51 390 0

This page intentionally left blank

5.5 Sealing-Oil System

© 0285

5.5 Sealing-Oil System

5.5.1 Legend for Piping Diagrams

5.5.1.1 Engine mounted components

F 16.2 Piping panel for pressure monitoring
K 11 Injection pump
S 28 Sealing-oil filter
S 49 Sealing-oil pump
S 55 Two-way valve

5.5.1.2 Engine Pipe Connections

H 375 Connection for pressure monitoring
H 640 Pressure connection from sealing oil pump
H 641 Pressure connection from high-level tank (sealing oil)

Legend for symbols see section 5.7.

© 0285

5.5 Sealing-Oil System

5.5.2 Fuel Conveyer Pump mounted on the Engine

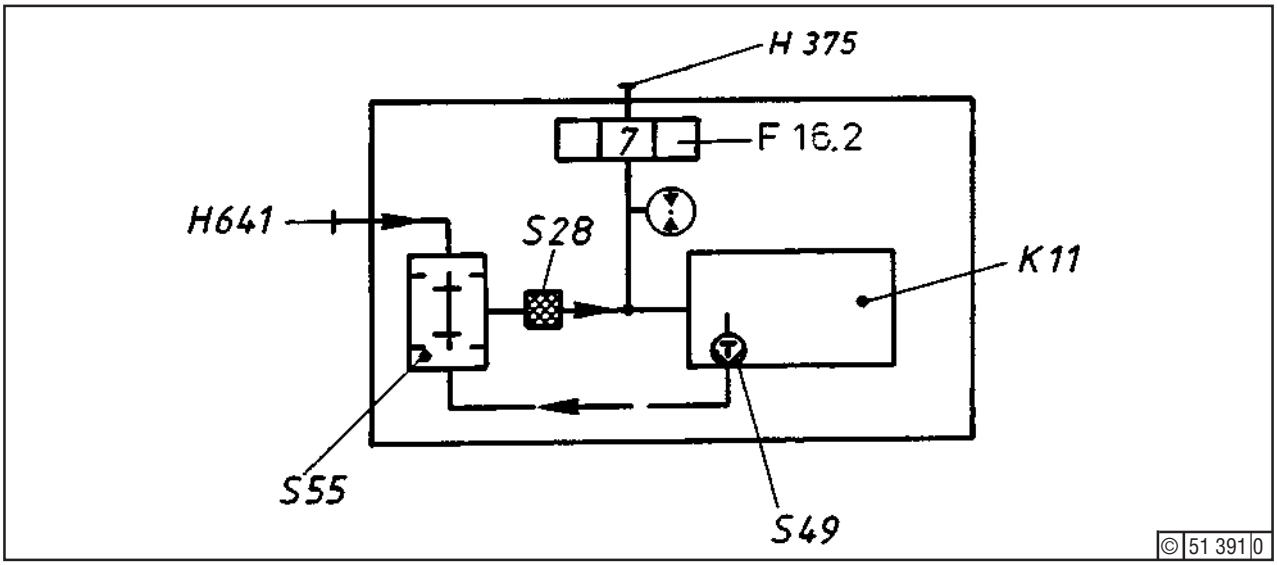

5.5.3 Fuel Conveyer Pump not mounted on the Engine

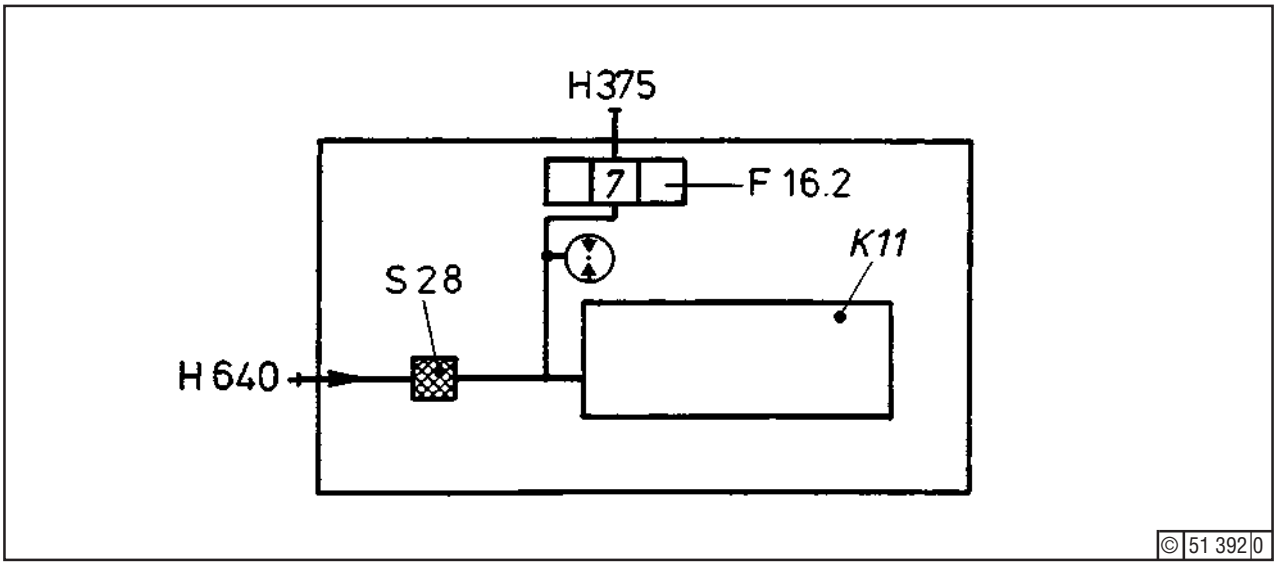

This page intentionally left blank

5.6 Injection Nozzle Cooling

© 0285

This page intentionally left blank

5.6 Injection Nozzle Cooling

List of Engine Pipe Connections

H 504 Feed to injectors
H 505 Discharge from injectors

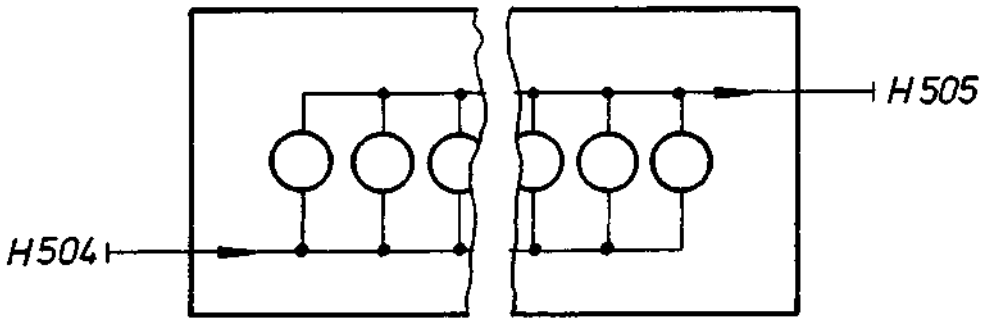

© 51 393 0

© ©0285

This page intentionally left blank

5.7 Symbols Used in Piping Diagrams (Definitions to DIN 30600)

5.7.1 Piping

Item .	DIN No. Ser. No.	Description	Symbol	30600 No.	Remarks
1.01	2481 4.01	Principal Media			Cooling water, lube oil, fuel oil, compressed air
1.02	2481 4.01	Direction of flow			Arrow above or incorporated
1.03	2481 4.01	Raw water			
1.04					
1.05					
1.06					
1.07	2481	Control line			e.g. on thermostat
1.08					
1.09		Insulated pipe			
1.10					
1.11	2481 4.25 2429 1.7	Intersection of two pipes w/o junction			
1.12	2429 1.8	Intersection of two pipes with junction			

Item	DIN No. Ser. No.	Description	Symbol	30600 No.	Remarks
1.13					
1.14					
1.15	2429 4.1.1.5	Flexible joint			Hose
1.16	2481 4.32	DRain tundish		582	
1.17	2481 4.36	Pipe cross section reduction / expansion piece	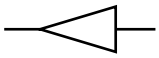	580	
1.18	2481	Outlet to atmosphere Rain cap		583	
1.19					

5.7.2 Shut-off Fittings

2.01	2481 5.05	Shut-off valve through-way valve		588	
2 . 02	2481 5.07	Angle valve		590	
2 . 03	2481	Three-way valve	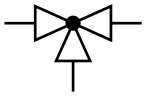	591	
2.06	2481 5.10	Non-return / through-way valve		604	Dot at inlet end indicates the non-return (check) function

Item	DIN No. Ser. No.	Description	S ymbol	30600 No.	Remarks
2.07	2481	Angled non-return valve	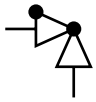	605	
2.08	2481 5.17	Pressure reducing through-way valve		594	Larger cross section = lower pressure
2.09	2481	Angled pressure reducing valve		595	
2.10	2481 5.15	Floating-ball valve		578	
2.11	2481	Gate valve		586	
2.12	2481 5.25	Through-way	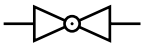	599	
2.13	2481 5.26	Angled cock		600	
2.14	2481	Three-way change-over cock	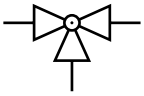	601	
2.15	2418	Four-way change-over cock	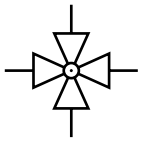	602	
2.16					
2. 17	2481 5.29	Shut-off flap, not adjustable	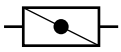	607	
2.18	2481 5.30	Shut-off flap, infinitely adjustable	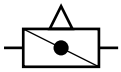	608	

Item	DIN No. Ser. No.	Description	Symbol	30600 No.	Remarks
2.19	2481 5.31	Non-return flap	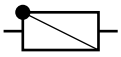	606	Dot indicates inlet end
2.20	2429 3.2.2.1	Intake strainer with foot valve (flap)			
2.21	2481 5.34	Drive by hand			
2.22	2481 5.36	Drive by solenoid	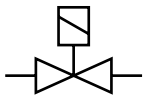		
2.23	2481 5.36	Drive by motor	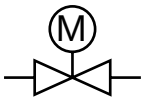		
2.24	2481 5.37	Drive by f luid	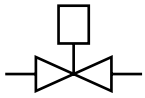		e.g. hydraulic or pneumatic
2.25	2481 5.40	Drive by weight	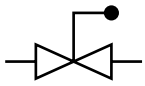		Quick.closing valve
2.26	2481 5.42	Relief valve spring-loaded	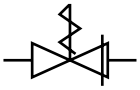		Angular design 2.02
2 27					
2.28	2481 5.58	Shut-off element closed			Shows working condition of system
2.29	2481 5.59	Shut-off element opened			
2.30					

Item	DIN No. Ser. No.	Description	Symbol	30600 No.	Remarks
2.31	2481 5.65	Flow limiter using restrictor plate (single orifice)		612	
2.32	2481 5.67	Flow inspection		611	
2.34	24300 page 3 2.3	Two-way valve	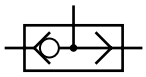		

5.7.3 Accessories

3.01	2481 5.72	Silencer		615	
3.02	2481 5.79 2429 5.2	Condensate trap		629	
3.03	2421 5.1	Separator			
3.04	2429 5.3	Strainer	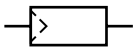		
3. 05	2429	Filter, single- element			
3.06		Filter, twin-element	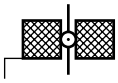		
3.07		Filter, four-element	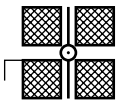		
3.08		Back-flushing filter with treatment of flushing oil	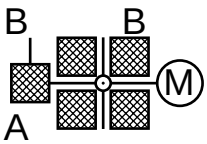		Energy 9.02 or 9.03 B: clean oil

Item	DIN No. Ser. No.	Description	Symbol	30600 No.	Remarks
3.09		Breather valve			
3.10		Preheater for engine coolant	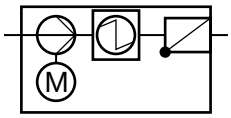		Energy also 9.05
3.11		Preheater for engine coolant and lube oil I: engine coolant II: lube oil	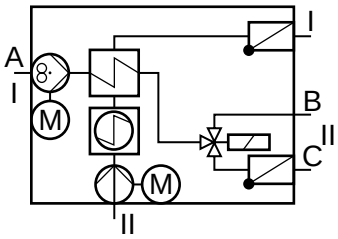		Energy also 9.05 A : from oil reservoir B : to engine C : to oil reservoir
3.12		Viscometer	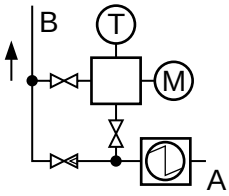		A : heavy oil inlet B : heavy oil outlet Energy also 9.05
3.13		Separator, manually cleaned	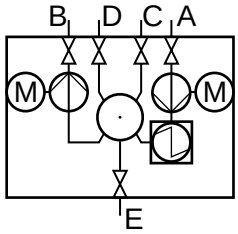		A : dirty oil inlet B : clean oil outlet C : water inlet D : water outlet E : sludge outlet
3.14		Separator self-cleaning	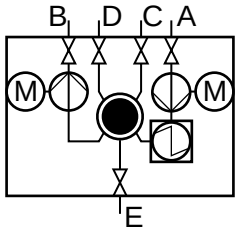		
3.15		Sea box	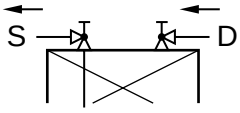		S : suction end D : delivery end
3.16		Over- / Under-pressure valve	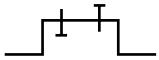		

Item	DIN No. Ser. No.	Description	Symbol	30600 No.	Remarks
3.18					
3.19					
3.20					
3.21					
5.7.4 Heavy Exchangers					
4.01	2481	Surface heat exchanger with media crossing	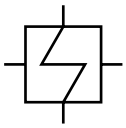		Zigzag pipe carries heat-absorbing medium
5.7.5 Containers					
5.01	2431 10.02	Tank	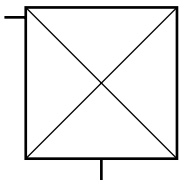		
5.02	2481 10.08	Tank with pipe coil	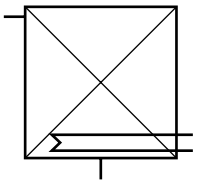		

Item	DIN No. Ser. No.	Description	Symbol	30600 No.	Remarks
5.03					
5.04	43609 3.2.2.2	Air receiver with valve head	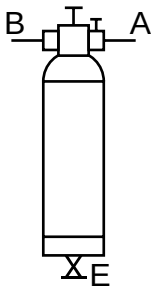	732	A = charging pipe B = discharging pipe E =drain
5.7.6 Machinery **5.7.6.1 Driving Machines**					
6.01	2481 11.01	Turbine	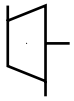	632	e.g. turbo charger
6.02	2481 11.11	Diesel engine	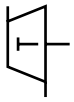	633	
6 . 03	2481 11.14	Electric motor		635	
6.04					
6.05					
5.7.6.2 Driven Machines					
6.06	2481 11.47	Electric generator		636	
6.07	2481 11.22	Centrifugal pump		708	
6.08	2481 11.23	Reciprocating pump		697	

Item	DIN No. Ser. No.	Description	Symbol	30600 No.	Remarks
6. 09	2481	Gear-type pump		702	
6.10		Hand-operated pump			
6.11	2481 11.33	Rotary compressor		715	e.g. fan
6.12	2481 11.34	Reciprocating compressor		716	e.g. compressor
6.13	2481 11.37	Turbo compressor		724	e.g. turbocharger
6.14					
6.15					
6.16					

5.7.7 Water Heat Exchangers

7.01	2481 14.01	Cooling tower	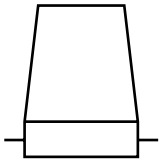	658	
7.02					
7.03					
7.04					

Item	DIN No. Ser. No.	Description	Symbol		30600 No.	Remarks
5.7.8	**Measuring and Control**		Gauge		Gauge shown alternately with or w/o circle	
8.01	2481 15.01	Flow			687	Code letter F
8.02	2481	Level			776	Code letter L
8.03	2481 15.04	Pressure			681	Code letter P
8.04	2481 15.03	Temperature			688	Code letter T
8.05		Service gauge				
8.06						
8.07		Thermostat (flow divider)	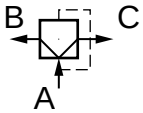			A : from engine B : to pump C : to cooler
8.08		Thermostat (blender)	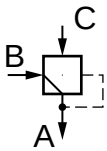			A : blended temp. B : hot C : cold
8.09						
8.10						
5.7.9	**Energies** (shown in drawings only in horizontal position)					
9.01	2481 16.01	Mechanical energy			273	

Item	DIN No. Ser. No.	Description	Symbol	30600 No.	Remarks
9.02	2481 16.02	Pneumatic energy		274	
9.03	2481 16.06	Electric energy		278	
9.04	2481 16.07	Hydraulic energy		279	
9.05	2431 16.03	Heat energy		275	
9.06	2481 16.04	Stream energy		276	
9.07					
9.08					

This page intentionally left blank

Engine Operating Media Treatment

6

Vorschriften über Betriebsstoffe
Prescrizioni relative a mezi di esercizio
Prescriptions applicables aux carburants
Prescripciones para medios de servicio
Voorschriften inzake brandstof-, smeerolie- en koelmiddel
П едписания по эксплуатацион мате иалам

6 Engine Operating Media Treatment

Vorschriften über Betriebsstoffe
Prescrizioni relative a mezi di esercizio
Prescriptions applicables aux carburants
Prescripciones para medios de servicio
Voorschriften inzake brandstof-, smeerolie- en koelmiddel
П едписания по эксплуатацион мате иалам

6 Operating Media

For information on the operating media used in your engine please refer to our technical circulars which are consistently kept up-to-date.

Technical circulars currently in force are the following
:

6.1 TR 0199-99-2082 concerning lube oils for ABB turbochargers

6.2 TR 0199-2090 concerning motor oils

6.3 TR 0199-2089 concerning fuels

6.4 TR 0199-2091 concerning cooling water

6.5 TR 0199-99-2116 concerning engine preservation

© 1199

This page intentionally left blank

6.1 Instructions for use of lube oils for ABB turbocharger

see **TR 0199-99-2082** enclosed.

© 1199

This page intentionally left blank

6.2 Instructions for Use of Motor Oils

see **TR 0199-2090** enclosed

© 1199

This page intentionally left blank

6.3 Instructions for Use of Fuels

see **TR 0199-2089** enclosed.

© 0690

This page intentionally left blank

6.4 Instructions for Colling Water

see **TR 0199-2091** enclosed

© 0691

This page intentionally left blank

6.5 Instructions for Engine Preservation

see **TR 0199-99-2116** enclosed.

© 1199

This page intentionally left blank

Trouble-shooting

7

Betriebsstörungen und ihre Beseitigung
Disfunzioni di esercizio e loro eliminazione
Pannes et leurs remèdes
Perturbaciones de servicio y su eliminación
Bedrijffstoringen en het verhelpen daarvan
Неисп авности и их уст анение

7 Trouble-shooting

Betriebsstörungen und ihre Beseitigung
Disfunzioni di esercizio e loro eliminazione
Pannes et leurs remèdes
Perturbaciones de servicio y su eliminación
Bedrijffstoringen en het verhelpen daarvan
Неисп авности и их уст анение

7 Trouble-shooting

7.1 Summary of Potential Troubles

		Page
Engine fails to start		7-0-02
Engine fails to fire or stalls		7-0-03 7-0-05
Engine fails to develop full power		7-0-04
Engine knocks		7-0-05
Power/speed failing off		7-0-06
Sluggish governor action		
Excessive engine speed		
Control lever unable to stop engine		
Deficient oil pressure		7-0-07
Rising oil temperature		
Heavy emission of oil mist from crankcase		
Lube oil contaminated by water		7-0-08
Low turbocharging pressure		
High turbocharging pressure		
High charge air pressure		
Air receiver pressure falling off		
Starting air pipe getting hot		7-0-09
High engine coolant temperature		
Poor combustion:	Black exhaust	7-0-10
	Blue exhaust	7-0-11
	White exhaust	
Secondary alarm released by crankcase oil mist detector		7-0-12

© 1283

7.2 General

Should trouble arise during engine starting or running, be sure to stop the engine immediately and to restart the engine only after the fault has been remedied. The following trouble chart is not exclusive.
When opening crankcase, be sure to observe safety precautions (job 02.00.01).

7.3 Trouble Chart

Trouble	Potential Cause	Remedy	Section / Job Card
Engine fails to start	Low starting air pressure	Charge air receiver	
	Incorrect valve clearance *)	Adjust clearance	01.01.01
	Leaky inlet or exhaust valves *)	If necessary, regrind valves	01.07.01
	Inlet or exhaust valves binding *)	Free valve with a blend of 50% diesel fuel and 50% lube oil; inspect valve springs	01.05.01
	Starting pilot air distributor valve binding *)	Recondition distributor	10.02.01
	Starting air master valve binding	Recond ition valve	10.03.01
	Master valve running-in screen not removed after 250 hours servizio	Remove screen	10.03.91
*) Caused by one or several cylinders	Leaky starting or relief valves or air piping	If necessary, regrind valves; close pipe leaks	01.11.01

© 1283

Trouble	Potential cause	Remedy	Section / Job Card
	Oil pressure switch defective or out of adjustment, so slenoid valve preventing engine start	Adjust switch or replace	11.01.02
	Safety feature in starting air pipe defective	Recondition safety device	01.12.01
Engine fails to fire or stalls	No fuel supply	Open fuel cock, switch on fuel feed pump and fill up service tank. If necessary, clean piping and filter and bleed.	07.10.01 07.03.02
	Air in fuel piping	Inspect L.P. piping for leaks; bleed piping	07.03.02
	Water in fuel tank	Drain water from tank, filter, piping and clean. Fill in fresh fuel and bleed system	07.10.01 07.03.02
	Poor fuel quality	Use better fuel, clean injection nozzles	Section 6.3
	Injection pump not working properly	Replace any defective pump element	07.01.01 07.02.01
		Test injector	07.08.01
	No compression	Preheat fuel service tank and filter. Open bypass pipe to preheat the fuel filter mounted on the engine and close again once a temperature of approx. 50°C is reached on the filter.	Section 4.1.1

© 1283

Trouble	Potential Cause	Remedy	Section / Job Card
		Free the fuel low pressure system, the injection pumps, piping and valves.	Section 6.3
	Insufficient engine fluid	Switch on the coolant pre-heating device - to preheat.	Section 4.1.1
	Faulty injection pump operation	Check injection pump, replace defective pump element, if necessary.	01.07.01 07.02.01
		Test injectors	07.08.01
	Inlet / exhaust valve jammed or has serious leak (no compression), free as required. Check valve shaft for signs of run-out. Regrind valves, if necessary	Check valve springs. Clean valves with a mixture of 50% gas oil and 50% lubricating oil.	01.07.01
	Insufficient compression, Piston rings are defective.	Remove piston and clean; replace rings	02.10.01
	Injection pump control rod or governor needle binding?	Free as required	05.04.14 07.01.01
	Firing speed not reached?	Inspect for defects like seizures of piston or bearings	
Engine fails to develop full power	Low compression. Piston rings damaged.	Replace piston rings, if applicable	02.10.01
	Inlet / exhaust valve leaky	Regrind valve	01.07.01
	Nozzles blocked by carbon; needles seized	Clean nozzles or replace	07.08.01
	Injection pump element seized	Replace element	07.02.01

© 1283

Trouble	Potential Cause	Remedy	Section / Job Card
	Fuel feed pump defective	Replace pump	07.11.01
	Low charge air pressure	Clean pressure charger, air cleaner and cooler; eliminate air and exhaust gas losses	06.12.01 06.03.11 06.04.02
	Air in injection system	Bleed system	07.03.02
	Fuel reduction by governor as a function of engine speed, charge pressure	Have checked by Deutz	
	Injection line restricted in the area of screwed joint	Replace injection line	07.03.03
Engine knocks	Piston defective or seized	Stop engine immediately, remove piston and overhaul; inspect cylinder linerl	03.02.01 02.10.01
		Run engine again	Section 4.6
	Bearing(s) seized	Stop engine; have crankshaft inspected for cracks by Deutz	
	Excessive big-end bearing clearance	Measure clearance Replace bearing	02.03.03 02.04.01
	High combustion pressure of all cylinders	Take indicator diagram, check injection timing	Section 4.5 07.06.01
	High combustion pressure of one cylinder	Match pressure to rest of cylinders.	07.06.01 07.08.01
	One cylinder overloaded	Check injection pump	07.01.01
	Excessive exhaust temperature of one cylinder	Inspect thermocouple and injector; examine exhaust valve. Have injection pump adjusted by Deutz	11.01.05 07.08.01 01.07.01 07.02.01

© 1283

Trouble-shooting

Trouble	Potential Cause	Remedy	Section / Job Card
	Engine overloaded	Reduce load	
	Faulty injector operation	Test injectors	07.08.01
	Low charge air pressure	Clean pressure charger, air cleaner and cooler; eliminate air and exhaust gas losses	06.12.01 06.03.11 06.04.02
	Turbocharger defective	Overhaul charger	06.06.01
	Foundation bolts loose	Tighten bolts	03.07.01
	Defective valve drive	Recondition valve drive	04.02.01
Power / speed falling off	Several cylinders fail to fire	See "Engine fails to fire"	Page 7-0-03
	Poor combustion	See "Poor combustion"	Page 7-0-10
	Piston or bearing seizure	See "Engine knocks"	Page 7-0-05
	Engine overloaded	Reduce load	
	Low / high charge air pressure	Clean turbocharger, air cleaner and charge air cooler	06.12.01 06.03.11 06.04.02
	Turbocharger defective	Have turbocharger overhauled	06.06.01
	Fuel filter blocked	Clean filter	07.10.01
	Governor / linkage not working properly	Inspect governor and linkage	05.04.14 07.01.01
Sluggish governor action	Governor linkage binding	Free linkage	05.04.14 07.0.01

© 1283

Trouble	Potential Cause	Remedy	Section / Job Card
Excessive engine speed	Governor linkage binding or maladjusted	Free linkage or readjust	05.04.14 07.01.01
Control lever unable to stop engine	Injection pump on/off control maladjusted or worn	Stop fuel supply and hence engine, and readjust on/off control	05.00.01
Deficient oil pressure	Low oil level in tank	Top up oil	08.02.01
	Oil too thin or diluted by fuel	Test injectors and leak oil barrier of the injection pump.	07.08.01 08.20.01
		Renew oil	08.02.02
	Oil filter blocked	Clean filter	08.10.01
	Oil piping leaky or blocked	Remove leaks or clean	
	Oil pressure gauge defective	Replace gauge	
	Oil pump relief valve binding	Free valve	08.04.01
	Oil pump worn	Recondition pump or replace	08.04.01
	Oil ressurestat dirty or binding	Clean or free valve	08.11.01
	Main / big-end bearing clearance excessive	Replace bearing (s)	02.03.03
Rising oil temperature	Oil cooler dirty	Clean cooler Inspect thermostat	

© 11283

Trouble-shooting

Trouble	Potential Cause	Remedy	Section / Job Card
Heavy emission of oil mist from crankcase	Piston rings seized or defective. Combustion gas is penetrating the crankcase and then visibly emerging at the crank chamber exhaust.	Remove pistons; replace rings and / or overhaul piston	02.10.01
Lube oil contaminated by water	Crankcase, cylinder head or exhaust valve cage cracked	Inspect parts	
	Liner jacket o-seals defective	Remove liner; replace o-seals	03.04.01 03.05.01
	Leaky oil cooler	Subject cooler to pressure test; if necessary, eliminate tube leak(s)	
	Oil separator works with additional water	Check separator setting	
Low turbocharging pressure	Intake air cleaner or charge air cooler dirty	Clean cleaner or cooler	06.03.11 06.04.02
	Charge air pipe leaky	If necessary, renew gaskets	06.02.01
	Exhaust gas leaking between engine and turbocharger	Inspect exhaust pipe and expansion joint	06.01.01
	Pressure charger dirty	Clean charger	06.12.01
High turbocharging pressure	Faulty combustion; turbine dirty	Check injection timing, inspect exhaust valves; clean turbine	07.06.01 01.07.01

© 1283

Trouble	Potential Cause	Remedy	Section / Job Card
High charge air pressure	Charge air cooler dirty	Clean cooler	06.04.02
	High intake air temperature	Reduce load (over 45°C temperature rise = 2% reduction in power).	
	Raw water flow insufficient	Check flow; clean filter, if necessary. Check charge air thermostat	
	High raw water temperature	Reduce load	
Air receiver pressure failing off	Leaky valves on air receiver	Clean valves, regrind seats or renew cones	
Starting air pipe getting hot	Leaky starting valves	Remove and regrind valves	01.11.02
High engine coolant temperature	Coolant quantity insufficient	Fill up with fresh water (evaporation losses) or treated water (leakage losses)	Section 6.4
	Raw water flow insufficient	Check raw water flow. If necessary, clean filter	
	Thermostat not working properly	Inspect thermostat	
	Air in system	Bleed system	
	Cooler, valves or piping blocked	Clean parts	

© 11283

Trouble-shooting

The following table specifies the possible causes and remedies for three operating troubles - black, blue and white exhaust.

Trouble	Potential Cause	Remedy	Section / Job Card
Poor Combustion: Black Exhaust	Incomplete Combustion	Inspect injectors	07.08.01
	Low charge air pressure	Clean intake air cleaner, turbocharger, charge air cooler. Check air piping gaskets,replace if necessary	06.03.11 06.12.01 06.04.02
	Injectors defective	Recondition injectors	07.08.01
	Engine is run at reduced speed, whereby the injection pump control rod is binding.	Reduce load	
	Inlet and exhaust valves leaky	Adjust valve clearance, if necessary, regrind valves	01.01.01 01.07.01
	Nozzles blocked	Clean and check nozzles	07.08.01
	Injection out of timing	Retime injection	07.06.01
	Low combustion / compression pressure ratio	Retime injection; check combustion	07.06.01
	Unsuitable fuel	Change fuel; clean nozzles	Section 6.3
	Engine overloaded (exhaust smoking)	Check injection timing and governing linkage setting	07.06.01 05.04.14 Section 4.5

© 1283

Trouble	Potential Cause	Remedy	Section / Job Card
B. Blue Exhaust (lube oil in exhaust)	Oil control rings sticking or worn	Renew rings	02.10.01
	Feed from oil reservoir insufficient	Check oil level	
	Heavy liner scoring	Service liners	03.02.01
C. White Exhaust (fuel or water in exhaust)	Fuel fails to fire	Check heavy fuel temperature and injection timing	Section 6.3 07 . 06 . 01
	Injectors defective	Recondition injectors	07.08.01
	Engine undercooled	Check temperatures of engine coolant, lube oil and charge air	Section 3.3.2
	Fuel contaminated by water	Change fuel; inspect injectors	Section 6.3 07.08.01
	Charge air cooler leaky	Recondition cooler	06.04.01
	Engine coolant leaking into combustion chambers (e.g. through cracks in cylinder head, liner, exhaust valve cage)	Inspect parts, make pressure tests and replace as necessary	01.08.01
Secondary alarm released by crankcase oil mist detector.	No power supply	Check mains and fuse	11.05.01
Light "Ready" goes out. No signal "main alarm".	Light intensity above some 50% of maximum value due to sensitivity control	Clean windows in test track	11.05.01

© 1283

Trouble	Potential Cause	Remedy	Section / Job Card
	No propulsion air	Check air supply	
	Open cover of measuring unit, e.g. due to cleaning	Close cover	
	Dirty air cleaner	Clean or replace	11.05.01
	Detector leaky	Inspect cover gaskets between measuring unit and mounting plate as well as bellows	

© 1283

Maintenance Schedules and List of Job Cards

8

Instandhaltungs- Intervallpläne und Arbeitskartenübersicht
Schemi degli intervalli di manutenzione, visione d‘insieme delle schede di lavoro
Plans des intervalles d’entretien et vue d’ensemble sur les fiches de travail
Tables de mantenimiento periódico y recopilación de fichas de trabajo
Onderhoudsschema en werkkaarten
Г афик инте валов техобслуживания и обзо абЧих ка т

8 Maintenance Schedules and List of Job Cards

Instandhaltungs- Intervallpläne und Arbeitskartenübersicht
Schemi degli intervalli di manutenzione, visione d‘insieme delle schede di lavoro
Plans des intervalles d’entretien et vue d’ensemble sur les fiches de travail
Tables de mantenimiento periódico y recopilación de fichas de trabajo
Onderhoudsschema en werkkaarten
Г афик инте валов техобслуживания и обзо абЧих ка т

8 Maintenance Schedules, List of Job Cards and Job Cards

8.1 Summary of Maintenance Schedules

All fittings, shutoff and control devices of the operating media piping systems as well as of the compressed air piping system not listed in these schedules shall be maintained according to manufacturer's specifications.

8.1.1 Initial maintenance jobs

8.1.1.1 - **Engines running in continuous operation,** e.g. marine engines, > 300 hours / year

8.1.1.2 - **Engines running in standby operation,** e.g. emergency generating sets, < 300 hours / year

8.1.2 Daily maintenance jobs

These jobs are described in Section 4.3, as well as in the brief instructions* under Section "Monitoring of Engine Operation".

8.1.3 Periodic maintenance jobs for engines running in continuous operation > 300 hours / year,

e.g. marine engines.

- This schedule forms part of the brief instructions*

8.1.4 Periodic maintenance jobs for engines running in continuous operation < 300 hours / year,

which are exclusively or most of the time in standby mode, e.g. emergency generating sets.

8.2 List of Job Cards

by maintenance groups

8.3 Job Cards

by maintenance groups

* The brief instructions are attached to this operation manual.

© 0795

This page intentionally left blank

8.1.1 Initial Maitenance Jobs

Job ... RH after commissioning	**8.1.1.1 Engines running in continuous operation,** e.g. marine engines, > 300 hours / year	Job Card No.	See Footnotes
	Checking and servicing engine coolant containing additives on non-mineral oil basis x1		X [1]
25 RH	Checking inlet and exhaust valve clearances	01.01.01	—
	Checking crankweb deflection / gauging axial clearance	02.02.01	—
	Cleaning fuel twin filter	07.10.01	—
	Servicing centrifugal lube oil filter	08.13.01	—
	Inspecting crankcase oil mist detector	11.05.01	x
50 RH	Checking engine alignment and elastic mounting	03.07.01	x
	Analyzing lube oil samples	08.01.01	—
	Servicing lube oil paper microf ilter	08.10.01	—
	Cleaning strainer in front of master starting valve	10.03.91	—
	Cleaning filter for pressure reducer station	10.06.01	x
100 RH	Changing oil of exhaust turbocharger	06.05.01	—
125 RH	Checking engine coolant containing anti-corrosive oil according to section 6.4	—	x
250 RH	Analyzing lube oil samples	08.01.01	—
	Cleaning raw water filter	—	x
	Functional check of starting and control air system	10.01.01	—
	Cleaning dirt trap	10.03.02	—
	Removing strainer in front of master starting valve	10.03.91	—
1000 RH	Checking engine alignment and elastic mounting	03.07.01	x
2000 RH	Checking engine alignment and elastic mounting	03.07.01	x
3000 RH	Checking engine alignment and elastic mounting	03.07.01	x
4000 RH	Checking engine alignment and elastic mounting	03.07.01	x

x Depending on engine type and additive used

x1 Depending on engine type and additive used
(intervall to be entered in Maintenance S chedule acc. to Section 6.4 of Operation Manual)

© 1199

Job.. RH after com-misioning	**8.1.1.2** **Engines running in continuous operation,** e.g. marine engines, > 300 hours / year	Job Card No.	See Footnotes
	Checking and servicing engine coolant containing additives on non-mineral oil basis		X 1
50 RH	Checking inlet and exhaust valve clearances	01.01.01	—
	Checking crankweb deflection / gauging axial clearance	02.02.01	—
	Checking engine alignment and elastic mounting	03.07.01	x
	Cleaning fuel twin filter	07.10.01	—
	Servicing centrifugal lube oil filter	08.13.01	—
	Analyzing lube oil samples	08.01.01	—
	Servicing lube oil paper microf ilter	08.10.01	—
	Cleaning strainer in front of master starting valve	10.03.91	—
	Cleaning filter for pressure reducer station	10.06.01	x
	Inspecting crankcase oil mist detector	11.05.01	x
1Year	Checking engine alignment and elastic mounting	03.07.01	x
2 Years	Checking engine alignment and elastic mounting	03.07.01	x

x Depending on engine type and additive used

x1 Depending on engine type and additive used
(intervall to be entered in Maintenance S chedule acc. to Section 6.4 of Operation Manual)

© 0795

8.1.2 Daily maintenance jobs, see Section 4.3

8.1.3 Periodic maintenance jobs for engines running in continuous operation,
e.g. marine engines > 300 hours / year.

All fittings, shutoff and control devices of operating media systems as well as of compressed air piping system shall be maintained according to manufacturer's specifications.

Ser. No.	**Periodic Maintenance Jobs**	Job Card No.	See Footnotes
	Checking and servicing engine coolant containing additives on non-mineral oil basis		X_1
1	Interval: every **250** engine running hours		
	Inspecting valve rotator	01.03.01	
	Cleaning turbocharger turbine (depending on fuel quality grade)	06.13.01	$M_1/M_2/M_3$
	Servicing centrifugal lube oil filter	08.13.01	
	Servicing light barrier of crankcase oil mist detector	11.05.01	X
	Inspecting coolant circulation pump	09.07.01	X
2	Interval: every **500** engine running hours		
	Jobs as under ser. No. 1		
	Cleaning fuel twin filter	07.10.01	X
	Cleaning filter of pressure reducer station	10.06.01	X
3	Interval: every **750** engine running hours		
	Jobs as under ser. No. 1		
	Checking engine coolant containing anticorrosive oil acc. to Section 6.4		X
4	Interval: every **1000** engine running hours		
	Jobs as under ser. Nos. 1 and 2		
	Checking inlet and exhaust valve clearances	01.01.01	M_3
	Inspecting combustion chamber	01.05.04	M_3
	Changing oil of turbocharger	06.05.01	X_5
	Inspecting injectors	07.08.01	M_3
	Cleaning dirt trap	10.03.02	
	Inspecting crankcase oil mist detector	11.05.01	X
5	Interval: every **1500** engine running hours		
	Jobs as under ser. Nos. 1 to 3		
	Checking inlet and exhaust valve clearances	01.01.01	$D/M_1/M_2$
	Inspecting combustion chamber	01.05.04	M_1 / M_2
	Inspecting injectors	07.08.01	M_1 / M_2
	Analyzing lube oil samples	08.01.01	
	Servicing lube oil paper microf ilter	08.10.01	$M_1/M_2/ M_3$
	Inspecting temperature monitors for oil, water and air	11.01.01	
	Inspecting pressure monitors for oil, water and air	11.01.02	
	Inspecting flow monitor	11.01.03	X
	Inspecting overspeed protection	11.03.01	
	Inspecting oil level float switch	11.07.01	X
	Inspecting service-alarm switch for lube oil wire edge filter	11.08.01	X

© 1199

Maintenance Schedule

DEUTZ®

Ser No.	Periodic Maintenance Jobs	Job Card No.	See Footnotes
6	Interval: every **3000** engine running hours		
	Jobs as under ser. Nos. 1 to 5		
	Inspecting combustion chamber	01.05.04	D
	Servicing cylinder head	01.08.01	M_3
	Checking crankweb deflection / gauging axial clearance	02.02.01	
	Inspecting foundation bolts	03.07.01	
	Changing oil of hydr. governor	05.03.11	X
	Changing oil of turbocharger	06.05.01	X_5
	Inspecting control linkage of injection pump	07.01.01	
	Inspecting injectors	07.08.01	D
	Repairing injectors	07.09.01	M_3
	Servicing lube oil paper microf ilter	08.10.01	D
	Checking delivery rate of valve seat lubrication	08.14.01	
	Cleaning lube oil microfilter (lube oil seal)	08.20.02	
7	Interval: every **4500** engine running hours		
	Jobs as under ser. Nos. 1, 2, 3 and 5		
	Servicing cylinder head	01.08.01	M_1 / M_2
	Changing oil of turbocharger	06.05.01	X_5
	Repairing injectors	07.09.01	M_1 / M_2
8	Interval: every **6000** engine running hours		
	Jobs as under ser. Nos. 1 to 6		
	Inspecting main running gear	02.01.01	
	Inspecting piston	02.10.01	M_3
	Inspecting governor control linkage	05.04.15	X_2
	Inspecting charge air system	06.02.01	M_3
	Cleaning charge air cooler, air side	06.04.02	
	Repairing injectors	07.09.01	D
	Functional check of starting and control air system	10.01.01	
	Inspecting rubber vibration damper	12.01.02	X
9	Interval: every **8000** engine running hours		
	Jobs as under ser. Nos. 1, 2 and 4		
	Servicing the turbocharger	06.06.01	
10	Interval: every **9000** engine running hours		
	Jobs as under ser. Nos. 1 to 7		
	Inspecting piston	02.10.01	M_1 / M_2
	Inspecting charge air system	06.02.01	M_1 / M_2
11	Interval: every **12000** engine running hours		
	Jobs as under ser. Nos. 1 to 6 and 8		
	Servicing cylinder head IF DISTILLED FUEL	01.08.01	D
	Inspecting piston	02.10.01	D
	Inspecting gear train	04.08.01	
	Inspecting drive for hydr. governor	05.04.01	X
	Servicing telescope piece	05.04.15	X
	Inspecting charge air system	06.02.01	D
	Servicing master starting valve	10.03.01	
	Renew flexible lines, -compensators, rubber tubes	--	

© 0101

Ser.. No.	Periodic Maintenance Jobs	Job Card No.	See Footnotes
12	Interval: every **15000** engine running hours		
	Jobs as under ser. Nos. 1 to 6		
	Inspecting main bearing	02.04.01	M_3
	Inspection of injection pump at DEUTZ SERVICE		M_3
	Replacing viscous-type torsional vibration damper	12.01.01	X
13	Interval: every **18000** engine running hours		
	Jobs as under ser. Nos. 1 to 8 and 10		
	Inspecting main bearing	02.04.01	M_1 / M_2
	Inspection of injection pump at DEUTZ SERVICE		M_1 / M_2
14	Interval: every **24000** engine running hours		
	Jobs as under ser. Nos. 1 to 6, 8, 9 and 11		
	Inspecting main bearing	02.04.01	D
	Inspecting piston pin, pin bush and pin bore	02.13.01	
	Servicing cylinder liner	03.02.03	
	Inspecting exhaust elbow	06.01.03	
	crankshaft bearing	04.01.01	
	Inspection of injection pump at DEUTZ SERVICE		D
	Servicing lube oil pump	08.04.01	
	Repairing wire edge filter	08.09.01	
	Repairing coolant circulation pump	09.07.02	X
	Maintaining plant-specific fittings and control devices	—	X_4
15	Interval: every **10 years**		
	Repairing rubber torsional vibration damper	12.01.02	X
16	As required		
	Repairing valve rotator	01.03.02	
	Cleaning turbocharger turbine	06.13.01	M_1/M_2/M_3
	Cleaning intake air cleaner of turbocharger	06.03.11	X
	Cleaning charge air cooler, air side	06.04.02	
	Servicing lube oil filter combination	08.10.01	
	Repairing viscous-type torsional vibration damper	12.01.01	X

X Depending on engine type
X_1 Depending on engine type and additive used (Interval as per Section 6.4, to be entered in MaintenanceSchedule)
X_2 Annually, at the latest, or after max. 500 start ing manoeuvres
X_3 After 2 years, at the latest, or after max. 1000 starting manoeuvres
X_4 Shorter intervals specified by zhe manufcturer of the bought-of-item, if any, must be considered.
X_5 See Section 6.1
D Distillate fuel, Section 6.3
M_1 Intermediate fuel, British Standard / Class B2, Section 6.3
M_2 Intermediate fuel, British Standard MA 100 / Class M3, CIMAC A 10 / B10 / E25, Section 6.3
M_3 Intermediate fuel, CIMAC C10 / D15, Section 6.3

Extension or reduction of intervals

☞ The inspections shall be carried out after the running hours quoted in the maintenance schedule. As a result of the inspections the intervals may be extended or reduced, however, to suit local conditions. The maintenance schedules summarise all inspection, servicing and repair jobs, while making reference to the individual sections and job cards of Section 8.

© 1199

This page intentionally left blank

8.1.4 Periodic maintenance jobs for engines running < 300 hours / year,
which are exclusively or for the greater part of time in standby mode (DEUTZ minimum requirement).
In addition, there exist numerous national and international standards which may also be applied if they do not restrict the specifications given here.
All fittings, shutoff and control devices of operating media systems as well as of compressed air piping system shall be maintained according to manufacturer's specifications.

Ser. No.:	Interval: Job:	Engine ready for operation ?	Job Card or Section No.
1	**Interval: daily** Checking: Starting air pressure Draining: Dirt trap	yes	10.03.02
2	**Interval: weekly** Jobs as under ser. No. 1 Checking: Circulating lube oil level Checking: Fuel level in service tank Checking: lCoolant level in header tank Servicing: Draining of the compressed air vessel Servicing: Draining leak-oil-tank Inspecting: Engine and operating media piping systems for leaks	yes	08.02.01
3	**Interval: every three months** Jobs as under ser. Nos. 1 and 2 Engine test run for 1/2 hour under max possible load (min. 25% load) Checking: Operating data, pressures, temperatures, etc. and comparing with acceptance test record - under steady-state conditions about 1/2 hour after start - before stopping the engine Checking: Turbocharger turbine slow-down Inspecting: Lube oil system Servicing: Operating wire edge lube oil filter Checking: Temperature monitors Checking: Pressure monitors	yes	see Section 4 08.02.02 08.09.01 11.01.01 11.01.02
4	**Interval: every six months** Jobs as under ser. Nos. 1 to 3 Analyzing engine coolant	yes yes	see Section 6.4

© 0394

Ser. No.:	Interval: Job:		Engine ready for operation ?	Job Card or Section No.:
5	**Interval:**	**every year**		
	Jobs as under ser. Nos. 1 to 4			
	Checking:	Inlet and exhaust valve clearances	no	01.01.01
	Inspecting:	Inner crankcase		02.01.01
	Inspecting:	Engine mounting (foundation)		03.07.01
	Inspecting:	Control governor control linkage x_1		05.04.01
	Cleaning:	Air cleaner (w. oil bath or dry air cleaner depending on degree of contamination)		06.03.01
	Inspecting:	Control rod		07.01.01
	Inspecting:	Fuel injector		07.08.01
	Cleaning:	Fuel filter		07.10.01
	Servicing:	Lube oil filter combination (renewing cartridge and cleaning filter combination)		08.10.01
	Cleaning:	Wire edge filter		08.09.01
	Servicing:	Changing oil		
		- Engine		08.02.02
		- Hydr. governor		05.03.11
	Inspecting:	Overspeed protection		11.03.01
	Inspecting:	Oil level float switch		11.07.01
6	**Interval**:	**after 2 years**		
	Jobs as under ser. Nos. 1 to 5			
	Servicing:	Telescopic piece x_2	no	05.04.15
		Changing oil of turbocharger X_3	no	06.05.01
7	**Interval:**	**after 4 years**		
	Jobs as under ser. Nos. 1 to 6			
	Servicing:	Cylinder head	no	01.08.01
	Inspecting:	Piston		02.10.01
	Inspecting:	Big-end bearing		02.04.01
	Servicing:	Cylinder liner		03.02.01
	Servicing:	Cleaning charge air cooler		06.04.02
	Servicing:	Replacing wire edge filter elements		08.09.01
	Servicing:	Starting air distr ibutor		10.02.01
	Servicing:	Master starting valve		10.03.01
	Servicing:	Dirt trap		10.03.02
	Sostituzione:	Pressure monitors		11.01.02
	Riparazione: sostituzione di:	Engine control unit		
		- Solenoid valves, pressure reducing valves, control valves		
		- Servicing H.P. filter		

© 1199

Ser. No.:	Interval: Job:		Engine ready for operation ?	Job Card or Section No.:
8	Interval:	**after 7 - 8 years**		
	Inspecting:	Main bearings (2 pcs)		02.04.01
		Visual inspection of cams and rollers		04.02.01
		Visual inspection of gear train		04.08.01
	Servicing:	Turbocharger	no	06.06.01
		Replacing temperature monitors		11.01.01
		Replacing thermocouples (exhaust pyrometer unit)		11.01.04
		Renew flexible lines, -compensators, rubber tubes		--
	Following expiry of the above operating period, please consult a DEUTZ-specialist to determine subsequent maintenance intervals.			

In the case of emergency generating sets very high demands are placed on the engine reliability. To meet these requirements, the following actions must be taken to prevent ”early failures”.

- The engine shall be commissioned by a DEUTZ-trained engineer who will check preheating, oil priming and automatic starting and who, during the commissioning run of the engine, will check the indicating, warning and shutdown devices and rectify if necessary.
- The operating instructions of the engine manufacturer shall be observed in respect of cooling water, fuel and lube oil.
- The instructions for operation of the engine given in Section 4 of this manual shall be observed.
- The engines shall be maintained in accordance with the present maintenance schedules and shall regularly undergo the specified test runs. Where the engines are run for substantially more than 300 hours per year, maintenance shall be carried out according to 8.1.3.
- Continuous idle running must not exceed 24 hours.

At the end of prolonged idling periods, the engine should always be run with min. 50% load for min. 30 minutes to remove all carbon residues liable to have formed during idling in the combustion chamber and the exhaust system as well as on the valves.

x_1 After max. 500 starting manoeuvres, at the latest
x_2 After max. 1000 starting manoeuvres, at the latest
X_3 See section 6.1

© 0101

This page intentionally left blank

8.2 List of Job Cards

Assy. Group	Job Card No.	Job (see also Maintenance Schedule here to for)	The Job Cards cover the following work: Inspection	Servicing	Repairing	Mounting
	01.00.00	**CYLINDER HEAD**				
11	01.01.01	Inlet / Exhaust Valve Clearance Checking	●			
11	01.02.02	Rocker Arm Removal / Refitment				●
11	01.02.03	Rocker Arm Bearing Inspection/Repairing	●		●	
08	01.03.01	Valve Rotator / Inspecting	●			
08	01.03.02	Valve Rotator Servicing / Repairing			●	
08	01.04.01	Cylinder Head Removal				●
08	01.05.01	Inlet / Exhaust Valve Removal / Refitment				●
08	01.05.04	Inlet / Exhaust Valve Inspection	●			
08	01.05.05	Valve Spring Removal / Refitment				●
08	01.06.01	Valve Guide Inspection / Repairing	●		●	
08	01.07.01	Inlet/Exhaust Valve Servicing/Repairing	●	●	●	
08	01.08.01	Cylinder Head Servicing		●		
08	01.09.01	Cylinder Head Refitment				●
31	01.11.01	Starting Valve Inspection / Testing	●			
31	01.11.02	Starting Valve Servicing		●		
31	01.12.01	Safety Valve Servicing		●		
08	01.13.01	Valve-seat Ring				●

© 0185

List of Job Cards

Assy. Group	Job Card No.	Job (see also Maintenance Schedule heretofore)	The Job Cards cover the following work:			
			Inspection	Servicing	Repairing	Mounting
	02.00.00	**CRANKSHAFT SYSTEM**				
05	02.00.01	Crankshaft System Precautions				●
05	02.01.01	Crankshaft System Inspection	●			
05	02.02.01	Crankweb Deflection Gauging	●			
06	02.03.02	Bearing Shell Spread Gauging	●			
06	02.03.03	Bearing Clearance Gauging	●			
06	02.04.01	Bearing Shell (Wear Pattern) Inspection	●			
06	02.05.01	Big-end Bearing Removal				●
06	02.06.01	Big-end Bearing Refitment				●
01	02.07.01	Main Bearing Removal				●
01	02.08.01	Main Bearing Refitment				●
07	02.09.01	Piston Removal				●
07	02.10.01	Piston Inspection / Servicing	●	●		
07	02.10.02	SPiston Ring / Groove Gauging	●			
07	02.10.04	Piston Reconditioning			●	
07	02.11.01	Piston Ring / Groove Reconditioning			●	
07	02.12.01	Piston Pin Removal / Refitment				●
07	02.13.01	Piston Pin Bush Gauging / Reconditioning			●	
07	02.14.01	Piston Refitment				●
07	02.15.01	Piston Coolant Nozzle Inspection	●			
49	02.16.02	Hydraulic Tool for Annular Nuts Servicing				●
63	02.17.01	Flexible Coupling (Vulkan)				●

© 0785

Assy. Group	Job Card No.	Job (see also Maintenance Schedule heretofore)	The Job Cards cover the following work:			
			Inspection	Servicing	Repairing	Mounting
	03.00.00	**ENGINE FRAME**				
01	03.01.01	Crankcase Relief Valve Inspection/Servicing	●	●		
04	03.02.01	Cylinder Liner Servicing		●		
04	03.02.03	Cylinder Liner Servicing/Reconditioning		●	●	
04	03.03.01	Cylinder Liner Inspection/Gauging	●			
04	03.04.01	Cylinder Liner Removal				●
04	03.05.01	Cylinder Liner Refitment				●
04	03.06.01	Cylinder Liner Servicing		●		
46	03.07.01	Foundation Bolts Inspection	●			
46	03.08.01	Crankshaft system reconditioning of resiliently mounted engines			●	
	04.00.00	**TIMING SYSTEM**				
10	04.01.01	Camshaft Bearing Inspection/Recond.	●		●	
11	04.02.01	Lower Valve Drive Reconditioning			●	
09	04.04.01	Timing Gear Train Removal/Refitment				●
10	04.05.01	Camshaft Removal				●
10	04.06.01	Camshaft Refitment				●
10	04.06.02	Valve Timing Checking	●			
09	04.08.01	Timing Gear Train Inspection/Gauging	●			
05	04.09.01	Flywheel Removal/Refitment				●
05	04.11.01	Crankshaft Gear Removal/Refitment				●
14	04.13.01	Water Pump Idler Gear Removal/Refitment				●
14	04.14.01	Pump Chest Removal/Refitment				●
05	04.16.01	Coupling Flange Removal/Refitment				●
49	04.16.02	Filling of Oil Pump				●

© 0983

List of Job Cards

Assy. Group	Job Card No.	Job (see also Maintenance Schedule heretofore)	The Job Cards cover the following work:			
			Inspection	Servicing	Repairing	Mounting
	05.00.00	**SPEED CONTROL SYSTEM**				
27	05.00.01	Speed Control System Safety Precautions				
27	05.03.11	Hydraulic Governor Servicing (Oil Change)		●		
27	05.03.12	Hydraulic Governor Setting	●			
27	05.03.13	Electr. Governor Speed Pick-up Rem./Ref.			●	
27	05.03.14	Hydr. and electr. Governor Serv./Recond.		●	●	
27	05.04.01	Governor Drive Inspection	●			
29	05.04.14	Governor Linkage Setting		●		
29	05.04.15	Governor Linkage Servicing	●	●	●	
29	05.04.15	Control Linkage	●		●	

© 0486

Assy. Group	Job Card No.	Job (see also Maintenance Schedule heretofore)	The Job Cards cover the following work:			
			Inspection	Servicing	Repairing	Mounting
	06.00.00	**EXHAUST / TURBOCHARGING SYSTEM**				
41	06.01.01	Exhaust Manifold Inspection	●			
41	06.01.03	Exhaust Elbow	●			
87	06.02.01	Charge Air System Inspection	●			
87	06.03.11	Intake Air Cleaner Servicing		●		
58	06.04.02	Charge Air Cooler Water Side Servicing				●
58	06.04.02	Charge Air Cooler Water Side Servicing		●		
43	06.05.01	Turbocharger Servicing (Oil Change)		●		
43	06.06.01	Turbocharger Servicing/Reconditioning		●	●	
43	06.12.01	Turbocharger Compressor Servicing		●		
43	06.13.01	Turbocharger Turbine Servicing		●		
43	06.13.02	Turbocharger Scavenging Attachm. Serv.		●		
43	06.13.03	Turbocharger Scavenging Nozzles	●			

© 0885

List of Job Cards

Assy. Group	Job Card No.	Job (see also Maintenance Schedule heretofore)	The Job Cards cover the following work:			
			Inspection	Servicing	Repairing	Mounting
	07.00.00	**FUEL SYSTEM**				
17	07.00.01	Instructions - Fuel System				
17	07.01.01	Inj. Pump Element Locking Contr. Rod Insp.	●			
17	07.02.01	Injection Pump Element Removal/Refitment				●
17	07.02.02	Idle Stroke Setting		●		
17	07.02.03	Injection Pump Control Rod Rem./Refitm.				●
17	07.02.04	Injection Pump Element Seal Recond.			●	
17	07. 02. 05	Constant Delivery Setting		●		
17	07.02.06	Roller Tappet Bush Rem./Refitm.				●
17	07.02.07	Firing Pressure and Exhaust Temperature		●		
21	07.03.01	Removing and Refitting Injection Piping				●
17	07.03.02	Fuel System Servicing (Bleeding)		●		
21	07.03.03	Injection Piping Reconditioning			●	
17	07.04.01	Injection Pump Removal/Refitment				●
17	07.05.01	Injection Pump Camshaft Removal/Refitment				●
17	07.06.01	Injection Timing	●			
19	07.07.01	Injector Removal/Refitment				●
19	07.08.01	Injector Testing	●			
19	07.09.01	Injector Reconditioning			●	
20	07.10.01	Fuel Duplex Filter Servicing		●		
20	07.11.01	Fuel Feed Pump Removal/Refitment				●

© 1284

Assy Group	Job Card No.	Job (see also Maintenance Schedule heretofore)	The Job Cards cover the following work:			
			Inspection	Servicing	Repairing	Mounting
	08.00.00	**LUBRICATING OIL SYSTEM**				
16	08.00.01	Instructions - lubricating oil System				
15	08.01.01	Oil Sampling	●			
15	08.02.01	Oil System Inspection	●			
15	08.02.02	Oil Change		●		
14	08.04.01	Oil Pump Servicing		●		
15	08.09.01	Oil Edge Filter Servicing/Reconditioning		●		
15	08.10.01	Oil Paper Microfilter Servicing		●		
16	08.11.01	Oil Pressurestat Inspection	●			
15	08.13.01	Centrifugal Oil Cleaner Servicing		●		
16	08.14.01	Valve Seat Lubrication Inspection	●			
17	08.20.01	Two-Way Valve (Sealing Oil System) Serv.		●		
17	08.20.02	Oil Microf ilter (Sealing Oil System) Serv.		●		

© 0983

List of Job Cards

Assy. Group	Job Card No.	Job (see also Maintenance Schedule heretofore)	The Job Cards cover the following work: Inspection	Servicing	Repairing	Mounting
	09.00.00	**COOLING WATER SYSTEM**				
37	09.00.00	Cooling Water System Draining				●
37	09.07.01	Coolant Circulation Pump Water and Oil Seals		●		
37	9.07.02	Coolant Circulation Pump			●	
	10.00.00	**PNEUMATIC SYSTEM**				
32	10.01.01	Pneumatic System	●			
30	10.02.01	Starting Pilot Air Distributor		●	●	
32	10.03.01	Starting Air Master Valve		●		
32	10.03.02	Dirt Collector		●		
32	10.03.91	Running-in Screen Start. Air Master Valve		●		
32	10.06.01	Pressure Reducer Station	●	●		

© 0185

Assy. Group	Job Card No.	Job (see also Maintenance Schedule heretofore)	The Job Cards cover the following work:			
			Inspection	Servicing	Repairing	Mounting
	11.00.00	**ENGINE PROTECTIVE SYSTEM**				
48	11.01.01	Temperature Switches (Oil, Water, Air)	●			
48	11.01.02	Pressure Switches (Oil, Water, Air)	●			
48	11.01.03	Flow Switch	●	●		
48	11.01.04	Rem./Refitm. Exhaust Gas Thermocouples				●
48	11.01.05	Exhaust Gas Thermocouples	●			
48	11.03.01	Engine Safety System	●			
48	11.05.01	Crabnkcase Oil Mist Detector	●	●		
48	11.06.01	Charge Air Pipe Condensate Detector	●			
48	11.07.01	Oil Level Float Switch	●			
48	11.08.01	Service-warning Switch on Lube Oil Filter	●			
	12.00.00	**TORSIONAL VIBRATION DAMPER**				
34	12.01.01	Viscous-type Damper			●	●
34	12.01.02	Rubber-type Damper	●		●	
34	12.01.03	Removal/Refitment Rubber-type Damper				●

© 1087

This page intentionally left blank

Job Cards **JC**

Arbeitskarten AK
Schede di lavoro SL
Cartes de travail CT
Fichas de trabajo FT
Werkkaarten WK
РабоЧие ка ты AK

JC	**Job Cards**
AK	Arbeitskarten
SL	Schede di lavoro
CT	Cartes de travail
FT	Fichas de trabajo
WK	Werkkaarten
AK	РабоЧие ка ты

Checking

Check inlet and exhaust valve clearance and adjust as necessary. Inspect upper valve drive.

☞ Excessive clearance causes the valves to open jerkily, so the cams may be damaged; insufficient clearance results in failure of the valves to close completely, so they will be destroyed by the gases streaming out.

Job:

Open indicator valves of all cylinders. Unscrew bolts (1) and remove rocker chamber cover (2). Turn crankshaft so the respective piston is in compression TDC and the tappet roller will rest on the cam base circle.

Clearance "X" between valve stem (6) and socket (5) should be 0,2 mm (inlet) and 0,5 mm (exhaust) respectively with engine cold.

If clearance is not correct, release locknut (3), insert feeler gauge beween stem (6) and socket (5) and turn pressure screw (4) until gauge can only be moved with a slight drag.
Retain screw (4) in this position and retighten locknut (3). Recheck clearance. Before refitting cover (2), check that gasket (7) is intact, otherwise renew.
Close indicator valves.

☞ For ease in determining compression TDC (both valves closed), proceed as follows:

Remove inspection cover from injection pump ansd observe respective pump element spring: as the spring starts being compressed while crankshaft is slowly turned, the exact TDC position is obtained.

Tools:

- Standard tools,
- Feeler gauge

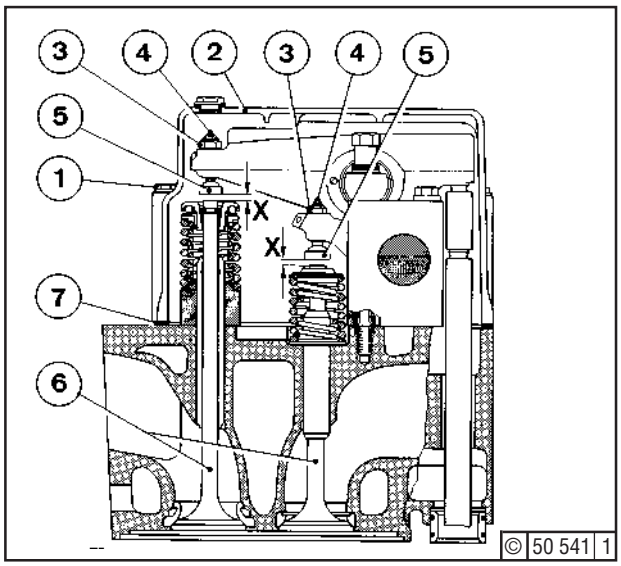

This page intentionally left blank

DEUTZ	Rocker Arm Removal / Refitment	Job Card No.: 01.02.02
	Filing No.: 0178-11-10 1066	Engine: S/BVM 628

Job:

Observe safety precautions. Open indicator valves. Turn camshaft so in tappet roller of the lower valve drive rests on the cam base circle and the rocker arm is unloaded. Unscrew bolts (5) to remove cover (1).

Removing:
Exhaust Rocker with Fulcrum
Unscrew bolts (2) with washers (14) and raise rocker (3) with fulcrum (4). Withdraw fulcrum from rocker.

Removing:
Inlet Rocker with Bracket
Unscrew bolts (11) and remove rocker (7) with brakket (6). Drive fulcrum out of bracket by brass arbor.

⚠ The diameter of the fulcrum bearings differ at both ends. The notched end ist thicker

Cleaning:
Clean all components. Blow through all oil passages in rockers and pressure screws abd check all passages are free.

Before reassembly, apply oil to fulcrum and bearing bushes. Clean bracket seat on cylinder head. Be sure no dowel bushes are damaged or lost.

Refitting:
Inlet Rocker with bracket
Hold Rocker (7) in bracket (6) and drive fulcrum (8) into bracket by arbor. Note correct location of notch (9).
Place bracket (6) with rocker (7) on cylinder head, threading in dowel bushes (12). Screw in bolts (11) with washers (10)

Refitting:
Exhaust Rocker with Bracket
Slip rocker (3) over fulcrum (4) and place on bracket (6), threading in dowel bushes (13). Screw in bolts (2) with washers (14).

Tightening Waisted Bolts
Tighten bolts (2) as under Section 3.5, item 8 and bolts (11) as under item 7. Be sure to preload the bolts through the torques specified.

Job Cards:

- 01.01.01
- 02.00.01

Tools:

- Standard tools
- Brass arbor

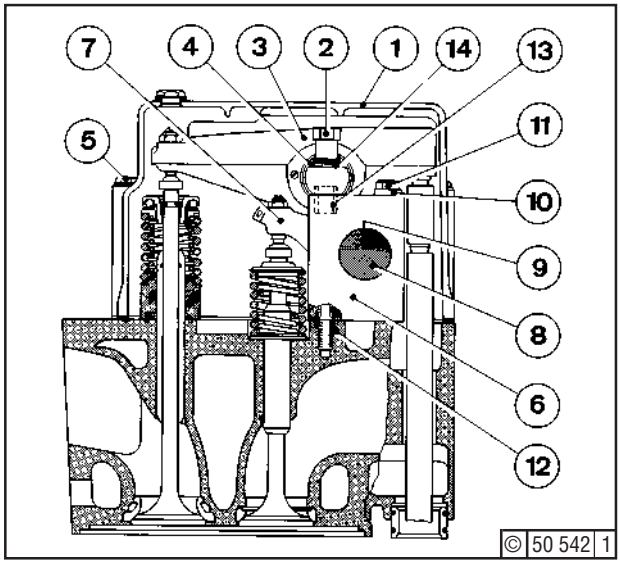

This page intentionally left blank.

Inspection

Check running clearance and replace bushes if required.

Job:
Remove arm (Job 01.02.02). Clean all components. Check radial clearance between bush (2) and fulcrum (3) by feeler gauge. Note that the bush bottom zone will present most wear.

⚠ Note that the bush bottom zone will present the most wear.

New Condition	Wear Limit
0,041 - 0,115	0,2

Permissible Clearance:
When using a caliper gauge, measure bush bore "D" and fulcrum diameter "d". Clearance = D less d.

Inspect adjusting screw (1), thrust pad (4) and faces (6) for wear and replace as necessary.

Reconditioning

If wear limit has been reached or other defects are discovered, remove bush (2) by brass arbor of suitable size.

Clamp down arm with new bush in a vice and carefully press in new bush with oil hole at bottom. Do not cant bush.

Carefully drive in bush farther by arbor up to 1,5 mm before edge as shown. Slip arm over fulcrum (3) and check clearance. When replacing pad (4), check that notch (5) is properly located.

EĞİM VERMEK,EĞİK TUTMAK

Tools:

- Standard tools,
- Feeler gauge (or caliper gauge),
- Brass arbor

Job Card:

- 01.02.02

KONTROL ET

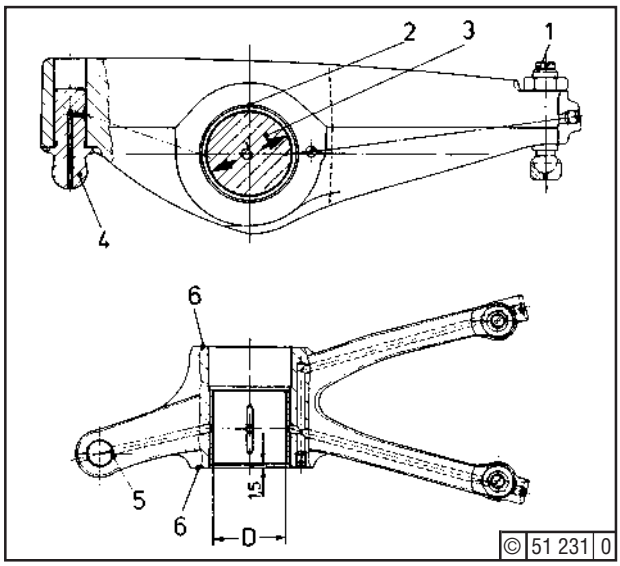

This page intentionally left blank

Inspection

Every 250 hours check while engine is running that exhaust valves rotators move freely.

Tools:

- Standard tools,
- Lamp,
- Clock

Job:

Unscrew plug (1) and O-seal (2) from rocker chamber cover (3). Check with lamp that rotator (4) moves freely: at 700/min engine speed check time needed for a full revolution by watching cam (5). If this time is more than 40 seconds, replace rotator on the next occasion since rotator will most likely be out of function soon.

Where rotator fails to move at all, replace once engine can be stopped.

For rotator reconditioning see job 01.03.02. If O-seal (2) is defective, replace.

Screw plug with O-seal into rocker chamber cover and tighten moderately.

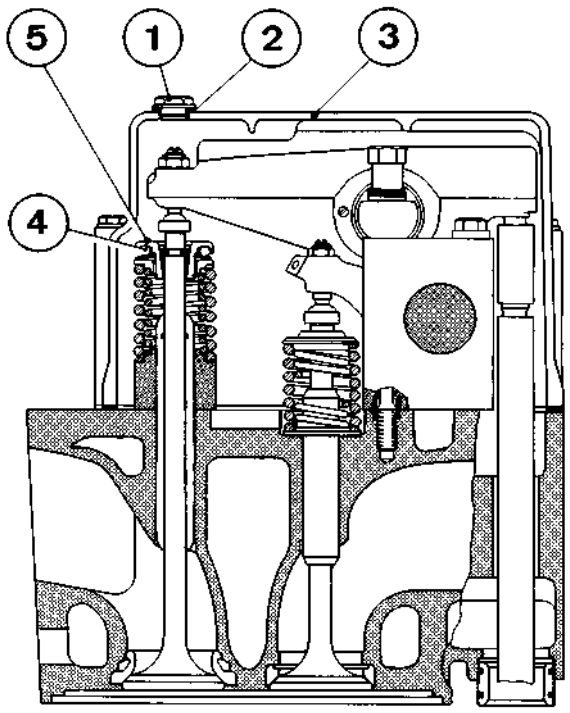

© 25 466 1

This page intentionally left blank

Reconditioning

If, upon inspection of valve rotator (Job 01.03.01), the rotator is found to be malfunctioning, renew same.

Job Cards:

- 01.01.01
- 01.02.02
- 01.03.01
- 01.05.05

Tools:

- Standard tools

Job:

Remove rocker arm (Job Card 01.02.02) and replace rotator (Job Card 01.05.05).

Refitment is made in the reverse order. Check valve clearance (Job Card 01.01.01).

© 0285

This page intentionally left blank

Job Cards:

- 01.08.01
- 01.09.01
- 02.00.01
- 02.16.02
- 09.00.01

Tools:

- Standard tools,
- Puller screw,
- Hydraulic tool for annular nuts (Section 1.8),
- Head removing device (Section 1.8) ,
- Wooden support

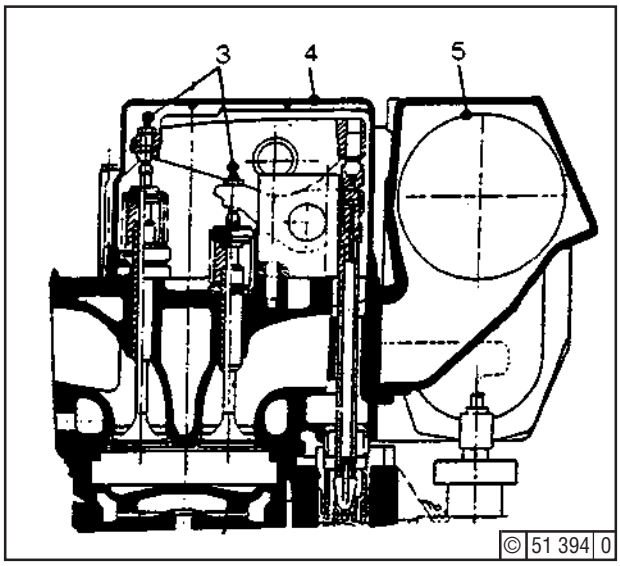

Fig. 1

Job:

Observe safety precautions (Job Card 02.00.01). Drain cooling water. Remove rocker chamber cover (4) - fig 1 - and turn engine so that inlet and exhaust valves are closed. Release valve clearance adjusting screws (3) on rocker arms. Disconnect pilot air pipe at the joint above the starting pipe. Release two hex. bolts securing indicator cock and turn cock. If necessary, remove. Release locks (16) - fig 3 - on sliding piece of the charge air piping (5) and move sliding pieces sideways. Disconnect injection piping and main starting air pipe from cylinder head. Unscrew 4 bolts (22) - fig 2 - on exhaust elbow (20).

Screw puller screw (19) into exhaust elbow and remove exhaust gasket (21).

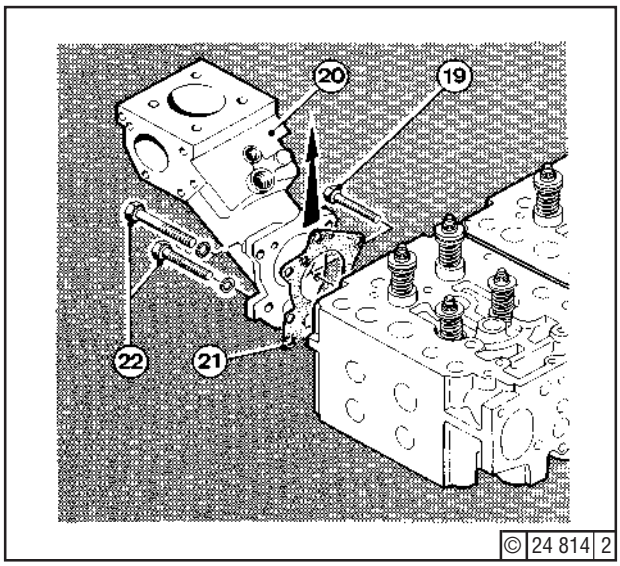

Fig. 2

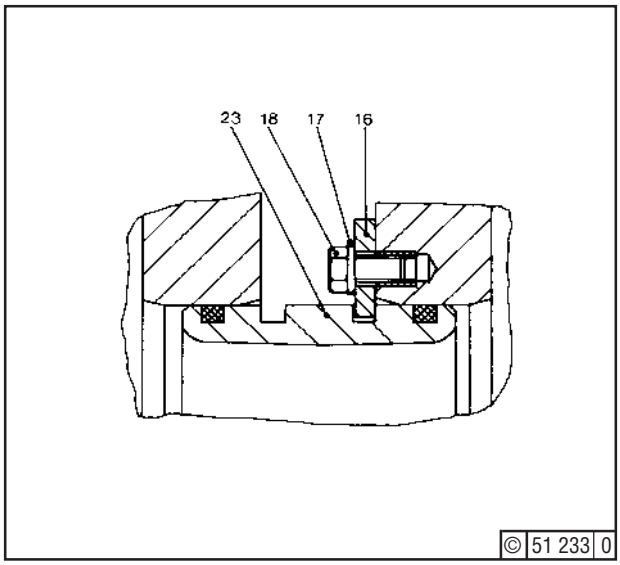

Bild 3

© 0583

Releasing Annular Nut (15) - Fig. 4
Assemble hydraulic tool (10) with hoses and pump and fill with hydraulic oil. Clean thread of stud (14) with gas oil acc. to Job Card 02.16.02. Screw stud (12) in place.

Position bushes (11) (two pairs - fig. 5) **with yoke (7)** and tool (19). Make sure that no bush is in contact with an adjacent cylinder. Fit washers (9) and screw together with hex. nuts (8) until tool piston is flush with cylinder. Back nuts (8) through one turn.

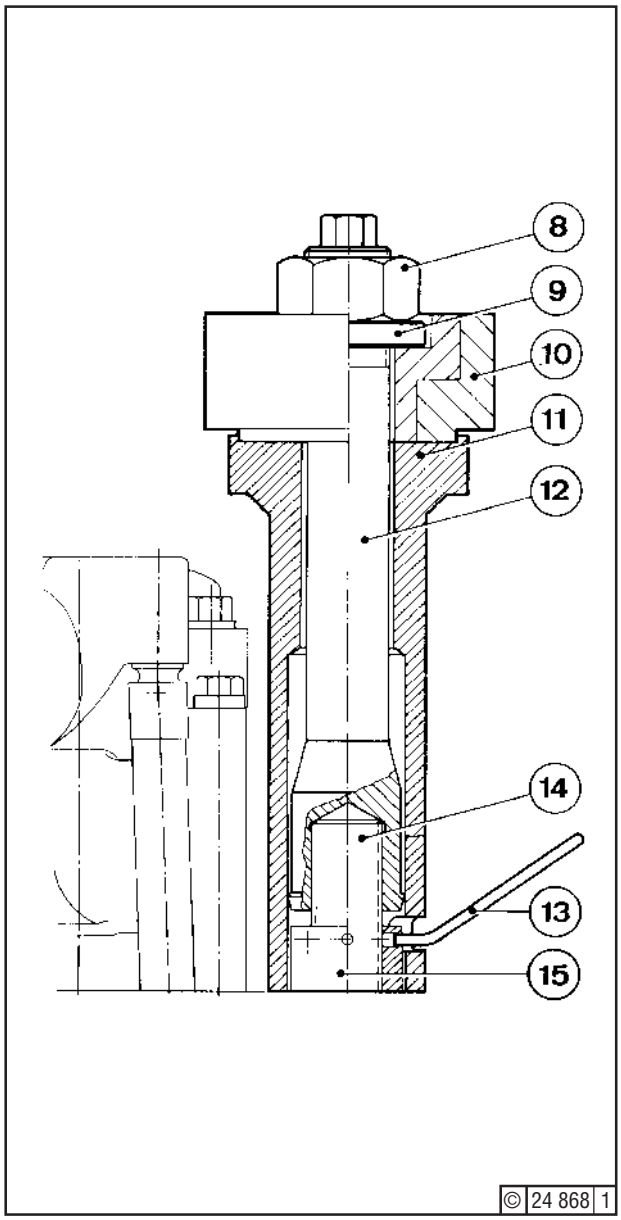

Fig. 4

Operate pump until pressure is as specified under Section 3.5, item 1. If necessary, raise pressure slowly 10 to 20 bar, so annular nut (15) is actually loose. Introduce pin (13) through aperture in bush (11) into lateral nut holes and turn up nut (15) in 10 stages.

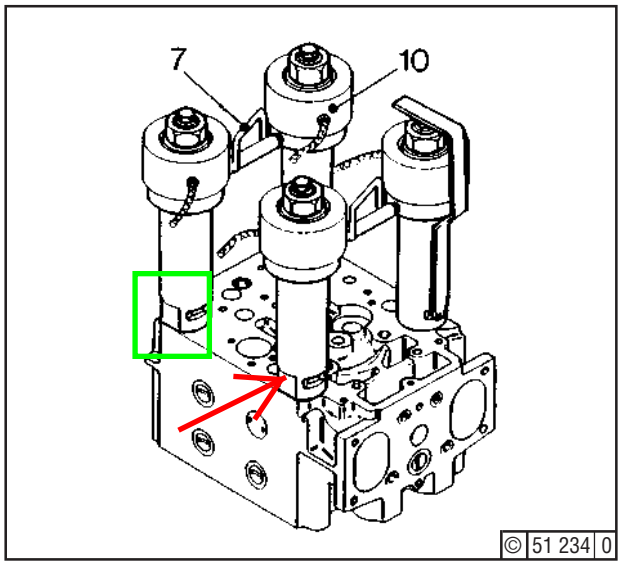

Fig. 5

To avoid jamming *) - fig 4 - of nut (15) by stud (12), be sure not to screw nut (15) against the stud. Unload pressure and disconnect hose. Unscrew hex. nuts (8) and remove tools (10) with bushes (11). Unscrew stud (12) and annular nuts (15).

Unscrew hexagon nuts (8) and remove tools (10) with bushes (11). Unscrew stud (12) and annular nuts (15). Mount cylinder head removing device and carefully raise head by hoist, so as not to damage joints or studs (14). Put down head on wooden support.

Servicing cylinder head seeJjo Cardb 01.08.01.
Refitting cylinder head see Job Card 01.09.01.

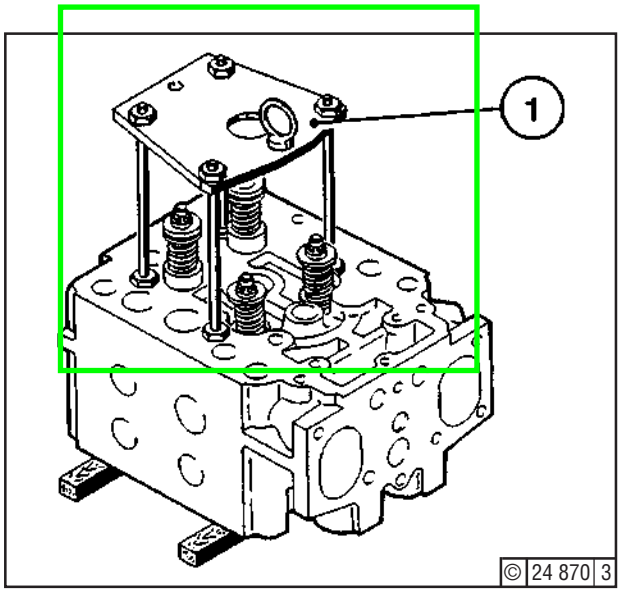

Fig. 6

© 0583

This page intentionally left blank

Job Cards:

- 01.01.01
- 01.04.01
- 01.05.05
- 01.07.01

Tools:

- Standard toolsi,
- Valve removing / refitting device (Section 1.8)

Job:

Removing the Valve

After removing the cylinder head (see Job Card 01.05.01), remove clamping cone (7) by using removing device (see Job Card 01.05.05).

Take down spring cap (6), springs (4) and (5), and spring cap (9). Withdraw valve downwards. Renew O-seal (10).

Clean valve components, inlet ducts in head, head base and check valve seats. For reconditioning see Job Card 01.07.01.

Refitting the Valve

Check that groove for clamping cone (7) and groove (11) for removing / refitting device in the valve stem are absolutely free from burrs to avoid damage to O-seal (10).
Install valve (8) with oil and retain at the bottom. Make sure that 0-seal (10) will not become defective.
Fit springs (4) and (5) . Next, install cap (6). Mount refitting decvice (see Job Card 01.05.05) and install clamping cone (7).

Release and remove refitting device.

☞ Be sure clamping cones are located correctly.

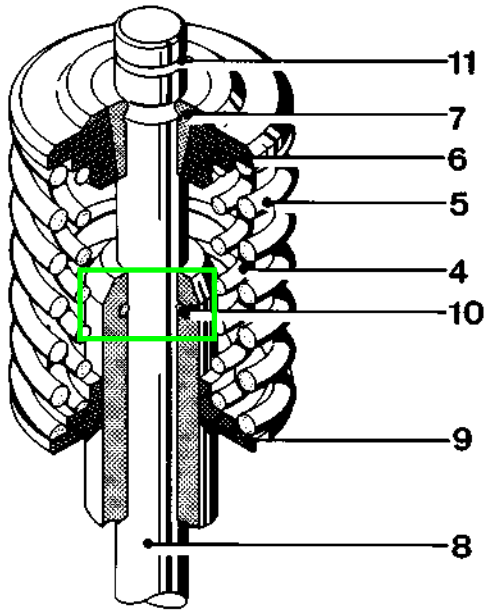

© 24 999 1

This page intentionally left blank

Job Cards:

- 01.01.01
- 01.04.01
- 01.05.05
- 01.07.01

Tools:

- Standard tools
- Valve removing / refitting device (Section 1.8)

Job:

Removing the Valve

After removing the cylinder head (see job 01.05.01), remove clamping cone (7) by using removing device (see job card 01.05.05).

Take down rotor (2), compression springs (4) and (5), and spring cap (3). Withdraw exhaust valve downwards. Renew O-seal (10).

Clean valve components, inlet ducts in head, head base and check valve seats. For reconditioning see job card 01.07.01.

Refitting the Valve

Check that groove for clamping cone (7) and groove (11) for removing / refitting device in the valve stem are absolutely free from burrs to avoid damage to O-seal (10). Install valve (8) with oil and retain at the bottom. Make sure that 0-seal (10) will not become defective. Fit springs (4) and (5) . Next, installrotor (2). Mount refitting decvice (see job card 01.05.05) and install clamping cone (7). Release and remove refitting device.

☞ Be sure clamping cones are located correctly.

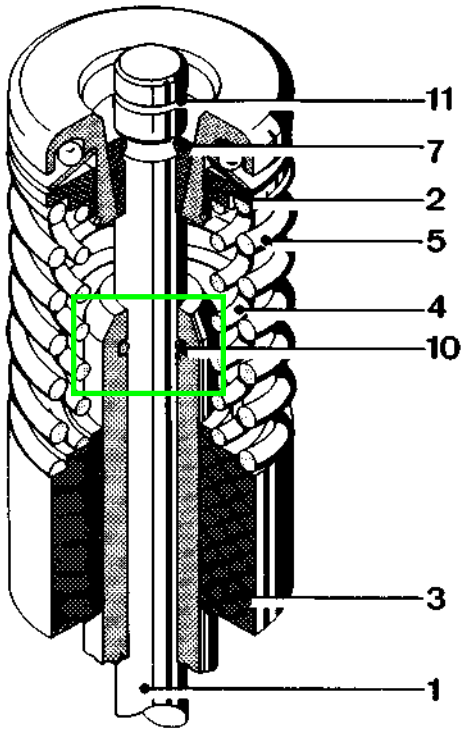

© 25 220 1

This page intentionally left blank

Inspection

The use of an endoscope enables both valves (plus cylinder wall) to be inspected without removing the head.

☞ The endoscope with transformer for 110/220 volts a.c., as well as the valve pliers, can be obtained from the Deutz head office.

Job Card:

- 07. 07. 01

Tools:

- Standard tools,
- Endoscope and valve pliers (optional)

Job:

Refitting

Remove rocker arm cover. Turn crankshaft until the relevant piston is in TDC position and the valves to be inspected are fully open. Remove injector (job 07.07.01) and clean injector bore in cylinder head (3). Connect endoscope (2) to transformer (1). Lower endoscope (with weak light) into the injector bore until valve tulips and valve seats are visible.

⚠ Use endoscope, if possible, with max. 11 volts and no longer than necessary, owing to the high heat development. Never touch lamp nor distort or strike endoscope.

Handle **carefully !**

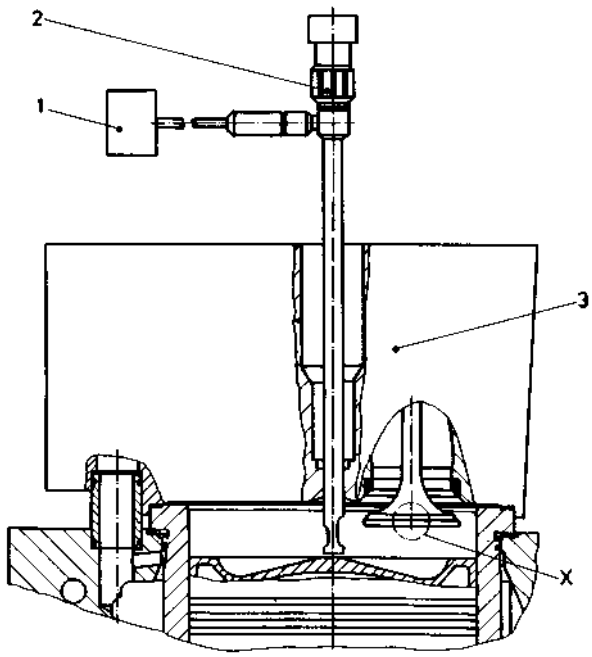

© 51 235 0

Inspecting the Valves

Turn endoscope until valve seat is in full view. Location of stem (6), seat (7) and plate (8): see "X". (Note that endoscope view appears as mirrored image and upside down).

Vary light intensity with the regulator on the transformer as required. If you are irritated by a dazzling effect, adjust endoscope level.

Pliers (9) enable valve tulips to be rotated for all-round inspection.

☞ IIf the combustion chamber is in poor condition, servicing as per Job Card 01.08.01 or 03.02.01 should be carried out.
In case the valves show drops from the engine coolant, exhaust elbows should be inspected as per Job Card 06.01.03.

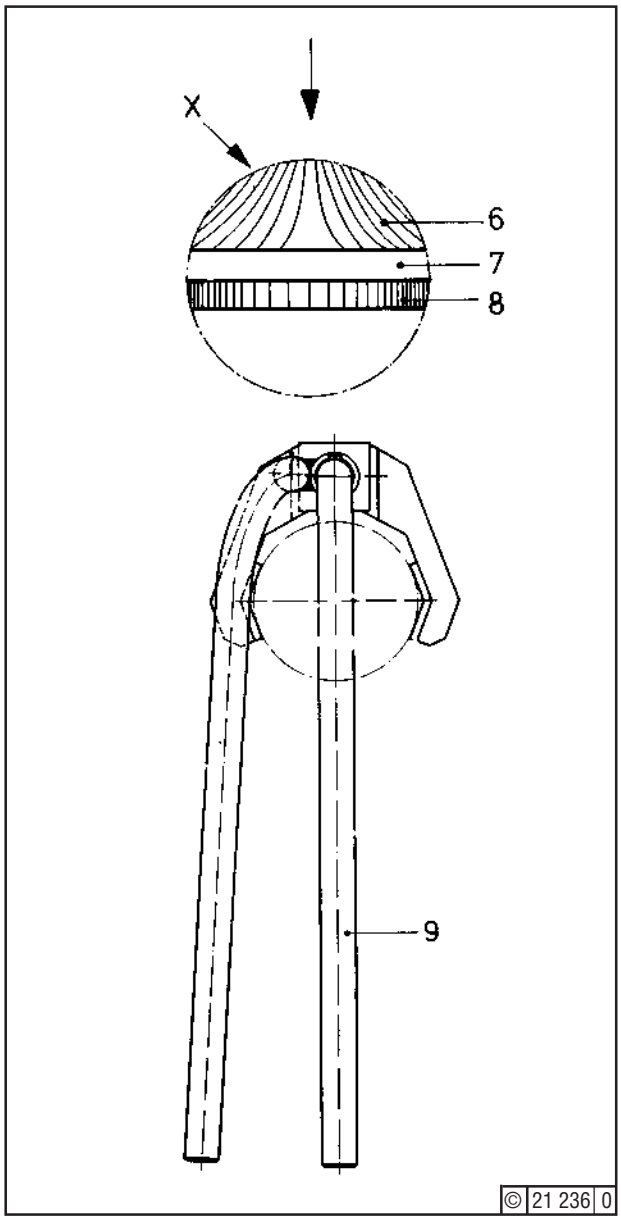

When working on cylinder head in fitted condition, the piston must be in TDC.

Job Card:
- 01.05.01

Tools:
- Valve removing device

Job:

Removing the Springs

Push up sleeve (4) and spread with suitable screwdriver. Place removing device on spring cap and let both dogs engage in groove of valve stem. Press sleeve down until removing device is safely secured to valve stem.

Do not re-use valves with worn groove. Discontinue use of worn dogs. Replace component (3). Dogs must have a safe grip, or the loaded valve springs may "shoot" the removing device out of place.

Turn nut (1) by wrench so as to compress the springs and take out clamping cone (6). Fully unload springs by releasing nut (1). Push up sleeve (4) to take down the removing device.

With the cylinder head fitted, there is no need to remove parts (3) and (4). The spring cap can be slipped over.

Refitting the Springs

Refitment is made in the reverse order, using again the valve removing device.

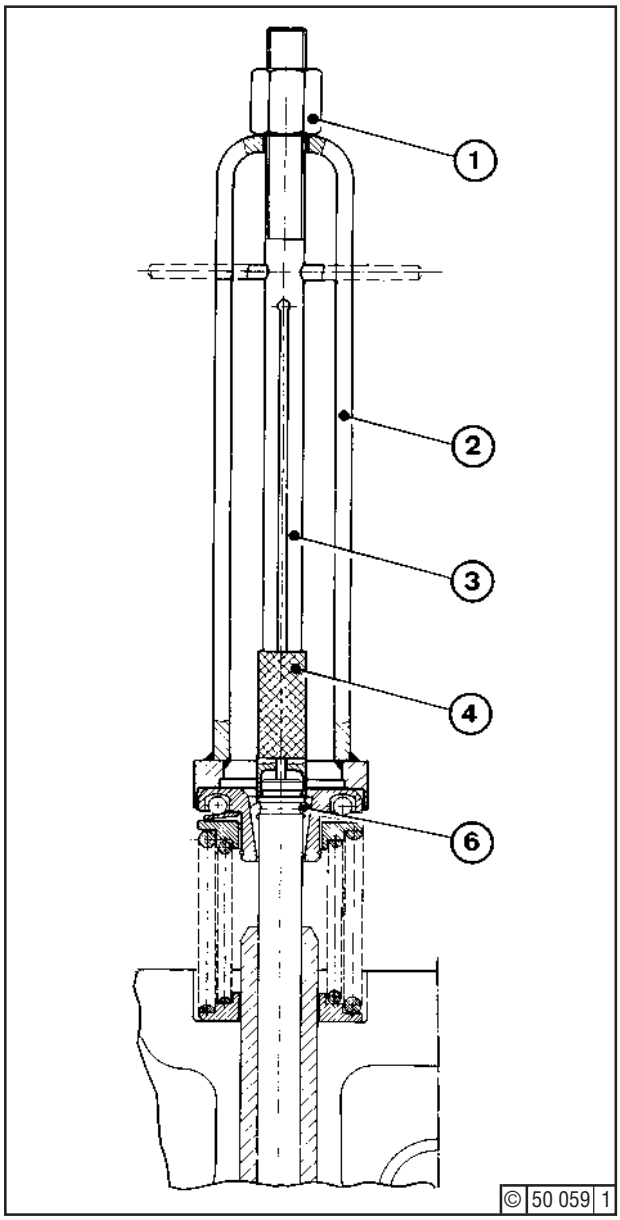

This page intentionally left blank

Checking

When reconditioning valves (Job Card 01.07.01), check the valve stem guide clearance.

Job Cards:

- 01.05.01
- 01.07.01

Tools:

- Standard tools,
- Caliper gauge,
- Brass arbor

Job:

Pull valve out of guide bush (1) / (2). Clean both. Measure bore of guide bushes (1) and (2) within a range of up to about 10 mm from the bottom end. If the inside diameter in this zone exceeds 16,2 mm, renew the guide bush.

Reconditioning

Replacing Guides

Since inlet and exhaust valve guides are of different length, be sure not to interchange them.

Length of valve guides:

Inlet - 136 mm,

Exhaust - 179 mm.

Drive out guide (1) / (2) with a brass arbor without damaging the receiving bore. Smoothen squeezed edges with a scraper. For installation of the valve guides, see page 2.

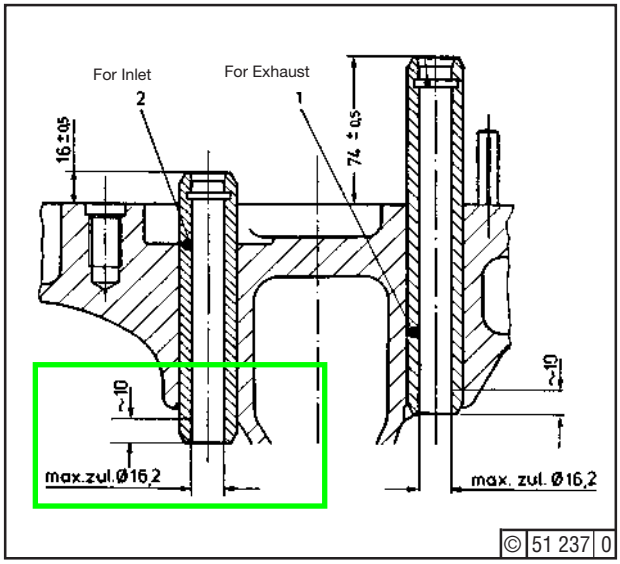

Refitment of guides is done after undercooling (shrinking) in liquid nitrogen (boiling temperature: -195,8°C) down to between -170°C and -195°C. To ensure that the guides are cooled deep into their cores, check that the nitrogen has stopped boiling (see also Section 3.7).

Make also sure that all shrink-fit surfaces are perfectly clean (metallically bright).

Introduce valve guide into cylinder head until the dimensions specified (page 1) have been reached.

Grind-in and check valve (Job Card 01.07.01). Renew the 0-ring for sealing the valve stem abd push it into its groove with the aid of the valve stem, using a second valve stem to prevent the ring slipping beyond the groove. Install valves (Job Card 01.05.01).

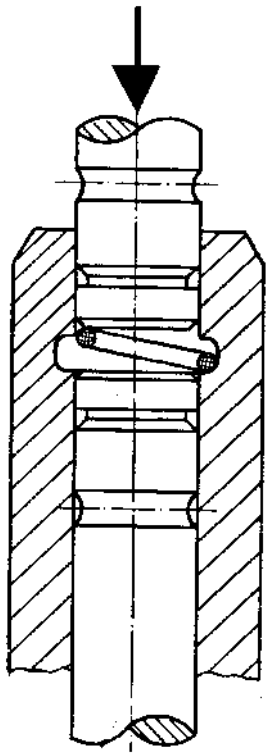

© 51 238 0

Checking and Reconditioning Inlet and Exhaust Valve Cones and Valve Seat Rings

Before re-using the valves, these are to be checked and reconditioned, if necessary, as described in the following:

☞ Faulty condition of the engine, inadequate preheating and treatment of fuel and cooling water, and non-permissible lugging operation (speed drop with control lever at fuel stop), etc. can - among other causes - bring about premature failure of valves.
Observance of the following instructions is prerequisite for an acceptable valve operating life.

Job:

Preparation

- Remove valves (job 01.05.01)
- Clean off deposits on seating surfaces.
- Remove carbon from valve discs and valve-seat rings with a scraper and wash with distillate fuel.

☞ To facilitate removal of water-solulable sulphurous deposits, the used valve cones can be soaked in water for a few hours.

Checking valve cones

The valve cones can be re-used, if the following preconditions are fulfilled:

- Seats free from burnt spots, blow-by, cracks or pounding marks,
- no damage on cone clamp groove,
- within the zones X and Y (Fig. on page 2) no interrupt of the (bright) chromium layer,

Tools:

- Standard tools,
- Dial gauge,
- Magnifying glass (min. 4-fold magnification)

Auxiliaries:

- Distillate fuel

Job Cards:

- 01-05-01
- 06.02.01

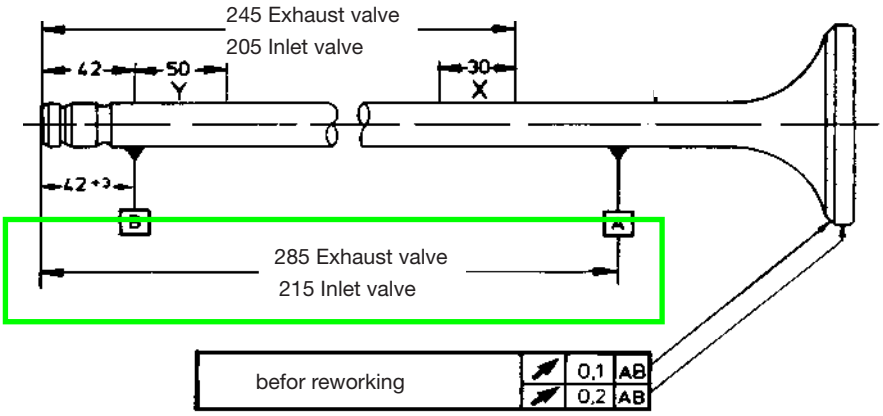

© 50 659 0

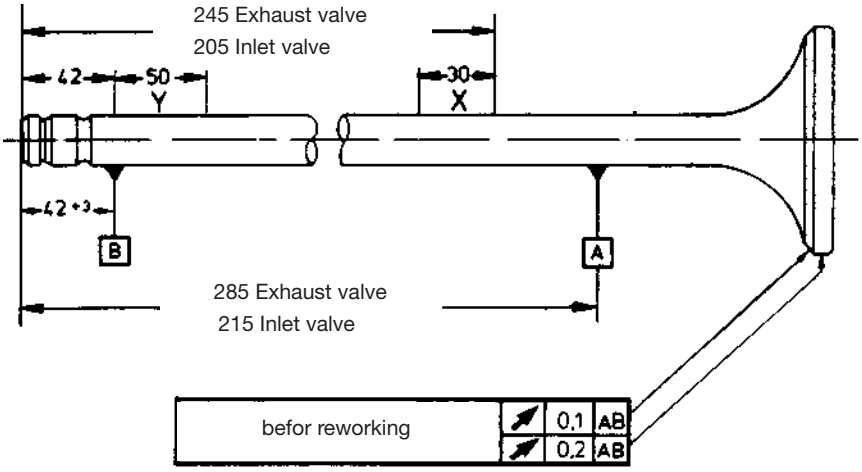

- in the areas X and Y
- no interruption of the (shiny) chrome layer

- **between** the zones X and Y (Fig on Page 2)
  - no corrosion pittings deeper than 0,2 mm,
  - stem diameter at no point < 15,5 mm.
- Out-of truth (deviation) of the cleaned disc edge relative to stem not exceeding 0,2 mm. To measure place stem on knife-edges at points A and B. On no account straighten valve cones! Renew valve cones, if the out-of-truth is excessive.

The seats of the valve cones are to be reworked if:
- the cleaned seat is not free from carbon scars, blow-bys, pittings and other damage (check with magnifying glass) or
- the out-of-truth (deviation) of the otherwise perfect seat relative to the stem is > 0,1 mm.

Checking valve-seat rings
The seat rings can be re-used if the following pre-conditions are fulfilledi:
- Seats free from burnt spots, blow-bys, cracks or pounding marks.

The seat surface of the seat rings is to be reworked in installed condition - in the cylinder head - if:
- the cleaned surface is not free from carbon scars, blow-bys, pittings, scorning, shoulders (see Fig.), corrosion and other damage (check with magnifying glass)

In the case of corrosion damage to the inlet valve seat rings, check also the charge air pipe for salt deposits and corrosion and the charge air cooler for leaks (see Job Card 06.02.01).

Reconditioning
This reconditioning work may only be done by DEUTZ Service workshops which are especially equipped to carry out such work.

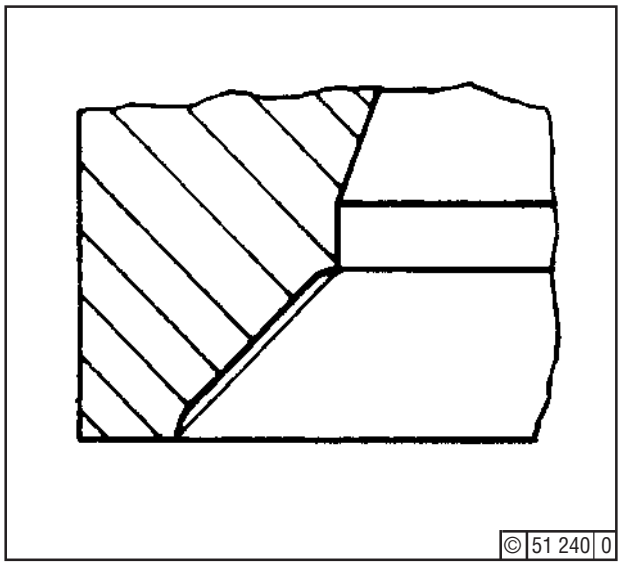

Servicing

The cylinder servicing intervals may differ very considerably since they are governed by engine application and load, as well as by fuel and lube oil qualities. To arrive at a rational servicing interval, we suggest that the following method be adopted.

Job Cards:

- 01.04.01
- 01.05.04
- 01.09.01

Inspection

When using an endoscope all cylinder heads are to be inspected as per Job Card 01.05.04. Should abnormal wear be found, remove one cylinder head per cylinder bank. To avoid any misjudgements, we recommend removal of the cylinder head (Job Card 01.04.01) having the poorest appearance, for checking and maintenance. The removed and dismantled cylinder head serves as comparison.
When adopting the above procedure, it is essential to observe the intervals for inspection of the combustion chamber per endoscope, in accordance with the Maintenance Schedule.

It should be generell noted, however, that the use of the endoscope serves, firstly, to simplify maintenance work and, secondly to help determine the lifespan of the components, depending on the application concerned.

If no endoscope is available, one cylinder head of each cylinder bank (not one of the end cylinder heads) is to be removed (Job Card 01.04.01) for checking and servicing.

The cylinder head servicing should be carried out together with the following jobs:

- Rocker Arm Inspection, Job 01.02.03
- Valve Guide Clearance Checking, Job 01.06.01
- Valve Seat and Cone Checking, Job 01.07.01
- Starting Valve Inspection, Job 01.11.01
- Safety Valve Servicing, Job 01.12.01
- Exhaust Manifold Inspection, Job 06.01.01
- Exhaust Elbow Inspection, Job 06.01.03

If these initial inspections reveal no faults, inspection of the remaining cylinder heads in the manner described can be postponed until the next check becomes due in accordance with the Maintenance Schedule

IIf the findings again prove to be positive, maintenance of all of the cylinder heads can be put off again until the next inspection becomes due.

However, should it be found during one of these inspections that the dismantled cylinder head has defects, be sure to remove also the remaining heads for inspection and maintenance.

For refitting the cylinder head, see Job Card 01.09.01.

☞ The Number of running hours up to the time when **all** cylinder heads must be serviced should be locally entered in the Maintenance Schedule as the regular **service interval** to be opbserved in future.

© 1199

This page intentionally left blank

Cylinder Head Refitment

Job Cards:
- 01.01.01
- 02.16.02
- 06.02.01

Tools:
- Standard tools
- hoist
- puller screws
- special tools (Section 1.8),
  - Hyrdaulic clamping tool
  - Cylinder head lifting device

Spare Parts:
- 0-seals for plug-in pieces
- Cylinder head gasket if necessary

Job:
Preparation
- Clean all joint faces thoroughly.

☞ Watch for corrosion in the area of annular gap between waisted stud shank (8) - Fig. 1 - and crankcase upper part (9). In case slight corrosion, remove and clean waisted stud. In case of more distinct corrosion marks, renew waisted studs, see under "Note".

- Replace 0-seals (1) to (5) on the plug-in pieces (Fig. 1).
- Grease plug-in pieces and insert in crankcase.
- Fit centering pin (7).
- Position cylinder head gasket (6) in place.

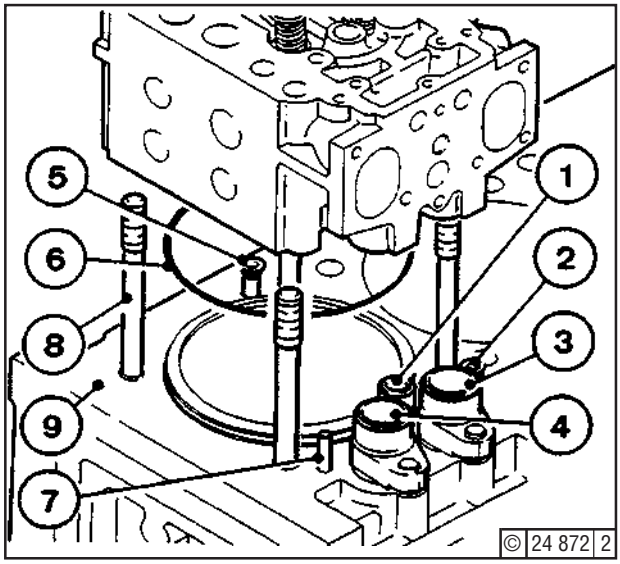

Fig. 1 Cylinder Head Refitment

- Fit lifting device (1) - Fig. 2 -.
- Insert pushrods for valve drive.

SÖKERKEN BU SIRALAMAYI TEYİD ET,YERİNE KONMADANMI TAKILMALI?

- Position cylinder head in place.

☞ - Do not tilt cylinder head.
- See to it that plug-in pieces and centering pin slide smoothly into the cylinder head.
- Check with feeler gauge that between head and crankcase there is an equal distance around the entire periphery.

- Remove lifting device (1).

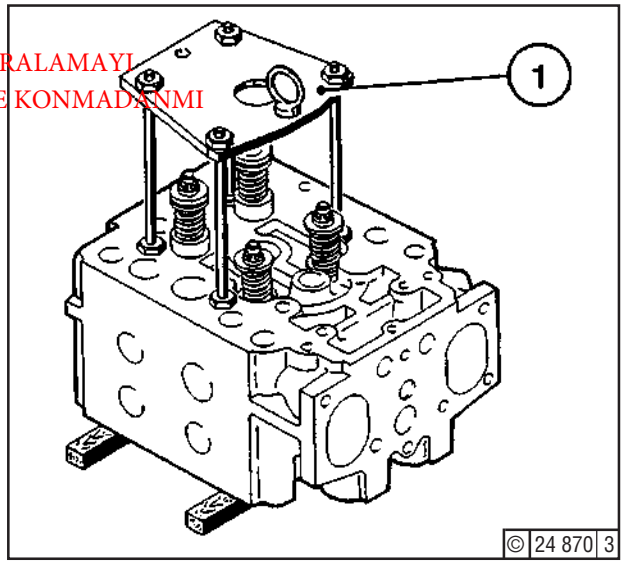

Fig. 2 Refitting device

© 0992

Tightening Annular Nuts (Fig. 3)
Apply oil to studs (14). Check that annular nuts (15) turn easily over the entire stud length. Screw nuts in place and tighten by hand. Check by feeler gauge that nuts are squarely seated.
Fit hydraulic tool and pump as in job card 01.04.01 (Releasing Nuts) and build up pressure (Section 3.5, item 1).

The stud thus having been lengthened as specified, retighten nuts (15) by pin (13) until again squarely seated. Make sure that the number of tightening stages (partial rotations) is equal on all nuts.
Slowly release hydraulic pressure, disconnect hoses and remove tool from studs.
Push sliding pieces (23) - Fig. 4 - of charge air pipe into their appropriate position.Fit lateral locking pieces (16) and tighten by bolt (18) with lockwasher (17).

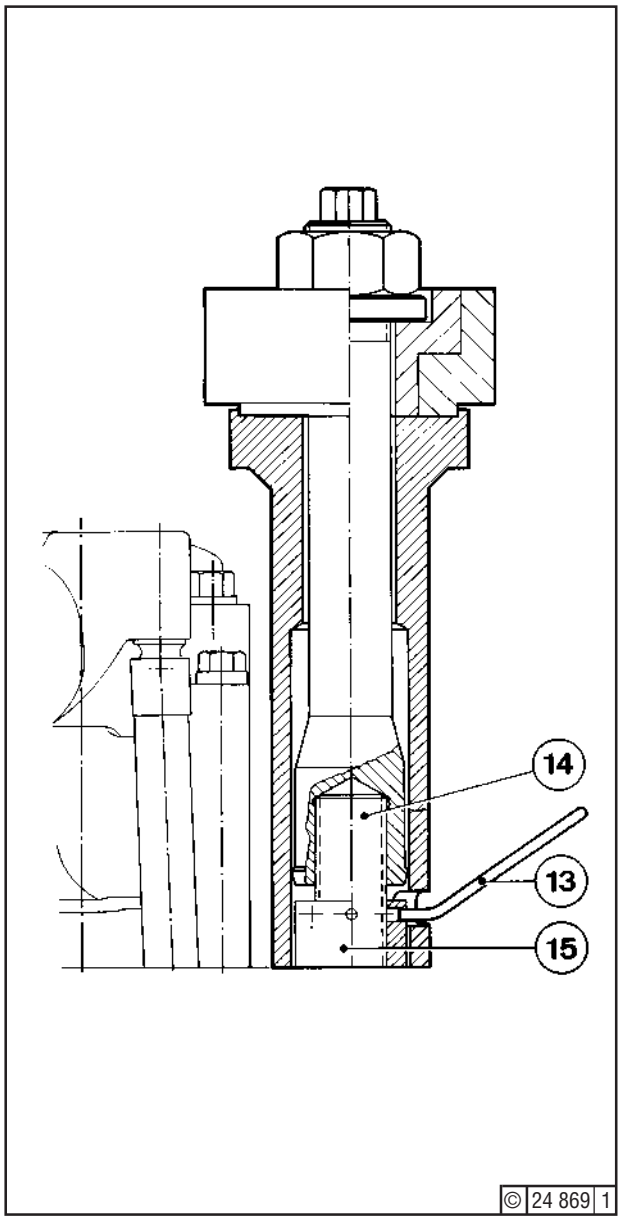

Fig. 3

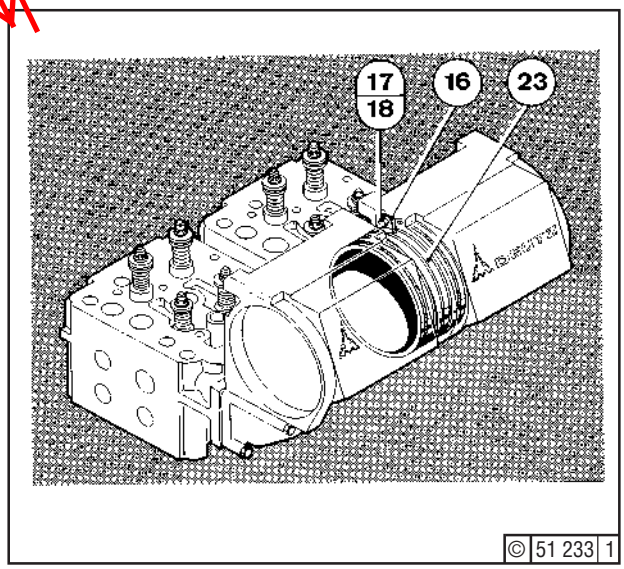

Fig. 4

Fit puller screw (19) in exhaust manifold (20) - Fig. 5 - and press off manifold from head until gasket (21) can be fitted in the gap.

Screw in two bolts (22), so gasket cannot fall out.

Unscrew bolts (19) and securely tighten remaining bolts (22). Connect air and fuel piping.

Set valve clearance (Job Card 01.01.01). Bring indicator cock in normal position and tighten bolts.

Following functional and lubrication test, fit rocker chamber cover (Job Card 01.01.01).

☞ When fitting new studs (14) - Fig. 3 - into the cylinder head, apply Deutz DW 57 locking compound to stud threads.
After screwing studs (14) in as far as they will go, tighten through 130 Nm torque.

Close annula r gap between stud shaft and crankcase with Deutz DW 48 sealing compound.

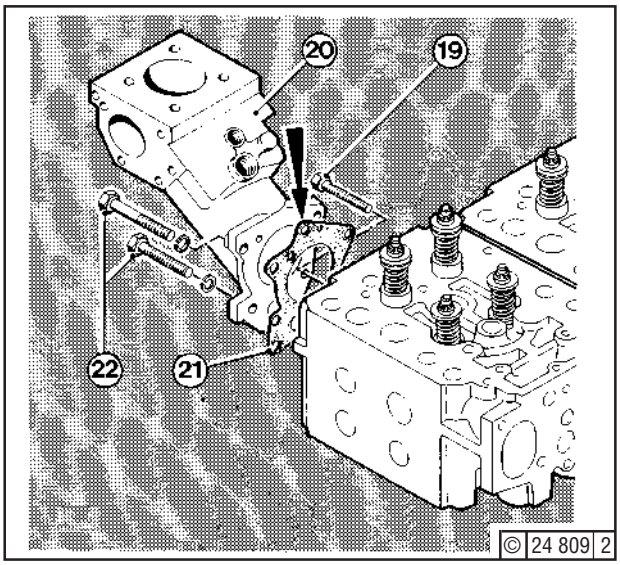

Fig. 5

This page intentionally left blank

Inspection

Check valve for free movement and freedom from leaks.

Job Cards:

- 01.11.02
- 02.00.01

Tools:

- Standard tools

☞ If the starting air pipe gets hot at the cylinder head when the engine is running, this suggeststhat the associated starting valve is leaky.

Job:

Observe safety precautions (job 02.00.01).

Checking Valve Stem and Guide Piston from Free Movement

Unscrew banjo bolt (58) - Fig. 1 -and press down valve (1) with an arbor. If there is lack of free movement, remove valve and overhaul (Job Card 01.11.02).

Checking the Valve for Tightnes

Remove banjo bolt (57) at starting air distributor (Fig. 2) and, in its place, fit a hex. bolt, sealing washers (67) and a hex. nut to seal off the starting air line.
Turn the engine so that the respective piston is a compression TDC (inlet and exhaust valves closed). Place engine control lever in "Start" position and slowly open shut-off valve on air receiver. If this causes air to come out through the indicator valve, this suggests that the starting valve is leaky.
However, before removing valve, check whether carbon deposits or valve binding are the cause of the leak. To do this, unscrew banjo bolt (58) - Fig. 1 - at the air pipe, remove sealing washers (66) and, after unscrewing hex. bolt (10), take off lockwasher (11) and cover (8). Apply a socket wrench to locknut (7) and move valve to and fro to remove any carbon deposizs. If this measure fails to eliminate the leak at the valve seat, remove valve (Job Card 01.11.02).

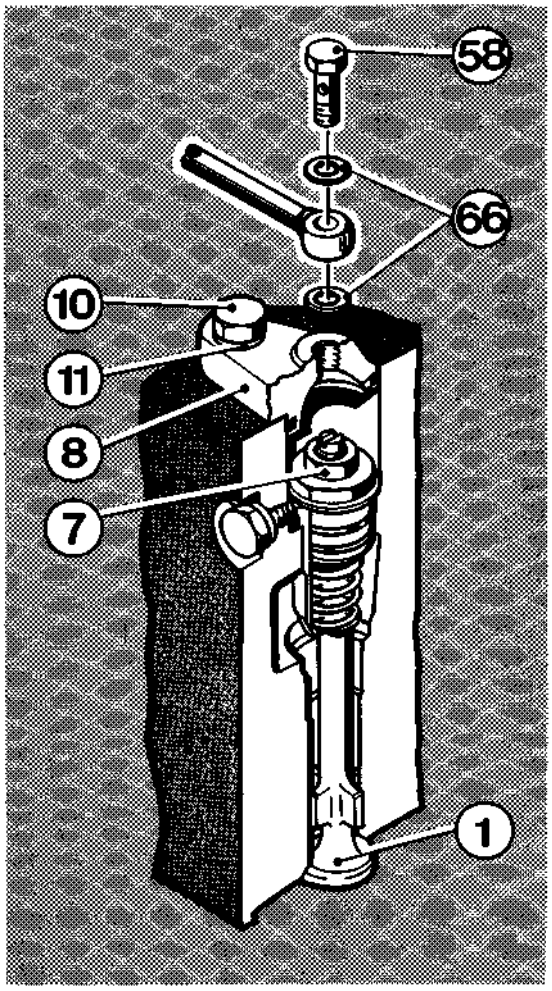

© 24 971 1

Fig. 1

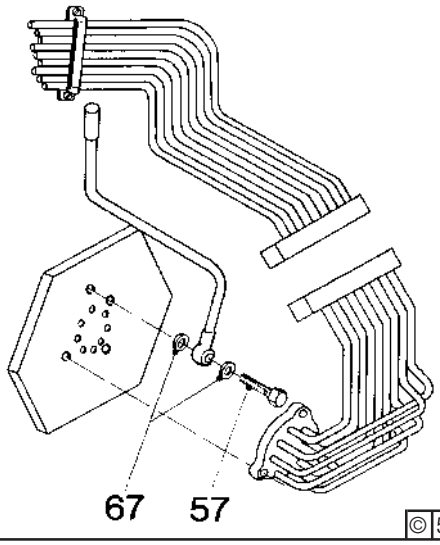

© 51 563 0

Fig. 2

This page intentionally left blank

Servicing

When servicing the cylinder head (Job Card 01.08.01) , the starting valve is also due for removal and servicing.

Job Card:

- 01.04.01

Tools:

- Valve seat miller (Section 1.8.1),
- Socket spanner (Section1.8.),
- Standard tools,
- Grinding-in paste

Job:

Place cylinder head on a wooden support. Unscrew hex. bolt (10) - Fig. 1 - with lockwasher (11), and remove cover (8). Place cylinder head on the side, remove circlip (12) and release locked nuts (7) and (6) as follows: Place a socket on hex. nut (7) and slip socket spanner over it to move hex. nut (6). Piston (3) is loaded by spring (2). Remove washer (5). Dismantle valve. Clean components in gas oil and check for wear. Oil components slightly.

Inspect valve seat and, if necessary, recondition with milling tool (Fig. 2), then grind in. To grind in, apply an even film of fine grinding-in paste to seat. Equip starting valve (1) with piston (3) to act as guide when grinding in. Turn valve cone with a screwdriver until the entire periphery of the sealing surface presents a shade of matt-grey.

Remove all residues.

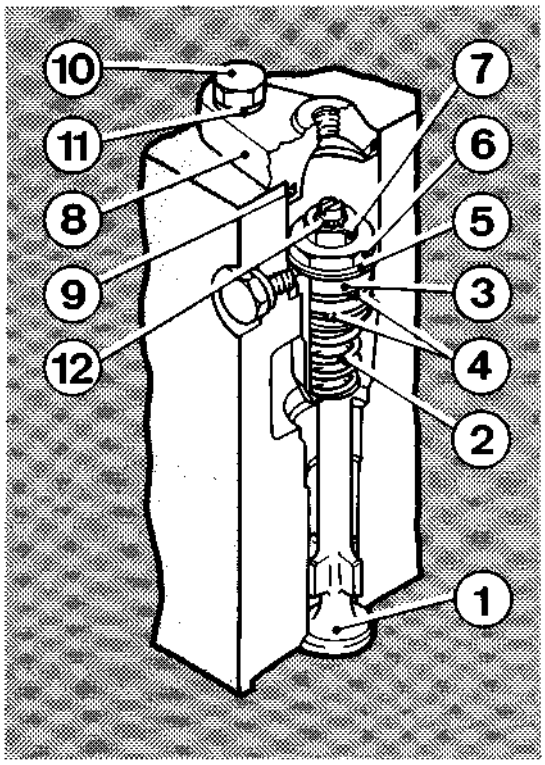

© 24 923 2

Fig. 1

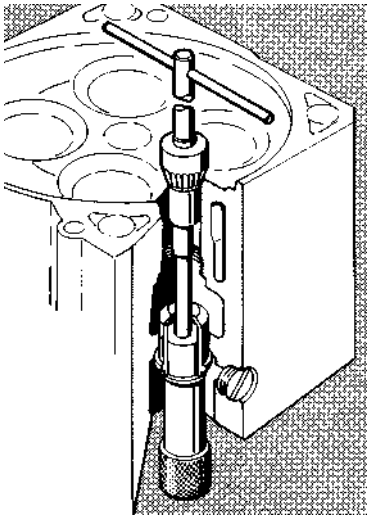

© 25 054 0

Fig. 2

Installation of the starting valve in the cylinder head is carried out in reverse order. Renew 0-ring (9) and, if necessary, packing rings (4). Tighten hex. nut (6) with socket spanner, while holding the starting valve (1) with a screwdriver in the slot of the valve disc.

Counterlock hex. nut (7) with socket and hex. nut (6) by means of the socket spanner. Mount circlip (12). Before placing on cover (8), check starting valve for easy movement.

⚠ In the case of improper locking of hex. nuts (6) and (7), there is a risk of the nuts loosening and the starting valve falling into the cylinder. This can result in very serious consequential damage.

☞ In the case of the V-type engines, starting valves are fitted in one bank of cylinder engine, and B1 to 8 of the 16-cylinder engine. The cylinder banks A1 to 6 and A1 to 8 respectively are provided with blanking plugs.

© 0684

Servicing

When servicing the cylinder head or when a safety valve has become leaky, remove valve, dismantle and, if necessary, regrind.

Tools:

- Standard tools,
- Fine grinding compound

Aid:

- Asbestos cord,
- Deutz S1 compound (Section 3.6),

Never try to remove a leak by increasing zhe valve spring loading.

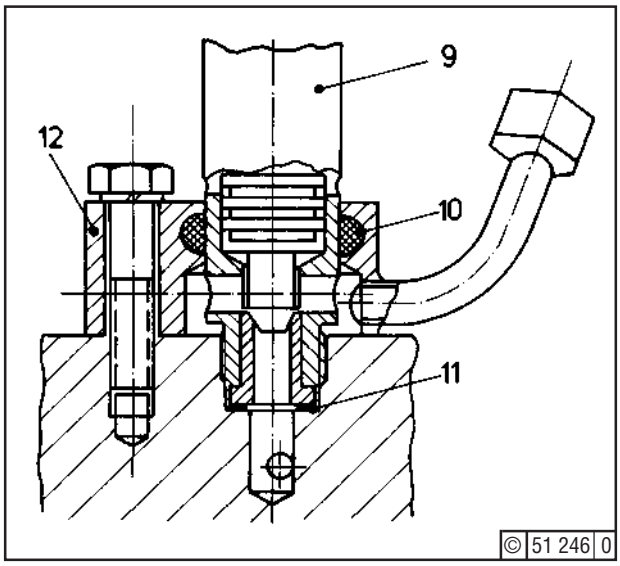

Job:

GEREKİRSE OKU

Stop engine. Depressurize combustion chamber by opening the indicator valve. Screw safety valve (9) out of cap (12). Release nut (2) and adjusting screw (1). Remove valve (4), spring (5), bushes (7) from body (3).

Clean all components and inspect for wear. If necessary, grind valve tulip on its seat in the casing with compound. Therafter remove all traces of compound. Renew washer (13) and asbestos cord (10).

Apply oil to all components before reassembly. Introduce valve (4), bushes (7) (proper location see fig.) and spring (5) into body (3). Screw in adjusting screw (1), set pressure by means of injector testing outfit (job 07.08.01) and lock by nut (2).

Apply S1 compound to thread of body (3) position safety valve (9) and screw into cap (12).

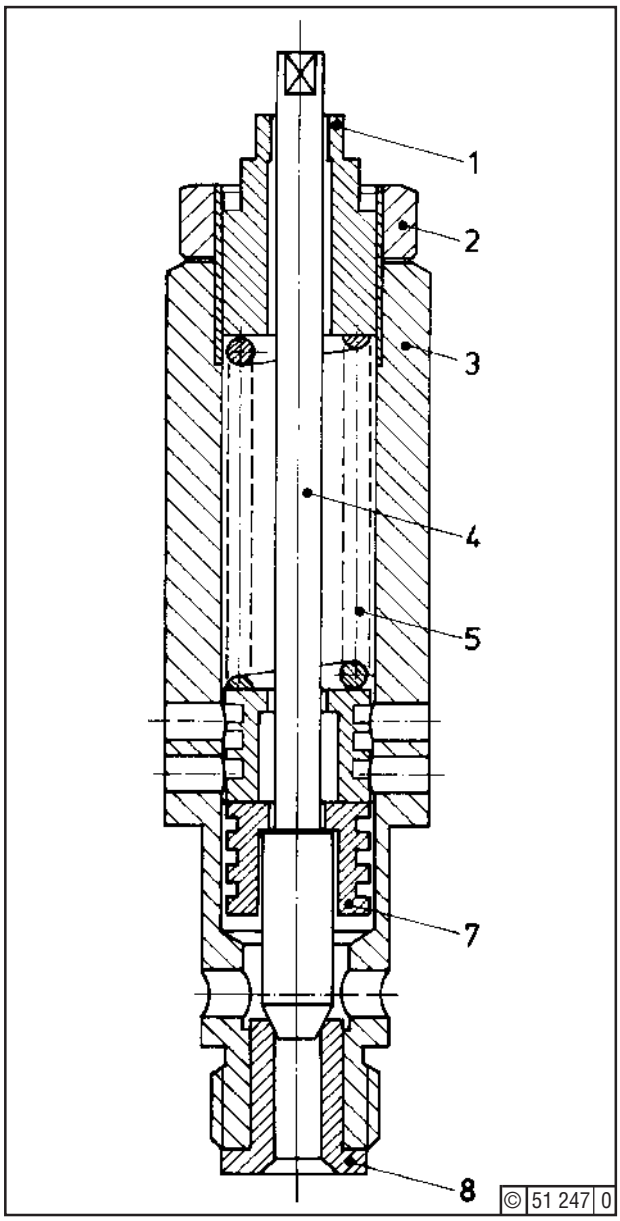

© 0595

This page intentionally left blank

In accordance with the engine equipment specifica-tio - depending on the type of fuel stated when the engine is ordered - the cylinder heads can be provi-ded with cooled or uncooled exhaust valve-seat rings. Inlet valve-seat rings are always uncooled.

Job Cards:

- 01.05.01
- 01.07.01

Tools:

- Standard tools,
- Puller tool for fitting and removing valve-seat rings (Section1.8).
- Locking compound Deutz DW 57 (Section 3.6).

Job:

First remove valve (Job Card 01.05.01).

Removing the Uncooled Valve-Seat Ring - Fig.1 -
Clean deposits out of the groove between valve-seat ring and cylinder head and insert circlip (6). Place puller bush (5) through inlet or exhaust passage respectively onto the circlip and, from the combustion chamber side, screw plate (7) onto the puller bush. This is necessary to ensure that the circlip is not pressed out of its groove during the pulling operation.

Now screw the hex. bolt (4), together with washers (2), bearing (3) and puller support (1) into the puller bush. Pull out the valve-seat ring by tightening the hex. bolt. Clean receiving bore in the cylinder head without damaging it.

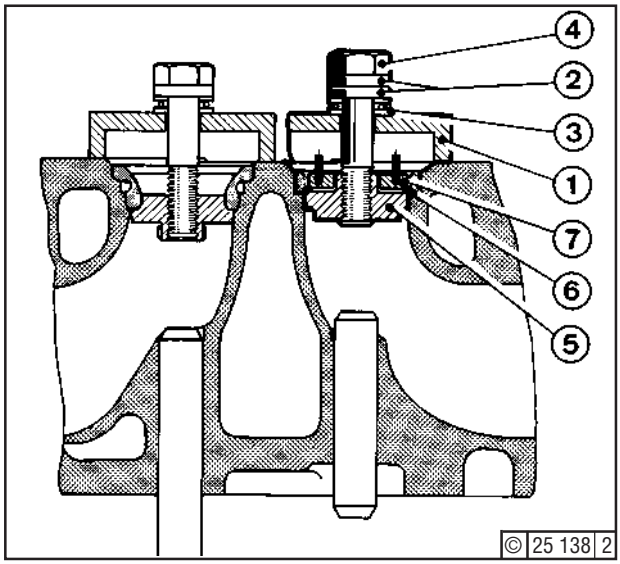

Fig. 1

Removing the Cooled Valve-Seat Ring - Fig . 2
Place puller bush (5) through the exhaust passage onto the valve-seat ring. From the combustion chamber side, screw hex. bolt (4), together with washer (2), bearing (3) and puller support (1), into the puller bush. Pull out the valve-seat ring by tightening the hex. bolt. Clean receiving bore in the cylinder head without damaging it.

Before fitting, gauge the receiving bore in the cylinder head. If the diameter of the receiving bore in the case of:

- uncooled valve-seat ring is greater than 79,03 mm,

- cooled valve-seat ring is greater than 72,03 mm and/or at the bottom is greater than 91,03 mm,

an oversize ring must be fitted. Further details can be obtained from our Deutz Service Departments.

⚠ Canting or the formation of burrs must be avoided!
Hammering-in instead of pulling-in with puller tool is not permisible!

Fitting the Uncooled Valve-Seat Ring - Fig. 3 -
Lightly oil seat ring on outer periphery and push it into the cylinder head. Mount threaded spindle (1), together with hex. nut (6), washers (5), bearing (4) and bush (3). The seat ring is pulled onto its seat by tightening the hex. nut (6). Ensure full seating! A repetition of the pulling-in operation results in a certain enlargement of the receiving bore in the cylinder head, so that an oversize ring may then be necessary.

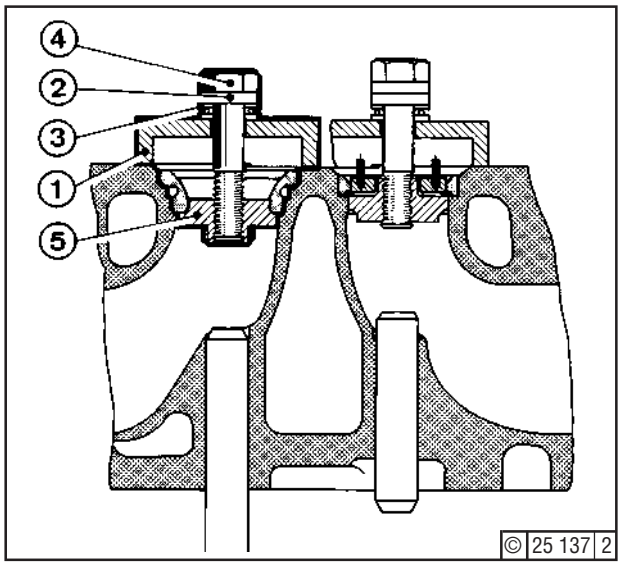

Fig. 2

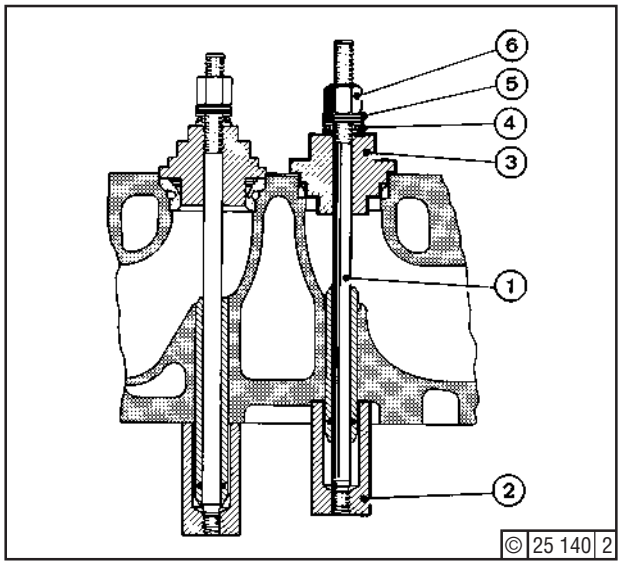

Fig. 3

Fitting the Cooled Valve-Seat Ring - fig. 4 -

Apply Deutz DW 57 to the entire seat ring receiving bore in cylinder head and to sealing surfaces of the valve-seat ring. Check that coolant passage between cylinder head and valve-seat ring is not blokked. Push seat ring into cylinder head.

Mount threaded spindle (1), together with hex. nut (6), washer (5), bearing (4) and bush (3).

Screw on sleeve (2). By tightening hex. nut (6), the valve-seat ring is pulled in up to the axial contact surface.

A repetition of the pulling-in operation results in a certain enlargement of the receiving bore in the cylinder head, so that an oversize ring may then be necessary.

After a waiting period of at least 1 hour, check cylinder head for leaks by subjecting to a pressure test with coolant (see Section 6.4) for at least 5 minutes.

Test-pressure: 7 bar.

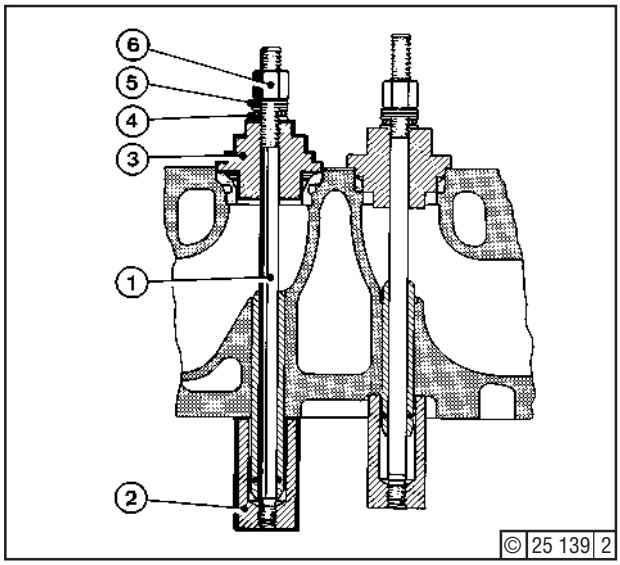

Fig. 4

After Fitting:

Grind-in valve cone on the valve-seat (Job Card 01.07.01).

This page intentionally left blank

Prior to Work

- Stop engine.
- Close shut-off valve on air receivers.
- Bleed air piping to engine.
- Open indicator valves.
- Wait 10 minutes before removing crankcase doors and some further minutes, allowing crankcase oil mist to dissipate, before starting work.

☞ Remove cover (3) along with oil dipstick (1) and guide tube (2).

During Work

Make sure that

- No further persons are present before turning the crankshaft.
- No tools will interfere with crankshaft turning.
- The motion parts will not be put out of balance by removing components.
- The propeller shaft, where provided, will be disengaged or otherwise the propeller can turn freely.
- The barring gear is properly engaged.
- The engine will not turn as the propeller shaft is turned.

⚠ Before refitting crankcase doors, check that all tools, rags etc. have been removed from the crankcase interior.

After the work

- Before refitting the crankcase door, ensure that all tools, rags etc. have been removed from the crankcase interior.
- Replace any defective door gaskets.
- Tighten fastening bolts of crankcase doors.
- Before putting the engine back to service, turn crankshaft with indicator valves open.
- Close indicator valves.

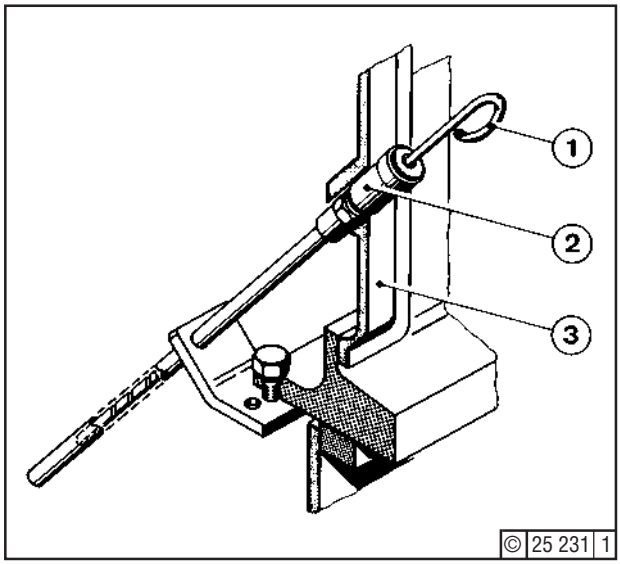

This page intentionally left blank

Inspection

Inspect system at regular intervals.

Job:

Observe safety precautions (Job Card 02.00.01).

Open indicator valves. 10 minutes after stopping of engine and interruption of oil circulation remove crankcase doors. Touch main and big-end bearings with your hands and check that they have abn even temperature.

Inspect the degree of system soiling, paying particular attention to the presence of bearing metal in the oil sump, to corrosion and water leaks.

Carefully inspect liner bores and seals, with the pistons in TDC.

Job Cards:

- 02.00.01
- 02.15.01
- 04.02.01

Tools:

- Tuning bar (Section. 1.8)
- Standard tools

Operate oil priming pump and check that oil emerges from each bearing. Check rocker arm bearings likewise, after removing the rocker chamber cover.

Turn engine and inspect cam surfaces (Job Card 04.02.01). Smoothen minor scores or high spots with oil stone.

☞ When performing the above jobs, be sure not to foul the piston coolant jets (Job Card 02.15.01).

© 0984

This page intentionally left blank

Inspection

In addition to regular gaugings, check deflection whenever this seems necessary.

Job Card:

- 02.00.01

Tools:

- Dial gauge with extension (web distance 85 mm)
- Hand mirror with handle

☞ Deflection values consist of:

- absolute amount of deflection, measurable by the difference between greatest and smallest web distance during one cranks haft rotation,
- plus or minus sign as shown below.

Normally, gauge readings increase as web distances decrease, and vice versa.

Be sure to make readings when the engine is cold, since the values differ according to the engine temperature.

Readings should not be taken when the ship is in dock.

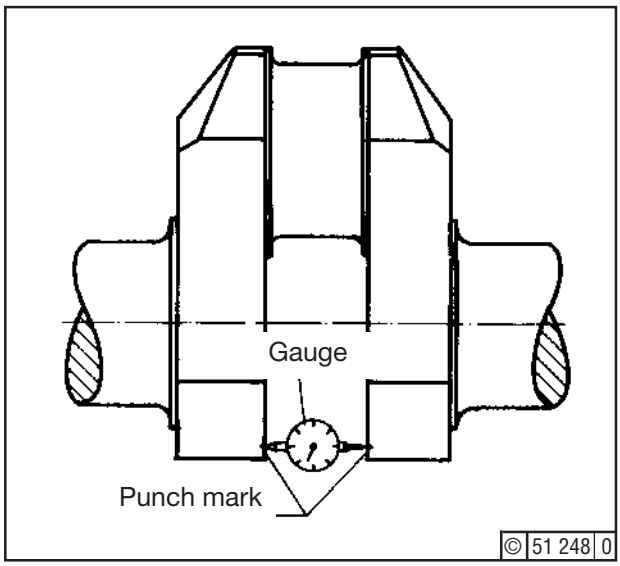

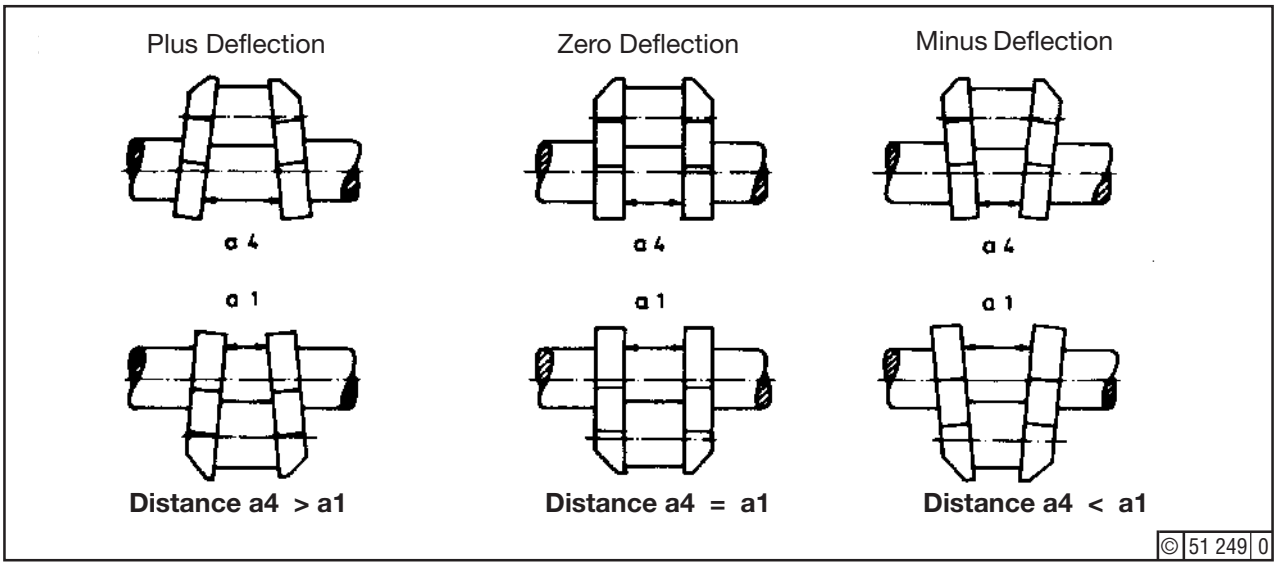

Job:
Introduce gauge into marks punched into webs (**not** beween balance weights) and rotate several times in this position. Set gauge to 25/100 of scale in measuring positions (1) or (2).

⚠ When using a mirror, check readings especially carefully.
For taking readings, turn crankshaft counter-clockwise, without touching the gauge.

With piston in situ: Take readings in position 2, 3, 4, 5 and 6

With piston removed: Take readings in positions 1, 3, 4 and 5.

Measuring position as viewed from the engine's driving end:

Measuring position	Crankpin position
1	Lowest
2	First auxiliary
3	First horizontal
4	Highest
5	Second horizontal
6	Second auxiliary

For measuring the deflection, turn crankshaft counter-clockwise.

Measuring positions

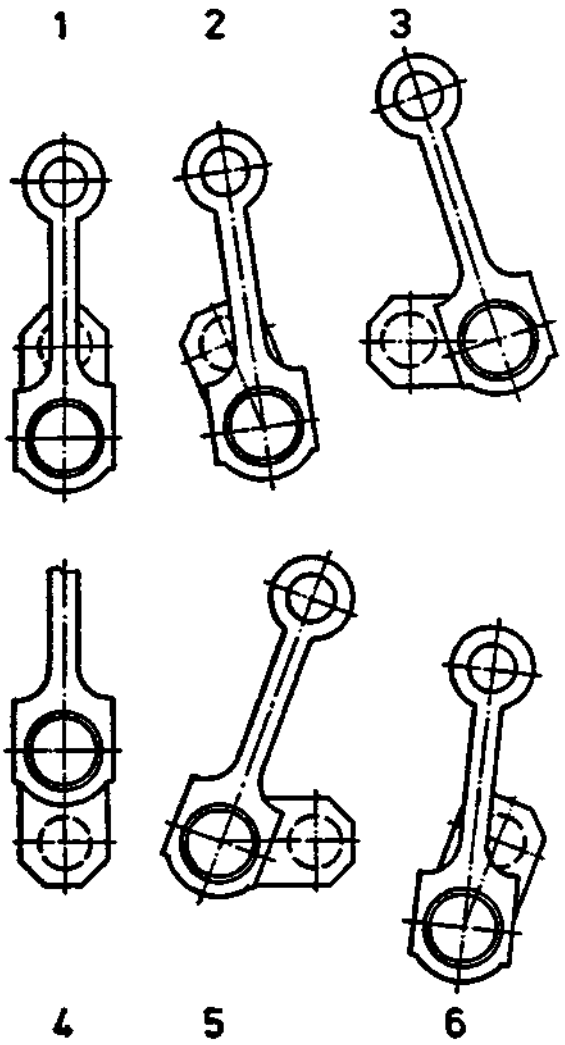

© 51 250 0

Typical Gauging Sheet

Engine Model: Engine Serial No.:

Engine hot [ ] Engine stopped for [ ] hours

Engine preheated [ ] Water temp [ ] °C Cyl. temp. [ ] °C

Measuring position	**Crankpin position**	**Reading in Throw of Cylinder No.:**							
Line		A/B 1	A/B 2	A/B 3	A/B 4	A/B 5	A/B 6	A/B 7	A/B 8
1	Lowest								
2	First auxiliary								
3	First horizontal								
4	Highest								
5	Second horizontal								
6	Second auxiliary								
Vertical deflection (Δ „a“)	Pos. 1 min. 4 or $\frac{\text{Pos. Z1.2+Z1.6}}{2}$ min. Z1.4								
Horizontal deflection (Δ „a“)	Pos. 3 min. 5								

Crankshaft end float: max. 1,5 mm

☞ Reading declines as distance "a" grows and vice versa

Remarks:

Max permissible deflection Δ „a“ (engine hot) = difference between two crankweb positions

No. 1 throw		Last throw: Power take-off at free end	Remaining throws
Overhung flywheel	Flywheel with pedestal bearing, or no flywheel		
+ 0,00 - 0,10	+ 0,06 - 0,06	* + 0,03 * - 0,08	+ 0,03 - 0,06

☞ If readings exceed those above, inspect bearings and, if necessary, realign engine.

* In the case of radial power take-off at crankshaft - e.g. belt drive - at free end, other deflection readings are permissible (regarding this, please consult the Service Department of Head Office).

© 1001

This page intentionally left blank

	Bearing Shell Spread Gauging	Job Card No.: 02.03.02
DEUTZ	Filing No.: 0178-06-10 1603	Engine: S/BV M 628

Gauging

Main and big-end bearing shells to be fitted must have sufficient positive spread, so they will have preload in their receiving bores.

Tools:
- Caliper gauge

All new shells have apositive spread unless they have been improperly handled, for instance in transit.

İLGİNÇ BİR BİLGİ...

Job:
The spread is positive when - measured at room temperature - dimension "a" is larger than "D" which is stamped on the shell back. (If illegible, see table below.)

If a used shell has a negative spread ("a" smaller than "D"), this may suggest that the bearing has been strained by overheating and thus has lost preload. Descard shells with negative spread, because the inner edges of such "loose" shells are liable to cut off the oil film on the shaft journal or crankpin respectively.

Do not perform a correction with own means, as there is a risk that the bearing metal may detach from the support shell or the bearing may become deformed. Damage of this kind may lead to serious operating faults.

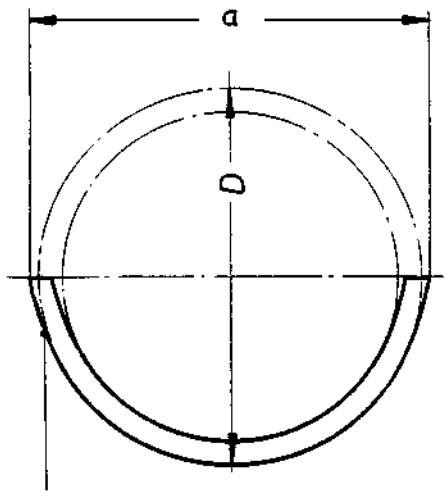

„D“ stamped here

© 51 251 0

	Main Bearing „D“	Big-end Bearing „D“
Nominal size	Ø 220,0 +0,029 0,000	Ø 182,0 +0,029 0,000
Under-size	Ø 220,5 +0,029 0,000	———
Under-size	Ø 221,0 +0,029 0,000	———
Under-size	Ø 221,5 +0,029 0,000	———
Under-size	Ø 222,0 +0,029 0,000	———

© 0595

This page intentionally left blank

Gauging

Check running clearance in all cases of doubt.

Normally, the running clearance need not be checked, since only new and genuine Deutz bearings may be fitted in new bores and the bolts tightened according to specification.

Tools:

- Dial gauge with magnetic support,
- Feeler gauge,
- Square timber of about 2000 mm length

Job Card:

- 02.00.01

Job:

Measuring the Big-end Bearing Clearance

Turn respective crankpin to BDC. Fasten gauge (3) and its support (2) to connecting rod (1). Set gauge (3) to zero position. Raise rod (1) by timber block and read clearance "S" from gauge, making allowance for 0,05 mm oil film thickness (5).

Measuring the Main Bearing Clearance

Measure clearance above and below shaft journal by feeler gauge or plastic materials.

Measuring the Locating Bearing Clearance

Remove RH and LH crankcase doors at No. 2 bearing and gauge side clearance between segment and crankshaft flange on both sides.

Running Clearance (mm)	New condition	Wear Limit
Main bearing	0,160 - 0,248	0,3
Big-end bering	0,140 - 0,224	0,3
Side Clearance (mm)		
Locating Bearing	0,6 - 0,754	1,5

When wear limits are exceeded, never remachine shells or segments but replace.

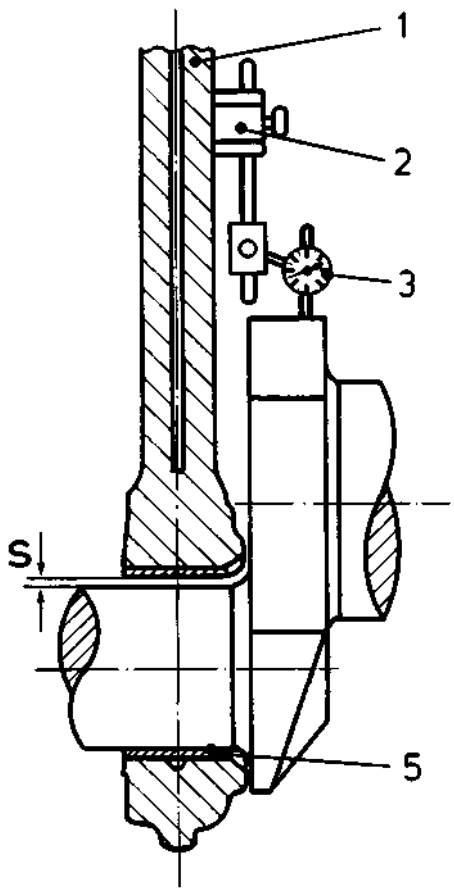

© 51 252 0

This page intentionally left blank

Inspection

Inspection of big-end bearings is required whenever removing pistons. If the wear pattern is unsatisfactory of if deep scoring and/or embedments of foreign particles are discovered.

Job Cards:

- 02.03.02
- 02.03.03
- 02.05.01 (Big-end bearings)
- 02.06.01 (Big-end bearings)
- 02.07.01 (Main bearings)
- 02.08.01 (Main bearings)

Inspect one main bearing also, in accordance with the Maintenance Schedule, and, if in bad shape, the rest als. The first bearing to be inspected should be the central one.

Big-end bearings and main bearings which have already been running for

20 000 hours with distillate fuel,
18 000 hours with mixed oil or heavy oil 1 and
15 000 hours with heavy oil 2

must be renewed, even if they are still of good appearance, since they are likely to have lost their running-in properties due to advanced wear and tear at this stage.

Renewal of all big-end bearings and main bearings is due at the end of about 40.000 running hours.

Bearings to be refitted must be inspected with regard to:

- adequate spread (Job Card 02.03.02),
- correct running clearance (Job Card 02.03.03),
- wear pattern.

Depending on the number of running and operating conditions, the wear patterns of bearing shells may differ widely. In all cases of doubt, therefore, it will be advisable to consult a DEUTZ serviceman.

© 1083

This page intentionally left blank

Job Cards:

- 02.00.01
- 02.06.01

Tools:

- Standard tools,
- Possibly square timber,
- Socket spanner (Section 1.8)

Job:

Bearing Removal with Piston Removal

Observe Safety Precautions given on Job Card 02.00.01.

☞ On S/BV12/16M 628 engines use a ben tsokket spanner to loosen the big-end bolts on cylinder A1.

sadece 12/16 cyl V makinelerde

Turn crankshaft so that the big-end bolts (6) can be loosened with tool (piston approx. in TDC). Support cap (5) and unscrew bolts completely. Remove cap (5) out of crankcase. Take bottom shell out of cap (5).

Remove top shell when drawing the piston (Job Card 02.09.01). Wrap adhesive tape (no transparent Scotch tape), cleaning rag or oil paper around the crankpin to protect the oil bore against contamination.

Without piston removal

The top shell can also be removed with the piston fitted. Remove support cap (5) as described under "Bearing Removal with Piston Removal". Place square timber underneath piston.
Turn crankshaft slowly until the piston lowers onto the square timber revealing the freely hanging connecting rod. Remove top shell.

For assessment of shell wear pattern see Job Card 02.04.01.

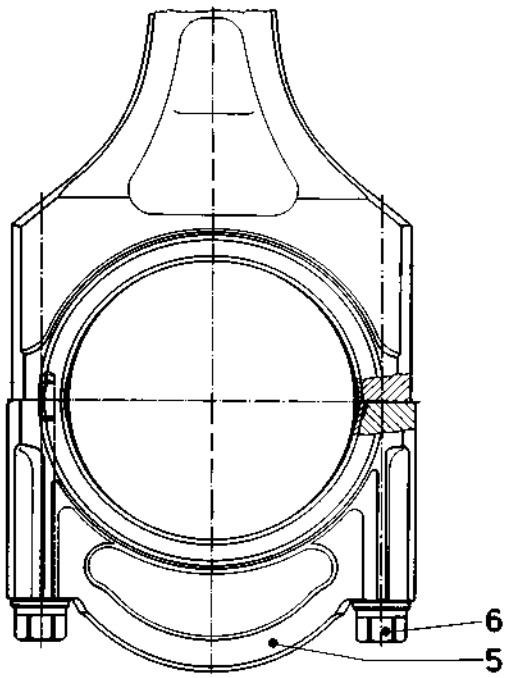

© 51 253 0

This page intentionally left blank

Inspect shells for wear pattern and renew, if required (job 02.04.01). Used shells, caps and bolts must always be refitted in their original location. Shells, caps, connecting rods and pistons carry mating Nos. (cylinder No.). Inspect condition of crankpin. It should not be out-of-round for more than 0,1 mm.

Job Cards:

- 02.03.03
- 02.14.01
- 02.15.01

Tools:

- Standard tools,
- possibly square timber,

Job:

Carefully clean crankpin, top shell (1) and big-end (8). Carefully inspect pin surface and smoothen with an oil stone any pressure marks that may have been produced in removing the bearing.

Bearing Refitment with Piston Removed

Install piston (Job Card 02.14.01) and lower it until shell can be fitted. Check markings "x" and "y". Apply oil to running surfaces of shell and pin, but keep shell back and joint free from grease and oil to ensure perfect heat transfer.

Top and bottom shells being identical, make sure that they are refitted in their original location. Make sure that lugs (3) of top and bottom shells properly engage in the rod/cap grooves.

Now slowly lower piston/rod assembly down to crankpin. Ensure that the lugs (3) of the top and bottom shells correctly engage in the rod/cap grooves. Slowly lower connecting rod with the piston onto the crankpin.

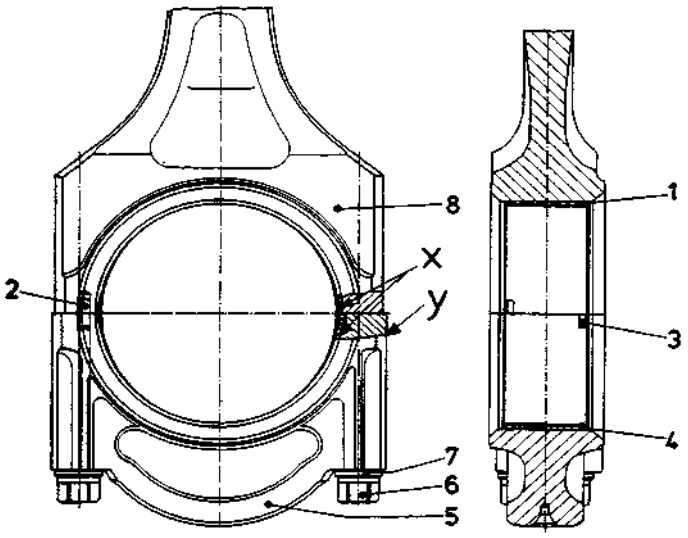

© 51 396 0

Big-end Bearing
Refitment

Filing No.: 0178-06-10 1088

Bearing Refitment with the Piston not Removed

In the case of piston and big-end bearing not being removed, lift and support big-end bearing with square timber, insert bearing shell (1) as described under "Bearing Refitment with Piston Removed", and slowly turn crankpin into head. Remove square timber.

Clean cap (5) and shell (4) and apply oil to shell inside. Check that shell back and joints are free from oil or grease, otherwise heat transfer may be affected. Install cap (5) with shell (4). Fix bearing cap in place with prallel pins (2).

Screw in connecting rod bolts (6) with washers (7) and tighten crosswise (Section 3.5, item 04).

If necessary, measure bearing running clearance (Job Card 02.03.03).

The rod side clearance should be as follows:

New Condition	Wear Limit
0,40 - 0,64 mm	0,75 mm

Yukarda max 0.3 diyordu,burda kastedilen ne acaba?

For running in new or used bearing shells, see Section 4.6.

☞ When performing the job above, be careful not to foul the piston coolant nozzles (Job Card 02.15.01).

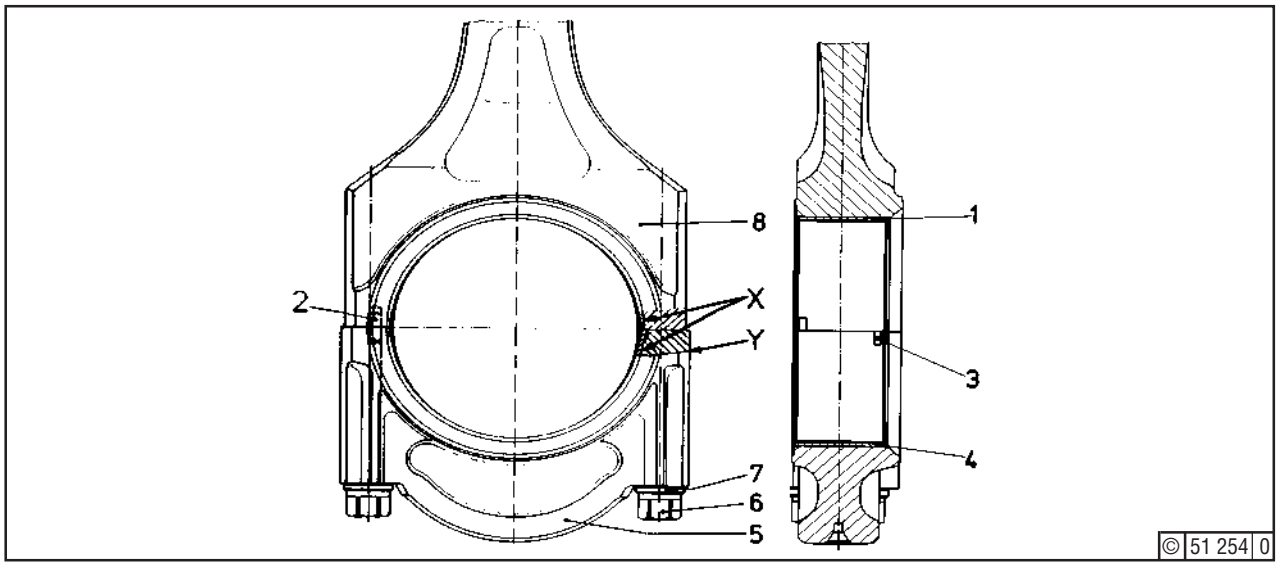

To begin with, make sure that cylinder No. markings are provided on bearing cap fronts and face the engine's driving end. Provide marks if missing..
Remove only every second bearing at a time, to prevent crankshaft sagging. Support flywheel when removing the bearing next to it.

Job Cards:

- 02.00.01
- 02.16.02
- 02.04.01

Tools:

- Standard tools,
- Driving pin (Section 1.8),
- Hydr. tool assembly (Section 1.8),
- H.P. pump with pressure gauge (Section 1.8),
- H.P. hoses and distributor (Section 1.8),
- Spreader (Section 1.8),
- Lever (Section 1.8).

Job:

Observe safety precautions (Job Card 02.00.01). Unscrew bolts (3) - Fig. 1 - on both engine sides. Fill two hydraulic tools with oil (Job Card 02.16.02) for releasing annular nuts (4) - Fig. 2 - . Procedure for releasing **one** nut (other side analogous); Screw clamping nut (7) onto stud (2) as far as it will go. Fit bush (8) onto nut (7). Push retainer (12) onto bush (8) and install hydraulic tool (11). By means of bolt (10) and washers (9), screw tool (11) together until the piston is flush with the cylinder end.

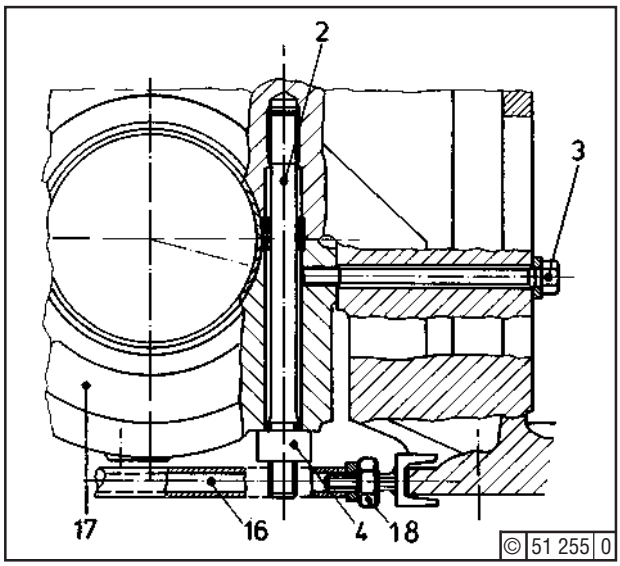

Fig. 1

Back bolt (10) through one turn. Connect hydr. pump with hoses and operate pump to obtain the pressure specified (Section 3.5, item 2). Introduce pin (13) - Fig. 3 - through aperture in bush (8). If annular nut (4) still resists turning, slowly raise oil pressure (10 to 20 bar).

⚠ Check by mirror when pumping that the marking groove (Fig. 2) i n the piston will not project beyond the cylinder.

Using pin (13), screw back nut (4) up to a little ahead of clamping nut (7), which requires some (9) strokes in the slot of bush (8) - Fig. 3 -. Take off oil pressure.

Disconnect hoses from tools. Remove tools and push piston into cylinder until flush with the end. Fit lever (27) - Fig. 4 -. Unscrew nuts (4) - Fig. 1 -. Lower bearing cap onto a wooden board of about 10 mm thickness in the oil sump.
Should cap (17) resist lowering, use spreader (16) - Fig. 1 -. In this case, nuts (4) remain in situ. Release f oundation bolts on the engine side having no fitted studs and expand crankcase slightly with spreader (16) by turning nut (18). Unscrew nuts (4) and lower cap with lever (27) - Fig. 4 - onto a wooden board in the oil sump, as described above.

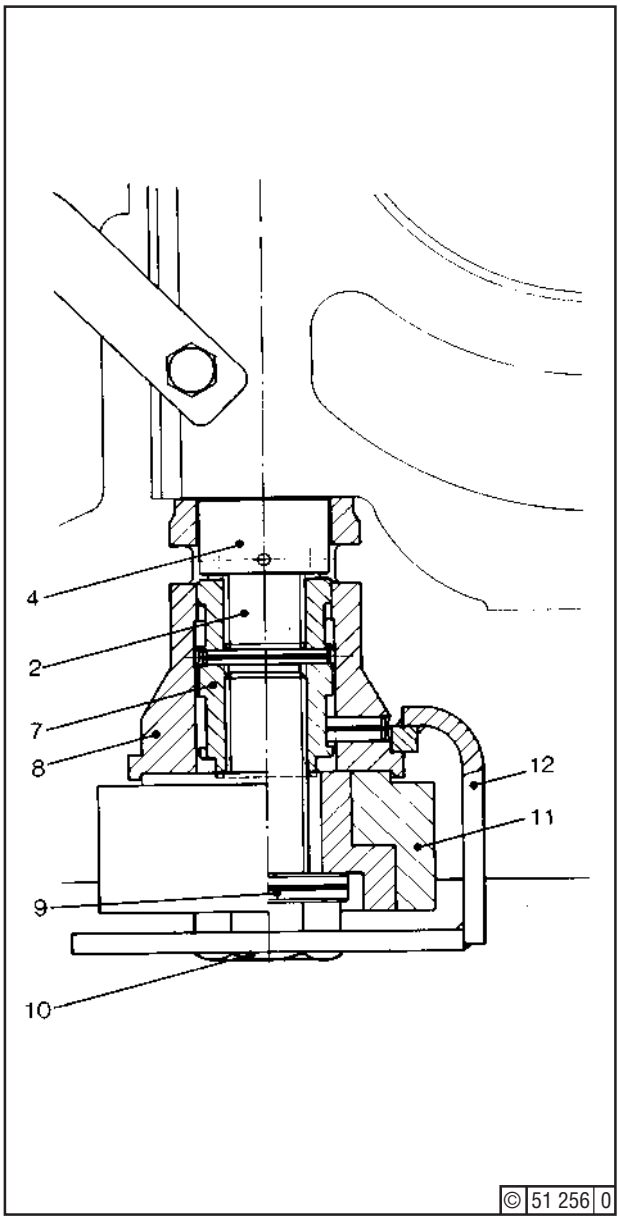

Fig. 2

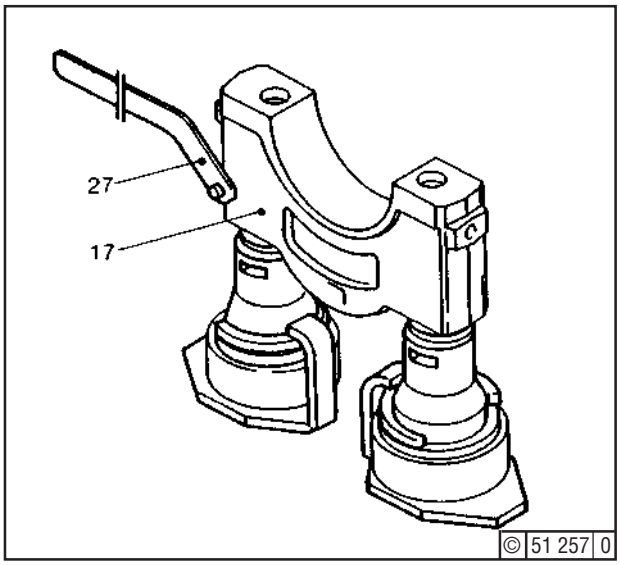

Fig. 4

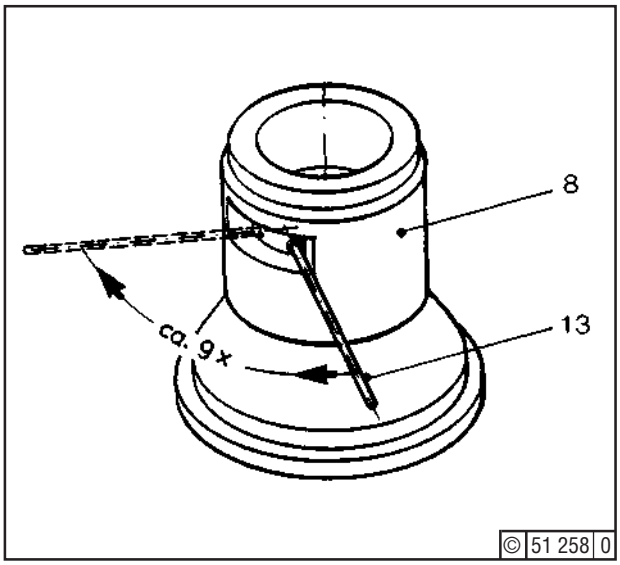

Fig. 3

Removing the Shells

Take out lower bearing shell and make sure that its lug is provided with a marking on the back.
NIf upper shell (14) cannot be pushed out by hand, insert driver pin (15) into oil passage 'X' of crankshaft (1) and carefully turn crankshaft in the arrowed direction (Fig. 5) until the flat of pin (15) contacts the joint of upper shell (14). Carefully turn farther until the upper shell can be removed by hand. Inspect upper shell for the lug marking (see job 02.08.01). Provide mark if missing. Remove pin (15).

To keep dust, etc., out of the crankshaft oil passage, close the holes with a **non-transparent** adhesive tape, so that it will be noticed for removal when reassembly is done. DEMEKKİ BİRİLERİ TRANSPARENT KOYUP SONRA UNUTMUŞ

Shell wear patterns: See Job Card 02.04.01.

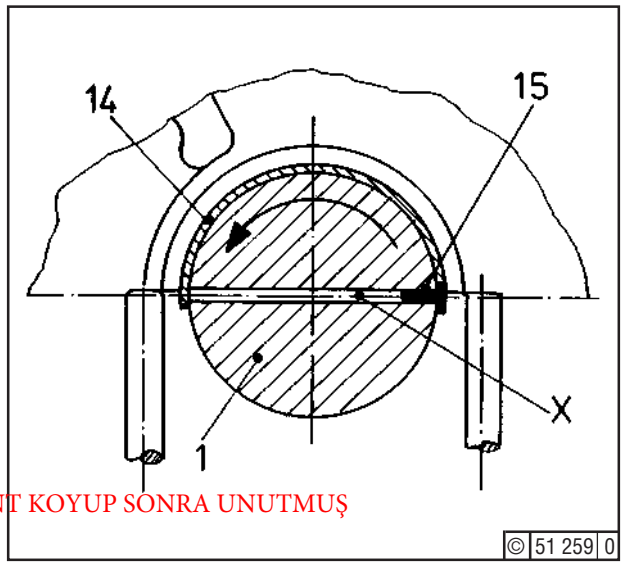

Fig. 5

This page intentionally left blank

Job Cards:

- 02.03.02
- 02.03.03

Tools:

- Standard tools,
- Driving pin (Section 1.8),
- Hydr. tool assembly (Section 1.8),
- H.P. pump with pressure gauge (Section 1.8),
- H.P. hoses and distributor (Section 1.8),
- Lever (Section 1.8),
- Deutz S2 compound (Section 3.6)

☞ Inspect bearing shells and renew as necessary (job 02.04.01). Used shells must be refitted in their original location. Unlike bottom shell (5), to shell (14) - Fig. 1 - is provided with oil grooves. New shells, being of the precision type, must not be modified by scraping, etc. Like the old shells, they must be provided on one lug with amarking that is permanent but will not give high spots. The top and bottom shells must always be installed so that the marks will mate. Note marking of cap (17) on its front facing the engine's driving end. Inspect journal and, if necessary, smoothen by oil stone.

Job:

Refitting the Shells

Clean all components. Remove protection coverings from oil bores of crankshaft (1) - Fig. 2 -. Apply film of oil to journal and shell running surface, but keep shell back and seat dry. Usually, shell (14) - Fig. 1 - can be fitted by hand.

Failing this, insert driving pin (15) into oil bore of crankshaft (1) and turn shaft until driving pin (15) is in the appropriate position for turning top shell (14) in place (see Fig. 2).

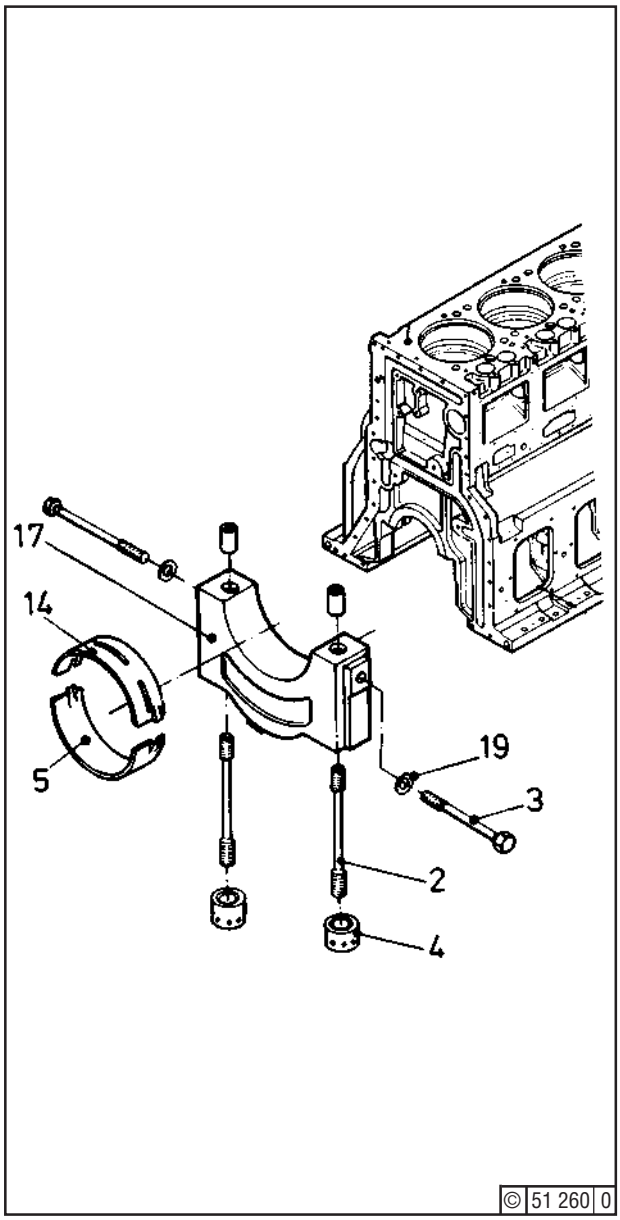

Fig. 1

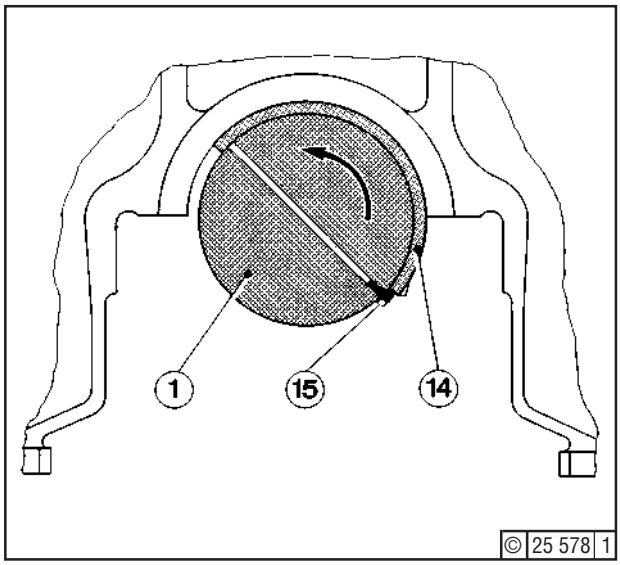

Fig. 2

Slowly turn crankshaft as arrowed until top shell (14) - Fig. 1 - is equidistant from cap joints. Be sure not to damage the shell lug. Remove driving pin (15) - Fig 2 - and put bottom shell (5) - Fig. 1 - (mark facing driving end) into cap (17).
Apply motor oil to threads of studs (2), and check that nuts (4) turn easily over the entire thread length. Install cap (17) with the aid of lever (27) - Fig. 3 - and screw nuts (4) in place hand-tight.
To faciliate introduction of cap (17) into lateral guide, the crankcase can be spread at this point by means of tool (16) - Fig. 4 -. To do this, release foundation bolts on the engine side opposite the fitted studs and turn nut (18) - Fig. 4 - for spreading.
Cap (17) - Fig 1 - can now be installed and hand-tightened by means of nuts (4). Remove spreader (16) - Fig. 4 - and retighten foundation bolts as locally specified.

Tightening Annular Nuts
Fill two hydraulic tools with oil (job 02.16.02).
Screw clamping nuts (7) - Fig. 3 - onto studs (2) as far as they will go. Fit clamping bushes (8) on clamping nuts (7). Slip retainer (12) over bushes (8).
Install tools (11) and screw together by hex. bolts (10) and washers (9) until pistons are flush with cylinder ends.

Back bolts (10) through one turn. Connect hydraulic pump with hoses. Apply Deutz S2 compound to seats of bolts (3) - see Fig 1 -. After the first expansion of studs (2), screw in bolts (3) together with washers (19). For enture expansion process, see Section 3.5.2.
Following fitment of new shells, gauge clearance (Job Card 02.03.03). Attach crankcase doors.

⚠ Run in engine, (Section 4.6).

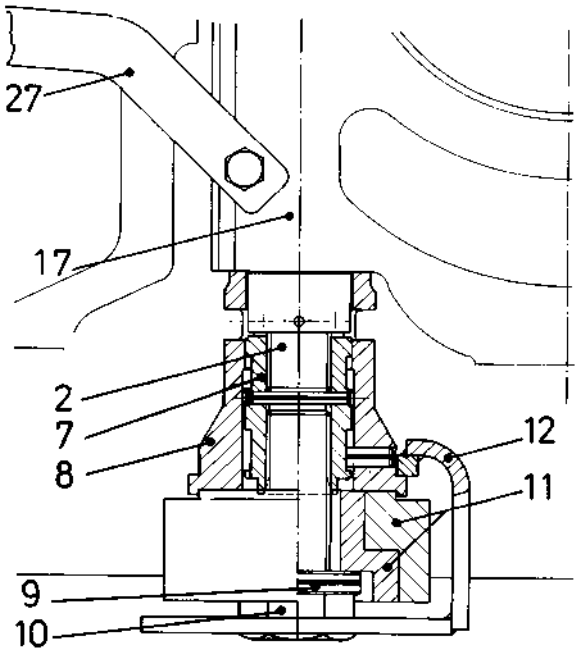

© 51 261 0

Fig. 3

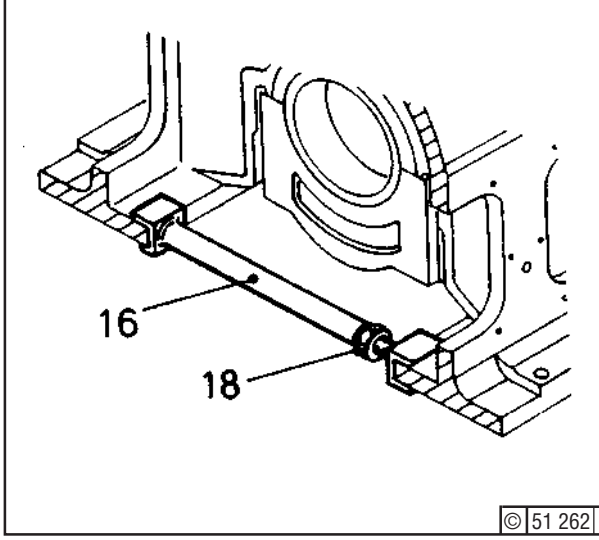

© 51 262 0

Fig. 4

Where studs (2) must be renewed, apply Deutz DW 60 compound to length of threads of new studs, screw into crankcase as far as they will go and tighten through 130 Nm (13 kpm).

☞ Refit oil sump (if removed) after application of Deutz DW 48 compound as a continuous "bead" (Fig. 5) of 2 - 3 mm width (**not more**) on the joint face.

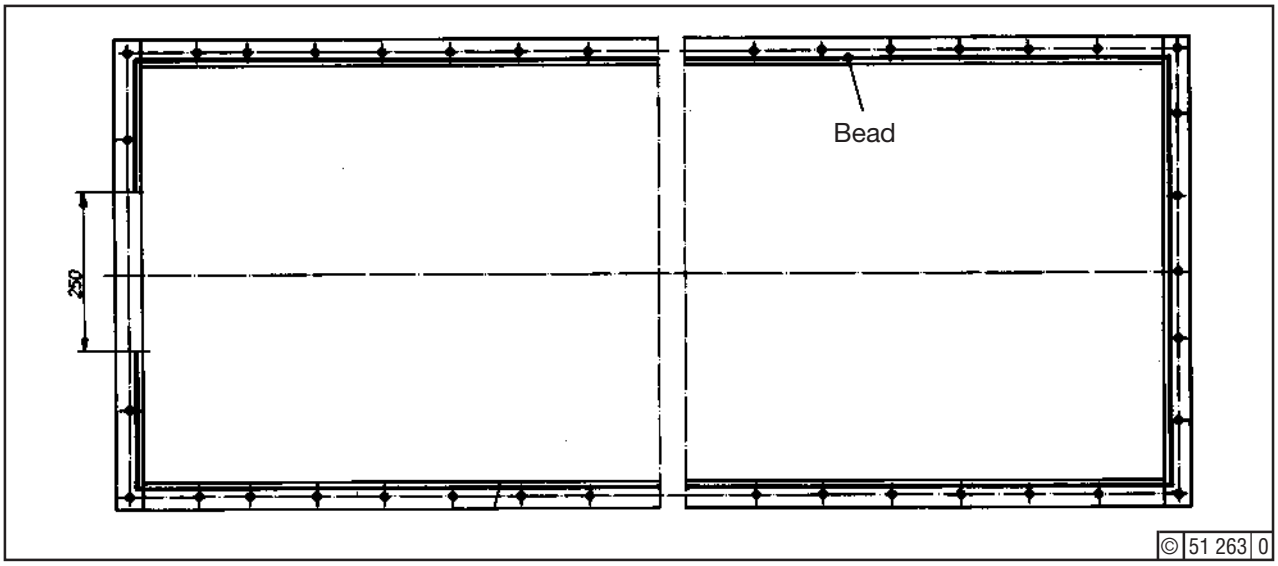

Fig. 5

This page intentionally left blank

Job Cards:

- 01.04.01
- 02.05.01
- 03.02.01

Tools:

- Standard tools
- Piston removing / refitting device (Section 1.8)
- 2 liner retainers (Section 1.8),
- Tap M 10
- Hoist

Job:

Remove cylinder head (job 01.04.01) and big-end bearing cap (Job Card 02.05.01). Place both liner retainers (7) - Fig. 1 - on two opposite studs and tighten annular nut (6) moderately.
Firmly screw thrust pad (11) on liner. Turn up piston (5) until bright liner running surface is just blanked off by piston top edge. Close gap between piston top and liner by grease and then scrape off carbon from liner top section **without** using a grinder.
Inspect reversing mark of top ring; if this mark has become so deep that piston rings are liable to catch here, grind mark away (Job Card 03.02.01).
Turn up piston to TDC.
Clean M 10 tapholes in piston top by means of tap and mount removing/refitting device (1).
Carefully raise piston (5) and connecting rod by hoist.

☞ Do not remove the layer of carbon on the piston crown until the piston has been removed.

⚠ During removal, check that rod big end will not foul the piston-cooling oil nozzle.

Remove top shell. Put down piston/rod assembly in wooden rack (9) - Fig. 2 - or between two blocks on a wooden support.
Secure rod against rocking. Wrap non-transparent adhesive tape, oil paper or a clean rag around crank-pin to protect from dirt or damage.

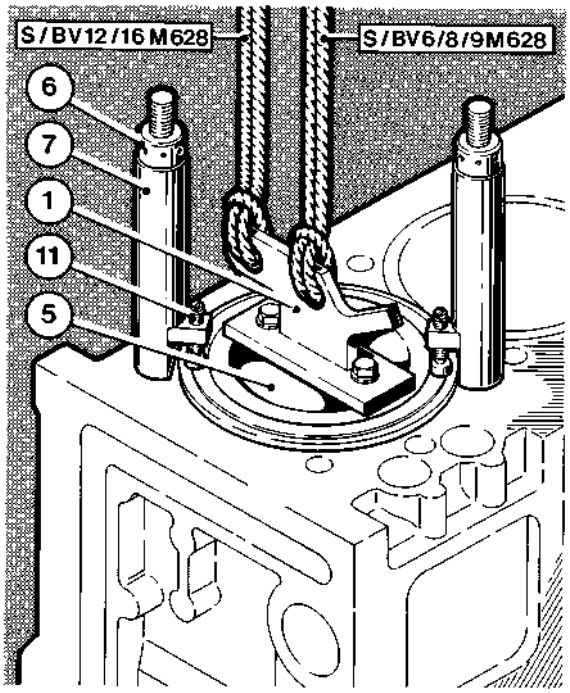

Fig. 1

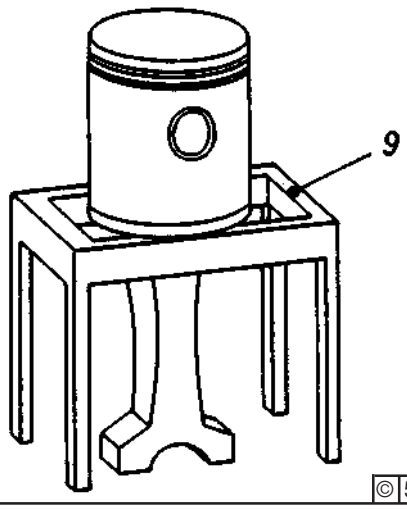

Fig. 2

This page intentionally left blank

Inspection

The piston servicing intervals with regard to "Scheduled Maintenance" are very different, depending on engine application and loading. The following procedure has been established so that efficient servicing intervals can be determined.

Tools:

- Standard tools

Job Cards:

- 01.05.04
- 01.08.01
- 02.04.01
- 02.09.01
- 02.10.02
- 02.10.04
- 02.12.01
- 03.02.01
- 06.02.01

Job:

- When the first piston inspection becomes due according to the maintenance schedule, the condition of pistons and piston rings is checked by inspecting the cylinder liner working surfaces from the combustion chamber using an endoscope (Job Card 01.05.04), or from the crankcase. If the cylinder heads have been removed, inspect as per Job Card 01.08.01.
- Thereafter draw one piston per cylinder bank. Remove that piston whrer the liner working surface appears to be in the worst shape (Job Card 02.09.01), in order to prevent faulty assesment of the piston status..
- Remove connecting rod as per Job Card 02.12.01.
- Clean cooling spaces, supply and discharge bores in the piston crown and body.
- Carefully remove oil carbon disposits in the piston using a scraper. If the disposit layer is ≥ 3 mm, check piston for consequential damage.
- Measure the combustion chamber contour of the piston. The centre of the piston in the case of motors with a compreesion ratio of
  e = 11.7 mm it must stand back by 0.8 mm - 1.1 mm
  e = 13.0 mm it must stand back by 2.3 mm - 2.6 mm
- If
  - the working surfaces of all cylinder liners are free from bright spots, scores and other defects, see also job 03.02.0,
  - the drawn pistons are in perfect condition,
    (in the case of engines, running on HFO, it must be checked whether there are oil carbon deposits in the piston cooling space. For this purpose introduce a screwdriver through the cooling oil discharge bore and check whether there exist any deposits. If a deposit layer is perceivable, i.e. exceeding ca. 0,5 mm, all pistons must be inspected and reconditioned as per Job Card 02.10.04.),
  - erosions of max. 1 mm in the area of the injection nozzle jets,
  - all piston rings are free from burned spots (brown/blue),
  - all piston rings are moving freely and not excessively worn, i.e.:
  - Running layers still fully intact and without signs of crumbling, no sharp edges,
  - Chromium plating on the rectangular ring still fully in tact and without cracks,
  - No running edge on the chamfered oil control ring exceeding 1 mm.

  the inspection of the remaining pistons may be postponed to the next inspection specified in the Maintenance Schedule. At that time a second inspection is carried out in the way as described above. If the findings are once again in order, servicing of all pistons may be postponed by another inspection interval.
- Should it become obvious during one of these inspections that the drawn piston shows any defects, all other pistons must be removed and serviced. If deviating values are measured, do not re-use piston! It is necessary to consult DEUTZ Service.

- For grater safety, inspect all other liners from the crankcase.

☞ The engine running hours up to the time when all pistons must be removed for the first time are considered as regular servicing interval for pistons in accordance with "S cheduled Maintenance". Enter the servicing interval in the Maintenance Schedule.

© 0693

Servicing:

All rings of adrawn piston must be renewed. Only in exceptional cases and after thorough inspection piston rings having run less than 1000 hours may be refitted.

Tools:
- Piston ring pliers (Section 1.8)

Aid:
- Ground piston ring (100 mm long)
- Fine emery cloth, No. 250
- Carborundum

Spare parts:
- Set of piston ring

Job Card:
- 02.10.02

Job:
- Remove piston rings with piston ring pliers (1).
- Free piston from carbon.
- Carefully clean ring grooves, using a ring fragment as scraper. Because of the chamfered face, scrape with the inner side of the ring and be sure not to damage the radii of the grooves and the groove flanks.
- Smoothen minor friction and seizure marks on the piston running surface with fine carborundum. In the case of major defects or heavy scoring, renew piston.
- Before refitting a cleaned piston, gauge the grooves, see job 02.10.02.
- Fit the piston rings, starting with the lowest. Use only piston ring pliers for this work.

☞ "Top" on the piston ring flanks must always point upward.

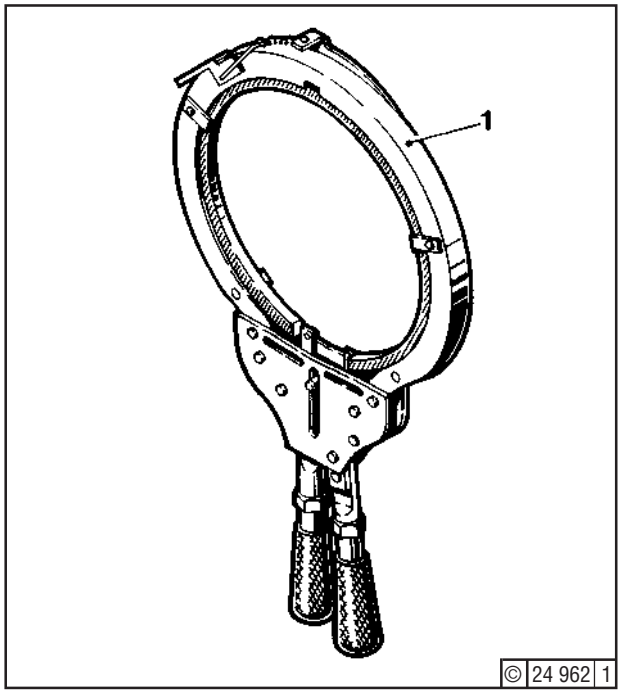

Fig. 1 Piston ring pliers

Ring Pack

1. Rectangular ring
2. Taper-faced compression ring
3. Bevelled-edge oil control ring

☞ After removal of piston control big-end bearingr, see Job Card 02.04.01.

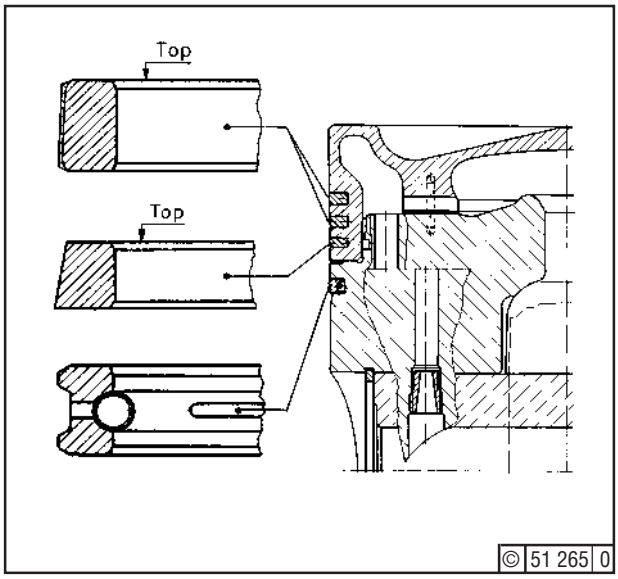

Fig. 2 Ring pack

Dimensions Specified for Piston Rings and Grooves		
New Condition		**Clearance**
Ring 1	4,925 - 4,940	0,190 - 0,225
Groove 1	5,130 - 5,150	
Ring 2	4,925 - 4,940	0,160 - 0,195
Groove 2	5,100 - 5,120	
Ring 3	6,965 - 6,987	0,063 - 0,105
Groove 3	7,050 - 7,070	

© 1083

This page intentionally left blank

Checking Piston Ring Grooves

Following each piston removal renew piston rings and gauge axial clearance "S" between new piston ring and bottom flank or ring groove at 8 points offset by 45°, Fig. 1.

Tools:
- Feeler gauge

Job Cards:
- 02.10.01
- 02.11.01

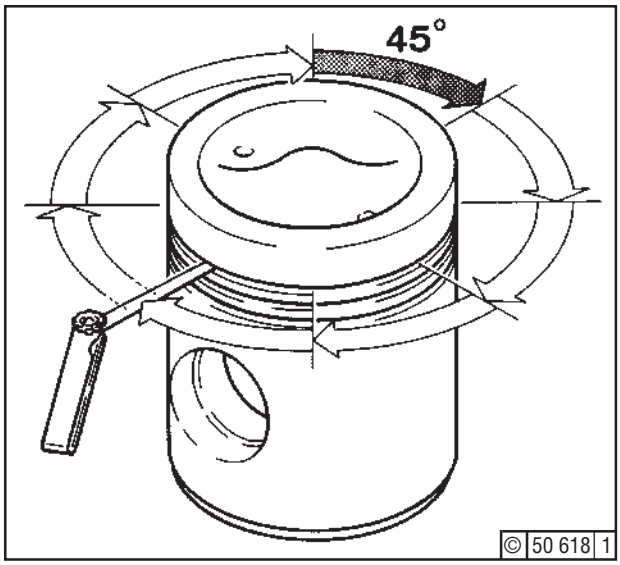

Fig. 1 Measuring points for gauging axial clearances

Job:

- Fit new piston rings as per job 02.10.01.
- Mark the insertion depth of 5 mm on a 0,4 mm feeler gauge, Fig. 2.
- Press new piston ring against groove base in the area of gauge point.
- Introduce feeler gauge at bottom flank of piston ring between piston and ring.
  If at any location the gauge can be inserted more than 5 mm, the piston must be reconditioned as per Job Card 02.11.01.

☞ Reconditioning will also be necessary if it must be expected that the axial clearance "S" is exceeded within the next piston overhaul interval according to the Maintenance Schedule.

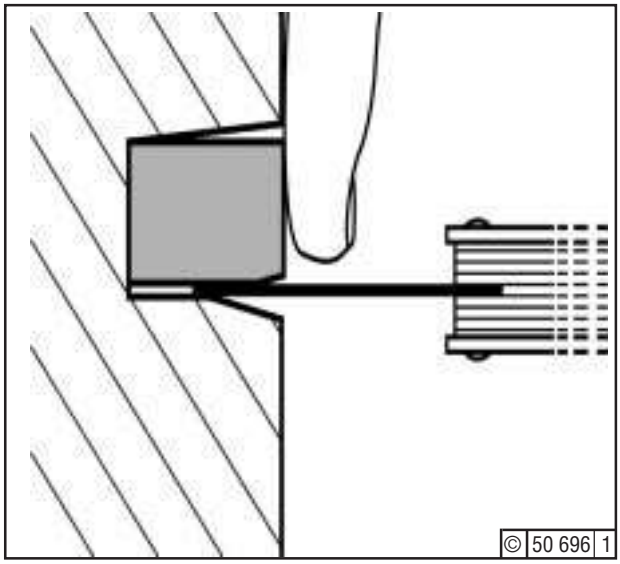

Fig. 2 Measuring procedure for gauging axial clearances

© 0392

This page intentionally left blank

Reconditioning

Normally, dismantling of the piston is not necessary. If, however, dismantling is indispensable because of the gauging results, this work may only be carried out by DEUTZ AG or an authorzed workshop.

Job:

Removal

- Inspect piston as per Job Card 02.10.01.
- Inspect piston rings grooves as per Job Card 02.10.02.
- Unscrew nuts (4) and take thrust pieces (5) out of piston base (3).
- Separate piston top (1) from base by hammering copper or plastic drift through cooling oil dis charge bore of the piston base.
- Clean all parts.

⚠ Do not damage components!
No manual or mechanical reworking is per missible on seating surfaces between piston top and base or on centering seats

- Measure dimension "X" of waisted studs with depth gauge.
  If dimension "X" exceeds 96 mm, renew waisted stud.
- Renew all worn and damaged parts.

Reassembly

- Screw waisted studs (6) with 25 Nm into piston top, if necessary.
- Place piston top (1) on its base (3) with dowel pin (2) properly engaged.
- Slide thrust pieces (5) onto studs so that spherical end faces towards the piston top.
- Apply DEUTZ S2 to threads and contact surfaces of nuts (4).

Job Cards:

- 03.20.02
- 02.10.02

Auxiliaries:

- Lubricant DEUTZ S2 (Section 3.6)

Tools:

- Standard tools
- Slide
- Copper or plastic drift

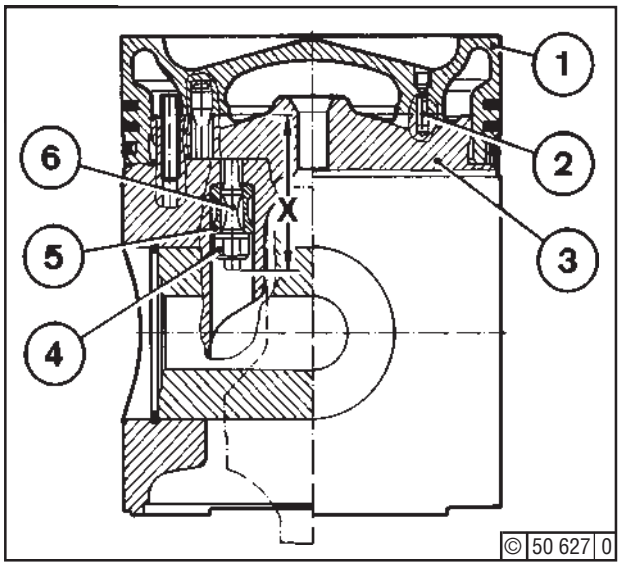

Fig. 1 Reconditioning of piston

- Screw nuts (4) onto studs (6).

  - Tighten nuts crosswise with 35 Nm.
  - Release nuts.
  - STighten nuts crosswise with 15 Nm.
  - Tighten nuts further through 60° - 90°.

  Check:
  - Tighten nuts with 35 Nm, while doing this the nuts must **not** continue to turn.

Otherwise determine and remedy cause; contact surfaces may be dirty or damaged, etc.

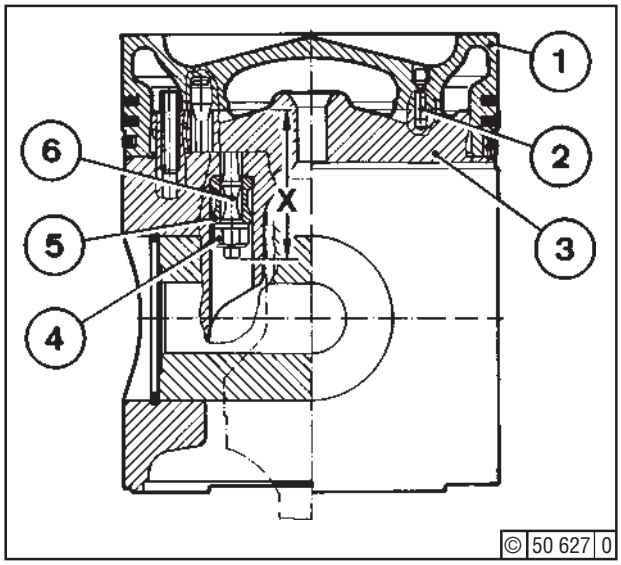

Fig. 2 Reconditioning of piston

Reconditioning

If it becomes obvious during an inspection of the piston ring grooves that the piston needs to be reconditioned, this can only be done by chromium-plating carried out by DEUTZ AG or by an authorized workshop.

© 0292

This page intentionally left blank

Job Cards:

- 02.09.01
- 02.13.01
- 02.14.01

Tools:

- Circlip pliers
- Hoist

Remove piston (job 02.09.01). Before removing piston pin, check that respective cylinder No. is marked at piston, shank, and big-end bearing cap (points I, II, and III in adjacent Fig.). Provide marks, if missing. Following pin removal, gauge small-end bush and pin (job 02.13.01).

Job:

Removing the Pin

Attach rod/piston assembly to hoist, with piston (7) at bottom and carefully place on piston crown. Remove circlips (6) and push out pin (5). Raise rod out of piston by hoist. Clean pin receiving bore, pin, and brush.

Replacing one Conrod

When replacing a conrod by a new one, make sure that the cylinder No. is marked at the points "II" and "III", before assembling the conrod and the big-end bearing cap (see Fig. 1).

Refitting the Pin

Install one circlip (6) in piston (7). Position rod by hoist so that, when introducing the rod into the piston, the cylinder Nos. marked on piston (I) and rod (II) are in line one above the other (see Fig. 1).

Apply oil to pin (5) and bush. Afterwards push in pin and install the second circlip.

When installing circlips (6), check that their gaps are facing towards the big-end (3) (see Fig. 2).

NEDEN ACABA?

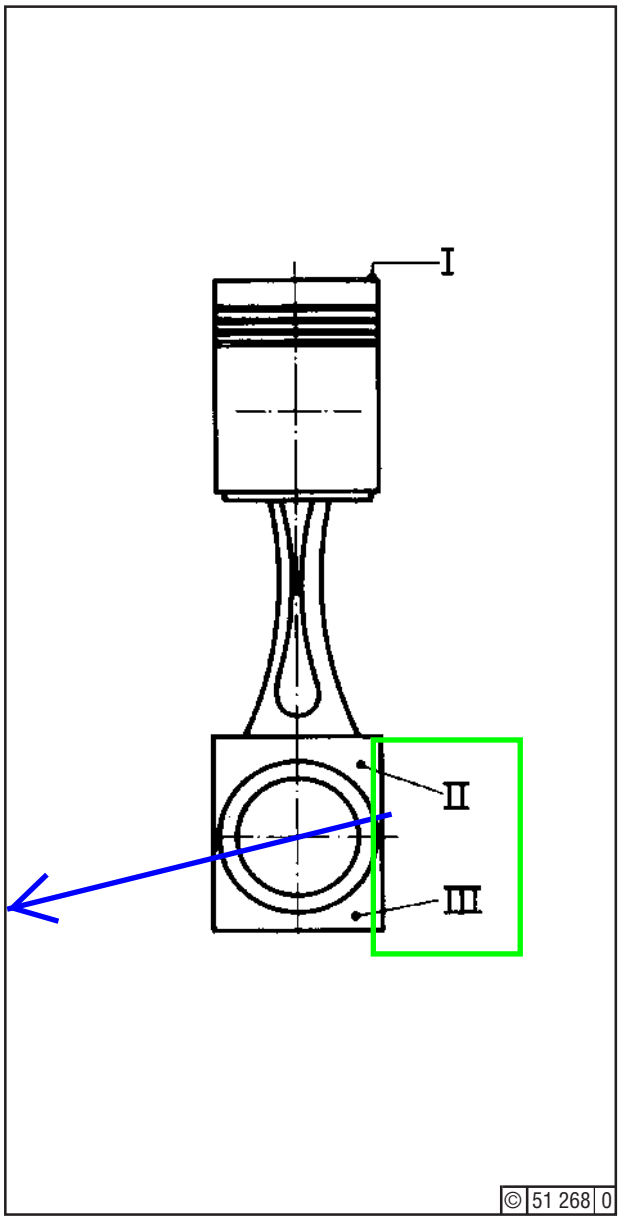

Fig. 1

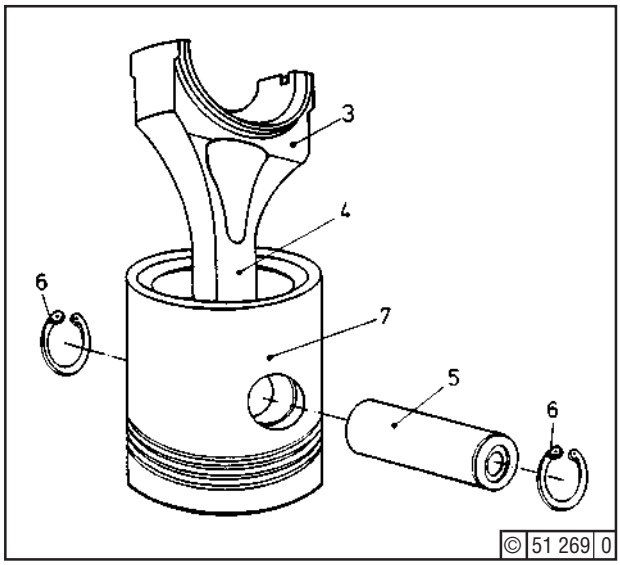

Fig. 2

This page intentionally left blank

Gauging

Measure the bearing clearance.

Job:

Remove pin (job 02.12.01). Put rod (3) upright. Introduce cleaned pin (1) into cleaned bush until pin projection "a" is equal at both bush ends.

Measure bearing clearance "S" by feeler gauge. Insert piston pin in cleaned piston pin bore and measure clearance. When the specified wear limit has been exceeded, the components must be individually gauged and the worn items renewed.

Tools:

- Feeler gauge,
- Inside micrometer,
- Outside micrometer,
- Removing/Refitting device for big-end bush (Section 1.8.1)

Clearance	New Condition	Wear Limit
Pin / Bush	0,09 - 0,155	0,2
Pin / Piston Bore	0,01 - 0,03	0,1
Diameter		
Pin bush inner diameter	105,090 to 105,145	105,15
Piston pin	104,990 to 105,000	104,95
Piston pin bore	105,010 to 105,020	105,07

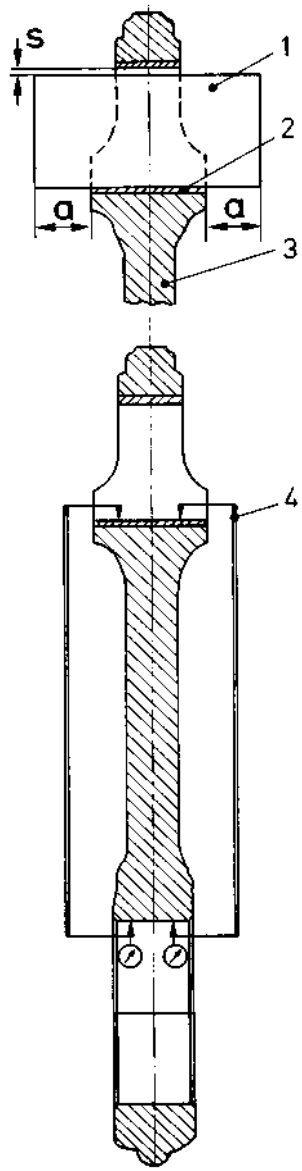

Reconditioning

Press out old bushes with a suitable tool after applying a saw. Undercool new bush with liquid nitrogen, if available, (see Section 3.7) or by placing the bush in the freezer. Heat small end in oil bath to 80-90°C. Introduce bush by removing/refitting device so that the bush projects the conrod eye evenly on the right and left. Afterwards, check bush for roundness and then check - with the adjoining fixture (4) - that the unparallelism between the small-end/big-end bearing centre lines is max. 0,04 mm per 100 mm length. If such fixture is not available, proceed as follows:

Remove rings from piston (job 02.10.01). Install piston (job 02.14.01), however, without piston rings. Introduce a feeler gauge between piston and liner and check that clearance endwise and crosswise to the engine are identical. If there is no equal clearance or if the unparallelism exceeds the specification, replace rod. Straightening is not alllowed.

© 1084

To begin with check, maintain and measure rings as under Job Cards 02.10.01 and 02.10.02. Inspect liner (Job Card 03.02.01). Matching of rings to grooves: see Job Card 02.10.01.

If piston/rod assembly was dismantled, see Job Card 02.12.01.

Job Cards:

- 01.09.01
- 02.06.01
- 02.10.01
- 02.10.02
- 02.12.01
- 02.15.01
- 03.02.01

Tools:

- Suspension device (Section 1.8),
- Ring compressor (Section 1.8),
- Ring pliers (Section 1.8),
- Hoist.

Job:

Mount suspension device (1) on piston (5). Make sure that joint of spring in conformable oil control ring is displaced by 180° relative to ring gap. Install rings by pliers, beginning with the oil control ring, and evenly distributing the ring gaps around the piston periphery. Apply ample oil to piston skirt and rings. Fit ring compressor (2) in place and tighten wingnut (6) while knocking the band on alternate sides with the hands. This is to ensure that the rings are properly seated in their grooves.
Turn respective crankpin to TDC and remove protective wrapping. Apply an ample amount of oil to liner, crankpin and running surface of top big-end shell. Install shell in big-end. To guide the piston, a pipe can be placed on suspension device (1). Check that big-end marking faces the crankcase door.

Introduce piston/rod assembly into liner, taking care that the big rod end will not damage the liner. While introducing piston further into liner, check that ring compressor (2) is squarely seated on the inner liner shoulder, thus preventing breakage of the rings. Lower piston/rod assembly still further until the big-end settles with the top shell on the crankpin. Remove suspension device (1) and compressing tool (2). For big-end bearing assembly, see Job Card 02.06.01.

If removed, refit piston coolant nozzles in their original location as marked by their cylinder Nos. Check nozzle alignment by test pin (Job Card 02.15.01).

Observe running-in instructions, Section 4.6.

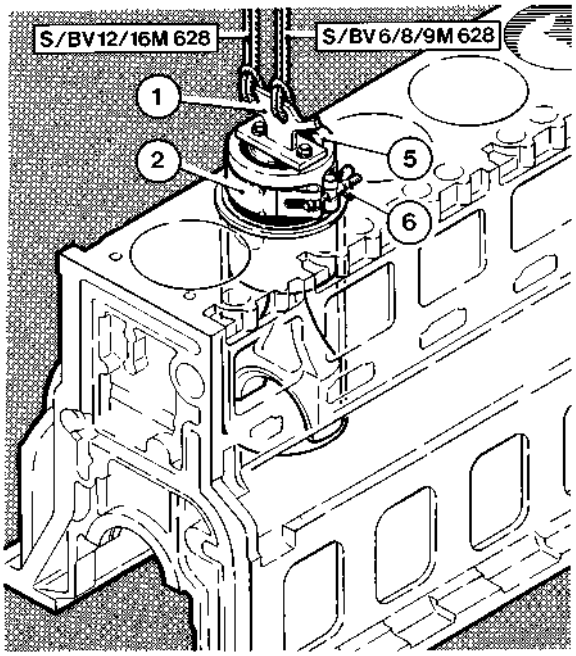

© 24 968 1

This page intentionally left blank.

Inspection

To ensure proper piston cooling, check that the coolant jet centrally enters the inlet hole of the piston. Make sure, therefore, the coolant nozzle is properly located.

Tools:

- Pocket lamp,
- Mirror (Section 1.8),
- Check pin (Section 1.8),
- Aligning tool (Section 1.8).

Job:

Inspecting the Check Pin

Make sure the bottom end of pin (2) is free from defects and the whole pin is straight. Install pin (2) in a spare nozzle and turn by hand. If the upper end is wobbling, straighten the pin.

Alignment Test

Remove crankcase door. Move piston to TDC.
Place mirror (4) so that coolant inlet (1) in piston and coolant nozzle (3) are clearely to be seen.
Fix a string to pin (2) and secure string to the engine exterior, to ensure that the pin cannot fall into the sump.

Carefully lower the piston by turning the crankshaft by about 30° crank angle, while guiding the pin ends into coolant inlet (1) and coolant nozzle (3).

Check that pin can be rotated freely, i.e. without contacting the check valve. Failing this, correct nozzle position with the aid of the aligning tool and the mirror.

Remove check pin after test!

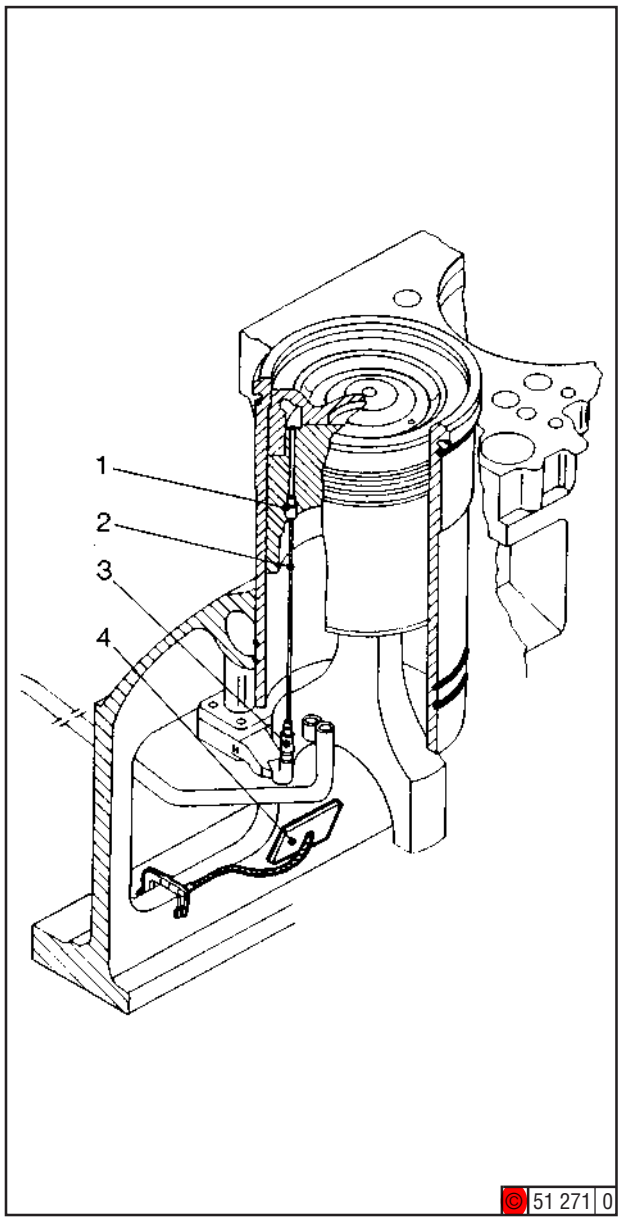

This page intentionally left blank

Servicing

(Filling and Bleeding)

Although satisfactory operation of this equipment requires complete freedom from air in piping etc., specific bleeding is normally not required since the automatic couplings keep oil in and air out.

Job Cards:

- 01.04.01
- 01.09.01
- 02.07.01
- 02.08.01

1 Pump
2 Oil reservoir
3 Filler plug
4 Hand lever
5 Retaining spring
6 Hand wheel for shut-off valve
7 Pressure gauge
8 Hose
9 Distributor
10 Safety half-coupling
11 Ram cylinder
12 Safety half-coupling

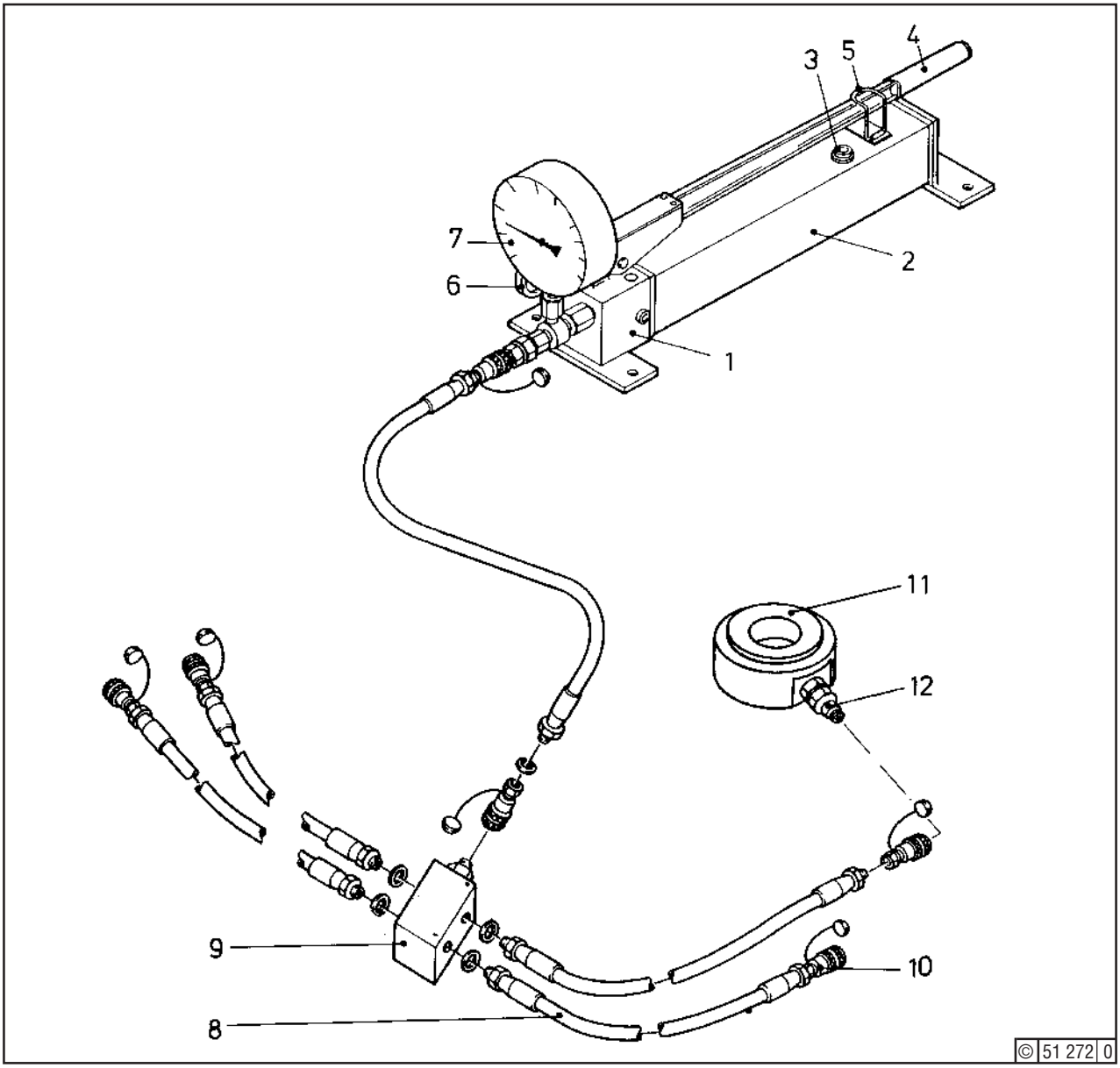

© 0683

Design and Function
Pump (1) builds up oil pressure which reaches rams (11) through hoses (8).
Overpressure is avoided by a relief valve. Gauge (7) is used for setting the oil pressure required for the spec ific screwed joint. Hand wheel (6) is turned to let off pressure afterwards. Safety hose couplings (10) and (12) are used in combination with H.P. hoses (8) and distributor (9). If less than four rams are operated, the unused hoses **must** be closed with half-coupling (10) and their locking nipples.

Filling and Bleeding

☞ The normal working position of pump (1) is horizontal, but the vertical position - hose connection down - is also permissible.

Use only one of the following hydraulic oils:

BP Energol Hydraulici 50	Mobil Hydraulic oil
BV E 100 Heavy- duty oil	Shell AB 11 oil
Esso Zerice 36	Viscobil Sera I oil
Gasolin Special AS	Viscobil oli CL 40 oil

Any other oils are liable to affect sealing materials. Definitely unsuitable are brake fluids, dashpot oils, gas, oil, kerosene or gasoline/petrol.

Job:
Fill pump (1) through hole (3) with min. 1,5 litres of oil. Connect pump (1), support for gauge (7), distributor (9) to hoses.
Operate pump lever (4) until hoses are bled.
Unscrew safety half-coupling (12) from tool. Fill tool with oil and refit half-coupling. Connect hoses.

⚠ All parts of the hydraulic device must be in perfect shape. This applies in particular to the hoses, which must never be sharply bent or pulled.

© 0583

☞ If trouble arises, for instance with the build-up or drop of hydraulic pressure, proceed as follows:

with pump (1) in vertical position (hose connection down), work lever (4) quickly up and down, while opening and closing shut-off wheel (6). Inspect ball valve in the support of gauge (7) and, if necessary, recondition.
Included in the set of reserve parts supplied with the engine is a pressure gauge also fitted with a safety half-coupling (12) for connection to one of hoses (8); this spare gauge can be used for calibrating regular gauge (7).

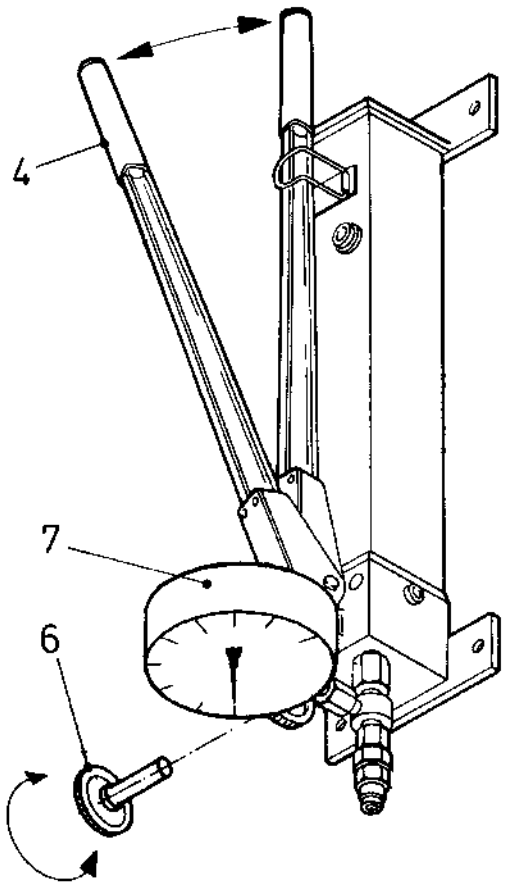

© 51 273 0

This page intentionally left blank

Coupling size: EZ 121 S / EZ 135 S
EZ 142 S / EZ 166 S

☞ The coupling can be radially removed without affecting engine and driven machine.

Tools:

- Standard tools,
- Hoist,
- Puller bolts.

Job:

Removing the Coupling

Attach coupling to hoist. Mark flanged jacket (4) - Fig. 1 - relative to flywheel (6), and coupling flange (9) relative to flanged hub (10).
Slacken hex. bolts (1) consecutively in stages through dimension "X".

Coupling size	Dimension„X“
EZ 121 S / EZ 135 S	12 mm
EZ 142 S / EZ 166 S	13 mm

Apply light blows to the heads of bolts (1) to work loose cover (2) from rubber element (3) and press it out from the locating seat of jacket (4).

In doing so, dowel sleeves (5) remain fixed in jacket (4) and, for piloting, partially in cover (2).

Unscrew hex. bolts (7) and take off washers (14). Remove any dowel pins (8) and lockplates (13). Unscrew hex. bolts (11) and remove pin (12). Using puller bolts M 18x50 / M 20x50, press back jacket (4) - Fig.2 - from flywheel (6) until the locating seats of flywheel and hub come clear.
By means of puller bolts remove hub (10) out of location seat of flange (9). Remove coupling.
For element replacement, see Vulkan instructions.

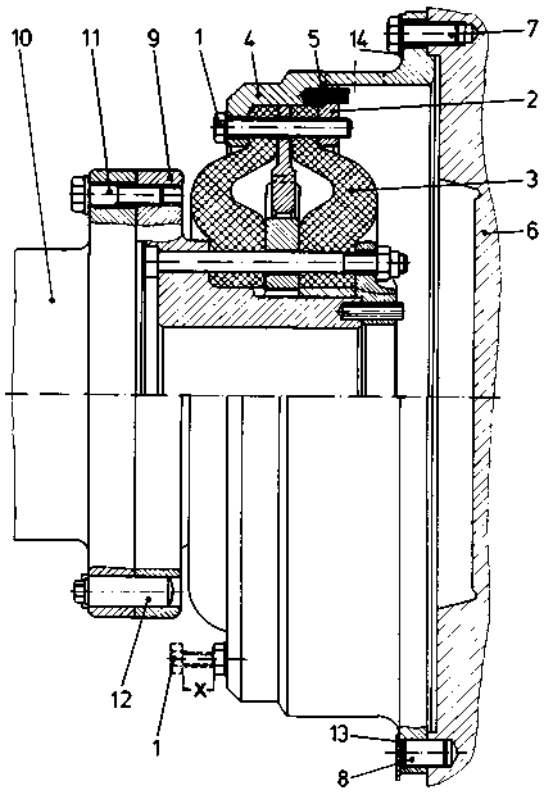

© 51 274 0

Fig. 1

Refitting and Coupling
Refitment is done in reverse order:
after installing the coupling, restore connection between flywheel (6) and jacket (4).

Tighten bolts (7) as specified (Section 3.5, Item 42 for couplings EZ 121 S / EZ 135 S, and Item 43 for couplings EZ 142 S / EZ 166 S).
Finally, attach flange (9) - Fig. 2 - to hub (10) and secure external element fastenings.

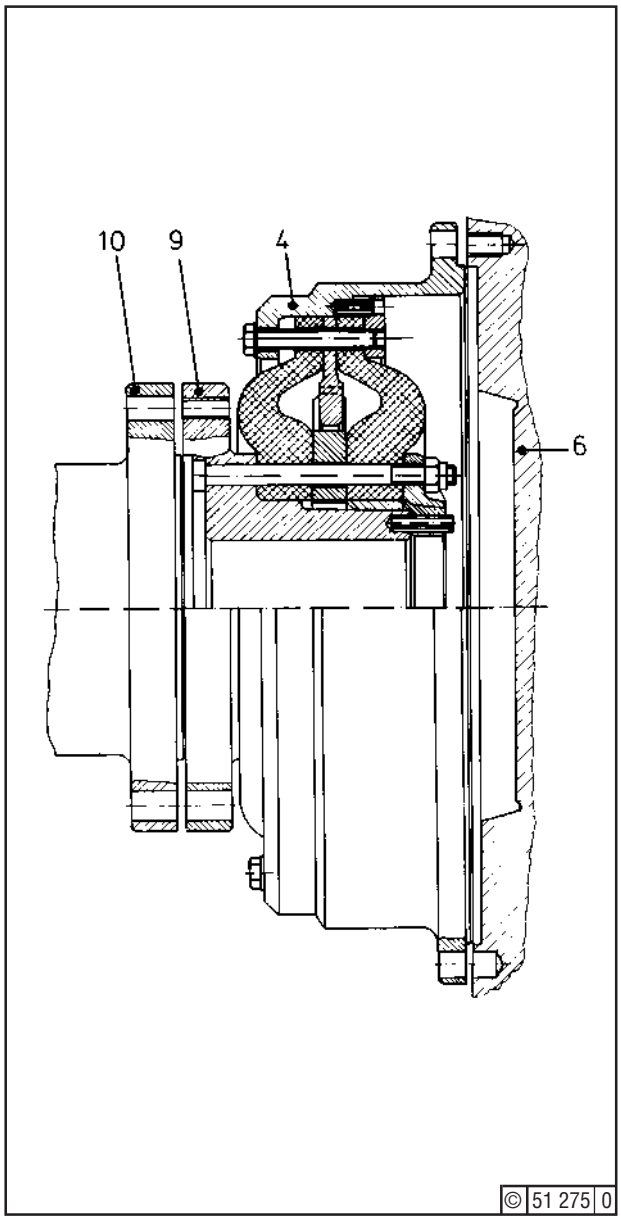

Fig. 2

Coupling Size: EZ 121 S, EZ 135 S, EZ 142 S, EZ 166 S, EZ 171 S, EZ 195 S, EZ 201 S

Tools:

- Standard tools,
- Puller bolts.

☞ Elements can be radially removed without affecting engine and driven machine.

Job:

Replacing Elements

Release hex. bolts (1) consecutively in stages and remove with washers as follows:
with the bolts still in cover (2) through half the thread length, apply light blows to the bolt to work loose cover (2) from element (3) and press it out from the location seat of jacket (4). In doing so, dowel sleeves (5) remain fixed in jacket (4). Unscrew hex. bolts (7) with washers (14). Remove any dowel pin (8) and lockplate (13). Press back jacket (4) by puller bolts and remove ring (15).

For further element replacement see Vulkan instructions.

For refitment, connect jacket (4) to flywheel (6) by fitting dowel pin (8) and lockplate (13) - if any -, tightening bolts (7) with washers (14) - see Section 3.5, Item 51 for couplings EZ 121 S / EZ 135 S, Item 52 for couplings EZ 142 S / EZ 166 S, Item 53 for couplings EZ 171 S / EZ 195 S, and Item 54 for coupling EZ 201 S -.

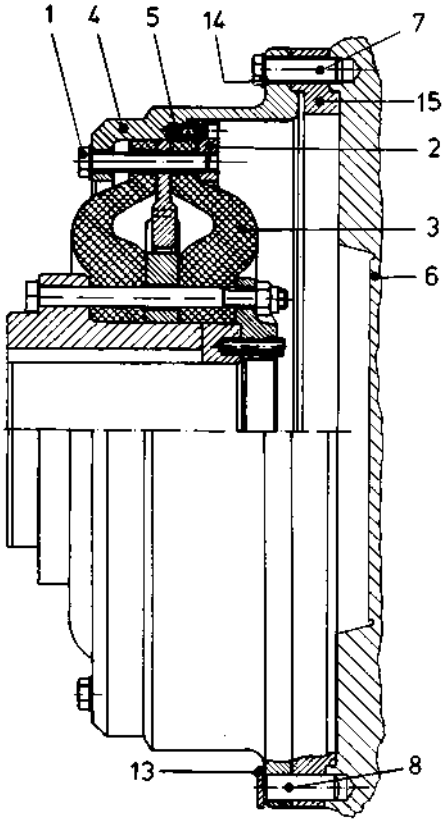

© 51 276 0

This page intentionally left blank

Inspection

Inspect gaskets of crankcase doors and test relief valves.

☞ Following removal of doors (1) with valves (4) inspect liner seals between water jackets and crankcase interior. Prime lubricating circuit and check that all bearings are supplied with oil. Clean oil sump from any sludge.

Tools:

- Standard tools

Job:

Unscrew hex. bolts (3) and remove door (1) with relief valve (4). Press valve by hand from inside and release. If disk plate (6) jams when pushing or if the screw spring (10) prevents the plate from pressing back against the 0-seal (7), dismantle and clean the relief valve.

Servicing

Dismantling the aRelief Valve

Unscrew hex. bolts (14) and remove sealing rings (13). Unscrew cheese-head screws (9) and remove round flange gasket (11) and ring carrier (8) with 0-seal (7). Disk plate (6) and spring(10) are beared in relief valve housing (4). Replace any defective part.

☞ Before reassembling, check round flange seal (11), gasket (2), and 0-seal (7) and replace, if required.

Tighten hex. bolts (3).

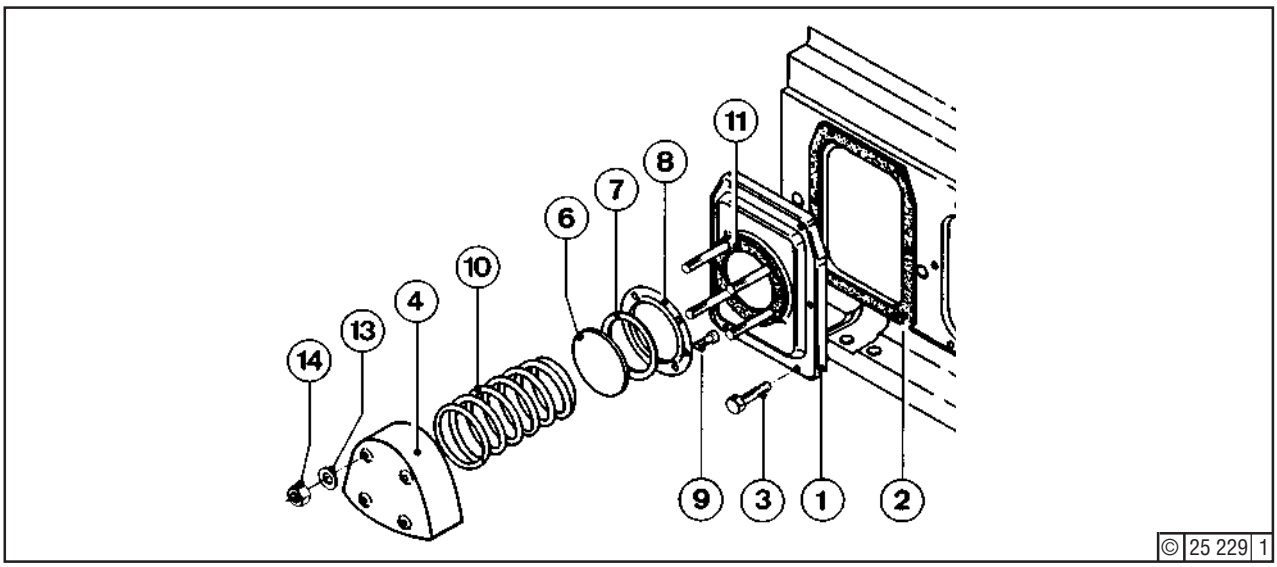

© 0985

This page intentionally left blank

Servicing

At every piston inspection, check also liner running surface and cylinder head gsket seat.

☞ Renew heavily scored liners. Remove any slight scores or high spots with emery cloth. Remove any shoulder marks. The nitrided cylinder liners need not to be extra re-roughened.

Job Cards:

- 02.09.01
- 03.03.01
- 03.06.01

Tools:

- Standard tools
- Emery cloth (grain size 200)

Job:

Before cleaning the liner, cover up the crankcase interior. **Prior to piston removal,** any severe top ring TDC reversing marks must be removed, and in any case when installing oversize rings. To avoid damage to the liner running surface in the zone of the reversing mark and below, the following procedure is recommendable:

Place a metal plate, 1 mm smaller in diameter than the liner, on the piston. Turn piston high enough so that the ceconditioning work will not affect the running surface below the reversing mark. Before starting the job, close clearance between piston and liner with grease. Remove reversing mark by means of emery cloth. When the job is finished, clean liner thoroughly.

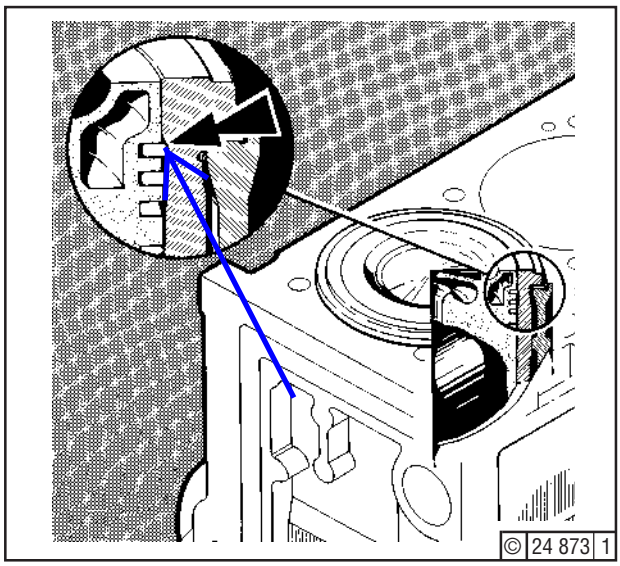

☞ After cleaning the liner, gauge the wear (job 03.03.01).

⚠ Liners are to be roughened whenever pistons are removed (job 03.06.01).

This page intentionally left blank

Servicing

Remove all cylinder liners, check and recondition or renew as necessary.

☞ Any necessary reconditioning of the cylinder liners and possibly of the crankcase must be carried out by DEUTZ Service.

Job Cards:

- 03.02.01
- 03.03.01
- 03.04.01
- 03.05.01
- 03.06.01
- 09.00.01

Tools:

- Standard tools

Job:

- Drain off cooling water (Job Card 09.00.01).
- Remove cylinder liner (Job Card 03.04.01) and clean.
- Inspect liner running surface for scores and wear-shoulder; inspect also cylinder head set - see Job Card 03.02.01.
- Gauge inside diameter and ovality (Job Card 03.03.01).
- Check outside of liner for damage, cavitation, corrosion or scale.
  Corrosion and scale suggest unsuitable cooling water. Observe instructions given in Section 6.
- Renew 0-rings (for sealing-off the cooling chamber) and sealing ring below the liner collar.
- Install liner (Job Card 03.05.01).

© 1083

This page intentionally left blank

Inspection / Gauging

Check (TDC) piston reversing mark. If it exceeds some 0,2 mm, gauge liner. Following installation of a new liner, a check for roundness will be sufficient.

☞ To begin with, carefully clean liner and stadia and cover up the crankcase interior below the liner.

Job:

Set micrometer to nominal liner diameter. Suspend stadia (1) in liner (2). Gauge liner axially and radially at the stadia levels provided. To do this, hang stad ia in the respective direction.

The gauging levels are provided by 3 holes in the stadia. Record all readings. When the specified limit is exceeded, replace liner.

Nominal bore	Ø 240 mm dia.
Wear limit (measured at TDC of 1st and 2nd compression ring)	Ø 241 mm dia.
Maximum ovality	0,072 mm

⚠ If ovality is exceeded, remove liner and trace cause (Job Ca rd 03.04.01).

Gauging levels from liner top:

a = 60 - 61 mm
b = 190 mm
c = 340 mm

☞ Renew cylinder liners which have almost reached the wear limit after more than 50,00 running hours.

Tools:

- Stadia (fabricated locally),
- Block gauge

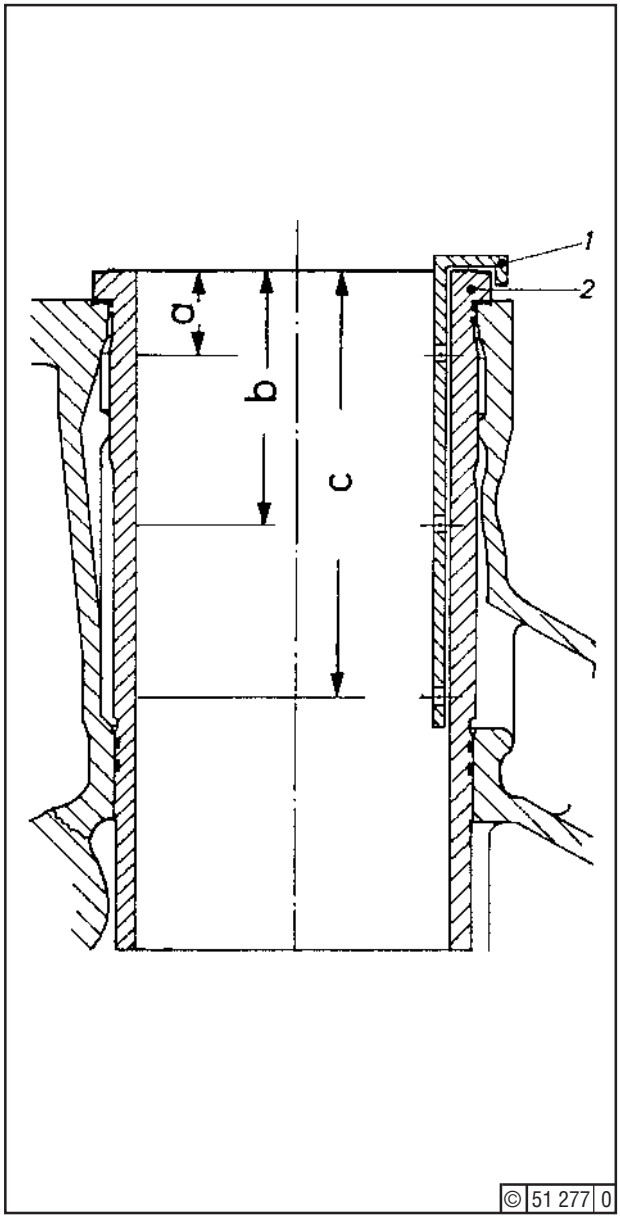

This page intentionally left blank

Cylinder lining removal

Remove the cylinder lining once the max. admissible degree of wear or required repair has been reached.

☞ Prior to removing the cylinder lining, take the standard measurement
See job card 03.03.01

Job Cards:

- 01.04.01
- 03.02.01
- 03.03.01
- 09.00.01

Tools:

- Removal and refitment tool (section 1.8).
- Standard tools
- Straight edge
- Hoist
- Scribing iron

Aid:

- Felt pen, water-proof

Job:

- Drain cooling water from the crankcase, job card 09.00.01
- Remove cylinder head, job card 01.04.01.
- Cover the crank cavity.
- Clean the cylinder lining collar and the crankcase seating surface.
- Place a straight edge on the cylinder lining collar, against 2 special cheese head screws, Fig. 1.
- Mark the refitment position of the cylinder lining in the crankcase along the straight edge using a water-proof felt pen.
  It may also be marked by means of the scribing iron, however, ensure that the sealing surface is not damaged, i.e., scribe on the outer circumfe rence of the cylinder lining collar.
- Mark the cylinder lining with the cylinder designa tion, e.g. A2 in Fig. 1.
- Fit bridge (2) on crankcase (5), Fig. 2
- Fit tension rod screw (3) through the hole of the bridge (2) in the cylinder lining.
- Press the pulling bracket (6) against the cylinder lining from the crank cavity.
- Screw tension rod screw (3) into the pulling brac ket (6), and fit hexagon nut (4).
- Tighten hexagon screw (4) until the cylinder lining raises out of the guide. Use a lifting device to pull the cylinder lining vertically out of the crankcase, and deposit on a wooden support.
- Remove the seal (1).
- Check the running surface of the cylinder lining, job card 03.02.01.
- Thoroughly clean the cylinder lining on the outsi de, particularly the grooves in the round seals.

☞ Deposit of boiler scale is an indication of unsuitable coolant, observe the regulations, section 6.4.

Decide whether additional linings must be removed on the basis of the findings.

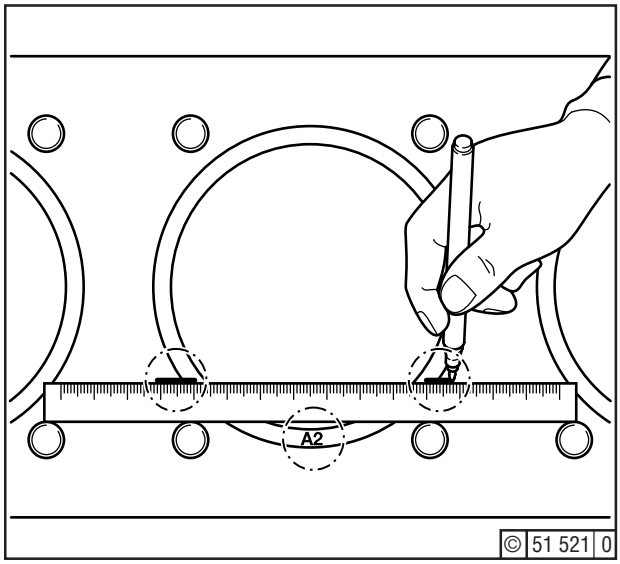

Fig. 1 Marking the refitment position

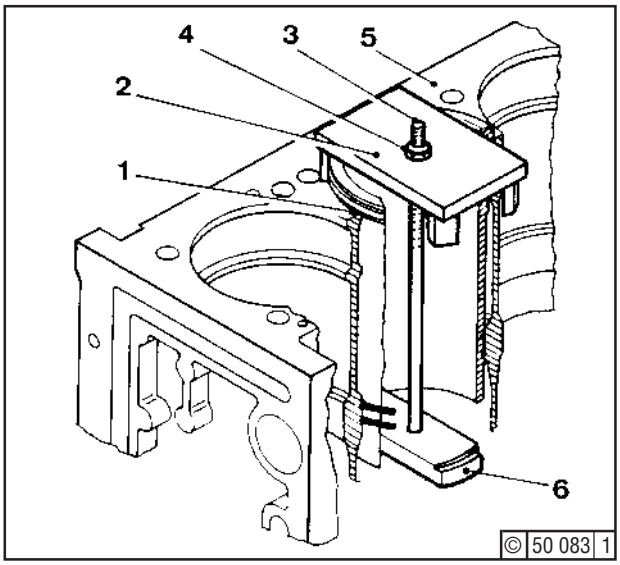

Fig. 2 Removal and refitment tools

© 0698

This page intentionally left blank

Gauge new liner after installation max. ovality 0,15 mm. When refitting used liners, inspect reversing marks of upper piston rings (see job 03.02.01).

Job Cards:

- 03.02.01
- 03.03.01
- 03.06.01

Tools:

- Standard tools,
- Lubrificant Deutz F5 (Section 3.6),
- Liner removing / refitting device (Section 1.8) ,
- Hoist,
- Square timber (70 x 70 x 300)

Job:

Cover up crankcase interior and clean wall of water space, seating surface of liner flange, as well as guide surfaces and conical introduction zones for 0-seals.

Grease Viton 0-seals (7 and 8) (5 and 4 mm Ø) with Deutz F5 and insert into grooves without diatorting them. Be sure to use always new genuine seals.

Inspect seal (6), renew when necessary, and insert in the locating seat provided in the crankcase. Mount liner removing/refitting device. For liner protection insert square timber (5) between bridge (1) and liner flange.

Attach liner to hoist and let liner slide into crankcase. When exerting slight pressure, the liner slides ontoits seat. Detach liner removing/refitting device (see Job Card 03.03.01).

Roughen running surface with a honing device (Job Card 03.06.01), unless this has already been done. If no hoing device is available, use emery cloth No. 200 (see Job Card 03.06.01 concerning roughening direction). When roughening is completed, clean liner thoroughly.

Run in engine again.
See Section 4.6, run-in instructions.

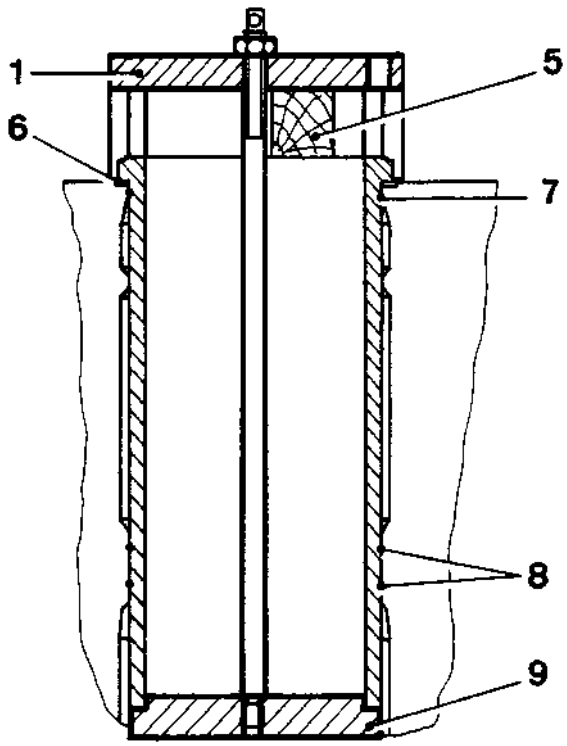

© 50 081 1

© 0985

This page intentionally left blank

Honing Cylinder Liner

A liner must be honed,
- upon installation of new piston rings or new piston,
- if running surface has become partially or totally bright, i.e. honing grooves are no longer visible,
- if grooves are too deep.

☞ The honing may only be carried out by DEUTZ AG workshops which are especially equipped to do that job.

© 1192

This page intentionally left blank

Inspection

The effects of heat and internal stressing may effect the foundation, so make sure that engine foundation bolts are tight (even where piping renders the access difficult).

☞ Inspection is especially important during the initial 50 running hours of the engine.

Job:

Strike chocks/shims (2) and (3) respectively with a hammer and check that this will produce a solid metallic sound. Failing this, bolts (4), (5), (6) are liable to be slack and must therefore be retightened as specified by the foundation erector. Thereafter, measure crankweb deflection (job 02.02.01).

Job Card:

- 02.02.01

Tools:

- Standard tools

☞ Cleanliness is very important, in particular, do not let the foundation come in contact with oil or water.

Rigid Mounting

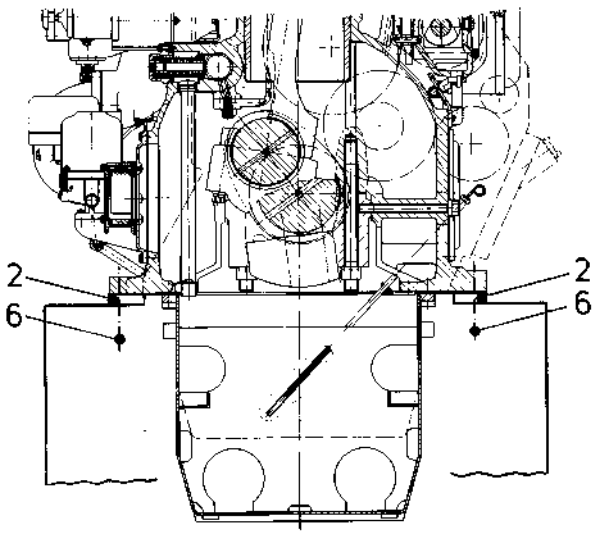

Resilient Mounting

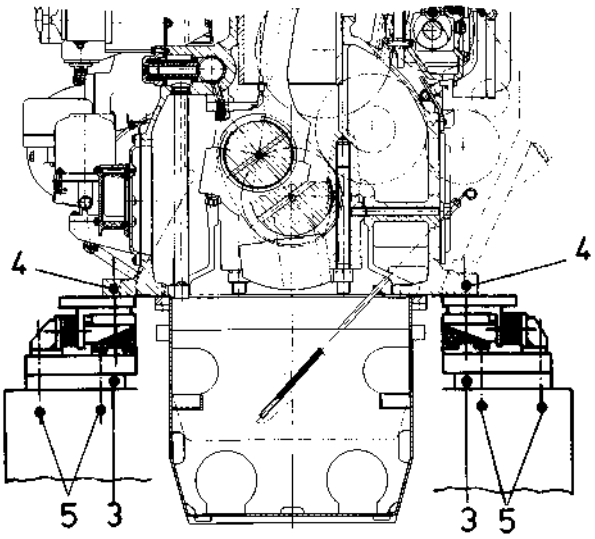

© 51 278 0

This page intentionally left blank

Reconditioning

Resiliently mounted engines call for the least possible imbalance of the crankshaft system.

When disassembling the crankshaft system of resilienly mounted engines, make sure that pistons, connecting rods and bearings are marked with the relevant cylinder No. During reassembly, it is necessary - as usual - that pistons, connecting rods and bearings are reinstalled for the same cylinder and in the same paired sets. This is particularly important in the case of resiliently mounted engines, in order to prevent any further imbalance of the crankshaft system.

Tools:

- Weighing scale (if required)

© 1283

This page intentionally left blank

Inspection / Gauging

Measure clearance of accessible bearings. If wear is discovered, examine other bearings also. To do this, remove injection pumps (Job Card 07.04.01).

☞ Replacement of bearing bushes requires camshaft removal (Job Card 04.05.01).

Job Cards:

- 02.00.01
- 04.05.01
- 04.06.01
- 07.04.01

Tools:

- Standard tools,
- Feeler gauge

Job:

Remove cover (1) and fit feeler gauge between camshaft and bearing bush.

Nominal clearance:	0,111 - 0,208 mm
Wear limit:	0,3 mm

Once 0,3 mm has been reached, bearing replacement is due.

Reconditioning

We recommend that reconditioning work be entrusted to a Deutz Service Station.

Removing the Bearing Bushes

Remove injection pump with drive (Job Card 07.04.01). Detach cover (1) and remove camshaft (Job Card 04.05.01). Either saw through bearing bushes (2) and/or drive out of the crankcase (3) with a brass pin (Ø 0,94 mm), or withdraw with a puller.

Fitting New Bearing Bushes

Prior to installation, the bearing bushes are to be undercooled (shrunk) in liquid nitrogen down to between -170°C and -196°C (see Section 3.7). Make sure that all shrink-fit surfaces (bushes and their receiving bores in the bushes in crankcase) are perfectly clean, i.e. metallically bright.
Be sure to install the bushes in the location shown overleaf, i.e. with the bores in the bushes coinciding with the bores in the crankcase.

© 0985

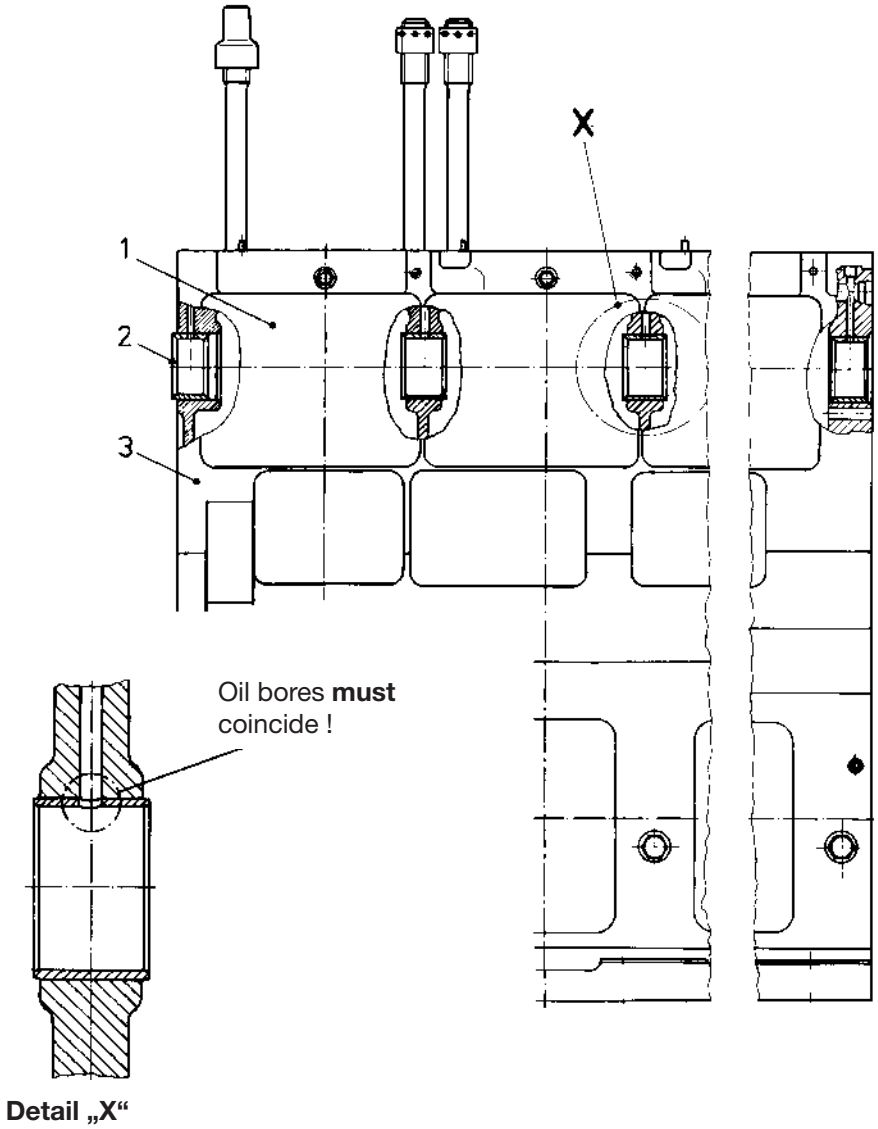

Detail "X"
Install camshaft (Job Card 04.06.01). Refit cover (1), tightening as per Section 3.5, item 28. Finally, mount injection pump (Job Card 07.04.01).

© d0985

Inspection

Inspect accessible tappet rollers and cams. If wear is found, inspect other tappet rollers and cams. To do this, remove injection pumps (Job Card 07.04.01).

Job:

Remove accessible covers (10) - Fig. 1 -. Turn engine and check for perfect running of the rollers and that the cams have a perfectly smooth surface. Especially critical defects are:

- scaling and cracks
- blue heat discoloration on the cams

If cams and rollers are found to be in perfect order, refit covers (10), tightening fastening bolts as per Section 3.5, item 28.

Reconditioning

Reconditioning is primarily required when rollers have become defective or the valve drive is jamming.

☞ Depending on the valve drive's location, it is necessary to remove injection pump drive (see Job Card 07.04.01).

Job Cards:

- 01.04.01
- 01.09.01
- 07.04.01

Tools:

- Standard tools
- Lamp
- Prism
- Hard-wood block or aluminium plate

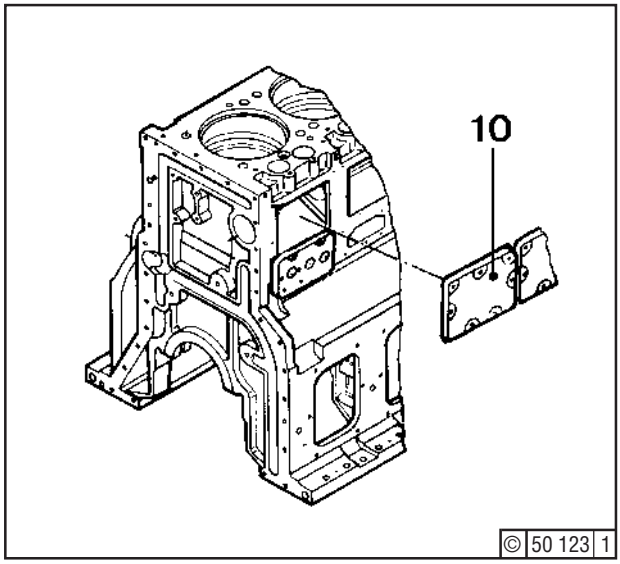

Fig. 1

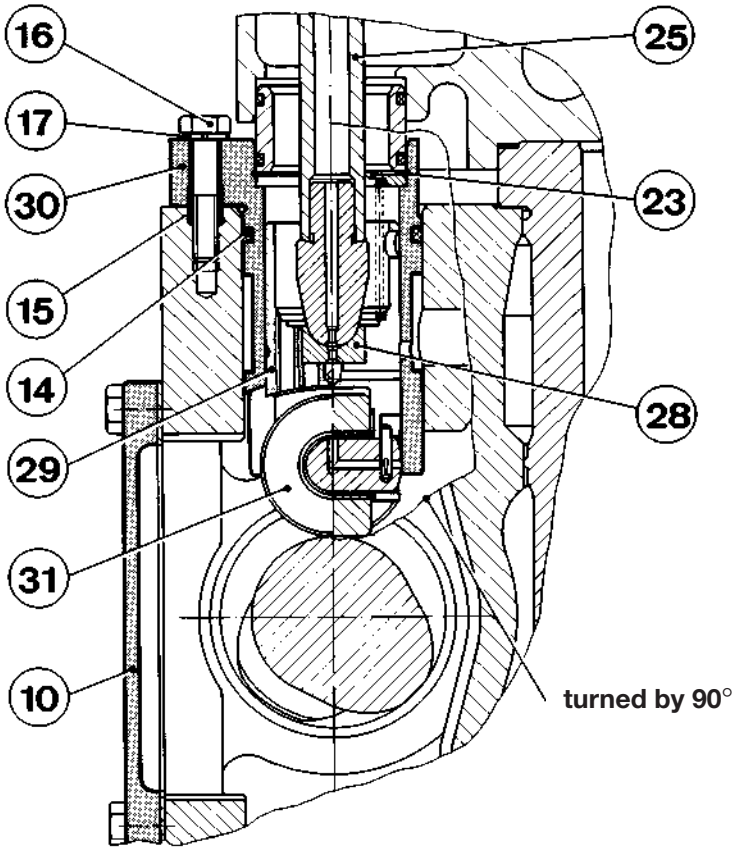

© 50 116 1

Fig. 2

Job:

Removing the Drive

Remove cylinder head (Job Card 01.04.01). Take out pushrods (25) - Fig. 2 - and remove bolts (16) together with spring lock-washers (17). Raise tappet guide (30) by means of a screwdriver inserted into the pocket provided in the flange of the tappet guide. Remove washer and compression spring (if provided).

Inspect all parts for wear, especially tappet guide (30), tappet (29), roller (31) and socket (28).
Replace any defective parts.

Removing Tappet Roller

After removing the complete tappet (29), the roller can be removed. The best way to do this is to use a prism, on which the tappet is placed to press out the roller pin (32) - Fig. 3 -. If no prism is to hand, the tappet can be placed on a hard-wood block (33) or on an aluminium plate provided with a suitable large hole for free passage of the roller pin when being pressed out.

Before pressing out the pin by means of a brass drift and a press, place a 0,3 - 0,4 mm-thick plate (34) between both sides of tappet (29), in order to prevent possible deformation of the lower part of the tappet.

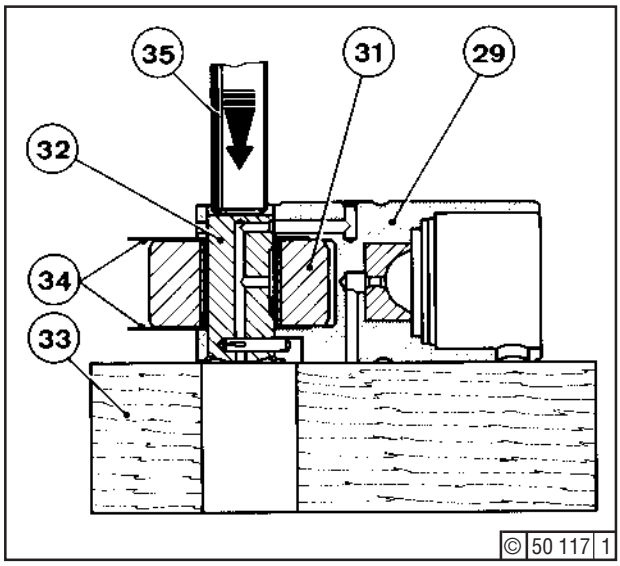

Fig. 3

Refitting the Drive

Clean all drive components, apply some oil and assemble in the reverse order. Check tappet roller (31) for easy rotation. Install tappet guide (30) provided with a new 0-seal (14) along with tappet (29) into crankcase, paying attention to dowel sleeve (15).

⚠ Slit of dowel sleeve (15) must face longitudinal direction of engine.

Screw in bolts (16) provided with lockwashers (17) and tighten securely. Check that tappet (29) moves freely in guide (30). Install pushrods (25) and refit cylinder head (Job Card 01.09.01). Set valve clearance (Job Card 01.01.01) .

Hint for Faciliating Removal of Camshaft

The cylinder heads can remain in situ. Only the pushrods (25) neeed be removed. By means of weld ing wires, the tappets (29) can be raised and the camshaft removed as perJob Card 04.05.01.

At the upper edge of the tappet (29) is a bore-hole, into which a wire can be inserted. Then raise the tappet and suspend it at the top edge of the cylinder head.

© 1285

This page intentionally left blank

Inspection

Inspect accessible tappet rollers and cams. If wear is found, inspect the other tappet rollers and cams. To do this, remove injection pumps (job 07.04.01).

Job Cards:

- 01.04.01
- 01.09.01
- 07.04.01

Tools:

- Standard tools
- Lamp
- Prism
- Hard-wood block or aluminium plate

Job

Remove accessible covers (10) - Fig. 1 -. Turn engine and check for perfect running of the rollers and that the cams have a perfectly smooth surface. Especially critical defects are:

- scaling and cracks
- blue heat discoloration on the cams

If cams and rollers are found to be in perfect order, refit covers (10), tightening fastening bolts as per Section 3.5, item 28.

Reconditioning

Reconditioning is primarily required when rollers have become defective or the valve drive is jamming.

☞ Depending on the valve drive's location, it is necessary to remove injection pump drive (see Job Card 07.04.01).

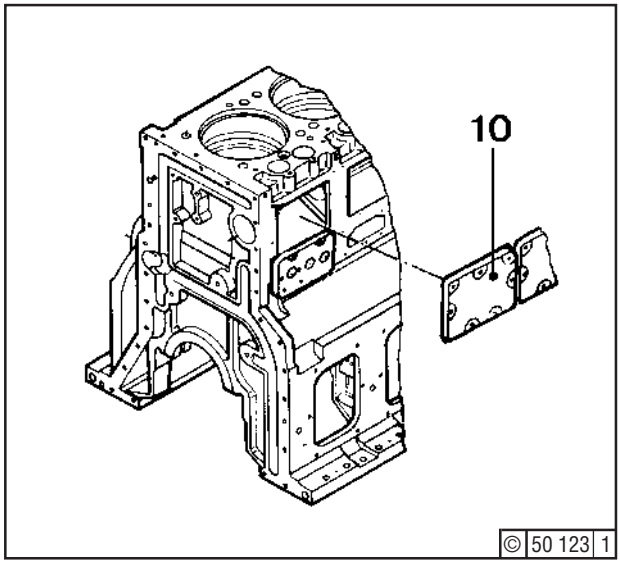

Fig. 1

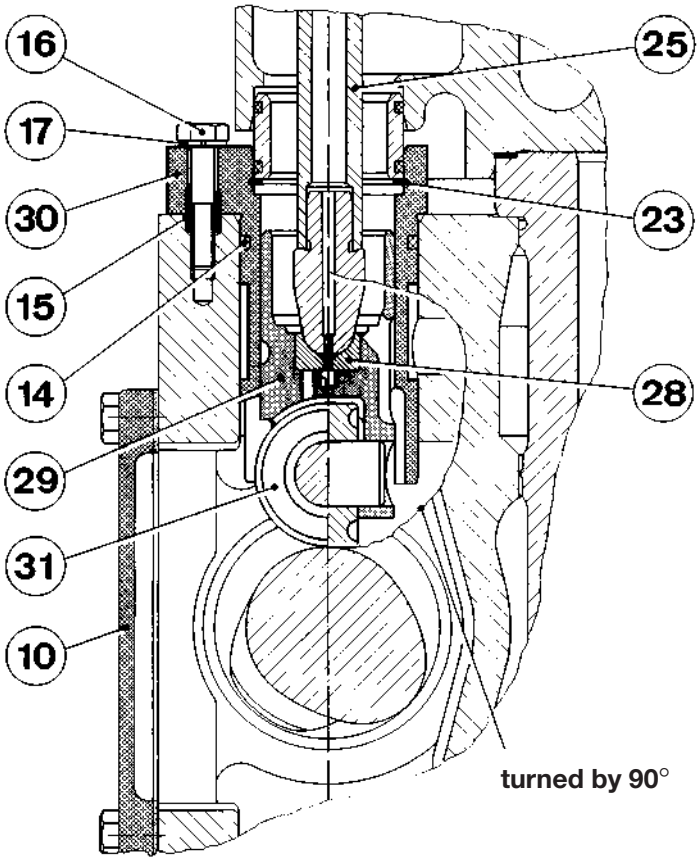

© 50 040 1

Fig. 2

Job:

Removing the Drive

Remove cylinder head (Job Card 01.04.01). Take out pushrods (25) - Fig. 2 - and remove bolts (16) together with spring lock-washers (17). Raise tappet guide (30) by means of a screwdriver inserted into the pocket provided in the flange of the tappet guide. Remove circlip (23).

Inspect all parts for wear, especially tappet guide (30), tappet (29), roller (31) and socket (28).
Replace any defective parts.

Removing Tappet Roller
After removing the complete tappet (29), the roller can be removed. The best way to do this is to use a prism, on which the tappet is placed to press out the roller pin (32) - Fig. 3 -. If no prism is to hand, the tappet can be placed on a hard-wood block (33) or on an aluminium plate provided with a suitable large hole for free passage of the roller pin when being pressed out.

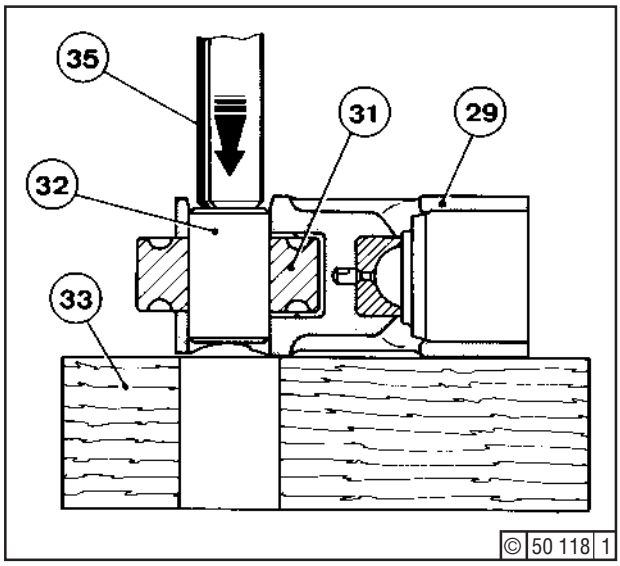

Fig. 3

Refitting the Drive
Clean all drive components, apply some oil and assemble in the reverse order. Check tappet roller (31) for easy rotation. Install tappet guide (30) provided with a new 0-seal (14) along with tappet (29) into crankcase, paying attention to dowel sleeve (15).

⚠ Slit of dowel sleeve (15) must face longitudinal direction of engine.

Screw in bolts (16) provided with lockwashers (17) and tighten securely. Check that tappet (29) moves freely in guide (30). Install pushrods (25) and refit cylinder head (job 01.09.01). Set valve clearance (job 01.01.01) .

Hint for Faciliating Removal of Camshaft
The cylinder heads can remain in situ. Only the pushrods (25) neeed be removed. By means of weld ing wires, the tappets (29) can be raised and the camshaft removed as perJob Card 04.05.01. Proceed by slightly bending the welding wires at the lower end.
Then push the wires into the oil return bores of the tappets, raise the tappets, and suspend them at the upper edge of the cylinder heads by bending the wires accordingly.

© 1285

This page intentionally left blank

Observe safety precautions (see job 05.00.01). Do not allow any components to fall into the crankcase.

Tools:

- Standard tools,
- Removing device for pivot pins (42), (44) and (14),
- Deutz DW 60 compound (see section 3.6).

Job Cards:

- 04.05.01,
- 04.06.01,
- 04.06.02,
- 04.08.01,
- 05.00.01,
- 07.04.01,
- 07.06.01,
- 10.02.01

Job:

Remove covers (24), (30) and (36).

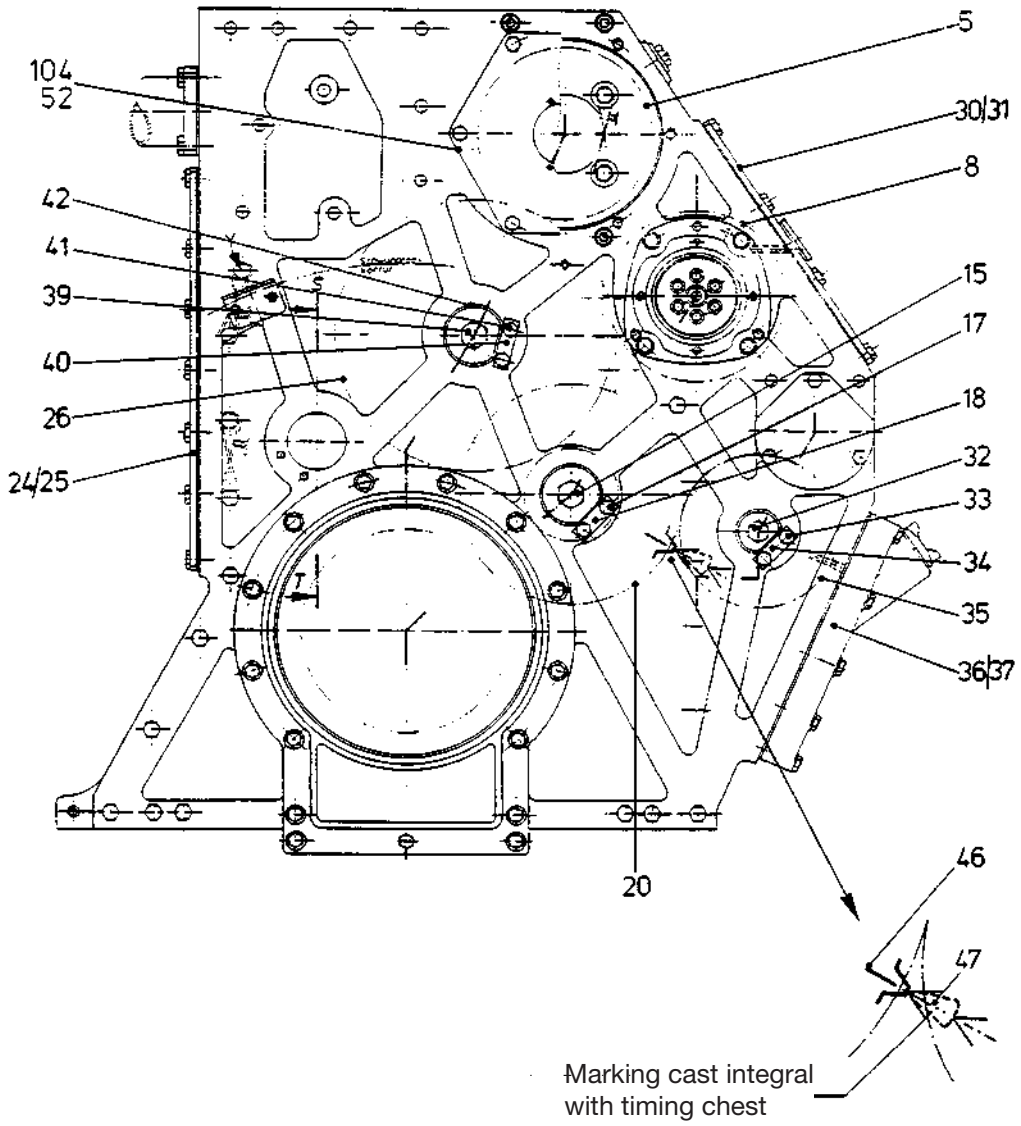

© 51 397 0

Fig. 1

Removing Idler Gear (26)

Turn flywheel until its aperture coincides with bolt (39). Unscrew bolts (41) and take down retainer plate (40). Unscrew bolt (39). Using removing device (see section 1.8).

Withdraw fulcrum (42) from the centering, while retaining gear (26) and was her (45). Then withdraw fulcrum (42) completely. Remove gear (26) and washer (45) sideways.

Clean all components. Inspect gear (26) for wear and bearing bush plus washer (45) for score marks. Inspect O-seals (49) and (51) and renew as required.

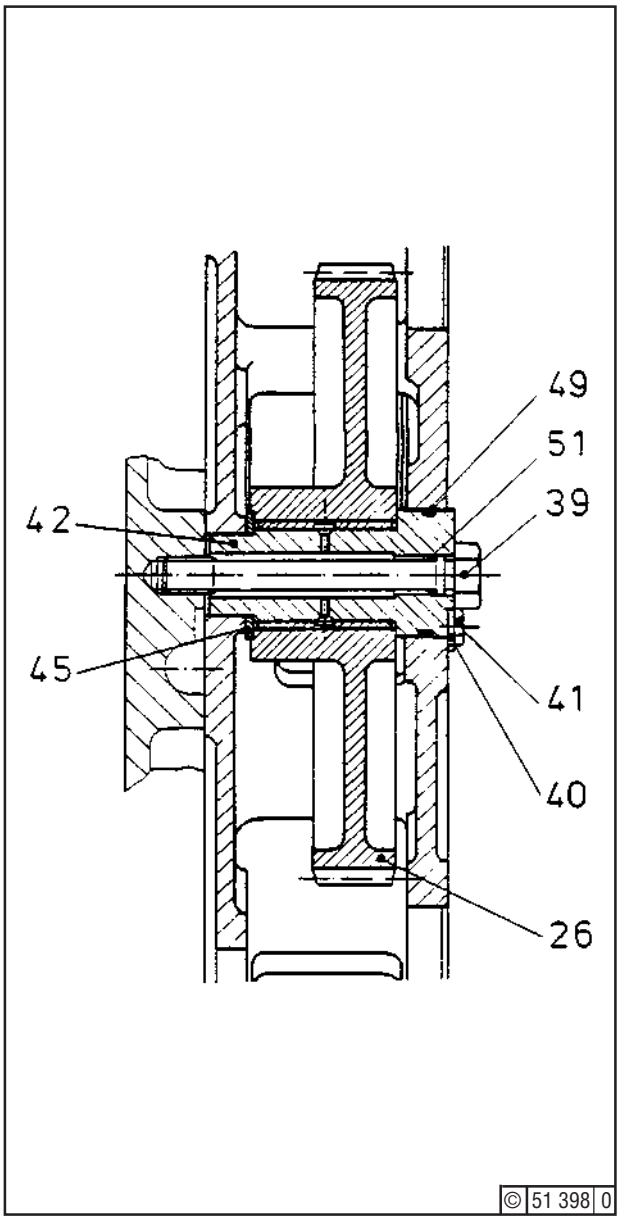

Fig. 2

Removing Idler Gear (35).

Turn flywheel until its aperture coincides with bolt (32). Unscrew cap nut (43). Then proceed as described for removing idler gear (26).

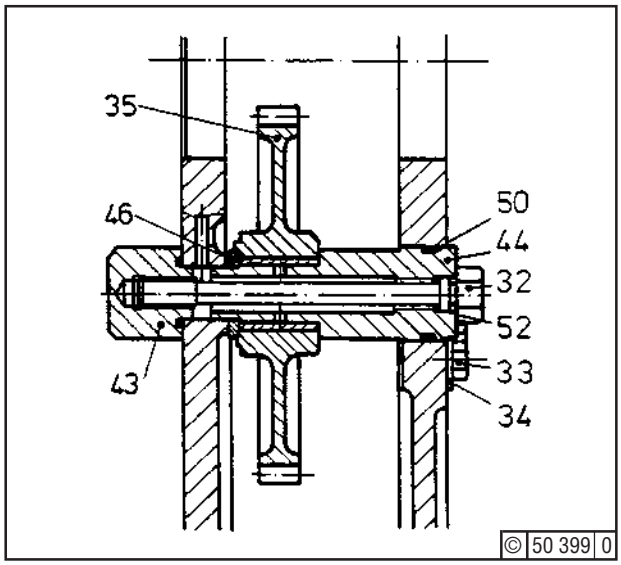

Fig. 3

Removing Injection Pump Drive Gear (8)
Remove oil pump with cover and piping (job 07.06.01).
Remove screws (9). While retaining gear (8), pull out part (10). Take out gear sideways.
Clean all components. Inspect gear (8) for wear and bearing bush for score marks.

Removing Camshaft Gear (5).
Take off cover (104) and gasket (52). For further procedure, see job 04.05.01.

Removing Idler Gear (20).
Proceed as described for removing idler gear (26).

Refitting Idler Gear (20).
Place No. 1 cylinder crankpin in topmast position (compression TDC).
Apply light film of oil to fulcrum (14) and bush in gear (20). Push O-seal (16) onto fulcrum (14). Apply grease to washer (19) and stick in recess of gear (20). Position gear (20) in timing chest so that notch (46) agrees with marking (47) - Fig. 1.
Install fulcrum (14).
Fit retainer plate (18). Screw bolts (17) in place, using DEUTZ DW 60. Fit O-seal (48) onto bolt (15). Insert bolt (15) in fulcrum (14) and screw in place in timing chest. Tighten as specified (section 3.5, item 41).

Refitting Idler Gear (26) - Fig. 2
Turn flywheel until its aperture coincides with bearing hole in timing chest. Apply thin film of oil to fulcrum (42) and bearing bush in gear (26). Apply grease to washer (45) and stick in recess of gear (26). Raise gear (26) in chest and install fulcrum (42) with O-seal (49). Fit retainer plate (40), srew bolt (41) in place with DEUTZ DW 60. Fit O-seal (51) onto bolt (39). Insert bolt (39) in fulcrum (42) and secure in chest, tightening as specified (section 3.5, item 41).

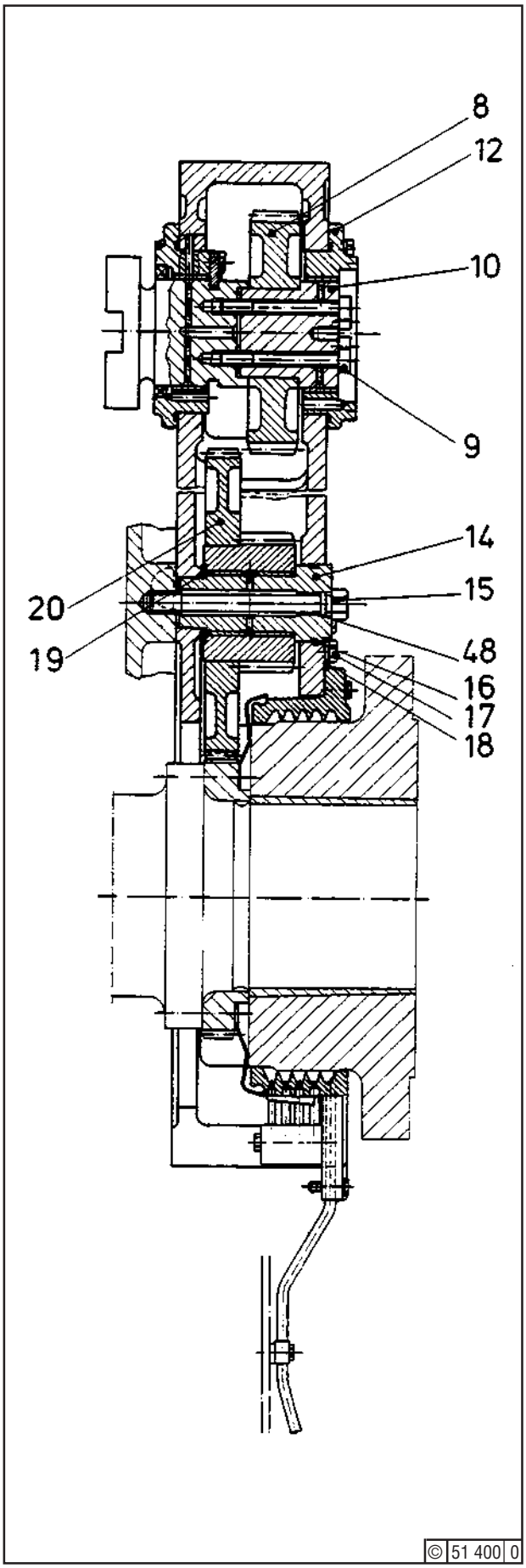

Fig. 4

Refitting Idler Gear (35) - Fig. 3
Turn flywheel until its aperture coincides with bearing hole in timing chest. Apply thin film of oil to fulcrum (44) and bearing bush in gear (35). Apply grease to washer (46) and stick in recess of gear (35). Raise gear (35) in chest and install fulcrum (44) with O-seal (50). Fit retainer plate (34), srew bolt (33) in place with DEUTZ DW 60. Fit O-seal (52) onto bolt (32). Insert bolt (32) in fulcrum (44) and secure by cap nut (43), tightening as specified (section 3.5, item 40).

Refitting Camshaft Gear (5)
See job 04.06.01.
Mount cover (104) together with gasket (52) (renew gasket if necessary).

Refitting Injection Pump Drive Gear (8) - Fig. 4
Apply thin film of oil to part (10) and bearing bush in flange (12). Install gear (8) in chest and push part (10) into flange (12) and gear (8). Fit screws (9). Time injection (job 07.06.01).

After installing the Gears:
Check backlash of the gears (job 04.08.01). Inspect gaskets (25), (31) and (37), renewing if necessary. Mount covers (24), (30) and (36), together with gaskets.

© 1283

Camshaft Removal

Removal is required when replacing camshaft bearings or repairing the camshaft. If in confined spaces the complete camshaft unit cannot be removed from the crankcase towards driving end ("KS") or free end ("KGS"), it is separated in the middle, at the flanged connection.

Job Cards:
- 01.02.02
- 04.02.01
- 07.04.01
- 10.02.01

Tools:
- Standard tools
- Straight edge
- Special tool (Section 1.8)
  - Torque wrench
  - Socket insert
- Special tool (Section 1.8.1)
  - Guide arbor

Auxiliary Material:
- Locking compound DEUTZ DW 55 (section 3.6)
- Distillate fuel

Job

Preparatory work
- Unscrew plug
- Rotate crankshaft until "R" mark or resp. notch (3) on gear (1) coincides with mark on timing chest, at inspection hole centreline.
- If necessary, remove injection pumps, job card 07.04.01.
- If necessary, take assembly cover off crankcase in the area of camshaft.
- Remove rocker arms, job card 01.02.02.
- Lift lower valve gear, job card 04.02.01.
- Take off cover with rotary starting air distributor, job card 10.02.01.

Removing Camshaft towards Engine Free End („KGS“)
- Screw off hex. nuts (13) and unscrew hex. bolts (9).
- Take off cover (14) and gasket (8).
- Bend up locking plate (12).
- Turn out hex. bolt (11).
- Take off guide roller (7) and guide plate (6).
- Remove dowel pin (10).

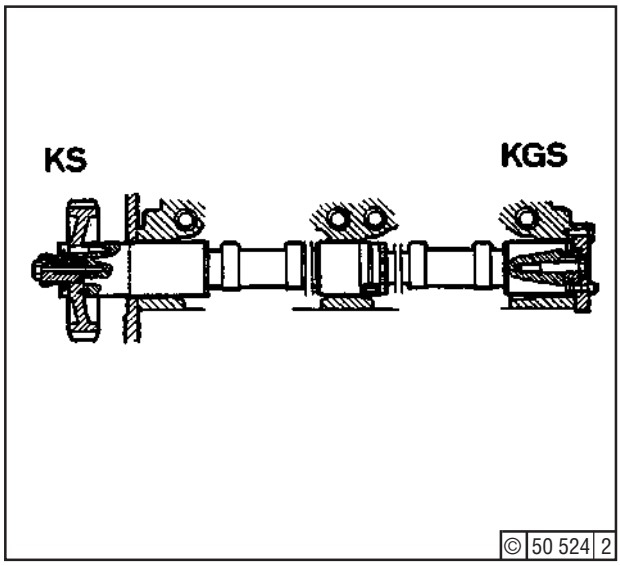

Fig.1 Camshaft

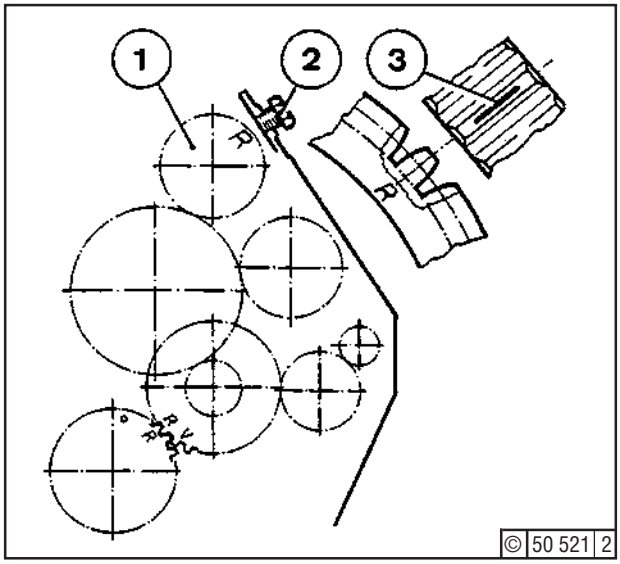

Fig. 2 Camshaft drive gear marking

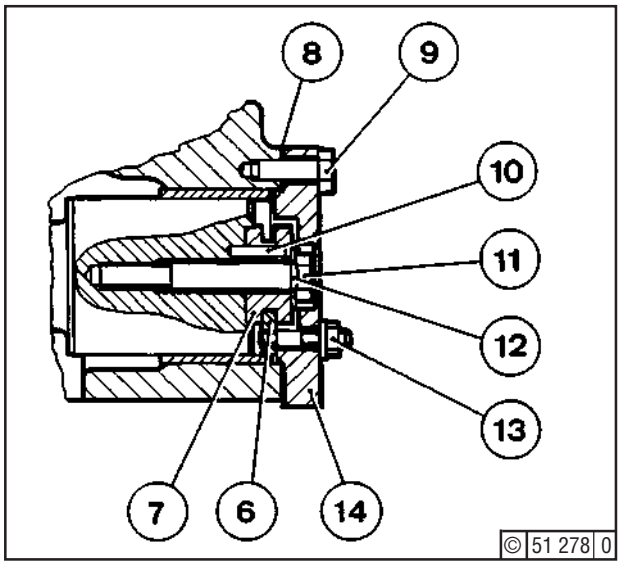

Fig. 3 Camshaft fixing "KGS"

- Unscrew waisted hex. bolt (5).
- Take off starting cam (4).
- Remove dowel pin (6).
- Remove locking wires of cheese-head bolts (3) and turn out bolts
- Take off gear (1).
- Remove dowel pin (2).
- Screw guide arbor with its **short** grub screw end into camshaft at engine driving end.
- Carefully pull out camshaft while turning it.
- Carfully place camshaft on two wooden supports.

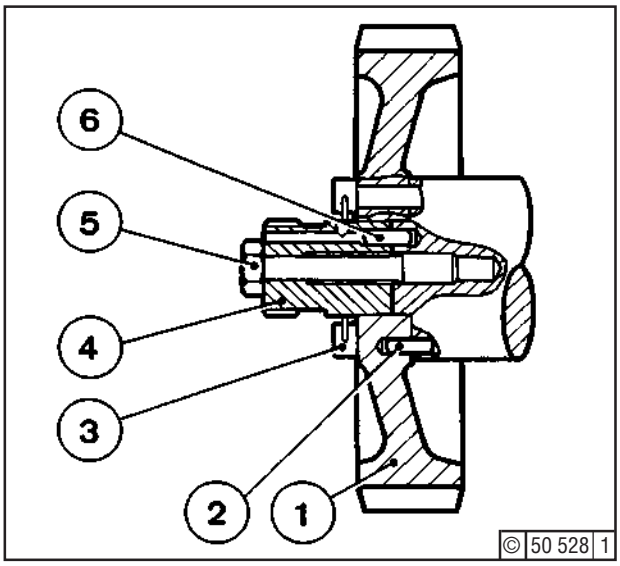

Fig. 4 Camshaft drive gear "KS"

Removing camshaft towards engine driving end

- Screw off hex. nuts (13) and unscrew hex. bolts (9).
- Take off cover (14) and gasket (8).
- Bend up locking plate (12).
- Turn out hex. bolt (11).
- Take off guide roller (7) and guide plate (6).
- Remove dowel pin (10).
- Screw guide arbor with its **long** grub screw end into camshaft at engine free end.

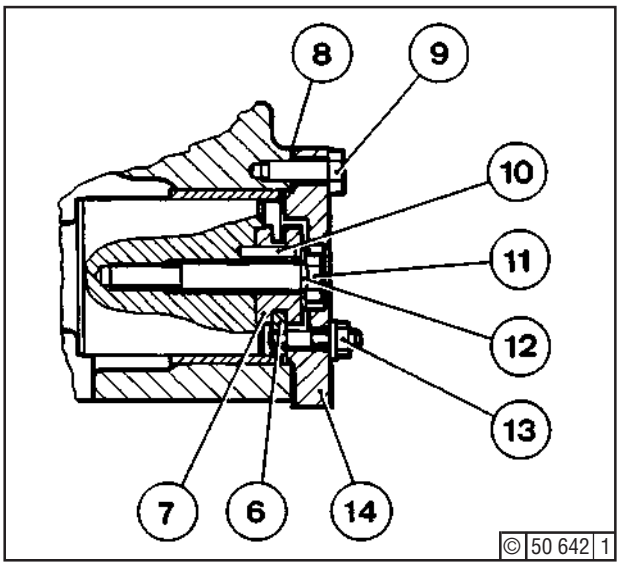

Fig. 5 Camshaft fixing

- Unscrew hex. bolt (5).
- Take off starting cam (4).
- Remove dowel pin (6).
- Remove locking wires of cheese-head bolts (3) and turn out bolts
- Take off gear (1).
- Remove dowel pin (2).
- Turn camshaft and pull or resp. push out.
- Carefully pull out camshaft while turning it.

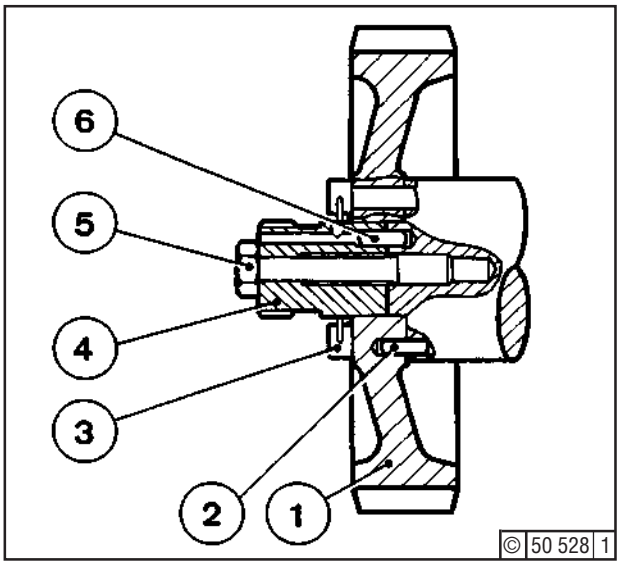

Fig. 6 Camshaft drive gear "KS"

Camshaft Removal in Confined Spaces

- Remove camshaft, as described above, towards driving or free end of engine, until flanged connection moves beyond bearing zone when pulling our pushing out camshaft; then connection may be detached.

☞ Secure first half-camshaft against falling down.

- Remove locking wire (2).
- Turn out cheese-head bolts (1).
- Remove dowel pin (3).
- Pull out half-shaft and place carefully on two wooden supports.

☞ Secure second half-shaft against falling down.

- Pull out half-shaft and place carefully on two wooden supports.

Finishing Work

- Clean all parts with distillate fuel.
- Inspect cam running surfaces; smoothen possible running marks with oil stone; if necessary, consult one of our service agencies.
- Unscrew stud (15) from guide plate (6).
- Check guide plate with straight edge for evenness and guide roller (7) for wear; renew if necessary.
- Screw studs by hand into guide plate using lokking compound DEUTZ DW 55; allow locking compound to cure.

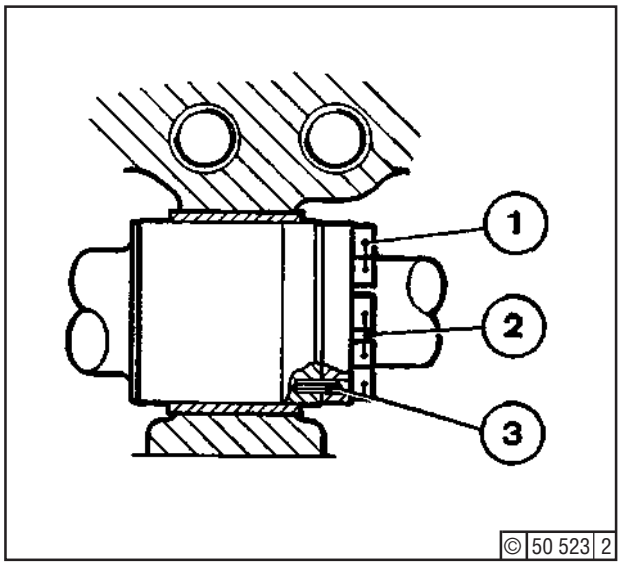

Fig. 7 Camshaft flange connection

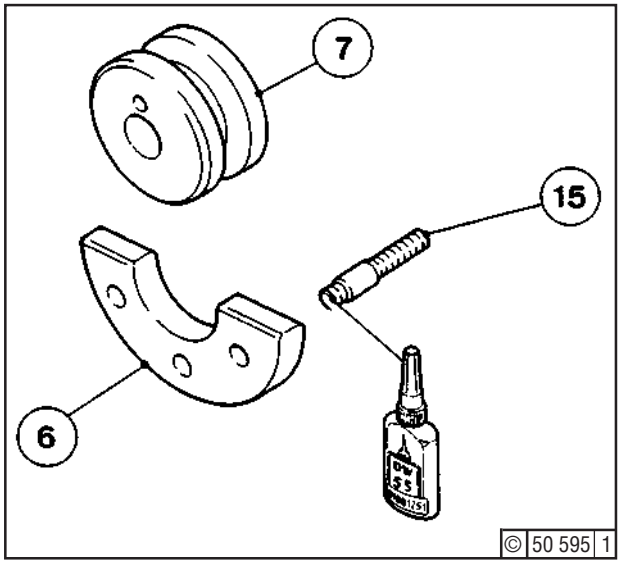

Fig. 8 Camshaft guide roller, guide plate

This page intentionally left blank

Camshaft Refitment

Job Cards:
- 01.01.01
- 01.02.02
- 04.02.01
- 04.06.02
- 04.08.01
- 07.04.01
- 10.02.01

Tools:
- Standard tools
- Special tool (Section 1.8)
  - Torque wrench
  - Socket insert
- Special tool (Section 1.8.1)
  - Guide arbor

Auxiliary Material:
- Lube oil

Spare parts:
- Locking wire
- Gasket for cover at engine free end

Job

Preparatory work

- Lubricate bearing positions
- Hand-tighten dowel pin (10), guide roller (7), new locking plate (12) and hex. bolt (11), refit.

☞ Camshaft must be released, i.e. valve gear is lifted.
Crankshaft must be in firing TDC position of cylinder 1, i.e. valves are closed.

Refitting camshaft from engine free end.

- Screw guide arbour with its short grub screw end into camshaft at engine driving end.
- Push camshaft with guide arbour carefully through camshaft bearings.
- Shortly before reaching end position, insert guide plate (6) into groove of guide roller (7) and push camshaft further into its end position.
- Remove guide arbor.

☞ Contact surfaces between gear (1) and cams haft must be absolutely clean and free from oil and grease.

- Insert dowel pin (2) into camshaft end.
- Position gear (1) in place.
- Screw in cheese head bolts (3) and tighten according to specification, section 3.5, line 26.
- Lock cheese head bolts with new locking wire.
- Advance camshaft until gear can rotate freely, i. e. it is not engaged with idler gear.

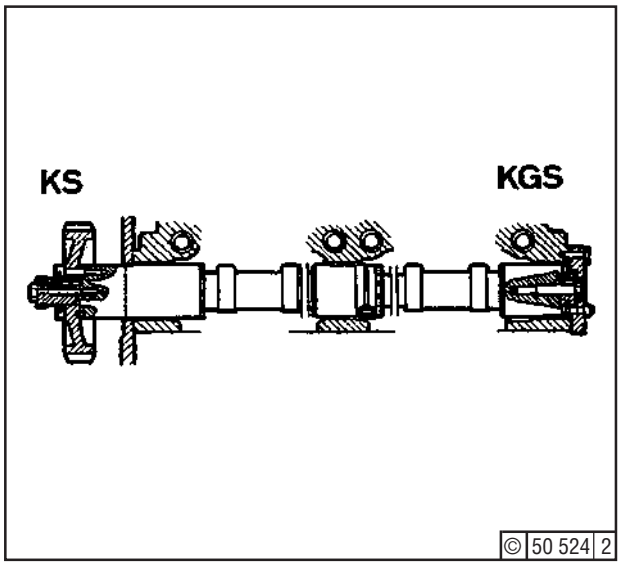

Fig. 1 Camshaft

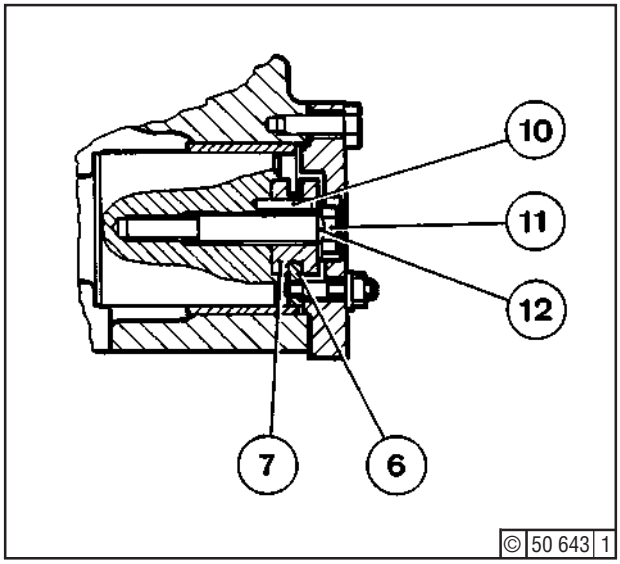

Fig. 2 Camshaft fixing

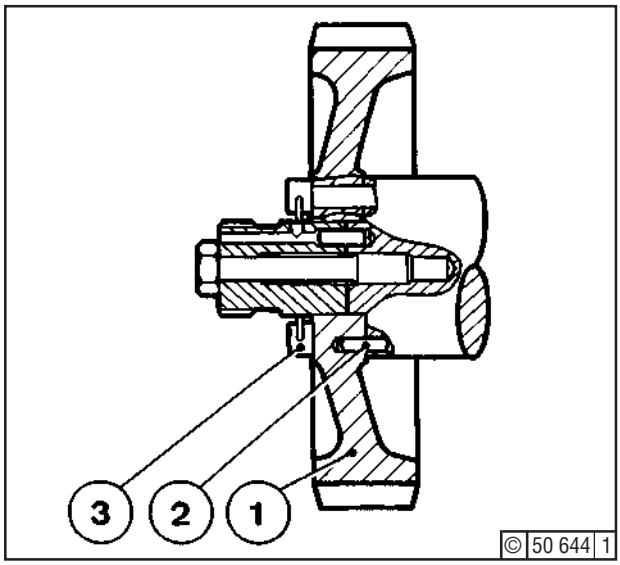

Fig. 3 Camshaft drive gear "KS"

- Rotate gear (1) until "R" mark or resp. notch (3) on gear coincides with mark on timing chest - at inspection hole centreline.
- Mesh gear with idler gear.

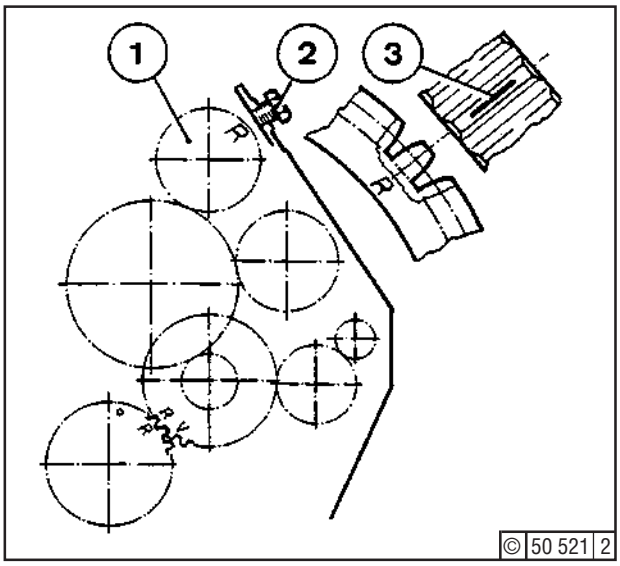

Fig. 4 Camshaft drive gear marking

- Screw in hex. bolt (11) with new locking plate (12).
- Tighten hex. bolt (11) an secure locking plate (12).
- Refit cover (14) with new gasket (8).
- Screw in hex. bolts (9) and tighten.
- Tighten hex. nuts (13) according to specification, section 3.5, line 61.
- Measure backlash on camshaft gear, job card 04.08.01.

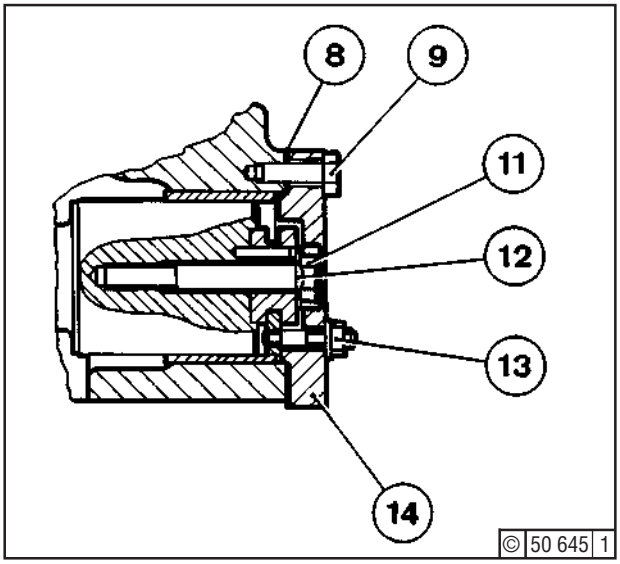

Fig. 5 Camshaft fixing "KGS"

Refitting camshaft from engine driving end

☞ Contact surfaces between gear (1) and camshaft must be absolutely clean and free from oil and grease.

- Insert dowel pin (2) into camshaft end.
- Position gear (1) in place.
- Screw in cheese head bolts (3) and tighten according to specification, section 3.5, line 26.

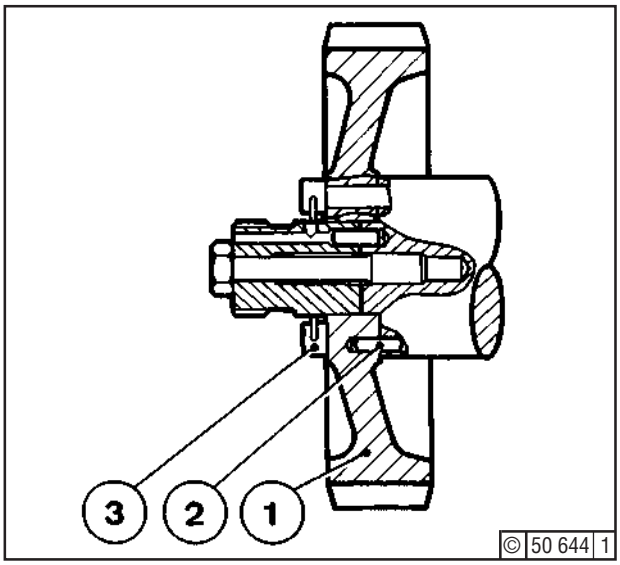

Fig. 6 Camshaft drive gear "KS"

- Screw guide arbour with its **long** grub screw end into camshaft at engine driving end.
- Carefully introduce camshaft through bearing bushes with guide arbour.
- Rotate camshaft with gear until ”R” mark or resp. notch (3) on gear (1) coincides with mark on timing chest sealing surface.
- Mesh gear with idler gear.
- Screw off guide arbour.

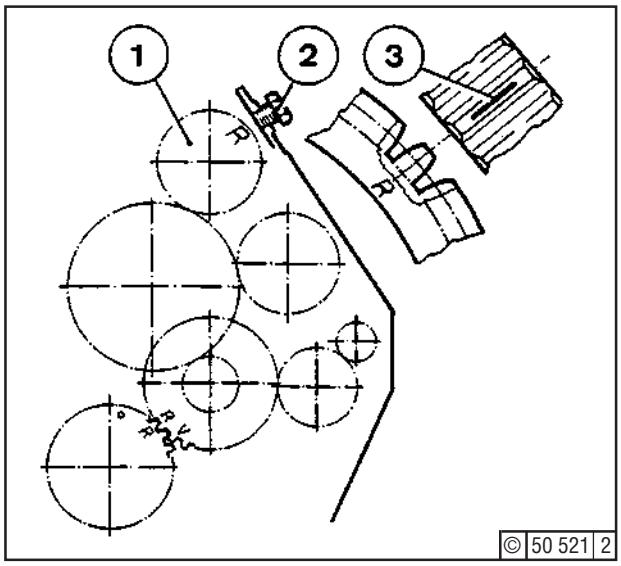

Fig. 7 Camshaft drive gear marking

- nsert dowel pin (10) and position guide roller (7) with guide plate (6).
- Screw in hex. bolt (11) together with locking plate (12).
- Tighten hex. bolt (11) and secure with locking plate (12).
- Fit cover (14) with new gasket (8).
- Tighten hex. bolts (9).
- Tighten hex. nuts (13) according to specification, section 3.5, line 61.
- Measure backlash of gear, job card 04.08.01.

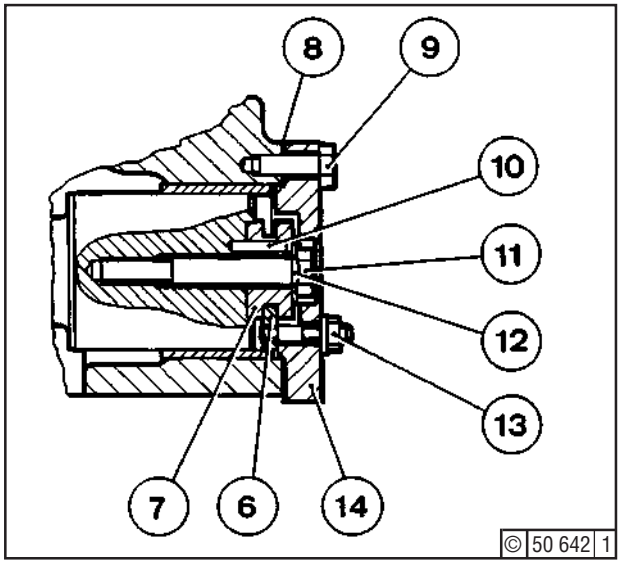

Fig. 8 Camshaft fixing "KGS"

Finishing Work

- Fit cover with rotary starting air distributor and new gasket as per job card 10.02.01.
- Release lower valve gear, job card 04.02.01.
- Fit rocker arms, job card 01.02.02.
- Adjust valve clearance, job card 01.01.01.
- Check valve timing, job card 04.06.02.
- Fit rocker chamber cover.
- If removed, refit injection pumps, job card 07.04.01.
- If removed, refit crankcase cover in the camshaft area with new gaskets; tighten hex. bolts according to specification, section 3.5, line 28.

Refitment in confined spaces

☞ The joint faces of the half-camshafts must be absolutely clean and free from oil and grease.

- Introduce first half-shaft with guide arbour and dowel pin (3) into crankcase.
- Introduce second half-shaft and tighten with cheese head bolts (1) according to specification, section 3.5, line 27.
- Lock cheese head bolts with locking wire (2).
- Rotate camshaft by hand at free end and check true run at the overhung end.
- Further refitment from driving or free end of engine and described heretofore.

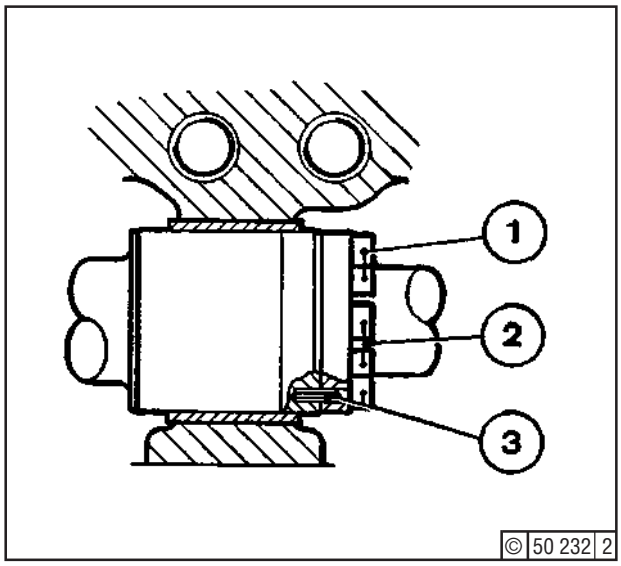

Fig. 9 Camshaft flange connection

Checking

Check inlet/exhaust valve timing.

☞ A timing check is required following camshaft fitment (Job Card 04.06.01) and when inspecting or working on the timing gears.

Tools:
- Standard tools
- Tape rule

Job:

Check valve clearance (Job Card 01.01.01). Turn crankshaft in the normal running direction until the valve drive of No. A1/1 and B1/7 or 9 cylinders have frictional contact so inlet/exhaust pushrods are heavy to turn.In this position mark flywheel to agree with the fixed pointer on the crankcase. From this mark to the TDC mark of No. 1 cylinder (in-line engines) or No. A1/B1 cylinder (V-type engines) measure distance "b" on flywheel periphery and flywheel diameter.

$$\alpha = \frac{360 \times b}{d \times \pi}$$

where b = distance on periphery and d = diameter.

The value obtained for must conform to the timing data (Section 3.3.1) within $\pm$ 4° crank angle, otherwise inspect upper and lower valve drives (Job Card 04.02.01) and timing gears (Job Card 04.08.01).

This page intentionally left blank

Inspection / Gauging

Inspect and measure backlash of gears in main timing gear train (engine's driving end) and pump drive (engine's free end).

While gear fulcrums are connected to the engine's main lube circuit, the gears themselves are lubricated by oil jet. Although gears normally have a long life, the ingress of foreign particles may cause premature wear and tear.

Tools:

- Standard tools
- Dial gauge with magnetic holder

Job:

Inspecting the Gears

Remove lateral cover on timing chest and turn engine. Inspect gears, especially tooth flanks, for defects, and check that all bolts are locked where necessary. Operate priming pump and make sure that all gears are properly lubricated.

Gauging the Backlash

Measure backlash with a dial gauge. To do this, fix one gear by wooden chock and move mating gear in both directions. Read difference from gauge.

For moving camshaft gears, release screws for valve clearance adjustment.

Renew gears with an unsatisfactory mesh pattern or excessive backlash. If necessary, consult Deutz (Job Card 04.04.01).

The following timing gear train diagram below shows agreement of mating marks with the No. 1 piston in compression TDC (both valves closed).

© 0199

Backlash of drive end gears

Gears	Backlash (mm)
1 / 2	0,130 - 0,320
2 / 3	0,096 - 0,344
3 / 4	0,094 - 0,365
5 / 6	0,060 - 0,340
6 / 7	0,070 - 0,360
6 / 8	0,070 - 0,360

1 Crankshaft gear
2 Idler gear
3 Idler gear
4 Governor drive gear
5 Idler gear
6 Idler gear
7 Camshaft drive gear
8 Injection pump drive gear

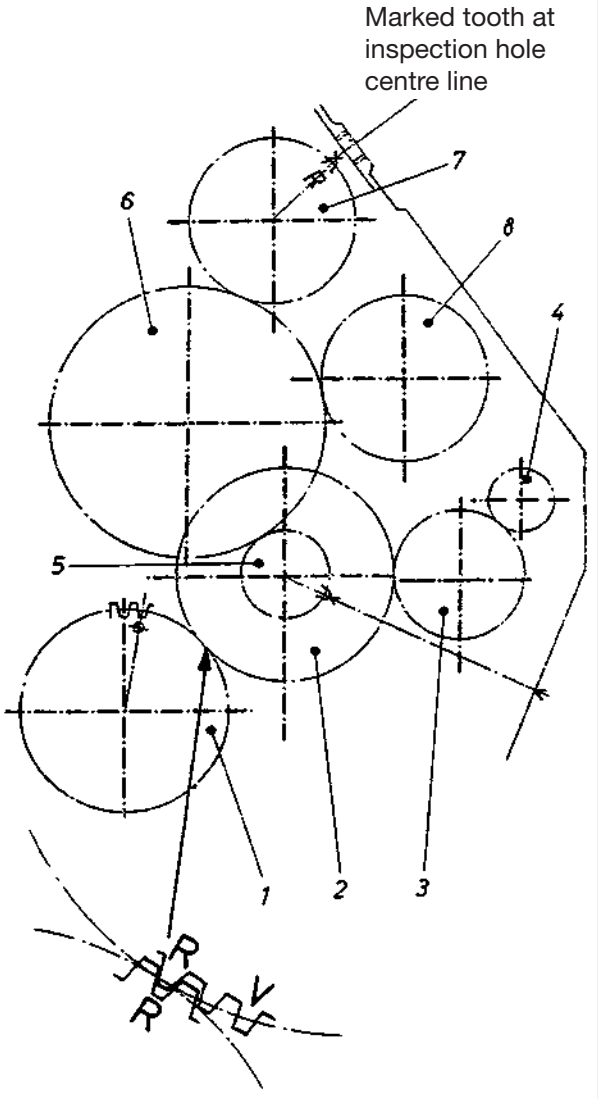

© 51 401 0

Backlash of free end gears

Speed Stage I

Gears	Addendum Ø line (mm)	Backlash (mm)
9 / 10	324 / 147	0,27 - 0,44
9 / 11	324 / 132	0,27 - 0,44
9 / 12	324 / 183	0,28 - 0,48
12 / 13	183 / 123	0,12 - 0,40

Speed Stage II

Gears	Addendum Ø line (mm)	Backlash (mm)
9 / 10	303 / 168	0,27 - 0,44
9 / 11	303 / 153	0,27 - 0,44
9 / 12	303 / 183	0,28 - 0,48
12 / 13	183 / 129	0,12 - 0,40

9 Crankshaft gear
10 Oil pump gear
11 Oil pump gear
12 Id ler gear
13 Water pump gear

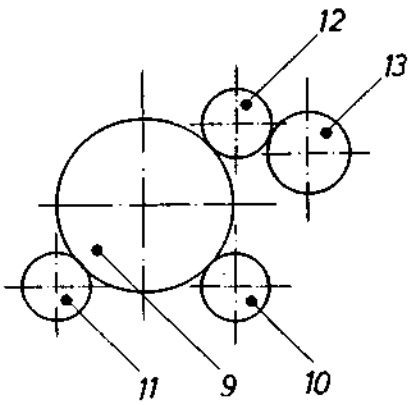

© 51 289 0

☞ Where two water pumps are provided, backlash 9 / 12 and 12 / 13 applies to both pumps.

Flywheel removal is required for replacement of the crankshaft gear.

Tools:
- Standard tools
- Hoist
- Eye screw

Job Card
- 05.00.01

Job

Observe safety precautions (job 05.00.01). Mark position of drive shaft relative to adapter flange or flexible coupling, and of flywheel to crankshaft.

Removing the Flywheel

Fit eye screw (4) and hold flywheel (1) by hoist. Unscrew bolts (2) and remove along with washers (3). Carefully withdraw flywheel from crankshaft.

Refitting the Flywheel

Observe markings and refit flywheel in the reverse order. Tightening bolts (2) see section 3.5, item 24.

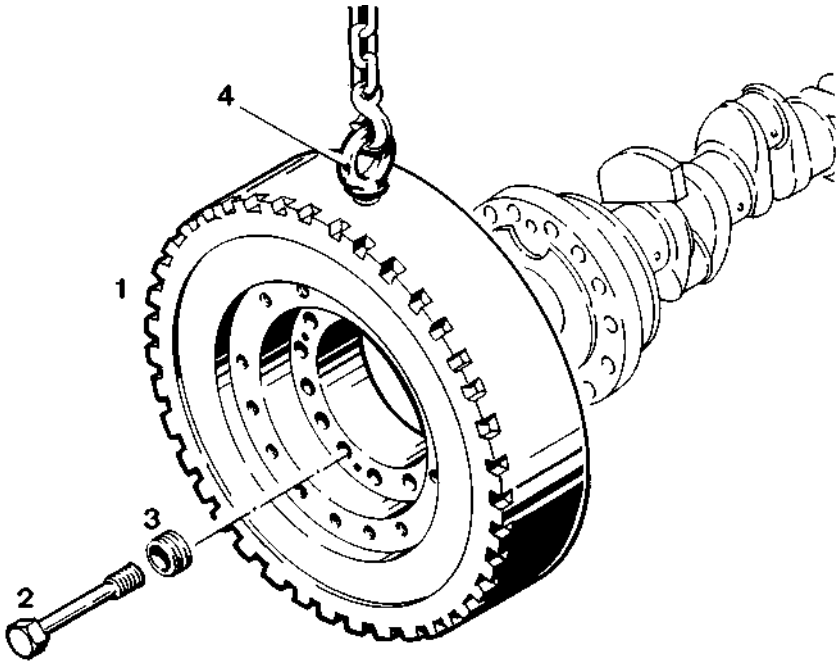

© 25 406 1

© 0884

This page intentionally left blank.

Tools:

- Standard tools
- Wrench with insert for socket-head screws (Section 1.8),
- 2 hex. bolts M 8x80
- Deutz DW 57 compound

Job Card:

- 04.16.01

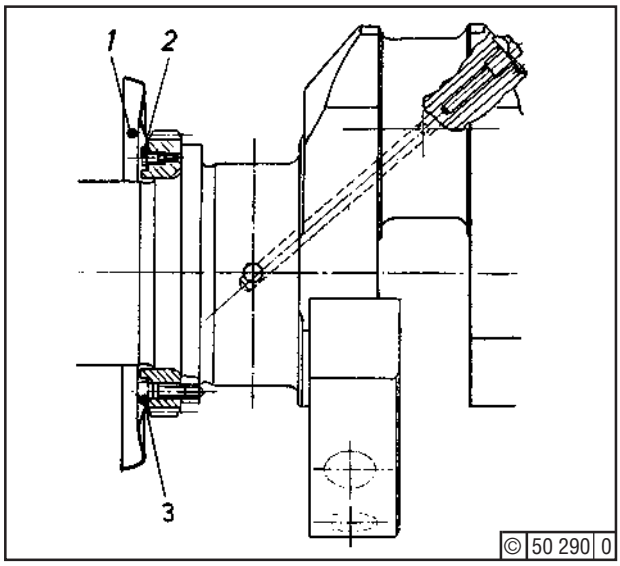

Job:

Removing the gear

Remove coupling flange (job 04.16.01). Unscrew hex. bolts (2) and remove deflector (1). Now remove all socket-head srews (3). In two opposing bores for bolts (2), screw in the two hex. bolts M 8x80 and pull the gear off the crankshaft (note dowel sleeve (4).

Refitting the Gear

Thoroughly clean joint faces of crankshaft and gear. Fit gear in place, noting dowel sleeve (4). Screw in socket-head screws (3) with Deutz DW 57 and tighten as specified (Section 3.5, item 25.
Mount deflector (1) and secure with hex. bolts (2), using Deutz DW 57.

Mount coupling flange (job 04.16.01).

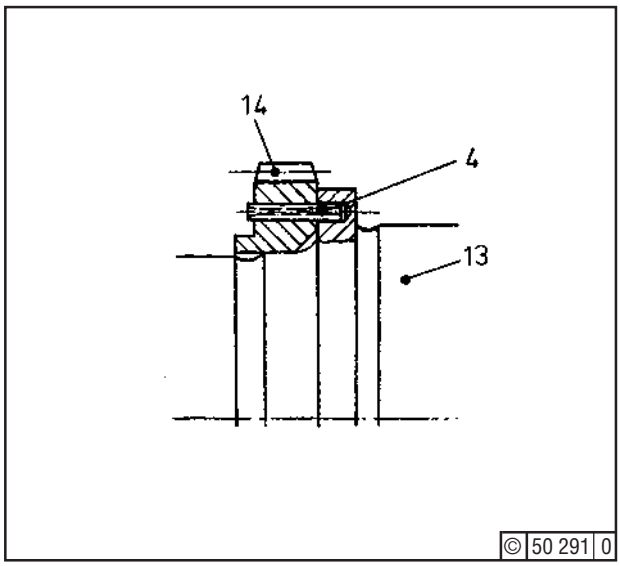

© 0595

This page intentionally left blank.

To begin with, remove water pump (job 09.07.02).

Tools:
- Standard tools
- Deutz DW49 compound (Section 1. 8)

Job Cards:
- 04.08.01
- 09.07.02

Job

Removing the gear

Disconnect oil pipe to gear. Unscrew nuts (2) and carefully withdraw fulcrum holder (6) with fulcrum (10). Retain gear (8) and washer (9) by hand. Take out components through timing chest aperture (11) of pump. Unscrew bolts (5).

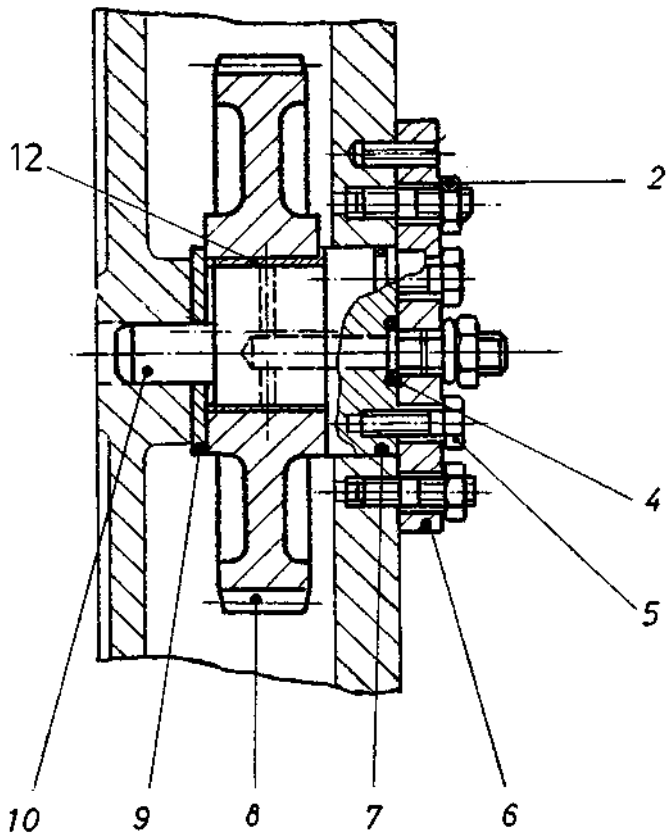

Speed stage I: eccentric at top (as shown)
Speed stage II: eccentric at bottom
(Stages see Job Card 04.08.01)

© 51 292 0

Fig. 1 Section L_1 - M_1 (see Fig. 2)

© 1283

Refitting the Gear

Clean gear and inspect for wear. If defective, replace gear (8),fulcrum (10), washer (9), bush (11) . Replace 0-seals (4) and (7) in any case.

Gear refitment is made in the reverse order, paying attention to correct location of eccentric (Fig. 1). Check gearlash (Job Card 04.08.01).

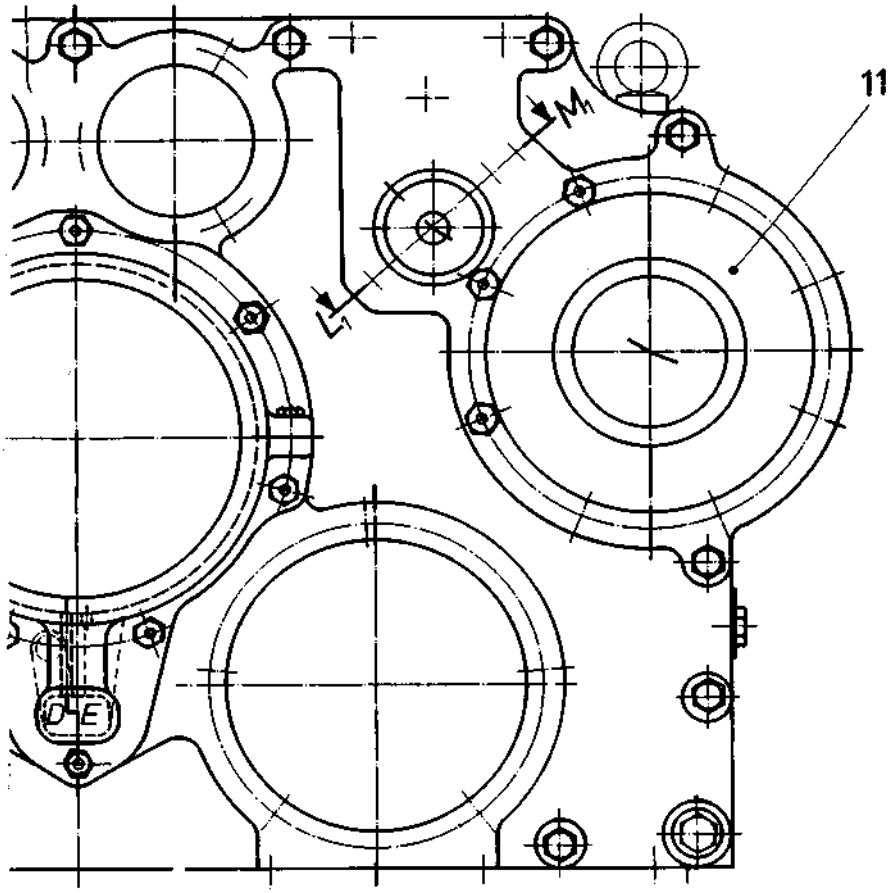

© 51 293 0

Fig. 2

Prior to pump chest removal, remove oil pump(s) (job 08.04.01), water pump(s) (job 09.07.02), vibration damper (jobs 12.01.01. and 12.01.02) and piping.

Tools:

- Standard tools
- Deutz DW48 compound (Section 1.8)
- Hoist
- Crowbar

Job Cards:

- 08.04.01
- 09.07.02
- 12.01.01
- 12.01.02
- 04.08.01

Job

Removing the Chest

Unscrew nuts (5) and take down oil deflector (4). Unscrew bolts (1) and (6) of chest (3) and bolts (10). Retain chest by hoist with lugs (12) (Fig. 2).

Since the chest is secured to crankcase and oil sump by adhesive compound, hold wooden block behind chest at the side and carefully work loose chest by crowbar, until bushes (9) are cleared.

Take care not to damage surfaces by crowbar.

Raise chest by hoist from oil sump and lower on wooden support.

Refitting the Chest

Carefully clean all surfaces, removing pressure marks carefully by a smooth file or oil stone. Apply Deutz DW 48 as a continuous bead (11) - Fig. 3 - to all joint faces, but of **no more** than 3 mm width.

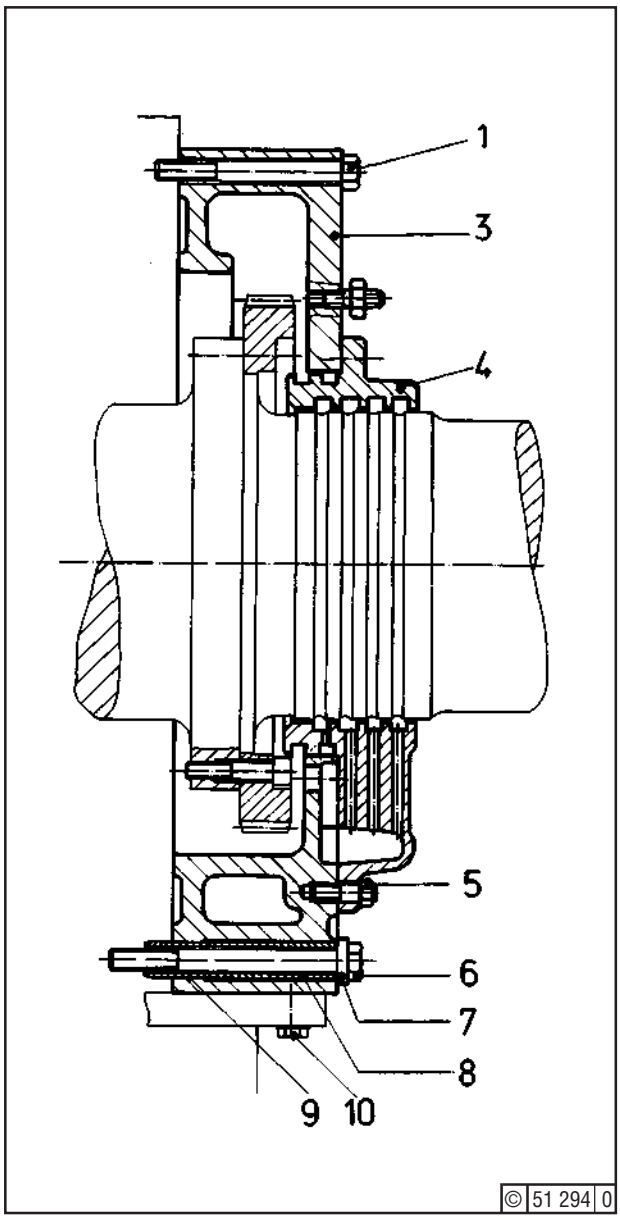

Fig. 1

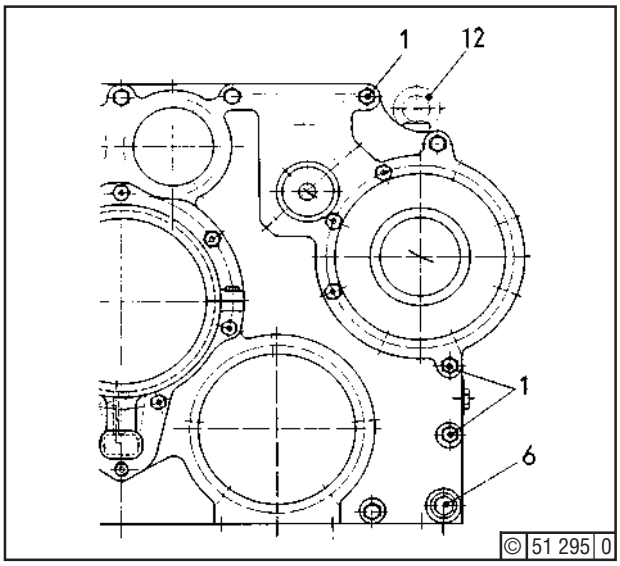

Fig. 2

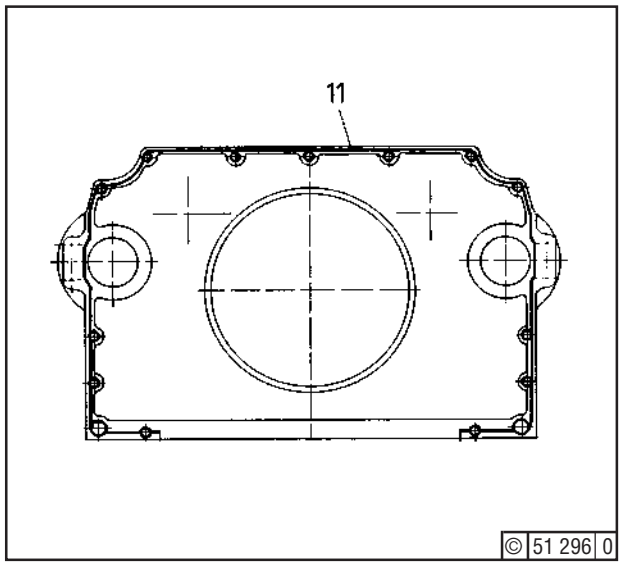

Fig. 3

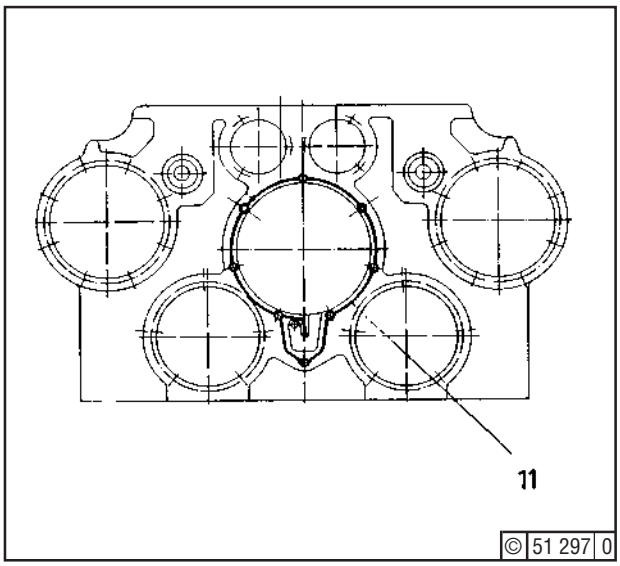

Fig. 4

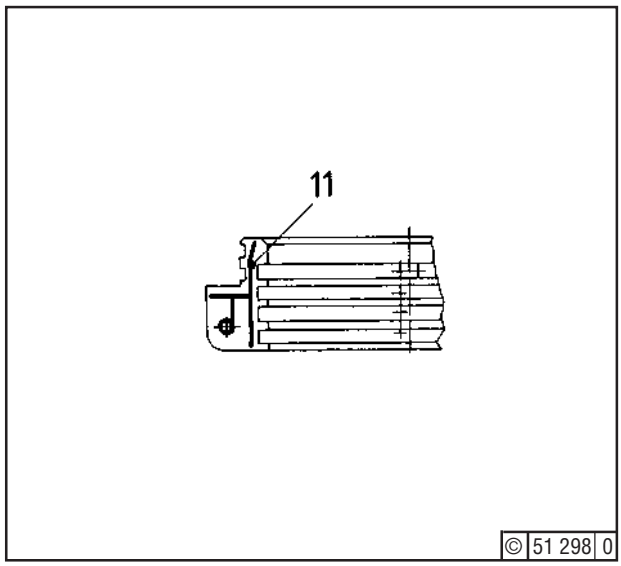

Fig. 5

Locate chest (3) with dowel bushes (9). Install both tubes (8) and screw in all bolts (1) and (6) with washers (9) plus bolts (10). Fit oil deflector.
Fit pumps, vibration damper and piping (see pertaining job cards). Gauge backlash (job 04.08.01).

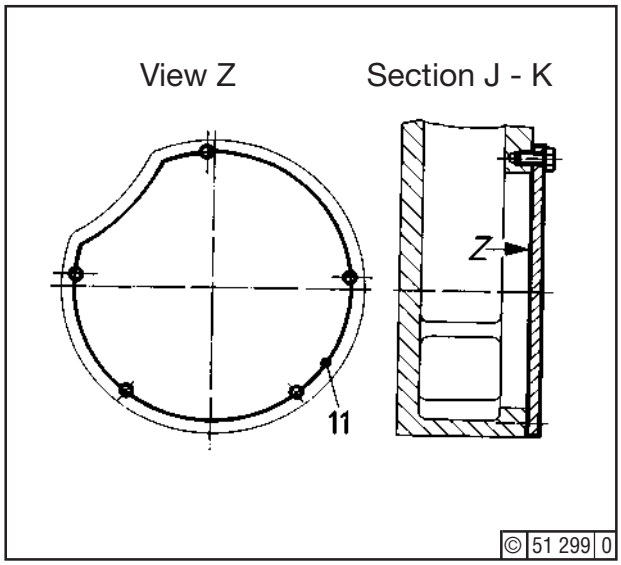

Fig. 6

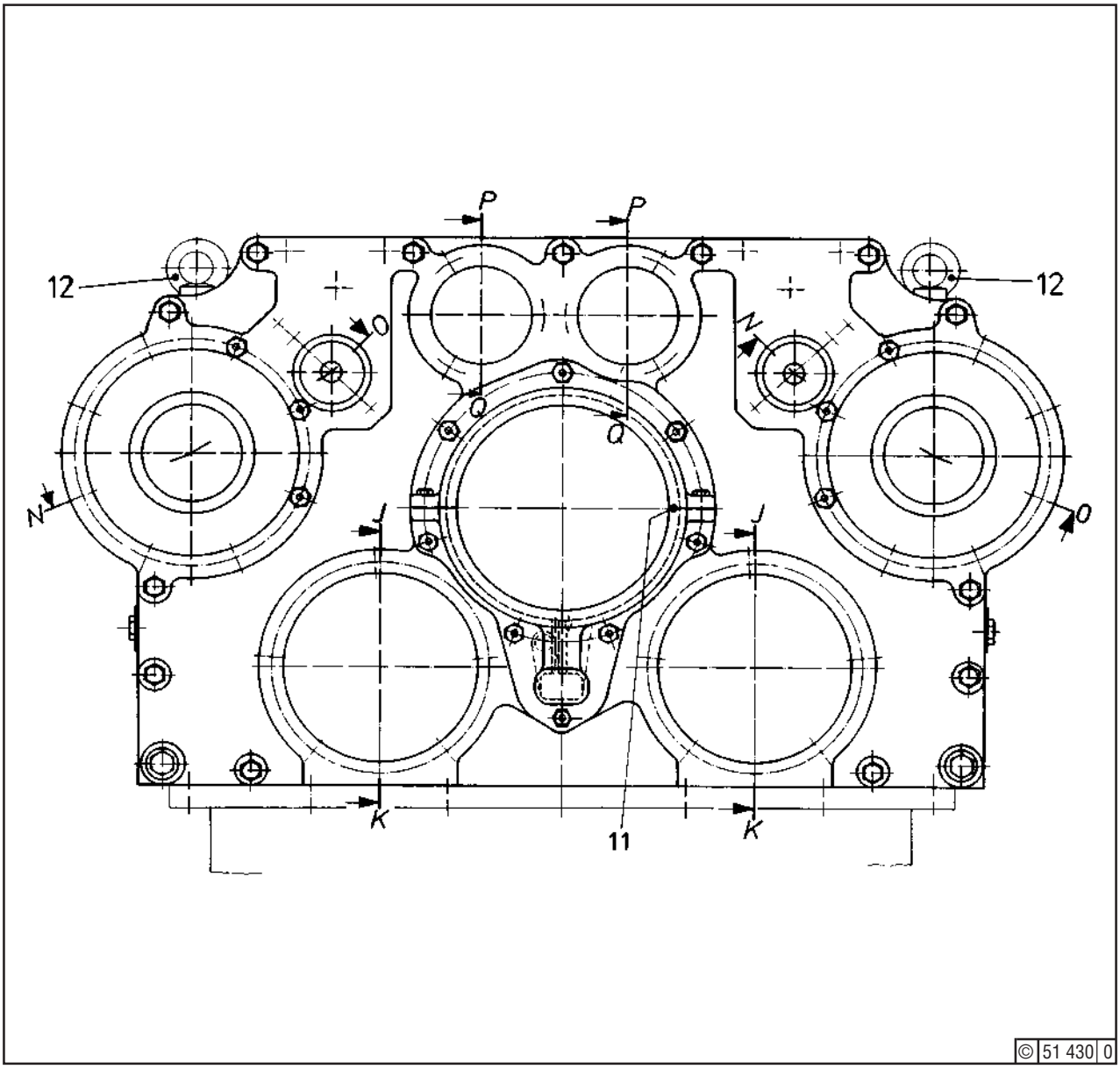

Fig. 7

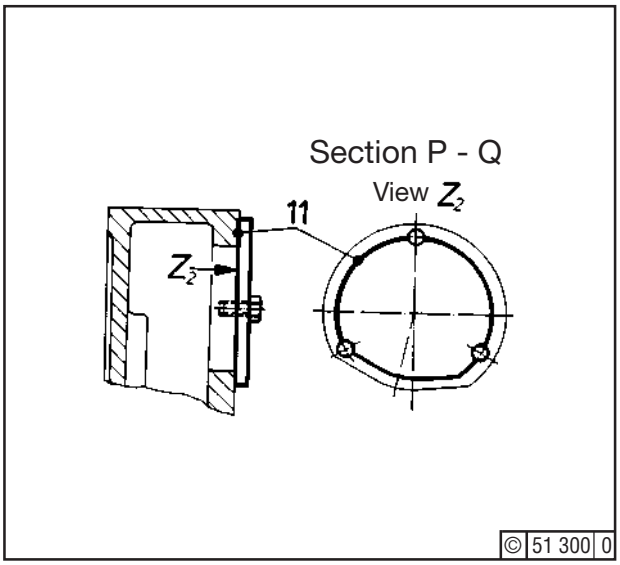

Fig. 8

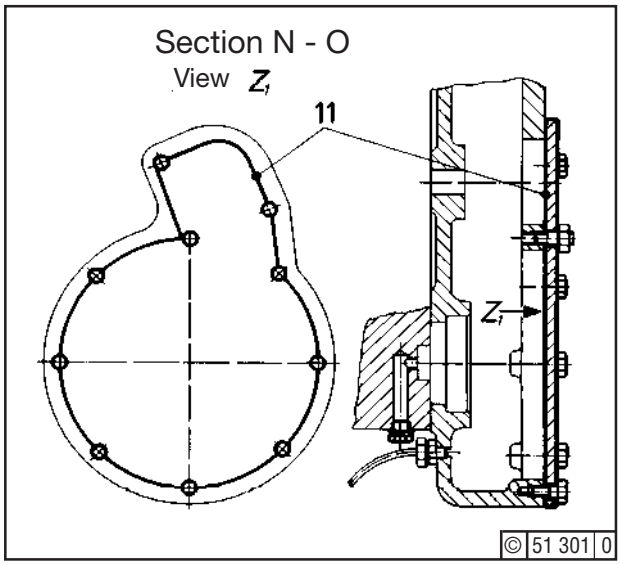

Fig. 9

This page intentionally left blank.

This job should preferably be entrusted to Deutz servicemen.

Tools:

- Standard tools
- Hydraulic flange spreader assy. (Section 1.8.1).

Job Cards:

- 04.09.01
- 04.16.02

Job:

Removing the Flange (see also page 3)

Normal Procedure

Remove flywheel (Job Card 04.09.01). Screw stud (4) into crankshaft jounal. Fit crossbearer (2) and screw nut (3) in place on stud (4). Unscrew plug (11) from connection in flange (12) and screw adapter (6) in place. Fill pump (1) with oil (Job Card 04.16.02), screw into adapter so that pump will not foul crossbearer (2). Tighten bolts between flange (12) and adapter (6) plus bolts between adapter and pump (1) so that the hydraulic oil used for flange spreading will stay in.
After releasing valve screw (10) somewhat, operate pump a few times until oil comes out through valve screw (10) free from bubbles. Tighten screw (10). Operate pump up to 2000 bar or so, whereupon flange (12) will normally easily come off the crankshaft journal.

The flange must not "shoot off" the crankcase, but come off in stages. To this end make sure that the distance between bearer (2) and retaining nut (3) will not exceed 5 mm in each stage.

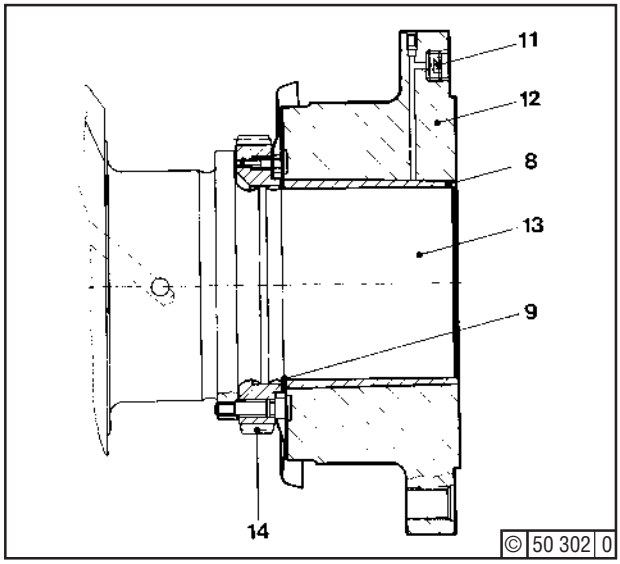

Exceptional Procedure

To assist in the hydraulic action, additionally turn about crossbearer (2) and use puller bolts (7). To secute bearer and flange, screw nut (3) up to bearer.

Whenn pulling off flange (12), be sure not to put your hands between flange and crossbearer.

Refitting the Flange (see also page 3)
Unscrew plug (11) from flange (12). Check that oil passages and groove of flange and joint faces between flange, taper sleeve (8) and crankshaft (13) are perfectly clean, but use only detergents that cause no corrosion.
Also check that joint between crankshaft (13) and taper sleeve (8) is completely dry.
Put spacer plate (9) on gear (14) and slip sleeve (8) - heated to 100°C or so - over journal (13) as far as it will go. After lubricating inside, fit flange (12) on sleeve (8) so that the identical marks (Nos.) (5) of sleeve and flange mate with punch mark (16) on journal (13) - Fig. 2 -. This agreement must be ensured also when the flange has reached its final position.

Screw Stud (4) into cranlshaft (13), fit crossbearer (2) and screw nut (3) in place. Tighten flange (12) with the device comprising items (2), (3) and (4). Screw adapter (6) into flange (12).
Fill hydraulic pump (1) with oil (Job Card 04.16.02), screw into adapter (6) and turn with adapter so that pump will not foul crossbearer (2). Tighten bolts between flange (12) and adapter (6) plus bolts between adapter and pump (1) so that the hydraulic oil used for flange spreading will stay in.
After releasing valve screw (10) somewhat, operate pump a few times until oil comes out through valve screw free from bubbles. Tighten screw (10).
Expand flange by operating pump (1) and turn nut (3) by wrench (5) to pressflange by crossbearer (2) onto taper sleeve (8) **as far as it will go.** In doing so, keep flange from rotation. Be sure to apply the maximum pressure of 1500 - 2000 bar and hence get a maximum spreading of the flange, so the flange can be mounted smoothly without "seizing" of components.

Repairs of Sleeve (8) and Flange (12)
Should scores between sleeve and flange affect hydraulic action, thoroughly smoothen scores and fill up whatever is left with Omni PLUS FE, Spachtelmetall supplied by:

Omni Technic GmbH
Triebstr. 9, 80993 München 50.

Following assembly, bleed pump (1) through valve screw (10) and unscrew pump (1) with adapter (6).
Close connection in flange (12) with plug (11). This plug must not be locked and not project from the joint face of the flange (12).
Remove crossbearer (2) and stud (4). After allowing oil pressure to be dispersed within min. 1hour. Mount flywheel (Job Card 04.09.01).

⚠ Following fitment of flange, wait 24 hours before starting up the engine.

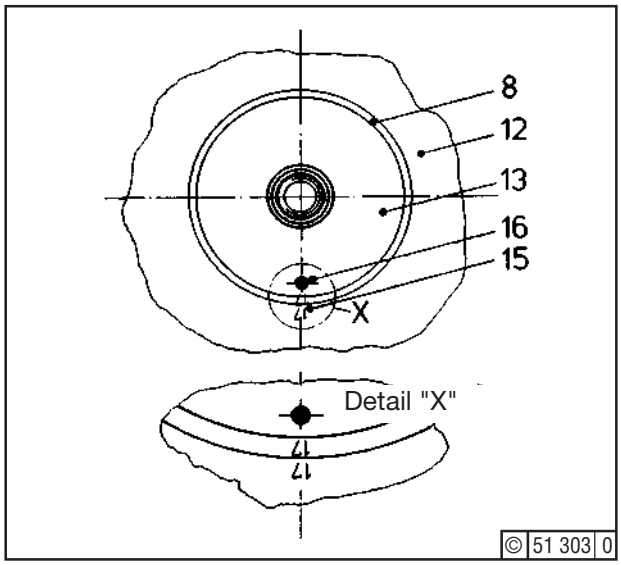

Fig. 1

Removing the Flange

Refitting the Flange

Section a - B

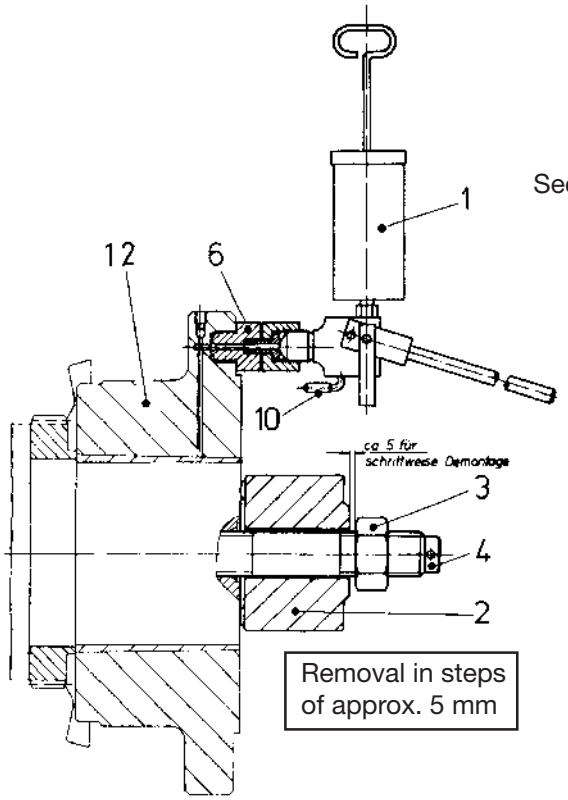

Removal in steps of approx. 5 mm

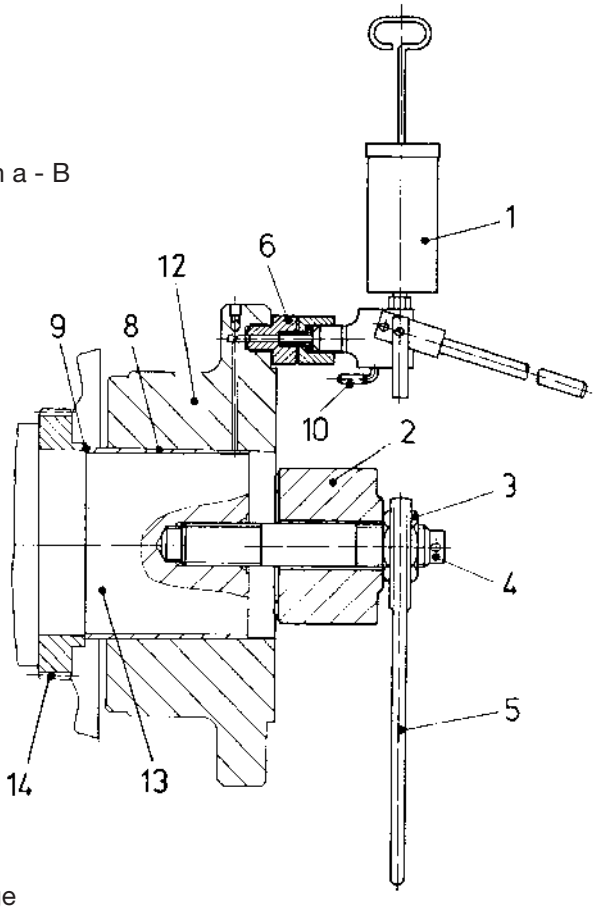

Removing the Flange
Normal Procedure

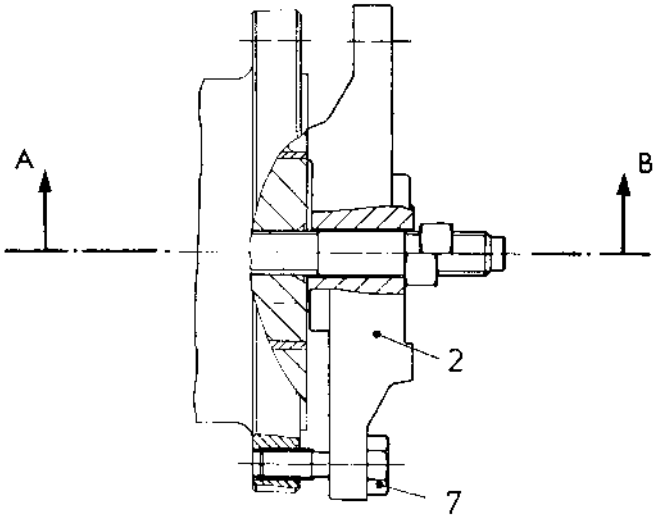

Exceptional Procedure

© 51 304 0

Fig. 2

© 1283

This page intentionally left blank.

Filling

The hydraulic fluid should be SAE 30 motor oil only.

To avoid corrosion, no other fluid is permissible. Especially not an aggressive one..

Tools:

- Container for hydraulic fluid

Job:

Unscrew reservoir (10) from pump and dip nipple (12) into a fluid container. Pull piston (11) to fill reservoir (10). Hold nipple (12) up and slightly press valve ball (13) in order to bleed any air present. Screwing reservoir (10) into pump will automatically push in ball (13) so as to open the valve.

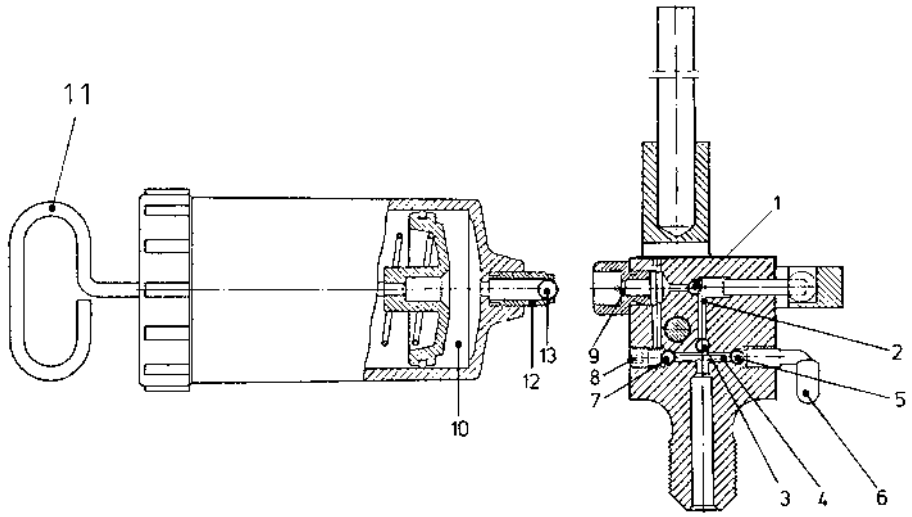

© 51 305 0

For cleaning the pump body, pull out pin to which the handle is linked and remove piston (11). The remaining components are removed in the following order: valve screws (6) and (8), balls (5) and (7), pin (4), ball (3) and pin (2) through the pump outlet, and finally ball (1) through the cylinder.

After cleaning pump body, reassemble components in the reverse order.

This page intentionally left blank.

If work is to be carried out on a speed governor, engine control unit, governing linkage and injection pump, strictly observe the following safety precautions.

Prior to Work

Stop engine. Close shut-off valve (2) on air receivers (1).
Bleed air supply line (3) to starting air master valve (4).

Following Work
Open shut-off valves (2) on air receivers (1).

Should the engine tend to race on starting, operate main switch (7).

Provided the linkage is properly adjusted, the engine can also be stopped by turning the lever on governor (terminal) shaft (6) toward the engine's driving end, using wrench (5) of SW 27 (mm a/fl).

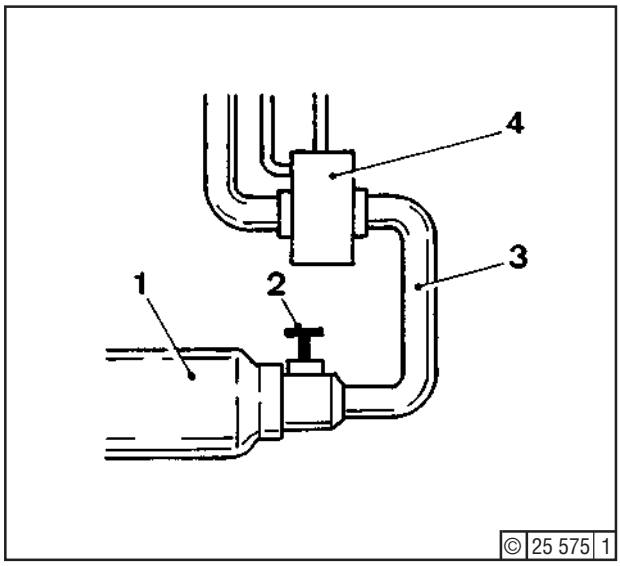

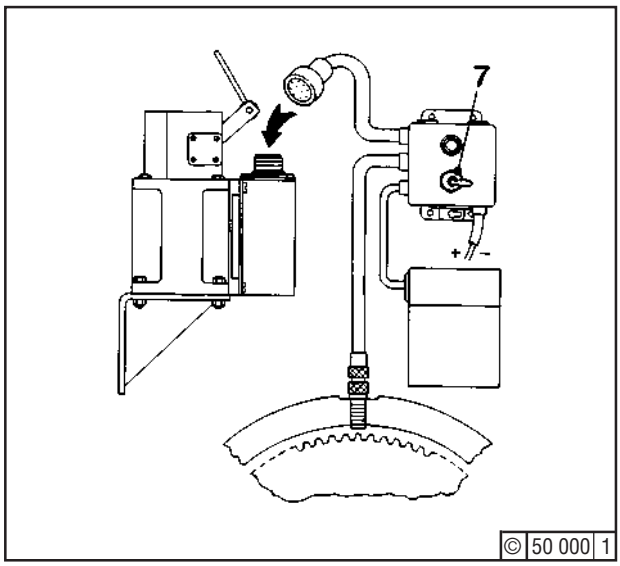

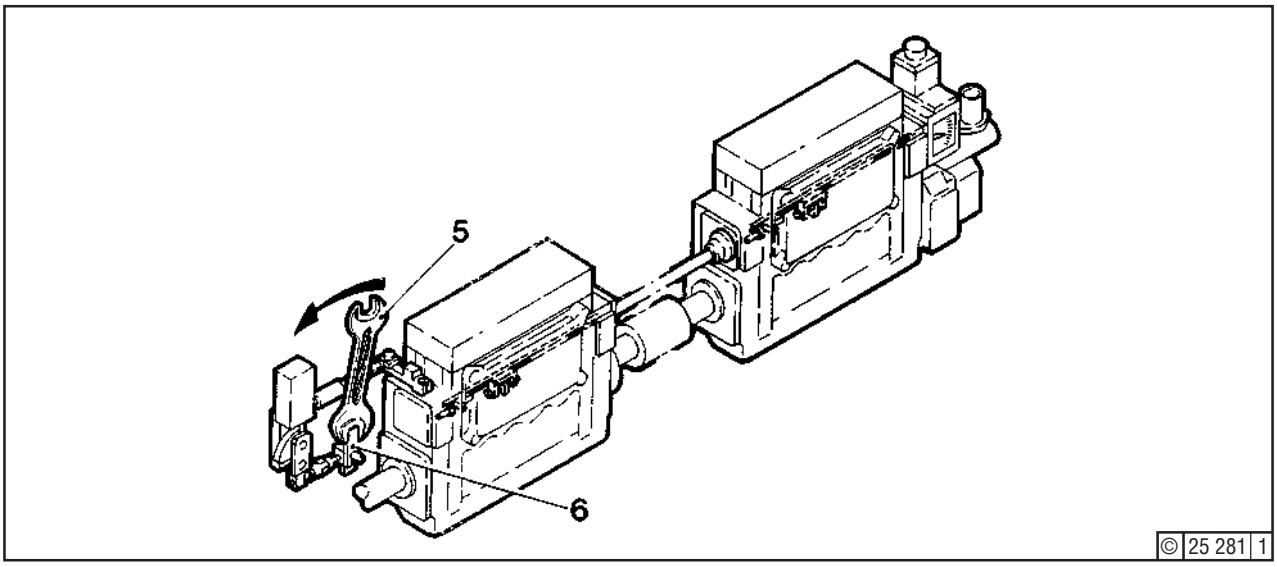

This page intentionally left blank

If work is to be carried out on a speed governor, engine control unit, governing linkage and injection pump, strictly observe the following safety precautions.

Prior to Work

Stop engine. Close shut-off valve (2) on air receivers (1). Bleed air supply line (3) to starting air master valve (4).

Following Work

Open shut-off valves (2) on air receivers (1).

Provided the linkage is properly adjusted, the engine can also be stopped (to prevent racing) by turning the lever on governor (terminal) shaft (6) toward the engine's driving end, using wrench (5) of SW 27 (mm a/fl).

With **UG 8 D governor** engine may also be stopped by setting "Load Limit" button to zero.

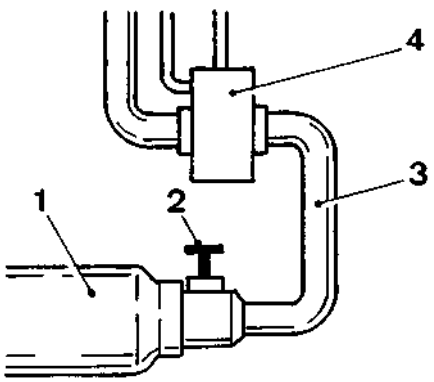

© 25 575 1

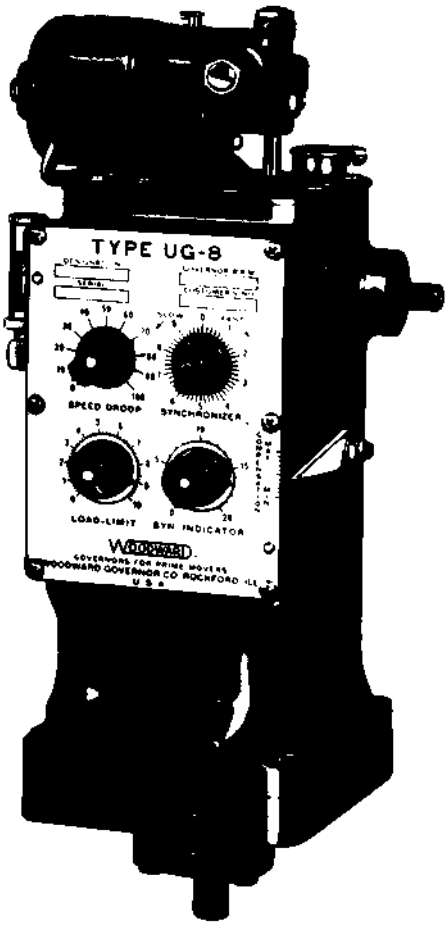

© 50 041 1

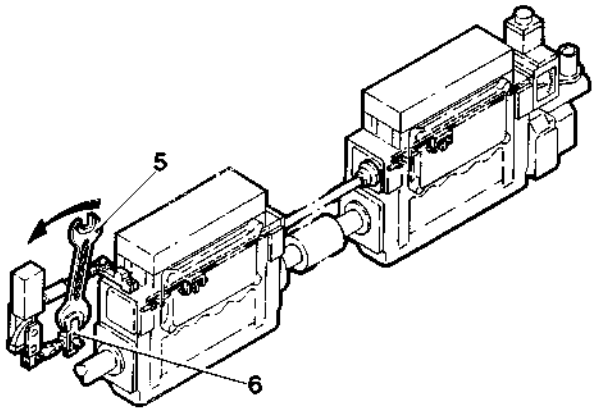

© 25 281 1

This page intentionally left blank

If work is to be carried out on a speed governor, engine control unit, governing linkage and injection pump, strictly observe the following safety precautions.

Prior to Work

Stop engine. Close shut-off valve (2) on air receivers (1). Bleed air supply line (3) to starting air master valve (4).

Following Work
Open shut-off valves (2) on air receivers (1). Should the engine tend to race on starting, press stopping button (5).

Provided the linkage is properly adjusted, the engine can also be stopped by turning the lever on governor (terminal) shaft (6) toward the engine's driving end, using wrench (5) of SW 27 (mm a/fl).

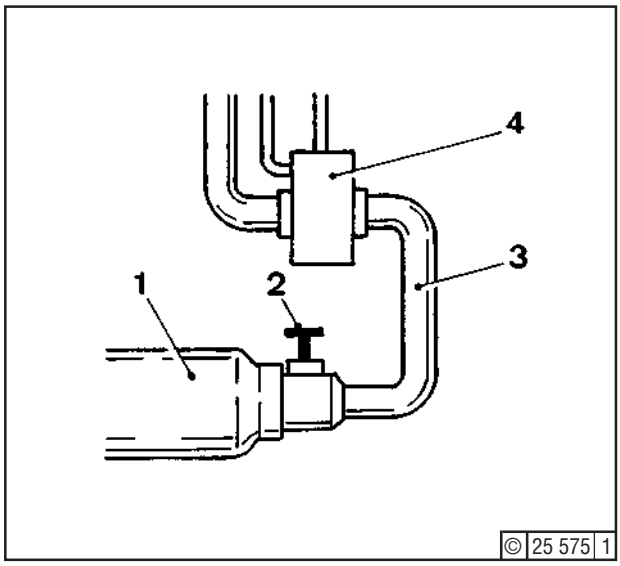

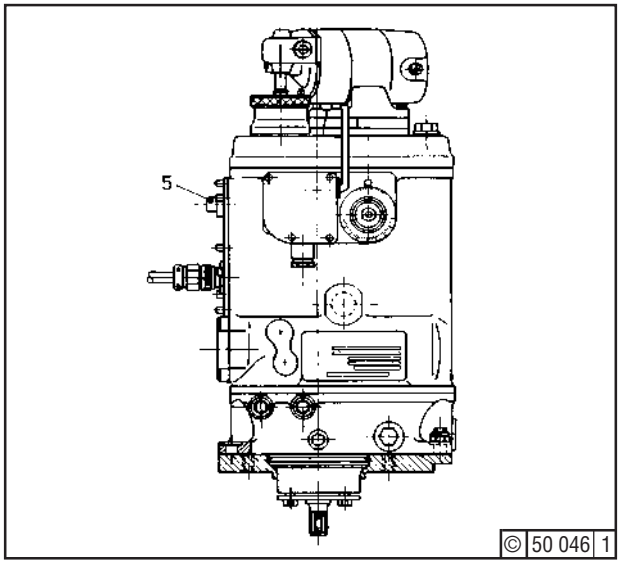

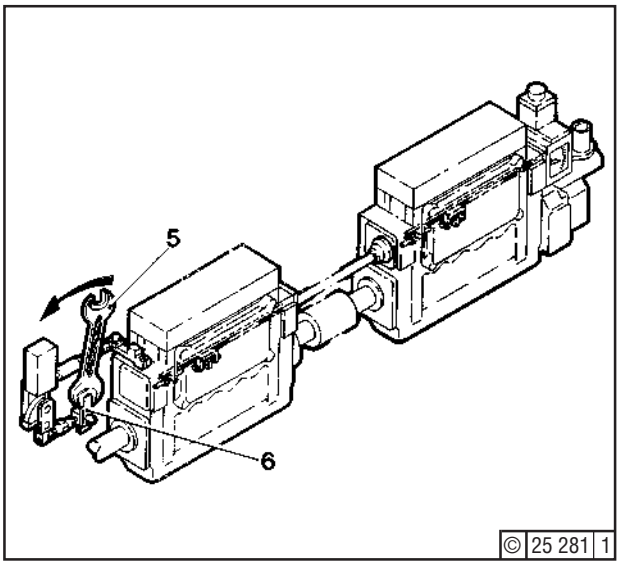

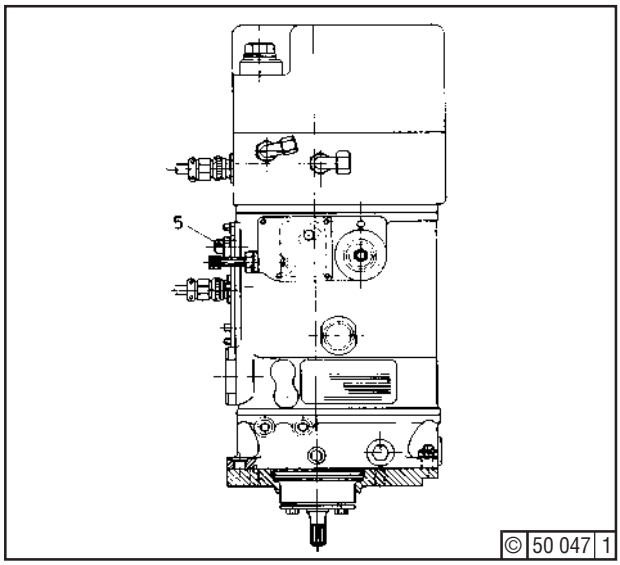

© 0585

This page intentionally left blank

Servicing

(Oil Change)
Contaminated oil will lead to governor trouble.

Tools:
- Standard tools

Job Card:
- 05.03.12

Be sure to use fresh oil only as specified by governor manufacturers which will guarantee proper, satisfactory operation and long service life of governor.

The old oil is drained in hot condition. Before filling in new oil check that the containers used are clean. If necessary, wash them in clean diesel fuel. During the oil change the governor may be removed or in position on engine.

To change the oil proceed according to the Woodward manual.

Observe safety precautions (job card 05.00.01) when restarting the engine and during the test run..

Adjust needle valve (job card 05.03.12) if governor does not function properly..

© 0585

This page intentionally left blank

Servicing

(Oil Change)
Contaminated oil will lead to governor trouble.

☞ Be sure to use fresh oil only as specified by governor manufacturers which will guarantee proper, satisfactory operation and long service life of governor.

Tools:
- Standard tools

Job Card:
- 05.03.12

The old oil is drained in hot condition. Before filling in new oil check that the containers used are clean. If necessary, wash them in clean diesel fuel. During the oil change the governor may be removed or in position on engine.

To change the oil proceed according to the Woodward manual.

⚠ Observe safety precautions (job card 05.00.01) when restarting the engine and during the test run.

Adjust needle valve (job card 05.03.12) if governor does not function properly..

© 0585

This page intentionally left blank

Inspection

Occasionally or after a governor oil change (job card 05.03.11) the compensation (needle valve) may need adjustment.

When sudden load changes result in heavy over- or underspeeding and sluggish return to the preset speed, this suggests wrong compensation setting.

Tools:

- Standard tools

Job Card:

- 05.03.11

When engine temperatures and governor oil temperature have reached the normal service values adjust compensation, oreferably at lowest engine load and speed, in accordance with the Woodward manual.

Observe safety precautions (job card 05.00.01) when restarting the engine and during the test run..

The governor droop setting is made by the governor manufacturers on the basis of the specific engine application and is then verified during the works accetance test run of the engine.

The **droop setting** may **not** be changed.

© 0585

This page intentionally left blank

Setting

Occasionally or after a governor oil change (job card 05.03.11) the compensation (needle valve) may need adjustment.

When sudden load changes result in heavy over- or underspeeding and sluggish return to the preset speed, this suggests wrong compensation setting.

Tools:

- Standard tools

Job Card:

- 05.03.11

When engine temperatures and governor oil temperature have reached the normal service values adjust compensation, oreferably at lowest engine load and speed, in accordance with the Regulateurs Europa Ltd. manual.

Observe safety precautions (job card 05.00.01) when restarting the engine and during the test run..

Governor Droop Setting

The governor droop setting is made by the governor manufacturers on the basis of the specific engine application and is then verified during the works accetance test run of the engine.

The **droop setting** may **not** be changed.

© 0585

This page intentionally left blank

Setting the magnetic frequency generator

The magnetic frequency generator (Fig. 1) is attached to the gearbox at the height of the intermediate wheel in relation to the speed control drive, Fig. 2. It creates electrical impulses proportionally to the speed of the intermediate wheel by sensing the teeth of the gearwheel moving past the speed generator, and passes these impulses on to the control electronics.

☞ A frequency generator (3) incorrectly set to the intermediate wheel, as well as adhering metal particles on the permanent magnet of the frequency generator influence the impulse output to the control electronics.
The frequency generator is factory set, therefore, only remove for an important reason.

Job:

Removal

- Loosen knurled screw (1) and disconnect the plug-in connection.
- Loosen locknut (4).
- Manually remove the frequency generator (3).

Check

- Check frequency generator for possibly adhering metal particles or soiling, clean, if necessary.

Refitment

- Coat frequency generator (3) and screw-in hole with the DEUTZ DW 66 compound. Screw in the frequency generator.
- Turn the gearwheel (5) until the tip of a tooth is positioned opposite the frequency generator.
- Manually screw the frequency generator down to the tip of a tooth.
- Turn back the frequency generator 180° - 360° ($^1/_2$ - 1 revolution)
  Spacing **"X"** between the gearwheel (5) and frequency generator (3) must amount to **0.5..... 1.0 mm**.

☞ The hole (2) on the frequency generator must be positioned **in** or **opposite** the **motor rotational direction** (6), if necessary, turn back slightly.

- Once the setting has been completed, tighten locknuts (4) (ensure that the position of the frequency generator is not changed).
- Establish the plug-in connection.
- Retighten knurled nut (1).

Tools:

- Standard tools

Job card:

- 04-08-01
- 05-04-14

Aid:

- DEUTZ DW 66

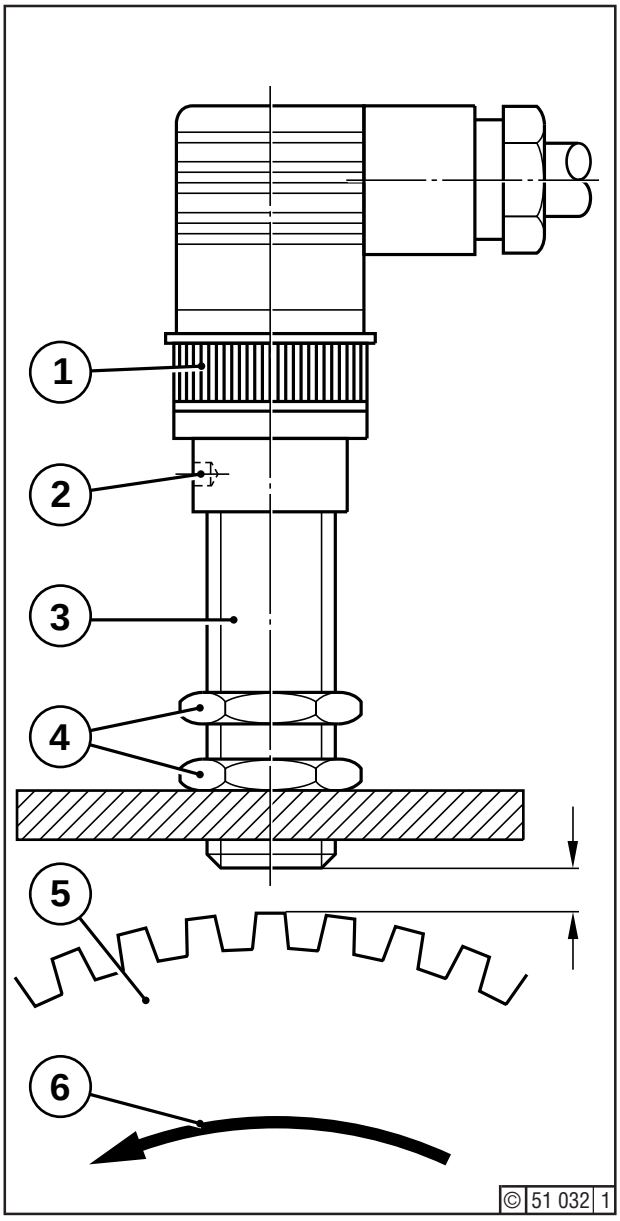

Fig. 1 Setting the frequency generator

© 0198

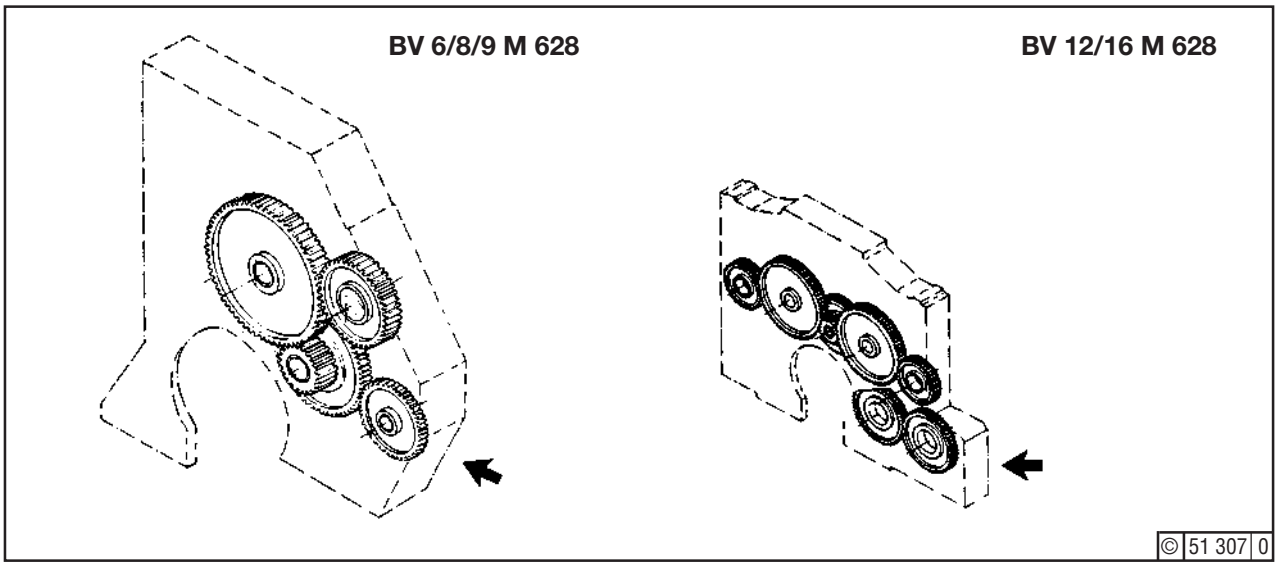

Fig. 2 Mounting point of the frequency generator

Servicing / Reconditioning

Any servicing or reconditioning work on the "Europa" governor should be carried out strictly in accordance with the manufacturers' instructions or preferably by the manufacturers themselves.

☞ Before removing governor from engine, mark connections.

Any loss of oil requiring replenishment more than once a week should be eliminated by replacing governor drive shaft seal (1) according to the manufacturers' instructions.

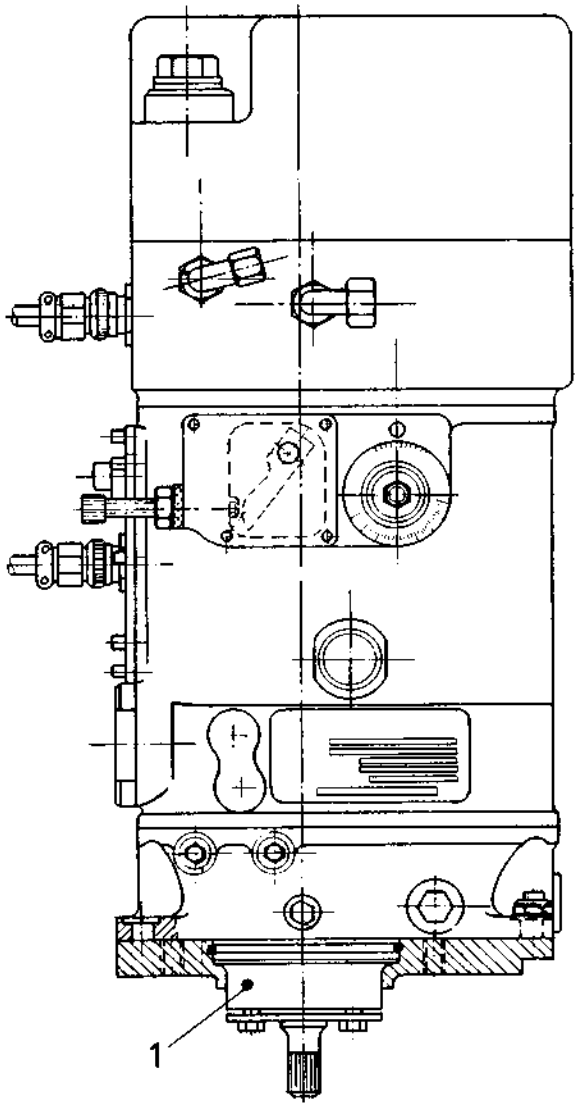

© 51 308 0

This page intentionally left blank

Servicing / Reconditioning

IAny servicing or reconditioning work on the "Europa" governor should be carried out strictly in accordance with the manufacturers' instructions or preferably by the manufacturers themselves.

☞ Before removing governor from engine, mark connections.

Any loss of oil requiring replenishment more than once a week should be eliminated by replacing governor drive shaft seal (1) according to the manufacturers' instructions.

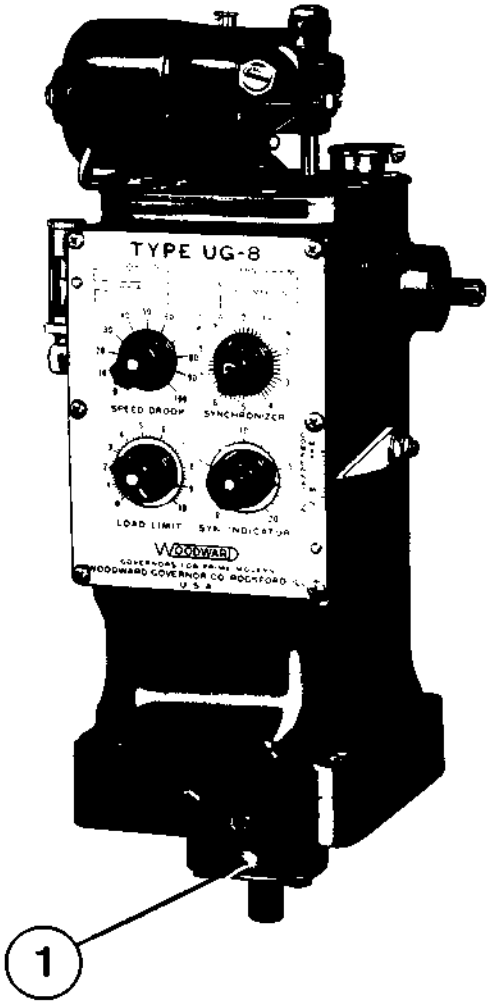

© 50 042 1

This page intentionally left blank

Servicing / Reconditioning

Any servicing or reconditioning work on the "Europa" governor should be carried out strictly in accordance with the manufacturers' instructions or preferably by the manufacturers themselves.

☞ Before removing governor from engine, mark connections.

© 0585

This page intentionally left blank

Inspection / Gauging

Unscrew governor fastening parts from governor drive. Dismantle drive and inspect for wear.

☞ Before dismantling drive, make sure it turns freely. In addition, gauge backlash between bevel gears. Excessive backlash may be eliminated by shim (9 or 20). IShould the bearings be worn, it will be recommendable to install new bearings and bevel gears.

Tools:

- Standard tools
- Feeler gauge

Job Card:

- 04.08.0
- 05.00.0
- 05.04.14

Job:

Close shut-off valve on air receivers and exhaust air supply pipe to engine. Remove governi ng linkage (Job Card 05.04.14).
Unscrew bolts (8) (Regulateurs Europa LTD) or nuts (1) (Woodward), remove bolts (15) and withdraw governor (32) upwards out of casing (2). Check that shaft (33) in gear (6)does not jam. Remove gasket (31). Unscrew bolts (16) and (34) and pull out drive from timing chest (37). Release locking plate (24) and pull off gear (27). Remove key (26) and bush (28). Unlock bolts (23) and unscrew. Pull out flanged bearing (29) complete and withdraw from casing (2).
In doing so, do not lose shims (20) required for correct backlash between bevel gears (6) and (17) when reassembling.

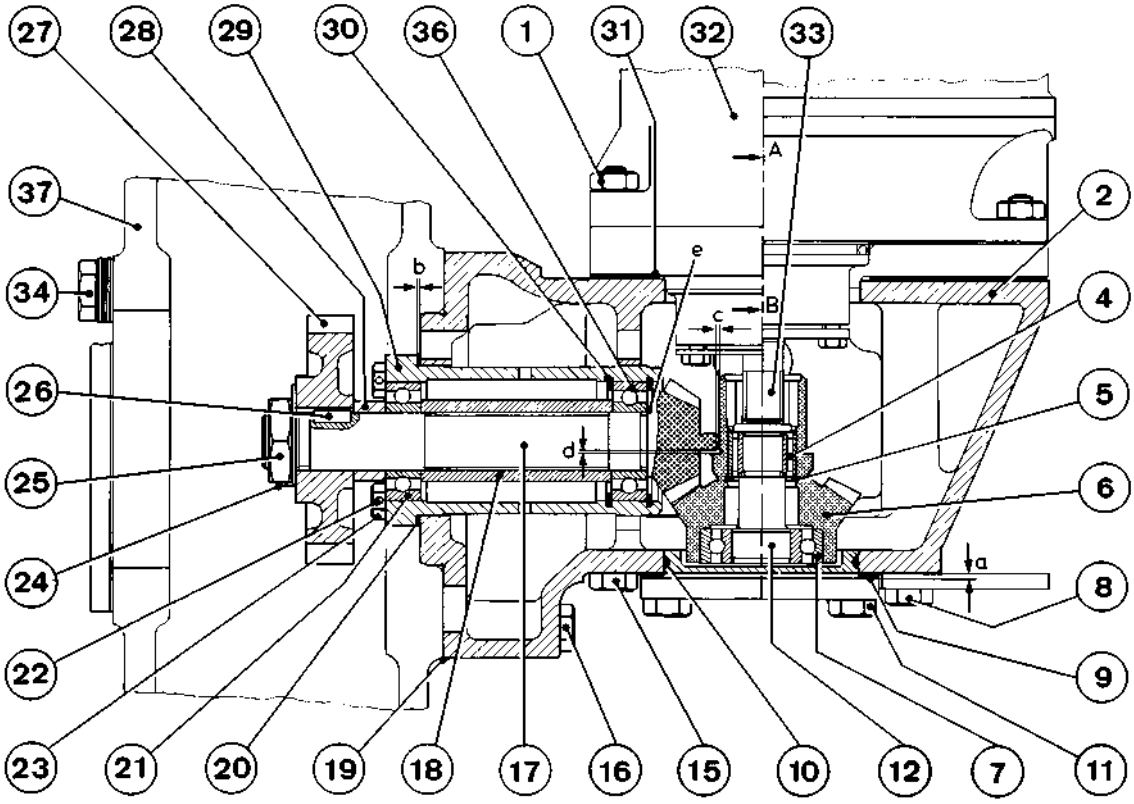

© 50 049 1

For further dimantling of bearing (39), drive shaft of gear (17) out of ball bearings (21) and (36). Drive bearing (21) out of bearing (29) and take out bush (18). Remove outer circlip (30) also .

Unscrew bolts (11) and withdraw fulcrum (12) with gear (6). Remove shims(9), which are likewise required for correct backlash of bevel gears (6) and (17). Pull fulcrum (12) out of gear (6). Remove bearing (7), circlip (5) and needle bearing (4).

Clean all components in diesel fuel, inspect for wear and, if necessary, replace.

Reassembling the Drive
Slightly apply oil to all components.

Drive Shaft with Bevel Gear (6)
Install needle bearing (4) in bevel gear (6).
Fit circlip (5). Slip ball bearing (7) onto fulcrum (12) and jointly install in gear (6).

Fit shims (9), push fulcrum (12) plus gear (6) into casing (2) and secure by bolts (11). Use shims (9) to obtain 0,6 mm clearance 'a' as a basis for setting backlash of bevel gears.

Flanged Bearing (29)
Install inner circlip (30) and push ball bearing (36). For this purpose be sure to use a sleeve, so the gauging pin of the gear will not be damaged. Fit bush (18) and introduce bearing (21). Install complete flanged bearing with shims (20) into casing (2) and secure by bolts (23).

Vary clearances 'a' and 'b' with shim (29) and (9) respectively until both 'c' and 'd' are 0,5 $\pm$ 0,5 mm. For checking 'd', unscrew the plug fitted in the casing side.

Tighten bolts (23) and lock by wire (22). Screw bush (28) in place and fit key (26). Fit gear (27) and locking plate (24). Screw nut (25) in place, tighten as specified (section 3.5, item 49) and lock by plate (24).

© 0585

Refitting the Drive

Place gasket (19) on casing (2). Push casing with driving parts into timing chest and secure by bolts (16) and (34). Ba cklash between gear (27) and idler gear: see job 04.08.01 . Fit gasket (31) and install governor with toothed shaft into drive shaft (6) , taking note of the dowel pin (78). Screw in bolts (8) and tighten.
Fit governing linkage (Job Card 05.04.14).

Start engine and check correct functioning of governor.

⚠ When start ing the engine and during the trial run be sure to observe all safety precautions (Job Card 05.00.01).

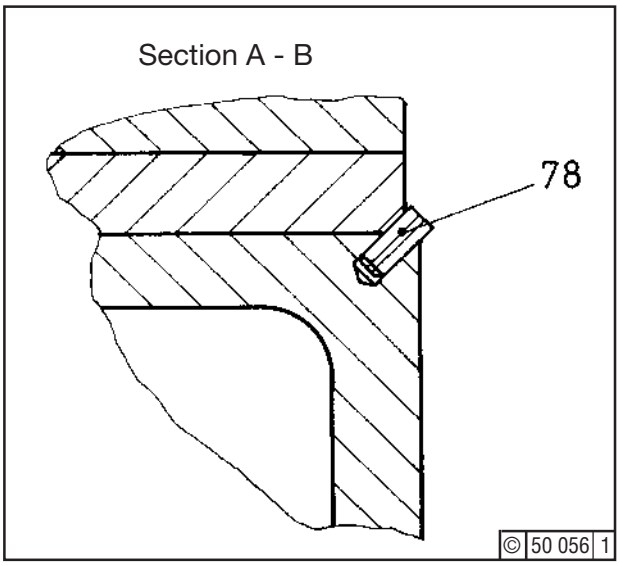

This page intentionally left blank

Servicing / Setting

For removing the injection pumps, it is necessary to remove the linkage between the pumps and to detach the linkage between pump and governor. After the pumps have been refitted , the linkage has to be checked and adjusted as necessary.
After a governor has been remounted, the setting of the linkage between governor and pump has also to be checked and adjusted as necessary.

We recommend that these jobs be entrusted to a DEUTZ specialist, since otherwise the warranty will possibly be affected. Only in emergency may this work be carried out by machine-room personnel. In that case, a DEUTZ specialist should be called in at the next opportunity to check and seal the control linkage.

Tools:

- Standard tools
- Sealing compound Deutz DW 59 (Section 3.6),
- Sealing wax red, part No.: 0100 7740

Job Card:

- 05.00.01

Job

Stop engine and observe safety precautions (Job Card 05.00.01).

Removing the Linkage

When Removing Injection Pumps

Remove linkage covers,. Remove covers at points A21 and A24 (Fig. 1).

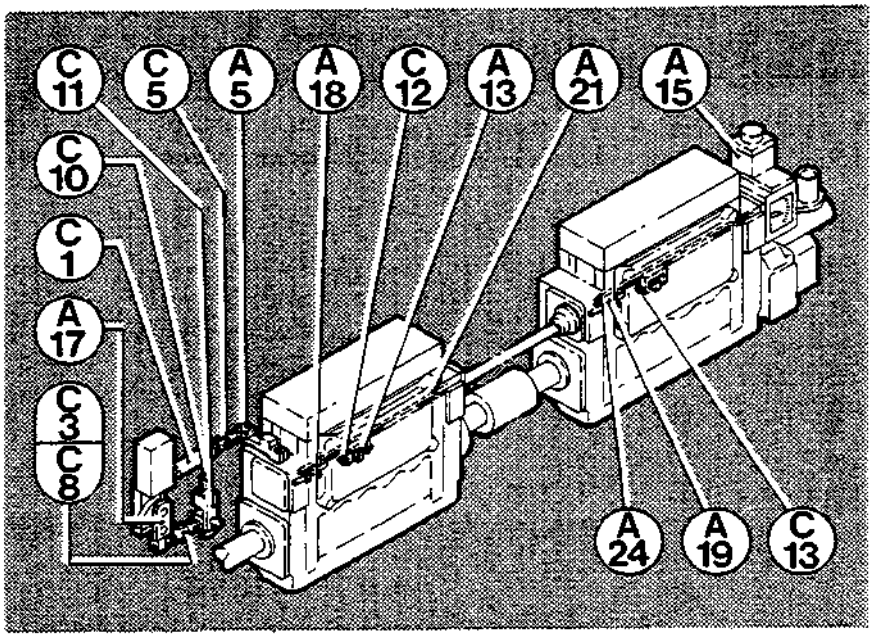

© 24 914 1

Fig. 1

Unscrew chees-head screws (60) - Fig. 2 -. Remove gaskets (64). Push covers (59) and bellows (29) towards the middle of links (55). Then undo cheese-head screws (62) and scrap. Remove flat irons (63). Slacken eccentrics (61) and carefully lift links out of the injection pumps.

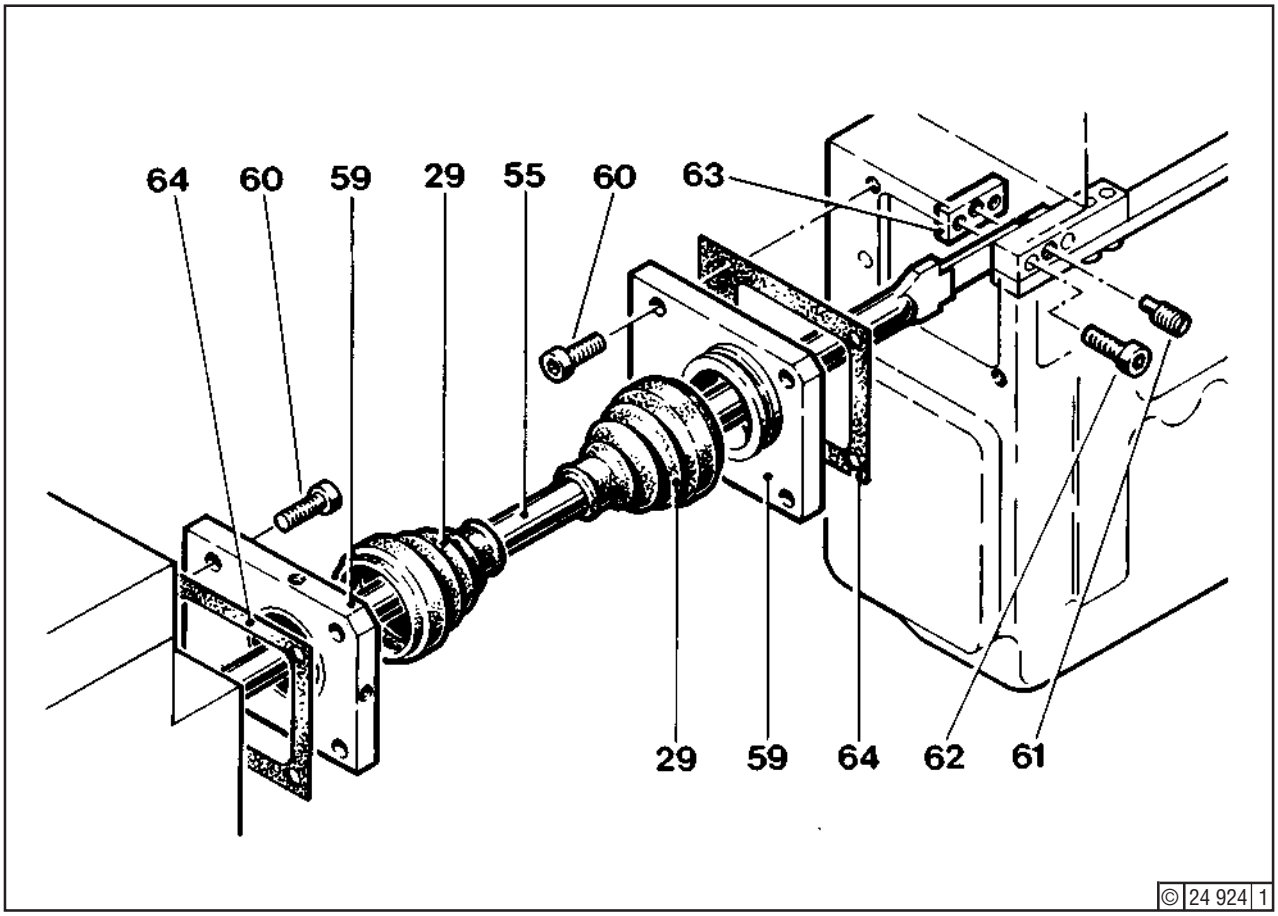

Fig. 2

After undoing the fastening screw A5 (Fig. 1) of the link C1, the injection pumps can be taken down.

When Removing Governor
Unscrew fastening bolt (*) - Fig. 3), remove link C3 and take down governor.

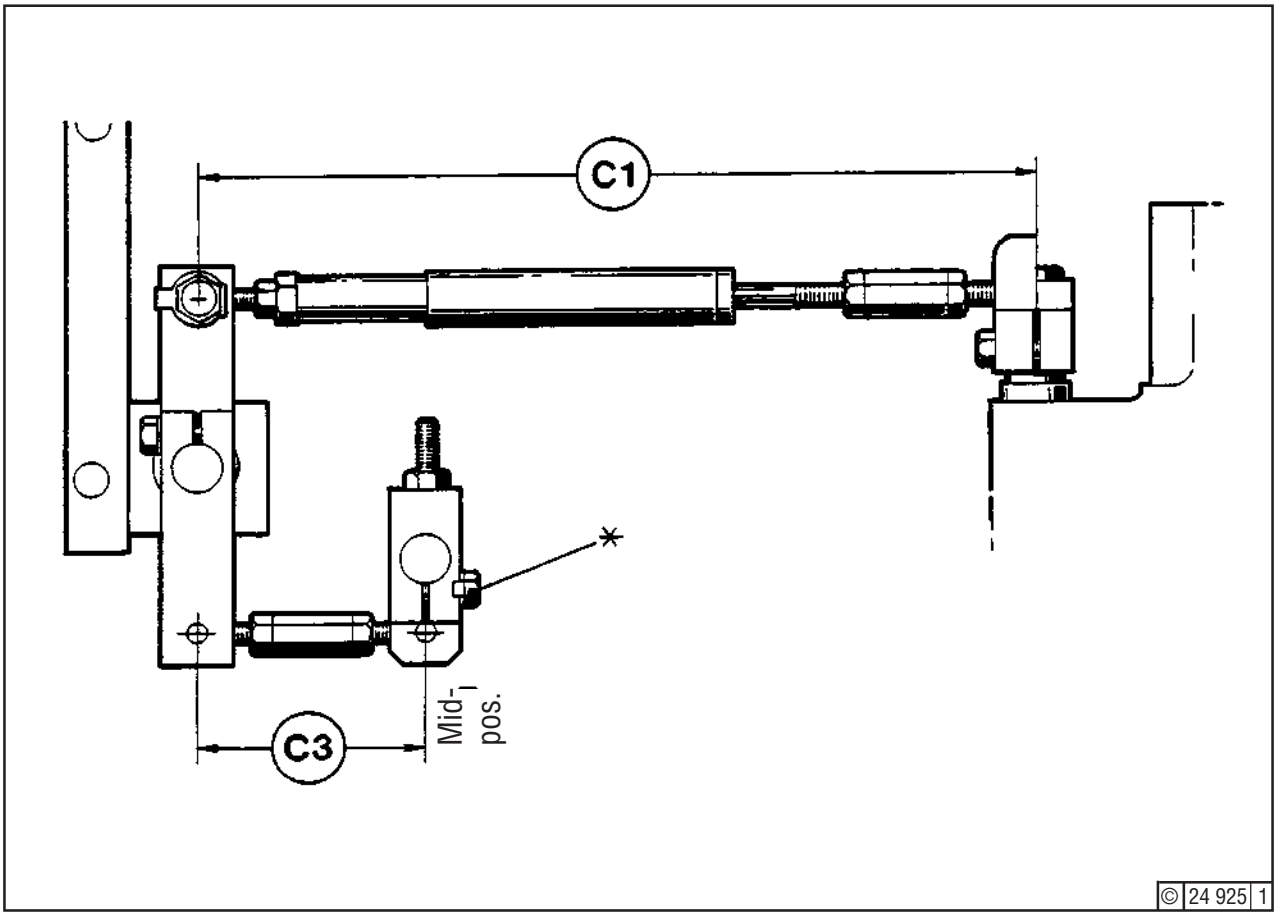

Fig. 3

Refitting the Linkage
For following operations, see also Fig. 1.

Checking Linkage Settings

1. Before refitting links C1and C3, check pertaining distance dimensions.

   They must be as follows:

   Link C1 = 310 mm, see Fig. 3

   Link C3 = 86 mm, see Fig. 3

Synchronizing the Injection Pumps

2. Detach link C1 at point A5 (*) - Fig. 4 -.

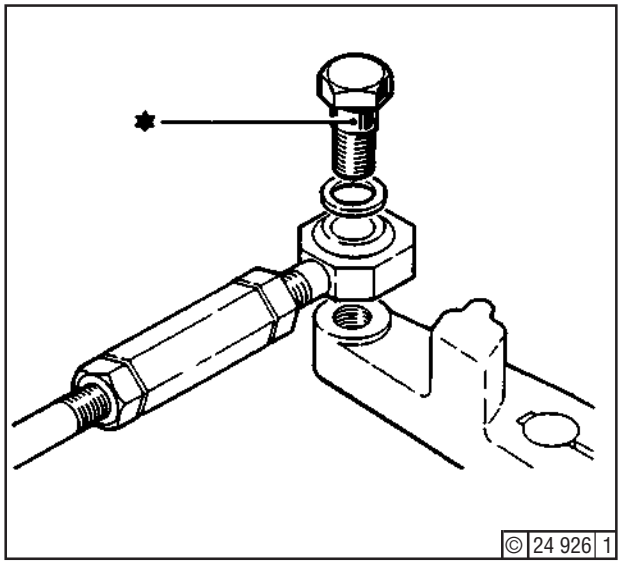

Fig. 4

3. Fully screw in stop screw (*) at point A 13 - Fig. 5 -. Record screw setting (**) where linkage is adjusted repeatedly.

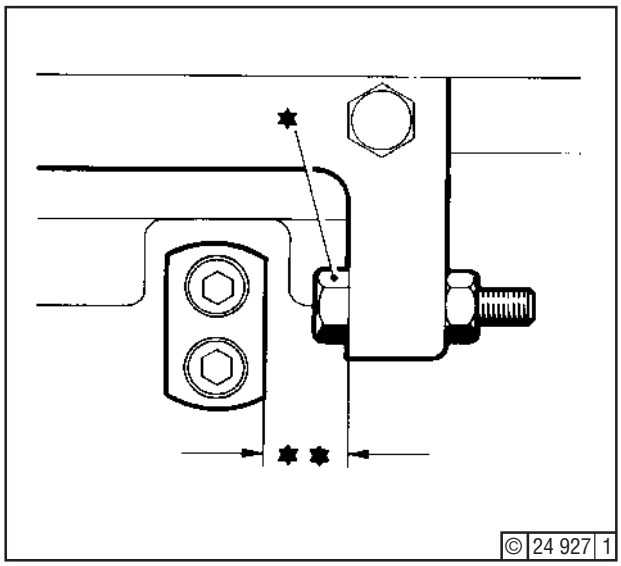

Fig. 5

4. Release screw (*) - Fig. 6 - to remove lever on starting fuel allowance stop, point A17.

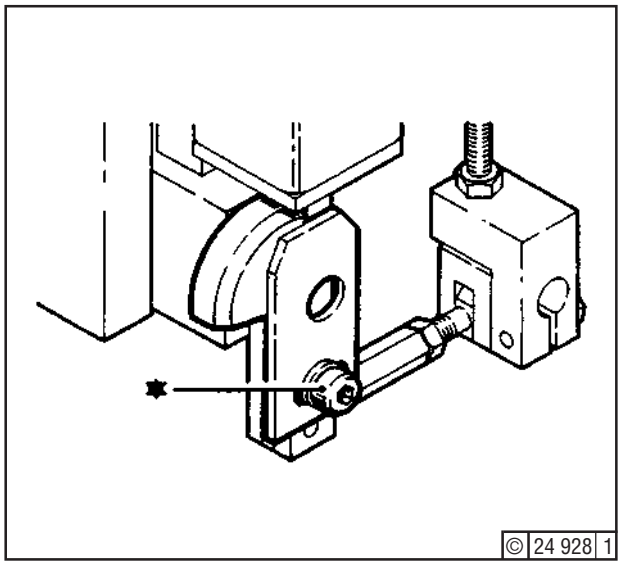

Fig. 6

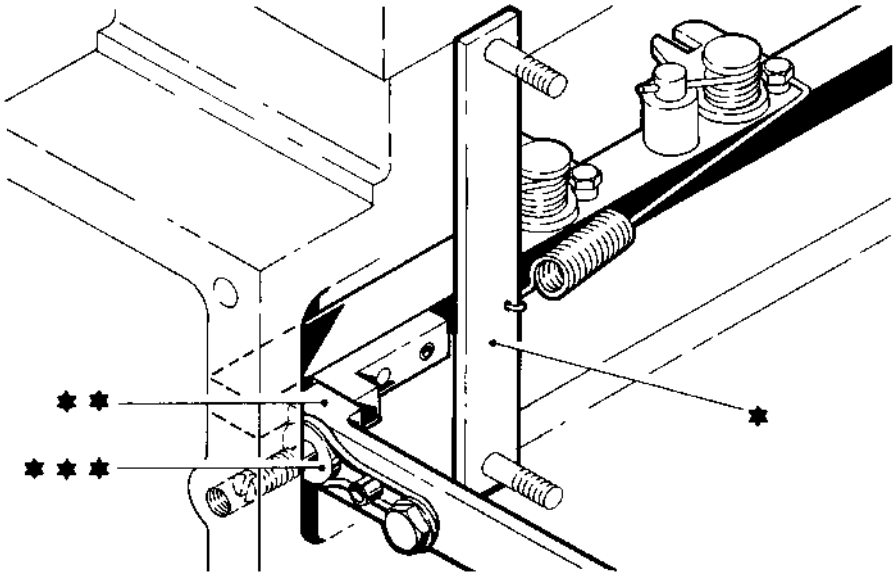

Fig. 7

5. Use tools (*) - Fig. 7 - to pull control rods of all injection pumps against the gauges (**) contacting check stops (***) at points A18 and A19.
   Leave tools (*) mounted for the time being.

6. Setting the Linkage
   Mount the linkage in the reverse order as described for "Removing the Linkage when Removing Injection Pumps", but do not yet tighten the new cheese-head screws (***) - Fig. 8 -.

   First of all, turn the eccentric (**) at the left hand end of the link (*) (pointA21) to the middle position, i.e., with the slit in the eccentric horizontal. Insert new cheese-head screws (***) and tighten according to specification, see "Specification Data", Section 3.5, line 60.

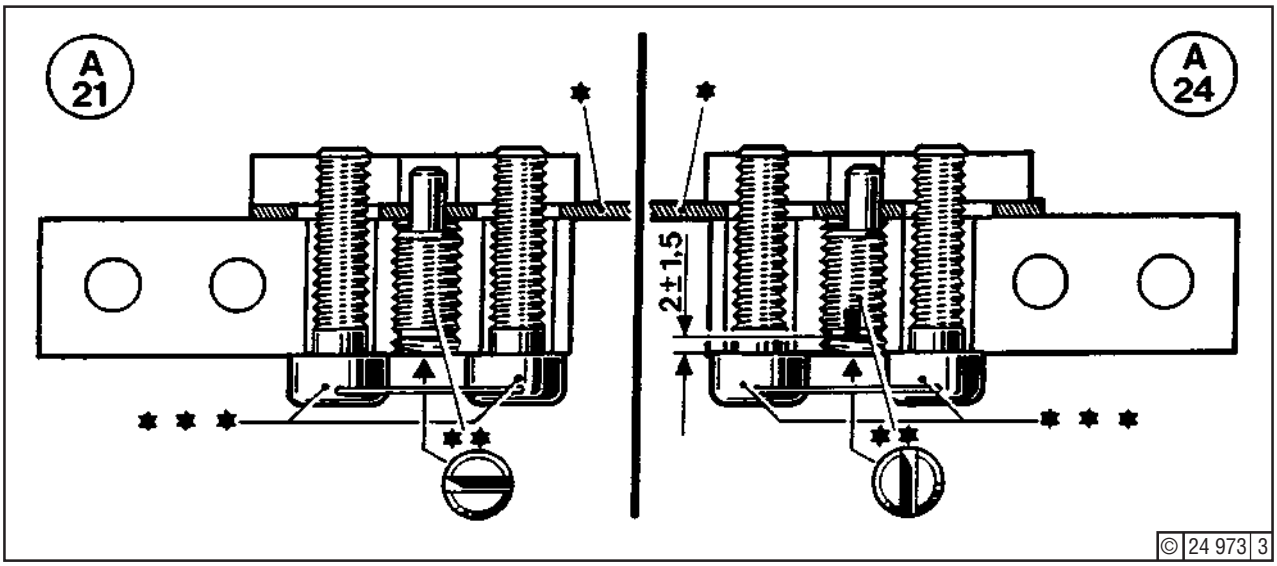

Fig. 8

Then, at the right-hand end of the link (*) (point A24), adjust the length of the link by means of the eccentric (**) so that the control rods contact the check stops without pressure, with the gauges inserted (see Fig. 7). Insert new cheese-head screws according to tightening specification, see "Specification Data", Section 3.5, line 60. If the setting at the right-hand eccentric is insufficient , rectify at the left-hand eccentric.

Having completed the setting, the cheese-head screws have to be lead-sealed.

7. Remove tools (Fig. 7). Move linkage in the direction "Stop" until one or more stop screws abut at points C12 and C13 (Fig. 9).

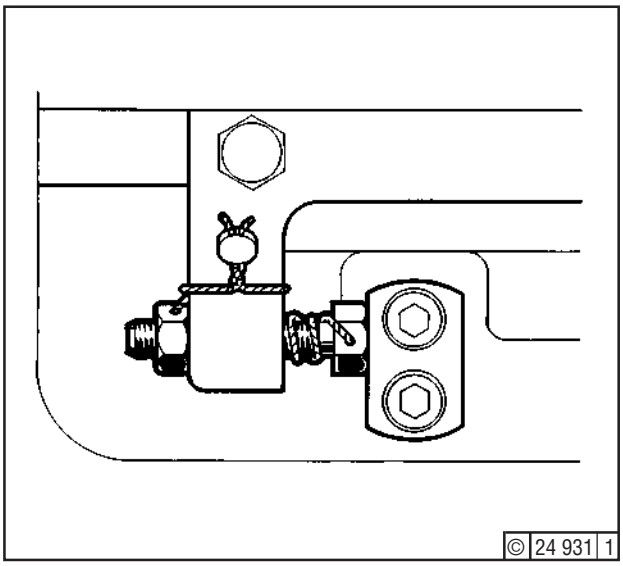

Fig. 9

Then adjust distance between stop piston ("Stop" position) at point A15 (Fig. 10) and shock absorber. Lock grooved nut (*).

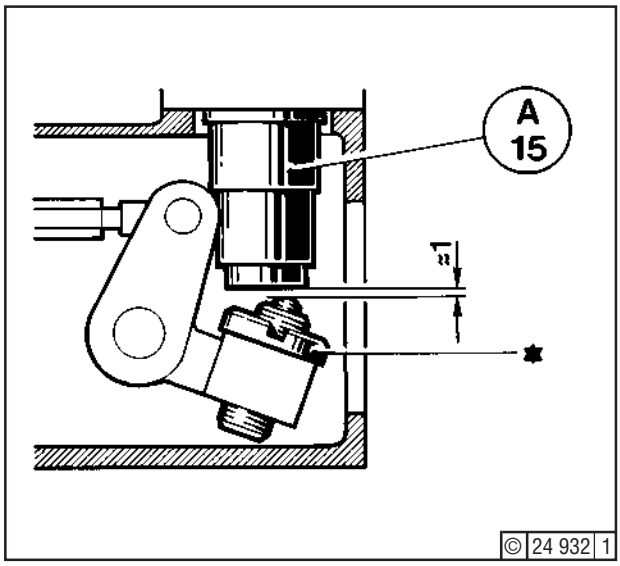

Fig. 10

8. Refit the tools (see under 5.) , then check whether, at operating position of the spring-loaded cylinder A15 (Fig. 11) and contact of the control rods at the check stops (points A18 and A19), there is a clearance of approx. 15 mm.

   Secure grooved nut (*) with Deutz DW 59 as specified.

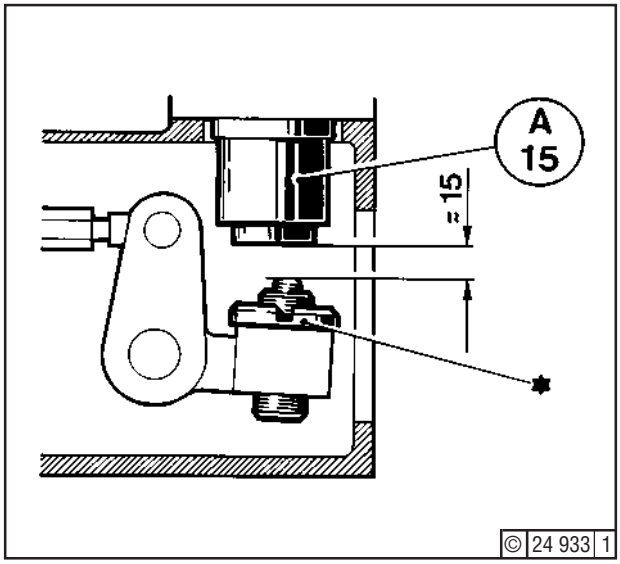

Fig. 11

© 0583

Governor link

9. Turn governor output shaft to graduation 5 (midposition) - Fig. 12 -, then fasten lever C11 (*) on output shaft in roughly vertical position.

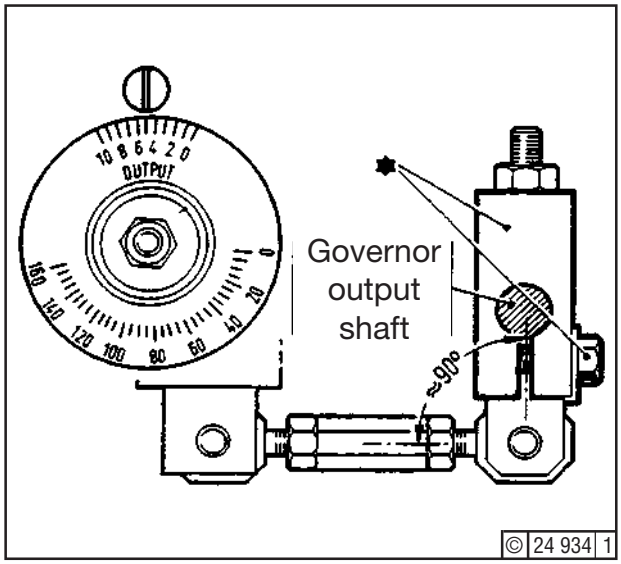

Fig. 12

10. Turn governor to graduation (10) - Fig. 13 - and secure link C1 to point A5 (*). Adjust length of link at point C5 (**) to ensure freedom from internal stressing.
Remove tool from all injection pumps (see Fig. 7).

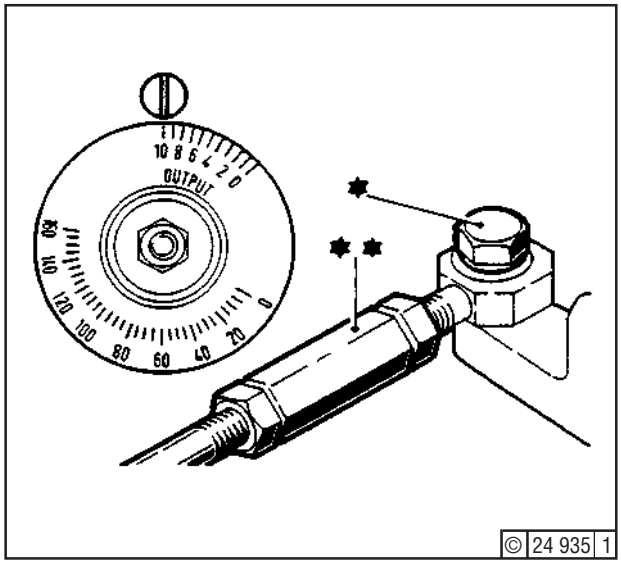

Fig. 13

11. Adjust linkage at points C8 (*) or C10 (**) - Fig. 14 - so as to obtain the settings scheduled in table below. Then tighten all locknuts.

Graduation	
Governor	Injection Pump
2	0
0	- 2,5 to - 5
9	approx. 14

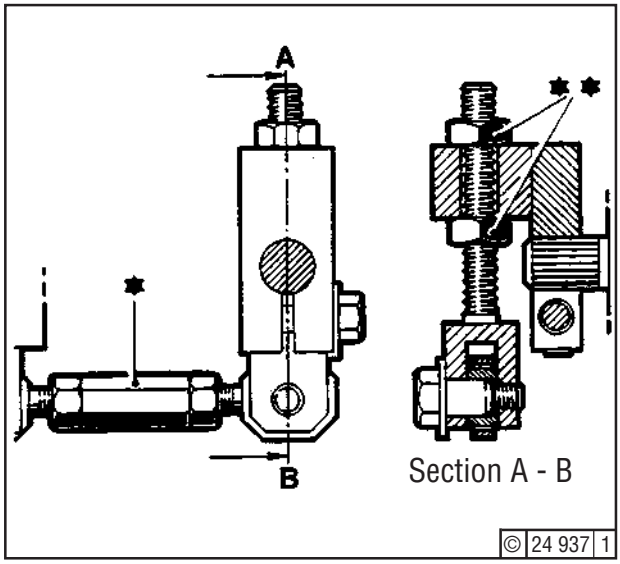

Fig. 14

Typical setting

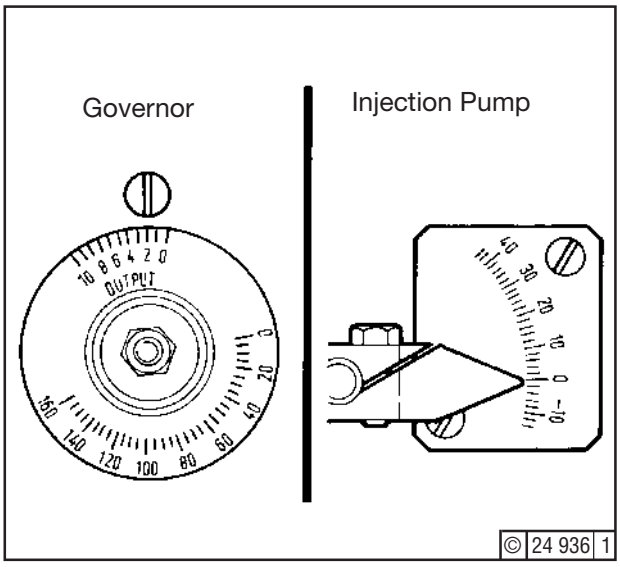

12. Set stop screw A13 so that load indicator on injection pump points to graduation (14) - Fig. 15.

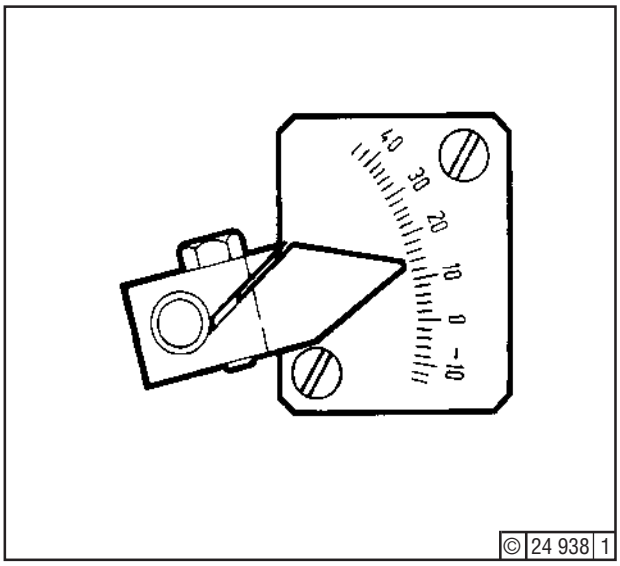

Fig. 15

13. Check that linkage abuts at stop screw (*) - Fig. 16 - when pushed to maximum load (point A13).
Upon completion of the setting, lead-seal the engine output (**).

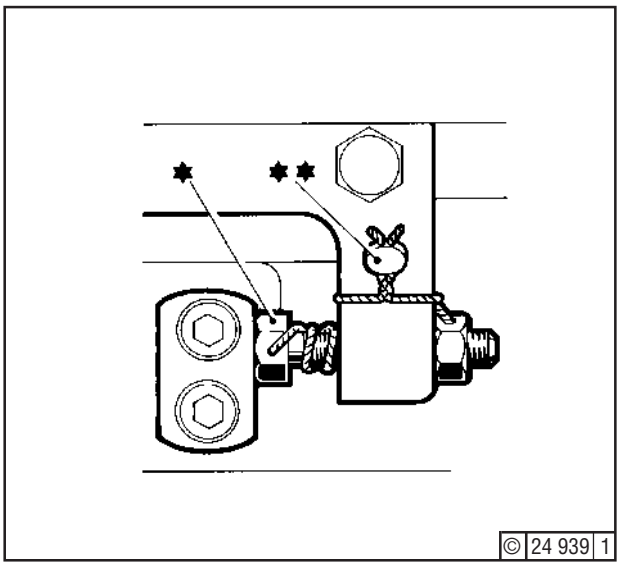

Fig. 16

14. After the engine has been put back to service and final load setting has been made, check that the governor scale gives the following readings:

No load	=	graduation 2
Full load	=	graduation 8

Failing this, adjust linkage (points C8 or C10 under 11.).

© 0583

15. Setting the starting fuel limit:
While the engine is running at 11 bar b.m.e.p., pressurize air cylinder of fuel limit and adjust refitted lever so that there is contact at point (**) - Fig. 17 - .
Tighten screw (*), depressurize air cylinder.

After finally completing the settings, refit the covers at points A21 and A24 - Fig. 1 -, together with new gaskets, if necessary. Remount the linkage covers.

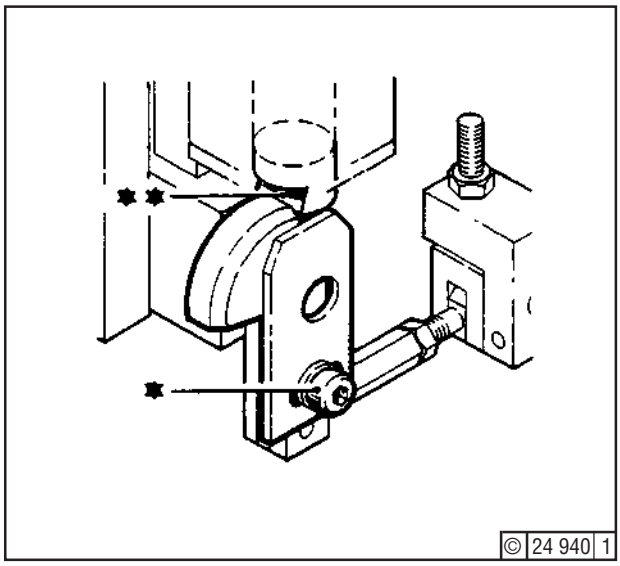

Fig. 17

This page intentionally left blank.

Servicing / Setting

For removing the injection pumps, it is necessary to remove the linkage between the pumps and to detach the linkage between pump and governor. After the pumps have been refitted , the linkage has to be checked and adjusted as necessary.
After a governor has been remounted, the setting of the linkage between governor and pump has also to be checked and adjusted as necessary.

We recommend that these jobs be entrusted to a DEUTZ specialist, since otherwise the warranty will possibly be affected. Only in emergency may this work be carried out by machine-room personnel. In that case, a DEUTZ specialist should be called in at the next opportunity to check and seal the control linkage.

Tools:

- Standard tools
- Sealing compound Deutz DW 59 (Section 3.6),
- Sealing wax red, part No.: 0100 7740

Job Card:

- 05.00.01

Job

Stop engine and observe safety precautions (Job Card 05.00.01).

Removing the Linkage

When Removing Injection Pumps

Remove linkage covers,. Remove covers at points A22, A23, A25 and A26 (Fig. 1).

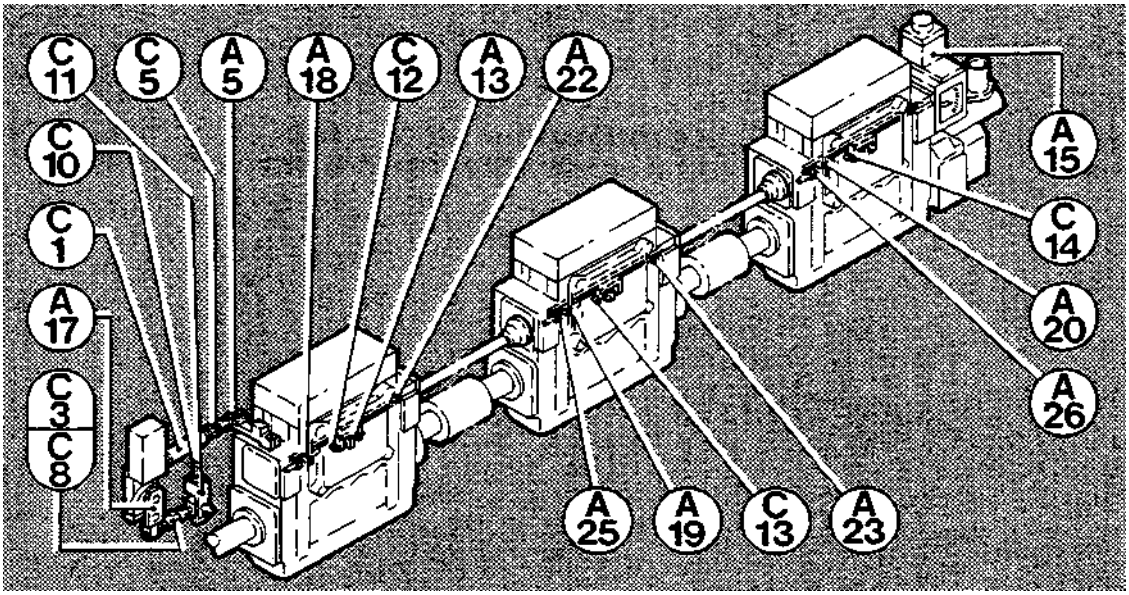

© 24 912 1

Fig. 1

Unscrew cheese-head screws (60) - Fig. 2 -. Remove gaskets (64). Push covers (59) and bellows (29) towards the middle of links (55). Then undo cheese-head screws (62) and scrap. Remove flat irons (63). Slacken eccentrics (61) and carefully lift links out of the injection pumps.

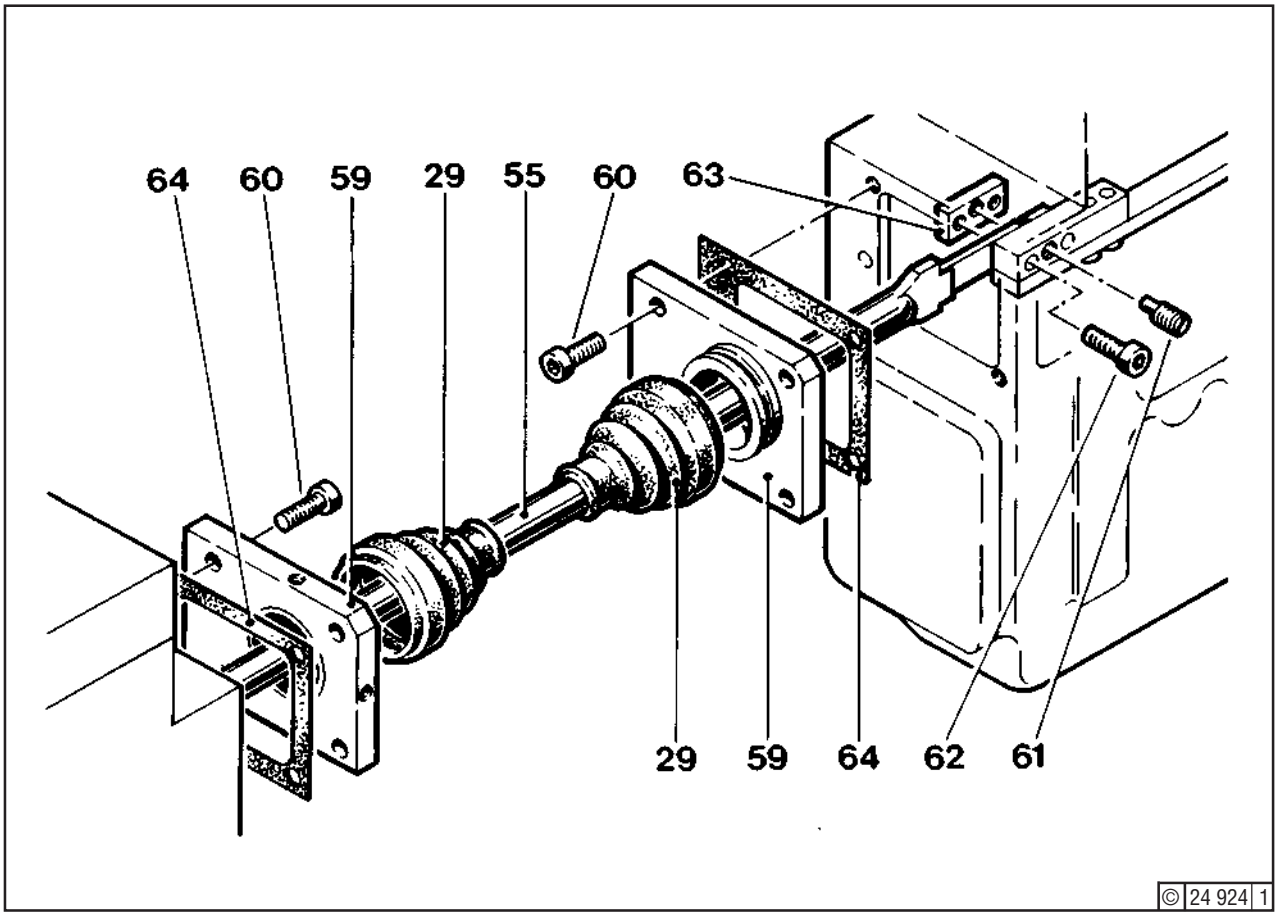

Fig. 2

After undoing the fastening screw A5 (Fig. 1) of the link C1, the injection pumps can be taken down.

When Removing Governor
Unscrew fastening bolt (*) - Fig. 3 -, remove link C3 and take down governor.

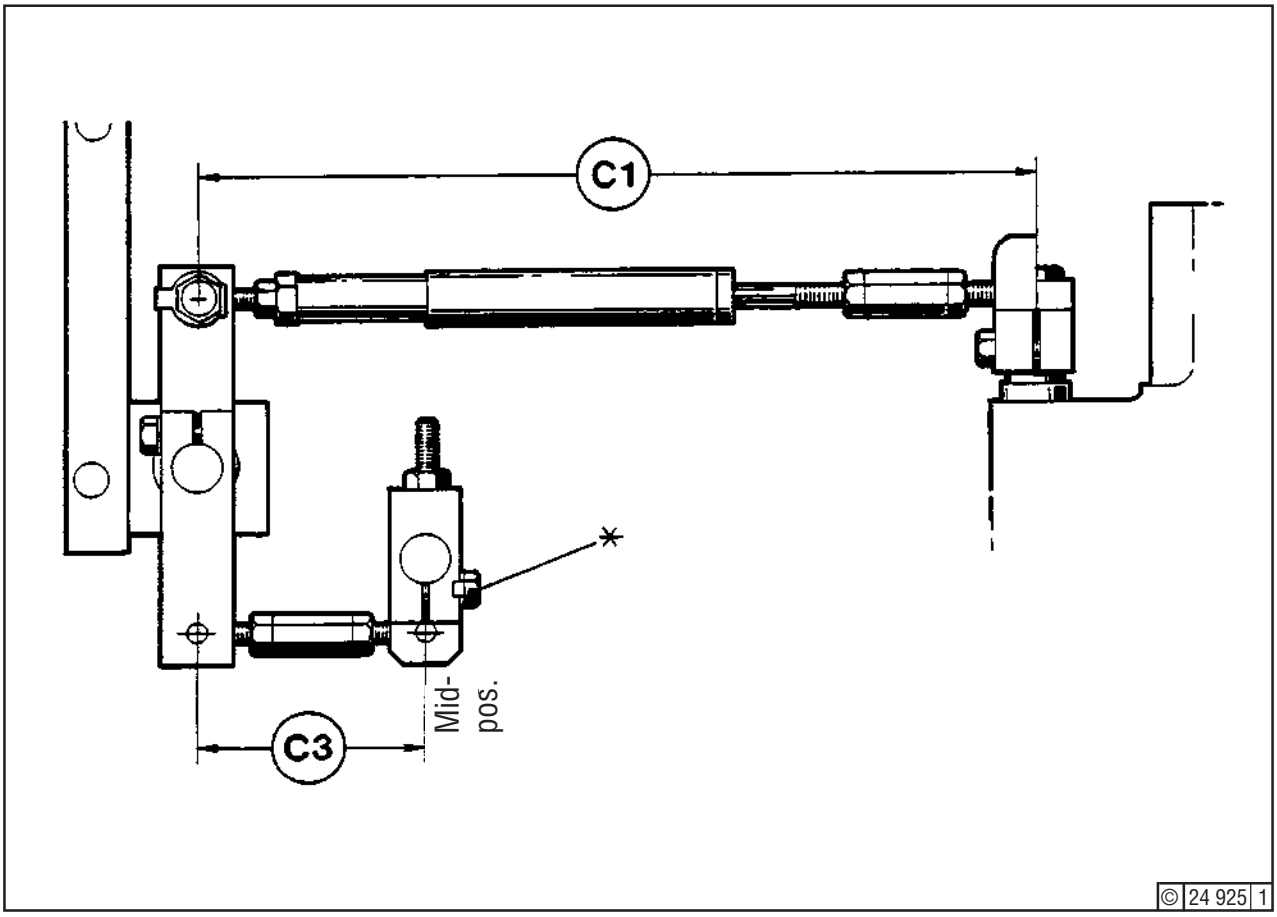

Fig. 3

Refitting the Linkage
For following operations, see also Fig. 1.

Checking Linkage Settings

1. Before refitting links C1and C3, check pertaining distance dimensions.

   They must be as follows:

   Link C1 = 310 mm, see Fig. 3

   Link C3 = 86 mm, see Fig. 3

Synchronizing the Injection Pumps

2. Detach link C1 at point A5 (*) - Fig. 4 -.

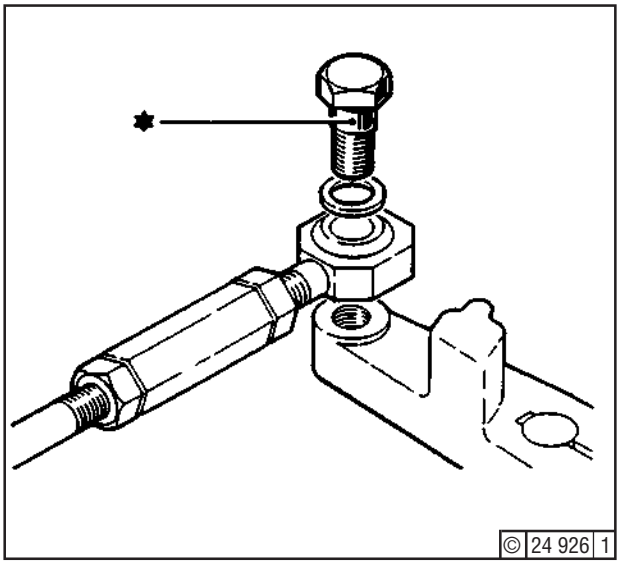

Fig. 4

3. Fully screw in stop screw (*) at point A 13 - Fig. 5 -. Record screw setting (**) where linkage is adjusted repeatedly.

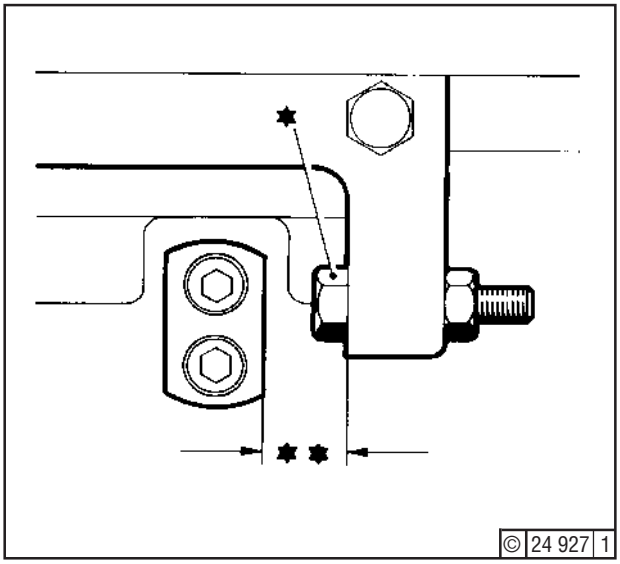

Fig. 5

4. Release screw (*) - Fig. 6 - to remove lever on starting fuel allowance stop, point A17.

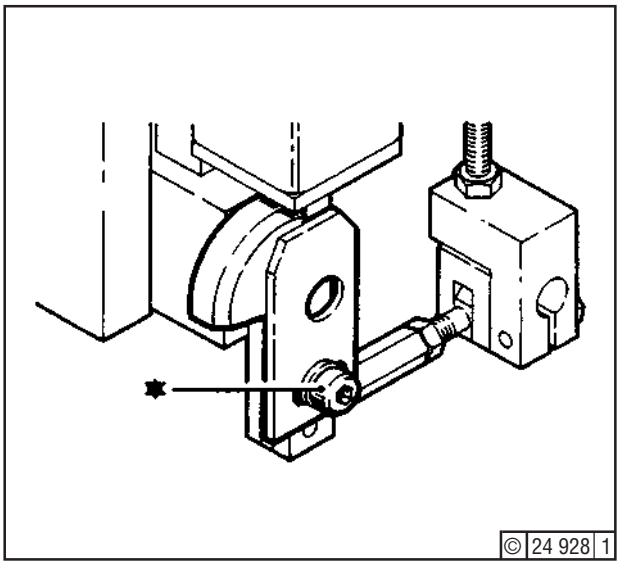

Fig. 6

© 0484

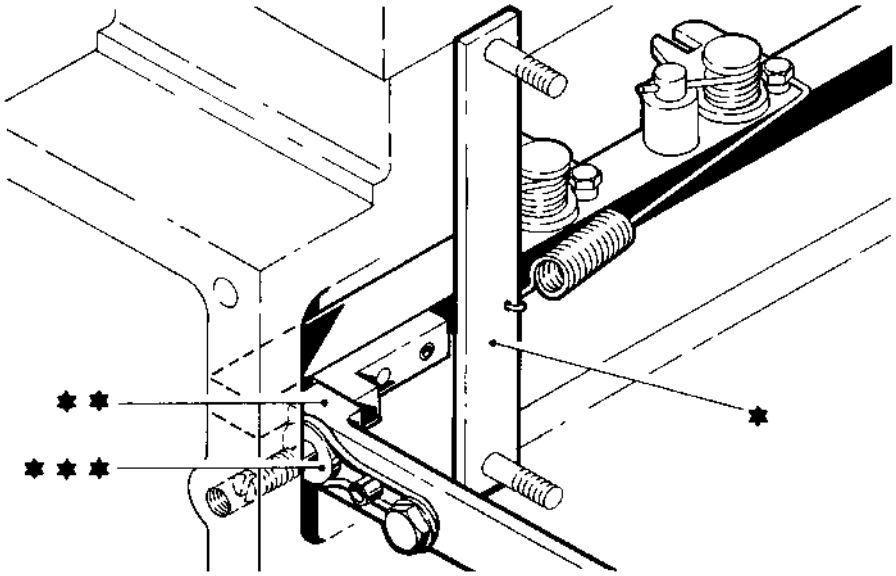

Fig. 7

5. Use tools (*) - Fig. 7 - to pull control rods of all injection pumps against the gauges (**) contacting check stops (***) at points A18, A19 and A20.
   Leave tools (*) mounted for the time being.

6. Setting the Linkage
   Mount the linkage in the reverse order as described for "Removing the Linkage when Removing Injection Pumps", but do not yet tighten the new cheese-head screws (***) - Fig. 8 -.

   First of all, turn the eccentric (**) at the left hand end of the link (*) (points A22, A23) to the middle position, i.e., with the slit in the eccentric horizontal. Insert new cheese-head screws (***) and tighten according to specification, see "Specification Data", Section 3.5, line 60.

© 0484

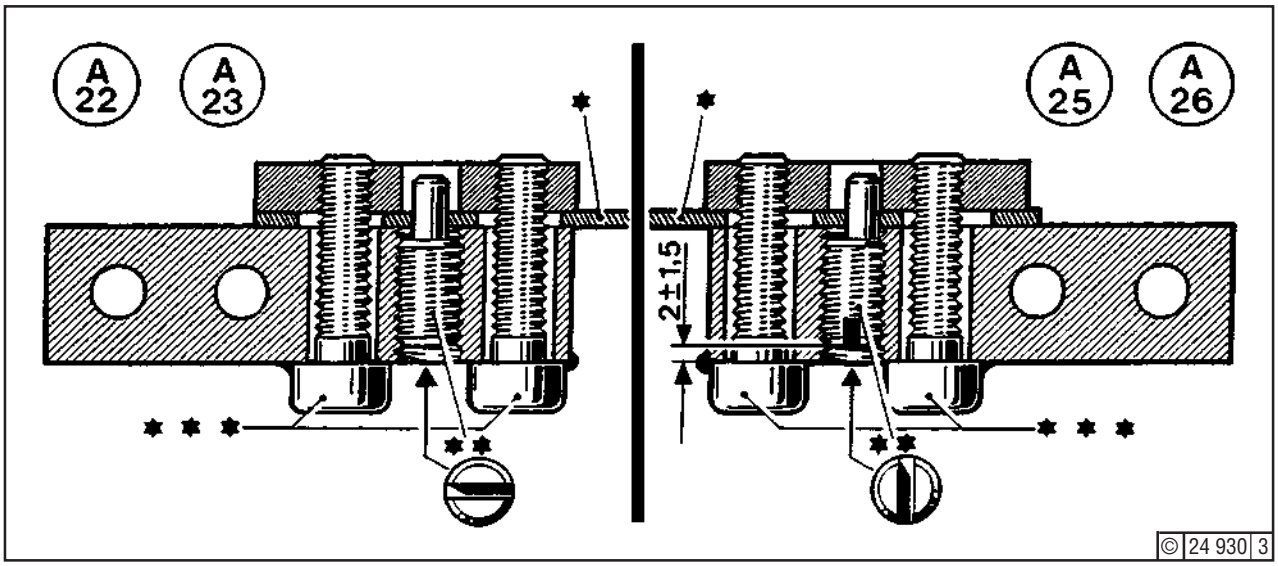

Fig. 8

Then, at the right-hand end of the link (*) (point A24), adjust the length of the link by means of the eccentric (**) so that the control rods contact the check stops without pressure, with the gauges inserted (see Fig. 7). Insert new cheese-head screws according to tightening specification, see "Specification Data", Section 3.5, line 60. If the setting at the right-hand eccentric is insufficient , rectify at the left-hand eccentric.

Having completed the setting, the cheese-head screws have to be lead-sealed.

7. Remove tools (Fig. 7). Move linkage in the direction "Stop" until one or more stop screws abut at points C12, C13 and C14 (Fig. 9).

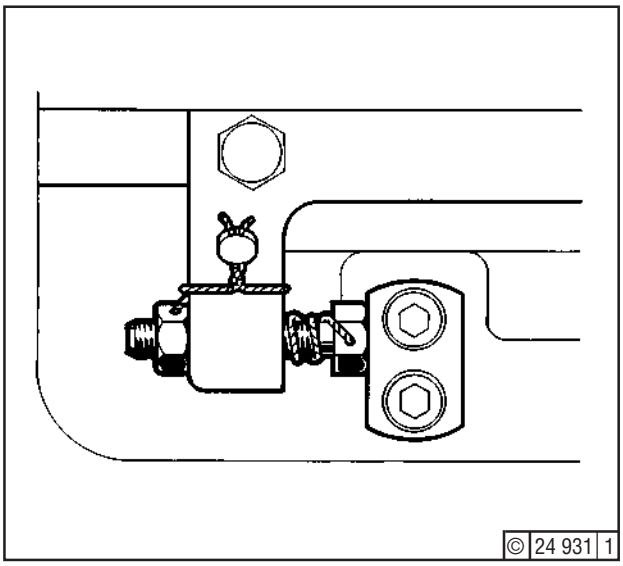

Fig. 9

Then adjust distance between stop piston ("Stop" position) at point A15 (Fig. 10) and shock absorber. Lock grooved nut (*).

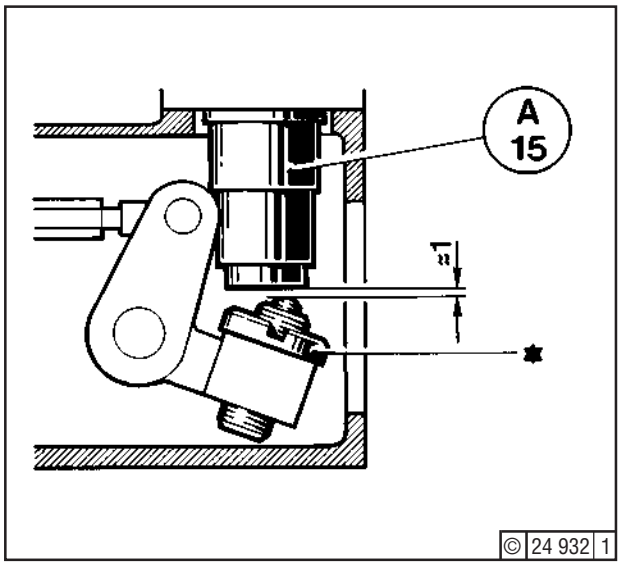

Fig. 10

8. Refit the tools (see under 5.) , then check whether, at operating position of the spring-loaded cylinder A15 (Fig. 11) and contact of the control rods at the check stops (points A18 A19 and A20), there is a clearance of approx. 15 mm.

   Secure grooved nut (*) with Deutz DW 59 as specified.

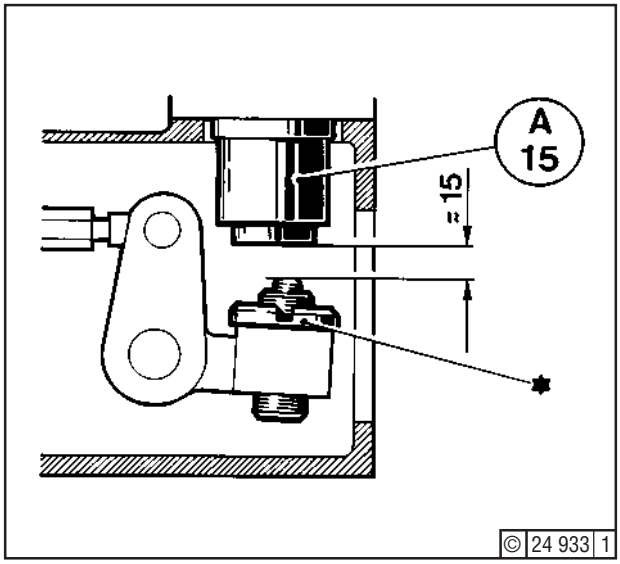

Fig. 11

Governor link

9. Turn governor output shaft to graduation 5 (midposition) - Fig. 12 -, then fasten lever C11 (*) on output shaft in roughly vertical position.

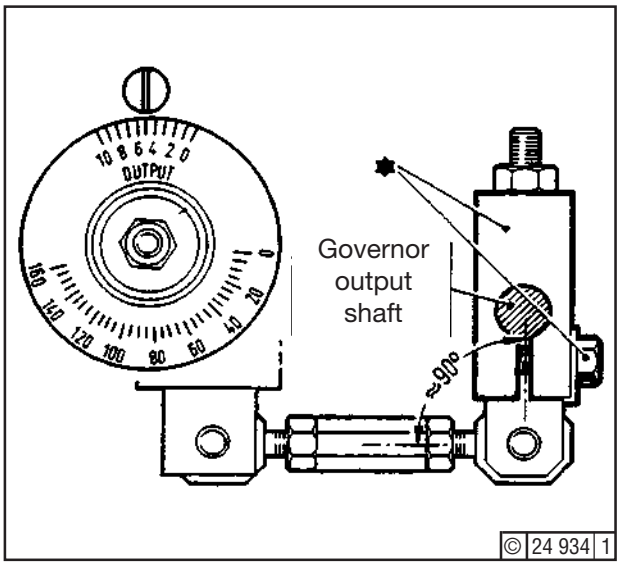

Fig. 12

10. Turn governor to graduation (10) - Fig. 13 - and secure link C1 to point A5 (*). Adjust length of link at point C5 (**) to ensure freedom from internal stressing.
Remove tool from all injection pumps (see Fig. 7).

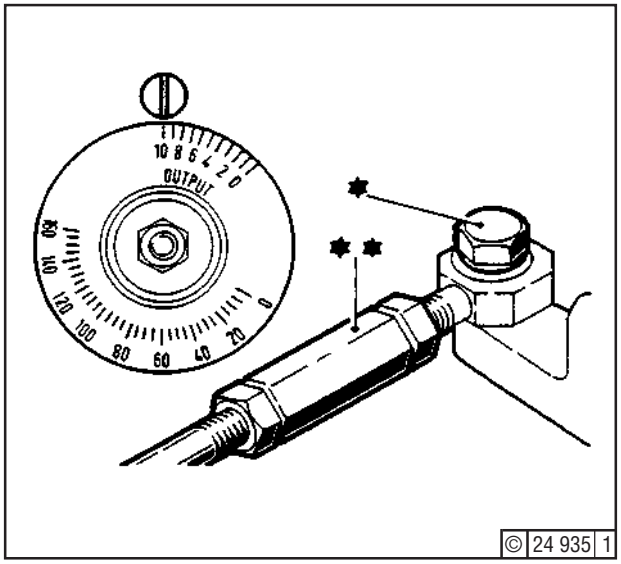

Fig. 13

11. Adjust linkage at points C8 (*) or C10 (**) - Fig. 14 - so as to obtain the settings scheduled in table below. Then tighten all locknuts.

Graduation	
Governor	Injection Pump
2	0
0	- 2,5 to - 5
9	approx. 14

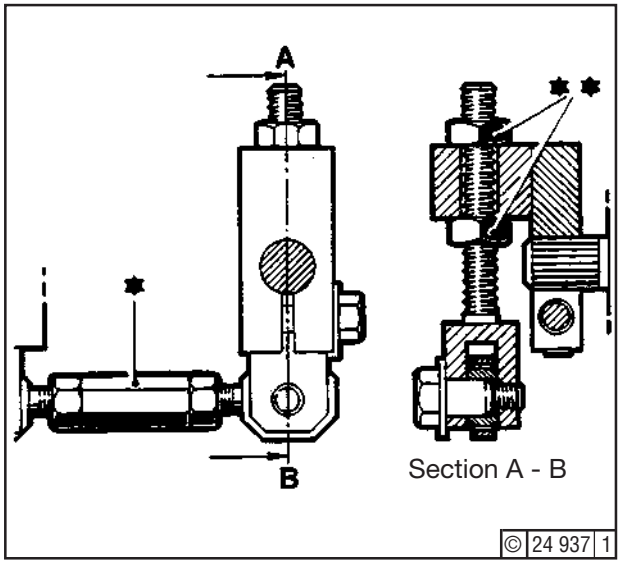

Fig. 14

Typical setting

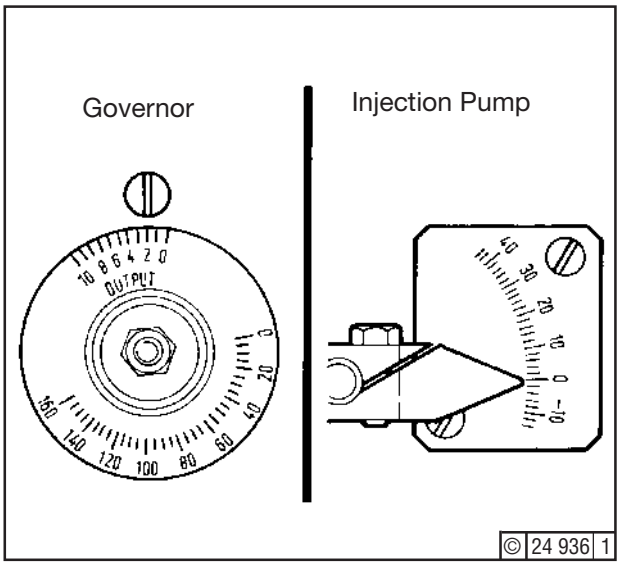

12. Set stop screw A13 so that load indicator on injection pump points to graduation (14) - Fig. 15.

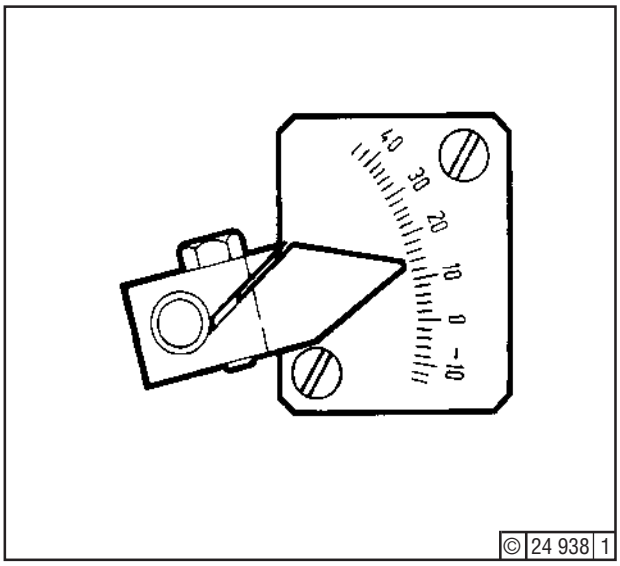

Fig. 15

13. Check that linkage abuts at stop screw (*) - Fig. 16 - when pushed to maximum load (point A13).
Upon completion of the setting, lead-seal the engine output (**).

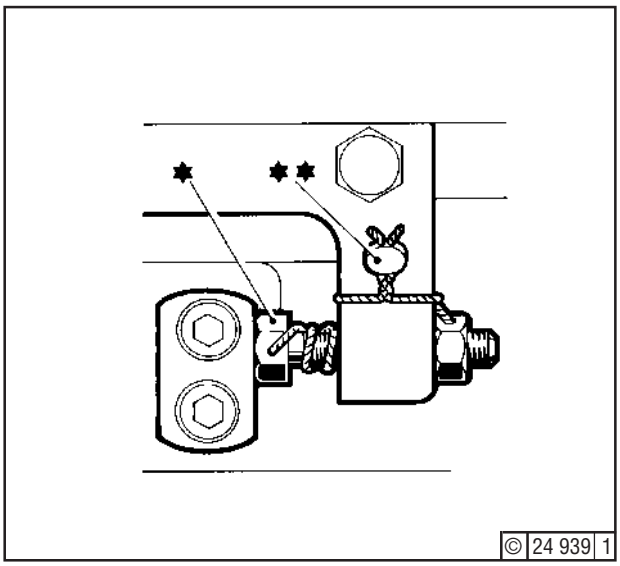

Fig. 16

14. After the engine has been put back to service and final load setting has been made, check that the governor scale gives the following readings:

No load	=	graduation 2
Full load	=	graduation 8

Failing this, adjust linkage (points C8 or C10 under 11.).

15. Setting the starting fuel limit:
While the engine is running at 11 bar b.m.e.p., pressurize air cylinder of fuel limit and adjust refitted lever so that there is contact at point (**) - Fig. 17 - . Tighten screw (*), depressurize air cylinder.

After finally completing the settings, refit the covers at points A22, A25, A23 and A26 - Fig. 1 -, together with new gaskets, if necessary. Remount the linkage covers.

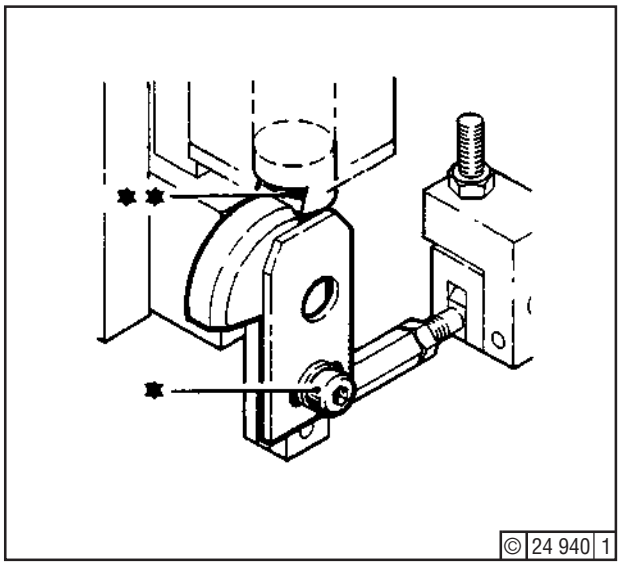

Fig. 17

This page intentionally left blank.

Servicing / Setting

For removing the injection pumps, it is necessary to remove the linkage between the pumps and to detach the linkage between pump and governor. After the pumps have been refitted , the linkage has to be checked and adjusted as necessary.
After a governor has been remounted, the setting of the linkage between governor and pump has also to be checked and adjusted as necessary.

We recommend that these jobs be entrusted to a Deutz specialist, since otherwise the warranty will possibly be affected. Only in emergency may this work be carried out by machine-room personnel. In that case, a DEUTZ specialist should be called in at the next opportunity to check and seal the control linkage.

Tools:

- Standard tools
- Sealing compound Deutz DW 59 (Section 3.6),
- Sealing wax red, part No.: 0100 7740

Job Card:

- 05.00.01

Job:

Stop engine and observe safety precautions (job 05.00.01).

Removing the Linkage

When Removing Injection Pumps

Remove linkage covers,. Remove covers at points A21 and A24 (Fig. 1).

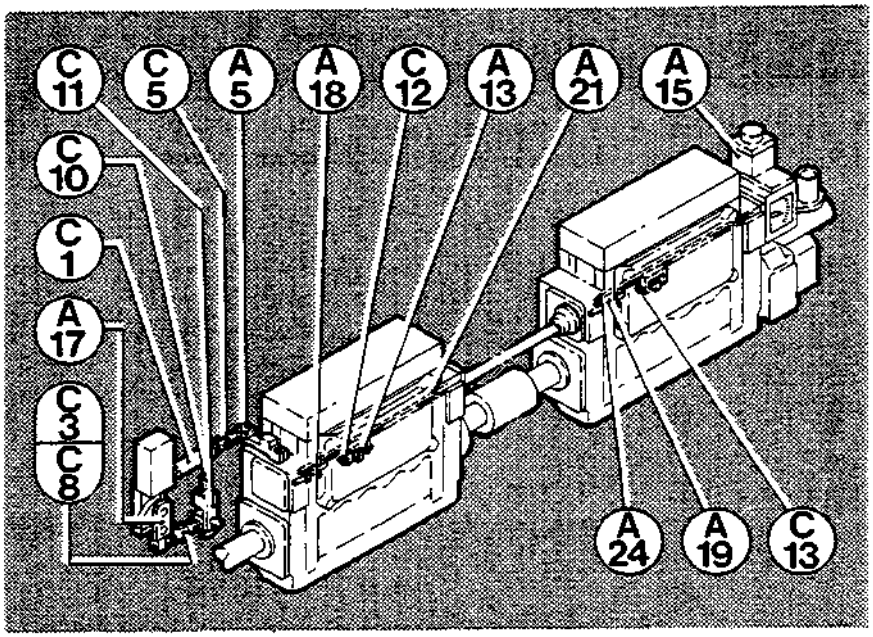

© 24 914 1

Fig. 1

Unscrew chees-head screws (60) - Fig. 2 -. Remove gaskets (64). Push covers (59) and bellows (29) towards the middle of links (55). Then undo cheese-head screws (62) and scrap. Remove flat irons (63). Slacken eccentrics (61) and carefully lift links out of the injection pumps.

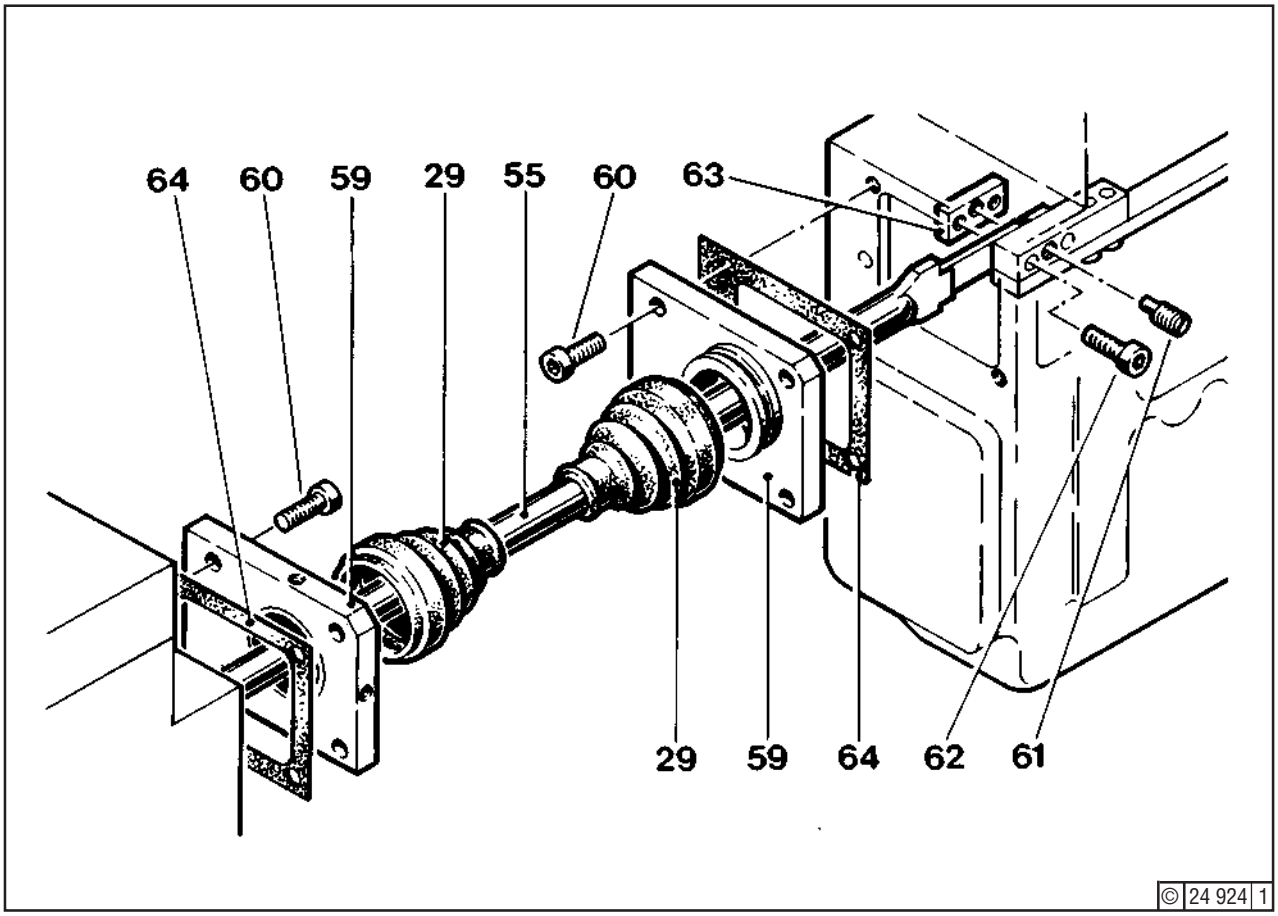

Fig. 2

After undoing the fastening screw A5 (Fig. 1) of the link C1, the injection pumps can be taken down.

When Removing Governor
Unscrew fastening bolt (*) - Fig. 3), remove link C3 and take down governor.

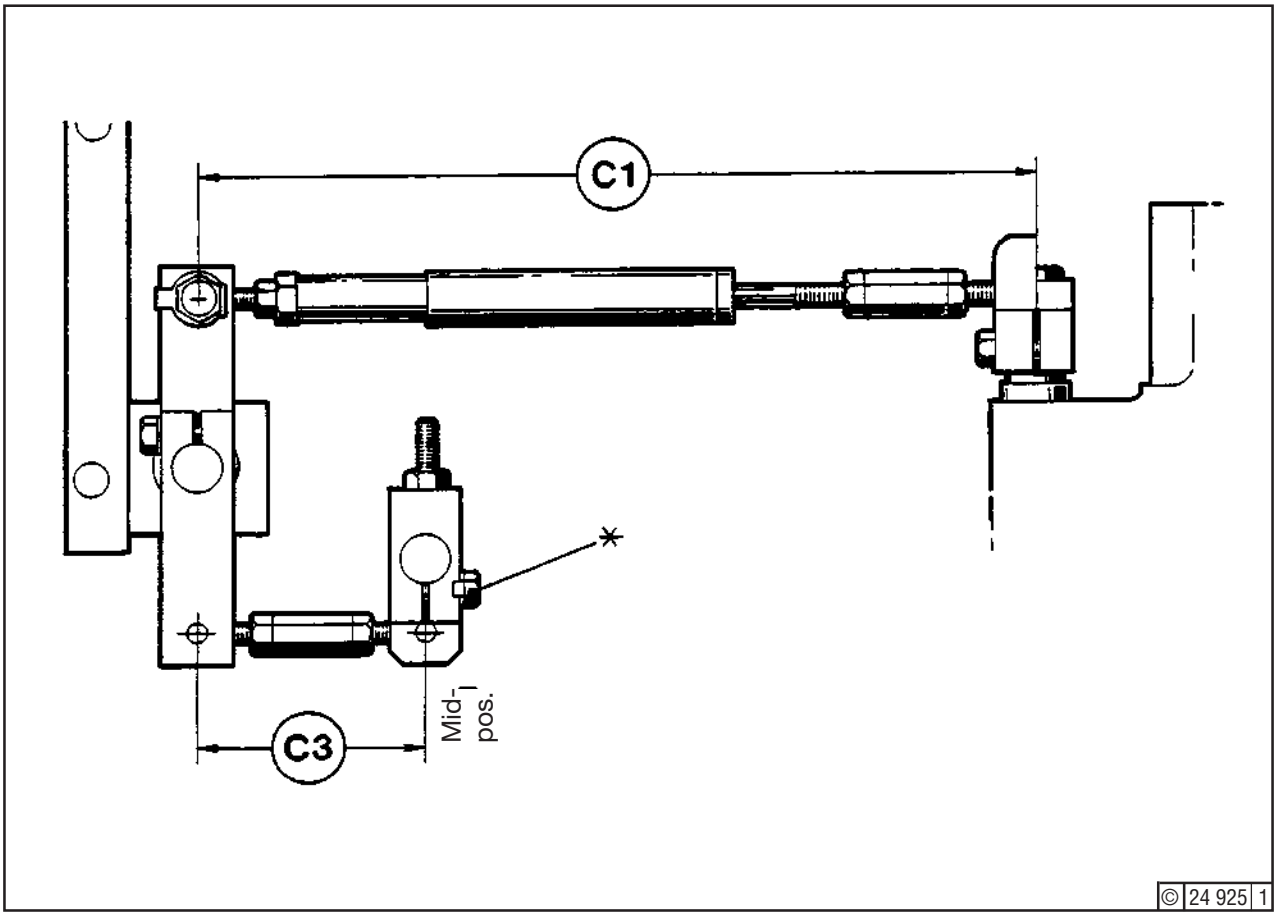

Fig. 3

Refitting the Linkage
For following operations, see also Fig. 1.

Checking Linkage Settings

1. Before refitting links C1and C3, check pertaining distance dimensions.

   They must be as follows:

   Link C1 = 310 mm, see Fig. 3

   Link C3 = 78 mm, see Fig. 3

Synchronizing the Injection Pumps

2. Detach link C1 at point A5 (*) - Fig. 4 -.

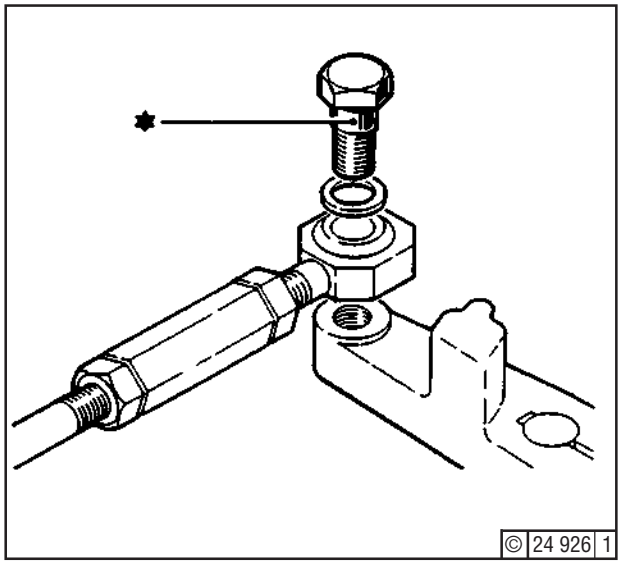

Fig. 4

3. Fully screw in stop screw (*) at point A 13 - Fig. 5 -. Record screw setting (**) where linkage is adjusted repeatedly.

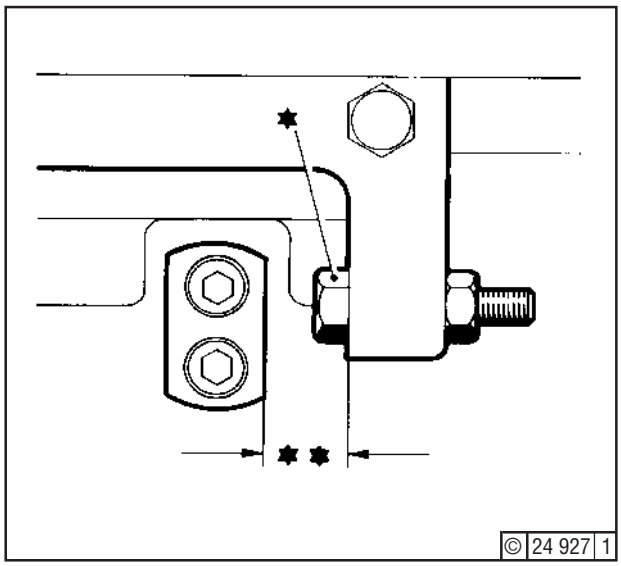

Fig. 5

4. Release screw (*) - Fig. 6 - to remove lever on starting fuel allowance stop, point A17.

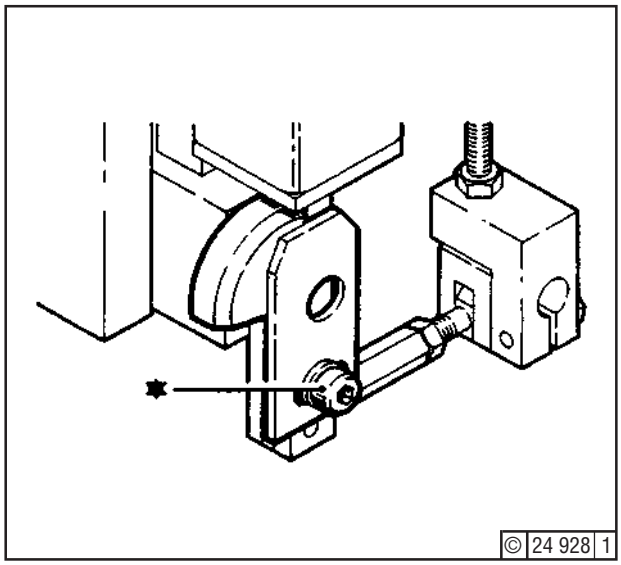

Fig. 6

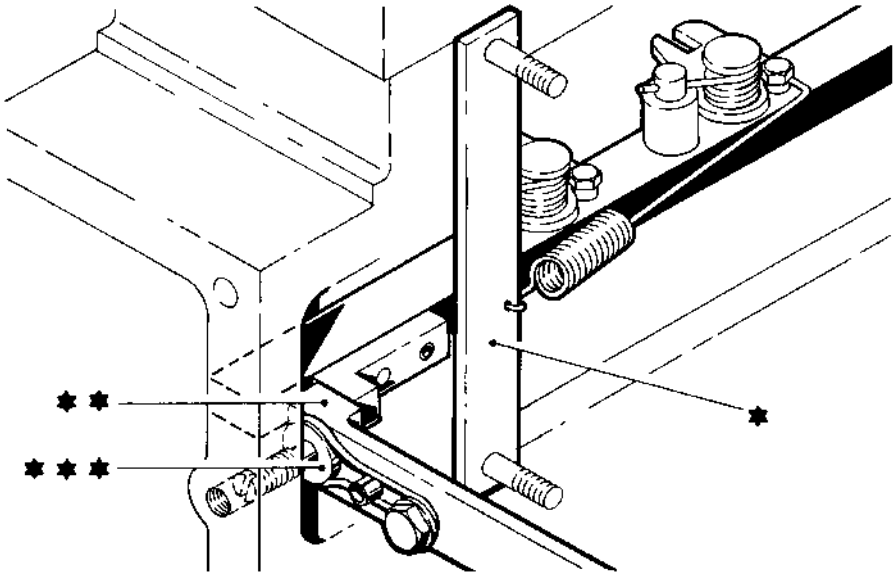

Fig. 7

5. Use tools (*) - Fig. 7 - to pull control rods of all injection pumps against the gauges (**) contacting check stops (***) at points A18 and A19. Leave tools (*) mounted for the time being.

6. Setting the Linkage
Mount the linkage in the reverse order as described for "Removing the Linkage when Removing Injection Pumps", but do not yet tighten the new cheese-head screws (***) - Fig. 8 -.

First of all, turn the eccentric (**) at the left hand end of the link (*) (pointA21) to the middle position, i.e., with the slit in the eccentric horizontal. Insert new cheese-head screws (***) and tighten according to specification, see "Specification Data", Section 3.5, line 60.

© 0484

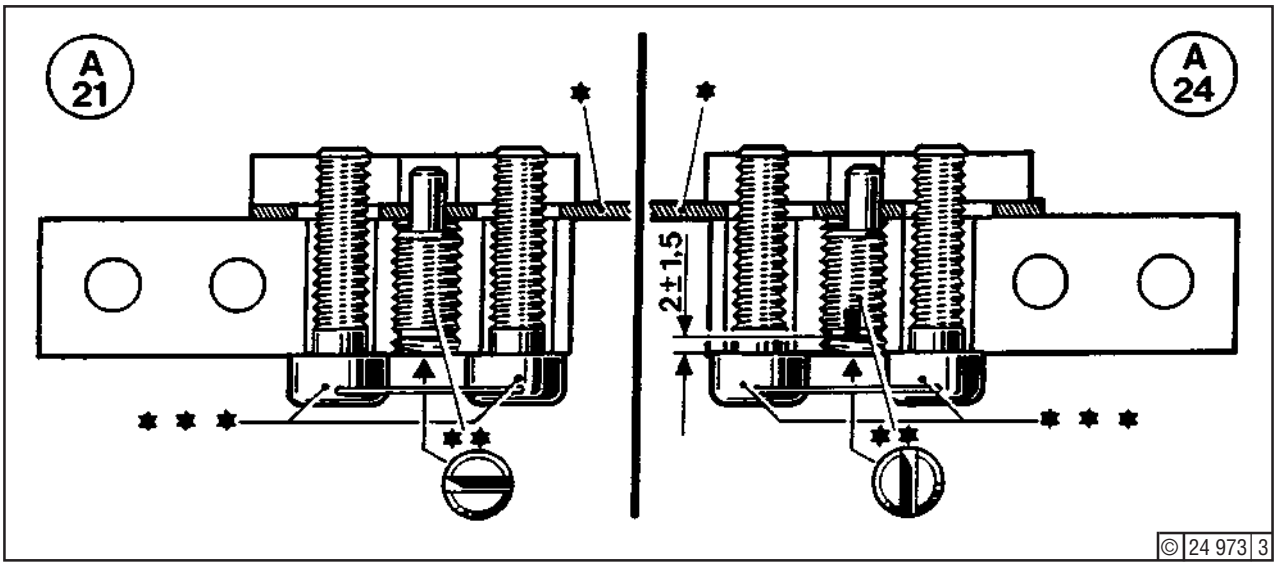

Fig. 8

Then, at the right-hand end of the link (*) (point A24), adjust the length of the link by means of the eccentric (**) so that the control rods contact the check stops without pressure, with the gauges inserted (see Fig. 7). Insert new cheese-head screws according to tightening specification, see "Specification Data", Section 3.5, line 60. If the setting at the right-hand eccentric is insufficient , rectify at the left-hand eccentric.

Having completed the setting, the cheese-head screws have to be lead-sealed.

7. Remove tools (Fig. 7). Move linkage in the direction "Stop" until one or more stop screws abut at points C12 and C13 (Fig. 9).

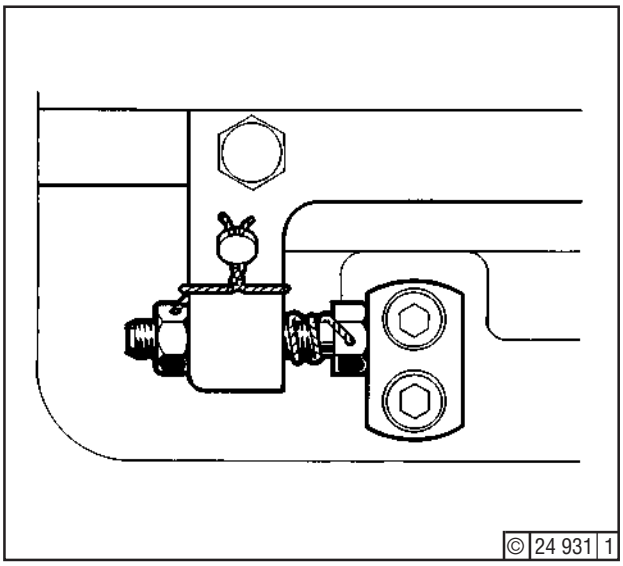

Fig. 9

Then adjust distance between stop piston ("Stop" position) at point A15 (Fig. 10) and shock absorber. Lock grooved nut (*).

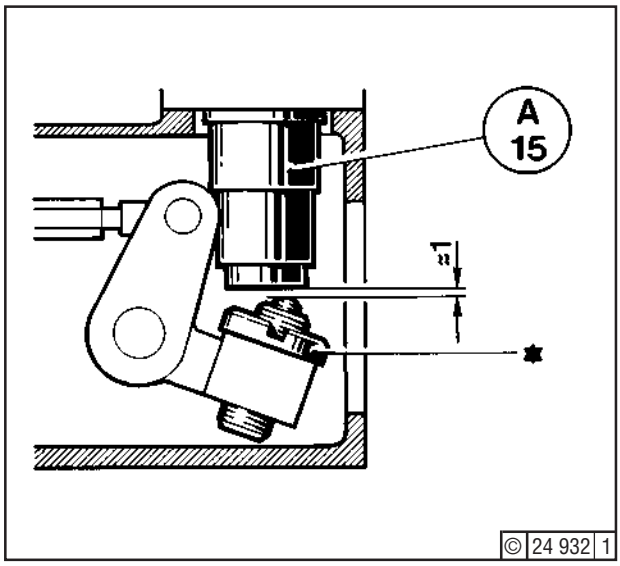

Fig. 10

8. Refit the tools (see under 5.) , then check whether, at operating position of the spring-loaded cylinder A15 (Fig. 11) and contact of the control rods at the check stops (points A18 and A19), there is a clearance of approx. 15 mm.

   Secure grooved nut (*) with Deutz DW 59 as specified.

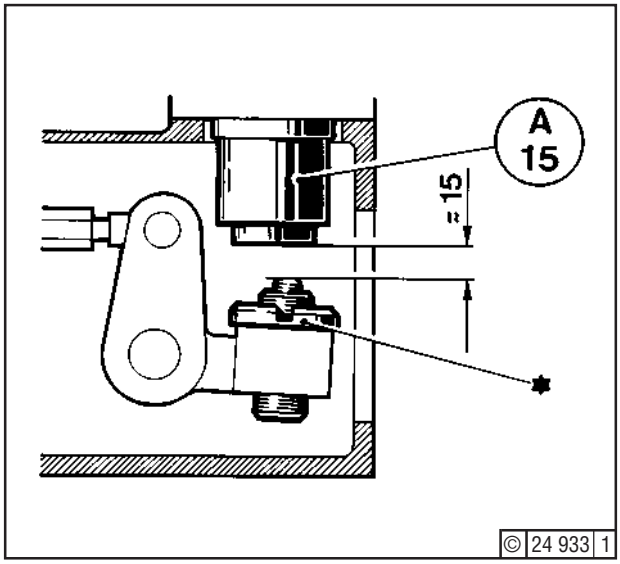

Fig. 11

Governor link

9. **Governor UG8D (Fig. 12)**
Turn knob of LOAD LIMIT to scale graduation 10 and output shaft to midposition (arrow).

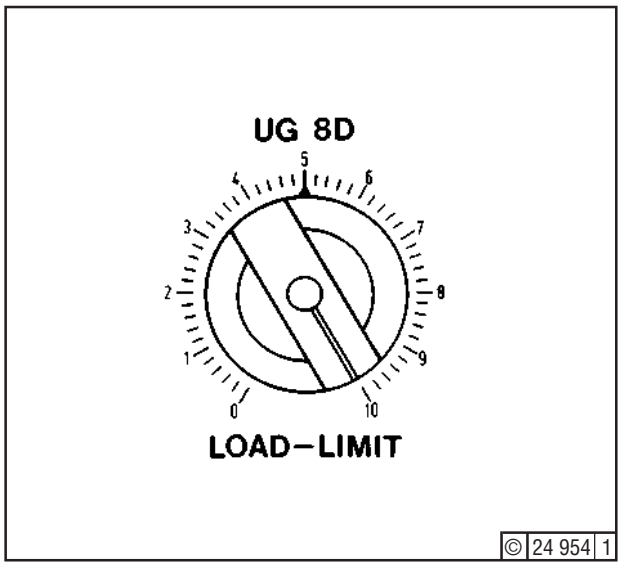

Fig. 12

Governor UG8L (Fig. 13)
Turn output shaft to mid-position 5

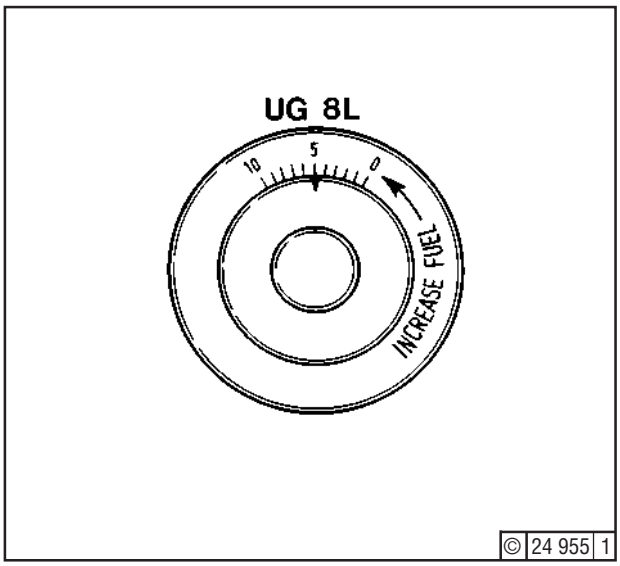

Fig. 13

Thereafter proceed on both models as follows:
Secure lever C11 (*) - Fig. 14 - to governor output shaft so that the lever is roughly vertical.

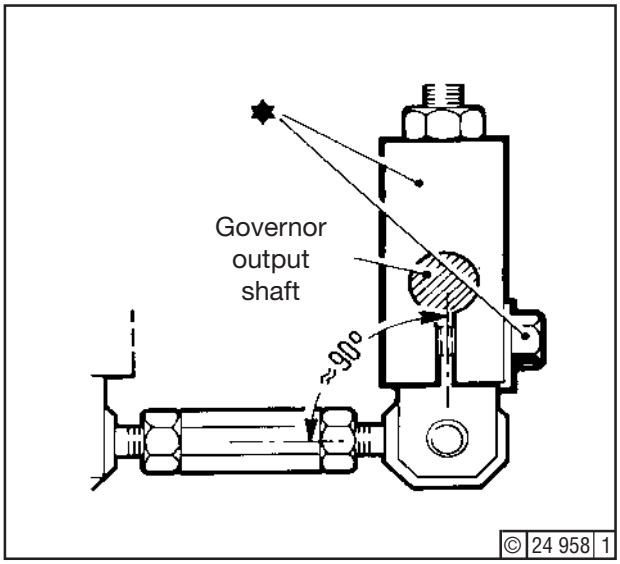

Fig. 14

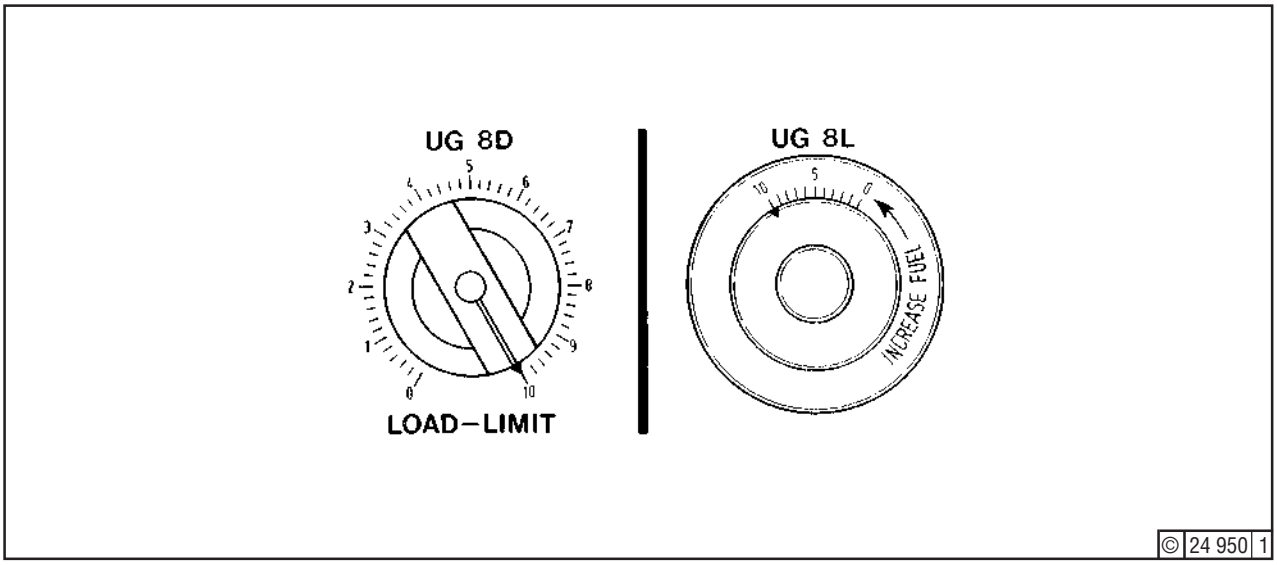

Fig. 15

10. Turn governor to graduation (10) - Fig. 15 - and secure link C1(Fig. 16) to point A5 (*). Adjust length of link (**) at point C5 to ensure freedom from internal stressing.
Remove tool from all injection pumps (see Fig. 7).

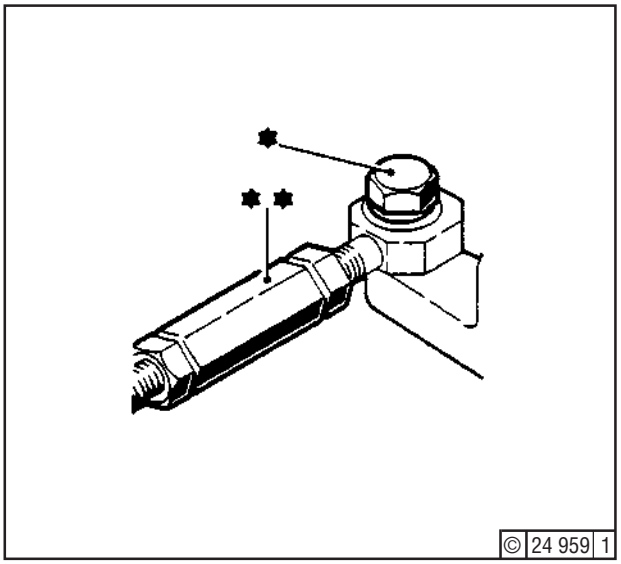

Fig. 16

11. Adjust linkage at points C8 (*) or C10 (**) - Fig. 17 - so as to obtain the settings scheduled in table at right. Then tighten all locknuts.

Graduation	
Governor	Injection Pump
2	0
0	- 2,5 to - 5
9	approx. 14

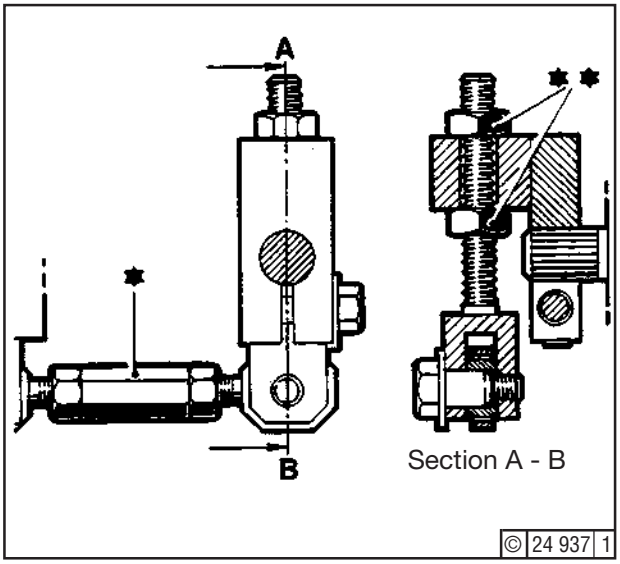

Fig. 17

Typical setting

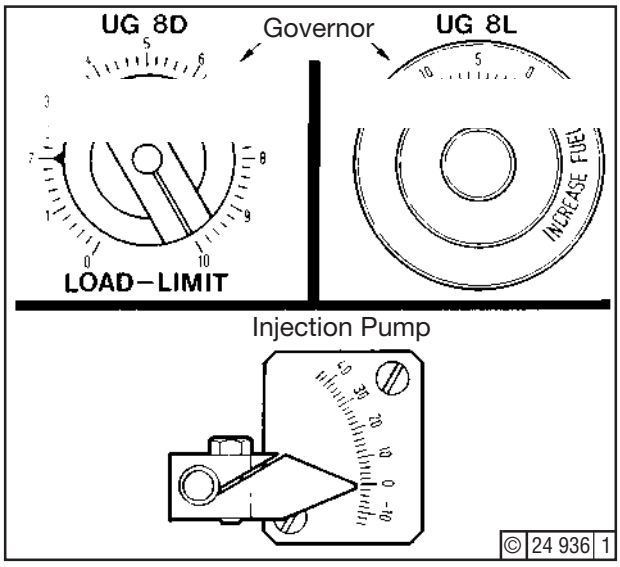

12. Set stop screw A13 so that load indicator on injection pump points to graduation (14) - Fig. 18.

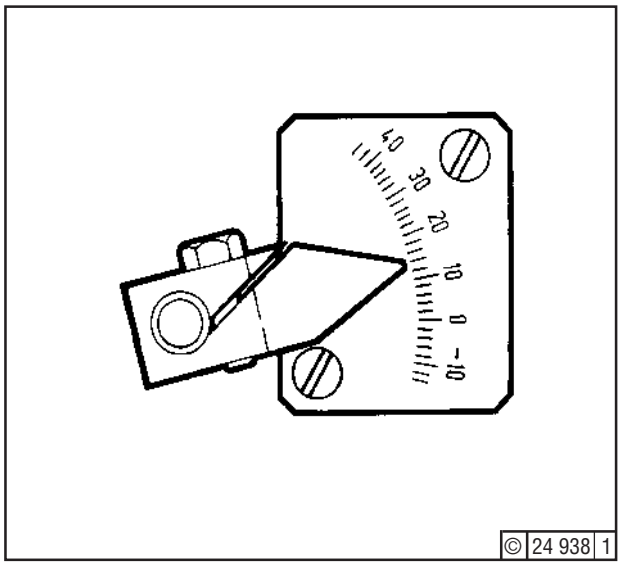

Fig. 18

13. Check that linkage abuts at stop screw (*) - Fig. 19 - when pushed to maximum load (point A13).
Upon completion of the setting, lead-seal the engine output (**).

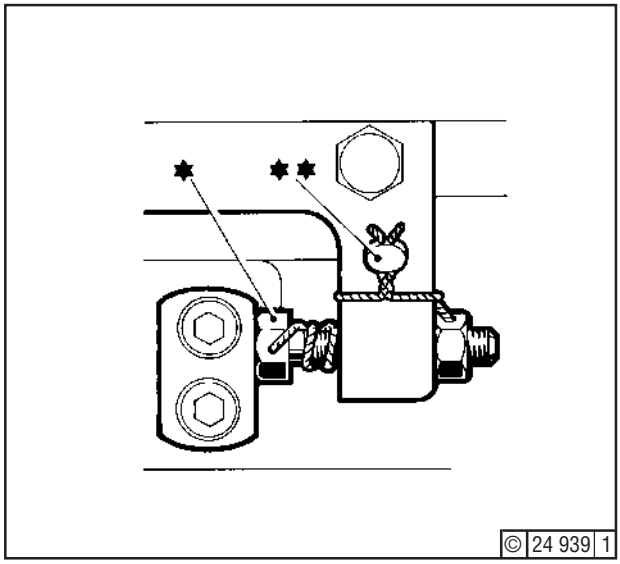

Fig. 19

14. After the engine has been put back to service and final load setting has been made, check that the governor scale gives the following readings:

No load	=	graduation 2
Full load	=	graduation 8

Failing this, adjust linkage (points C8 or C10 under 11.).

© 0583

15. Setting the starting fuel limit:
While the engine is running at 11 bar b.m.e.p., pressurize air cylinder of fuel limit and adjust refitted lever so that there is contact at point (**) - Fig. 20 - .
Tighten screw (*), depressurize air cylinder.

After finally completing the settings, refit the covers at points A21 and A24 - Fig. 1 -, together with new gaskets, if necessary. Remount the linkage covers.

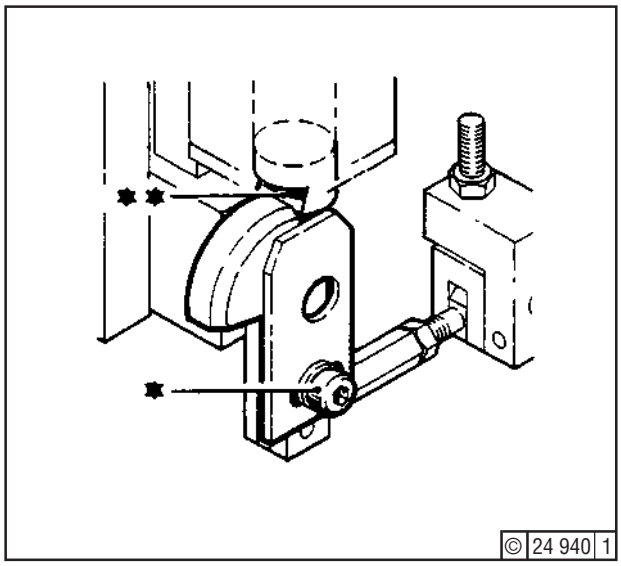

Fig. 20

Servicing / Setting

For removing the injection pumps, it is necessary to remove the linkage between the pumps and to detach the linkage between pump and governor. After the pumps have been refitted , the linkage has to be checked and adjusted as necessary.
After a governor has been remounted, the setting of the linkage between governor and pump has also to be checked and adjusted as necessary.

We recommend that these jobs be entrusted to a Deutz specialist, since otherwise the warranty will possibly be affected. Only in emergency may this work be carried out by machine-room personnel. In that case, a DEUTZ specialist should be called in at the next opportunity to check and seal the control linkage.

Tools:

- Standard tools
- Sealing compound Deutz DW 59 (Section 3.6),
- Sealing wax red, part No.: 0100 7740

Job Card:

- 05.00.01

Job

Stop engine and observe safety precautions (job 05.00.01).

Removing the Linkage

When Removing Injection Pumps

Remove linkage covers,. Remove covers at points A22, A23, A25 and A26 (Fig. 1).

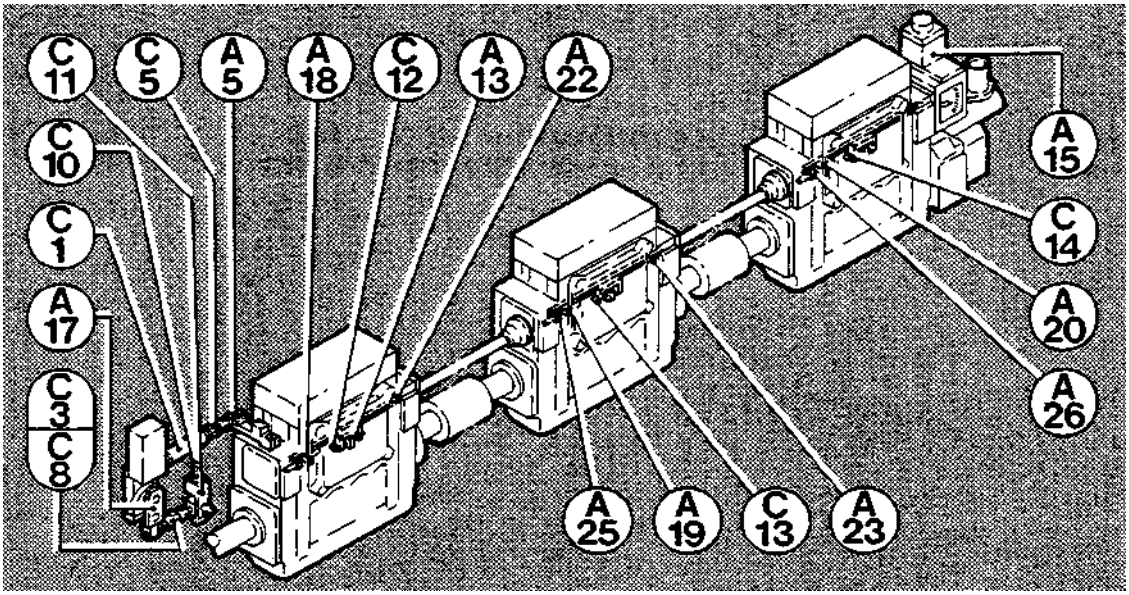

© 24 912 1

Fig. 1

Unscrew cheese-head screws (60) - Fig. 2 -. Remove gaskets (64). Push covers (59) and bellows (29) towards the middle of links (55). Then undo cheese-head screws (62) and scrap. Remove flat irons (63). Slacken eccentrics (61) and carefully lift links out of the injection pumps.

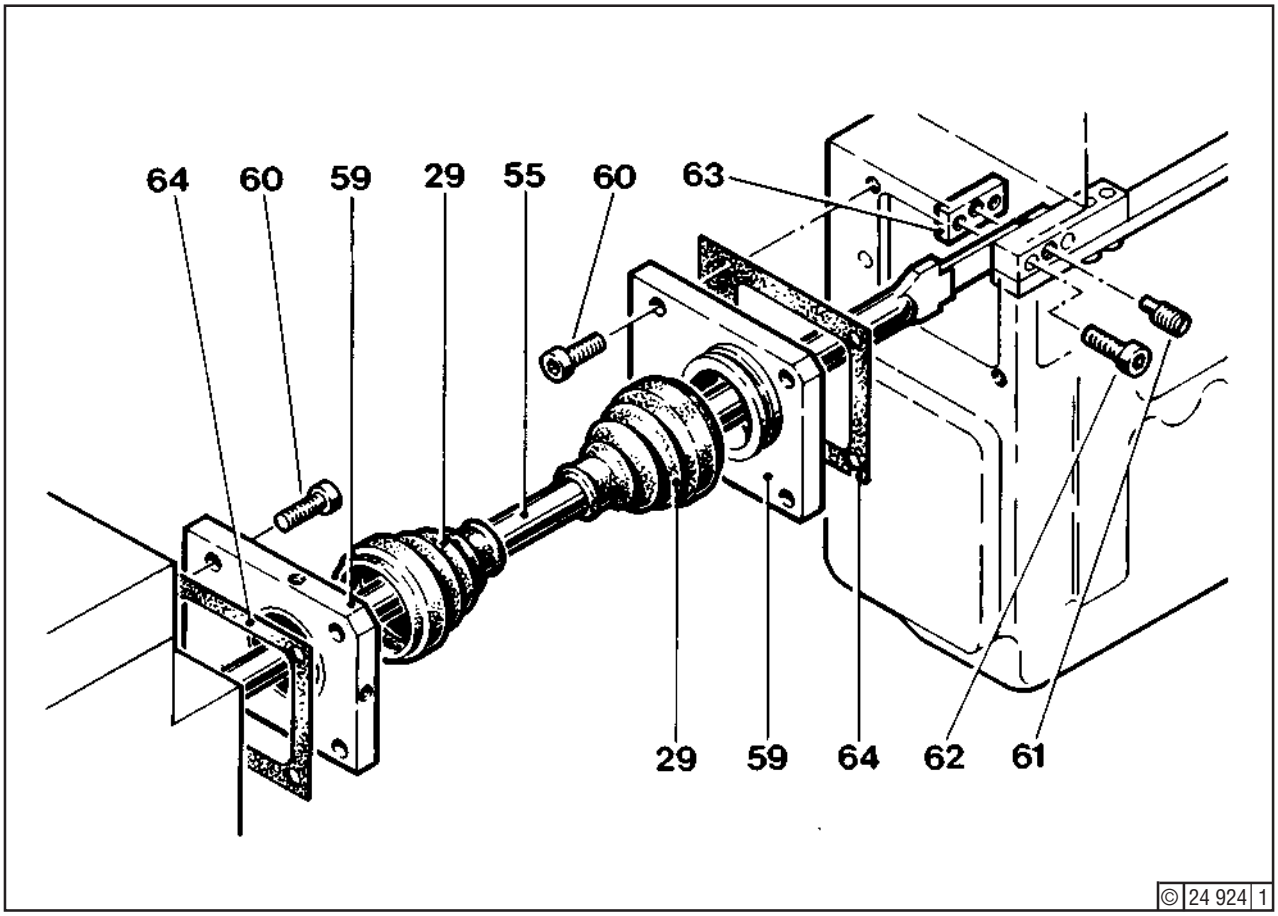

Fig. 2

After undoing the fastening screw A5 (Fig. 1) of the link C1, the injection pumps can be taken down.

When Removing Governor
Unscrew fastening bolt (*) - Fig. 3 -, remove link C3 and take down governor.

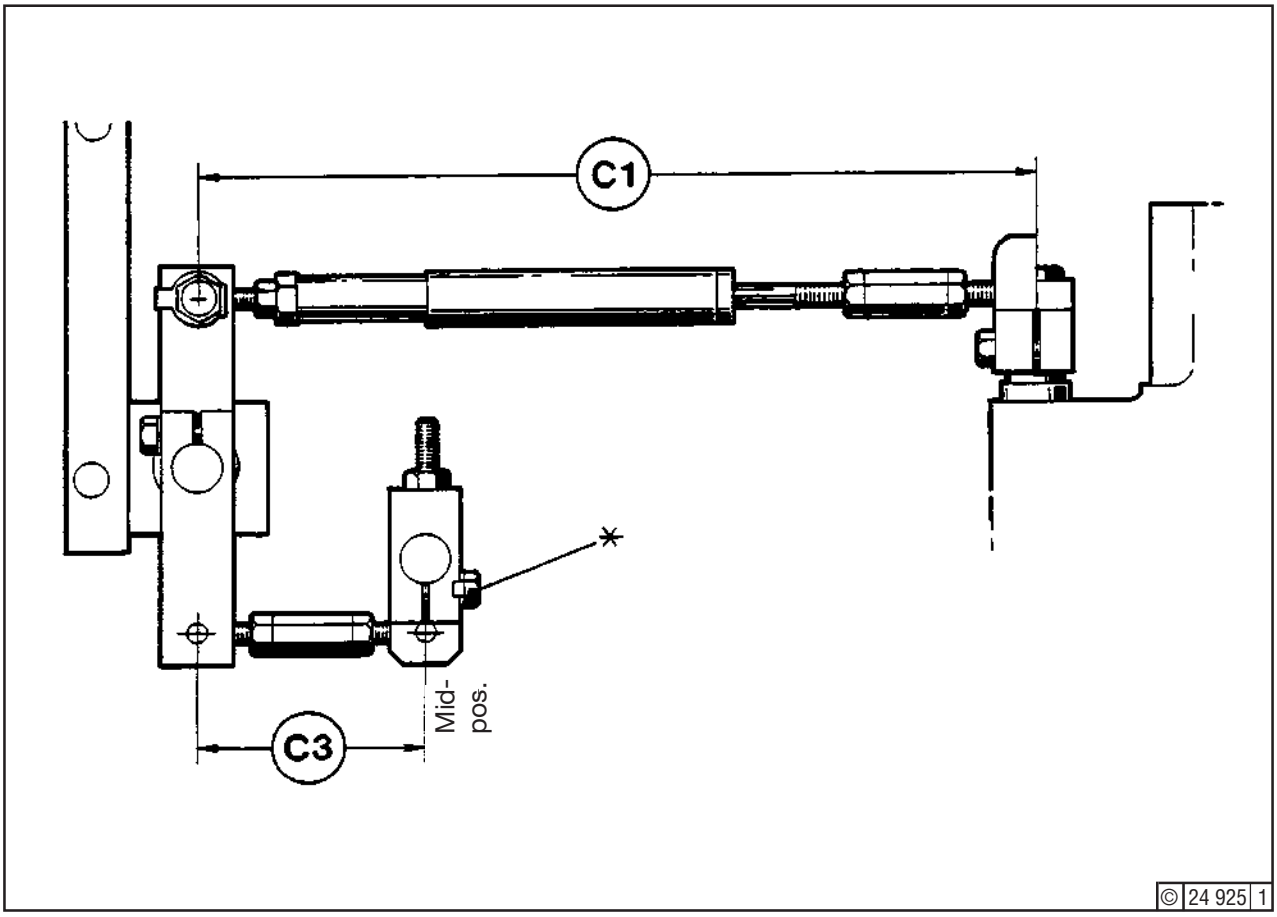

Fig. 3

Refitting the Linkage
For following operations, see also Fig. 1.

Checking Linkage Settings

1. Before refitting links C1and C3, check pertaining distance dimensions.

   They must be as follows:

   Link C1 = 310 mm, see Fig. 3

   Link C3 = 78 mm, see Fig. 3

© 0583

Synchronizing the Injection Pumps

2. Detach link C1 at point A5 (*) - Fig. 4 -.

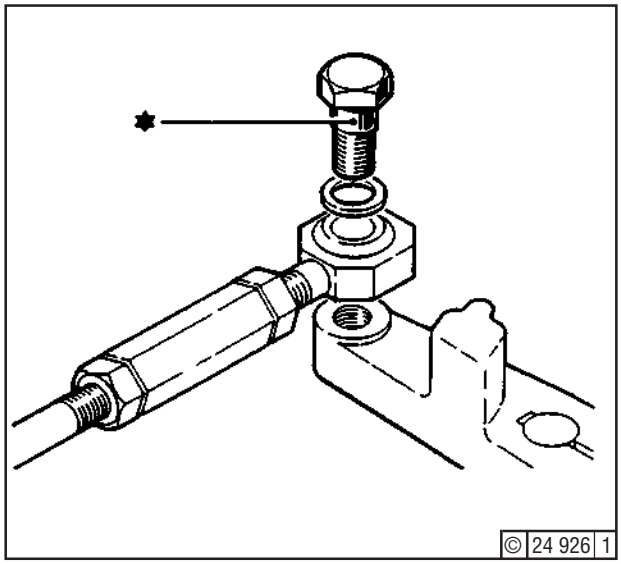

Fig. 4

3. Fully screw in stop screw (*) at point A 13 - Fig. 5 -. Record screw setting (**) where linkage is adjusted repeatedly.

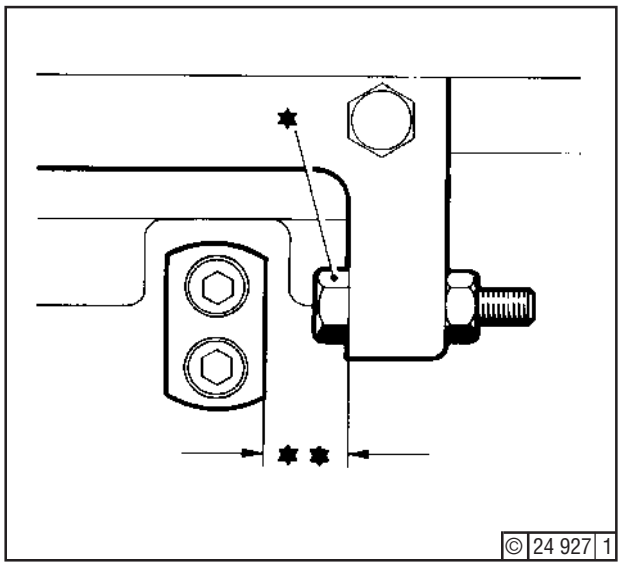

Fig. 5

4. Release screw (*) - Fig. 6 - to remove lever on starting fuel allowance stop, point A17.

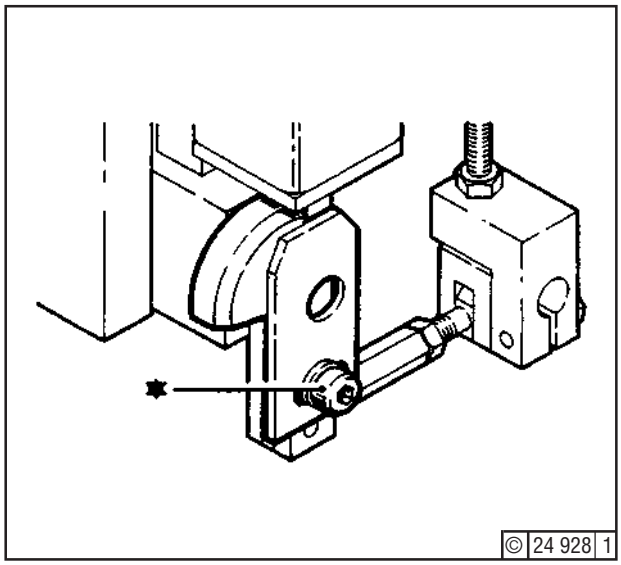

Fig. 6

© 0484

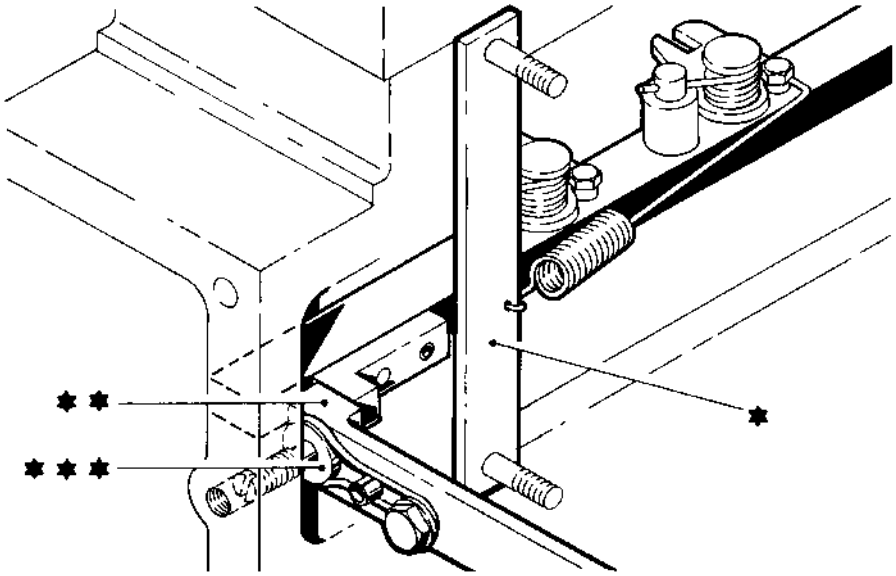

Fig. 7

5. Use tools (*) - Fig. 7 - to pull control rods of all injection pumps against the gauges (**) contacting check stops (***) at points A18, A19 and A20. Leave tools (*) mounted for the time being.

6. Setting the Linkage
Mount the linkage in the reverse order as described for "Removing the Linkage when Removing Injection Pumps", but do not yet tighten the new cheese-head screws (***) - Fig. 8 -.

First of all, turn the eccentric (**) at the left hand end of the link (*) (points A22, A23) to the middle position, i.e., with the slit in the eccentric horizontal. Insert new cheese-head screws (***) and tighten according to specification, see "Specification Data", Section 3.5, line 60.

© 0484

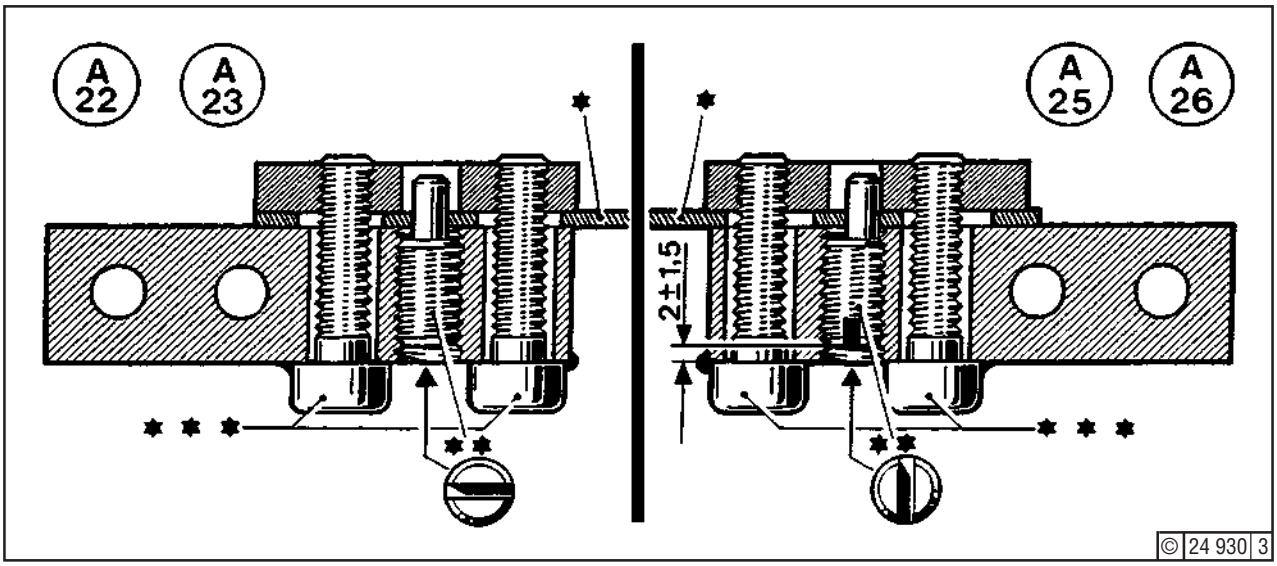

Fig. 8

Then, at the right-hand ends of the links (*) (point A25, A26), adjust the length of the link by means of the eccentric (**) so that the control rods contact the check stops without pressure, with the gauges inserted (see Fig. 7). Insert new cheese-head screws according to tightening specification, see "Specification Data", Section 3.5, line 60. If the setting at the right-hand eccentric is insufficient , rectify at the left-hand eccentric.

Having completed the setting, the cheese-head screws have to be lead-sealed.

7. Remove tools (Fig. 7). Move linkage in the direction "Stop" until one or more stop screws abut at points C12, and C13 (Fig. 9).

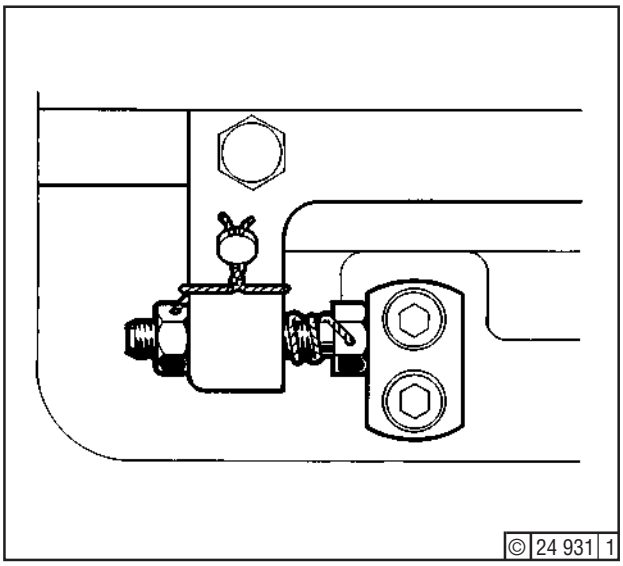

Fig. 9

Then adjust distance between stop piston ("Stop" position) at point A15 (Fig. 10) and shock absorber. Lock grooved nut (*).

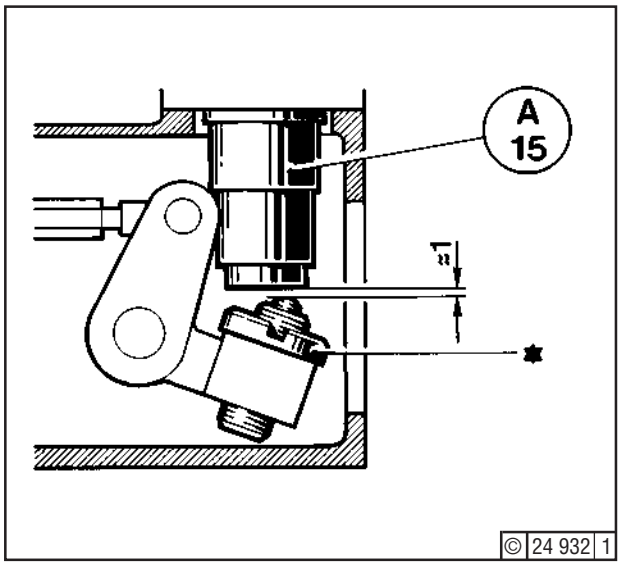

Fig. 10

8. Refit the tools (see under 5.) , then check whether, at operating position of the spring-loaded cylinder A15 (Fig. 11) and contact of the control rods at the check stops (points A18 A19 and A20), there is a clearance of approx. 15 mm.

   Secure grooved nut (*) with Deutz DW 59 as specified.

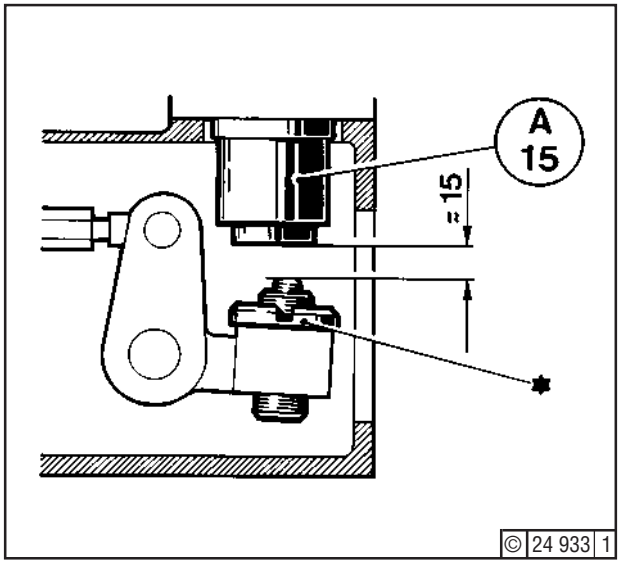

Fig. 11

Governor link

9. **Governor UG8D** (Fig. 12)
Turn knob of LOAD LIMIT to scale graduation 10 and output shaft to mid-position 5 (arrow).

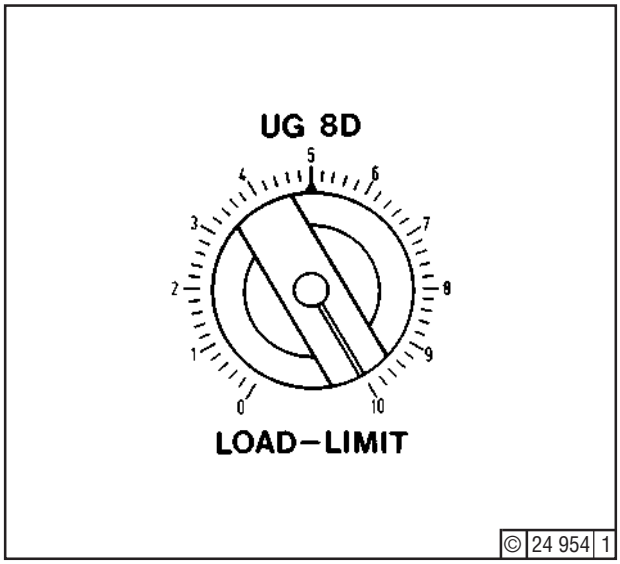

Fig. 12

Governor UG8L (Fig. 13)
Turn output shaft to mid-position 5.

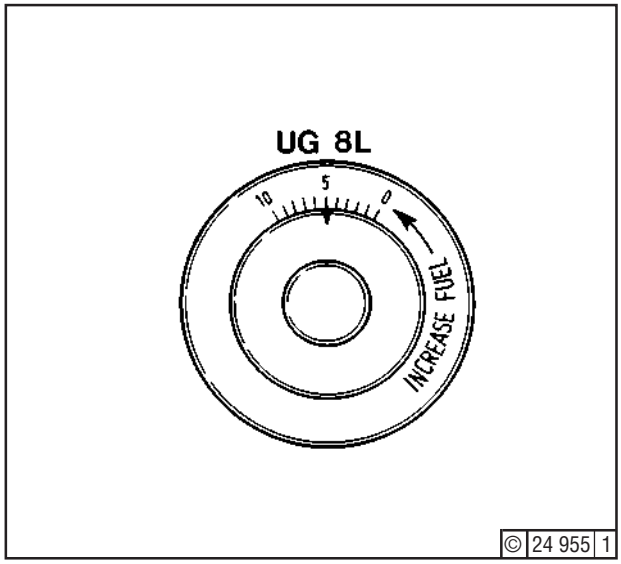

Fig. 13

Thereafter proceed on both models as follows:
Secure lever C11 (*) - Fig. 14 - to governor output shaft so that the lever is roughly vertical.

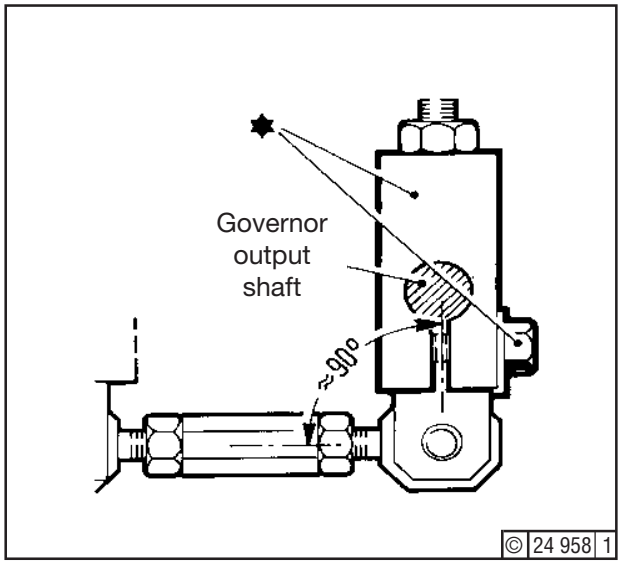

Fig. 14

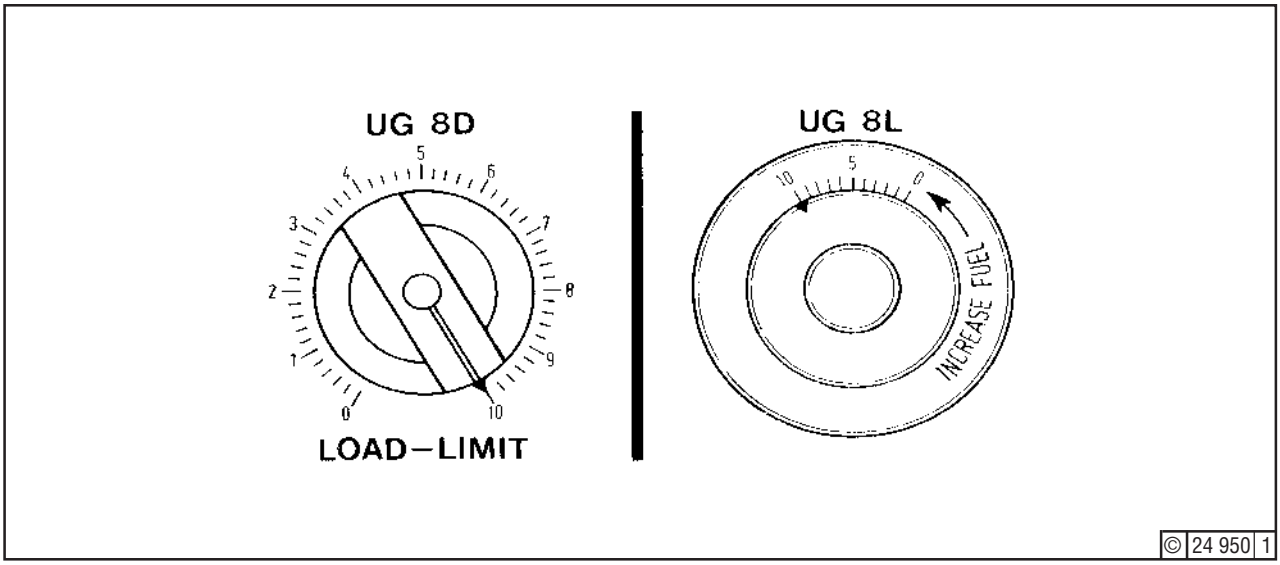

Fig. 15

10. Turn governor to scale graduation 10 - Fig. 15 - and secure link C1(Fig. 16) to point A5 (*). Adjust length of link (**) at point C5 to ensure freedom from internal stressing.
Remove tool from all injection pumps (see Fig. 7).

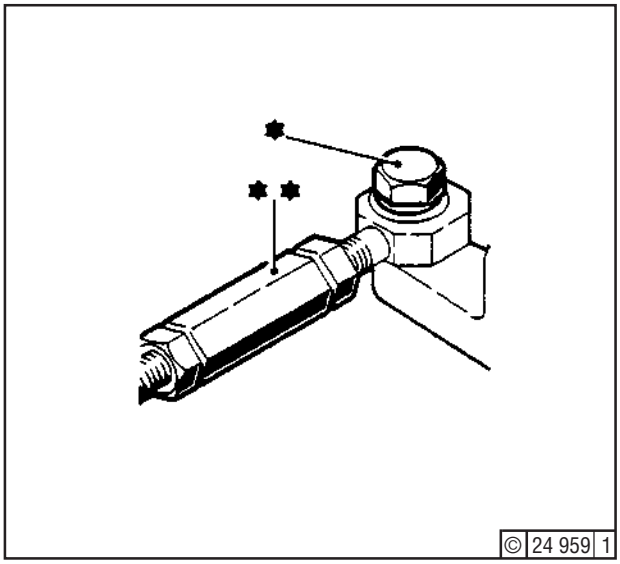

Fig. 16

11. Adjust linkage at points C8 (*) or C10 (**) - Fig. 17 - so as to obtain the settings scheduled in table at right. Then tighten all locknuts.

Graduation	
Governor	Injection Pump
2	0
0	- 2,5 to - 5
9	approx. 14

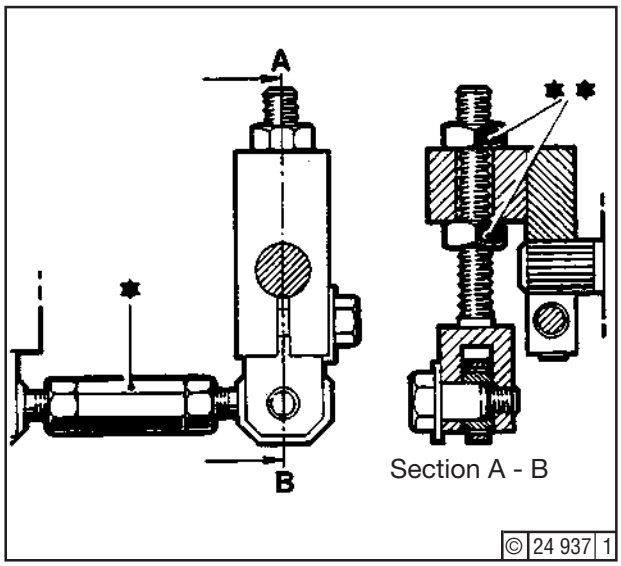

Fig. 17

Typical setting

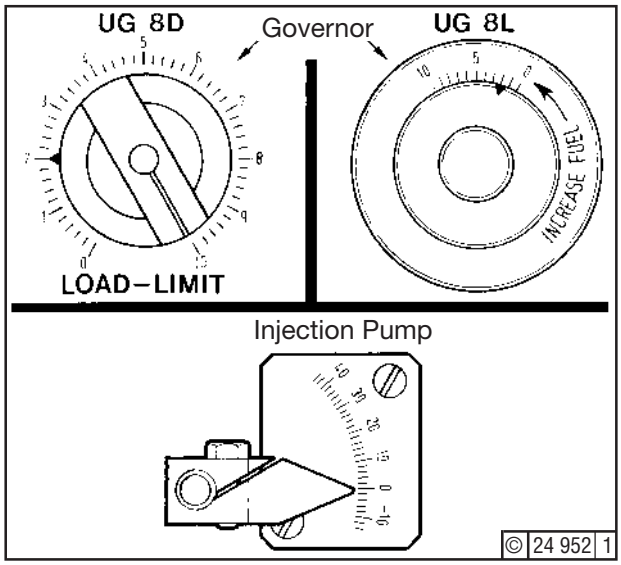

12. Set stop screw A13 so that load indicator on injection pump (Fig. 18) points to graduation 14.

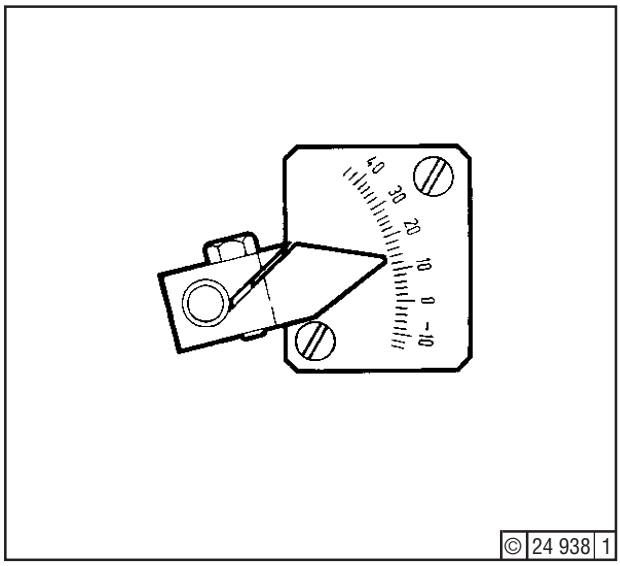

Fig. 18

13. Check that linkage abuts at top screw (*) - Fig. 19 - when pushed to maximum load (point A13).
Upon completion of the setting, lead-seal the engine output (**).

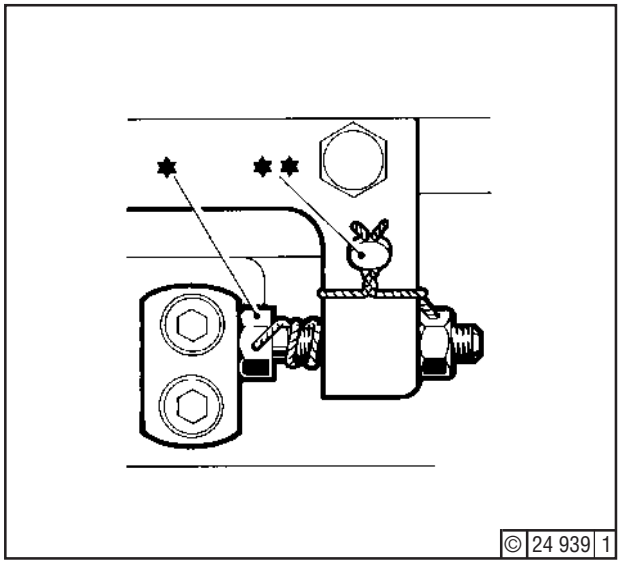

Fig. 19

14. After the engine has been put back to service and final load setting has been made, check that governor scale gives the following readings:

No load	=	graduation 2
Full load	=	graduation 8

Failing this, adjust linkage (points C8 or C10 under 11.).

© 0595

15. Setting the starting fuel limit:
While the engine is running at 11 bar b.m.e.p., pressurize air cylinder of fuel limit and adjust refitted lever so that there is contact at point (**) - Fig. 20 - . Tighten screw (*), depressurize air cylinder.

After finally completing the settings, refit the covers at points A22, A25, A23 and A26 - Fig. 1 -, together with new gaskets, if necessary. Remount the linkage covers.

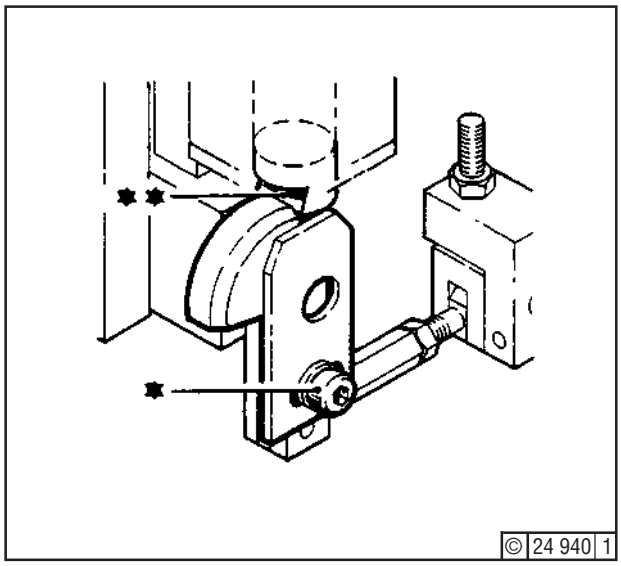

Fig. 20

© 1283

Servicing / Setting

For removing the injection pumps, it is necessary to remove the linkage between the pumps and to detach the linkage between pump and governor. After the pumps have been refitted , the linkage has to be checked and adjusted as necessary.
After a governor has been remounted, the setting of the linkage between governor and pump has also to be checked and adjusted as necessary.

We recommend that these jobs be entrusted to a DEUTZ specialist, since otherwise the warranty will possibly be affected. Only in emergency may this work be carried out by machine-room personnel. In that case, a DEUTZ specialist should be called in at the next opportunity to check and seal the control linkage.

Tools:

- Standard tools
- Sealing compound Deutz DW 59 (Section 3.6),
- Sealing wax red, part No.: 0100 7740

Job Card:

- 05.00.01

Job

Stop engine and observe safety precautions (job 05.00.01).

Removing the Linkage

When Removing Injection Pumps

Remove linkage covers,. Remove covers at points A21 and A24 (Fig. 1).

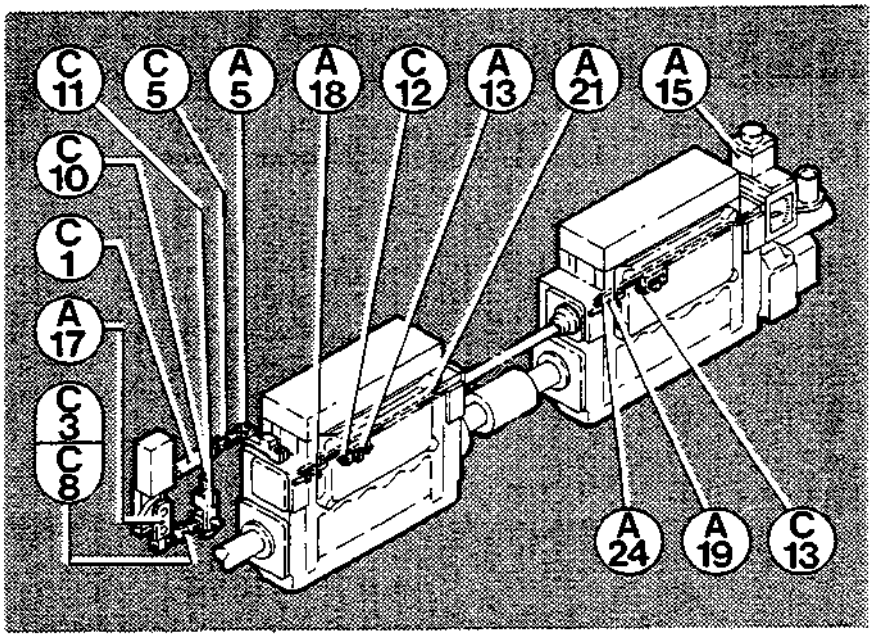

© 24 914 1

Fig. 1

Unscrew chees-head screws (60) - Fig. 2 -. Remove gaskets (64). Push covers (59) and bellows (29) towards the middle of link (55). Then undo cheese-head screws (62) and scrap. Remove flat irons (63). Slacken eccentrics (61) and carefully lift links out of the injection pumps.

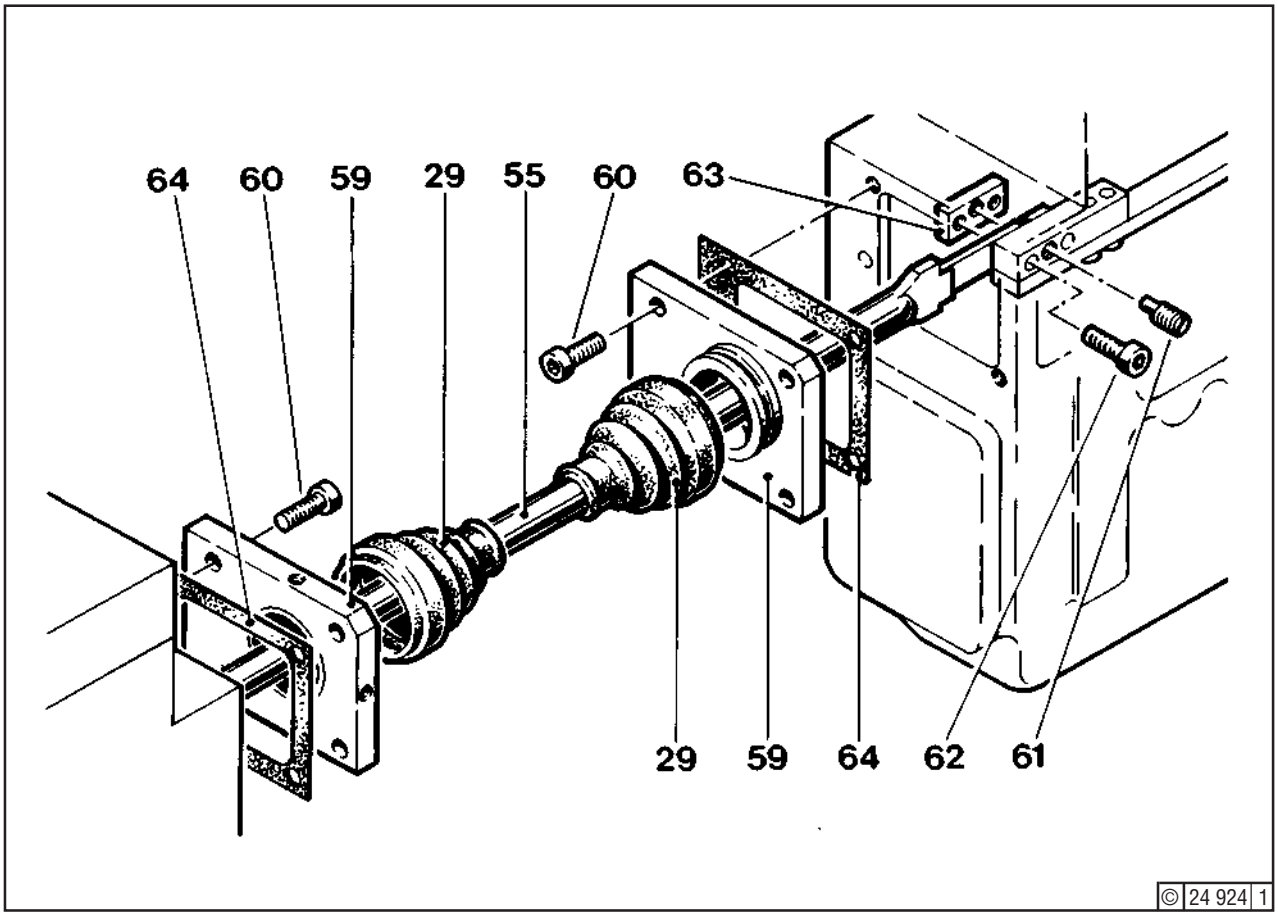

Fig. 2

After undoing the fastening screw A5 (Fig. 1) of the link C1, the injection pumps can be taken down.

When Removing Governor
Unscrew fastening bolt (*) - Fig. 3 -, remove link C3 and take down governor.

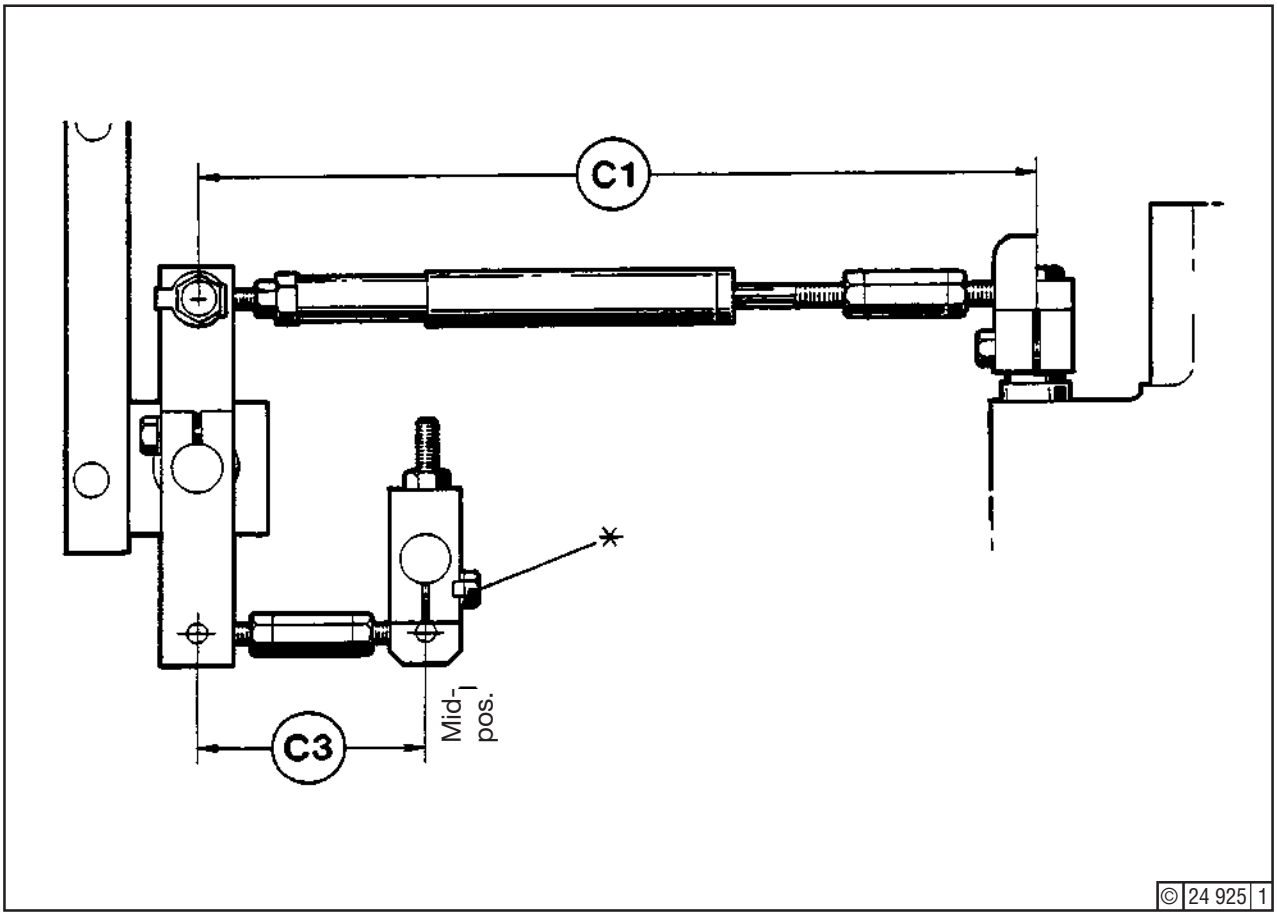

Fig. 3

Refitting the Linkage
For following operations, see also Fig. 1.

Checking Linkage Settings

1. Before refitting links C1and C3, check pertaining distance dimensions.

   They must be as follows:

   Link C1 = 310 mm, see Fig. 3

   Link C3 = 78 mm, see Fig. 3

Synchronizing the Injection Pumps

2. Detach link C1 at point A5 (*) - Fig. 4 -.

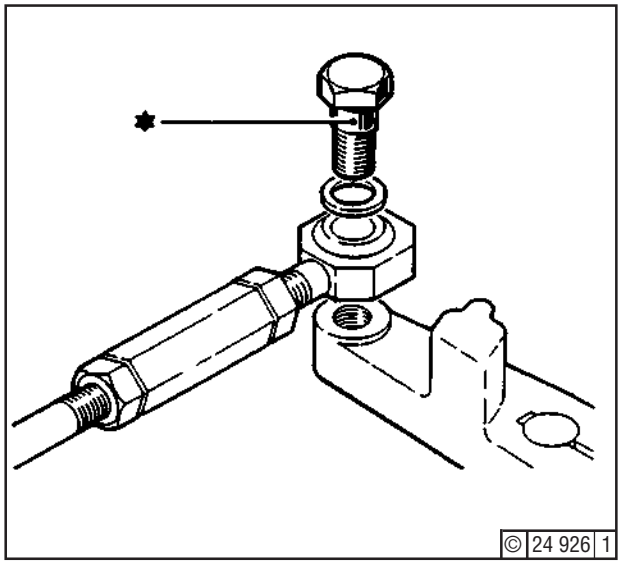

Fig. 4

3. Fully screw in stop screw (*) at point A 13 - Fig. 5 -. Record screw setting (**) where linkage is adjusted repeatedly.

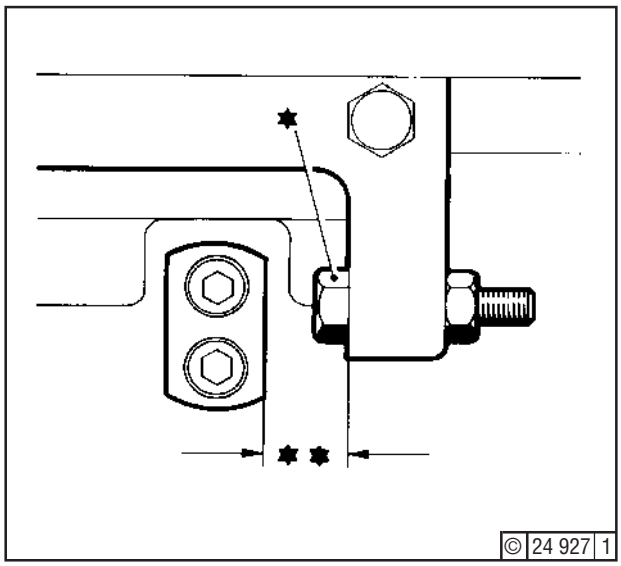

Fig. 5

4. Release screw (*) - Fig. 6 - to remove lever on starting fuel allowance stop, point A17.

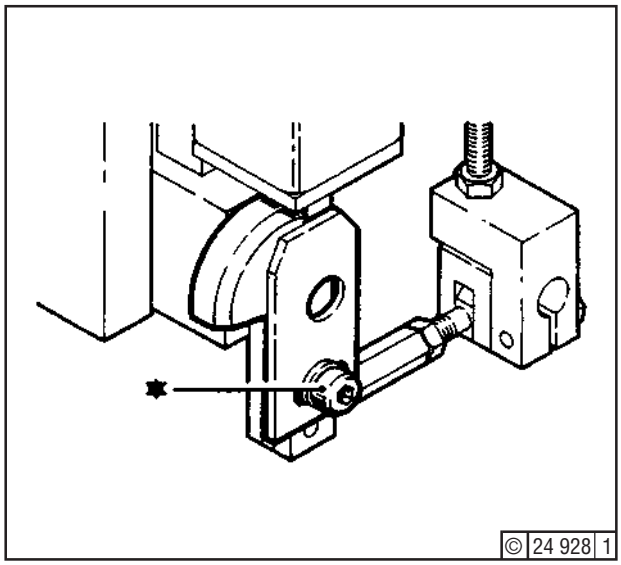

Fig. 6

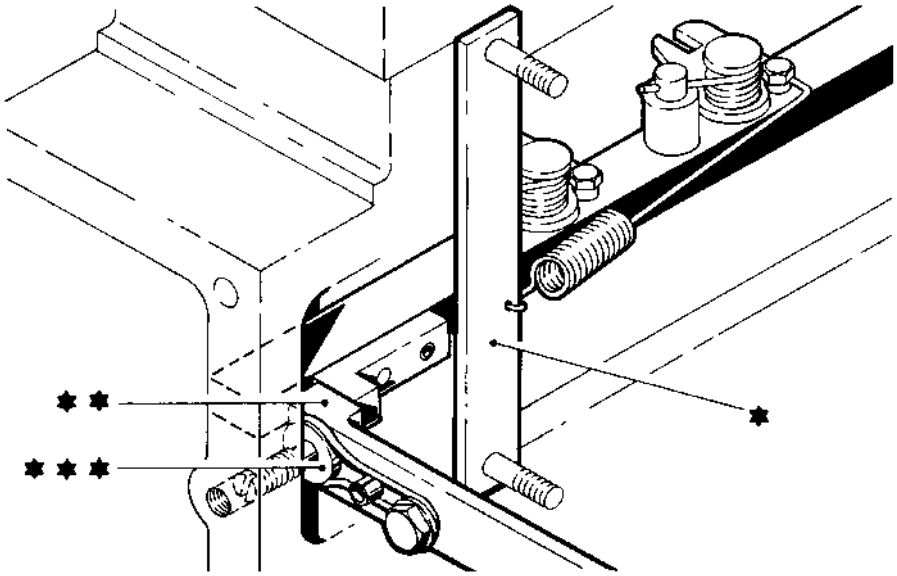

Fig. 7

5. Use tools (*) - Fig. 7 - to pull control rods of all injection pumps against the gauges (**) contacting check stops (***) at points A18 and A19. Leave tools (*) mounted for the time being.

6. Setting the Linkage
Mount the linkage in the reverse order as described for "Removing the Linkage when Removing Injection Pumps", but do not yet tighten the new cheese-head screws (***) - Fig. 8 -.

First of all, turn the eccentric (**) at the left hand end of the link (*) (pointA21) to the middle position, i.e., with the slit in the eccentric horizontal. Insert new cheese-head screws (***) and tighten according to specification, see "Specification Data", Section 3.5, line 60.

© 0484

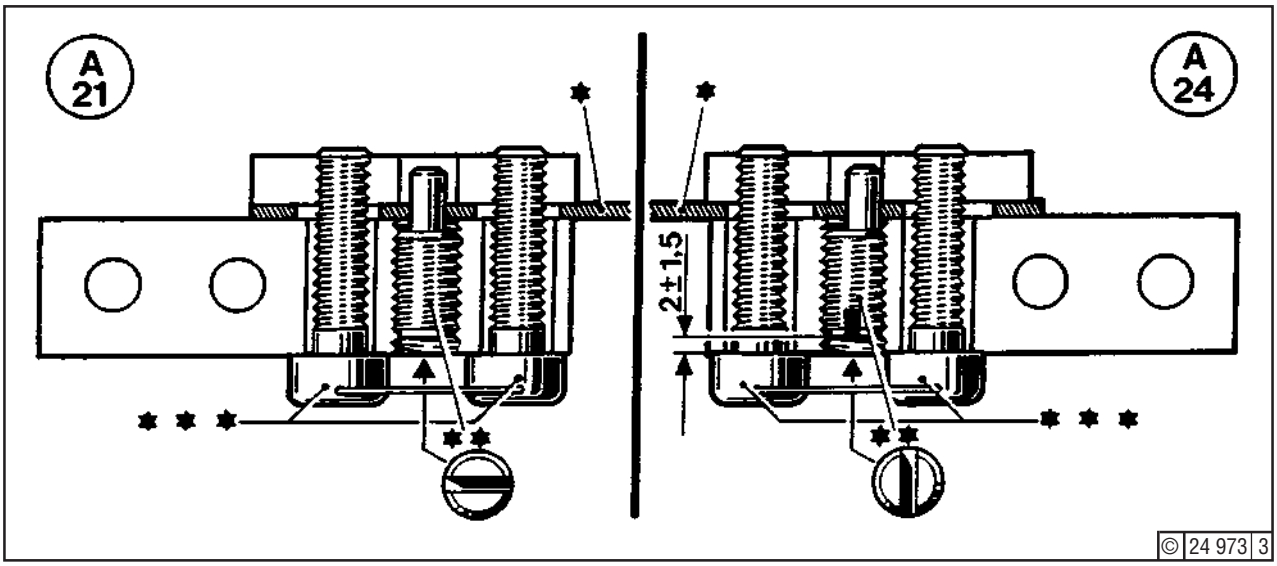

Fig. 8

Then, at the right-hand end of the link (*) (point A24), adjust the length of the link by means of the eccentric (**) so that the control rods contact the check stops without pressure, with the gauges inserted (see Fig. 7). Insert new cheese-head screws (***) and tighten according to specification, see "Specification Data", Section 3.5, line 60. If the setting at the right-hand eccentric is insufficient , rectify at the left-hand eccentric.

Having completed the setting, the cheese-head screws have to be lead-sealed.

7. Remove tools (Fig. 7). Move linkage in the direction "Stop" until one or more stop screws abut at points C12 and C13 (Fig. 9).

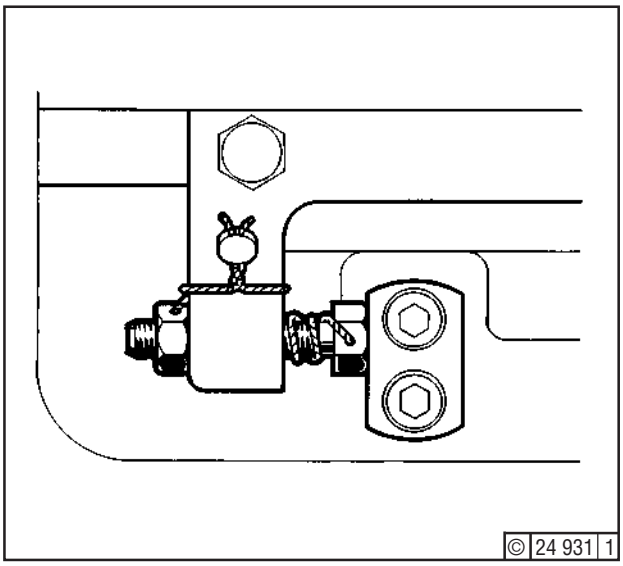

Fig. 9

Then adjust distance between stop piston ("Stop" position) at point A15 (Fig. 10) and shock absorber. Lock grooved nut (*).

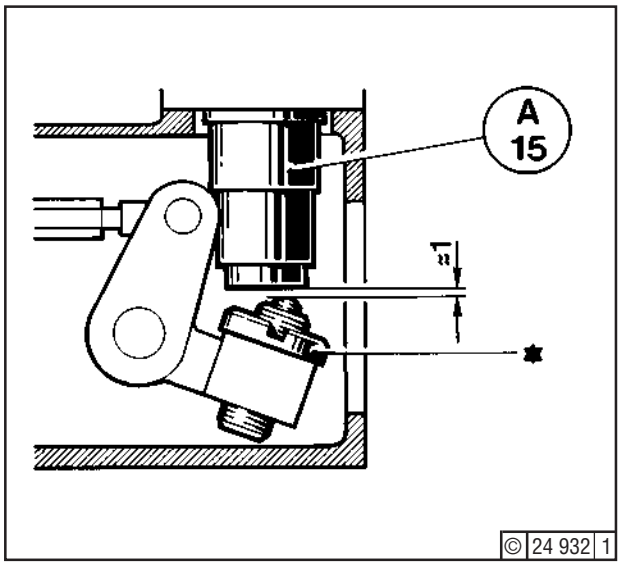

Fig. 10

8. Refit the tools (see under 5.) , then check whether, at operating position of the spring-loaded cylinder A15 (Fig. 11) and contact of the control rods at the check stops (points A18 and A19), there is a clearance of approx. 15 mm.

   Secure grooved nut (*) with Deutz DW 59 as specified.

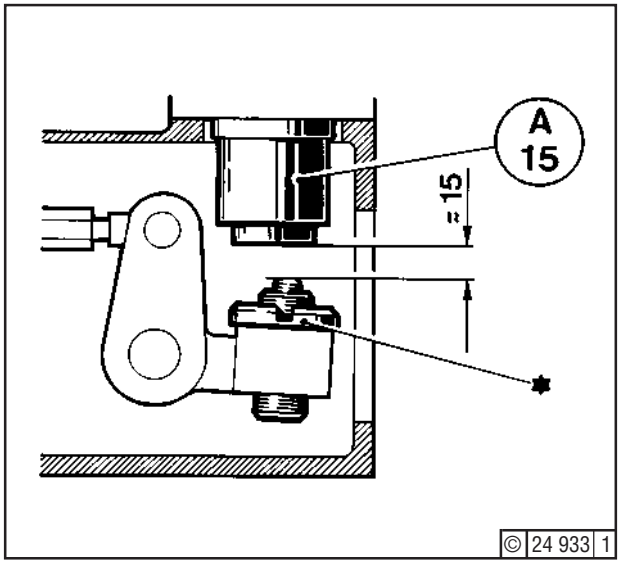

Fig. 11

© 0695

Actuator Link

9. Secure lever C11 (*) (Fig. 12) to actuator so that the lever is roughly vertical when the actuator shaft (Fig. 13) is in mid-position. (Shaft rotation is max. 45°.)

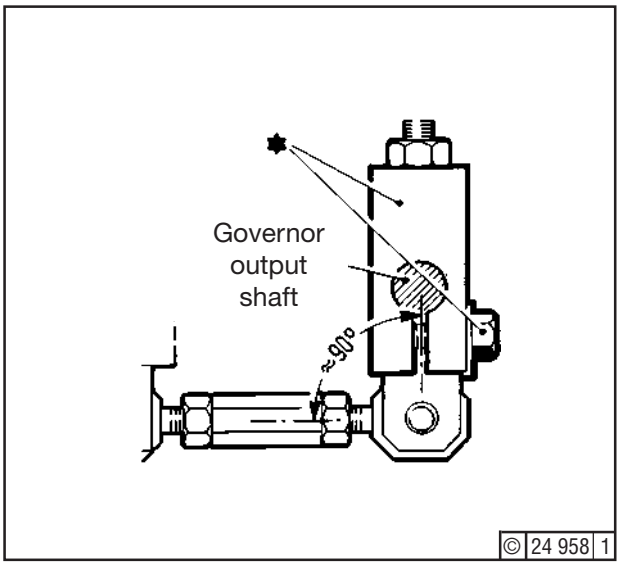

Fig. 12

Mark vertical lever position on external free shaft end (**)

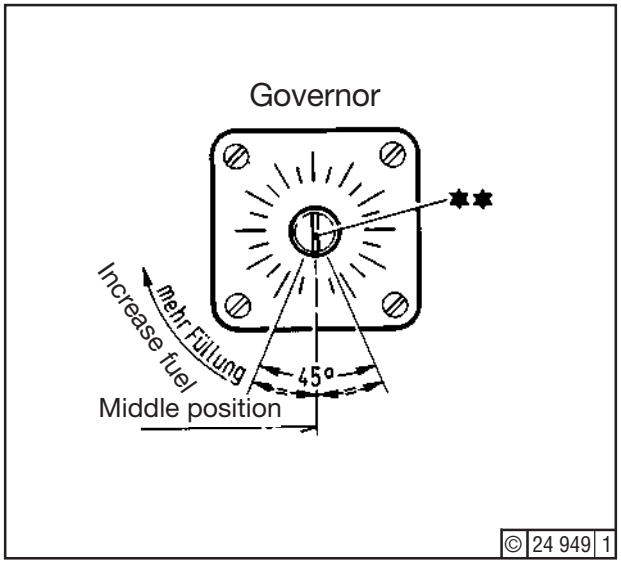

Fig. 13

10. With governing linkage removed, the actuator shaft will always be in "Stop"position. Turn shaft to maximum fuel (Fig. 14).

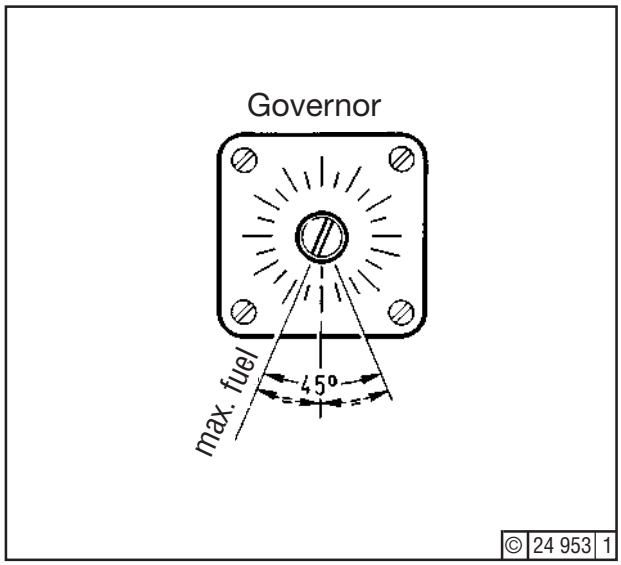

Fig. 14

Then secure linkage C1 (Fig. 15) to point A5 (*) and adjust length of link at point C5 (**) to ensure freedom from internal stressing. Remove tools from all injection pumps (see Fig. 7).

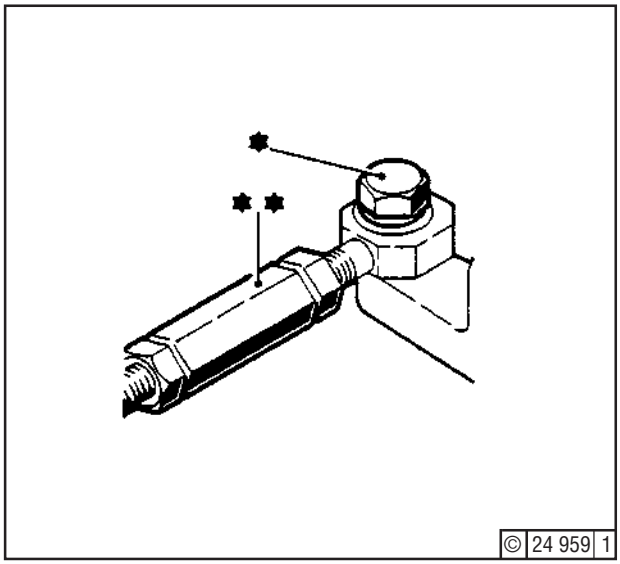

Fig. 15

© 0695

11. Adjust linkage at points C8 (*) or C10 (**) - Fig. 17 - so as to obtain the settings scheduled in table below. Then tighten all locknuts.

Graduation	
Actuator	Injection Pump
9° from Stop	0
Stop limit position	- 2,5 to - 5
34° from Stop	approx. 14

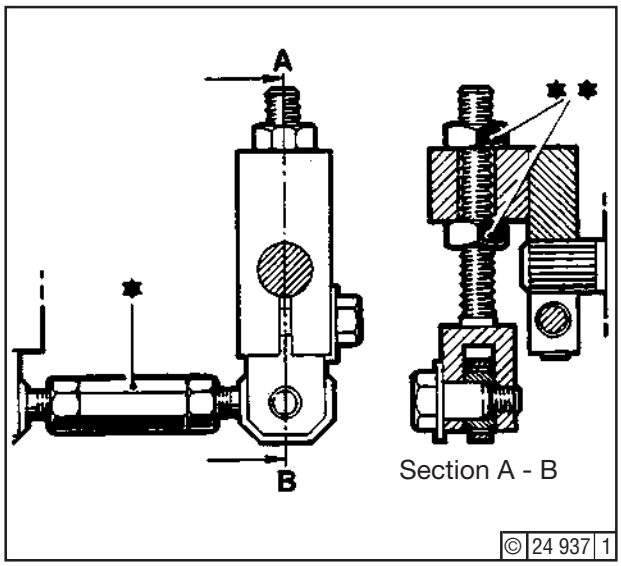

Fig. 16

Typical setting

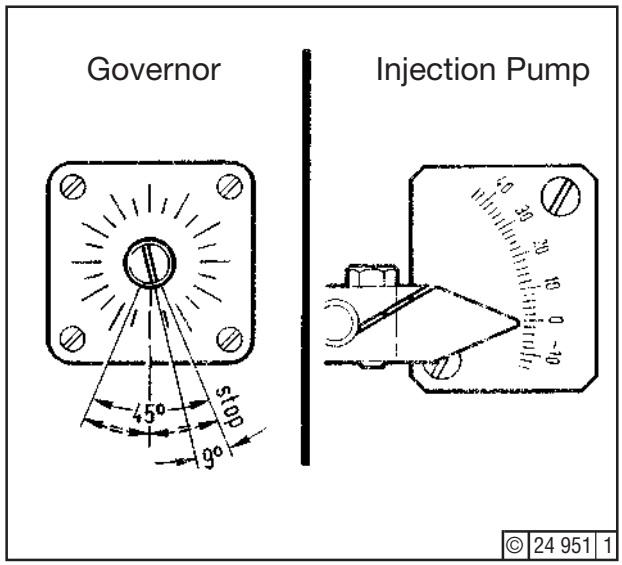

Fig. 17

© 0199

12. Set stop screw A13 so that load indicator on injection pump points to graduation (14) - Fig. 17.

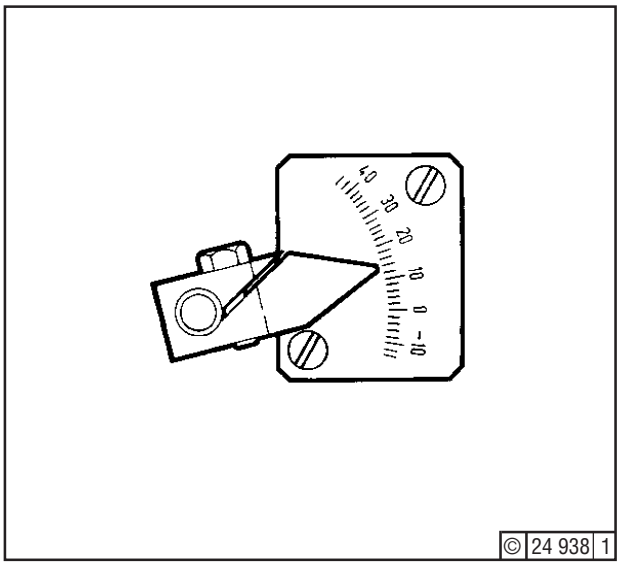

13. Check that linkage abuts at stop screw (*) - Fig. 18 - when pushed to maximum load (point A13).
Upon completion of the setting, lead-seal the engine output (**).

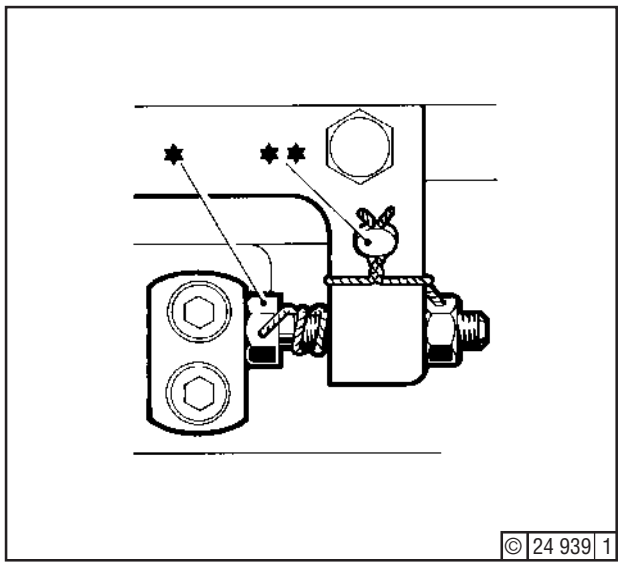

Fig. 18

14. After the engine has been put back to service and final load setting has been made, check that the governor scale gives the following readings:

No load	=	9°	rotation	measured from
Full load	=	34°	rotation	Stop position

Failing this, adjust linkage (points C8 or C10 under 11.).

15. Setting the starting fuel limit:
While the engine is running at 11 bar b.m.e.p., pressurize air cylinder of fuel limit and adjust refitted lever so that there is contact at point (**) - Fig. 19 - . Tighten screw (*), depressurize air cylinder.

After finally completing the settings, refit the covers at points A21 and A24 - Fig. 1 -, together with new gaskets, if necessary. Remount the linkage covers.

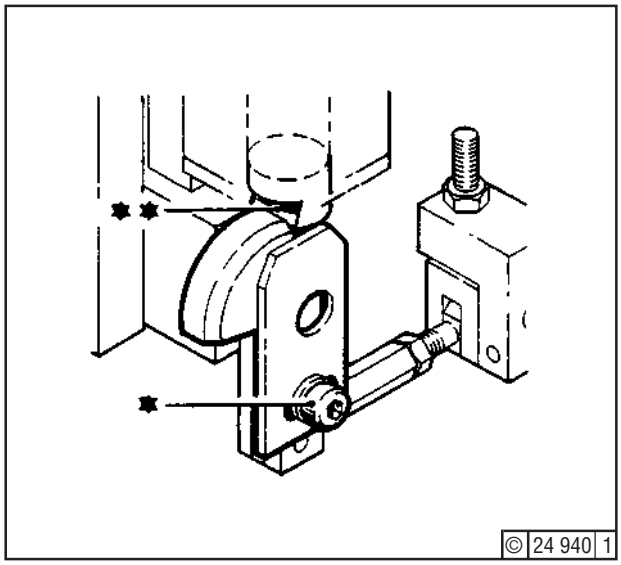

Fig. 19

Servicing / Setting

For removing the injection pumps, it is necessary to remove the linkage between the pumps and to detach the linkage between pump and governor. After the pumps have been refitted , the linkage has to be checked and adjusted as necessary.
After a governor has been remounted, the setting of the linkage between governor and pump has also to be checked and adjusted as necessary.

We recommend that these jobs be entrusted to a DEUTZ specialist, since otherwise the warranty will possibly be affected. Only in emergency may this work be carried out by machine-room personnel. In that case, a DEUTZ specialist should be called in at the next opportunity to check and seal the control linkage.

Tools:

- Standard tools
- Sealing compound Deutz DW 59 (Section 3.6),
- Sealing wax red, part No.: 0100 7740

Job Card:

- 05.00.01

Job:

Stop engine and observe safety precautions (job 05.00.01).

Removing the Linkage

When Removing Injection Pumps

Remove linkage covers,. Remove covers at points A21 and A24 (Fig. 1).

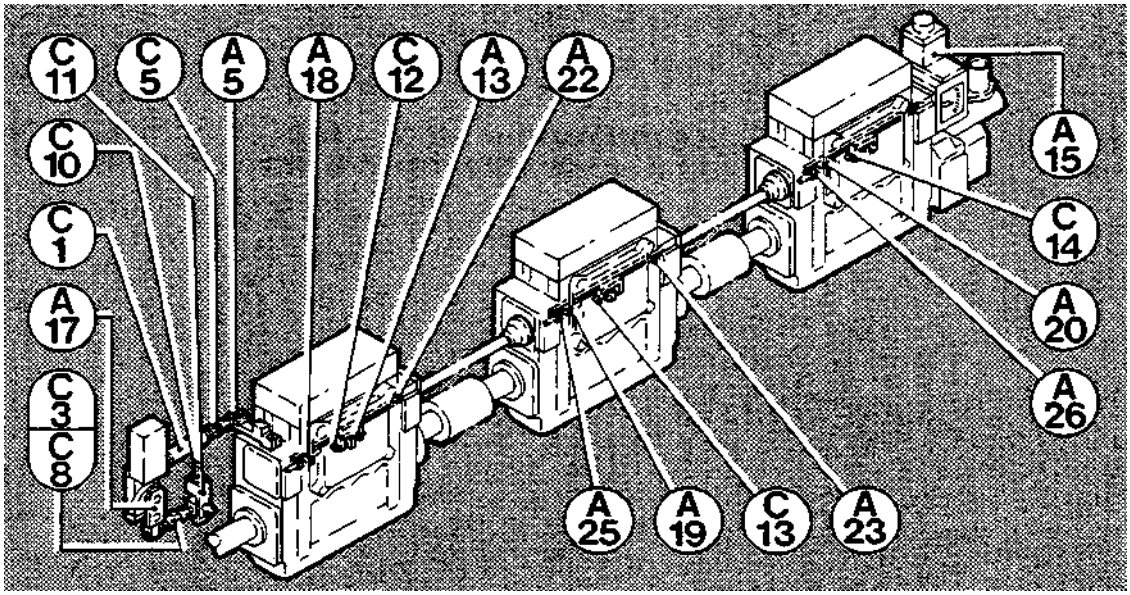

© 24 912 1

Fig. 1

Unscrew chees-head screws (60) - Fig. 2 -. Remove gaskets (64). Push covers (59) and bellows (29) towards the middle of link (55). Then undo cheese-head screws (62) and scrap. Remove flat irons (63). Slacken eccentrics (61) and carefully lift links out of the injection pumps.

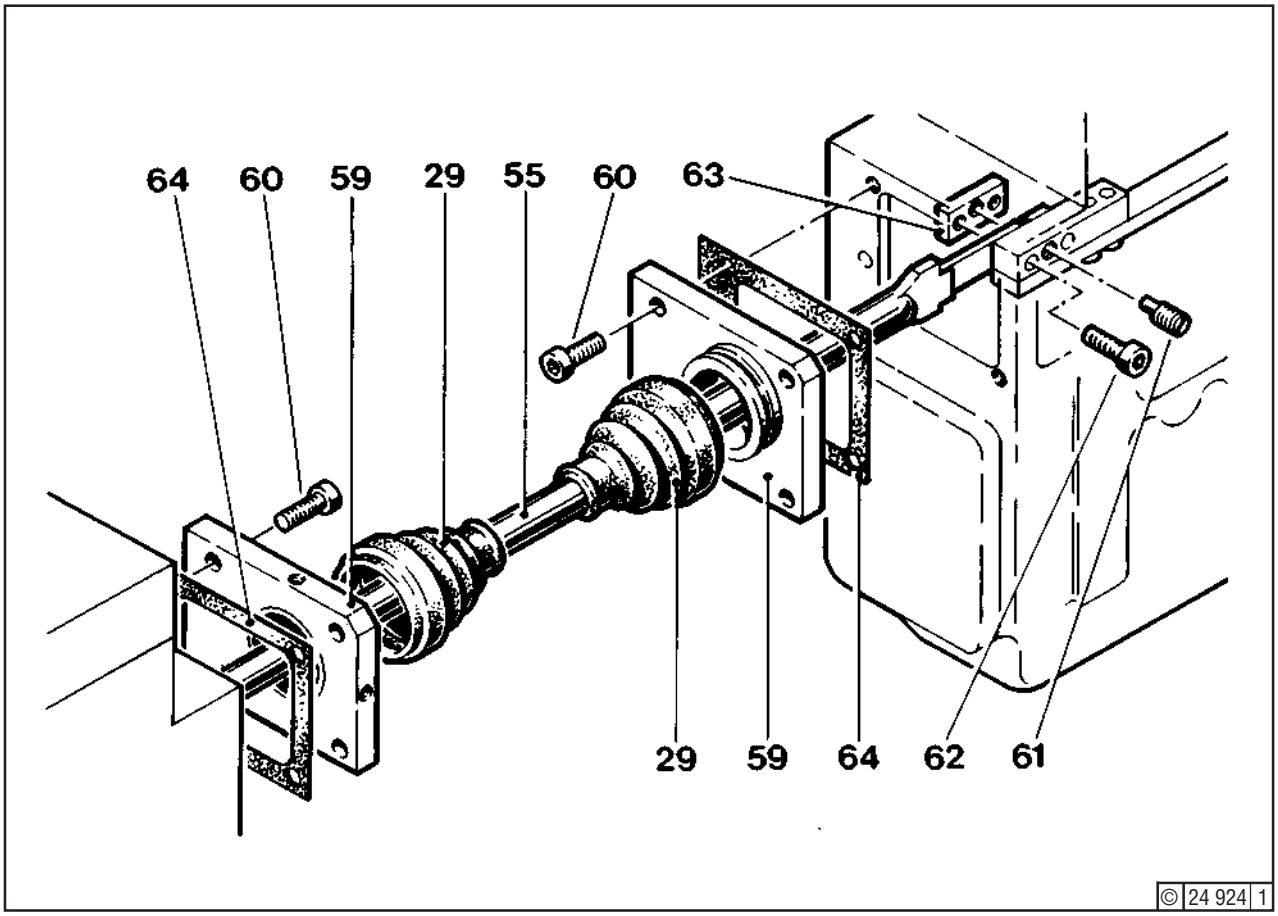

Fig. 2

After undoing the fastening screw A5 (Fig. 1) of the link C1, the injection pumps can be taken down.

When Removing Governor
Unscrew fastening bolt (*) - Fig. 3 -, remove link C3 and take down governor.

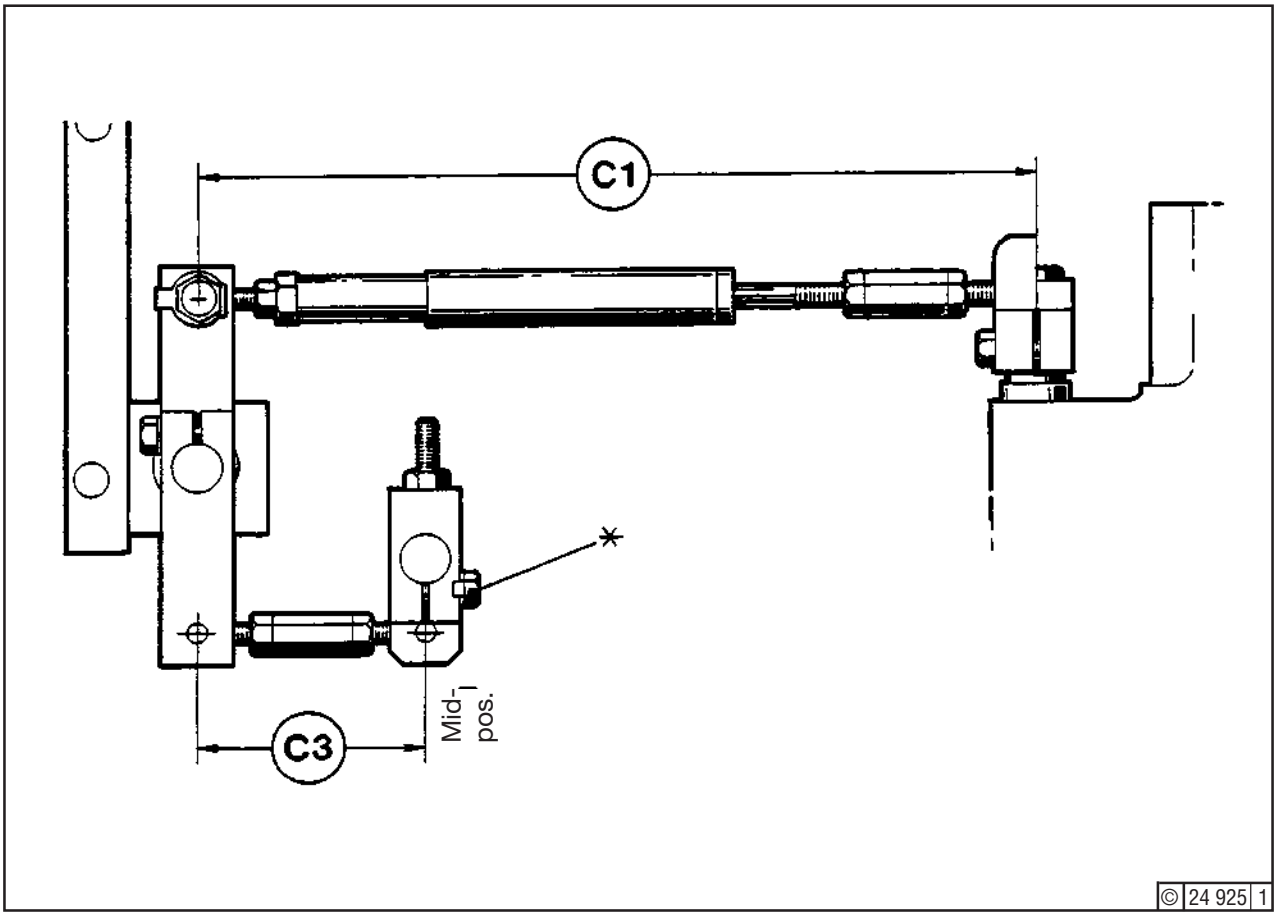

Fig. 3

Refitting the Linkage
For following operations, see also Fig. 1.

Checking Linkage Settings

1. Before refitting links C1and C3, check pertaining distance dimensions.

   They must be as follows:

   Link C1 = 310 mm, see Fig. 3

   Link C3 = 78 mm, see Fig. 3

Synchronizing the Injection Pumps

2. Detach link C1 at point A5 (*) - Fig. 4 -.

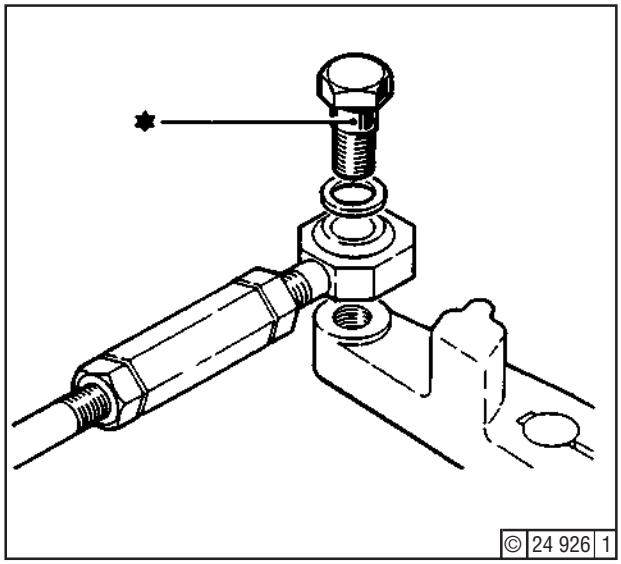

Fig. 4

3. Fully screw in stop screw (*) at point A 13 - Fig. 5 -. Record screw setting (**) where linkage is adjusted repeatedly.

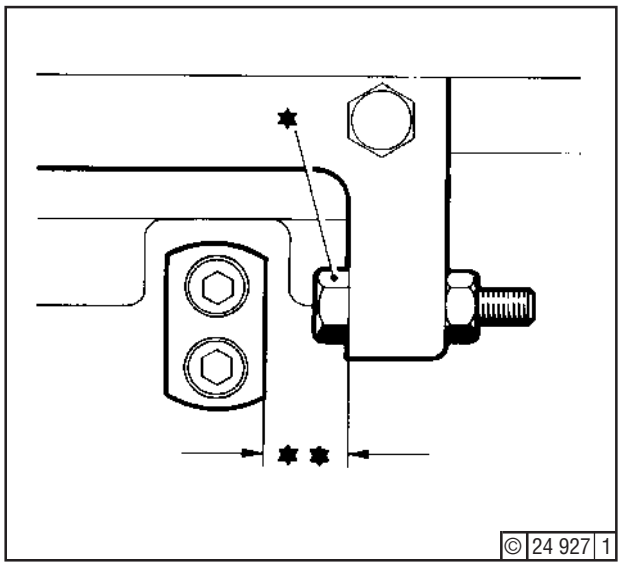

Fig. 5

4. Release screw (*) - Fig. 6 - to remove lever on starting fuel allowance stop, point A17.

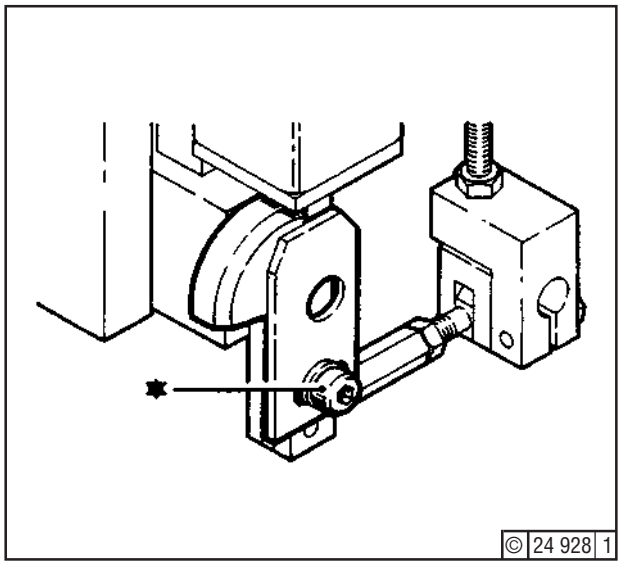

Fig. 6

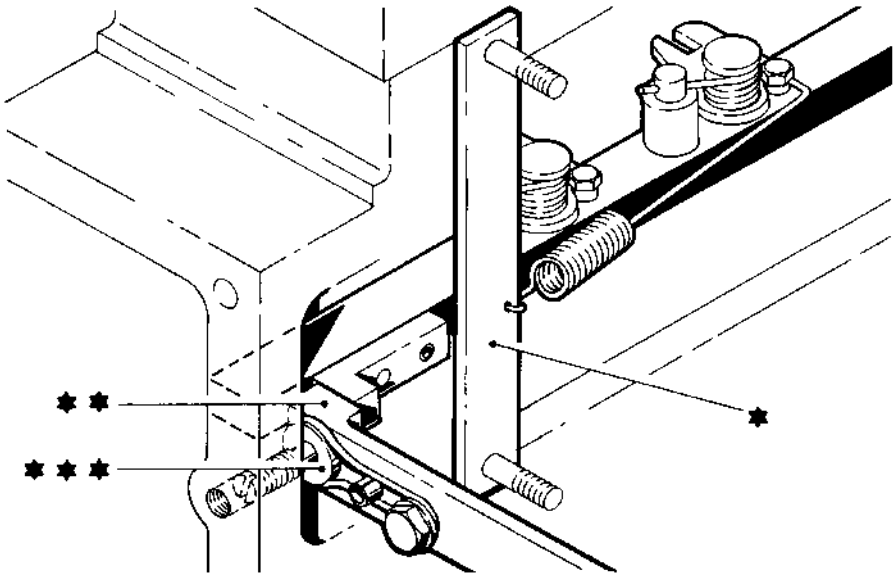

Fig. 7

5. Use tools (*) - Fig. 7 - to pull control rods of all injection pumps against the gauges (**) contacting check stops (***) at points A18, A19 and A20. Leave tools (*) mounted for the time being.

6. Setting the Linkage
Mount the linkage in the reverse order as described for "Removing the Linkage when Removing Injection Pumps", but do not yet tighten the new cheese-head screws (***) - Fig. 8 -.

First of all, turn the eccentric (**) at the left hand end of the link (*) (points A22, A23) to the middle position, i.e., with the slit in the eccentric horizontal. Insert new cheese-head screws (***) and tighten according to specification, see "Specification Data", Section 3.5, line 60.

© 0484

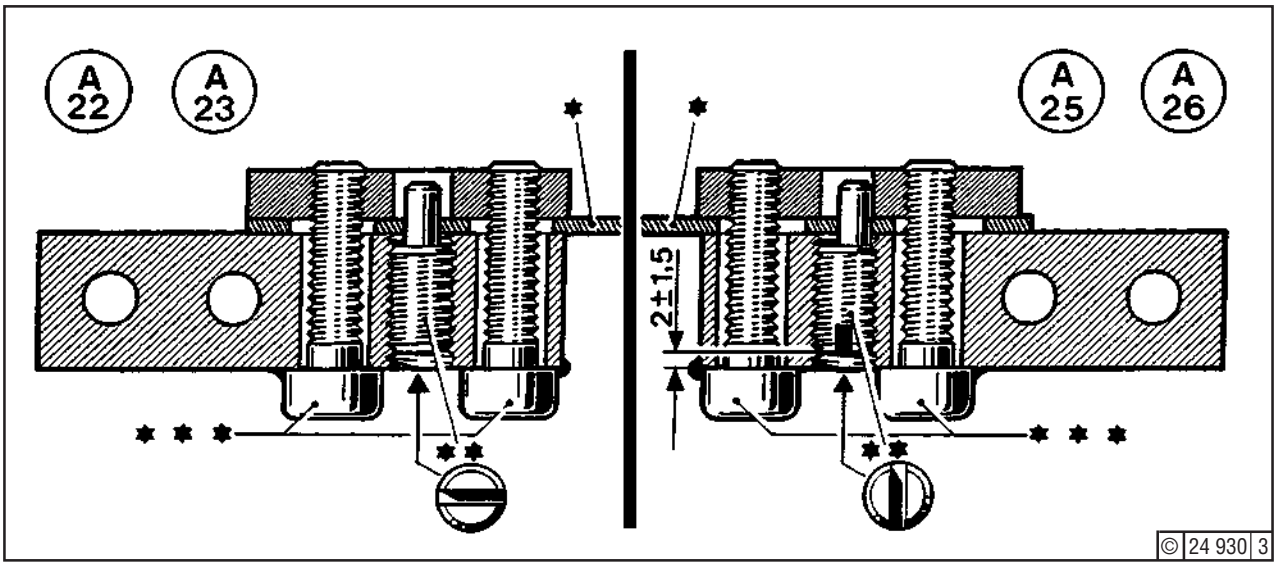

Fig. 8

Then, at the right-hand end of the link (*) (points A25, A26), adjust the length of the link by means of the eccentric (**) so that the control rods contact the check stops without pressure, with the gauges inserted (see Fig. 7). Insert new cheese-head screws (***) and tighten according to specification, see "Specification Data", Section 3.5, line 60. If the setting at the right-hand eccentric is insufficient , rectify at the left-hand eccentric.

Having completed the setting, the cheese-head screws have to be lead-sealed.

7. Remove tools (Fig. 7). Move linkage in the direction "Stop" until one or more stop screws abut at points C12, C13 and C14 (Fig. 9).

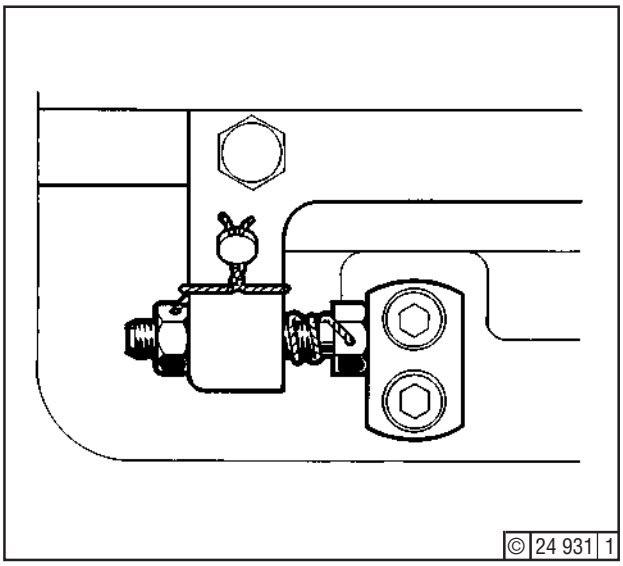

Fig. 9

Then adjust distance between stop piston ("Stop" position) at point A15 (Fig. 10) and shock absorber. Lock grooved nut (*).

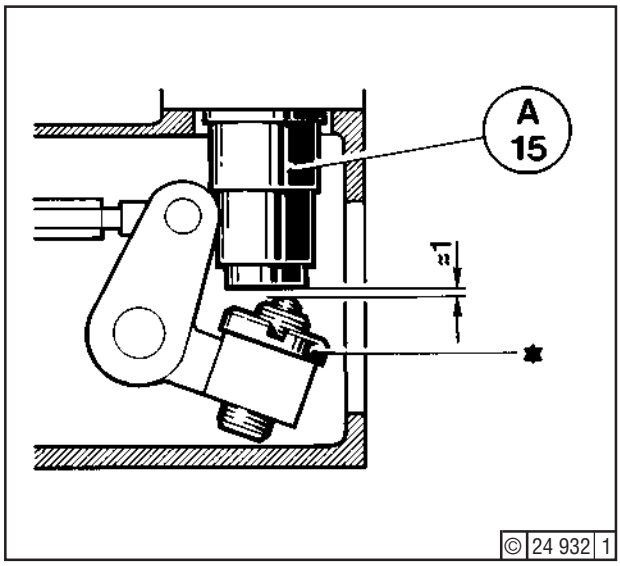

Fig. 10

8. Refit the tools (see under 5.) , then check whether, at operating position of the spring-loaded cylinder A15 (Fig. 11) and contact of the control rods at the check stops (points A18, A19 and A20), there is a clearance of approx. 15 mm.

   Secure grooved nut (*) with Deutz DW 59 as specified.

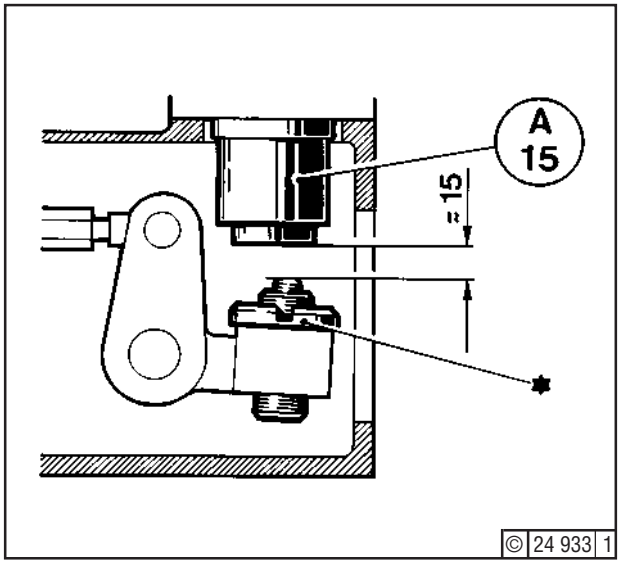

Fig. 11

Actuator Link

9. Secure lever C11 (*) (Fig. 12) to actuator so that the lever is roughly vertical when the actuator shaft (Fig. 13) is in mid-position. (Shaft rotation is max. 45°.)

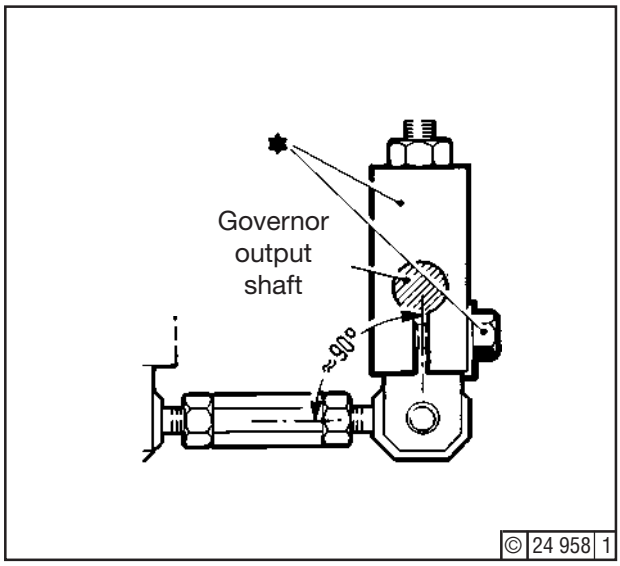

Fig. 12

Mark vertical lever position on external free shaft end (**)

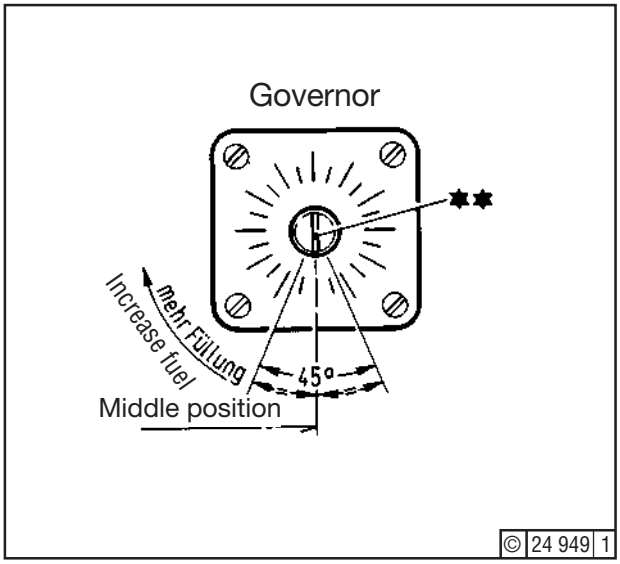

Fig. 13

10. With governing linkage removed, the actuator shaft will always be in "Stop"position. Turn shaft to maximum fuel (Fig. 14).

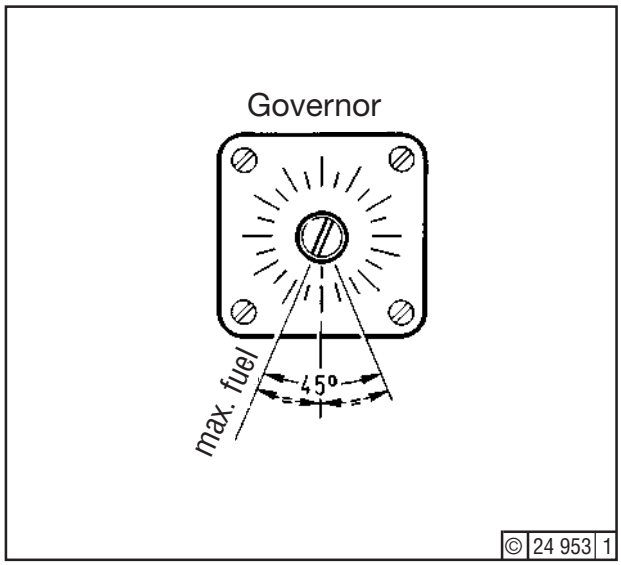

Fig. 14

Then secure linkage C1 (Fig. 15) to point A5 (*) and adjust length of link at point C5 (**) to ensure freedom from internal stressing. Remove tools from all injection pumps (see Fig. 7).

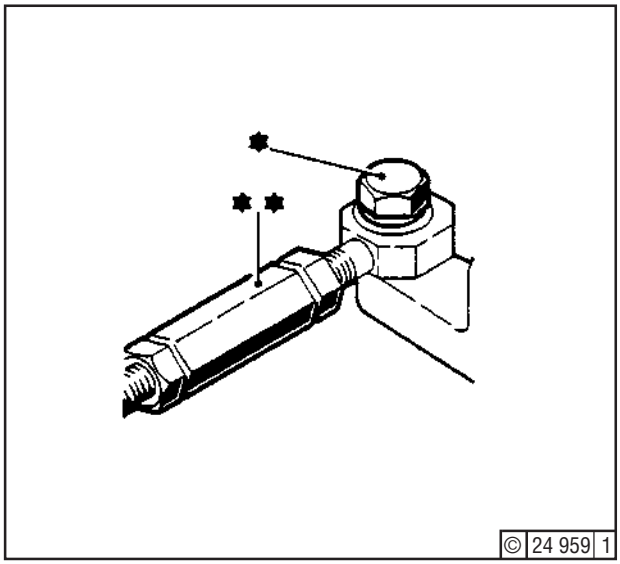

Fig. 15

11. Adjust linkage at points C8 (*) or C10 (**) - Fig. 17 - so as to obtain the settings scheduled in table at right. Then tighten all locknuts.

Graduation	
Actuator	Injection Pump
9° from Stop	0
Stop limit position	- 2,5 to - 5
34° from Stop	approx. 14

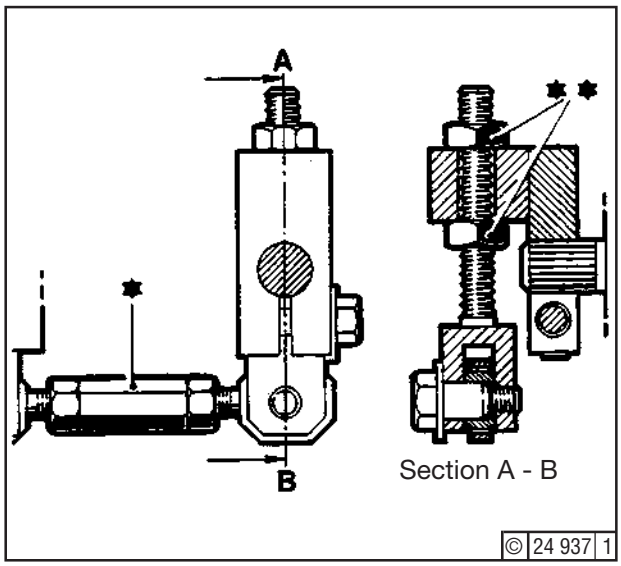

Fig. 16

Typical setting

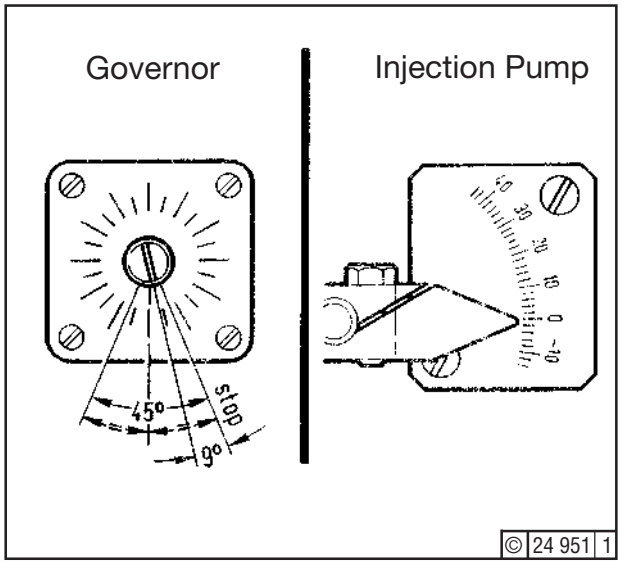

12. Set stop screw A13 so that load indicator on injection pump points to graduation (14) - Fig. 17.

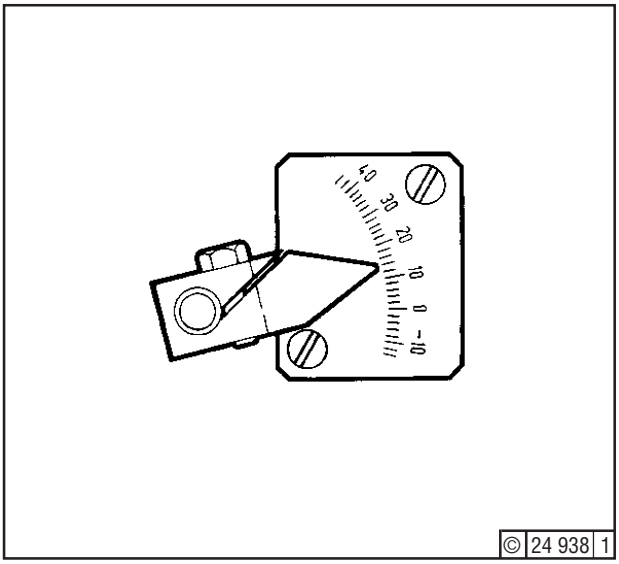

Fig. 17

13. Check that linkage abuts at stop screw (*) - Fig. 18 - when pushed to maximum load (point A13).
Upon completion of the setting, lead-seal the engine output (**).

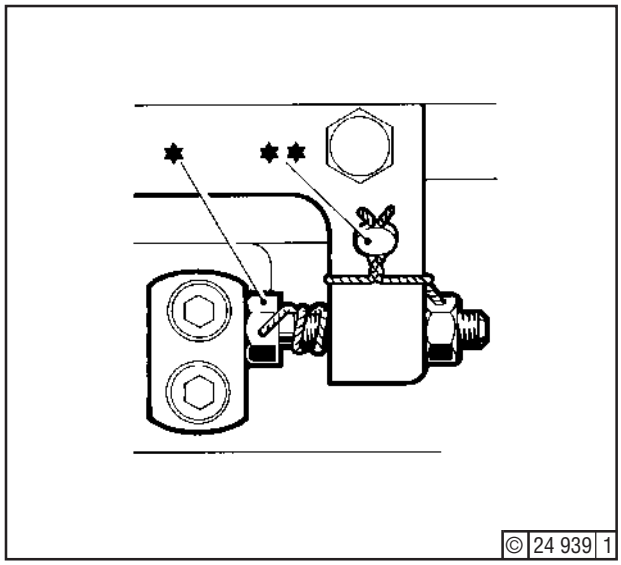

Fig. 18

14. After the engine has been put back to service and final load setting has been made, check that the governor scale gives the following readings:

No load	=	9°	rotation	measured from
Full load	=	34°	rotation	Stop position

Failing this, adjust linkage (points C8 or C10 under 11.).

15. Setting the starting fuel limit:
While the engine is running at 11 bar b.m.e.p., pressurize air cylinder of fuel limit and adjust refitted lever so that there is contact at point (**) - Fig. 19 - . Tighten screw (*), depressurize air cylinder.

After finally completing the settings, refit the covers at points A22, A25, A23 and A26 - Fig. 1 -, together with new gaskets, if necessary. Remount the linkage covers.

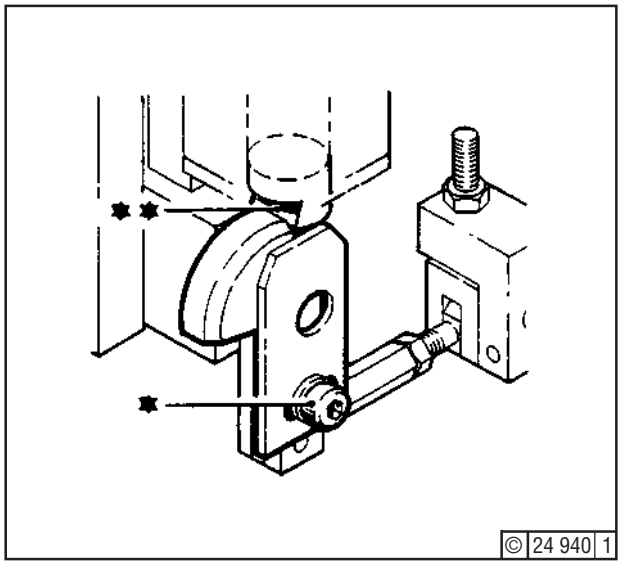

Fig. 19

Inspection

Check function of the telescopic pieces; check link bearings for wear.

☞ Proper condition of the link bearings and of the telescopic pieces is essential for problem-free operation of the engines.

This calls for regular inspection and servicing of the telescopes - by greasing - and of the link bearings - by checking the degree of wear.

We strongly recommend having these jobs carried out by our Service Organization. However, should it be necessary for the control linkage to be serviced by the engine operator, it is **essential** that it be checked and lead-sealed by our Service Organization at the next earliest opportunity.

Tools:

- Standard tools
- Locking compound, Deutz DW 57 and 60 (Section 3.6)
- Lubricating compound, Deutz S2 (Section 3.6)
- Sealing compound, Deutz DW 48 (Section 3.6)

Job Cards:

- 05.00.01
- 05.04.14

Inspecting Link Bearings

Remove linkage covers between speed governor and injection pumps.
Move link rods C1 (Fig. 1) and C3 to and fro. If play is found to exist, the link heads are worn and must be replaced (see "Reconditioning").
Similarly check the play of the link bearings in the bearing block (2) by moving the two levers (5) up and down and to and fro. If necessary, renew the link bearings

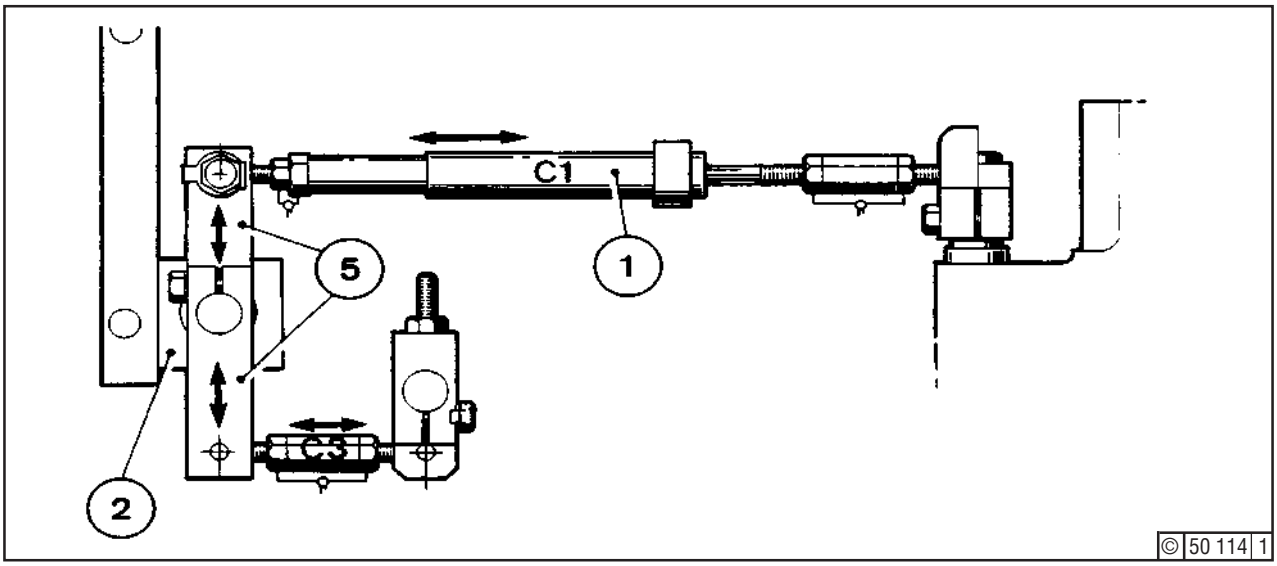

Fig. 1 Linkage

© 0199

Inspecting Telescopic Piece C1(Fig. 1)
Undo fitted hex. bolt (*) - Fig. 2 -. At the other end of the link, release locking plate and screw out fitted hex. bolt. Take link rod out of forked lever, compress by hand, and release. The resistance thereby occurring should result solely from the compression spring inside the telescopic piece (1) - Fig. 1 -. The link rod should then return to its original position.

If not, the telescopic piece must be reconditioned. Reassembly is in the reverse order, the fitted hex. bolt (*) - Fig. 2 - then being inserted with locking compound Deutz DW 57.

☞ The sliding surface of the link ends (**) must be absolutely free of locking compound.

At the other end of the link rod, secure the fitted hex. bolt with a new locking plate.

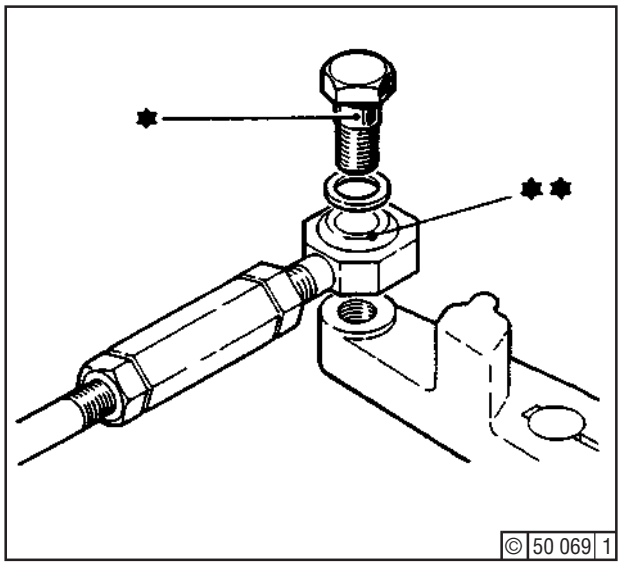

Fig. 2 Telescopic piece

Reconditioning

Renewing Heads of Links C3 - Fig. 1 -
Release locking plates of the two fitted hex. bolts (*) - Fig. 3 - and remove the bolts. Take link rod C3 out of the forks.

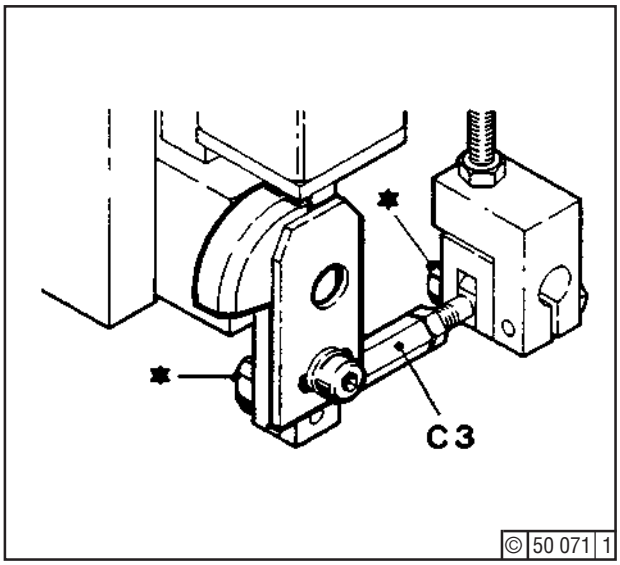

Fig. 3 Linkrod

Loosen hex. nuts (13) and (15) - Fig. 4 - and turn out link heads (10) and (16).

⚠ Parts (10) and (13) have left-hand threads.

Clean all parts in diesel fuel. Fit new heads and reassemble link rods in the reverse order. Check and set linkage as per job card 05.04.14.

Remount as described under "Inspecting Telescopic Pieces". Lead-seal hex. nuts (13) and (15).

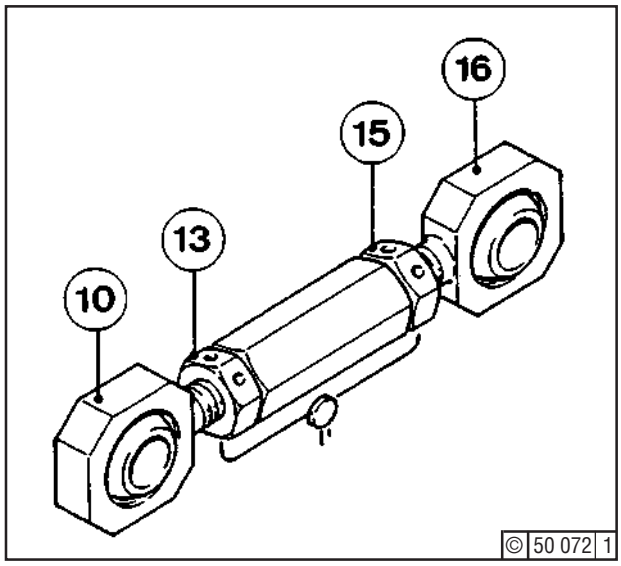

Fig. 4 Heads of links

Renewing Heads of Link C2 - Fig. 1 -

Dismantling procedure is analogous to that described under "Inspecting Telescopic Pieces".

Loosen hex. nuts (13) - Fig. 5 - and (15) and turn out link heads (10) and (16).

⚠ Parts (10) and (13) have left-hand threads

Clean all parts in diesel fuel. Fit new link heads, check and set linkage as per job card 05.04.14.

Refitting procedure is analogous to that described under "Inspecting Telescopic Pieces". Lead-seal hex. nuts (13) and (15).

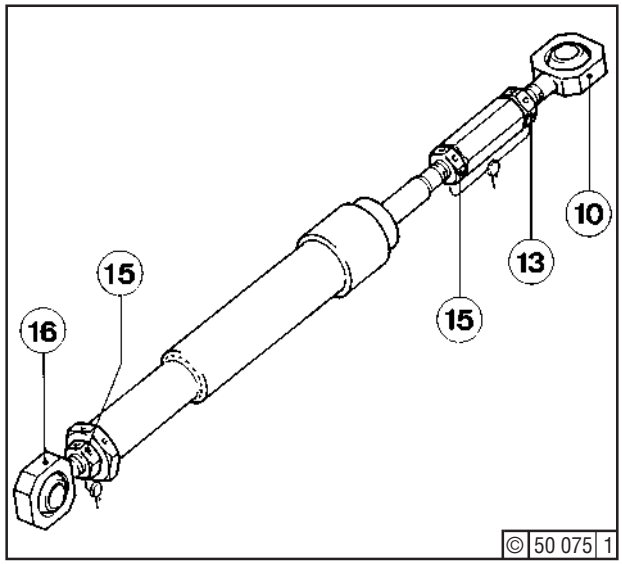

Fig. 5 Heads of the telescopic piece

© 0199

Renewing Link Bearings of Bearing Block (2) - Fig. 1 -

Release link rods C1 and C3 - Fig. 6 - at the levers (5), as described under ”Renewing Link Heads”. Unlock hex. bolts (7) and remove.
Take off levers (5) and Woodruff keys (6). Remove Allen-head screws (43), take off bearing block. Carefully drive out shaft (44) with brass drift and remove link bearings (3). Clean all parts in diesel fuel and rub dry with a non-fraying cloth.

First, push one link bearing onto shaft (44) as far as the stop, after having applied a film of locking compound DW 57 to the seat of the inner ring and to the seat of the outer ring.

⚠ The sliding surfaces of the links must be absolutely free of locking compound.

Push shaft with link bearing into bearing block. Then fit the second link bearing in similar manner, provided with Deutz DW 57, and push on as far as the stop.
When the locking compound has hardened, check shaft for ease of movement.
Position the two levers (5) together with the Woodruff keys (6) and push on to butt against the link bearings (3), free of axial play. Screw in hex. bolts (7), tighten and lock with locking plates.

Fasten link rods C1 and C3 to levers (5) as described under ”Renewing Link Heads”.

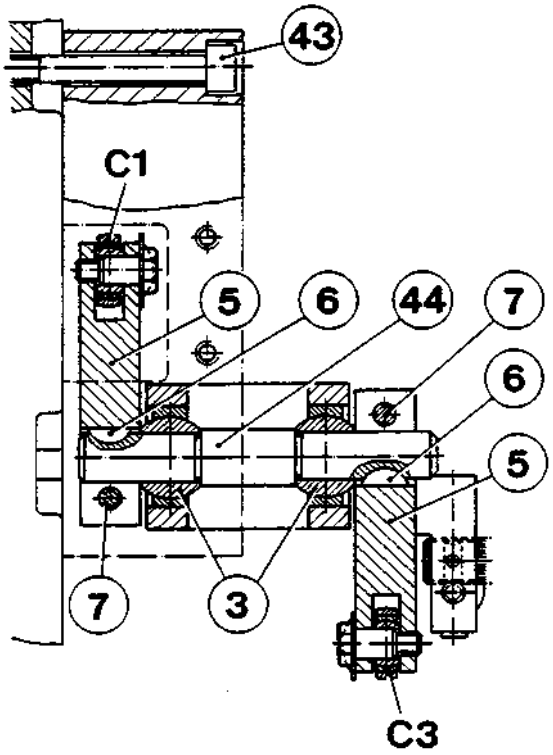

Fig. 6 Link bearings of bearing block

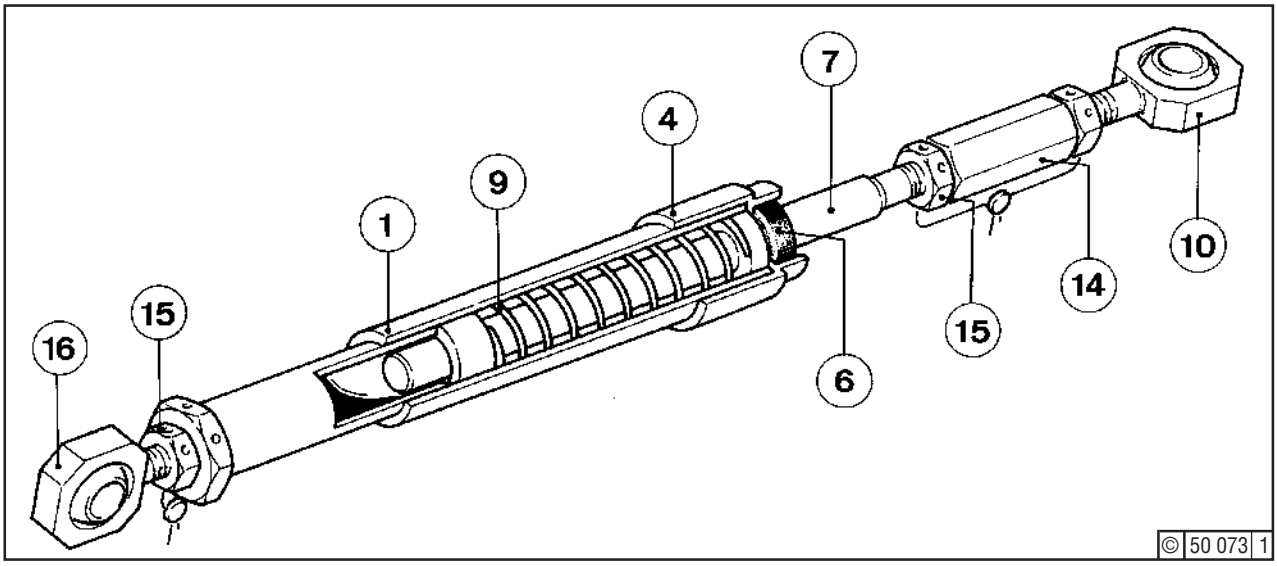

Fig. 7 Reconditioning of the telescopic pieces

Reconditioning Telescopic Pieces
Dismantle link rod C1 - Fig. 1 - as described under ”Inspecting Telescopic Piece”.

Loosen hex. nuts (15) - Fig. 7 - and remove link heads (16) and (10), the latter together with turnbuckle (14). Carefully screw off union nut (4), which is under pressure of compression spring (9) inside the telescope. Take out connecting piece (7) and compression spring (9).
Clean all parts in diesel fuel and check for wear and corrosion, renewing any damaged parts.

When re-assembling the telescopic piece (1), fit a new packing ring (6) - wetted completely on the outside with Deutz DW 48 - in the union nut (4). Apply a coating of Deutz S2 to the sliding surfaces between telescopic piece (1) and connection piece (7). Completely coat thread of telescopic piece with Deutz DW 60 for receiving union nut (4). Now insert compression spring (9). Fit union nut over connecting piece (7), screw onto telescopic piece (1), and tighten.

Mount the link heads in reverse order as for removal. Check function of telescopic piece as described under ”Inspecting Telescopic Piece”.

Check and set the linkage as per Job Card 05.04.14. Lead-seal hex. nuts (15). Mount linkage as described under ”Inspecting Telescopic Piece”.

Upon completion of the work, check control linkage in mounted condition for proper operation.

© 0199

This page intentionally left blank.

Inspection

When the cylinder head is due for servicing (job 01.08.01), inspect the manifold for leaks and contamination inside, see also job card 06.01.03. If heavy deposits of soot are inside, remove and clean manifold.

Tools:

- Standard tools
- Lubricating compound "Deutz S1" (Section 3.6)
- Brush

Job Cards:

- 01.08.01
- 06.01.03

Job:

Check manifold for leaks. Leaks due to cracks or slack bolting are usually indicated by black discolouring or carbon black/soot deposits at the ventilation slots of the legging. Remove part of legging involved for sealing/tightening up leaks and replacing gaskets, expansion joints or manifold sections. Check that all bolts are tight.

Where the entire legging has been removed, be sure to refit all cover plates, especially the strip covering the ventilation slot at the top. Failing this, operating media (fuel or oil) may find ingress into the legging, e. g. from leaks of adjacent piping.

If the entire exhaust manifold has been removed, it is necessary when re-assembling to observe correct allocation of individual cylinders to the manifold sections, as shown in Fig. 2 and 3.

⚠ When refitting expansion compensators, observe the direction of flow. The bead-over of the inner pipe and the wide overlap of the flange must be on the flow approach side (see Fig. 1).
When reassembling the exhaust manifold, be sure to use the right, partly heat-resistant bolts and nuts, as listed in the spare parts book.

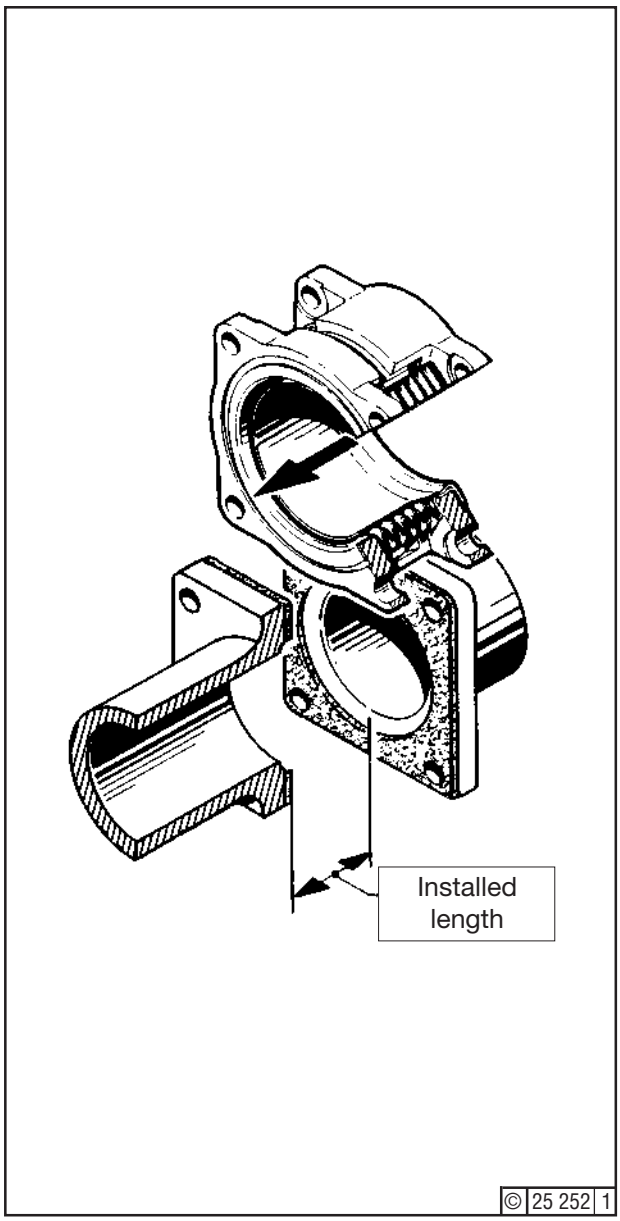

Fig. 1

© 0885

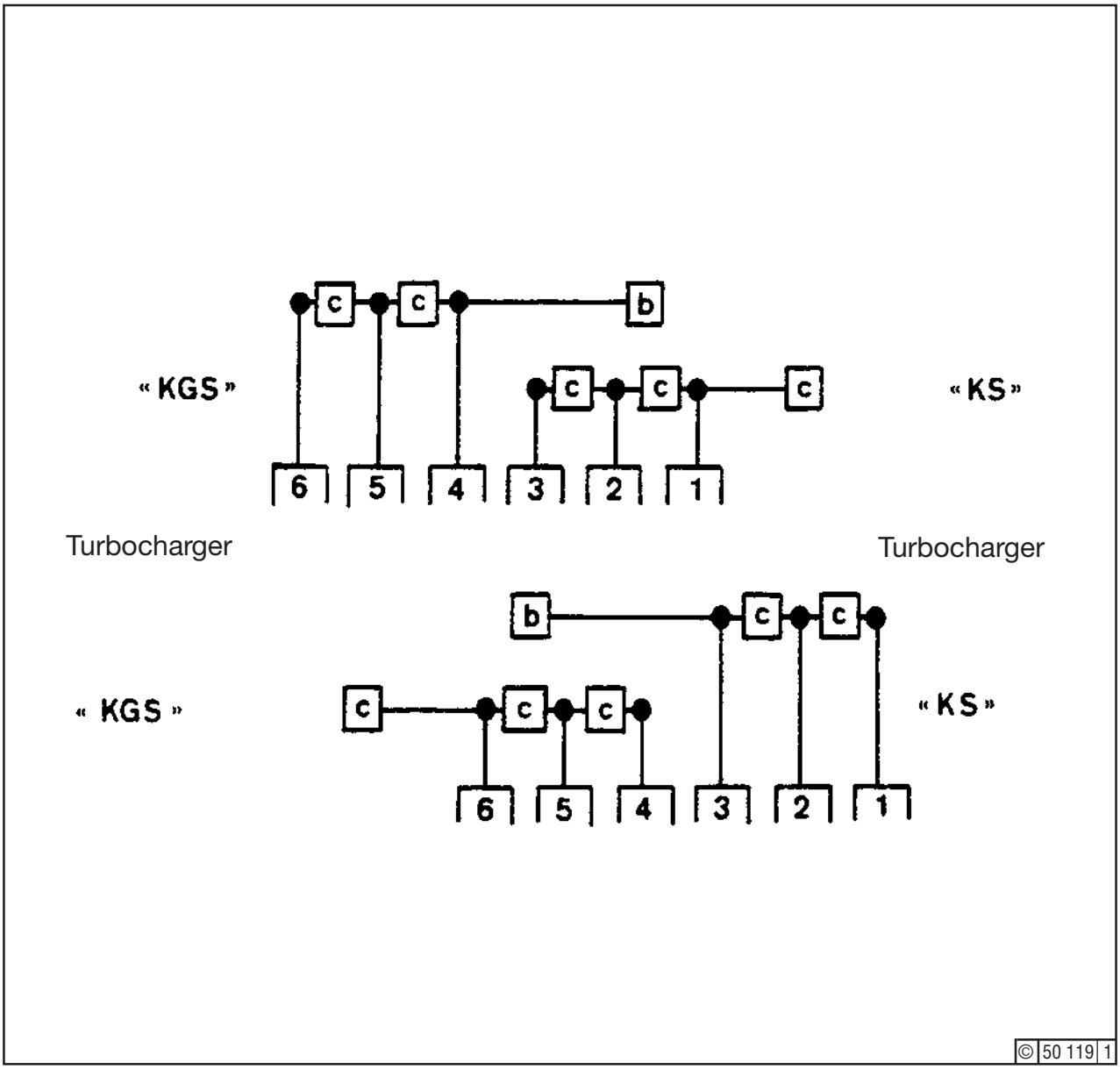

"KGS" = Free end

"KS" = Driving end

Compensator	Laid length
b	88^{+1}_{-4}
c	88^{+1}_{-6}

Fig. 3

© 0885

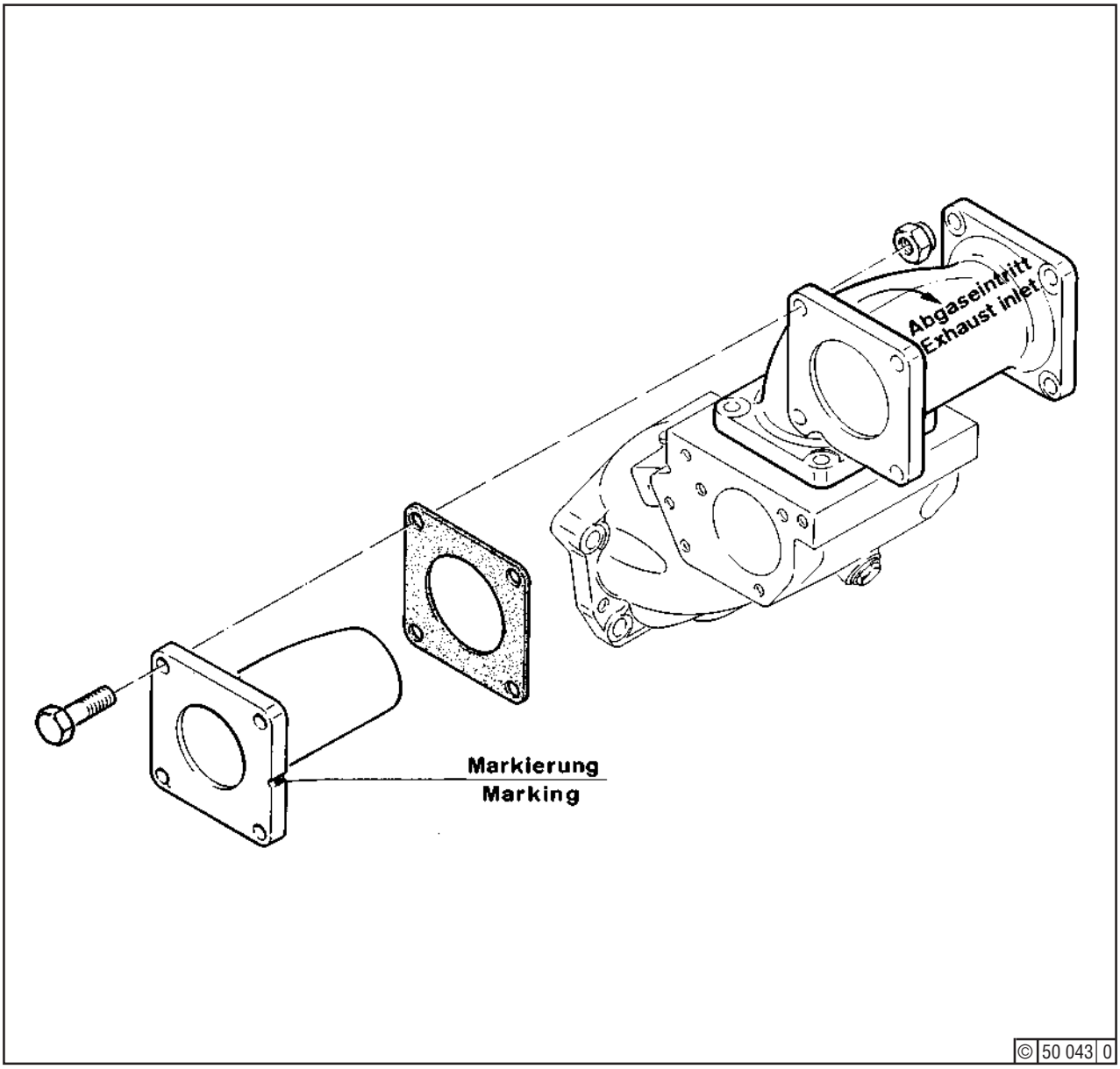

Fig. 4

⚠ Mount fillers at the end of the exhaust manifold sections as per Fig. 4.
The marking groove is always situated opposite to the exhaust inlet of the upper cross pipe of the T-shaped exhaust bend, as shown.

☞ Boltings of the exhaust gas system which are subject to thermal stress loads have to be coated with protective lubricating compound ”Deutz S1” to facilitate later dismantling. To do this, clean boltings thoroughly, then apply thin coat of compound using brush, or, if available, a spray can.

© 0885

This page intentionally left blank

Inspection

When the cylinder head is due for servicing (job 01.08.01), inspect the manifold for leaks and contamination inside, see also job 06.01.03. If heavy deposits of soot are inside, remove and clean manifold.

Job:

Check manifold for leaks. Leaks due to cracks or slack bolting are usually indicated by black discolouring or carbon black/soot deposits at the ventilation slots of the legging. Remove part of legging involved for sealing/tightening up leaks and replacing gaskets, expansion joints or manifold sections. Check that all bolts are tight.

Where the entire legging has been removed, be sure to refit all cover plates, especially the strip covering the ventilation slot at the top. Failing this, operating media (fuel or oil) may find ingress into the legging, e. g. from leaks of adjacent piping.

If the entire exhaust manifold has been removed, it is necessary when reassembling to observe correct allocation of individual cylinders to the manifold sections, as shown in Fig. 2 and 3.

⚠ When refitting expansion compensators, observe the direction of flow. The bead-over of the inner pipe and the wide overlap of the flange must be on the flow approach side (see Fig. 1).

When reassembling the exhaust manifold, be sure to use the right, partly heat-resistant bolts and nuts, as listed in the spare parts book.

Tools:

- Standard tools
- Lubrificating compound „Deutz S1“ (Section 3.6)
- Brush

Job Cards:

- 01.08.01
- 06.01.03

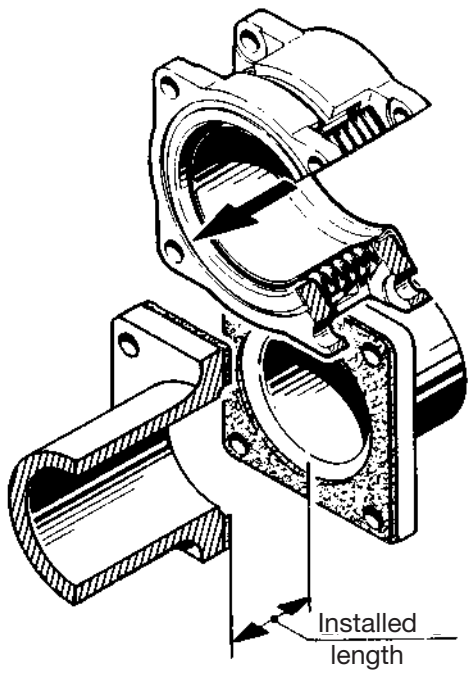

© 25 252 1

Fig. 1

© 0885

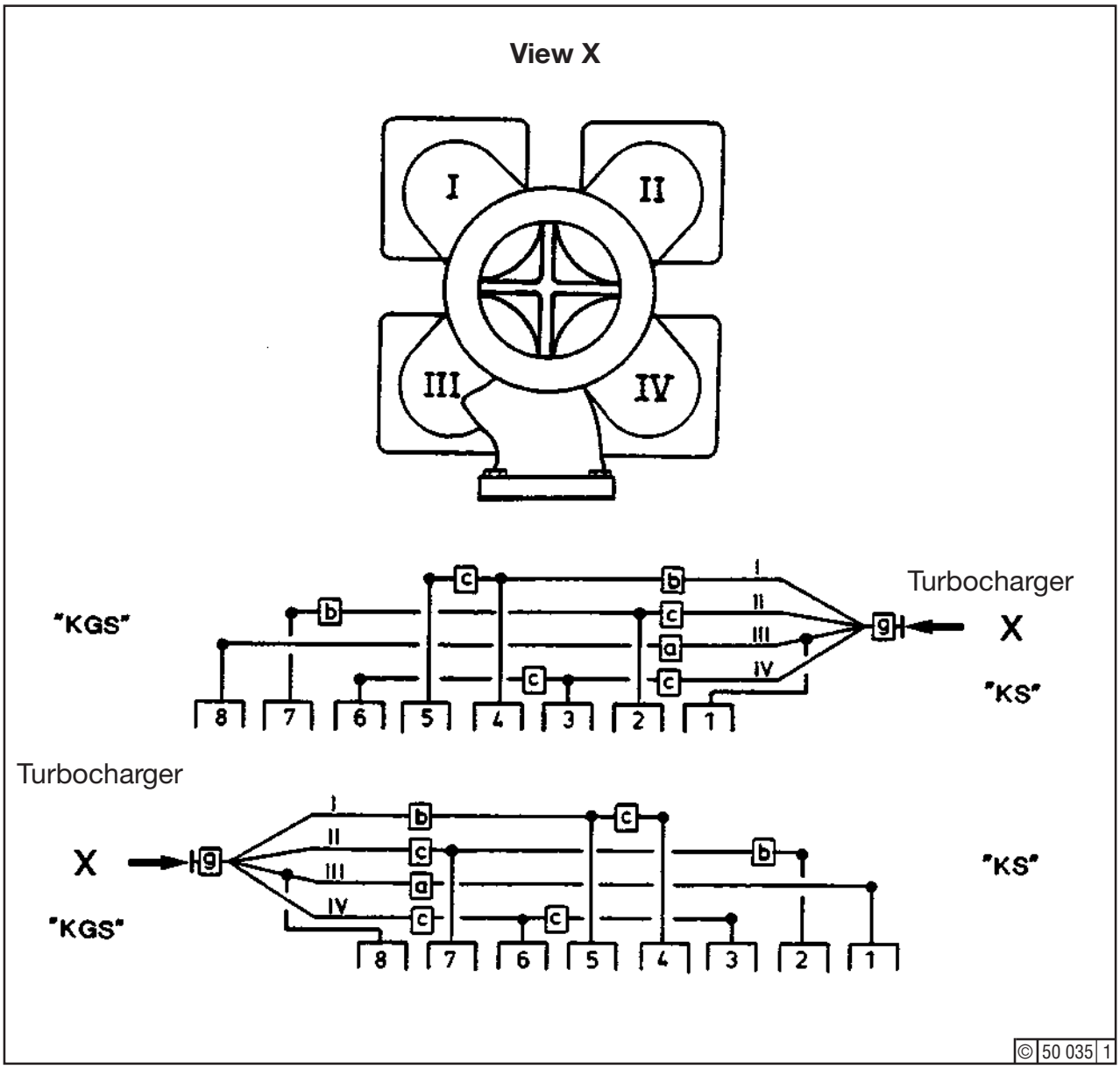

Fig. 2

"KGS" = Free end

"KS" = Driving end

Compensator	Laid length
a	88^{+1}
b	88^{+1}_{-4}
c	68^{+1}_{-6}
g	68^{+1}_{-2}

Fig. 3

© 0885

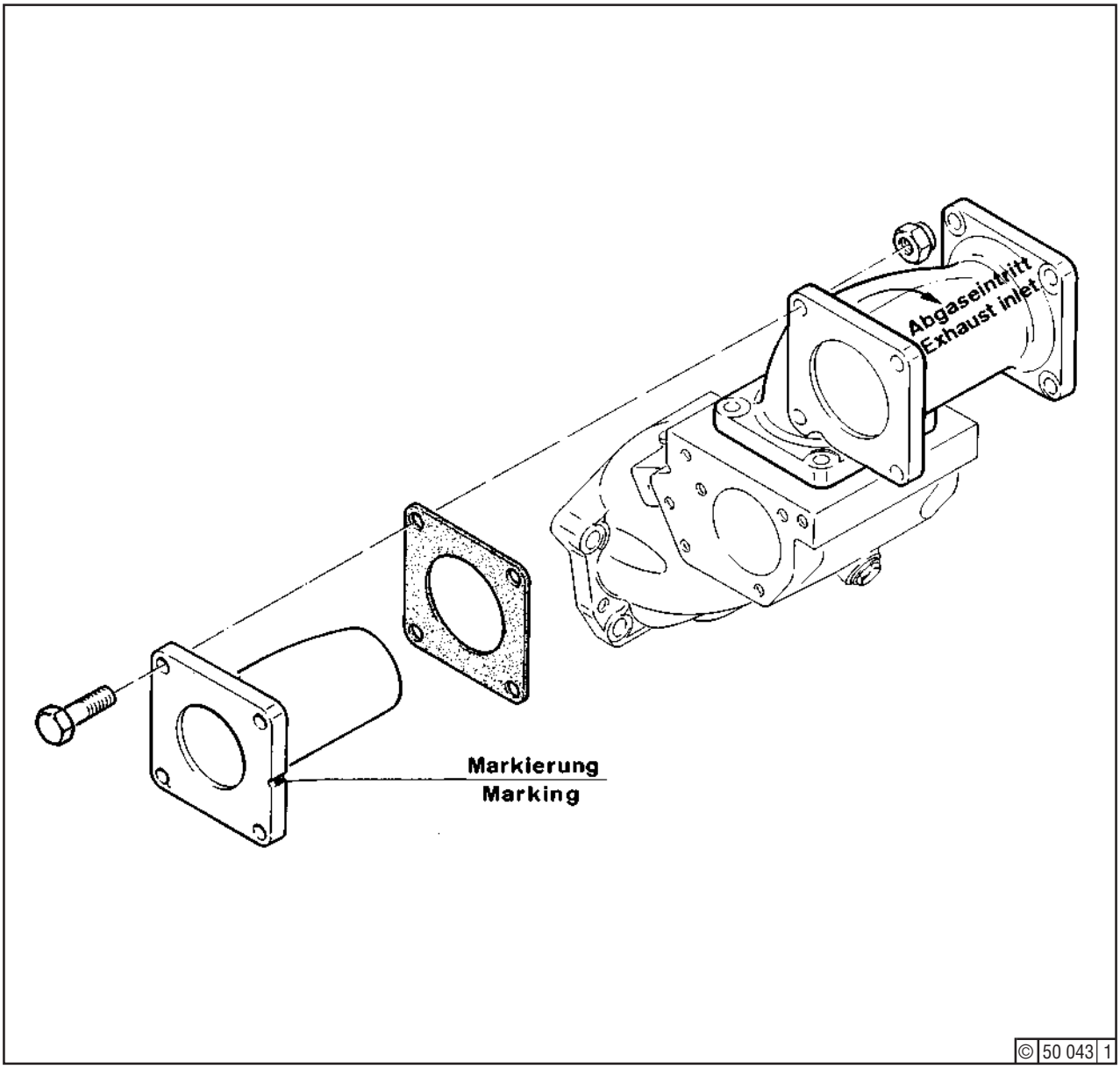

Fig. 4

⚠ Mount fillers at the ends of the exhaust manifold sections as per Fig. 4.
The marking groove is always situated opposite to the exhaust inlet of the upper cross pipe of the T-shaped exhaust bend, as shown.

☞ Boltings of the exhaust gas system which are subject to thermal stress loads have to be coated with protective lubricating compound ”Deutz S1” to facilitate later dismantling. To do this, clean boltings thoroughly, then apply thin coat of compound using brush, or, if available, a spray can.

© 0885

This page intentionally left blank

Inspection

When the cylinder head is due for servicing (Job Card 01.08.01), inspect the manifold for leaks and contamination inside, see also Job Card 06.01.03. If heavy deposits of soot are inside, remove and clean manifold.

Tools:

- Standard tools
- „Deutz S1“ compound (Section 3.6)
- Brush

Job Cards:

- 01.08.01
- 06.01.03

Job:

Check manifold for leaks. Leaks due to cracks or slack bolting are usually indicated by black discolouring or carbon black/soot deposits at the venting slots of the legging. For replacement of gaskets, expansion joints or manifold sections, only the associated partial lagging need be removed. Check that all fastening bolts are tight.

Where the entire legging has been removed, be sure to refit all cover plates, especially the strip covering the ventilation slot at the top. Failing this, operating media (fuel or oil) may find ingress into the legging, e. g. from leaks of adjacent piping.

If the entire exhaust manifold has been removed, it is necessary when re-assembling to observe correct allocation of individual cylinders relative to the exhaust lines, as shown in Fig. 2 and 3.

⚠ When refitting expansion compensators, observe the direction of flow. The bead-over of the inner pipe and the wide overlap of the flange must be on the flow approach side (see Fig. 1).
When re-assembling the exhaust manifold, be sure to use the right, partly heat-resistant bolts and nuts, as listed in the spare parts book.

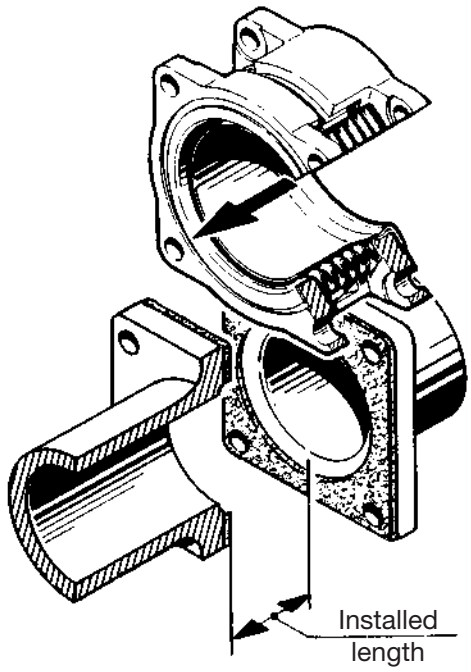

© 25 252 1

Fig. 1

© 0885

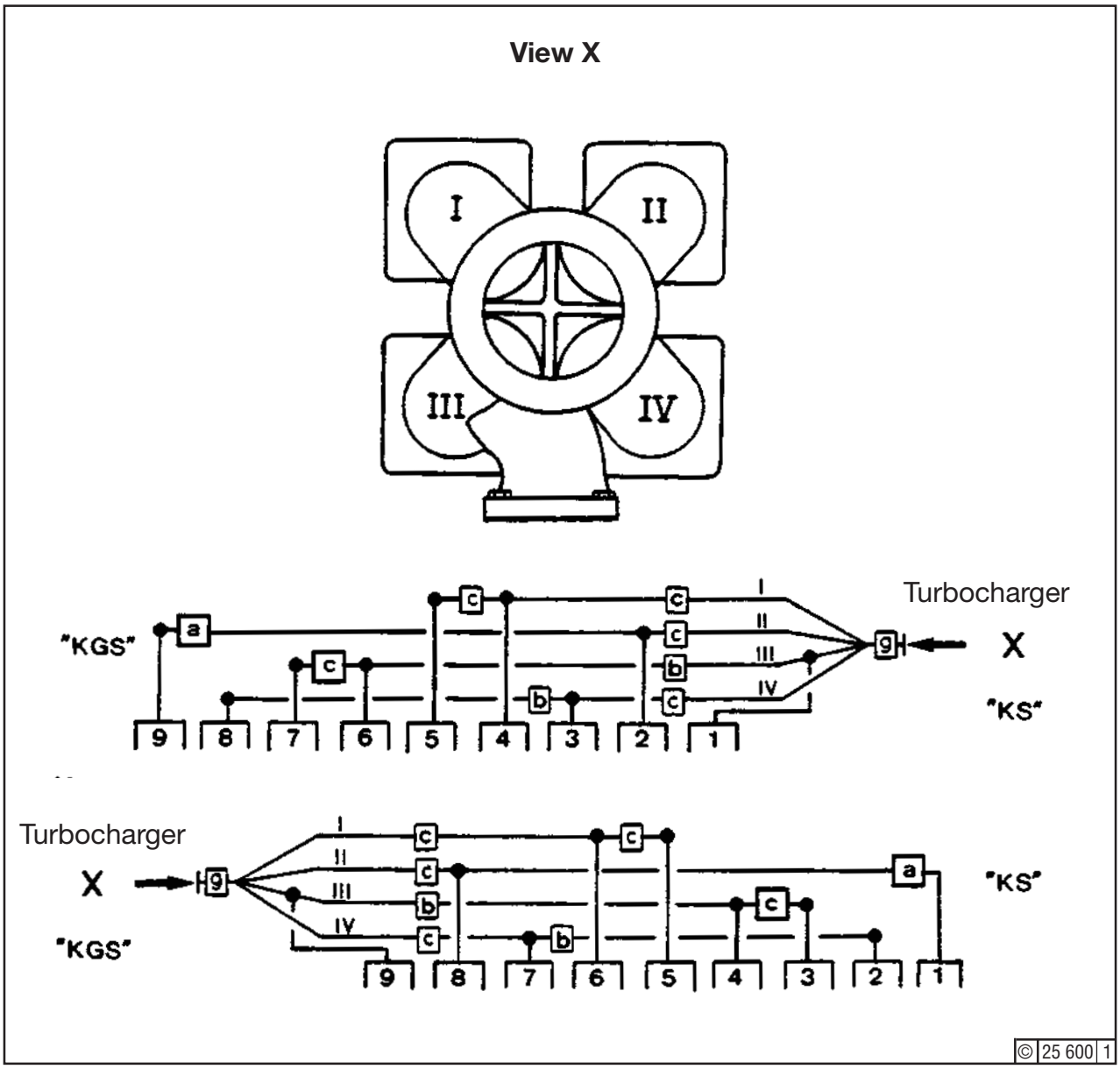

Fig. 2

Compensator	Laid length
a	88^{+1}
b	88^{+1}_{-4}
c	68^{+1}_{-6}
g	68^{+1}_{-2}

Fig. 3

© 0885

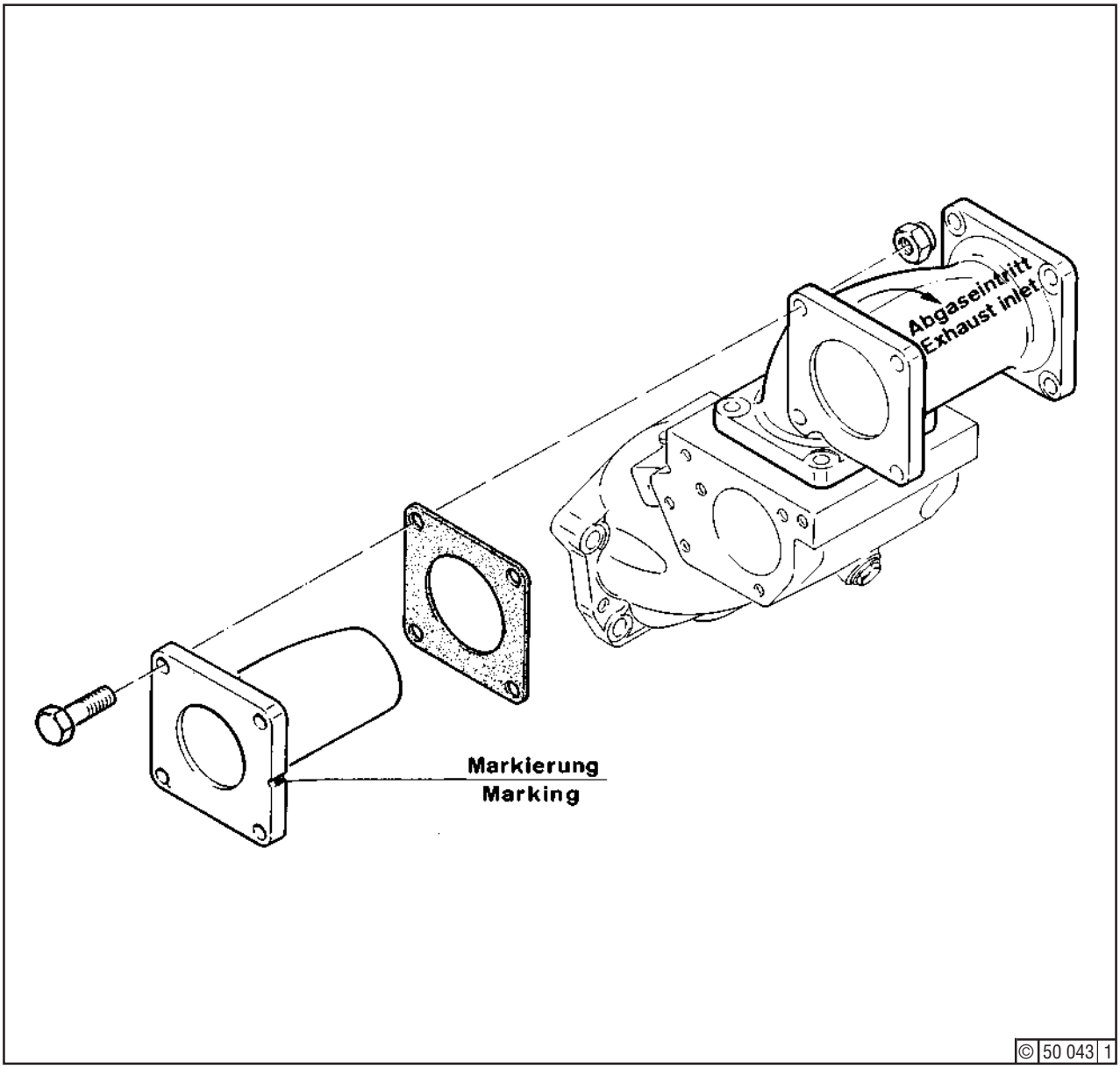

Fig. 3

⚠ Mount fillers at the ends of the exhaust manifold sections as per Fig. 4.
The marking groove is always situated opposite to the exhaust inlet of the upper cross pipe of the T-shaped exhaust bend, as shown.

☞ Bolting subjected to thermal stressing are to be treated with Deutz S1 compound to facilitate dismantling work. To do this, clean boltings thoroughly, then apply thin coat of compound using brush, or, if available, by a spraying can.

© 0885

This page intentionally left blank

Inspection

Check exhaust elbow inside for corrosion damage.

- Initially after 24000 running hours
- Thereafter every 12000 running hours

Tools:
- Flashlight
- Special tool
  - Ultrasonic tester (see Section 1.8.1)

Job

● Illuminate elbow inside using flashlight.

⚠ If corrosion damage (1) is visible inside of elbow, measure wall thickness with an ultrasonic tester.
DEUTZ Service will be at your disposal for such purpose.

If the wall thickness is < 3 mm, the exhaust elbow must be renewed; otherwise coolant leakage may occur which again may result in water shock.

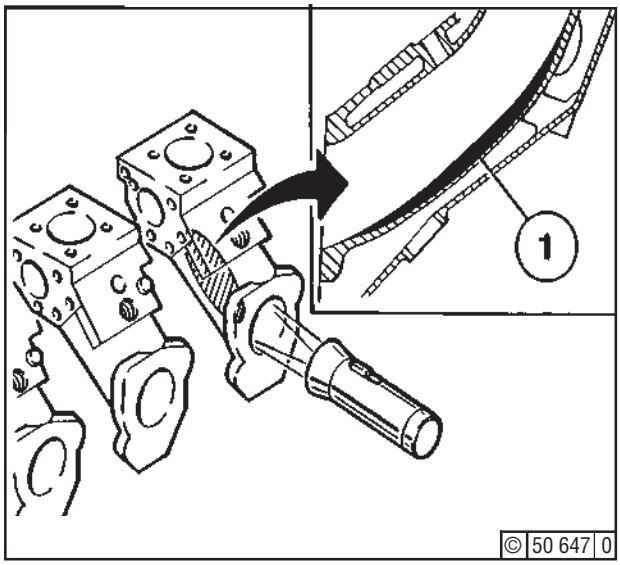

This page intentionally left blank

Inspection

When a piston is overhauled, inspect charge air piping inside and clean as necessary.

Tools:
- Standard tools
- „Deutz F5“ (Section 3.6)

If the water detector in the charge air pipe gives an alarm check charge air cooler (2) for leaks.

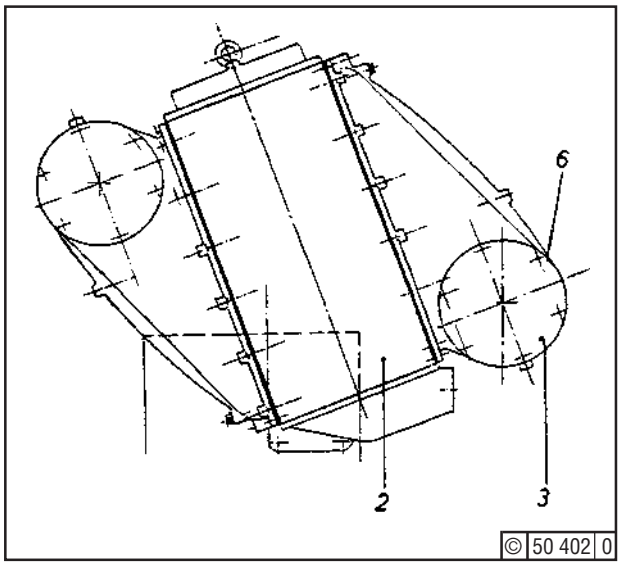

Fig. 1

Job:
Remove covers (3) and (4). For removal of the latter loosen bolts (5) and tilt cover.
Inspect pipe inside.
When cleaning the pipe, be sure no dirt or detergents will find ingress into the cylinder head inlet.
Refit cover (3) with new gasket (6) and cover (4) with O-seal (7).
If seal (7) is defective, replace. Install seal with a coat of Deutz F5 compound.

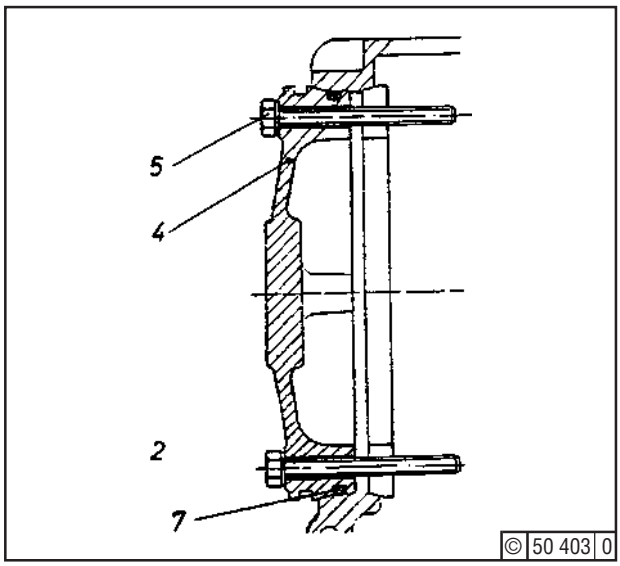

Fig. 2

Check that bolts securing charge air cooler to brakket and bolts (8) securing charge air pipe to cylinder heads are tight.

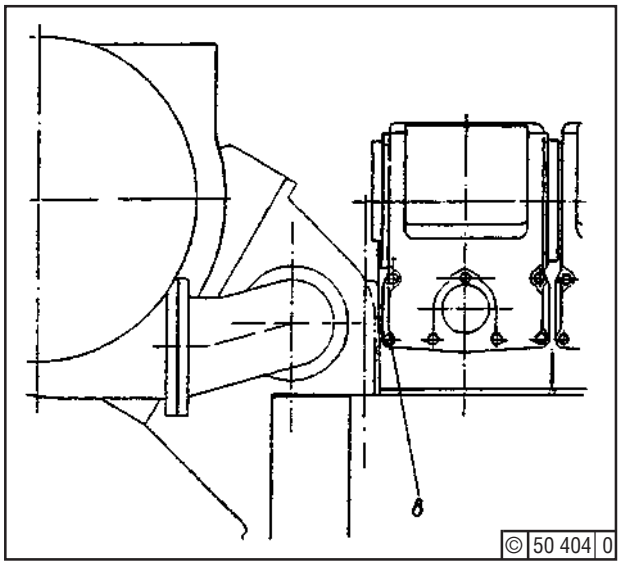

Fig. 3

This page intentionally left blank

Servicing

This job card refers only to ”Fibroid-elastov 30” filtering mats produced by Delbag.
The cleaner consists of two or three segments.

If removal of a filtering mat from one of the segments during engine service causes the air pressure to rise, service entire air cleaner.

☞ It is recommendable always to keep one set of mats in reserve, enabling it to be cleaned while the engine is running.

Tools:

- Standard tools

Detergents:

- The detergent chosen should suit the particular type of soiling. A typical detergent should be a mixture of 200g of Henkel P3-T308 with 20 litres of water, the temperature being approx. 50°C.
- or a detergent of the same quality from a different company.

Job

Stop engine. Open clips (1) of one segment and remove one mat (2). Put mat in a vessel filled with detergent and let soak for a few minutes. Wash mat and rinse in fresh water. Let mat drip off and dry. Reinstall mat (2) and tighten clips (1).
Never squeeze or fold mats! Insert dry filter mat (2) back into the filter segment and tighten clips (1).

Use can also be made of expendable plastics-type Freudenberg Viledon PSB 1290 filter mats, which are temperature-resistant up to approx. 70°C. Being only of 15 mm thickness, two layers of mats must be installed in one segment.

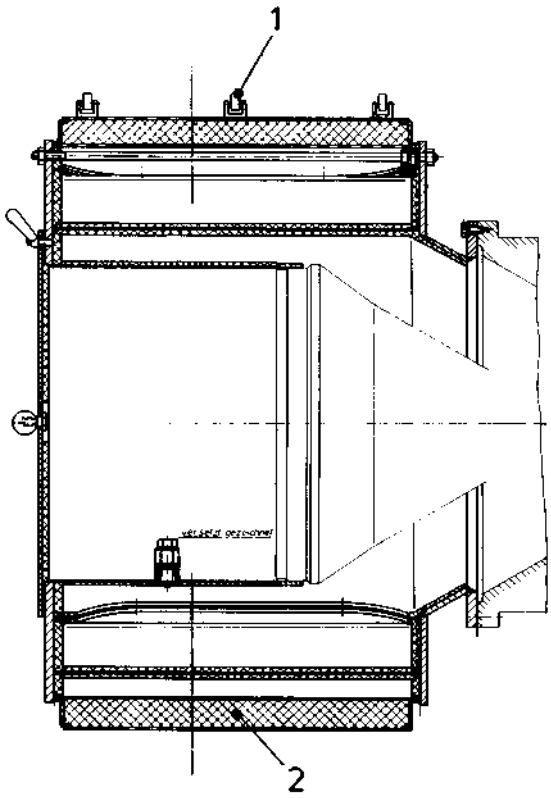

© 51 311 0

This page intentionally left blank

Job:

Removing the Cooler

Close shut-off valves in water feed and discharge piping. Open drain cock. Disconnect water piping. Retain charge air pipe (1) plus control unit and support to prevent turning sideways. Retain cooler (2) by hoist. Unscrew (6) bolts (7) and remove pipe (5). Unscrew bolts (9) and remove cooler (2).

Tools:

- Standard tools
- Hoist

Refitting the Cooler

Inspect gasket (8) and (10) and replace if defective. Cooler refitment is made in the reverse order. Connect feed and discharge piping as well as breather pipe. Fill up system with a newly prepared coolant (see Section 6.4).

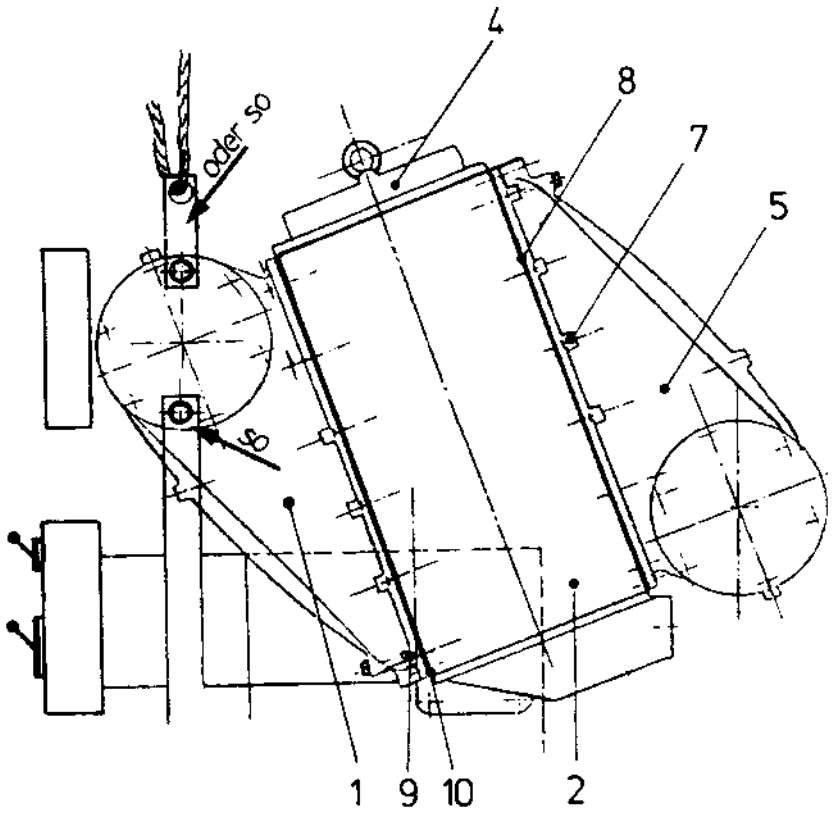

© 51 405 0

Fig. 1

This page intentionally left blank

Cleaning Charge Air Cooler Air Side Engine-Mounted

At the intervals given in the maintenance chart of the Operation Manual, or when the differential pressure at full load has risen through 100 %, the cooler air side is due for cleaning.
If time and cost reasons forbid removal of the charge air cooler, air side cleaning of the engine-mounted cooler is possible by pumping-through with detergent.

Tools:

- Standard tools
- Flashlight
- Liquid pump
- Suction strainer with filter screen
- Shut-off valve
- PVC hose
  - NW 8, Approx. 2,5 m length
  - NW 30, approx. 5 m length
- Special tools (Section 1.8.1)
  - for cleaning engine-mounted cooler

Aids:

- Vessel, min. caoacity 50 lit.
- Detergent
  - P3T 768 - P3T - 5308
  - ACC 9 - Vecom B85
  - or similar agent

Job:

- Remove sliding pieces (3/10) and socket flanges (2/4/9) together with gaskets (1/5/8) between charge air pipe and air cooling.
- Remove screw plug (6) together with seal (7).

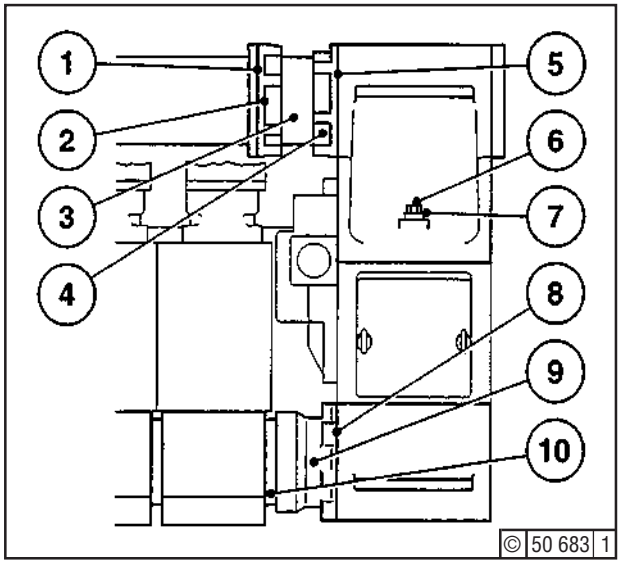

Fig. 1 Removing components

Fit the following parts from the special tools kit:

- Fit cover (1/3) - with pipe elbow - in place of the socket flange.
- Connect pipe (2).

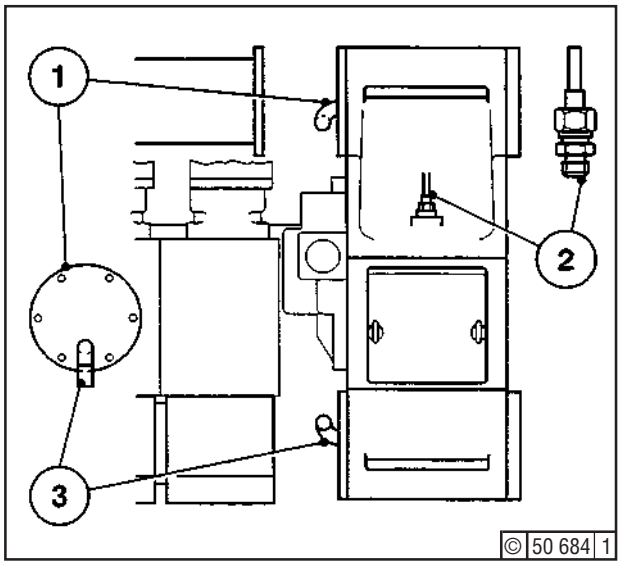

Fig. 2 Mounting special tools

© 0199

- Connect hose, 30 mm dia. (1), to pipe elbow ”water inlet end”.
  Connect other hose end to delivery side of liquid pump (7). Connect hose pipe with suction strainer (6) to suction side of liquid pump.
- Connect hose, 30 mm dia. (4), to pipe elbow ”water outlet end”.
- Install shut-off valve (3) between ”water outlet” and end of hose.
- Connect bleed hose, 8 mm dia. (2), to pipe.
- Connect hose to drain valve (5).
- Secure all hose connections by means of hose clips.
- Get vessel in position and fill with fresh water.
- Take hose ends and suction strainer into vessel.
- Close shut-off valve.
- Switch on liquid pump and top up fresh water until fresh water emerges at the bleed hose.
- Open drain valve (5) so far that just a little fresh water emerges.
- Open shut-off valve so far that just a little fresh water still emerges at the bleed hose.
- Slowly fill detergent into the vessel with fresh water, while pumping detergent through the cooler.

☞ Heating the detergent solution (to approx. 50° C) will improve the cleaning effect.
- For this purpose, switch on the engine coolant pre-heating system, if so equip ped.
- Eventualmente riscaldare il liquido detergente con un riscaldatore ad immersione o simile
- Repeat cleaning process using fresh deter gent solution, if necessary.

- Switch off liquid pump.
- Drain detergent solution after about one hour and a half and empty cooler completely. Dispose of detergent solution in an ecologically harmless manner.
- Fill vessel again with fresh water and proceed in the same manner as for cleaning, to flush cooler thoroughly.
- Remove hose lines and cover.
- Check all seals for wear and replace as necessary.
- Fit back screw plug, cover, socket flanges and sliding pieces.

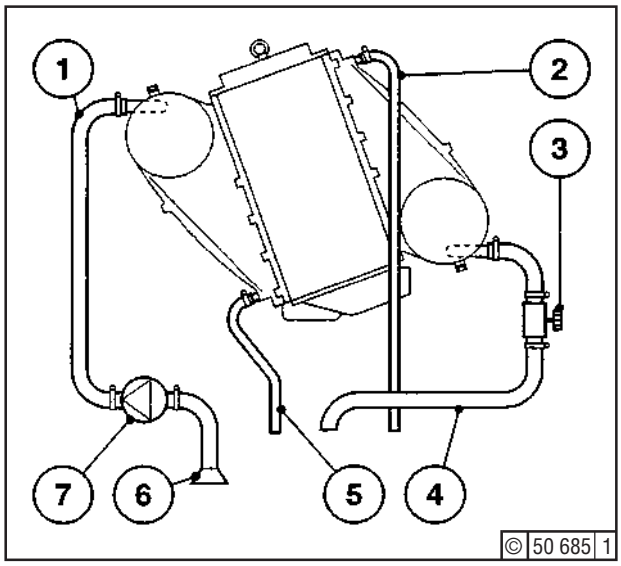

Fig. 3 Making hose connections

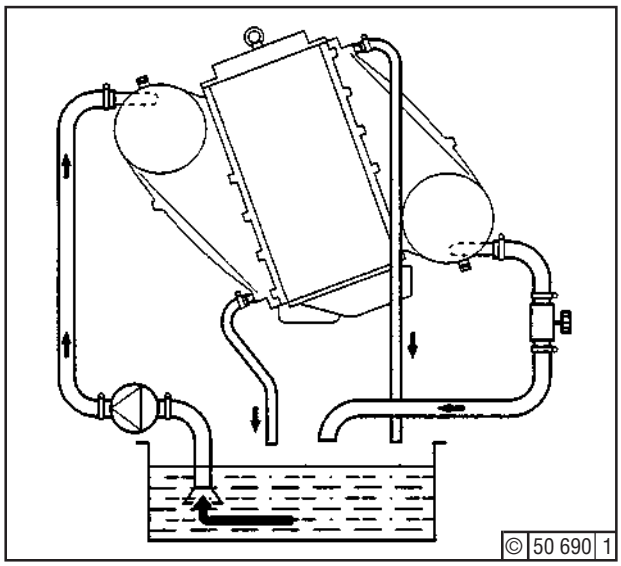

Fig. 4 Cleaning process

Cleaning Charge Air Cooler Air Side Cooler Removed

At the intervals given in the maintenance chart of the Operation Manual, or when the differential pressure at full load has risen through 100%, the cooler air side is due for cleaning.

Tools:
- Standard tools

Aids:
- Vessel for charge air cooler
- Cleaning brush of natural or sythetic bristles
- Detergent, e.g.:
- P3T 768
- P3T - 5308
- ACC 9
- Vecom B85
- or similar agent

Job Card:
- 06.04.01

Job:

- Remove charge air cooler from engine, Job Card 06.04.01.
- Remove covers (1), (5).
- Check gaskets (2), (4) for wear and renew as necessary.
- Apply detergent, observing supplier's instructions.
- Fill detergent into vessel.
- Put cooler core (3) into vessel.

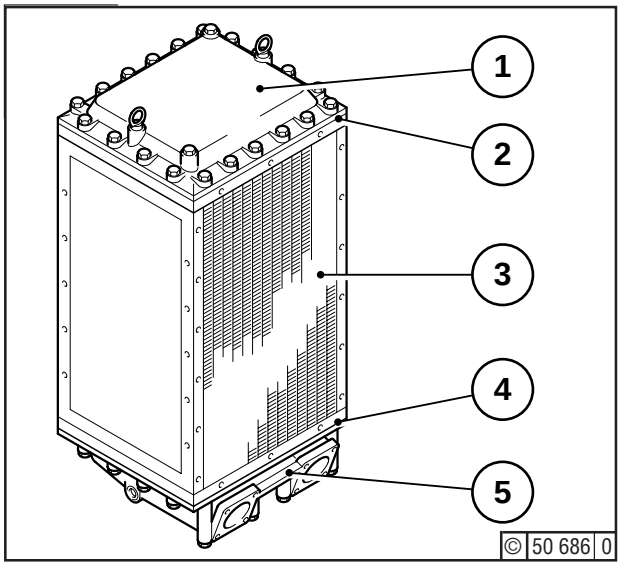

Fig. 1 Removing covers

- Soften the cake of dirt.

The softening time is dependent on the extent of soiling.

- Clean cooler core with brush.

Take care not to damage the fins!

- Clean finned tubes on inside with tube brush if necessary.
- Flush cooler core clean with fresh water.
- Fit gaskets and covers back in place on cooler core.
- Reassemble charge air cooler on engine, Job Card 06.04.02.

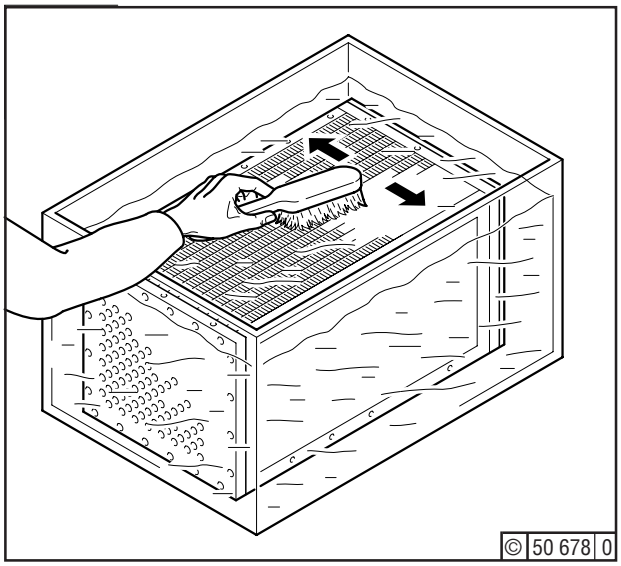

Fig. 2 Cleaning cooler air side

© 0193

This page intentionally left blank

Servicing

- For lube oil type, viscosity, oil changing intervals, see Section 6.1 and ABB operating instructions.
- For lube oil quantity and oil changing procedure, see ABB operating instructions.

☞ Drain lube oil into a container using a hair sieve, or if unavailable, using a clean, non-linting cloth. If any abraded metal should be found in the sieve or cloth, it is advisable to clean the lube oil spaces (1) and bearings (2) as specified in ABB operating instructions.

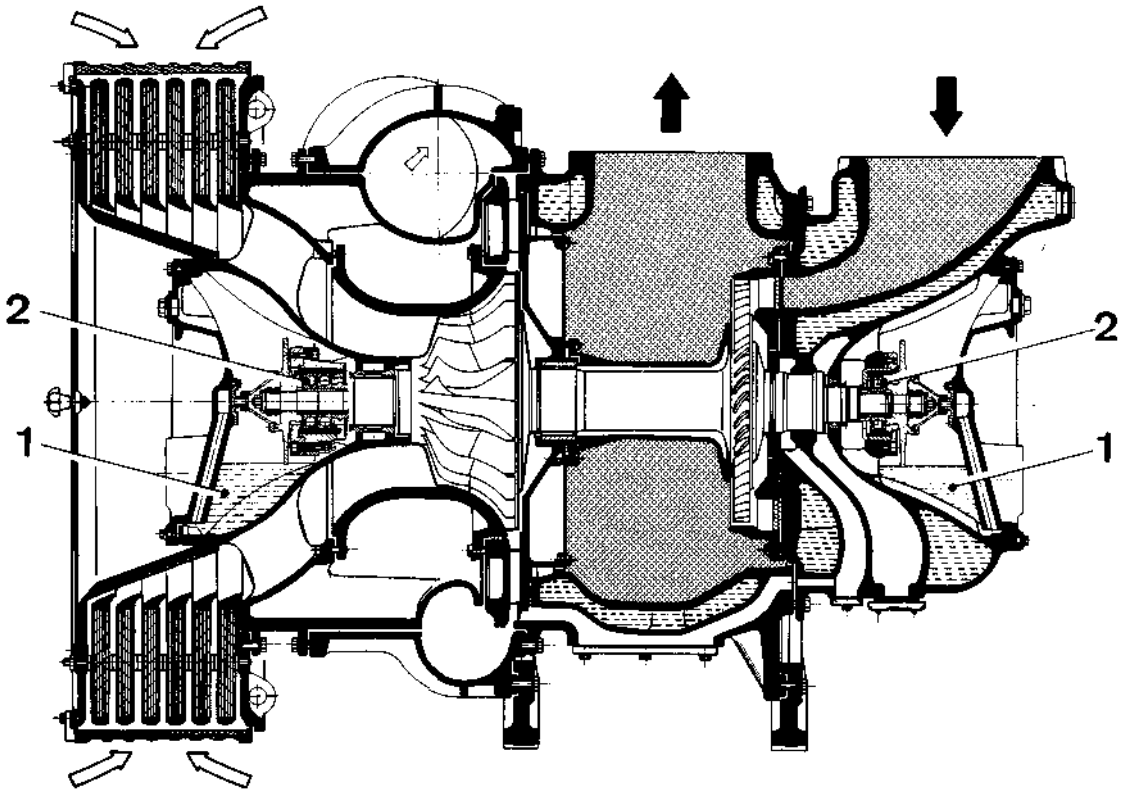

© 25 460 1

This page intentionally left blank

Servicing and Reconditioning

Job Card:
- 05.00.01

- Observe safety precautions (job 05.00.01).
- Perform service work on scavenging nozzles (job 06.13.02).
- Carry out work according to ABB instructions or have carried out by ABB Service.

© 0884

This page intentionally left blank

Servicing

Cleaning of the charger at full load.

☞ To prevent a loss in power due to contamination of the charger unit, clean charger during operation - at full load or at least 60% load - by injecting clean water into the charger. In this process the water does not serve as a solvent. The dirt build-up is removed by the striking droplets.

Detergent:

- Clean fresh water
- VTR 201/214, 0,3 ltrs.
- VTR 251/254, 0,5 ltrs.

Job:

- Loosen turning handle (3) and remove cover (2) with gasket.
- Fill housing (4) with the respective amount of water.
- Refit gasket with cover and fasten turning handle (3).
- Press-in knob (5).

Make sure that the whole amount of water is injected from the housing within 4 to 10 seconds.

A success of the cleaning action is indicated either by a raise of the charge air pressure or by a drop of the exhaust gas temperatures.

⚠ Wait for min. 10 minutes before repeating the cleaning procedure.

- Wait for at least 5 minutes before running engine under full load.

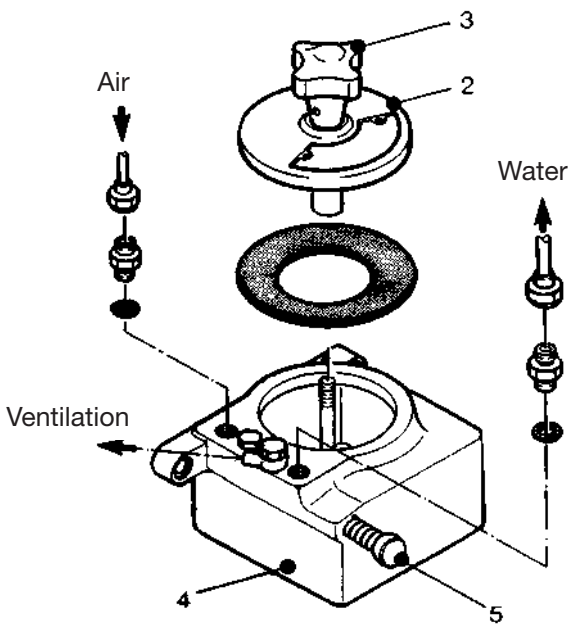

© 51 313 0

This page intentionally left blank

Servicing

Cleaning the turbine during running of the engine on blended or heavy fuel.

☞ Periodic scavenging of the turbine with fresh water prevents the formation of heavy carbon deposits on the turbine blading, and hence excessive engine exhaust temperature, plus increased turbocharger bearing loads due to unbalance. Special attention is therefore to be given to the following servicing instructions.

Tools:

- Standard tools
- Hose 1/2"

Detergent:

- Fresh water

Job:

1. Reduce engine power until an exhaust gas temperature of 250 - 370°C after cylinder is obtained.

2. To avoid water collecting in the turbine outlet housing, open drain pipe (4) by screwing off cap nut (5), and check that this pipe is free (exhaust gas must emerge).
   If necessary, push a thick wire through the deposits.

   ⚠ Wear gloves as protection against hot exhaust gases.

3. Connect hose (3) between turbine scavenging feed pipe and water pipe and turn on pressure.

4. Slowly open scavenging nozzles (1).
   Should, directly after release of water supply, no water and/or steam come out of drain pipe (4), stop scavenging at once and check that drain pipe is free and that water passes to the scavenging nozzles.
   Failing this, water level in turbine housing will rise and reach the bearings, resulting in possible damage.

5. Scavenging time: 5 - max. 10 minutes.

6. Close scavenging nozzles.

7. Disconnect hose (3) at turbine scavenging feed pipe.

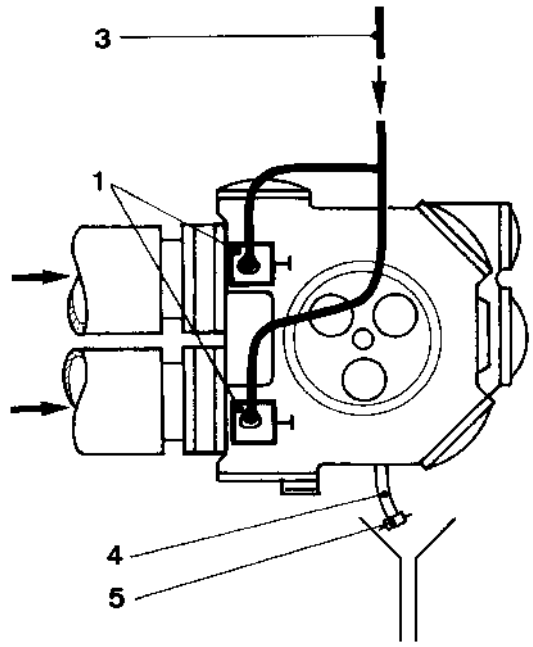

© 25 405 2

⚠ Be sure to disconnect hose (3) after **each** scavenging operation, so that water cannot run into the exhaust piping during non-scavenging periods.

8. When no more water or steam comes out of drain pipe (4), close same with cap nut (5).

9. Raise engine load slowly and, where possible, run engine for at least 10 minutes under load in order to prevent possible corrosion.

Depending on the quality of cleaning, the interval between scavenging operations can be lengthened or shortened accordingly.

© 0885

Servicing

Remove and service the scavenging nozzles (1) (Fig. 1) on turbine side of the exhaust turbocharger.

Tools:

- Standard tools
- Fine grinding paste
- Deutz S1compound (Section 3.6)

Job

Disconnect water piping from nozzles.

Scavenging Nozzle (Fig. 1)

Unscrew scavenging nozzle from turbocharger. After taking down hand wheel (1), unscrew hex. nut (2) and spindle nut (3), and remove spindle (5) from casing (4).

Clean all components and renew worn items. Grind spindle (5) in nozzle (6) and its top seat in spindle nut (3).

⚠ Do not damage wall of nozzle (6).

Renew joint washers. Apply Deutz S1 compound to spindle thread. Reassemble in the reverse order.

Before screwing nozzle into turbocharger, apply Deutz S1 compound to thread.

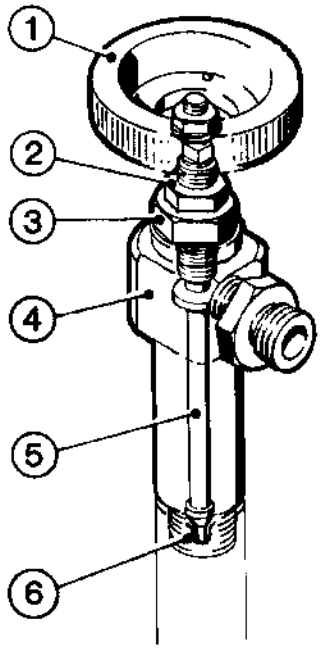

© 25 051 0

Fig. 1

This page intentionally left blank

Check

Prior to commissioning new engines, and following extensive work on the fresh-water system, it is necessary to measure the quantity of scavenging water at the scavenging nozzles of each turbocharger, correcting as required.

☞ Either one or two scavenging nozzles may be provided.

Tools:

- Standard tools
- Measuring vessel

Job

Undo feed pipe (6) - Fig. 1 - of scavenging nozzle (8) so that the latter can be removed from the turbocharger. Then refit the nozzle to the feed pipe and turn so that the nozzle can spray into a measuring vessel. If necessary, undo pipe clips.

⚠ Do not bend scavenging feed pipe.

Connect scavenging feed pipe to fresh-water system. Open scavenging nozzles. Allow some water to run out before beginning to measure. The following approximate quantities in kg/min. per turbocharger should be measured:

Turbocharger	Scavenging water quantity
VTR 201	ca. 9,0 kg/min.
VTR 214	ca. 12,0 kg/min.
VTR 251	ca. 14,5 kg/min.
VTR 254	ca. 17,0 kg/min.

Should these scavenging water quantities not be attained, find out the cause and remedy accordingly.

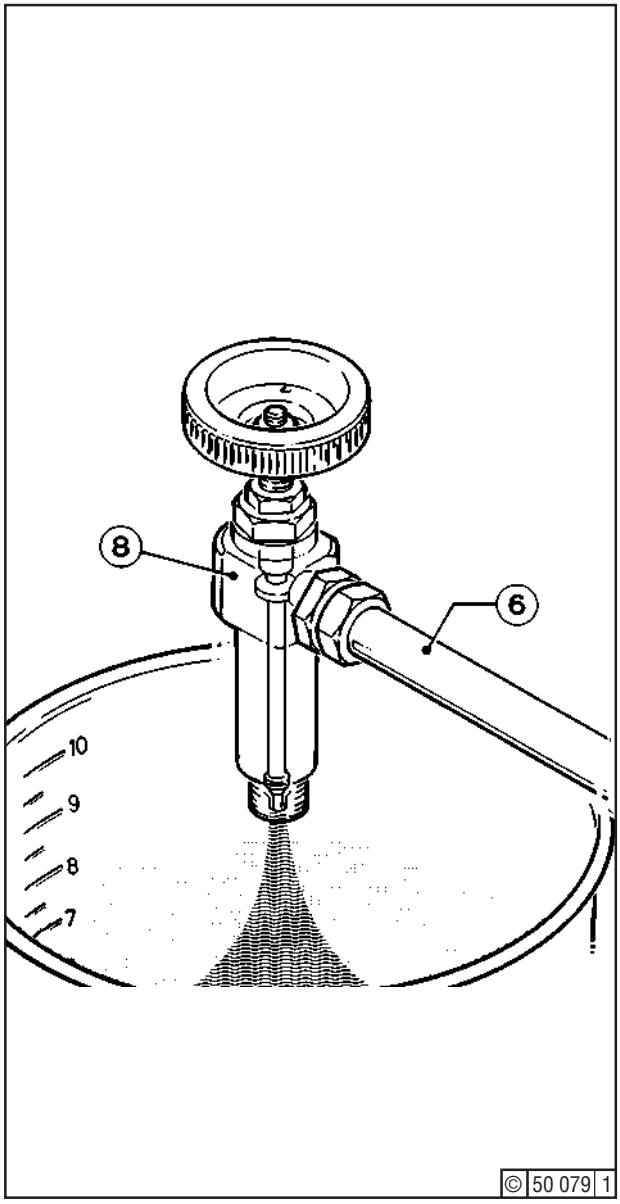

Fig. 1

This page intentionally left blank

When working on the fuel system, the following safety and environment protection precautions are to be observed:

- Pay particular attention to cleanliness.
- Do not open any pressurized components, e.g. injection lines, etc.
- When carrying out injector tests, do not allow the hands to come into contact with the fuel jet.
- Catch any dripping fuel in a receptacle and dispose of with care for environment.
- Dispose replaced filter cartridges with care for the environment.
- Any work on the fuel injection pumps and on the control linkages between speed governor and injector pumps is permissible in **emergency cases only** and must be checked **at the next earliest opportunity** by a Deutz specialist, who will carry out any necessary resettings.

© 1186

This page intentionally left blank

Inspection

Check injection pump control rod for movement.

☞ Located in the injection pump top are the individual plug-in elements, the plungers of which are driven by the injection pump camshaft via roller follower tappets.
Positive plunger/tappet contact is ensured by a spring.

The control rod 310 - Fig. 1 - is fitted with a lug (3) which engages with the control pin (21) of the pump element and thus transmits the governor action to the plunger provided with a helical control edge.

Job Card:

- 05.00.01

Job

Checking the Control Rod for Free Movement

Observe safety precautions as per Job Card No. 05.00.01.
Proceed by moving the rod by hand with the engine stopped and the engine control lever in the ”Run” position. If provided, actuate shutdown button on speed governor and press the control linkage between governor and injection pumps in the direction ”Max. fuel”. Resistance should be offered by the governor only.
Should lack of free movement be found, remove cover (1) and press the control linkage again. If all of the control pins (21) move uniformly to and fro, check the control linkage between governor and injection pump, as per Job Card 07.02.03. If a plunger sticks, renew the pump element (Job Card 07.02.01).

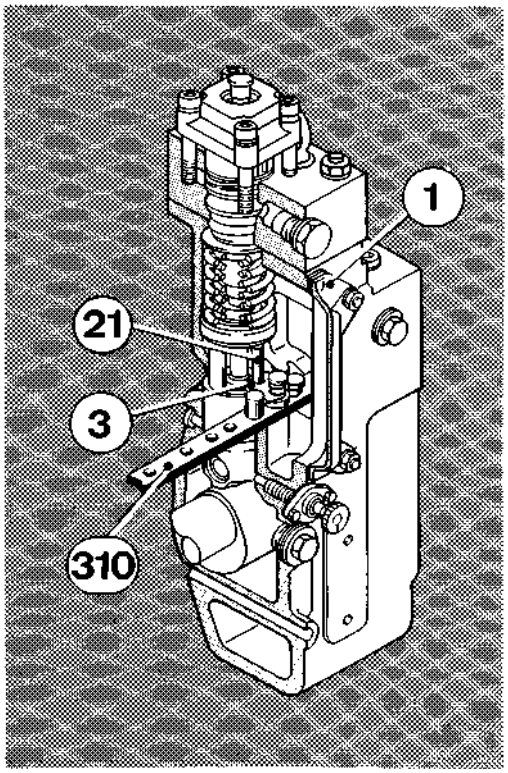

© 25 533 1

Fig. 1

© 1284

Locking out Pump Element (actuate lock)

- **Engine Running**
  - Press knurled nut (9) - Fig. 2 - against spring pressure until pin (2) is positioned under roller tappet bush (3).
  - Turn knurled nut until the arrow points up wards. The lock is now engaged and holds the roller tappet bush in TDC position.

- **Engine Stationary**
  - One person must turn the engine by hand.
  - At the same time, a second person presses the relevant knurled nut (9) - Fig. 2 - against spring pressure until pin (2) is positioned un der roller tappet bush (3).
  - Stop turning the engine.
  - Turn knurled nut until arrow points upwards. The lock is now engaged and holds the roller tappet bush in TDC position.

Putting an Element back into Service (open lock)

- **Engine Running**
  Turn knurled nut (9) until arrow points down wards. By spring pressure, pin (2) is moved away from under roller tappet bush (3).

- **Engine Stationary**
  One person must turn the engine by hand. At the same time, a second person turns the relevant knurled nut (9) until the arrow points downwards. By spring pressure, pin (2) is moved away from under roller tappet bush (3).

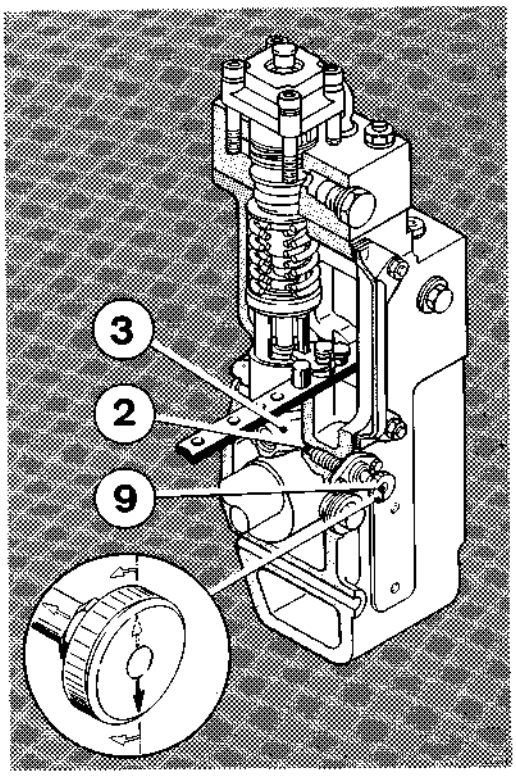

© 25 534 1

Fig. 2

Should it become necessary to renew a pump element, a basic setting for the idle stroke and for constant delivery has to be carried out prior to installation. Observe strict cleanliness. Use non-fraying rags for cleaning.

Job Cards:

- 05.00.01
- 07.00.01
- 07.02.02
- 07.02.04
- 07.02.05
- 07.03.01

Tools:

- Standard tools
- Assembly device (Section 1.8),
- Parker-O-Lube compound

Job

Removal

Observe safety precautions as per Job Card 05.00.01 and 07.00.01.

Disconnect injection lines (Job Card 07.03.01).

Remove injection pump cover (1) - Fig. 1.

Removing the Delivery Valve

Turn engine by hand until the plunger of the relevant pump element is at bottom and the tappet roller rests on the cam base circle.
Remove screws (352) together with lockwashers. Remove clamping plate (307). Take down connector (296) and withdraw spring (45), insert (46), ring (295) and delivery valve (371). Clean all components in diesel fuel and make sure they are in good order.

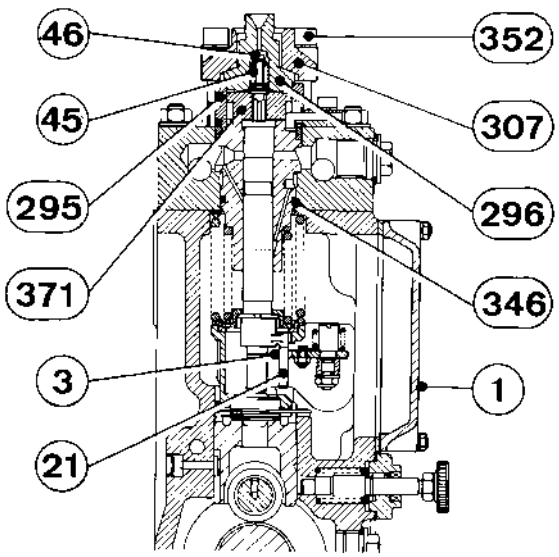

© 25 543 1

Fig. 1

Removing the Element
Removal is initially as described under "Removing the Delivery Valve". Then turn engine by hand until the plunger of the relevant pump element is in top-most position, i.e. with the tappet roller resting on the cam peak. Take out screws (303) - Fig. 2 - together with washers (348). Remove plate (298), locking strip (299) and bridge (301).

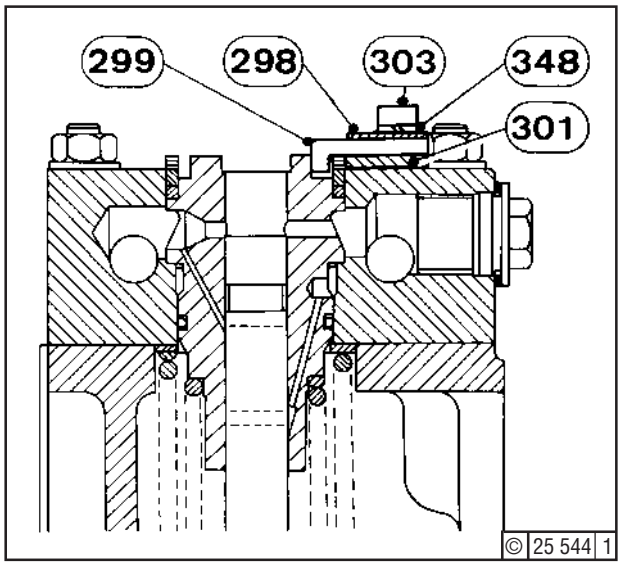

Fig. 2

Screw in pins (4) - Fig. 3 -, place on clamping plate (2) and tighten up with hex. nuts (6) fitted with washers (5). Now complete special tool with threaded piece (3), set screw (7) and nut (8). Turn set screw into plunger (9) and pull element out of injection pump by turning the nut. Take off clamping plate (2).
Clean all components in diesel fuel. Renew O-seal (346) - Fig. 1.

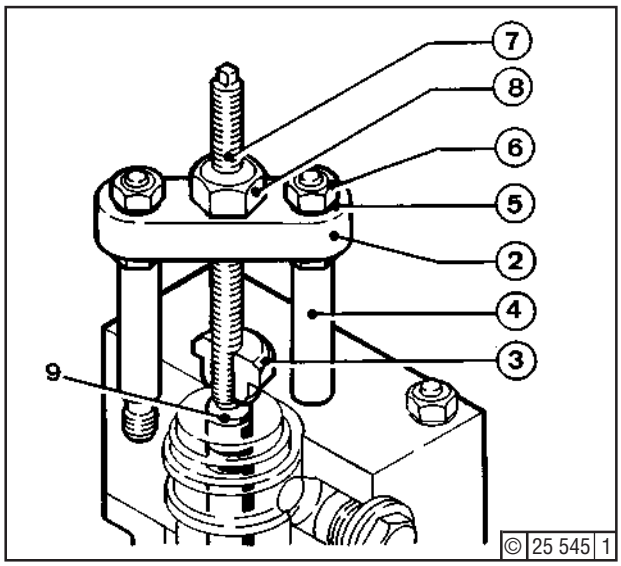

Fig. 3

Prior to Refitting a Pump Element
Set the idle stroke (Job Card 07.02.02)
Set constant delivery (Job Card 07.02.05)

Refitting the Element
Turn engine by hand until the plunger of the relevant pump element is at bottom, i.e. with the tappet roller resting on the cam base circle. Gauge new element seal as per Job Card 07.02.04. To facilitate installation, apply a film of Parker-O-Lube compound to the sealing surfaces of the pump element, the element seal and the O-seal (346) - Fig. 1.

Mount clamping plate (2) and nut (8) as shown in Fig. 4 and carefully insert element into injection pump. Press element onto its seat by turning the nut.

Fill space of element seal with grease.

⚠ When inserting the pump element, make sure that the control pin (21) - Fig. 1 - engages in lug (3).

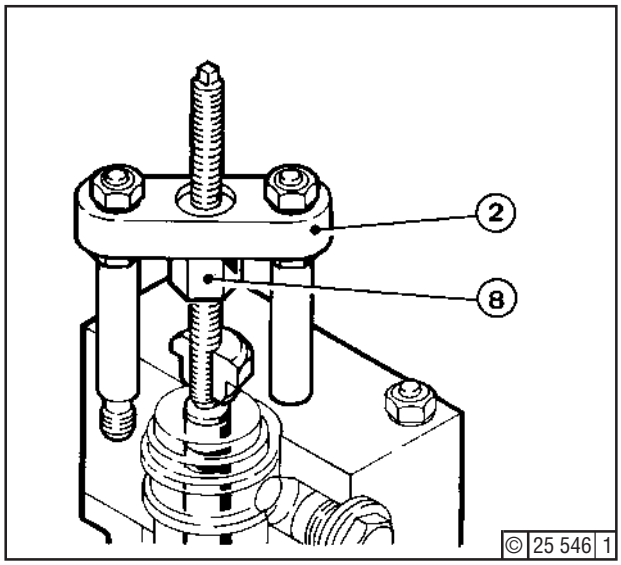

Fig. 4

Then complete assembly device with bush (7) - Fig. 5 - and fit element seal into position.

⚠ Place on bush so that locking strip (299) - Fig. 2 - can engage in the cut-out during reassembly.

Secure bridge (301) - Fig. 2 -, locking strip (299) and plate (298) by means of screws (303) complete with washers (348).

Refitting the Delivery Valve
Refitment is carried out in the reverse order as described for ”Removing the Delivery Valve”.

Finally, tighten screws (352) - Fig. 1 - as prescribed (Section 3.5, item 11).

☞ A tightening torque exceeding that quoted is not permissible and will have no remedial effect for curing any leaks which may occur.

Mount injection pump cover (1) - Fig. 1 - complete with gasket.

Mount injection lines (Job Card 07.03.01).

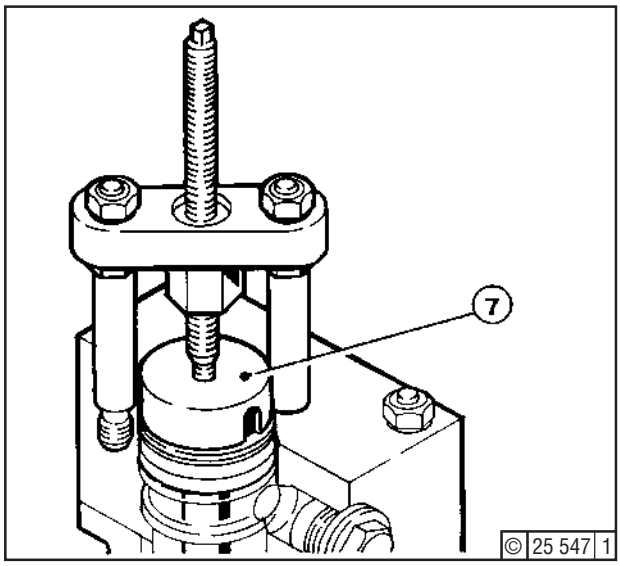

Fig. 5

This page intentionally left blank

Setting

Prior to installing a pump element, it is necessary to carry out a basic setting of the idle stroke.

Job Card:
- 07.02.01

Tools
- Standard tools
- Depth gauge

Job

Turn engine by barring gear until the relevant tappet roller rests on the cam base circle. To facilitate gauging, insert a bush (b) - Fig. 1. Using depth gauge, measure dimension (a) and calculate dimension (t).

$$t = a - b$$

Now turn the engine until the tappet roller of the relevant pump element rests on the cam peak - Fig. 2. Mount retainer device (1). This retains the support (15). Turn engine further until the roller is again resting on the cam base circle.

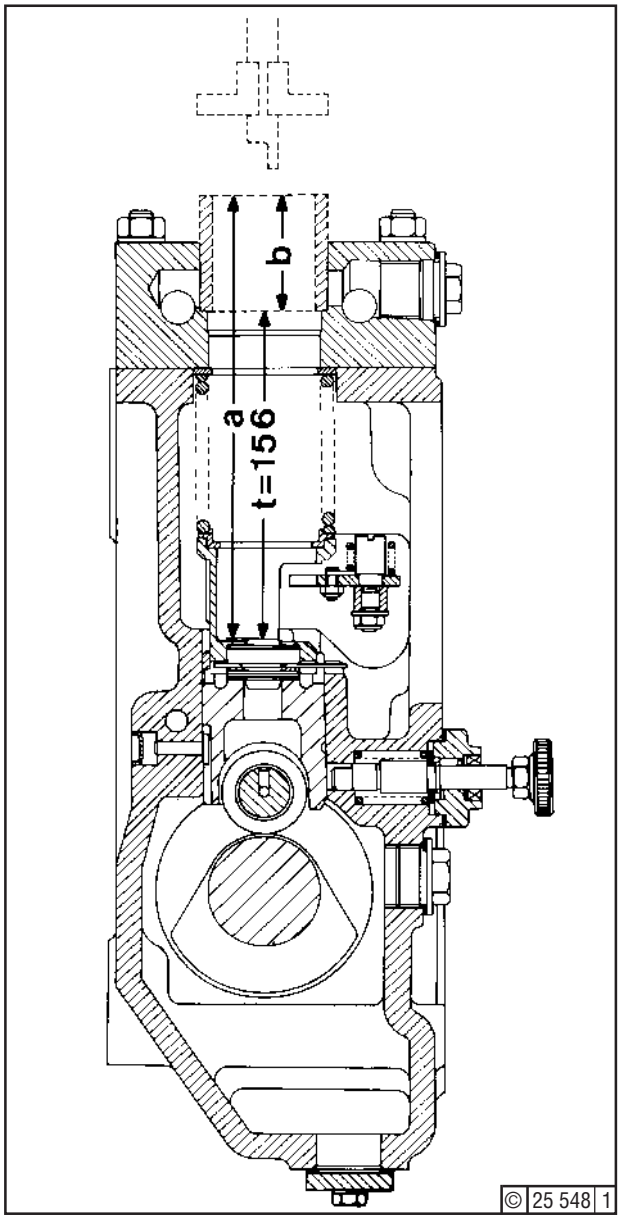

Fig. 1

© 1284

The depth dimension (t) of 156 mm - Fig. 1 - is now obtained by means of shim plates (12) of various thicknesses.

This results in an idle stroke (X) - Fig. 3 - of 3,5 ± 0,1 mm.

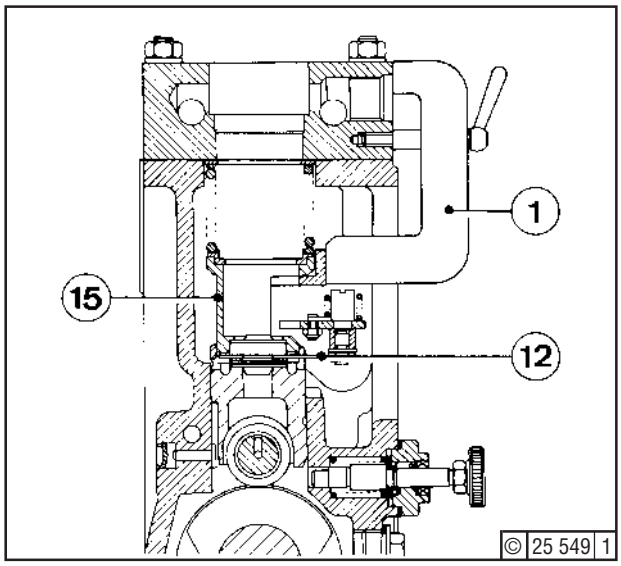

Fig. 2

⚠ Max. tolerance +/- 0.5 mm for later firing pressure correction, in view of limited free distance between spring cap (41) and pump element (293).

☞ Changing the thickness of the shim plate pack by 0.25 mm corresponds to a change in firing pressure of 3 - 4 bar.

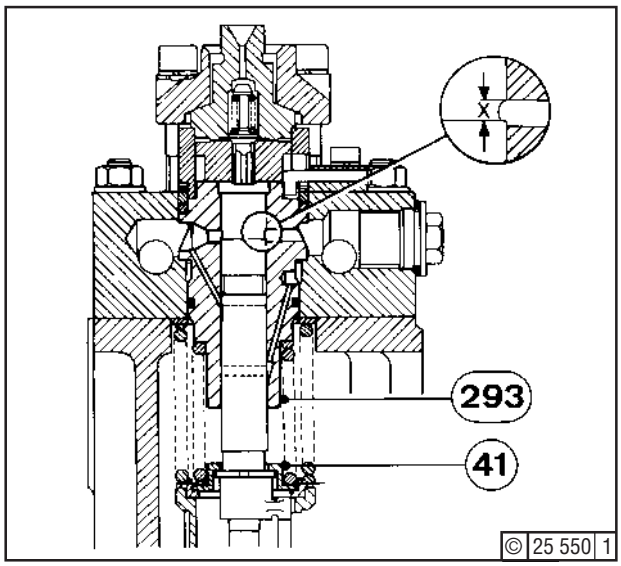

Fig. 3

Removal and reinstallation of the plungers require removal of the control rod. This can be done with the fuel injection pump mounted, otherwise remove injection pump as described on Job Card 07.04.01.

Tools:

- Standard tools
- Deutz DW 59 locking compound (Section 3.6)

Job Cards:

- 07.02.06
- 05.04.14

Job:

Removing Control Rod of Pump No. 1 - Fig. 1 -

Remove control linkage C1 and connection rod (55) between the pumps No. 1 and No. 2 (Job Card 05.04.14).

Remove cover (95) - Fig. 2 - and gasket (94). Then, take down cover (74) with gasket (72). Open lead-seal wire (205), unscrew hex. bolts (320) and carefully withdraw lever (316) from the two clamping bushes (319).

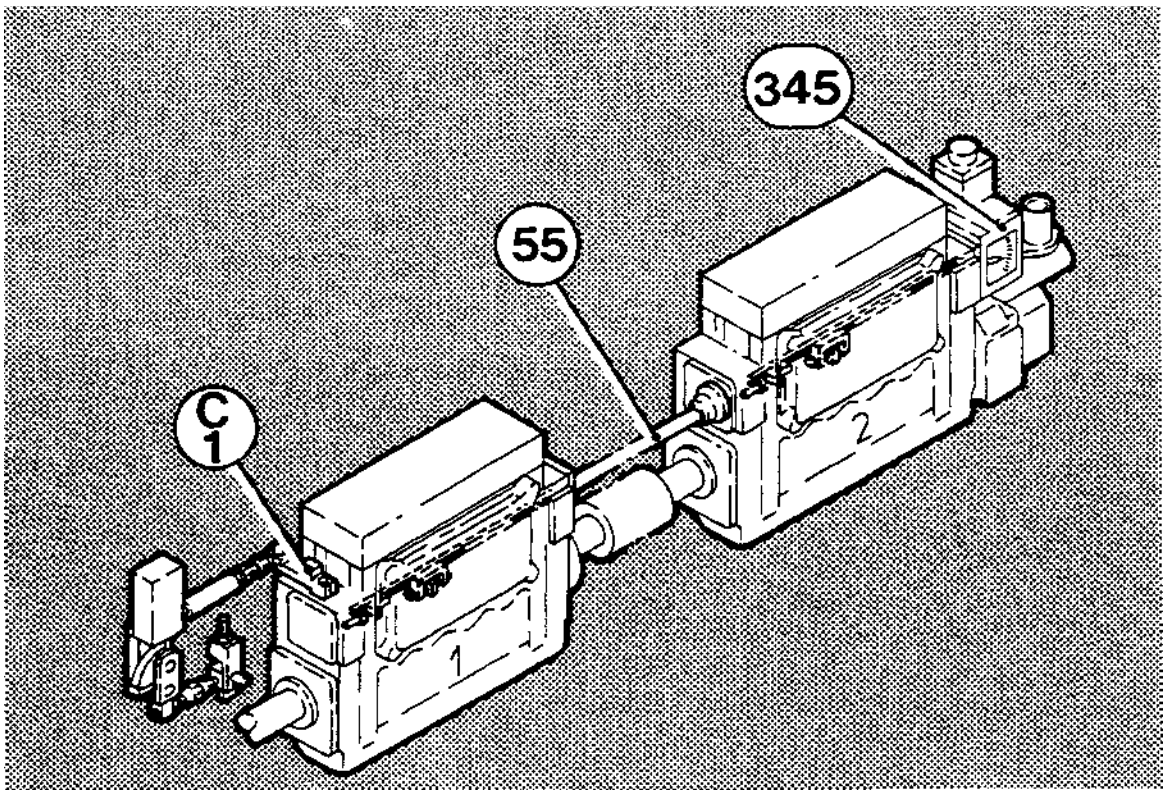

© 25 342 1

Fig. 1

Slacken hex. bolts (57) and lever (313) at the RH and LH sides of the control rod. Unscrew hex. bolts (62) and take down washer (61). Withdraw bush(es) (391) and bush (59), if any. Check pertaining shaft seal (60) and renew, if necessary. Pull out shaft(s) (390) complete with circlip (55), tube (326), washers (227, 228). Remove shaft (328), if any, complete with circlip (55), tube (326), washers (227, 228) and keys (54). Remove sleeves (327) and take out control rod (310) laterally from the injection pump housing.

⚠ Make sure that no parts are left in the injection pump.

Clean all parts in diesel fuel and check for wear. Replace, if necessary.

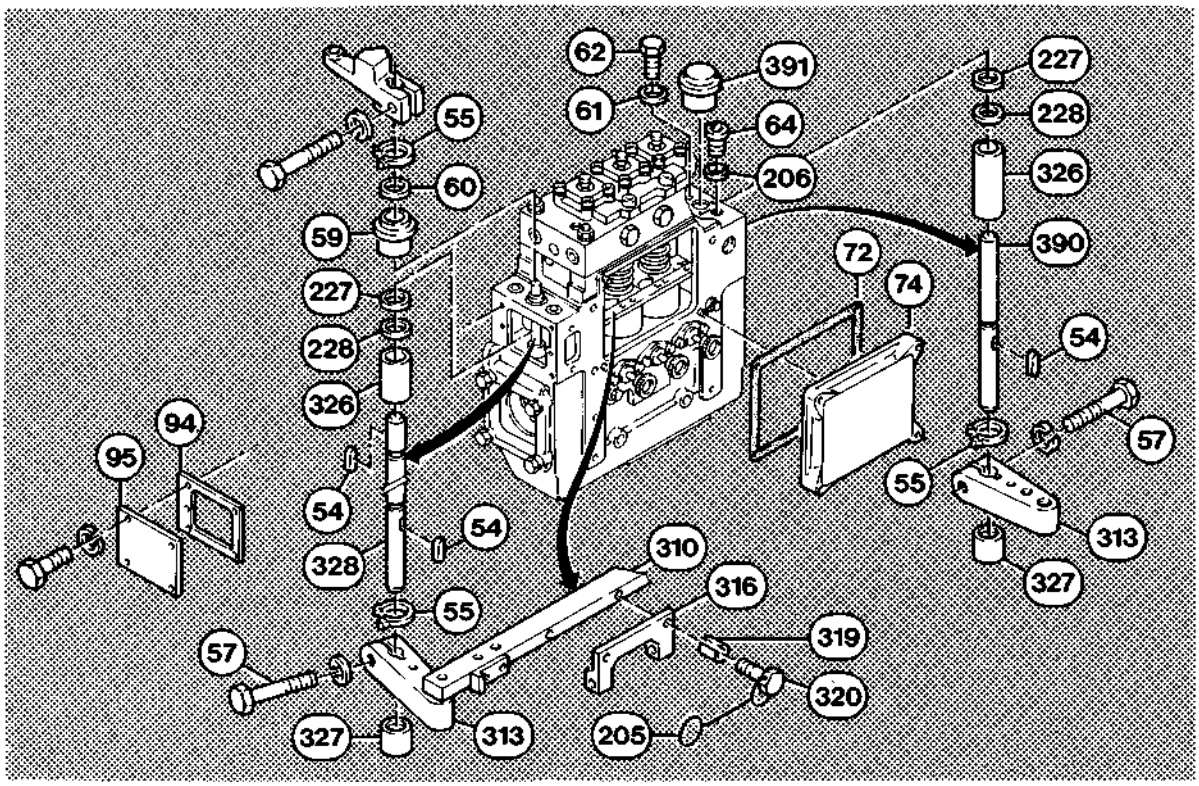

© 25 344 2

Fig. 2

Refitting Control Rod of Pump No. 1
The installation of the control rod is carried out in the reverse order to removal. Introduce the rod into the pump case, seeing to it that the adjusting pins (21) engage in the forks (3) - Fig. 3-.

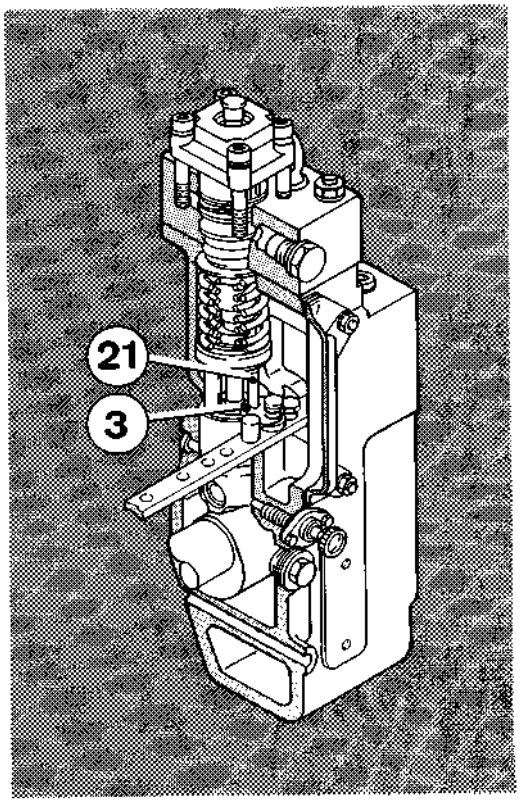

© 25 345 1

Fig. 3

When fitting the shafts, set clearance to 0,2 $^{+02}$ mm - Fig. 4 - with shims (227, 228).

Lead-seal hex. bolts (320) - Fig. 2, if possible. Otherwise have the bolts lead-sealed at the nearest Deutz Service Station.

Check the control rod for easy movement.

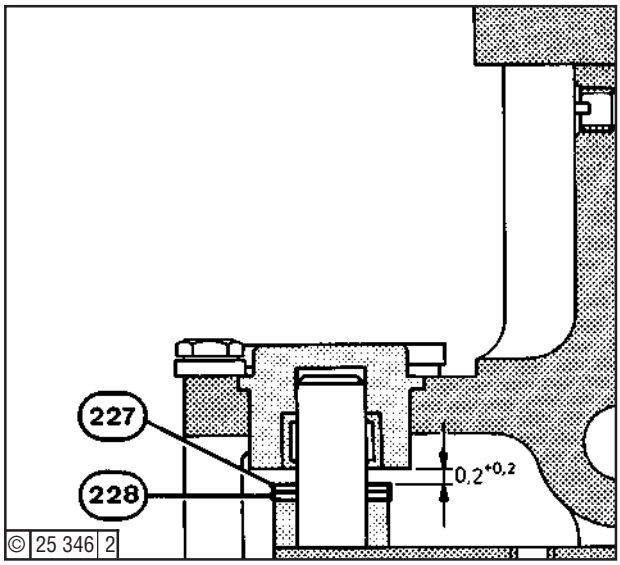

© 25 346 2

Fig. 4

Removing Control Rod of Pump No. 2 - Fig. 1
Remove connection rod (55) (job 05.04.14).
Unscrew plug screw (64) - Fig. 2 - with sealing ring (206). Loosen and remove the cheese head screw (343) - Fig. 5 - underneath in the pump housing.
Remove cover (277) and gasket (276). Take off the hex. nut (71) inside housing (345) with lock washer (106), and withdraw housing from the injection pump.

Now proceed as described under “Removing Control Rod of Pump No. 1”.

Refitting Control Rod of Pump No. 2 2
The installation of the control rod is carried out in the reverse order to removal. Cheese head screw (343), however, is to be installed with Deutz DW 59 locking compound.

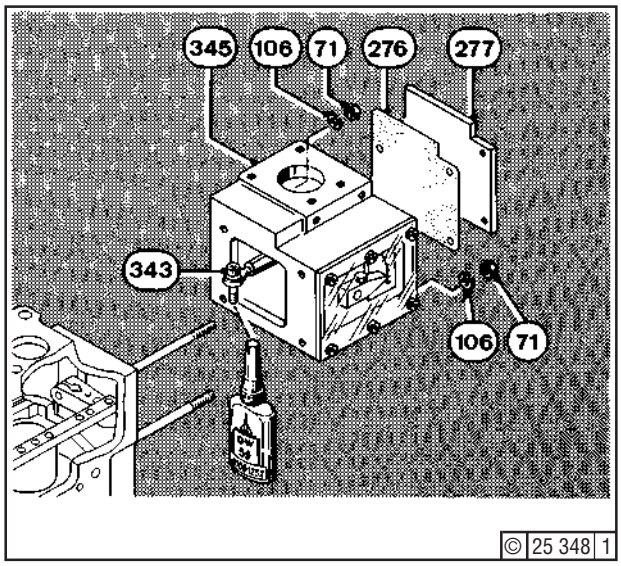

Fig. 5

Removal and reinstallation of the plungers require removal of the control rod. This can be done with the fuel injection pump mounted, otherwise remove injection pump as described on Job Card 07.04.01.

Tools:

- Standard tools
- Deutz DW 59 locking compound (Section 3.6)

Job Cards:

- 07.02.06
- 05.04.14

Job:

Removing Control Rod of Pump No. 1 - Fig. 1 -

Remove control linkage C1 and connection rod (55) between the pumps No. 1 and No. 2 (job 05.04.14).

Remove cover (95) - Fig. 2 - and gasket (94). Then, take down cover (74) with gasket (72). Open lead-seal wire (205), unscrew hex. bolts (320) and carefully withdraw lever (316) from the two clamping bushes (319).

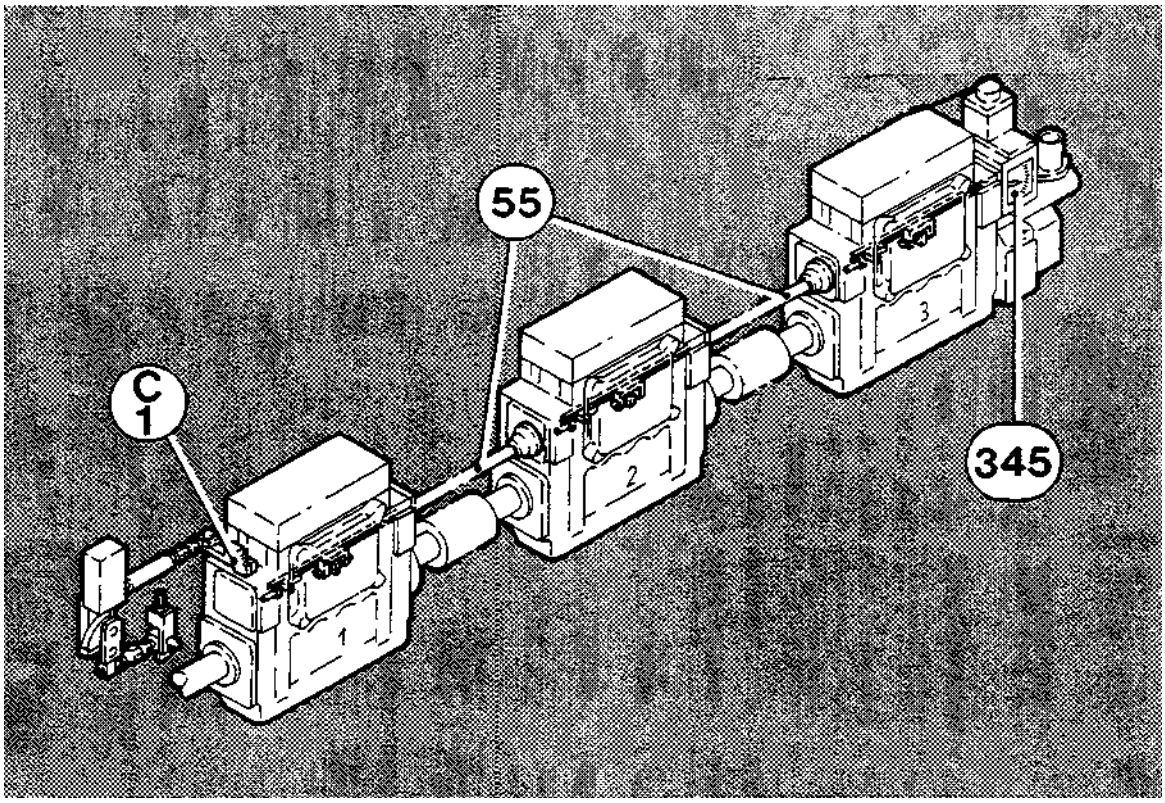

© 25 341 1

Fig. 1

Slacken hex. bolts (57) and lever (313) at the RH and LH sides of the control rod. Unscrew hex. bolts (62) and take down washer (61). Withdraw bush(es) (391) and bush (59), if any. Check pertaining shaft seal (60) and renew, if necessary. Pull out shaft(s) (390) complete with circlip (55), tube (326), washers (227, 228). Remove shaft (328), if any, complete with circlip (55), tube (326), washers (227, 228) and keys (54). Remove sleeves (327) and take out control rod (310) laterally from the injection pump housing.

⚠ Make sure that no parts are left in the injection pump.

Clean all parts in diesel fuel and check for wear. Replace, if necessary.

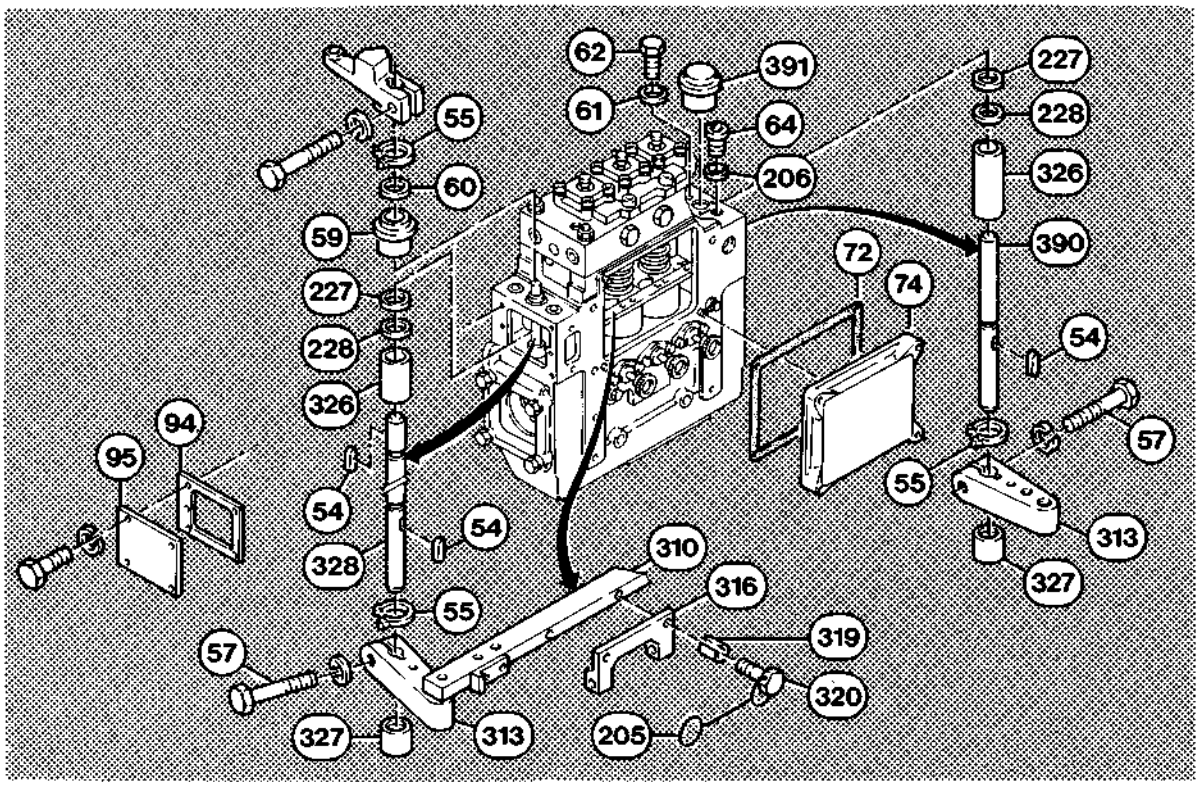

© 25 344 2

Fig. 2

Refitting Control Rod of Pu mp No. 1
The installation of the control rod is carried out in the reverse order to removal. Introduce the rod into the pump case, seeing to it that the adjusting pins (21) engage in the forks (3) - Fig. 3).

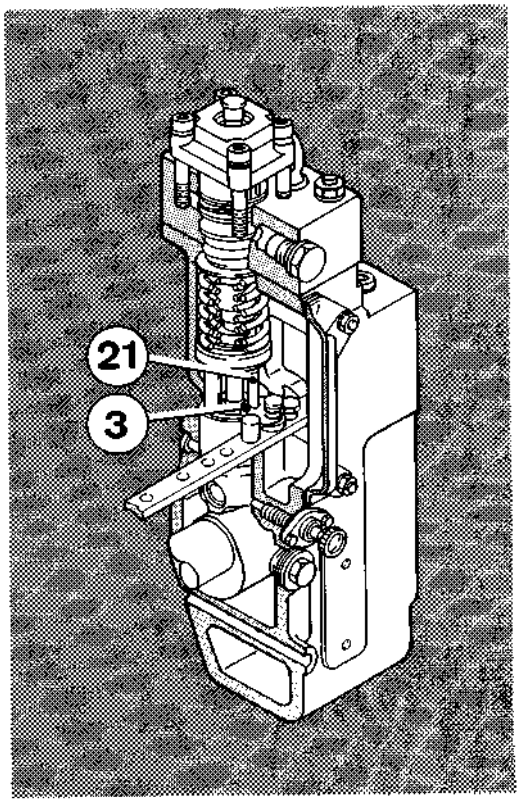

© 25 345 1

Fig. 3

When fitting the shafts, set clearance to 0,2 $^{+02}$ mm - Fig. 4 - with shims (227, 228).

Lead-seal hex. bolts (320) - Fig. 2, if possible. Otherwise have the bolts lead-sealed at the nearest Deutz Service Station.

Check the control rod for easy movement.

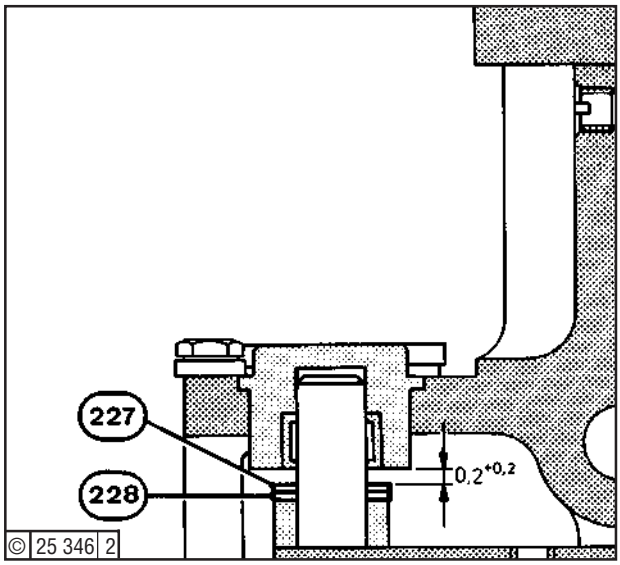

© 25 346 2

Fig. 4

Removing Control Rod of Pump No. 2 - Fig. 1
Remove connection rods (55) between the fuel injection pumps (job 05.04.14).
Now proceed as described for pump No. 1.

Refitting Control Rod of Pump No. 2
Reinstallation is carried out as described for pump No. 1.

Removing Control Rod of Pump No. 3 - Fig. 1
Remove connection rod (55) (job 05.04.14). Unscrew plug screw (64) - Fig. 2 - with sealing ring (206). Loosen and remove the cheese head screw (343) - Fig. 5 - underneath in the pump housing. Remove cover (277) and gasket (276). Take off the hex. nut (71) inside housing (345) with lock washer (106), and withdraw housing from the injection pump.

Now proceed as described under “Removing Control Rod of Pump No. 1”.

Refitting Control Rod of Pump No. 3
The installation of the control rod is carried out in the reverse order to removal. Cheese head screw (343), however, is to be installed with Deutz DW 59 locking compound.

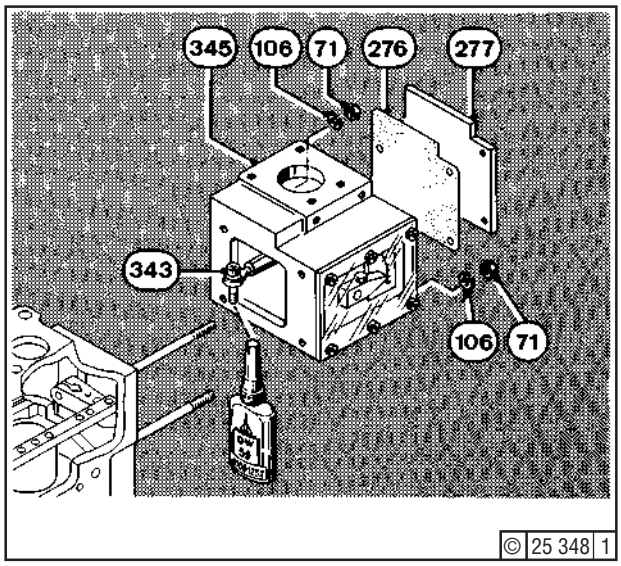

Fig. 5

Reconditioning

Where leaks are discovered near ring (295) - Fig. 1, renew O-seal (392) - Fig. 2 - and supporting ring (393).

☞ If a pump element is to be renewed, renew also O-seal (392) and supporting ring (393) of the element sealing pack.

Tools

- Standard tools
- Slide gauge
- Parker-O-Lube compound

Job Cards:

- 07. 00. 01
- 07 . 02 . 01

Job:

Removing the Seal

Remove pump element (Job Card 07.02.01). Remove element seal (34) - Fig. 1 - from barrel.

Gauging the Installation Space f or the Element Seal

- Measure distance ”A” - Fig. 3 - between ring (295) and pump element (293). Assemble items (293, 295 and 296) and compress by hand.

⚠ Ensure that there is contact between ring (295), screw union (296) and pump element (293).

Thickness of seal pack = 13 mm - Fig. 2

⚠ The total thickness of the individual components is **not measured**; it is 13mm.

- Select shim (37) of such size that the total thickness of components (392, 393, 394 and 37) is 0 to 0.2mm shorter than distance ”A”.

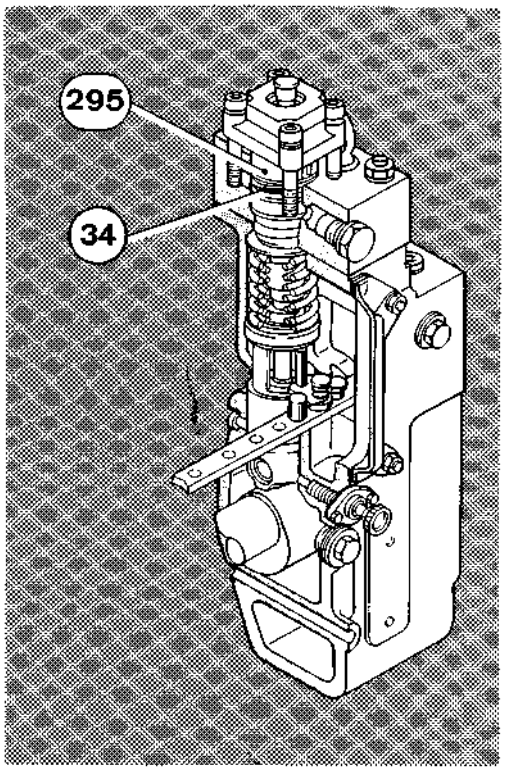

© 25 551 1

Fig. 1

© 1286

Example (assuming A = 13.6 mm):

h_x = A - 13
h_x = 13,8 - 13
h_x = 0,8 mm

When fitting a shim of 0.3 mm thickness, a clearance of 0.2 mm remains (0.8 - 0.6 = 0.2), which is within the tolerance of = to 0.2 mm.

Refitting the Seal

Install element (Job Card 07.02.01). Insert seal components as per Fig. 2. Make sure that the groove of supporting ring (393) is positioned on O-seal (392). Apply Parker-O-Lube on all components of the element seal pack to facilitate installation.

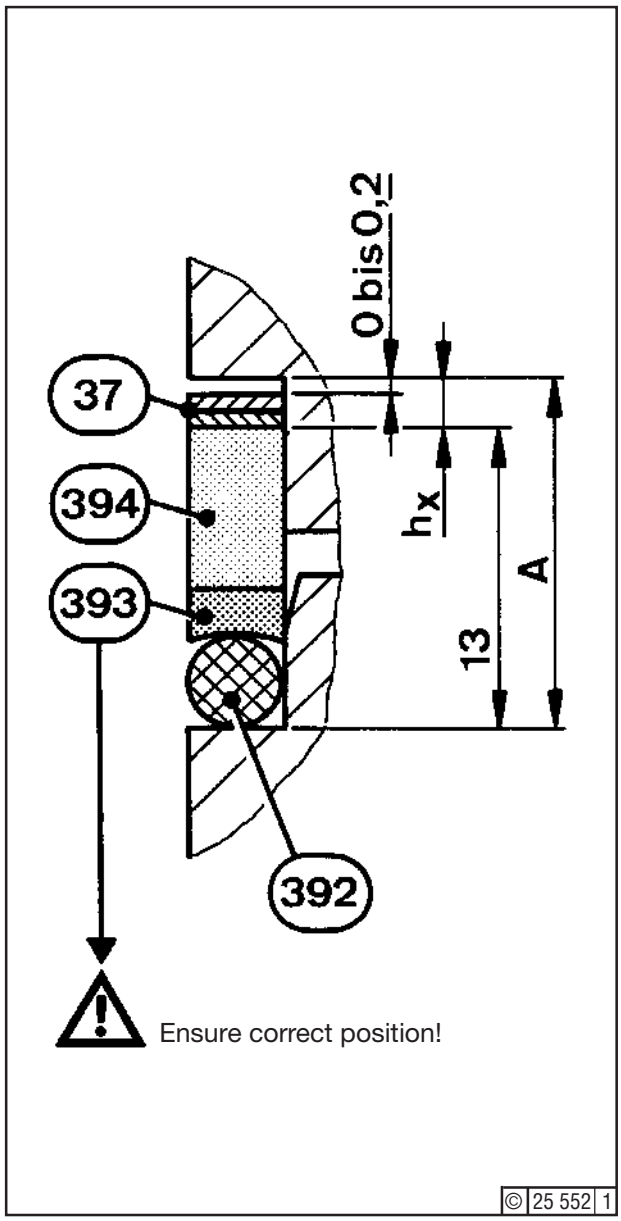

Fig. 2

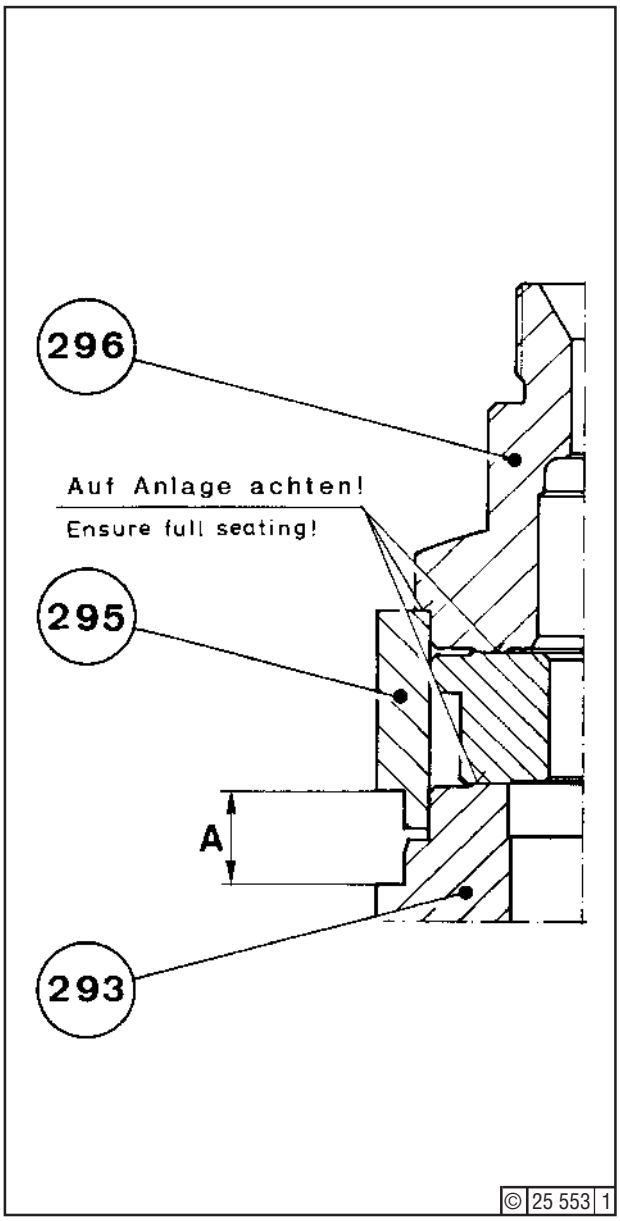

Fig. 3

Maintenance

Prior to installing a new pump element, it is necessary to set the pump element for constant delivery.

Job Cards:
- 05.00.01
- 11.01.05

Tools:
- Standard tools

Job

Check thermocouples as per Job Card 11.01.05. Slacken locknut (13) - Fig. 1. By means of guide (16) - eccentric - adjust lug (3) so that it is positioned at an angle of 90° relative to the control rod.
Tighten locknut.

When subsequently checking at low idling, the cylinder related to the renewed element must fire reliably. This can be ascertained from the exhaust temperature, which should be about the same as that of the other cylinders. Refer also to the acceptance documents. If necessary, the injection quantity and thus the exhaust temperature must be corrected by turning the guide (16).

Turn clockwise to reduce quantity

Turn anti-clockwise to increase quantity

⚠ We recommend having the injection pump checked at the next opportunity by a DEUTZ Service Station.

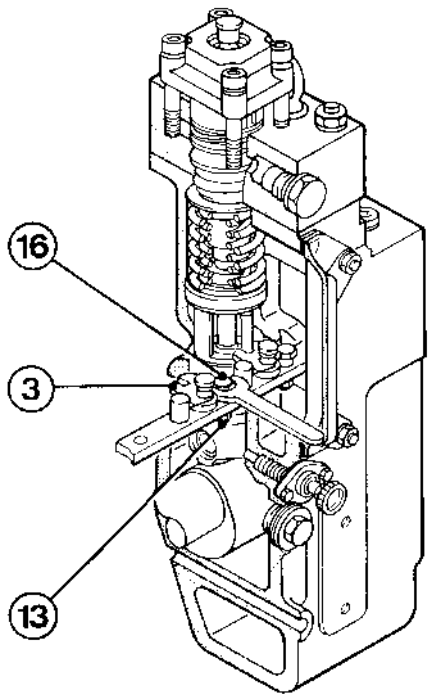

© 25 554 1

Fig. 1

This page intentionally left blank

If the tappet bush or roller has become defective, the entire tappet assembly (11) - Fig. 1 - must be renewed.

Job Cards:

- 07.02.01
- 07.02.03

Tools:

- Standard tools
- Spring assembly device

Job

Removing the Tappet

Remove pump element (293) (job 07.02.01) and control rod (310) (job 07.02.03).

Turn engine by barring gear until roller of relevant tappet rests on cam peak. Insert assembly device - Fig. 2 - in injection pump together with screw (3), washer (2) and slotted nut (4). Compress spring (31) by means of screw and hook spanner (1). Turn engine further until tappet roller rests on cam base circle. Remove spring assembly device from pump together with spring. Then remove support (15) and tappet (11).

Clean all components in diesel fuel, inspect (renewing as necessary), and apply lube oil.

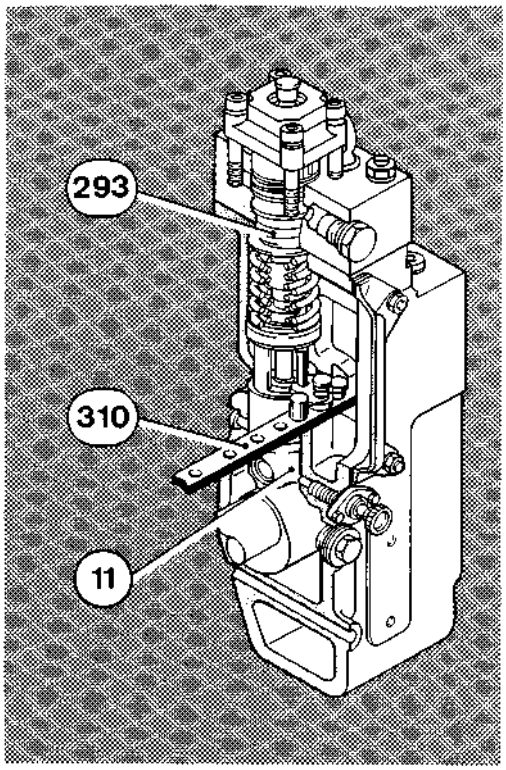

© 25 555 1

Fig. 1

© 1284

Replacing the Spring
Push lower fork (7) - Fig. 3 - into tube (6) and place the spring in tube with device. Push upper fork (7) into tube and turn short screw (3) out of device. Now screw in the longer screw (5) - Fig. 3 - and compress the spring a little. Remove top fork and turn out longer screw. The spring is now unloaded.

Spring loading is effected in the reverse order.

Refitting the Tappet
Refitment is effected in the reverse order to removal. Guide pin (17) - Fig. 2 - into groove of tappet.

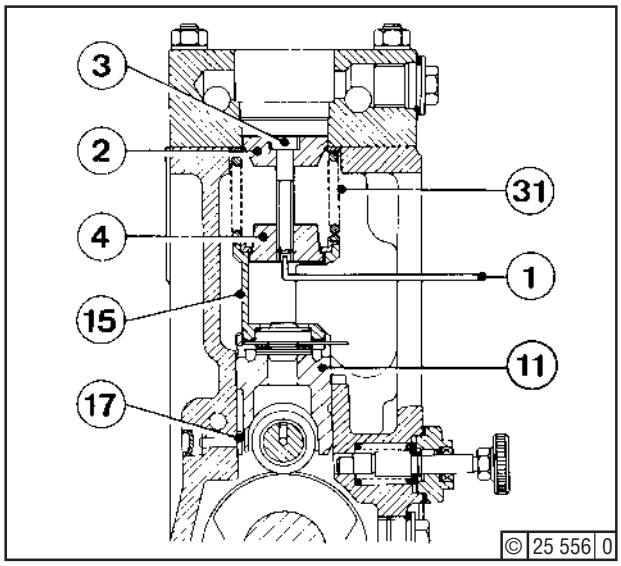

Fig. 2

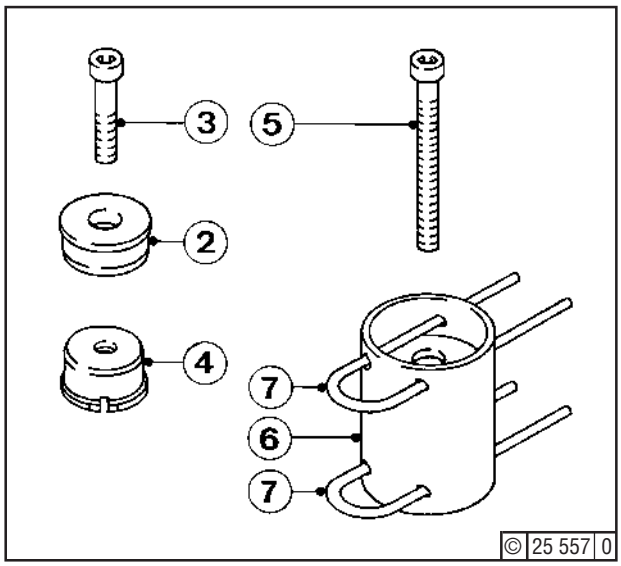

Fig. 3

Servicing

After setting the idle stroke and constant delivery, checking and correcting of the firing pressure and exhaust temperature becomes necessary.

Job Cards:

- 07.00.01
- 07.02.02
- 07.02.05
- 11.01.05

Tools:

- Standard tools

Job

Check thermocouples (job 11.01.05).

Apply full load to engine as described in the acceptance documents. Compare firing pressure and exhaust temperature values quoted in documents with those of engine running under load.

If necessary, correct exhaust temperatures as per Job Card 07.02.05, and firing pressures by changing the idle stroke as per Job Card 07.02.02.

☞ Changing the thickness of the shim pack by 0.25 mm corresponds to a change in firing pressure of 3-4 bar.

A thicker shim pack gives a smaller idle stroke and thus a higher firing pressure, and vice versa.

⚠ Following correction, recheck the values.

We recommend having the injection pump checked at the next opportunity by a DEUTZ Service Station.

© 1284

This page intentionally left blank

Mark piping by paint or labels with the associated cylinder No. before removal.

Job Cards:
- 07.03.02
- 07.07.01

Tools:
- Standard tools
- Dog and socket wrench with tommy bar (Section 1.8)

Job:

Removing the Piping - Fig. 1 -

Stop engine. Release bolt (7), unscrew bolts (12) and take down clip (10). Slacken union screw (1) through one or two turns, so the inner seal will not be damaged. Unscrew union nuts (2) (with dog wrench and tommy bar) and (3) (with open-end wrench), and remove pipe (4).

Measure inside diameter of injection piping. If it is less than 3.0 mm, the injection piping must be reconditioned (see Job Card 07.03.03).

Refitting the Piping - Fig. 1 -

Before mounting the injection piping, check the clamping sleeves (14) - Fig. 2 - for firm seating by means of socket wrench (5) (left-hand thread!).

nspect pipe and fittings for cleanliness. Attach pipe to connectors and screw union nuts (2) and then (3) by hand in place until pipe ends are seated, at least through five turns.

Should it prove impossible to screw union nut (2) in place by hand, release injector. If this does not help, trace cause and eliminate. If necessary, realign pipe in cold condition or renew.

Now tighten union nut (3) as per Section 3.5, item 31. Bleed pipe (see Job Card 07.03.02). Likewise, tighten nut (2). Slightly tighten union screw (1) and resecure injector, where applicable (Job Card 07.07.01). Now fasten pipe with bolt (12), lockwasher (13), plate (11) and clip (10) to retaining plate (6). Secure retaining plate by means of bolt (7), lockwasher (8) and washer (9).

Be sure pipe is free of stress. If necessary, place shims at point I or remachine clip at point II.

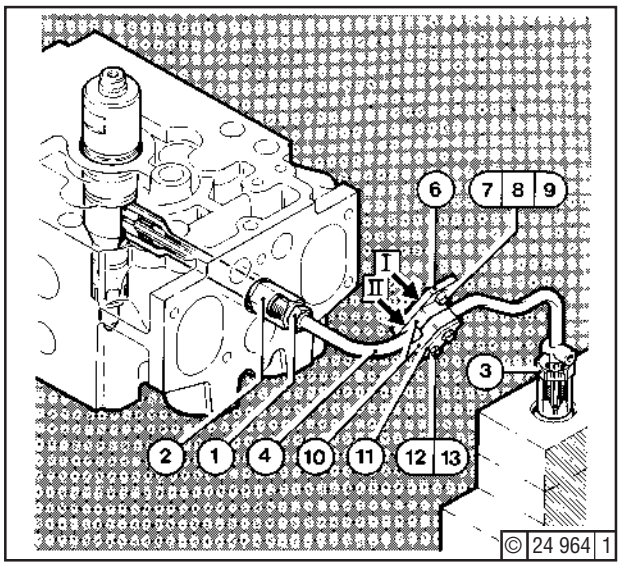

Fig. 1

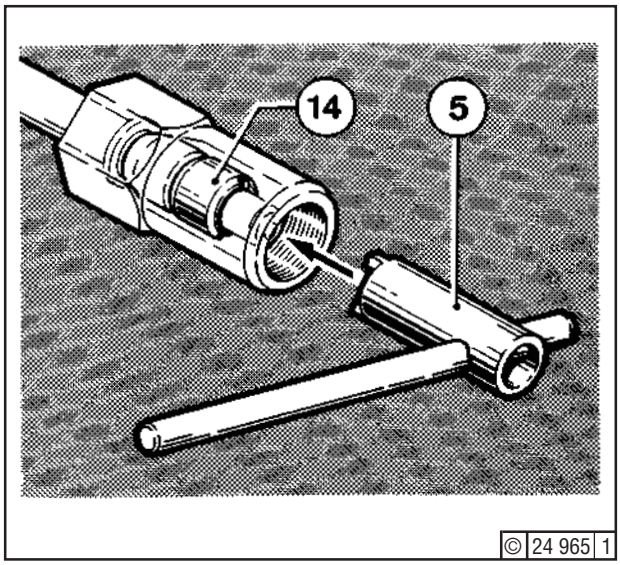

Fig. 2

© 0199

This page intentionally left blank

Servicing

Before using reconditioned (overhauled) or new injection pumps, or following fitment of fuel piping, filter or overflow valve, the entire fuel system must be filled up with fuel and bled.

Tools:

- Standard tools
- Claw grip spanner with tommy bar (Section 1.8)

Job

Bleeding the Low Pressure System - Fig. 1

Stop engine. Place control rod of injection pump in full-load position. (Engine control lever in ”Run” position.) Open shut-off valve in fuel line to engine. Switch 3-way cock (7) at fuel filter to middle position and unscrewing screws (5). Remove cover (4). Open bleed screws (3) by 1 or 2 threads. With hand pump or standby feed pump prime system until fuel emerges free from bubbles at the bleed screws. Retighten bleed screws.

Refit cover and secure by wing screws. Switch 3-way cock to right or left position.

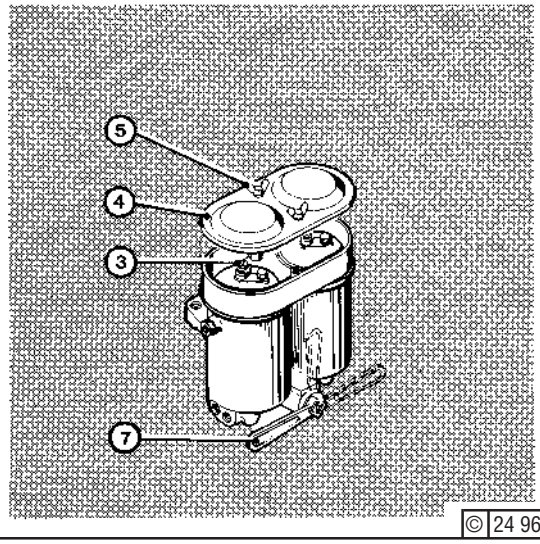

© 24 964 1

Fig. 1

Bleeding the High Pressure System - Fig. 2

Loosen union screw (1) by 1 to 2 turns, so that inner seal will not be damaged. Loosen union nut (2) also by 1 or 2 turns, using claw grip spanner and tommy bar. Afterwards, place control level several times briefly to ”Run” position until fuel emerges at the passage of the injection pipe through the cylinder head. Tighten injection pipe connection (see Section 3.5, item 31). Finally, lightly tighten union screw (1).

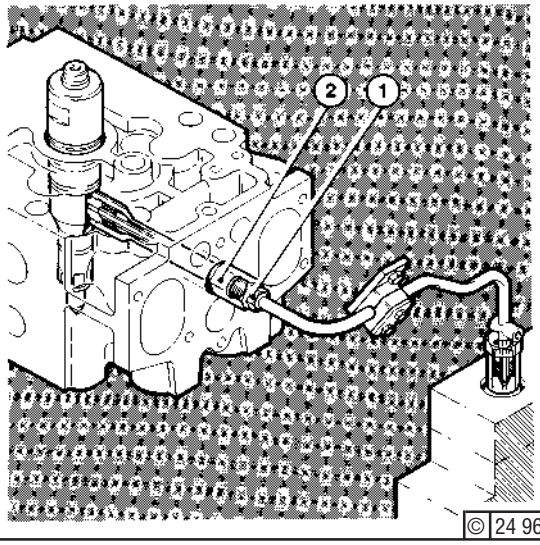

© 24 965 1

Fig.2

This page intentionally left blank

Reconditioning

If, due to frequent reassembly or excessive tightening, the end of the injection piping has been contracted, i.e. the inside diameter is less than 3.0mm, the piping must be renewed.

Job Card:
- 07.03.01

Tools:
- Standard tools
- Socket spanner with tommy bar (Section 1.8)

Job
Remove injection piping (job 07.03.01).

Screw off clamping sleeves (14) at both ends of the piping by means of socket spanner (5) - Fig. 1.

⚠ Left-hand thread

Withdraw union nuts (2 and 3) from piping - Fig. 2. Undo fully cap screw (1). Renew O-seals (15 and 16), as well as clamping sleeves (14).
Assemble new injection piping in the reverse order with screwed union fittings and mount as described for job 07.03.01.

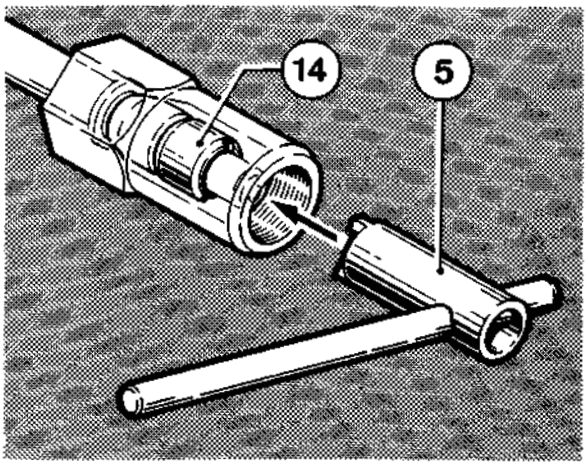

© 24 964 1

Fig. 1

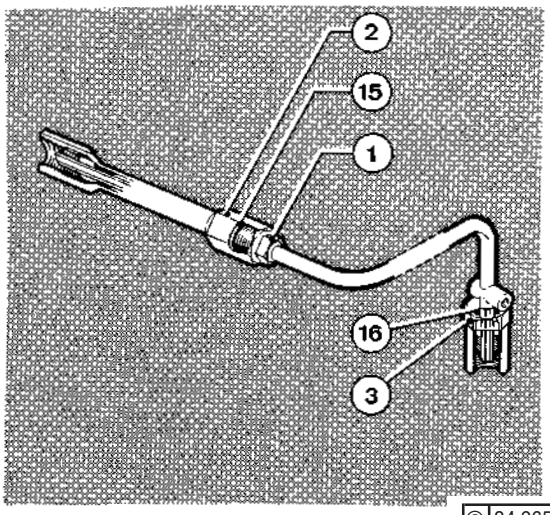

© 24 965 1

Fig. 2

© 0199

This page intentionally left blank

The described job sequence **must** be **strictly** adhered to and followed for **each** removal and refitment of injection pump.

If an injection pump has to be disassembled for repair purposes it has to be brought to a DEUTZ- Service station and calibrated there - following its reassembly - to the same injection quantity and set to maximum fuel stop power. The accessory carrier with attachments will be removed and refitted together with the injection pump.

Tools:

- Standard tools
- Feeler
- Gauge
- Hoist
- Torque wrench (Section 1.8)
- 2 Dial gauges (Section 1.8.1)

Job Cards:

- 02.00.01
- 05.04.01
- 05.04.14
- 07.01.01
- 07.03.01
- 07.03.02
- 07.06.01

Job:

Before removing the injection pumps

- Observe safety regulations as per job card 02.00.01.
- Put all injection pump tappets out of operation by actuating the lifting devices (see job 07.01.01).
- Remove cover from pump drive.
- Remove all fuel and lube oil pipes.
- Remove injection lines (job 07.03.01).
- Remove governing linkage (job 05.04.14) as necessary.
- Remove hydraulic speed governor (job 05.04.01).

  or

- Remove electronic governor, undo cable connections.
- Remove lube oil pump for valve seat lubrication (job 07.06.01).
- Remove respective timing cover.
- Mark with scriber (18) position of injection pump drive gear (8) - Fig. 1 - relative to shaft section (19).
- Mark (11) position of shaft section (19) relative to shaft (14).
- Loosen bolts (1) and (8) - Fig. 2.
- Loosen cheese head fastening bolts (17) - Fig. 1 - of drive gear until the injection pump drive shaft (14) can be turned by hand.
  The clamping connection must be unclamped but there must be no gap between the two shaft sections (19) and (15), i.e. they should have no play.

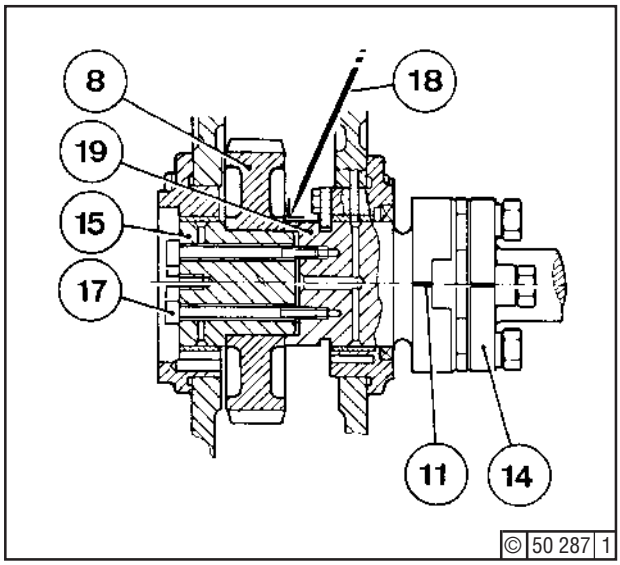

Fig. 1

© 0988

Removing pumps P1, P2, or P3 - fig. 3 -

- Unscrew the 4 fitted bolts (1) and (8) - Fig. 2.

  Remove coupling with washers (9) and (10), coupling disc (5) and bushes (2) and (3). Loosen cheese head bolts (7), remove washers (23) and shaft (14) - pump 1 or (24) pump 2 or 3 - paying attention to dowel sleeve (22).

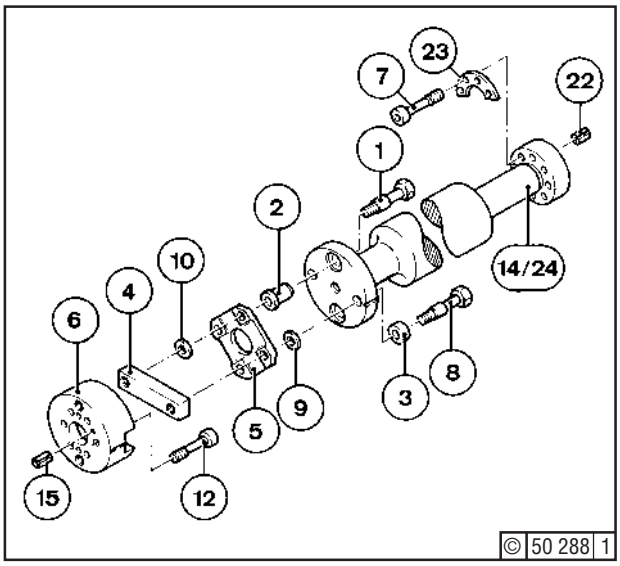

Fig. 2

- Retain injection pump - Fig. 3 - with hoist. Unscrew hex. bolts (13) and (20) and take out washers (21). Lift off pump from engine and place down carefully. When lifting off pump, pay attention to spacers (25) and parallel pin - between crankcase cover and injection pump. The spacers may be adhered or fastened with countersunk nails.

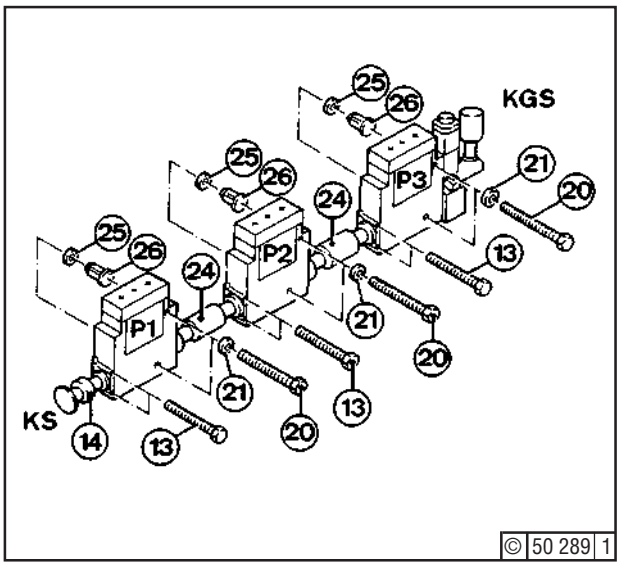

Fig. 3

We recommend to fasten glued-on spacers (25) - Fig. 4 - with countersunk nails as well. For that purpose the respective crankcase covers have to be reworked as per Fig. 4. Use countersunk nails to DIN 1477-3 x 10-ST.

☞ When beating in the countersunk nails make sure that they do not protrude above the spacers, i.e. they must be completely countersunk. Check with bevelled steel straight edge.

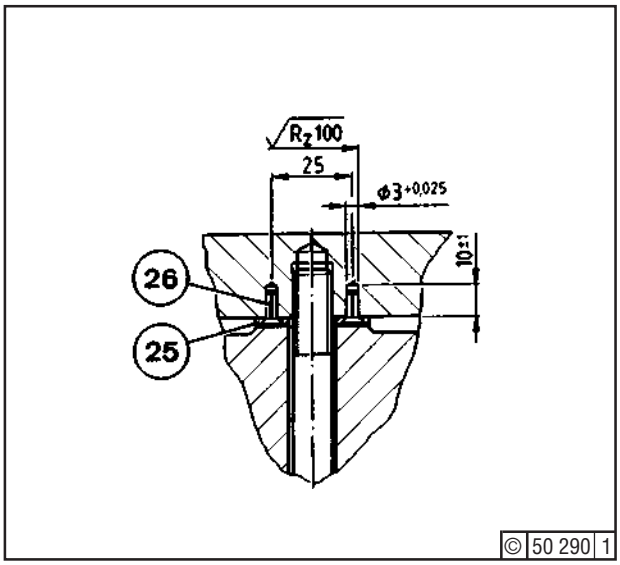

Fig. 4

Before refitting injection pumps

- Make sure that only genuine DEUTZ gaskets are fitted under crankcase covers - behind injection pumps - and spacers (25) - Fig. 3 - otherwise alignment errors may result.

Refitting pump 1 (6/8/9-cyl. engine)

- Fit shaft (14) - Fig. 2 - by locating it with dowel pin (22) and screw together with washers (23) and cheese head bolts (7) until hand-tight. If the injection pump retainer had been taken off, it should be suspended loosely above the shaft. If not, loosen the four hex. bolts (101) - Fig. 5 - before refitting the pump.

- Insert bushes (2) - Fig. 2 - into shaft (14) and thread fitted bolts (8) provided with bushes (3) through shaft (14).
  Connect washers (9), coupling disc (5) - recessed side facing towards drive end - and connecting plate (4) with fitted bolts and screw together until hand-tight.

- Make sure that spacers (25) are fitted - Fig. 3. Place injection pump with shaft onto parallel pin in crankcase cover and observe marks (11) - Fig. 5 -.
  Secure hex. bolts (20) provided with washers (21) hand-tight so that the injection pump rests against the crankcase without any clearance.

☞ If space is limited, it is also possible to screw shaft (14) together with the injection pump only when this is already loosely attached to the crankcase.

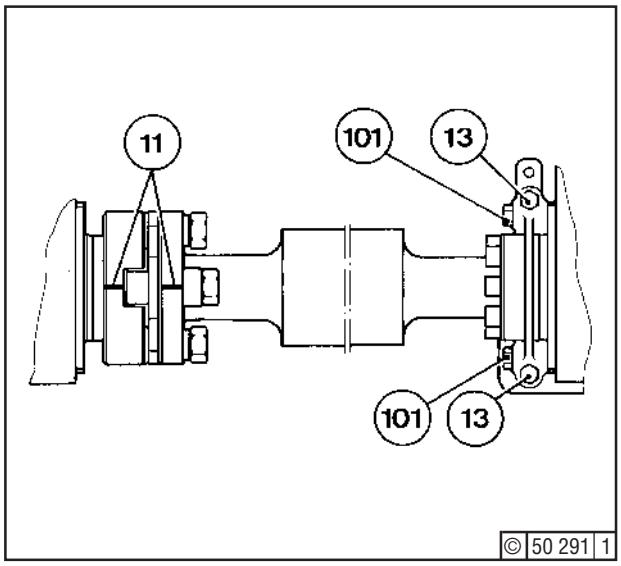

Fig. 5

Axial alignment of shaft and assembly of coupling

- Check whether all tappets of injection pump are out of function (see job card 07.01.01).
- Move shaft to both end positions - drive end and free end - Fig. 6.

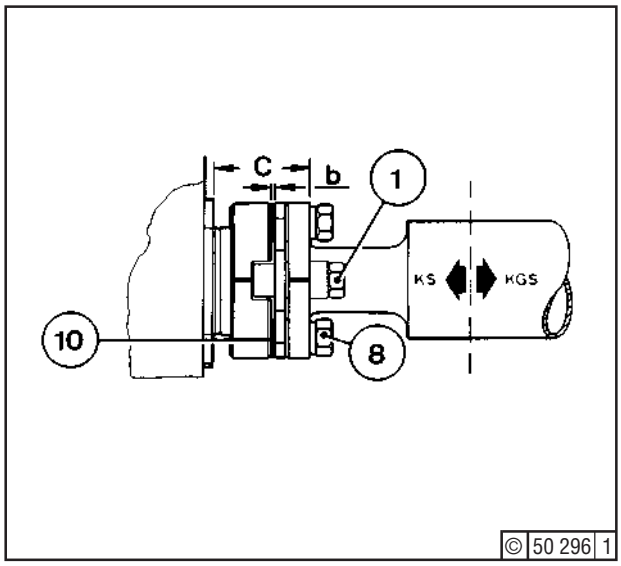

Fig. 6

- Gauge in each end position - Fig. 7.
  Clearance = maximum dimension “C” minus minimum dimension “C”.

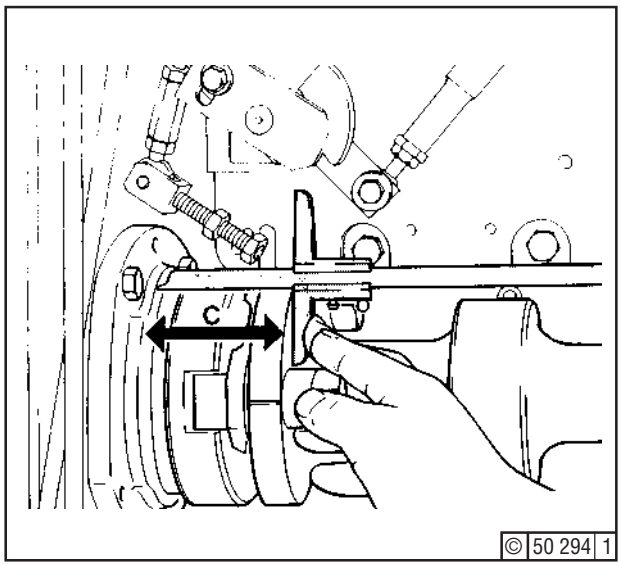

Fig. 7

- Determine maximum dimensions “b”. Move shaft into right end position - free end - Fig. 8.
- Determine thickness of shims (10) - Fig. 6: max. dimensions “b” minus half clearance.

  Select appropriate shims.
- Insert fitted bolts (1) - Fig. 6 - and secure hand-tight alternately with fitted bolts (8).

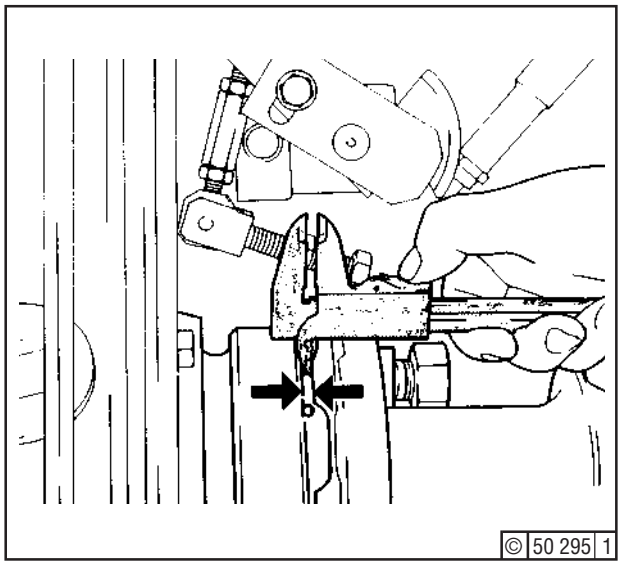

Fig. 8

Checking easy movement of shaft

- Turn shaft (14) - Fig. 9 - by hand at least one full revolution and check for easy movement.

Reassembling injection pump retainer

- Fasten retainer loosely, but without clearance, with hex. bolts (13) and (101).

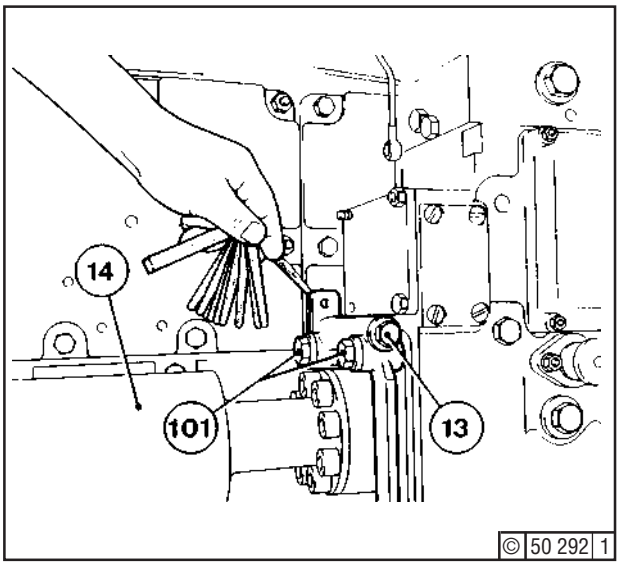

Fig. 9

- Check with feeler gauge 0.05mm between: retainer - crankcase, retainer - injection pump - Fig. 10.

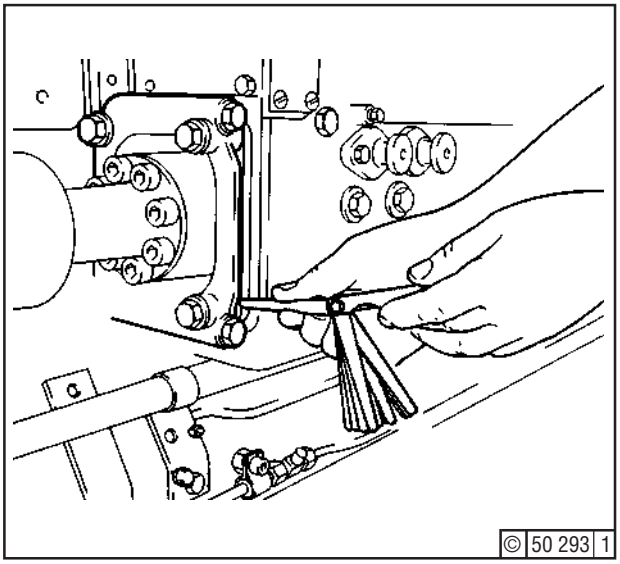

Fig. 10

© 0988

Tightening drive shaft bolts

- Make sure that scriber marks on injection pump drive gear (8) - Fig. 1 - and shaft section (19) correspond.

  Tighten cheese head bolts (17), as specified (Section 3.5, line 16).

- Tighten fitted bolts (1) crosswise - Fig. 11 - and (8), as specified (Section 3.5, line 14).

- Tighten cheese head bolts (7) - Fig. 12 - as specified (Section 3.5, line 15).

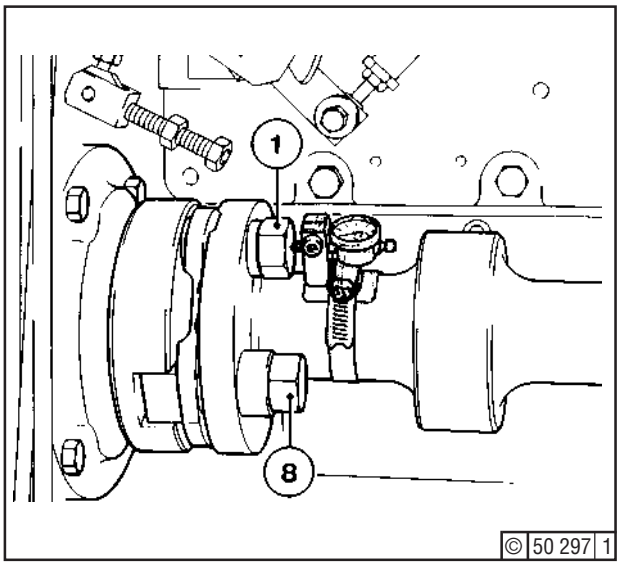

Fig. 11

Checking alignment and radial runout tolerance

- Fasten dial gauge on shaft. Place feeler of dial gauge on fitted bolt head (1) at centre - Fig. 11. Do not confuse with fitted bolt (8)!

- Fasten dial gauge to crankcase. Position feeler of dial gauge at drive end of injection pump - Fig. 12.

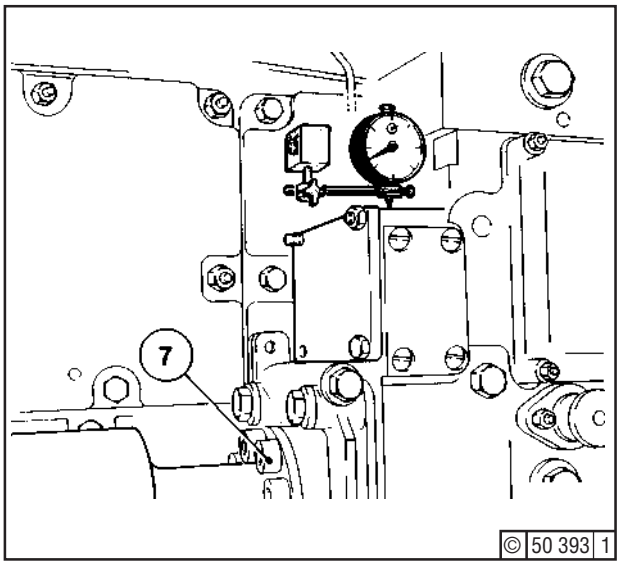

Fig. 12

© 0988

- Turn crankshaft in direction of engine rotation - depending on engine design - two complete revolutions, while recording intensity and direction of dial gauge deflection.

  Max. permissible dial gauge deflection:

  - Coupling disc +/- 0.03mm -
  - Injection pump 0.05mm -

- Should one of these values be exceeded this may be attributable to the following causes:

  - On injection pump

    - Deviation from radial run-out tolerance in shaft due to embedded dirt or damaged flange.

    - Deviation from radial or axial run-out tolerances, verifiable by component check of drive shaft - Fig. 1, shaft - Fig. 2 - coupling disc, coupling flange at drive end, injection pump camshaft.

  - On coupling disc

    - Horizontal misalignment, for instance, due to incorrect gaskets behind crankcase covers or incorrect spacers (25) - Fig. 4, improperly countersunk nails (26).

    - Vertical misalignment. For elimination of this error, the weight of the injection pump must be supported by hoist. Make careful vertical re-alignment within bearing clearances. The centering pin in the crankcase is the fulcrum.

    ☞ Be careful not to apply great forces.
    Bending stresses acting on shafts may cause shaft fractures.

    ⚠ Be sure to adhere to specified tightening sequence.

Tightening fastening bolts of injection pump retainer and injection pump

- Lock down hex. bolts (13) - Fig. 9 - until hand-tight.

- Lock down hex. bolts (101) until hand-tight.

☞ The hex. bolts must be fitted without any **constraint**, that means the hex. bolts and the retainer should have no contact within the through-holes; otherwise bores should be reworked.

- Tighten hex. bolts (13).

- Tighten hex. bolts (101) crosswise.

- Tighten hex. bolts (20) - Fig. 3 - as specified (Section 3.5, line 13).

Check after ref itment

- Check coupling disc once again for alignment as described before. The dial gauge deflections must correspond in respect of intensity and direction to the values measured before fastening the injection pump.
  Deviations of +/- 0.02mm are permissible if the upper limit of +/- 0.03mm is not exceeded.
  Larger deviations indicate straining of the shafting.

© 0988

- Check shaft (14) for easy movement. For this purpose loosen cheese head bolts (17) - Fig. 1 - as described under heading “Before removing injection pumps”.
  Make several crankshaft revolutions by hand and check for smooth and even running.

Should one of these checks reveal any inadmissible discrepancy, the injection pump retainer and the pump have to be slackened by loosening the hex. bolts (13) and (101) - Fig. 5, as well as (20) - Fig. 3.

- Repeat refitment and checks as from “Preassembly of injection pump retainer”.

If another deficiency is determined after the refitment, components should be checked as described before.

Refitting pump 2 (6/8/9-cyl. engine) - Fig. 3 -

- If the coupling flange (6) - Fig. 2 - was removed, remount same to pump 1 by means of cheese head bolts (12), located by dowel pin (15).
- Tighten cheese head bolts (12) as specified (Section 3.5, line 15).
- Then proceed further as described under “Refitting pump 1”.

Refitting pump 3 (9-cyl. engine) - Fig. 3 -

- Refitting should be done in a similar way as described under “Refitting pump 2”.

After refitting the injection pumps

- Turn shaft (14) - Fig. 1 - until scriber marks on drive gear (8) and shaft section (19) correspond.
- Lock down cheese head bolts (17) - observing scriber marks - as specified (Section 3.5, line 16).
- Put tappets into operation as per job card 07.01.01.
- Check commencement of delivery and fit lube oil pump for valve seat lubrication as per job card 07.06.01.

Depending on engine design

- Refit electronic governor, fasten cable connections or refit hydraulic governor as per job card 05.04.01.
- Refit timing cover.
- Refit governing linkage as per job card 05.04.14.
- Refit injection lines as per job card 07.03.01.
- Refit all fuel and lube oil pipes.
- Bleed fuel lines as per job card 07.03.02.
- Fasten cover of injection pump drive.

© 0988

☞ Defective cams etc. will require the entire camshaft to be replaced.

Job:

Remove injection pump from engine (job 07.04.01).
Lock out all roller tappet bushes.

Job Card:

- 07.04.01

Tools:

- Standard tools
- Dial gauge

Removing the Camshaft
Injection Pump without Engine Auxiliaries

Unscrew bolts (5 and 15), remove retainer (3) and pull out flanges (2 and 11). Remove circlips (9 and 13) and take down spacers (8 and 12). Pull out camshaft (7) toward either end of pump case (1).

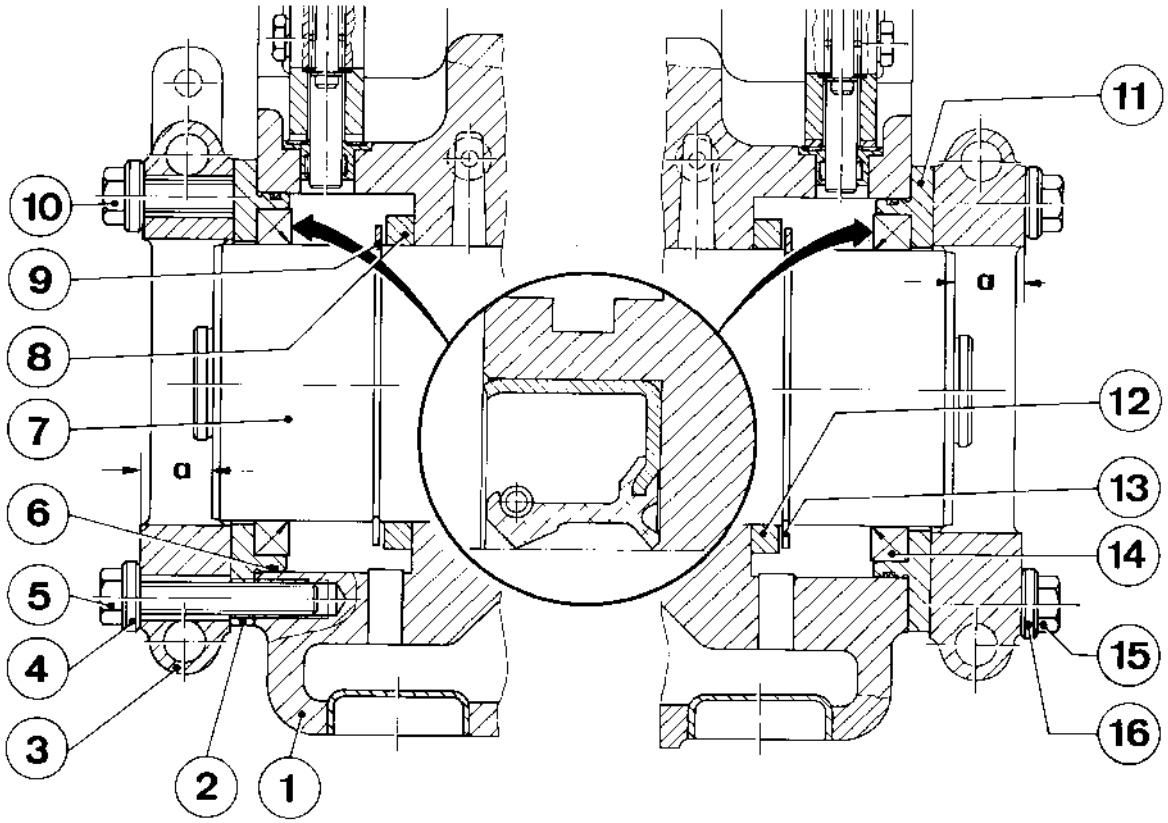

© 50 129 1

Fig. 1

© 0586

Injection Pump with Engine Auxiliaries (fig. 2)
Remove components at the end opposite the auxiliaries as described before. Detach casing 18 for auxiliaries by unscrewing bolts (17), circlip (25) and ring (25). Pull out camshaft toward either end of pump case.

Refitting the Camshaft
Clean all components in diesel fuel and replace any worn components. Clean oil sump of pump case.

Injection Pump without Engine Auxiliaries
Push camshaft (7) into pump case in lubricated condition. Fit spacer rings (8 and 12) as well as circlips (9 and 13).

Gauging Camshaft End Float

1. With camshaft pushed in up to stop, gauge clearance "a" $_{min.}$
2. With camshaft pulled out up to stop, gauge clearance "a" $_{max.}$

3. Set "a" =

$$\frac{a_{min} + a_{max} \pm 0{,}2}{2}$$

at drive coupling.

Clearance ‘a’ may be determined between any part connected to the camshaft and a fixed surface or edge on the engine.

Install flanges (2 and 11) with new O-seals (6) and intact shaft seals (14), the flange drain hole being at the bottom. Fit retainer (3) and secure both flanges (2 and 11) with bolts (5 and 15) plus lockwashers (4 and 16).

2. Injection Pump with Engine Auxiliaries
Inspect gear (22) for wear and pittings and replace if necessary. Tighten bolt (21) as specified (Section 3.5, item 12).

Install camshaft (26) in pump case in lubricated condition. Continue assembling as before.
Secure casing (18) for auxiliaries with new O-seal (23) by bolts (17).

Check that camshaft moves freely and let down roller tappet bushes. Mount injection pump on engine (job 07.04.01).

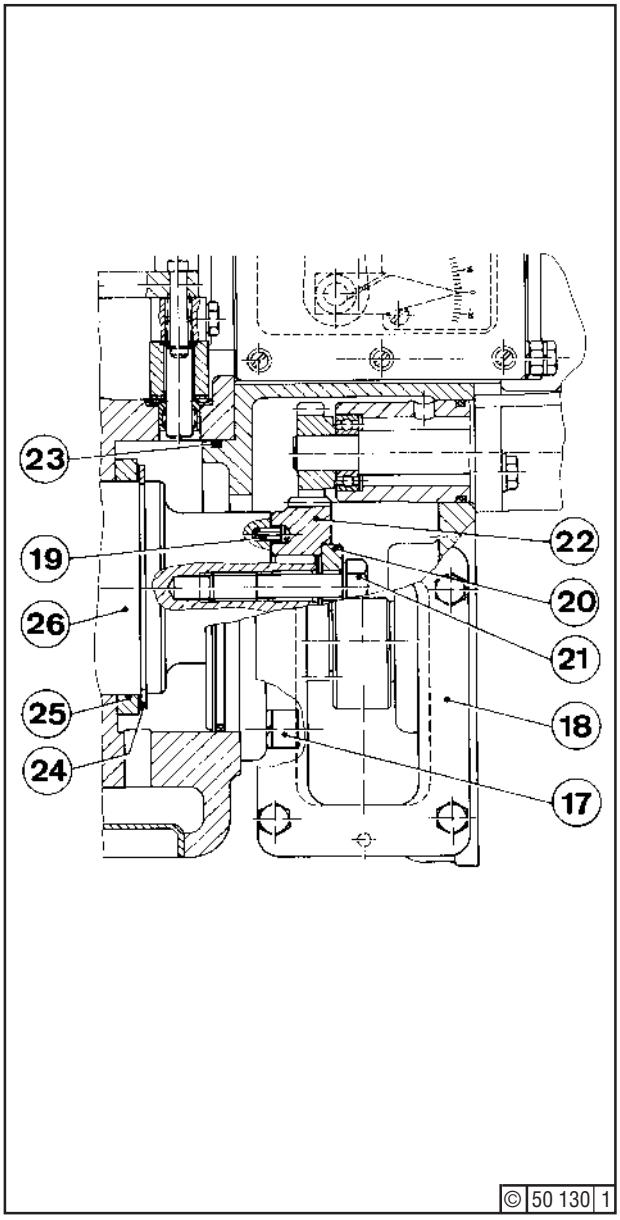

Fig. 2

Injection Timing

(Setting the Commencement of Injection)

Following any work on the injection pump drive, test the commencement of injection on the pump element for the No. 1 cylinder.

☞ Adjusting the commencement of injection and hence the firing pressures is permissible only when the pressures depart from the Acceptance Certificate. Such fault may be due to excessive backlash of the injection pump drive gear, coupling out of adjustment, wear in the injection pump drive, excessive backlash of pump drive gear.
An advancement of the commencement of injection raises the firing pressure and vice versa. Prior to any adjustment of the setting, check that injector, injection pipe and injection pump are in good shape and condition.

Tools:

- Standard tools
- Spill pipe
- Injector testing outfit (Section 1)
- Pipe from testing pump to fuel filter
- Torque wrench

Job Card:

- 07.03.01

An adjustment as described hereafter ensures utmost accuracy since the measurement involved considers any wear both in the pump drive and the actual pump.

Job:

Setting the Commencement of Injection at the Injection Pump Coupling

Stop engine. Place control level in “run” position. Shut off fuel suction line between engine and fuel service tank and between overflow line and injection pump (1). Unscrew bleed plug on fuel filter (2). Fit banjo bolt with pipe (3) (see under “Tools”) to filter and connect pipe (3) to testing pump (4). Disconnect injection line (5) for No. 1 cylinder from injector, connect spill pipe (6) and place container (7) thereunder.

Turn engine until roller tappet of No. 1 cylinder rests on the cam base circle. Operate testing outfit until fuel emerges in a vigorous jet. While pumping, slowly turn engine in the normal running direction.
Once the fuel jet breaks, stop turning and pumping because at this point the commencement of injection is properly set according to the acceptance documents. Failing this, re-adjust (see page 2).

⚠ If you continue pumping, this may result in damage to the fuel L.P. system.

☞ Measure distance “b” on the flywheel periphery from No. 1 cylinder TDC mark to the fixed arrow on the crankcase. Convert this value to degress crank angle and compare with the Acceptance Certificate.

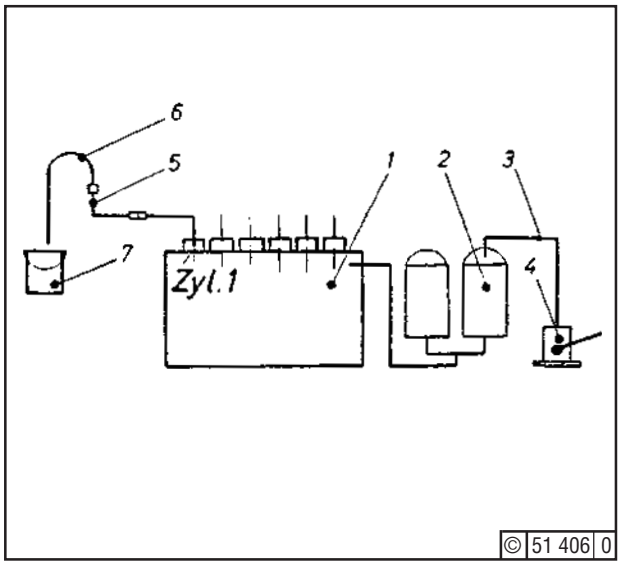

Fig. 1

Conversion to degrees crank angle „ α "

where „d" = flywheel diameter(810 and 970 mm)

$$\alpha = \frac{360 \times b}{d \times \imath}$$

The crank angle "α" thus found must roughly meet the Acceptance Certificate, the engine reaching full load. Following this, adjust the coupling, paying attention to the normal direction of rotation of the injection pump drive.
To do so, unscrew plug (11) on cover (8) near the pump drive.

Disconnect lines from oil pump (12) and take down pump with cover (12) after unscrewing bolts (13). Remove spring (14). Release screws (9) of shaft section (10). Turn coupling to adjust the timing until the mean value of all cylinders at full load and correct charge air pressure will conform to the acceptance test sheet within +/- 4 bar.

Retighten screws (9) by torque wrench as under Section 3.5, item 16. Verify adjustment. Disconnect pipe (3) (page 1) with testing outfit and spill pipe. Tighten injection pipe as in 3.5, item 31 and refit bleed plug. Fit spring (14), mount oil pump (12) and connect piping.

⚠ Since the pump is preset at the factory for equal fuel deliveries, an adjustment should preferably be performed on a pump testbed of the Deutz Service.

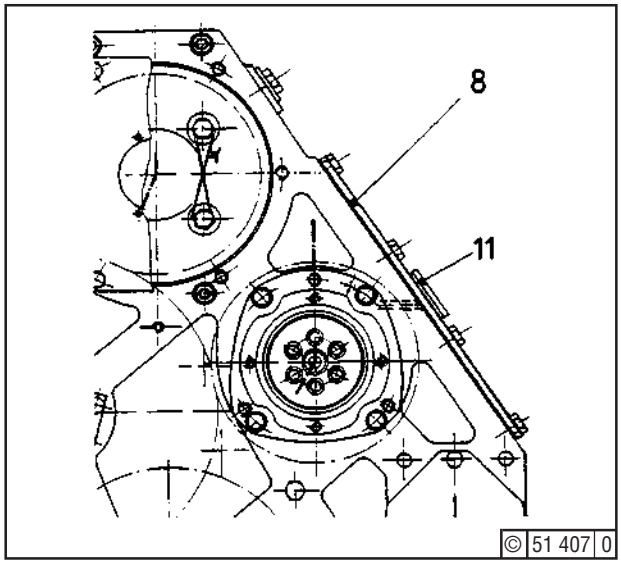

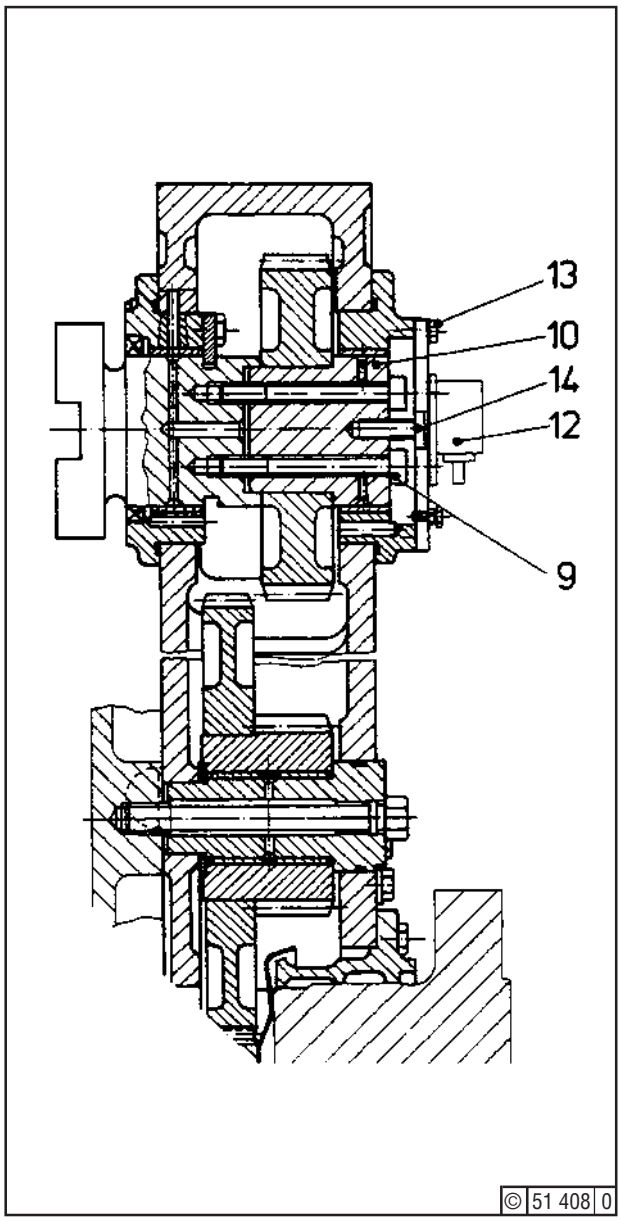

Job Cards:
- 07.03.01
- 07.03.02

Tools:
- Standard tools
- Injector removing device (Sect. 1.8)
- Deutz S1 lubricating compound (Sect. 3.6)
- Deutz F5 lubricating compound (Sect. 3.6)

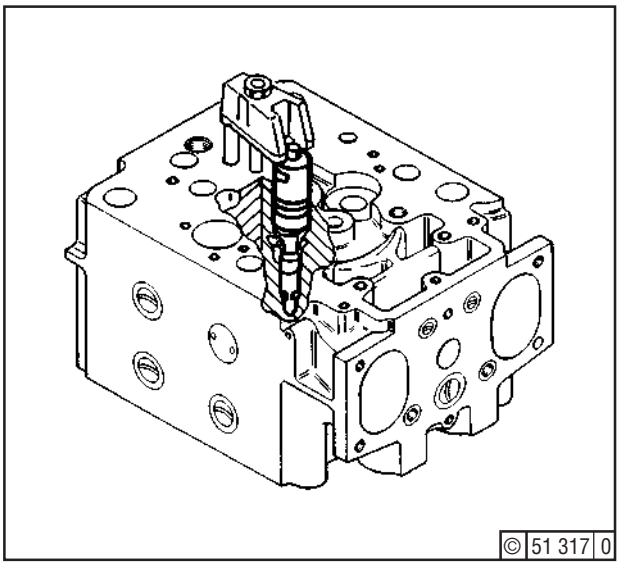

Job

Removing the Injector (see also Fig. 3):
Stop engine. Open indicator valves. Remove injection piping. Remove rocker chamber cover. Unscrew hex nut (22) and take down clamping pad (23) along with domed washer (24). Screw stud (25) of the injector removing device into cap (31). Place yoke (26) in position. Fit washer(2)7 and screw on hex. nut (28).

Pull injector out of cylinder head by turning the hex. nut (28). take off injector removing device.

⚠ Remove sealing washer (29) from cylinder head, unless baked on.

Carefully clean injector receiving bore in head, especially seat of washer (29), and cover up.

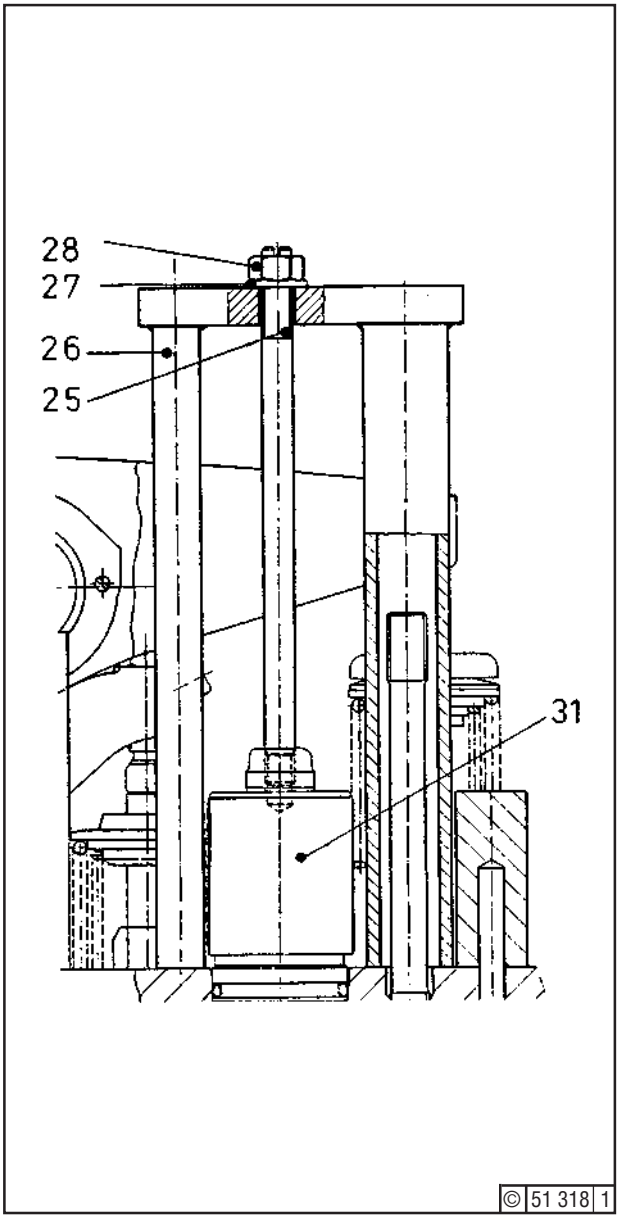

Refitting the Injector:
Apply light film of Deutz S1 heat-resistant lubricating compound to new washer (29) and its seat, as well as to sliding surface of nozzle (15). Fit washer on injector. If necessary, fit new O-seals 2 and apply light film of Deutz F5 compound. Install injector with the aid of dowel pin (30). Clean joints of injection piping.

⚠ For fitting the injection piping, see job 07.03.01.

Then fit clamping pad (23) along with domed washer (24). Next, tighten hex., nut (22) as specified (Section 3.5, item 23).

Mount rocker chamber cover, bleed fuel system (job 07.03.02).

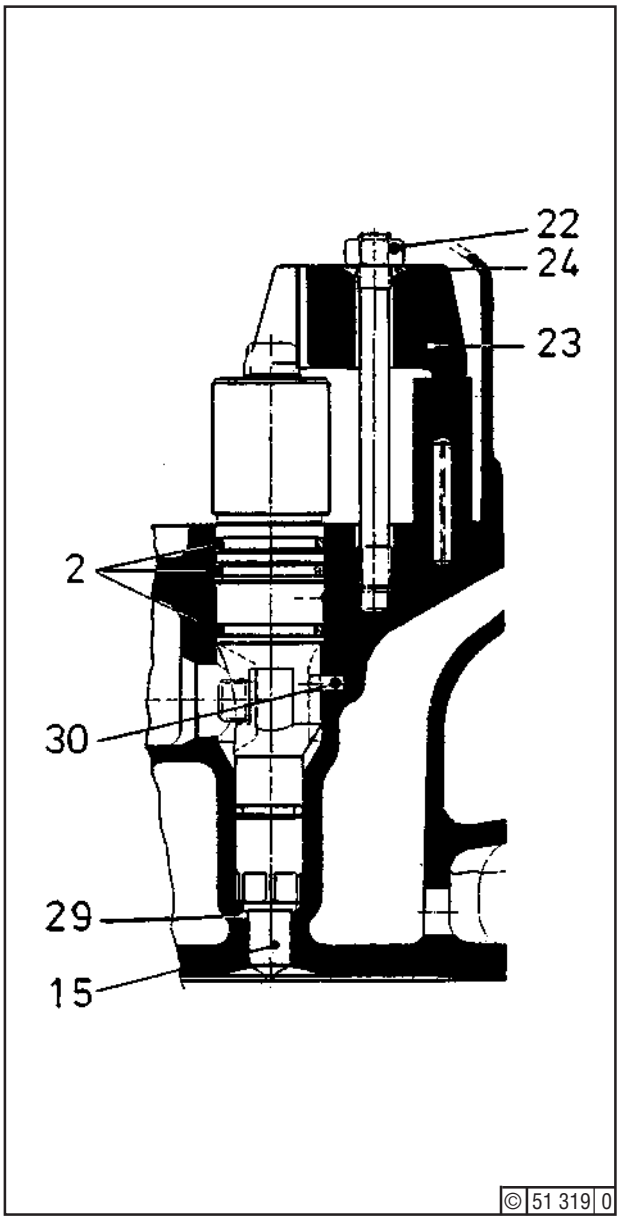

Job Cards:
- 07.03.01
- 07.03.02

Tools:
- Standard tools
- Removing device (Section 1.8)
- Deutz S 1 lubricating compound (Section 3.6)
- Deutz F 5 lubricating compound (Section 3.6)

Job

Removing the Injector:

Stop engine. Open indicator valves. Cut out injector coolant pump. Disconnect injection and coolant piping, paying attention to the seals. Remove rocker chamber cover. Unscrew hex. nut (22) and remove clamp (23) with domed washer (24). Remove screw (21). Screw stud (25) of removing device into adapter (19). Fit crossbar (26), washer (27) and hex. nut (28). Withdraw injector by turning nut (28). Remove device.

⚠ Be sure to remove washer (29) from cylinder head.
Carefully clean injector receiving hole in head, especially seat of washer (29), and cover up.

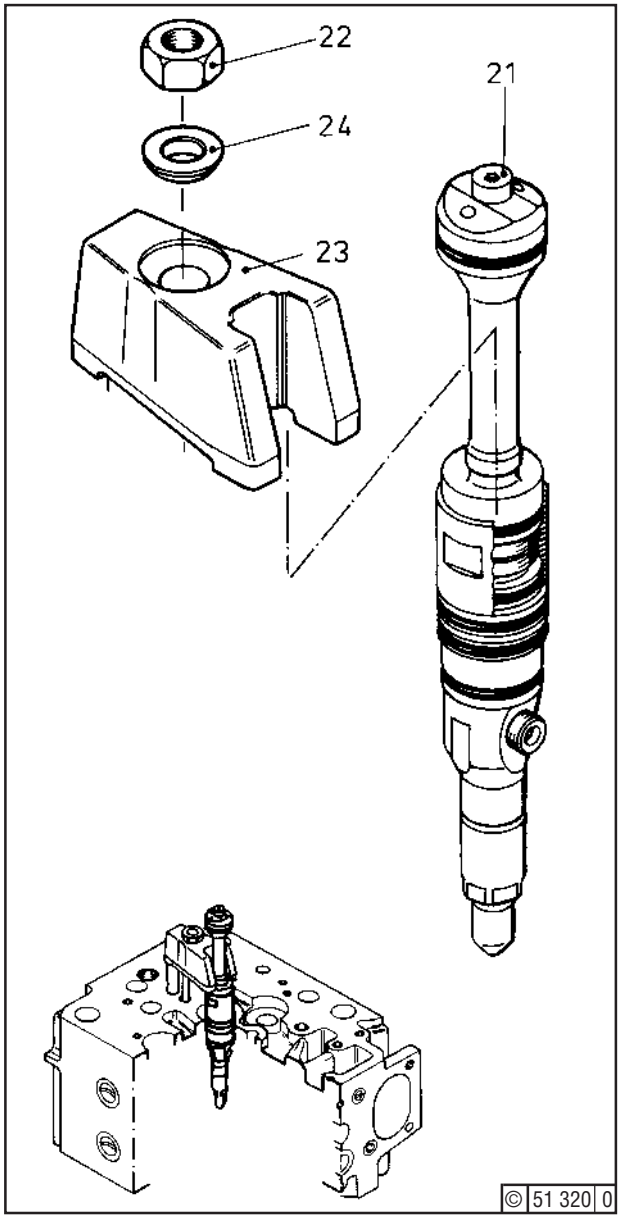

Refitting the Injector

Apply light film of Deutz S1 heat-resistant lubricating compound to new washer (29) and its seat, as well as to sliding surface of nozzle (15). Fit washer on injector. If necessary, fit new O-seals 2 and apply light film of Deutz F5 compound. Install injector with the aid of dowel pin (30). Clean joints of injection piping.

⚠ For fitting the injection piping, see job 07.03.01.

Then fit clamping pad (23) along with domed washer (24). Next, tighten hex. nut (22) as specified (Section 3.5, item 23).
Mount rocker chamber cover, bleed fuel system (job 07.03.02).

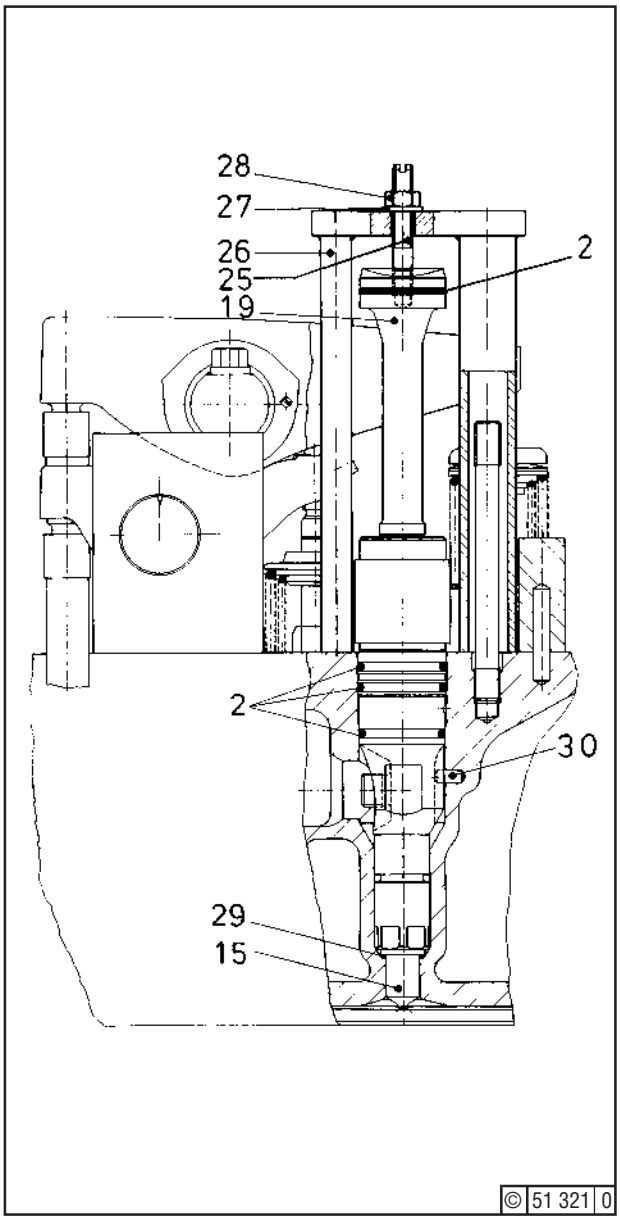

Inspection / Testing

Apart from the intervals specified in the Maintenance Schedule, injectors must be inspected and tested whenever they fail to work properly.

Changes in normal exhaust colour and exhaust gas temperatures indicate that injectors are not in good working order, which may to be due to blocked nozzle holes, binding nozzle needle or leaky needle seat.

Following removal (or overhaul) of injectors, check these for correct spray pressure, tightness, and spray pattern.

☞ As test fuel, use only clean diesel fuel.

Tools:

- Standard tools
- Injector testing device (Section 1.8)

Aid:

- Blotting paper
- Lubricating compound Deutz F5 (Section 3.6)

Detergents:

- O-seals
- Gasket

Job Cards:

- 01.05.04
- 07.07.01
- 07.09.01

Job:

⚠ Keep your hands from the fuel jet!
When it penetrates the skin tissue, blood poisoning may be the result.

- Clean exterior of injector removed.
- Install injector in testing device, clamp down by wing screws, and connect injection line to injector.
- Operate hand lever vigorously several times.

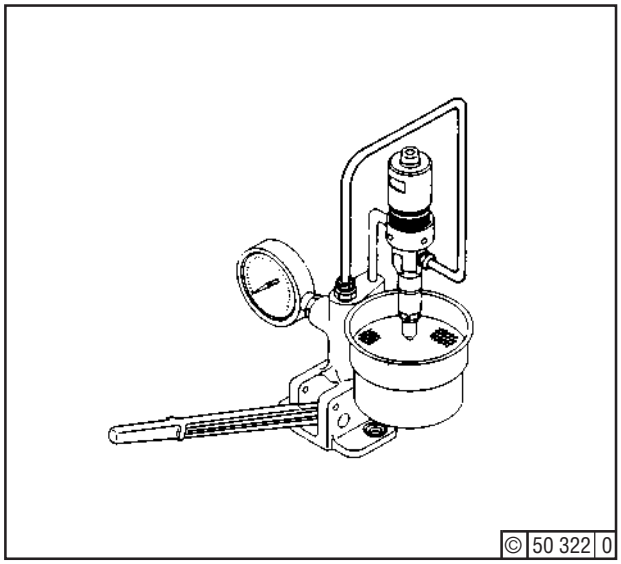

Fig. 1 Injector testing device

Checking the Injection Spray Pressure

☞ For setting the pressure observe pressure gauge.

- Force down hand lever slowly until the nozzle opens.

  Testpressure: 350 bars.

- If the pressure reading at this moment deviates from the specified pressure, correct pressure by means of adjusting screw (10).

© 0199

Correcting the Injection Spray Pressure

- For this purpose unscrew cap (12) and loosen sleeve (11).
- Adjust pressure with adjusting screw (10) and secure by sleeve (11).
- Check O-seals (2) and gasket (13), and replace, if necessary.
- Apply some lubricating compound Deutz F5 to O-seals. Screw on cap (12).

Checking the Nozzle for Tightness:

- Operate hand lever until the gauge reads 35 bars (35 kp/cm2) less than the specified pressure.
  The nozzle is tight, if there is no afterdribble within 10 seconds.

Buzzing and Atomizing Tests

- Operate hand lever quickly (one or two downstrokes per second) and check that the nozzle emits a buzzing sound.

Jet Test

⚠ Keep your hands from the fuel jet!

- Keep a sheet of blotting paper in front of the nozzle and check that all nozzle orifices are free so as to produce a regular spray pattern.

If any one of the tests is not satisfactory, recondition injector (job 07.09.01).

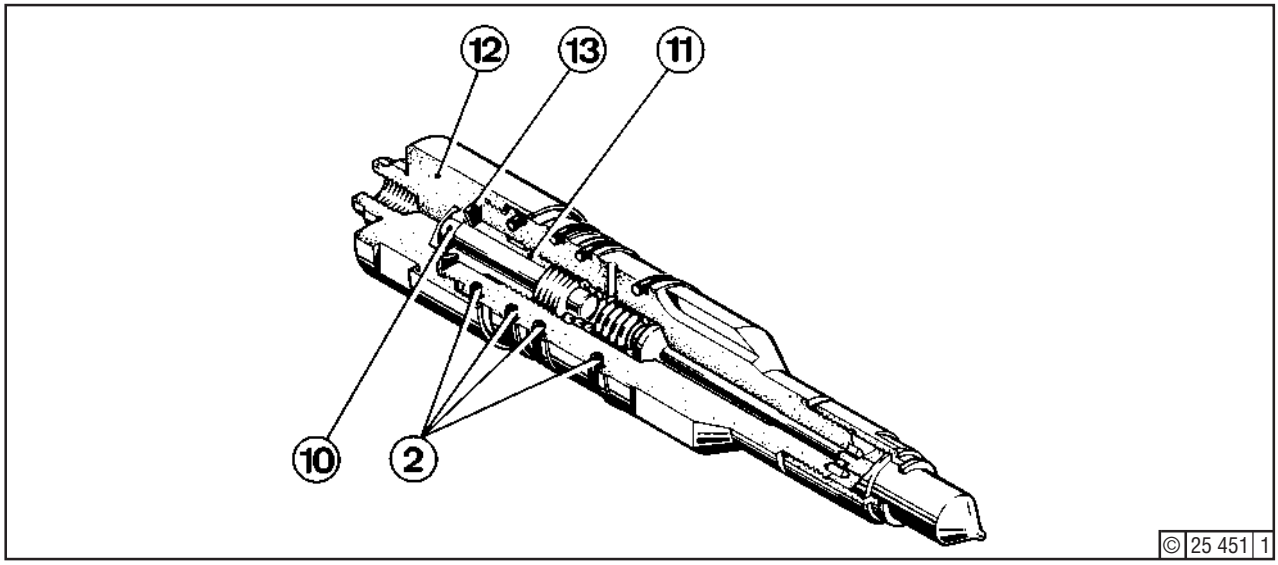

Fig. 2 Injector, uncooled

Inspection / Testing

Apart from the intervals specified in the Maintenance Schedule, injectors must be inspected and tested whenever they fail to work properly.

Changes in normal exhaust colour and exhaust gas temperatures indicate that injectors are not in good working order, which may to be due to blocked nozzle holes, binding nozzle needle or leaky needle seat.

Following removal (or overhaul) of injectors, check these for correct spray pressure, tightness, and spray pattern.

☞ As test fuel, use only clean diesel fuel.

Tools:

- Standard tools
- Injector testing device (Section 1.8)

Aids:

- Blotting paper
- Lubricating compound Deutz F5 (Section 3.6)

Detergents:

see also Fig. 2

- O-seals
- Gasket

Job Cards:

- 01.05.04
- 07.07.01
- 07.09.01

Job:

⚠ Keep your hands from the fuel jet! When it penetrates the skin tissue, blood poisening may be the result

- Clean exterior of injector removed.
- Install injector in testing device, clamp down by wing screws, and connect injection line to injector.
- Operate hand lever vigorously several times.

Checking the Injection Spray Pressure

☞ For setting the pressure observe pressure gauge.

Force down hand lever slowly until the nozzle opens.

Test pressure: 350 $^{+1}$ bars

- If the pressure reading at this moment deviates from the specified pressure, correct pressure.

See also "Correcting the Injection Spray Pressure"

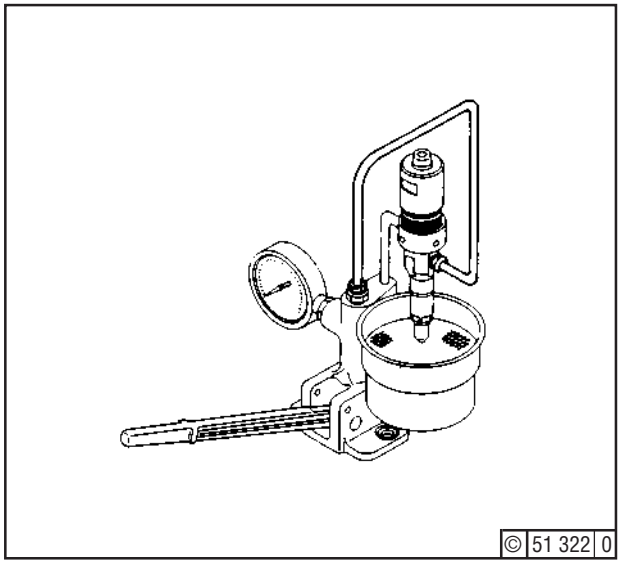

Fig. 1 Injector testing device

© 0199

Correcting the Injection Spray Pressure

- For this purpose turn clamping nut (18) to remove adapter (19) from housing (4).
- Release sleeve (11).
- Set correct pressure with hexagon of adjusting screw and retighten sleeve (11).
- Check 0-seals (2) and gasket (17) and replace, if necessary.
- Apply some lubricating compound Deutz F5 to 0-seals.

☞ Make sure that gasket (17) is in correct position, otherwise coolant openings will be closed.

- Screw clamping nut (18) through one winding on housing (4).
- Lower adapter (19) located by dowel pin (20) down to nut (18) and retain.
- Tighten clamping nut (18).

Checking the nozzle for Tightness:

- Operate hand lever until the gauge reads 35 bars (35 kp/cm2) less than the specified pressure.
  The nozzle is tight, if there is no afterdribble within 10 seconds.

Buzzing and Atomizing Tests

- Operate hand lever quickly (one or two downstrokes per second) and check that the nozzle emits a buzzing sound.

Jet Test

⚠ Keep your hands from the fuel jet!

- Keep a sheet of blotting paper in front of the nozzle and check that all nozzle orifices are free so as to produce a regular spray pattern.

If any one of the tests is not satisfactory, recondition injector (job 07.09.01).

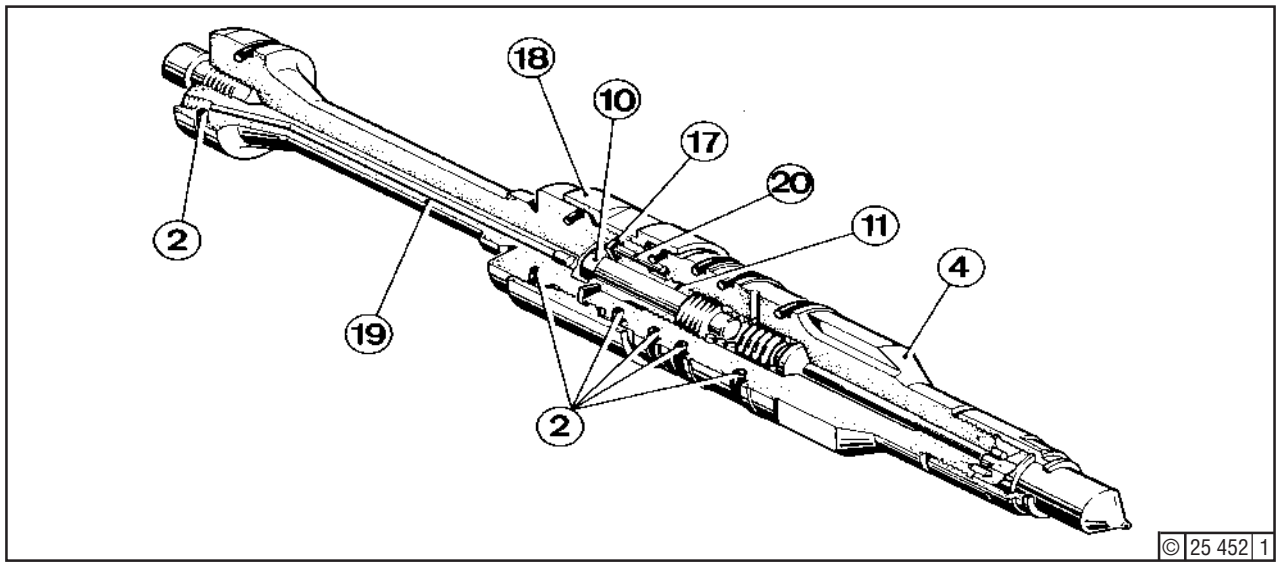

Fig. 2 Injector, cooled

Reconditioning

When injectors are due for reconditioning according to the Maintenance Schedule, replace nozzles.

☞ Exercise utmost cleanliness when reconditioning an injector. Use no metallic tools for cleaning, apart from wire brushes.

The job should preferably be entrusted to a specialized workshop.

Job Cards:

- 07.07.01
- 07.08.01

Tools:

- Standard tools
- Deutz S1 compound (Section 3.6)
- Deutz S2 compound (Section 3.6)

Job:

Removing the Nozzle

Remove injector as per Job Card 07.07.01. Unscrew cap (12) - Fig. 1 - and remove gasket (13). Release sleeve (11), turn out adjusting screw (10) by a few turns until spring (9) is unloaded. Clamp housing (4) at its flats in a vice. Using wire brush, **carefully** remove combustion residues from the surface of the nozzle element (15), **avoiding damage to the nozzle bores**, and remove washer (29). Then lay or suspend the injector in diesel fuel to soak for 24 hours in order to soften the layer of carbon deposit between nozzle nut (7) and nozzle element (24). Do not stand on end, otherwise the nozzle tip may be damaged.
When releasing nozzle nut (7), nozzle element (15) must be consistently contacting the flat surface of housing (4), otherwise dowel pin (6) and possibly the bore in nozzle element (15) are liable to be damaged. For this purpose, place a cleaning rag over the nozzle, and press the nozzle with the hand against the housing 4. When released, remove stop bush (5) and nozzle element (15) with needle (16) from housing (4).
Clean all components in diesel fuel. Renew any damaged components.

⚠ To prevent corrosion, be sure to keep your fingers away from the lapped faced of housing (4), nozzle element (15) and needle (16), once cleaning is finished.

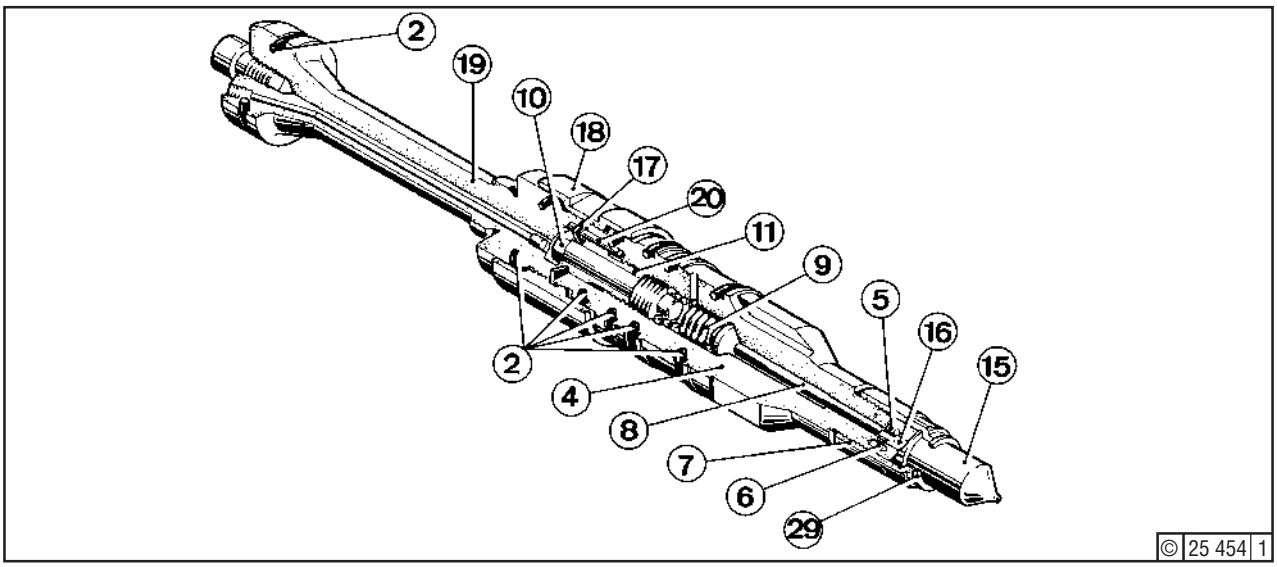

Fig. 1

© 0585

Inspecting the Nozzle
Introduce needle (16) - Fig. 2 - with diesel fuel into nozzle element(15). When pulled out halfway by its thrust pin, the needle must sink back onto its seat by its own weight. Should the needle (16) bind, it must be renewed as a unit with nozzle element (15). Nozzles may not be reworked.

⚠ Since new nozzles are supplied in greased condition, clean them in diesel fuel before fitment.

Refitting the Nozzle
Clamp housing (4) - Fig. 1 - in a vice with flat face at top. If dowel pin (6) presents shear marks, renew pin. Place nozzle element (15) with needle (16) on the carefully cleaned and dried flat surface. Apply Deutz S2 compound to thread of nut (7) and pressure face between nozzle element (15) and nut (7).
Tighten nozzle nut (7) as specified (Section 3.6, item 50).

⚠ Do not tighten the nozzle nut beyond the value specified, otherwise difficulties may be encountered when releasing at a future date.

Set injector with testing outfit (Job Card 07.08.01), and check setting. To prevent baking on in the cylinder head, equip injector with new washer (29) and apply heat-resistant Deutz S1 to nozzle element (15) and to seat of injector. Install injector in cylinder head (Job Card 07.07.01).

Dismantling the Injector as a Whole
Unscrew cap (12). Turn out sleeve (11) and adjusting screw (10). Turn housing (4) upside down to take out spring (9) and plunger (8). Remove nozzle as already described. Clean all components. Renew O-seals(2) and gasket (13).

Reassembling the Injector as a Whole
Introduce plunger (8) and spring (9) into cleaned housing (4). Turn in adjusting screw (10) and sleeve (11) through a few threads. For installing the nozzle and setting of injector, see ”Refitting the Nozzle”.

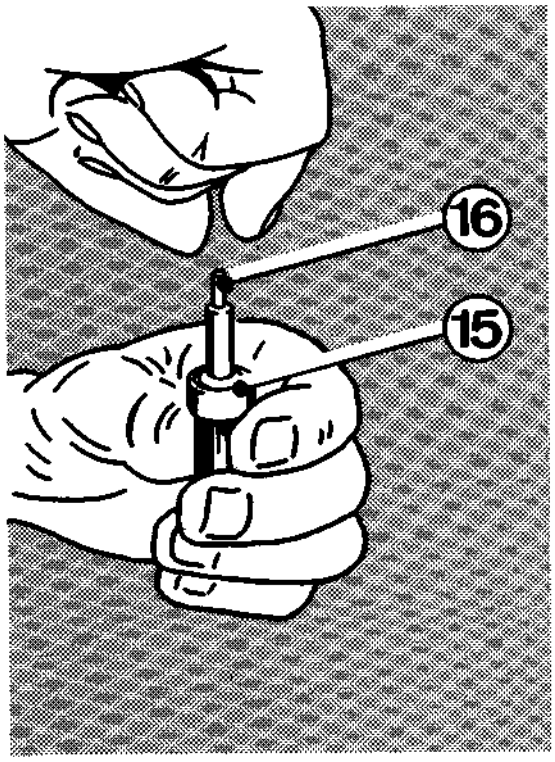

© 24 910 1

Fig. 2

Reconditioning

When injectors are due for reconditioning according to the Maintenance Schedule, renew nozzles.

☞ Exercise utmost cleanliness when reconditioning an injector. Use no metallic tools for cleaning, apart from wire brushes.

Job Cards:

- 07.07.01
- 07.08.01

Tools:

- Standard tools
- Deutz S1 compound (Section 3.6)
- Deutz S2 compound (Section 3.6)

Job

Removing the Nozzle

Remove injector as per Job Card 07.07.01. Release clamping nut (18) - Fig. 1 -, thus separating adapter (19) from housing (4). Remove gasket (17). Release sleeve (11) and turn out adjusting screw (10) by a few turns until spring (9) is unloaded. Clamp housing (4) at its flats in a vice. Using wire brush, **carefully** remove combustion residue from the surface of the nozzle element (15), **avoiding damage to the nozzle bores.**

Remove washer (19) - if not lying in the cylinder head. Then lay or suspend the injector in diesel fuel to soak for 24 hours in order to soften the layer of carbon deposit between nozzle nut (7) and nozzle element (24). Do not stand on end, otherwise the nozzle tip may be damaged. When releasing nozzle nut (7), nozzle element (24) must be consistently contacting the flat surface of housing (4), otherwise dowel pin (6) and possibly the bore in nozzle element (24) are liable to be damaged. For this purpose, place a cleaning rag over the nozzle, and press the nozzle with the hand against the housing (4). When released, remove stop bush (5) and needle (16). Clean all components in diesel fuel. Renew and damaged components.

⚠ To prevent corrosion, be sure to keep your fingers away from the lapped faces of housing (4), nozzle element (15) and needle (16), once cleaning is finished.

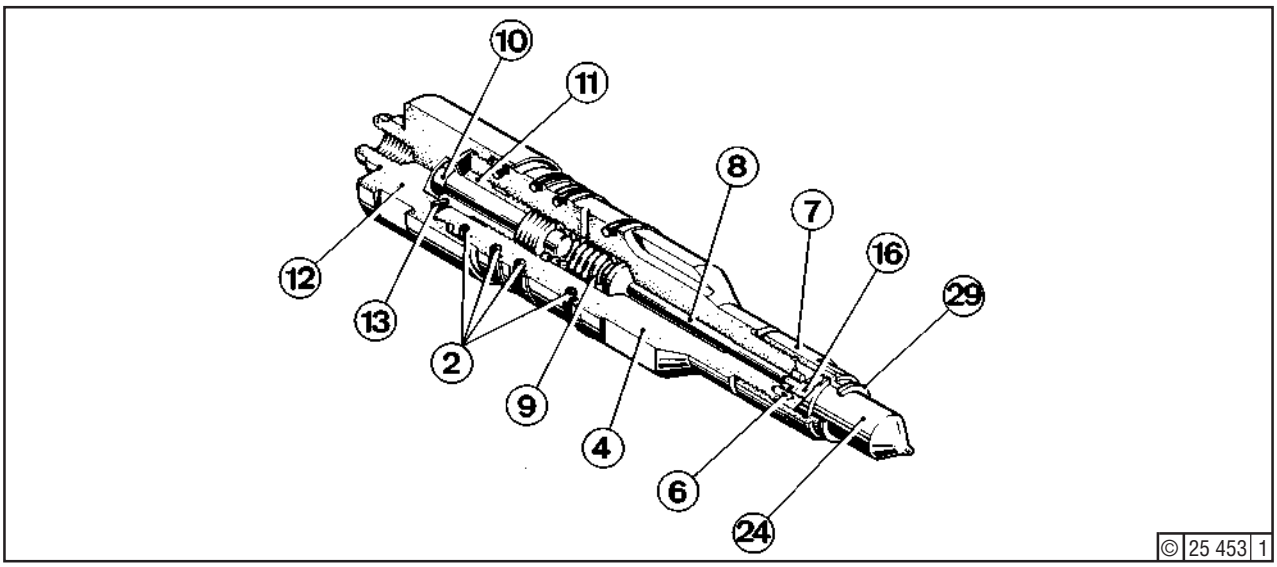

Fig. 1

Inspecting the Nozzle
Introduce needle (16) (Fig. 2) with diesel fuel into nozzle element (15). When pulled out halfway by its thrust pin, the needle must sink back onto its seat by its own weight. Should the needle (16) bind, it must be renewed as a unit with nozzle element (15). Nozzles may not be reworked.

⚠ Since the nozzles are supplied in greased condition, clean them in diesel fuel before fitment.

Refitting the Nozzle
Clamp housing (4) (Fig. 1) in a vice with flat face at top. If dowel pin (6) presents shear marks, renew pin. Place nozzle element (15) with needle (16) and stop bush (5) on the carefully cleaned and dried flat surface. Apply Deutz S2 compound to thread of nut (7) and pressure face between nozzle element (15) and nut (7).
Tighten nozzle nut (7) **as specified (Section 3.6, item 50).**

⚠ Do not tighten the nozzle nut beyond the value specified, otherwise difficulties may be encountered when releasing at a future date.

Set injector with testing outfit (Job Card 07.08.01), and check setting. To prevent baking on in the cylinder head, equip injector with new washer (29) and apply heat-resistant Deutz S1 to nozzle element (15) and to seat of injector. Install injector (Job Card 07.07.01).

Dismantling the Injector as a Whole
Unscrew clamping nut (18), separate adapter 19 from housing (4). Remove gasket (17). Screw out sleeve (11) and adjusting screw (10). Turn housing (4) upside down to take out spring (9) and plunger (8). Remove nozzle as already described. Clean all components. Renew O-seals (2) and gasket (17).

Reassembling the Injector as a Whole
Introduce plunger (8) and spring (9) into cleaned housing (4). Turn in adjusting screw (10) and sleeve (11) through a few threads. For further reassembly and setting of injector, see ”Refitting the Nozzle”.

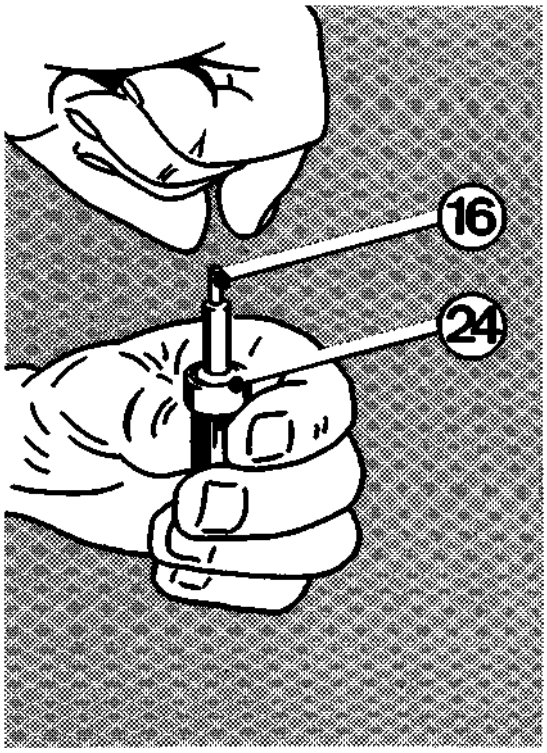

© 24 911 2

Fig. 2

Servicing

Cleaning fuel duplex filter

While the engine is running, only one of the two filter chambers should be operative, lever (7) - Fig. 1 - of the 3-way cock being in the LH or RH position accordingly.
Should the fuel pressure fall off, or if a red indicator appears in the window of the pressure differential monitor (30) - Fig. 2 - (if provided), change over to the other filter chamber and clean the soiled one immediately. When running on distillate fuel, a paper filter is used; when running on MDF blend or heavy fuel, a strainer filter is used.

The pressure differential monitor indicates the degree of soiling and thus the deadline for cleaning the filter. If the lever (7) of the 3-way cock is at the RH position, the LH chamber is in operation, and vice versa.

Interval for Filter Cartridge Change and Cleaning Filter Chamber

Changing of the cartridge and cleaning of the filter chamber are due when the window is filled to about 75 % by the red indicator or after 500 running hours at the latest.

The following maintenance work is also necessary under certain conditions:

- Change filter cartridge and clean filter chamber about 25 running hours after commissioning new engines or engines which have been shut down for more than 3 months.
- Change filter cartridge and clean filter chamber about 25 running hours after every major plant repair job involving the fuel system.

Job:

Place lever (7) of 3-way cock in the appropriate position. Open shut-off valve (10) of leakage line and allow filter chamber to drain empty. Undo hex. bolt (2). Take off cover (1).

Allow filter chamber to drain completely, otherwise dirt may pass to the clean side.

Tools:

- Standard tools
- Diesel fuel
- Cleaning brush

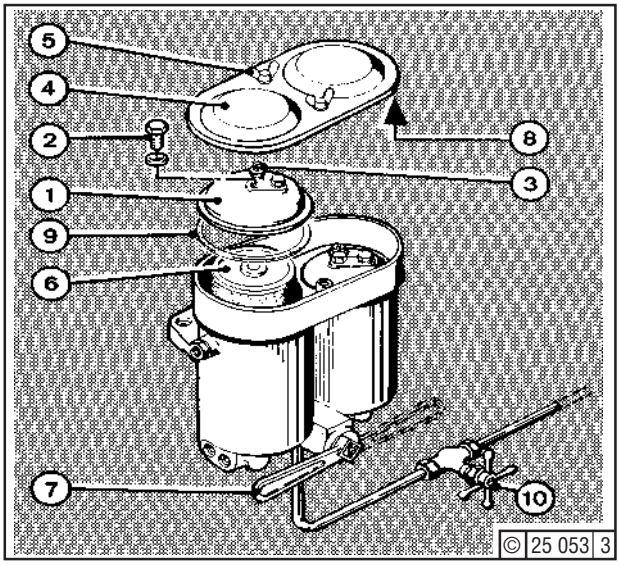

Fig. 1

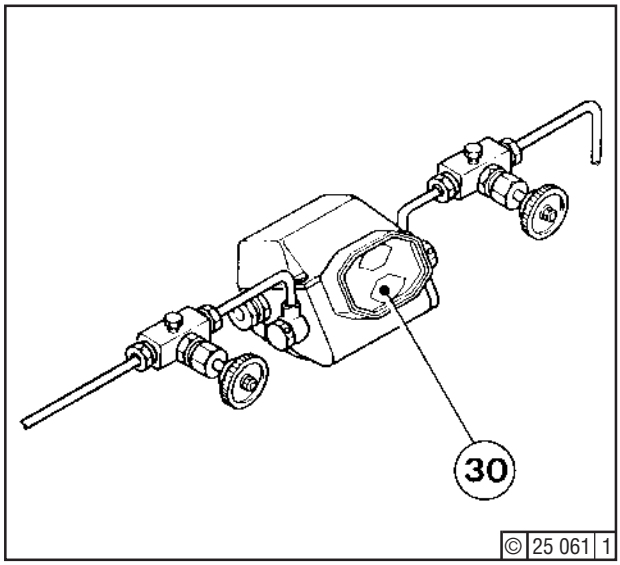

Fig. 2

© 0289

Take out element (6). Wash out any contamination in filter housing with diesel fuel and brush. Clean strainer filter in diesel fuel as well. Renew filter cartridges. By no means refit any damaged paper filter cartridges. Before reassembling, check condition of O-seal (9) and gasket (8) - renew if necessary. Install element (6) and fit cover (1).

For bleeding the cleaned chamber, open screw (3) through one or two turns. With the engine running, slowly move cock lever (7) to the intermediate position (both chambers becoming operative) until air noticeably comes out through opening of screw (3). Once fuel free from bubbles comes out, close screw (3) and place lever (7) in the ”clean chamber” position. Then close shut-off valve (10) of the leakage line.

© 0289

Job

Removing Pump

Close shut-off valves from and to daily service tank. Disconnect fuel piping from pump, draining fuel emerging into a suitable receptacle. Unscrew bolts (1) and (2), and carefully remove pump.

Job Card:

- 07.03.02

Tools:

- Standard tools
- MOLYCOTE Longterm 2 (Sect. 3.6)

Refitting Pump

Prior to refitting the pump, apply ”MOLYCOTE Longterm 2” to splines at both ends of torsion rod (3). Place splines in the correct position. Fit pump with intact gaskets (4) and (5).
Connect piping and open shutoff valves.

Bleeding Pump

For bleeding feed pump, including piping, see job 07.03.02.

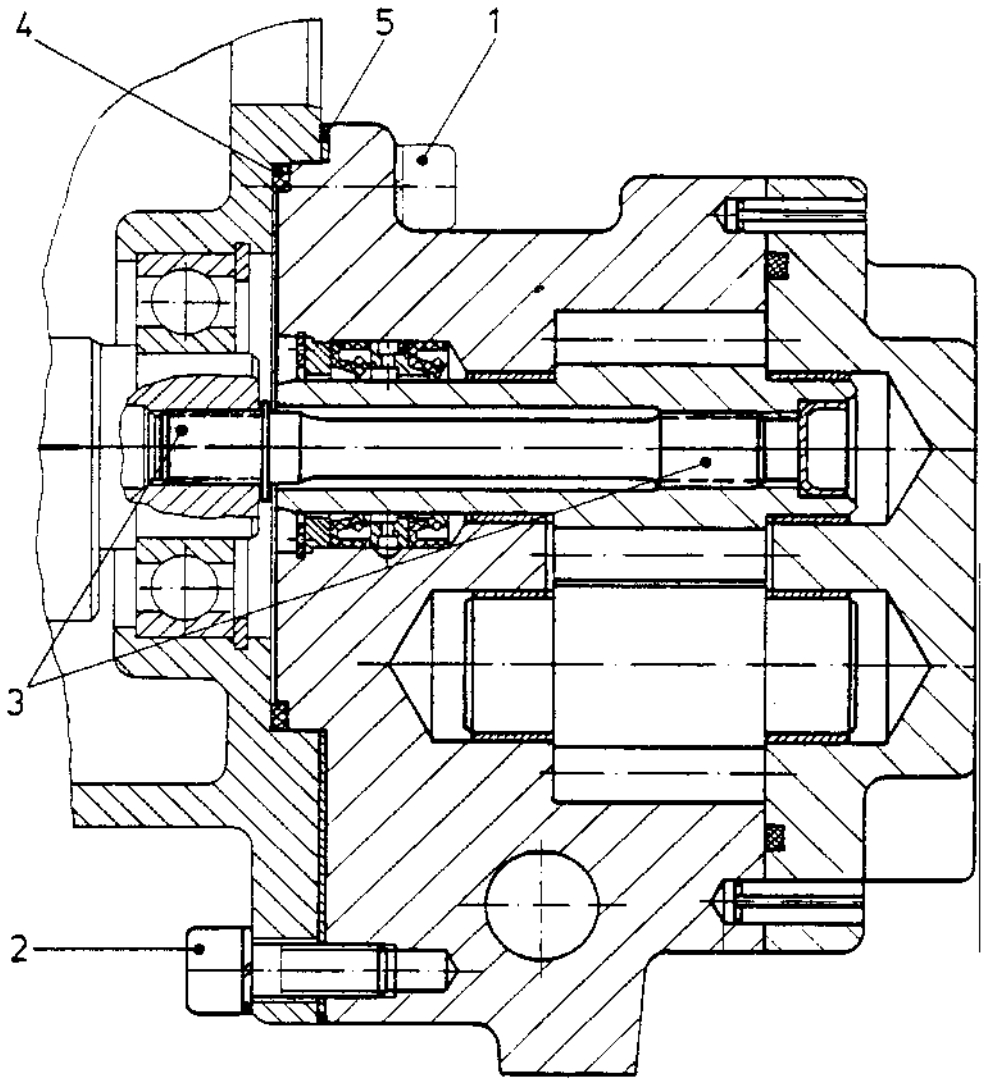

© 51 323 0

© 0682

This page intentionally left blank

When working on the lubricating oil system, the following safety precautions and environment-protective regulations are to be observed:

- Beware of hot oil!
- Prior to any dismantling work, shut down engine (see Section 4.4). Collect any escaping oil in a suitable receptacle and dispose of properly in accordance with anti-pollution regulations.
- When taking oil samples and servicing oil filters, dispose of escaping oil and used filter cartridges in accordance with anti-pollution regulations.
- Service lube oil centrifuges only after engine has been shut down. Dispose of dirt layers and oil in accordance with anti-pollution regulations.

© 0683

This page intentionally left blank

Inspection

Regular inspection of the lube oil is essential for determining the engine's working condition.

☞ With the engine running, oil samples should preferably be taken by the same man at some 60°C oil temperature.

Job:

Hold a waste container under hose connector (2). Slacken bolt (1) until oil slowly comes out through connector (2). Drain an initial quantity of 5 litres, so any impurities will be removed from the filter body. Then drain about 1 litre into a clean container and send this in completely sealed condition to a laboratory with a tag or label giving the following information:

- Engine model and serial No.
- Purpose appropriate of the engine
- Rated power and speed
- Total engine running hours
- Oil brand and grade
- Utilized fuel
- Oil viscosity
- Total oil service hours and refill quantity during this period

Along with this sample of used oil, send in a sample of the oil in fresh condition.

☞ The analysis results should be taken as a basis for arranging with the oil suppliers a regular oil change period, taking also into consideration the cleanliness of the lube oil system, especially that of the engine's crankcase. Once the interior is coated with the oil residues, this invariably calls for renewal of the entire oil filling.

Tools:

- 1 litre container (sheet metal or plastics)

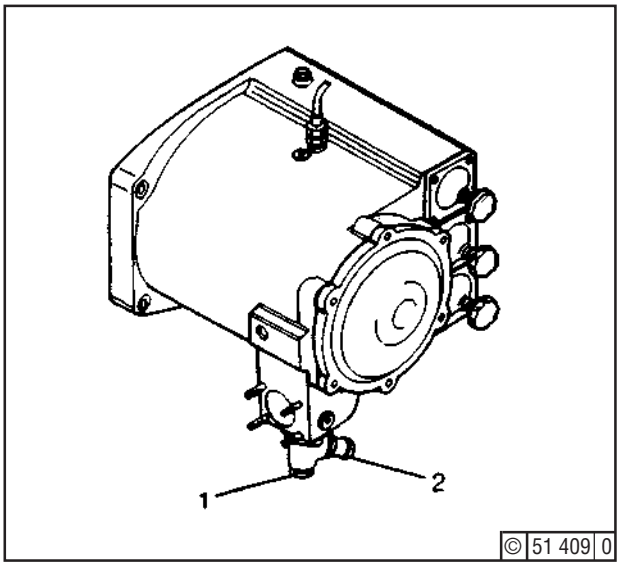

This page intentionally left blank

Inspection

Carry out inspection and servicing work on the lubricating system.

☞ Unsuitable lube oil may cause sticking of piston rings, seizure of pistons, hot running of bearings and increased wear and tear of the entire engine. Be sure, therefore, to use a lube oil meeting the minimum quality requirements specified (Section 6).

Tools:
- Standard tools

Job

Make a point of regularly observing oil pressures and temperatures in service and recording the readings every day.
Check the following oil levels:

- engine oil sump / tank
- turbocharger
- hydraulic governor, whrere provided

Carry out the following additional work:

- Check service gauge for combined filter (job 08.10.01)
- Make sure that all pipe unions and connections are tight.
- At larger intervals, lubricate by hand all bearings not connected to the main lube circuit or to the lubricator. This in particular applies to the governor/injection pump linkage joints.
- During the running-in program following overhaul work, check all accessible bearings for correct temperatures.

© 1283

This page intentionally left blank

Oil Change

The oil change period largely depends on the quality of the fuel and lube oil used, the quantity of oil in the engine lubrication system, the operating conditions, the lube oil consumption of the engine, and the efficiency of the filter.

For the above reasons, the manufacturer is unable to state standard times for lube oil change. The lube oil should be changed if, on the basis of oil examinations (see Job Card 08.01.01), there is any doubt regarding the further usability of the oil.

Job Cards:

- 08.00.01
- 08.01.01
- 08.02.01
- 08.10.01

Tools:

- Standard tools

Lube oil recommendations, dependent on fuel used and engine application, are given in Section 6.

Job:

With engine in hot condition, check that valves are properly positioned and drain oil from sump or extra tank, using the priming pump as required.

After opening drain and bleed holes, drain oil from filters, cooler and all piping.

Change paper microfilter (job. 08.10.01). Clean crankcase interior and oil tanks, as required.

For filling in the fresh oil, close all drain and bleed holes, fill in oil to top mark and bleed filters, etc., in the direction of flow. Check oil level while the engine is running and top up as required.

Make sure all piping is tight.

© 0185

This page intentionally left blank

Servicing

Dismantling of pump and inspection of gear shafts, bearings and relief valves.

Tools:

- Standard tools
- Puller
- Deutz DW 55 compound (Section 3.6)
- Deutz DW 48 compound (Section 3.6)
- Deutz DW 50 compound (Section 3.6)

Job Card:

- 04.08.01

Job

Removing the Pump (Fig. 1)

Stop engine. Disconnect suction line (1) and delivery line (2) from pump (3). Remove bleed and filling line (4). Unscrew bolts (5) and remove pump (3) from engine.

Dismantling the Pump

Unscrew bolt (10) - Fig. 2 - and take off washer (11). Remove driving gear (12) by puller and take out key (22). Unscrew hex. bolts (24) and take off cover (25) - Fig. 3 -. Undo cheese-head screws (6) and (7). Take off pump covers (8) and (9) from the pump body (14), paying attention to the two dowel sleeves (13). Remove gears (15) and (16) and inspect. If defective, renew. Clean all components and especially joint faces and oil passages. Inspect bearings (17) for scoring and gears for wear. Check that rotating faces (18) are free from friction marks.

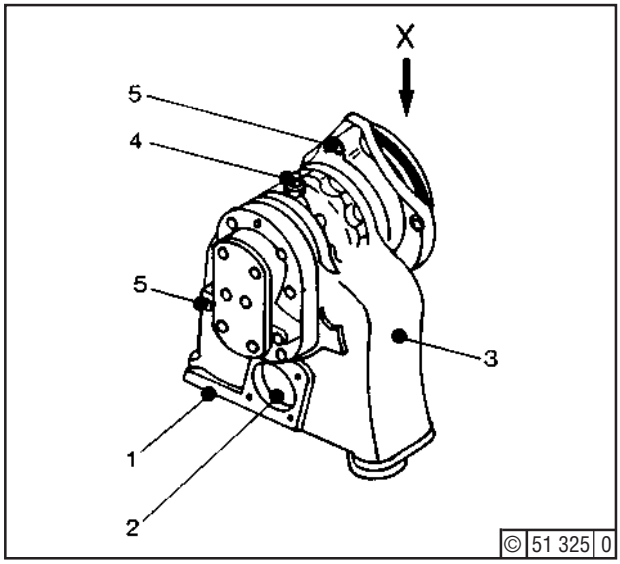

Fig. 1

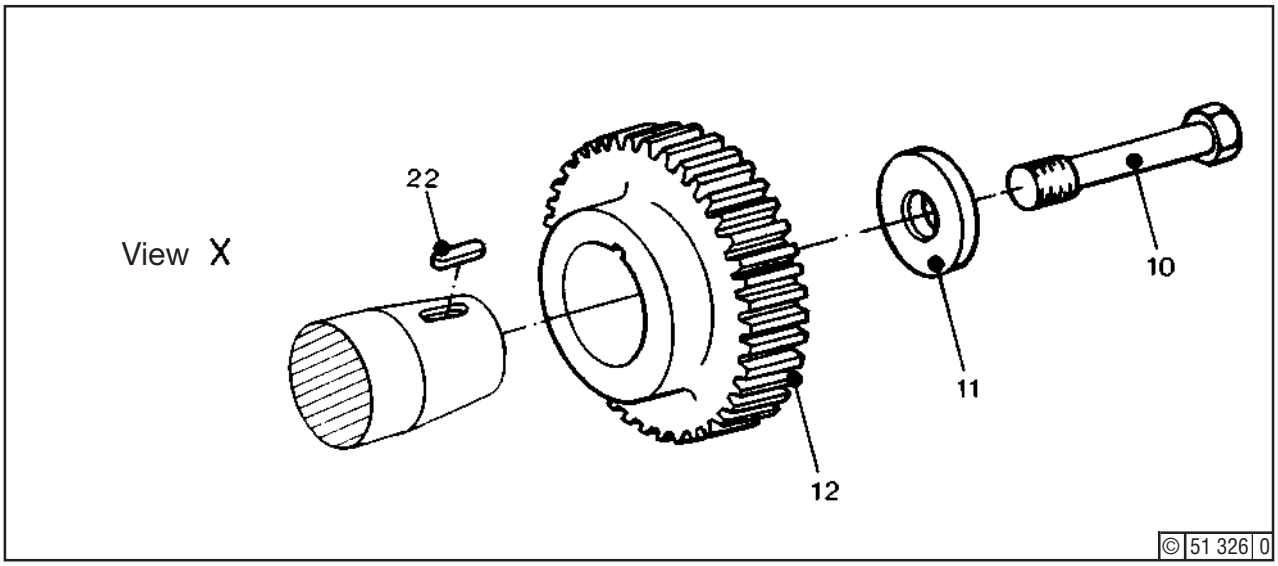

Fig. 2

© 1283

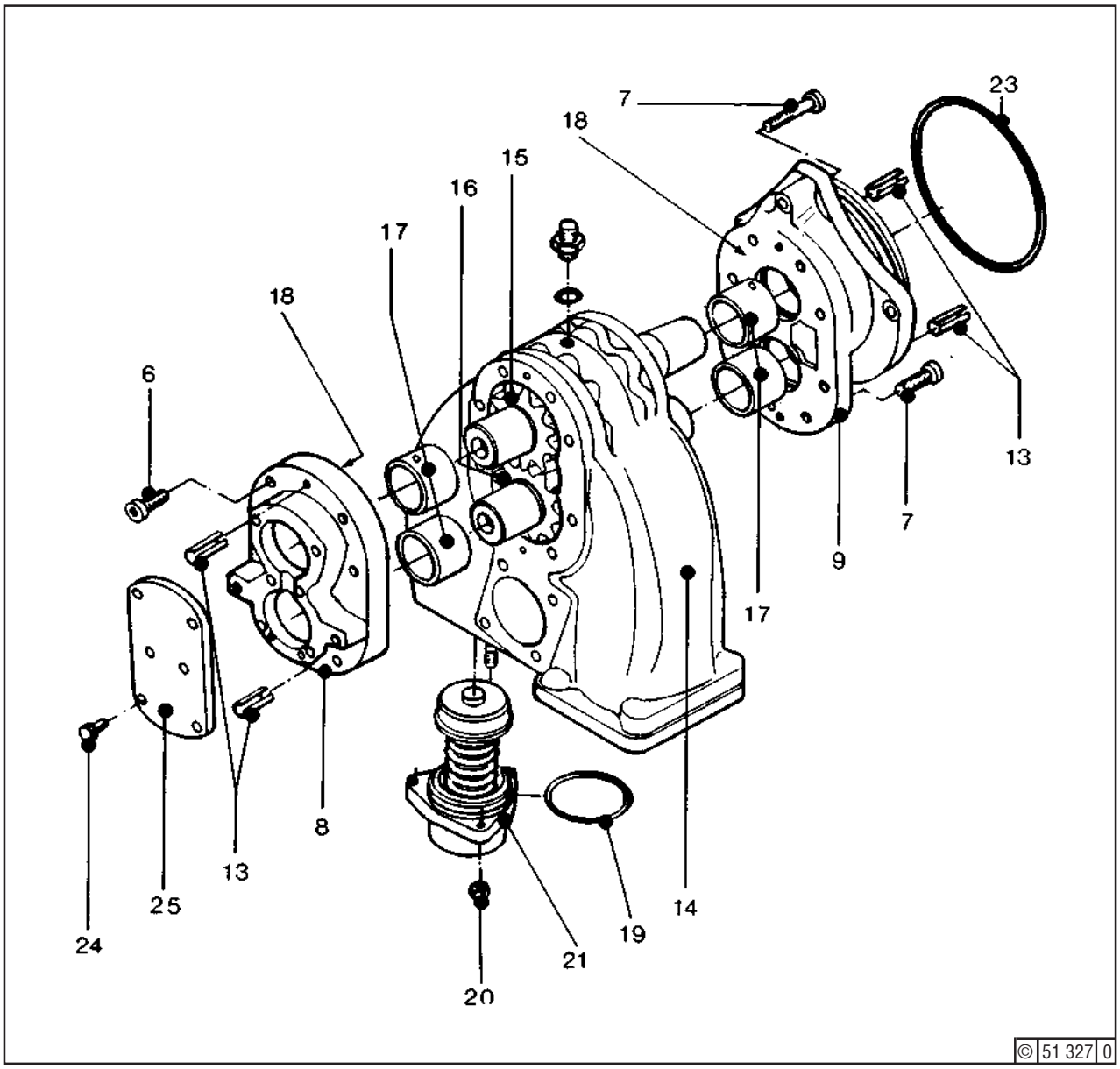

Fig. 3

Relief Valve (Fig. 3)
Unscrew nuts (20) and remove valve (21). Clean components. Check valve.

Reassembling the Pump
Install gear (15) (Fig. 3) in pump cover (9). Install key (22) - Fig. 2 - and fit gear (12). Screw bolt (10) with washer (11) in place and tighten with Deutz DW 55 locking compound (Section 3.5, item 22).
Apply Deutz DW 50 to sealing face of cover (8) - Fig. 3 -. Put cover (8) on body (14), locating it by dowel sleeves (13), and fit screws (6) with Deutz DW 55 locking compound.
Install gear (16) in body (14). Apply Deutz DW 50 to sealing face of cover (9). Place cover(9) with gear (15) on body (14), locating it by dowel sleeves (13), and fit screws (7) with DW 55 locking compound.
Turn gear (12) to check that gears (15) and (16) move freely in body. Check also side clearance of gears by moving gear (12) and gearshaft (16) from side to side (after screwing in one hex. bolt). If the side clearance is greater than 0.5 mm, the pump must be exchanged. Install relieve valve(21) with new O-seal (19) in body and tighten by hex. nuts (20).

Apply a continuous bead of Deutz DW 48 compound (bead not exceeding 3 mm in width for optimum sealing) to cover (8) - Fig. 4 -. Fit cover(25) and tighten by hex. bolts (24).

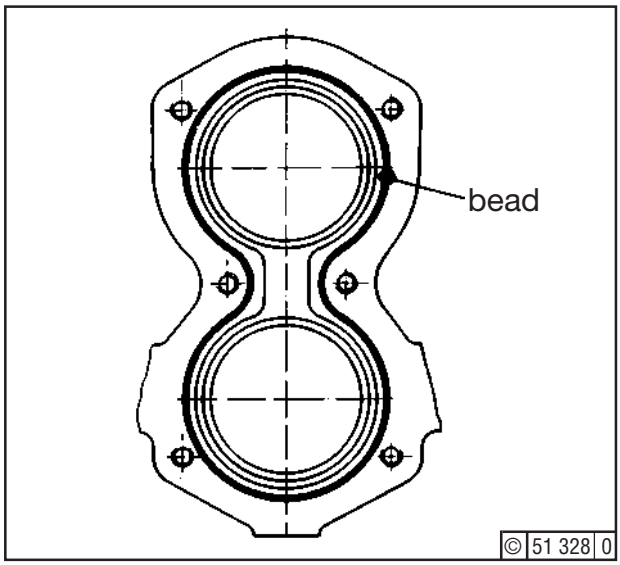

Fig. 4

Refitting the Pump (Fig. 5)
Secure pump (3) with new O-seal (23) by hex. bolts (5) to pump chest. Reconnect all piping: Fill pump with oil.

⚠ Make sure that pump never runs dry.
When putting pump back to service, check that it has to leaks.

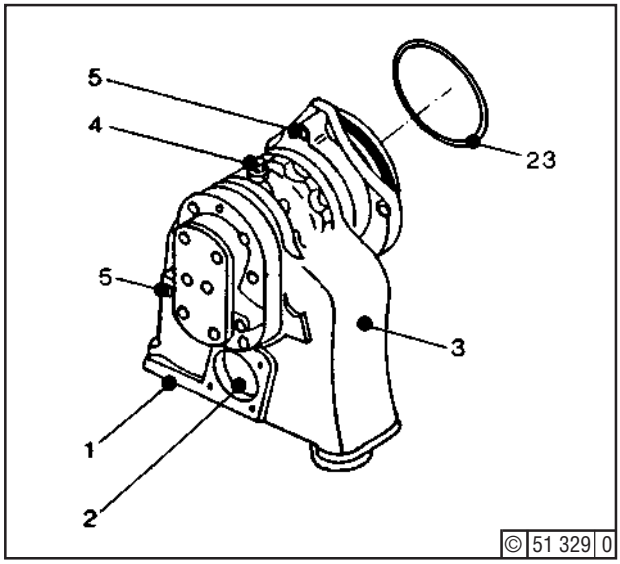

Fig. 5

© 1283

This page intentionally left blank

Servicing and Repair

Inserted in the lube oil primary flow is a filter combination comprising a paper microfilter preceding the wire edge filter (see also Job 08.10.01).
The wire edge filter can be equipped at option with a differential pressure warning system which responds in case of excessive contamination.

Servicing

- **Daily**
  - Turn rotary knob (5) through about 1 1/2 turns.

  ☞ Repeat this procedure on each edge filter element.

- Clean filter chamber and wire edge filter element:

  - 10 running hours after engine overhaul;
  - if resistance is felt when turning at the rotary knob;
  - when differential pressure alarm is given.

  ☞ Remove wire edge filter element only if absolutely necessary.

Repair

Renew wire edge filter element:

- at the intervals given in the maintenance chart;
- whenever the wire edge filter element is damaged.

Job

Removing and refitting wire edge filter element; cleaning filter chamber.

- Stop engine
- Remove drain plug (3) along with joint washer (2).
- Drain oil.

Tools:

- Standard tools

Aids:

- Pail
- Cleaning brush
- Diesel fuel

Job Card:

- 08.10.01

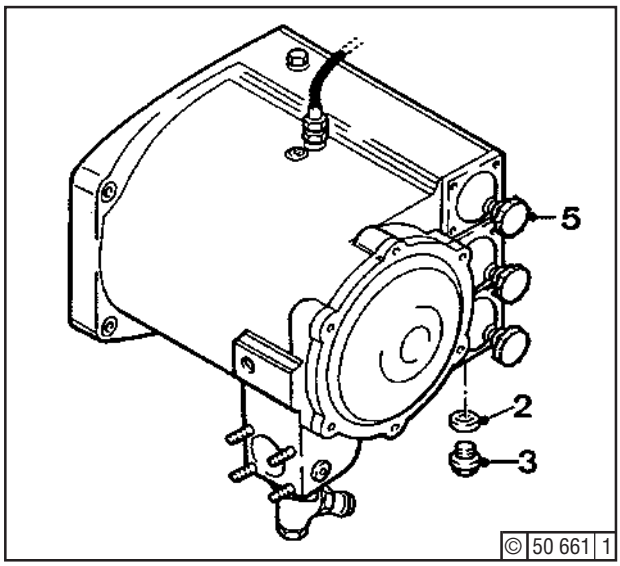

Fig. 1 Non-backflushing oil filter combination

© 0193

- Undo hex. nuts (9) - Fig. 2 - with withdraw edge filter element (14) from filter body.
- Remove square flange gasket (8).

  ☞ To prevent dirty cleaning fluid from getting inside the element, close open end with a cap of 55 mm dia.

- Dip element in diesel fuel, actuate rotary knob (5) alternately and clean element with the brush.
- Remove cap and blow out element from inside with filtered compressed air.

  ☞ If the filter wire is damaged or dented, renew the element.

- Plug up oil outlet hole (4) - Fig. 3 - in filter body.
- Clean filter chamber. Remove plug after cleaning.
- Insert drain plug (3) - Fig. 2 - along with washer (2).
- Refit filter element (14) with new flange gasket (8) in filter body.
- Tighten hex.nuts (9).

  ☞ Introduce filter element (14) in perfectly horizontal position so that it will not be damaged.

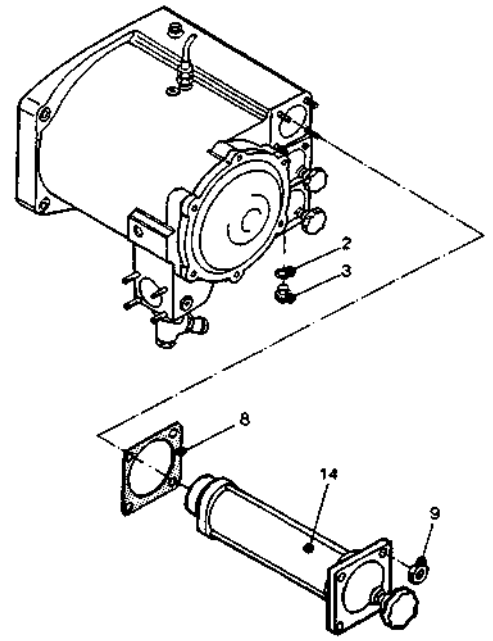

© 51 330 0

Fig. 2 Filter element

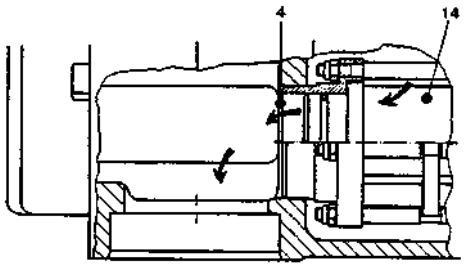

© 51 331 0

Fig. 3 Lube oil outlet hole

Servicing and Repair

Inserted in the lube oil primary flow is a filter combination comprising a paper microfilter preceding the wire edge filter (see also Job 08.10.01).
The wire edge filter can be equipped at option with a differential pressure warning system which responds in case of excessive contamination.

Servicing

- **Daily**
  - Turn rotary handle (5) through about 1 _ turns.
  - Press lever (18) down as far as it will go, and hold.
  - Turn rotary handle (5) again through about 1-2 turns.
  - Release lever (18).

☞ Repeat this procedure on each wire edge filter element.

- Clean filter chamber and wire edge filter element:
  - 10 running hours after engine overhaul;
  - if resistance is felt when turning at the rotary handle;
  - when differential pressure alarm is given.

☞ Remove wire edge filter element only if absolutely necessary.

Repair:
Renew wire edge filter element:

- at the intervals given in the maintenance chart;
- whenever the wire edge filter element is damaged.

Tools:
- Standard tools

Aids:
- Pail
- Cleaning brush
- Diesel fuel

Job Card:
- 08.10.01

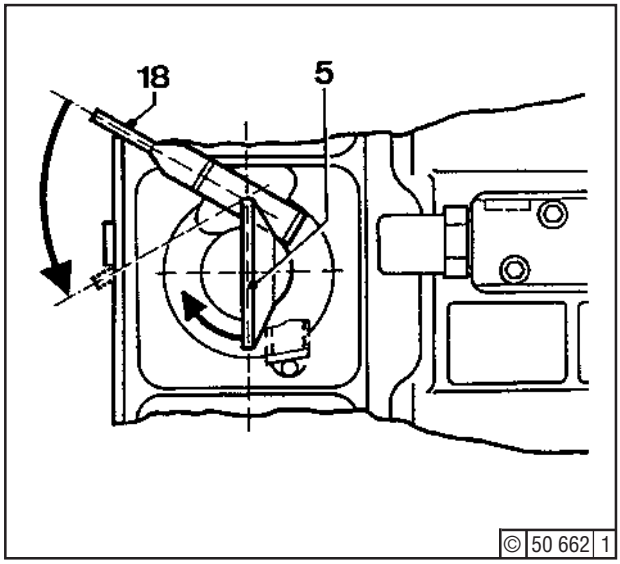

Fig. 1 Turning the wire edge filter

Job:

Removing and refitting wire edge filter element; cleaning filter chamber.

- Stop engine
- Remove drain plug (3) along with joint washer (2).
- Drain oil.
- Remove back flushing line from filter elements.
- Undo hex. nuts (9) and withdraw element (14) from filter body.
- Remove square flange gasket (8).

  ☞ To prevent dirty cleaning fluid from getting inside the element, close open end with a cap of 55 mm dia.

- Dip element in diesel fuel, actuate rotary knob (5) alternately and clean element with the brush.
- Remove cap and blow out element from inside with filtered compressed air.

  ☞ If the filter wire is damaged or dented, renew the element.

- Plug up oil outlet bore (4) in filter body.
- Clean filter chamber. Remove plug after cleaning.
- Insert drain plug (3)along with washer (2).
- Refit filter element (14) with new flange gasket (8) in filter body.

  ☞ Introduce filter element (14) in perfectly horizontal position so that it will not touch the body.

- Tighten hex. nuts (9).
- Refit back flushing line.

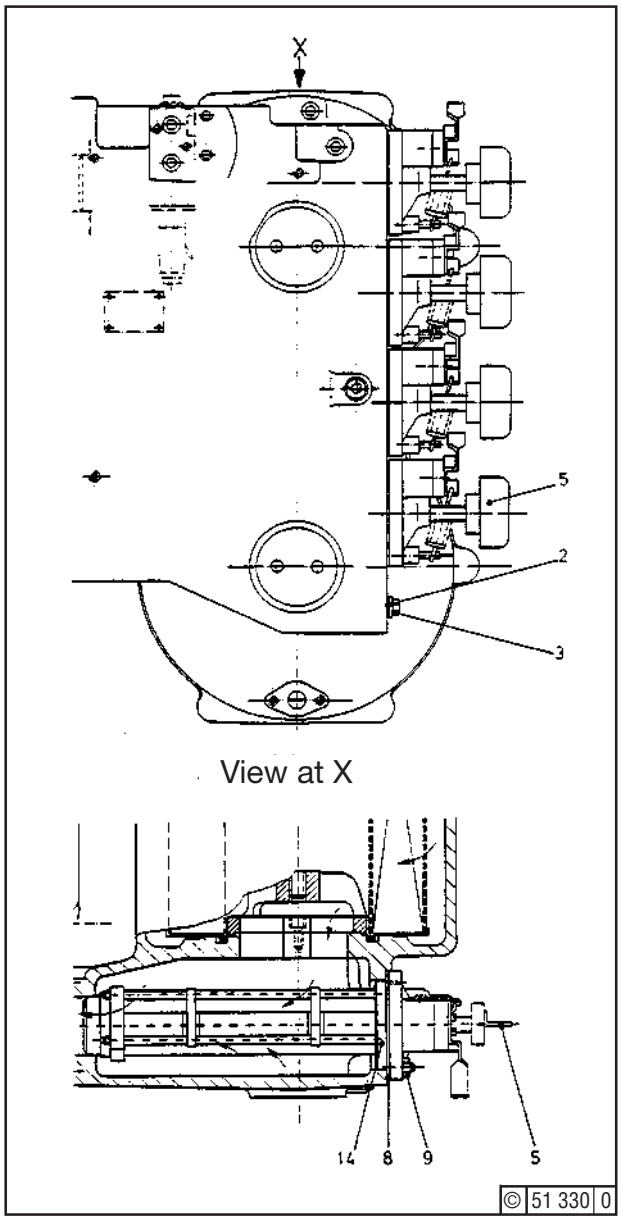

Fig. 2 Backflushing oil filter combination

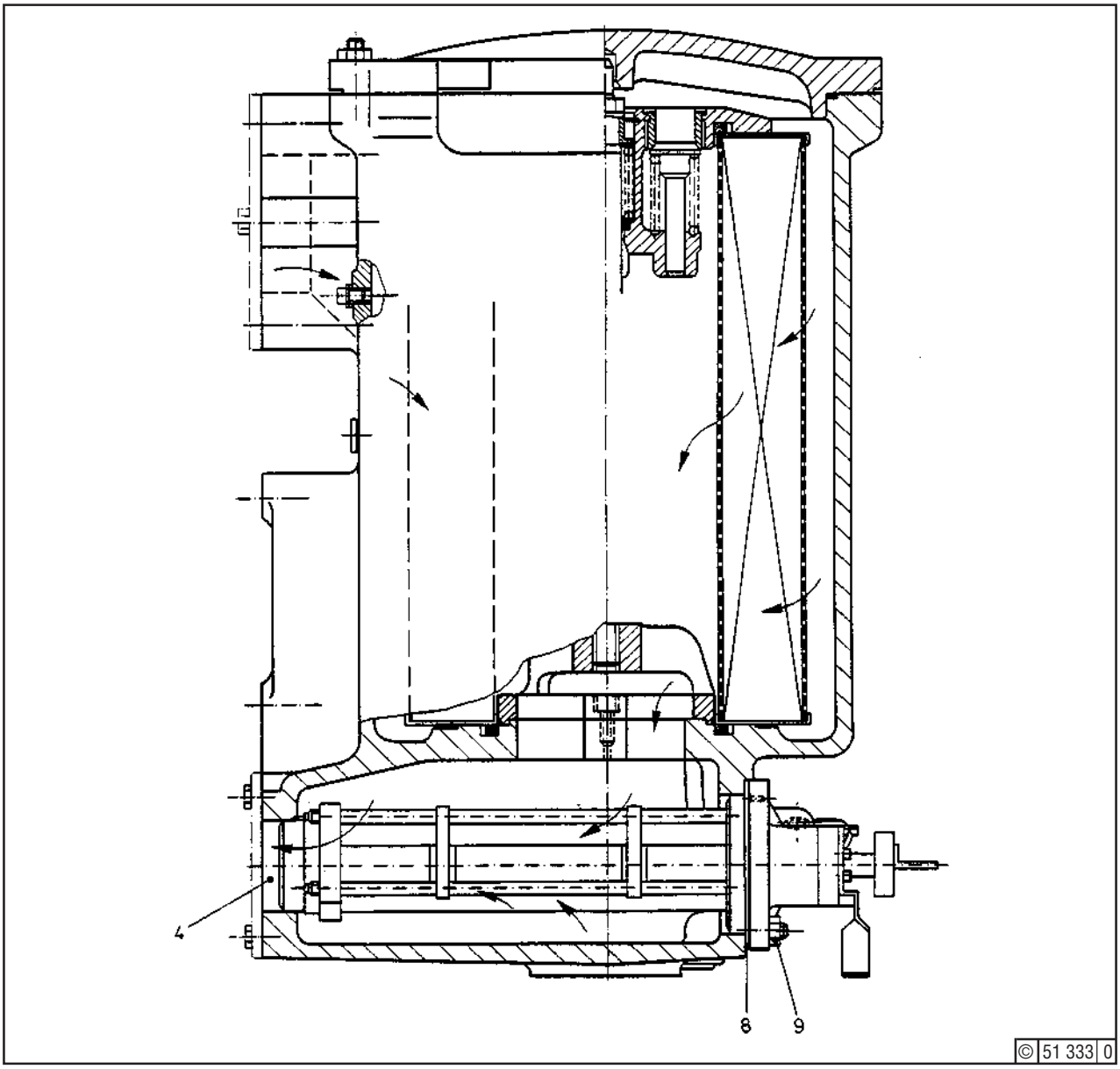

Fig. 3 Oil filter combination

This page intentionally left blank

Servicing

The combined full-flow oil filter comprises a wire edge-type filter (job 08.09.01) preceded by a cartridge-type micro filter. Service gauge 17 indicates when the filter cartridge is due for replacement.

Tools:

- Standard tools
- Pail
- New filter cartridge
- Diesel fuel
- Cleaning brush

Job Card:

- 08.09.01

Routine Servicing

The filter cartridge is due for renewal and the filter chamber is due for cleaning when the window of service gauge 17 (Fig. 3) has turned fully red **with the engine hot.**
Replacement is in any case due at the end of 3000 running hours or at the end of one year, which ever is earlier.

☞ When the engine is still cold and hence the motor oil more viscous, the appearance of the red signal may be disregarded. When the engine has attained normal working temperature, however, the red signal should disappear if the filter cartridge is not yet ready for renewal.

The interval between initial appearance of the red signal and the ”full red” stage is about 200 running hours. Change the filter cartridge at this time, if possible.

Additional Servicing

- Change paper filter and clean filter chamber about 50 running hours after commissioning.
- Change paper filter and clean filter chamber at every oil change.
- Change paper filter and clean filter chamber about 10 hours following any major engine overhaul work (for example, after rehoning cylinder liners).
- Change paper filter an clean filter chamber about 10 hours following opening of crankcase in extremely dust or sand-laden air.
- Change paper filter and clean filter chamber about 50 hours following every lubrication system overhaul on equipment not engine-mounted.

© 0185

Job

Change paper filter cartridge (Fig. 3) and clean filter chamber.
Stop engine. Place pail beneath hose connector 24 (Fig. 2) and open plug 25 to drain oil from filter. Release hex. nuts 7 (Fig. 3) and work loose cover 12 by lever or screwdriver. Remove O-seal 6 and nut 11.

⚠ Clamping piece 16 is under spring pressure. Carefully pull out piece 16 and filter cartridge 13. Clean filter chamber, taking care that no dirt will enter the clean space of filter. Following cleaning, refit plug 25 (Fig. 2). Check that seals 15 (Fig. 3) are in good order and properly seated. Carefully install new cartridge 13. Fit clamping piece 16. Screw nut 11 in place and tighten securely. Fit O-seal 6 (renewing if necessary) and secure cover 12 with hex. nuts 7.

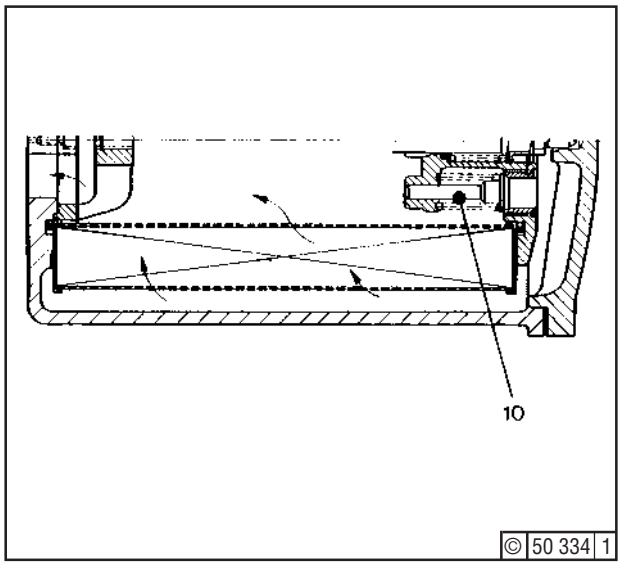

Fig. 1 Paper filter (sectional view)

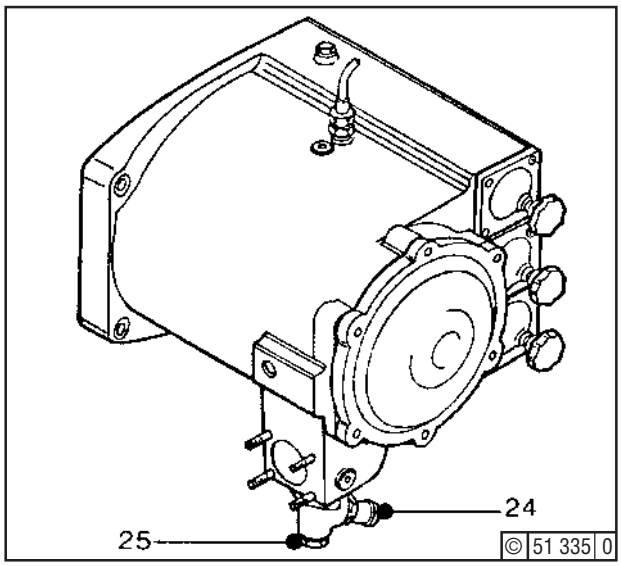

Fig. 2 Oil draining

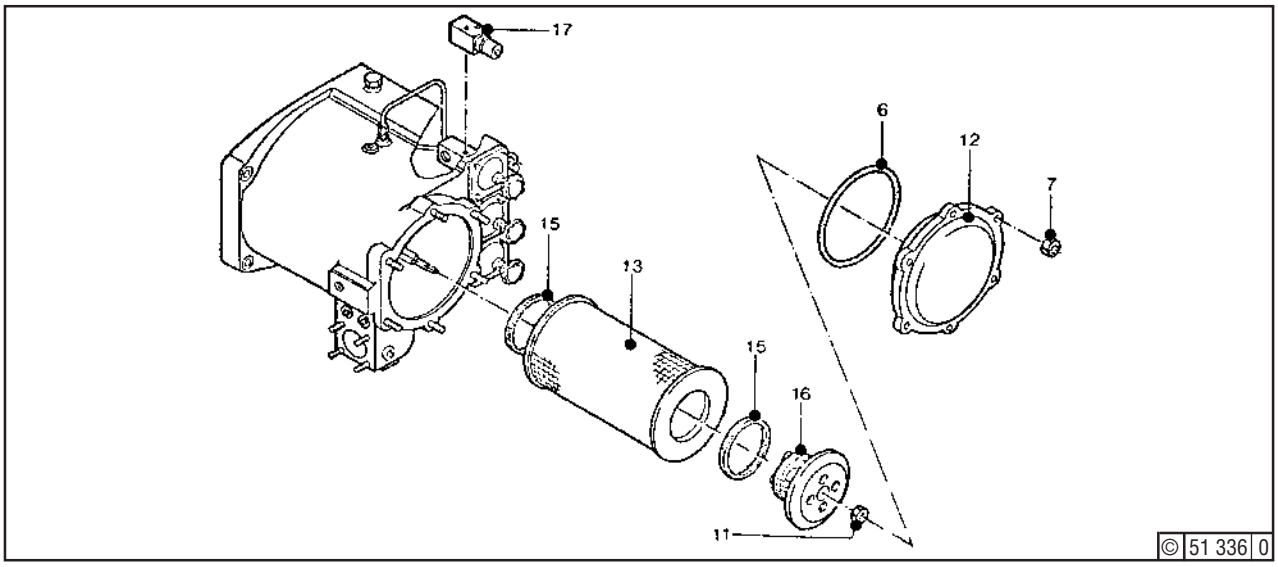

Fig. 3 Change paper filter

Inspection

When the oil pressure falls off, inspect pressurestat.

☞ The pressurestat is not adjustable. With the engine hot, the oil pressure should conform to the acceptance test sheet (see also Specification Data under 3.3.2).

Should the oil pressure deviate from the specified value - particularly after an oil change - check whether the lube oil used conforms to the prescribed viscosity class (see Section 6.2).

Tools:

- Standard tools
- Pocket lamp

Job:

With engine hot and at full load, read working pressure from gauge. If the pressure is not as specified, stop engine and remove pressurestat.
To do this, unscrew hex. bolts (2) and withdraw same together with washers (3). Pull out cover (1) with valve. Clean all components in diesel fuel and inspect for wear, especially the valve spring. Renew components as required. When reassembling, renew O-seal (4).

⚠ All work on the lube oil system requires utmost cleanliness!

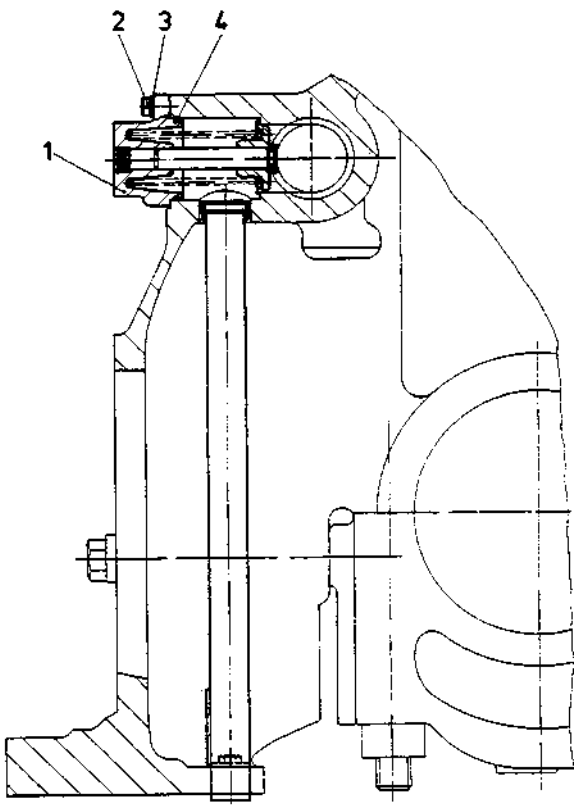

© 51 410 0

This page intentionally left blank

Servicing

Clean centrifugal oil cleaner. Inspect valve.

☞ Clean only when engine is stationary or the feed line is isolated. Change paper lining in rotor at regular intervals and clean centrifuge.

Tools:

- Standard tools
- Cleaning brush
- Wooden scraper

Job Card:

- 08.00.01

Job:

Stop engine or close feed line. Remove screw plug (11) - Fig. 1 - together with sealing ring. Take out valve (9) and spring (10). Collect oil in a container. Unscrew nuts (6) and fold down studs. Remove cover (1). Lift rotor (2) carefully out of body lower part. Clamp rotor base at flats in vice. Now loosen fastening nut (13) in rotor upper part with socket wrench.

⚠ Never counterhold with open-end wrench placed on the flattened collar of the upper part.

Separate upper and lower parts of rotor. Check sealing rings (4) and (5) - renew if necessary. Discard soiled lining (3). Remove residual dirt with wooden scraper. Check that valve (9) moves freely and that seats are undamaged. If valve seats are worn, lightly grind valve into body (15), after removing body from engine.

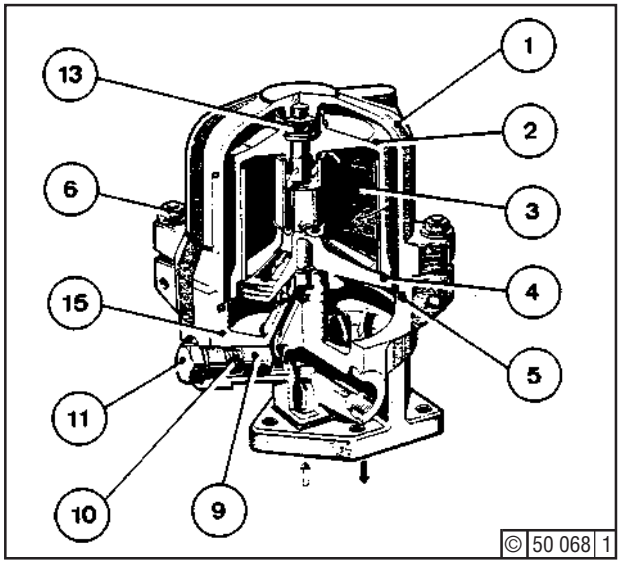

Fig. 1

© 0885

Following this, clean all parts and blow out with compressed air, particularly the nozzles and all bores.

Install valve (9) complete with spring (10), and screw plug (11) together with sealing ring. Fit new lining (3) Fig. 2. Push rotor upper part carefully over rotor lower part, paying attention to the fixing location of both parts. Tighten fastening nut (13) - Fig. 1. Placeassembled rotor in body and check for smooth running. Mount cover (1) without using force, and tighten nuts (6).
After starting engine, make sure that the centrifuge is oil-tight.

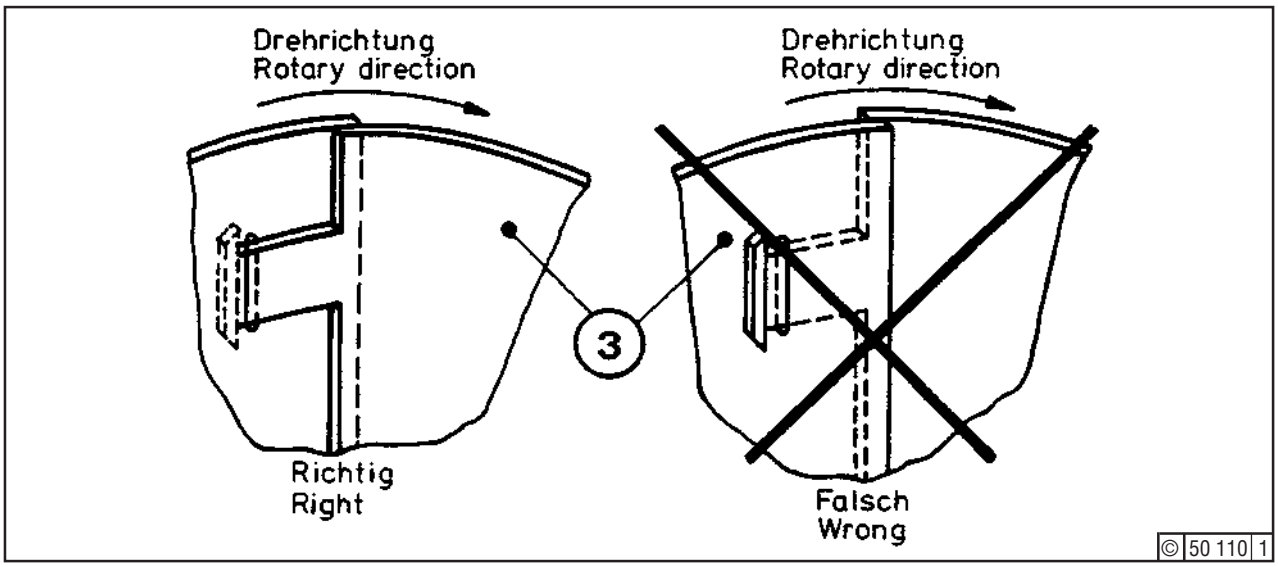

Fig. 2

Checking

Inspect the valve seat lubrication system.
Check volume of valve seat lubrication.

Tools:

- Standard tools

Job:

Visual inspection:
View through inspection window of dropper (1). If the valve seat lubrication system is working, drops will form at the valve of the dropper and drip off in slow sequence. If not, find out the cause and remedy.

Turbocharger at engine's driving end

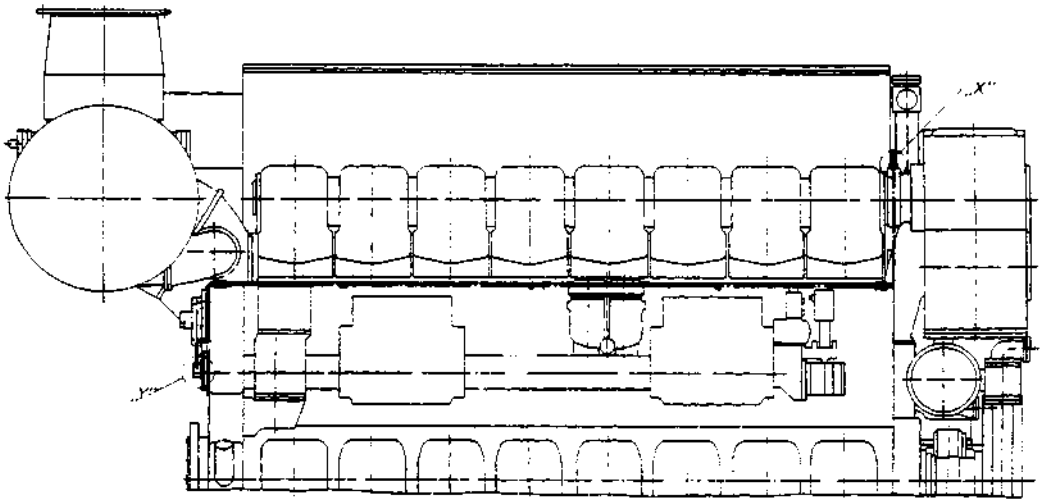

Turbocharger at engine's free end

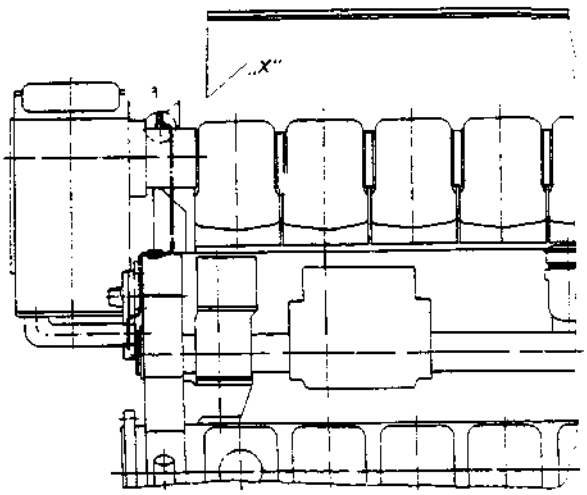

Detail "X"

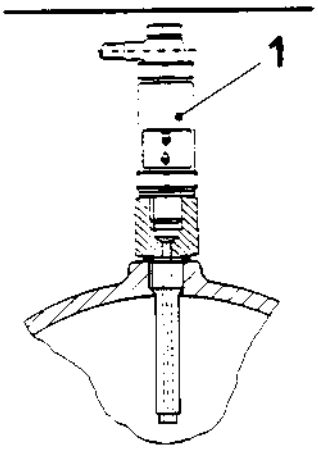

© 51 411 0

© 0682

Valve Seat Lubrication System

Filing No.: 0178-16-10 1640

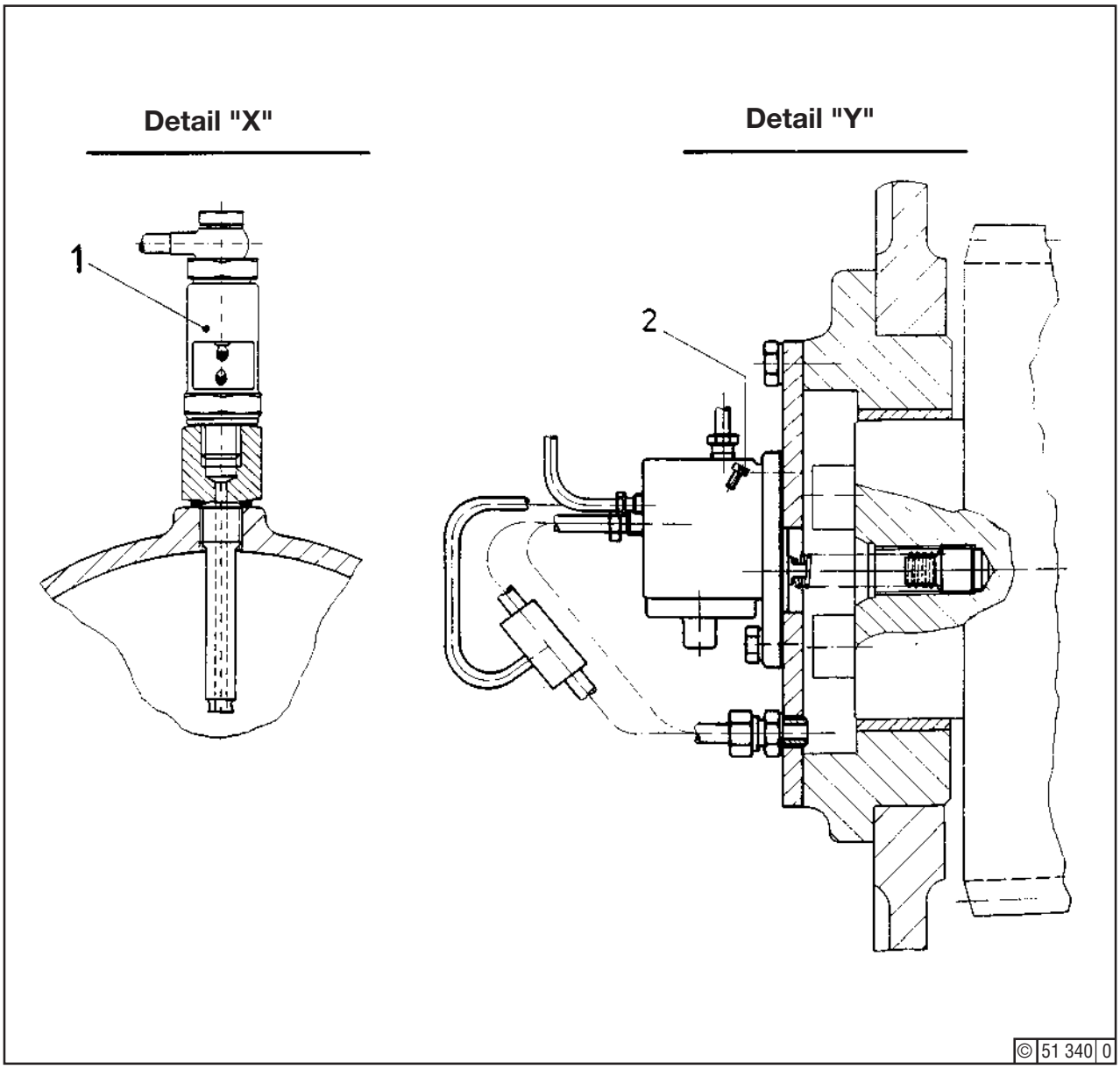

Check volume of valve seat lubrication:
The delivery volume is measured in drops (1), and is specified in Section 3.3.2. If necessary, correct volume by means of detent screw (2) on oil pump. To increase volume, turn screw clockwise, and vice versa.

Servicing

Remove two-way valve of injection pump plunger hydraulic seal (Section 5.1.4), dismantle and clean.

☞ Following commissioning of a new engine, valve element 3 may bind due to dirt coming from the sealing oil high-level tank. In this case clean not only valve, but also tank and line to valve.

Job:

Stop engine. Isolate line from oil high-level tank to two-way valve or, if provided, switch off separate oil pump. Remove valve from oil line. Unscrew connector (1) and plug (7) from valve body (2). Press out valve seats (5) to the right and left respectively. Take out valve element (3).
Clean all parts in diesel fuel and check for wear including scoring. Renew O-seals (4) and (8).
In the case of a slight seizure of element (3) in body (2), remedy this by extra-fine lapping.
Reinstall element (3) and both valve seats (5) with new O-seals (4) and 8 in body (2). Screw in connector (1) and plug (7) with new washers (6).
Check free movement of element (3) with an arbor inserted through connections ”A” and ”C”.
Reinstall two-way valve in oil line. Open shut-off valve. Check that oil line connections are free from leaks.

Reconditioning
If element 3 in body 2 has excessive clearance as suggested for instance by a rise of the amount of oil in the high-level tank, replace two-way valve.

A from oil tank

B to oil passage in injection pump

C from oil feed pump in injection pump

Tools:

- Standard tools,
- Detergent

Job Card:

- 07.03.01

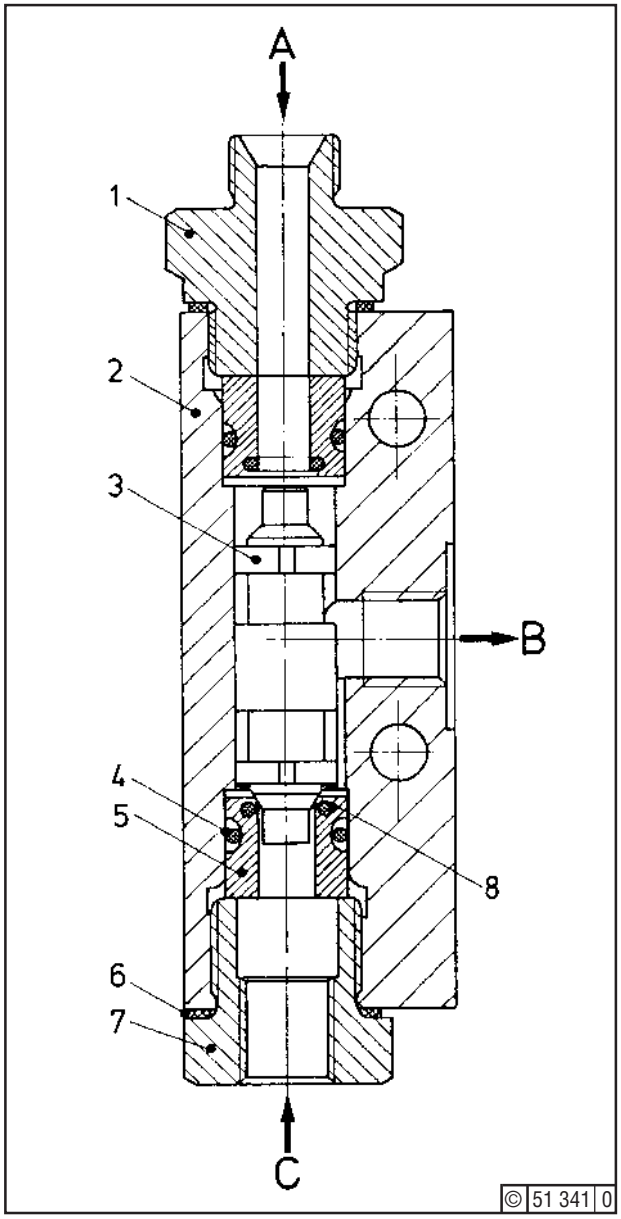

This page intentionally left blank

Servicing

Replace filter element.

☞ The microfilter is arranged in the oil circuit bypass line ahead of the lubricator to ensure an especially high degree of cleanliness of the oil supplied to the injection pump and, if provided, the air compressor.
The air flows through the element outside in and deposits its impurities on the impregnated filter paper perforated with minute holes. Being of the radial-fin type, the filtering surface is very large and hence stays long in service.

Tools:

- Standard tools
- Gasoil
- Hair brush
- Container

Job

Close shut-off valve, remove plug (1) and drain oil into a container.
Unscrew hex. bolt (2) and remove cover (3), avoiding damage to gasket (7). Withdraw element (4) upwards. Clean body (5) inside, making sure that no coarse dirt particles will settle in the holes of centre tube (6). Refit drain plug (1) and slip new element (4) over centre tube (6). Fill oil into body. Fit basket (7), cover (3) and tighten bolts (2). Start engine and bleed filter by slackening bolt (2).

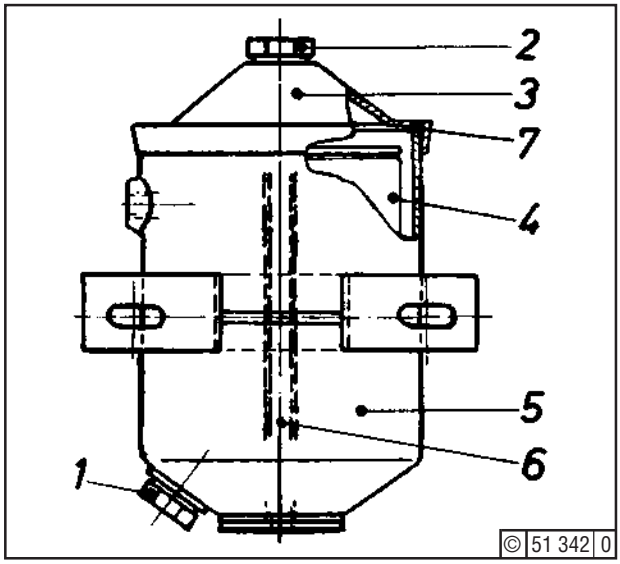

This page intentionally left blank

See also Sections 6.4 and 6.5

Jobs on cylinder head, crankcase, turbocharger, heat exchanger, water pump(s), piping, etc., may require the cooling water to be drained partially or entirely.

Where the engine is shut down for a major period and **frost is imminent, drain all water** from engine and attachments, unless an anti-freeze is provided.

If the engine is to be shut down for a prolonged period, preservation is necessary (Section 6.5).

Job:

- Shut off all water piping to and from engine.
- Open drain valve (19) at No. 1 cylinder.

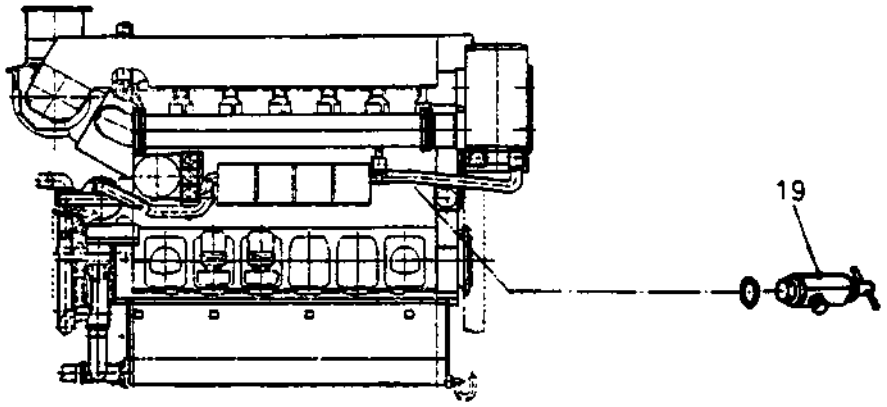

© 51 412 0

- Loosen spigot screw (21) on dual valve through 5 to 8 turns.

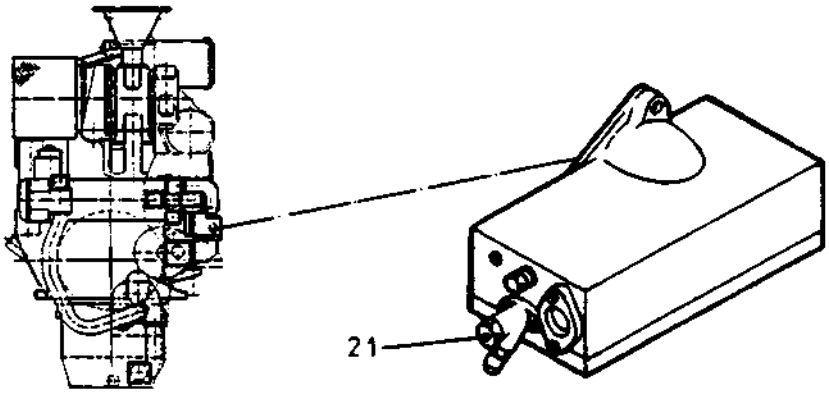

© 51 413 0

© 0983

Cooling Water System
Draining

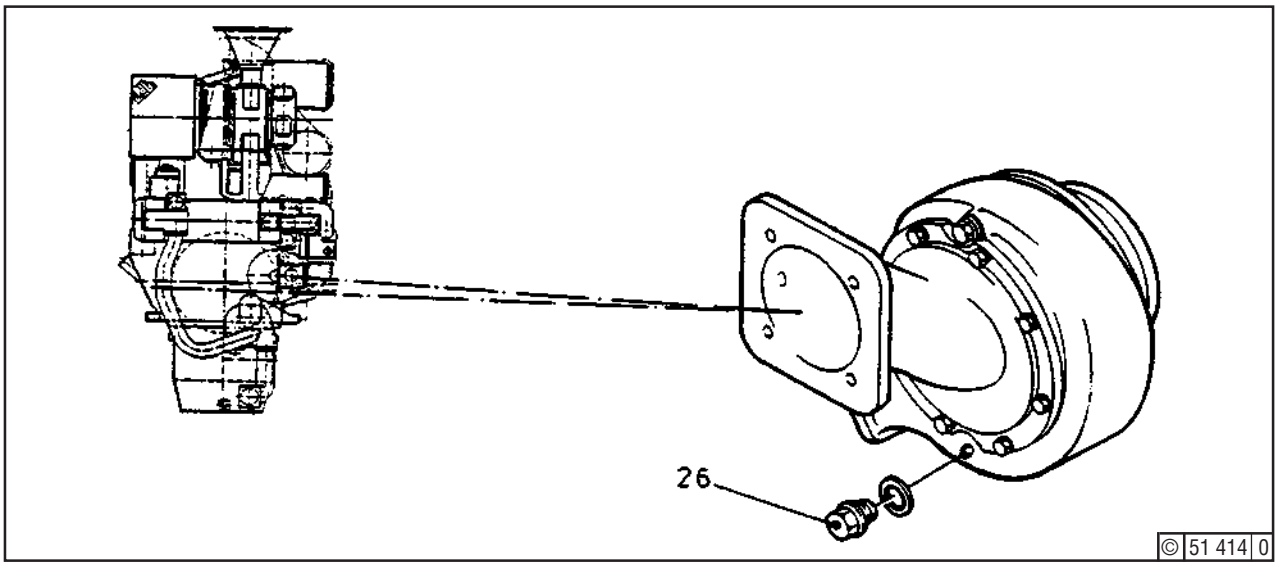

- Unscrew plug(s) (26) from centrifugal pump(s).

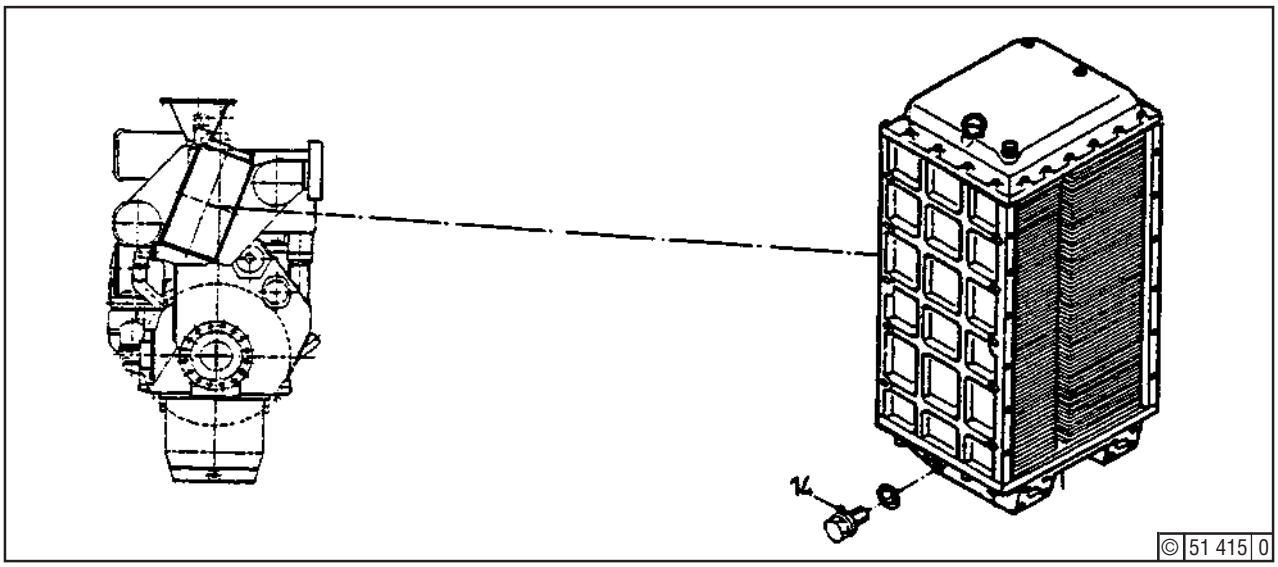

- Unscrew plug (14) from charge air cooler.
- Drain water from air bottles (job 10.01.01).
- Drain water from pressure reducing stations (job 10.06.01).
- Drain water from all pipe sockets by unscrewing plug. Where no plug is provided, disconnect associated pipe.
- Send an air blast through cooled-type injectors and pressure gauge piping.

Refit plugs, close valves and reconnect piping.

© 0983

Servicing

Water leaks at outlet hole ”X” of bearing housing (9) suggest defective seal (31); oil leaks suggest defective seal (25). Replace as necessary.

Tools:

- Standard tools
- Holding device for impeller (Sect. 1.8)
- Deutz F2 compound (Sect. 3.6)
- Deutz S4 compound (Sect. 3.6)

Job Card:

- 09.07.02

Job

Stop engine. Close shut-off valves in suction and delivery lines of water pump. Drain water by removing plug (26). When replacing water seal (31), disconnect only suction line. For replacing oil seal (25), disconnect delivery line also.

Removing Water Seal 31

Remove hex. bolts (2) along with spring lockwashers(3)..
Unscrew cap nut (34) (Job Card 09.07.02) and withdraw impeller (5). Take off water seal (31) with backing ring (30), and O-seal (29). Clean all components.

Refitting Water Seal (31)

Inspect seat of seal on shaft (32) and smoothen shaft if required. Check backing ring (30) for hair-cracks and O-seal (29) for damage. Renew as necessary. Push on backing ring along with O-seal. Apply alight film of Deutz F2 compound to sealing lip of the new water seal (31) and push same into position. The contact surfaces between water seal and backing ring must be absolutely free from dirt and compound. Place on impeller (5), paying attention to dowel sleeve (35). Inspect O-seal (33), renewing if necessary.
Fit cap nut (34) - see job 09.07.02 -. Check O-seal (4) - renew if necessary - and secure intake (1) by means of hex. bolts (2) complete with spring washers (3).

Connect suction line. Open valves. Fill in water (check its properties as detailed in Section 6.4). During trial run, make sure that pump is free from leaks and water pressure is correct.

Removing and Refitting Oil Seal (25)

See Job Card 09.07.02.

For illustration, see Job Card 09.07.02

© 0683

This pag e intentionally left blank

Reconditioning

Dismantle coolant circulation pump, clean and inspect. In the case of mounted vibration damper, the coolant circulation pump is partly dismantled on the engine.

Tools:

- Standard tools
- Circlip pliers
- Holding device for impeller (Sect. 1.8)
- Puller for bearing
- Timber block

☞ The coolant pump is driven via an idler gear from the crankshaft gear. Depending on the engine's speed, the pump is supplied in two versions with different driving rations.

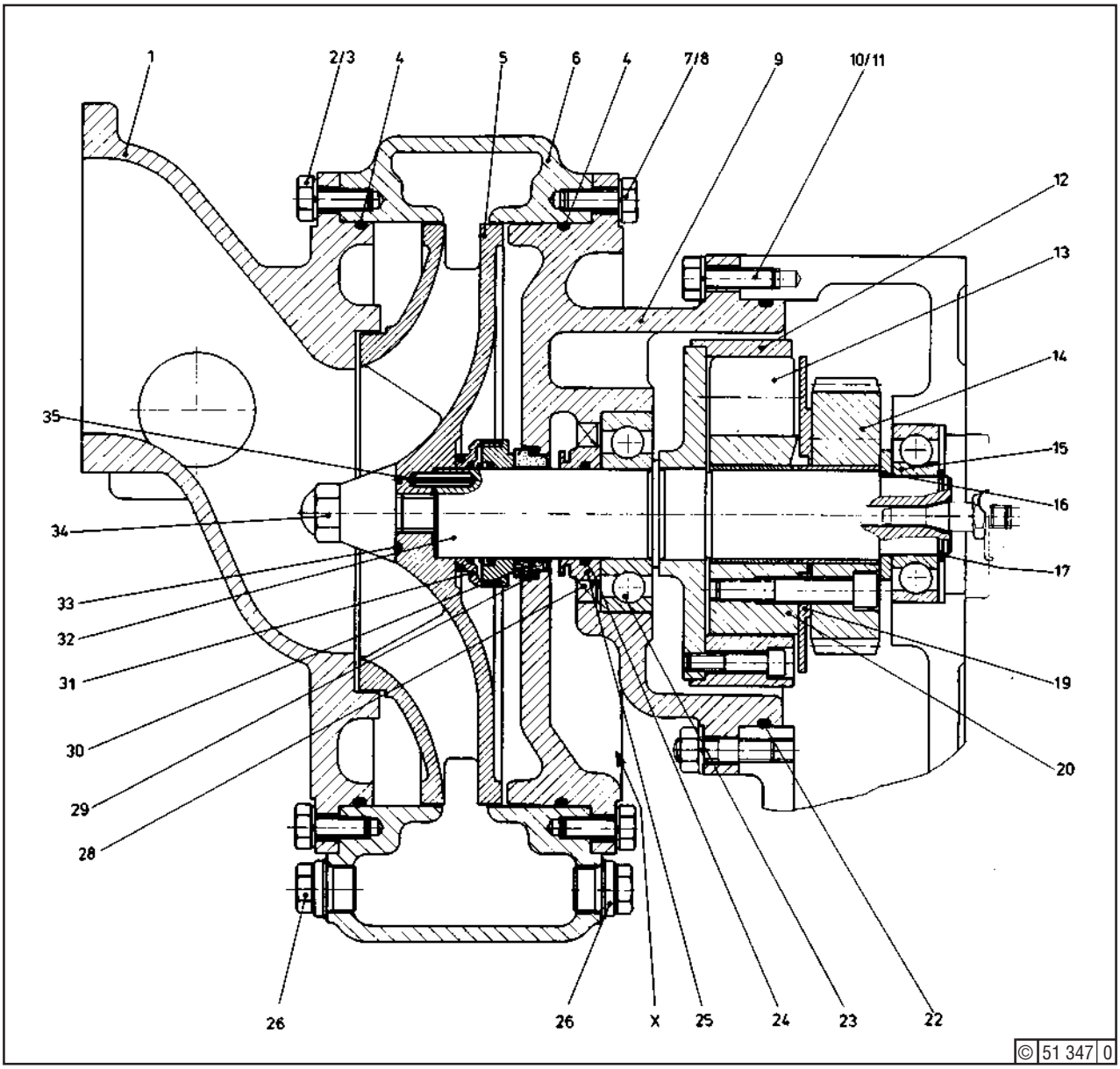

Fig. 1

Job:

Removing the Pump (Fig. 1)

Stop engine. Close shut-off valves in suction and delivery lines of pump. Drain water from pump by removing plug (26). Disconnect suction and delivery lines between pump and shut-off valves. Unscrew hex. bolts (2) and take down intake (1). Fasten holding device (lock) (21) - Fig. 2 - by means of bolts (2) to volute casing (6). Turn impeller (5) until the balancing holes coincide with one of the two holes in the lock. Push an M6x70 bolt or a pin of 5 to 6 mm dia. through the lock hole, thus blocking the impeller. Unscrew cap nut (34). Remove lock (21) and withdraw impeller. Take off water seal (31). Undo hex. bolts (7) and take off volute casing. Undo hex. bolts (10). Pull out bearing housing (9), push sideways and tilt so that it can be lifted out behind the vibration damper.

Dismantling the Pump (Fig. 1)

Carefully drive out shaft (32) by means of hammer and square timber block in downward direction. Remove circlip (17) and withdraw ball bearing (15) by puller. Remove spacer (16). Pull off gear (14) along with bearing bush, plate (19) and coupling assembly (20) from shaft (32). Take out six rollers (13) from coupling spider (12). Remove backing ring (30) and ring (28) with oil seal (25) from bearing housing (9). Clean all components and inspect for wear.

Inspect impeller (5), intake 1 and volute casing (6) for erosion, shaft (32) in the zone of seals (25) and (31) for scoring, as well as axial water seal (31) and radial oil seal (25) for tightness. Replace O-seals and any worn parts, especially bearings (15) and (23).

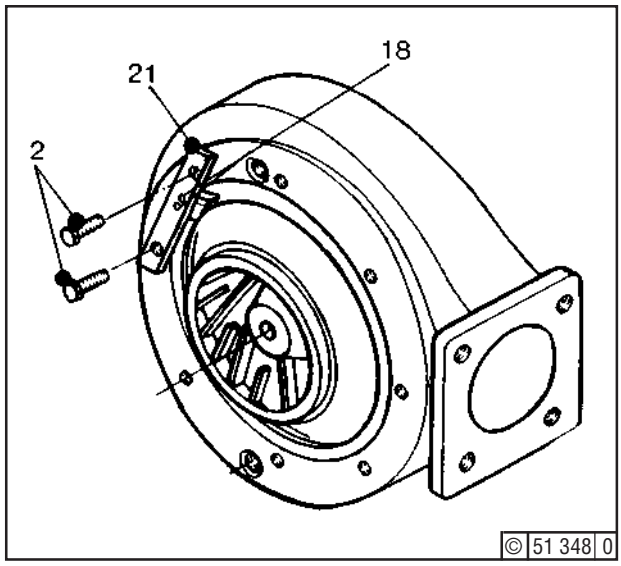

Reassembling the Pump (Fig. 1)

Install new rollers (13). Slip gear (14) with bearing bush, plate (19) and spider (20) as an assembly onto shaft (32). Fit spacer 16, ball bearing (15) and circlip (17).

Install oil seal(25) with ring (28) and O-seal (24) in bearing housing (9). Push shaft (32) with bearing (23) and coupling into bearing housing (9) Install O-seal (22).

Refitting the Pump (Fig. 1)

Carefully push bearing housing (9) with shaft (32) into pump chest (hole ”X” down) and secure by bolts (10) with lockwashers (11). Fit backing ring (30) and O-seal (29). Install O-seal (4) in bearing housing (9). Fit volute casing (6) and secure by bolts (7) plus lockwashers (8). Slightly wet sealing lip of seal (31) with coolant (not with lubricant). Slip seal (31) onto shaft (32).

Check that no lubricant or dirt is present between seal (31) and backing ring (30), or between impeller (5) and shaft (32). Insert impeller (5), located by dowel sleeve (35). Install O-seal (33). Mount impeller (5) with stop (21) - Fig. 2 - (see ”Removing the Pump”). Tighten fastening nut as per Section 3.5, item 19.

Put intake (1) with new O-seal (4) in place and secure by bolts (2) plus lockwashers (3). Connect water piping. Open shut-off valves. Fill in engine coolant and check its condition. (Section 6.4).

During the trial run, check pump for correct water pressure and freedom from leaks.

© 0185

Testing

Check entire compressed-air system for correct functioning.

⚠ To prevent seizure by rust of the system's control valves, drain water from system including air receivers daily. Drain water from the compressed air receivers after each charging cycle as specified by the Accident Prevention Regulation.

Job

Drain water from air receivers. If an automatic drain valve is provided, inspect this. Check that relief valve blows off as 30 bar are exceeded. Check that the system's control valves work properly.

Servicing

Clean air piping.

Job

Close shut-off valves on air receivers. Exhaust feed piping. Unscrew connections for control piping and blow out any rust deposits. Refit connections.
Perform starting manoeuvre.
When starting manoeuvre is completed, check pressure on air receiver and temperature of starting valve (Job Card 01.11.01).

☞ When refitting piping, never apply white or red lead or varnish because this will render any subsequent disconnections more difficult. In addition, hardened particles may find ingress into the system and cause damage, in particular to the system's control valves. For the same reason, be sure to keep trimmings and similar foreign matter out of the piping.

When assembling the piping also keep chips and similar foreign matter out of the piping and away from the control equipment.

Make sure that all pipe unions and connections are tightened securely, but never with internal stressing. If necessary, align pipes so they fit perfectly. Do this in cold condition, and never fill piping with sand or similar matter. Following pipe bending, clean piping inside from scale etc. and finally blow out.

© 0582

This page intentionally left blank

Tools:
- Standard tools

Job Card:
- 02.00.01

The control disc (9) - Fig. 2 - contacts the distributor ring (13) only during the starting procedure. Ring (10) seals off the air passage to the crankcase. At the end of the starting procedure, control disc (9) runs free.

Inspection
Remove distributor ring (13) and control disc (9) for inspection.

Job
Removing Control Disc (9)
Undo coupling (6) - Fig. 1 -. Unscrew hex. bolts (62) and take off nest of tubes (11). Pull off distributor ring (13) - Fig. 2 - and withdraw control disc (9) along with ring (10).

Clean all components.
Check sliding surfaces of distributor ring (13) and control disc (9). If the surfaces are damaged, renew components. Check ring 10, renew if necessary.

Refitting Control Disc (9)
Install control disc (9) along with ring (10) to that the punch mark (16) coincides with the hole (17) in shaft (1) - see Fig. 3 -.
Check control disc (9) and ring (10) for easy movement. Check O-seal (14) in distributor ring (13), renewing if necessary. Place distributor ring (13) in position so that punch mark (18) on cover (4) coincides with notch (19) in distributor ring (13) - see Fig. 3 -. Secure nest of tubes (11) - Fig. 1 - by means of hex. bolts (62). Connect coupling (6).

Removing and Refitting Starting Pilot Air Distributor
Removing Starting Pilot Air Distributor
Undo coupling (6). Unscrew hex. bolts (62) and take off nest of tubes (11). Pull off distributor ring (13) - Fig. 2 - and withdraw control disc (9) along with ring (10). Screw out banjo bolt (57) and remove pipe (5). Undo hex. bolts (8). Take off cover (4) along with gasket (7).

Shaft (1) is quite difficult to withdraw, owing to the lock pin, and should therefore be dismantled only when really essential.

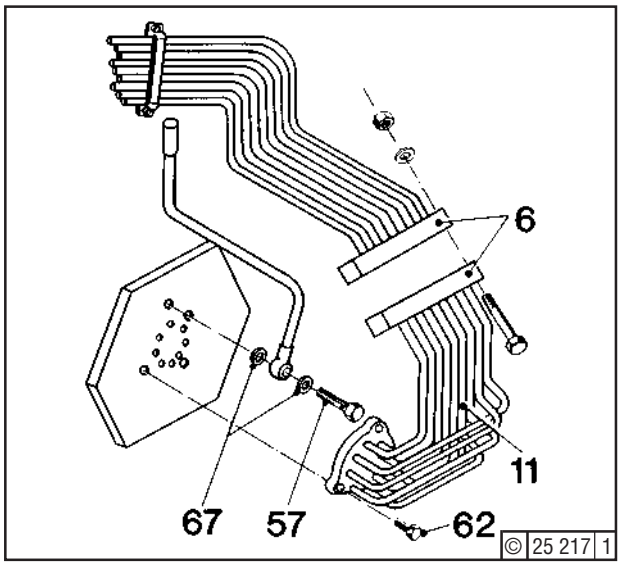

Fig. 1

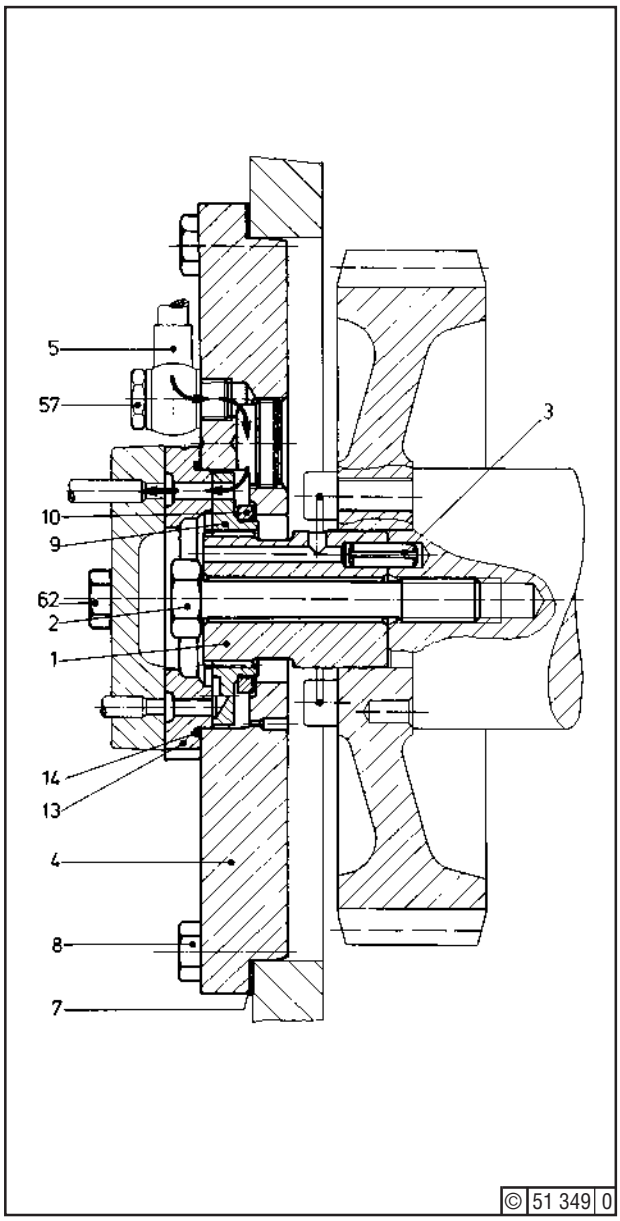

Fig. 2

Screw out hex. bolts (2). Withdraw shaft (1). Clean all components. Check seals, control disc and distributor ring, renewing if necessary.

Refitting Starting Pilot Air Distributor

Make sure that lock pin (3) is present in camshaft and fit shaft (1) located by the lock pin.
Screw in hex. bolt (2) and tighten (see Section 3.5, item 30). Place cover (4) and gasket (7) in position and secure by hex. bolts (8). Mount pipe (5) and secure with banjo bolt (57).
Install control disc (9) along with ring (10) so that the punch mark (16) on the control disc (9) coincides with the hole (17) in shaft (1). Fit distributor ring (13) with O-seal (14) so that punch mark (18) on cover 4 coincides with notch (19) in distributor ring (13). Position nest of tubes (1) and secure by hex. bolts (62) - Fig. 1 -. Connect coupling (6). Upon completion of the work, start engine several times with compressed air, checking for perfect function and air-tightness of the starting pilot air distributor.

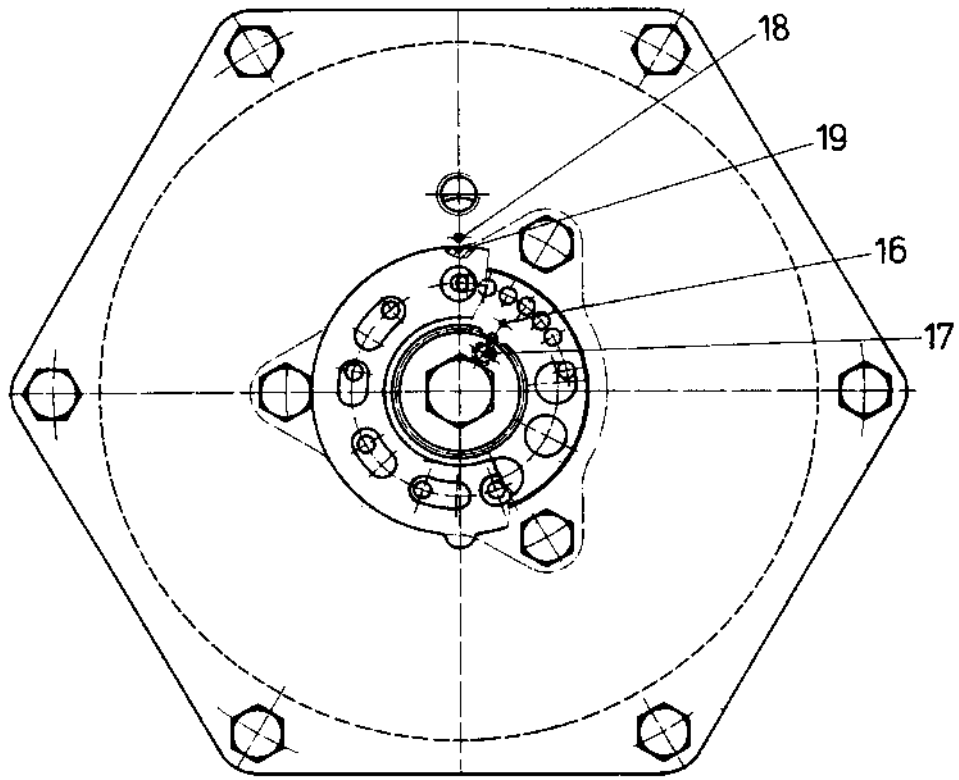

© 51 350 0

Fig. 3

Servicing

Dismantle master valve and clean.

Tools:
- Standard tools
- Deutz S2 lubricating compound (Section 3.6)

Job Card:
- 05.00.01

Job
Observe safety precautions (job 05.00.01). Disconnect control air pipe. Remove valve from starting air pipe.

Dismantling the Valve
Carefully unscrew bolts (1).

⚠ Cover (3) is spring-loaded. Remove cover (3). Take washer (2), adapter (6), spring (7) and piston (10) out of housing (8). Clean all components in diesel fuel and inspect for wear. Examine especially joint faces between housing (8) and piston (10) and of adapter (6) for corrosion and scoring. Smoothen as required. Replace O-seals (4) and (9). Inspect multi-disc seal (5) and replace if necessary.

Reassembling the Valve
Apply a thin film of Deutz S2 to sliding faces of (8), (10), (6) and to (4), (9), (5). Install piston (10) with O-seals (4) and (9) plus multi-disc seal (5), spring (7), and adapter (6) in housing (8). Fit washer (2). Secure cover (3) to housing (8) by bolts (1).

⚠ Following reassembly, start engine several times to check mater valve for proper working and freedom from leaks.

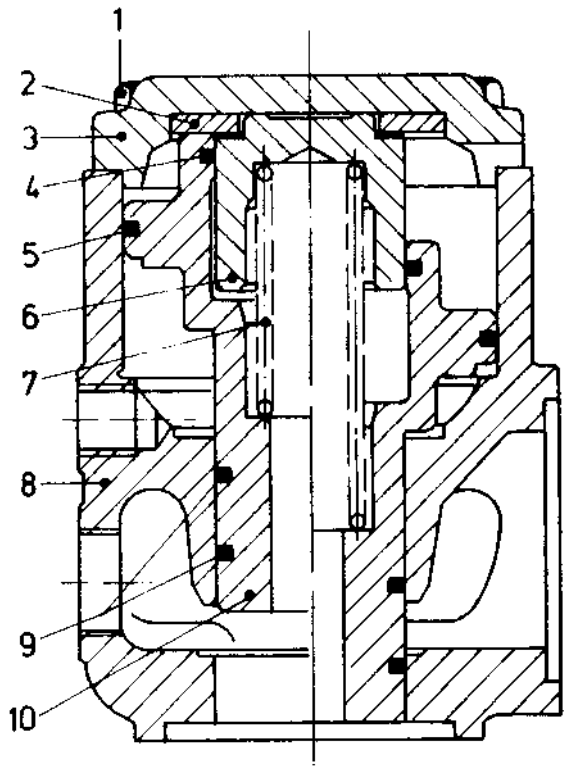

© 51 351 0

This page intentionally left blank

Servicing

Before servicing the dirt collector in the starting air line, make sure that the shut-off valve on the compressed air receiver is closed.

Daily:
Open shut-off valve (1) on dirt collector and allow condensation water (if any) to drain off. Then reclose shut-off valve.

Clean the Sieve
as per Maintenance Schedule.

Tools:

- Standard tools,
- Cleaning agent

Job:

Loosen hex. nuts (3) and take out hex. bolts (2). Take off flange (4) and gasket (5). Remove sieve (6). Clean sieve with a cleaning agent (e.g. cold cleaner) and rinse afterwards with fresh water. Then blow out with compressed air. Renew sieve if damaged. Clean sealing faces of flange and check gasket (5), renewing if necessary. Centre sieve together with retainer (8) in flange (4) and introduce assembly into tube (7), taking care that the sieve also sits in the centring of tube (7).

Now tighten hex. bolts (2) and hex. nuts (3).
Close shut-off valve (1), if open.

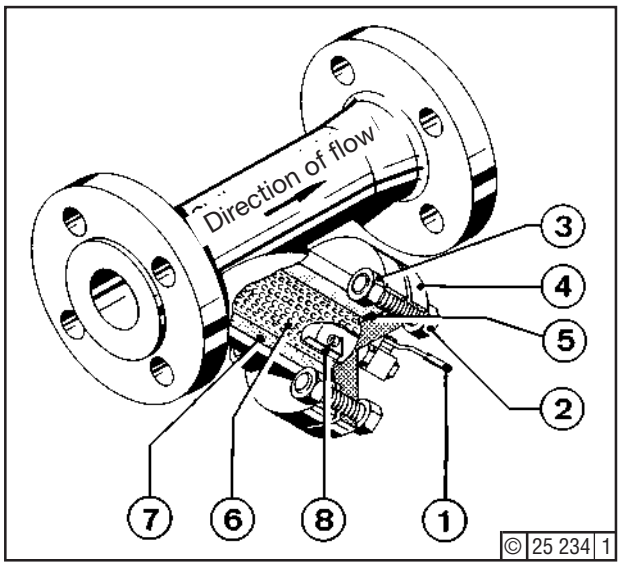

This page intentionally left blank

Servicing

Clean screen ahead of master valve. At the end of 250 hours (or later) replace screen by a ring.

All new engines are delivered with a screen ahead of the starting air master valve for the purpose of protecting the valve from piping scale or other foreign matter. After 50 running hours the screen must be cleaned or replaced. It can be finally removed at the end of 250 hours, provided the cleaning solution reveals no appreciable dirt.

Following major repairs and prolonged engine shut-down, the screen - if already removed - must be renewed. The above servicing intervals are then also to be observed.

Tools:

- Standard tools
- Detergent

Job Card:

- 05.00.01

Job:

Cleaning the Screen

Observe safety precautions (job 05.00.01).
Detach pipe and adapter flange (4) from master valve (3). Remove screen (2) and clean with a suitable detergent. Then flush with fresh water and blow out with air.
Clean flange joint faces, install screen (2) and connect pipe.

Finally Removing the Screen

Remove screen as above and replace by ring (1). Fit flange (4) and air pipe.

Never close vent hole (5).

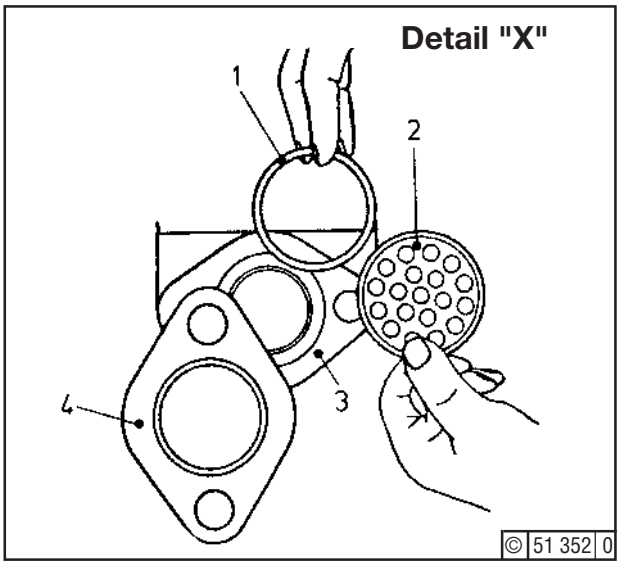

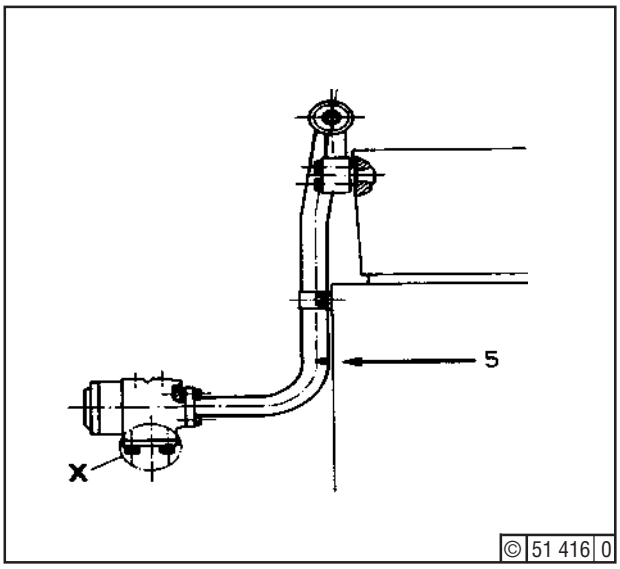

This page intentionally left blank

Servicing

Drain condensate and clean filter elements. This is possible while the engine is running.

In hand lever position I and III, the H.P. lien is connected to the L.P. line through one filter and one pressure reducer each. The low pressure is indicated by gauge (6) direct; it can be adjusted with screws (5). In lever position II, both filters and pressure reducers are connected in the L.P. line. In position IV, the H.P. lien is isolated, while the L.P. line is connected to the atmosphere.

Tools.

- Standard tools

Job

Draining Condensate

Operate rods (1).

Cleaning the Filter

Clean only filters not in service: filter(4) in lever position I and filter (3) in position III.
With the engine shut down, both filters can be cleaned in position IV.

Procedure

Unscrew plug and remove filter. After cleaning filter, dry by air blast. Reinstall filter and fit plug with washer.

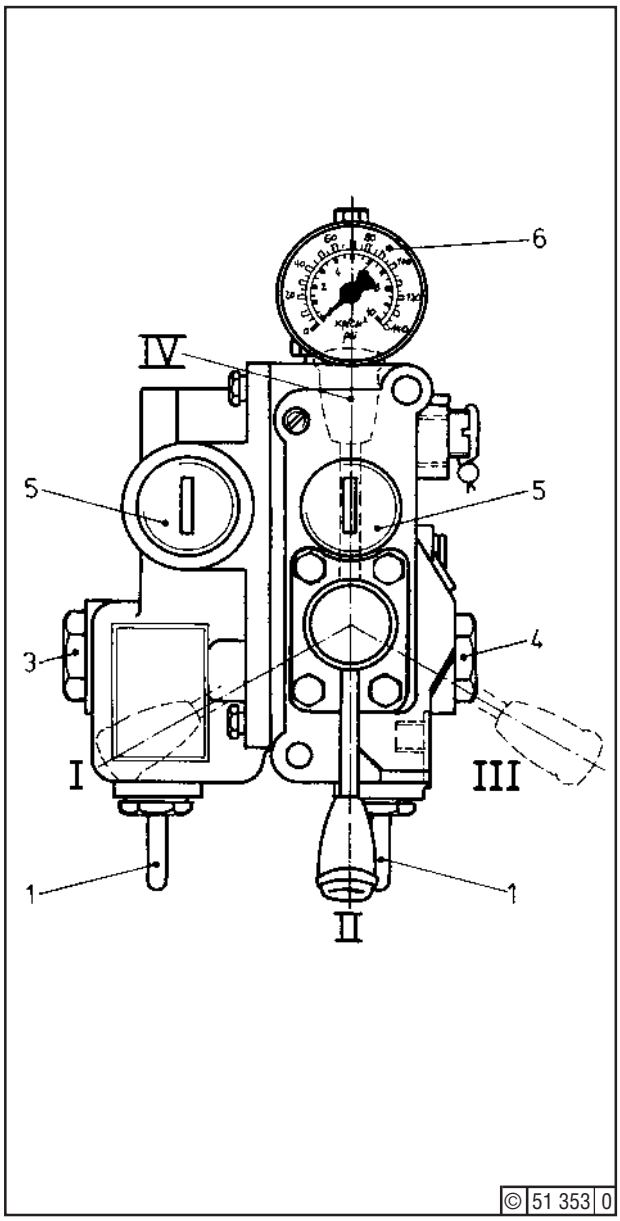

This page intentionally left blank

Testing

Check the switch for correct setting and proper functioning.
The switch comprises sensor (1) with pocket (2) - test site - and a setting unit (4) - cable terminal box -.

☞ Be sure lead (7) between setting unit (4) and sensor (1) will not chafe.

Tools:

- Standard tools
- Ohmmeter
- Thermometer
- Heat conducting compound

Job

Clean sensor (1) externally and check that it is firmly seated.

Setting:

Refer to the section 3.3 ”Technical Specifications” for the set point values of the temperature switch trip points. The trip point (see 3.3) is set on dial (3) of unit (4) with an accuracy of 2.5 % over the entire temperature range.

a) Testing the Sensor (1)
Remove sensor (1) from pocket (2) and dip in hot water. Use and ohmmeter to meet the electrical resistance. By means of curves on sheet (3), compare actual and specified values, or test as under c).

b) Testing the Setting Unit (4)
Remove unit (4) from terminal box and connect to terminals (3) and (4) of sensor (1) in water by means of two 1.5 mm2 leads. Apply auxiliary voltage of 24 volts to terminals (1) and (2). Connect ohmmeter to terminals (5) and (6). Adjust dial (3) to determine trip point and compare with water temperature. If test result is satisfactory, seal unit with lead, or test as under c).

c) Testing Sensor (1) plus Setting Unit (4) as a Whole (alternatively)
Use test instrument TP 100/12 supplied by Noris Techometerwerk GmbH & Co., Muggenhofer Str. 95, 8500 Nürnberg, Germany.

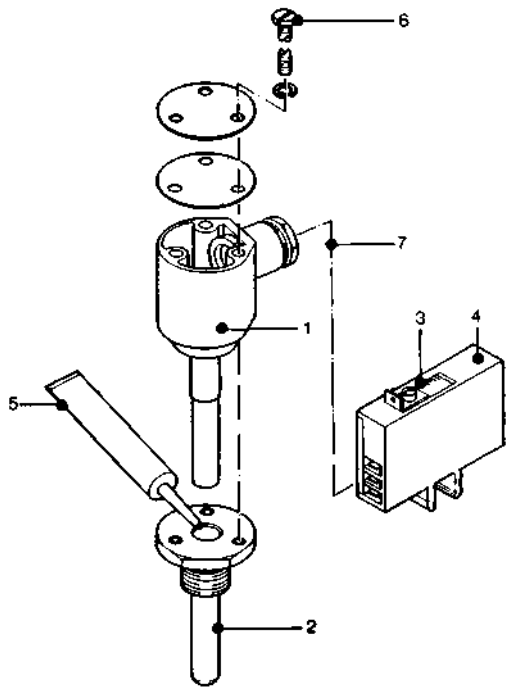

© 51 354 0

Reconditioning

(Temperature sensor and setting unit cannot be repaired).

Replacing the Sensor

With engine running, remove screws (6) and take sensor (1) out of pocket (2).
Before fitting a new sensor, check that sensor and setting unit are a match, i.e., their model designations must have the same figures. (Example: sensor TH 31 will agree with setting unit RH 31.)
Fill pocket 2 with heat compound (5). (Press some 20 mm out of tube.) Secure sensor (1) by screw (6).

⚠ Air in the pocket is liable to affect the readings.

Replacing the Setting Unit:

Remove leads and push unit (4) out of terminal bar.
Before fitting a new unit, check for agreement with sensor (see above).
For setting a new unit, see Section 3.3 or rating plate of the old unit.

© 1283

Switch RH 32 A
yellow rating plate with blue dot)

Sensor TH 32
(yellow dot - yellow sensor head)

Range: 7 - 70°C
(minimum temperature limit)

Switch RH 31
(white rating plate)

Sensor TH 31
(white dot - black sensor head)

Range: 42 - 120 °C
(maximum temperature limit)

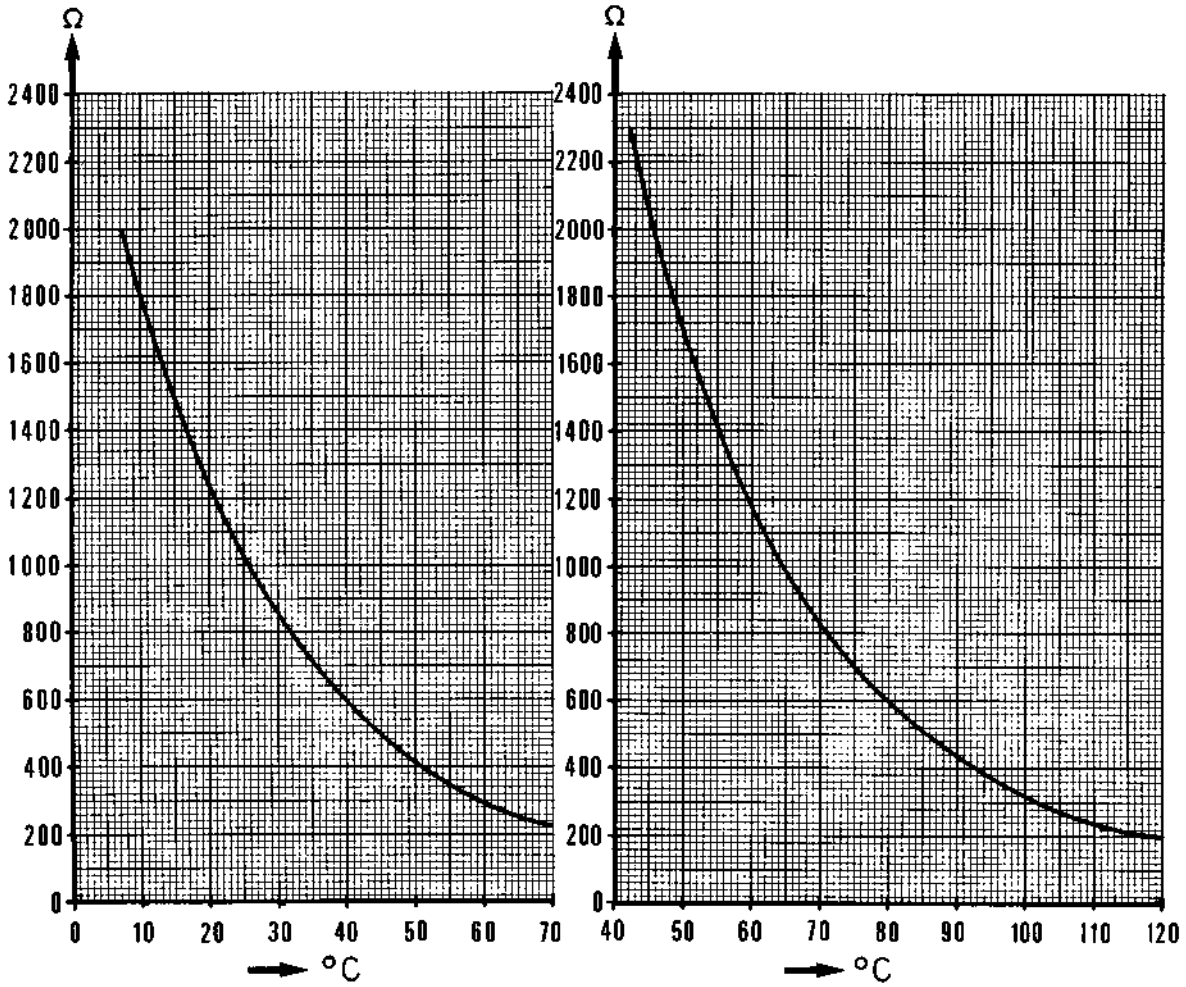

© 25 581 1

This page intentionally left blank

Tools:

- Standard tools,
- testing gauge,
- setting mandrel
- Testing hose with standard test flange (Section 1.8)
- Commercial test pump

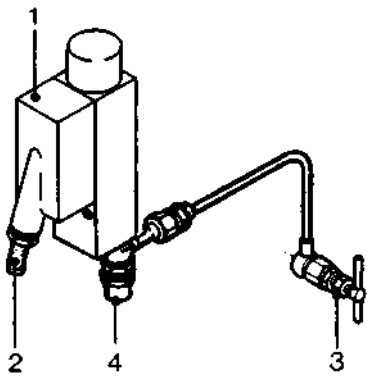

© 51 355 0

Inspection / Testing

Inspect and test the switch for proper functioning

Pressure switches are available for the following media: lube oil, fuel, raw water, fresh water, injector coolant, control (pilot) air, starting and charge air pressure.
Settings are indicated on the switch in bar (kp/cm2). Check whether setting is to fix minimum (dropping) or maximum (rising) limits. (Terminal 212 / 212 always for rising function).

Job:

Clean housing (1) externally. Check that all bolts/screws and stuffing box screwing (2) are tight. Be sure no lead can chafe. Close cock (3). Unscrew cap nut (4) and connect testing hose. Connect test gauge to hose flange. Subject switch to a higher working pressure by a commercial test pump. Check that switch trips as the pressure falls or rises (depending on setting and application). The test gauge indicates the prevailing working pressure. Compare actual tripping point (e.g. for release of an alarm) to the preset tripping point (see Section 3.3).

Servicing

Setting the trip point

For altering the setting (trip point), loosen fixing screw (6) and turn adjusting screw; clockwise raises pressure, counterclockwise reduces pressure. As the desired setting is obtained, lock adjusting screw (7) by fixing screw (6).

Adjusting screws have RH thread.

The integral microswitches are of the single-pole quick-action type and must never be removed. Nor must the sensor retaining screws be slackened or removed. Be sure to replace defective pressure switches as a complete unit.

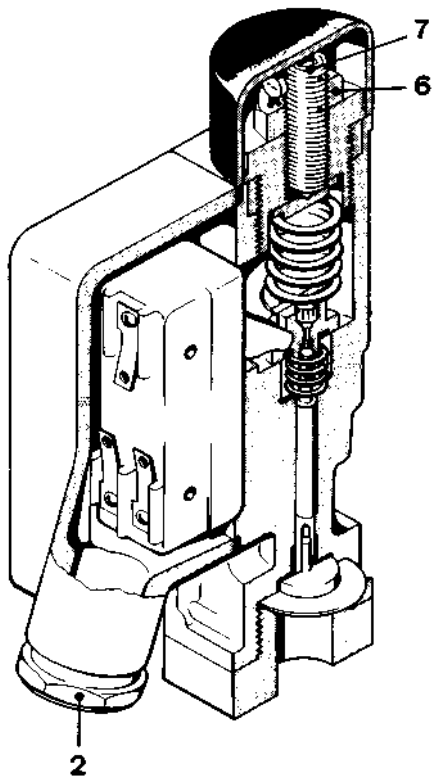

© 51 356 0

This page intentionally left blank

Inspection / Testing

Inspect and test the switch for proper functioning.

☞ Pressure switches are available for the following media: lube oil, fuel, raw water, fresh water, injector coolant, control (pilot) air, starting and charge-air pressure. Settings are indicated on the switch in bar (kp/cm2). Check whether settings is to fix minimum (dropping) or maximum (rising) limits. (Terminal 212/212 always for rising function). Test for proper functioning has to be carried out with the unit operating.

Clean housing (1) externally. Check that all bolts/ screws and stuffing box screwing (2) are tight. Be sure no lead can chafe. Close shut-off valve (3).

Functional Test
For testing functions of the instruments mounted on the pressure switch panel, remove screw plug (4) and connect in place of same the hose with test connection. To this hose can be connected a test gauge or a test pump combined with test gauge. Subject switch to a higher working pressure by a commercial test pump. check that switch trips as the pressure falls or rises (depending on setting and application). The test gauge indicates the prevailing working pressure.

Compare actual tripping point (e.g. for release of an alarm) to the preset tripping point (see Section 3.3).

Tools:
- Standard tools,
- testing gauge,
- hose with test connection
- Commercial test pump

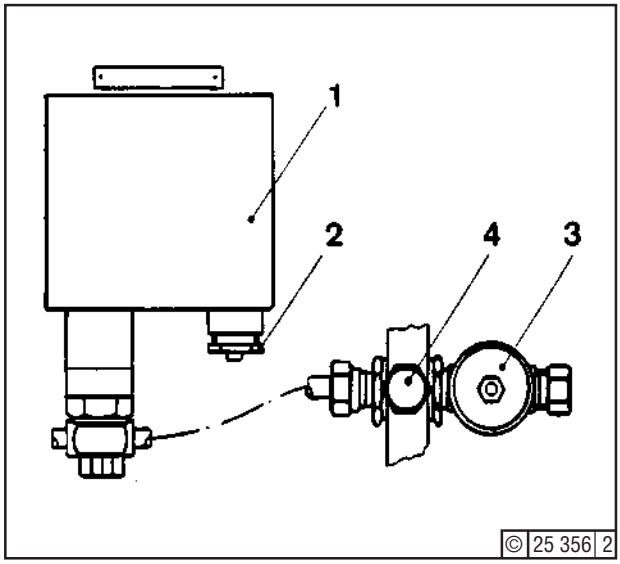

Servicing

Setting the trip point

For altering the setting (trip point), remove housing cover (5) and loosen fixing screw (6) located inside the housing. The trip point is set at the adjusting screw (7) with the aid of a screwdriver: clockwise raises pressure, counterclockwise reduces pressure. As the desired setting has been obtained, retighten fixing screw (6) and replace housing cover (5).

⚠ The built-in micro switches are of single-pole quick-action type.

The screws retaining the pressure switch must never be slackened or removed. Be sure to replace defective pressure switches as a complete unit.

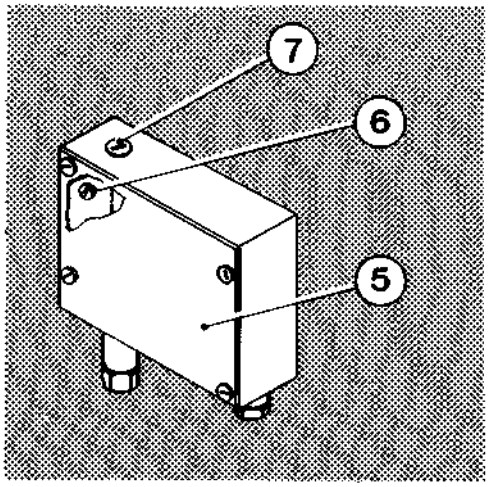

© 25 357 1

Inspecting Pressure Transmitter

Pressure transmitters are available for the following media, depending on the scope of monitoring equipment:
lube oil, fuel, control air, starting and charge air pressure. Settings are indicated on the pressure transmitter in “bar”. The inspection is carried out during operation according to the intervals specified in the Maintenance Schedule. In the case of pressure transmitters with measuring ranges different from that indicated here, the inspection should be done analogously.

Tools:

- Standard tools
- Test gauge
- Test hose with test connection
- Commercial test pump
- Ammeter (range 4-20 mA)

Job

Preparation

- Clean housing (3).
- Check that all bolts/screws are tight.
- Check stuffing box screw union for possible leak (4).

☞ Be sure no lead nor line can chafe!

Inspection

- Close shut-off valve (1)
- Remove screw plug (2), connect hose with test connection. Fit a test gauge respectively a test pump combined with pressure gauge to this hose.
- Connect ammeter.
- Subject pressure transmitter with test pump to a higher working pressure than specified - 6 bar at a maximum, however.
  Pressure transmitter must indicate on the connected ammeter, depending on the measuring range (e.g. 0-10 bar)

  0 bar, corresponding to 4 mA,
  6 bar, corresponding to 13,6 mA.

After Completed Inspection

- Remove test hose.
- Detach ammeter.
- Turn in screw plug (2).
- Open shut-off valve (1).

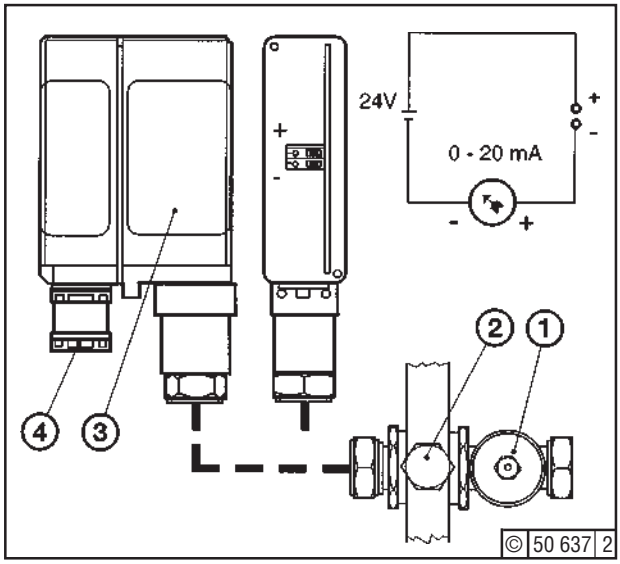

Fig. 1

Calibration parameters for VD 61-2,5	
Serial-Nr.: 1119202013 Day: 08-01-1992	
Calibr.point 1 P1 = 0,000 bar I1 = 4,01 mA	Intermediate measurement 0,5 (P2 - P1) = 1,250 bar
Calibr.point 2 P2 = 2,500 bar I2 = 19,95 mA	Iout = 11.97 mA
Inp. range: 0...2,5 bar	Output: 4...20 mA

© 0185

This page intentionally left blank

Testing

Check that flow switch for shielded injection lines works properly.

⚠ The switch can work properly only when the fuel back leakage line is installed with **consistent gravity feed** to the collector tank.

☞ Alarm by the flow switch in service may be caused by a broken line or a leaky connection.

Tools:

- Srandard tools
- Tundish

Job

Clean switch (2) externally and make sure that connections are tight.
With the engine in service, unscrew union (1) and take out blanking cone. Put tundish on pipe connection and fill in diesel fuel. The switch (2) should now release an alarm as long as the diesel flow continues.
If no alarm is released, eliminate the cause of the trouble or replace the switch.

☞ Check that the electric lead is properly installed so as not to “chafe”.

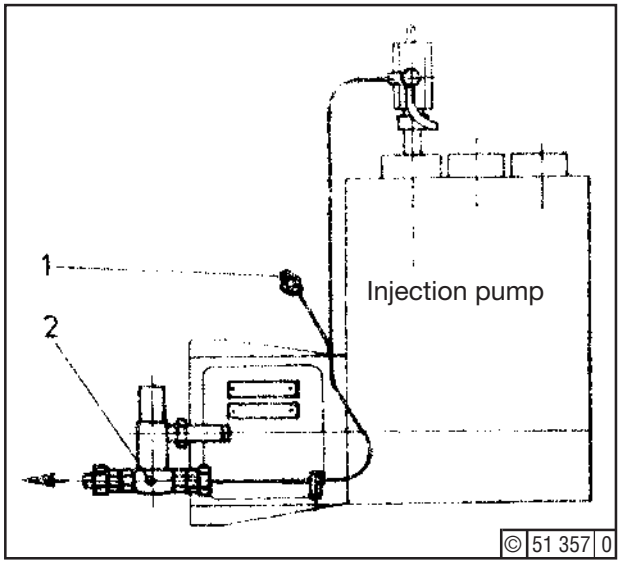

This page intentionally left blank

Tools:

- Standard tools

The fastening location point (3) of the coupling socket is the temperature comparison point.

Job

Removing the Thermocouple

Stop engine. Unscrew bolts (1) and remove cap (2). Pull plug (5) out of socket (4). Undo clamping union (9) and pull out complete thermocouple. If the job has to be done with engine running, the cover tube (11) of the thermocouple must remain in situ. In that case, undo union (6) and withdraw sensor (10).

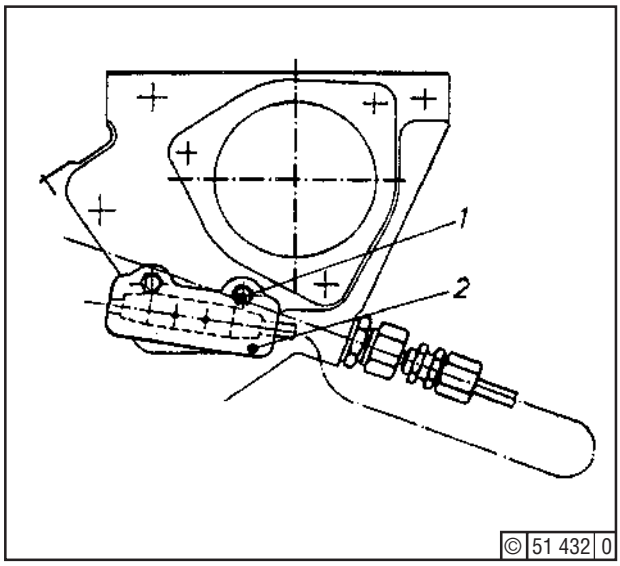

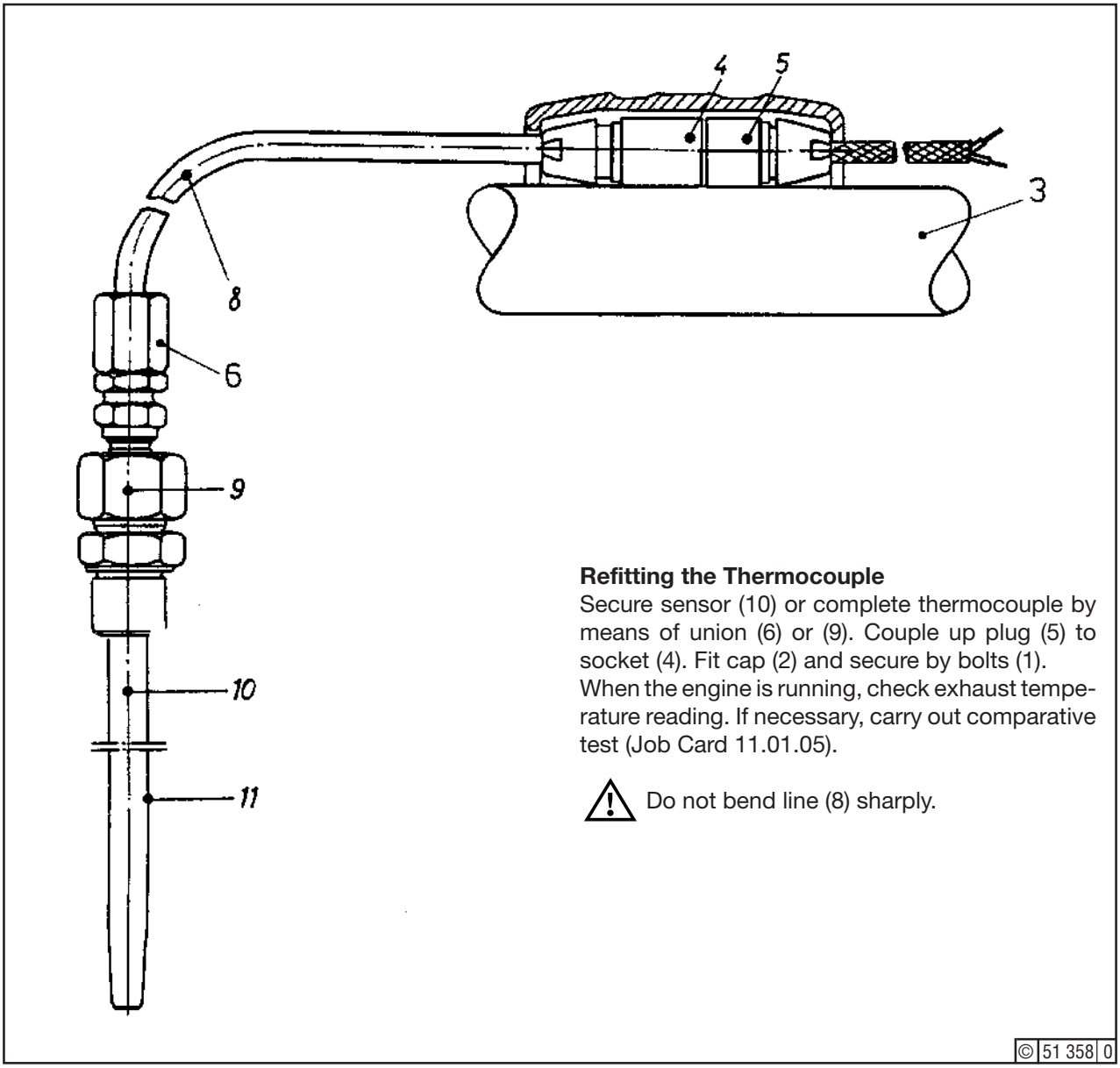

Refitting the Thermocouple

Secure sensor (10) or complete thermocouple by means of union (6) or (9). Couple up plug (5) to socket (4). Fit cap (2) and secure by bolts (1).
When the engine is running, check exhaust temperature reading. If necessary, carry out comparative test (Job Card 11.01.05).

Do not bend line (8) sharply.

© 0983

This page intentionally left blank

Testing

Carry out a comparative measurement if readings between thermocouples differ widely or a thermocouple has entirely failed.

Job Card:

- 11.01.04

Tools:

- Standard tools
- mV meter
- Thermometer

Job

Stop engine. Remove thermocouple (job 11.01.04). Carry out a comparative measurement either with a new thermocouple or one that has been removed from an adjacent cylinder. Refit new or used thermocouple (job 11.01.04).

Comparative Test (see also Fig. of job 11.01.04)
Start engine and run up to working temperature. Pull plug (5) out of socket (4). Connect mV meter to the following point in socket 4:
Connection (1): negative lead (green)
Connection (3): positive lead (red)
Read off mV value.
Measure temperature of coupling socket (comparison point) and take mV value from table. Add both mV values together and take exhaust gas temperature from table.

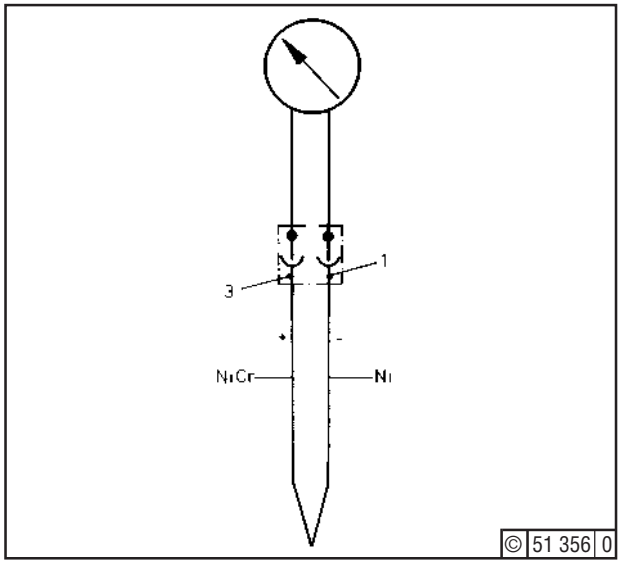

☞ If the coupling socket has been removed from the comparison point on engine, measure the temperature of coupling socket and add same to value of exhaust gas temperature.

Compare table temperature with that indicated by thermometer. Renew thermocouple if necessary. Refit coupling (Job Card 11.01.04).

Conversion Table: mV to °C
Using Thermocouple Leads NiCr
and Ni to DIN 43710

°C	0	10	20	30	40	50	60	70	80	90	
0	0	0,40	0,80	1,20	1,61	2,02	2,43	2,85	3,26	3,68	**mV**
100	4,10	4,51	4,92	5,33	5,73	6,13	6,53	6,93	7,33	7,73	**mV**
200	8,13	8,54	8,94	9,34	9,75	10,16	10,57	10,98	11,39	11,80	**mV**
300	12,21	12,63	13,04	13,46	13,88	14,29	14,71	15,13	15,55	15,98	**mV**
400	16, 40	16,82	17,24	17, 67	18,09	18,51	18,94	19,36	19,79	20,22	**mV**
500	20,65	21,07	21,50	21,92	22,35	22,78	23,20	23,63	24,06	24,49	**mV**
600	24, 91	25,34	25,76	26 ,19	26,61	27,03	27,45	27,87	28,29	28,72	**mV**

© 1183

This page intentionally left blank

NORIS-KN safety system

The NORIS-KN safety system is designed for monitoring marine diesel and stationary engines.
A description of the operation of the system can be found in the separate manufacturer's documentation, which is enclosed.
Maintenance work must only be carried out by DEUTZ service or by an authorised specialist workshop.

© 0401

This page intentionally left blank

© 0401

Checking and Servicing

- Cleaning the optical components, initially after 25 hours
- Cleaning the optical components, periodically every 250 hours
- Checking and servicing, periodically every 1000 hours

All checking and servicing work should be carried out in accordance with the manufacturer's operating manual.

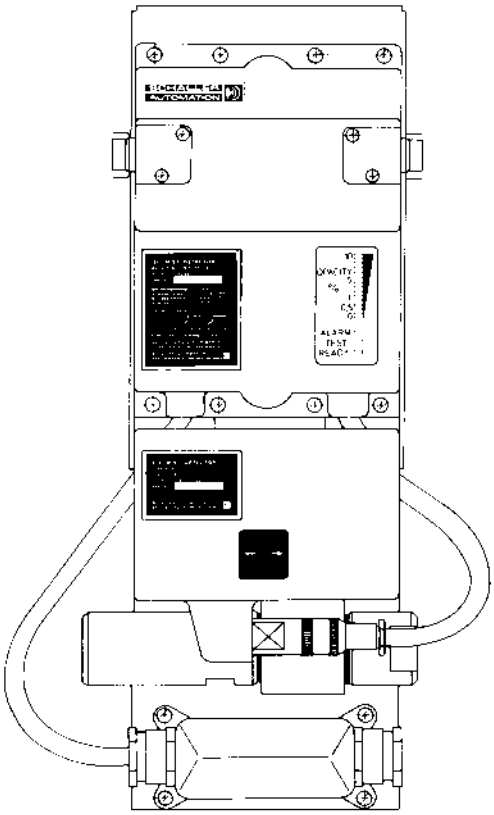

© 25 577 1

This page intentionally left blank

Testing

Test water detector for proper functioning.

☞ The detector is located beneath the charge air pipe. When water collects in the charge air pipe, due for instance to a charge cooler leak or the temperature not reaching the dew point, the water level will rise in container (4) and release an alarm. In this case be sure to remedy the trouble immediately.
Drain water through cock (5).

Tools:
- Standard tools

Job

Unscrew plug (3) and fill container (4) with water up to overflow port (2), whereupon sensor (1) should cause an alarm. Failing this, inspect sensor and, if necessary, replace.

Following this test, refit plug (3) with a new joint washer.

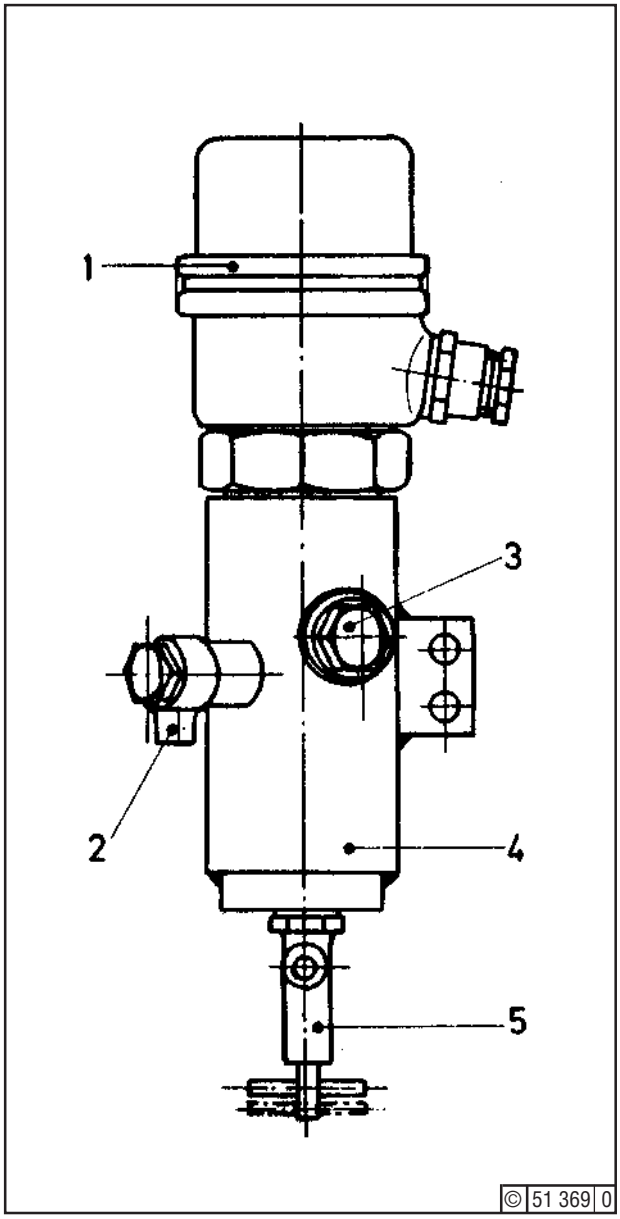

This page intentionally left blank

Testing

With engine stationary, test switch response.

☞ The switch is provided where required. Where a high-level oil tank is fitted, the switch gives alarm for maximum level; where lubrication is from the regular sump, the switch gives alarm for minimum level.

Tools:

- Standard tools
- Blunt wooden stick, 8 mm diameter, about 100 mm in length

Job Card:

- 02.00.01

Job

To begin with, open the following crankcase doors:

	S/BV 6 M 628	S/BV 8 M 628	S/BV 9 M 628
Door	3	4	5

	S/BV 12 M 628	S/BV 16 M 628
Cyl. bank	A	A
Door	3	4

Introduce wooden stick (e.g. a pencil) through one of the holes in top/bottom of switch and raise the latter (high-level tank, Fig. 1) or press down (sump, Fig. 2), until alarm is released.

© 1283

Oil Level Float Switch
Testing

Filing No.: 0178-48-10 1546

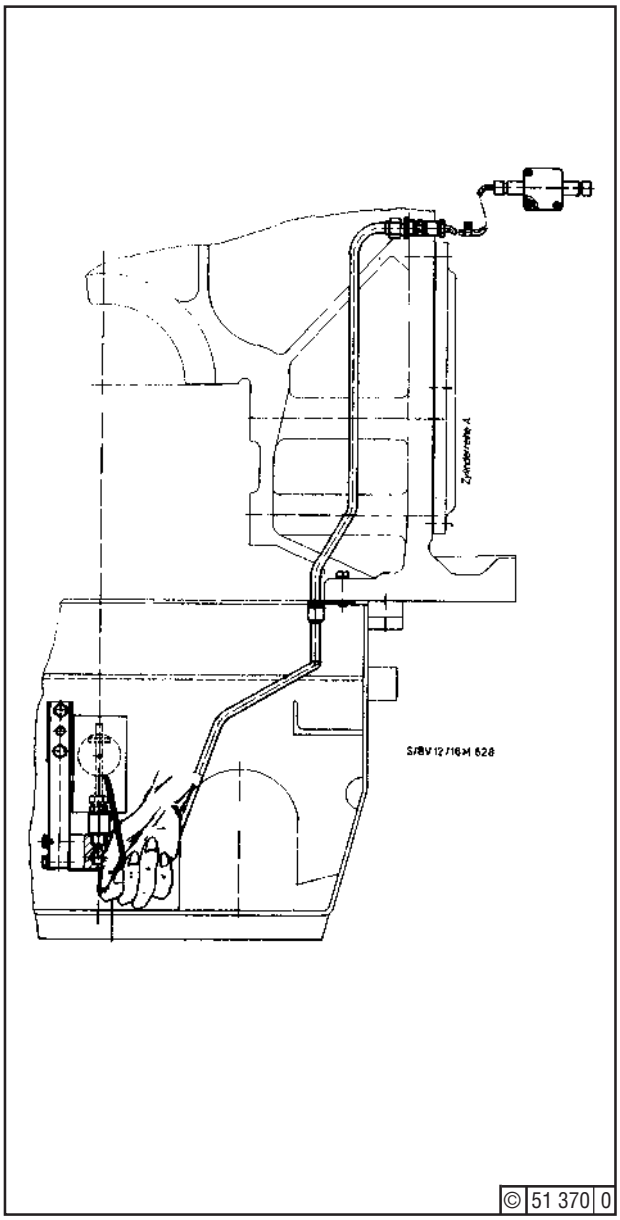

Fig. 1

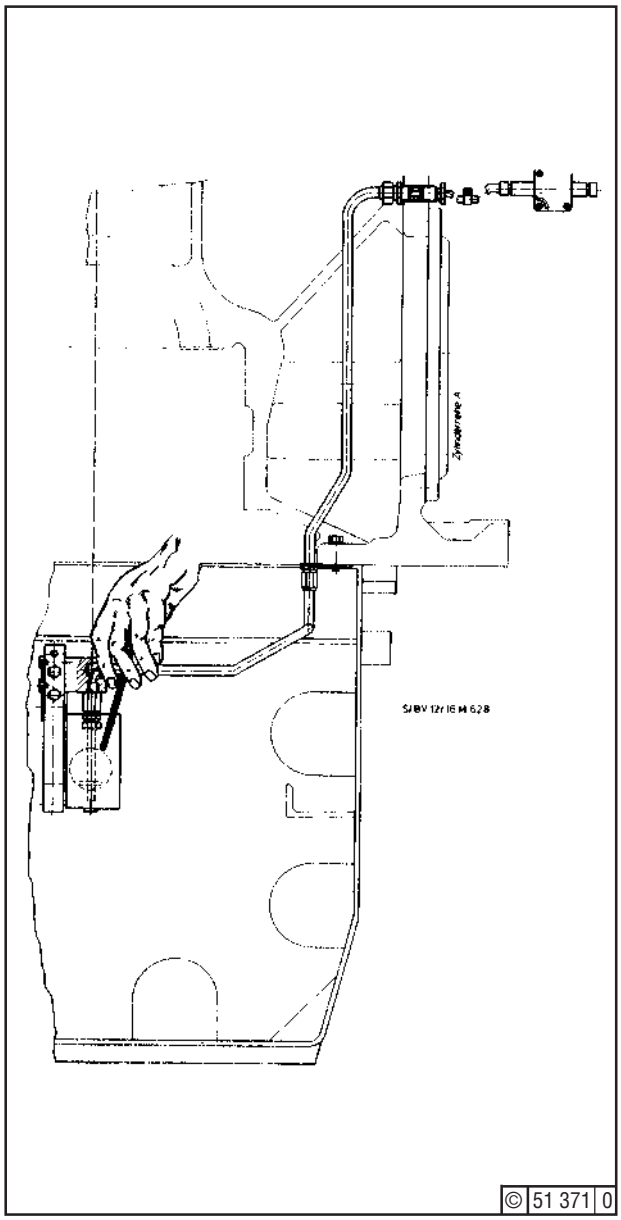

Fig. 2

Should no alarm be given, trace cause of defect immediately or replace switch.

⚠ Never move switch with a pointed tool like a screwdriver and never use brute force. Check that nothing will fall into sump and that switch lead will not chafe.

Checking

Inspect and test function of the service warning switch on lube oil filter with engine stopped.

☞ In the case of excessive contamination of the lube oil paper microfilter, the service warning switch causes a differential pressure warning to be given.

Tools:

- Standard tools
- Testing pressure gauge
- Testing hose (Section 1.8)
- Standard testing pump

Job Card:

- 08.00.01

Job

Observe instructions given in Job Card No. 08.00.01

Clean exterior of housing. Check fastening screws for tight seating. Remedy any leaks. Ensure that the connection cables do not chafe.

By means of hand wheel or 8 mm open-end spanner, turn cock (1) to test position II. Remove screw plug (2). Connect up testing hose, pressure gauge and testing pump. Actuate pump and read off pressure at gauge. At a pressure of 1± 0.2 bar, the differential pressure warning must be given.

Defective service warning switches must be renewed complete.

Remove testing hose, refit screw plug (2) complete with seal ring. Finally, turn cock (1) back to operating position I.

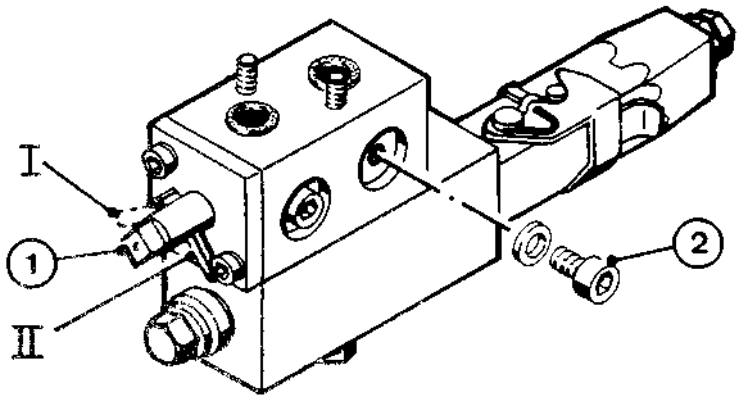

© 25 136 1

This page intentionally left blank

DEUTZ	Viscous-type Vibration Damper (Version without Auxiliary Drive)	Job Card No.: 12.01.01
	Filing No.: 0178-34-10 1198	Engine: S/BVM 628

Replacement of this torsional vibration damper is due at the end of 15,000 running hours. Reconditioning must be made by the manufacturers only.

Tools:

- Standard tools
- 2 puller bolts M12 x 70
- Hoist

Job:

Removing the Damper

Stop engine. Remove casing. Attach damper (3) to hoist. Remove bolts (1) with washers (2). Use bolts (4) to pull off damper (3) from crankshaft (5). Clean all damper contact faces. Remove any high spots with oil stone.

Refitting the Damper

Remove puller bolts (4). Fit damper (3) on crankshaft (5). Fit bolts (1) with washers (2) and tighten crosswise as specified (Section 3.5, item 17). Refit casing. The following applies to vibration damper plus extra mass.

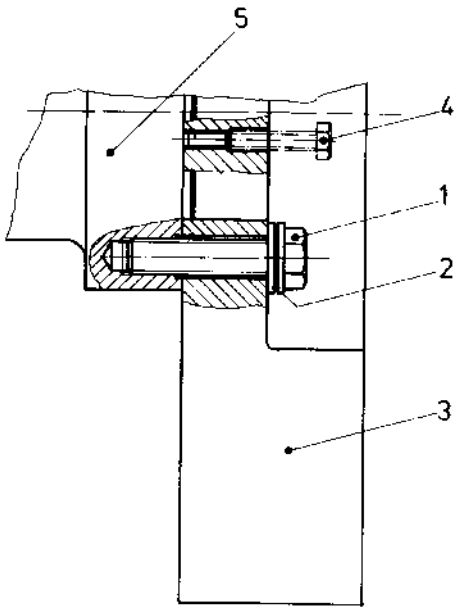

© 51 372 0

This page intentionally left blank

DEUTZ	Viscous-type Vibration Damper (Version without Auxiliary Drive)	Job Card No.: 12.01.01
	Filing No.: 0178-34-10 1337	Engine: S/BVM 628

☞ Replacement of this torsional vibration damper is due at the end of 15,000 running hours. Reconditioning must be made by the manufacturers only.

Tools:

- Standard tools
- 2 puller bolts M12 x 70
- Hoist

Job:

Removing the Damper

Stop the engine. Remove casing.
Attach damper (3) to hoist. Remove bolts (1) with washers (2). Use bolts (4) to pull off damper 3 from crankshaft (5).
Clean all damper contact faces. Remove any high spots with oil stone.

Refitting the Damper

Remove puller bolts (4). Clean crankshaft journal as well as the contact faces of the new damper and balance weights (3) and push balance weights with damper onto the crankshaft journal (5). Ensure that damper and balance weights are centred. Screw in screws (1) with washers (2) fingertight. Tighten screws crosswise as specified (Section 3.5, item 48). Refit casing.

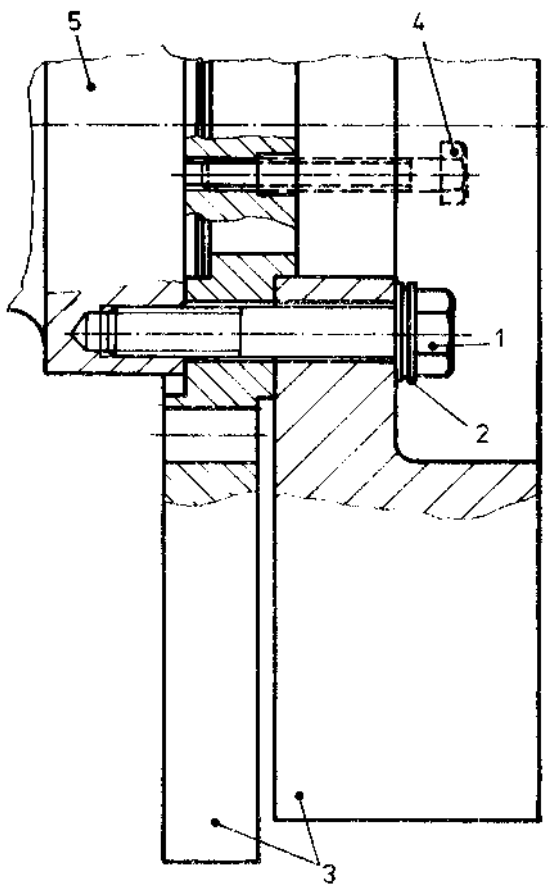

© 51 373 0

This page intentionally left blank

DEUTZ	Viscous-type Vibration Damper (Version with Auxiliary Drive)	Job Card No.: 12.01.01
	Filing No.: 0178-34-10 1361	Engine: S/BVM 628

Replacement of this torsional vibration damper is due at the end of 15,000 running hours. Reconditioning must be made by the manufacturers only.

Tools:

- Standard tools
- Puller bolt M12 x 70
- Hoist

Job

Removing the Damper

Stop engine. Remove casing. Attach damper (2) to hoist. Remove screws (1) and (4), dowel pins (6) and auxiliary drive shaft (3).
Use bolt M 12x70 (7) to pull off damper (2) from crankshaft (8) and carefully put down damper.
Clean all damper contact faces. Remove any high spots with oil stone.

Refitting the Damper

When fitting a new damper, first enlarge both holes for dowel pins (6) to 32 mm diameter. Clean damper contact surfaces. Fit damper on crankshaft (8) so dowel pins (6) can be installed. Mount auxiliary drive shaft (4). Secure plate (5) by screws (4).
Fit screws (1) and tighten crosswise as specified (Section 3.5, item 18). Refit casing.

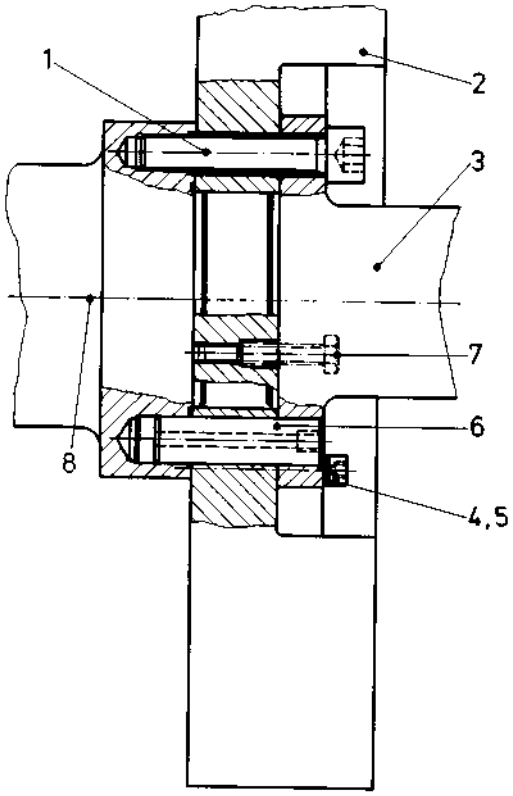

© 51 374 0

This page intentionally left blank

The torsional vibration occurring in the critical speed range of the engine is absorbed by two or four rubber damping elements secured between fly ring and the plates attached to the crankshaft flange.

Keep fuel and lube oil away from rubber elements!

Tools:
- Standard tools
- Pocket lamp

Job Card:
- 12.01.03

Inspection

Inspection is carried out with damper in situ.

- Check air slits (if provided) in damper for cleanliness and free air-passage. If necessary, clear slits with compressed air.
- Where possible, check damper elements for freedom from cracks and for firm connection with the vulcanized-on steel plates. If necessary, recondition damper.
- Check bolts of joints (where accessible) for “hand-tight” seating (torque ca. 30 Nm), **without** holding the nuts. Any signs of friction indicate loose bolts. If loose bolted joints are found, the damper has to be reconditioned.

Reconditioning

The damper must be reconditioned not later than 10 years after date of engine commissioning, irrespective of the hours run. Such reconditioning is required too, if damage or any defects have been ascertained during the inspection.

We recommend that reconditioning be entrusted to a DEUTZ-Service workshop.

© 0686

Tools:

- Standard tools
- Dial gauge
- Deutz DW 55 locking compound (Section 3.6)

Job

Remove vibration damper (Job Card 12.01.03).

Dismantling (4-element Damper)

Markings provided on the large castings to show relative positionings - Fig. 1.

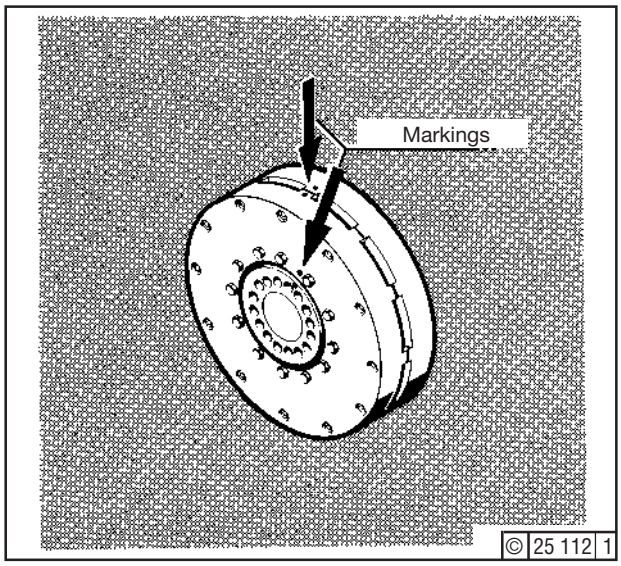

Fig. 1

Remove hex. bolts (8) - Fig. 2 - and hex. plates (1). Now unscrew hex. bolts (13) and take off threaded ring (7). The four damping discs (3) - two of each fastened together to form a pair - can now be removed, and also the ring (2).
Screw out hex. bolts (10). Separate damping discs (3) and triangular plates (6).
Clean and inspect all components, renewing as necessary.
Renew damping discs (3).

⚠ Do not damage rubber elements of damping discs.

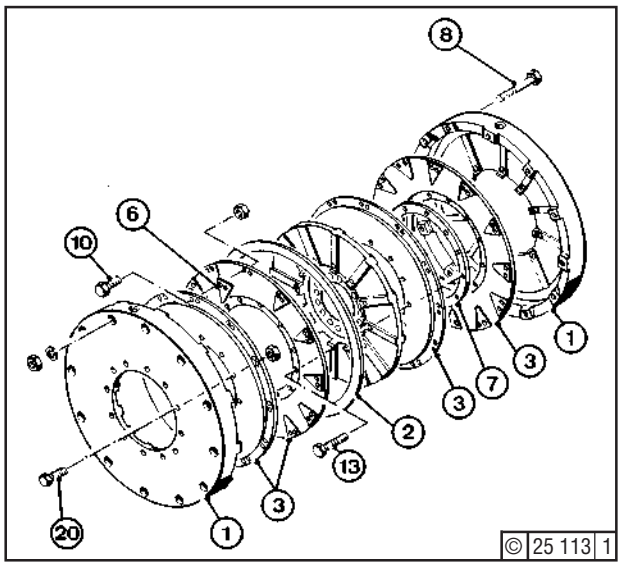

Fig. 2

Reassembly (4-element Damper)

Equip one pair of damping discs (3) - Fig. 3 - with threaded ring (7) and the other pair with hex. bolts (13) ready for bolting together. Now complete damping discs with triangular plates (6), hex. bolts (10) - inserted with Deutz DW 55 - and hex. nuts (11). Align damping discs and tighten hex. nuts (11) (Section 3.5, item 56).

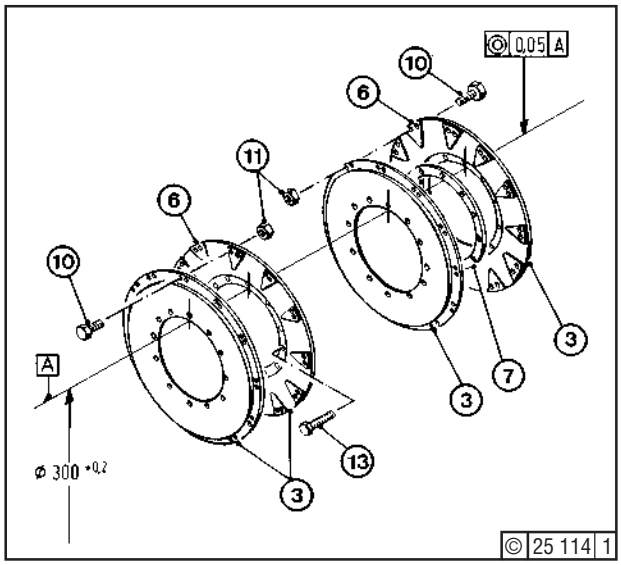

Fig. 3

Insert damping-disc pair complete with threaded ring (7) - Fig. 4 - into end plate (1). Fit hex. bolts (20) provided with Deutz DW 55. Tighten up end plate and damping-disc pair with hex. nuts (15) (Section 3.5, item 58).

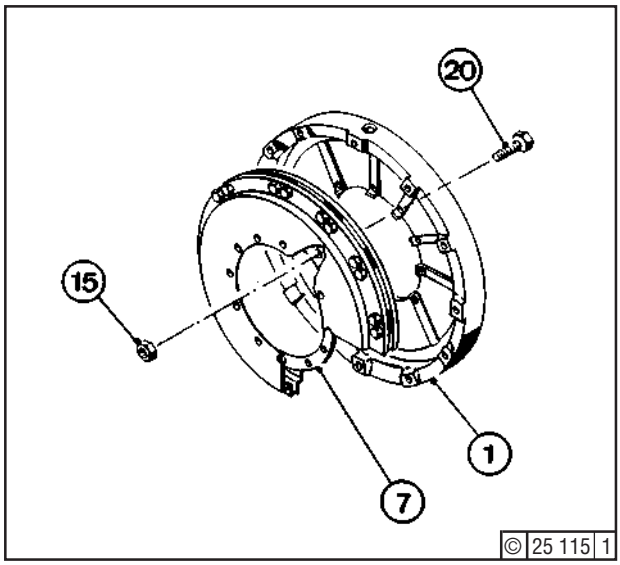

Fig. 4

Insert ring (2) - Fig. 5 - and disc (14), observing markings as per Fig. 1. Bolt up the two damping-disc pairs and disc (14) by means of hex. bolts (13) - inserted with Deutz DW 55 - and c/w threaded ring (7) (Section 3.5, item 59).

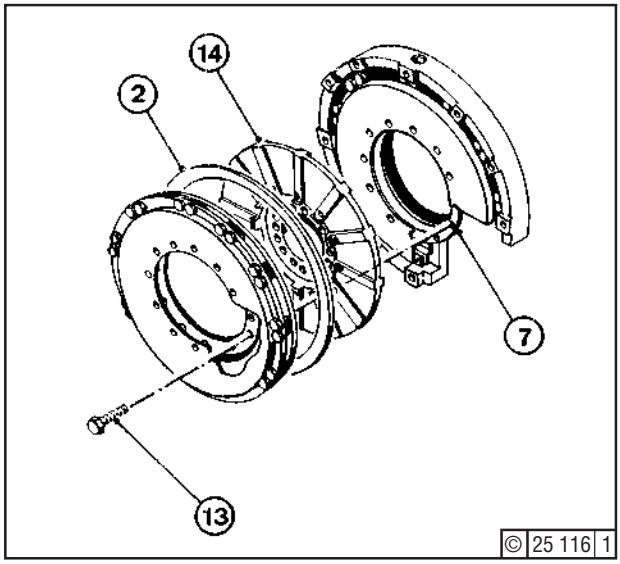

Fig. 5

Place end plate (1) - Fig. 6 - in position, observing markings as per Fig. 1. Insert hex. bolts (8) and fasten with nuts complete with spring lockwashers. Fit hex. bolts (20), provided with Deutz DW 55. Tighten up end plate and damping-disc pair with hex. nuts (15) (Section 3.5, item 58).

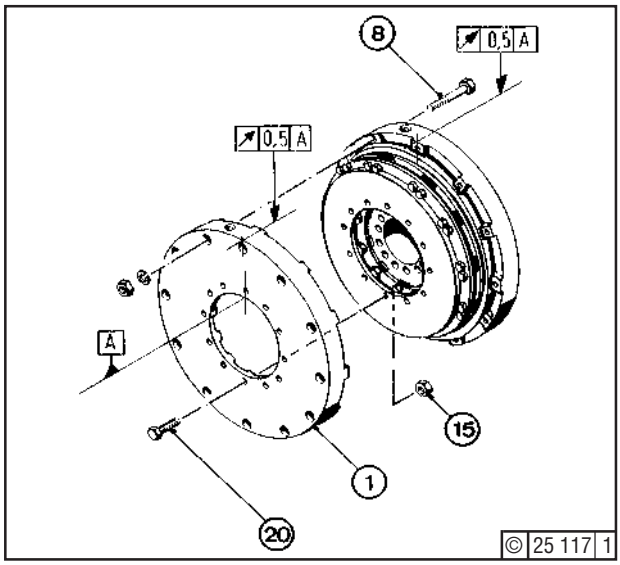

Fig. 6

© 0983

Dismantling (2-element Damper) - Fig. 7
Markings provided on fly ring (22) and disc (18) to show relative positioning. Remove hex. bolts (12) and (15). Take off damping discs (4) and disc (18). Clean and inspect all components, renewing as necessary. Renew damping discs (4).

⚠ Do not damage rubber elements of damping discs.

Reassembly (2-element Damper) - Fig. 7
First, bolt up one damping disc (4) onto fly ring (22) by means of hex. bolts (15) provided with Deutz DW 55. Place on disc (18) and second damping disc (4). Bolt up with hex. bolts (15) and (12) - provided with Deutz DW 55 - and hex. nuts (14). Tighten up hex. bolts (15) (see Section 3.5, item 55) and hex. bolts (12) (Section 3.5, item 59).

Mount vibration damper (job 12.01.03). If an end plate (Fig. 6, item 1) or a fly ring (Fig. 7, item 22) had to be renewed, the damper must be statically balanced.

Finally, check for true running as per Figs. 6 or 7.

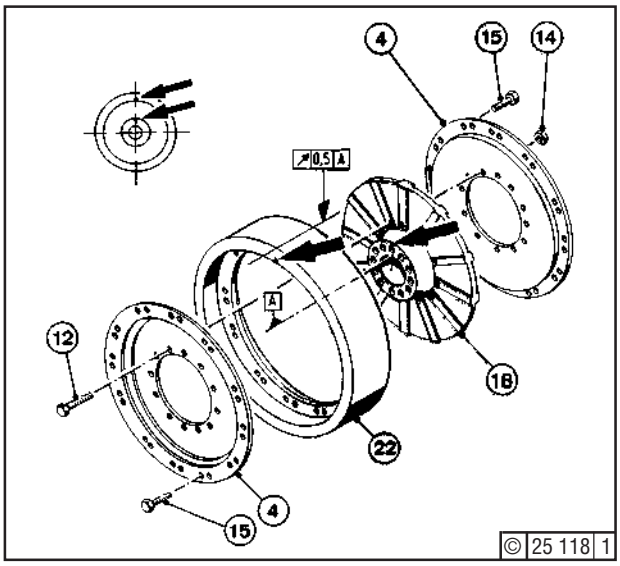

Fig. 7

Tools:
- Standard tools
- 2 puller bolts M 12 x 70
- Hoist

Job Card:
- 12.01.02

Job

Removing the Damper

Stop engine. Remove casing. Attach damper (2) to hoist. Remove bolts (1) with washers (2). Use bolts (4) to pull of damper (3) from crankshaft (5). Clean all damper contact faces. Remove any high spots with oil stone.

☞ Keep fuel and lube oil away from rubber elements!

Refitting the Damper

Remove puller bolts (4). Clean crankshaft journal as well as the contact faces of the new damper and balance weights (3) and push balance weights with damper onto the crankshaft journal (5). Ensure that damper and balance weights are centred. Screw in screws (1) with washers (2) fingertight. Tighten screws crosswise as specified (Section 3.5, item 17). Refit casing.

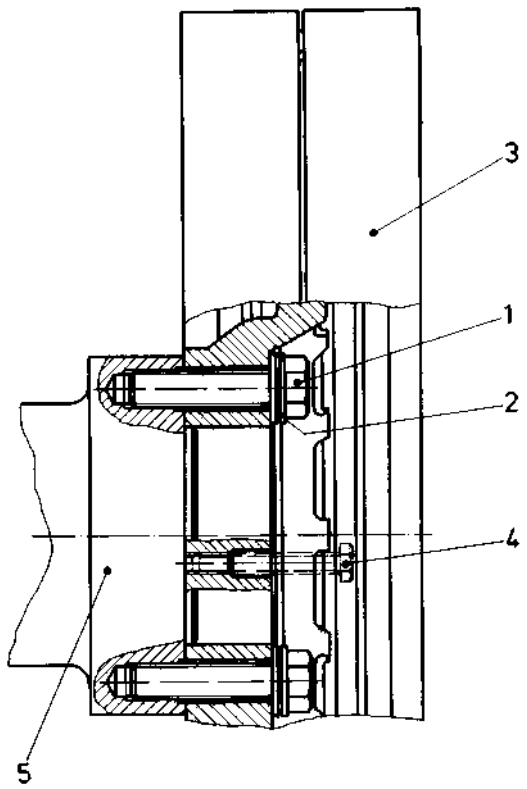

Shown here is design for S/BV 8/9/12 M 628

© 51 375 0

This page intentionally left blank

Tools:
- Standard tools
- Puller bolt M12 x 70
- Hoist

Job Card:
- 12.01.02

Job

Removing the Damper

Stop engine. Remove casing. Attach damper (2) to hoist. Remove screws (1) and (4), dowel pins (6) and auxiliary drive shaft (3). Use bolt (7) to pull off damper (2) from crankshaft (8) and carefully put down damper. Clean all damper contact faces. Remove any high spots with oil stone.

☞ Keep fuel and lube oil away from rubber elements!

Refitting the Damper

When fitting a new damper, first enlarge both holes for dowel pins (6) to 32mm diameter. Clean damper contact surfaces. Also observe above note for this.
Fit damper (2) on crankshaft (8) so dowel pins (6) can be installed. Mount auxiliary drive shaft (4). Secure plate (5) by screws (4).
Fit screws (1) and tighten crosswise as specified (Section 3.5, item 18). Refit casing.

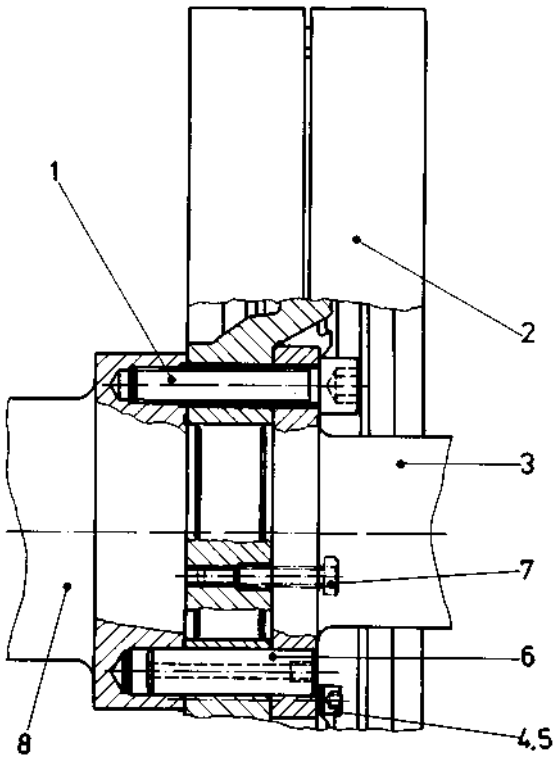

Shown here is design for S/BV 8/9/12 M 628

© 51 376 0

This page intentionally left blank

Knowing it's DEUTZ.

DEUTZ has always stood for excellence in motor construction, pioneering many developments in the industry. As an independent motor manufacturer, we offer - worldwide - a comprehensive range of diesel and gas motors spanning from 4kW to 7,400kW. Our products are perfectly tailored to meet our customers' individual requirements.

Over 1.4 million DEUTZ motors do their job reliably all over the world. We are determined to preserve the high standard of performance and dependability of our motors, thus keeping our customers satisfied at all times. Therefore we are represented worldwide through a network of highly competent service partners who will meet the needs of our customers, wherever they are.

This is why DEUTZ is not only the name for motors which pack a lot of inventive genius. DEUTZ also means reliable service and comprehensive support to enhance your motor's performance.

This index Sales & Service offers you an overview of the DEUTZ partners in your vicinity, including the products for which they are responsible and the range of services provided. But even when no direct product responibility is mentioned, your DEUTZ partner will be happy to help you with expert advice.

The index is constantly updated. Please ask your DEUTZ service partner for the latest edition.

DEUTZ AG - at your service.

Order-No.: 0297 7444

Order-No.: 0297 7445 (CD-ROM)

Obtainable from the local service partner responsible for you or from:

DEUTZ AG
Deutz-Mülheimer Str. 147-149
D-51057 Köln

Phone: 0049-221-822-0
Telefax: 0049-221-822-5304
Telex: 8812-0 khd d
http://www.deutz.de