LIQUID SPRAYERS

PARTS CATALOG

CHALLENGER

7460 / 7660 SPRAYER CHASSIS (EFF S/N ..Txx1001)

520030D1 B

June 2008

How to use this Parts Book

Parts Ordering Guide:

1. Give the Serial Number of your Chassis or System when ordering.
2. Use the part number and description when ordering parts.
3. Give the Assembly Title if needed.
4. Give the P/N number and date for the Parts Book if needed.

Parts List Abbreviations

NSS	Not Sold Separately
AR	As Required, usually for a lubricant or adhesive
REF	Reference - Part called out on a different page.
NS	Not shown in illustration
R/B	Replaced by another number
ASM	assembly page

Notice:

Every effort has been made to ensure the accuracy of the information in this book. However, because of design changes that can occur since this book was published, it is possible that some illustrations and part numbers can be different than on your machine. The technical information in this book was correct at the time this book was approved for publication.

FUEL TANK AND TOOL BOX INSTL

ITEM	PART #	QTY	DESCRIPTION	COMMENTS
1	AG109742	4	MATTING-RUBBER,2.00X44.50X.12	
2	AG109754	4	MATTING-RUBBER,2.00X46.00X.12	
3	AG120558	1	TUBE WLDMT-FUEL LINE	
4	AG122229	1	BRKT,STIFFNER,HAT SECTION	
5	AG122302	1	BRKT-AUX BAT POST	
6	AG125208	1	SHIELD-EXHAUST	
7	AG125210	4	STRAP WLDMT-FUEL TANK	
8	AG126403	4	BOLT-.31-18X2.75 G5 CRG ZN/Y	
9	AG130111	1	PLATE,MTG-FUEL TUBE	
10	AG130414	4	TUBE-RD,.75ODX.12WALL X 2.00LG	
11	AG262729	2	PLATE-SLOT SEALING	
12	AG325049	1	CABINET ASM-TOOL BOX,LH	SEE PAGE 4-2
13	AG325050	1	CABINET ASM-TOOL BOX,RH	SEE PAGE 4-3
14	AG504815	1	TANK-FUEL,65GL,POLY,RH	[A]
15	AG504816	1	TANK-FUEL,65GL,POLY,LH	[B]
16	AG510939	-	HOSE HYD 0.37 BULK 250PSI WP [BULK: 5 FT]	
17	AG512346	-	3M 1300 YELLOW ADHESIVE (GAL) [BULK: 0.001 GL]	
18	AG512885	AR	LOCTITE ADHESIVE SEALANT BLUE	
19	AG518292	2	BOLT-U .31-18X2.00X 2.69 RD SS	
20	AG519556	1	SENDING UNIT FUEL LEVEL	
21	AG522183	-	HOSE-FUEL,2.00 ID [BULK: 2.5 FT]	
22	AG522439	8	BOLT-.38-16X1.5,G5,ZN,CRG	
23	AG522453	2	VENT-FUEL,90D,.50MNPTX.38HOSEB	
24	AG523919	8	CLAMP-HIGH TORQUE,3.00	
25	AG550124	2	NUT 0.50-13NC HEX ZN REG	
26	AG550205	4	WASHER LK 0.31 ZN REG	
27	AG550213	4	NUT 0.31-18NC HEX ZN REG	
28	AG550256	2	BOLT.50-13NCX1.25 G5 ZN HHD	
29	AG550264	2	WASHER 0.50 LK ZN REG	
30	AG550353	10	WASHER 0.50 FL ZN REG TYPE-B	
31	AG551007	8	WASHER FL 0.37 ZN REG TYPE-B	
32	AG551015	4	WASHER 0.31 FL ZN REG TYPE-B	
33	AG551201	1	ADAP STR .37MNPT X .37MJIC (N)	
34	AG552461	1	ADAP STR 0.50MNPT X 0.50MJIC	
35	AG561025	2	CLAMP HOSE .218 TO .625 U5S	
36	AG561867	2	PLUG PIPE 0.25-18 EXT HEX HD	
37	AG601152	8	NUT 0.50-13NC HEX ZN REG NY	
38	AG601411	8	NUT 0.37-16NC HEX ZN REG LK NY	
39	AG601888	4	NUT 0.31-18NC HEX ZN REG NY	
	FOOTNOTE [A]		FOR REPLACEMENT CAP USE AG055178	
	FOOTNOTE [B]		FOR REPLACEMENT CAP USE AG055178	

Assembly Title, refer to Table of Contents

Assembly Reference, see referenced page

Footnote Reference, see notes below.

Footnote Reference

Footnote description

Assembly Page #, refer to Table of Contents

Part Book Section, refer to Table of Contents

Part Book Title, refer to Part Book Cover

Copyright © 2003 AGCO Corporation

1 - 3 | 9 (CHECK LETTER) | 14 - 17

MACHINE SEQUENCE NUMBER:
SEQUENCE NUMBER WILL START OVER AT THE BEGINNING OF EACH MODEL YEAR. THE FIRST MACHINE OF EACH MODEL YEAR WILL BE SEQUENCED 1001.

4 | 5 - 8 | 10 | 11 | 12 | 13

1 - 3	
WORLD MANUFACTURER CODE:	
AGC	AGCO

4	
BRAND CODE:	
A	AG-CHEM
C	CHALLENGER
L	LORAL
S	SPRA-COUPE
W	WILLMAR

5 - 8	
MODEL NUMBER:	
0874	AG-CHEM
1074	
1070	
1274	
6103	
1206	
6203	
8203	
8204	
8244	
9203	
9103	
9203	
3104	
3244	
9055	
9556	
6300	LORAL
6400	

5 - 8	
MODEL NUMBER:	
5150	WILLMAR
5200	
5500	
5600	
5800	
1600	
1655	
2455	
0107	
4550	
8500	
3450	CHALLENGER
3650	
4450	
4455	
4460	
4650	
4655	
4660	
7450	
7650	
7655	
7460	
7660	
0410	
0610	
0735	
0745	
0755	
0765	
0835	
0845	
0855	
0865	
0875	
0945	
0955	
0965	
0975	
2244	SPRA-COUPE
3244	

10	
LOCATION BUILT CODE:	
N	JACKSON
Q	GRUBBENVORST

11	
MODEL YEAR CODE:	
P	2005
R	2006
S	2007
T	2008
U	2009
Y	2010
W	2011
X	2012

12		
OPTION CODE:		
0	NO CODE	AG-CHEM, LORAL (WILLMAR)
B	BOLT-ON HOPPER	
7	NARROW AXLE	SPRA-COUPE & CHALLENGER SPRAYER
8	WIDE AXLE	
I	EXTRA WIDE AXLE	
E	ESP	
P	POLY TANK	AG-CHEM (65/75C ONLY)
S	STAINLESS TANK	
N	NEW LEADER	
A	745	CHALLENGER TRACTOR
B	755	
C	765	
G	835	
H	845	
J	855	
K	865	
L	875	
R	945	
S	955	
T	965	
U	975	

13		
OPTION CODE:		
0	NO CODE	AG-CHEM, LORAL, WILLMAR
A	AUTOMATIC XSHN	SPRA-COUPE & CHALLENGER SPRAYER
M	MANUAL XSHN	
P	POWERSHIFT XSHN	
S	ESP	
G	800 GALLON	AG-CHEM (65/75C ONLY)
I	1000 GALLON	
L	NEW LEADER	
A	EAME AG	CHALLENGER TRACTOR
B	EAME SCRAPER	
C	R.O.S. AG NARROW (MT700 ONLY)	
D	R.O.S. AG WIDE (MT700 ONLY)	
E	R.O.S. AG ULTRA-WIDE (MT700 ONLY)	
F	R.O.S. SCRAPER (MT800 & MT900)	
G	R.O.S. AG (MT800 & MT900)	

ENGINE GROUP	1
TRANSMISSION GROUP	2
FRAME AND SUSPENSION GROUP	3
AXLE AND STEERING GROUP	4
FUEL SYSTEM GROUP	5
HYDRAULIC GROUP	6
CAB GROUP	7
ELECTRICAL GROUP	8
LIGHTING GROUP	9
APPEARANCE GROUP	10
TIRE AND WHEEL GROUP	11
DECAL GROUP	12
GUIDANCE GROUP	13
CONTROLLER GROUP	14
OPTIONS GROUP	15

ENGINE INSTALL-7X60,CHALLENGER	1-1
ENGINE INSTALL-7X60,CHALLENGER	1-2
ENGINE-CAT C6.6,174HP T3	1-3
FAN GUARD INSTALL	1-4
FAN GUARD INSTALL	1-5
AIR INTAKE GROUP	1-6
EXHAUST SYSTEM GROUP	1-7
COOLING PKG GROUP	1-8
COOLING PKG GROUP	1-9

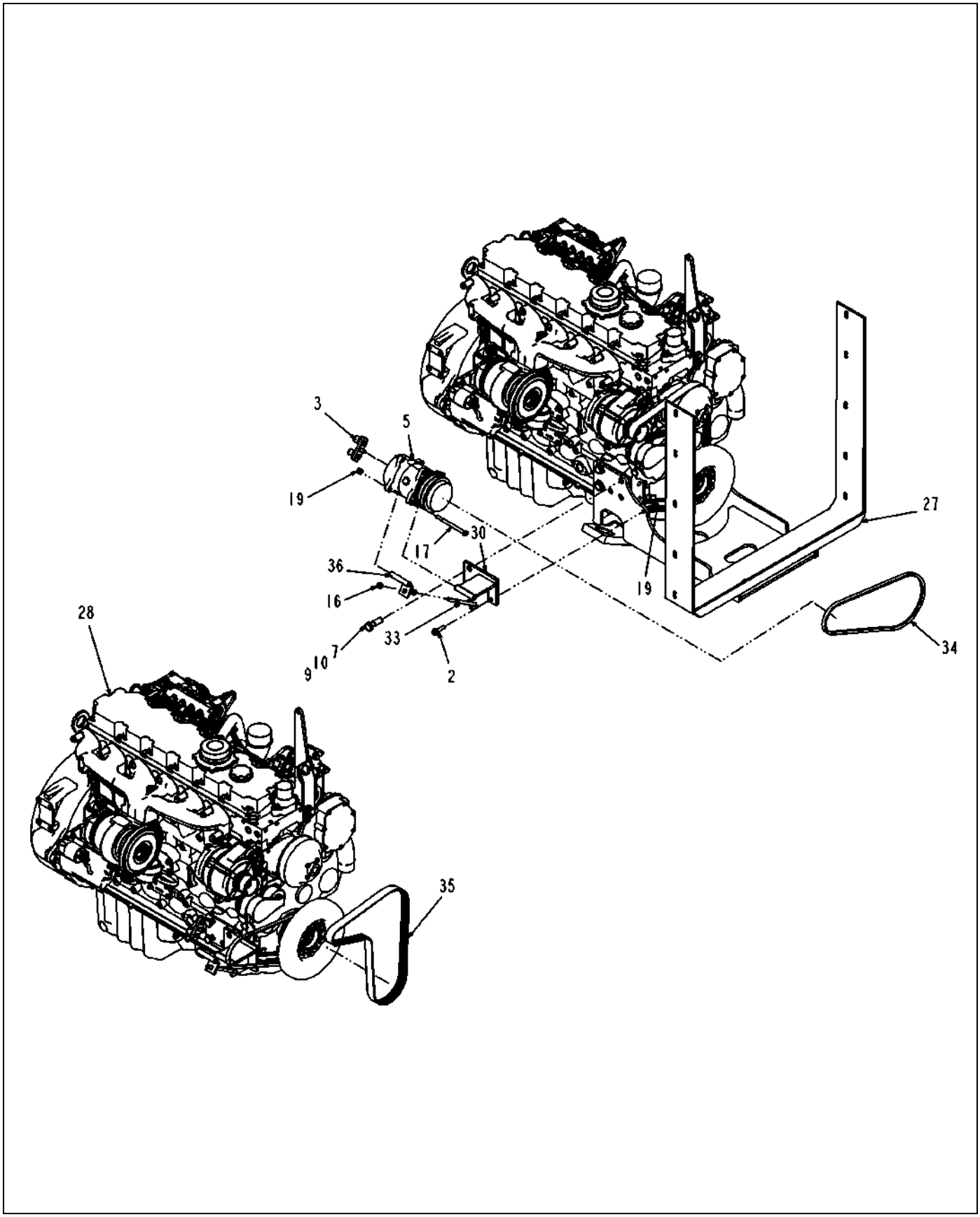

513027D1-03-T101-01.TIF

Copyright © 2008 AGCO Corporation

ITEM	PART #	QTY	DESCRIPTION	COMMENTS
2	WR55261	1	SCREW-HEX FLG,.375NCX1.50 GR5	
3	AG122058	1	PAD-FITTING,A/C COMPRESSOR	
5	WR127944	1	COMPRESSOR-A/C,R134A,2 GROOVE	
7	WR129405	2	BOLT-HEX M16-2.0X50,10.9,ZN	
9	AG512885	-	LOCTITE ADHESIVE SEALANT BLUE	
10	AG515180	8	WASHER 0.62 FL ZN SAE TYP-A G8	
16	AG550825	2	NUT 0.37-16NC HEX ZN REG	
17	AG553662	2	BOLT 0.37-16NCX 5.00 G5 ZN HHD	
19	AG601411	3	NUT 0.37-16NC HEX ZN REG NY	
27	513025D1	1	WLDMT-MOUNT,ENG,FRONT	
28	513030D1	1	ENGINE-CAT C6.6,174HP T3	SEE PAGE 1-3
30	513121D1	1	WLDMT-BRKT,A/C	
33	513800D1	1	ROD-TENSIONER,A/C	
34	515757D1	1	BELT-VEE,.500 IN X44.3 IN	
35	515758D1	1	BELT-8PK1360	
36	517537D1	1	BRACKET-TENSION,A/C	

Copyright © 2008 AGCO Corporation

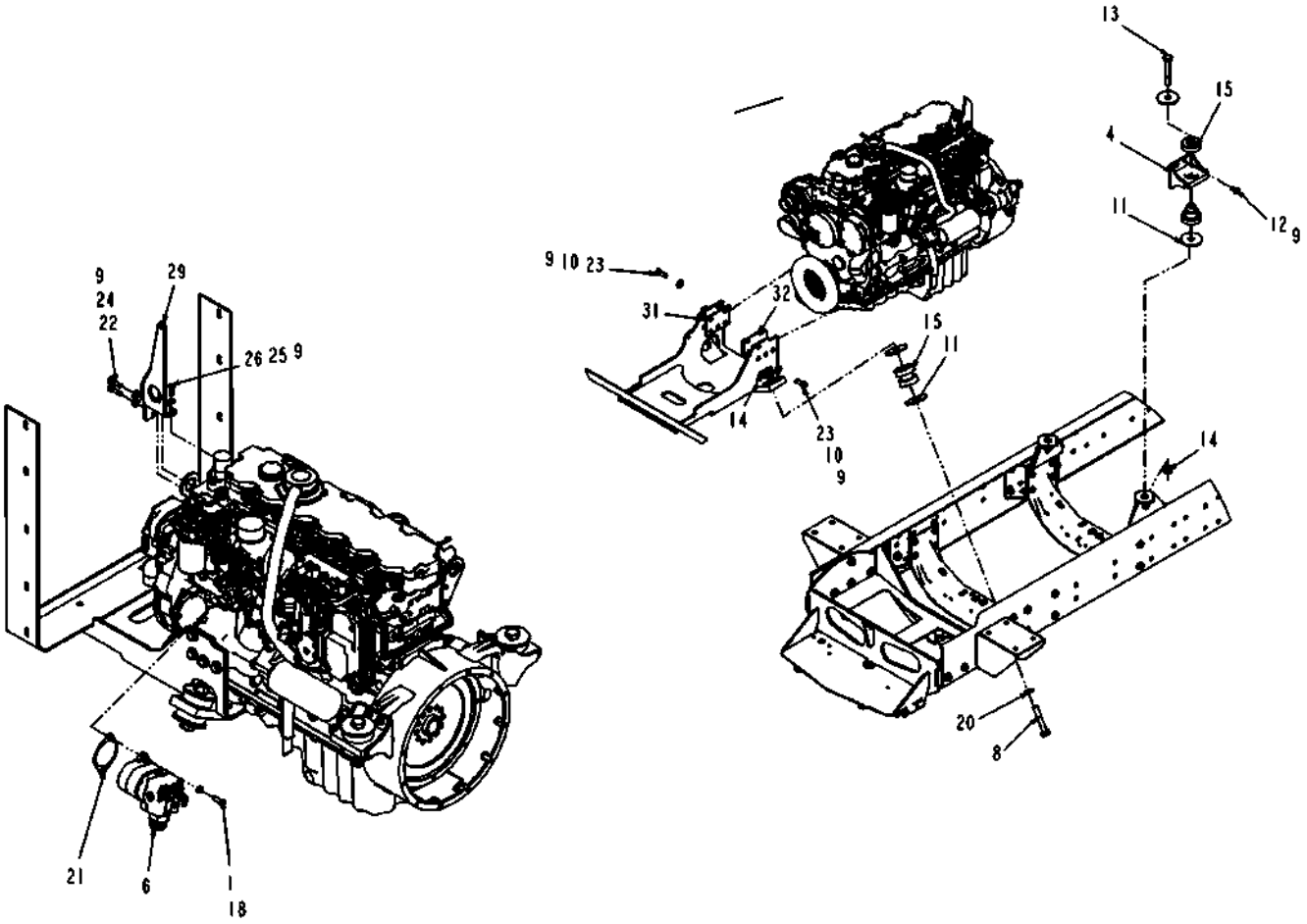

513027D1-03-T101-02.TIF

Copyright © 2008 AGCO Corporation

ITEM	PART #	QTY	DESCRIPTION	COMMENTS
1	AG609419	2	SOCKET HD CPSCR M10-1.5X30MM	
4	WR125256	2	WLDMT-MOUNT,ENGINE,REAR	
6	WR129400	1	PUMP-ASM,HYD,CHASSIS	SEE PAGE 6-28
8	WR134414	2	BOLT .87-9UNCX 5.00 G8 ZN HHD	
9	AG512885	-	LOCTITE ADHESIVE SEALANT BLUE	
10	AG515180	8	WASHER 0.62 FL ZN SAE TYP-A G8	
11	AG521797	8	WASHER-3.880 OD X .938 ID	
12	AG522193	8	BOLT-M12-1.75X30,CL10.9,PH,FLG	
13	AG522710	2	BOLT .87-9UNCX 5.50 G8 ZN HHD	
14	AG522719	4	NUT-.88-9,G8,ZN,H	
15	AG522989	4	MOUNT-RUBBER,2 PIECE	
18	AG562271	2	WASHER M10 LK ZN REG	
20	AG606258	2	WASHER 1.75ODX0.93ID G8 ZN	
21	AG711567	1	GASKET-SAE A PAD	
22	400059X1	2	BOLT-M10X1.5X35 ZNDI HHD 10.9	
23	400191X1	6	BOLT-M16X2X40MM ZNDI HHD 10.9	
24	400287X1	2	WASHER-HARD 11IDX21ODX2.5 ZND1	
25	400339X1	1	WASHER-HARD 9IDX16ODX2.5 ZNDI	
26	400341X1	1	BOLT-M8X1.25X25ZNDI HHD 10.9	
29	513033D1	1	WELDMENT-BRACE,RADIATOR	
31	513122D1	1	SPACER-ENGINE MNT PLATE, RH	
32	513124D1	1	SPACER-ENGINE MNT PLATE, LH	

Copyright © 2008 AGCO Corporation

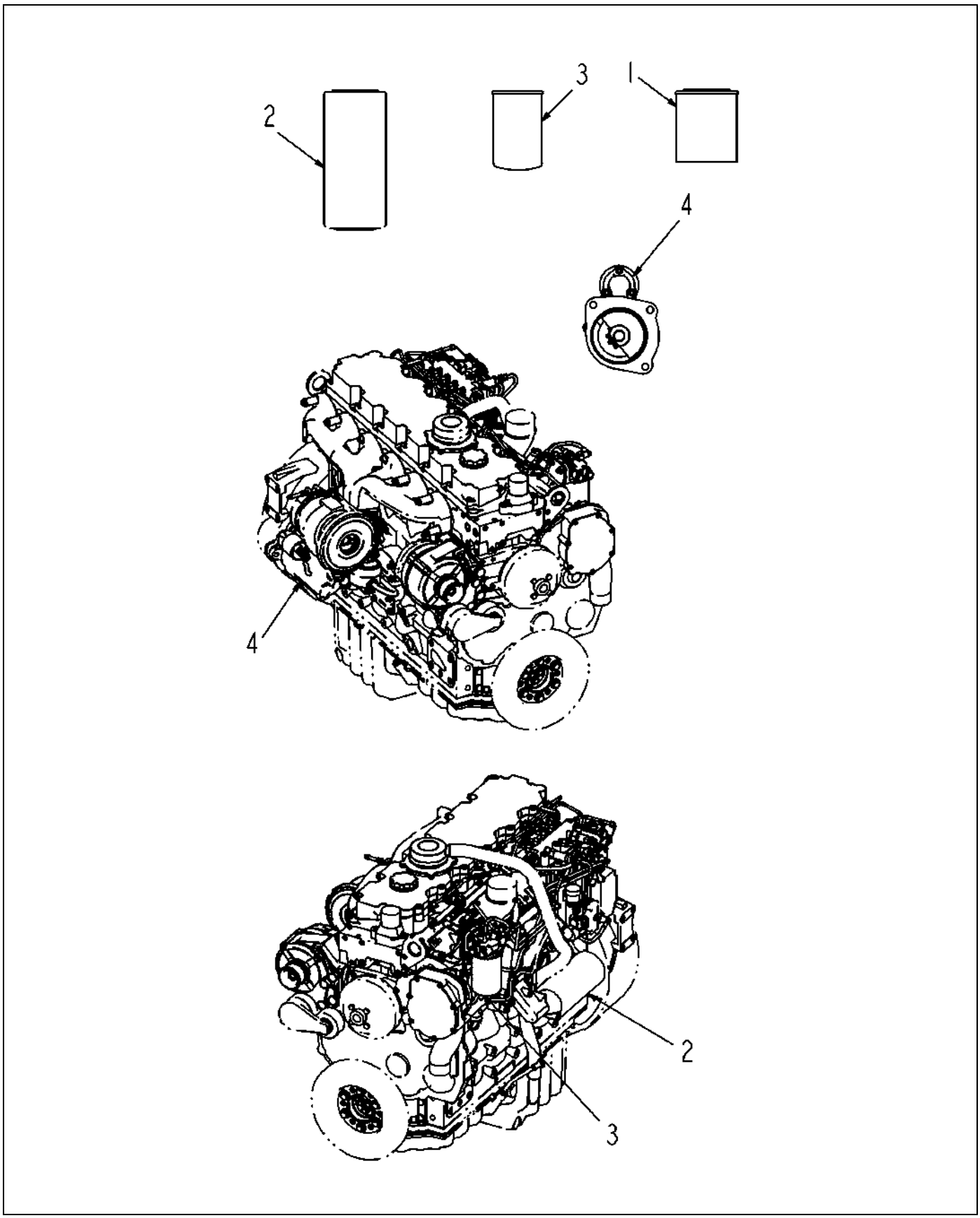

513030D1-05-T160-.TIF

Copyright © 2008 AGCO Corporation

ITEM	PART #	QTY	DESCRIPTION	COMMENTS
1	521057D1	1	ELEMENT-FWS	
2	521058D1	1	FILTER-OIL,ENGINE	
3	521059D1	1	FILTER-FUEL,PRIMARY	
4	522589D1	1	STARTER-LIGHT DUTY,RHS	

Copyright © 2008 AGCO Corporation

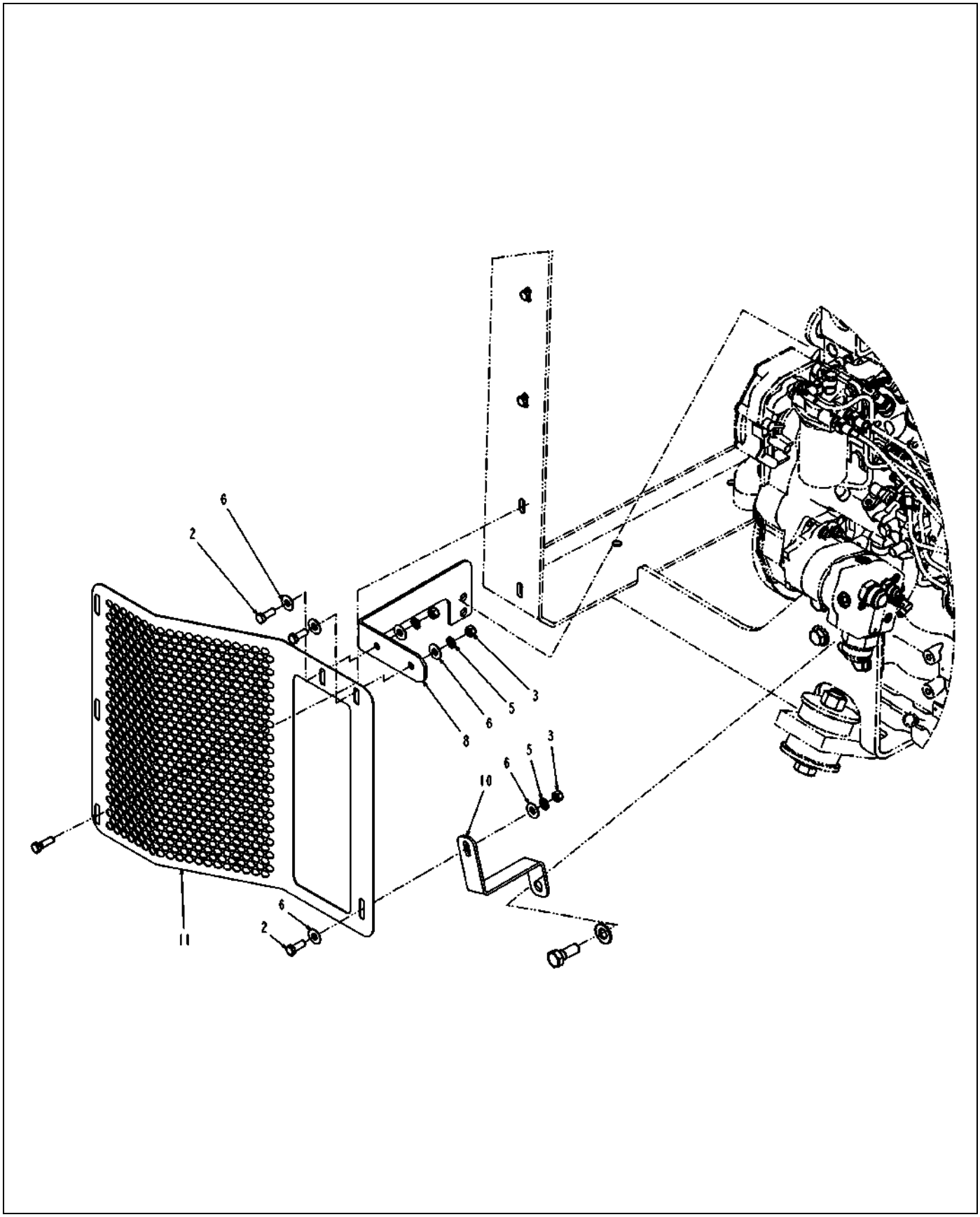

513039D1-03-T003-01.TIF

Copyright © 2008 AGCO Corporation

FAN GUARD INSTALL

ITEM	PART #	QTY	DESCRIPTION	COMMENTS
2	AG550175	4	BOLT 0.37-16NCX 1.00 G5 ZN HHD	
3	AG550825	4	NUT 0.37-16NC HEX ZN REG	
5	AG562050	4	WASHER 0.37 LK SS REG	
6	AG562073	8	WASHER 0.37 FL SS R/B 523061	
8	513048D1	1	BRKT,FAN GUARD, LH TOP	
10	513125D1	1	BRKT-FAN GUARD, LH BOTTOM	
11	515782D1	1	GUARD-FAN,LH	

Copyright © 2008 AGCO Corporation

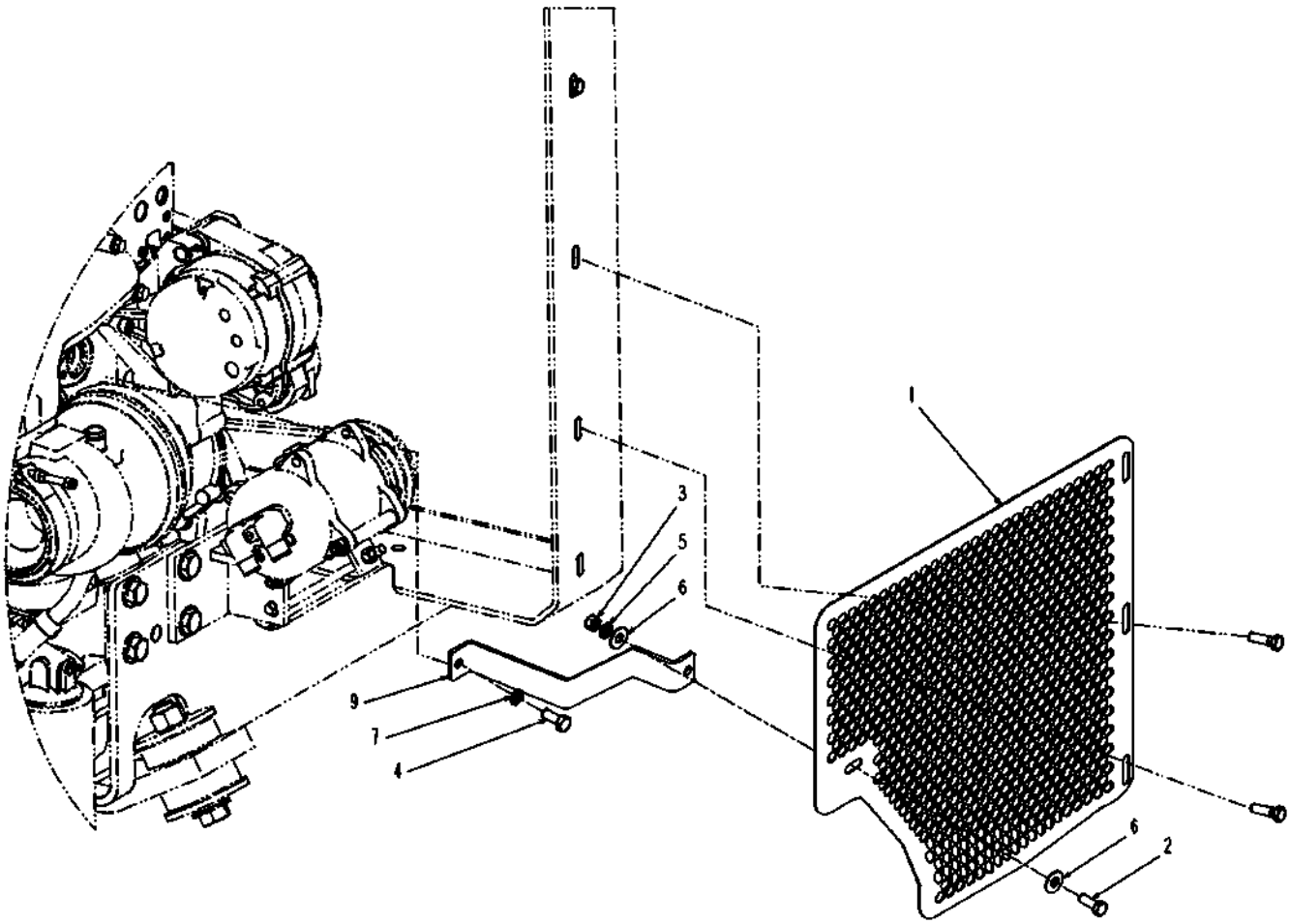

513039D1-03-T003-02.TIF

Copyright © 2008 AGCO Corporation

FAN GUARD INSTALL

ITEM	PART #	QTY	DESCRIPTION	COMMENTS
1	WR128648	1	FAN GUARD,RH	
2	AG550175	4	BOLT 0.37-16NCX 1.00 G5 ZN HHD	
3	AG550825	4	NUT 0.37-16NC HEX ZN REG	
4	AG561683	1	BOLT M10-1.5 X 25MM G8.8 ZN HH	
5	AG562050	4	WASHER 0.37 LK SS REG	
6	AG562073	8	WASHER 0.37 FL SS R/B 523061	
7	AG562271	1	WASHER M10 LK ZN REG	
9	513049D1	1	BRKT-FAN GUARD, RH	

Copyright © 2008 AGCO Corporation

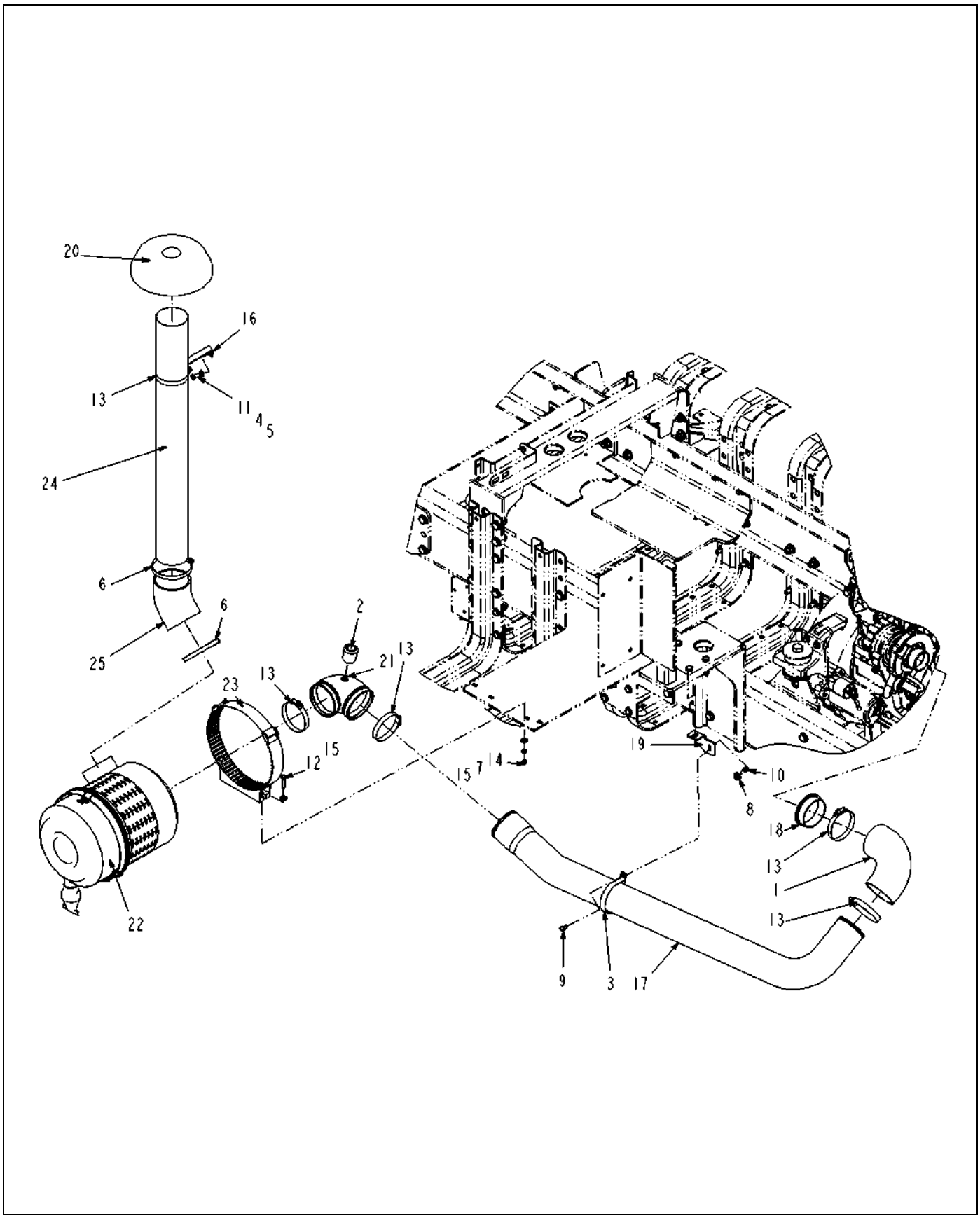

513040D1-02-R816-.TIF

Copyright © 2008 AGCO Corporation

AIR INTAKE GROUP

ITEM	PART #	QTY	DESCRIPTION	COMMENTS
1	WR28659	1	ELBOW-RUBBER 90,4.00 ID	
2	AG122569	1	INDICATOR-OPTICAL SERVICE	
3	WR129637	1	CLAMP-4.00 DIA,COATED,HOSE	
4	WR129759	1	WASHER-FLAT,M10,ZN,HARD	
5	AG512885	AR	LOCTITE ADHESIVE SEALANT BLUE	
6	AG522378	2	CLAMP-HIGH TORQUE,5.00	
7	AG561679	2	WASHER LOCK M8 ZN	
8	AG562073	1	WASHER 0.37 FL SS R/B 523061	
9	AG562120	1	BOLT 0.37-16NCX 0.75 S.S. HHD	
10	AG562123	1	NUT 0.37-16NC HEX SS C-LK	
11	AG562463	1	BOLT M10-1.50X 20MM G8.8 ZN HH	
12	400060X1	2	BOLT-M8X1.25X40 ZNDI HHD 10.9	
13	400127X1	5	CLAMP-HOSE CT SST 95-118X16	
14	400340X1	2	NUT-M8X1.25X13 HEX ZND1	
15	400599X1	4	WASHER-HARD,M8X20.5ODX2THK	
16	511813D1	1	PLATE-AIR INTAKE TUBE,ATTACH	
17	513041D1	1	PIPE-INLET, AIR INTAKE	
18	513042D1	1	INSERT - RUBBER, 4.0 X 3.75	
19	513114D1	1	BRKT-AIR INTAKE TUBE	
20	522329D1	1	CAP-RAIN,AIR INTAKE,110	
21	522330D1	1	COUPLING-90DEG, W/PORT	
22	522331D1	1	AIR FILTER ASSY,12.00 IN	
23	522332D1	1	BRKT-MOUNTING AIR CLEANER	
24	522333D1	1	TUBE-AIR INTAKE, EXT.,STACK	
25	522335D1	1	ELBOW-45,AIR INTAKE	

Copyright © 2008 AGCO Corporation

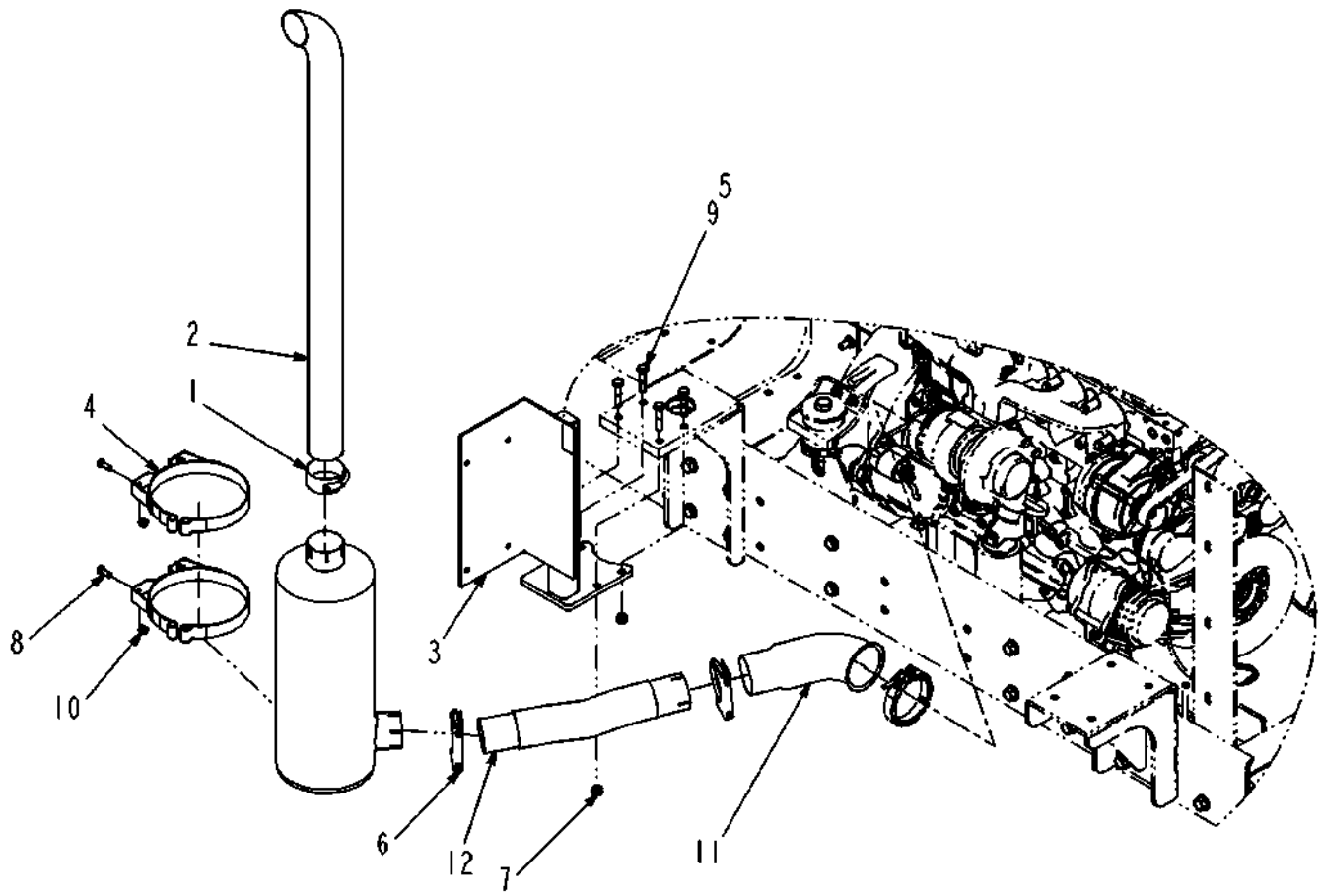

513043D1-01-R674-.TIF

Copyright © 2008 AGCO Corporation

ITEM	PART #	QTY	DESCRIPTION	COMMENTS
1	WR125158	1	CLAMP-EXHAUST,BENT BOLT	
2	WR125161	1	EXHAUST-STACK,3.00 IN X48 IN	
3	WR125880	1	BRACKET-MUFFLER WLDMT	
4	WR128453	2	CLAMP-MUFFLER BODY,8.5 IN	
5	AG512885	-	LOCTITE ADHESIVE SEALANT BLUE	
6	AG516482	2	CLAMP EXHAUST 3.00 DIA. ZN	[A]
7	AG550124	4	NUT 0.50-13NC HEX ZN REG	
8	AG550175	4	BOLT 0.37-16NCX 1.00 G5 ZN HHD	
9	AG551244	4	BOLT.50-13NCX 2.25G5 ZN HHD	
10	AG601411	4	NUT 0.37-16NC HEX ZN REG NY	
11	513045D1	1	PIPE - EXHAUST TURBO	
12	513113D1	1	TUBE-EXHAUST FLEX	
13	519244D1	1	RWK-EXHAUST,MUFFLER	
	FOOTNOTE [A]		UPDATE 9645	

Copyright © 2008 AGCO Corporation

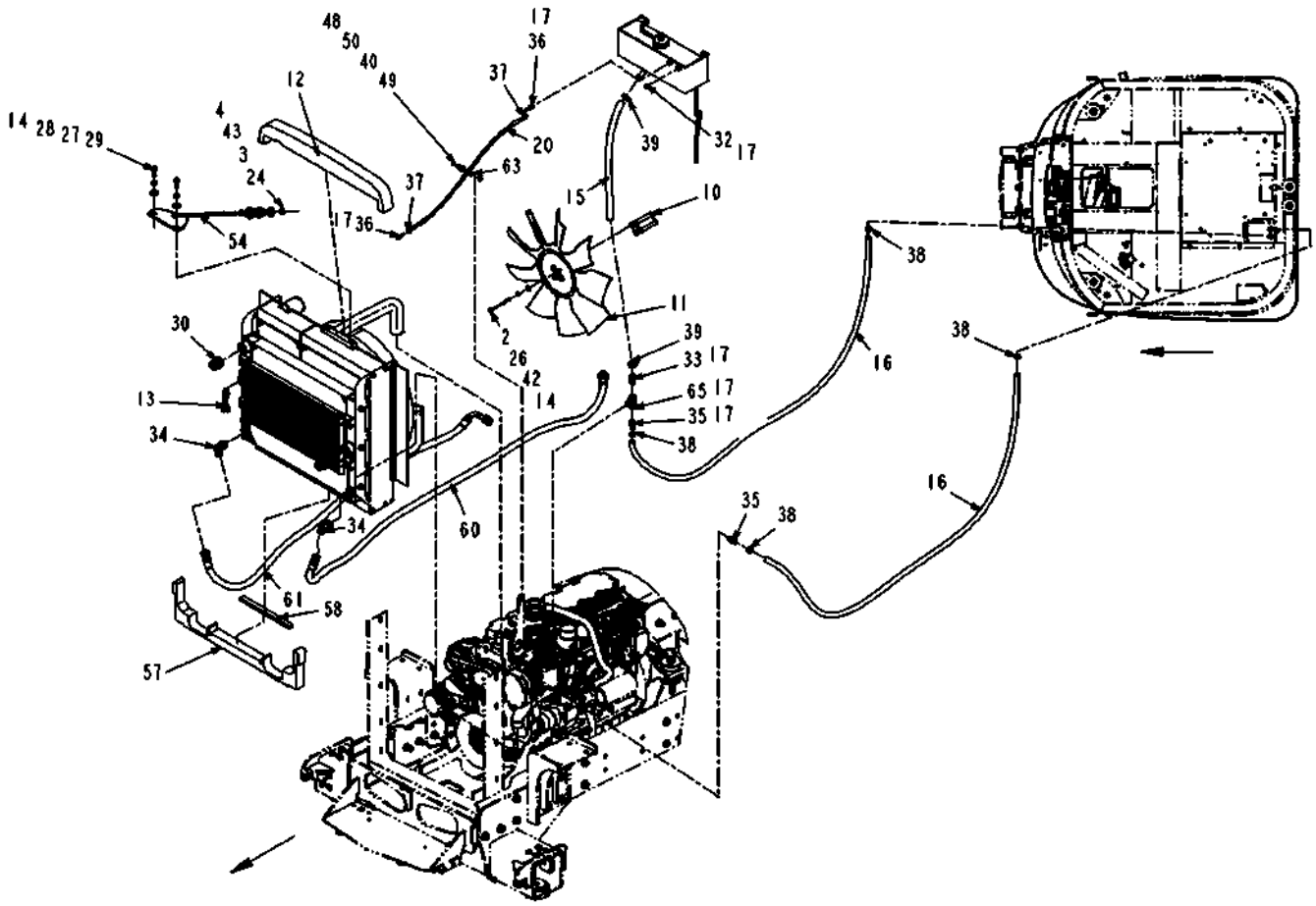

513028D1-03-T160-02.TIF

Copyright © 2008 AGCO Corporation

ITEM	PART #	QTY	DESCRIPTION	COMMENTS
2	WR55062	4	SCREW-CAP HEX M8 X 130	
3	AG100676	1	WASHER SHOCK MOUNT	
4	AG109445	1	WASHER-SHOCK MOUNT	
10	WR129586	1	FAN SPACER-4.00 IN	
11	WR129588	1	FAN-26 IN ,STD FLOW	
12	WR129929	1	BARRIER-RECIRC,FOAM,TOP	
13	AG235212	1	SWITCH A/C HIGH PRESS ASM	
14	AG512885	AR	LOCTITE ADHESIVE SEALANT BLUE	
15	AG513385	-	HOSE,MED.PRESS 0.75 2BRD EPDM [BULK: 2.500 FT]	
16	AG513423	-	HOSE 0.62 1BRD EPDM [BULK: 17.500 FT]	
17	AG513916	AR	LOCTITE HYD SEALANT BROWN	
20	AG517845	-	HOSE .25 BULK AIR,H20,FUEL [BULK: 5.667 FT]	
24	AG550124	2	NUT 0.50-13NC HEX ZN REG	
26	AG550205	4	WASHER 0.31 LK ZN REG	
27	AG550264	2	WASHER 0.50 LK ZN REG	
28	AG550353	2	WASHER 0.50 FL ZN REG TYPE-B	
29	AG550817	2	BOLT 0.50-13NCX 1.50 G5 ZN HHD	
30	AG552186	2	ADAP STR-20MBX-20MJ	[A]
32	AG553441	1	PLUG PIPE .25 SQ HD NPT ZN PL	
33	AG553867	1	HOSE BARB 0.50NPTX0.75 STL	
34	AG554510	2	ELBOW 90D -12MJIC X -12MSTOR	
35	AG558648	2	HOSE BARB 0.50NPTX0.62HOSE STL	
36	AG559873	4	HOSE BARB 0.25NPTX0.25HOSE STL	
37	AG561025	4	CLAMP HOSE .218 TO .625 U5S	
38	AG561215	4	CLAMP 0.50-0.91 HOSE 8HS	
39	AG561229	2	CLAMP 0.68-1.25 HOSE 12HS	
40	AG561679	5	WASHER LOCK M8 ZN	
42	AG562074	4	WASHER 0.31 FL SS REG TYPE-B	
43	AG601284	1	MOUNT SHOCK LORD J-6642-7	
48	400340X1	1	NUT-M8X1.25X13 HEX ZND1	
49	400341X1	5	BOLT-M8X1.25X25ZNDI HHD 10.9	
50	400599X1	1	WASHER-HARD,M8X20.5ODX2THK	
54	513038D1	1	WLDMT-RADIATOR/ENGINE,TOP MNT	
57	518488D1	1	SEAL-LOWER RADIATOR	
58	518557D1	1	BAFFLE-FOAM,ENGINE MNT	
60	522418D1	-	HOSE ASM,-12X97 FJS/16FJS	
61	522419D1	-	HOSE ASM,-12X78 FJS/FJS90L	
63	CH4K-8864	1	CLIP-LOOP 14.29ID	
65	WR55840	1	TEE-08FP-08FP-08MP	
	FOOTNOTE [A]		AG714806-O-RING	

Copyright © 2008 AGCO Corporation

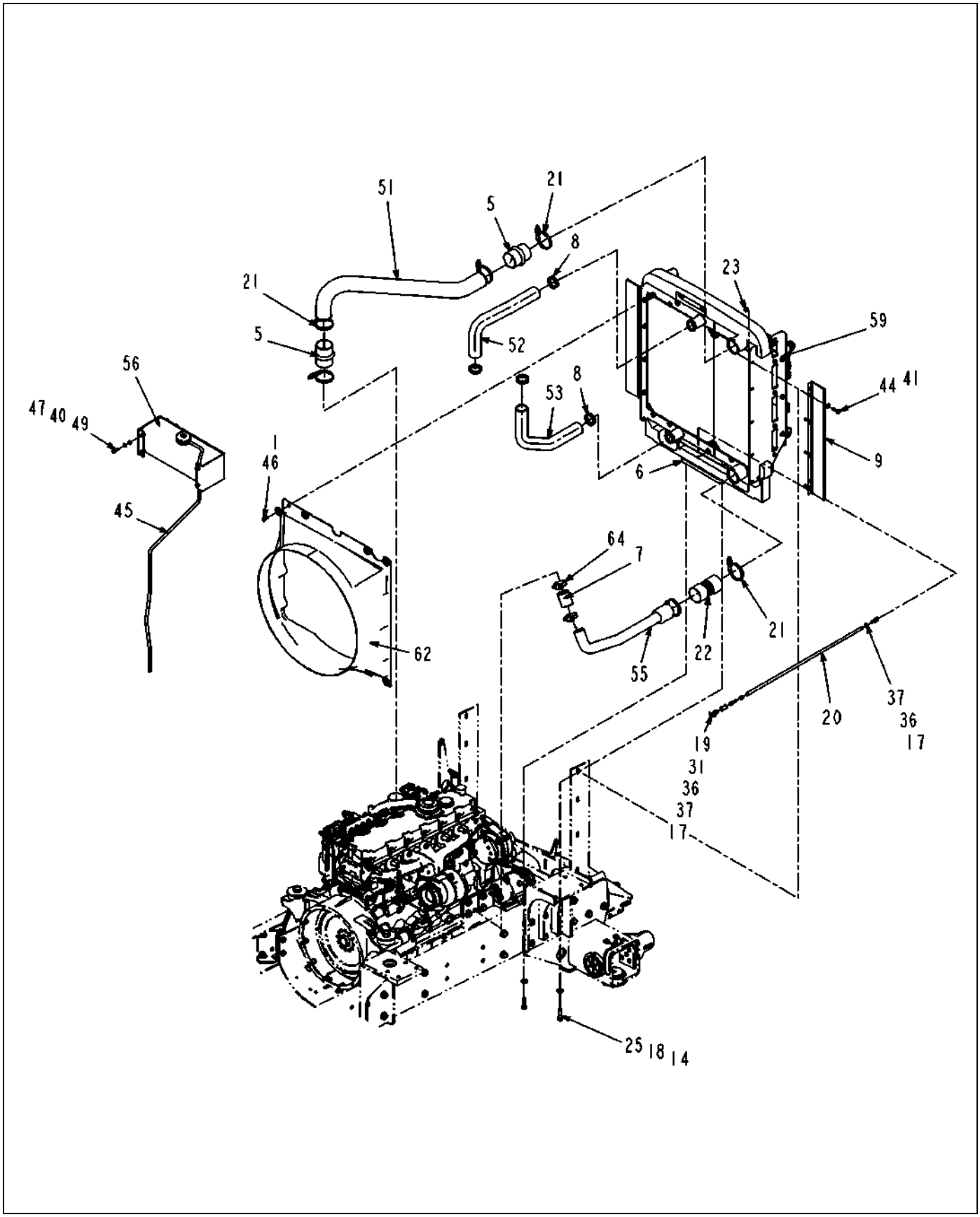

513028D1-03-T160-03.TIF

Copyright © 2008 AGCO Corporation

COOLING PKG GROUP

ITEM	PART #	QTY	DESCRIPTION	COMMENTS
1	WR19092	8	WASHER-FENDER, 3/8 ID	
5	AG121551	2	HUMP HOSE,3 X 4.38	
6	AG121841	1	ISOLATOR,COOLER MOUNT	
6	WR124315	2	CLAMP- CT250L R/B CH8T-6703	
7	WR124381	1	HOSE-CAC,2 IN	
8	AG125817	4	CLAMP-HOSE,HIGH TORQUE,2.75	
9	WR128403	2	SEAL-BRUSH,RADIATOR	
14	AG512885	AR	LOCTITE ADHESIVE SEALANT BLUE	
17	AG513916	AR	LOCTITE HYD SEALANT BROWN	
18	AG514554	2	WASHER 0.50 FL ZN SAE TYP-A G8	
19	AG515983	1	PETCOCK DRAIN 0.25NPT BR	
20	AG517845	-	HOSE .25 BULK AIR,H20,FUEL [BULK: 5.667 FT]	
21	AG519741	6	CLAMP-HOSE 2.75 DIA	
22	AG520209	1	HOSE-3.00 ID,AIR COOLER	
23	AG522562	8	NUT-.38-16,SS,SFLG,H	
25	AG550132	2	BOLT .50-13NCX 2 G5 ZN HHD	
31	AG553115	1	COUPLING 0.25NPS PIPE STEEL PL	
36	AG559873	4	HOSE BARB 0.25NPTX0.25HOSE STL	
37	AG561025	4	CLAMP HOSE .218 TO .625 U5S	
40	AG561679	5	WASHER LOCK M8 ZN	
41	AG562072	5	WASHER 0.37 FL SS SAE TYPE-A	
44	AG604167	8	BOLT 0.37-16NCX 1.25 S.S. HHD	
45	6577822	-	HOSE BULK, 5/16 IN [BULK: 5 FT]	
46	400053X1	8	BOLT-M8X1.25X20 ZNDI HHD 10.9	
47	400339X1	4	WASHER-HARD 9IDX16ODX2.5 ZNDI	
49	400341X1	5	BOLT-M8X1.25X25ZNDI HHD 10.9	
51	513029D1	1	AIR PIPE-CAC TO ENGINE INLET	
52	513031D1	1	HOSE-RADIATOR,UPPER	
53	513032D1	1	HOSE-RADITOR,LOWER	
55	513046D1	1	PIPE-AIR,COMPRESSOR TO CAC	
56	515091D1	1	TANK-DEARATION	
59	521942D1	1	COOLING PKG - TIER 3,COUPE 7X6	
62	523174D1	1	FAN-SHROUD, 26 IN FAN	
64	CH8T-6703	2	CLAMP-HOSE 45-67X16 CONST LD	

Copyright © 2008 AGCO Corporation

TRANSMISSION-POWERSHIFT,6SP 1.94TC	2-1
TRANSMISSION-POWERSHIFT,6SP 1.94TC	2-2
TRANSMISSION-POWERSHIFT,6SP 1.94TC	2-3
TRANSMISSION-POWERSHIFT,6SP 1.94TC	2-4
VALVE-CLUTCH 1	2-5
VALVE, FORWARD HI-LO	2-6
VALVE-CLUTCH	2-7
VALVE-CLUTCH	2-8
TRANSMISSION-INSTALL	2-9
TCU-INSTALL, 6 SPEED	2-10
TCU-INSTALL,4 SPEED	2-11

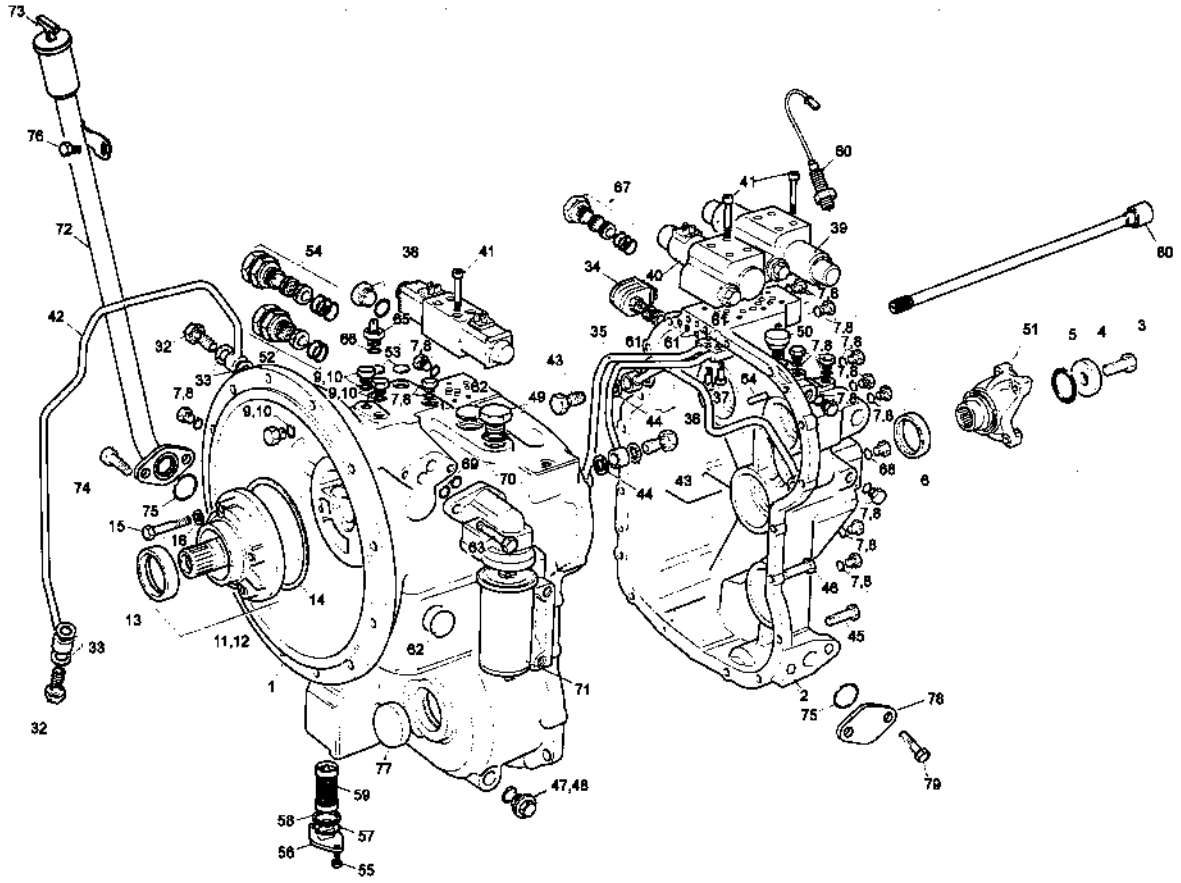

136436-A-1.TIF

Copyright © 2008 AGCO Corporation

TRANSMISSION-POWERSHIFT,6SP 1.94TC

ITEM	PART #	QTY	DESCRIPTION	COMMENTS
REF	WR127993	1	TCU-TURNER,SC,4F,2R	
REF	AG136437	1	TORQUE CONV. 1.94	
REF	505565D1	1	TCU-TURNER,SPRA-COUPE	
1	WR137609	1	CASE-FRONT	
2	WR137610	1	CASE-REAR	
3	WR137611	AR	BOLT-OUTPUT YOKE RETAINING	
4	7T-3195	1	WASHER	
5	4F-7391	1	SEAL-O RING	
6	216-2267	1	SEAL	
7	400611X1	1	PLUG-STO 9/16-18 PLATED	
8	400318X1	1	SEAL-O-RING 11.89IDXDIA1.98	
9	8L-2786	1	SEAL-O RING	
10	WR137613	1	PLUT & O-RING	
11	121-7385	1	PUMP & SEAL ASM	
13	208-8240	1	SEAL	
14	7X-4741	1	RING/SEAL	
15	WR137614	AR	BOLT-PUMP	
16	9P-9150	4	WASHER	
18	6T-9166	AR	SHIM	
32	147-0266	2	BOLT	
33	147-0262	4	WASHER,SEALING	
34	121-4036	1	VALVE-CLUTCH 1	SEE PAGE 2-5
35	147-0218	1	PIPE, TRANSFER 3-4	
36	147-0226	1	PIPE, TRANSFER 1ST	
37	238-7562	1	BOLT	
38	238-1968	1	VALVE, FORWARD HI-LO	SEE PAGE 2-6
39	274-4575	1	VALVE-CLUTCH	SEE PAGE 2-7
40	274-4581	1	VALVE-CLUTCH	SEE PAGE 2-8
41	WR137618	AR	BOLT	
42	147-0236	1	PIPE, TRANSFER ASM	
43	147-0234	4	BOLT	
44	WR137619	AR	WASHER-SEAL	
45	8T-0643	AR	BOLT	
47	6Y-1896	1	PLUG WITH O-RING	
48	5P-6718	1	O-RING	
49	7M-8485	1	SEAL-O RING 29.75ID X 2.95CS	
49	9S-9334	1	PLUG	
50	7T-3251	1	BREATHER	
50	6V-5842	AR	BOLT-M10X1.5X40 PH&O HHD 10.9	
51	184-1112	1	YOKE-END ASSEMBLY	
52	147-0209	1	CARTRIDGE, VALVE	
53	6T-9202	2	PLUG, EXTENSION	
54	121-7396	1	CARTRIDGE, RELIEF	
54	WR136438	1	VALVE, PRESS REG 18 BAR	
55	6V-5215	2	BOLT-M8X1.25-16 PH&O HHD 10.9	
56	106-9861	1	PLATE, COVER ASM	
57	4F-7952	1	O-RING	
58	9W-5460	1	WASHER, SUPPORT	
59	7T-2651	1	STRAINER	
60	189-5746	1	TRANSDUCER SPEED	
61	120-9762	3	O-RING	

Copyright © 2008 AGCO Corporation

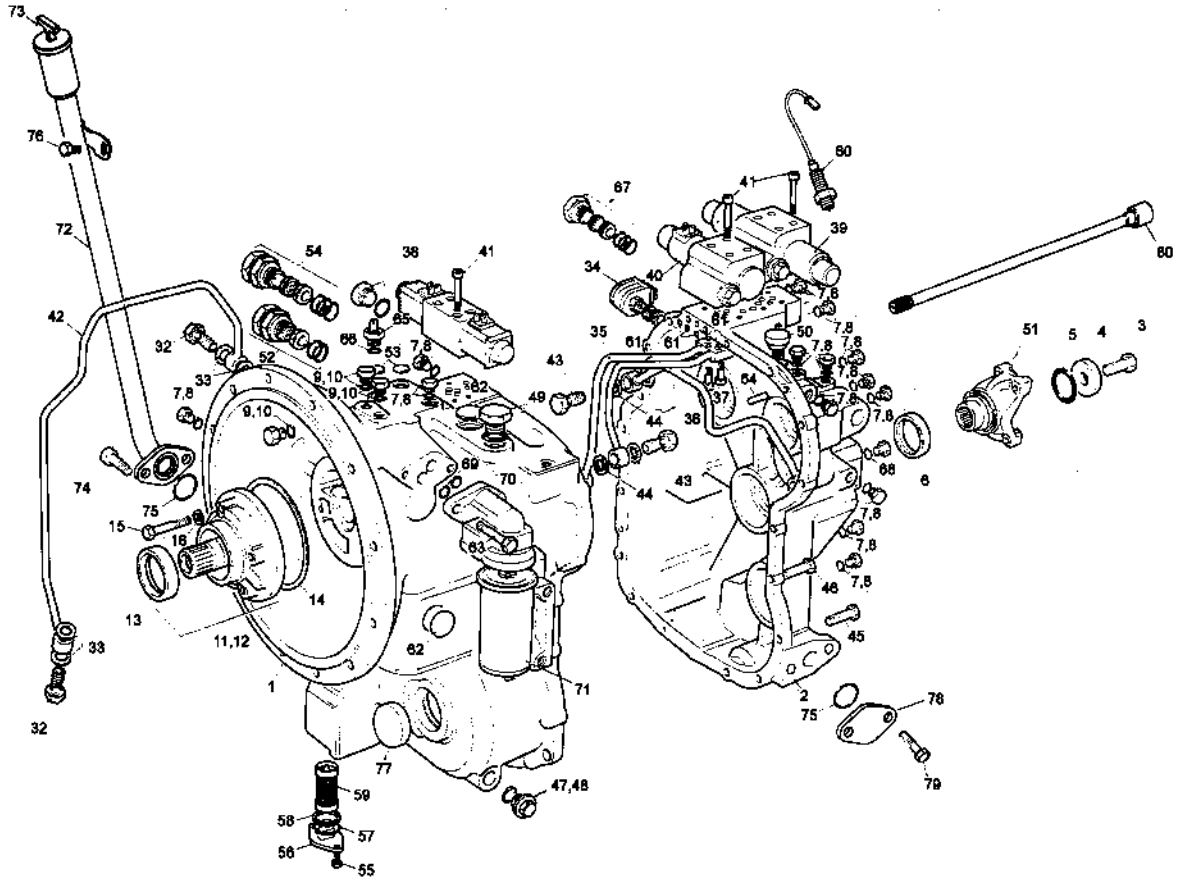

136436-A-1.TIF

Copyright © 2008 AGCO Corporation

ITEM	PART #	QTY	DESCRIPTION	COMMENTS
62	147-0232	2	CAP, SEALING	
63	6V-3822	2	BOLT	
64	7T-3253	2	DOWELL	
65	203-8025	1	SENDER, TEMP	
66	3J-1907	1	SEAL-O RING 11.89ID X 1.98CS	
67	147-0211	1	PLUG	
68	237-5185	1	PLUG & 0-RING	
69	150-7732	2	O-RING	
71	119-4740	1	FILTER, OIL	
72	1387380	1	TUBE/DIPSTICK	
73	274-4577	1	GAGE-DIPSTICK	
74	6A-5591	1	BOLT M12X1.75X25MM	
75	281-218	2	O-RING	
75	4F-7952	2	O-RING	
76	6V-5215	1	BOLT-M8X1.25-16 PH&O HHD 10.9	
77	147-0239	1	SEAL, BORE 62 MM	
78	WR137629	1	PLATE-COVER	
80	WR137631	1	SHAFT AUX-PUMP R/B 274-4570	
82	147-0202	1	GEAR, LOW PRI 24 T	
84	WR137635	1	CUP-BEARING	
84	WR137634	1	CONE-BEARING	
87	122-1886	1	RING, SEAL 40MM	
88	WR137636	1	BEARING-NEEDLE	
125	274-4557	AR	DISC/FRICTION	
126	274-4553	AR	PLATE	
146	274-4553	AR	PLATE	

Copyright © 2008 AGCO Corporation

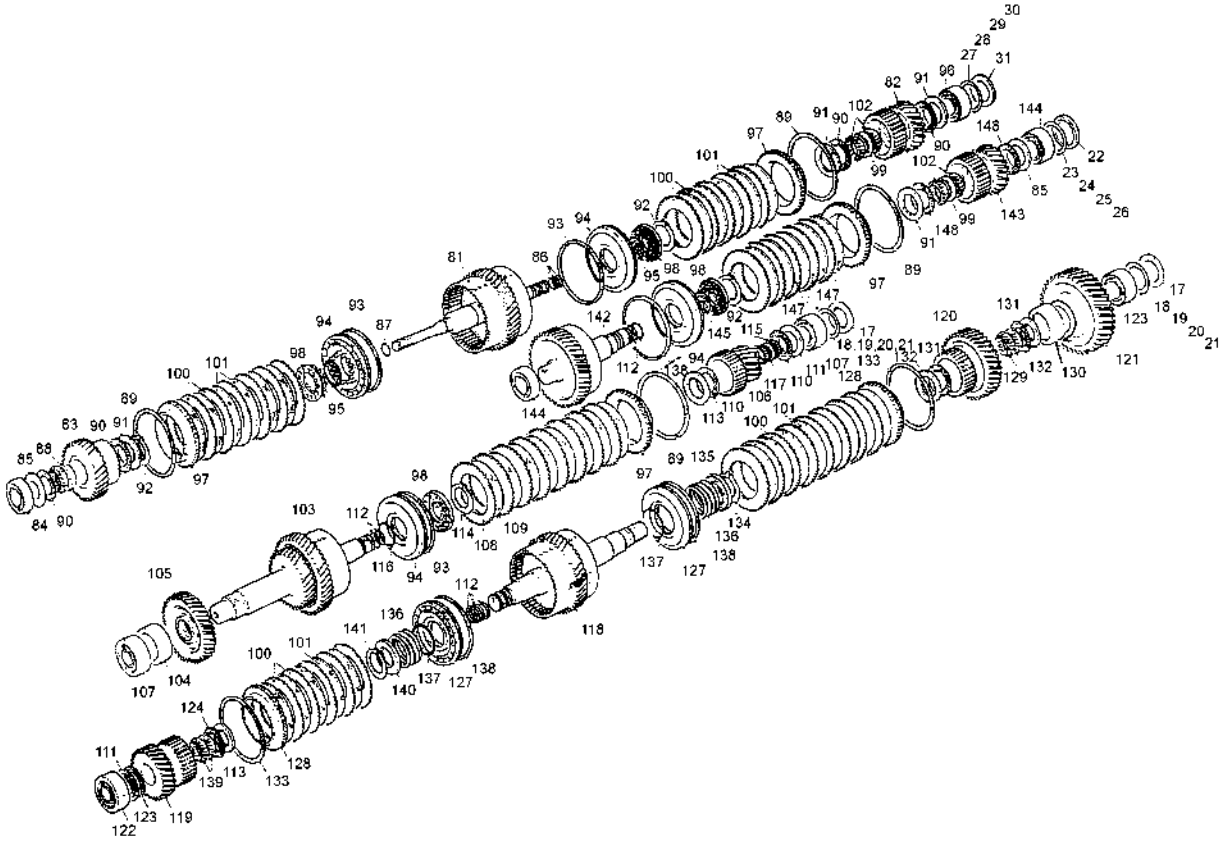

136436-A-2.TIF

Copyright © 2008 AGCO Corporation

ITEM	PART #	QTY	DESCRIPTION	COMMENTS
17	7T-2646	2	SPACER	
18	6T-9166	AR	SHIM	
19	6T-9165	AR	SHIM	
20	6T-9164	4	SHIM	
21	6T-9163	AR	SHIM	
22	122-1879	1	SPACER	
23	104-3288	AR	SHIM	
24	121-2059	AR	SHIM	
25	121-2060	AR	SHIM	
26	121-2061	AR	SHIM	
27	121-7399	AR	SHIM	
28	121-7400	AR	SHIM	
29	121-7401	AR	SHIM	
30	121-7402	AR	SHIM	
31	121-7398	1	SHIM	
82	147-0202	1	GEAR, LOW PRI 24 T	
83	147-0224	1	GEAR, HI 32T	
84	WR137635	1	CUP-BEARING	
84	WR137634	1	CONE-BEARING	
85	121-0694	1	WASHER, SUPPORT	
86	9U-8886	3	RING, SEAL 50MM	
87	122-1886	1	RING, SEAL 40MM	
88	WR137636	1	BEARING-NEEDLE	
89	9U-8875	3	RING-RETAINING	
90	WR137637	1	BEARING-THRUST	
91	121-2500	3	WASHER, THRUST	
92	238-7567	3	CLIP	
93	6T-9196	2	SEAL	
94	147-0228	3	PISTON	
96	WR137639	1	CONE-BEARING	
96	WR137640	1	CUP-BEARING	
97	8E-5707	3	RING, SUPPORT CLUTCH	
98	147-0238	3	RETAINER, SPRING	
99	147-0259	1	SPACER	
100	274-4553	45	PLATE	
101	274-4557	37	DISC/FRICTION	
102	7T-6655	2	BEARING	
103	WR137643	1	SHAFT AS-COUNTER	
103	WR137644	1	SHAFT AS-COUNTER (WELDED)	
104	WR137645	1	SPECER	
105	147-0216	1	BEAR, 38T	
106	147-0215	1	GEAR, 1 - 2 19T	
107	WR137646	1	CONE-BEARING	
107	WR137647	1	CUP-BEARING	
108	274-4553	AR	PLATE	
109	274-4557	AR	DISC/FRICTION	
110	WR137650	1	BEARING-THRUST	
111	122-1877	1	WASHER, THRUST	
112	6Y-1192	2	RING, SEALING	
113	147-0203	1	WASHER, THRUST	
114	WR132988	1	CLIP R/B 238-7567	
115	WR137678	1	BEARING-NEEDLE	

Copyright © 2008 AGCO Corporation

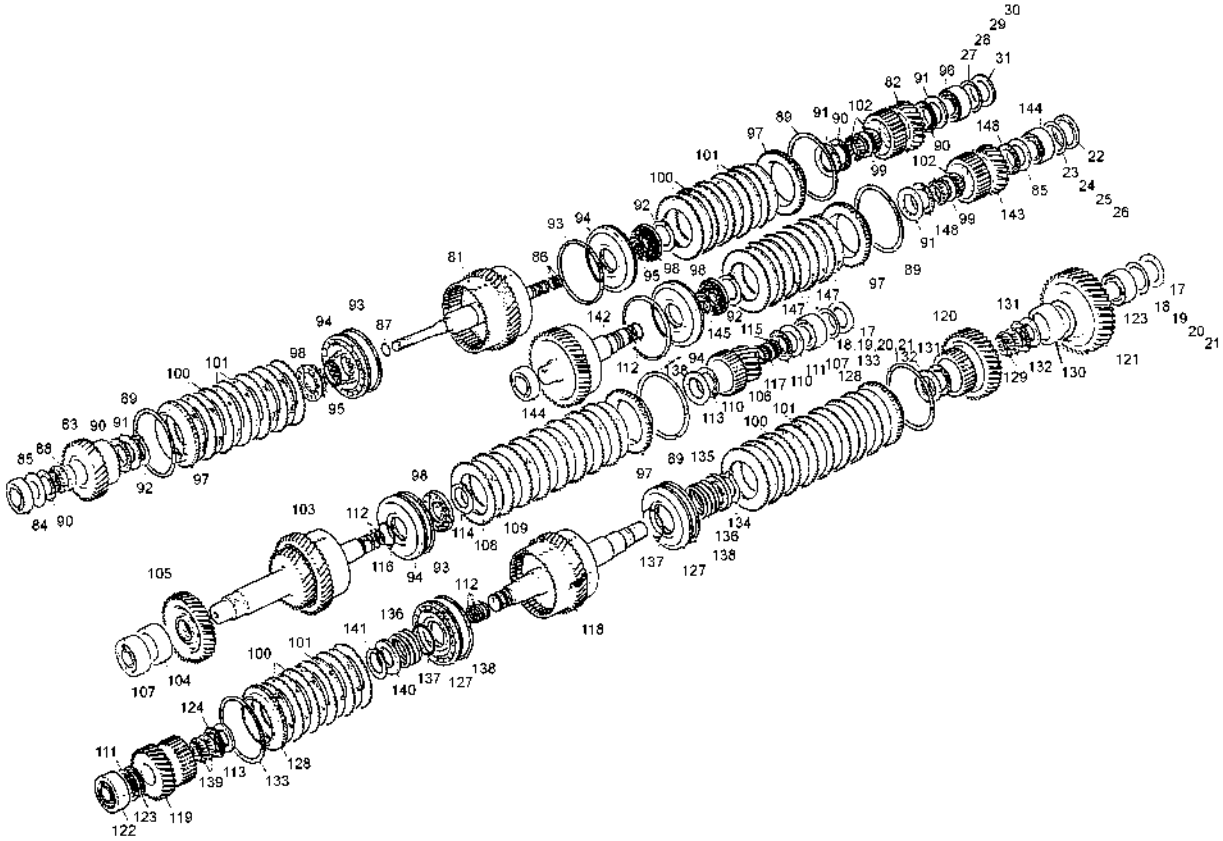

136436-A-2.TIF

Copyright © 2008 AGCO Corporation

ITEM	PART #	QTY	DESCRIPTION	COMMENTS
116	WR137651	1	O-RING	
117	147-0258	1	SPACER	
118	WR137652	1	SHAFT AS-MAIN	
118	WR137653	1	MAINSHAFT-WELDED ASSEMBLY	
119	WR137654	1	GEAR-4TH MAIN	
120	WR137655	1	GEAR-3RD MAIN	
121	147-0242	1	GEAR, 48T	
122	8T-1580	1	CUP-BEARING	
123	WR137647	1	CUP-BEARING	
123	WR137646	1	CONE-BEARING	
124	WR137656	1	BEARING-THRUST	
127	157-2088	2	PISTON	
128	WR137659	1	RING-SUPPORT	
129	6V-8500	2	BEARING	
130	WR137660	1	SPACER-NEEDLE BEARING	
131	WR137661	1	BEARING-THRUST	
132	147-0205	2	WASHER, THRUST	
133	9U-8875	2	RING-RETAINING	
134	WR137662	1	CIRCLIP	
135	147-0260	1	RETAINER, SPRING	
136	178-9566	2	SPRING	
137	WR137663	1	SEAL-PISTON	
138	6T-9196	2	SEAL	
139	274-4560	1	NUT	
140	121-0885	1	RETAINER, SPRING	
141	WR137665	1	CIRCLIP	
142	WR137676	1	SHAFT-REVERSE IDLER	
142	WR137666	1	SHAFT AS-REV IDLER	
143	147-0202	1	GEAR, LOW PRI 24 T	
144	WR137634	1	CONE-BEARING	
144	WR137635	1	CUP-BEARING	
145	WR137667	1	O-RING	
147	274-4557	AR	DISC/FRICTION	
148	WR137670	1	BEARING-THRUST	

Copyright © 2008 AGCO Corporation

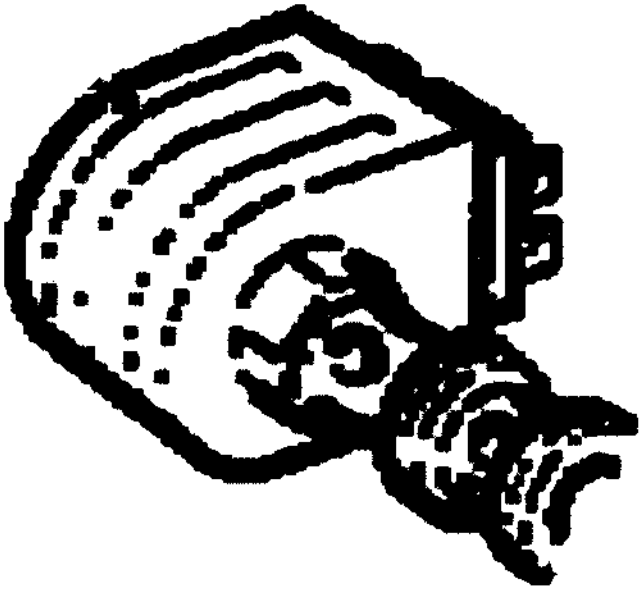

121-4036.TIF

Copyright © 2008 AGCO Corporation

VALVE-CLUTCH 1

ITEM	PART #	QTY	DESCRIPTION	COMMENTS
REF	3J-9196	1	NUT	
REF	130-0013	1	COIL	

Copyright © 2008 AGCO Corporation

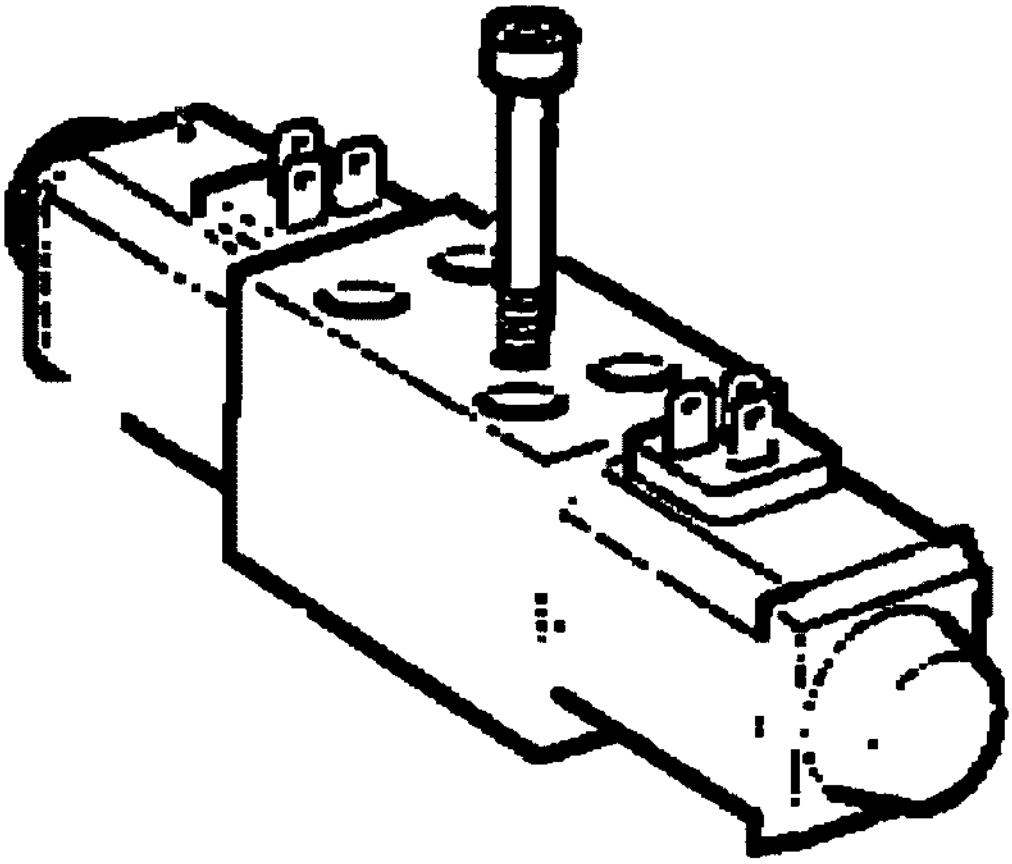

238-1968.TIF

Copyright © 2008 AGCO Corporation

VALVE, FORWARD HI-LO

ITEM	PART #	QTY	DESCRIPTION	COMMENTS
REF	202-0040	1	NUT	
REF	130-0912	1	SOLENOID/3 PIN CONNECTOR	
REF	117-2911	1	SOLENOID/2 PIN CONNECTOR	

Copyright © 2008 AGCO Corporation

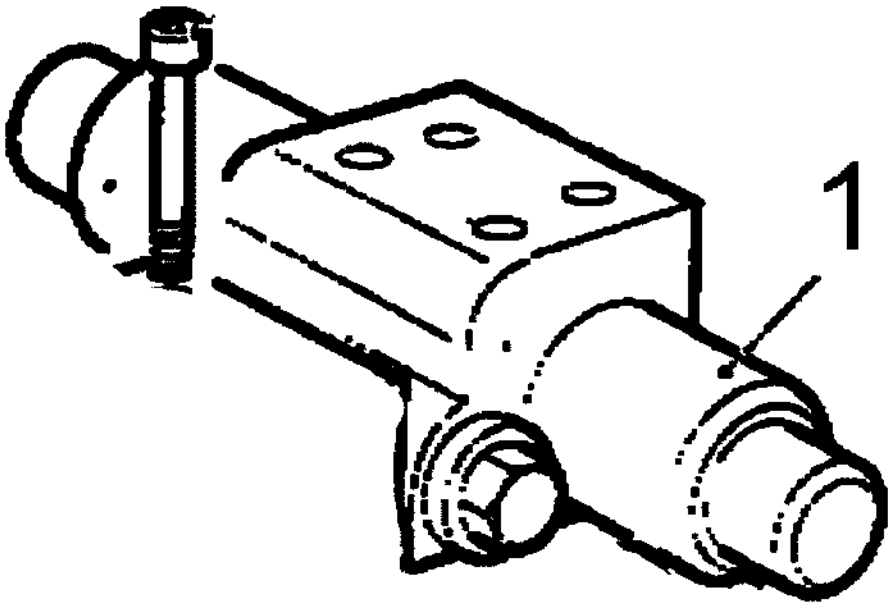

274-4575.TIF

Copyright © 2008 AGCO Corporation

VALVE-CLUTCH

ITEM	PART #	QTY	DESCRIPTION	COMMENTS
REF	274-4560	2	NUT	
REF	WR70899	1	O-RING/NUT KIT D15 SOELNOID	
1	274-4559	1	COIL	

Copyright © 2008 AGCO Corporation

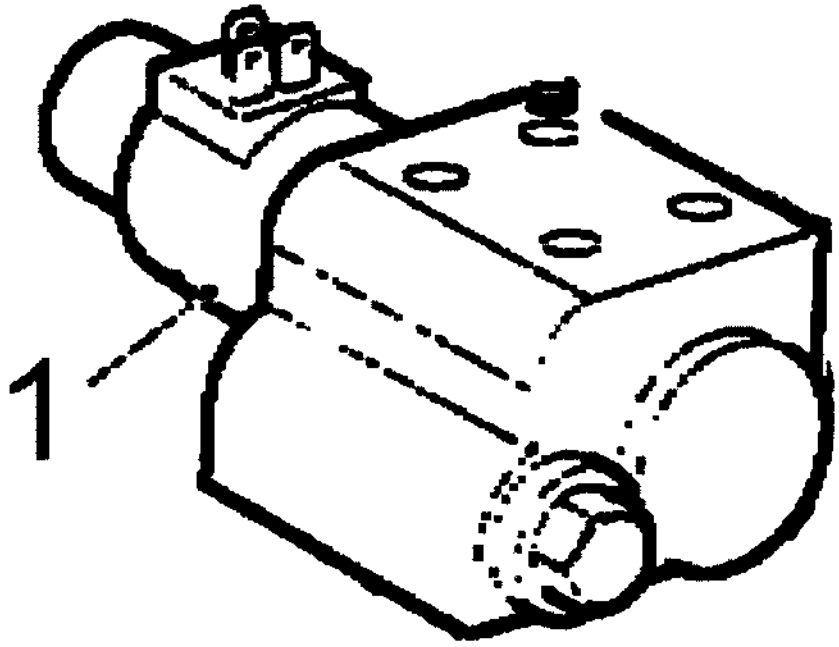

274-4581.TIF

Copyright © 2008 AGCO Corporation

VALVE-CLUTCH

ITEM	PART #	QTY	DESCRIPTION	COMMENTS
1	WR70899	2	O-RING/NUT KIT D15 SOELNOID	
1	274-4559	1	COIL	

Copyright © 2008 AGCO Corporation

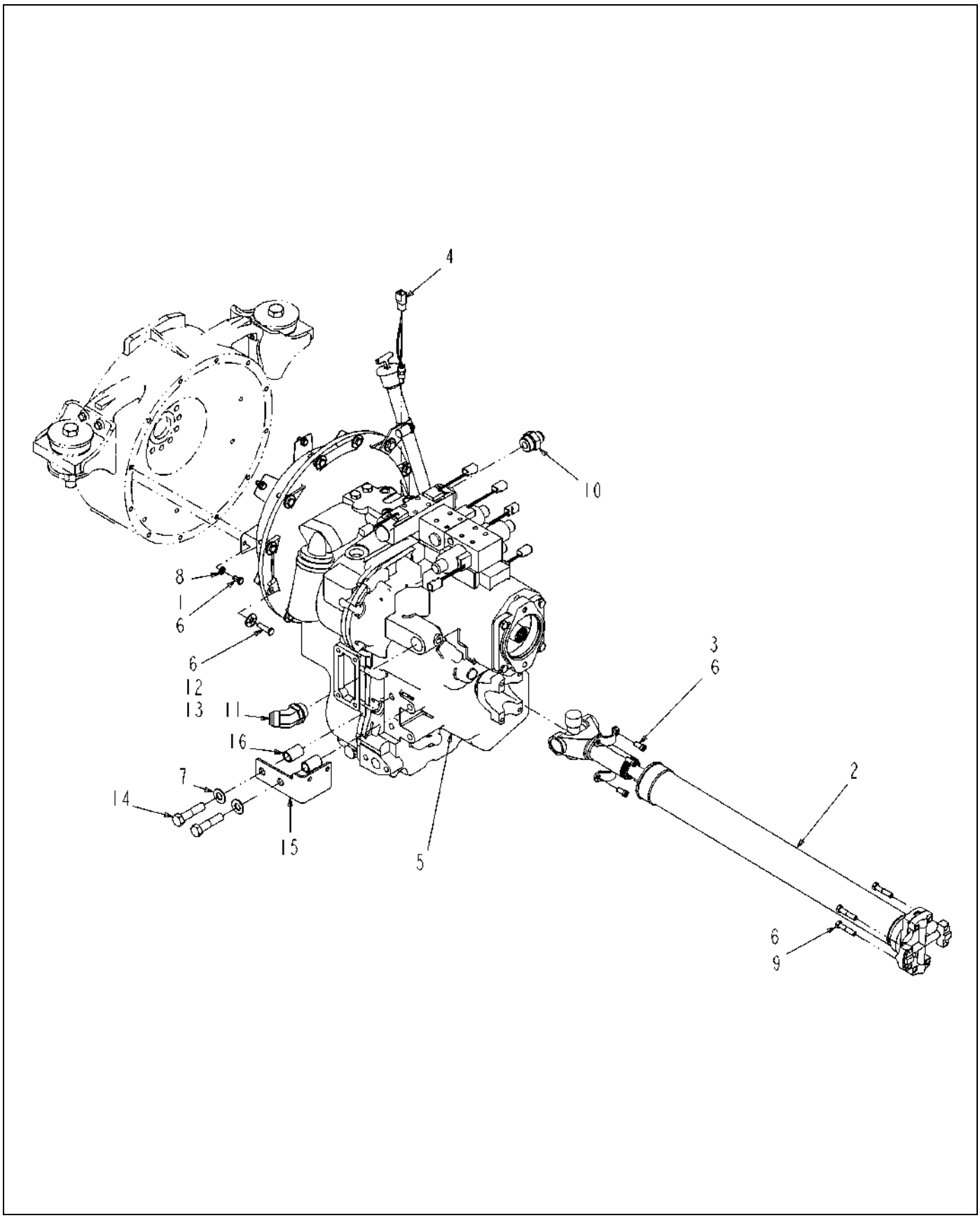

515766D1-01-R518-.TIF

Copyright © 2008 AGCO Corporation

ITEM	PART #	QTY	DESCRIPTION	COMMENTS
1	WR25752	8	SCREW-CAP HEX M8 X 16,	
2	WR123752	1	DRIVESHAFT-6C TELESCOPING	SEE PAGE 4-35
3	WR129592	1	STRAP KIT-1480/1550	
4	AG131763	1	SWITCH-TEMP,120DC,-6 O-RING	
5	AG136436	1	TRANS-POWERSHIFT,6SP 1.94TC	SEE PAGE 2-1
6	AG512885	AR	LOCTITE ADHESIVE SEALANT BLUE	
7	AG515180	2	WASHER 0.62 FL ZN SAE TYP-A G8	
8	AG520880	8	WASHER-FL,M8,ZN,REG	
9	AG561119	4	BOLT 0.37-24NFX 1.75 G8 ZN HHD	
10	AG561317	1	ADAP STR 1.00MO-R X 0.75MJIC	[A]
11	AG561454	1	ELBOW -16MB45X-16MJ	[B]
12	AG562789	12	WASHER FL METRIC#10 GEN PUR ZN	
13	AG562817	12	BOLT M10-1.5X35MM G10.9 ZN HHD	
14	401619X1	2	BOLT,M16-2 X 70,8.8,HHD,ZN	
15	515767D1	1	PLATE-FUEL FILTER,SECONDARY	
16	517527D1	2	TUBE-SPACER,1.0 OD X .120 WL	
	FOOTNOTE [A]		AG713900 O-RING	
	FOOTNOTE [B]		AG714365 O-RING	

Copyright © 2008 AGCO Corporation

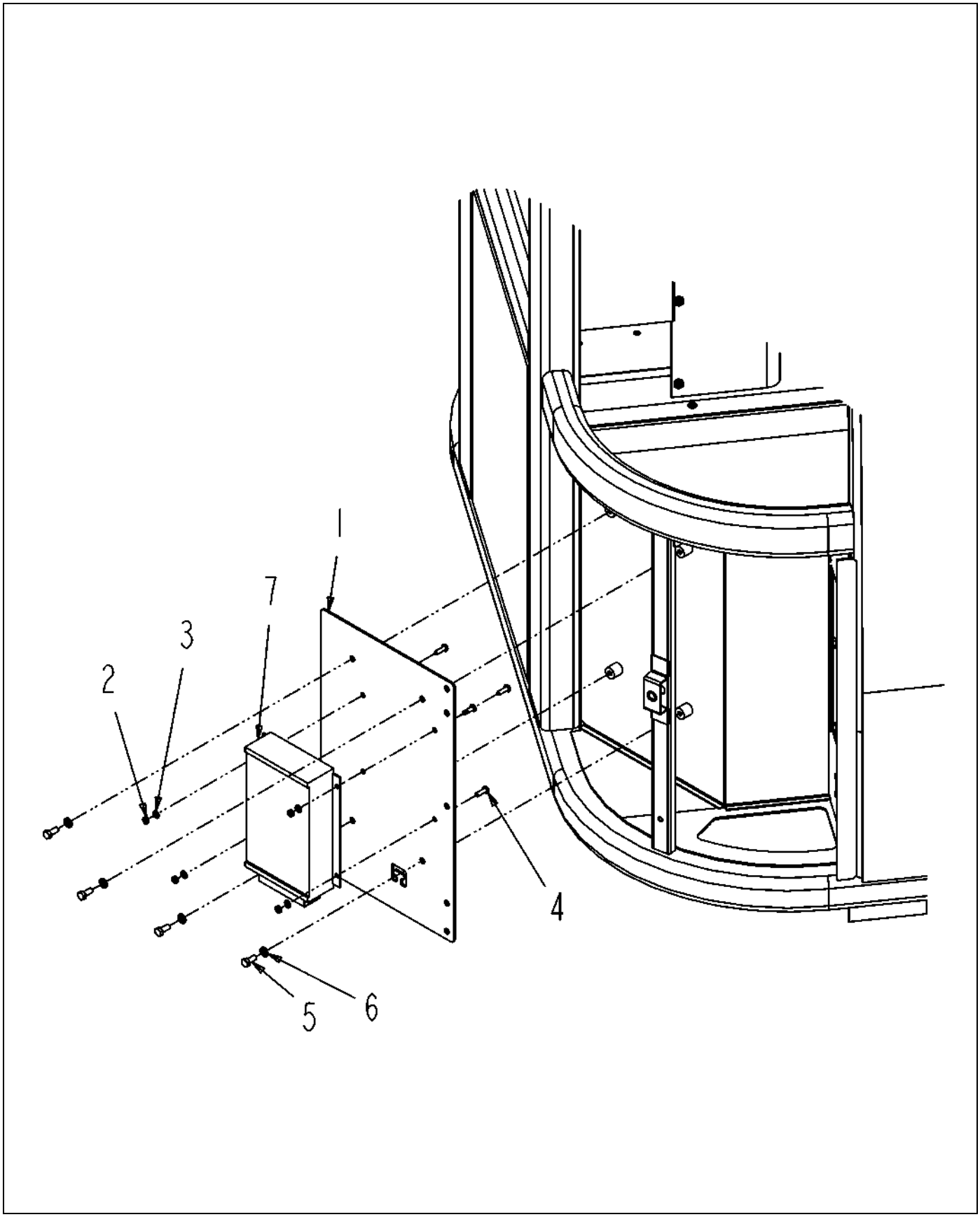

128252-02-M755-.TIF

Copyright © 2008 AGCO Corporation

TCU-INSTALL, 6 SPEED

ITEM	PART #	QTY	DESCRIPTION	COMMENTS
1	WR126909	1	PLATE-TCU,MINI CAB	
2	AG522220	4	NUT-M5-0.8,CL10.9,ZN,H	
3	AG522247	4	WASHER-LK,M5,SS,REG	
4	AG523508	4	SCR-M5-0.8X16,CL10.9,BLK,BHHS	
5	AG562639	4	BOLT M6 1.00X12MM G8.8 ZN HHD	
6	AG562792	4	WASHER LOCK M6 SPRING ZN	
7	505565D1	1	TCU-TURNER,SPRA-COUPE	

Copyright © 2008 AGCO Corporation

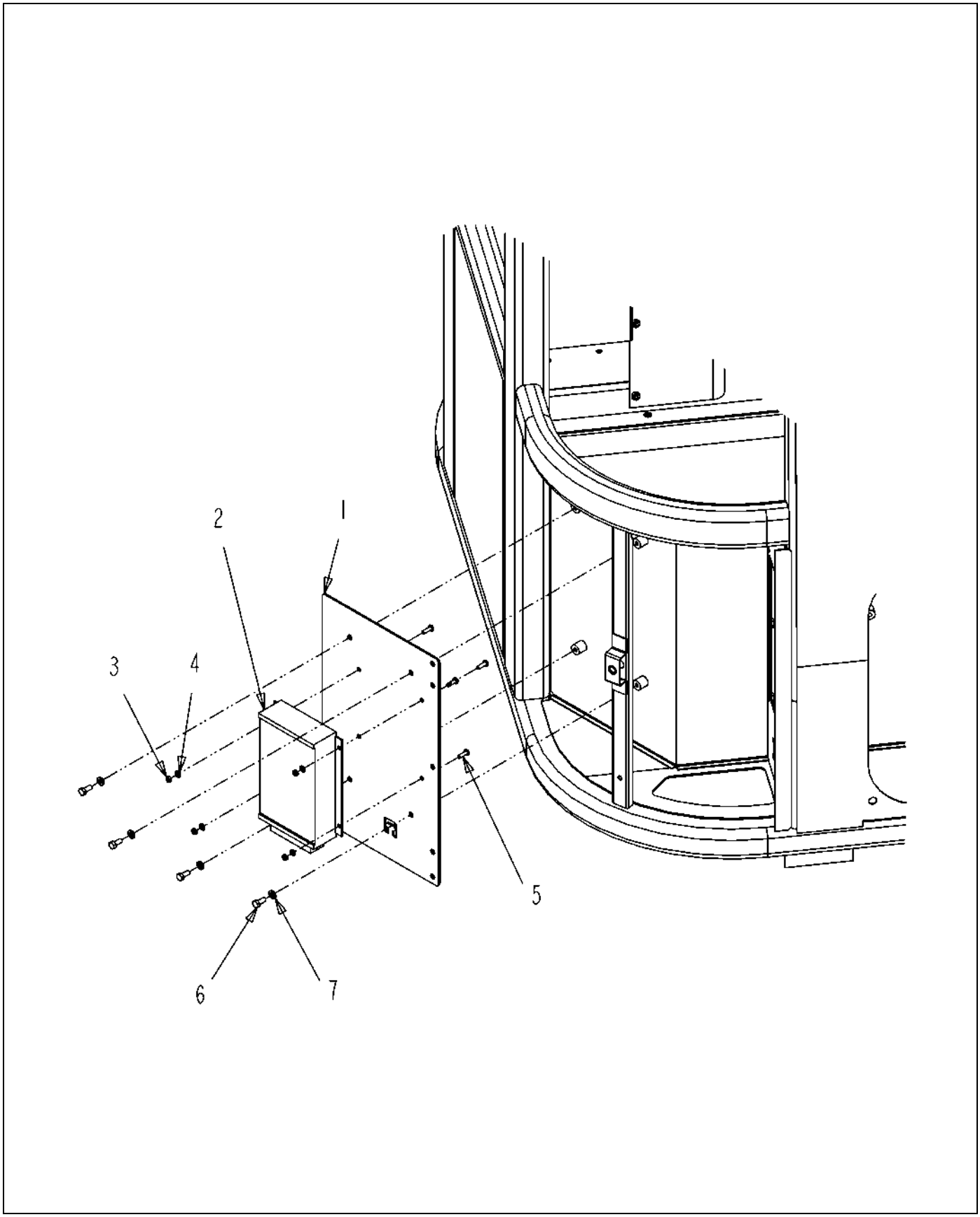

128253-A-1.TIF

Copyright © 2008 AGCO Corporation

TCU-INSTALL,4 SPEED

ITEM	PART #	QTY	DESCRIPTION	COMMENTS
1	WR126909	1	PLATE-TCU,MINI CAB	
2	WR127993	1	TCU-TURNER,SC,4F,2R	
3	AG522220	4	NUT-M5-0.8,CL10.9,ZN,H	
4	AG522247	4	WASHER-LK,M5,SS,REG	
5	AG523508	4	SCR-M5-0.8X16,CL10.9,BLK,BHHS	
6	AG562639	4	BOLT M6 1.00X12MM G8.8 ZN HHD	
7	AG562792	4	WASHER LOCK M6 SPRING ZN	

Copyright © 2008 AGCO Corporation

LADDER INSTALL-SC7000 3-1
LADDER INSTALL-SC7000 3-2
PLATFORM INSTALL-SC7000 3-3
BOOMREST INSTALL-DOMESTIC 3-4
BOOMREST INSTALL-EUROPE 3-5

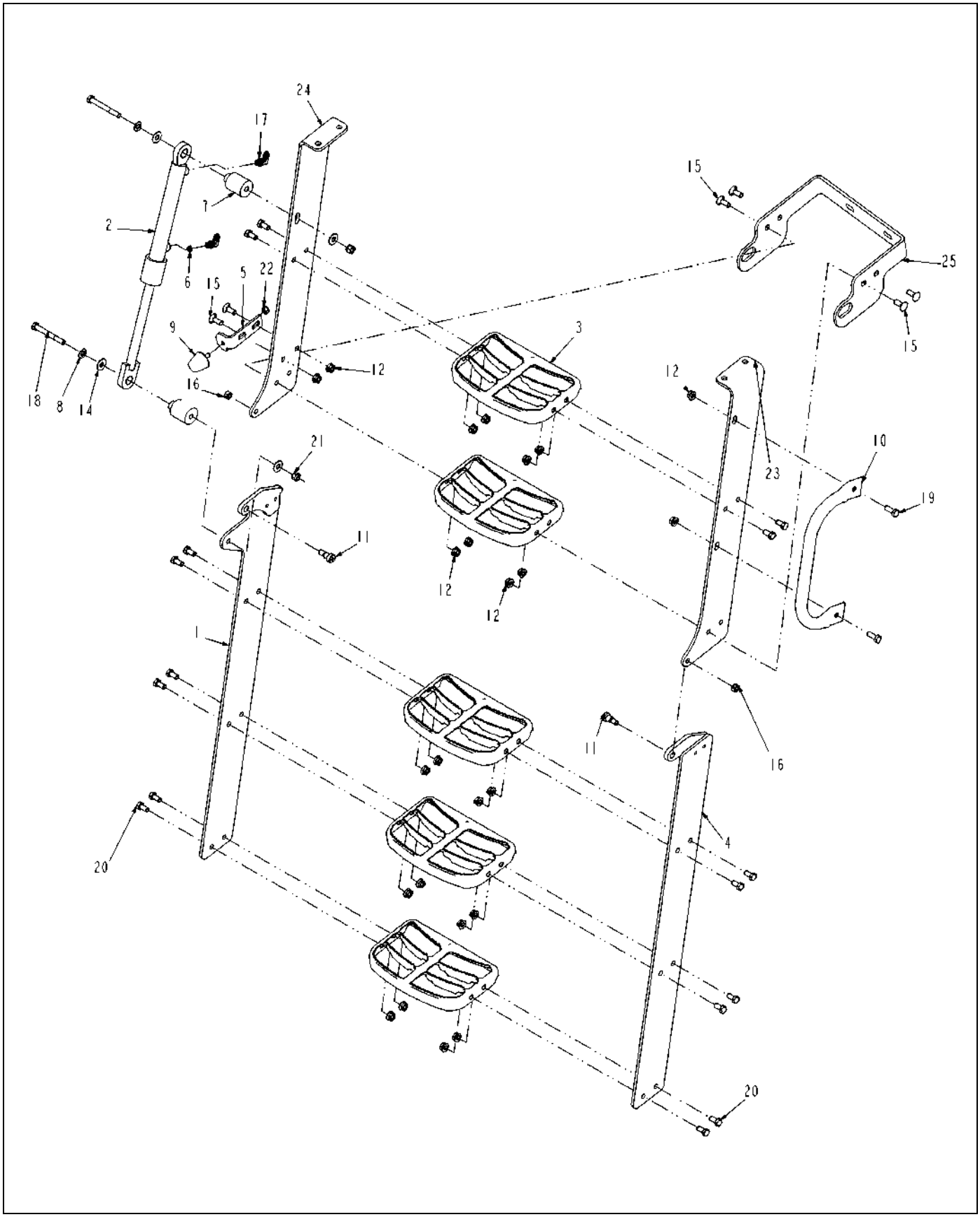

520394D1-01-R489-01.TIF

Copyright © 2008 AGCO Corporation

ITEM	PART #	QTY	DESCRIPTION	COMMENTS
1	WR126139	1	STRINGER-WLDMT,LADDER,LWR,LH	
2	WR126480	1	CYLINDER-HYD,6.50 IN STROKE	SEE PAGE 6-54
3	WR128461	5	STEP-6.50 IN X 10.63 IN	
4	WR128640	1	STRINGER-WLDMT,LADDER,LWR,RH	
5	AG130137	1	BRACKET-MOUNTING, BUMPER	
6	WR132236	1	PLATE-ORIFICE,2 WAY,THREADED	
7	AG262883	2	SPACER-UPPER,LADDER	
8	AG514559	2	WASHER 0.37 FL ZN SAE TYP-A G8	
9	AG519802	1	BUMPER, RUBBER VIBRATION	
10	AG520929	1	HANDLE-TUBULAR	
11	AG521342	2	BOLT-.38-16X.50DX.50,S,SH	
12	AG522562	30	NUT-.38-16,SS,SFLG,H	
14	AG551007	4	WASHER 0.37 FL ZN REG TYPE-B	
15	AG556300	6	BOLT 0.37-16NCX 1.00 G5 ZN CRG	
16	AG557676	2	NUT 0.37-16NC HEX ZN C-LK	
17	AG561677	2	ELBOW 90D 0.25MO-R X 0.25MJIC	SEE PAGE 6-106
18	AG562013	2	BOLT 0.37-16NCX 3.25 G8 ZN HHD	
19	AG562048	2	BOLT 0.37-16NCX 1.00 S.S. HHD	
20	AG562120	16	BOLT 0.37-16NCX 0.75 S.S. HHD	
21	AG601411	2	NUT 0.37-16NC HEX ZN REG NY	
22	AG601888	1	NUT 0.31-18NC HEX ZN REG NY	
23	520469D1	1	PLATE-STRINGER,UPPER,RH	
24	520470D1	1	PLATE-STRINGER,UPPER,LH	
25	520471D1	1	PLATE-BRACKET,LADDER SUPPORT	

Copyright © 2008 AGCO Corporation

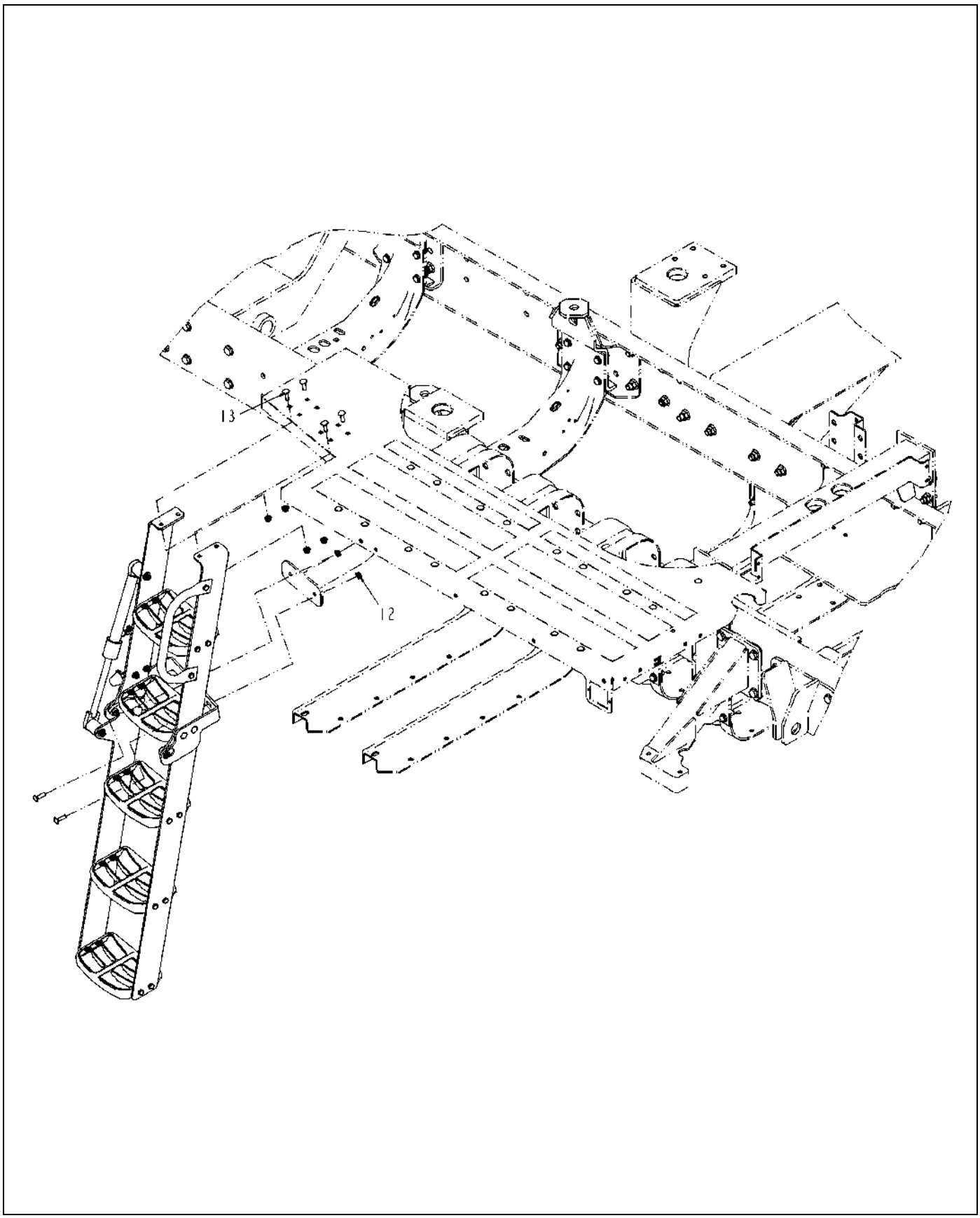

520394D1-01-R489-02.TIF

Copyright © 2008 AGCO Corporation

ITEM	PART #	QTY	DESCRIPTION	COMMENTS
12	AG522562	30	NUT-.38-16,SS,SFLG,H	
13	AG522571	6	BOLT .37-16NCX 1.25 SS CRG	

Copyright © 2008 AGCO Corporation

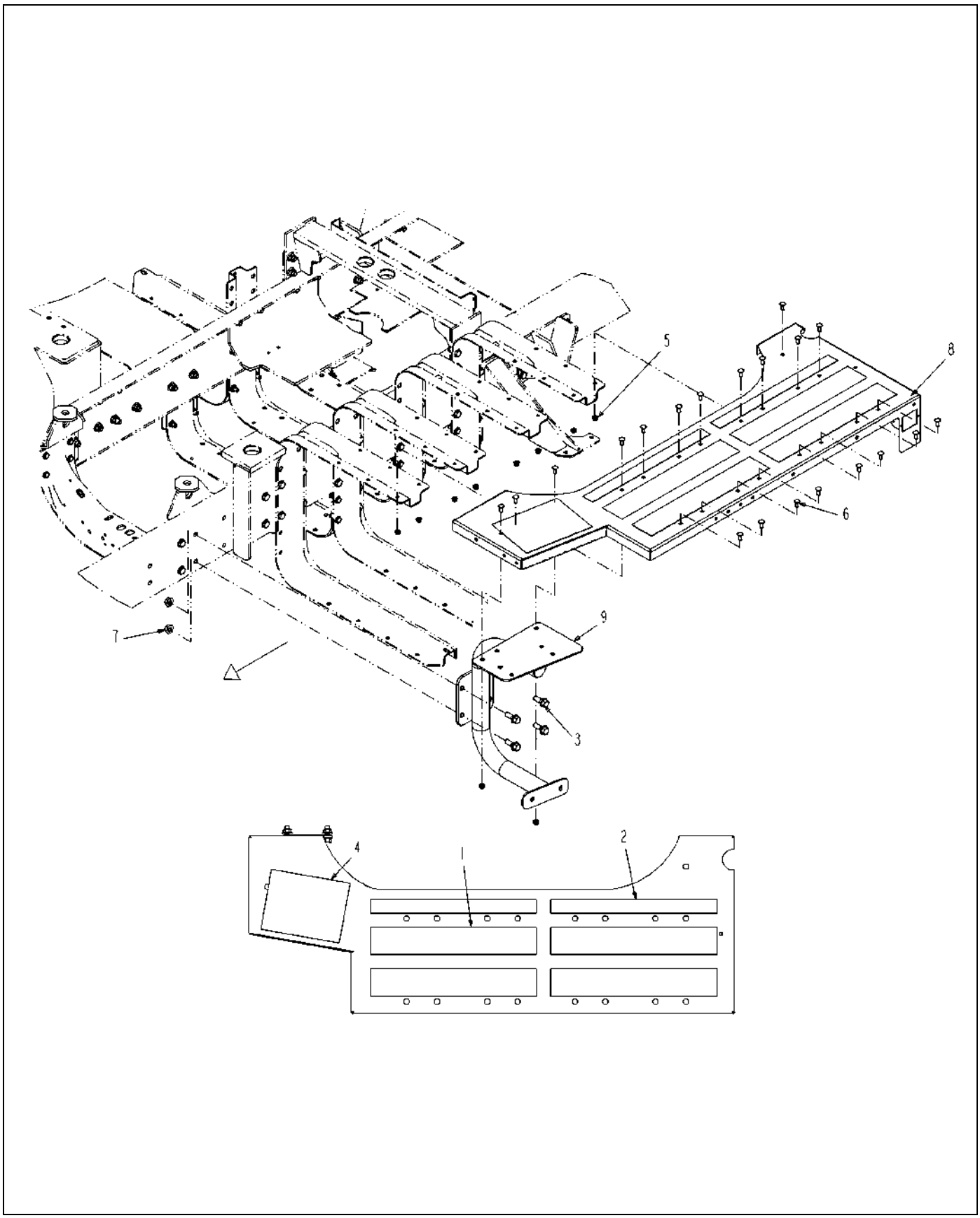

520395D1-01-R489-.TIF

Copyright © 2008 AGCO Corporation

PLATFORM INSTALL-SC7000

ITEM	PART #	QTY	DESCRIPTION	COMMENTS
1	AG511757	4	TREAD, SAFETY 4 IN X 24 IN	
2	AG515361	2	TREAD SAFETY 2.00X24.00	
3	AG517556	4	BOLT 0.62-18 X 1.75 G8 HX FLG	
4	AG519203	1	TREAD SAFETY 11.50 X 8.75	
5	AG522562	20	NUT-.38-16,SS,SFLG,H	
6	AG609084	20	BOLT 0.37-16NCX 1.00 SS CRG	
7	AG609313	4	NUT HX FLG 0.62-18NF	
8	520465D1	1	WLDMT-PLATFORM,MAIN	
9	520467D1	1	WLDMT-LADDER,SUPPORT TUBE	

Copyright © 2008 AGCO Corporation

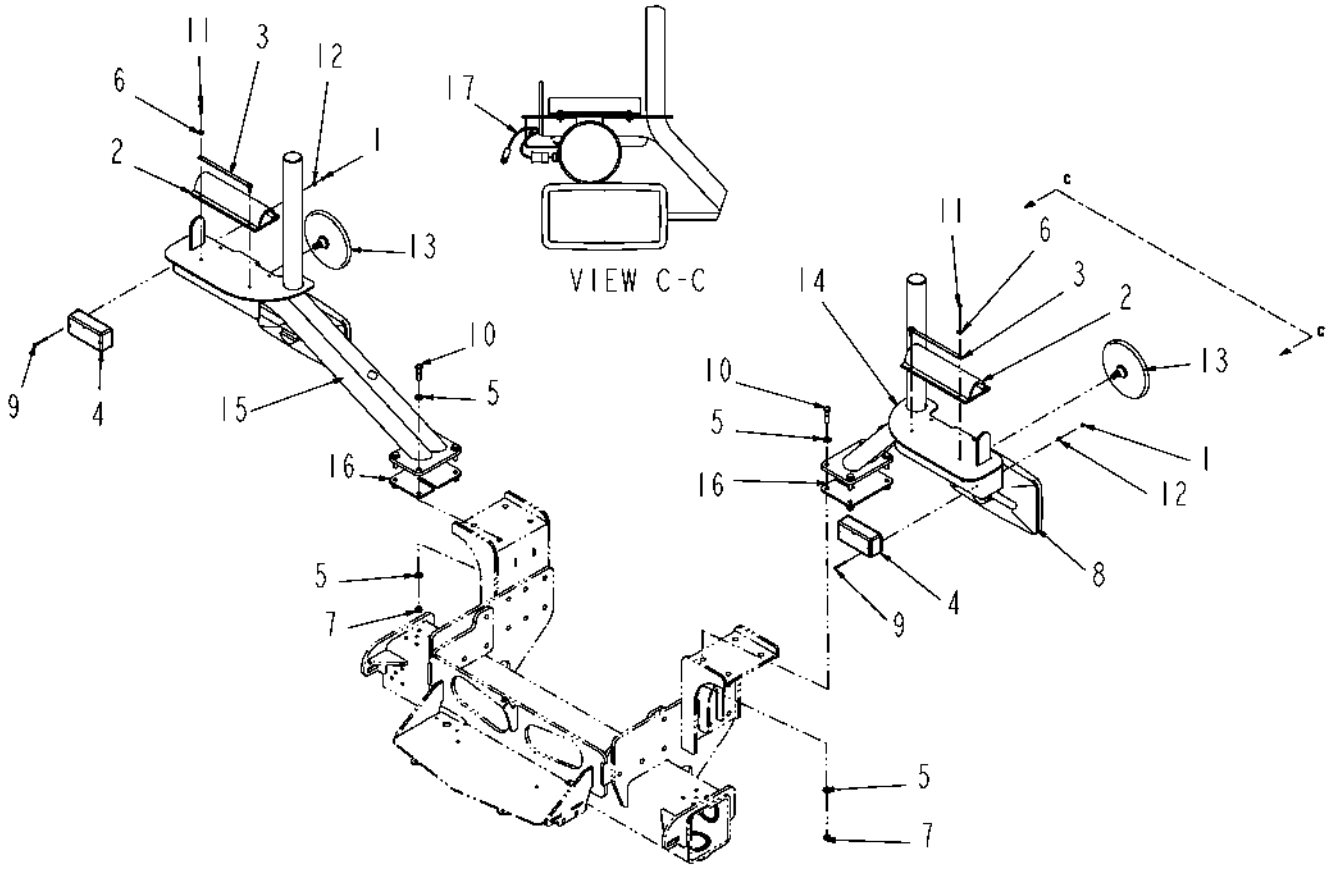

517863D1-01-R181-.TIF

Copyright © 2008 AGCO Corporation

BOOMREST INSTALL-DOMESTIC

ITEM	PART #	QTY	DESCRIPTION	COMMENTS
1	AG027274	4	NUT #10-24NC HEX SS REG NY	
2	WR136831	2	BUMPER-12.25,BOOM REST	
3	WR136832	4	STRAP-RETAINER,BUMPER	
4	AG327247	2	LAMP-WARNING,AMBER	
5	AG514554	16	WASHER 0.50 FL ZN SAE TYP-A G8	
6	AG515121	8	WASHER 0.25 FL SS REG TYPE-B	
7	AG520614	8	NUT-.50-13,G8,ZN,HH,C-LK	
8	AG521009	2	MIRROR-RECTANGULAR	
9	AG523814	4	SCR-10-24X2.25,PPH,SS	
10	AG561665	8	BOLT 0.50-13NCX 2.00 G8 ZN HHD	
11	AG561952	8	BOLT 0.25-20NCX 1.25 SS HHD	
12	AG562082	4	WASHER #10 FL SS REG TYPE-B	
13	AG610643	2	MIRROR-ROUND,8.00,BLK (326990)	
14	514090D1	1	WLDMT-BOOMREST,LH	
15	514096D1	1	WLDMT-BOOMREST,RH	
16	517112D1	2	PLATE-ELEC,SPACER,BOOMREST	
17	517950D1	2	HARNESS-BOOM REST	

Copyright © 2008 AGCO Corporation

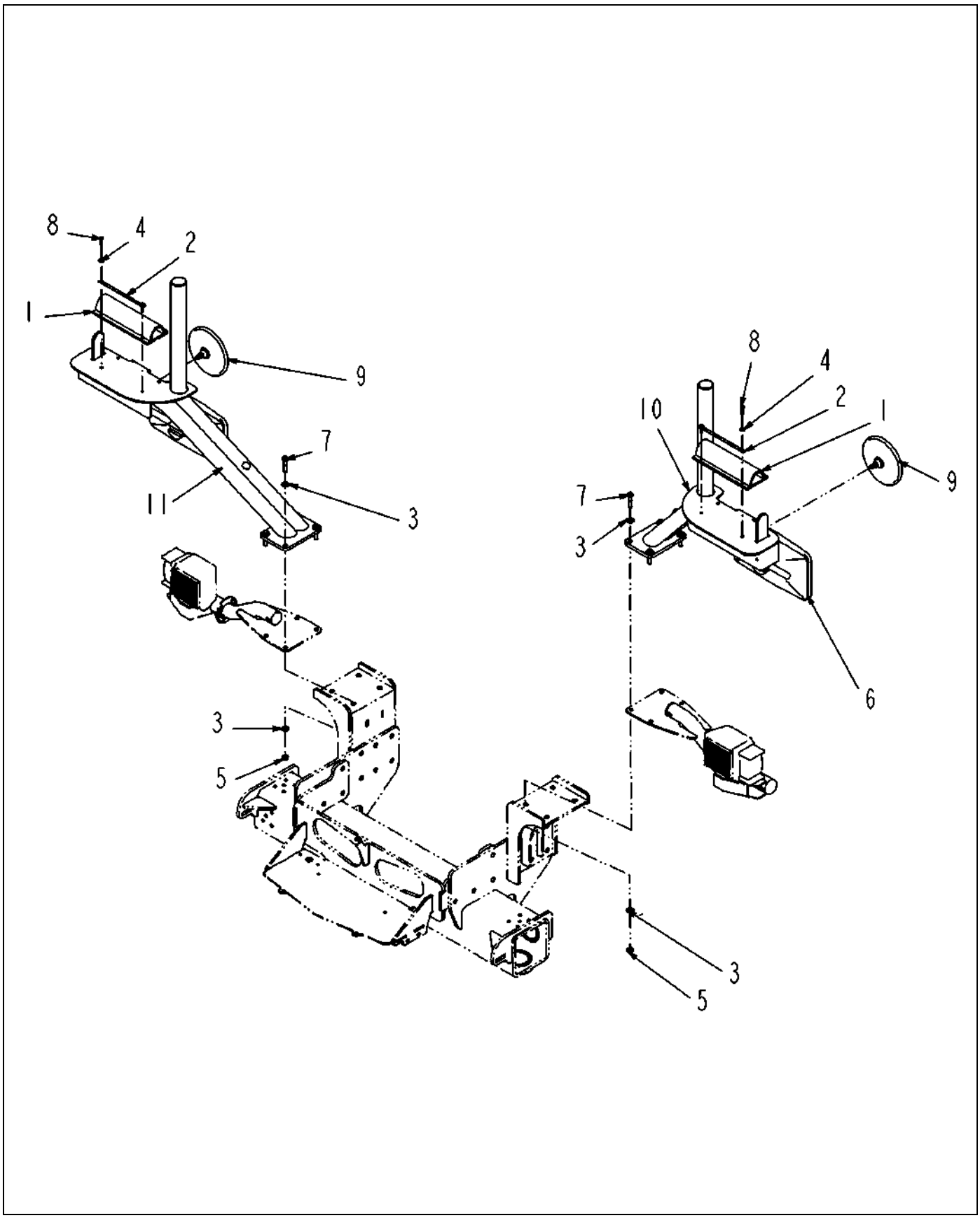

520929D1-02-R925-.TIF

Copyright © 2008 AGCO Corporation

BOOMREST INSTALL-EUROPE

ITEM	PART #	QTY	DESCRIPTION	COMMENTS
1	WR136831	2	BUMPER-12.25,BOOM REST	
2	WR136832	4	STRAP-RETAINER,BUMPER	
3	AG514554	16	WASHER 0.50 FL ZN SAE TYP-A G8	
4	AG515121	8	WASHER 0.25 FL SS REG TYPE-B	
5	AG520614	8	NUT-.50-13,G8,ZN,HH,C-LK	
6	AG521009	2	MIRROR-RECTANGULAR	
7	AG551244	8	BOLT.50-13NCX 2.25G5 ZN HHD	
8	AG561952	8	BOLT 0.25-20NCX 1.25 SS HHD	
9	AG610643	2	MIRROR-ROUND,8.00,BLK (326990)	
10	514090D1	1	WLDMT-BOOMREST,LH	
11	514096D1	1	WLDMT-BOOMREST,RH	

Copyright © 2008 AGCO Corporation

AXLE-ASM,LOW SPEED,17.8:1	4-1
CHAINCASE-ASM,LH,1.18:1	4-2
CHAINCASE-ASM,LH,1.18:1	4-3
CHAINCASE-ASM,RH,1.18:1	4-4
CHAINCASE-ASM,RH,1.18:1	4-5
BRAKE GROUP	4-6
ASSEMBLY, BRAKE DISC	4-7
BRAKE, ASM DISC	4-8
KIT, LINING	4-9
KIT, SEAL	4-10
KIT, HYDRAULIC	4-11
KIT, HARDWARE	4-12
KIT, REPAIR	4-13
CYLINDER-INSTALL,REAR AXLE,71	4-14
CARRIER-ASM,2.92:1	4-15
ASSEMBLY CENTER AXLE	4-16
ASSEMBLY CARRIER	4-17
BOLT ASM-EYE	4-18
DRIVE SHAFT W/U JOINT CAPS,NRW	4-19
STEERING UNIT INSTALL	4-20
STEERING UNIT ASM	4-21
AXLE-INSTALL,REAR,120-160	4-22
AXLE-INSTALL,REAR,120-160	4-23
AXLE-INSTALL,REAR,120-160	4-24
AXLE-INSTALL,REAR,120-160	4-25
DRIVESHAFT-W/CAPS,120-160 AXLE	4-26
AXLE-REAR,HYD,88 IN	4-27
AXLE-REAR,HYD,88 IN	4-28
AXLE-REAR,HYD,88 IN	4-29
AXLE-REAR,HYD,88 IN	4-30
AXLE-REAR,120 IN -160 IN ,HYDRAULIC	4-31
AXLE-REAR,120 IN -160 IN ,HYDRAULIC	4-32
AXLE-REAR,120 IN -160 IN ,HYDRAULIC	4-33
AXLE-REAR,120 IN -160 IN ,HYDRAULIC	4-34
DRIVESHAFT-6C TELESCOPING	4-35
AXLE-REAR,SPRING,88 IN	4-36
AXLE-REAR,SPRING,88 IN	4-37
AXLE-REAR,SPRING,88 IN	4-38
AXLE-REAR,SPRING,88 IN	4-39
DRIVESHAFT-W/CAPS,88 IN -128 IN	4-40
AXLE-FRONT,88 IN -120 IN	4-41
AXLE-FRONT,88 IN -120 IN	4-42
AXLE-FRONT,88 IN -120 IN	4-43
AXLE-FRONT,88 IN -120 IN	4-44
AXLE-FRONT,88 IN -120 IN	4-45
AXLE-FRONT,120 IN -160 IN	4-46
AXLE-FRONT,120 IN -160 IN	4-47
AXLE-FRONT,120 IN -160 IN	4-48
AXLE-FRONT,120 IN -160 IN	4-49
AXLE-FRONT,120 IN -160 IN	4-50
ASSEMBLY-FRAME,7X50,NO OSC.	4-51
ASSEMBLY-FRAME,7X50,NO OSC.	4-52
ASSEMBLY-FRAME,7X50,NO OSC.	4-53
HUB/SPINDLE-10 STUD,11.25 B.C.	4-54

AXLE-REAR,SPRING,71 IN 4-55
AXLE-REAR,SPRING,71 IN 4-56
AXLE-REAR,SPRING,71 IN 4-57
AXLE-REAR,SPRING,71 IN 4-58
AXLE-REAR,HYDRAULIC,71 IN 4-59
AXLE-REAR,HYDRAULIC,71 IN 4-60
AXLE-REAR,HYDRAULIC,71 IN 4-61
AXLE-REAR,HYDRAULIC,71 IN 4-62

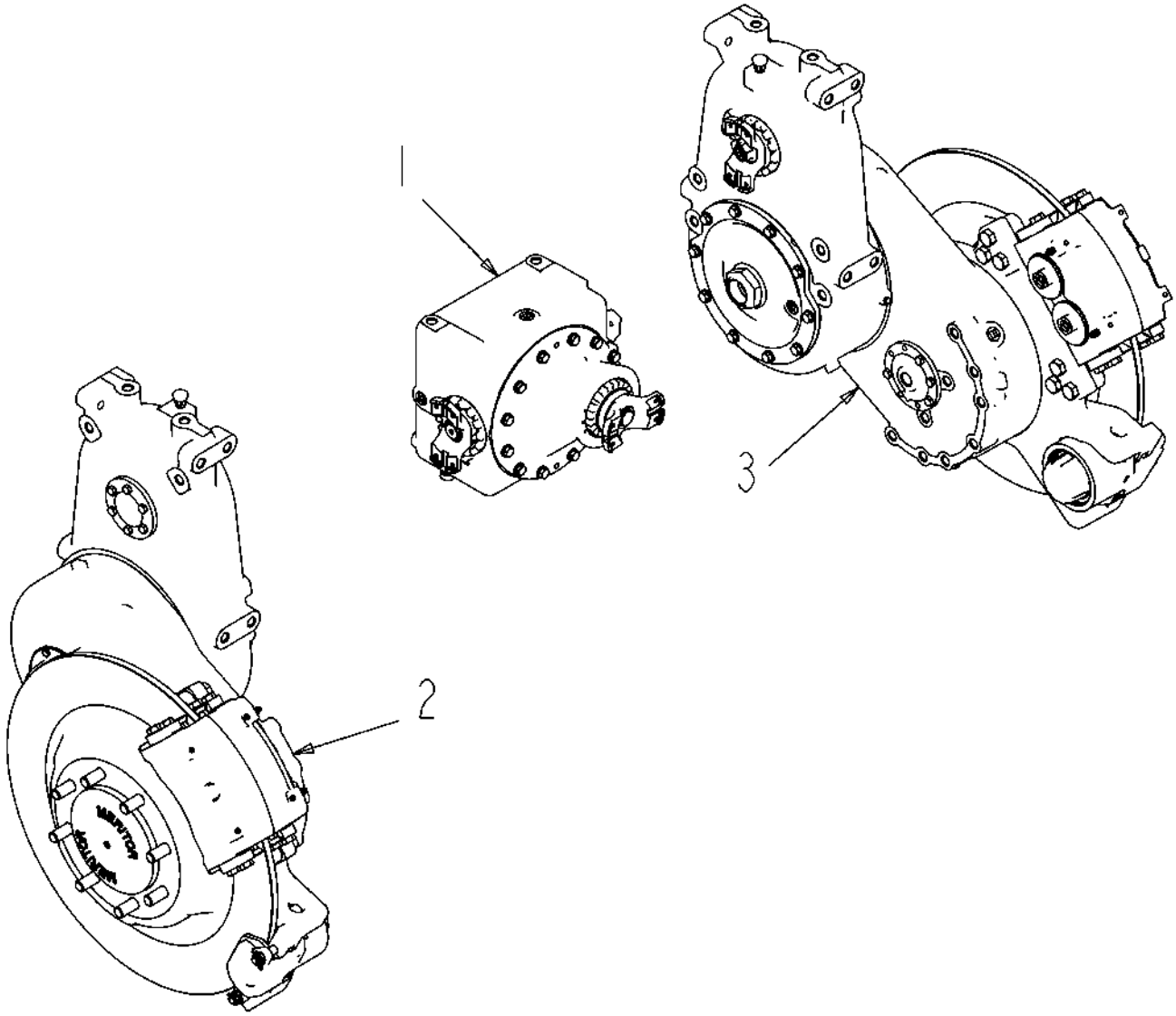

129724-A.TIF

Copyright © 2008 AGCO Corporation

AXLE-ASM,LOW SPEED,17.8:1

ITEM	PART #	QTY	DESCRIPTION	COMMENTS
1	WR129725	1	CARRIER-ASM,2.92:1	SEE PAGE 4-15
2	WR129726	1	CHAINCASE-ASM,LH,R/B522022D1	SEE PAGE 4-2
3	WR129727	1	CHAINCASE-ASM,RH,R/B522020D1	SEE PAGE 4-4

Copyright © 2008 AGCO Corporation

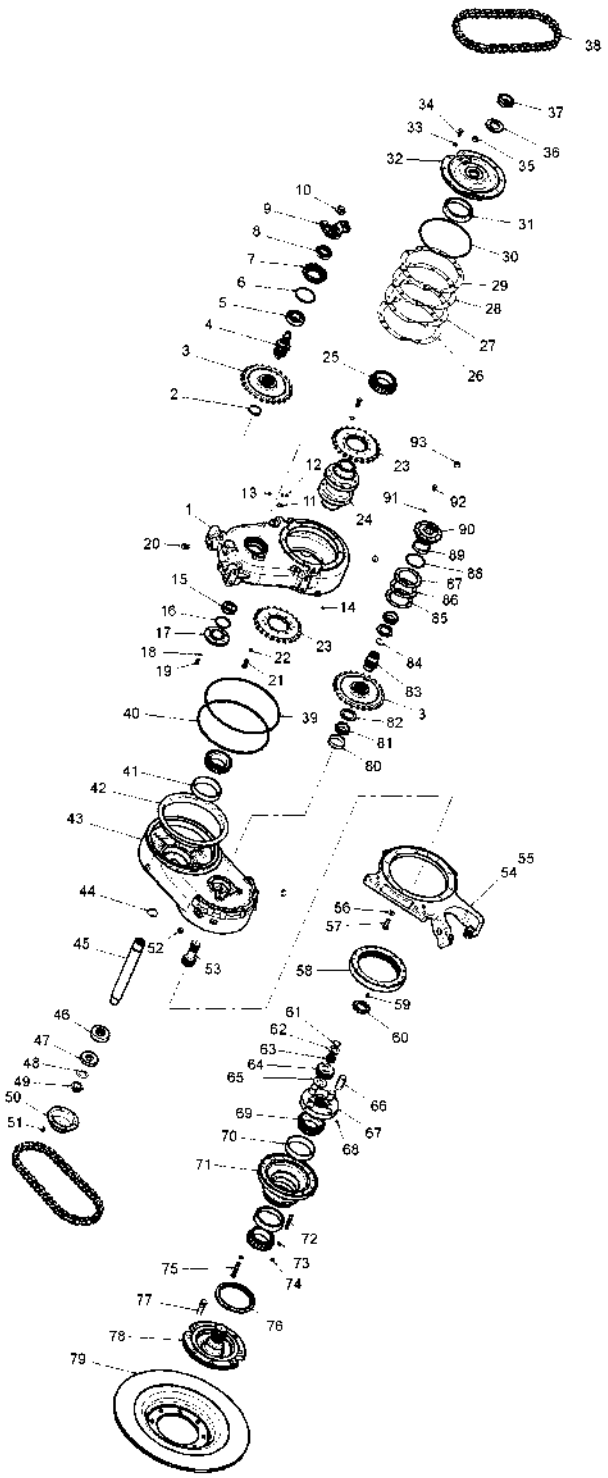

129726.TIF

Copyright © 2008 AGCO Corporation

ITEM	PART #	QTY	DESCRIPTION	COMMENTS
REF	WR131980	-	BRAKE GROUP	SEE PAGE 4-6
REF	WR131981	-	BRAKE, ASM DISC	SEE PAGE 4-8
REF	AG330668	1	STUD/WHEEL END	
1	WR131830	1	CASE, TRANSFER	
2	WR131831	1	RING, SNAP	
3	WR131913	1	SPROCKET, 23 TOOTH	
3	WR131832	1	SPROCKET, 25 TOOTH	
4	WR131890	4	WASHER, THRUST	
4	WR131833	1	SHAFT, INPUT	
5	WR131834	1	BEARING	
6	WR131835	1	O-RING	
7	WR131836	1	CAGE PINION	
8	WR131837	1	SEAL	
9	WR131838	1	YOKE, INPUT	
10	WR131839	1	NUT, LOCK	
11	WR131840	1	LOCK	
12	WR131841	1	SCREW	
13	WR131842	1	FITTING, GREASE	
14	WR131843	1	FITTING, RELIEF	
15	WR131844	1	BEARING	
16	WR131845	1	O-RING	
17	WR131846	1	COVER	
18	WR131847	6	WASHER, HARDENED	
19	WR131848	6	SCREW	
20	AG132723	1	BREATHER	
20	WR131850	1	PLUG	
21	AG726892	20	CAPSCREW	
22	WR131852	30	WASHER, FLAT	
23	WR131914	1	SPROCKET, 25 TOOTH	
23	WR131853	1	SPROCKET, 23 TOOTH	
24	WR131854	1	SHAFT	
25	WR131855	2	BEARING	
26	WR131856	-	SHIM, .010	
27	WR131857	-	SHIM .004	
28	WR131858	-	SHIM .002	
29	WR131859	-	SHIM .020	
30	WR131860	1	O-RING	
31	WR131861	2	CUP, BEARING	
32	WR131862	1	CAGE, ASM BEARING	
34	WR131863	10	SCREW	
35	AG705830	1	PLUG LEVEL	
36	WR131864	1	WASHER, FLAT	
37	WR131865	1	NUT, LOCK	
38	WR131866	2	CHAIN, ASM DRIVE	
39	WR131867	1	O-RING	
40	WR131868	1	SEAL	
42	WR131869	1	BUSHING	
43	WR131870	1	CASE, ASM TRANSFER	
44	WR131871	1	O-RING	
45	WR131872	1	SHAFT, PINION	
46	AG131873	1	BEARING, THRUST	
47	WR131874	1	WASHER, FLAT	
	FOOTNOTE		ITEM 63: ROLLER. FOR THE 7000 SPRA-COUPE, THIS ROLLER IS USED IN 4 DIFFERENT BEARINGS IN EACH CHAINCASE AND EACH BEARING CONTAINS 29 OF THESE ROLLERS.	

Copyright © 2008 AGCO Corporation

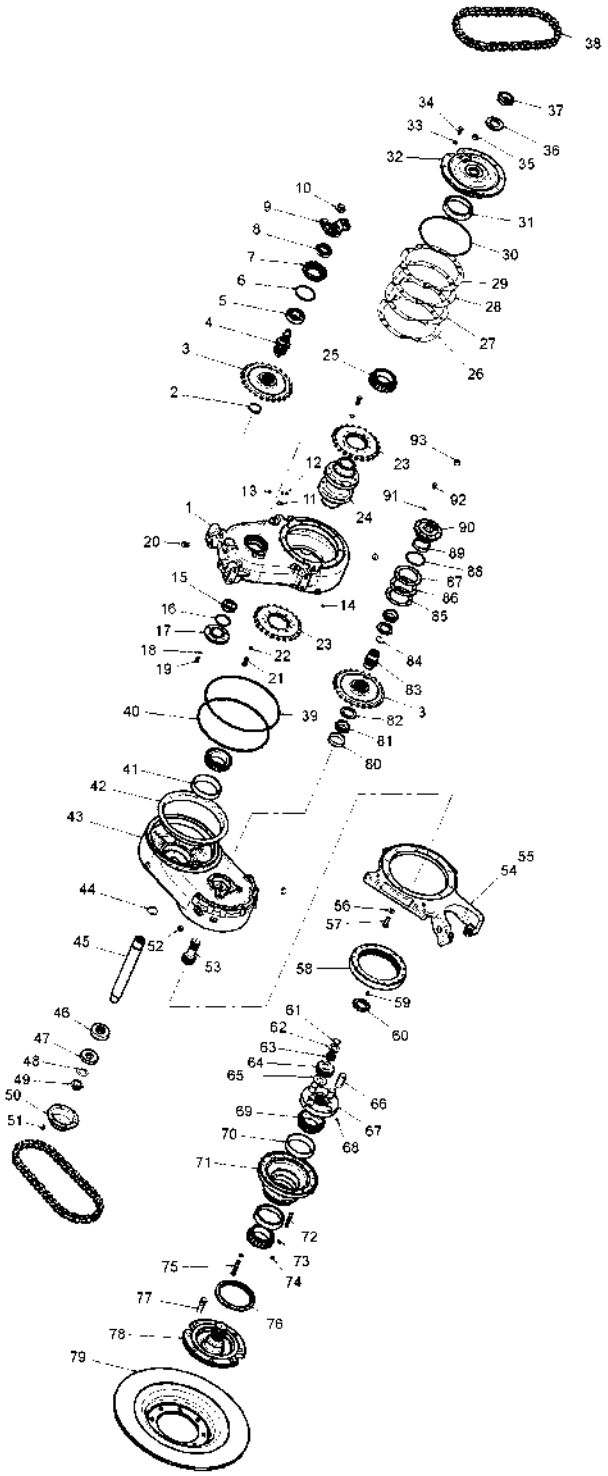

129726.TIF

Copyright © 2008 AGCO Corporation

ITEM	PART #	QTY	DESCRIPTION	COMMENTS
48	AG713825	1	WASHER BEVEL PINION NUT	
49	AG713834	1	NUT BEVEL PINION	
50	WR131876	1	CAP, HUB	
51	WR131877	6	SCREW	
52	AG707658	3	PLUG PLANETARY OIL LEVER .75	
53	WR131878	1	GEAR, SUN R/B 522761D1	
54	WR131879	1	ADAPTER, BRAKE LH	
55	WR131880	1	ADAPTER, BRAKE RH	
56	WR131881	10	WASHER, HARDENED	
57	WR131882	10	SCREW	
58	WR131883	1	GEAR, RING	
59	WR131884	1	SCREW, SPECIAL	
60	WR131885	1	NUT, WHEEL BRG	
61	WR131886	2	RING, SNAP	
62	WR131887	2	WASHER, THRUST	
63	WR131888	116	ROLLER	
64	WR131889	4	PINION, PLANET	
66	WR131891	4	SHAFT, PINION PLANET	
67	WR131892	1	SPIDER, ASM PLANET	
68	WR131893	4	SCREW SET	
71	WR131895	1	CAGE, ASM BEARING	
72	WR131915	4	STUD	
74	WR131897	2	NUT LOCK	
75	WR131898	14	SCREW	
76	WR131899	1	SEAL, ASM	
77	WR131900	4	STUD, WHEEL	
78	WR131901	1	SHAFT, OUTPUT PLANET	
78	WR131902	1	SHAFT, OUTPUT ASM	
78	WR131903	1	SHAFT, OUTPUT ASM	
79	WR131904	1	DISC, BRAKE	
80	AG714471	1	CONE TAPER BRG	
81	AG714472	2	CONE TAPER BRG	
82	WR131905	2	WASHER, HARDENED	
83	WR131906	1	SHAFT, OUTPUT	
84	WR131907	1	RING, SNAP	
85	WR131908	-	SHIM .020	
86	WR131909	-	SHIM .004	
87	WR131910	-	SHIM .010	
88	WR131911	1	O-RING	
90	WR131912	1	CAGE, BRG ASM	
	FOOTNOTE		ITEM 63: ROLLER. FOR THE 7000 SPRA-COUPE, THIS ROLLER IS USED IN 4 DIFFERENT BEARINGS IN EACH CHAINCASE AND EACH BEARING CONTAINS 29 OF THESE ROLLERS.	

Copyright © 2008 AGCO Corporation

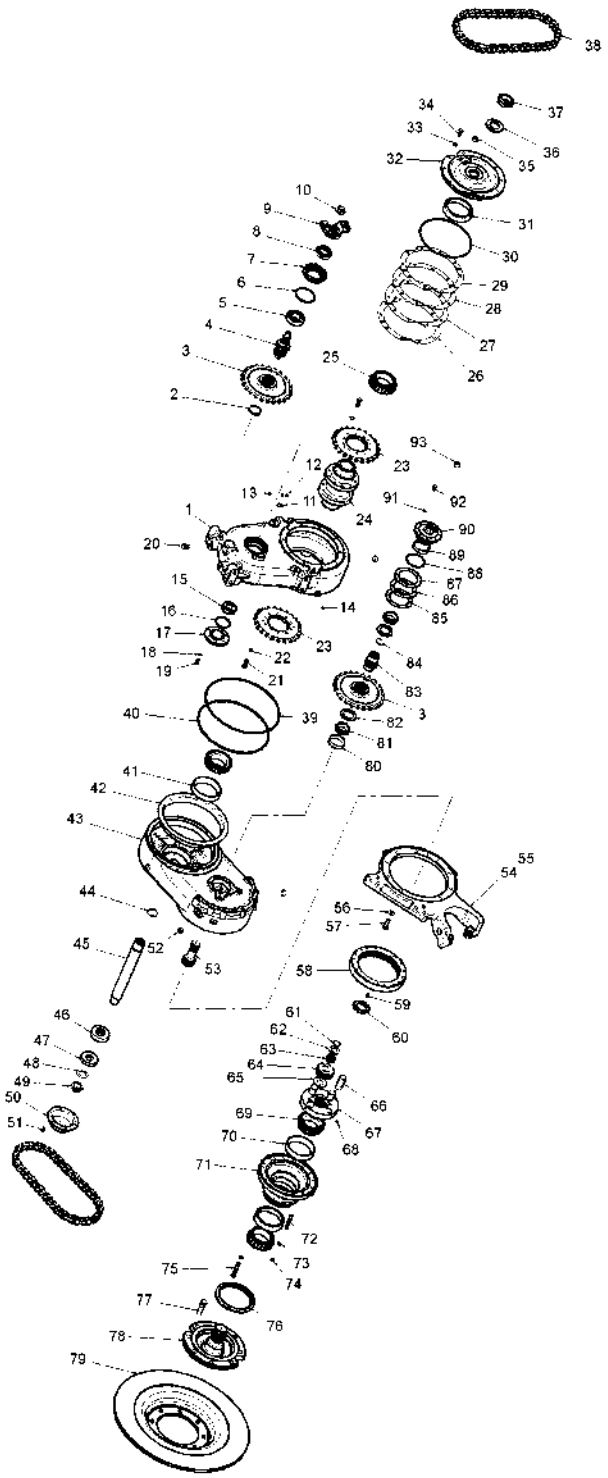

129727.TIF

Copyright © 2008 AGCO Corporation

ITEM	PART #	QTY	DESCRIPTION	COMMENTS
REF	WR131980	-	BRAKE GROUP	SEE PAGE 4-6
REF	WR131981	-	BRAKE, ASM DISC	SEE PAGE 4-8
REF	AG330668	1	STUD/WHEEL END	
1	WR131830	1	CASE, TRANSFER	
2	WR131831	1	RING, SNAP	
3	WR131913	1	SPROCKET, 23 TOOTH	
3	WR131832	1	SPROCKET, 25 TOOTH	
4	WR131890	4	WASHER, THRUST	
4	WR131833	1	SHAFT, INPUT	
5	WR131834	1	BEARING	
6	WR131835	1	O-RING	
7	WR131836	1	CAGE PINION	
8	WR131837	1	SEAL	
9	WR131838	1	YOKE, INPUT	
10	WR131839	1	NUT, LOCK	
11	WR131840	1	LOCK	
12	WR131841	1	SCREW	
13	WR131842	1	FITTING, GREASE	
14	WR131843	1	FITTING, RELIEF	
15	WR131844	1	BEARING	
16	WR131845	1	O-RING	
17	WR131846	1	COVER	
18	WR131847	6	WASHER, HARDENED	
19	WR131848	6	SCREW	
20	AG132723	1	BREATHER	
20	WR131850	1	PLUG	
21	AG726892	20	CAPSCREW	
22	WR131852	30	WASHER, FLAT	
23	WR131914	1	SPROCKET, 25 TOOTH	
23	WR131853	1	SPROCKET, 23 TOOTH	
24	WR131854	1	SHAFT	
25	WR131855	2	BEARING	
26	WR131856	-	SHIM, .010	
27	WR131857	-	SHIM .004	
28	WR131858	-	SHIM .002	
29	WR131859	-	SHIM .020	
30	WR131860	1	O-RING	
31	WR131861	2	CUP, BEARING	
32	WR131862	1	CAGE, ASM BEARING	
34	WR131863	10	SCREW	
35	AG705830	1	PLUG LEVEL	
36	WR131864	1	WASHER, FLAT	
37	WR131865	1	NUT, LOCK	
38	WR131866	2	CHAIN, ASM DRIVE	
39	WR131867	1	O-RING	
40	WR131868	1	SEAL	
42	WR131869	1	BUSHING	
43	WR131870	1	CASE, ASM TRANSFER	
44	WR131871	1	O-RING	
45	WR131872	1	SHAFT, PINION	
46	AG131873	1	BEARING, THRUST	
47	WR131874	1	WASHER, FLAT	
	FOOTNOTE		ITEM 63: ROLLER. FOR THE 7000 SPRA-COUPE, THIS ROLLER IS USED IN 4 DIFFERENT BEARINGS IN EACH CHAINCASE AND EACH BEARING CONTAINS 29 OF THESE ROLLERS.	

Copyright © 2008 AGCO Corporation

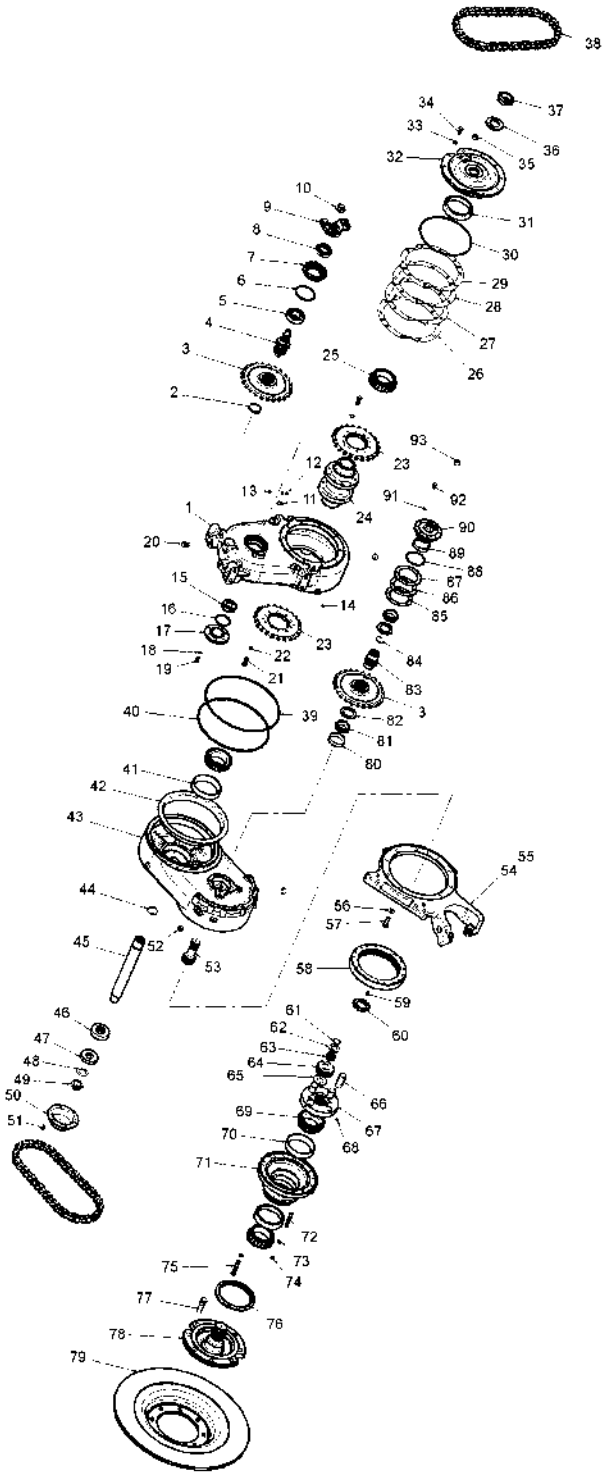

129727.TIF

Copyright © 2008 AGCO Corporation

ITEM	PART #	QTY	DESCRIPTION	COMMENTS
48	AG713825	1	WASHER BEVEL PINION NUT	
49	AG713834	1	NUT BEVEL PINION	
50	WR131876	1	CAP, HUB	
51	WR131877	6	SCREW	
52	AG707658	3	PLUG PLANETARY OIL LEVER .75	
53	WR131878	1	GEAR, SUN R/B 522761D1	
54	WR131879	1	ADAPTER, BRAKE LH	
55	WR131880	1	ADAPTER, BRAKE RH	
56	WR131881	10	WASHER, HARDENED	
57	WR131882	10	SCREW	
58	WR131883	1	GEAR, RING	
59	WR131884	1	SCREW, SPECIAL	
60	WR131885	1	NUT, WHEEL BRG	
61	WR131886	2	RING, SNAP	
62	WR131887	2	WASHER, THRUST	
63	WR131888	116	ROLLER	
64	WR131889	4	PINION, PLANET	
66	WR131891	4	SHAFT, PINION PLANET	
67	WR131892	1	SPIDER, ASM PLANET	
68	WR131893	4	SCREW SET	
71	WR131895	1	CAGE, ASM BEARING	
72	WR131915	4	STUD	
74	WR131897	2	NUT LOCK	
75	WR131898	14	SCREW	
76	WR131899	1	SEAL, ASM	
77	WR131900	4	STUD, WHEEL	
78	WR131901	1	SHAFT, OUTPUT PLANET	
78	WR131902	1	SHAFT, OUTPUT ASM	
78	WR131903	1	SHAFT, OUTPUT ASM	
79	WR131904	1	DISC, BRAKE	
80	AG714471	1	CONE TAPER BRG	
81	AG714472	2	CONE TAPER BRG	
82	WR131905	2	WASHER, HARDENED	
83	WR131906	1	SHAFT, OUTPUT	
84	WR131907	1	RING, SNAP	
85	WR131908	-	SHIM .020	
86	WR131909	-	SHIM .004	
87	WR131910	-	SHIM .010	
88	WR131911	1	O-RING	
90	WR131912	1	CAGE, BRG ASM	
	FOOTNOTE		ITEM 63: ROLLER. FOR THE 7000 SPRA-COUPE, THIS ROLLER IS USED IN 4 DIFFERENT BEARINGS IN EACH CHAINCASE AND EACH BEARING CONTAINS 29 OF THESE ROLLERS.	

Copyright © 2008 AGCO Corporation

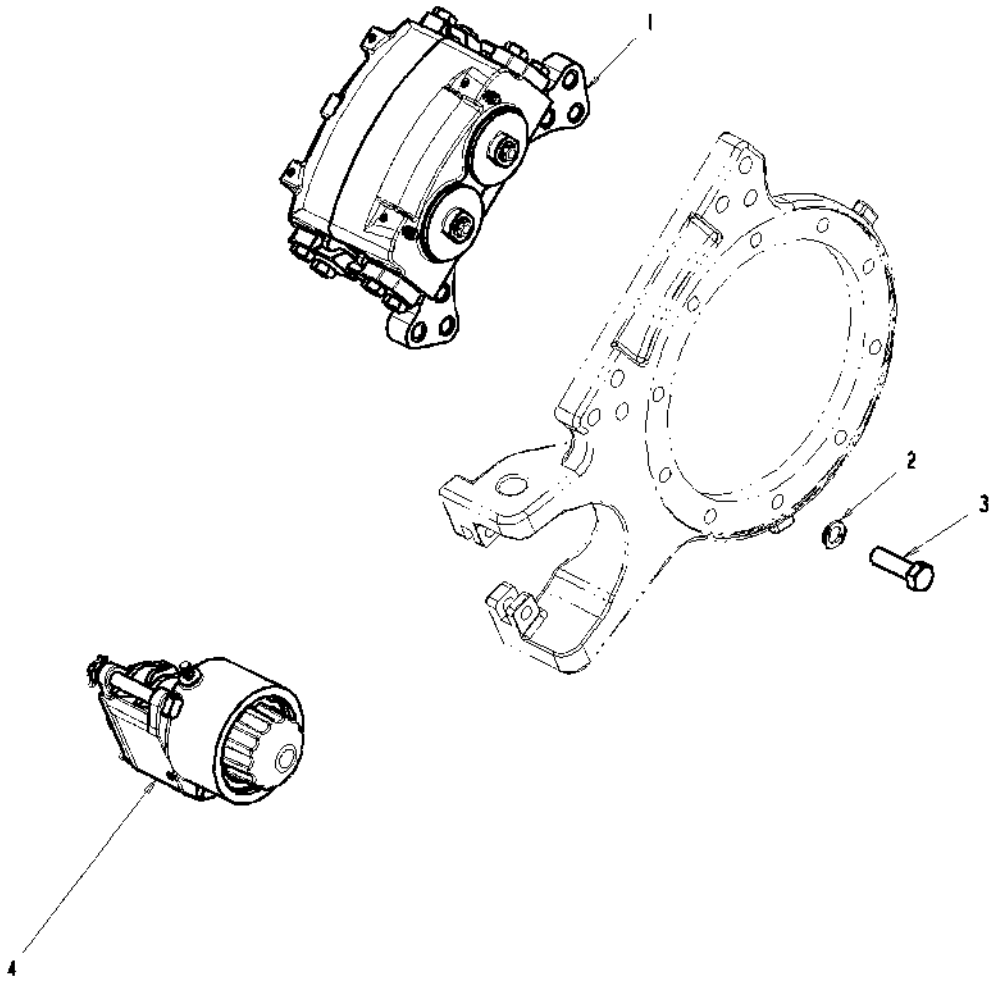

131980.TIF

Copyright © 2008 AGCO Corporation

ITEM	PART #	QTY	DESCRIPTION	COMMENTS
REF	WR131951	4	CAP, BLEED SCREW	
1	WR131947	2	ASSEMBLY, BRAKE DISC	SEE PAGE 4-7
2	AG705968	12	WASHER 0.75X1.25X0.12	
3	WR131948	12	SCREW	
4	WR131949	1	BRAKE, ASM LH	
4	WR131950	1	BRAKE, ASM RH	

Copyright © 2008 AGCO Corporation

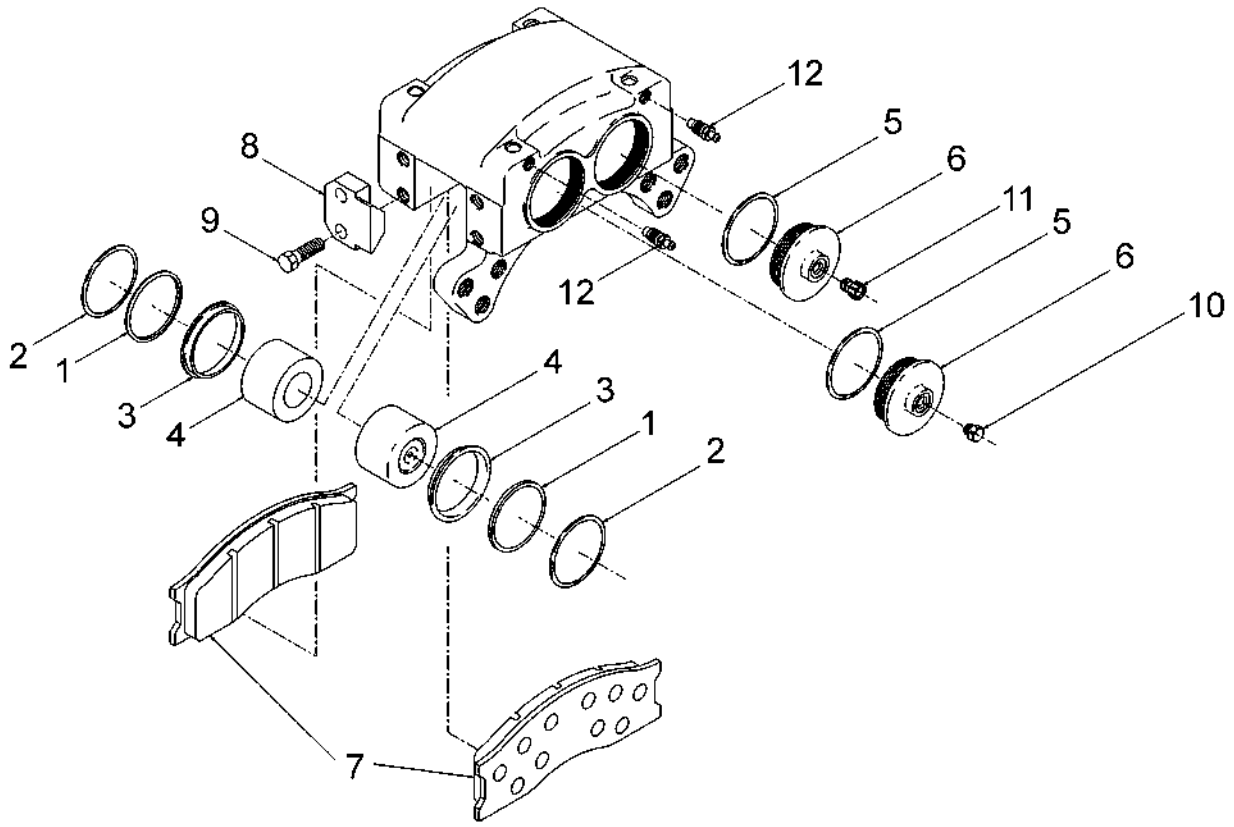

131947.TIF

Copyright © 2008 AGCO Corporation

ASSEMBLY, BRAKE DISC

ITEM	PART #	QTY	DESCRIPTION	COMMENTS
REF	AG330527	1	KIT/OVERHAUL BRAKE	
REF	AG330526	1	SHOE/BRAKE KIT	
REF	WR139407	4	FITTING ASY/BRAKE	
REF	WR139408	1	HOUSING/BRAKE, FIN.	
6	WR139414	2	CAP, FIN.	
8	WR139416	4	PLATE, FIN.	
9	WR139417	8	BOLT/CAPSCREW	
10	WR139418	1	PLUG	
11	WR139419	1	PROTECTOR/SHIPPING	
	FOOTNOTE		ITEMS 1 - 5 and 12 ARE NOT AVAILABLE INDIVIDUALLY BUT ARE INCLUDED IN THE AG330527 OVERHAUL KIT.	
	FOOTNOTE		AG330527 OVERHAUL KIT INCLUDES ITEMS 1 - 5, 7 AND 12.	
	FOOTNOTE		AG330526 SHOE/BRAKE, LINING ASSY	

Copyright © 2008 AGCO Corporation

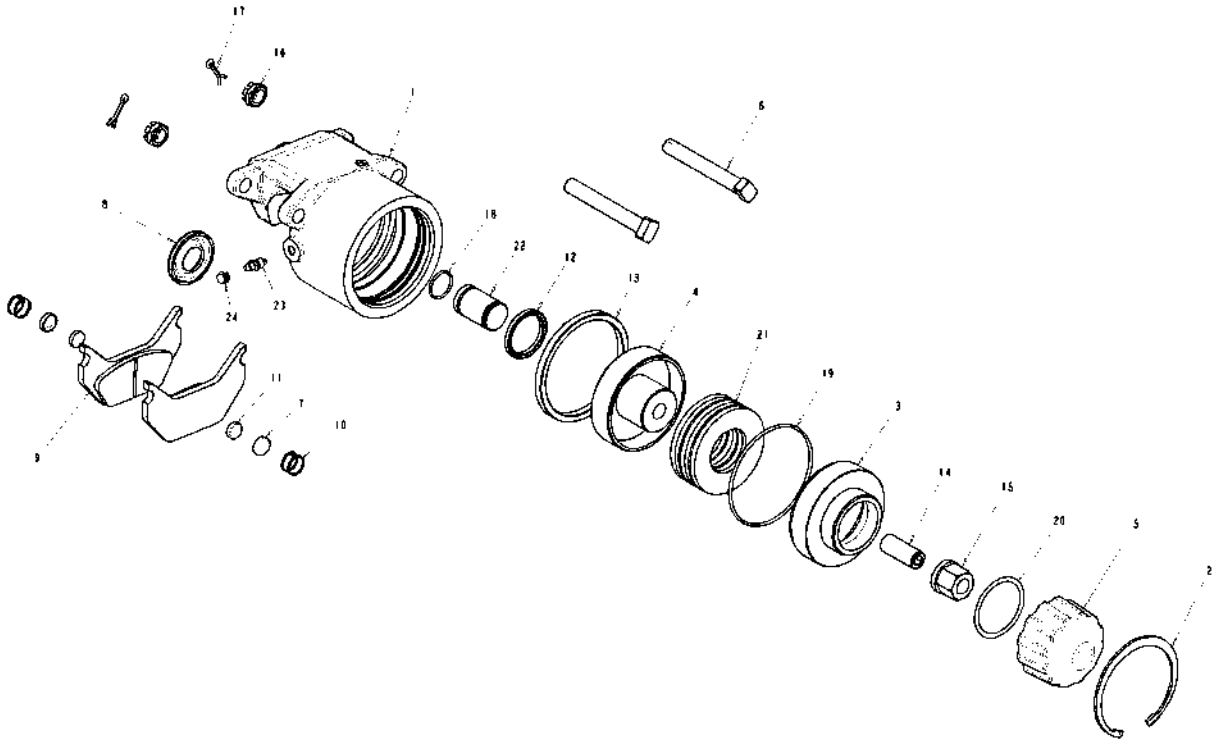

131981.TIF

Copyright © 2008 AGCO Corporation

ITEM	PART #	QTY	DESCRIPTION	COMMENTS
REF	WR131973	-	KIT, SEAL	SEE PAGE 4-10
REF	WR131972	-	KIT, LINING	SEE PAGE 4-9
REF	WR131974	-	KIT, HYD	SEE PAGE 4-11
REF	WR131976	-	KIT, REPAIR	SEE PAGE 4-13
REF	WR131975	-	KIT, HARDWARE	SEE PAGE 4-12
2	WR131952	1	RING, RETAINER	
3	WR131953	1	PAD, THRUST	
4	WR131954	1	PISTON	
5	WR131955	1	SCREW	
6	WR131956	2	PIN, SLIDE	
8	WR131957	2	CAP, DUST	
9	WR131958	1	PAD, BRAKE	
12	WR131959	1	CUP, SEAL	
13	WR131960	1	CUP, SEAL	
14	WR131961	1	SCREW, GRUB	
15	WR131962	1	NUT, LOCK	
16	WR131963	2	NUT, CASTLE	
17	WR131964	2	PIN, COTTER	
18	WR131965	1	O-RING	
19	WR131966	1	O-RING	
20	WR131967	1	O-RING	
21	WR131968	6	SPRING, DISC	
22	WR131969	1	COUPLING, FORCE BOLT	
23	WR131970	1	SCREW, BLEED	
24	WR131971	1	CAP, DUST	
	FOOTNOTE		ITEM 1 CANNOT BE PURCHASED INDIVIDUALLY BUT IS INCLUDED IN THE BRAKE ASSEMBLY.	
	FOOTNOTE		ITEMS 7, 10 AND 11 CANNOT BE PURCHASED INDIVIDUALLY.	

Copyright © 2008 AGCO Corporation

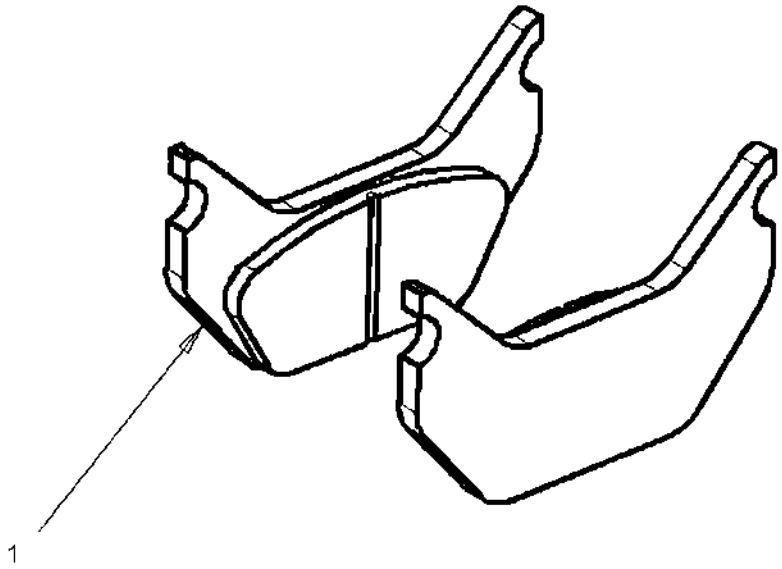

131972.TIF

Copyright © 2008 AGCO Corporation

KIT, LINING

ITEM	PART #	QTY	DESCRIPTION	COMMENTS
1	WR131958	2	PAD, BRAKE	

Copyright © 2008 AGCO Corporation

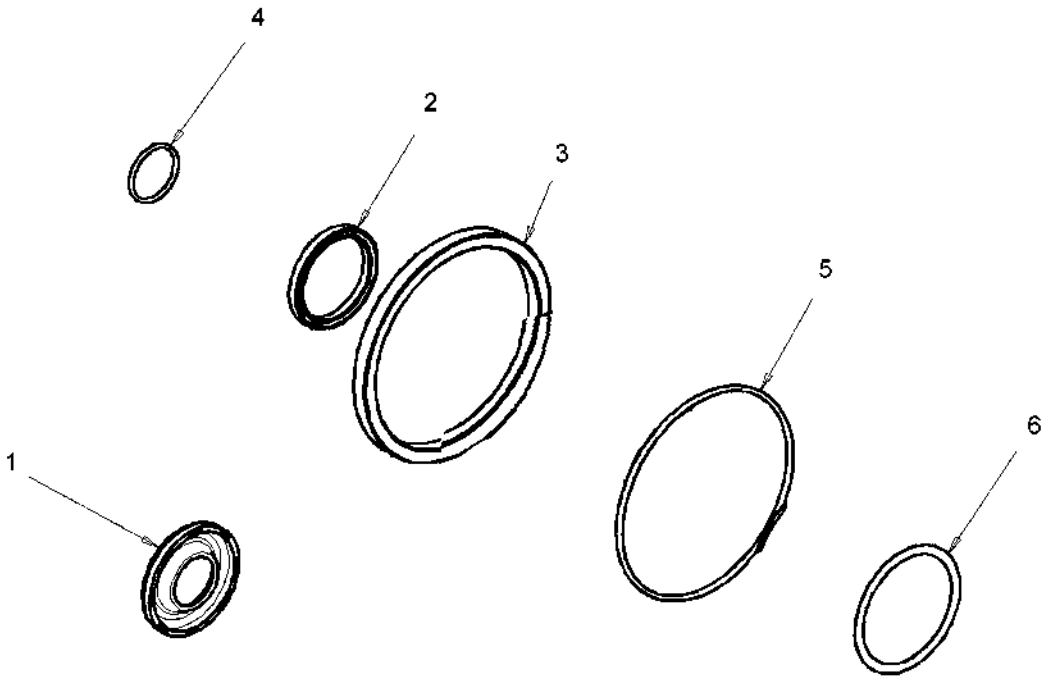

131973.TIF

Copyright © 2008 AGCO Corporation

KIT, SEAL

ITEM	PART #	QTY	DESCRIPTION	COMMENTS
1	WR131957	1	CAP, DUST	
2	WR131959	1	CUP, SEAL	
3	WR131960	1	CUP, SEAL	
4	WR131965	1	O-RING	
5	WR131966	1	O-RING	
6	WR131967	1	O-RING	

Copyright © 2008 AGCO Corporation

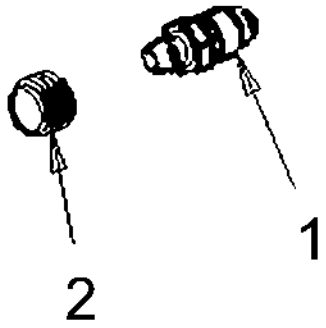

131974.TIF

Copyright © 2008 AGCO Corporation

KIT, HYDRAULIC

ITEM	PART #	QTY	DESCRIPTION	COMMENTS
1	WR131970	1	SCREW, BLEED	
2	WR131971	1	CAP, DUST	

Copyright © 2008 AGCO Corporation

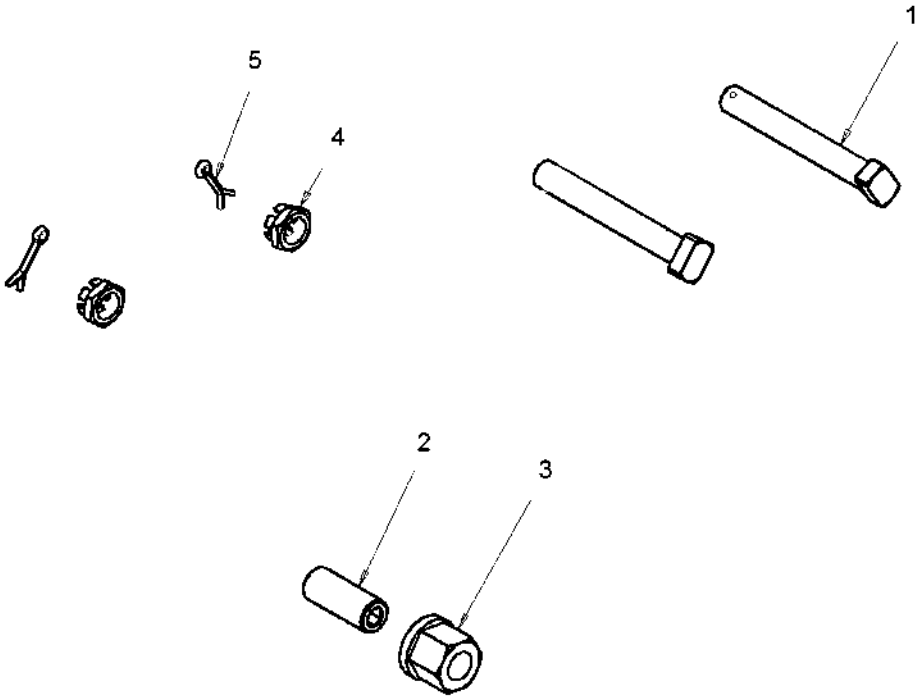

131975.TIF

Copyright © 2008 AGCO Corporation

KIT, HARDWARE

ITEM	PART #	QTY	DESCRIPTION	COMMENTS
1	WR131956	2	PIN, SLIDE	
2	WR131961	1	SCREW, GRUB	
3	WR131962	1	NUT, LOCK	
4	WR131963	2	NUT, CASTLE	
5	WR131964	2	PIN, COTTER	

Copyright © 2008 AGCO Corporation

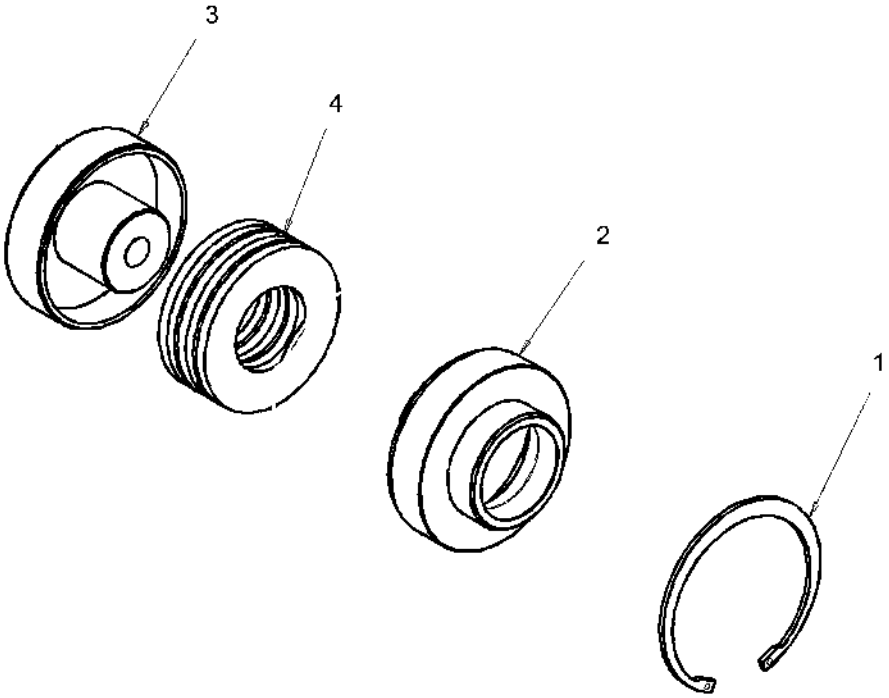

131976.TIF

Copyright © 2008 AGCO Corporation

KIT, REPAIR

ITEM	PART #	QTY	DESCRIPTION	COMMENTS
1	WR131952	1	RING, RETAINER	
2	WR131953	1	PAD, THRUST	
3	WR131954	1	PISTON	
4	WR131968	6	SPRING, DISC	

Copyright © 2008 AGCO Corporation

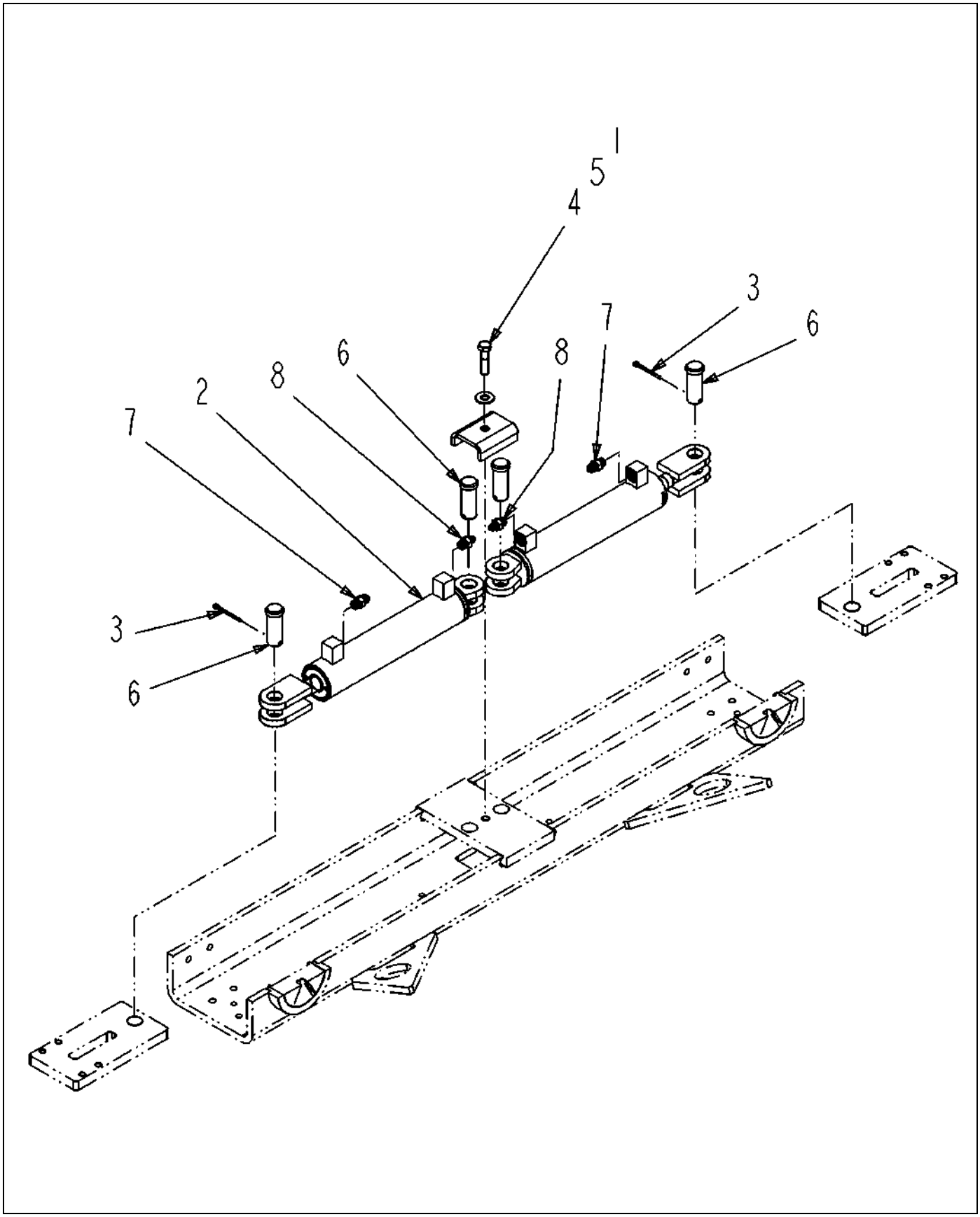

520822D1-01-R549-.TIF

Copyright © 2008 AGCO Corporation

CYLINDER-INSTALL,REAR AXLE,71

ITEM	PART #	QTY	DESCRIPTION	COMMENTS
1	WR127015	1	CLAMP	
2	WR128661	2	CYLINDER-HYD,725 REAR TRK NRW	SEE PAGE 6-5
3	AG515352	2	PIN COTTER 0.18X2.00 SS	
4	AG550132	1	BOLT .50-13NCX 2 G5 ZN HHD	
5	AG550353	1	WASHER 0.50 FL ZN REG TYPE-B	
6	AG554022	4	PIN CLEVIS 1.00X2.50 ZN	
7	AG560693	2	ADAP STR 0.37MO-R X 0.37MJIC	SEE PAGE 6-104
8	AG561744	2	ADAP STR 0.37MO-R X 0.25MJIC	[A]
	FOOTNOTE [A]		AG713166 O-RING	

Copyright © 2008 AGCO Corporation

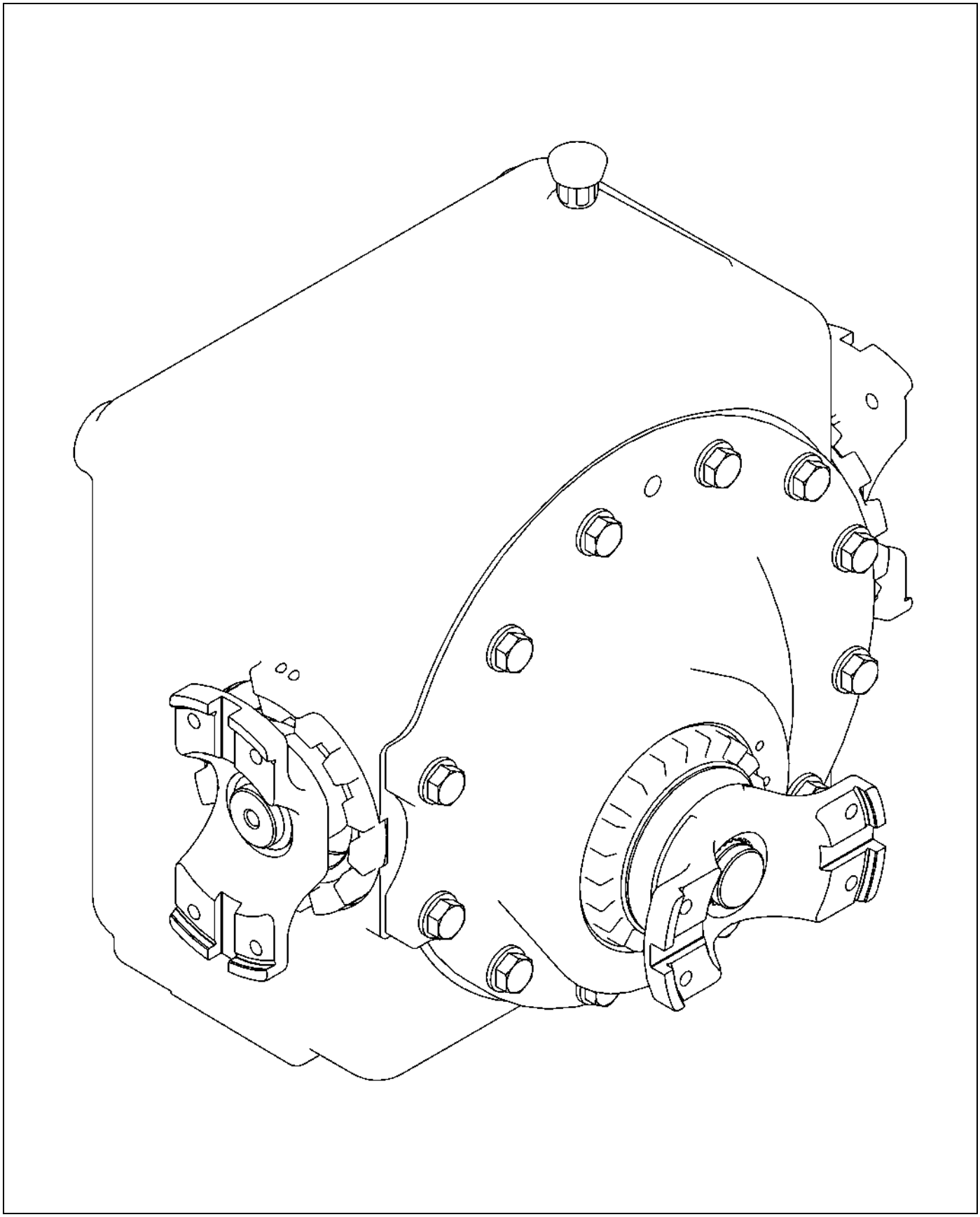

129725-A-L899-.TIF

Copyright © 2008 AGCO Corporation

CARRIER-ASM,2.92:1

ITEM	PART #	QTY	DESCRIPTION	COMMENTS
REF	AG132901	1	ASSEMBLY CARRIER	SEE PAGE 4-17
REF	AG131979	1	ASSEMBLY CENTER AXLE	SEE PAGE 4-16

Copyright © 2008 AGCO Corporation

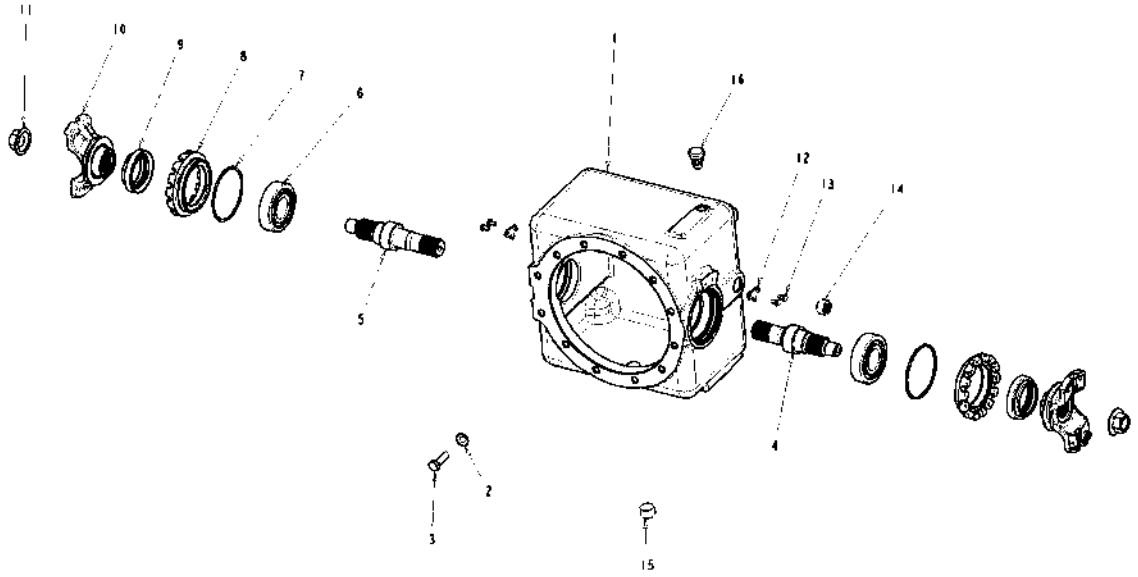

131979.TIF

Copyright © 2008 AGCO Corporation

ASSEMBLY CENTER AXLE

ITEM	PART #	QTY	DESCRIPTION	COMMENTS
1	WR131942	1	HOUSING, ASM	
2	WR131852	12	WASHER, FLAT	
3	WR131943	12	SCREW	
4	WR131944	1	SHAFT, OUTPUT LH	
5	WR131945	1	SHAFT, OUTPUT RH	
6	WR131946	2	BEARING	
7	WR131835	2	O-RING	
8	WR131836	2	CAGE PINION	
9	WR131837	2	SEAL	
10	WR131838	2	YOKE, INPUT	
11	WR131839	2	NUT, LOCK	
12	WR131840	2	LOCK	
13	WR131841	4	SCREW	
14	AG705830	1	PLUG LEVEL	
15	AG707658	1	PLUG PLANETARY OIL LEVER .75	
16	AG132723	1	BREATHER	
	FOOTNOTE		ITEM 1 INCLUDES ITEMS 2,3,14,15 AND 16	

Copyright © 2008 AGCO Corporation

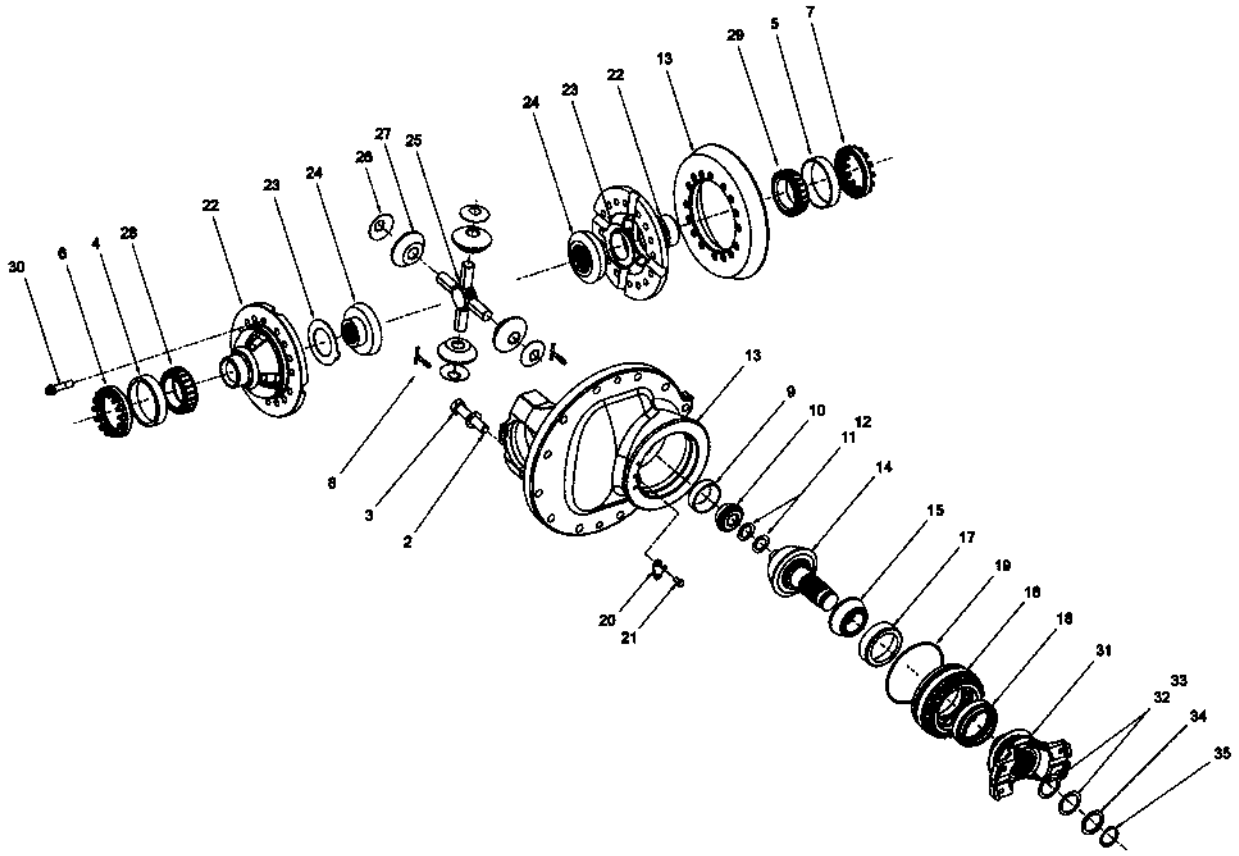

132901.TIF

Copyright © 2008 AGCO Corporation

ASSEMBLY CARRIER

ITEM	PART #	QTY	DESCRIPTION	COMMENTS
1	WR131916	1	ASSEMBLY CARRIER	
2	WR131917	1	WASHER, FLAT	
3	WR131918	1	SCREW	
4	AG714471	2	CONE TAPER BRG	
5	AG714471	2	CONE TAPER BRG	
6	WR131919	2	RING, BRG ADJ	
7	WR131919	2	RING, BRG ADJ	
8	WR131920	2	PIN, COTTER	
9	WR131921	1	CUP, INNER	
10	WR131922	1	BEARING, INNER	
11	WR131923	-	SHIM .030	
12	WR131924	-	SHIM .020	
13	WR132902	1	GEAR, SET	
15	WR131926	1	BEARING	
16	WR131927	1	CAGE, PINION ASM	
17	WR131928	1	CUP, BEARING	
18	WR131837	1	SEAL	
19	WR131929	1	O-RING	
20	WR131977	1	LOCK	
21	WR131841	2	SCREW	
22	WR131930	2	CASE, DIFF FLANGE HALF	
23	522871D1	2	WASHER,THRUST	
24	WR131932	2	GEAR, DIFF SIDE	
25	WR131933	1	SPIDER, DIFF	
26	WR131934	4	WASHER, THRUST	
27	WR131935	4	PINION, DIFF	
28	AG714472	1	CONE TAPER BRG	
30	WR131936	16	SCREW	
31	WR131937	1	YOKE, FLANGE INPUT	
32	WR131938	-	SHIM .020	
33	WR131939	-	SHIM .030	
34	WR131940	1	WASHER, FLAT	
35	WR131941	1	RING, SNAP	
	FOOTNOTE		ITEM 14 CANNOT BE PURCHASED INDIVIDUALLY.	

Copyright © 2008 AGCO Corporation

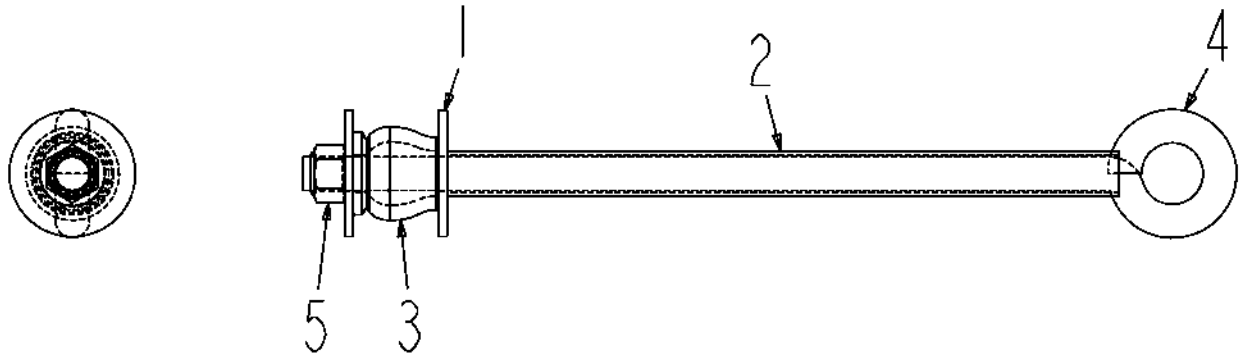

128307-D.TIF

Copyright © 2008 AGCO Corporation

BOLT ASM-EYE

ITEM	PART #	QTY	DESCRIPTION	COMMENTS
1	WR34265	2	WASHER-FLAT,FAB,2.812 OD	
2	WR128309	1	TUBE-EYEBOLT SHEATH	
3	WR134529	1	BUMPER-REBOUND,ELASTOMER	
4	AG522877	1	BOLT-EYE,.75-10X18.00,G5,ZN	
5	AG603864	1	NUT 0.75-10NC HEX ZN REG NY	

Copyright © 2008 AGCO Corporation

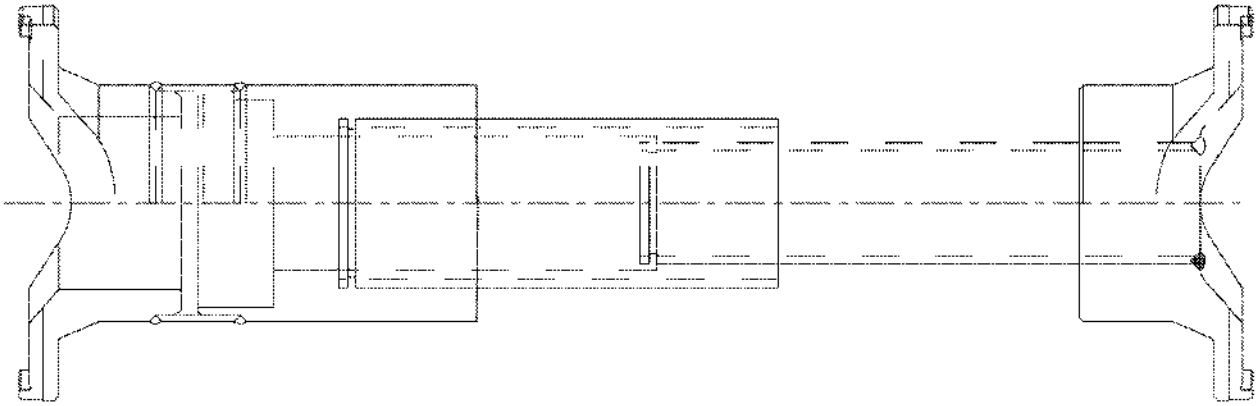

512336D1-01-N519-.TIF

Copyright © 2008 AGCO Corporation

DRIVE SHAFT W/U JOINT CAPS,NRW

ITEM	PART #	QTY	DESCRIPTION	COMMENTS
REF	WR131499	2	KIT,CROSS & BEARING	

Copyright © 2008 AGCO Corporation

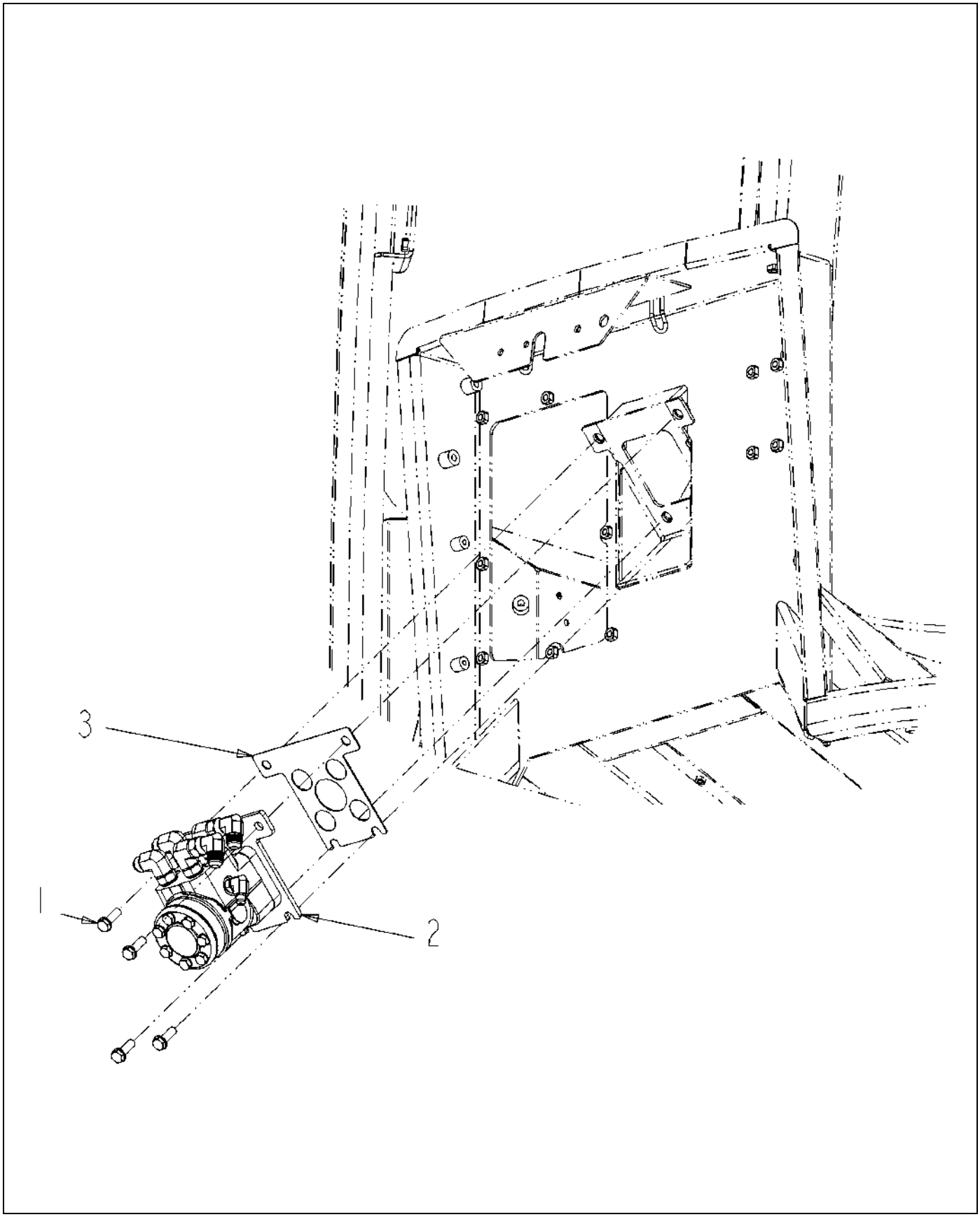

520283D1-01-R518-.TIF

Copyright © 2008 AGCO Corporation

ITEM	PART #	QTY	DESCRIPTION	COMMENTS
1	AG520691	4	BOLT-M10-1.5X30MM,G8.8,FLG,HHD	
2	520274D1	1	STEERING UNIT ASM	SEE PAGE 4-21
3	520284D1	AR	SHIM-MTG,STEERING ORBITROL	

Copyright © 2008 AGCO Corporation

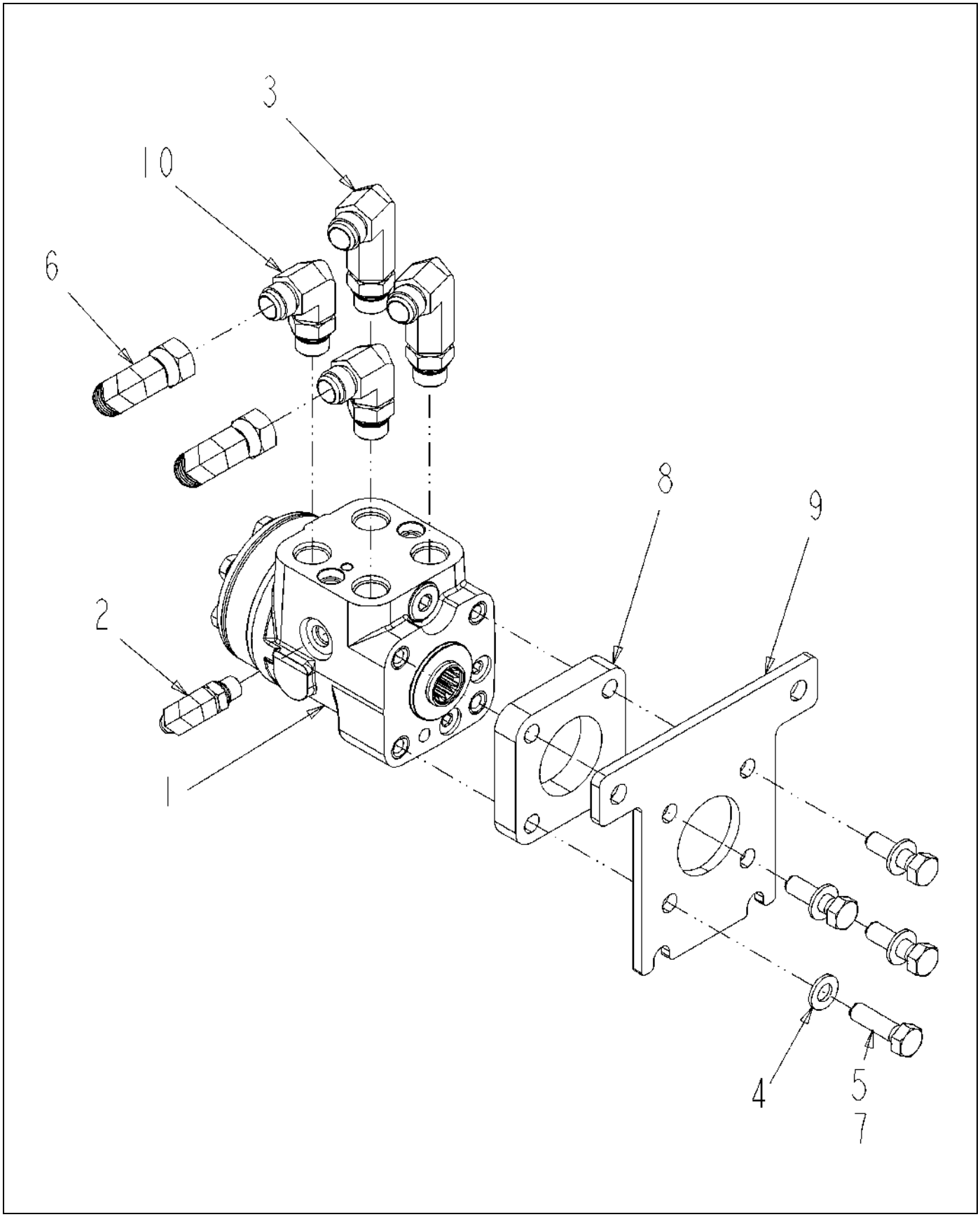

520274D1-02-R560-.TIF

Copyright © 2008 AGCO Corporation

STEERING UNIT ASM

ITEM	PART #	QTY	DESCRIPTION	COMMENTS
1	WR123746	1	STEER UNIT-OSPQ,125/250	
2	WR129175	1	ELBOW-90,-M12MB/-04MJ	
3	WR129176	2	ELBOW-90L,-M18B/-08MJ	
4	WR129759	4	WASHER-FLAT,M10,ZN,HARD	
5	AG512885	AR	LOCTITE ADHESIVE SEALANT BLUE	
6	AG561941	2	ELBOW -8FJS90 X-8MJ	
7	400059X1	4	BOLT-M10X1.5X35 ZNDI HHD 10.9	
8	520272D1	1	SPACER-STEERING CONTROL,0.62 IN	
9	520273D1	1	PLATE-MTG,STEERING ORBITROL	
10	WR41013	2	ELBOW-90,-M18MB/-08MJ	

Copyright © 2008 AGCO Corporation

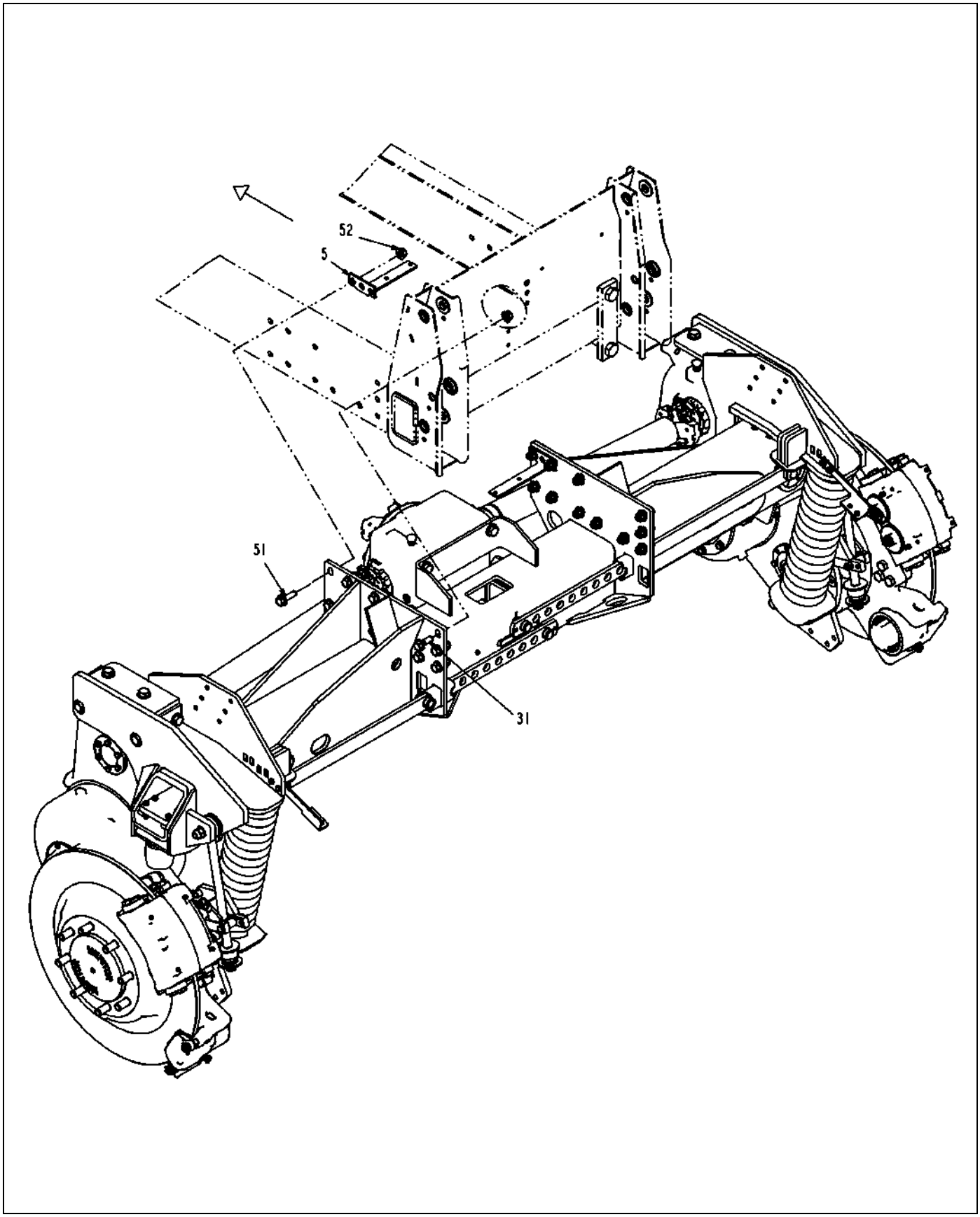

503479D1-05-T369-01.TIF

Copyright © 2008 AGCO Corporation

ITEM	PART #	QTY	DESCRIPTION	COMMENTS
5	AG121826	2	BRACKET-HOSE SUPPORT	
26	AG511099	AR	GREASE-MULTI PURPOSE LITH.	
30	AG516064	AR	ANTI SEIZE	
31	AG517556	18	BOLT 0.62-18 X 1.75 G8 HX FLG	
51	AG609311	4	BOLT 0.62-18 X 2.00 G8 HX FLG	
52	AG609313	22	NUT HX FLG 0.62-18NF	

Copyright © 2008 AGCO Corporation

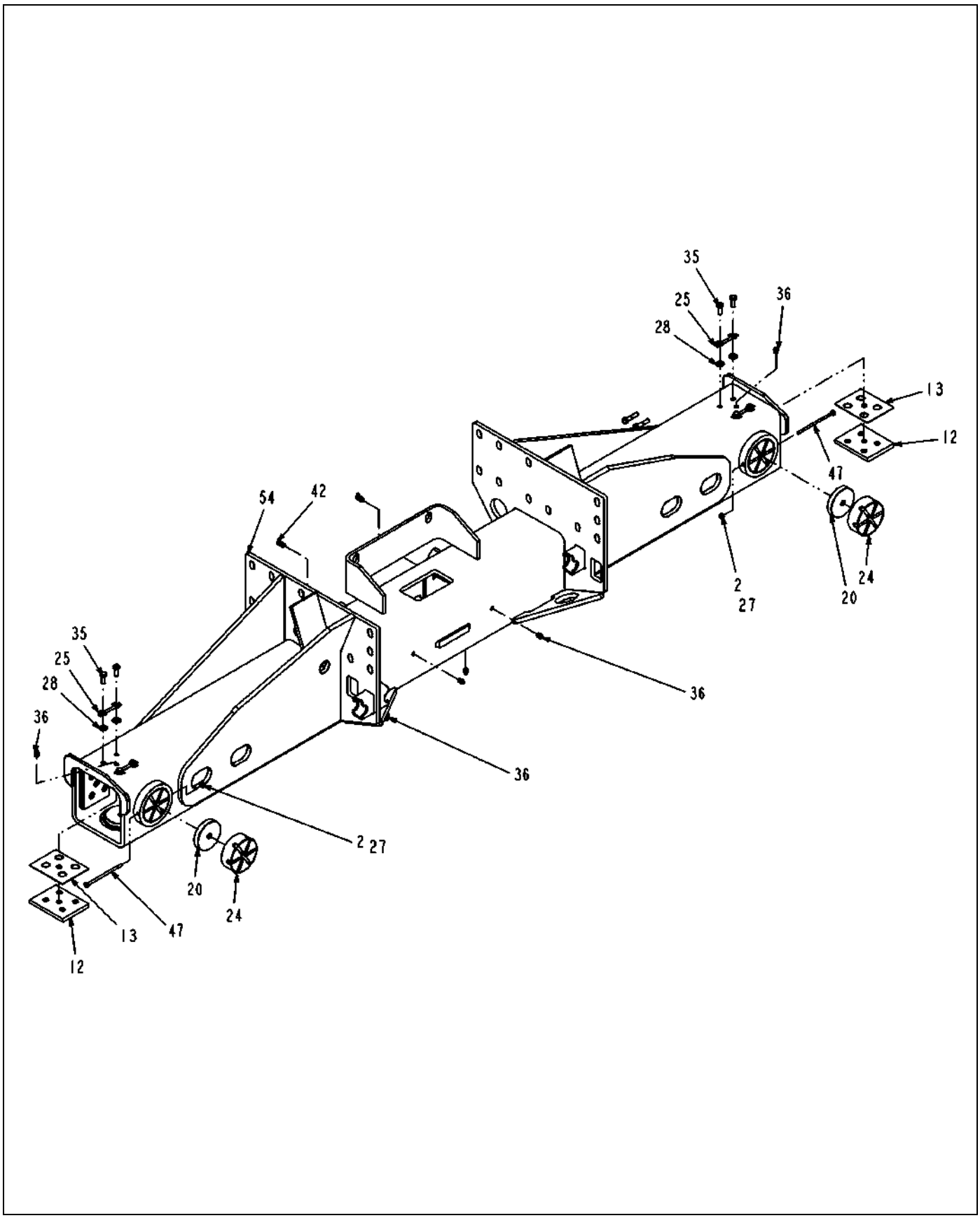

503479D1-05-T369-02.TIF

Copyright © 2008 AGCO Corporation

ITEM	PART #	QTY	DESCRIPTION	COMMENTS
2	WR11494	4	NUT-CENTERLOCK, 1/4	
12	WR125577	4	PAD-WEAR,MID SIZE	
13	WR125580	AR	SHIM-WEAR PAD,UPPER	
20	WR128335	4	PAD-WEAR,SLIDERITE	
24	WR135714	-	ADJUSTER-WEAR PAD,PUCK	[A]
25	AG233052	8	LOCK STRAP	
27	AG512885	AR	LOCTITE ADHESIVE SEALANT BLUE	
28	AG514559	16	WASHER 0.37 FL ZN SAE TYP-A G8	
35	AG519184	16	BOLT 0.37-24NFX 1.00 G5 ZN HHD	
36	AG550280	8	FITTING LUB.12-27NPTFX0.68	
42	AG559083	2	FITTING LUB 90D 0.125 NPTF	
47	AG563104	4	BOLT 0.25-20NCX 5.25 G5 ZN HHD	
54	503480D1	1	WLDMT-AXLE TUBE,REAR,120	
	FOOTNOTE [A]		THE TOOL TO ADJUST THIS PUCK IS WR129714.	

Copyright © 2008 AGCO Corporation

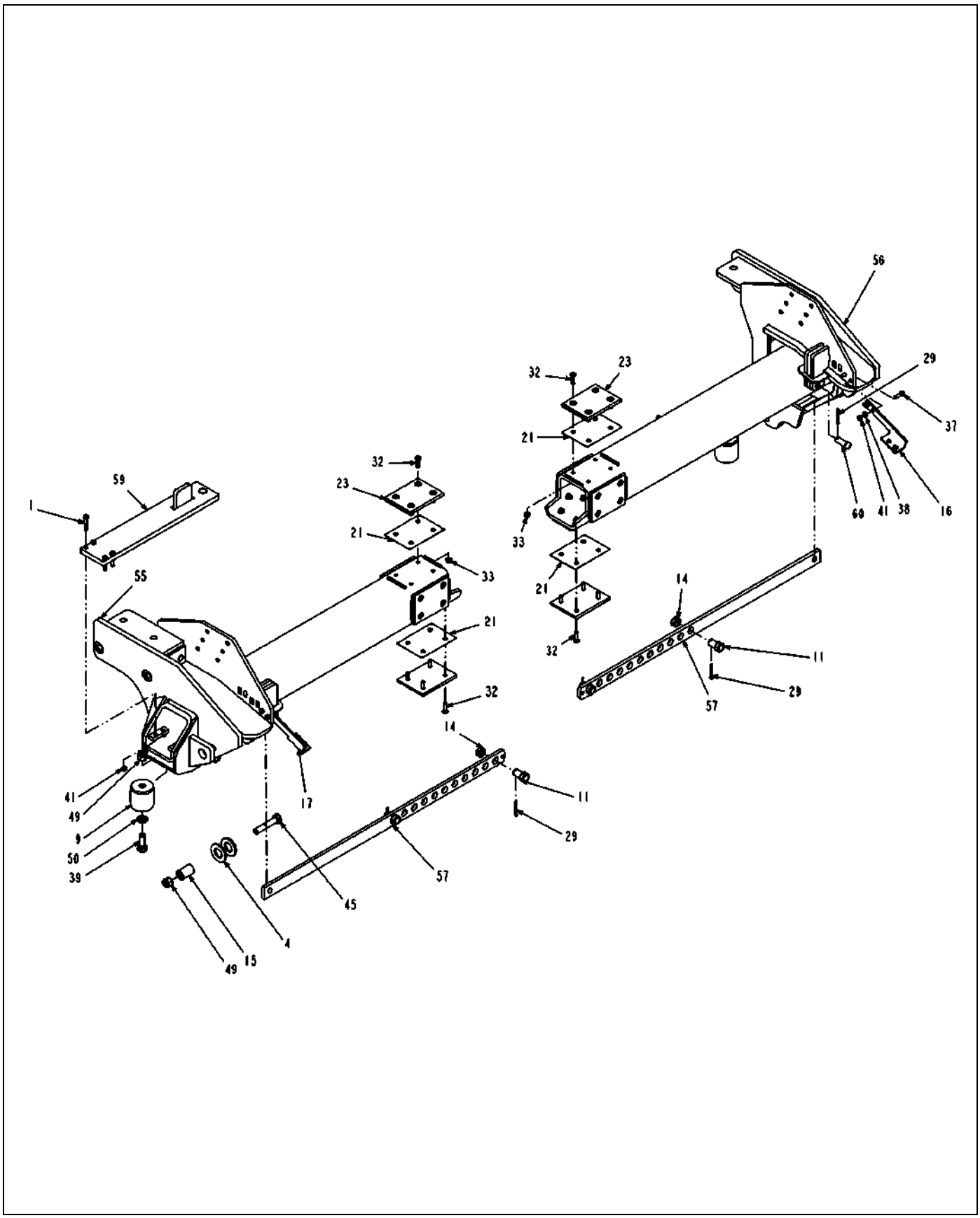

503479D1-05-T369-03.TIF

Copyright © 2008 AGCO Corporation

ITEM	PART #	QTY	DESCRIPTION	COMMENTS
1	WR10185	8	SCREW-CAP HEX 3/8 NC X 2	
4	AG109948	4	SPACER-EYEBOLT HANGER	
9	WR123067	2	BUMPER-LIMIT,SUSPENSION	
11	WR125526	4	PIN-TRACK ADJUST	
14	WR125609	4	BUSHING-TRACK ADJUST	
15	WR125758	2	SPACER-MTG,EYEBOLT HANGER	
16	WR126678	1	BRACKET-BRAKE LINES KEEPER	
17	WR126679	1	BRACKET-BRAKE LINES KEEPER	
21	WR129686	AR	SHIM-WEAR PAD,5.00 IN X6.88 IN	
23	WR134202	8	PAD-WEAR,SLIDERITE,5.00X6.75 IN	
29	AG515352	6	PIN COTTER 0.18X2.00 SS	
32	AG518505	32	SCREW .38-24 NF X 1.50 FHCS	
33	AG518511	32	NUT FLANGE .38-24 UNF	
37	AG550515	4	BOLT 0.37-16NCX 1.25 G5 ZN HHD	
38	AG550981	4	WASHER 0.37 FL ZN NAR TYPE-B	
39	AG554537	2	BOLT 0.75-10NCX 2.00 G5 ZN HHD	
41	AG557676	12	NUT 0.37-16NC HEX ZN C-LK	
45	AG561593	2	BOLT 0.75-10NCX 4.00 G5 ZN HHD	
49	AG603864	4	NUT 0.75-10NC HEX ZN REG NY	
50	AG604203	22	WASHER 0.75 FL ZN SAE TYP-A G8	
55	503483D1	1	WLDMT-6X6,LH,REAR,120	
56	503484D1	1	WLDMT-6X6,RH,REAR,120	
57	503491D1	2	PLATE-TRACKING,REAR,ADJUST	
59	524603D1	2	WLDMT-TRACK CYL,ANCHOR,120 IN	
60	WR55974	2	PIN-CLEVIS	

Copyright © 2008 AGCO Corporation

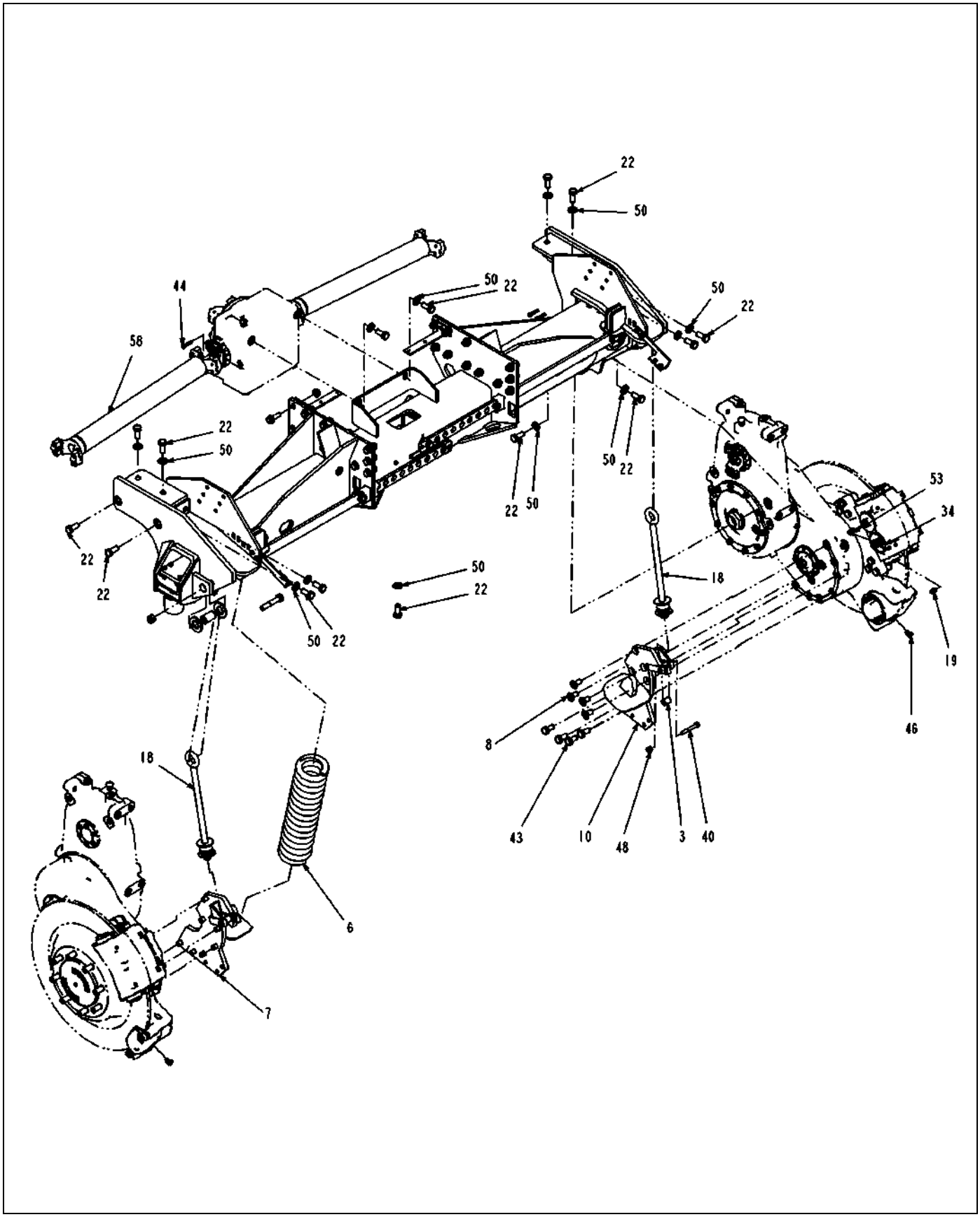

503479D1-05-T369-04.TIF

Copyright © 2008 AGCO Corporation

ITEM	PART #	QTY	DESCRIPTION	COMMENTS
3	AG109902	2	SPACER-MTG,EYEBOLT STOP	
6	WR122909	2	SPRING-REAR,HEAVY	
7	WR122915	1	BRACKET-WDMT,SPRING PVT,LH	
8	WR123065	8	FSHCS-.75X1.50 ALLOY	
10	WR124043	1	BRACKET-WDMT,SPRING RH	
18	WR128307	2	BOLT ASM-EYE	SEE PAGE 4-18
19	WR128326	2	ADAPTER,-4JICX-5MOR,STR	
22	WR129814	24	BOLT .75-10NCX 1.75 G8 ZN HHD	
34	AG519113	2	TUBE END NIPPLE -4	
40	AG556149	2	BOLT 0.50-13NCX 3.50 G5 ZN HHD	
43	AG559938	8	BOLT 0.75-10NCX 1.50 G5 ZN HHD	
44	AG561119	16	BOLT 0.37-24NFX 1.75 G8 ZN HHD	
46	AG561677	2	ELBOW 90D 0.25MO-R X 0.25MJIC	SEE PAGE 6-106
48	AG601152	2	NUT 0.50-13NC HEX ZN REG NY	
50	AG604203	22	WASHER 0.75 FL ZN SAE TYP-A G8	
53	401704X1	2	ELBOW 90D -4MJX-5MOR	
58	503492D1	2	DRIVESHAFT-W/CAPS,120 IN	SEE PAGE 4-26

Copyright © 2008 AGCO Corporation

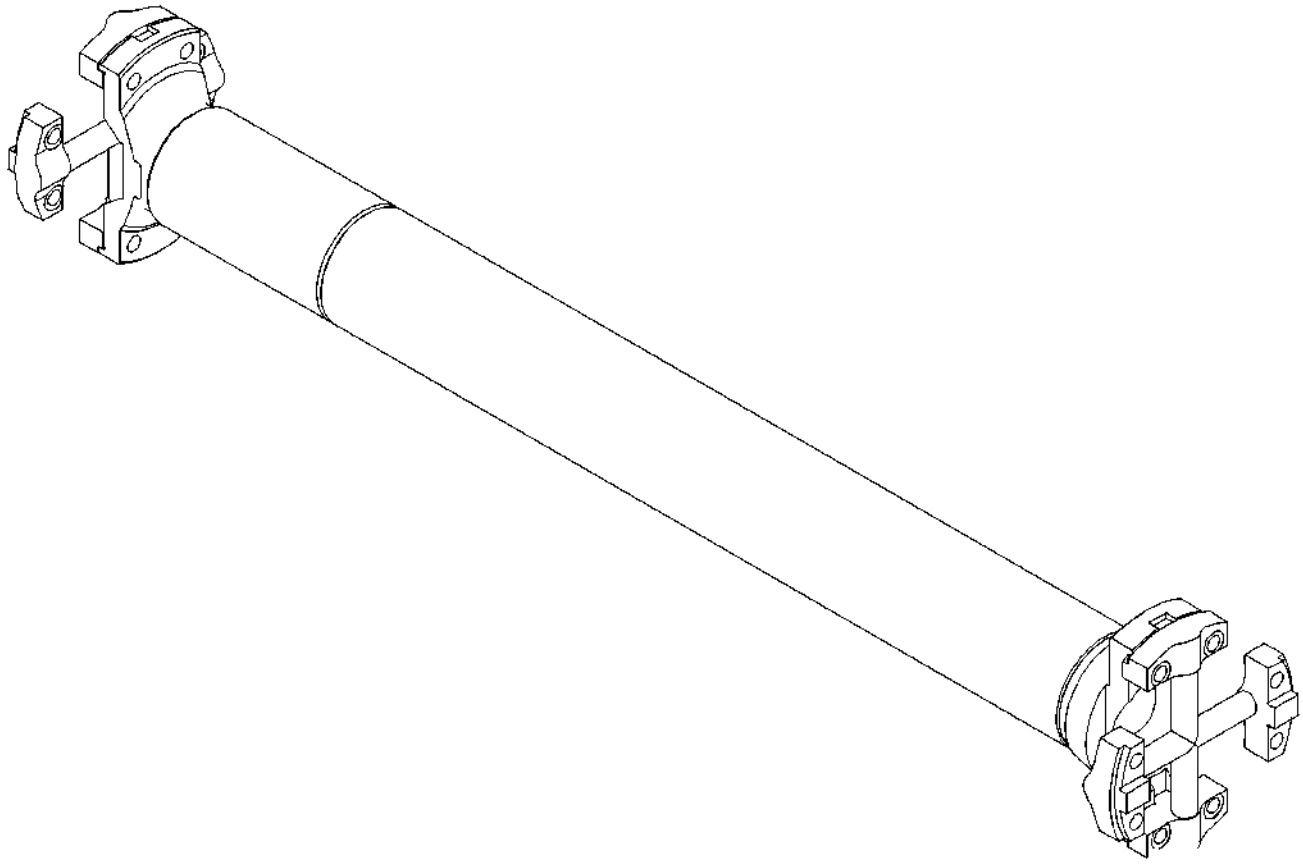

503492D1-01-R217-.TIF

Copyright © 2008 AGCO Corporation

DRIVESHAFT-W/CAPS,120-160 AXLE

ITEM	PART #	QTY	DESCRIPTION	COMMENTS
REF	WR131499	2	KIT,CROSS & BEARING	

Copyright © 2008 AGCO Corporation

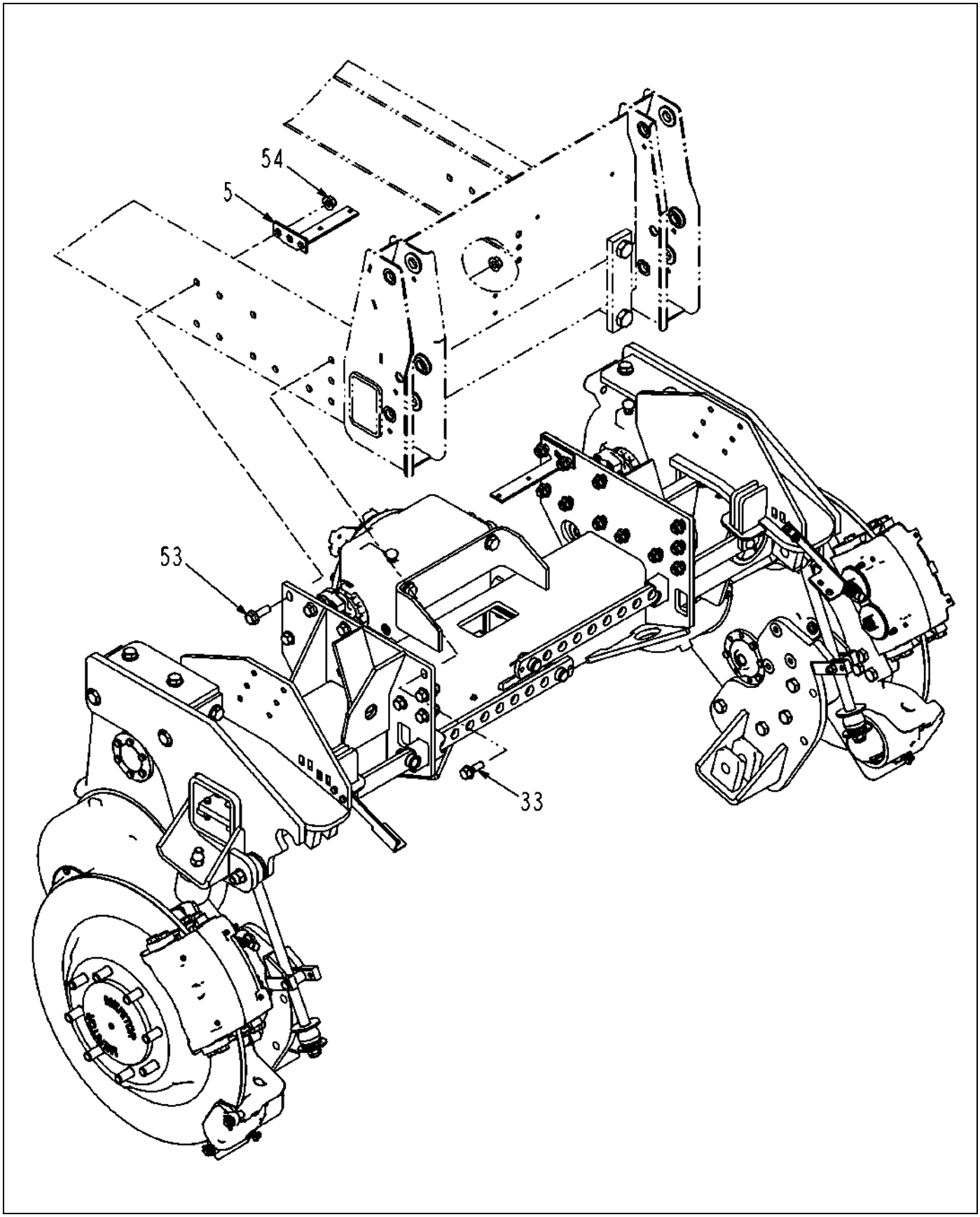

514346D1-03-T369-01.TIF

Copyright © 2008 AGCO Corporation

ITEM	PART #	QTY	DESCRIPTION	COMMENTS
5	AG121826	2	BRACKET-HOSE SUPPORT	
26	WR135714	-	ADJUSTER-WEAR PAD,PUCK	[A]
28	AG511099	AR	GREASE-MULTI PURPOSE LITH.	
32	AG516064	AR	ANTI SEIZE	
33	AG517556	16	BOLT 0.62-18 X 1.75 G8 HX FLG	
53	AG609311	4	BOLT 0.62-18 X 2.00 G8 HX FLG	
54	AG609313	22	NUT HX FLG 0.62-18NF	
	FOOTNOTE [A]		THE TOOL TO ADJUST THIS PUCK IS WR129714.	

Copyright © 2008 AGCO Corporation

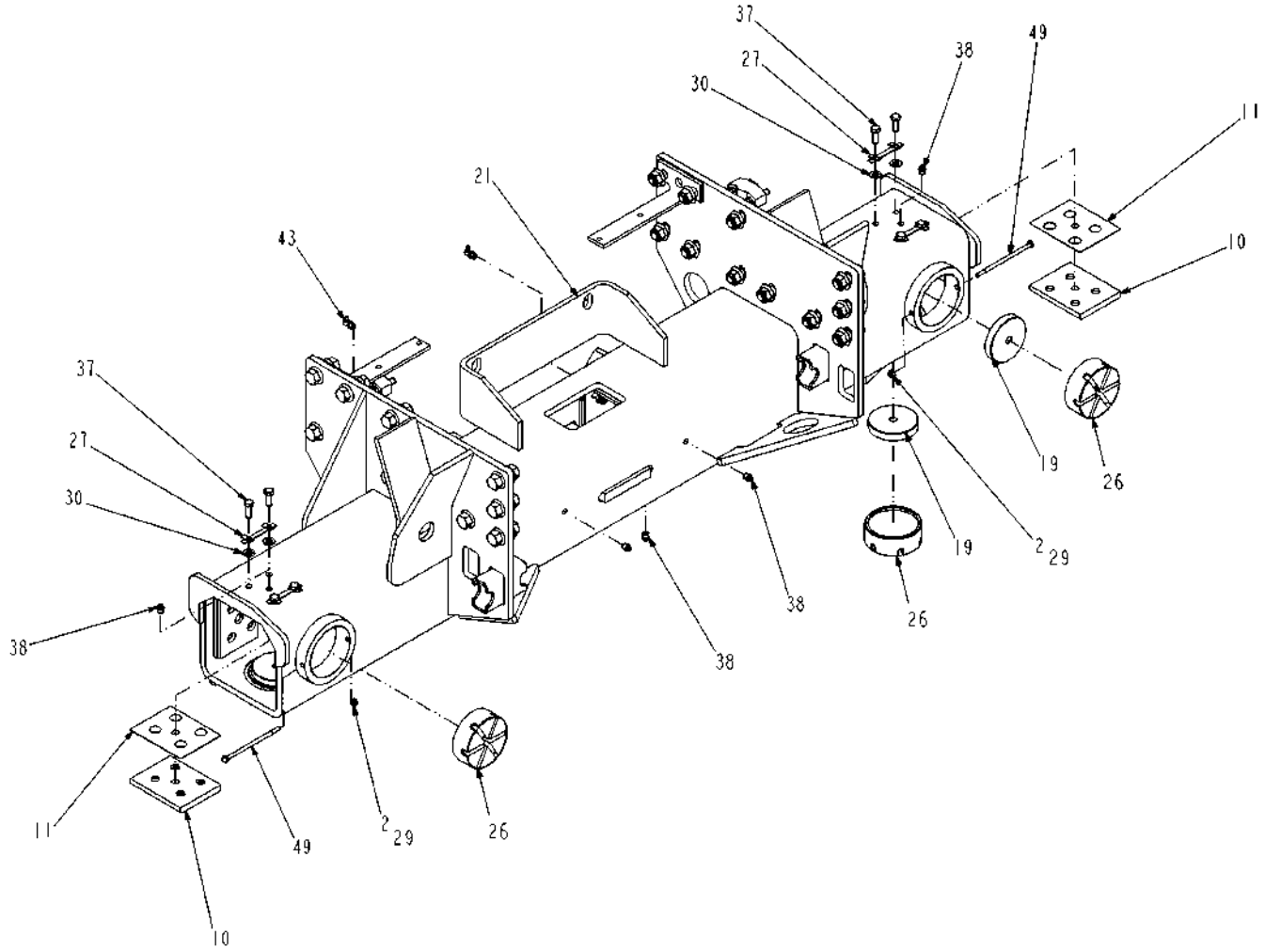

514346D1-03-T369-02.TIF

Copyright © 2008 AGCO Corporation

AXLE-REAR,HYD,88 IN

ITEM	PART #	QTY	DESCRIPTION	COMMENTS
2	WR11494	2	NUT-CENTERLOCK, 1/4	
10	WR125577	4	PAD-WEAR,MID SIZE	
11	WR125580	AR	SHIM-WEAR PAD,UPPER	
19	WR128335	4	PAD-WEAR,SLIDERITE	
21	WR129662	1	AXLE WLDMT-REAR,WIDE TRACK	
27	AG233052	8	LOCK STRAP	
29	AG512885	AR	LOCTITE ADHESIVE SEALANT BLUE	
30	AG514559	16	WASHER 0.37 FL ZN SAE TYP-A G8	
37	AG519184	16	BOLT 0.37-24NFX 1.00 G5 ZN HHD	
38	AG550280	8	FITTING LUB.12-27NPTFX0.68	
43	AG559083	2	FITTING LUB 90D 0.125 NPTF	
49	AG563104	4	BOLT 0.25-20NCX 5.25 G5 ZN HHD	

Copyright © 2008 AGCO Corporation

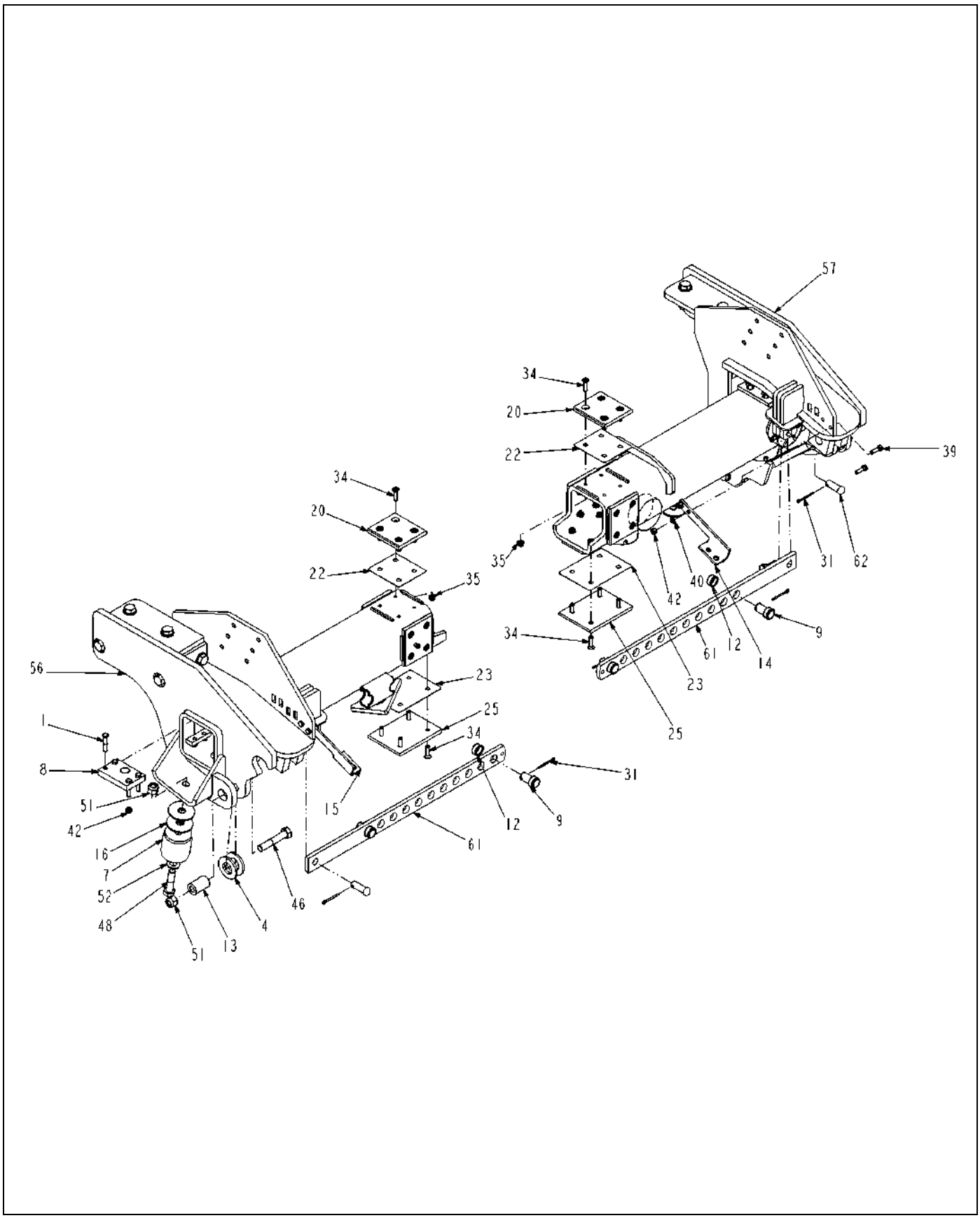

514346D1-03-T369-03.TIF

Copyright © 2008 AGCO Corporation

AXLE-REAR,HYD,88 IN

ITEM	PART #	QTY	DESCRIPTION	COMMENTS
1	WR10185	8	SCREW-CAP HEX 3/8 NC X 2	
4	AG109948	4	SPACER-EYEBOLT HANGER	
7	WR123067	2	BUMPER-LIMIT,SUSPENSION	
8	WR125503	2	BAR-TRACK CYL ANCHOR	
9	WR125526	4	PIN-TRACK ADJUST	
12	WR125609	4	BUSHING-TRACK ADJUST	
13	WR125758	2	SPACER-MTG,EYEBOLT HANGER	
14	WR126678	1	BRACKET-BRAKE LINES KEEPER	
15	WR126679	1	BRACKET-BRAKE LINES KEEPER	
16	AG127152	4	WASHER-FLAT,3.0ODX.80IDX.19T	
20	WR129646	6	PAD-WEAR,6X6,REAR,SLIDERITE	
22	WR129685	AR	SHIM-WEAR PAD,4.50 IN X5.00 IN	
23	WR129686	AR	SHIM-WEAR PAD,5.00 IN X6.88 IN	
25	WR134202	2	PAD-WEAR,SLIDERITE,5.00X6.75 IN	
31	AG515352	6	PIN COTTER 0.18X2.00 SS	
34	AG518505	32	SCREW .38-24 NF X 1.50 FHCS	
35	AG518511	32	NUT FLANGE .38-24 UNF	
39	AG550515	4	BOLT 0.37-16NCX 1.25 G5 ZN HHD	
40	AG550981	4	WASHER 0.37 FL ZN NAR TYPE-B	
42	AG557676	12	NUT 0.37-16NC HEX ZN C-LK	
46	AG561593	2	BOLT 0.75-10NCX 4.00 G5 ZN HHD	
48	AG562688	2	BOLT 0.75-10NCX 3.00 G8 ZN HHD	
51	AG603864	4	NUT 0.75-10NC HEX ZN REG NY	
52	AG604203	22	WASHER 0.75 FL ZN SAE TYP-A G8	
56	511555D1	1	WLDMT-SLIDE,HYD,88 IN ,LH	
57	511560D1	1	WLDMT-SLIDE,HYD,88 IN ,RH	
61	518498D1	2	PLATE-BAR,TRACK,88 IN	
62	WR55974	2	PIN-CLEVIS	

Copyright © 2008 AGCO Corporation

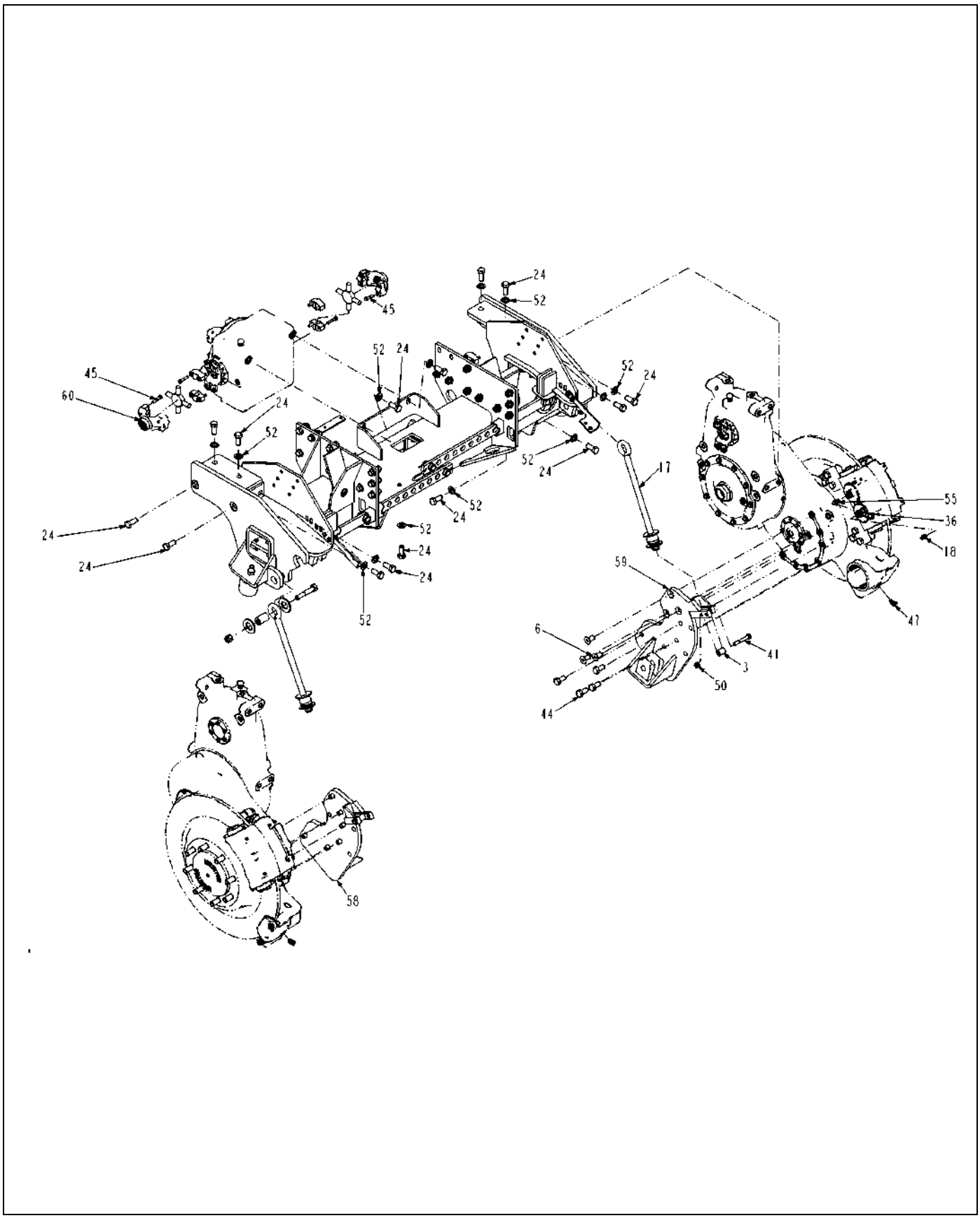

514346D1-03-T369-04.TIF

Copyright © 2008 AGCO Corporation

AXLE-REAR,HYD,88 IN

ITEM	PART #	QTY	DESCRIPTION	COMMENTS
3	AG109902	2	SPACER-MTG,EYEBOLT STOP	
6	WR123065	6	FSHCS-.75X1.50 ALLOY	
17	WR128307	2	BOLT ASM-EYE	SEE PAGE 4-18
18	WR128326	2	ADAPTER,-4JICX-5MOR,STR	
24	WR129814	24	BOLT .75-10NCX 1.75 G8 ZN HHD	
36	AG519113	2	TUBE END NIPPLE -4	
41	AG556149	2	BOLT 0.50-13NCX 3.50 G5 ZN HHD	
44	AG559938	8	BOLT 0.75-10NCX 1.50 G5 ZN HHD	
45	AG561119	32	BOLT 0.37-24NFX 1.75 G8 ZN HHD	
47	AG561677	2	ELBOW 90D 0.25MO-R X 0.25MJIC	SEE PAGE 6-106
50	AG601152	2	NUT 0.50-13NC HEX ZN REG NY	
52	AG604203	22	WASHER 0.75 FL ZN SAE TYP-A G8	
55	401704X1	2	ELBOW 90D -4MJX-5MOR	
58	511769D1	1	WLDMT-CYLINDER MNT,LH	
59	511770D1	1	WLDMT-CYLINDER MNT,RH	
60	512337D1	2	DRIVESHAFT-W/CAPS,88 IN -128 IN	SEE PAGE 4-40

Copyright © 2008 AGCO Corporation

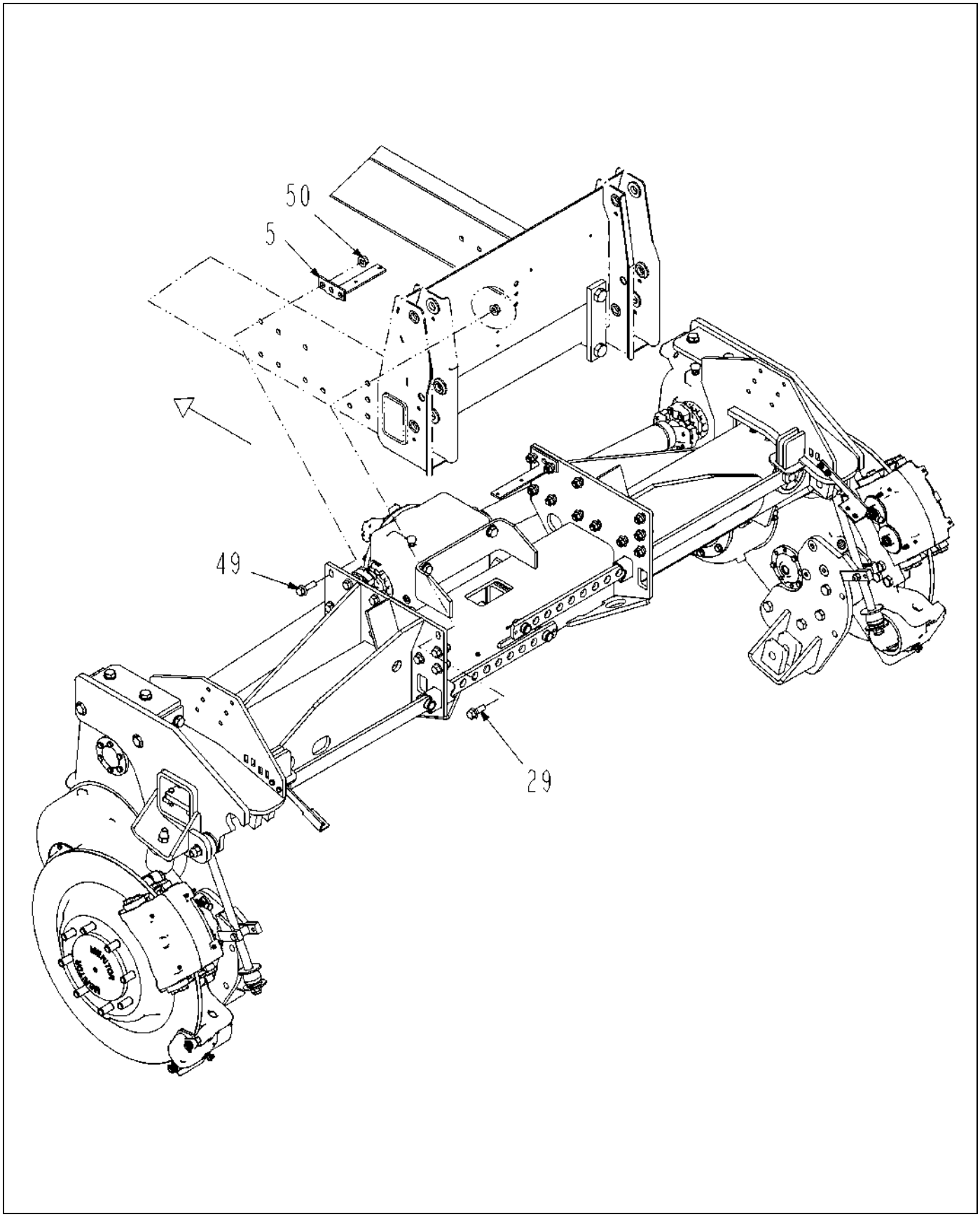

515231D1-03-T369-01.TIF

Copyright © 2008 AGCO Corporation

AXLE-REAR,120 IN -160 IN ,HYDRAULIC

ITEM	PART #	QTY	DESCRIPTION	COMMENTS
5	AG121826	2	BRACKET-HOSE SUPPORT	
24	AG511099	AR	GREASE-MULTI PURPOSE LITH.	
25	AG512885	AR	LOCTITE ADHESIVE SEALANT BLUE	
28	AG516064	AR	ANTI SEIZE	
29	AG517556	18	BOLT 0.62-18 X 1.75 G8 HX FLG	
49	AG609311	4	BOLT 0.62-18 X 2.00 G8 HX FLG	
50	AG609313	22	NUT HX FLG 0.62-18NF	

Copyright © 2008 AGCO Corporation

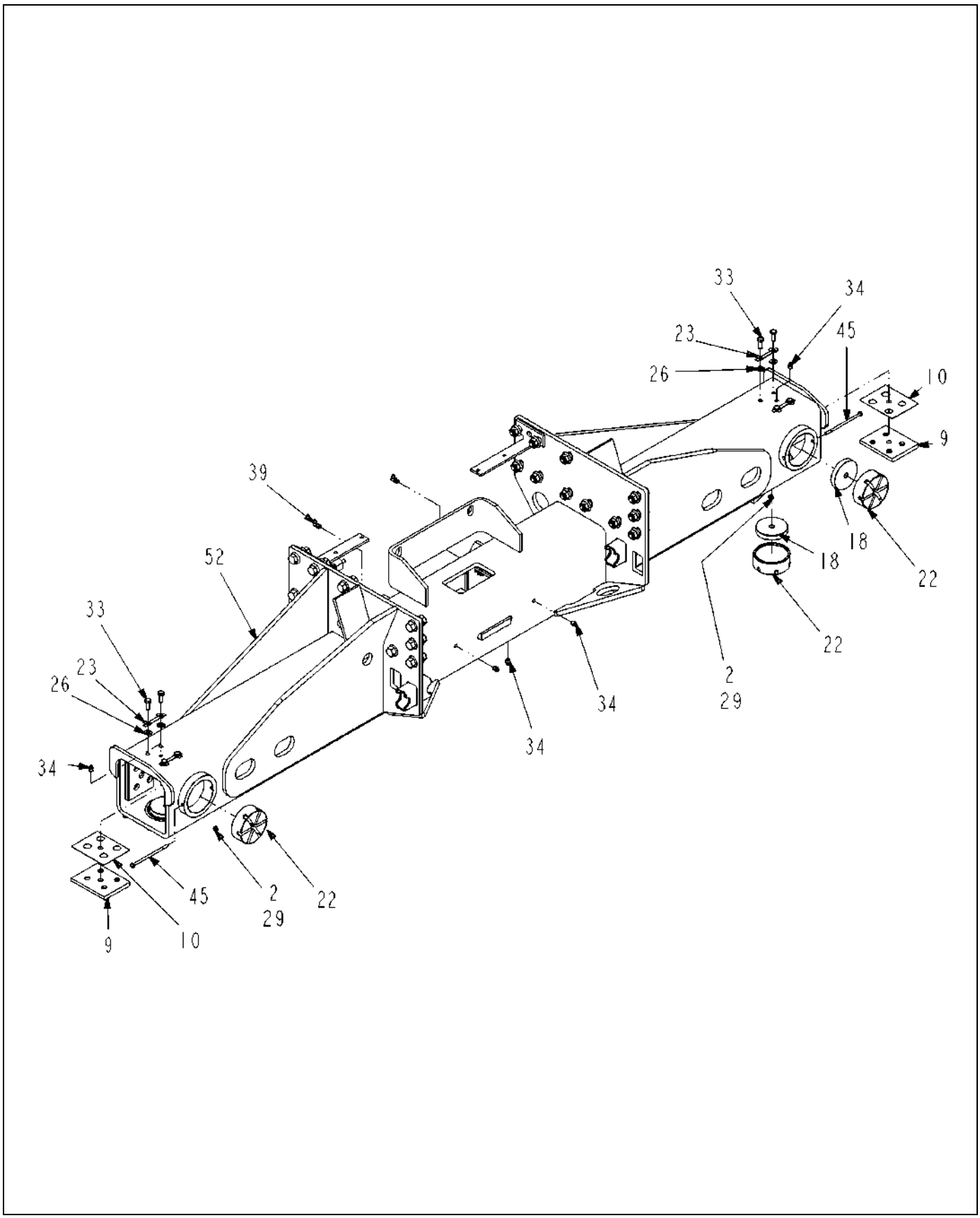

515231D1-03-T369-02.TIF

Copyright © 2008 AGCO Corporation

AXLE-REAR,120 IN -160 IN ,HYDRAULIC

ITEM	PART #	QTY	DESCRIPTION	COMMENTS
2	WR11494	4	NUT-CENTERLOCK, 1/4	
9	WR125577	4	PAD-WEAR,MID SIZE	
10	WR125580	AR	SHIM-WEAR PAD,UPPER	
18	WR128335	4	PAD-WEAR,SLIDERITE	
22	WR135714	-	ADJUSTER-WEAR PAD,PUCK	[A]
23	AG233052	8	LOCK STRAP	
26	AG514559	16	WASHER 0.37 FL ZN SAE TYP-A G8	
29	AG517556	18	BOLT 0.62-18 X 1.75 G8 HX FLG	
33	AG519184	16	BOLT 0.37-24NFX 1.00 G5 ZN HHD	
34	AG550280	8	FITTING LUB.12-27NPTFX0.68	
39	AG559083	2	FITTING LUB 90D 0.125 NPTF	
45	AG563104	4	BOLT 0.25-20NCX 5.25 G5 ZN HHD	
52	503480D1	1	WLDMT-AXLE TUBE,REAR,120	
	FOOTNOTE [A]		THE TOOL TO ADJUST THIS PUCK IS WR129714.	

Copyright © 2008 AGCO Corporation

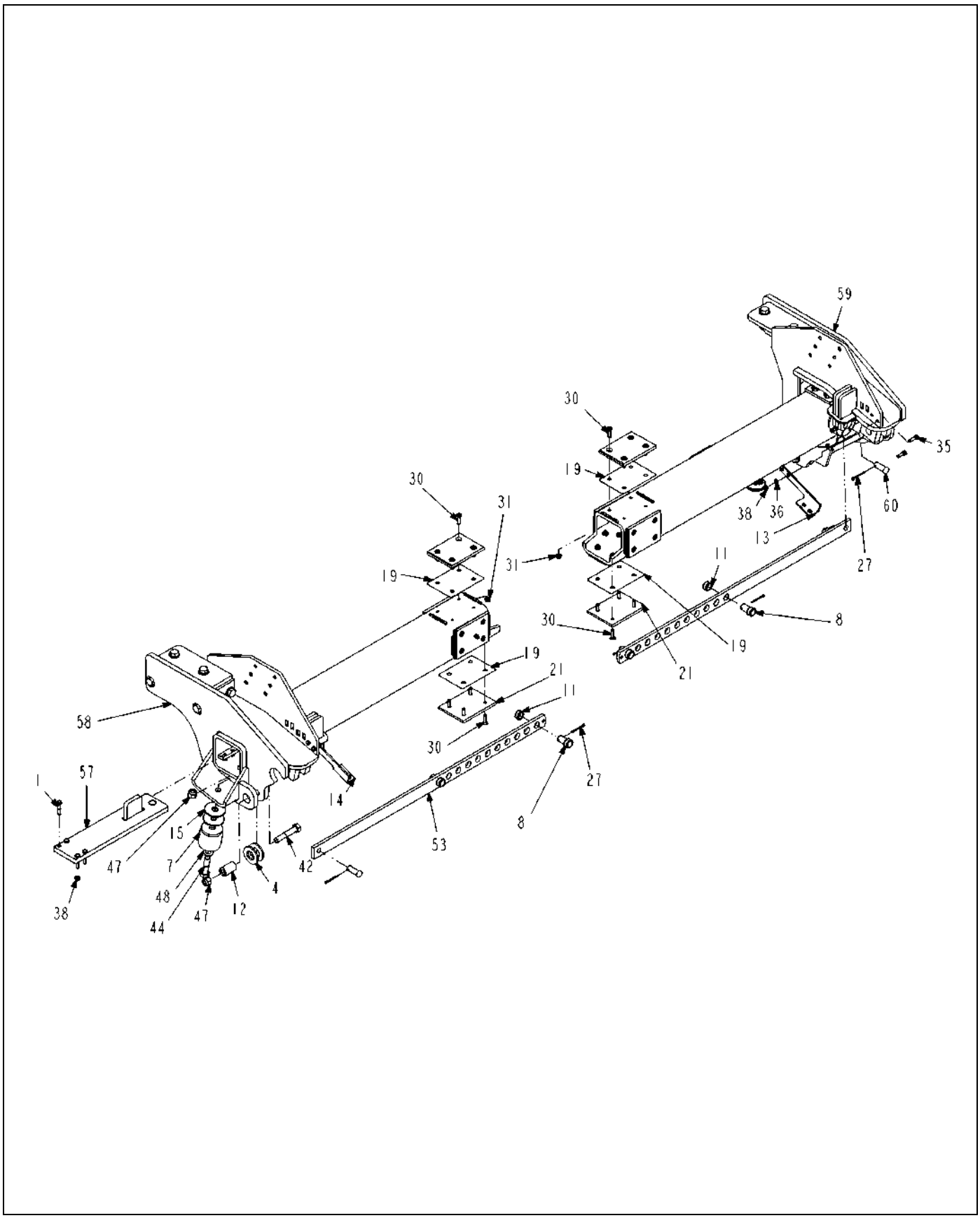

515231D1-03-T369-03.TIF

Copyright © 2008 AGCO Corporation

AXLE-REAR,120 IN -160 IN ,HYDRAULIC

ITEM	PART #	QTY	DESCRIPTION	COMMENTS
1	WR10185	8	SCREW-CAP HEX 3/8 NC X 2	
4	AG109948	4	SPACER-EYEBOLT HANGER	
7	WR123067	2	BUMPER-LIMIT,SUSPENSION	
8	WR125526	4	PIN-TRACK ADJUST	
11	WR125609	4	BUSHING-TRACK ADJUST	
12	WR125758	2	SPACER-MTG,EYEBOLT HANGER	
13	WR126678	1	BRACKET-BRAKE LINES KEEPER	
14	WR126679	1	BRACKET-BRAKE LINES KEEPER	
15	AG127152	4	WASHER-FLAT,3.0ODX.80IDX.19T	
19	WR129686	AR	SHIM-WEAR PAD,5.00 IN X6.88 IN	
21	WR134202	8	PAD-WEAR,SLIDERITE,5.00X6.75 IN	
27	AG515352	6	PIN COTTER 0.18X2.00 SS	
30	AG518505	32	SCREW .38-24 NF X 1.50 FHCS	
31	AG518511	32	NUT FLANGE .38-24 UNF	
35	AG550515	4	BOLT 0.37-16NCX 1.25 G5 ZN HHD	
36	AG550981	4	WASHER 0.37 FL ZN NAR TYPE-B	
38	AG557676	12	NUT 0.37-16NC HEX ZN C-LK	
42	AG561593	2	BOLT 0.75-10NCX 4.00 G5 ZN HHD	
44	AG562688	2	BOLT 0.75-10NCX 3.00 G8 ZN HHD	
47	AG603864	4	NUT 0.75-10NC HEX ZN REG NY	
48	AG604203	22	WASHER 0.75 FL ZN SAE TYP-A G8	
53	503491D1	2	PLATE-TRACKING,REAR,ADJUST	
57	512357D1	2	WLDMT-SLIDE,CYLINDER ATTACH	
58	515232D1	1	WLDMT-SLIDE,120 IN ,LH,HYD	
59	515233D1	1	WLDMT-SLIDE,120 IN ,RH,HYD	
60	WR55974	2	PIN-CLEVIS	

Copyright © 2008 AGCO Corporation

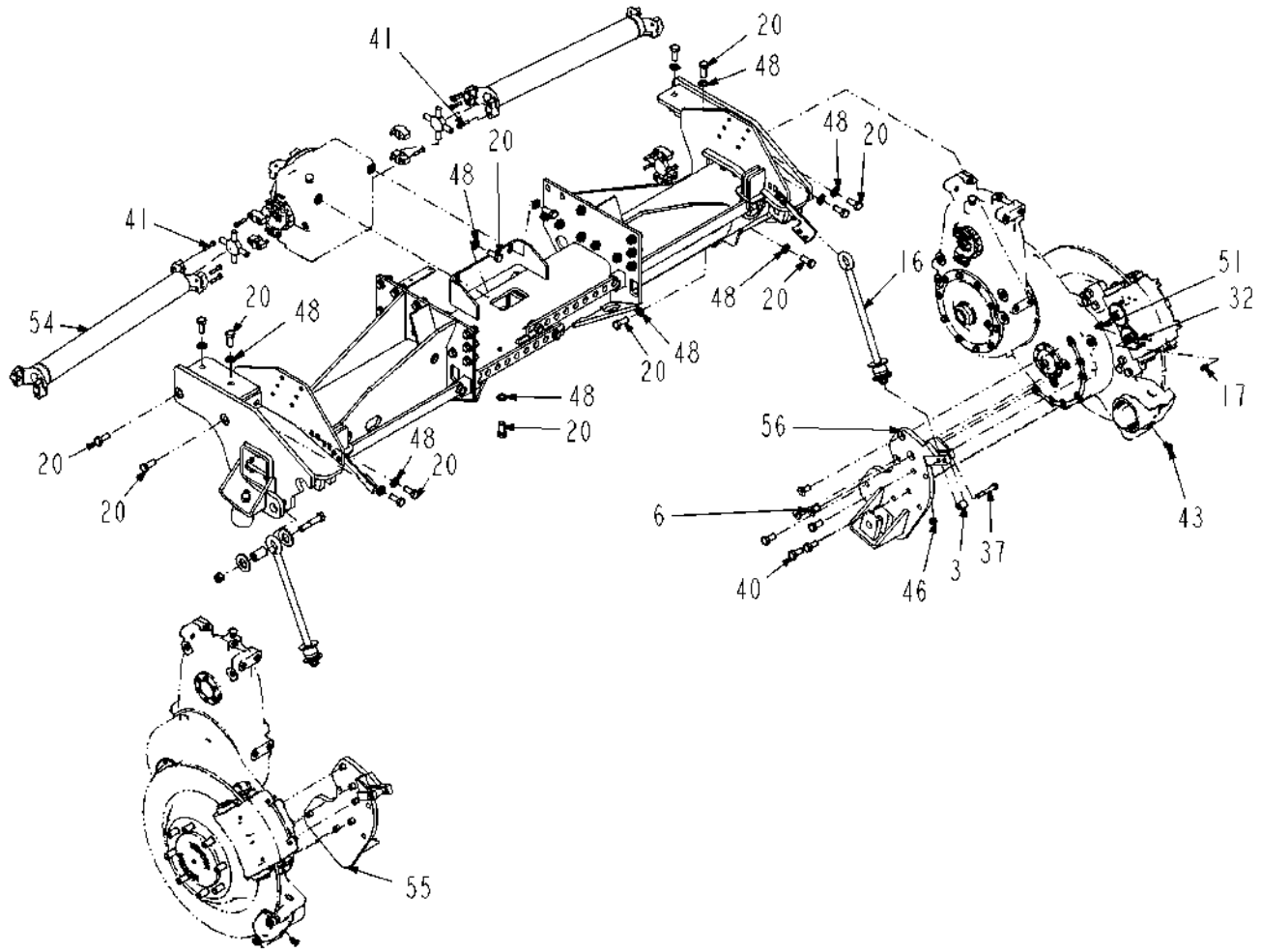

515231D1-03-T369-04.TIF

Copyright © 2008 AGCO Corporation

AXLE-REAR,120 IN -160 IN ,HYDRAULIC

ITEM	PART #	QTY	DESCRIPTION	COMMENTS
3	AG109902	2	SPACER-MTG,EYEBOLT STOP	
6	WR123065	6	FSHCS-.75X1.50 ALLOY	
16	WR128307	2	BOLT ASM-EYE	SEE PAGE 4-18
17	WR128326	2	ADAPTER,-4JICX-5MOR,STR	
20	WR129814	24	BOLT .75-10NCX 1.75 G8 ZN HHD	
32	AG519113	2	TUBE END NIPPLE -4	
37	AG556149	2	BOLT 0.50-13NCX 3.50 G5 ZN HHD	
40	AG559938	8	BOLT 0.75-10NCX 1.50 G5 ZN HHD	
41	AG561119	32	BOLT 0.37-24NFX 1.75 G8 ZN HHD	
43	AG561677	2	ELBOW 90D 0.25MO-R X 0.25MJIC	SEE PAGE 6-106
46	AG601152	2	NUT 0.50-13NC HEX ZN REG NY	
48	AG604203	22	WASHER 0.75 FL ZN SAE TYP-A G8	
51	401704X1	2	ELBOW 90D -4MJX-5MOR	
54	503492D1	2	DRIVESHAFT-W/CAPS,120 IN	SEE PAGE 4-26
55	511769D1	1	WLDMT-CYLINDER MNT,LH	
56	511770D1	1	WLDMT-CYLINDER MNT,RH	

Copyright © 2008 AGCO Corporation

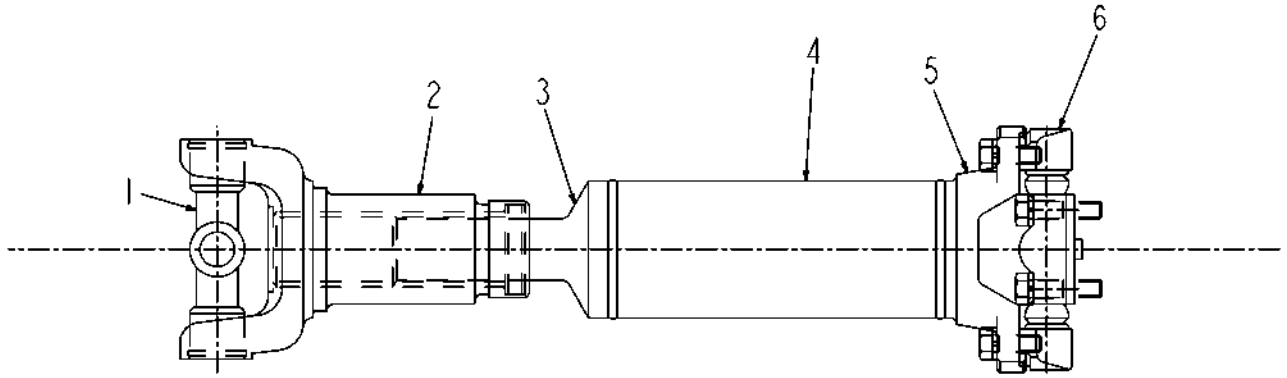

123752-A.TIF

Copyright © 2008 AGCO Corporation

DRIVESHAFT-6C TELESCOPING

ITEM	PART #	QTY	DESCRIPTION	COMMENTS
1	WR131495	1	KIT, CROSS & BEARING	
2	AG722951	1	SLIP YOKE	
3	NS	-	NON-SERVICEABLE PART	
4	NS	-	NON-SERVICEABLE PART	
5	NS	-	NON-SERVICEABLE PART	
6	WR131499	1	KIT,CROSS & BEARING	
	FOOTNOTE		ITEMS 3, 4, AND 5 CANNOT BE PURCHASED INDIVIDUALLY BUT ARE INCLUDED IN THE DRIESHAFT ASSEMBLY.	

Copyright © 2008 AGCO Corporation

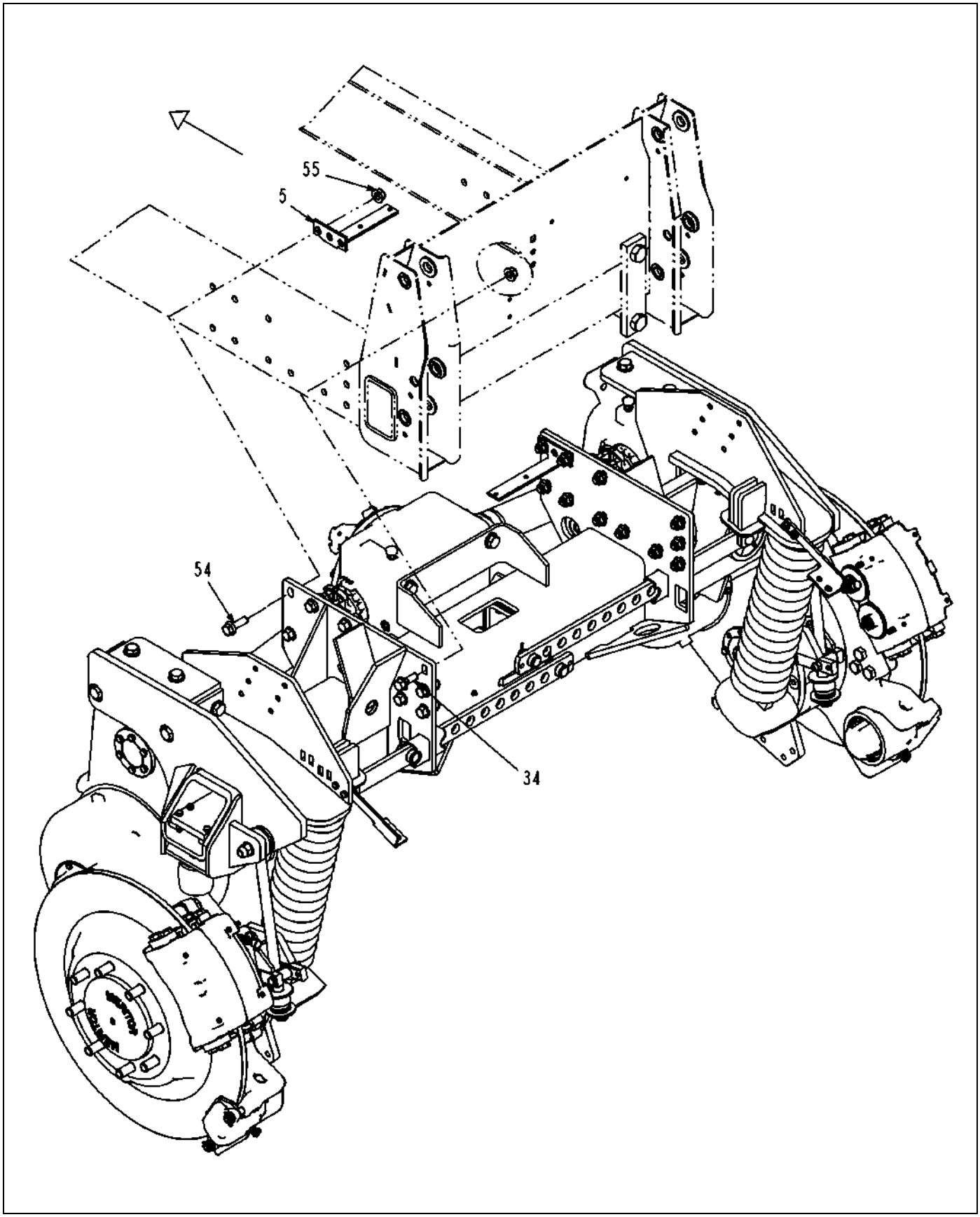

518378D1-05-T369-01.TIF

Copyright © 2008 AGCO Corporation

AXLE-REAR,SPRING,88 IN

ITEM	PART #	QTY	DESCRIPTION	COMMENTS
5	AG121826	2	BRACKET-HOSE SUPPORT	
27	WR135714	-	ADJUSTER-WEAR PAD,PUCK	[A]
29	AG511099	AR	GREASE-MULTI PURPOSE LITH.	
33	AG516064	AR	ANTI SEIZE	
34	AG517556	18	BOLT 0.62-18 X 1.75 G8 HX FLG	
54	AG609311	4	BOLT 0.62-18 X 2.00 G8 HX FLG	
55	AG609313	22	NUT HX FLG 0.62-18NF	
	FOOTNOTE [A]		THE TOOL TO ADJUST THIS PUCK IS WR129714.	

Copyright © 2008 AGCO Corporation

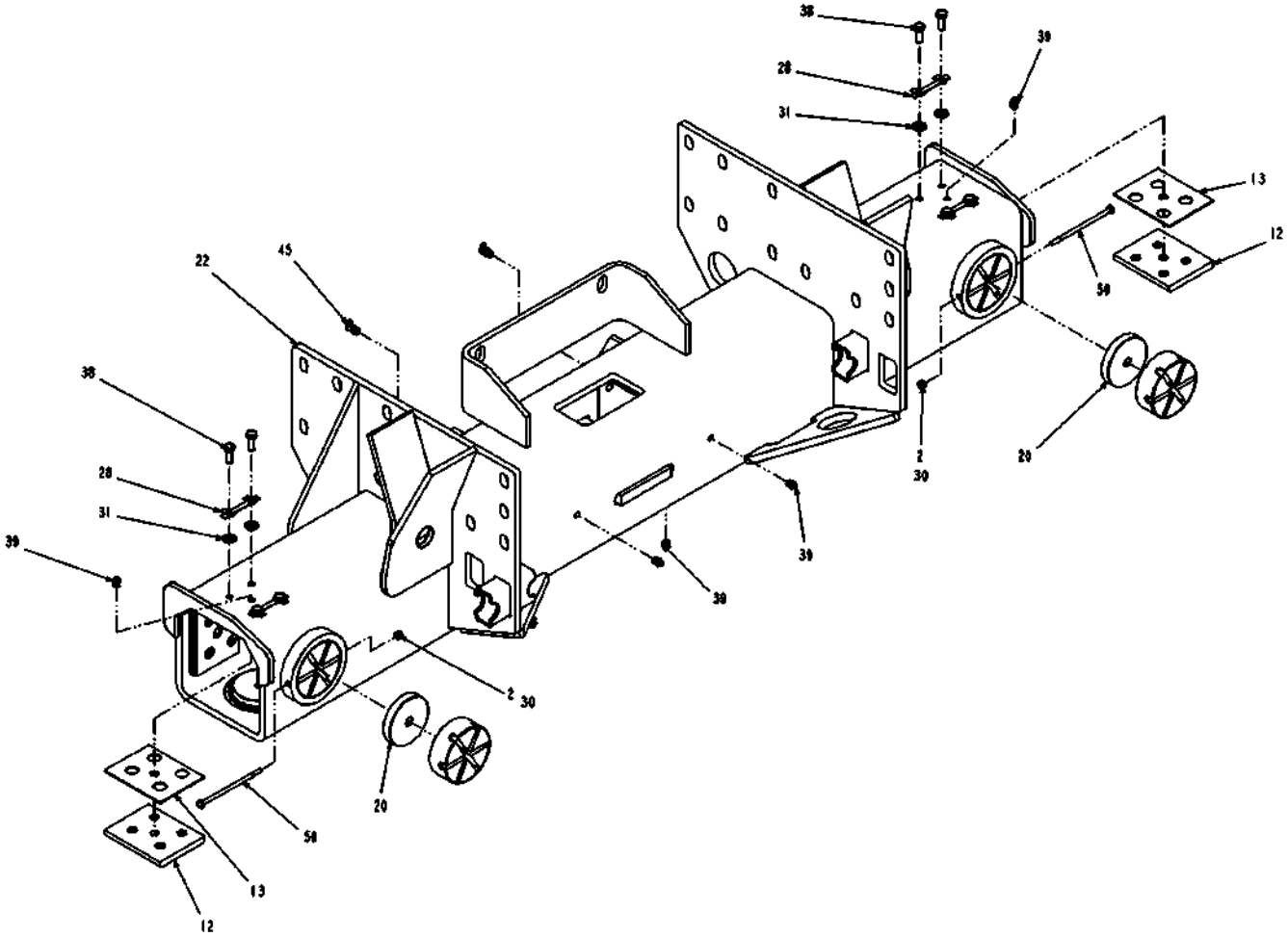

518378D1-05-T369-02.TIF

Copyright © 2008 AGCO Corporation

AXLE-REAR,SPRING,88 IN

ITEM	PART #	QTY	DESCRIPTION	COMMENTS
2	WR11494	4	NUT-CENTERLOCK, 1/4	
12	WR125577	4	PAD-WEAR,MID SIZE	
13	WR125580	AR	SHIM-WEAR PAD,UPPER	
20	WR128335	4	PAD-WEAR,SLIDERITE	
22	WR129662	1	AXLE WLDMT-REAR,WIDE TRACK	
28	AG233052	8	LOCK STRAP	
30	AG512885	AR	LOCTITE ADHESIVE SEALANT BLUE	
31	AG514559	16	WASHER 0.37 FL ZN SAE TYP-A G8	
38	AG519184	16	BOLT 0.37-24NFX 1.00 G5 ZN HHD	
39	AG550280	8	FITTING LUB.12-27NPTFX0.68	
45	AG559083	2	FITTING LUB 90D 0.125 NPTF	
50	AG563104	4	BOLT 0.25-20NCX 5.25 G5 ZN HHD	

Copyright © 2008 AGCO Corporation

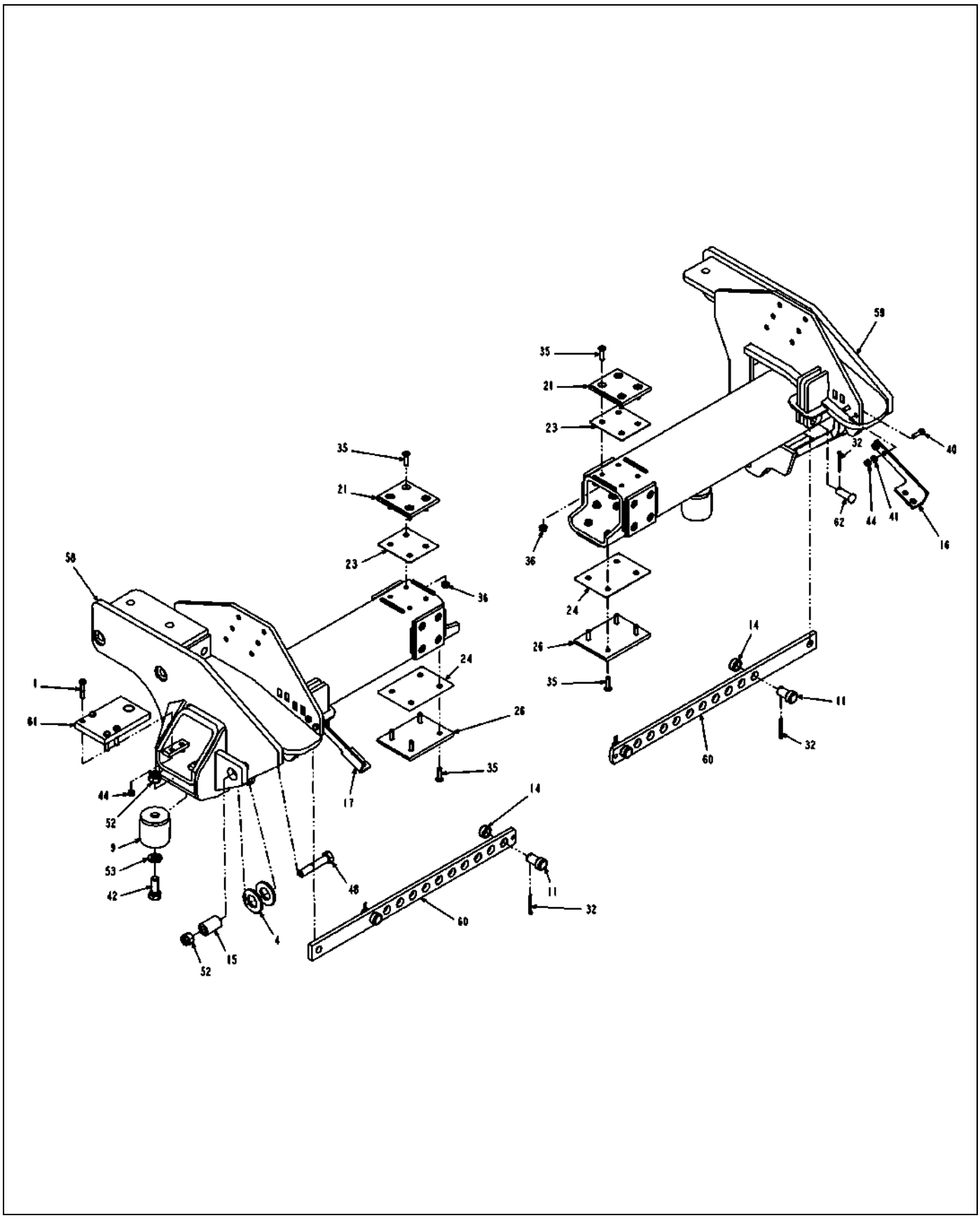

518378D1-05-T369-03.TIF

Copyright © 2008 AGCO Corporation

AXLE-REAR,SPRING,88 IN

ITEM	PART #	QTY	DESCRIPTION	COMMENTS
1	WR10185	8	SCREW-CAP HEX 3/8 NC X 2	
4	AG109948	4	SPACER-EYEBOLT HANGER	
9	WR123067	2	BUMPER-LIMIT,SUSPENSION	
11	WR125526	4	PIN-TRACK ADJUST	
14	WR125609	4	BUSHING-TRACK ADJUST	
15	WR125758	2	SPACER-MTG,EYEBOLT HANGER	
16	WR126678	1	BRACKET-BRAKE LINES KEEPER	
17	WR126679	1	BRACKET-BRAKE LINES KEEPER	
21	WR129646	6	PAD-WEAR,6X6,REAR,SLIDERITE	
23	WR129685	AR	SHIM-WEAR PAD,4.50 IN X5.00 IN	
24	WR129686	AR	SHIM-WEAR PAD,5.00 IN X6.88 IN	
26	WR134202	2	PAD-WEAR,SLIDERITE,5.00X6.75 IN	
32	AG515352	6	PIN COTTER 0.18X2.00 SS	
35	AG518505	32	SCREW .38-24 NF X 1.50 FHCS	
36	AG518511	32	NUT FLANGE .38-24 UNF	
40	AG550515	4	BOLT 0.37-16NCX 1.25 G5 ZN HHD	
41	AG550981	4	WASHER 0.37 FL ZN NAR TYPE-B	
42	AG554537	2	BOLT 0.75-10NCX 2.00 G5 ZN HHD	
44	AG557676	12	NUT 0.37-16NC HEX ZN C-LK	
48	AG561593	2	BOLT 0.75-10NCX 4.00 G5 ZN HHD	
52	AG603864	4	NUT 0.75-10NC HEX ZN REG NY	
53	AG604203	22	WASHER 0.75 FL ZN SAE TYP-A G8	
58	518405D1	1	WLDMT-SLIDE,88 IN ,SPRING,LH	
59	518406D1	1	WLDMT-SLIDE,88 IN ,SPRING,RH	
60	518498D1	2	PLATE-BAR,TRACK,88 IN	
61	524602D1	2	PLATE-TRACK CYL,ANCHOR,88 IN	
62	WR55974	2	PIN-CLEVIS	

Copyright © 2008 AGCO Corporation

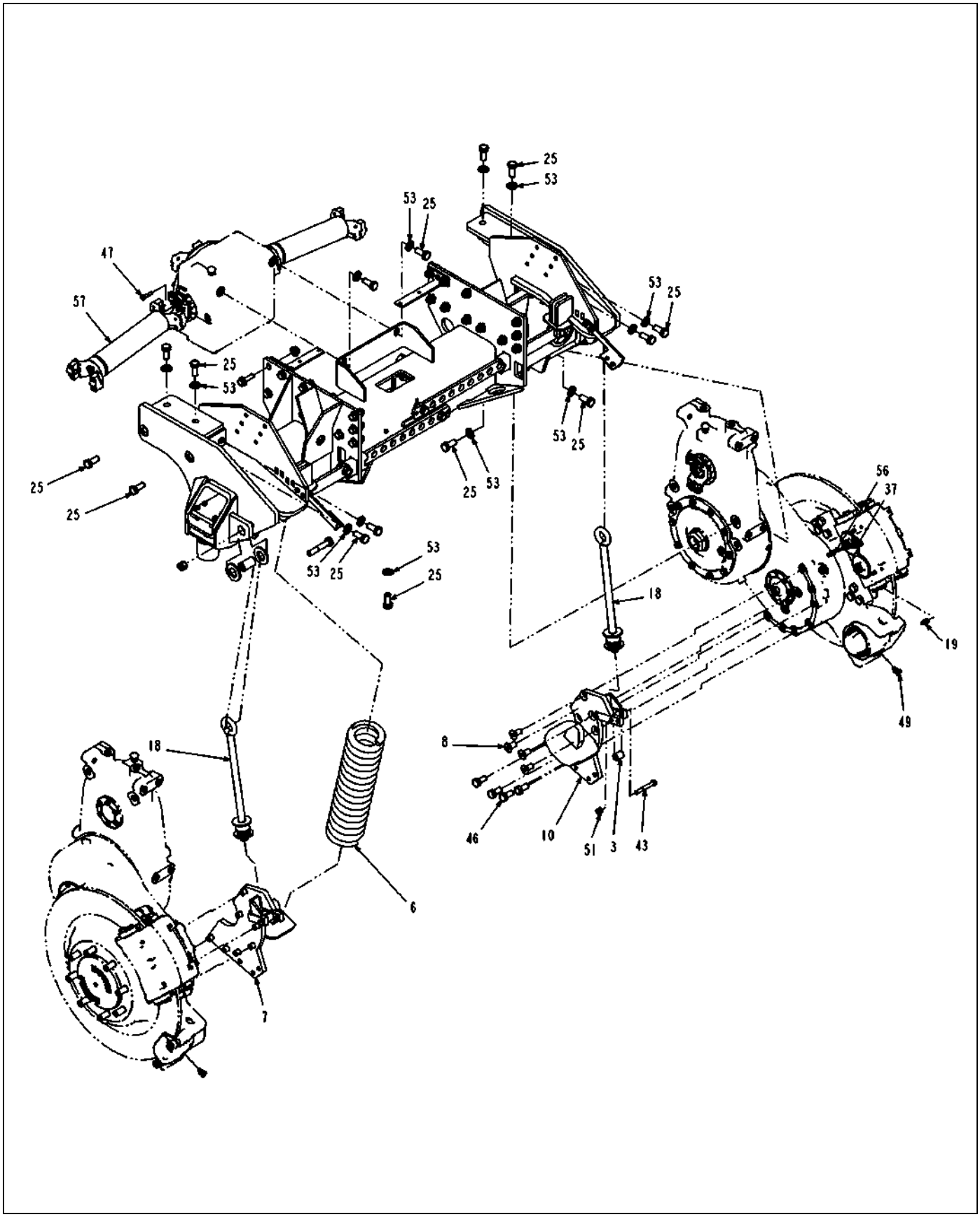

518378D1-05-T369-04.TIF

Copyright © 2008 AGCO Corporation

AXLE-REAR,SPRING,88 IN

ITEM	PART #	QTY	DESCRIPTION	COMMENTS
3	AG109902	2	SPACER-MTG,EYEBOLT STOP	
6	WR122909	2	SPRING-REAR,HEAVY	
7	WR122915	1	BRACKET-WDMT,SPRING PVT,LH	
8	WR123065	8	FSHCS-.75X1.50 ALLOY	
10	WR124043	1	BRACKET-WDMT,SPRING RH	
18	WR128307	2	BOLT ASM-EYE	SEE PAGE 4-18
19	WR128326	2	ADAPTER,-4JICX-5MOR,STR	
25	WR129814	24	BOLT .75-10NCX 1.75 G8 ZN HHD	
37	AG519113	2	TUBE END NIPPLE -4	
43	AG556149	2	BOLT 0.50-13NCX 3.50 G5 ZN HHD	
46	AG559938	8	BOLT 0.75-10NCX 1.50 G5 ZN HHD	
47	AG561119	16	BOLT 0.37-24NFX 1.75 G8 ZN HHD	
49	AG561677	2	ELBOW 90D 0.25MO-R X 0.25MJIC	SEE PAGE 6-106
51	AG601152	2	NUT 0.50-13NC HEX ZN REG NY	
53	AG604203	22	WASHER 0.75 FL ZN SAE TYP-A G8	
56	401704X1	2	ELBOW 90D -4MJX-5MOR	
57	512337D1	2	DRIVESHAFT-W/CAPS,88 IN -128 IN	SEE PAGE 4-40

Copyright © 2008 AGCO Corporation

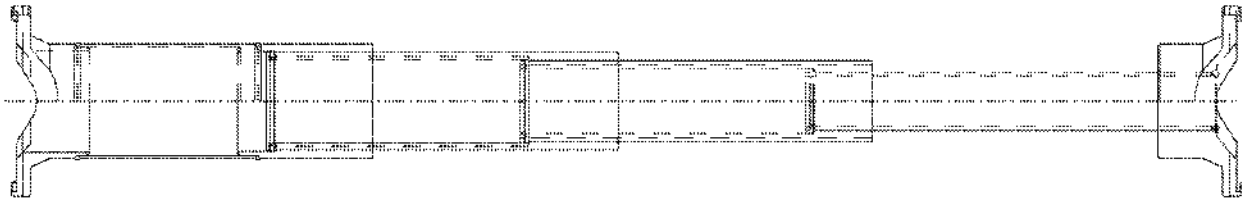

512337D1-01-N519-.TIF

Copyright © 2008 AGCO Corporation

DRIVESHAFT-W/CAPS,88 IN -128 IN

ITEM	PART #	QTY	DESCRIPTION	COMMENTS
REF	AG331463	-	RING/RETAINING-MEDIUM	
REF	AG331464	-	RING/RETAINING-LARGE	
REF	WR131499	2	KIT,CROSS & BEARING	
REF	AG331462	-	RING/RETAINING-SMALL	

Copyright © 2008 AGCO Corporation

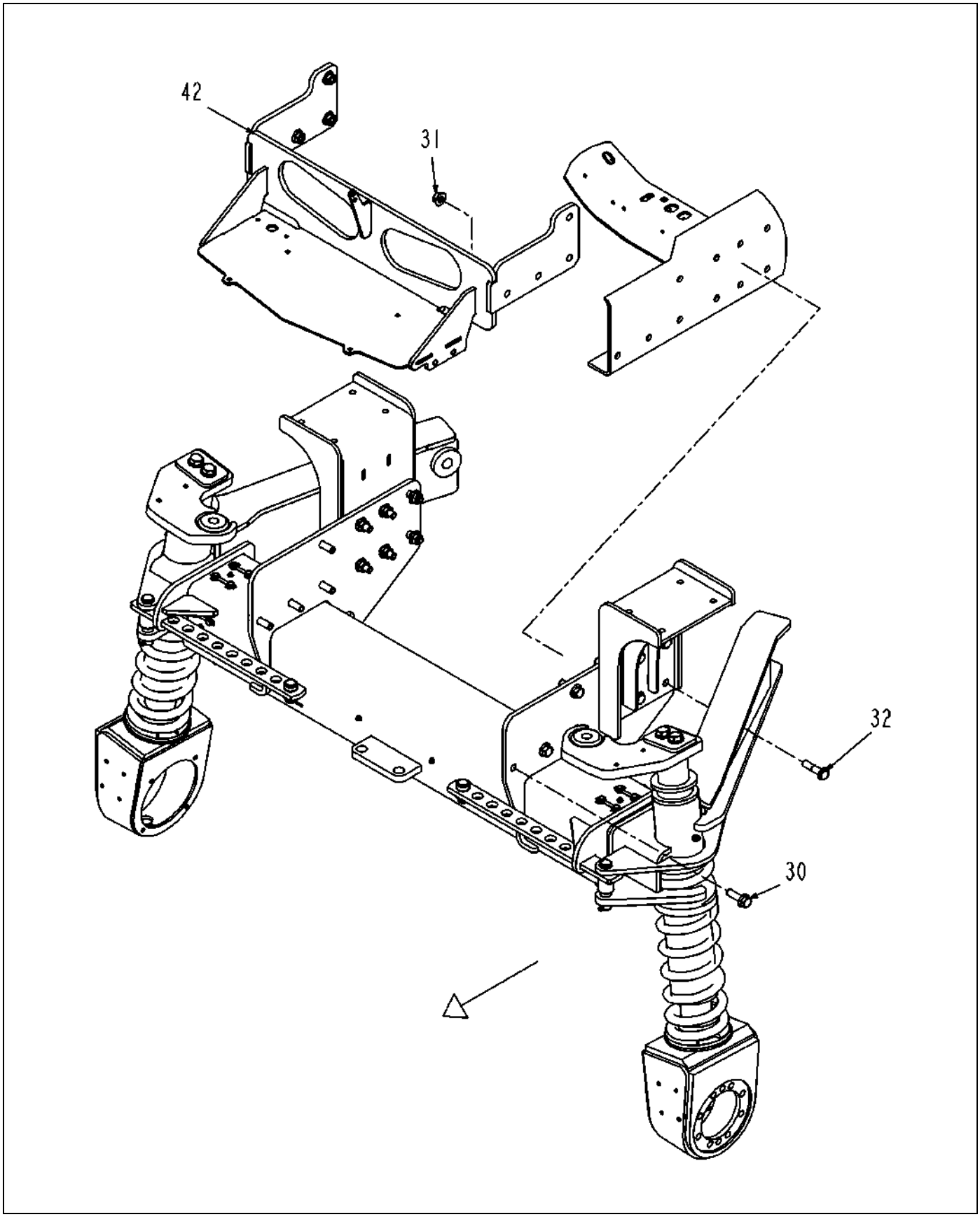

508470D1-03-T176-01.TIF

Copyright © 2008 AGCO Corporation

AXLE-FRONT,88 IN -120 IN

ITEM	PART #	QTY	DESCRIPTION	COMMENTS
30	AG609311	20	BOLT 0.62-18 X 2.00 G8 HX FLG	
31	AG609313	20	NUT HX FLG 0.62-18NF	
32	AG609314	12	BOLT 0.62-18 X 2.50 G8 HX FLG	
42	515151D1	1	WLDMT-CROSSMEMBER,FNT	

Copyright © 2008 AGCO Corporation

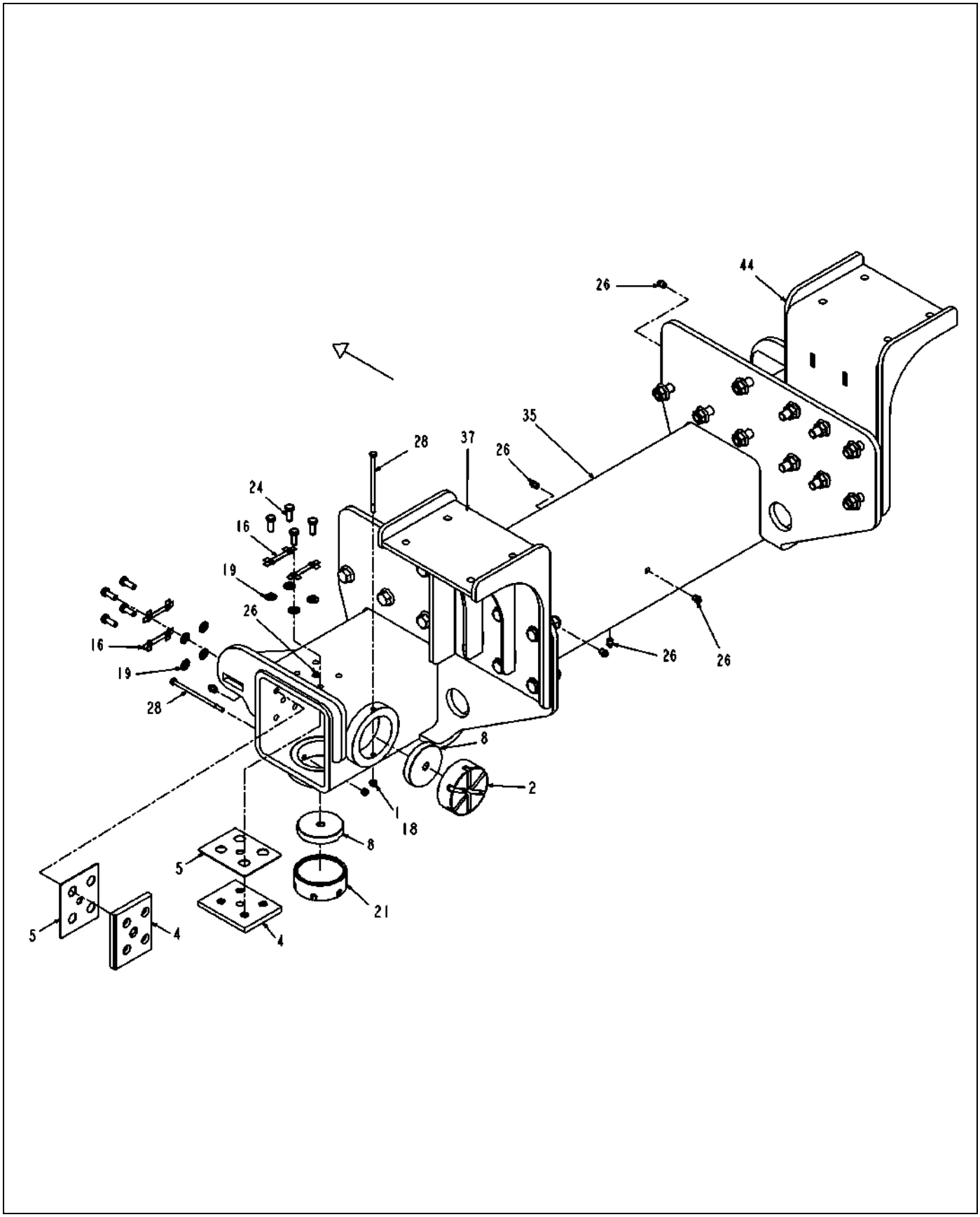

508470D1-03-T176-02.TIF

Copyright © 2008 AGCO Corporation

AXLE-FRONT,88 IN -120 IN

ITEM	PART #	QTY	DESCRIPTION	COMMENTS
1	WR11494	4	NUT-CENTERLOCK, 1/4	
2	WR125398	4	BUSHING-3.507X3.006X3.00	
4	WR125577	4	PAD-WEAR,MID SIZE	
5	WR125580	AR	SHIM-WEAR PAD,UPPER	
8	WR128335	4	PAD-WEAR,SLIDERITE	
16	AG233052	8	LOCK STRAP	
18	AG512885	AR	LOCTITE ADHESIVE SEALANT BLUE	
19	AG514559	16	WASHER 0.37 FL ZN SAE TYP-A G8	
21	AG516064	AR	ANTI SEIZE	
24	AG519184	16	BOLT 0.37-24NFX 1.00 G5 ZN HHD	
26	AG550280	10	FITTING LUB.12-27NPTFX0.68	
28	AG563104	4	BOLT 0.25-20NCX 5.25 G5 ZN HHD	
35	508479D1	1	WELDMENT-AXLE,FRONT,88 IN 120 IN	
37	514101D1	1	WLDMT-BOOMREST,ATTACH,LH	
44	515167D1	1	WLDMT-BOOMREST,ATTACH,RH	

Copyright © 2008 AGCO Corporation

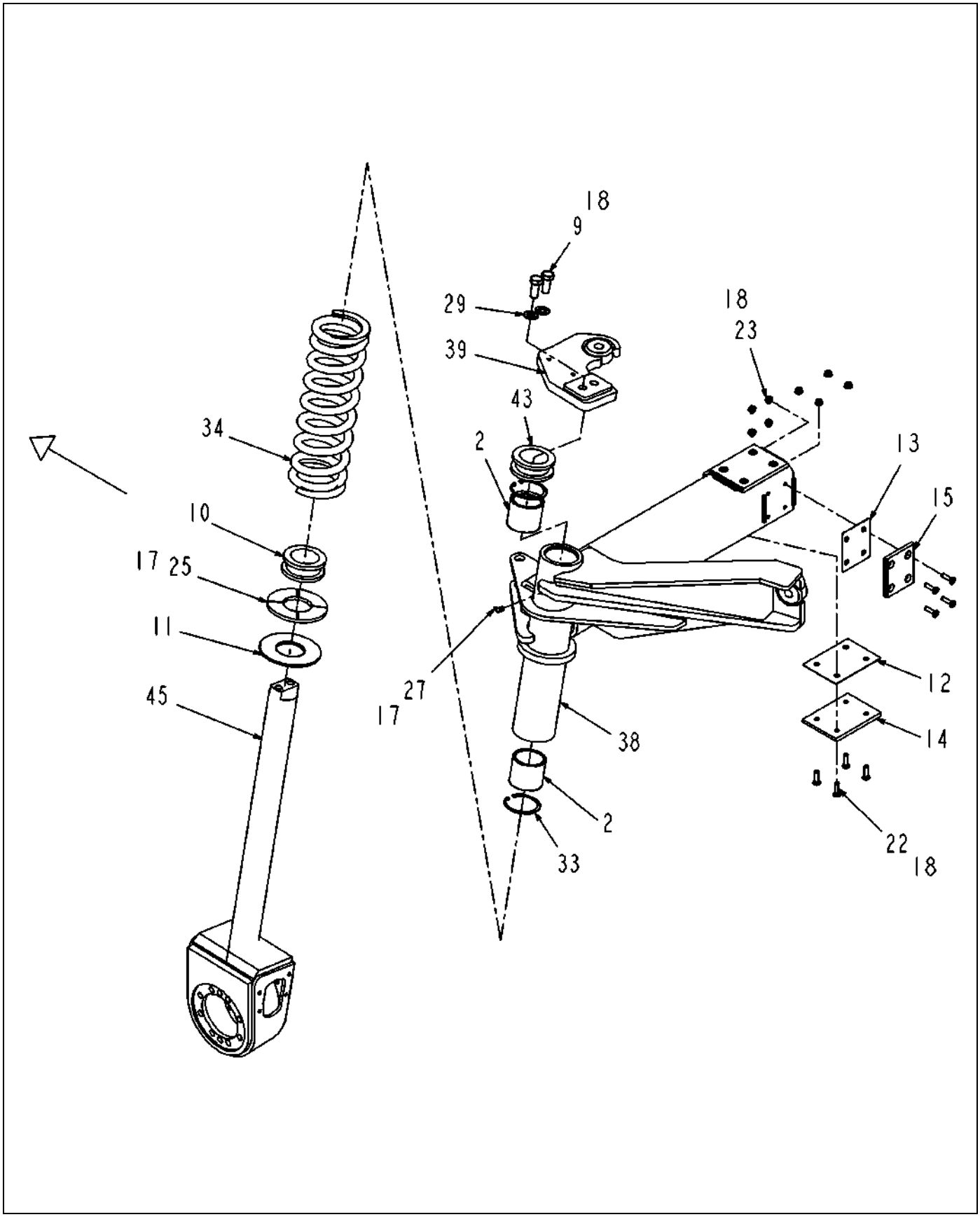

508470D1-03-T176-03.TIF

Copyright © 2008 AGCO Corporation

AXLE-FRONT,88 IN -120 IN

ITEM	PART #	QTY	DESCRIPTION	COMMENTS
2	WR125398	4	BUSHING-3.507X3.006X3.00	
9	WR129814	4	BOLT .75-10NCX 1.75 G8 ZN HHD	
10	WR132214	2	JOUNCE BUMPER-ELASTOMER,7650	
11	WR132224	2	WASHER-HARD BOTTOM	
12	WR134200	AR	SHIM-WEAR PAD,5.00X6.75 IN	
13	WR134201	AR	SHIM-WEAR PAD,5.00X4.125 IN	
14	WR134202	6	PAD-WEAR,SLIDERITE,5.00X6.75 IN	
15	WR134203	2	PAD-WEAR,SLIDERITE,5.00X4.125 IN	
17	AG511099	AR	GREASE-MULTI PURPOSE LITH.	
18	AG512885	AR	LOCTITE ADHESIVE SEALANT BLUE	
22	AG518505	32	SCREW .38-24 NF X 1.50 FHCS	
23	AG518511	32	NUT FLANGE .38-24 UNF	
25	AG522723	2	BUSHING-THRUST,KING PIN	
27	AG559083	2	FITTING LUB 90D 0.125 NPTF	
29	AG604203	4	WASHER 0.75 FL ZN SAE TYP-A G8	
33	401481X1	4	RING-RETAINING,INT,3.625 DIA	
34	508467D1	2	SPRING-COIL	
38	514934D1	1	WELDMENT-SLIDE,LH,88 IN -120 IN	
39	514937D1	1	ARM-FORMED,STEERING,LH	
43	515156D1	2	BUMPER-REBOUND,STRUT	
45	525874D1	1	KNUCKLE-STRG,LH	

Copyright © 2008 AGCO Corporation

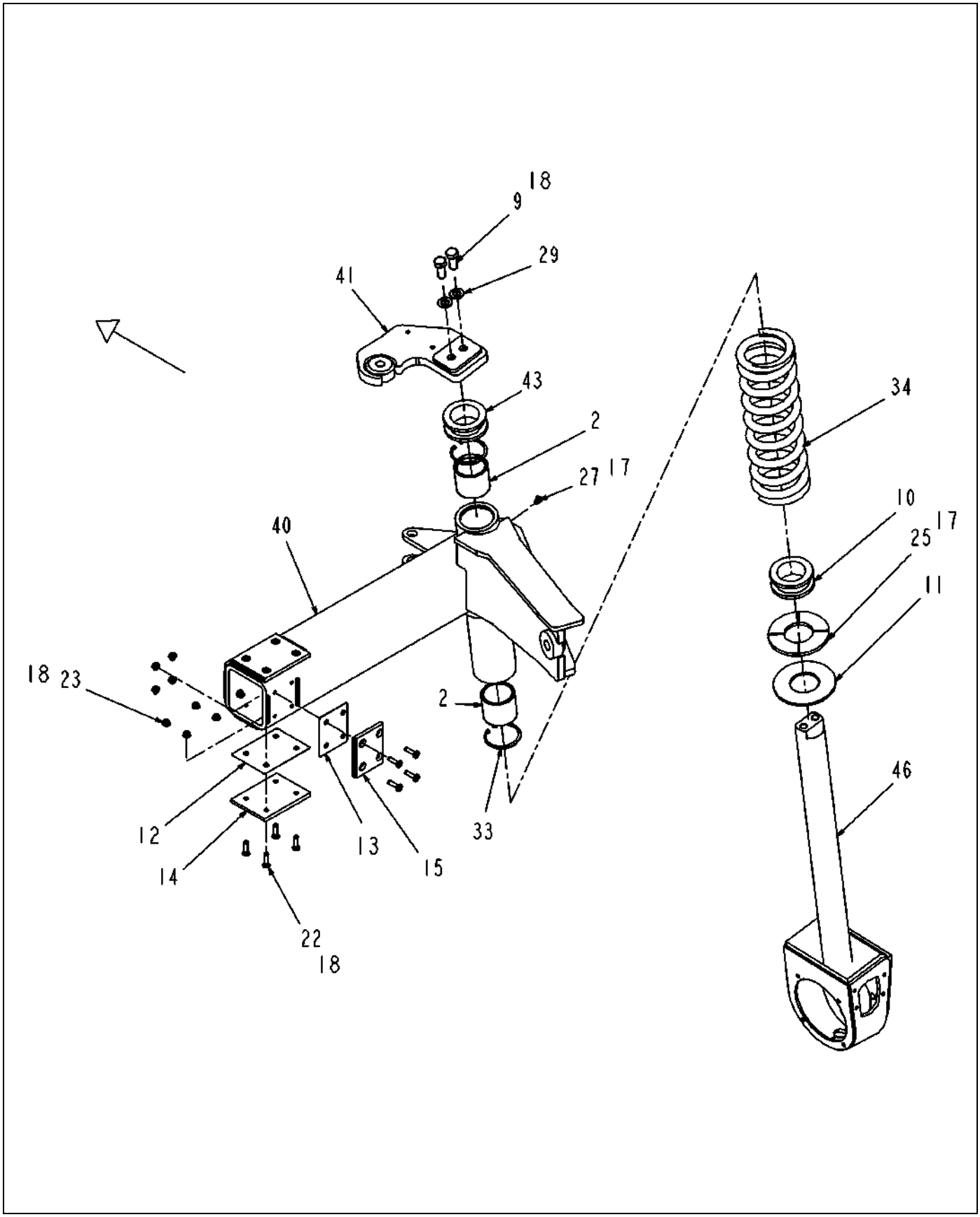

508470D1-03-T176-04.TIF

Copyright © 2008 AGCO Corporation

AXLE-FRONT,88 IN -120 IN

ITEM	PART #	QTY	DESCRIPTION	COMMENTS
2	WR125398	4	BUSHING-3.507X3.006X3.00	
9	WR129814	4	BOLT .75-10NCX 1.75 G8 ZN HHD	
10	WR132214	2	JOUNCE BUMPER-ELASTOMER,7650	
11	WR132224	2	WASHER-HARD BOTTOM	
12	WR134200	AR	SHIM-WEAR PAD,5.00X6.75 IN	
13	WR134201	AR	SHIM-WEAR PAD,5.00X4.125 IN	
14	WR134202	6	PAD-WEAR,SLIDERITE,5.00X6.75 IN	
15	WR134203	2	PAD-WEAR,SLIDERITE,5.00X4.125 IN	
17	AG511099	AR	GREASE-MULTI PURPOSE LITH.	
18	AG512885	AR	LOCTITE ADHESIVE SEALANT BLUE	
22	AG518505	32	SCREW .38-24 NF X 1.50 FHCS	
23	AG518511	32	NUT FLANGE .38-24 UNF	
25	AG522723	2	BUSHING-THRUST,KING PIN	
27	AG559083	2	FITTING LUB 90D 0.125 NPTF	
29	AG604203	4	WASHER 0.75 FL ZN SAE TYP-A G8	
33	401481X1	4	RING-RETAINING,INT,3.625 DIA	
34	508467D1	2	SPRING-COIL	
40	514943D1	1	WELDMENT-SLIDE,88 IN -120 IN ,RH	
41	514948D1	1	ARM-FORMED,STEERING,RH	
43	515156D1	2	BUMPER-REBOUND,STRUT	
46	525875D1	1	KNUCKLE-STRG,RH	

Copyright © 2008 AGCO Corporation

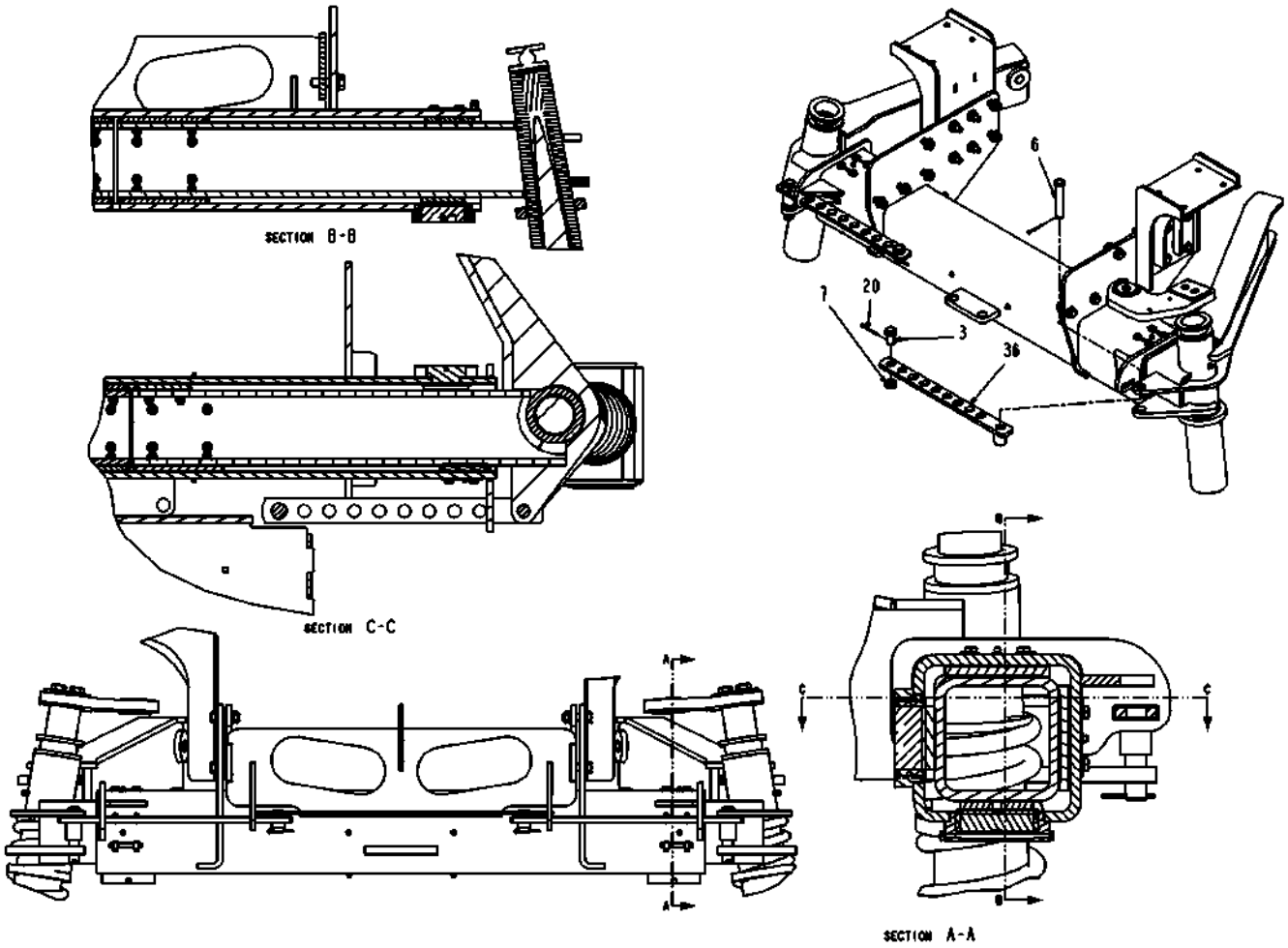

508470D1-03-T176-05.TIF

Copyright © 2008 AGCO Corporation

AXLE-FRONT,88 IN -120 IN

ITEM	PART #	QTY	DESCRIPTION	COMMENTS
3	WR125526	2	PIN-TRACK ADJUST	
6	WR125598	2	PIN-CLEVIS	
7	WR125609	2	BUSHING-TRACK ADJUST	
20	AG515352	4	PIN COTTER 0.18X2.00 SS	
36	511364D1	2	WELDMENT-BAR,TRACK ADJ	

Copyright © 2008 AGCO Corporation

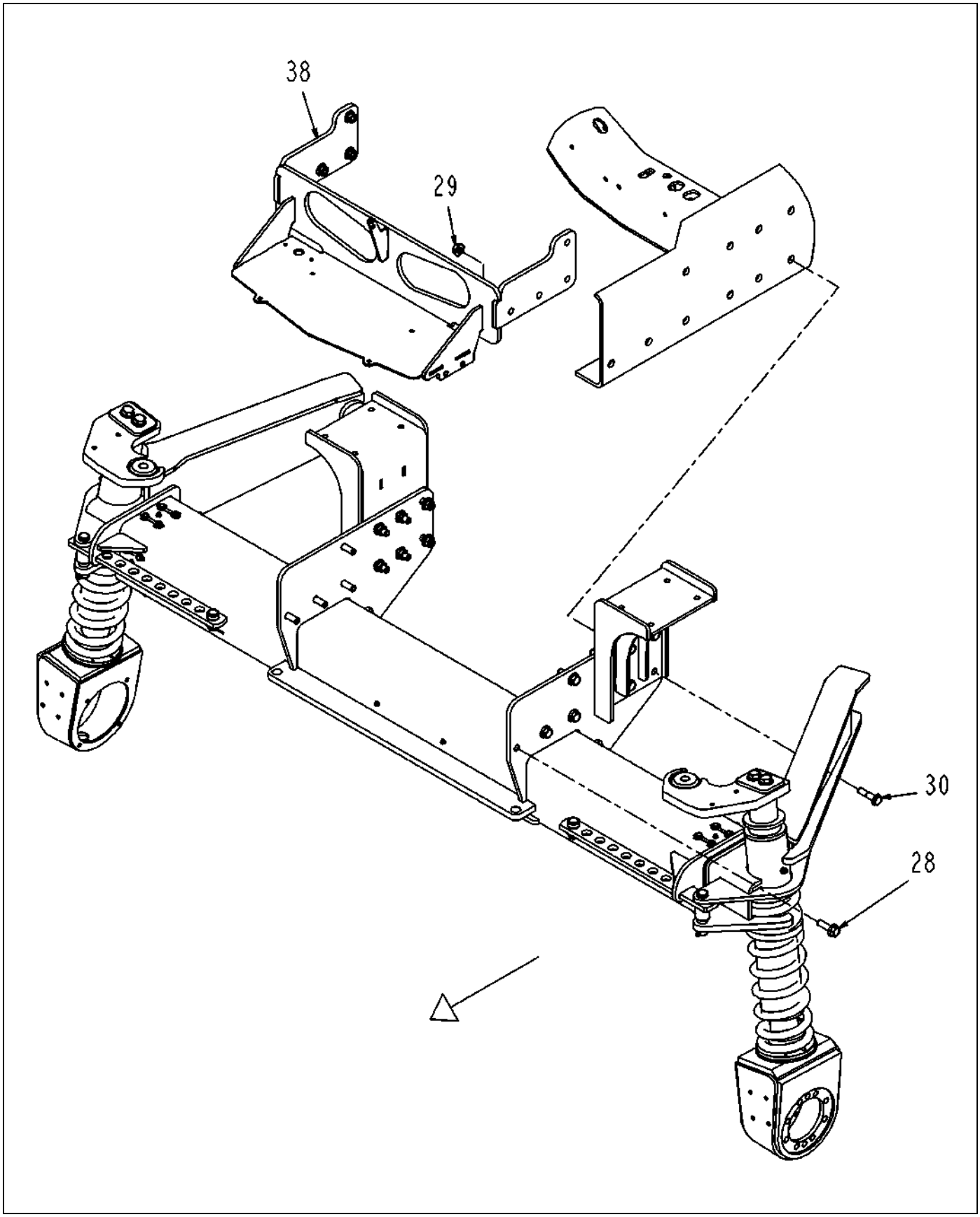

512338D1-03-T176-01.TIF

Copyright © 2008 AGCO Corporation

ITEM	PART #	QTY	DESCRIPTION	COMMENTS
28	AG609311	8	BOLT 0.62-18 X 2.00 G8 HX FLG	
29	AG609313	20	NUT HX FLG 0.62-18NF	
30	AG609314	12	BOLT 0.62-18 X 2.50 G8 HX FLG	
38	515151D1	1	WLDMT-CROSSMEMBER,FNT	

Copyright © 2008 AGCO Corporation

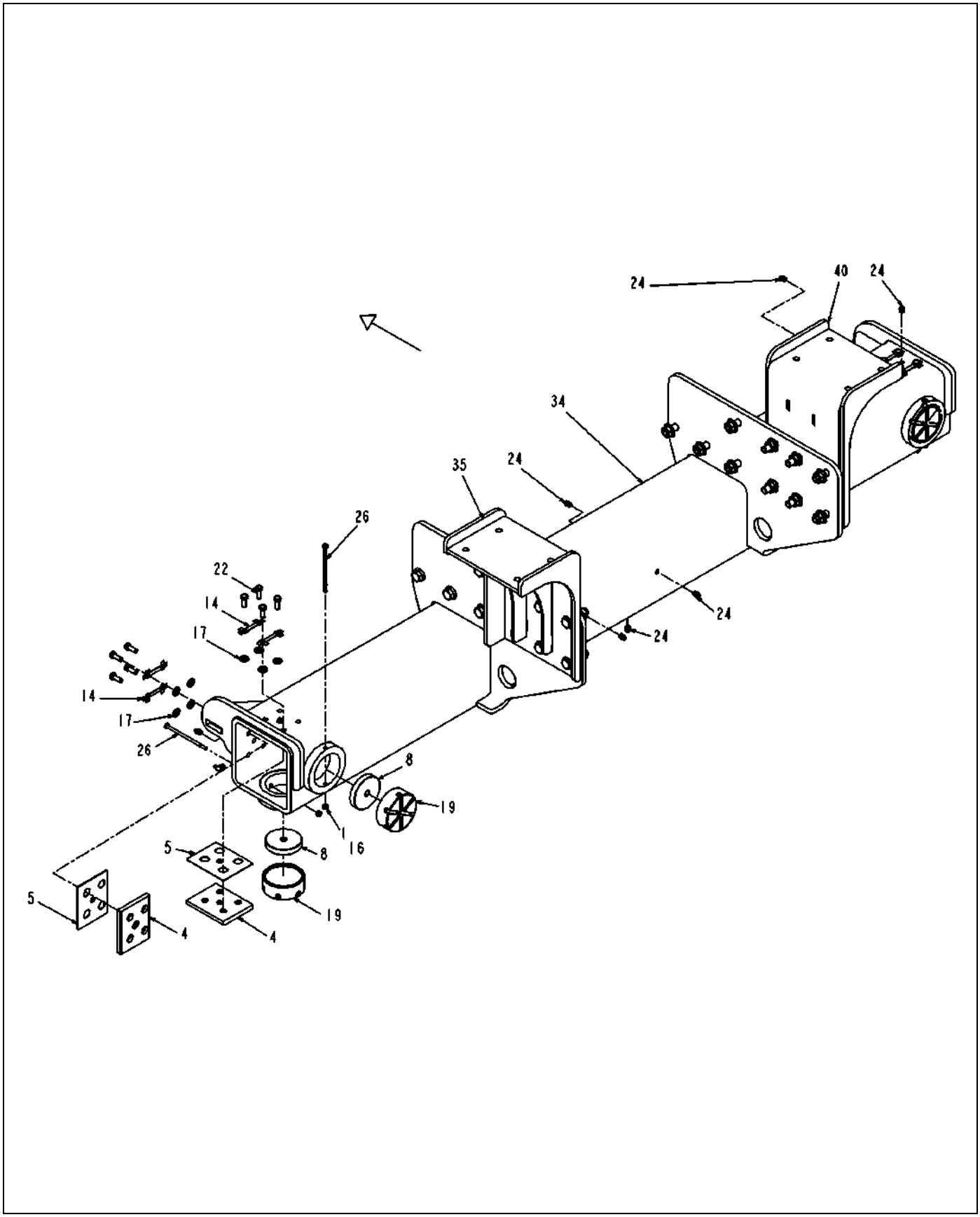

512338D1-03-T176-02.TIF

Copyright © 2008 AGCO Corporation

AXLE-FRONT,120 IN -160 IN

ITEM	PART #	QTY	DESCRIPTION	COMMENTS
1	WR11494	4	NUT-CENTERLOCK, 1/4	
4	WR125577	4	PAD-WEAR,MID SIZE	
5	WR125580	AR	SHIM-WEAR PAD,UPPER	
8	WR128335	4	PAD-WEAR,SLIDERITE	
14	AG233052	8	LOCK STRAP	
16	AG512885	AR	LOCTITE ADHESIVE SEALANT BLUE	
17	AG514559	16	WASHER 0.37 FL ZN SAE TYP-A G8	
19	AG516064	AR	ANTI SEIZE	
22	AG519184	16	BOLT 0.37-24NFX 1.00 G5 ZN HHD	
24	AG550280	10	FITTING LUB.12-27NPTFX0.68	
26	AG563104	4	BOLT 0.25-20NCX 5.25 G5 ZN HHD	
34	512339D1	1	WELDMENT-AXLE,FRONT,120 IN	
35	514101D1	1	WLDMT-BOOMREST,ATTACH,LH	
40	515167D1	1	WLDMT-BOOMREST,ATTACH,RH	

Copyright © 2008 AGCO Corporation

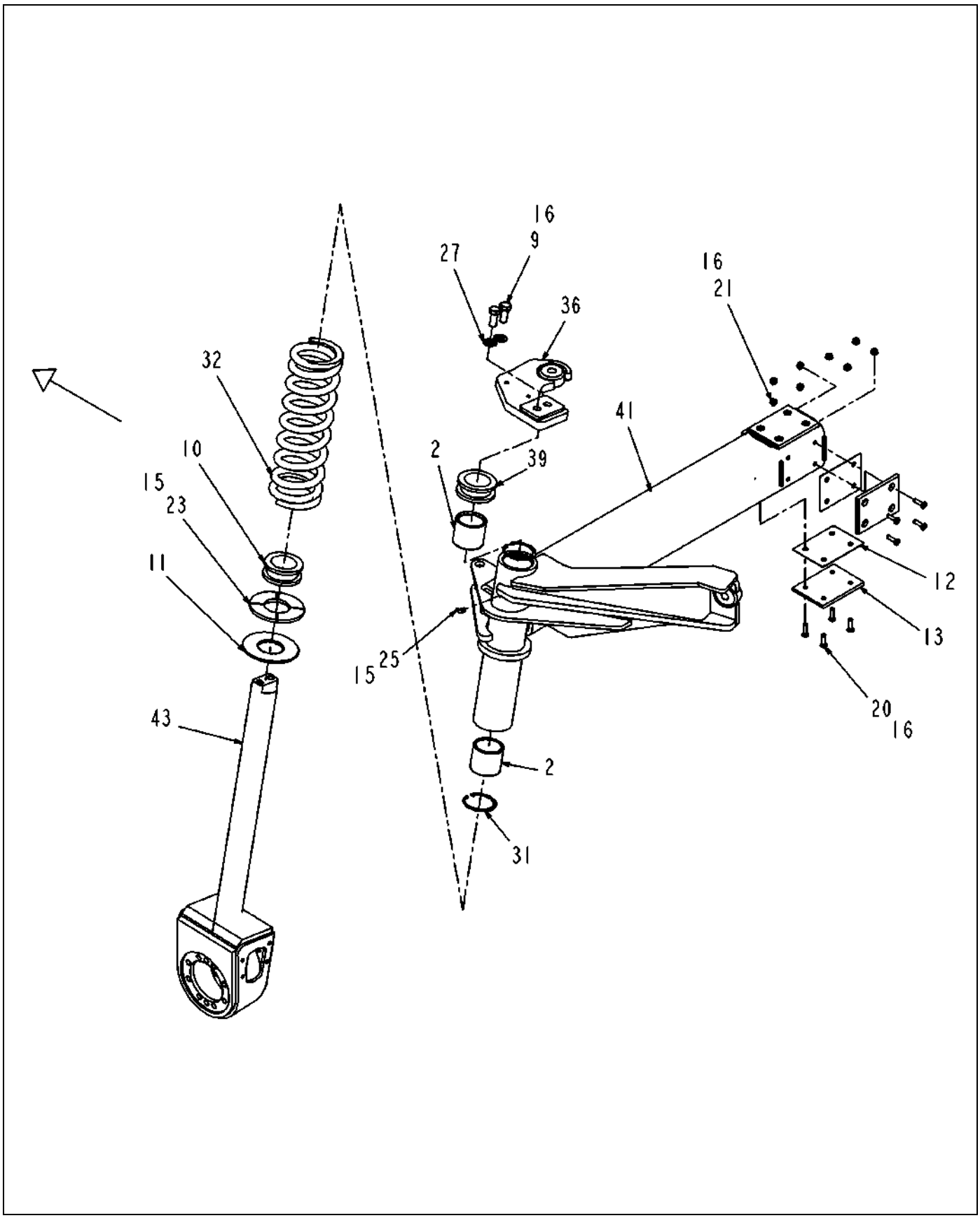

512338D1-03-T176-03.TIF

Copyright © 2008 AGCO Corporation

AXLE-FRONT,120 IN -160 IN

ITEM	PART #	QTY	DESCRIPTION	COMMENTS
2	WR125398	4	BUSHING-3.507X3.006X3.00	
9	WR129814	4	BOLT .75-10NCX 1.75 G8 ZN HHD	
10	WR132214	2	JOUNCE BUMPER-ELASTOMER,7650	
11	WR132224	2	WASHER-HARD BOTTOM	
12	WR134200	AR	SHIM-WEAR PAD,5.00X6.75 IN	
13	WR134202	8	PAD-WEAR,SLIDERITE,5.00X6.75 IN	
15	AG511099	AR	GREASE-MULTI PURPOSE LITH.	
16	AG512885	AR	LOCTITE ADHESIVE SEALANT BLUE	
20	AG518505	32	SCREW .38-24 NF X 1.50 FHCS	
21	AG518511	32	NUT FLANGE .38-24 UNF	
23	AG522723	2	BUSHING-THRUST,KING PIN	
25	AG559083	2	FITTING LUB 90D 0.125 NPTF	
27	AG604203	4	WASHER 0.75 FL ZN SAE TYP-A G8	
31	401481X1	4	RING-RETAINING,INT,3.625 DIA	
32	508467D1	2	SPRING-COIL	
36	514937D1	1	ARM-FORMED,STEERING,LH	
39	515156D1	2	BUMPER-REBOUND,STRUT	
41	515194D1	1	WLDMT-SLIDE,120 IN ,LH,FNT	
43	525874D1	1	KNUCKLE-STRG,LH	

Copyright © 2008 AGCO Corporation

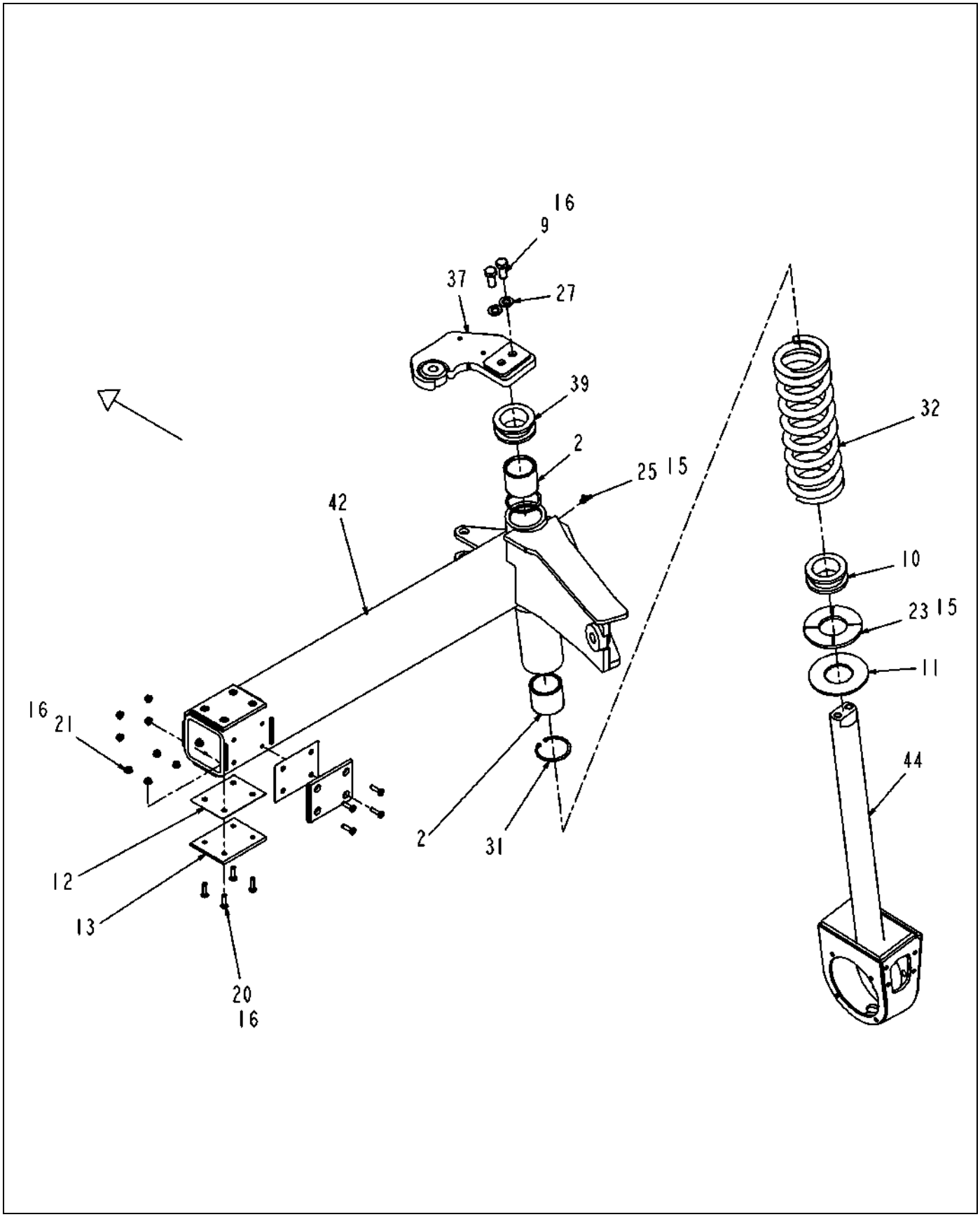

512338D1-03-T176-04.TIF

Copyright © 2008 AGCO Corporation

AXLE-FRONT,120 IN -160 IN

ITEM	PART #	QTY	DESCRIPTION	COMMENTS
2	WR125398	4	BUSHING-3.507X3.006X3.00	
9	WR129814	4	BOLT .75-10NCX 1.75 G8 ZN HHD	
10	WR132214	2	JOUNCE BUMPER-ELASTOMER,7650	
11	WR132224	2	WASHER-HARD BOTTOM	
12	WR134200	AR	SHIM-WEAR PAD,5.00X6.75 IN	
13	WR134202	8	PAD-WEAR,SLIDERITE,5.00X6.75 IN	
15	AG511099	AR	GREASE-MULTI PURPOSE LITH.	
16	AG512885	AR	LOCTITE ADHESIVE SEALANT BLUE	
20	AG518505	32	SCREW .38-24 NF X 1.50 FHCS	
21	AG518511	32	NUT FLANGE .38-24 UNF	
23	AG522723	2	BUSHING-THRUST,KING PIN	
25	AG559083	2	FITTING LUB 90D 0.125 NPTF	
27	AG604203	4	WASHER 0.75 FL ZN SAE TYP-A G8	
31	401481X1	4	RING-RETAINING,INT,3.625 DIA	
32	508467D1	2	SPRING-COIL	
37	514948D1	1	ARM-FORMED,STEERING,RH	
39	515156D1	2	BUMPER-REBOUND,STRUT	
42	515195D1	1	WLDMT-SLIDE,120 IN ,RH,FNT	
44	525875D1	1	KNUCKLE-STRG,RH	

Copyright © 2008 AGCO Corporation

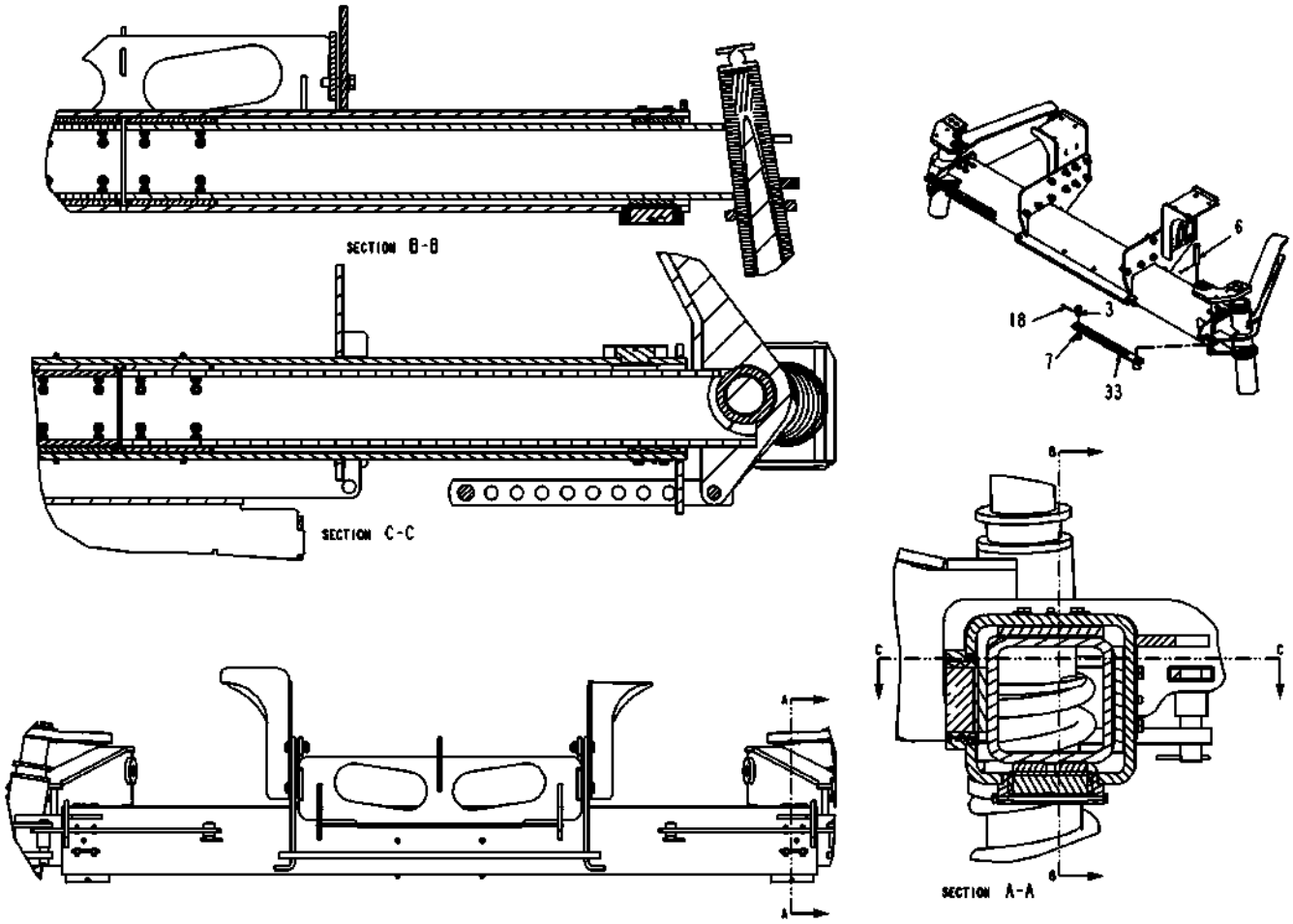

512338D1-03-T176-05.TIF

Copyright © 2008 AGCO Corporation

AXLE-FRONT,120 IN -160 IN

ITEM	PART #	QTY	DESCRIPTION	COMMENTS
3	WR125526	2	PIN-TRACK ADJUST	
6	WR125598	2	PIN-CLEVIS	
7	WR125609	2	BUSHING-TRACK ADJUST	
18	AG515352	4	PIN COTTER 0.18X2.00 SS	
33	511364D1	2	WELDMENT-BAR,TRACK ADJ	

Copyright © 2008 AGCO Corporation

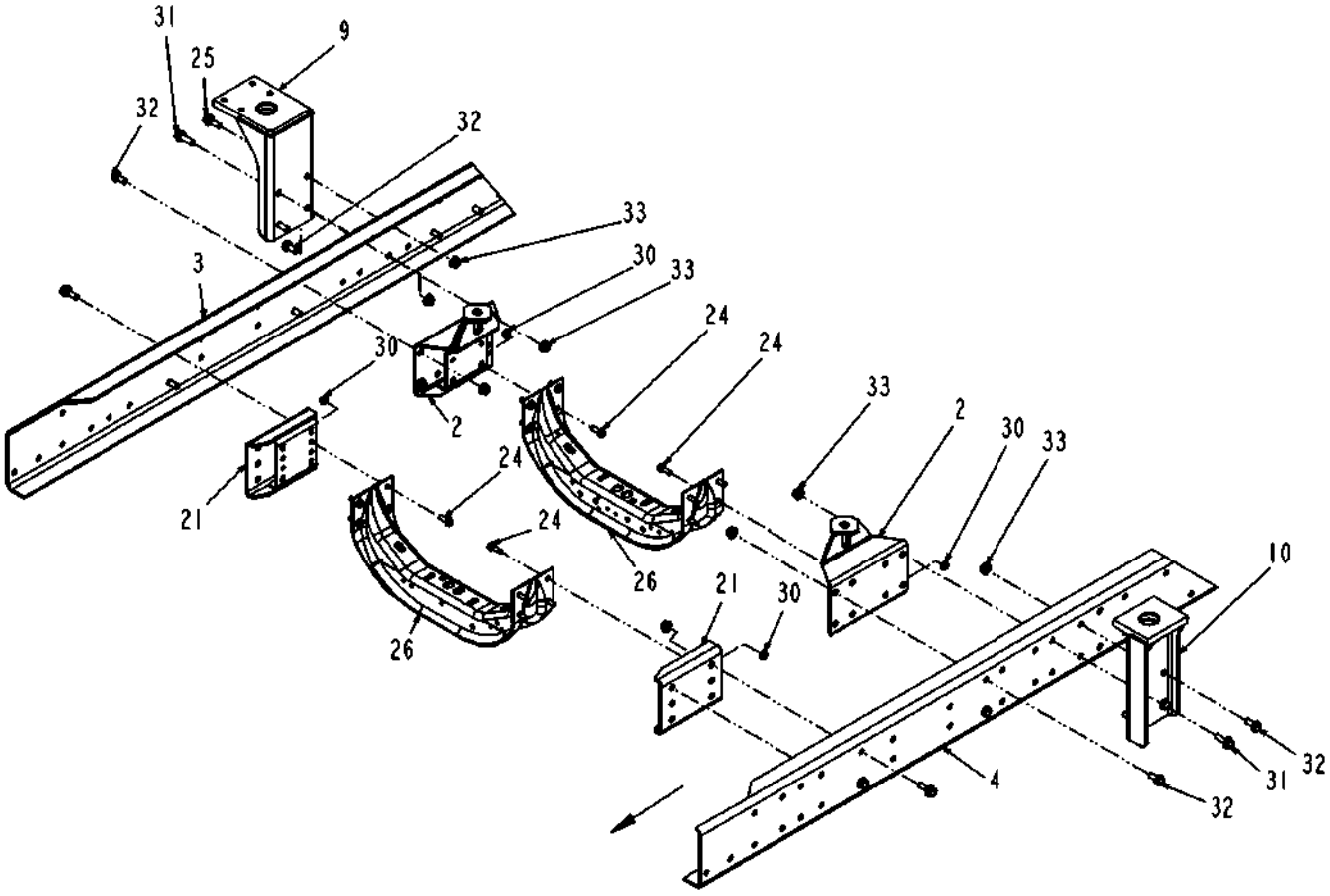

511370D1-02-R673-02.TIF

Copyright © 2008 AGCO Corporation

ASSEMBLY-FRAME,7X50,NO OSC.

ITEM	PART #	QTY	DESCRIPTION	COMMENTS
2	WR124252	2	BRKT-WLDMT,MTG,ENGINE,REAR	
3	WR124255	1	RAIL WLMDT-FRAME,RH	
4	WR124256	1	RAIL WLDMT-FRAME,LH	
9	WR124548	1	WLDMT-BRKT,MOUNT,CAB,FRONT,RH	
10	WR124551	1	MOUNT CAB LH FRT	
21	AG327879	2	CHANNEL WLDMT-XMBR MOUNT	
24	AG514771	40	BOLT 0.50-20 X 1.50 G8 HX FLG	
25	AG517556	13	BOLT 0.62-18 X 1.75 G8 HX FLG	
26	AG518361	2	CROSSMEMBER	
30	AG606489	40	NUT HX FLG 0.50-20NF	
31	AG609311	23	BOLT 0.62-18 X 2.00 G8 HX FLG	
32	AG609312	28	BOLT 0.62-18 X 1.50 G8 HXFLG	
33	AG609313	64	NUT HX FLG 0.62-18NF	

Copyright © 2008 AGCO Corporation

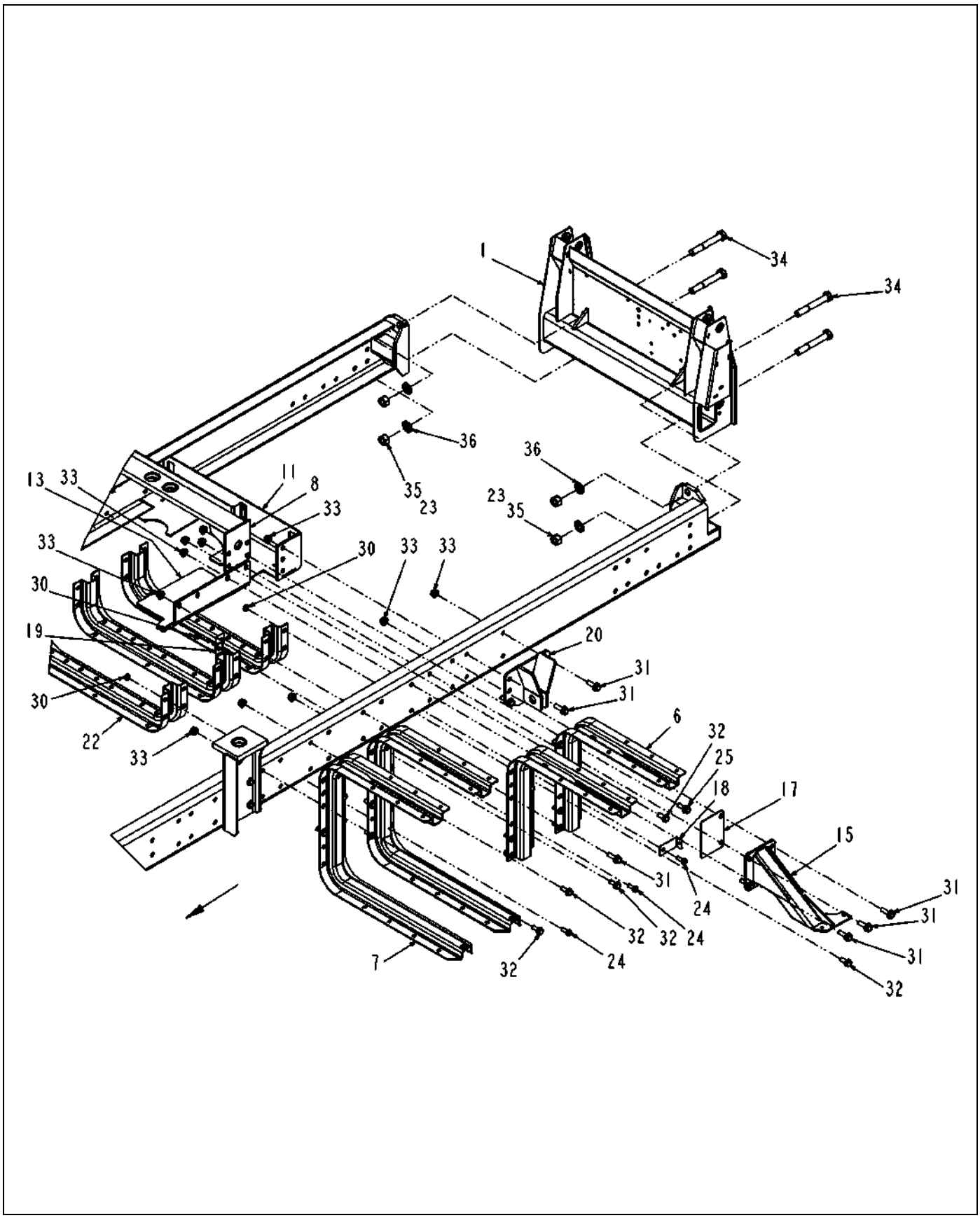

511370D1-02-R673-03.TIF

Copyright © 2008 AGCO Corporation

ASSEMBLY-FRAME,7X50,NO OSC.

ITEM	PART #	QTY	DESCRIPTION	COMMENTS
1	WR124143	1	CROSSMEMBER,WLDMT,FRAME,REAR	
6	WR124291	2	BRKT WLDMT-PLTFRM,DECK	
7	WR124293	2	BRKT WLDMT-PLTFRM,TANK,FUEL,LH	
8	WR124316	1	MOUNT-REAR CAB	
11	WR124994	1	WLDMT-CROSSMEMBER,MIDDLE	
13	WR125195	1	PLATE-SUPPORT,TANK,LH	
15	WR126885	1	SUPPORT WLDMT-PUMP,PRODUCT	
17	WR127665	1	PLATE-SPACER,SUPPORT,PROD PUMP	
18	WR129425	1	BRKT-MTG,90D,TWIN CLAMP,TUBE	
19	WR129426	1	BRKT-MTG,Z,TWIN CLAMP,TUBE	
20	AG327819	2	BRACKET WLDMT-SYSTEM MOUNT	
22	AG407964	3	CROSSMEMBER	
23	AG512885	AR	LOCTITE ADHESIVE SEALANT BLUE	
24	AG514771	40	BOLT 0.50-20 X 1.50 G8 HX FLG	
25	AG517556	13	BOLT 0.62-18 X 1.75 G8 HX FLG	
30	AG606489	40	NUT HX FLG 0.50-20NF	
31	AG609311	23	BOLT 0.62-18 X 2.00 G8 HX FLG	
32	AG609312	28	BOLT 0.62-18 X 1.50 G8 HXFLG	
33	AG609313	64	NUT HX FLG 0.62-18NF	
34	401074X1	4	BOLT-1.00-8NCX7.00,G8,PHOS,HHD	
35	401075X1	4	NUT-1.00-8NC,GR8,PHOS	
36	401076X1	4	WASHER-1.00,HARD,PHOS	

Copyright © 2008 AGCO Corporation

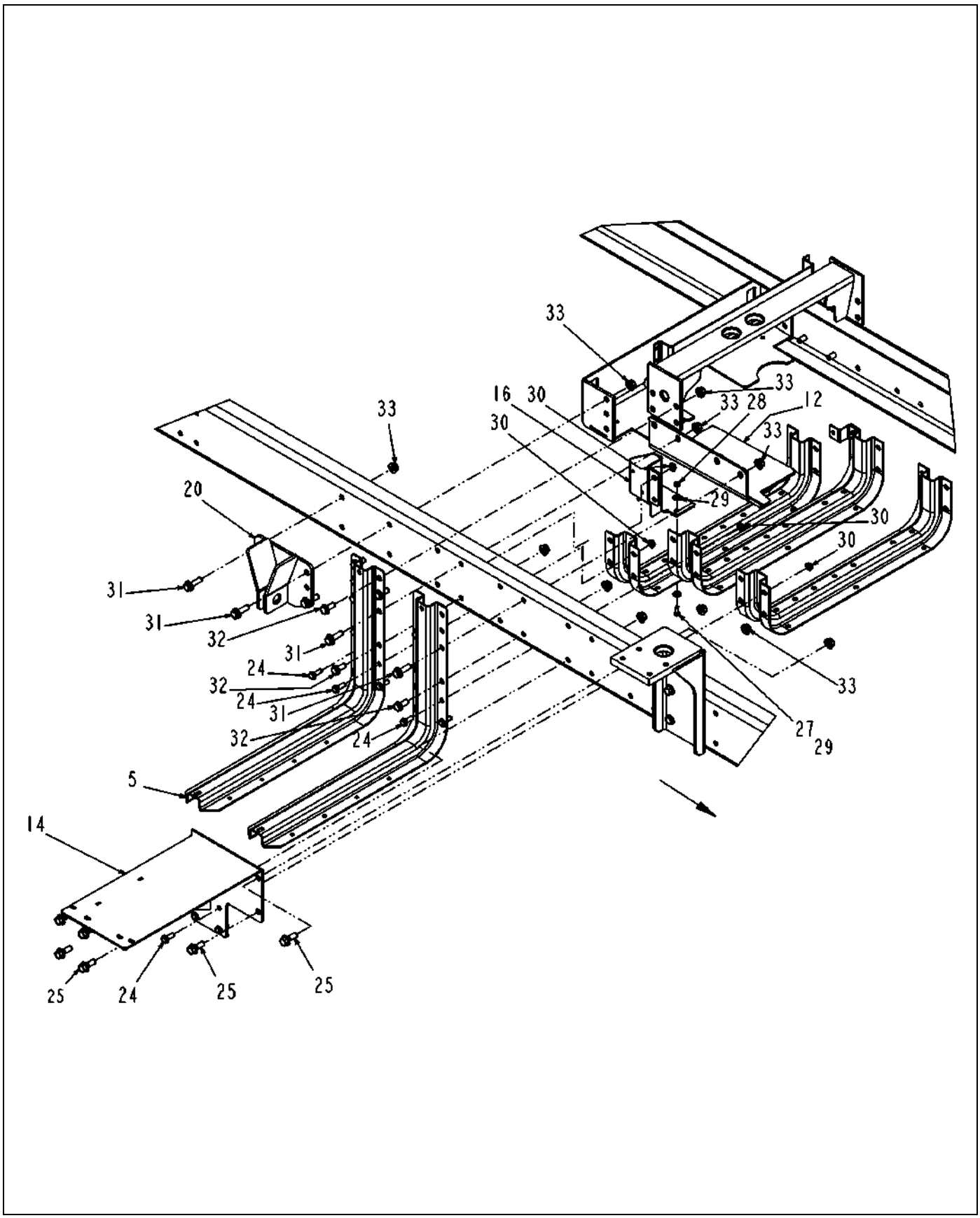

511370D1-02-R673-04.TIF

Copyright © 2008 AGCO Corporation

ASSEMBLY-FRAME,7X50,NO OSC.

ITEM	PART #	QTY	DESCRIPTION	COMMENTS
5	WR124290	2	BRKT WLDMT-PLTFRM,WATER TANK	
12	WR125194	1	PLATE-SUPPORT,TANK,RH	
14	WR126006	1	WLDMT-AIR CLEANER	
16	WR127157	1	BRACKET-RADAR	
20	AG327819	2	BRACKET WLDMT-SYSTEM MOUNT	
24	AG514771	40	BOLT 0.50-20 X 1.50 G8 HX FLG	
25	AG517556	13	BOLT 0.62-18 X 1.75 G8 HX FLG	
27	AG550175	1	BOLT 0.37-16NCX 1.00 G5 ZN HHD	
28	AG550825	1	NUT 0.37-16NC HEX ZN REG	
29	AG551007	2	WASHER 0.37 FL ZN REG TYPE-B	
30	AG606489	40	NUT HX FLG 0.50-20NF	
31	AG609311	23	BOLT 0.62-18 X 2.00 G8 HX FLG	
32	AG609312	28	BOLT 0.62-18 X 1.50 G8 HXFLG	
33	AG609313	64	NUT HX FLG 0.62-18NF	

Copyright © 2008 AGCO Corporation

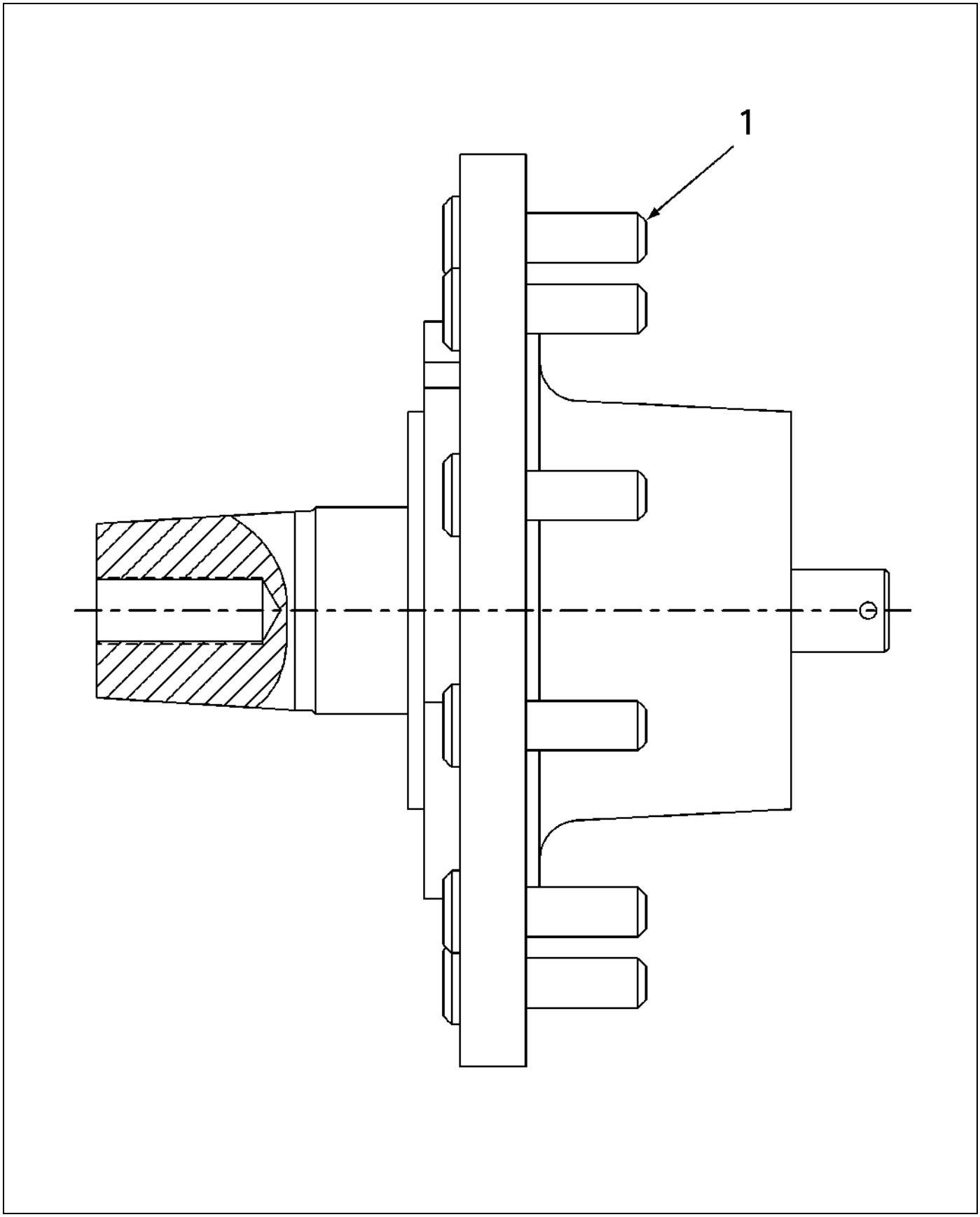

512002D1-01-R217-.TIF

Copyright © 2008 AGCO Corporation

HUB/SPINDLE-10 STUD,11.25 B.C.

ITEM	PART #	QTY	DESCRIPTION	COMMENTS
REF	AG333302	1	CONE,BEARING	
REF	AG720158	1	CUP INNER TIMKEN	
REF	74253787	1	CONE,BEARING	
REF	AG115052	1	SEAL	
REF	AG115054	1	BEARING CUP	
1	AG332233	10	STUD	
	FOOTNOTE		INNER CONE BEARING IS 74253787	
	FOOTNOTE		OUTER CONE BEARING IS AG333302	
	FOOTNOTE		OUTER BEARING CUP IS AG720158	
	FOOTNOTE		INNER BEARING CUP IS AG115054	

Copyright © 2008 AGCO Corporation

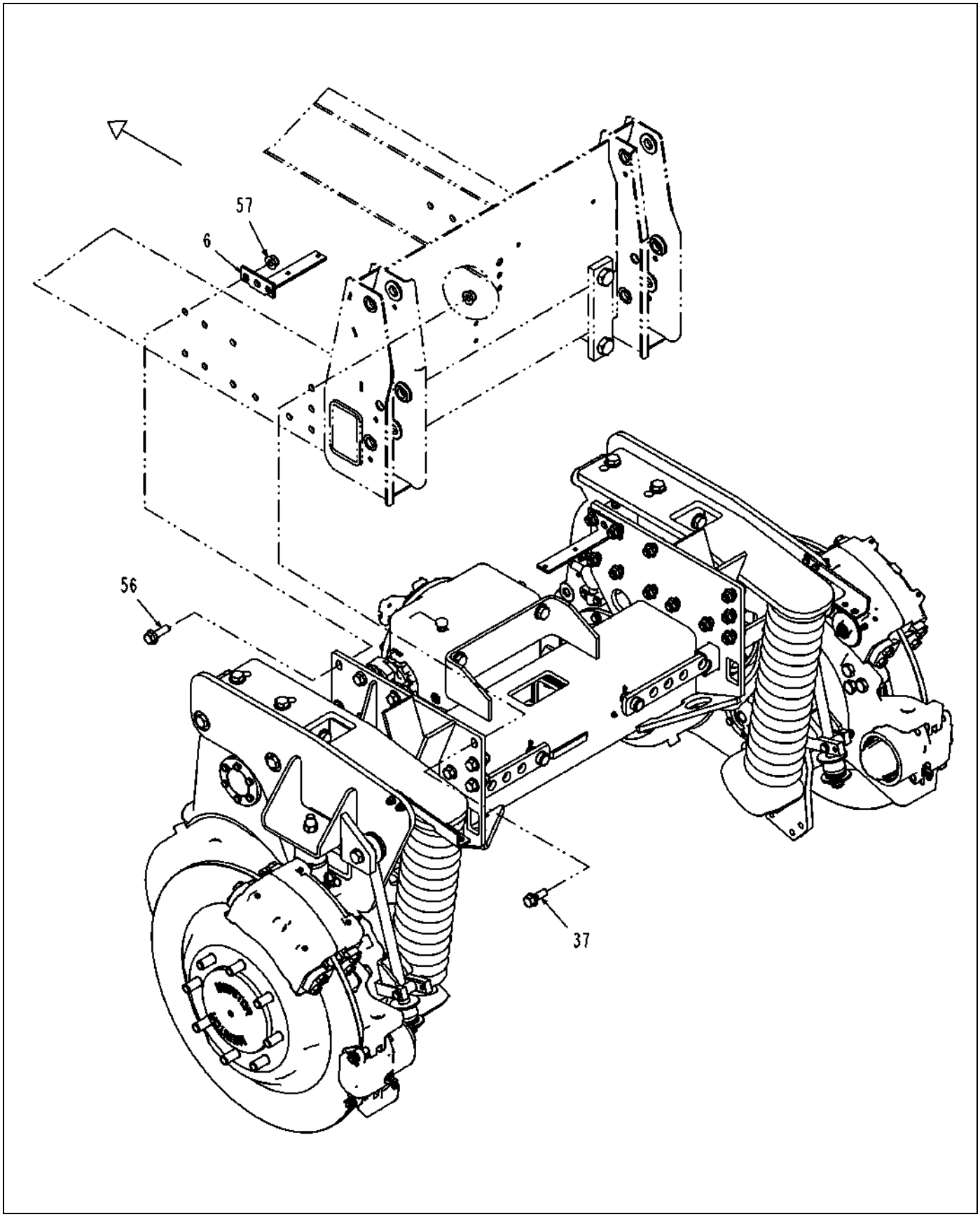

519461D1-03-T369-01.TIF

Copyright © 2008 AGCO Corporation

AXLE-REAR,SPRING,71 IN

ITEM	PART #	QTY	DESCRIPTION	COMMENTS
6	AG121826	2	BRACKET-HOSE SUPPORT	
7	WR122909	2	SPRING-REAR,HEAVY	
30	WR135714	-	ADJUSTER-WEAR PAD,PUCK	[A]
32	AG511099	AR	GREASE-MULTI PURPOSE LITH.	
33	AG512885	AR	LOCTITE ADHESIVE SEALANT BLUE	
36	AG516064	AR	ANTI SEIZE	
37	AG517556	18	BOLT 0.62-18 X 1.75 G8 HX FLG	
56	AG609311	4	BOLT 0.62-18 X 2.00 G8 HX FLG	
57	AG609313	22	NUT HX FLG 0.62-18NF	
	FOOTNOTE [A]		THE TOOL TO ADJUST THIS PUCK IS WR129714.	

Copyright © 2008 AGCO Corporation

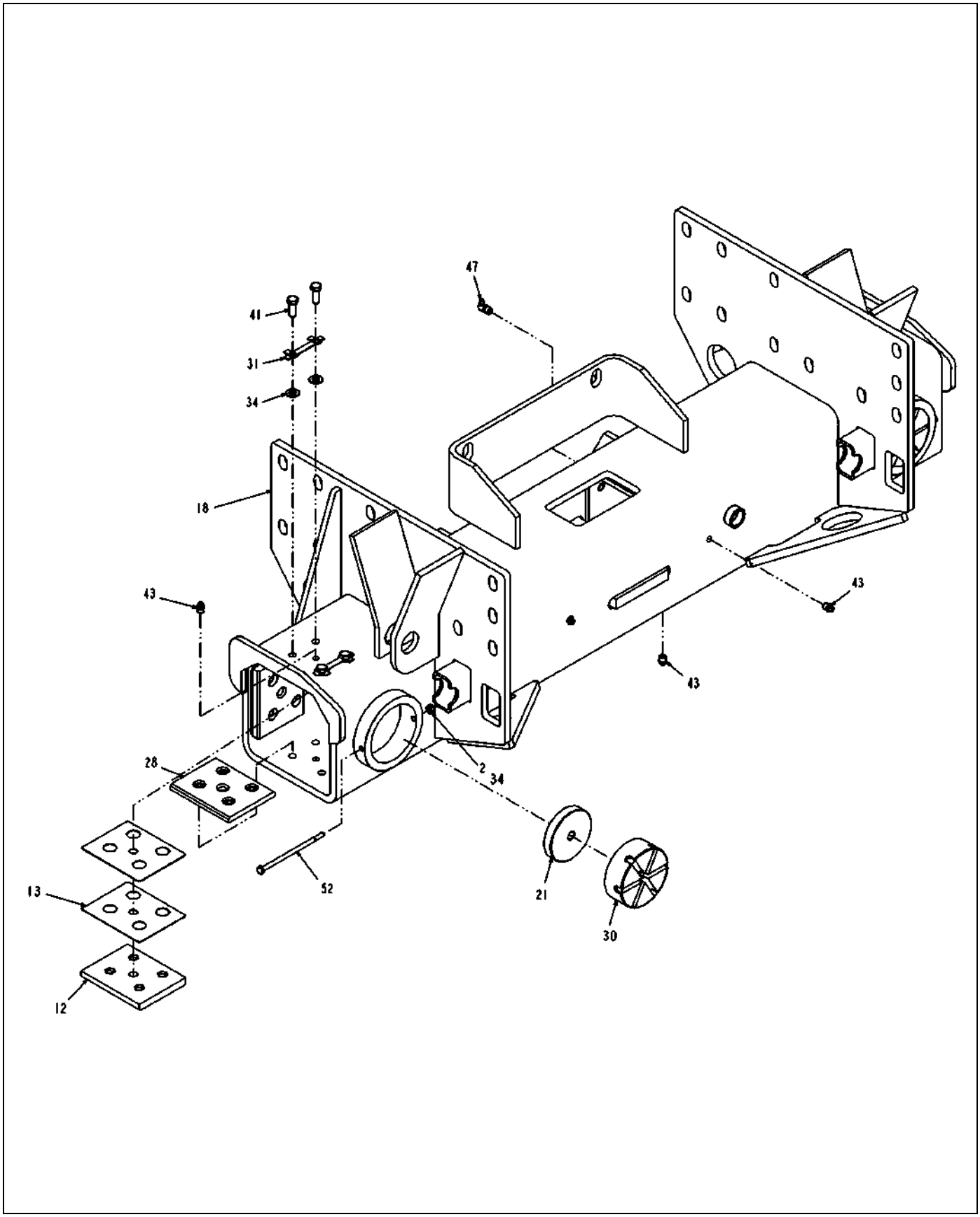

519461D1-03-T369-02.TIF

Copyright © 2008 AGCO Corporation

AXLE-REAR,SPRING,71 IN

ITEM	PART #	QTY	DESCRIPTION	COMMENTS
2	WR11494	2	NUT-CENTERLOCK, 1/4	
12	WR125577	4	PAD-WEAR,MID SIZE	
13	WR125580	AR	SHIM-WEAR PAD,UPPER	
18	WR128007	1	AXLE WLDMT-REAR,NARROW	
21	WR128335	2	PAD-WEAR,SLIDERITE	
28	WR133195	2	PAD-WEAR,8X8 BOTTOM	
31	AG233052	12	LOCK STRAP	
34	AG514559	24	WASHER 0.37 FL ZN SAE TYP-A G8	
41	AG519184	24	BOLT 0.37-24NFX 1.00 G5 ZN HHD	
43	AG550280	10	FITTING LUB.12-27NPTFX0.68	
47	AG559083	2	FITTING LUB 90D 0.125 NPTF	
52	AG563104	2	BOLT 0.25-20NCX 5.25 G5 ZN HHD	

Copyright © 2008 AGCO Corporation

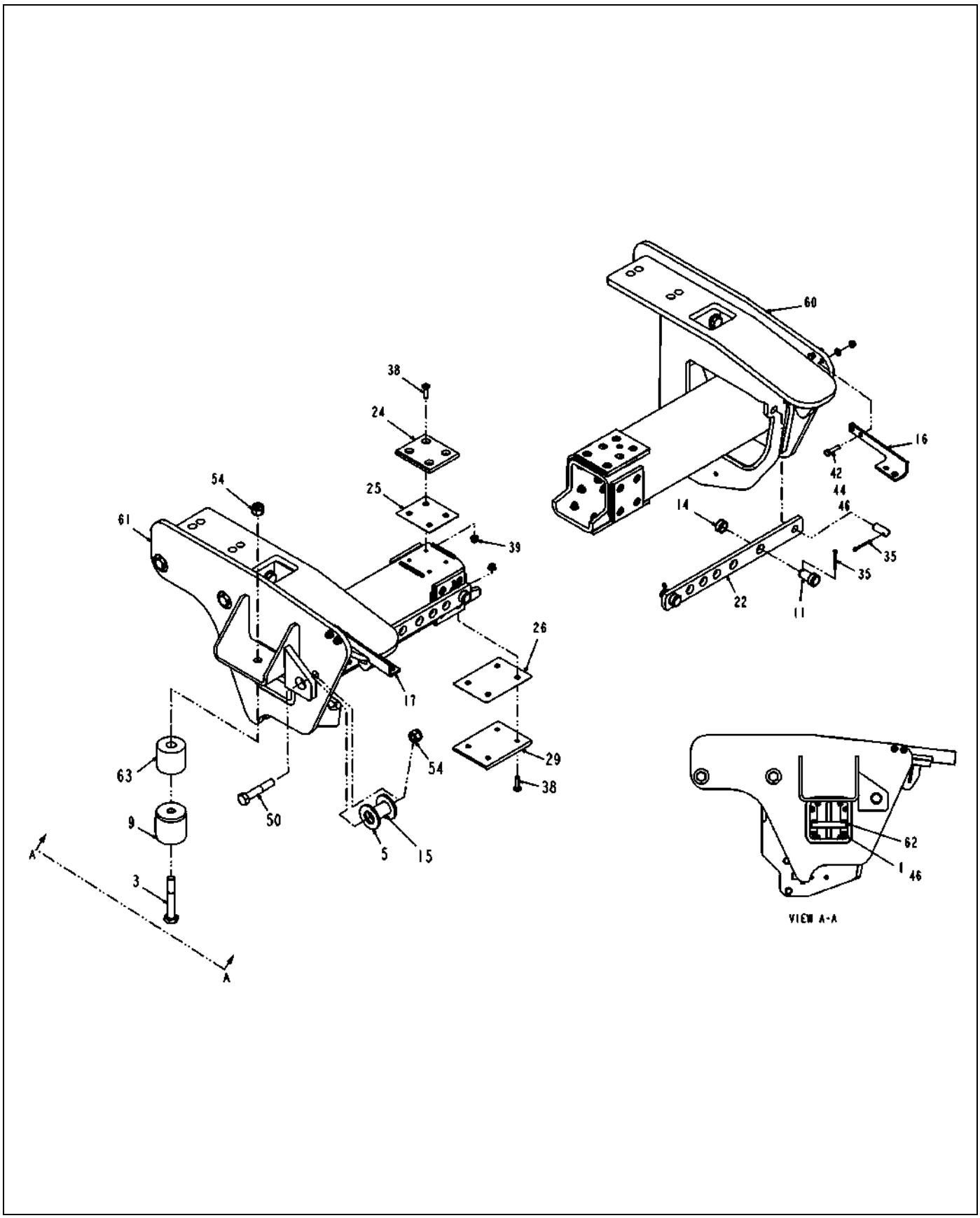

519461D1-03-T369-03.TIF

Copyright © 2008 AGCO Corporation

AXLE-REAR,SPRING,71 IN

ITEM	PART #	QTY	DESCRIPTION	COMMENTS
1	WR10185	8	SCREW-CAP HEX 3/8 NC X 2	
3	WR51770	2	SCREW-CAP HEX 3/4 NC X 5	
5	AG109948	4	SPACER-EYEBOLT HANGER	
9	WR123067	2	BUMPER-LIMIT,SUSPENSION	
11	WR125526	4	PIN-TRACK ADJUST	
14	WR125609	4	BUSHING-TRACK ADJUST	
15	WR125758	2	SPACER-MTG,EYEBOLT HANGER	
16	WR126678	1	BRACKET-BRAKE LINES KEEPER	
17	WR126679	1	BRACKET-BRAKE LINES KEEPER	
22	WR128359	2	PLATE-STOP,TRACK ADJ,NRW	
24	WR129646	6	PAD-WEAR,6X6,REAR,SLIDERITE	
25	WR129685	AR	SHIM-WEAR PAD,4.50 IN X5.00 IN	
26	WR129686	AR	SHIM-WEAR PAD,5.00 IN X6.88 IN	
29	WR134202	2	PAD-WEAR,SLIDERITE,5.00X6.75 IN	
35	AG515352	6	PIN COTTER 0.18X2.00 SS	
38	AG518505	32	SCREW .38-24 NF X 1.50 FHCS	
39	AG518511	32	NUT FLANGE .38-24 UNF	
42	AG522905	4	BOLT .37-16NCX 1.50 G5 ZN FTD	
44	AG550981	4	WASHER 0.37 FL ZN NAR TYPE-B	
46	AG557676	12	NUT 0.37-16NC HEX ZN C-LK	
50	AG561593	2	BOLT 0.75-10NCX 4.00 G5 ZN HHD	
54	AG603864	4	NUT 0.75-10NC HEX ZN REG NY	
60	519462D1	1	WLDMT-6X6,RH,REAR,71 IN	
61	519463D1	1	WLDMT-6X6,LH,REAR,71 IN	
62	519491D1	2	WLDMT-SLIDE,CYLINDER ATTACH	
63	519493D1	2	BLOCK-BUMPER,SPACER	

Copyright © 2008 AGCO Corporation

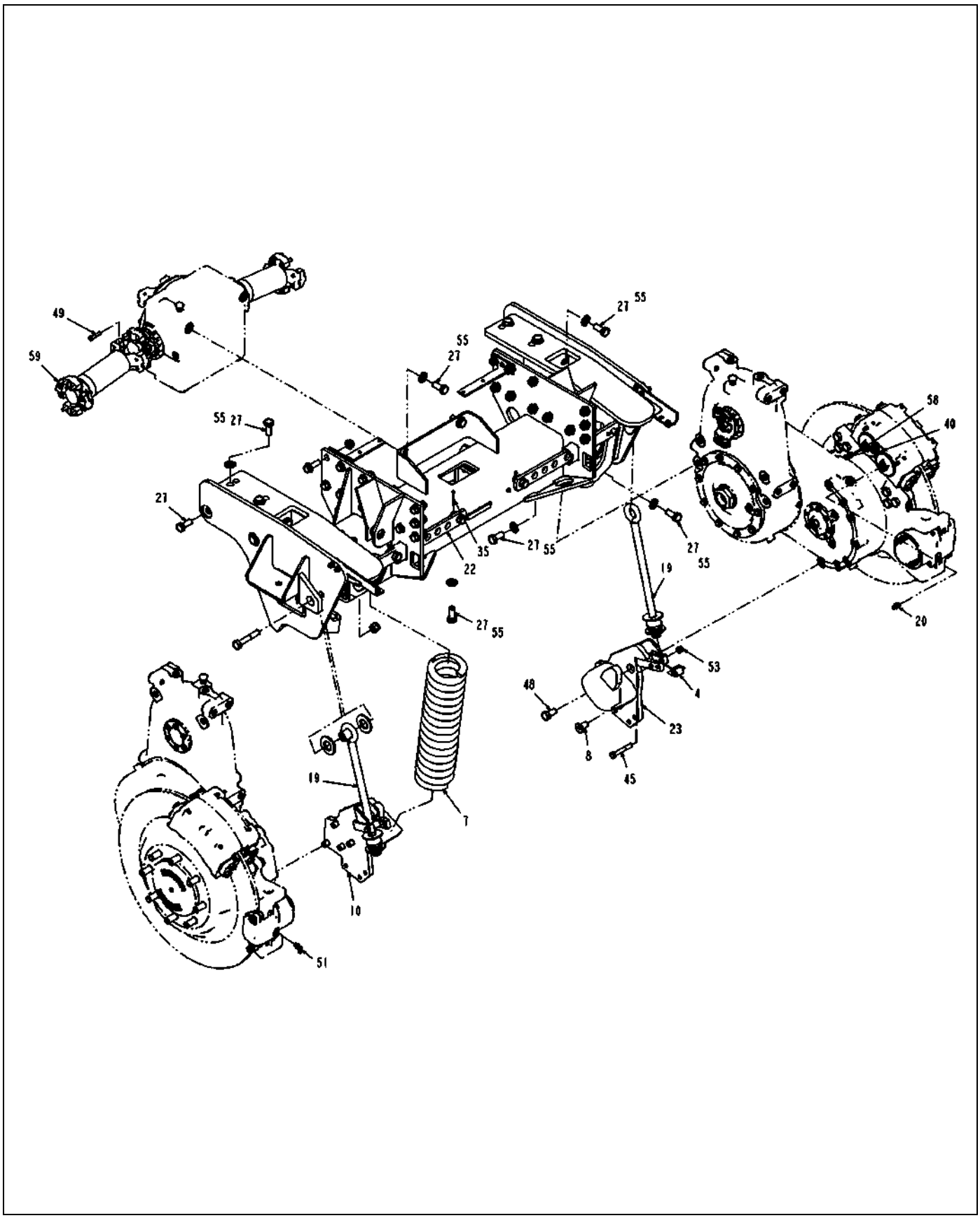

519461D1-03-T369-04.TIF

Copyright © 2008 AGCO Corporation

AXLE-REAR,SPRING,71 IN

ITEM	PART #	QTY	DESCRIPTION	COMMENTS
1	WR10185	8	SCREW-CAP HEX 3/8 NC X 2	
4	AG109902	2	SPACER-MTG,EYEBOLT STOP	
8	WR123065	2	FSHCS-.75X1.50 ALLOY	
10	WR124021	1	BRACKET-WLDMT,SPRING PIVOT,LH	
19	WR128307	2	BOLT ASM-EYE	SEE PAGE 4-18
20	WR128326	2	ADAPTER,-4JICX-5MOR,STR	
22	WR128359	2	PLATE-STOP,TRACK ADJ,NRW	
23	WR128659	1	BRACKET-WLDMT,SPRING PIVOT,RH	
27	WR129814	24	BOLT .75-10NCX 1.75 G8 ZN HHD	
35	AG515352	6	PIN COTTER 0.18X2.00 SS	
40	AG519113	2	TUBE END NIPPLE -4	
45	AG556149	2	BOLT 0.50-13NCX 3.50 G5 ZN HHD	
48	AG559938	8	BOLT 0.75-10NCX 1.50 G5 ZN HHD	
49	AG561119	32	BOLT 0.37-24NFX 1.75 G8 ZN HHD	
51	AG561677	2	ELBOW 90D 0.25MO-R X 0.25MJIC	SEE PAGE 6-106
53	AG601152	2	NUT 0.50-13NC HEX ZN REG NY	
55	AG604203	20	WASHER 0.75 FL ZN SAE TYP-A G8	
58	401704X1	2	ELBOW 90D -4MJX-5MOR	
59	512336D1	2	DRIVE SHAFT W/U JOINT CAPS,NRW	SEE PAGE 4-19

Copyright © 2008 AGCO Corporation

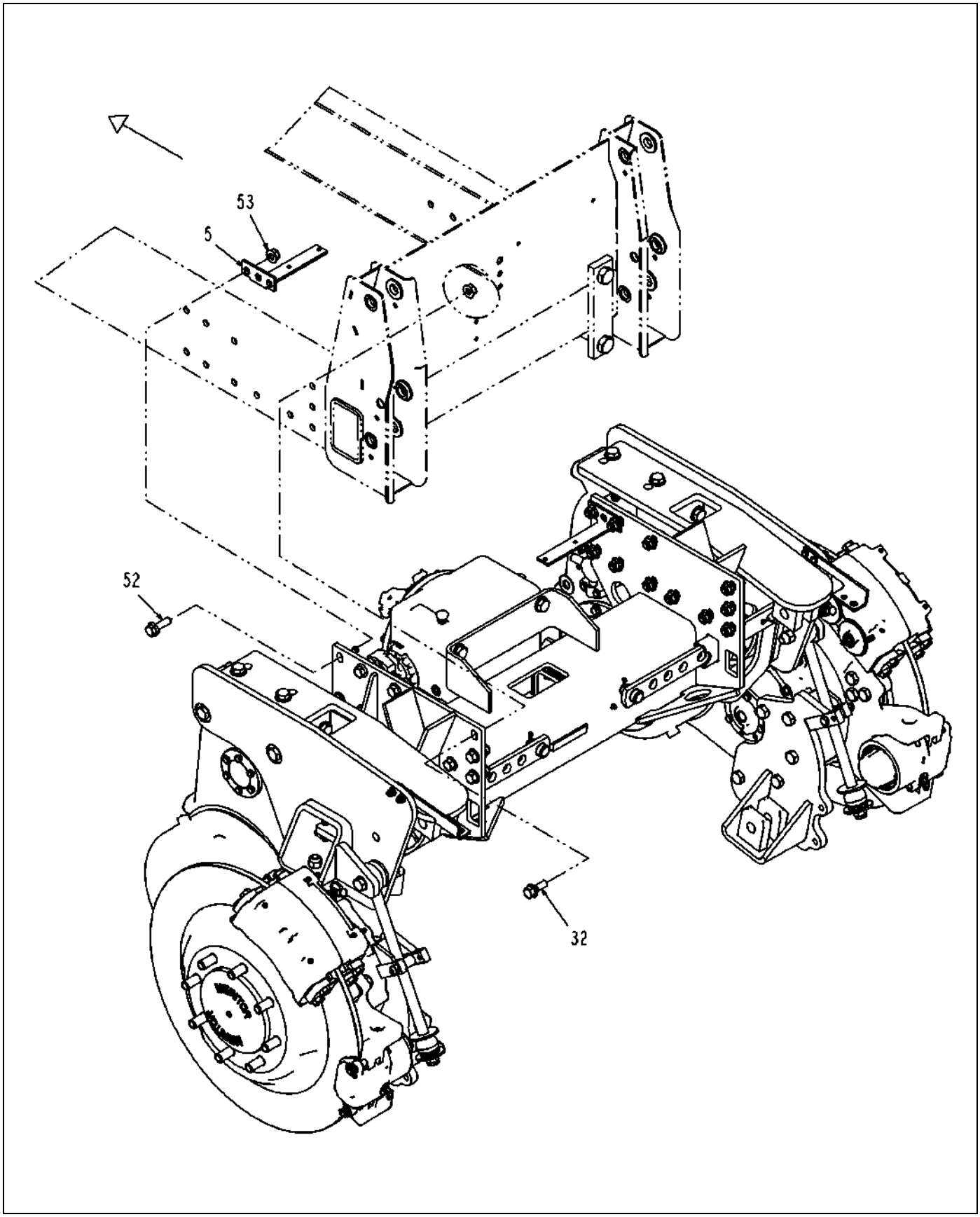

520185D1-03-T369-01.TIF

Copyright © 2008 AGCO Corporation

AXLE-REAR,HYDRAULIC,71 IN

ITEM	PART #	QTY	DESCRIPTION	COMMENTS
5	AG121826	2	BRACKET-HOSE SUPPORT	
25	WR135714	-	ADJUSTER-WEAR PAD,PUCK	[A]
27	AG511099	AR	GREASE-MULTI PURPOSE LITH.	
28	AG512885	AR	LOCTITE ADHESIVE SEALANT BLUE	
31	AG516064	AR	ANTI SEIZE	
32	AG517556	18	BOLT 0.62-18 X 1.75 G8 HX FLG	
52	AG609311	4	BOLT 0.62-18 X 2.00 G8 HX FLG	
53	AG609313	22	NUT HX FLG 0.62-18NF	
	FOOTNOTE [A]		THE TOOL TO ADJUST THIS PUCK IS WR129714.	

Copyright © 2008 AGCO Corporation

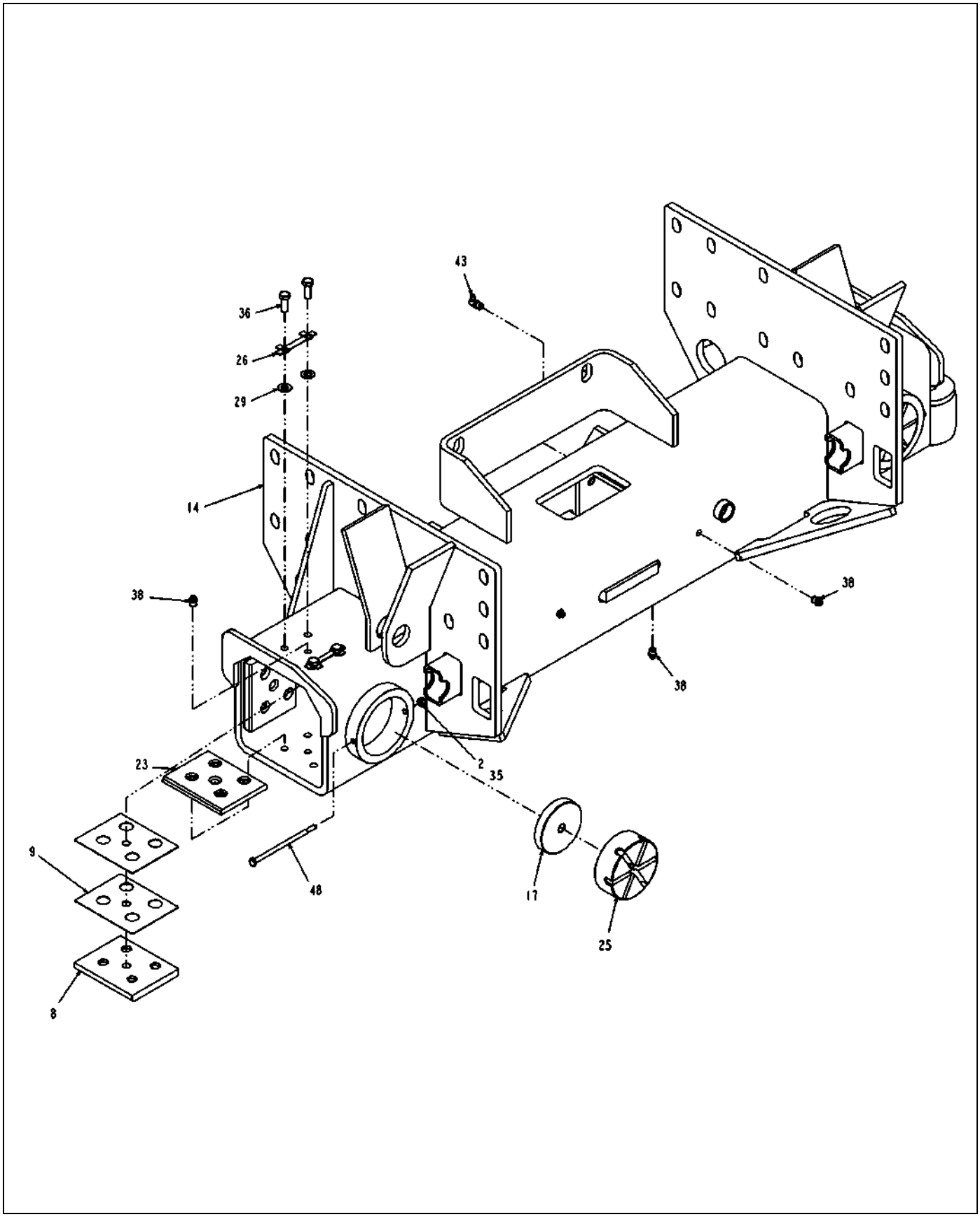

520185D1-03-T369-02.TIF

Copyright © 2008 AGCO Corporation

AXLE-REAR,HYDRAULIC,71 IN

ITEM	PART #	QTY	DESCRIPTION	COMMENTS
2	WR11494	2	NUT-CENTERLOCK, 1/4	
8	WR125577	4	PAD-WEAR,MID SIZE	
9	WR125580	AR	SHIM-WEAR PAD,UPPER	
14	WR128007	1	AXLE WLDMT-REAR,NARROW	
17	WR128335	2	PAD-WEAR,SLIDERITE	
23	WR133195	2	PAD-WEAR,8X8 BOTTOM	
26	AG233052	12	LOCK STRAP	
29	AG514559	24	WASHER 0.37 FL ZN SAE TYP-A G8	
35	AG519113	2	TUBE END NIPPLE -4	
36	AG519184	24	BOLT 0.37-24NFX 1.00 G5 ZN HHD	
38	AG550280	10	FITTING LUB.12-27NPTFX0.68	
43	AG559083	2	FITTING LUB 90D 0.125 NPTF	
48	AG563104	2	BOLT 0.25-20NCX 5.25 G5 ZN HHD	

Copyright © 2008 AGCO Corporation

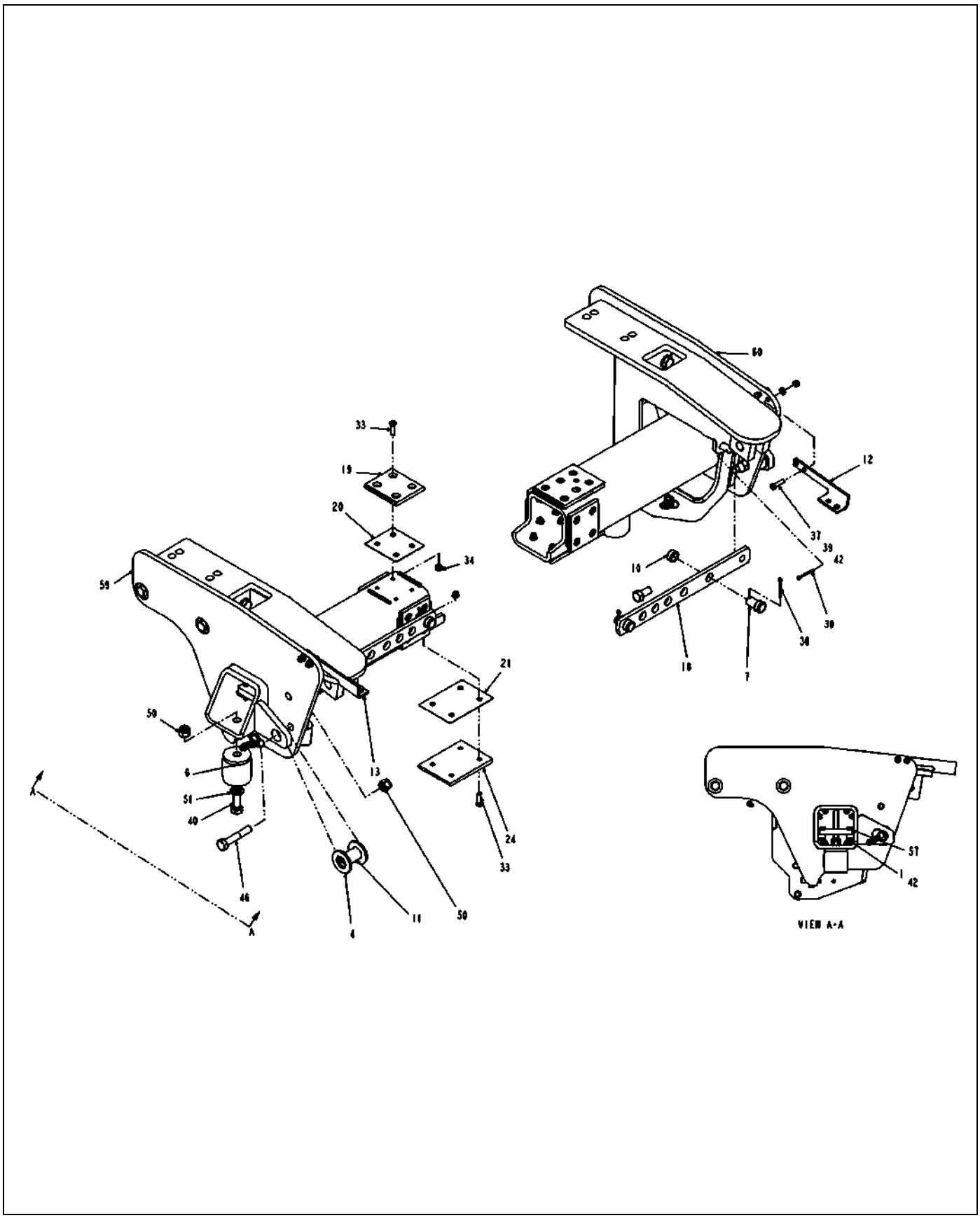

520185D1-03-T369-03.TIF

Copyright © 2008 AGCO Corporation

AXLE-REAR,HYDRAULIC,71 IN

ITEM	PART #	QTY	DESCRIPTION	COMMENTS
1	WR10185	8	SCREW-CAP HEX 3/8 NC X 2	
4	AG109948	4	SPACER-EYEBOLT HANGER	
6	WR123067	2	BUMPER-LIMIT,SUSPENSION	
7	WR125526	4	PIN-TRACK ADJUST	
10	WR125609	4	BUSHING-TRACK ADJUST	
11	WR125758	2	SPACER-MTG,EYEBOLT HANGER	
12	WR126678	1	BRACKET-BRAKE LINES KEEPER	
13	WR126679	1	BRACKET-BRAKE LINES KEEPER	
18	WR128359	2	PLATE-STOP,TRACK ADJ,NRW	
19	WR129646	6	PAD-WEAR,6X6,REAR,SLIDERITE	
20	WR129685	AR	SHIM-WEAR PAD,4.50 IN X5.00 IN	
21	WR129686	AR	SHIM-WEAR PAD,5.00 IN X6.88 IN	
24	WR134202	2	PAD-WEAR,SLIDERITE,5.00X6.75 IN	
30	AG515352	6	PIN COTTER 0.18X2.00 SS	
33	AG518505	32	SCREW .38-24 NF X 1.50 FHCS	
34	AG518511	32	NUT FLANGE .38-24 UNF	
37	AG522905	4	BOLT .37-16NCX 1.50 G5 ZN FTD	
39	AG550981	4	WASHER 0.37 FL ZN NAR TYPE-B	
40	AG554537	2	BOLT 0.75-10NCX 2.00 G5 ZN HHD	
42	AG557676	12	NUT 0.37-16NC HEX ZN C-LK	
46	AG561593	2	BOLT 0.75-10NCX 4.00 G5 ZN HHD	
50	AG603864	4	NUT 0.75-10NC HEX ZN REG NY	
51	AG604203	22	WASHER 0.75 FL ZN SAE TYP-A G8	
57	519491D1	2	WLDMT-SLIDE,CYLINDER ATTACH	
59	520186D1	1	WLDMT-6X6,LH,REAR,HYD,71 IN	
60	520187D1	1	WLDMT-6X6,RH,REAR,HYD,71 IN	

Copyright © 2008 AGCO Corporation

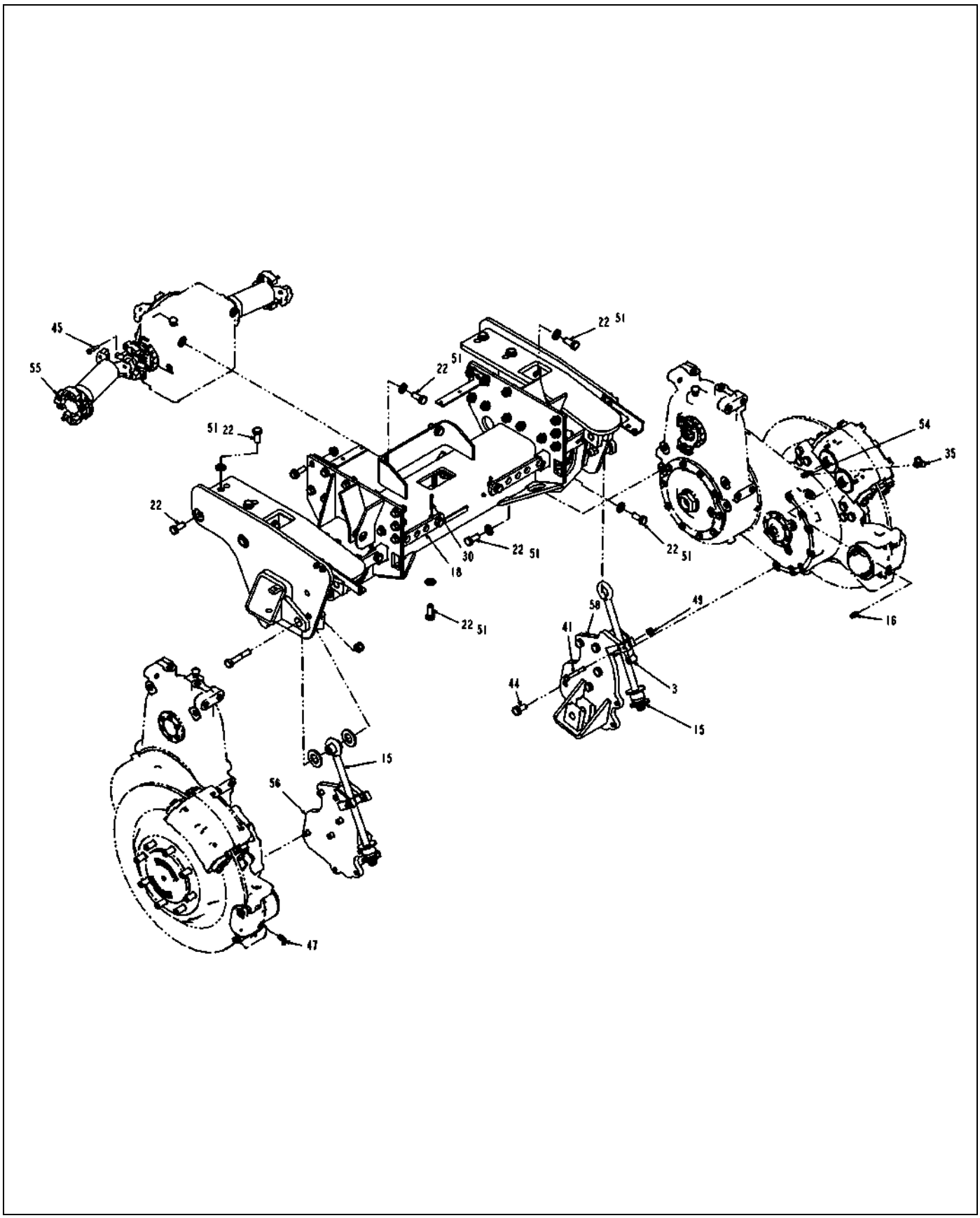

520185D1-03-T369-04.TIF

Copyright © 2008 AGCO Corporation

AXLE-REAR,HYDRAULIC,71 IN

ITEM	PART #	QTY	DESCRIPTION	COMMENTS
3	AG109902	2	SPACER-MTG,EYEBOLT STOP	
15	WR128307	2	BOLT ASM-EYE	SEE PAGE 4-18
16	WR128326	2	ADAPTER,-4JICX-5MOR,STR	
18	WR128359	2	PLATE-STOP,TRACK ADJ,NRW	
22	WR129814	24	BOLT .75-10NCX 1.75 G8 ZN HHD	
30	AG515352	6	PIN COTTER 0.18X2.00 SS	
35	AG519113	2	TUBE END NIPPLE -4	
41	AG556149	2	BOLT 0.50-13NCX 3.50 G5 ZN HHD	
44	AG559938	10	BOLT 0.75-10NCX 1.50 G5 ZN HHD	
45	AG561119	32	BOLT 0.37-24NFX 1.75 G8 ZN HHD	
47	AG561677	2	ELBOW 90D 0.25MO-R X 0.25MJIC	SEE PAGE 6-106
49	AG601152	2	NUT 0.50-13NC HEX ZN REG NY	
51	AG604203	22	WASHER 0.75 FL ZN SAE TYP-A G8	
54	401704X1	2	ELBOW 90D -4MJX-5MOR	
55	512336D1	2	DRIVE SHAFT W/U JOINT CAPS,NRW	SEE PAGE 4-19
56	519489D1	1	WLDMT-CYLINDER,SLIDE MOUNT,LH	
58	520008D1	1	WLDMT-CYLINDER,SLIDE MOUNT,RH	

Copyright © 2008 AGCO Corporation

FUEL TANK GROUP 5-1
FUEL TANK GROUP 5-2
TANK-POLY,65GL,LH 5-3

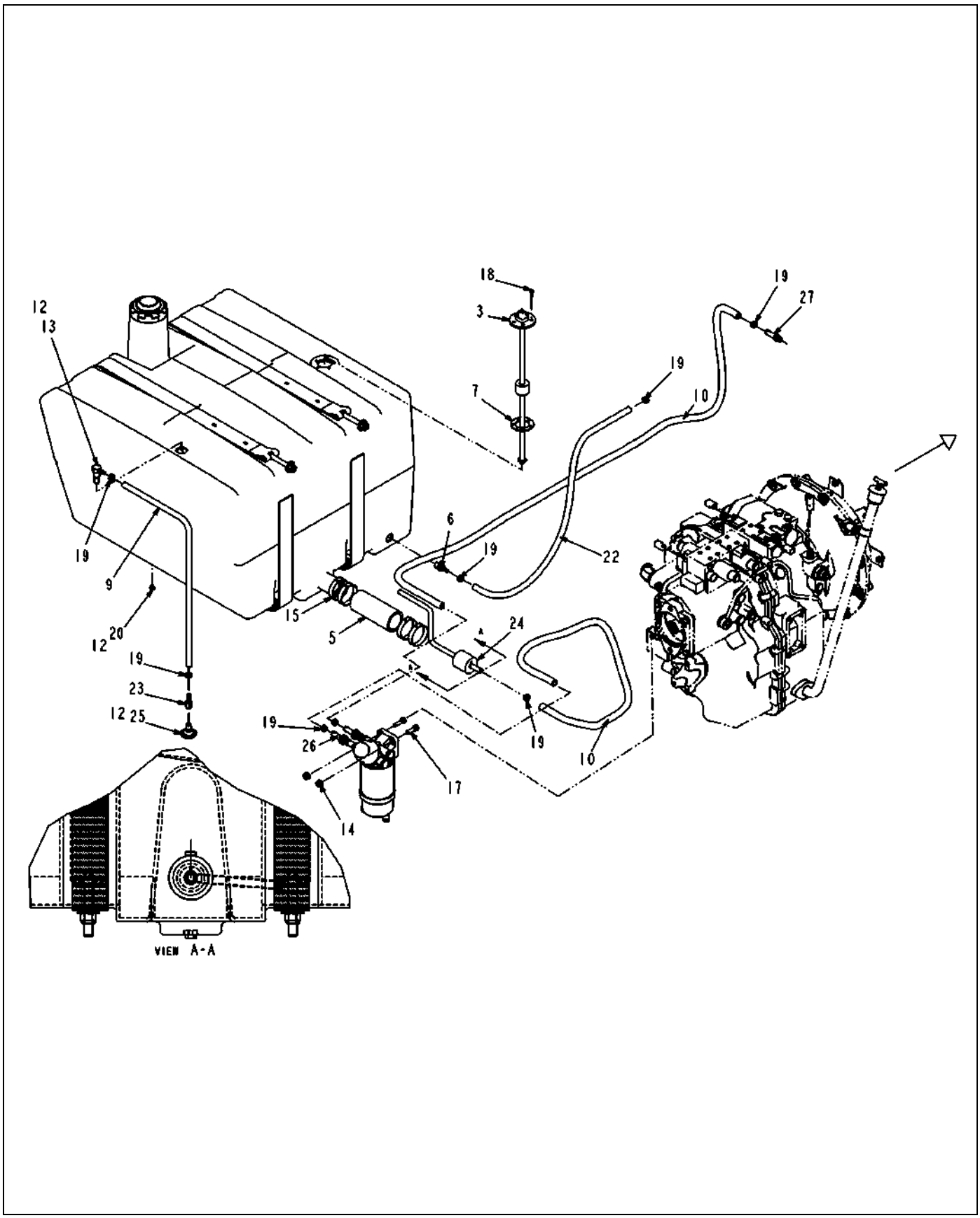

515743D1-04-T003-01.TIF

Copyright © 2008 AGCO Corporation

FUEL TANK GROUP

ITEM	PART #	QTY	DESCRIPTION	COMMENTS
3	AG122986	1	FUEL SENDER-TUBE TYPE	
5	AG522183	-	HOSE-FUEL,2.00 ID [BULK: 0.334 FT]	
6	WR128473	1	FITTING-3/8NPTF X -5 PUSHLOCK	
7	AG236753	1	GASKET-SENDER,FUEL	
9	AG510939	-	HOSE HYD 0.37 BULK 250PSI WP [BULK: 2.500 FT]	
10	AG510947	-	HOSE HYD 0.50 BULK 250PSI WP [BULK: 8.334 FT]	
12	AG513916	AR	LOCTITE HYD SEALANT BROWN	
13	AG522453	1	VENT-FUEL,90D,.50MNPTX.38HOSEB	
14	AG522562	2	NUT-.38-16,SS,SFLG,H	
15	AG523919	4	CLAMP-HIGH TORQUE,3.00	
17	AG550515	2	BOLT 0.37-16NCX 1.25 G5 ZN HHD	
18	AG553174	5	SCREW 10-32X 0.75 MA ZN SL RHD	
19	AG561025	8	CLAMP HOSE .218 TO .625 U5S	
20	AG561867	1	PLUG PIPE 0.25-18 EXT HEX HD	
22	6577822	-	HOSE BULK, 5/16 IN [BULK: 3 FT]	
23	401468X1	1	HOSEBARB - .25 FNPTF X .31	
24	513779D1	1	FUEL-PICKUP,.40ID IN,.24ID OUT	
25	515768D1	1	VENT-FUEL TANK	
26	523010D1	2	ADAPTOR - M16 MSTOR X 08HB	
27	523011D1	1	ADAPTOR - M12 MSTOR X 08HB	

Copyright © 2008 AGCO Corporation

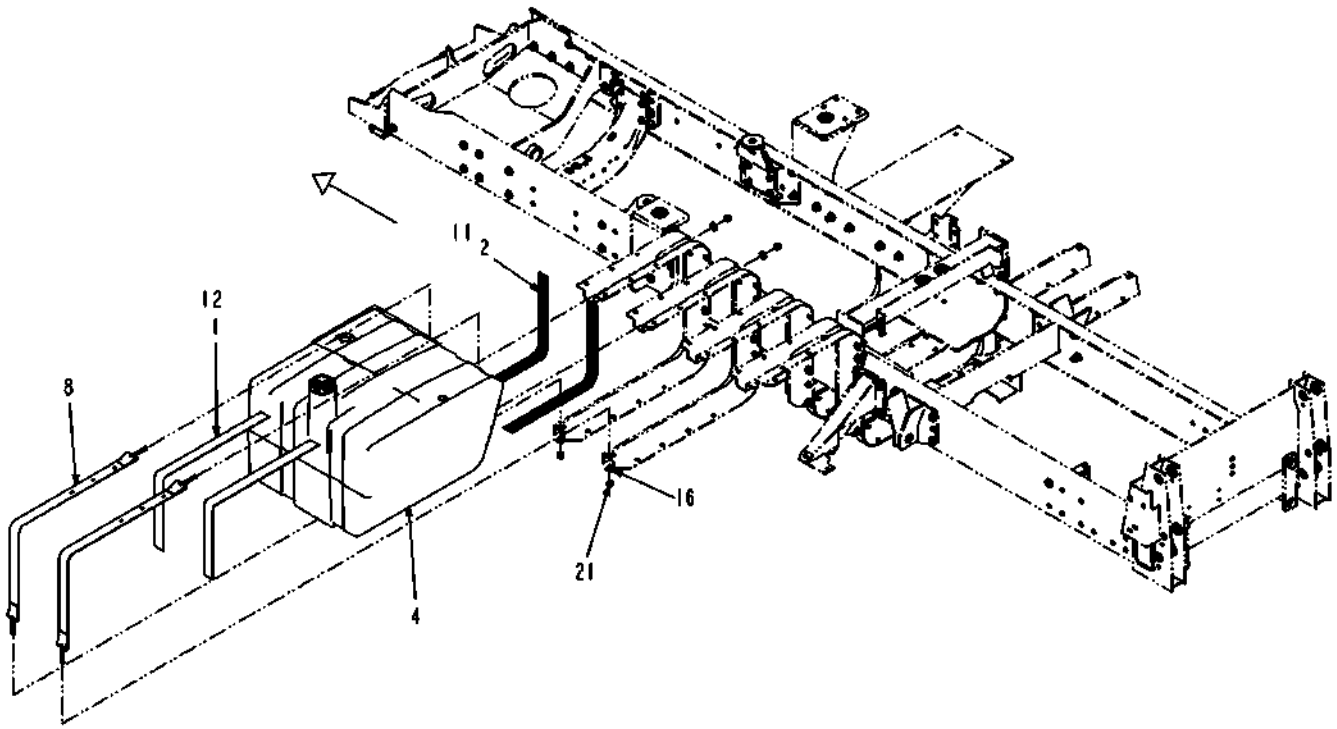

515743D1-04-T003-02.TIF

Copyright © 2008 AGCO Corporation

ITEM	PART #	QTY	DESCRIPTION	COMMENTS
1	AG109742	2	MATTING-RUBBER,2.00X44.50X.12	
2	AG109754	2	MATTING-RUBBER,2.00X46.00X.12	
4	WR128281	1	TANK-POLY,65GL,LH	SEE PAGE 5-3
8	AG425412	2	STRAP-MTG,FUEL TANK	
11	AG512346	AR	3M 1300 YELLOW ADHESIVE (GAL)	
12	AG513916	AR	LOCTITE HYD SEALANT BROWN	
16	AG550353	4	WASHER 0.50 FL ZN REG TYPE-B	
21	AG601152	4	NUT 0.50-13NC HEX ZN REG NY	

Copyright © 2008 AGCO Corporation

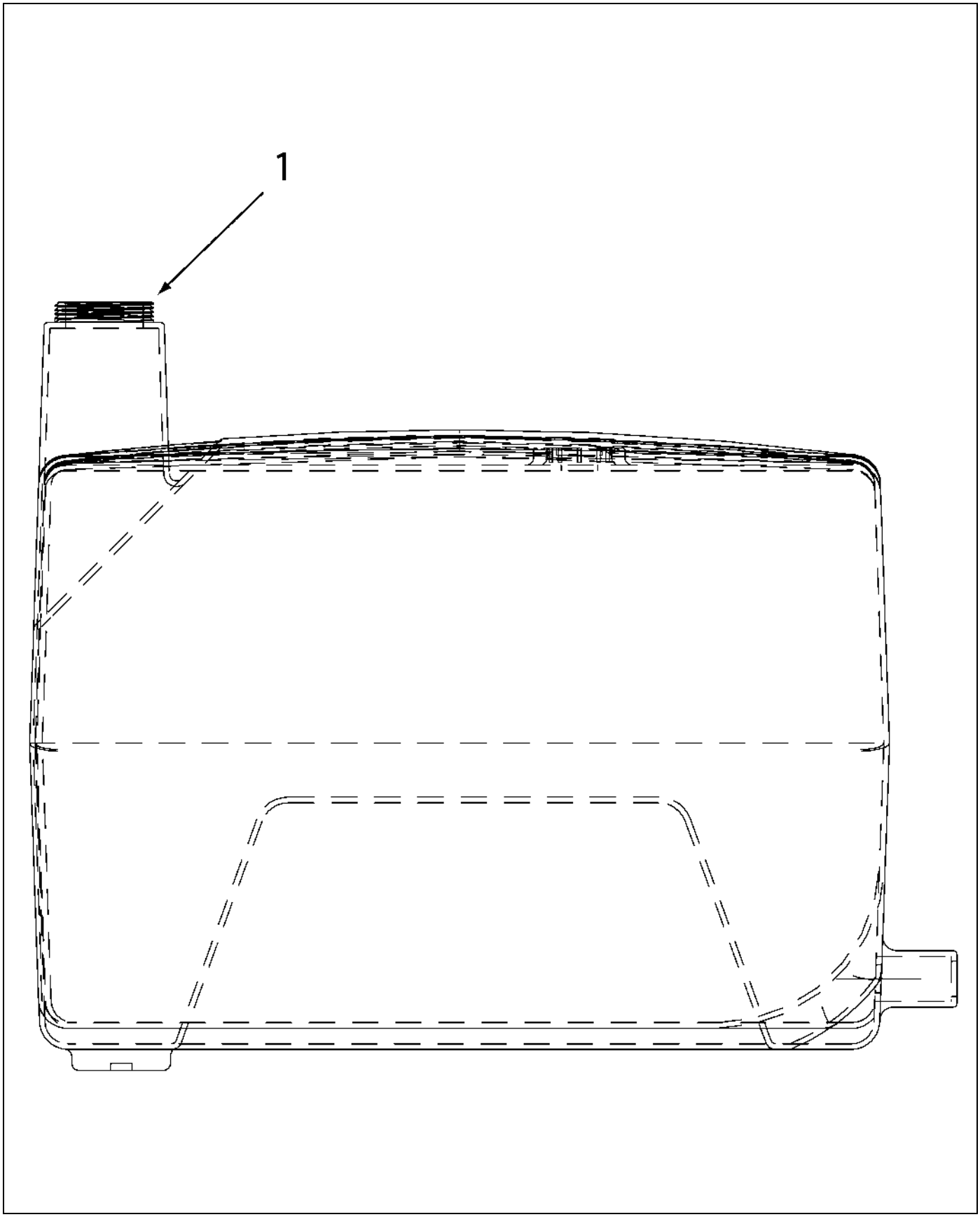

128281.TIF

Copyright © 2008 AGCO Corporation

TANK-POLY,65GL,LH

ITEM	PART #	QTY	DESCRIPTION	COMMENTS
1	AG055178	1	CAP-DIESEL FUEL,GREEN	

Copyright © 2008 AGCO Corporation

VALVE-PARK BRAKE	6-1
CYLINDER-HYD,TRACK ADJ,NARROW	6-2
CYLINDER-ASM,STEERING,7000	6-3
CYLINDER-STEERING,7000,9.59 STROKE	6-4
CYLINDER-HYD,725 REAR TRACK NARROW	6-5
HYD-INSTALL, HYD SUSPENSION	6-6
HYD SUSPENSION ASM	6-7
COMPONENT INSTALL-CHASSIS	6-8
FITTING INSTALL-PROD/BOOM VALVE	6-9
VALVE-PRODUCT/BOOM PRIORITY	6-10
VALVE, COMPENSATOR	6-11
POPPET	6-12
VALVE, RELIEF	6-13
VALVE, PRIORITY	6-14
FILTER-ASM,CHASSIS	6-15
FILTER-HYD,W/25PSI BY-PASS	6-16
FWA,COMPONENT INSTALL	6-17
FWA-PUMP ASM	6-18
PUMP-HYD,51CC,LOAD SENSE	6-19
FWA-2 SPEED/CASE BYPASS ASM	6-20
VALVE-CARTRIDGE,2 SPEED,HI/LO	6-21
FILTER ASM-FWA,R2	6-22
CYLINDER-INSTALL,FRONT AXLE,88	6-23
CYLINDER-INSTALL,FRONT AXLE,88	6-24
CYLINDER-HYD,TRACK ADJUST	6-25
CYLINDER-INSTALL,FRONT AXLE,120	6-26
CYLINDER-INSTALL,FRONT AXLE,120	6-27
PUMP-ASM,HYDRAULIC,CHASSIS	6-28
PUMP-HYDRAULIC,GEAR,2.75 CID	6-29
VALVE INSTALL-HYD,BOOM LIFT/TRACK ADJUST	6-30
VALVE ASM-HYD,BOOM LIFT/TRACK ADJUST	6-31
FITTING INSTALL-BRAKE CHARGE VALVE	6-32
CHASSIS-HOSE ASM INSTALL, 2008	6-33
CHASSIS-HOSE ASM INSTALL, 2008	6-34
CHASSIS-HOSE ASM INSTALL, 2008	6-35
HYD CHASSIS GROUP,NON DOMESTIC	6-36
HYD CHASSIS GROUP,DOMESTIC	6-37
CHASSIS-HOSE ASM INSTALL, 2009	6-38
CHASSIS-HOSE ASM INSTALL, 2009	6-39
CHASSIS-HOSE ASM INSTALL, 2009	6-40
CHASSIS-HOSE ASM INSTALL, 2009	6-41
CHASSIS-HOSE ASM INSTALL, 2009	6-42
CHASSIS-HOSE ASM INSTALL, 2009	6-43
FWA,HYDRAULIC TANK INSTALL	6-44
FWA-HYDRAULIC TANK ASM	6-45
FILTER ASM-FWA,R3	6-46
VALVE ASM-FWA,MAIN	6-47
2 WHEEL DRIVE-HYDRAULIC TANK INSTALL	6-48
2 WHEEL DRIVE-HYDRAULIC TANK ASM	6-49
INSTALL-2 WHEEL DRIVE	6-50
CYLINDER-INSTALL,REAR AXLE,120	6-51
CYLINDER-HYDRAULIC,TRACK ADJUST	6-52
CYLINDER-INSTALL,REAR AXLE,88	6-53
CYLINDER-HYD,6.50 IN STROKE	6-54

HOSE-INSTALL,NON AUTOGUIDE	6-55
2-WHEEL DRIVE COVER INSTALL	6-56
WHEEL MOTOR GROUP	6-57
WHEEL MTR-HYD,940/470CC	6-58
WHEEL MTR-HYD,940/470CC	6-59
HOSE-INSTALL,REAR AXLE,120	6-60
HOSE-INSTALL,REAR AXLE,120	6-61
HOSE-INSTALL,REAR AXLE,88	6-62
HOSE-INSTALL,REAR AXLE,88	6-63
FWA,HOSE INSTALL,120	6-64
FWA,HOSE INSTALL,120	6-65
HOSE SUPPORT INSTALL,120	6-66
FWA,HOSE INSTALL,88	6-67
FWA,HOSE INSTALL,88	6-68
WHEEL MTR,HOSE INSTALL,120	6-69
WHEEL MTR,HOSE INSTALL,88	6-70
HOSE SUPPORT INSTALL,88	6-71
HOSE-INSTALL,FRONT AXLE,71	6-72
HOSE-INSTALL,FRONT AXLE,71	6-73
CYLINDER-INSTALL,FRONT AXLE,71	6-74
CYLINDER-INSTALL,FRONT AXLE,71	6-75
HOSE-INSTALL,REAR AXLE,71	6-76
HOSE-INSTALL,REAR AXLE,71	6-77
HOSE-INSTALL,FRONT AXLE,88	6-78
HOSE-INSTALL,FRONT AXLE,88	6-79
HOSE-INSTALL,FRONT AXLE,120	6-80
HOSE-INSTALL,FRONT AXLE,120	6-81
WHEEL MOTOR,HOSE INSTALL,71	6-82
FWA,HOSE INSTALL,71	6-83
FWA,HOSE INSTALL,71	6-84
HOSE SUPPORT INSTALL,71	6-85
HOSE-SUPPORT,STEERING	6-86
VALVE-HYD,BOOM LIFT/TRACK ADJUST,3 BANK	6-87
VALVE-CHECK,CV08200N25	6-88
CYLINDER-SINGLE ACT,3 X 12.00 IN	6-89
VALVE-BRAKE CHARGE	6-90
VALVE-CARTRIDGE,CHECK-08 (4 PSI)	6-91
RETAINER, FILTER	6-92
UNLOADER, PILOT #10	6-93
VALVE-CONTROL,F.W.A. S/D	6-94
VALVE-CONTROL,F.W.A. S/D	6-95
VALVE-CONTROL,F.W.A. S/D	6-96
VALVE-CONTROL,F.W.A. S/D	6-97
VALVE-CONTROL,F.W.A. S/D	6-98
VALVE-CONTROL,F.W.A. S/D	6-99
VALVE-BRAKE,L/R,DUAL SLOPE	6-100
TEE-RUN,STR THD -6	6-101
ADAP STR 0.50MO-R X 0.50 MJIC	6-102
ADAP STR 1.00MO-R X 1.00MJIC	6-103
ADAP STR 0.37MO-R X 0.37MJIC	6-104
ELBOW 90D 0.50MO-R X 0.50MJIC	6-105
ELBOW 90D 0.25MO-R X 0.25MJIC	6-106
HYD-INSTALL,REAR AXLE,71,2009 SPR	6-107
HOSE-INSTALL,REAR AXLE,71,2009	6-108

HOSE-INSTALL,REAR AXLE,71,2009 6-109
HYD-INSTALL,REAR AXLE,71, HYD,2009 6-110
HYD-INSTALL,REAR AXLE,88 SPR,2009 6-111
HOSE-INSTALL,REAR AXLE,88,2009 6-112
HOSE-INSTALL,REAR AXLE,88,2009 6-113
HYD-INSTALL,REAR AXLE,88 HYD,2009 6-114
HYD-INSTALL,REAR AXLE,120 SPR,2009 6-115
HOSE-INSTALL,REAR AXLE,120,2009 6-116
HOSE-INSTALL,REAR AXLE,120,2009 6-117
HYD-INSTALL,REAR AXLE,120 HYD,2009 6-118

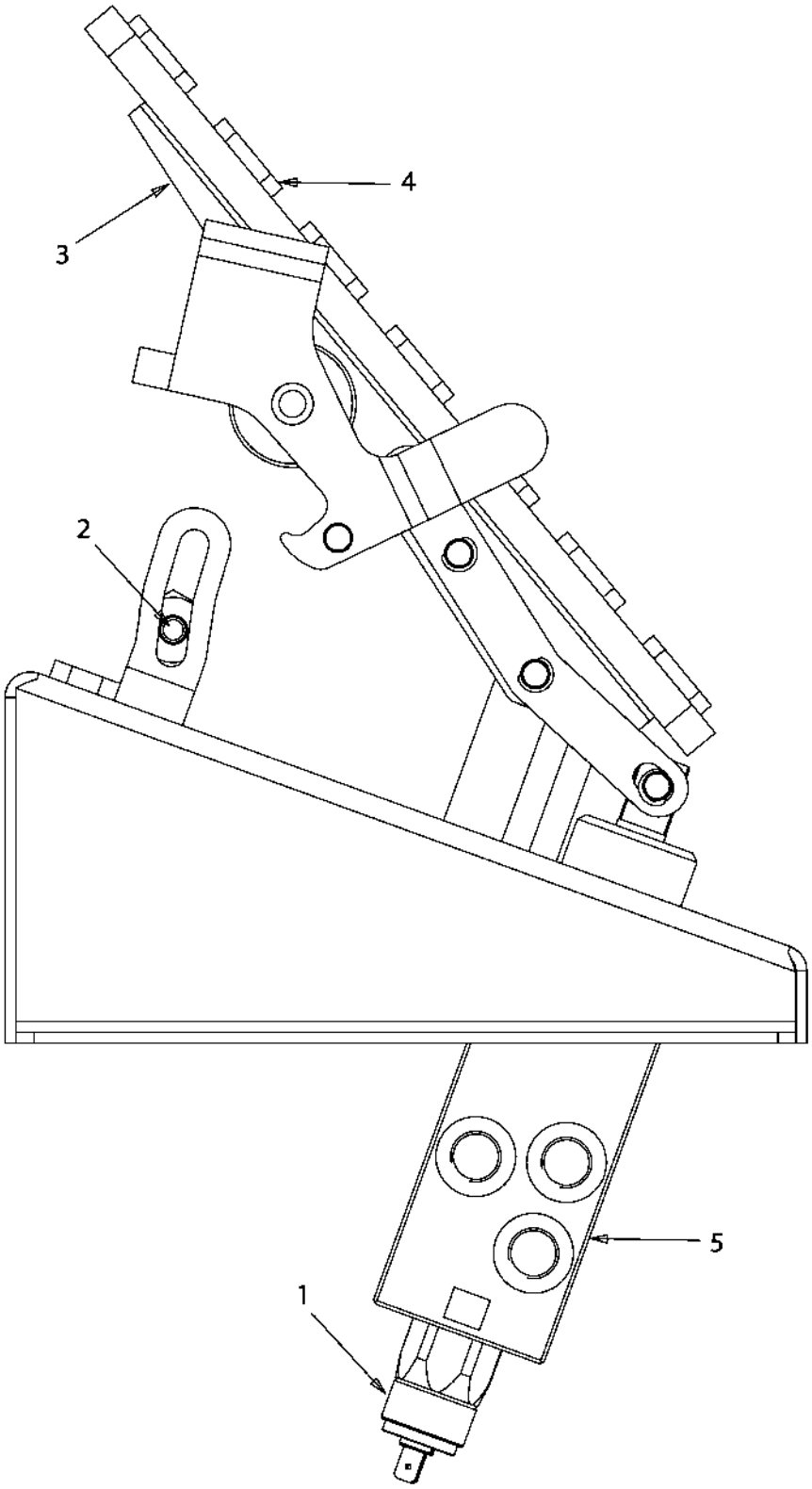

512906D1-02-R016-.TIF

Copyright © 2008 AGCO Corporation

VALVE-PARK BRAKE

ITEM	PART #	QTY	DESCRIPTION	COMMENTS
REF	516586D1	1	PARK BRAKE,PEDAL ASSEMBLY	
1	WR133082	1	SWITCH, PRESSURE	
2	WR137370	1	PIN/LOCKING 128040	
3	WR139381	1	PEDAL ASY	
4	WR139382	1	PEDAL/RUBBER	
5	516585D1	1	VALVE-PARK BRAKE W/O PEDAL ASM	

Copyright © 2008 AGCO Corporation

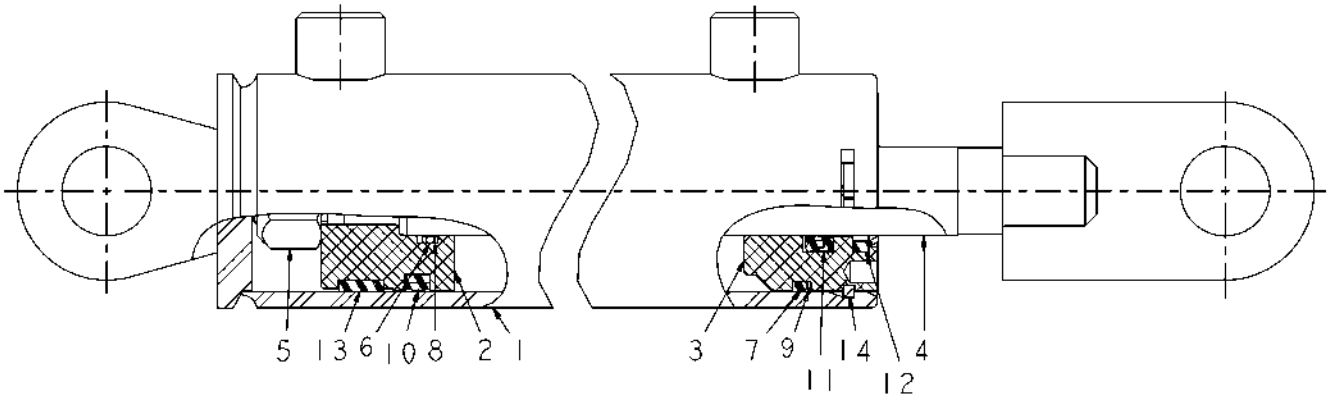

128334.TIF

Copyright © 2008 AGCO Corporation

CYLINDER-HYD,TRACK ADJ,NARROW

ITEM	PART #	QTY	DESCRIPTION	COMMENTS
REF	WR124932	-	KIT, SEAL	
2	WR131647	1	PISTON	
3	WR131646	1	HEAD, GLAND	
4	WR131648	1	ROD, CYLINDER	
5	WR606610	1	NUT 0.75-16NF HEX ZN C-LK	
	FOOTNOTE		ITEM 1 CANNOT BE PURCHASED INDIVIDUALLY BUT IS INCLUDED WIT THE CYLINDER.	
	FOOTNOTE		ITEMS 6 - 14 CANNOT BE PURCHASED INDIVIDUALLY BUT ARE INCLUDED IN THE SEAL KIT.	

Copyright © 2008 AGCO Corporation

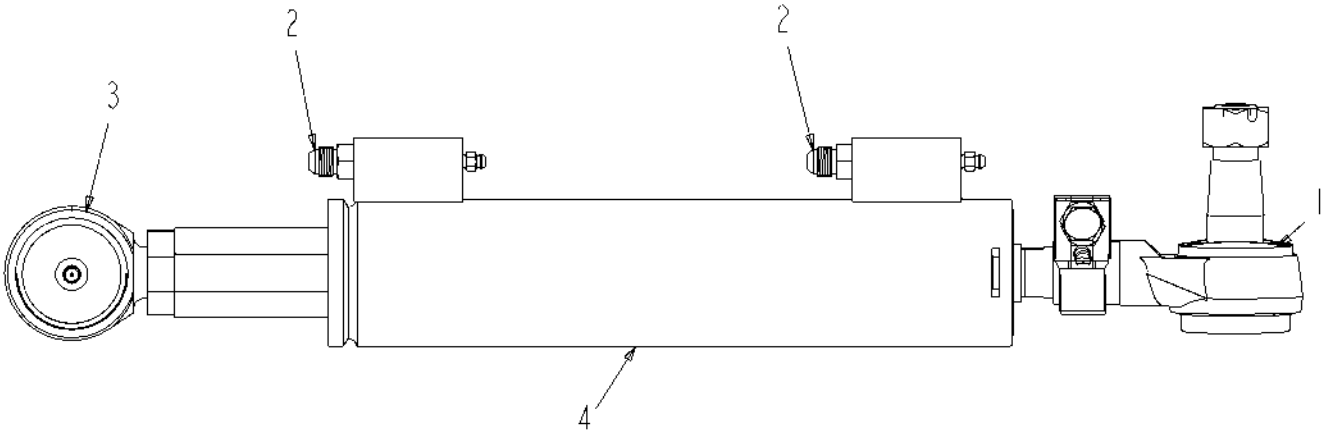

515282D1-02-R270-.TIF

Copyright © 2008 AGCO Corporation

CYLINDER-ASM,STEERING,7000

ITEM	PART #	QTY	DESCRIPTION	COMMENTS
1	WR129397	1	BALL SOCKET-STEERING	
2	AG560693	2	ADAP STR 0.37MO-R X 0.37MJIC	SEE PAGE 6-104
3	515157D1	1	SOCKET-VERTICAL ASSEMBLY,MALE	
4	515283D1	1	CYL-STEERING,7000,9.59 STROKE	SEE PAGE 6-4

Copyright © 2008 AGCO Corporation

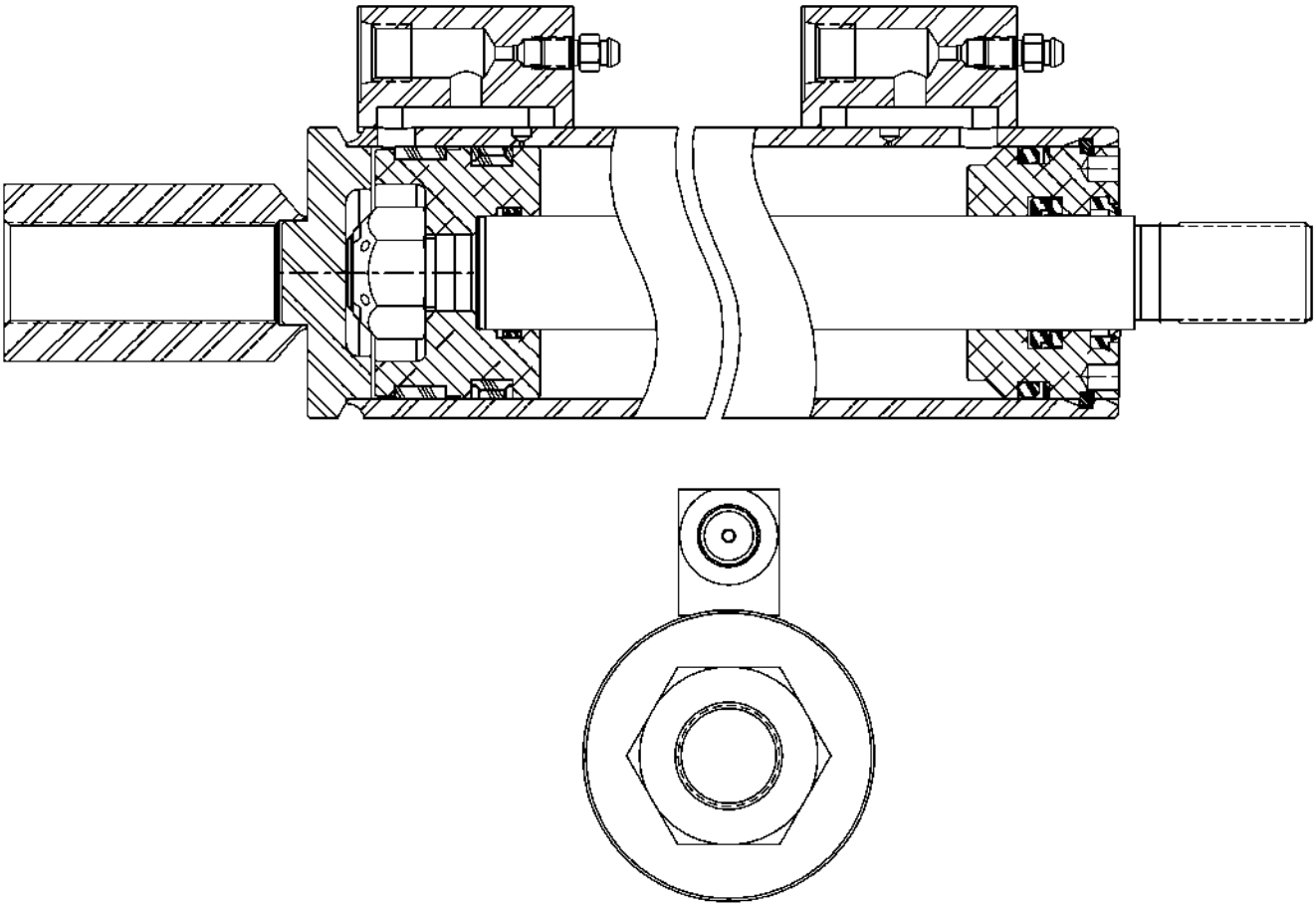

515283D1-02-R270-.TIF

Copyright © 2008 AGCO Corporation

CYLINDER-STEERING,7000,9.59 STROKE

ITEM	PART #	QTY	DESCRIPTION	COMMENTS
REF	WR124931	-	KIT, SEAL	

Copyright © 2008 AGCO Corporation

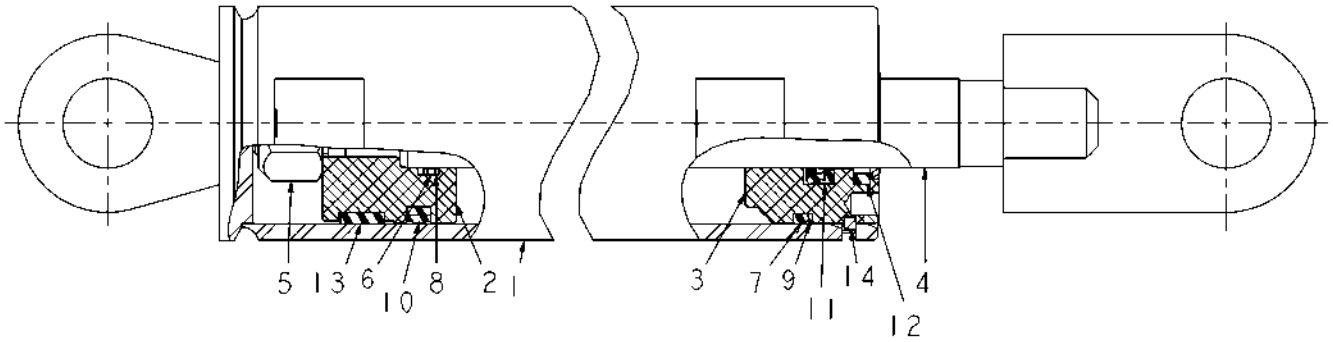

128661.TIF

Copyright © 2008 AGCO Corporation

CYLINDER-HYD,725 REAR TRACK NARROW

ITEM	PART #	QTY	DESCRIPTION	COMMENTS
REF	WR124932	-	KIT, SEAL	
2	WR131647	1	PISTON	
3	WR131646	1	HEAD, GLAND	
4	WR131648	1	ROD, CYLINDER	
5	WR606610	1	NUT 0.75-16NF HEX ZN C-LK	
	FOOTNOTE		ITEM 1 CANNOT BE PURCHASED INDIVIDUALLY BUT IS INCLUDED WITH THE CYLINDER.	
	FOOTNOTE		ITEMS 6 - 14 CANNOT BE PURCHASED INDIVIDUALLY BUT ARE INCLUDED IN THE SEAL KIT.	

Copyright © 2008 AGCO Corporation

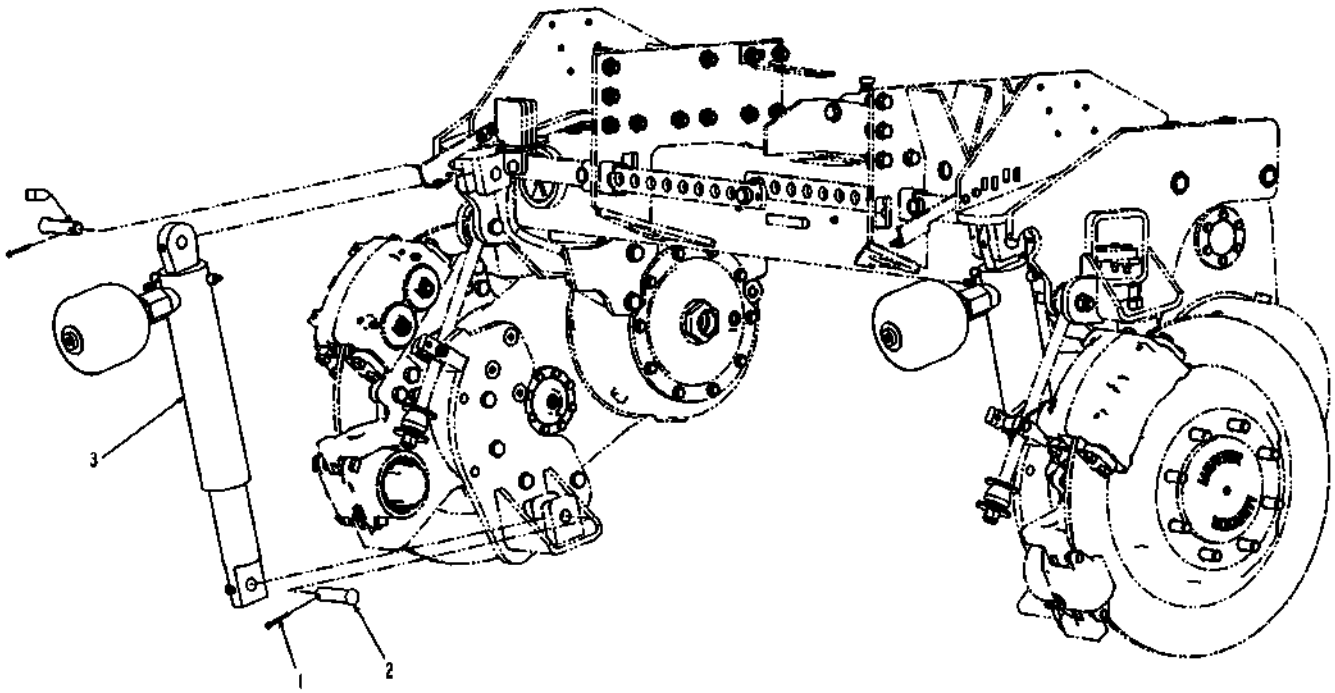

518400D1-05-R616-.TIF

Copyright © 2008 AGCO Corporation

ITEM	PART #	QTY	DESCRIPTION	COMMENTS
1	AG515352	4	PIN COTTER 0.18X2.00 SS	
2	AG522058	4	PIN-CLEVIS 1.00 X4.00	
3	518401D1	2	HYD SUSPENSION ASM	SEE PAGE 6-7

Copyright © 2008 AGCO Corporation

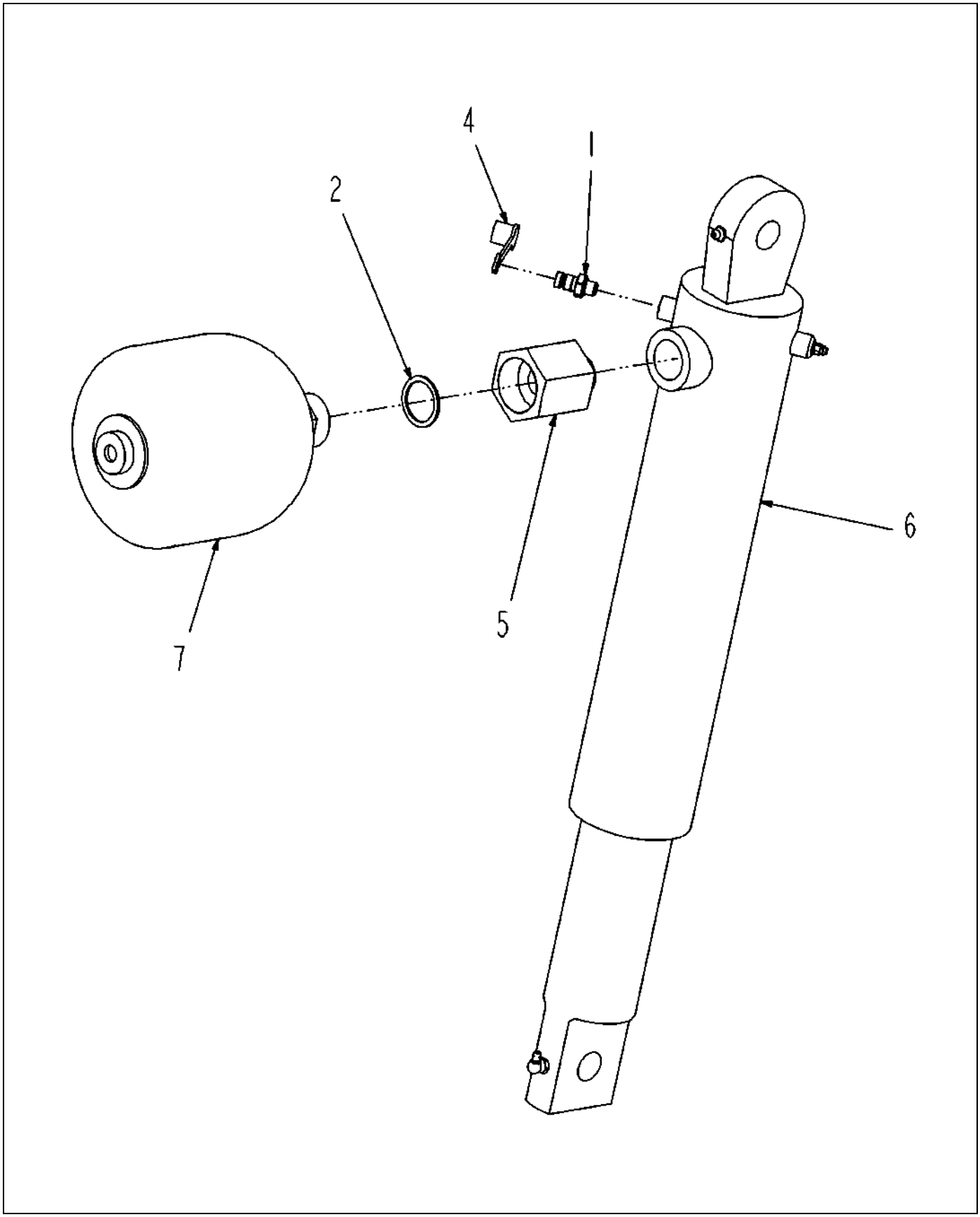

518401D1-05-R539-.TIF

Copyright © 2008 AGCO Corporation

HYD SUSPENSION ASM

ITEM	PART #	QTY	DESCRIPTION	COMMENTS
1	WR32723	1	COUPLING-MPD/-04MB	
2	AG124041	1	RING-SEAL,ACCUMULATOR(123765)	
3	AG523964	-	OIL-HYD,VISCOSITY IMPROVED [BULK: 0.370 GA]	
4	6630367	1	CAP-DUST	
5	401582X1	1	ORIFICE CHECK -16MORXM45X1.5	
6	509945D1	1	CYLINDER-SINGLE ACT.,3X12.00 IN	SEE PAGE 6-89
7	520039D1	1	HYDAC 2.0L ACCUMULATOR	

Copyright © 2008 AGCO Corporation

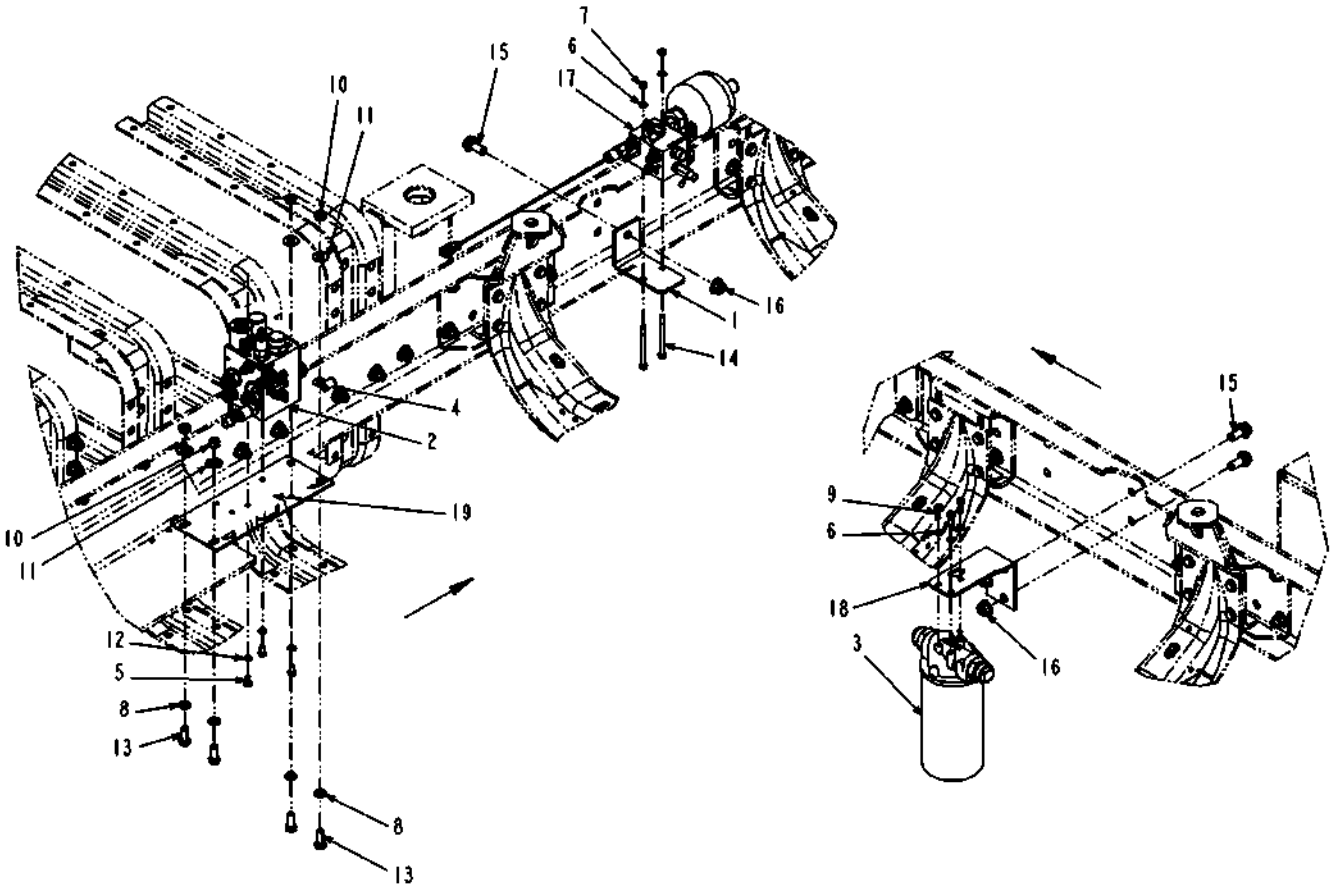

520782D1-02-T026-.TIF

Copyright © 2008 AGCO Corporation

ITEM	PART #	QTY	DESCRIPTION	COMMENTS
1	WR128477	1	PLATE-BRAKE CHARGE VALVE	
2	WR129375	1	FITTING INSTL-PROD/BOOM VALVE	SEE PAGE 6-9
3	WR129404	1	FILTER-ASM,CHASSIS	SEE PAGE 6-15
4	AG514777	1	CLAMP 0.50 COATED HOSE	
5	AG523910	3	BOLT .31-18NCX .62 SS HHD	
6	AG550205	5	WASHER 0.31 LK ZN REG	
7	AG550213	2	NUT 0.31-18NC HEX ZN REG	
8	AG550264	4	WASHER 0.50 LK ZN REG	
9	AG551252	3	BOLT 0.31-18NCX 1.00 G5 ZN HHD	
10	AG562045	4	NUT 0.50-13NC HEX SS REG	
11	AG562046	4	WASHER 0.50 FL SS REG TYPE-B	
12	AG562051	3	WASHER 0.31 LK SS REG	
13	AG562115	4	BOLT 0.50-13NCX 1.25 S.S. HHD	
14	AG562214	2	BOLT 0.31-18NCX 4.00 G5 ZN HHD	
15	AG609312	3	BOLT 0.62-18 X 1.50 G8 HXFLG	
16	AG609313	3	NUT HX FLG 0.62-18NF	
17	503558D1	1	FITTING INSTL-BRAKE CHG VALVE	SEE PAGE 6-32
18	520847D1	1	BRKT-HYD,OIL FILTER	
19	522562D1	1	BRACKET-VALVE MTG.	

Copyright © 2008 AGCO Corporation

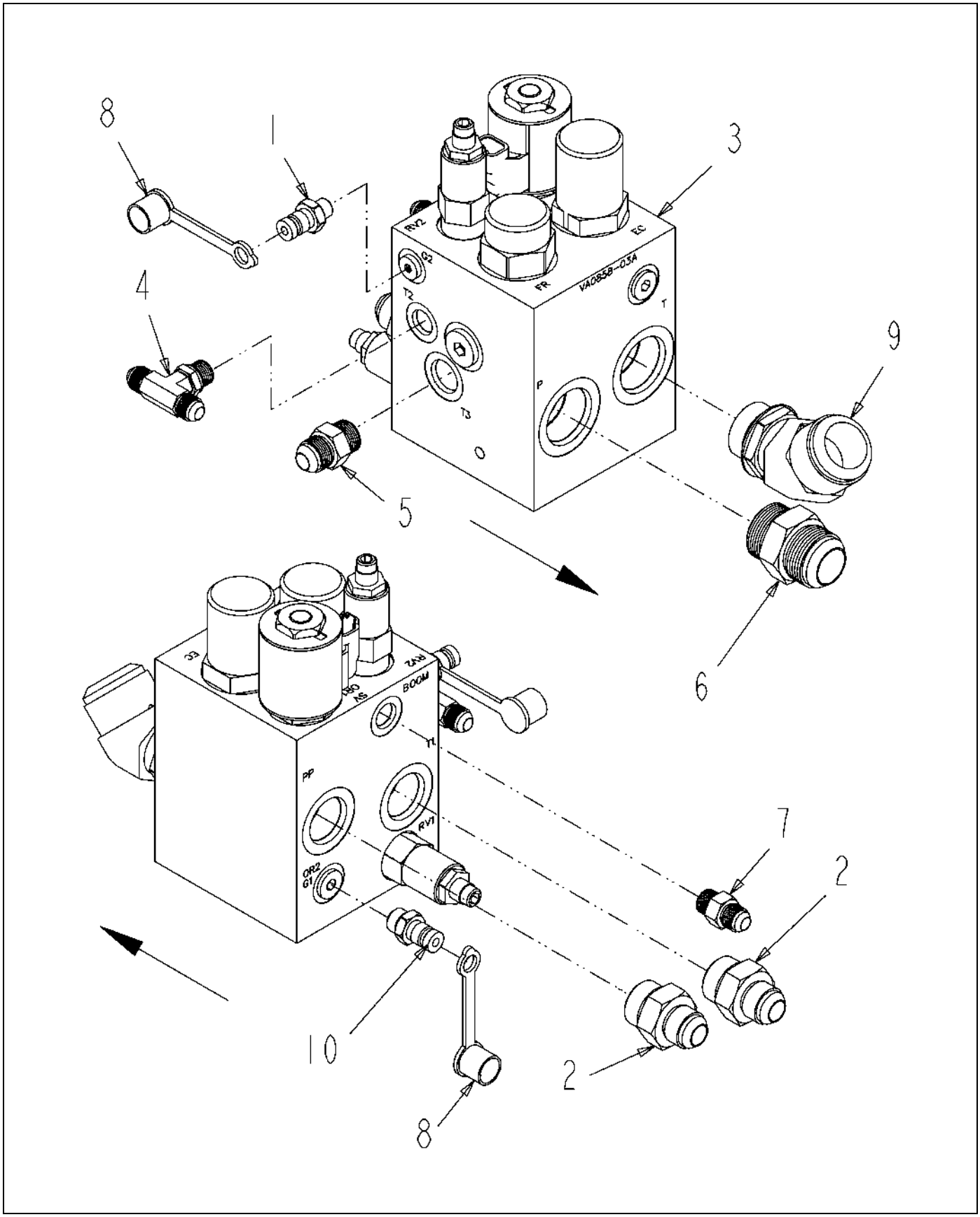

129375-03-N276.TIF

Copyright © 2008 AGCO Corporation

FITTING INSTALL-PROD/BOOM VALVE

ITEM	PART #	QTY	DESCRIPTION	COMMENTS
1	WR32723	1	COUPLING-MPD/-04MB	
2	AG122207	2	ADAPTR-STR -12MB X -10MJ	
3	WR128478	1	VALVE-PRODUCT/BOOM PRIORITY	SEE PAGE 6-10
4	AG520285	1	TEE-6MOR X -6MJIC	
5	AG551139	1	ADAP STR 0.50MO-R X 0.50 MJIC	SEE PAGE 6-102
6	AG558877	1	ADAP STR 1.00MO-R X 1.00MJIC	SEE PAGE 6-103
7	AG560693	1	ADAP STR 0.37MO-R X 0.37MJIC	SEE PAGE 6-104
8	6630367	2	CAP-DUST	
9	401253X1	1	ELBOW-45D,-20MJIC-16MO-R	
10	WR41777	1	COUPLING-MPD/-06MB	

Copyright © 2008 AGCO Corporation

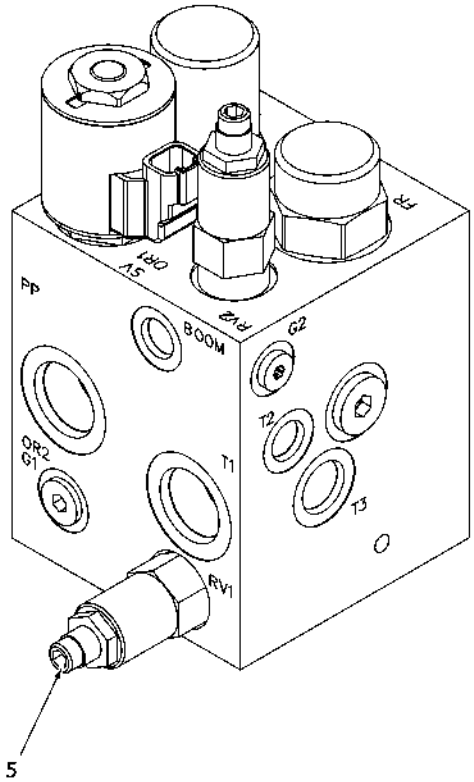

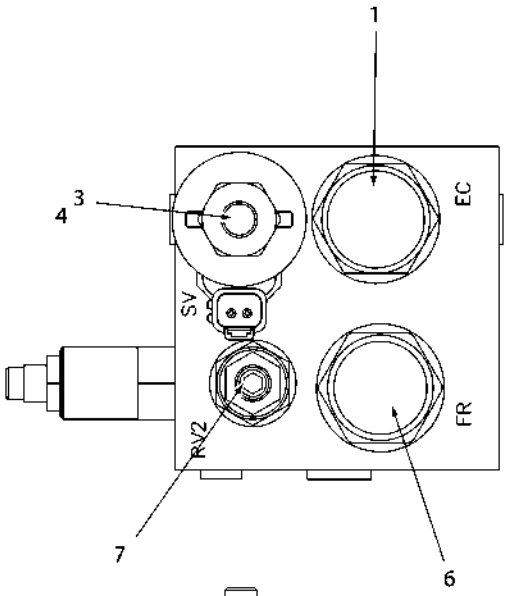

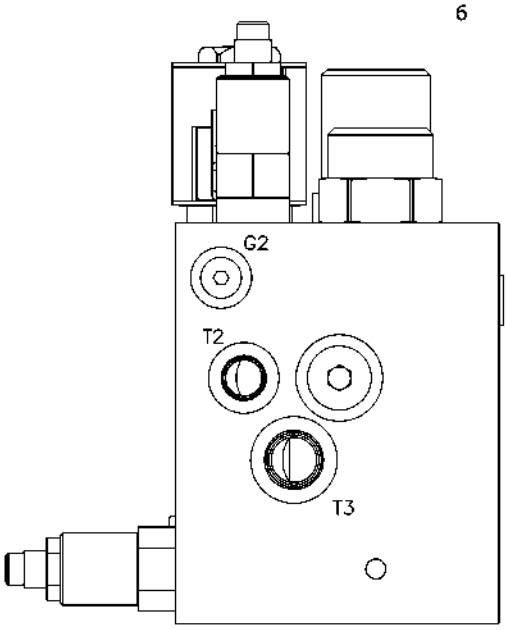

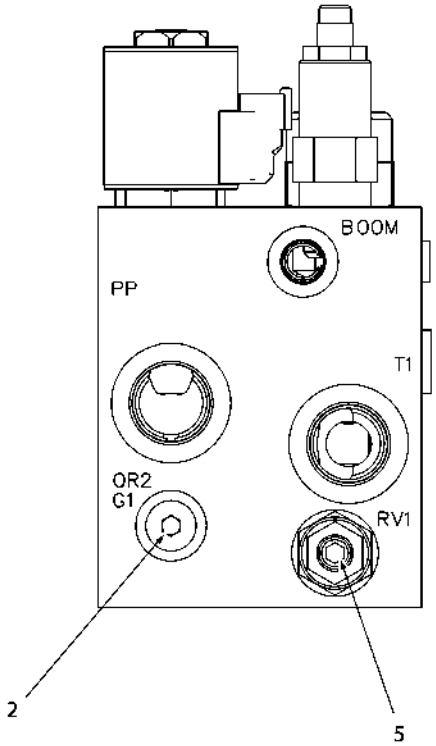

BILL OF MATERIALS				
CAV.	QTY.	PART NUMBER	DESCRIPTION	SERVICE SEAL KIT
	1	131688	BODY,SC325 PRODUCT & BOOM PRIORITY	N/A
EC	1	131669	#06 LOAD SENSE COMPENSATOR 150 PSI	131675
OR1	1	131670	#02-2 ORIFICE DISC. HEAVY DUTY .050.100	N/A
SV	1	131671	#02 PPM, 2 WAY, N.C. POPPET	131676
SV	1	121484	#06 E-COIL 12 VDC DEUTSCH DT04-2P B100E	N/A
RV1	1	131672	#6 RELIEF: DIRECT ACTING 2000 PSI	121490
FR	1	131673	#06 PRECMATA FLOW CONTROL 4 GPM	131677
RV2	1	131674	#04 RELIEF, DIFFERENTIAL AREA 2500 PSI	N/A

128478.TIF

Copyright © 2008 AGCO Corporation

VALVE-PRODUCT/BOOM PRIORITY

ITEM	PART #	QTY	DESCRIPTION	COMMENTS
REF	WR131677	-	KIT, SEAL	
REF	WR131676	-	KIT, SEAL	
REF	WR131668	-	BODY, VALVE BLOCK	
REF	WR31675	-	FRAME WLDMT-REAR,6400	
REF	AG121490	-	KIT-SEAL,SOLENOID,-08	
1	WR131669	1	VALVE, COMPENSATOR	SEE PAGE 6-11
2	WR131670	1	ORIFICE, DISC 12-2	
3	WR131671	1	POPPET	SEE PAGE 6-12
4	AG121484	1	COIL-E,12VDC DEUTCH W/DIODE,10	
5	WR131672	1	VALVE, RELIEF	SEE PAGE 6-13
6	WR131673	1	VALVE, PRIORITY	SEE PAGE 6-14
7	WR131674	1	VALVE, RELIEF	

Copyright © 2008 AGCO Corporation

Please refer to the Bill Of Material on the opposite page for related Installations, Assemblies, or Parts

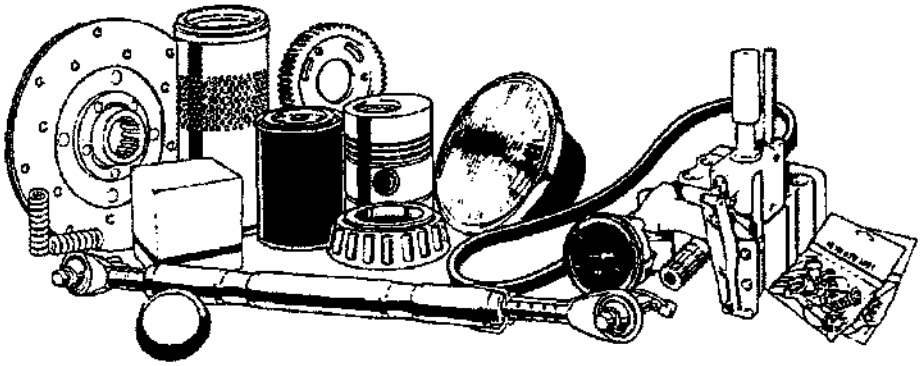

131669.TIF

Copyright © 2008 AGCO Corporation

VALVE, COMPENSATOR

ITEM	PART #	QTY	DESCRIPTION	COMMENTS
REF	WR131675	-	KIT, SEAL	

Copyright © 2008 AGCO Corporation

Please refer to the Bill Of Material on the opposite page for related Installations, Assemblies, or Parts

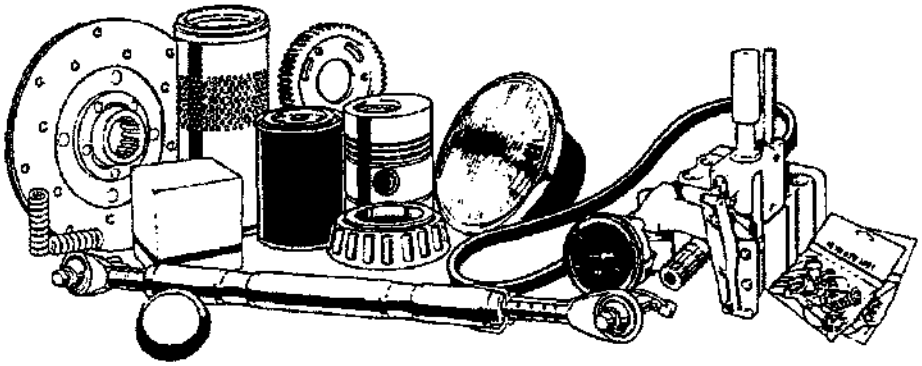

131671.TIF

Copyright © 2008 AGCO Corporation

ITEM	PART #	QTY	DESCRIPTION	COMMENTS
REF	WR131676	-	KIT, SEAL	

Copyright © 2008 AGCO Corporation

Please refer to the Bill Of Material on the opposite page for related Installations, Assemblies, or Parts

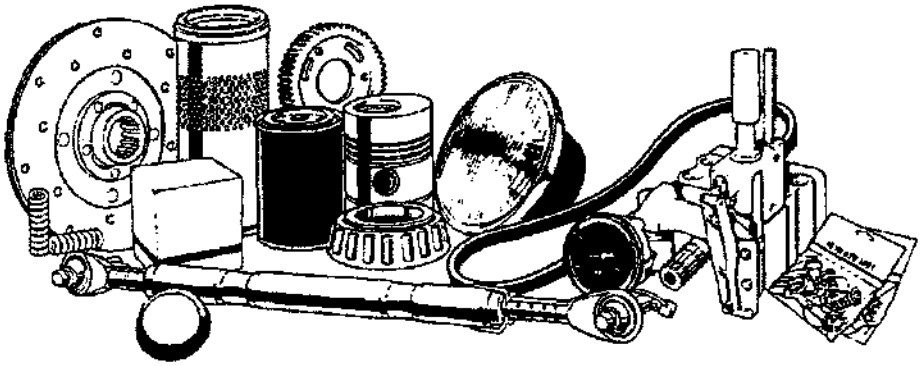

131672.TIF

Copyright © 2008 AGCO Corporation

VALVE, RELIEF

ITEM	PART #	QTY	DESCRIPTION	COMMENTS
REF	AG121490	-	KIT-SEAL,SOLENOID,-08	

Copyright © 2008 AGCO Corporation

Please refer to the Bill Of Material on the opposite page for related Installations, Assemblies, or Parts

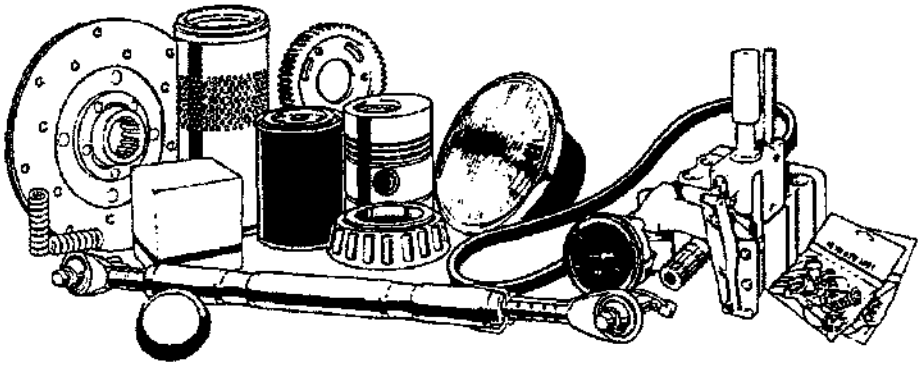

131673.TIF

Copyright © 2008 AGCO Corporation

VALVE, PRIORITY

ITEM	PART #	QTY	DESCRIPTION	COMMENTS
REF	WR131677	-	KIT, SEAL	

Copyright © 2008 AGCO Corporation

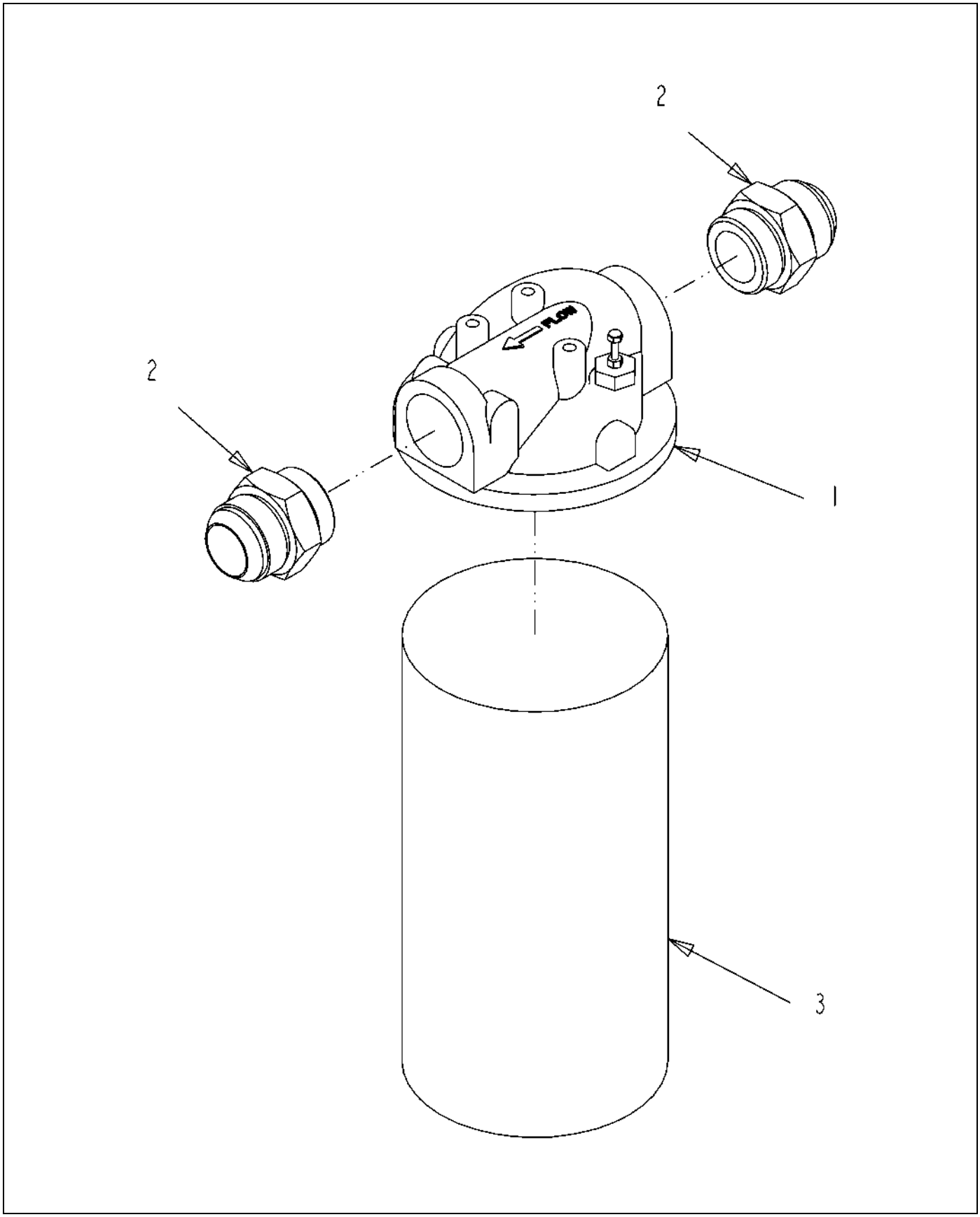

129404-A-1.TIF

Copyright © 2008 AGCO Corporation

FILTER-ASM,CHASSIS

ITEM	PART #	QTY	DESCRIPTION	COMMENTS
1	AG121587	1	FILTER-HYD,W/25PSI BY-PASS	SEE PAGE 6-16
2	AG552186	2	ADAP STR-20MBX-20MJ	[A]
3	AG715586	1	ELEMENT FILTER	
	FOOTNOTE [A]		AG714806-O-RING	

Copyright © 2008 AGCO Corporation

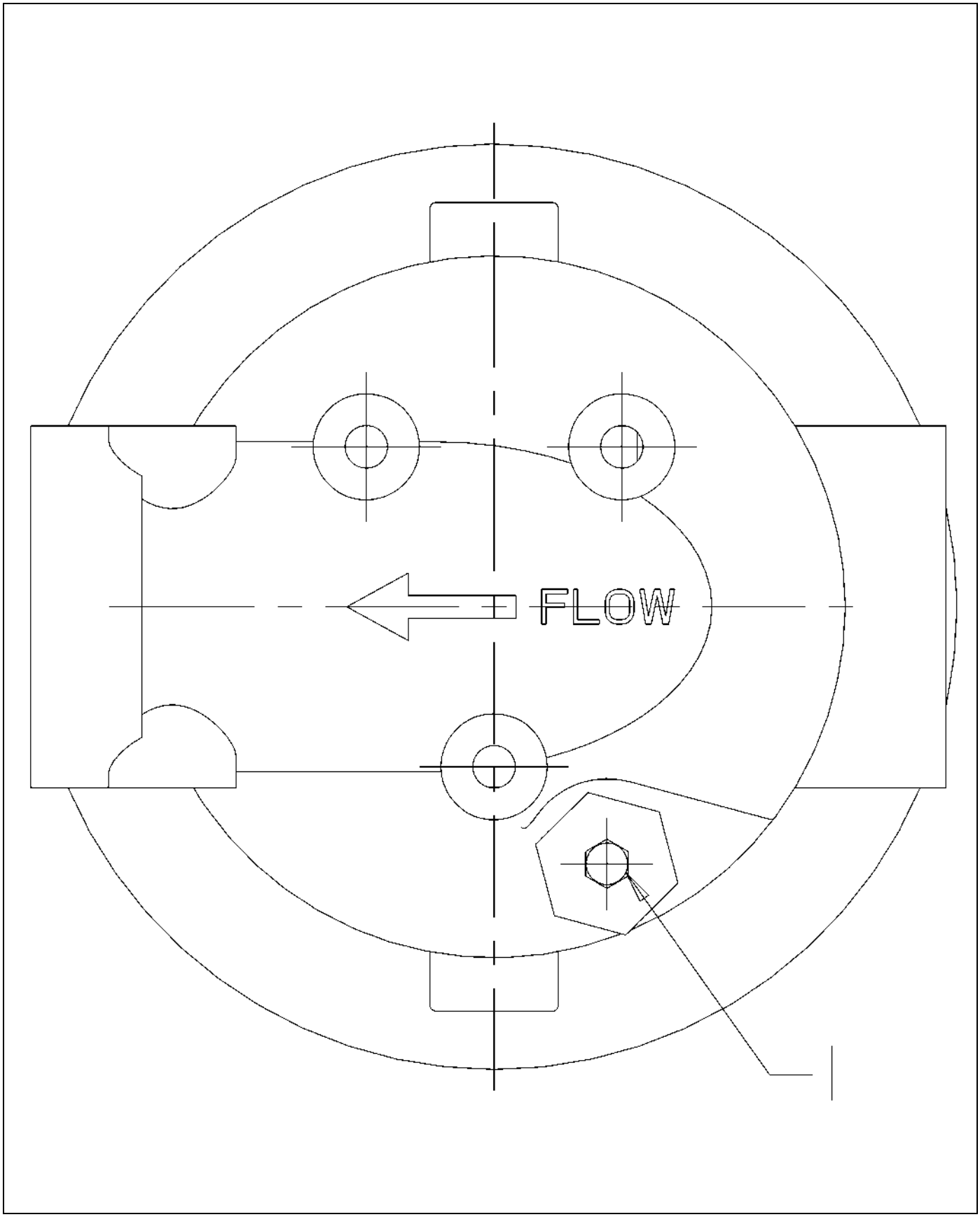

121587.TIF

Copyright © 2008 AGCO Corporation

FILTER-HYD,W/25PSI BY-PASS

ITEM	PART #	QTY	DESCRIPTION	COMMENTS
1	AG122807	1	INDICATOR-ELEC,22PSID DC	

Copyright © 2008 AGCO Corporation

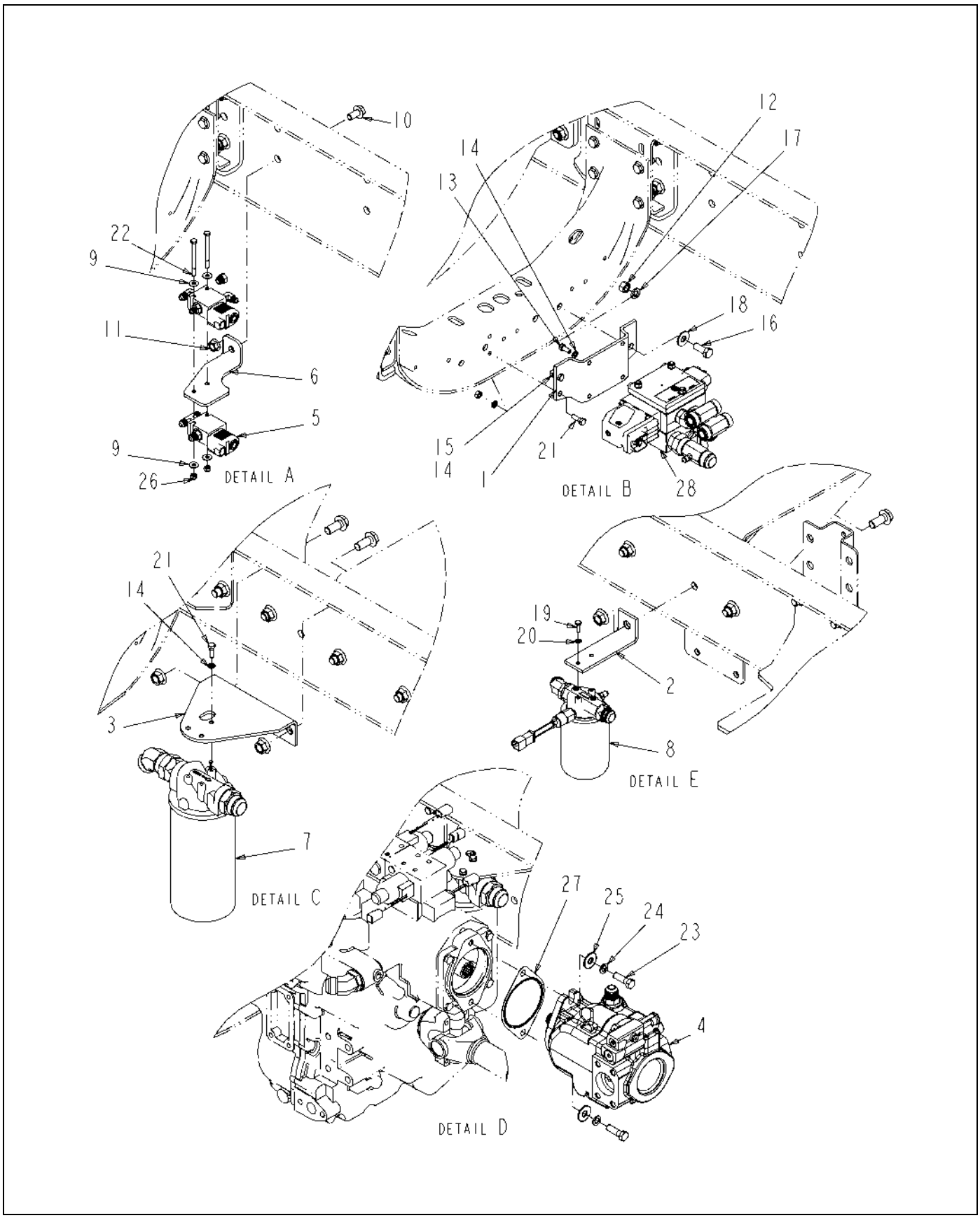

518949D1-01-R270-02.TIF

Copyright © 2008 AGCO Corporation

ITEM	PART #	QTY	DESCRIPTION	COMMENTS
1	WR125776	1	BRACKET-VALVE FWA	
2	WR126694	1	BRKT-HYD FILTER	
3	WR128467	1	BRKT-HYD.,FILTER MOUNT	
4	WR128673	1	FWA-PUMP ASM	SEE PAGE 6-18
5	WR128674	1	FWA-2 SPEED/CASE BYPASS ASM	SEE PAGE 6-20
6	WR128887	1	BRKT-2 SPEED VALVE	
7	WR128892	1	FILTER ASM-FWA,R2	SEE PAGE 6-22
8	WR128893	1	FILTER ASM-FWA,R3	SEE PAGE 6-46
9	AG515121	4	WASHER 0.25 FL SS REG TYPE-B	
10	AG520627	1	BOLT-.50-13X1.00,G5,ZN,FLG,HHD	
11	AG520628	1	NUT-.50-13,G5,ZN,FLG,HHD	
12	AG550124	1	NUT 0.50-13NC HEX ZN REG	
13	AG550183	4	BOLT 0.31-18NCX 0.75 G5 ZN HHD	
14	AG550205	9	WASHER 0.31 LK ZN REG	
15	AG550213	2	NUT 0.31-18NC HEX ZN REG	
16	AG550256	1	BOLT.50-13NCX1.25 G5 ZN HHD	
17	AG550264	1	WASHER 0.50 LK ZN REG	
18	AG550353	1	WASHER 0.50 FL ZN REG TYPE-B	
19	AG550485	2	BOLT 0.25-20NCX 0.75 G5 ZN HHD	
20	AG550493	2	WASHER 0.25 LK ZN REG	
21	AG551252	5	BOLT 0.31-18NCX 1.00 G5 ZN HHD	
22	AG561246	2	BOLT 0.25-20NCX 3.25 G5 ZN HHD	
23	AG562270	2	BOLT M12-1.75X 40MM G8.8 ZN HH	
24	AG562272	2	WASHER M12 LK ZN REG	
25	AG562790	2	WASHER FL METRIC#12 GEN PUR ZN	
26	AG604216	2	NUT 0.25-20NC HEX ZN REG NY	
27	AG714101	1	GASKET PUMP	
28	519005D1	1	VALVE ASM-FWA,MAIN	SEE PAGE 6-47

Copyright © 2008 AGCO Corporation

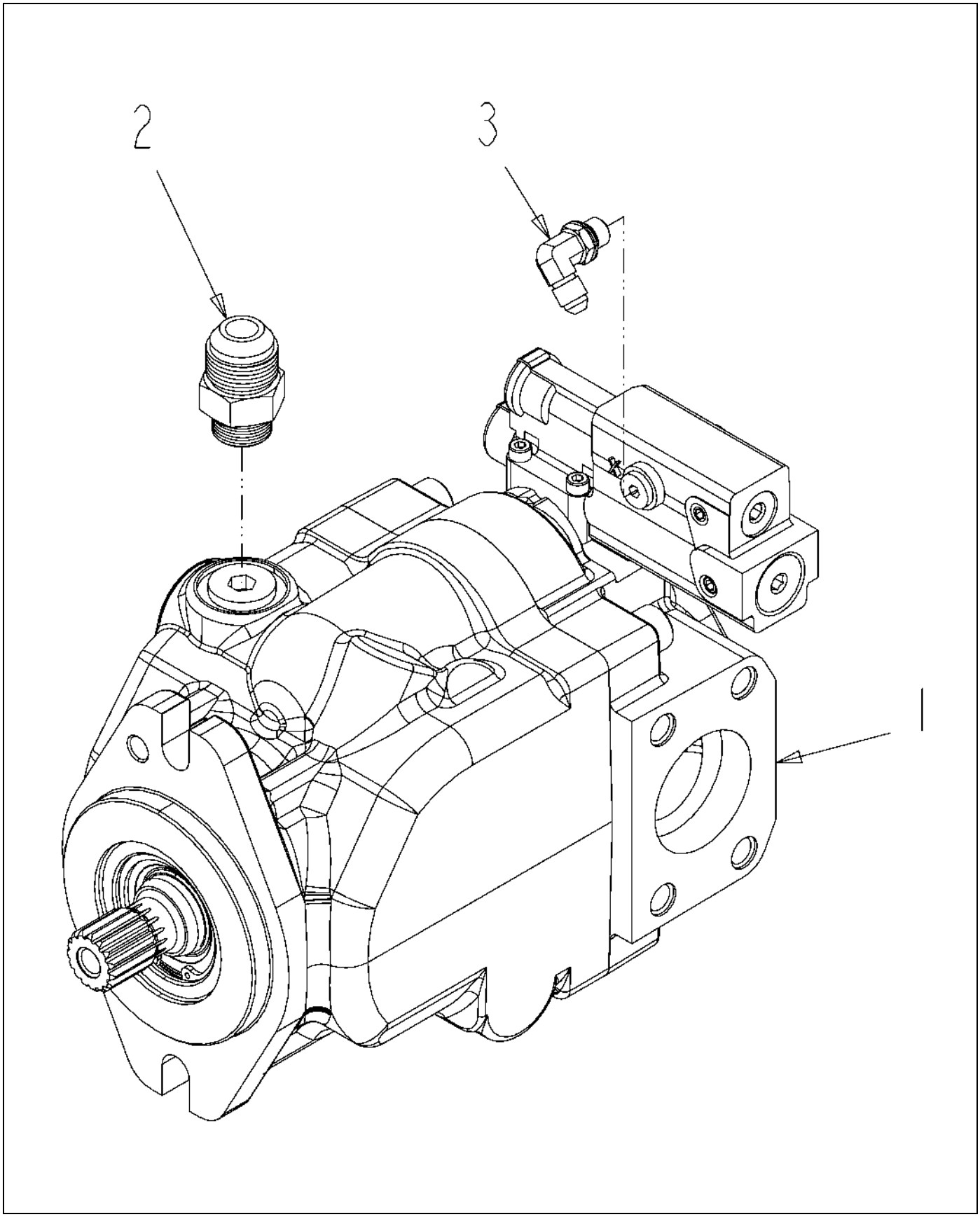

128673-03-M503-.TIF

Copyright © 2008 AGCO Corporation

FWA-PUMP ASM

ITEM	PART #	QTY	DESCRIPTION	COMMENTS
1	WR136148	1	PUMP-HYD,51CC,LOAD SENSE	SEE PAGE 6-19
2	AG560900	1	ADAP STR -10MBX12MJ	
3	AG561677	1	ELBOW 90D 0.25MO-R X 0.25MJIC	SEE PAGE 6-106

Copyright © 2008 AGCO Corporation

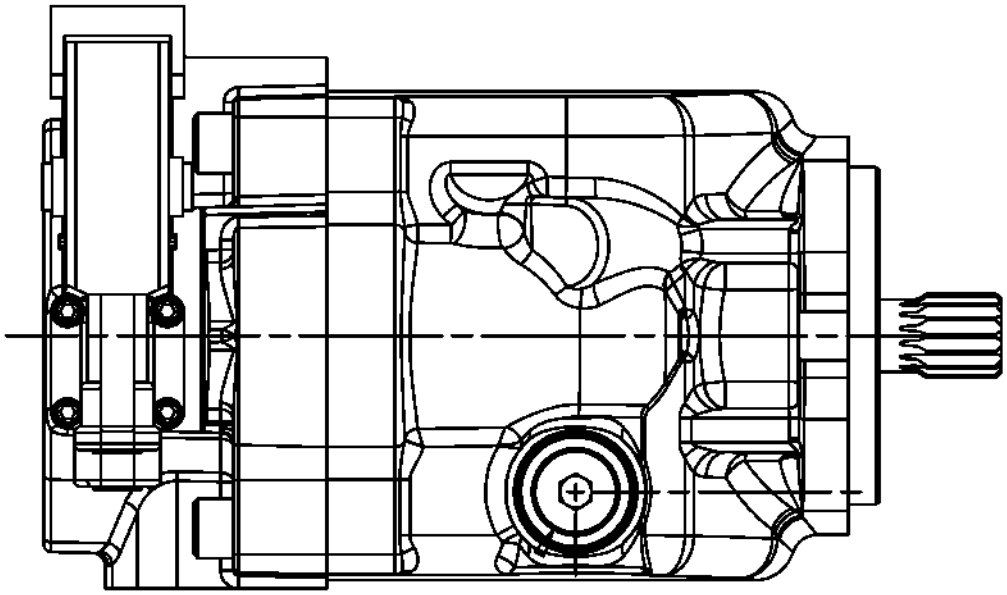

136148-01-M503-.TIF

Copyright © 2008 AGCO Corporation

PUMP-HYD,51CC,LOAD SENSE

ITEM	PART #	QTY	DESCRIPTION	COMMENTS
REF	AG332529	-	CONTROL KIT, LOAD SENSING	
REF	AG727285	-	RING/SEAL	
REF	WR132160	-	KIT,CONTROL PC/LS	
REF	AG330796	1	SEAL/LIP	

Copyright © 2008 AGCO Corporation

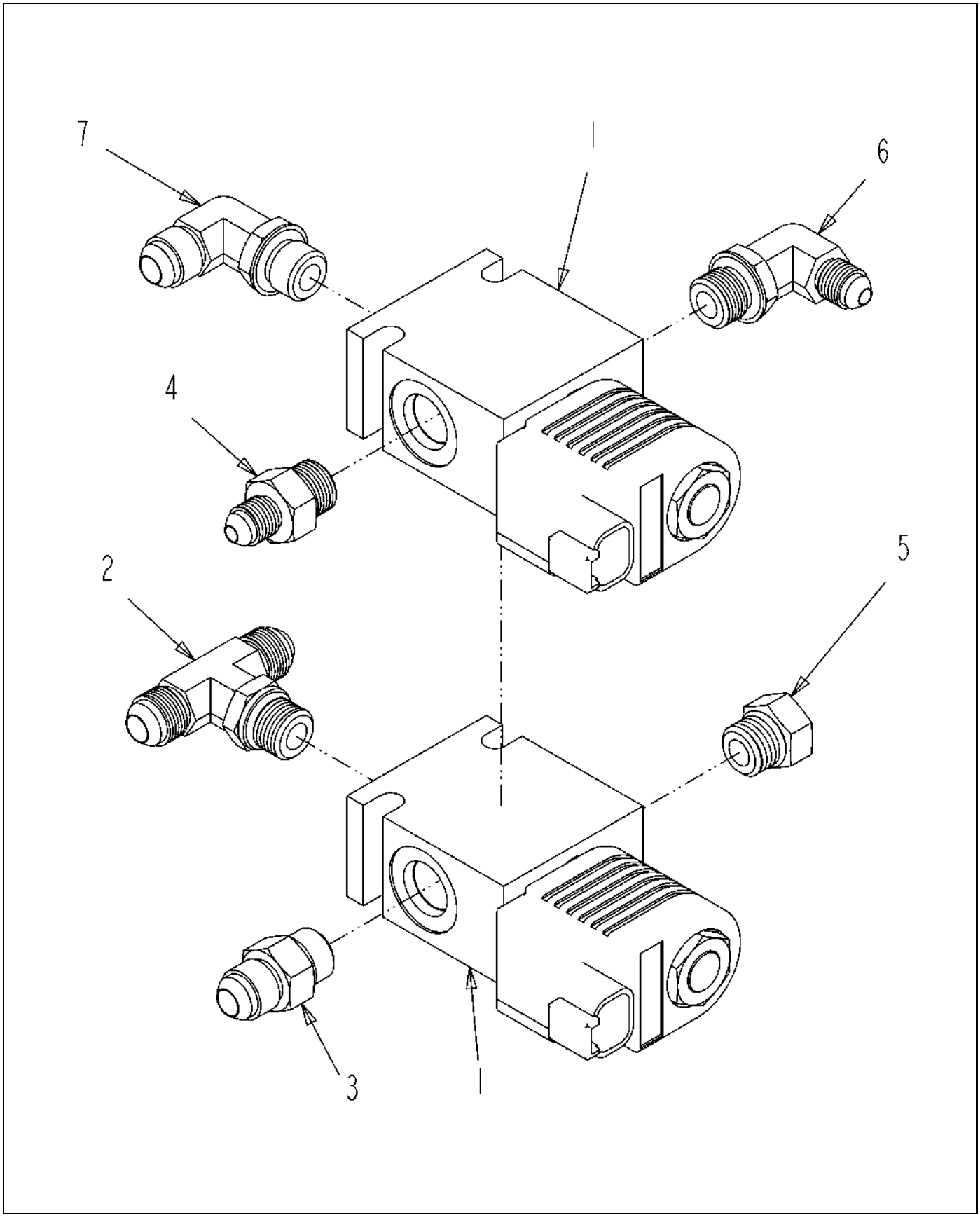

128674-02-M812-.TIF

Copyright © 2008 AGCO Corporation

FWA-2 SPEED/CASE BYPASS ASM

ITEM	PART #	QTY	DESCRIPTION	COMMENTS
1	WR123749	2	VALVE-CARTRIDGE,2 SPEED,HI/LO	SEE PAGE 6-21
2	AG520285	1	TEE-6MOR X -6MJIC	
3	AG560693	1	ADAP STR 0.37MO-R X 0.37MJIC	SEE PAGE 6-104
4	AG561744	1	ADAP STR 0.37MO-R X 0.25MJIC	[A]
5	AG561797	1	PLUG 0.37MO-R HEX	
6	AG562354	1	ELBOW 90D 0.37MO-R X 0.25MJIC	[B]
7	AG562401	1	ELBOW -6MB90X-6MJ	
	FOOTNOTE [A]		AG713166 O-RING	
	FOOTNOTE [B]		AG713166 O-RING	

Copyright © 2008 AGCO Corporation

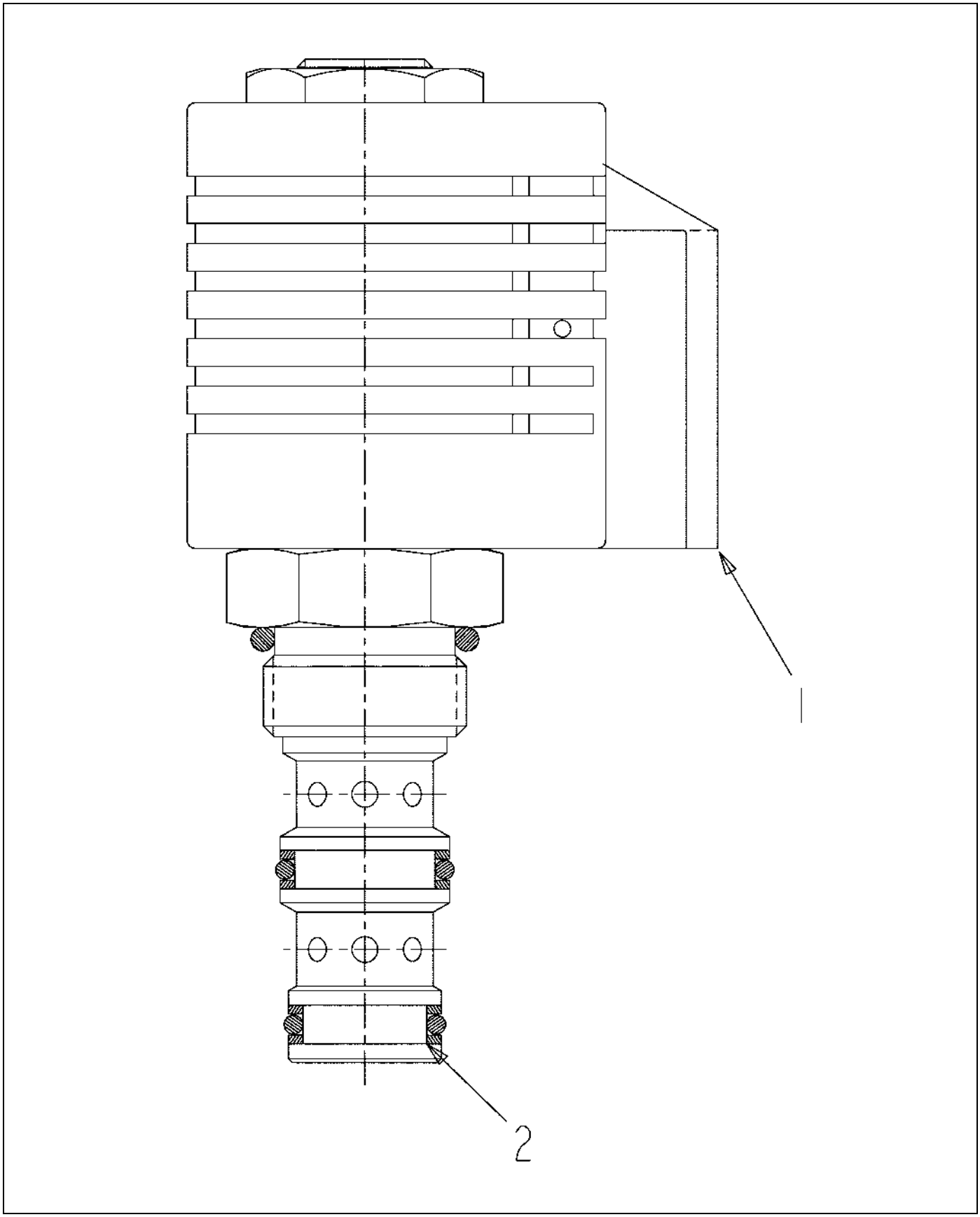

123749-A.TIF

Copyright © 2008 AGCO Corporation

VALVE-CARTRIDGE,2 SPEED,HI/LO

ITEM	PART #	QTY	DESCRIPTION	COMMENTS
1	WR133568	1	COIL	
2	AG133727	1	CARTRIDGE	

Copyright © 2008 AGCO Corporation

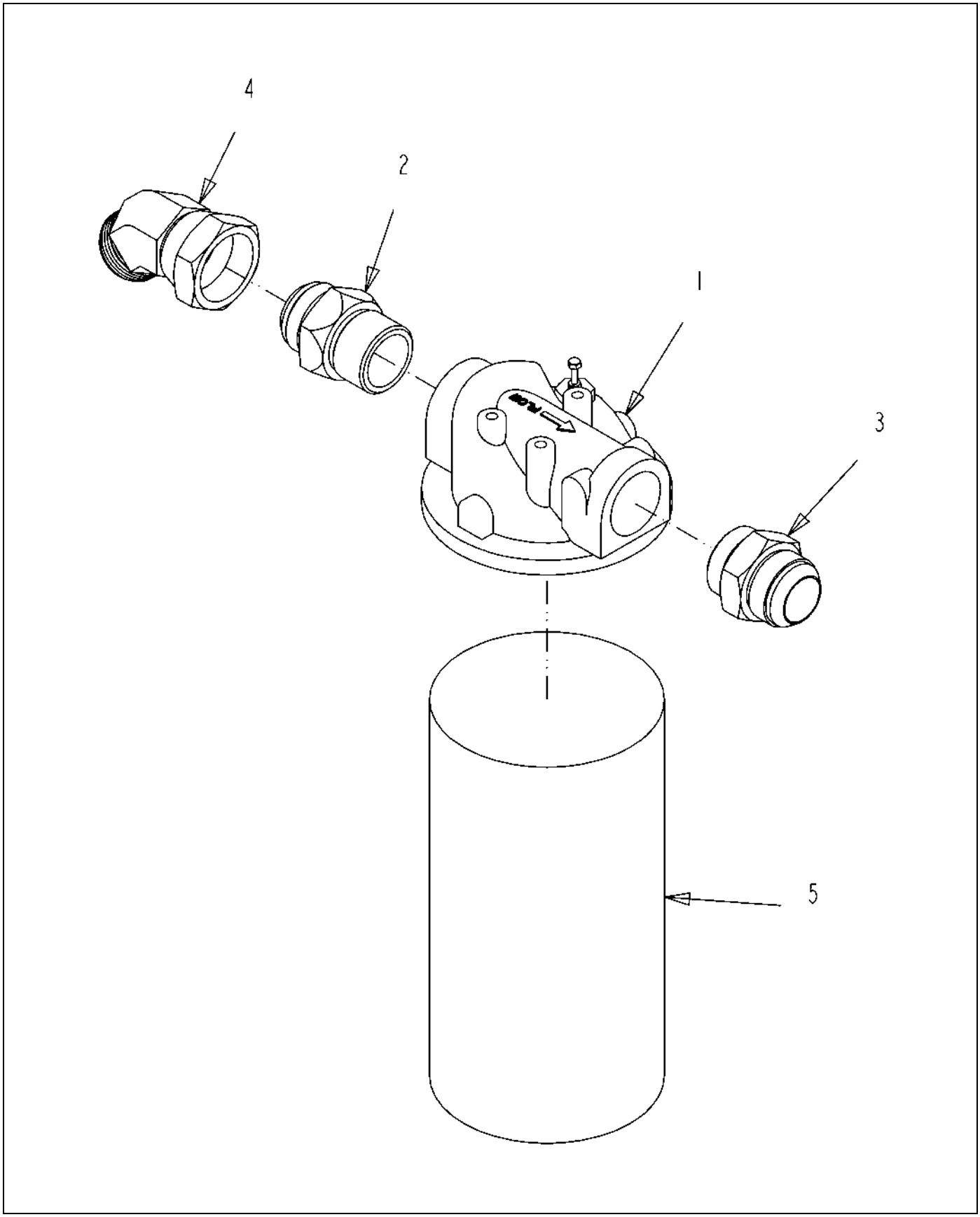

128892-A-1.TIF

Copyright © 2008 AGCO Corporation

FILTER ASM-FWA,R2

ITEM	PART #	QTY	DESCRIPTION	COMMENTS
1	AG121587	1	FILTER-HYD,W/25PSI BY-PASS	SEE PAGE 6-16
2	WR128753	1	VALVE-CHECK,65 PSI	
3	AG552186	1	ADAP STR-20MBX-20MJ	[A]
4	AG561794	1	ELBOW 45D 1.25MJICX1.25FJIC SW	
5	AG715586	1	ELEMENT FILTER	
	FOOTNOTE [A]		AG714806-O-RING	

Copyright © 2008 AGCO Corporation

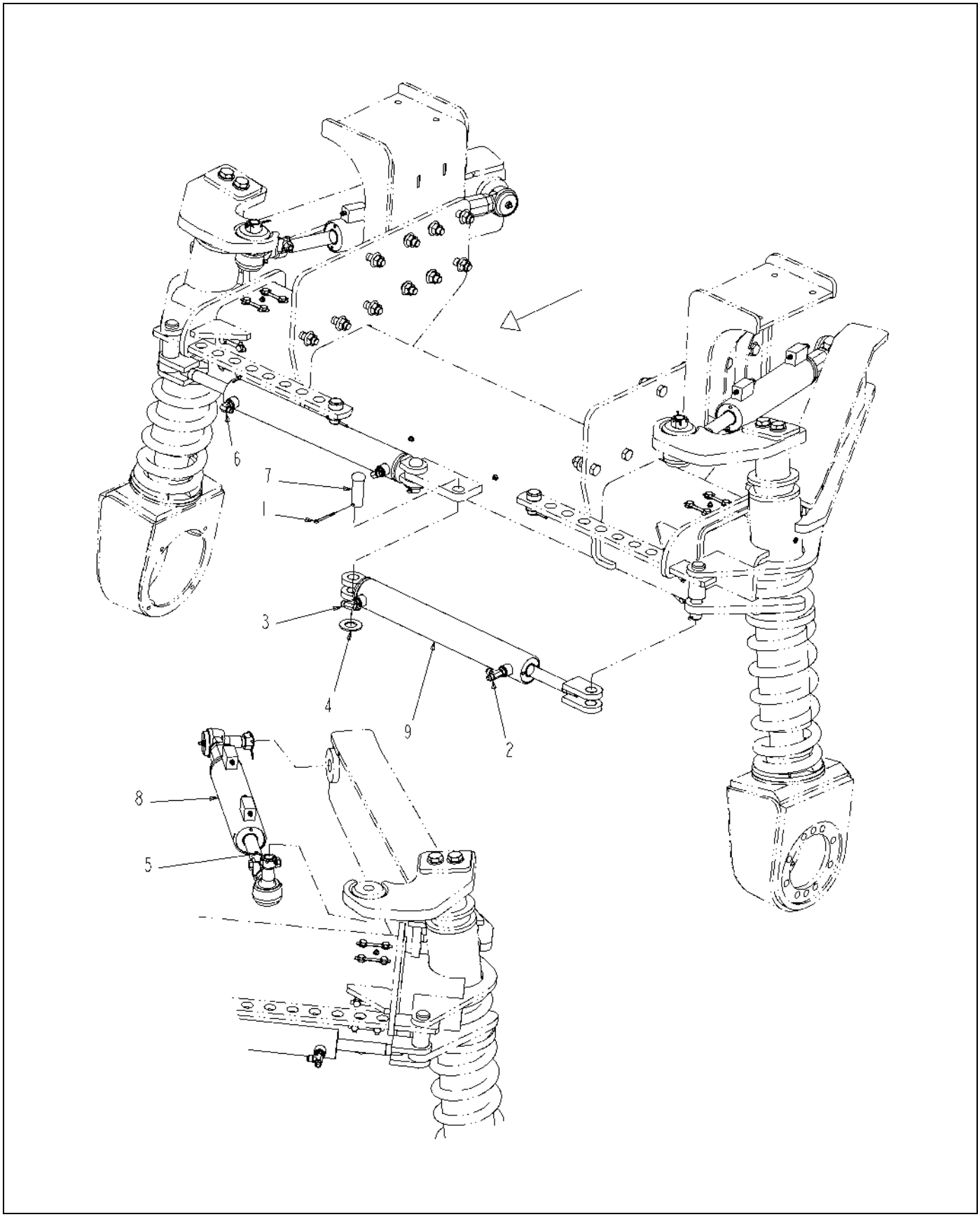

518389D1-02-R270-01.TIF

Copyright © 2008 AGCO Corporation

CYLINDER-INSTALL,FRONT AXLE,88

ITEM	PART #	QTY	DESCRIPTION	COMMENTS
1	AG515352	2	PIN COTTER 0.18X2.00 SS	
2	AG519123	1	TEE-RUN,STR THD -6	SEE PAGE 6-101
3	AG520285	1	TEE-6MOR X -6MJIC	
4	AG551856	2	WASHER 1.00 FL ZN SAE TYPE-A	
5	AG557838	4	PIN COTTER 0.12X2.00 ZN	
6	AG562354	2	ELBOW 90D 0.37MO-R X 0.25MJIC	[A]
7	AG602132	2	PIN CLEVIS 1.00X2.62 ZN	
8	515282D1	2	CYL-ASM,STEERING,7000	SEE PAGE 6-3
9	518305D1	2	CYL-HYD,TRACK ADJUST	SEE PAGE 6-25
	FOOTNOTE [A]		AG713166 O-RING	

Copyright © 2008 AGCO Corporation

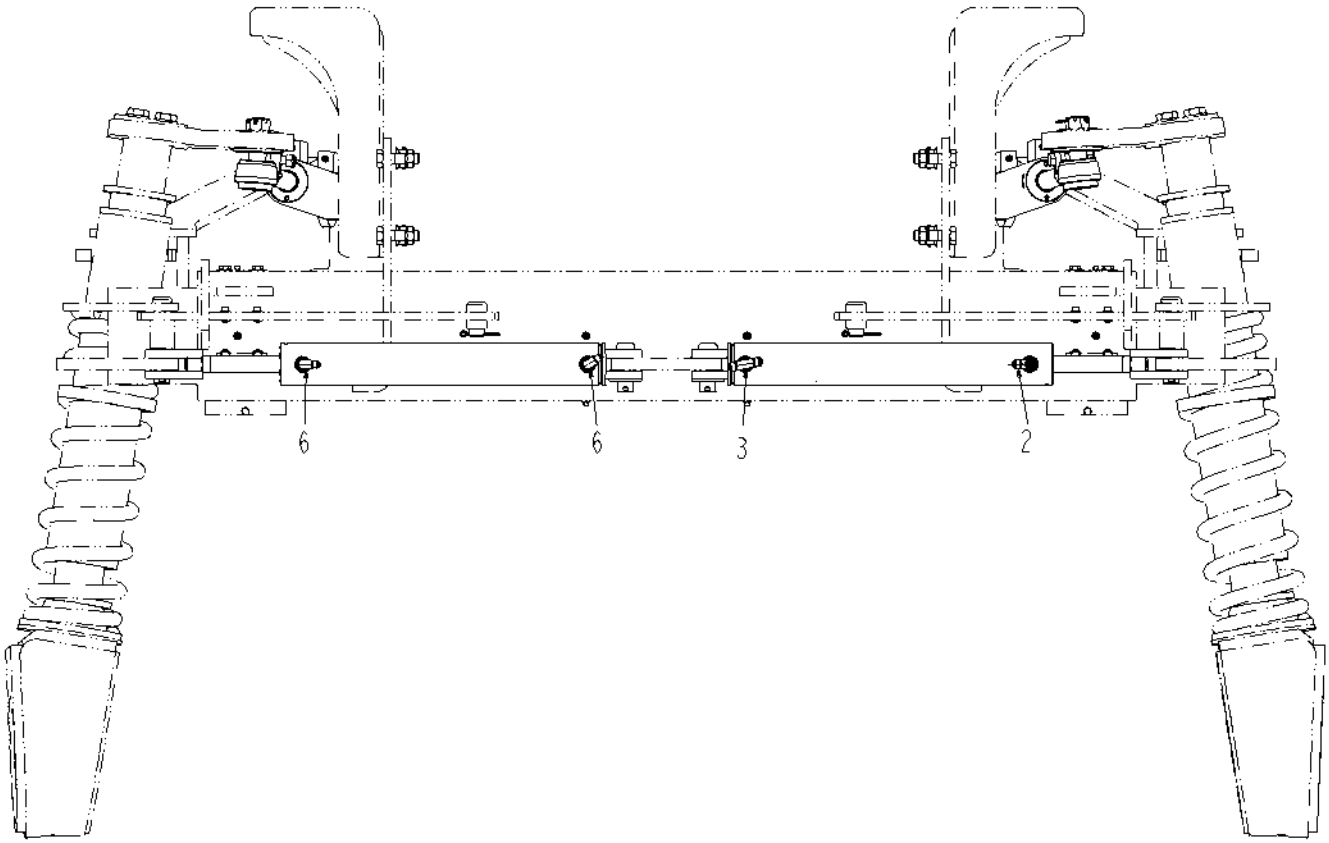

518389D1-02-R270-02.TIF

Copyright © 2008 AGCO Corporation

ITEM	PART #	QTY	DESCRIPTION	COMMENTS
2	AG519123	1	TEE-RUN,STR THD -6	SEE PAGE 6-101
3	AG520285	1	TEE-6MOR X -6MJIC	
6	AG562354	2	ELBOW 90D 0.37MO-R X 0.25MJIC	[A]
	FOOTNOTE [A]		AG713166 O-RING	

Copyright © 2008 AGCO Corporation

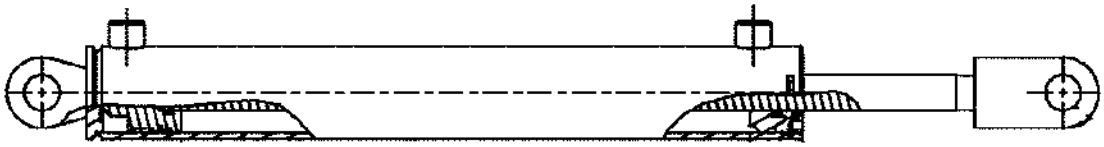

518305D1-01-R109-.TIF

Copyright © 2008 AGCO Corporation

CYLINDER-HYD,TRACK ADJUST

ITEM	PART #	QTY	DESCRIPTION	COMMENTS
REF	WR124932	-	KIT, SEAL	

Copyright © 2008 AGCO Corporation

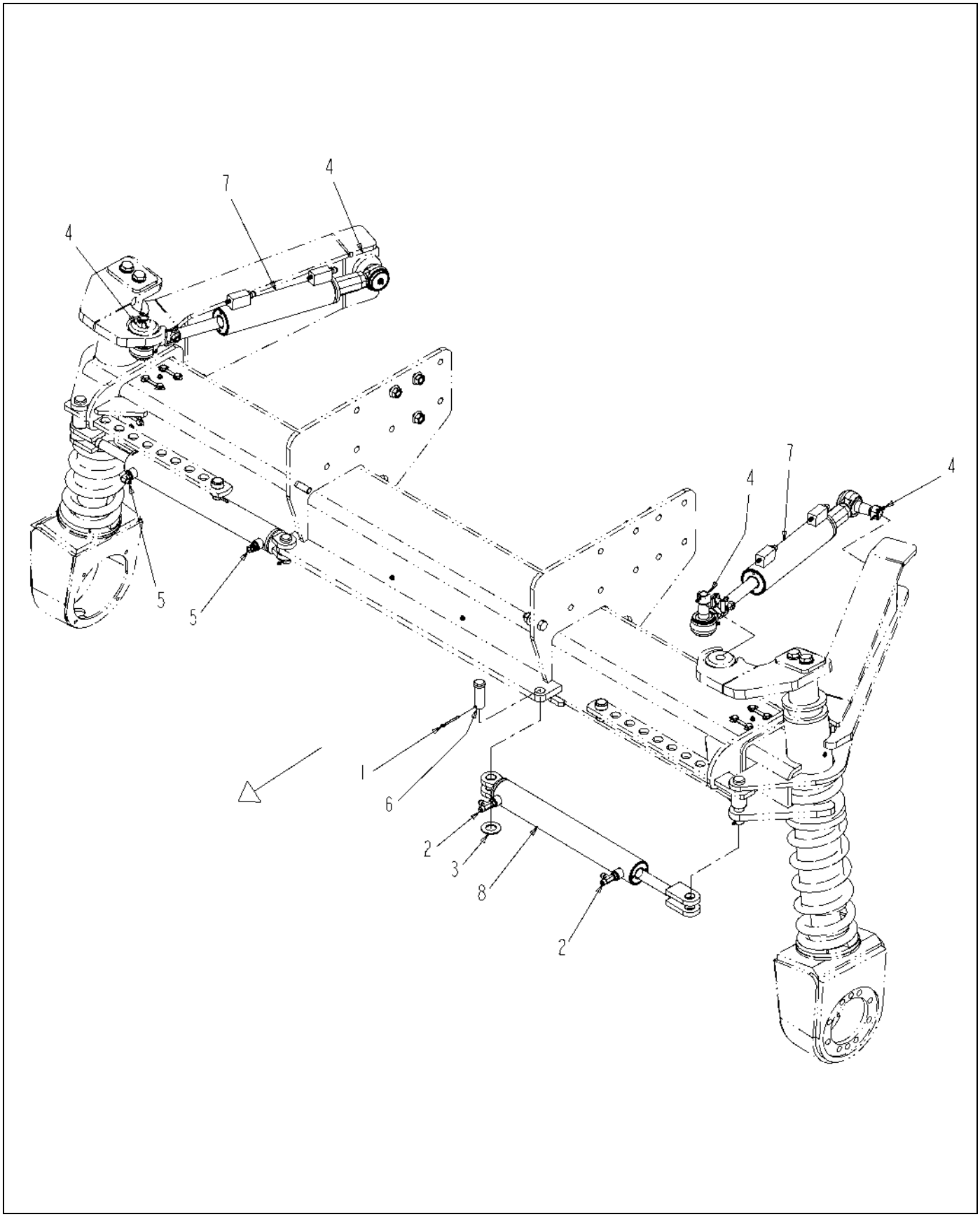

518353D1-02-R270-01.TIF

Copyright © 2008 AGCO Corporation

CYLINDER-INSTALL,FRONT AXLE,120

ITEM	PART #	QTY	DESCRIPTION	COMMENTS
1	AG515352	2	PIN COTTER 0.18X2.00 SS	
2	AG519123	2	TEE-RUN,STR THD -6	SEE PAGE 6-101
3	AG551856	2	WASHER 1.00 FL ZN SAE TYPE-A	
4	AG557838	4	PIN COTTER 0.12X2.00 ZN	
5	AG562354	2	ELBOW 90D 0.37MO-R X 0.25MJIC	[A]
6	AG602132	2	PIN CLEVIS 1.00X2.62 ZN	
7	515282D1	2	CYL-ASM,STEERING,7000	SEE PAGE 6-3
8	518305D1	2	CYL-HYD,TRACK ADJUST	SEE PAGE 6-25
	FOOTNOTE [A]		AG713166 O-RING	

Copyright © 2008 AGCO Corporation

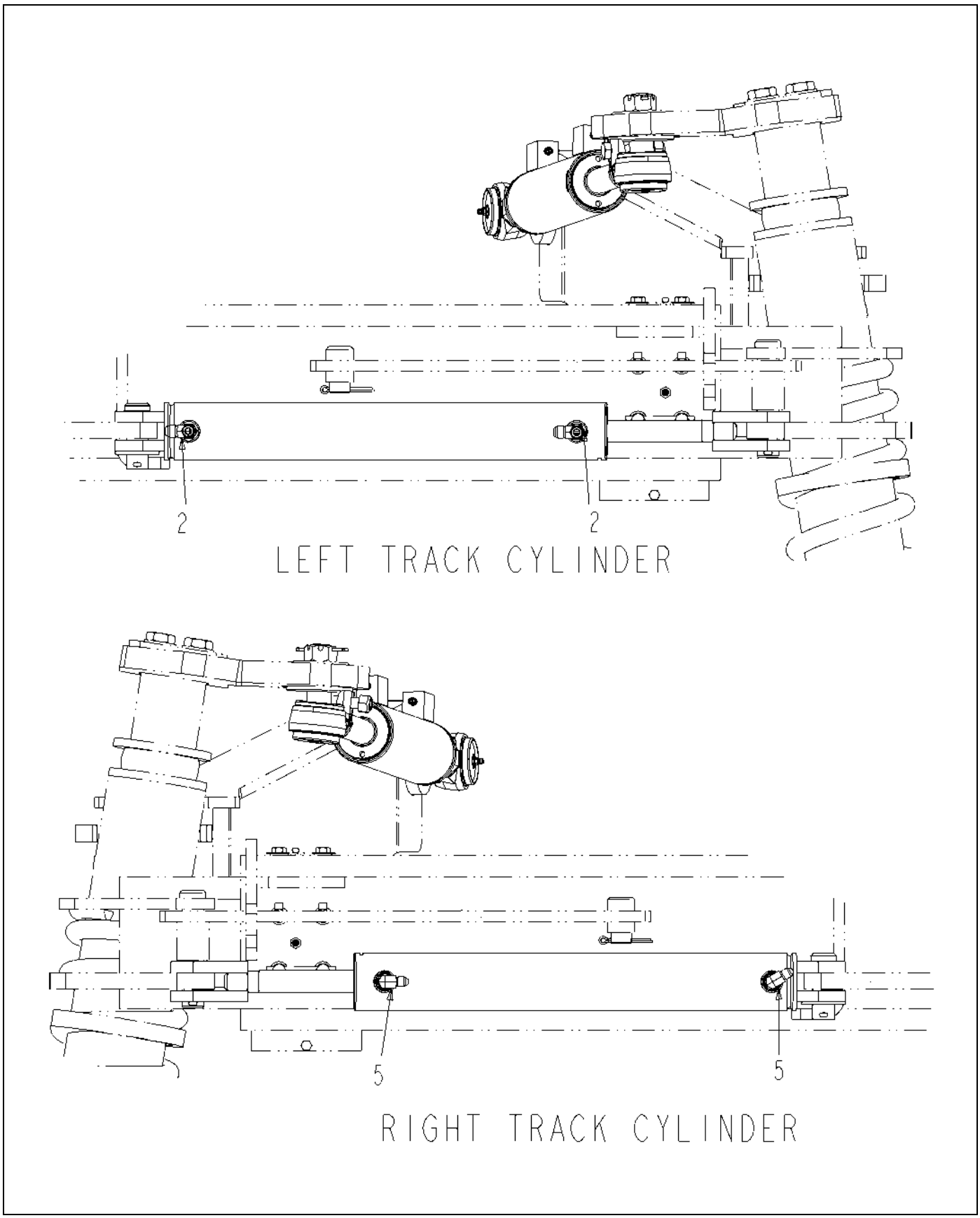

518353D1-02-R270-02.TIF

Copyright © 2008 AGCO Corporation

ITEM	PART #	QTY	DESCRIPTION	COMMENTS
2	AG519123	2	TEE-RUN,STR THD -6	SEE PAGE 6-101
5	AG562354	2	ELBOW 90D 0.37MO-R X 0.25MJIC	[A]
	FOOTNOTE [A]		AG713166 O-RING	

Copyright © 2008 AGCO Corporation

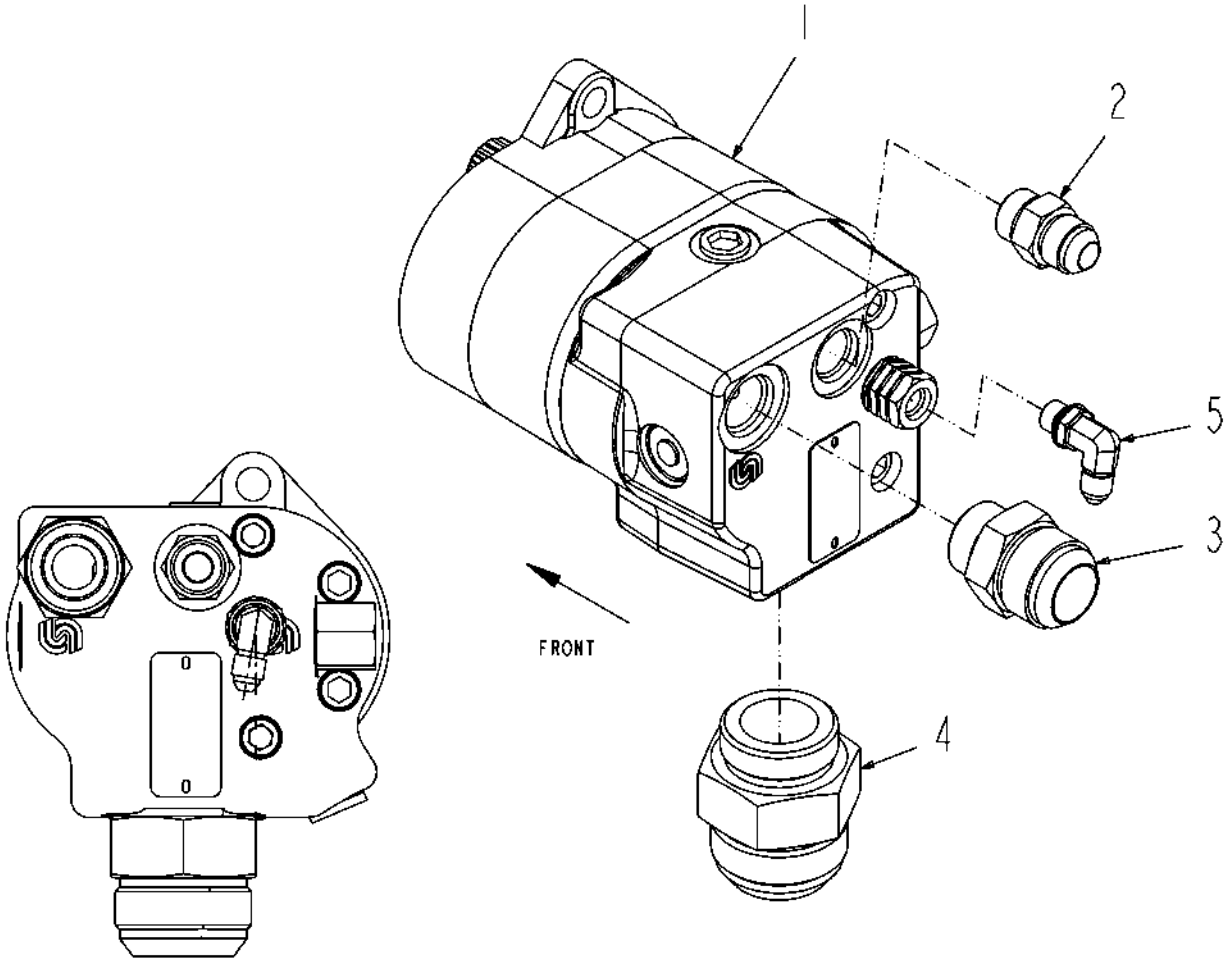

129400-A-1.TIF

Copyright © 2008 AGCO Corporation

PUMP-ASM,HYDRAULIC,CHASSIS

ITEM	PART #	QTY	DESCRIPTION	COMMENTS
1	WR123745	1	PUMP-HYD,GEAR,2.75 CID	SEE PAGE 6-29
2	AG551139	1	ADAP STR 0.50MO-R X 0.50 MJIC	SEE PAGE 6-102
3	AG561288	1	ADAP STR 0.75MO-R X 1.00MJIC	[A]
4	AG561296	1	ADAP STR 1.25MO-R X 1.50MJIC	
5	AG561677	1	ELBOW 90D 0.25MO-R X 0.25MJIC	SEE PAGE 6-106
	FOOTNOTE [A]		O-RING ONLY - AG714806	

Copyright © 2008 AGCO Corporation

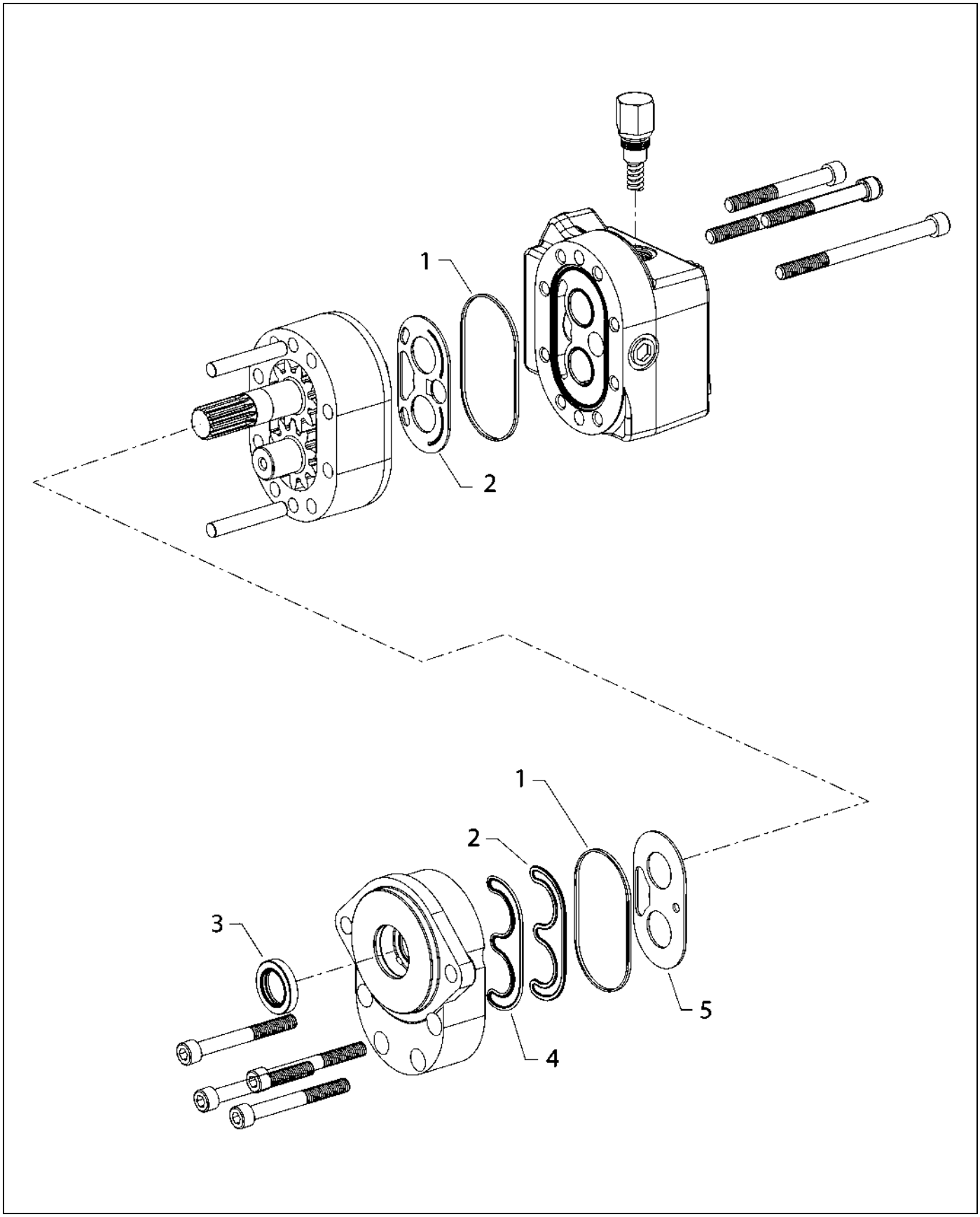

123745-A.TIF

Copyright © 2008 AGCO Corporation

PUMP-HYDRAULIC,GEAR,2.75 CID

ITEM	PART #	QTY	DESCRIPTION	COMMENTS
REF	WR138066	1	KIT/SEAL	
	FOOTNOTE		ITEMS 1-5 CANNOT BE PURCHASED INDIVIDUALLY BUT ARE INCLUDED IN THE SEAL KIT.	

Copyright © 2008 AGCO Corporation

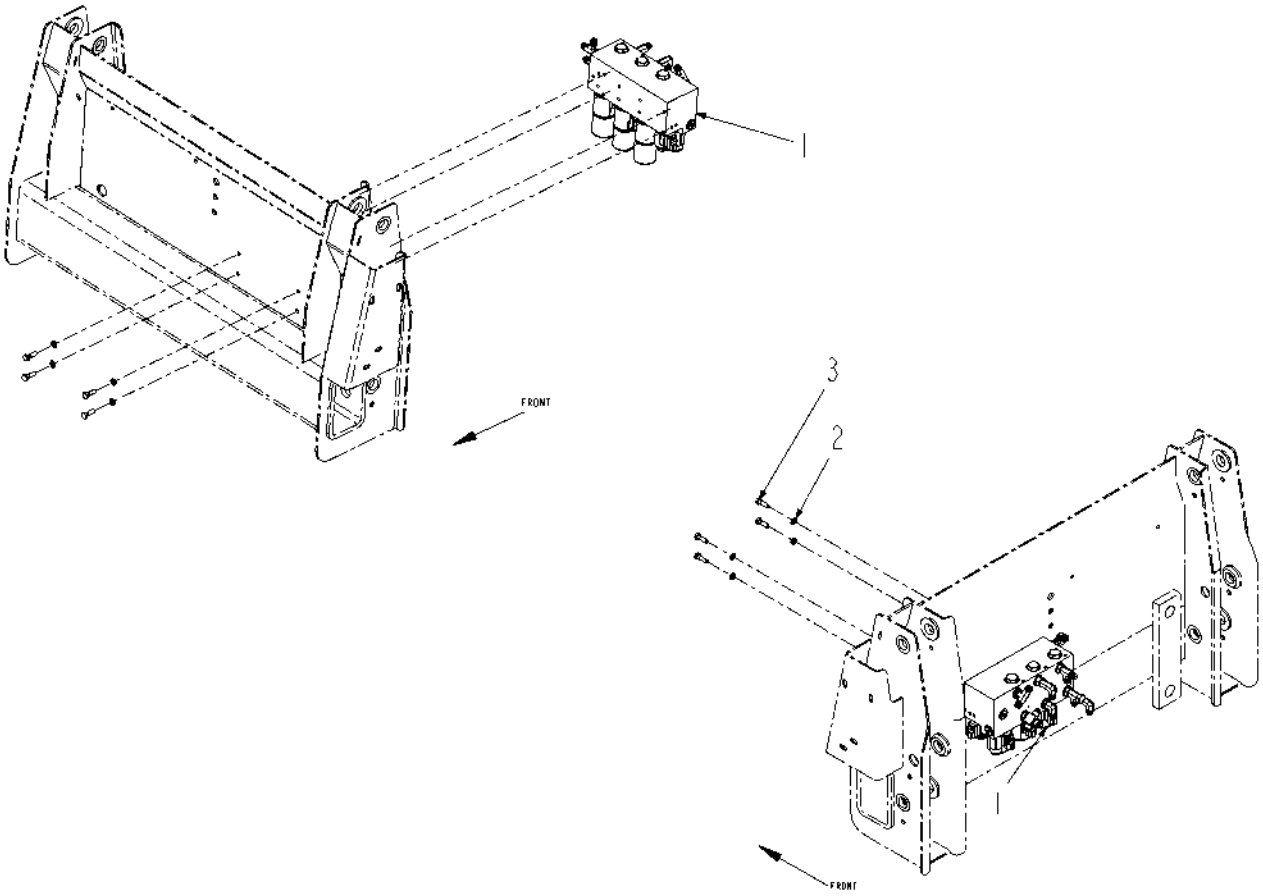

128875-04-N048-.TIF

Copyright © 2008 AGCO Corporation

VALVE INSTALL-HYD,BOOM LIFT/TRACK ADJUST

ITEM	PART #	QTY	DESCRIPTION	COMMENTS
1	WR128874	1	VALVE ASM-HYD,BM LFT/TRK ADJ	SEE PAGE 6-31
2	AG550205	4	WASHER 0.31 LK ZN REG	
3	AG551252	4	BOLT 0.31-18NCX 1.00 G5 ZN HHD	

Copyright © 2008 AGCO Corporation

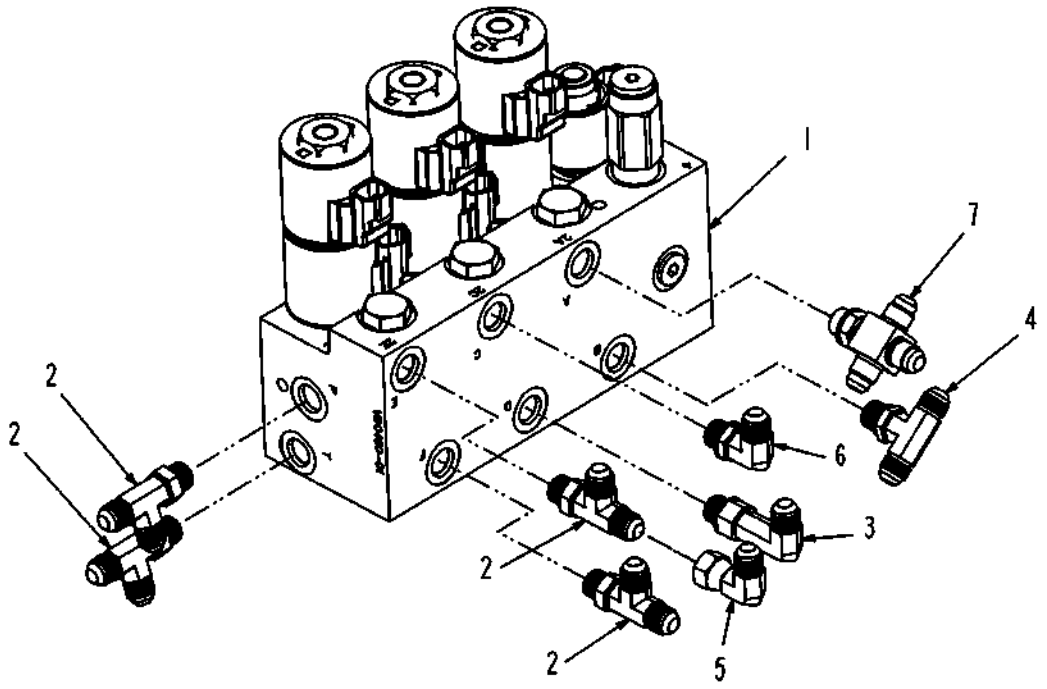

128874-C.TIF

Copyright © 2008 AGCO Corporation

VALVE ASM-HYD,BOOM LIFT/TRACK ADJUST

ITEM	PART #	QTY	DESCRIPTION	COMMENTS
1	WR122643	1	VALVE-HYD,BM LFT/TRK ADJ,3BANK	SEE PAGE 6-87
2	AG519123	4	TEE-RUN,STR THD -6	SEE PAGE 6-101
3	AG519766	1	ELBOW 90D .37MO-R LONGX.37MJIC	
4	AG520285	1	TEE-6MOR X -6MJIC	
5	AG561629	1	ELBOW -6FJS90X -6MJ	
6	AG562401	1	ELBOW -6MB90X-6MJ	
7	6578209	1	CONNECTOR-CROSS	

Copyright © 2008 AGCO Corporation

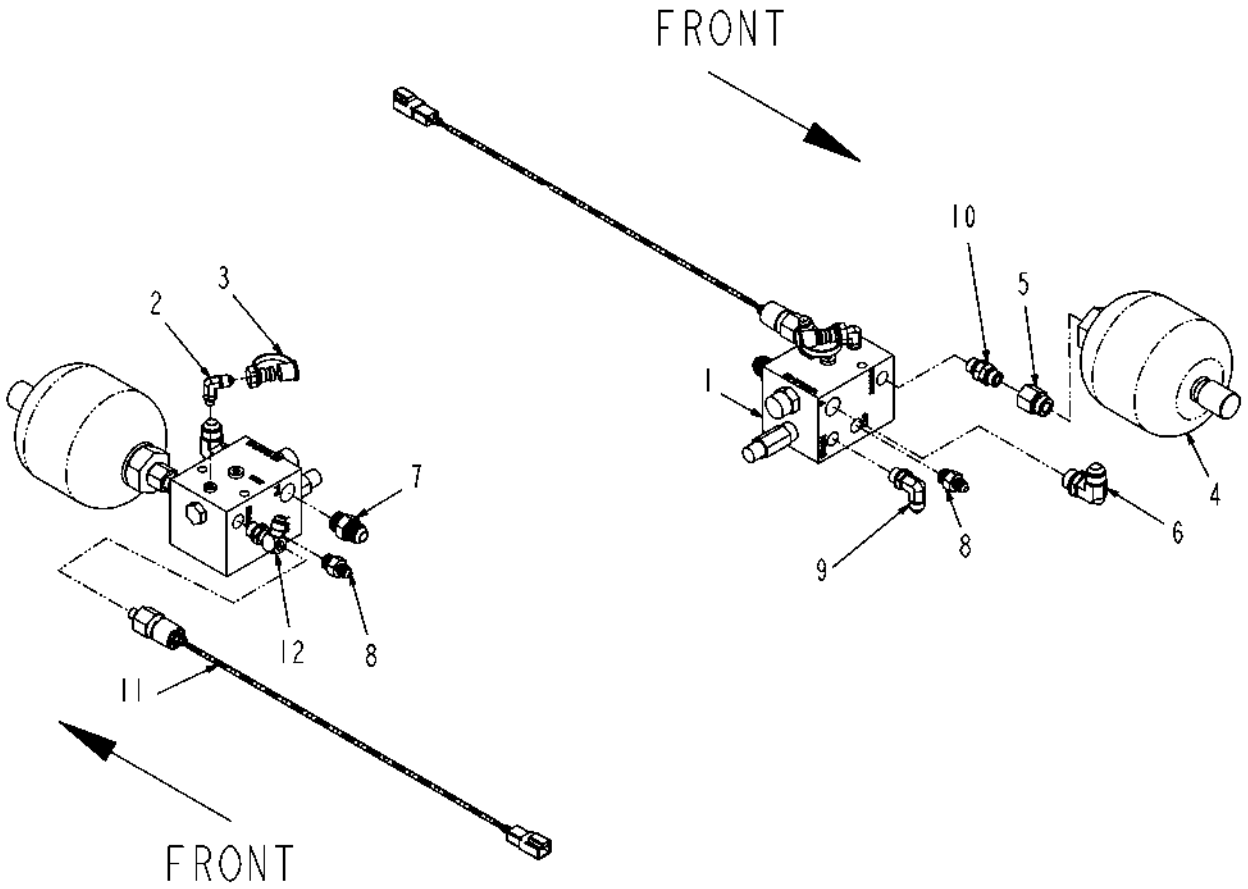

503558D1-02-M835-.TIF

Copyright © 2008 AGCO Corporation

FITTING INSTALL-BRAKE CHARGE VALVE

ITEM	PART #	QTY	DESCRIPTION	COMMENTS
1	WR122664	1	VALVE-BRAKE CHARGE	SEE PAGE 6-90
2	WR134358	1	ELBOW-90D -2MO-R X -4MJIC	
3	AG519113	1	TUBE END NIPPLE -4	
4	AG523544	1	ACCUM-HYD,DIAPH,45CU IN(MV)	
5	AG523871	1	ADAPTER-STR,.50MO-RX.38FO-R	
6	AG551112	1	ELBOW 90D 0.50MO-R X 0.50MJIC	SEE PAGE 6-105
7	AG551139	1	ADAP STR 0.50MO-R X 0.50 MJIC	SEE PAGE 6-102
8	AG561744	2	ADAP STR 0.37MO-R X 0.25MJIC	[A]
9	AG562401	1	ELBOW -6MB90X-6MJ	
10	AG717340	1	ADPTR-STR,.37MORX.37MOR	
11	503528D1	1	SWITCH-PRESSURE,-2MNPT,1040F	
12	503554D1	1	ELBOW-90D,-6MORX-6MJIC,2NPTF	
	FOOTNOTE [A]		AG713166 O-RING	

Copyright © 2008 AGCO Corporation

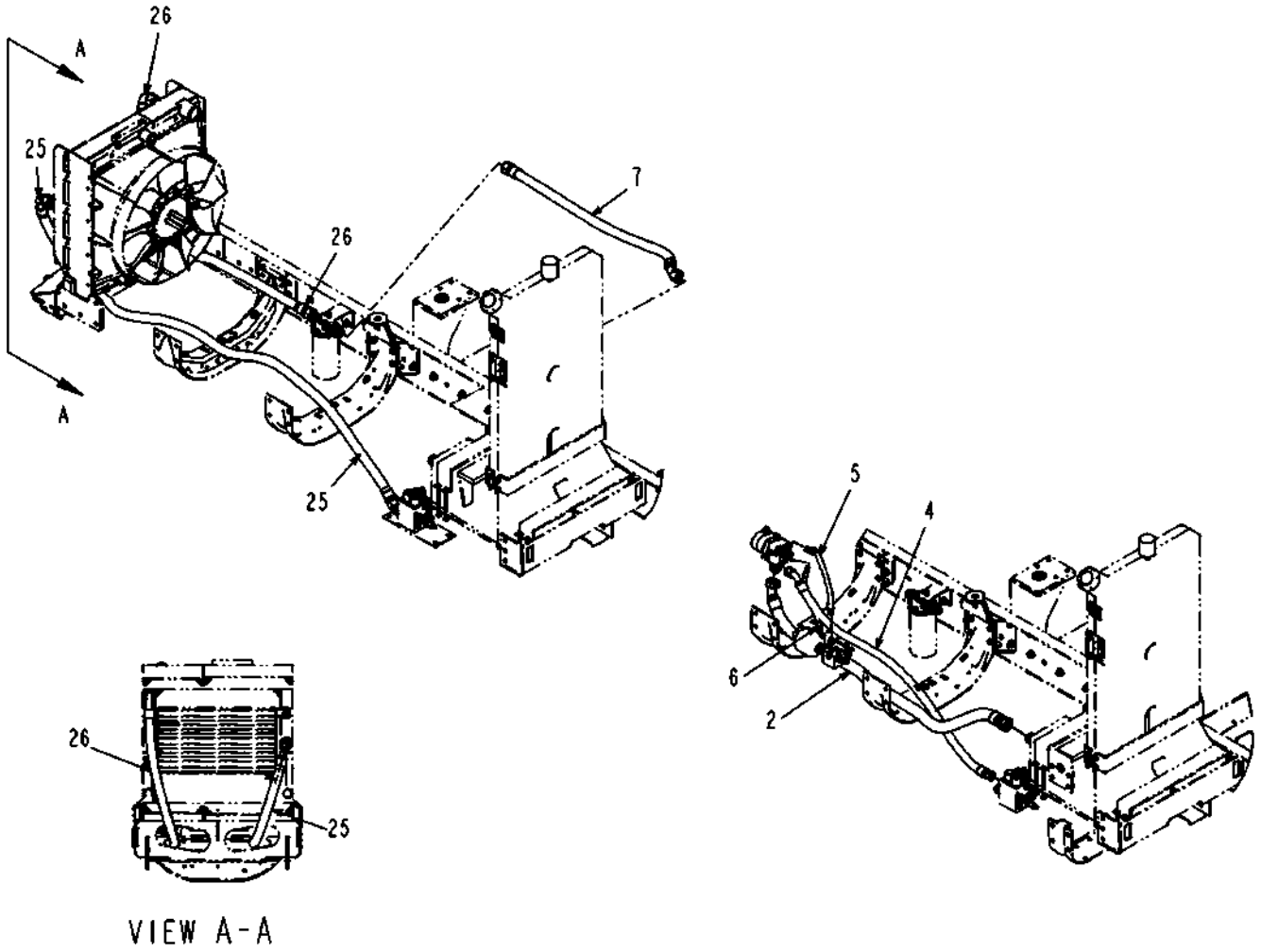

520783D1-04-T044-01.TIF

Copyright © 2008 AGCO Corporation

ITEM	PART #	QTY	DESCRIPTION	COMMENTS
2	WR128895	-	HOSE ASM -24X71.00 FJS/FJS45	
4	WR129217	-	HOSE ASM -16X62.00 FJS/FJS45	
5	WR129218	-	HOSE ASM -8X21.00 FJS/FJS45	
6	WR129219	-	HOSE ASM -4X15.50 FJS/FJS45	
7	WR129221	-	HOSE ASM -20X49.00 FJS/FJS45	
12	AG235277	-	HOSE ASM -6 140.00 FJS/FJS90	
22	520784D1	-	KIT-HOSE,CHASSIS	
25	522421D1	-	HOSE ASM,-20X114 FJS/FJS90S	
26	525056D1	-	HOSE ASM,-20X74 FJS/FJS90S	

Copyright © 2008 AGCO Corporation

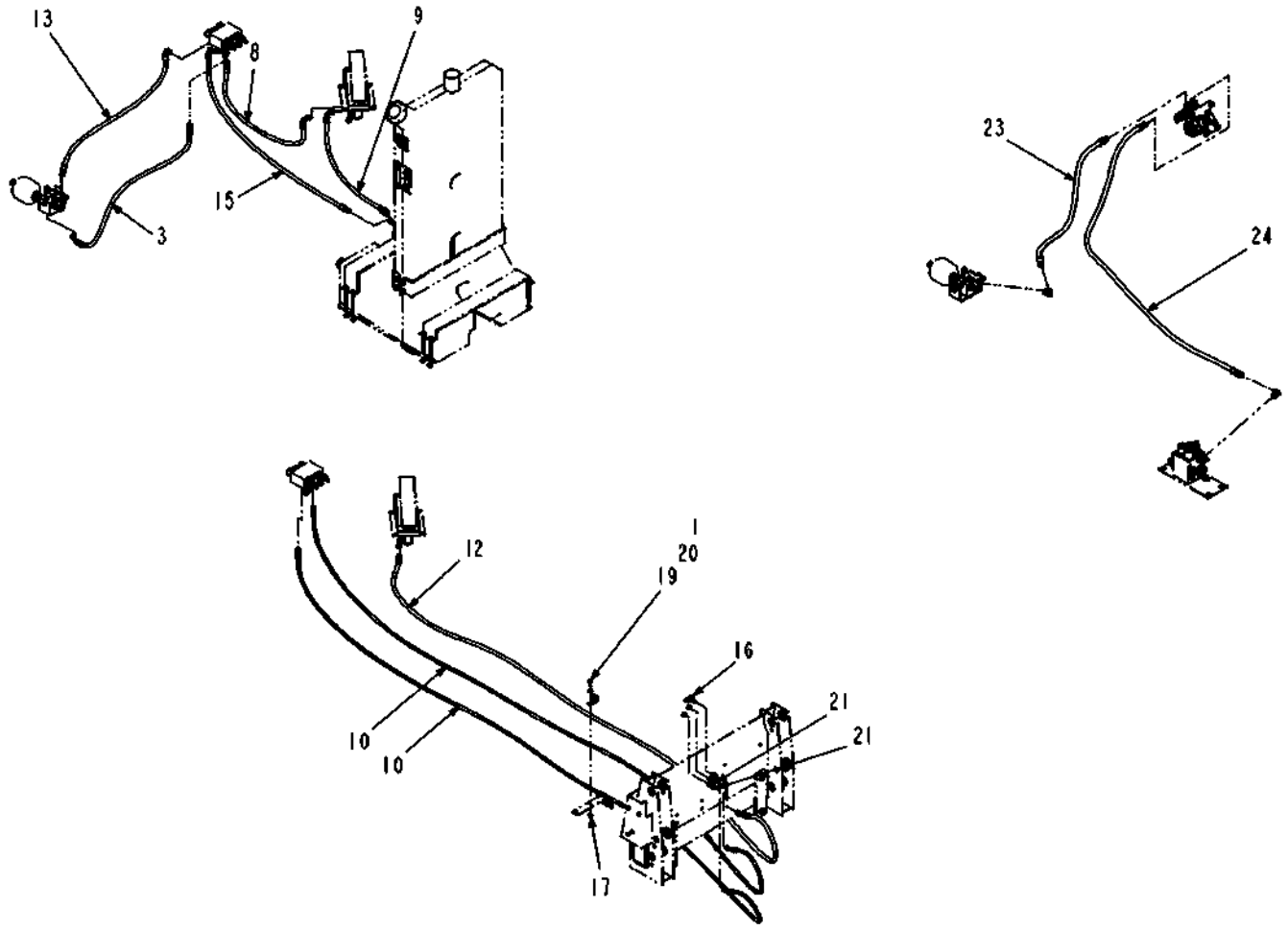

520783D1-04-T044-02.TIF

Copyright © 2008 AGCO Corporation

ITEM	PART #	QTY	DESCRIPTION	COMMENTS
1	AG010359	1	CLAMP LOOM 1.25 PER DWG	
3	WR129213	-	HOSE ASM -6X48.00 FJS/FJS90	
8	WR129227	-	HOSE ASM -6X36.00 FJS/FJS90	
9	WR129232	-	HOSE ASM -6X33.00 FJS90/FJS90	
10	WR129406	-	HOSE ASM -4X173 4FJS/6FJS	
13	AG235880	-	HOSE ASM -6X40.00 FJS/FJS90	
15	AG260517	-	HOSE ASM -6X55.00 FJS/FJS90	
16	AG517469	1	TEE BLKHD 0.38 JIC	[A]
17	AG520885	2	NUT-.38-16,G5,ZN,FLG,H	
19	AG550175	2	BOLT 0.37-16NCX 1.00 G5 ZN HHD	
20	AG550981	2	WASHER 0.37 FL ZN NAR TYPE-B	
21	AG561645	2	ADAP STR 0.25MJICBKHDX0.25MJIC	
23	521457D1	-	HOSE ASM,-8X40 FJS(2)	
24	521458D1	-	HOSE ASM,-8X78 FJS(2)	
	FOOTNOTE [A]		AG713166 O-RING	

Copyright © 2008 AGCO Corporation

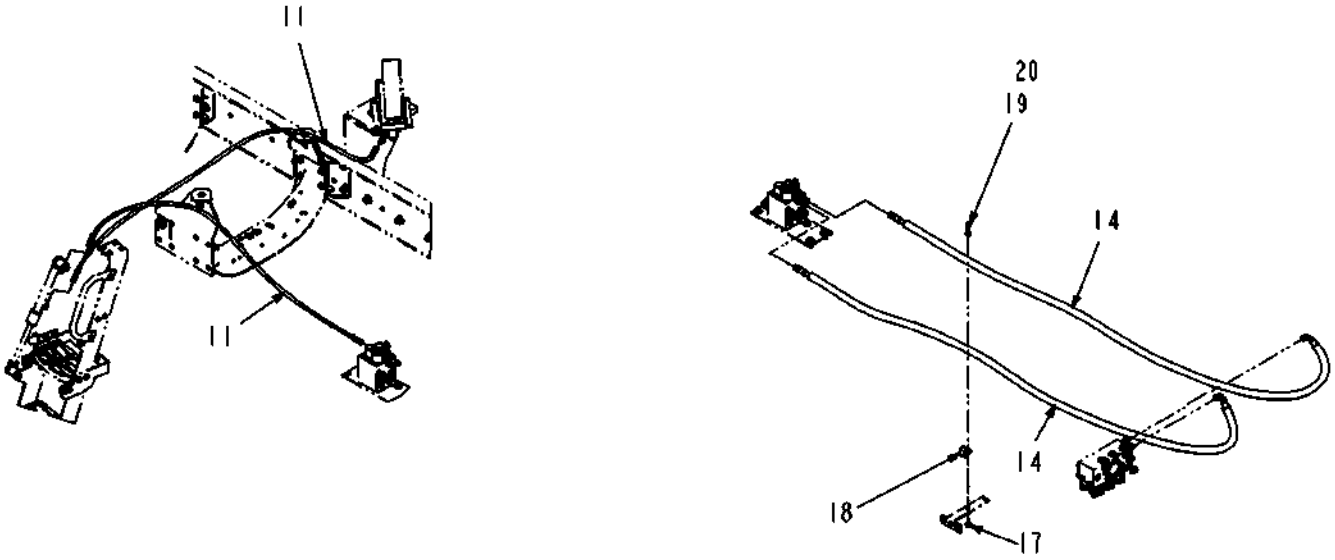

520783D1-04-T044-03.TIF

Copyright © 2008 AGCO Corporation

ITEM	PART #	QTY	DESCRIPTION	COMMENTS
11	AG229245	-	HOSE ASM -4 63.00 R1AT	
14	AG237062	-	HOSE ASM -6X120,FJS/FJS90	
17	AG520885	2	NUT-.38-16,G5,ZN,FLG,H	
18	AG523533	1	CLAMP-1.62 DIA,COATED,HOSE	
19	AG550175	2	BOLT 0.37-16NCX 1.00 G5 ZN HHD	
20	AG550981	2	WASHER 0.37 FL ZN NAR TYPE-B	

Copyright © 2008 AGCO Corporation

Please refer to the Bill Of Material on the opposite page for related Installations, Assemblies, or Parts

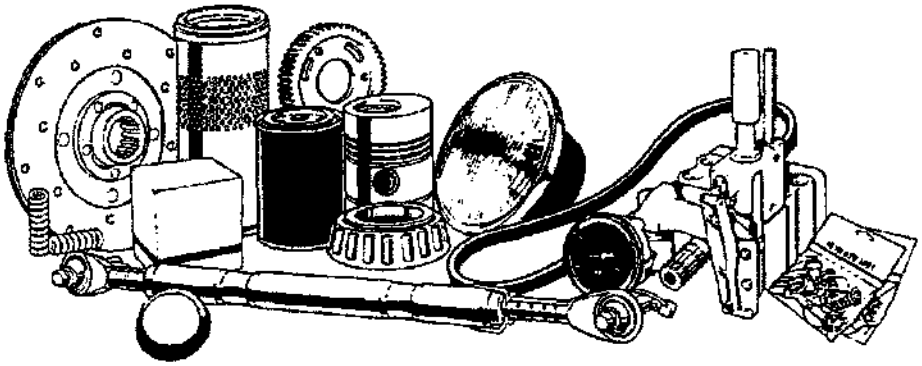

523722D1.tif

Copyright © 2008 AGCO Corporation

HYD CHASSIS GROUP,NON DOMESTIC

ITEM	PART #	QTY	DESCRIPTION	COMMENTS
1	WR128875	1	VALVE INSTL-HYD,BM LFT/TRK ADJ	SEE PAGE 6-30
2	520782D1	1	COMPONENT INSTL-CHASSIS	SEE PAGE 6-8
3	523922D1	1	CHASSIS-HOSE ASM INSTL	SEE PAGE 6-41
4	523924D1	1	KIT-HOSE,CHASSIS	

Copyright © 2008 AGCO Corporation

Please refer to the Bill Of Material on the opposite page for related Installations, Assemblies, or Parts

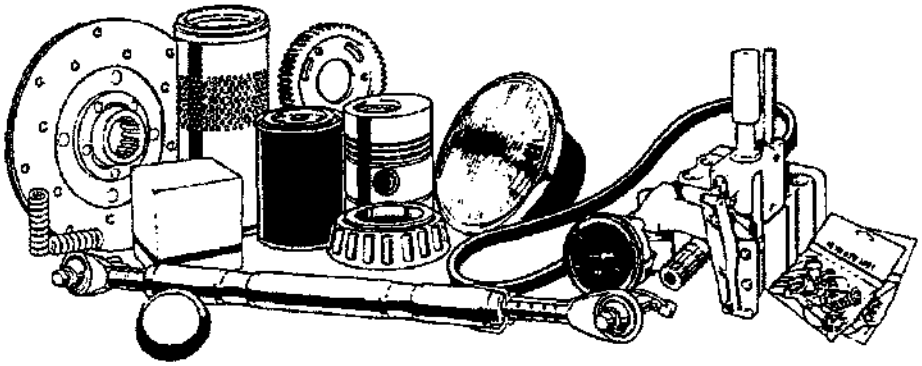

523049D1.tif

Copyright © 2008 AGCO Corporation

HYD CHASSIS GROUP,DOMESTIC

ITEM	PART #	QTY	DESCRIPTION	COMMENTS
1	WR128875	1	VALVE INSTL-HYD,BM LFT/TRK ADJ	SEE PAGE 6-30
2	520782D1	1	COMPONENT INSTL-CHASSIS	SEE PAGE 6-8
3	523921D1	1	CHASSIS-HOSE ASM INSTL	SEE PAGE 6-38
4	523923D1	1	KIT-HOSE,CHASSIS	

Copyright © 2008 AGCO Corporation

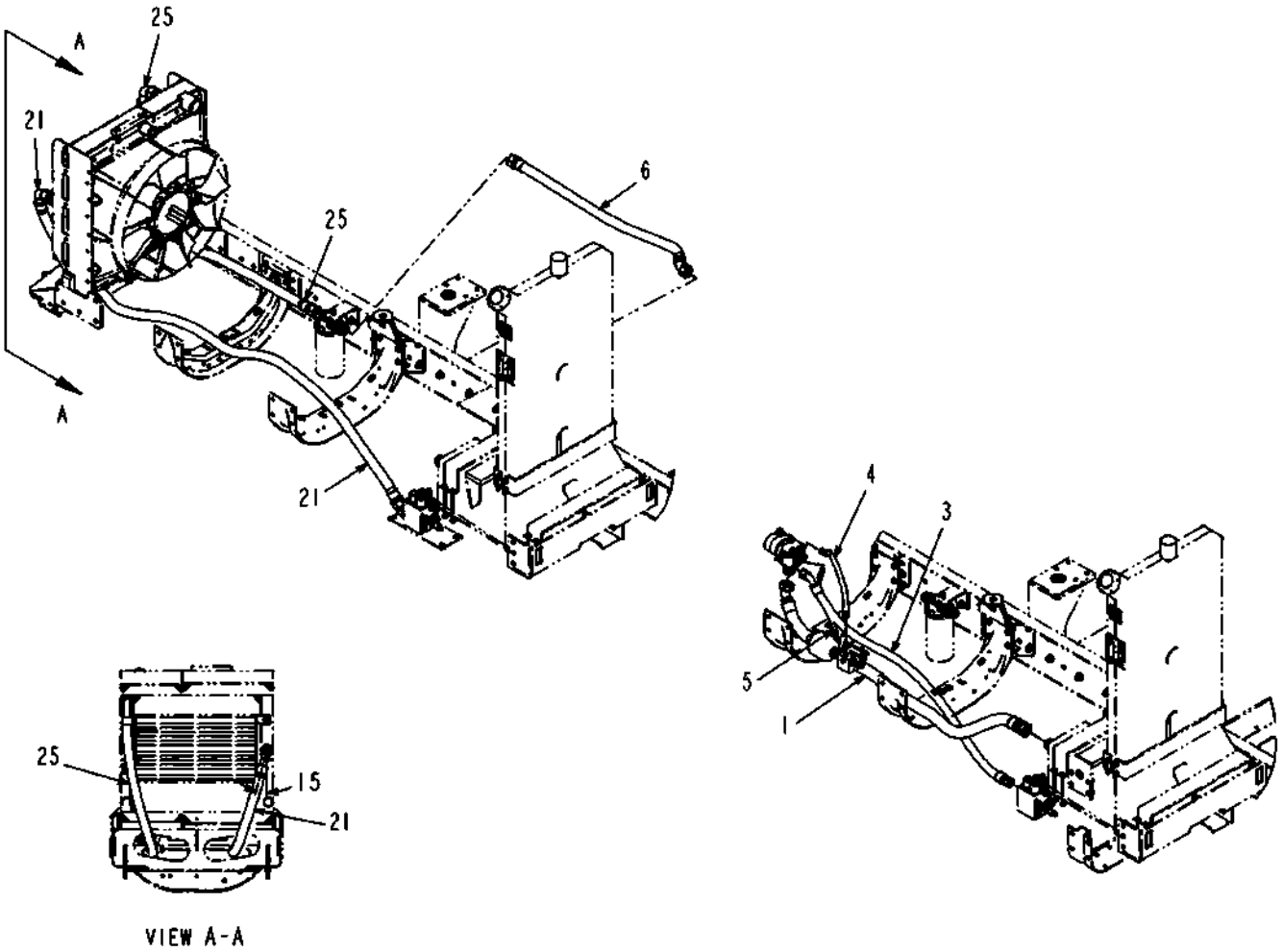

523921D1-01-R907-01.TIF

Copyright © 2008 AGCO Corporation

ITEM	PART #	QTY	DESCRIPTION	COMMENTS
1	WR128895	-	HOSE ASM -24X71.00 FJS/FJS45	
3	WR129217	-	HOSE ASM -16X62.00 FJS/FJS45	
4	WR129218	-	HOSE ASM -8X21.00 FJS/FJS45	
5	WR129219	-	HOSE ASM -4X15.50 FJS/FJS45	
6	WR129221	-	HOSE ASM -20X49.00 FJS/FJS45	
15	AG520885	2	NUT-.38-16,G5,ZN,FLG,H	
21	522421D1	-	HOSE ASM,-20X114 FJS/FJS90S	
22	523923D1	-	KIT-HOSE,CHASSIS	
25	525056D1	-	HOSE ASM,-20X74 FJS/FJS90S	

Copyright © 2008 AGCO Corporation

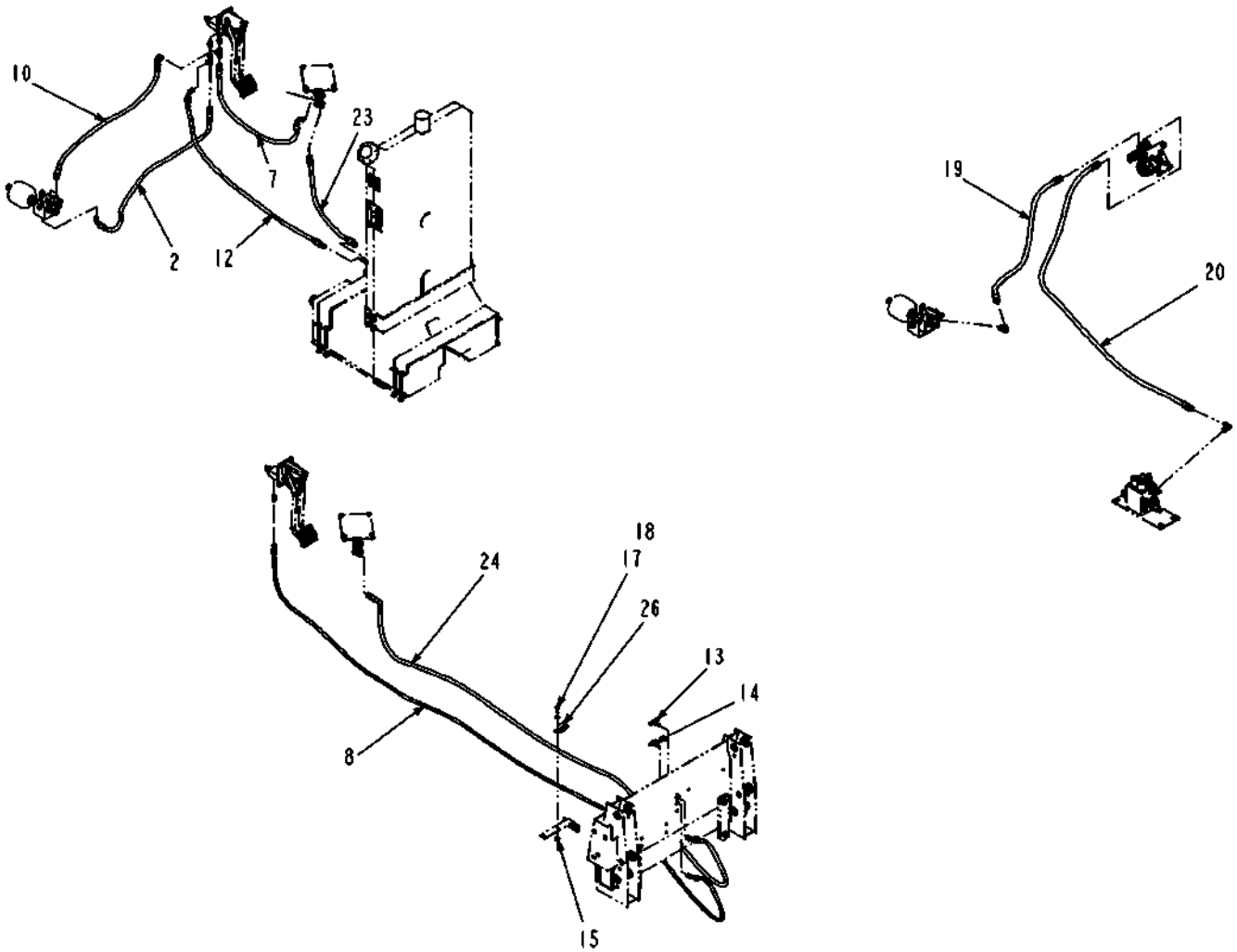

523921D1-01-R907-02.TIF

Copyright © 2008 AGCO Corporation

ITEM	PART #	QTY	DESCRIPTION	COMMENTS
2	WR129213	-	HOSE ASM -6X48.00 FJS/FJS90	
7	WR129227	-	HOSE ASM -6X36.00 FJS/FJS90	
8	WR129406	-	HOSE ASM -4X173 4FJS/6FJS	
10	AG235880	-	HOSE ASM -6X40.00 FJS/FJS90	
12	AG260517	-	HOSE ASM -6X55.00 FJS/FJS90	
13	AG517469	1	TEE BLKHD 0.38 JIC	[A]
14	AG517471	1	ADAPTER BLKHD BRANCH TEE -4	
15	AG520885	2	NUT-.38-16,G5,ZN,FLG,H	
17	AG550175	2	BOLT 0.37-16NCX 1.00 G5 ZN HHD	
18	AG550981	2	WASHER 0.37 FL ZN NAR TYPE-B	
19	521457D1	-	HOSE ASM,-8X40 FJS(2)	
20	521458D1	-	HOSE ASM,-8X78 FJS(2)	
23	523946D1	-	HOSE ASM,-6X28 FJS/FJS90S	
24	523947D1	-	HOSE ASM,-6X138 FJS/FJS90S	
26	CH100-4336	1	CLIP-LOOP 10.3 DBL	
	FOOTNOTE [A]		AG713166 O-RING	

Copyright © 2008 AGCO Corporation

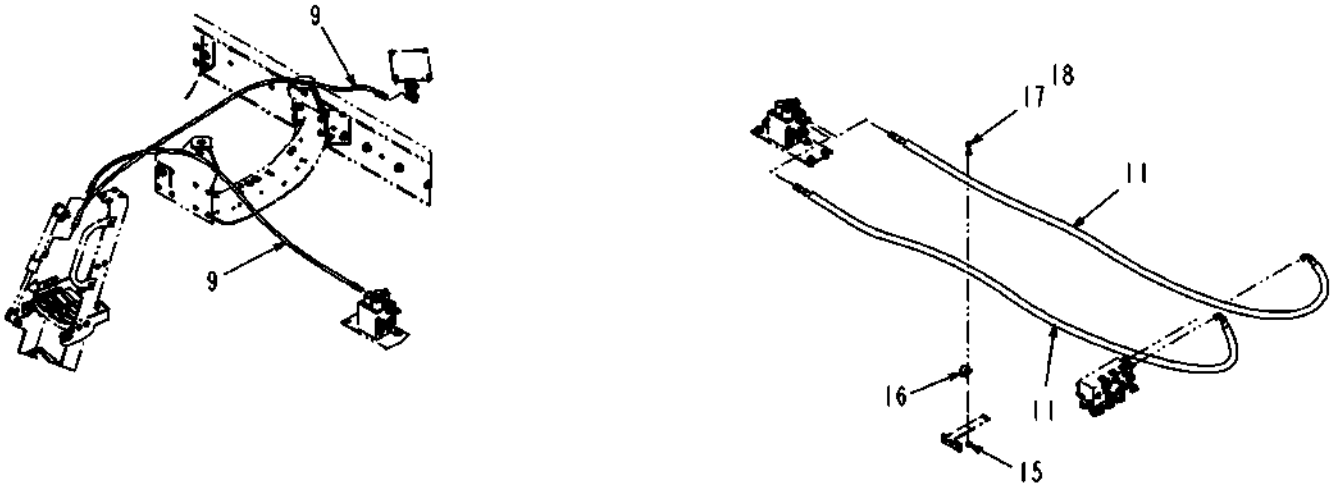

523921D1-01-R907-03.TIF

Copyright © 2008 AGCO Corporation

ITEM	PART #	QTY	DESCRIPTION	COMMENTS
9	AG229245	-	HOSE ASM -4 63.00 R1AT	
11	AG237062	-	HOSE ASM -6X120,FJS/FJS90	
15	AG520885	2	NUT-.38-16,G5,ZN,FLG,H	
16	AG523533	1	CLAMP-1.62 DIA,COATED,HOSE	
17	AG550175	2	BOLT 0.37-16NCX 1.00 G5 ZN HHD	
18	AG550981	2	WASHER 0.37 FL ZN NAR TYPE-B	

Copyright © 2008 AGCO Corporation

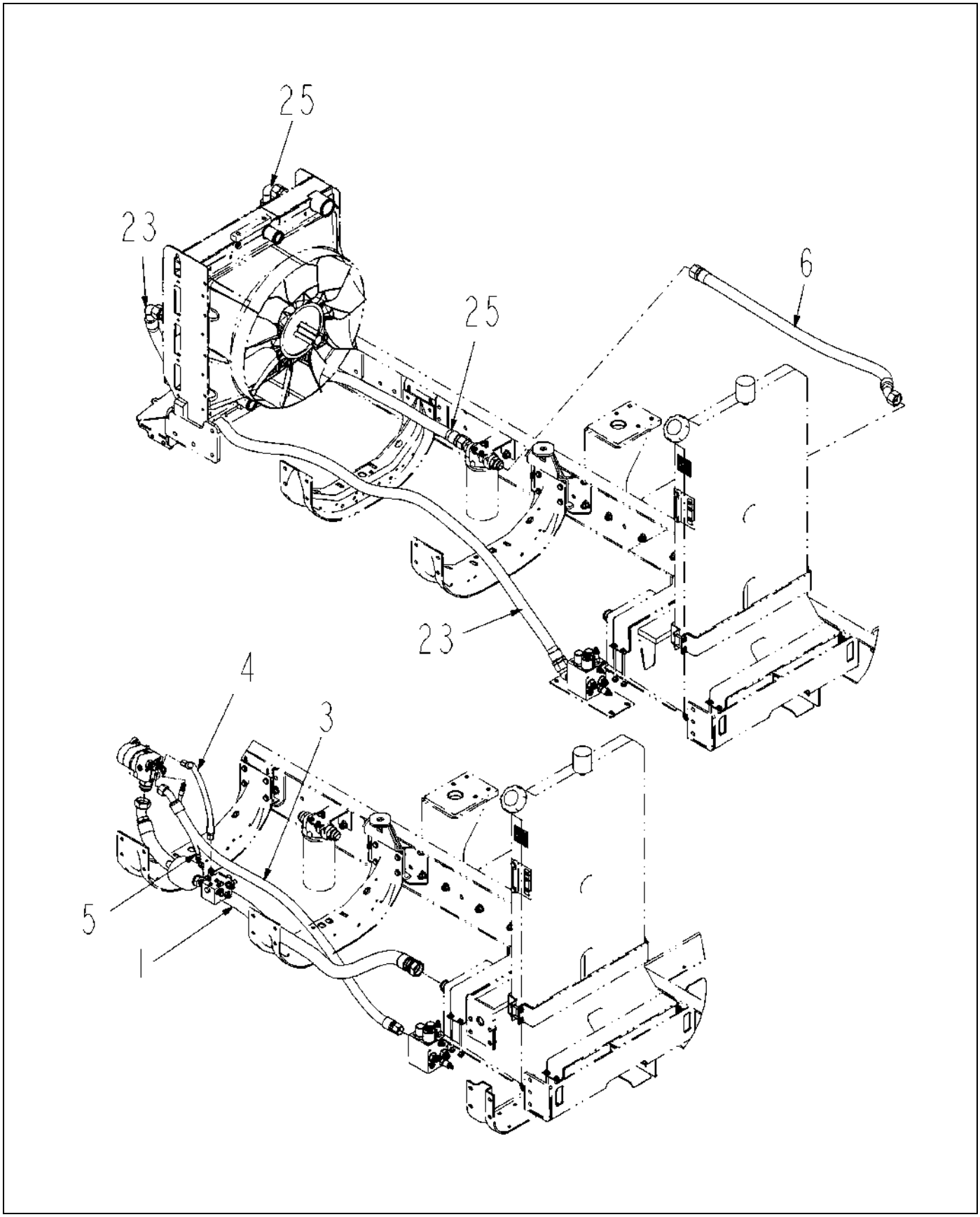

523922D1-01-R907-01.TIF

Copyright © 2008 AGCO Corporation

CHASSIS-HOSE ASM INSTALL, 2009

ITEM	PART #	QTY	DESCRIPTION	COMMENTS
1	WR128895	-	HOSE ASM -24X71.00 FJS/FJS45	
3	WR129217	-	HOSE ASM -16X62.00 FJS/FJS45	
4	WR129218	-	HOSE ASM -8X21.00 FJS/FJS45	
5	WR129219	-	HOSE ASM -4X15.50 FJS/FJS45	
6	WR129221	-	HOSE ASM -20X49.00 FJS/FJS45	
23	522421D1	-	HOSE ASM,-20X114 FJS/FJS90S	
24	523924D1	-	KIT-HOSE,CHASSIS	
25	525056D1	-	HOSE ASM,-20X74 FJS/FJS90S	

Copyright © 2008 AGCO Corporation

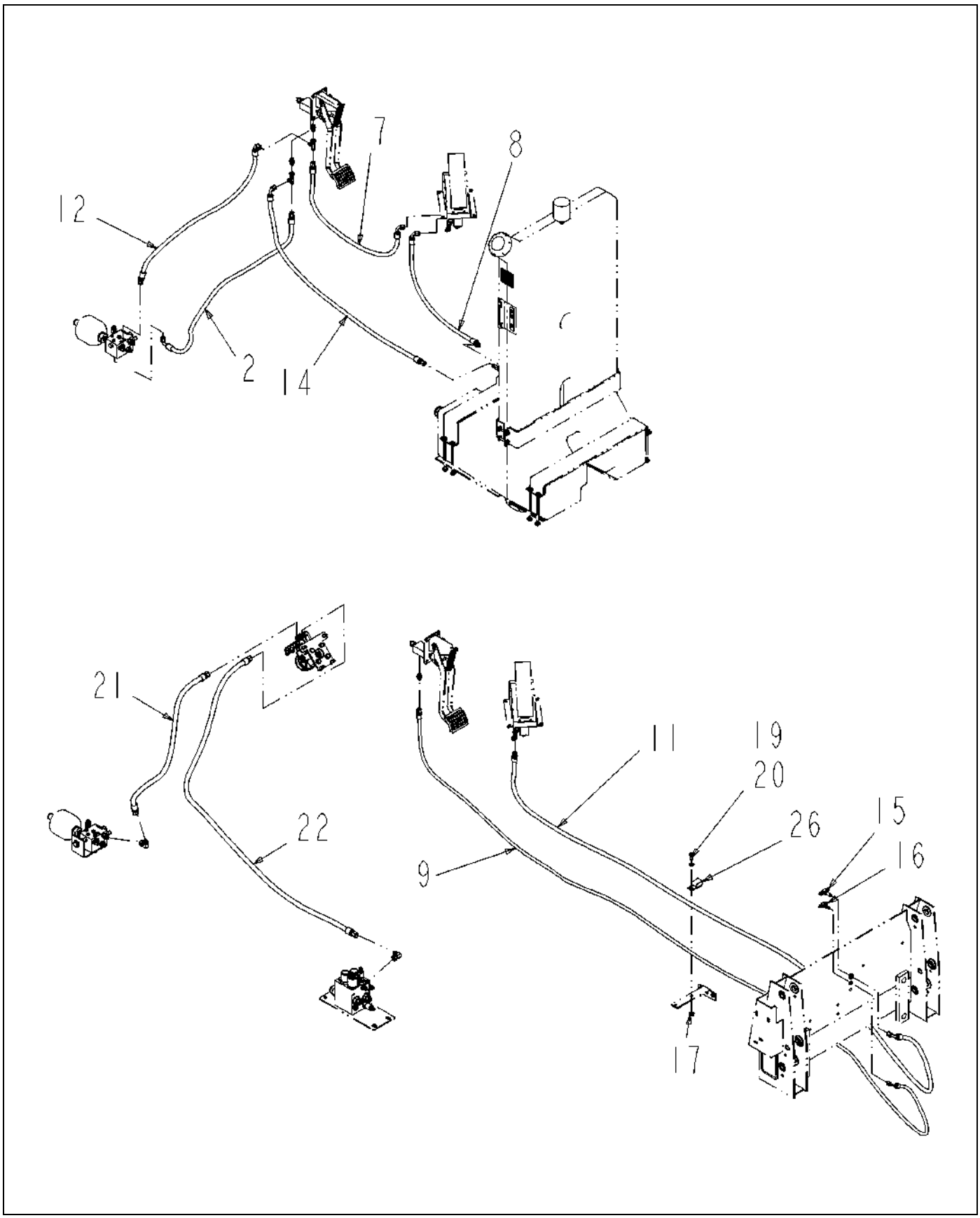

523922D1-01-R907-02.TIF

Copyright © 2008 AGCO Corporation

ITEM	PART #	QTY	DESCRIPTION	COMMENTS
2	WR129213	-	HOSE ASM -6X48.00 FJS/FJS90	
7	WR129227	-	HOSE ASM -6X36.00 FJS/FJS90	
8	WR129232	-	HOSE ASM -6X33.00 FJS90/FJS90	
9	WR129406	-	HOSE ASM -4X173 4FJS/6FJS	
11	AG235277	-	HOSE ASM -6 140.00 FJS/FJS90	
12	AG235880	-	HOSE ASM -6X40.00 FJS/FJS90	
14	AG260517	-	HOSE ASM -6X55.00 FJS/FJS90	
15	AG517469	1	TEE BLKHD 0.38 JIC	[A]
16	AG517471	1	ADAPTER BLKHD BRANCH TEE -4	
17	AG520885	2	NUT-.38-16,G5,ZN,FLG,H	
19	AG550175	2	BOLT 0.37-16NCX 1.00 G5 ZN HHD	
20	AG550981	2	WASHER 0.37 FL ZN NAR TYPE-B	
21	521457D1	-	HOSE ASM,-8X40 FJS(2)	
22	521458D1	-	HOSE ASM,-8X78 FJS(2)	
26	CH100-4336	1	CLIP-LOOP 10.3 DBL	
	FOOTNOTE [A]		AG713166 O-RING	

Copyright © 2008 AGCO Corporation

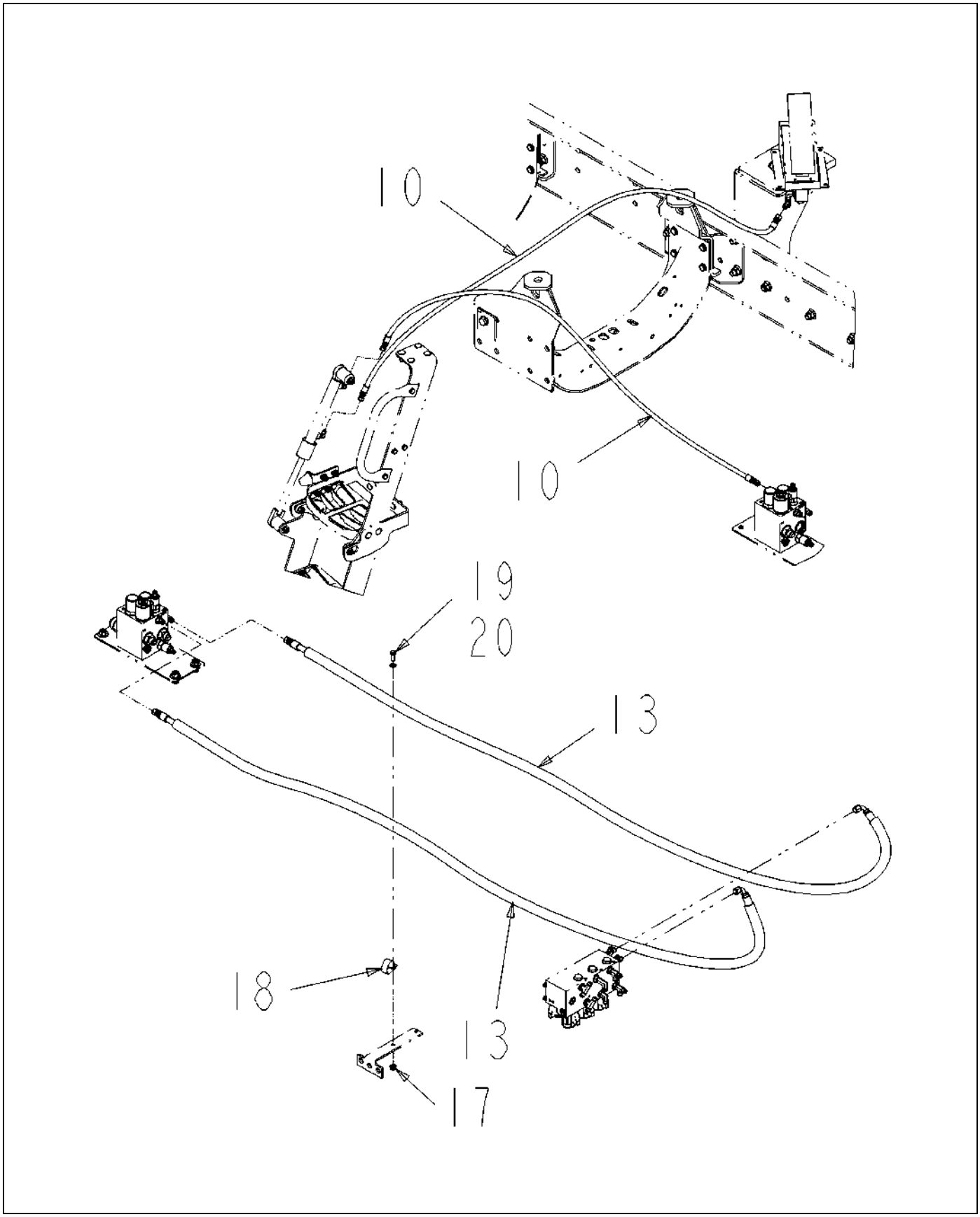

523922D1-01-R907-03.TIF

Copyright © 2008 AGCO Corporation

ITEM	PART #	QTY	DESCRIPTION	COMMENTS
10	AG229245	-	HOSE ASM -4 63.00 R1AT	
13	AG237062	-	HOSE ASM -6X120,FJS/FJS90	
17	AG520885	2	NUT-.38-16,G5,ZN,FLG,H	
18	AG523533	1	CLAMP-1.62 DIA,COATED,HOSE	
19	AG550175	2	BOLT 0.37-16NCX 1.00 G5 ZN HHD	
20	AG550981	2	WASHER 0.37 FL ZN NAR TYPE-B	

Copyright © 2008 AGCO Corporation

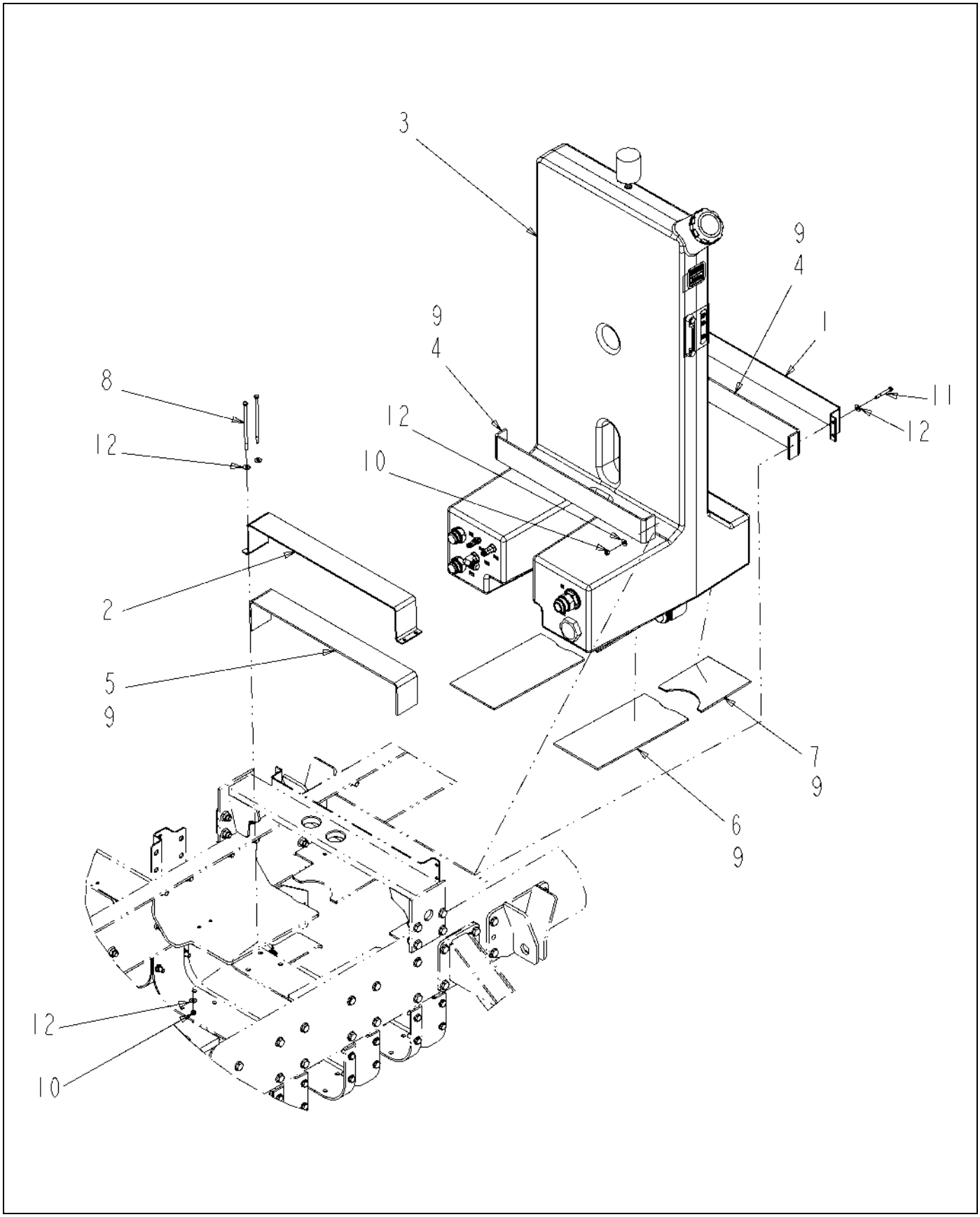

518947D1-01-R270-.TIF

Copyright © 2008 AGCO Corporation

FWA,HYDRAULIC TANK INSTALL

ITEM	PART #	QTY	DESCRIPTION	COMMENTS
1	WR124555	1	BRKT-MOUNT,HYD,RESERVOIR	
2	WR126011	1	BRKT-MOUNT,HYD,RESERVOIR FRONT	
3	WR128683	1	FWA-HYDRAULIC TANK ASM	SEE PAGE 6-45
4	WR128911	2	MATTING-RUBBER,3.50X29.41	
5	WR128912	1	MATTING-RUBBER,3.50X34.54	
6	WR128913	2	MATTING-RUBBER,7.75X16.00	
7	WR128914	2	MATTING-RUBBER,7.50X8.75	
8	WR129148	4	BOLT HEX-5/16-18UNCX7.00 G5 ZN	
9	AG512346	AR	3M 1300 YELLOW ADHESIVE (GAL)	
10	AG516403	8	NUT 0.31-18NC HEX SS REG NY	
11	AG561384	4	BOLT 0.31-18NCX 2.50 G5 ZN HHD	
12	AG562074	16	WASHER 0.31 FL SS REG TYPE-B	

Copyright © 2008 AGCO Corporation

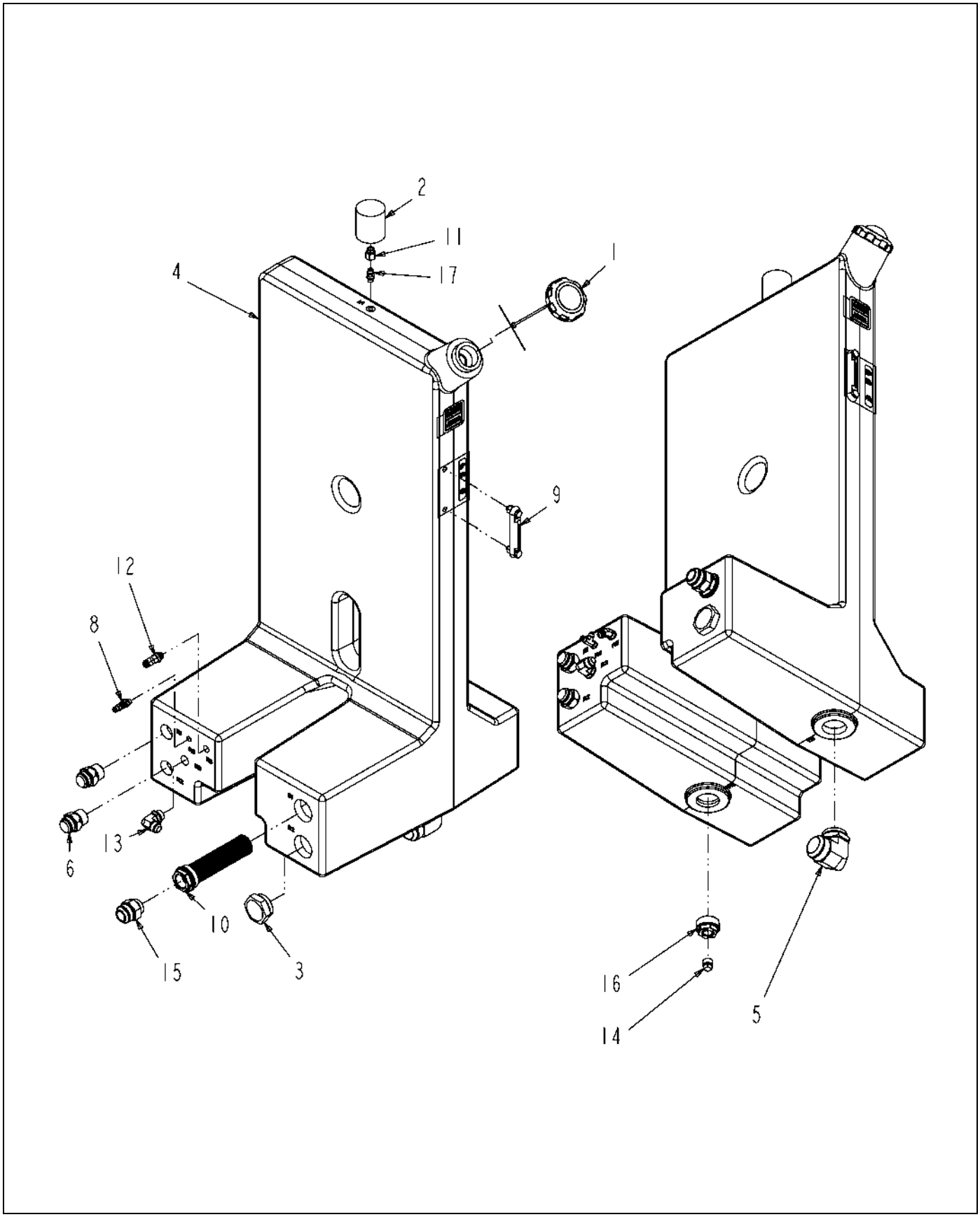

128683-05-N157-.TIF

Copyright © 2008 AGCO Corporation

FWA-HYDRAULIC TANK ASM

ITEM	PART #	QTY	DESCRIPTION	COMMENTS
1	AG121768	-	CAP-HYDRAULIC W/LANYARD	
2	AG121778	1	FILTER BREATHER,HYD. TANK	
3	AG121806	1	PLUG-2.00 MO-R HEX	
4	WR125282	1	TANK-HYDRAULIC	
5	WR128671	1	ELBOW 90D -32MOR X -32MJIC	
6	WR128754	2	VALVE-CHECK, 5 PSI	
7	AG513916	AR	LOCTITE HYD SEALANT BROWN	
8	AG519123	1	TEE-RUN,STR THD -6	SEE PAGE 6-101
9	AG519570	1	INDICATOR HYD FLUID LEVEL	
10	AG520617	1	STRAINER-SUCTION 2.50	
11	AG523871	1	ADAPTER-STR,.50MO-RX.38FO-R	
12	AG553891	1	ELBOW 45D 0.50MO-R X 0.50MJIC	
13	AG554510	1	ELBOW 90D -12MJIC X -12MSTOR	
14	AG557315	1	PLUG PIPE .75 SQ HD NPT ML IR	
15	AG561296	1	ADAP STR 1.25MO-R X 1.50MJIC	
16	AG561549	1	BUSHG 2.00X 0.75 NPT,STEEL,HX	
17	AG717340	1	ADPTR-STR,.37MORX.37MOR	

Copyright © 2008 AGCO Corporation

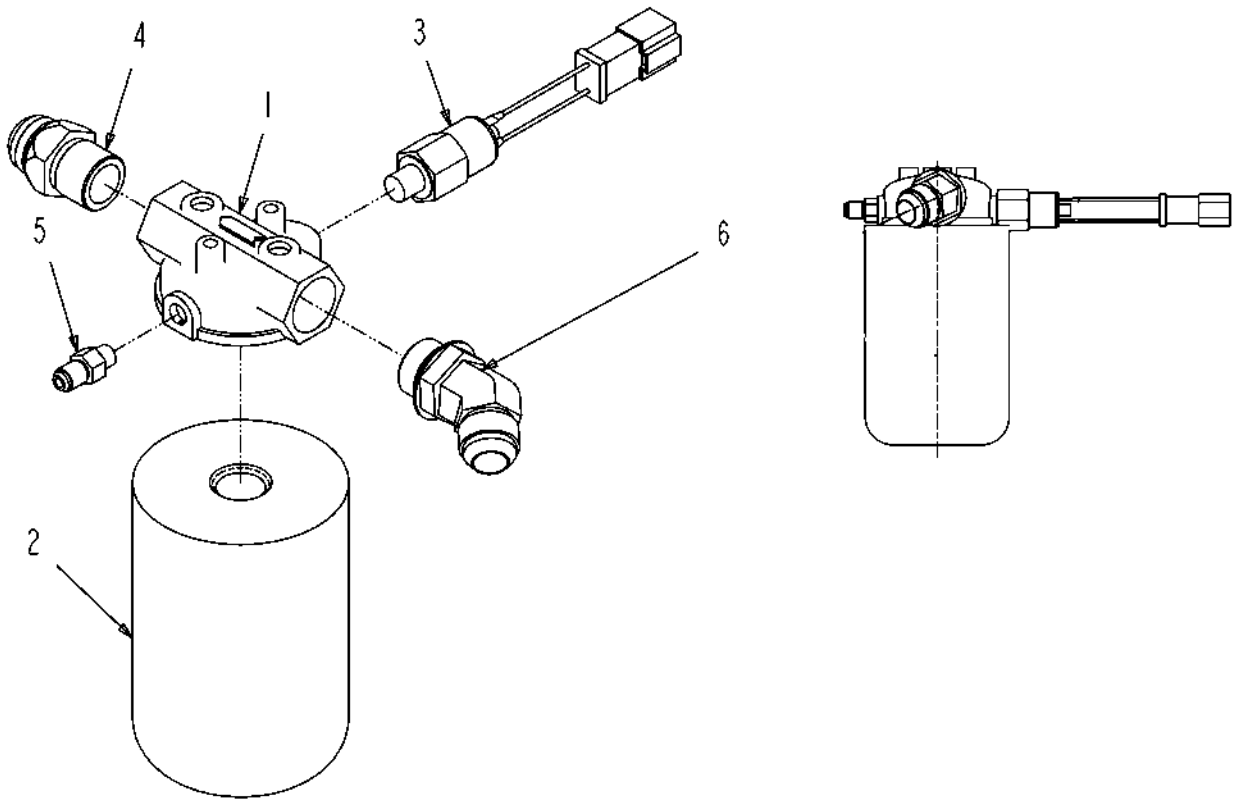

128893-04-M461-.TIF

Copyright © 2008 AGCO Corporation

FILTER ASM-FWA,R3

ITEM	PART #	QTY	DESCRIPTION	COMMENTS
1	WR125334	1	FILTER HEAD-HYD. NO BYPASS	
2	WR125335	1	ELEMENT-HYD,NO-BYPASS	
3	WR125336	1	SWITCH-HYD,25 PSI	
4	AG522307	1	VALVE-CHECK -12MB X -12MJ,5PSI	
5	AG553530	1	ADAP STR -2MP X -4MJ	
6	AG709257	1	ELBOW 45D 0.75MO-R X 0.75MJIC	

Copyright © 2008 AGCO Corporation

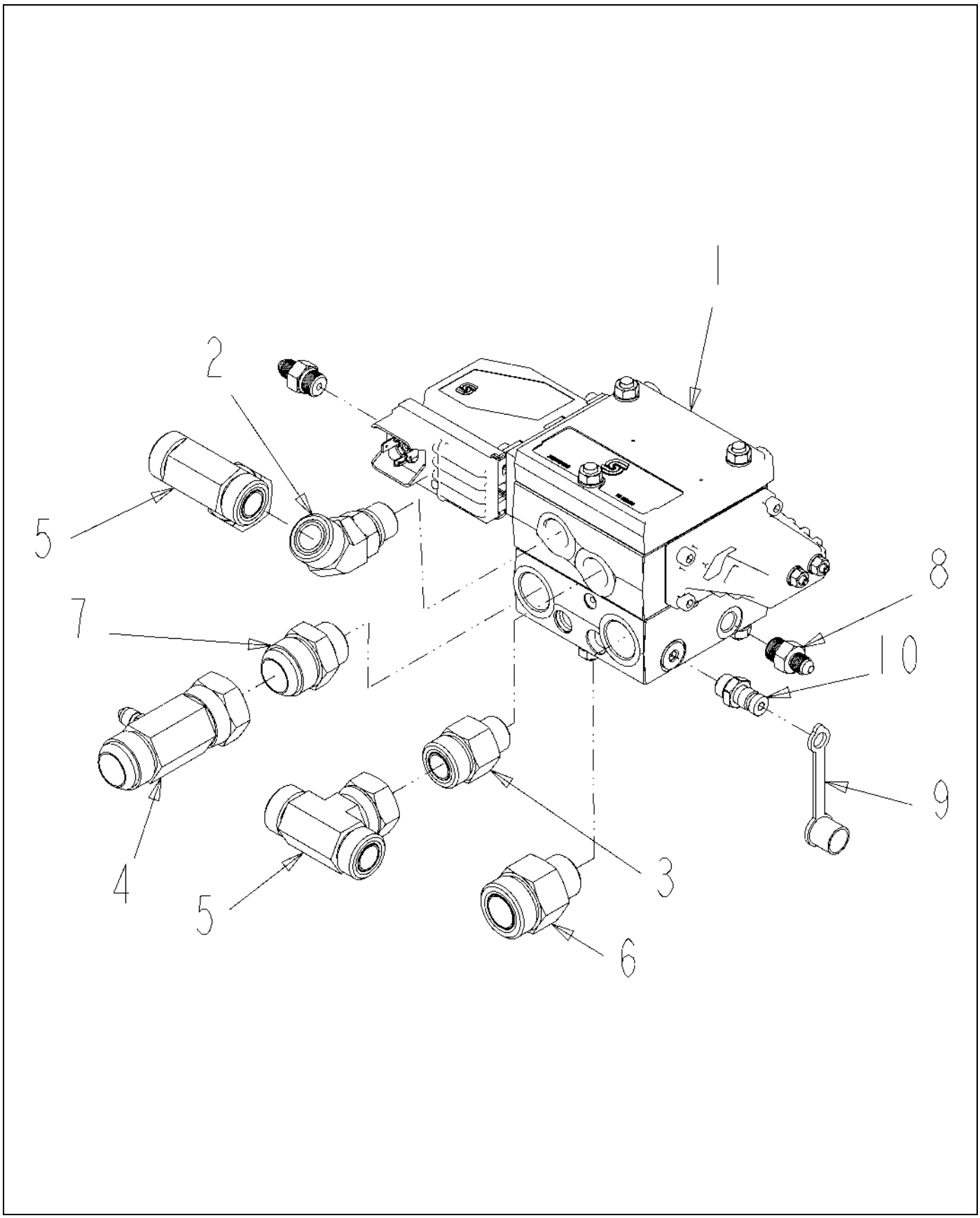

519005D1-01-R270-.TIF

Copyright © 2008 AGCO Corporation

VALVE ASM-FWA,MAIN

ITEM	PART #	QTY	DESCRIPTION	COMMENTS
1	WR123748	1	VALVE-CONTROL,F.W.A. S/D	SEE PAGE 6-94
2	WR128769	1	ADAPTER-10 SAE X -12 ORFS 45D	
3	WR128770	1	ADAPTER-10 SAE X -12 ORFS STR	
4	WR128877	1	TEE-16MJIC -4MJIC,RUN SWIVEL	
5	WR128878	2	TEE -12ORFS,BRANCH	
6	WR128879	1	ADAPTER -16ORFS X -12ORB	
7	AG561288	1	ADAP STR 0.75MO-R X 1.00MJIC	[A]
8	AG561744	2	ADAP STR 0.37MO-R X 0.25MJIC	[B]
9	6630367	1	CAP-DUST	
10	WR41777	1	COUPLING-MPD/-06MB	
	FOOTNOTE [A]		O-RING ONLY - AG714806	
	FOOTNOTE [B]		AG713166 O-RING	

Copyright © 2008 AGCO Corporation

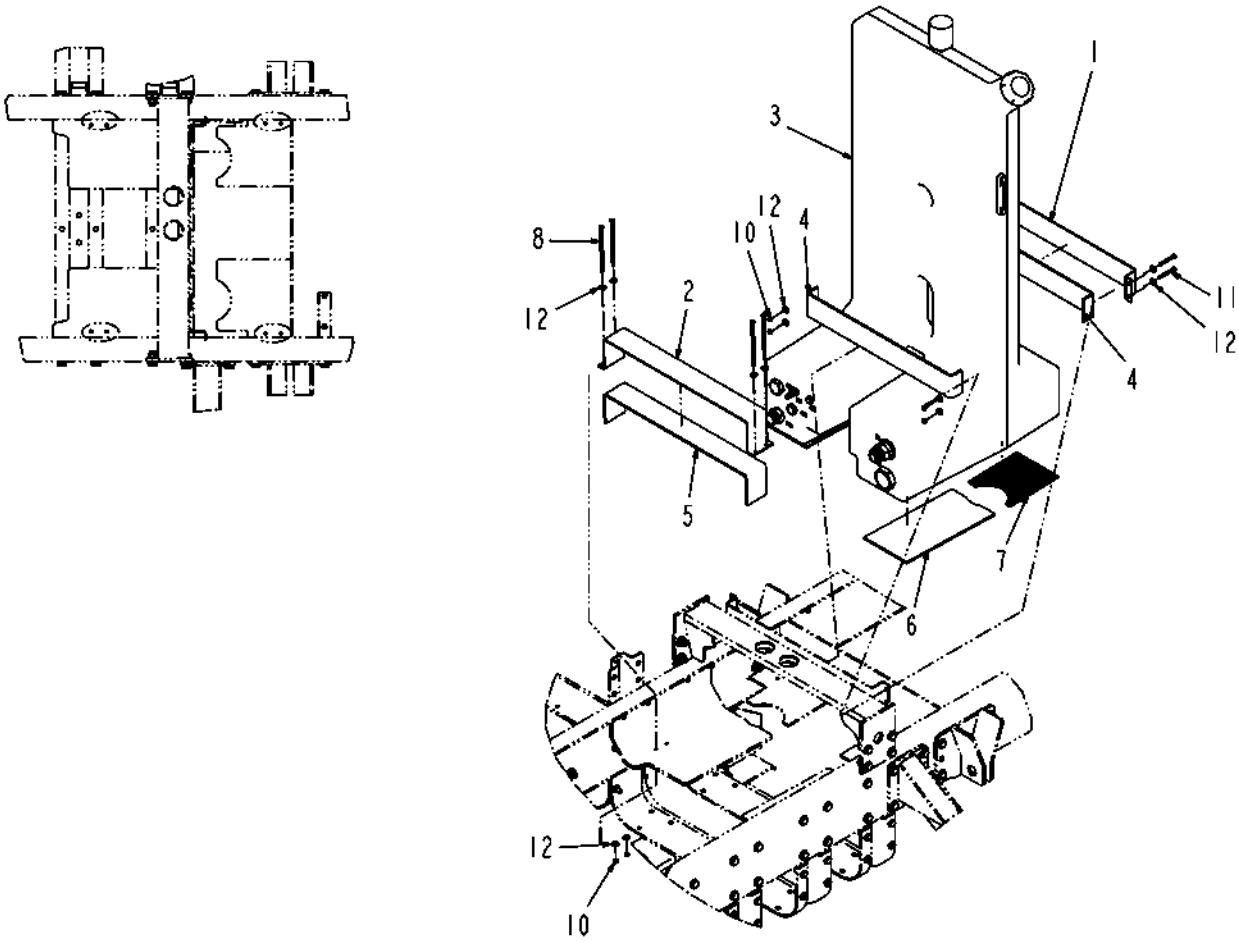

128909-C.TIF

Copyright © 2008 AGCO Corporation

2 WHEEL DRIVE-HYDRAULIC TANK INSTALL

ITEM	PART #	QTY	DESCRIPTION	COMMENTS
1	WR124555	1	BRKT-MOUNT,HYD,RESERVOIR	
2	WR126011	1	BRKT-MOUNT,HYD,RESERVOIR FRONT	
3	WR128910	1	2 WHEEL DRIVE-HYD TANK ASM	SEE PAGE 6-49
4	WR128911	2	MATTING-RUBBER,3.50X29.41	
5	WR128912	1	MATTING-RUBBER,3.50X34.54	
6	WR128913	2	MATTING-RUBBER,7.75X16.00	
7	WR128914	2	MATTING-RUBBER,7.50X8.75	
8	WR129148	4	BOLT HEX-5/16-18UNCX7.00 G5 ZN	
9	AG512346	AR	3M 1300 YELLOW ADHESIVE (GAL)	
10	AG516403	8	NUT 0.31-18NC HEX SS REG NY	
11	AG561384	4	BOLT 0.31-18NCX 2.50 G5 ZN HHD	
12	AG562074	16	WASHER 0.31 FL SS REG TYPE-B	

Copyright © 2008 AGCO Corporation

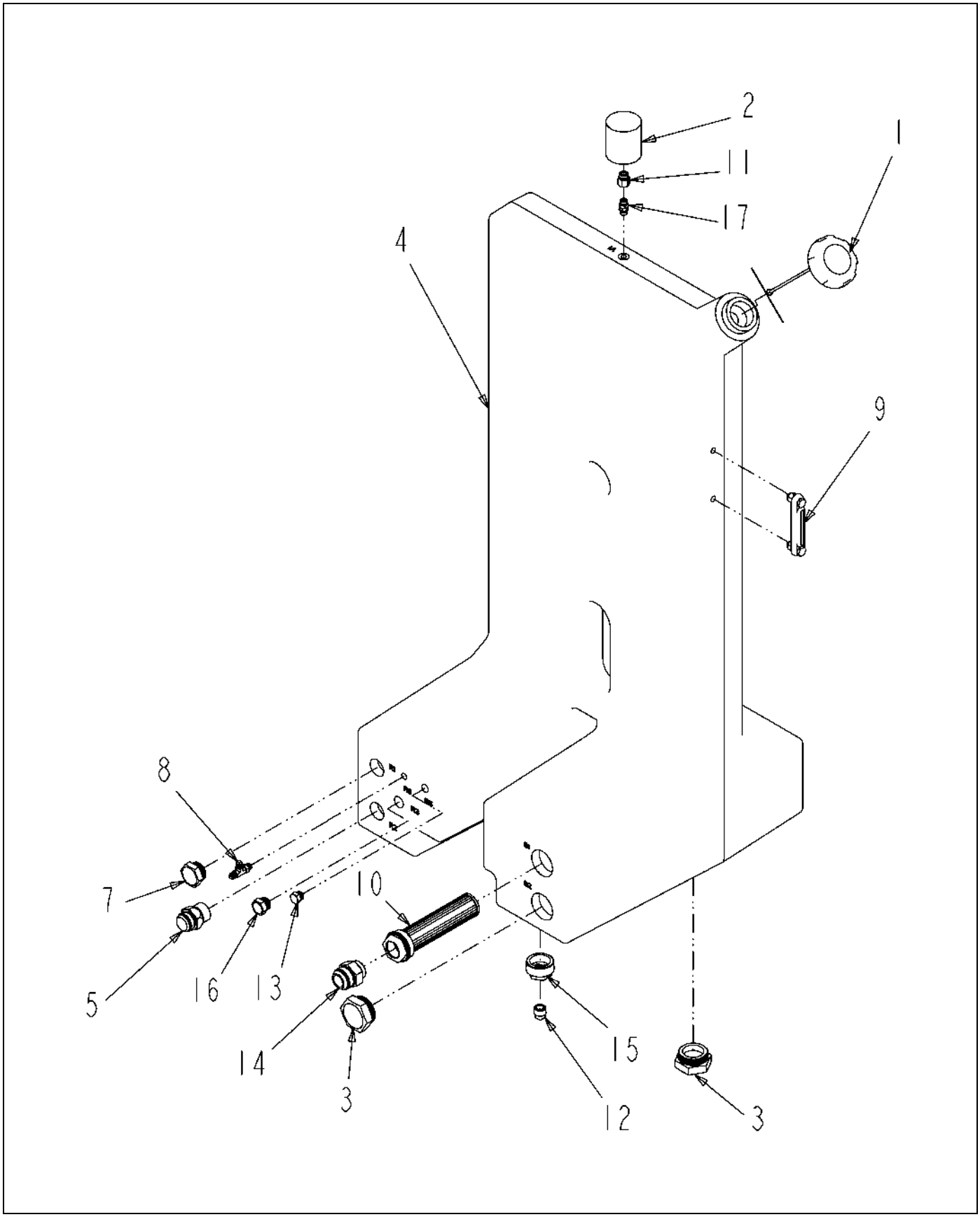

128910-04-N157-.TIF

Copyright © 2008 AGCO Corporation

2 WHEEL DRIVE-HYDRAULIC TANK ASM

ITEM	PART #	QTY	DESCRIPTION	COMMENTS
1	AG121768	-	CAP-HYDRAULIC W/LANYARD	
2	AG121778	1	FILTER BREATHER,HYD. TANK	
3	AG121806	2	PLUG-2.00 MO-R HEX	
4	WR125282	1	TANK-HYDRAULIC	
5	WR128754	1	VALVE-CHECK, 5 PSI	
6	AG513916	AR	LOCTITE HYD SEALANT BROWN	
7	AG517802	2	PLUG, O-RING BOSS-20	
8	AG519123	1	TEE-RUN,STR THD -6	SEE PAGE 6-101
9	AG519570	1	INDICATOR HYD FLUID LEVEL	
10	AG520617	1	STRAINER-SUCTION 2.50	
11	AG523871	1	ADAPTER-STR,.50MO-RX.38FO-R	
12	AG557315	1	PLUG PIPE .75 SQ HD NPT ML IR	
13	AG560899	1	PLUG 0.50MO-R HEX	
14	AG561296	1	ADAP STR 1.25MO-R X 1.50MJIC	
15	AG561549	1	BUSHG 2.00X 0.75 NPT,STEEL,HX	
16	AG561879	1	PLUG 0.75MO-R HEX	
17	AG717340	1	ADPTR-STR,.37MORX.37MOR	

Copyright © 2008 AGCO Corporation

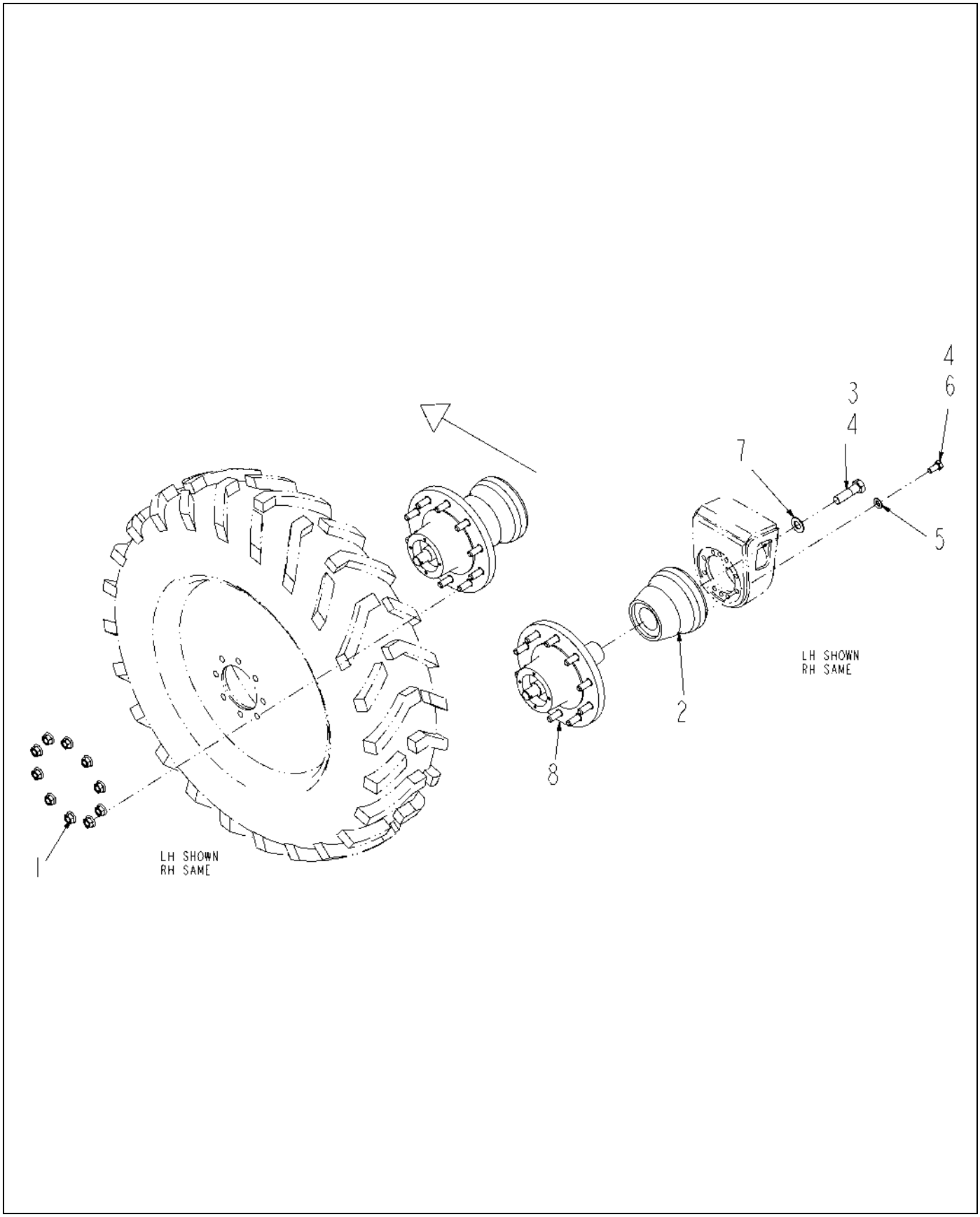

518500D1-02-R292-.TIF

Copyright © 2008 AGCO Corporation

ITEM	PART #	QTY	DESCRIPTION	COMMENTS
1	WR33994	20	NUT-FLANGE,WHEEL BOLT	
2	WR126351	2	SPINDLE-ADAPTER,FINAL MACH	
3	WR128756	2	BOLT-HEX 1-14UNF X 3.50 G8 ZN	
4	AG512885	AR	LOCTITE ADHESIVE SEALANT BLUE	
5	AG515180	16	WASHER 0.62 FL ZN SAE TYP-A G8	
6	AG518357	16	BOLT HHD M16-2X35MM GR 10.9	
7	AG604184	2	WASHER 1.00 FL ZN SAE TYP-A G8	
8	512002D1	2	HUB/SPINDLE-10 STUD,11.25 B.C.	SEE PAGE 4-54

Copyright © 2008 AGCO Corporation

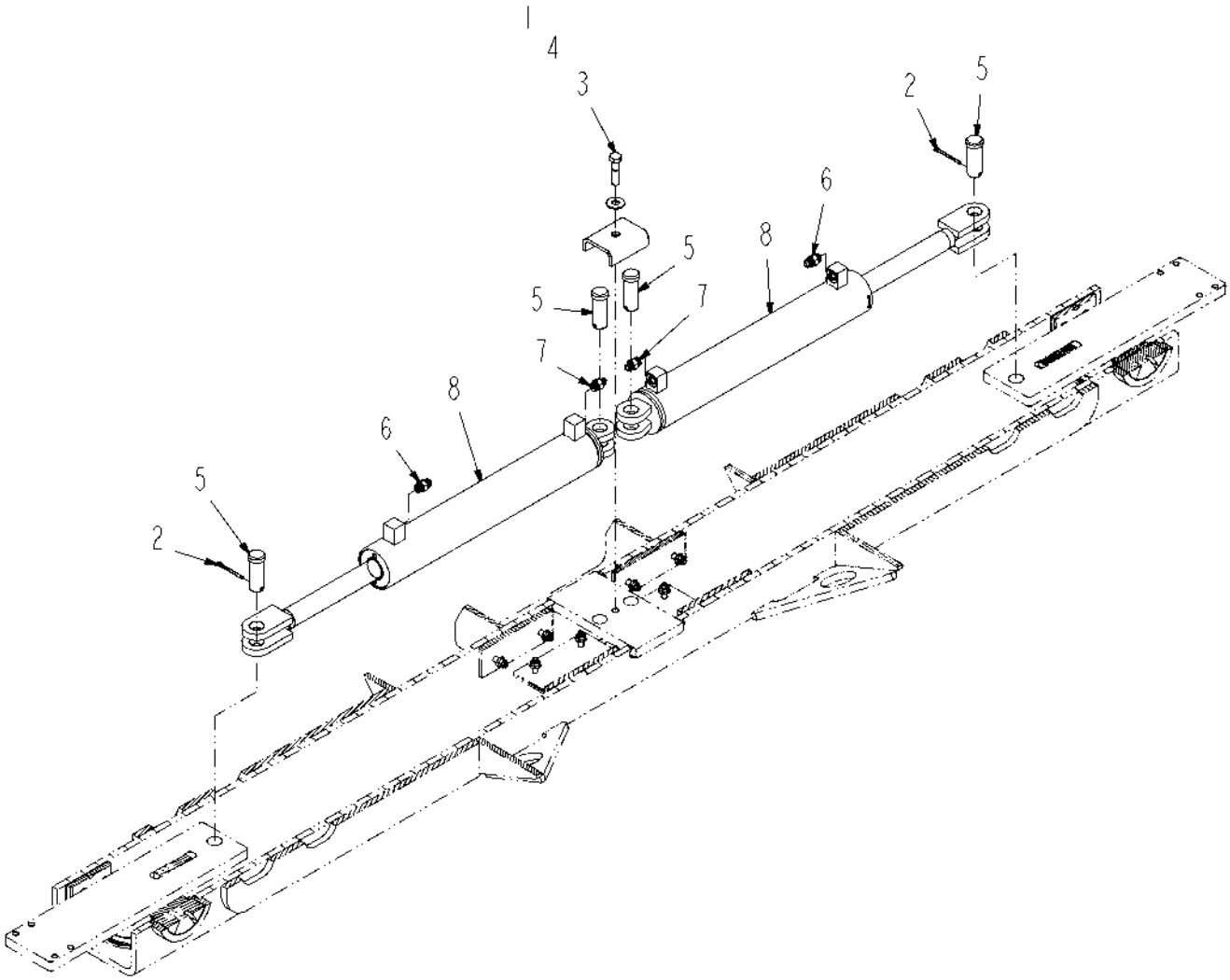

518393D1-01-R109-.TIF

Copyright © 2008 AGCO Corporation

CYLINDER-INSTALL,REAR AXLE,120

ITEM	PART #	QTY	DESCRIPTION	COMMENTS
1	WR127015	1	CLAMP	
2	AG515352	2	PIN COTTER 0.18X2.00 SS	
3	AG550132	1	BOLT .50-13NCX 2 G5 ZN HHD	
4	AG550353	1	WASHER 0.50 FL ZN REG TYPE-B	
5	AG554022	4	PIN CLEVIS 1.00X2.50 ZN	
6	AG560693	2	ADAP STR 0.37MO-R X 0.37MJIC	SEE PAGE 6-104
7	AG561744	2	ADAP STR 0.37MO-R X 0.25MJIC	[A]
8	514345D1	2	CYL-HYD,TRACK ADJUST	SEE PAGE 6-52
	FOOTNOTE [A]		AG713166 O-RING	

Copyright © 2008 AGCO Corporation

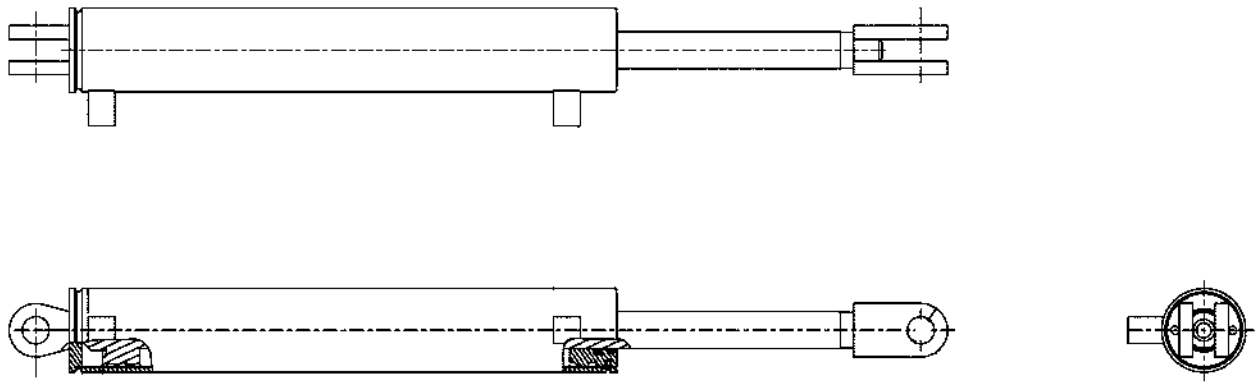

514345D1-01-R109-.TIF

Copyright © 2008 AGCO Corporation

CYLINDER-HYDRAULIC,TRACK ADJUST

ITEM	PART #	QTY	DESCRIPTION	COMMENTS
REF	515812D1	1	KIT-SEAL, CYLINDER	

Copyright © 2008 AGCO Corporation

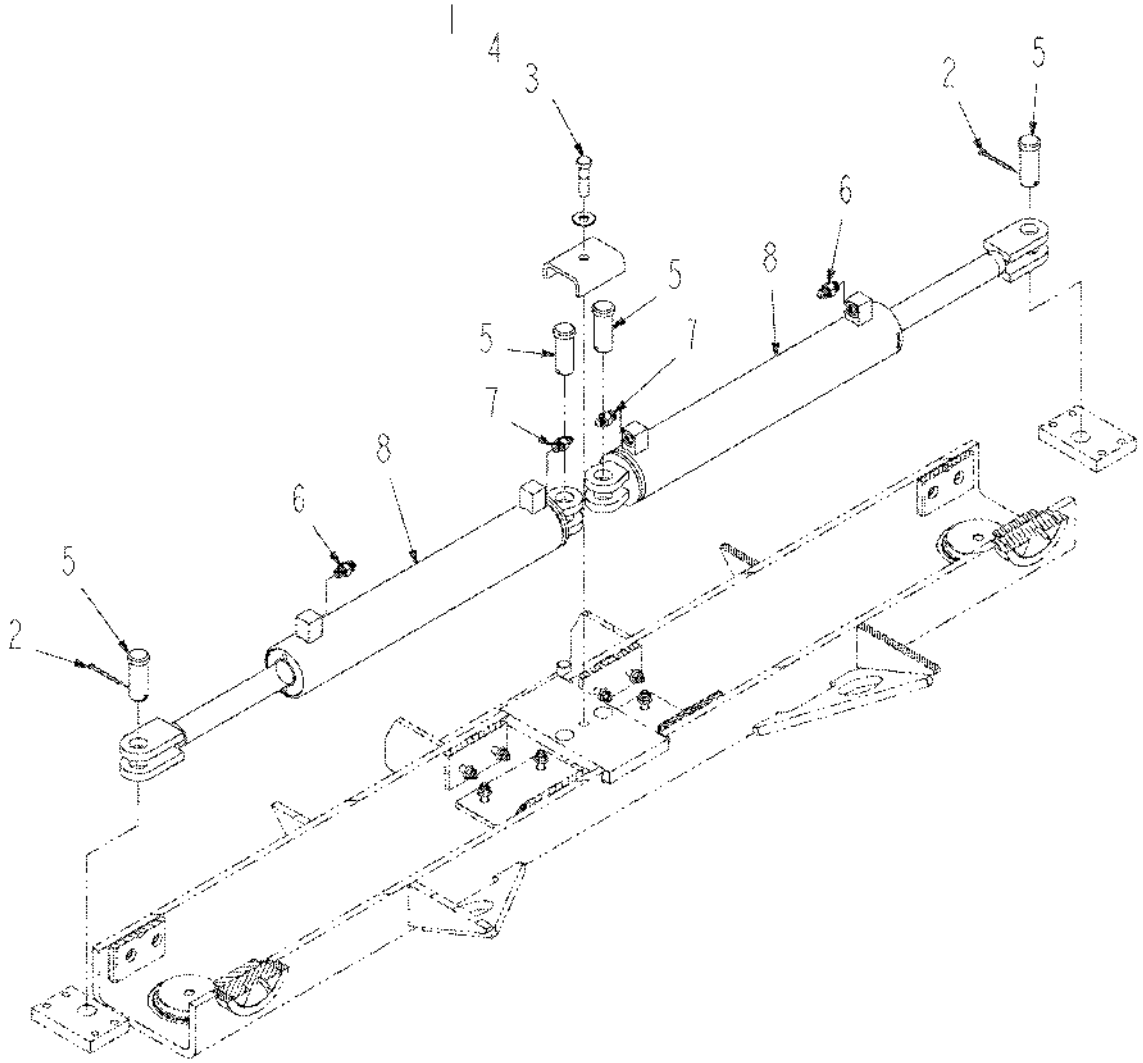

518398D1-01-R109-.TIF

Copyright © 2008 AGCO Corporation

CYLINDER-INSTALL,REAR AXLE,88

ITEM	PART #	QTY	DESCRIPTION	COMMENTS
1	WR127015	1	CLAMP	
2	AG515352	2	PIN COTTER 0.18X2.00 SS	
3	AG550132	1	BOLT .50-13NCX 2 G5 ZN HHD	
4	AG550353	1	WASHER 0.50 FL ZN REG TYPE-B	
5	AG554022	4	PIN CLEVIS 1.00X2.50 ZN	
6	AG560693	2	ADAP STR 0.37MO-R X 0.37MJIC	SEE PAGE 6-104
7	AG561744	2	ADAP STR 0.37MO-R X 0.25MJIC	[A]
8	514345D1	2	CYL-HYD,TRACK ADJUST	SEE PAGE 6-52
	FOOTNOTE [A]		AG713166 O-RING	

Copyright © 2008 AGCO Corporation

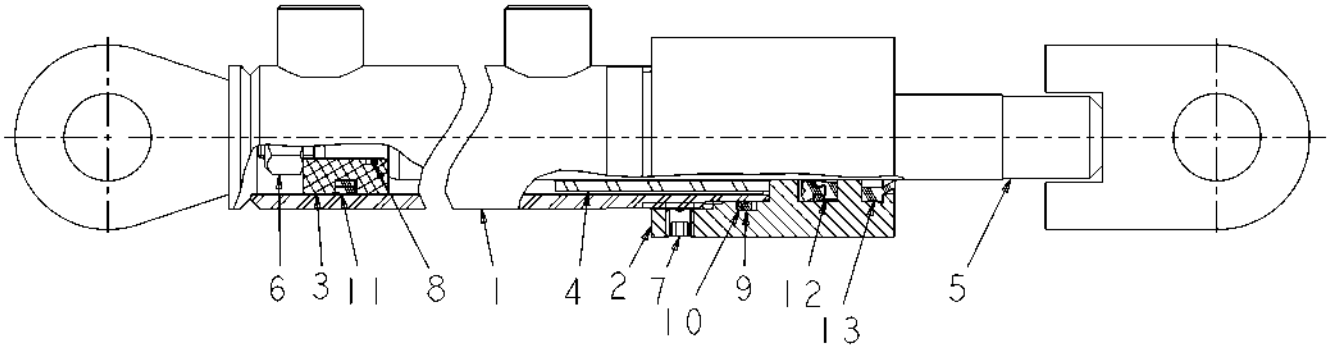

126480.TIF

Copyright © 2008 AGCO Corporation

CYLINDER-HYD,6.50 IN STROKE

ITEM	PART #	QTY	DESCRIPTION	COMMENTS
REF	WR131664	1	KIT, REPAIR	
2	WR131663	1	CAP, HEAD GLAND	
3	WR131655	1	PISTON	
4	WR131654	4	SPACER, ROD	
5	WR131653	5	ROD, CYLINDER	
6	AG602639	1	NUT 0.37-24NF HEX ZN REG NY	
7	WR131667	1	SCREW, SET	
	FOOTNOTE		ITEMS 8 - 13 CANNOT BE PURCHASED INDIVIDUALLY BUT ARE INCLUDED WITH THE SEAL KIT.	

Copyright © 2008 AGCO Corporation

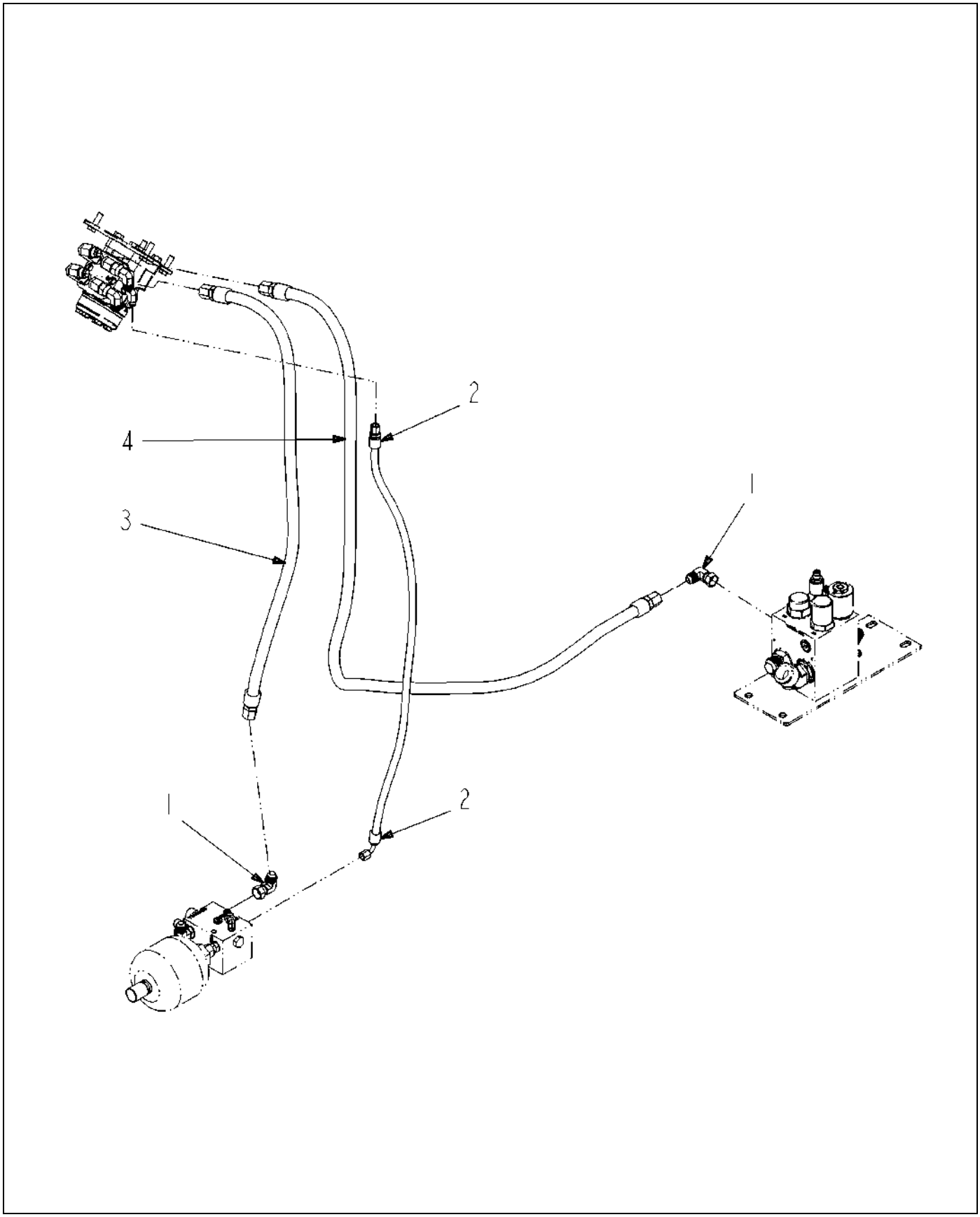

520837D1-02-R560-.TIF

Copyright © 2008 AGCO Corporation

HOSE-INSTALL,NON AUTOGUIDE

ITEM	PART #	QTY	DESCRIPTION	COMMENTS
1	AG561941	2	ELBOW -8FJS90 X-8MJ	
2	520838D1	1	HOSE ASM,-4X34 FJS/FJS90S	
3	521457D1	-	HOSE ASM,-8X40 FJS(2)	
4	521458D1	-	HOSE ASM,-8X78 FJS(2)	

Copyright © 2008 AGCO Corporation

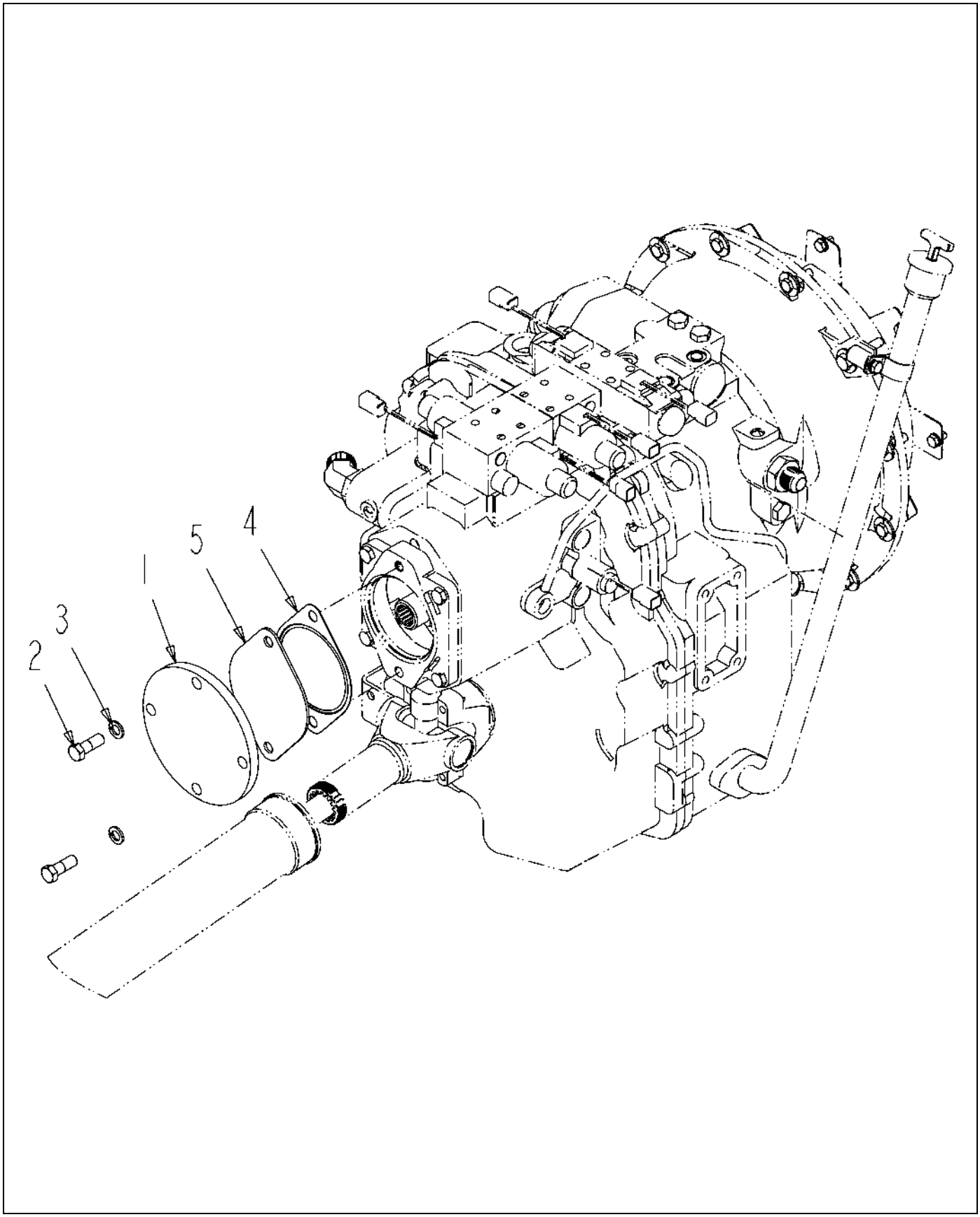

132525-03-N739-.TIF

Copyright © 2008 AGCO Corporation

2-WHEEL DRIVE COVER INSTALL

ITEM	PART #	QTY	DESCRIPTION	COMMENTS
1	AG328690	1	COVER-PUMP,B PAD	
2	AG518304	2	BOLT M12-1.75X 35MM G8.8 ZN HH	
3	AG562272	2	WASHER M12 LK ZN REG	
4	AG714101	1	GASKET PUMP	
5	513918D1	1	SPACER-COVER, UHMW	

Copyright © 2008 AGCO Corporation

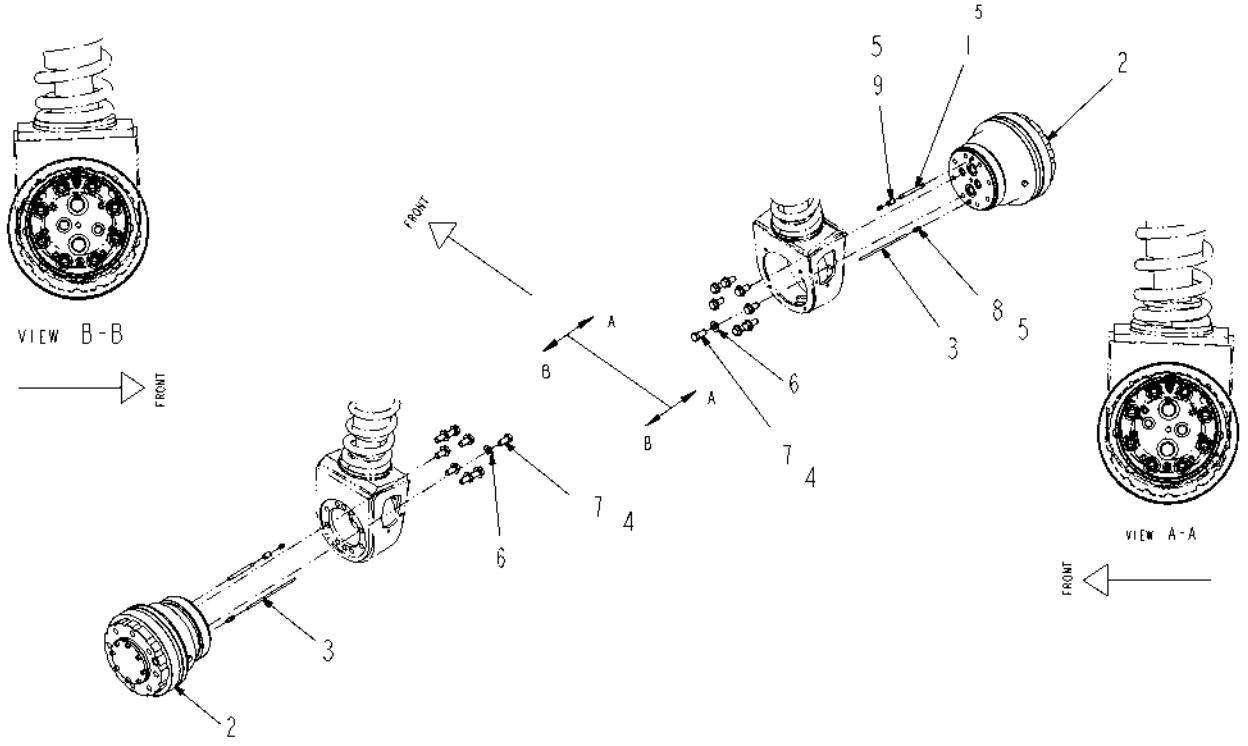

517319D1-01-R109-.TIF

Copyright © 2008 AGCO Corporation

WHEEL MOTOR GROUP

ITEM	PART #	QTY	DESCRIPTION	COMMENTS
1	AG056442	2	NIPPLE,EXTRA HEAVY .125X4.00	
2	WR136700	2	WHEEL MTR-HYD,940/470CC	SEE PAGE 6-58
3	AG511021	-	TUBING 0.25 OD NYLON BLACK [BULK: 1.334 FT]	
4	AG512885	AR	LOCTITE ADHESIVE SEALANT BLUE	
5	AG513916	AR	LOCTITE HYD SEALANT BROWN	
6	AG515180	16	WASHER 0.62 FL ZN SAE TYP-A G8	
7	AG518357	16	BOLT HHD M16-2X35MM GR 10.9	
8	AG518421	2	COUPLING .25 AIR QUICK METAL	
9	AG556475	2	COUPLING 0.12NPS PIPE STEEL PL	

Copyright © 2008 AGCO Corporation

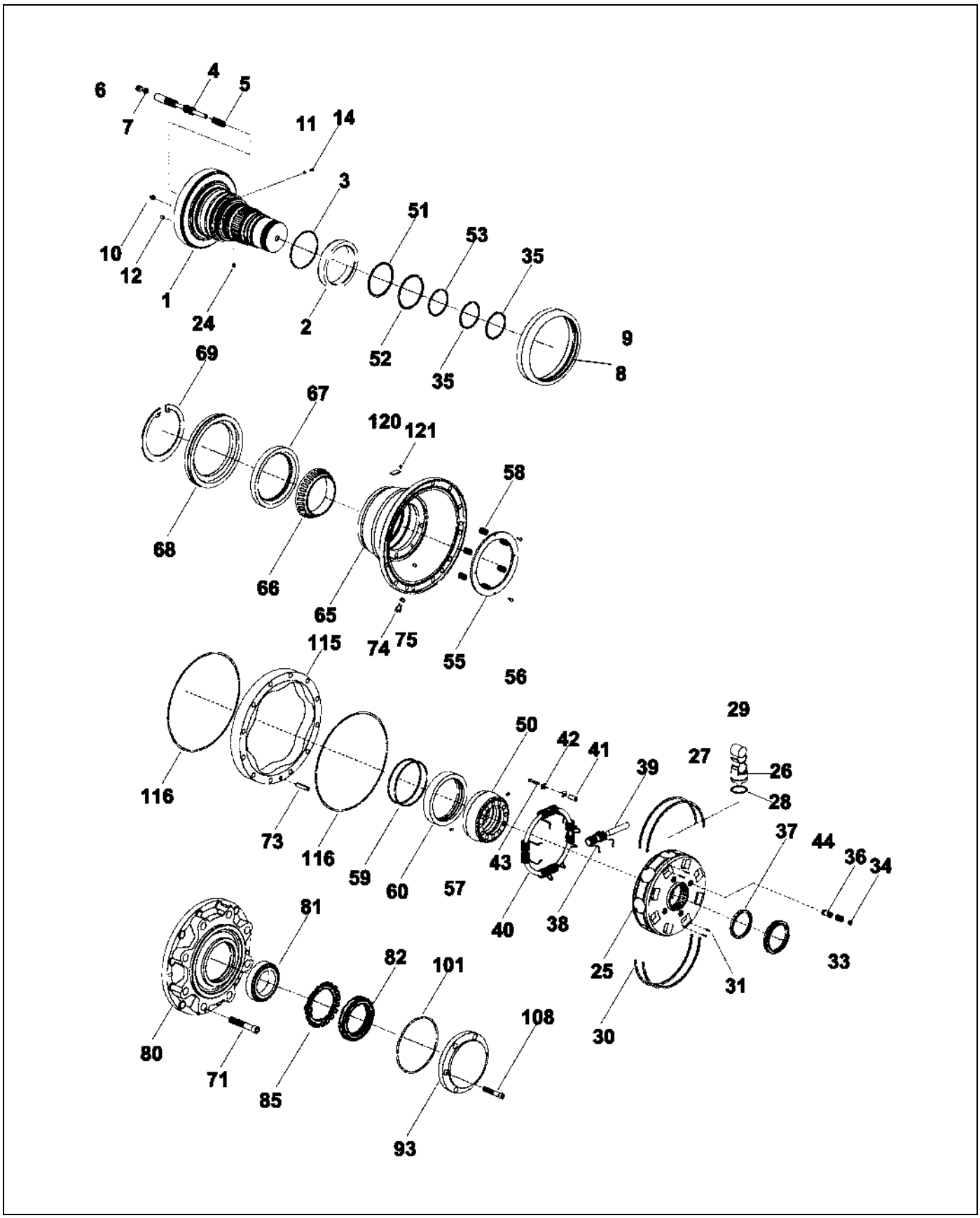

136700-01.TIF

Copyright © 2008 AGCO Corporation

ITEM	PART #	QTY	DESCRIPTION	COMMENTS
REF	WR425871	1	RING/SUPPORT BBC02	
REF	AG330529	1	SEAL/KIT LUE BBC2	
REF	WR132044	-	ASSEMBLY, CYL BLOCK	
REF	WR425874	1	MOTOR/REMAN 136700	
REF	WR425873	1	COLLAR/SEAL BBC02	
REF	WR425872	1	SEAL/BLUE BBC02	
1	AG263373	1	SHAFT/THREADED BBC02	
3	WR131829	1	O-RING	
4	WR131982	1	SPOOL, 2-SPEED	
5	WR131983	1	SPRING	
6	WR131984	1	PLUG	
7	WR131985	1	ORIFICE	
8	WR131986	1	RING, SEALING	
9	WR131987	1	RING, GREASE	
10	AG726285	2	GREASE ZERK	
11	AG726286	2	VALVE, CHECK	
12	AG717101	1	PLUG-EXPANDER	
14	AG713524	2	SHAFT PLUG	
24	AG726290	2	EXPANDER PLUG	
25	WR131988	1	CYLINDER BLOCK	
26	WR131989	10	PISTON	
27	WR131990	10	INSERT, PISTON	
28	WR131991	10	RING, PISTON	
29	WR131992	10	ROLLER, CAM	
30	AG263375	1	RING/GUIDE	
31	WR131994	8	PIN	
33	WR131995	5	SPRING	
34	WR131996	5	PLUG	
35	WR131997	2	RING, SEALING	
36	WR131998	5	SPOOL, POPPET	
37	WR131999	1	RING, RETAINING	
38	WR132000	5	SPRING	
39	WR132001	5	PIPE, PLASTIC	
40	WR132002	1	RING	
41	WR132003	5	BUSHING	
42	AG713495	10	FW CLIP	
43	WR132004	5	SCREW	
44	WR132005	1	RING, LOCKING	
50	WR132006	1	DISTRIBUTOR	
51	WR132009	1	RING, SEALING	
52	WR132008	1	RING, SEALING	
53	WR133007	1	RETAINER, SPRING R/B 147-0260	
55	WR132010	1	RING, CONNECTING	
56	AG715330	2	PIN	
57	AG713528	2	GUIDE PIN	
58	WR132011	12	SPRING	
59	WR132012	2	RING, SEALING	
60	WR132013	1	RING, SUPPORT	
65	WR132014	1	COVER, REAR	

Copyright © 2008 AGCO Corporation

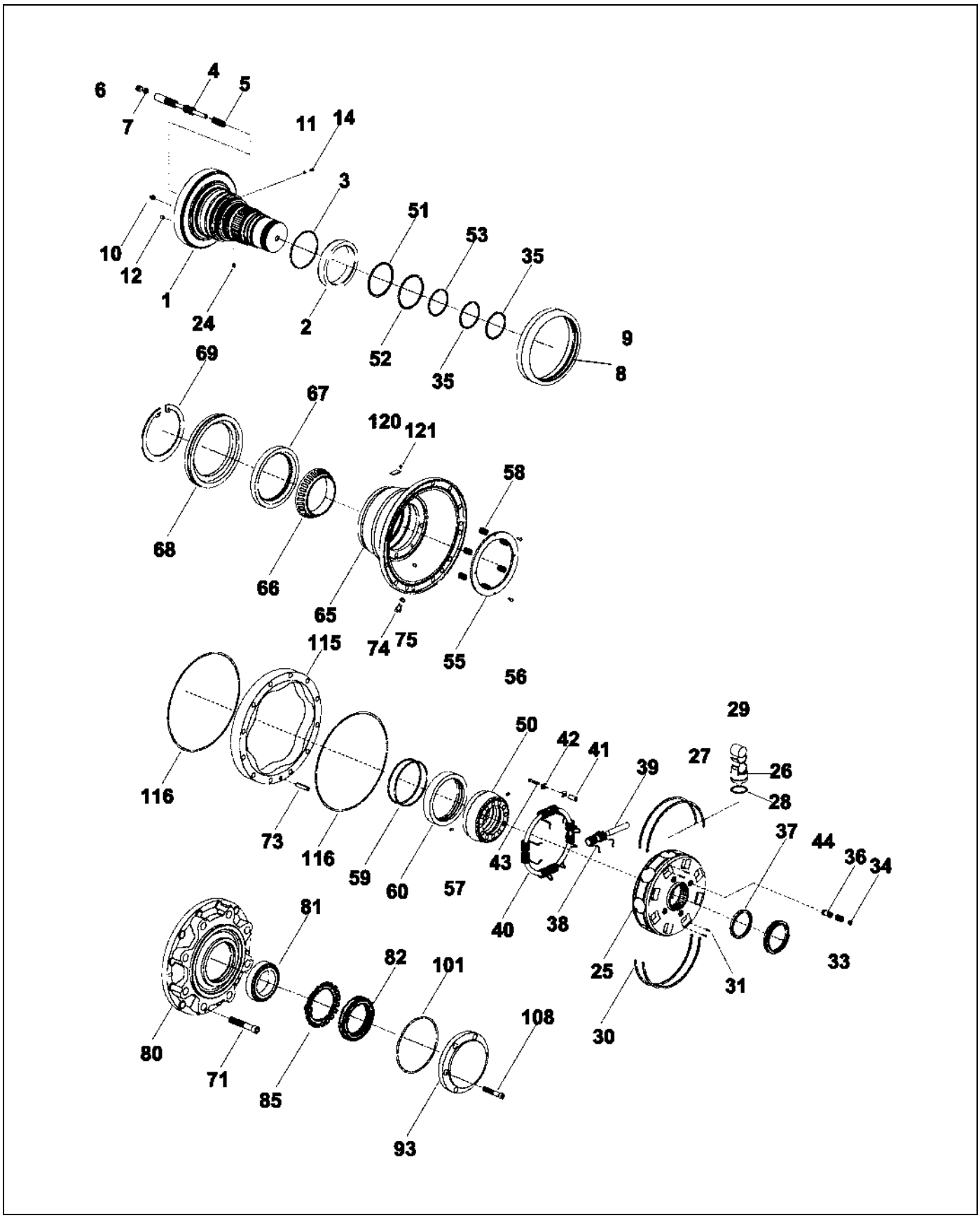

136700-01.TIF

Copyright © 2008 AGCO Corporation

ITEM	PART #	QTY	DESCRIPTION	COMMENTS
66	WR132015	1	BEARING	
69	WR132018	1	RING, RETAINING	
71	WR132019	15	SCREW	
73	WR132020	1	PIN	
74	AG713497	2	BLEED SCREW	
75	AG713525	2	WASHER	
80	WR132021	1	COVER, HUB	
81	WR132022	1	BEARING	
82	AG263371	1	NUT/SHAFT BBC02	
85	AG263372	1	RING/RETAINER	
93	WR132038	1	COVER	
101	WR131829	1	O-RING	
108	WR132040	8	SCREW	
115	WR132041	1	RING,CAM 940 CCM	
116	WR132042	2	O-RING	
120	AG713517	1	IDENTIFICATION TAG	
121	AG726354	2	PIN R/B 713518	

Copyright © 2008 AGCO Corporation

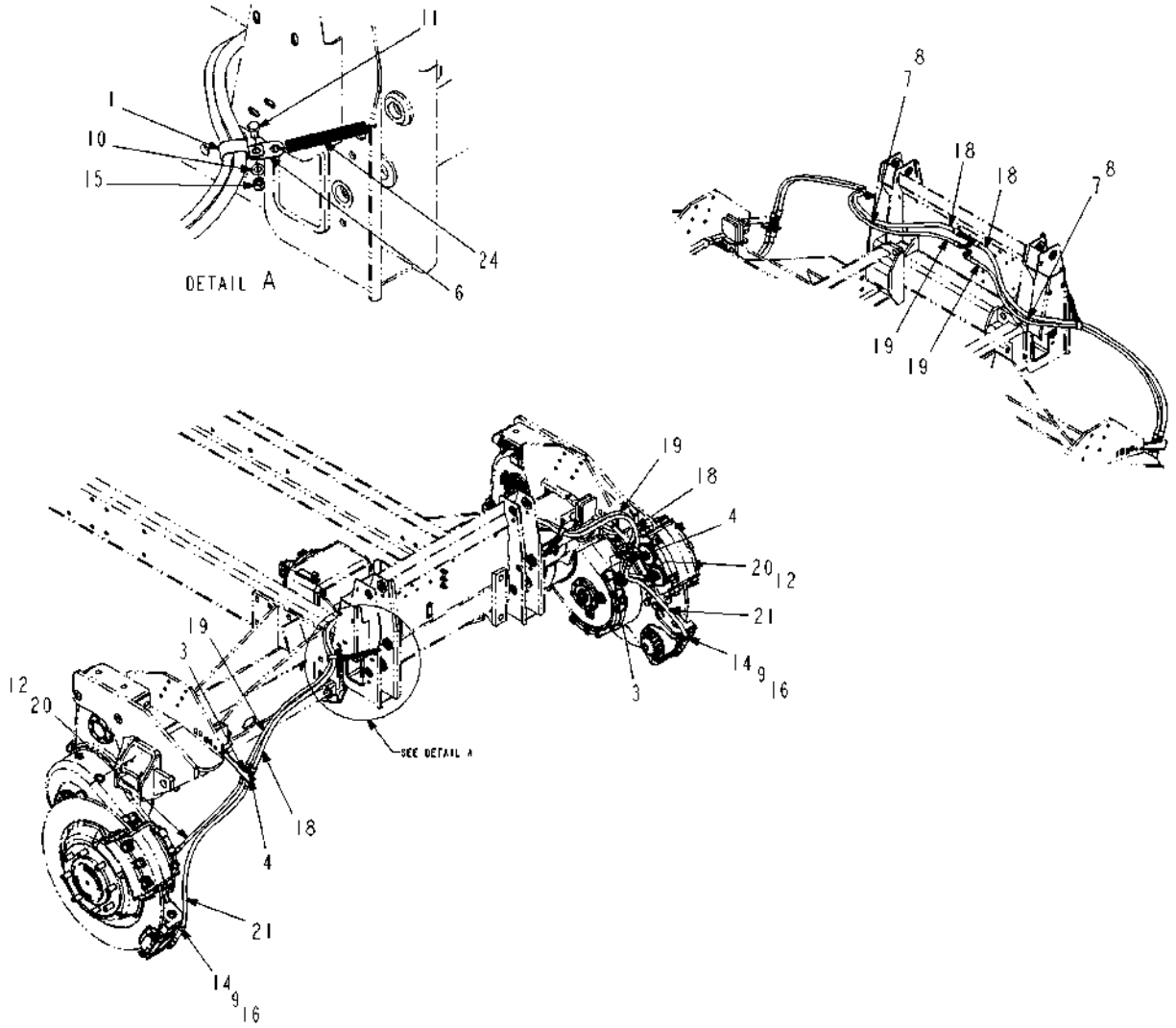

518391D1-02-R560-01.TIF

Copyright © 2008 AGCO Corporation

HOSE-INSTALL,REAR AXLE,120

ITEM	PART #	QTY	DESCRIPTION	COMMENTS
1	WR55247	2	CLAMP-SUPPORT CUSHION DBL	
3	WR129997	2	NUT-HEX,.438-20UN2B,ZINC	
4	WR129998	2	NUT-HEX,.563-18UN2B,ZINC	
6	AG263132	2	WASHER-DOUBLE HOLE,.50	
7	AG519861	AR	PROTECTOR HOSE 6.00 IN EPHA	
8	AG519862	AR	PROTECTOR HOSE 4 IN EPHA	
9	AG550671	2	WASHER 0.25 FL ZN SAE TYPE-A	
10	AG550981	2	WASHER 0.37 FL ZN NAR TYPE-B	
11	AG551503	2	BOLT 0.37-16NCX 0.75 G5 ZN HHD	
12	AG553557	AR	TIE CABLE 7.37 .06-1.37 BLACK	
14	AG562237	2	CLAMP CTD 0.75IDX0.75WIDE	
15	AG601411	2	NUT 0.37-16NC HEX ZN REG NY	
16	400152X1	2	BOLT-M6X1X16MM ZNDI HHD 10.9	
17	518392D1	-	HOSE-KIT,REAR AXLE,120	
18	518531D1	-	HOSE ASM,-6X72 FJS(2)	
19	518532D1	-	HOSE ASM,-4X72 FJS/FJS90	
20	518533D1	-	HOSE ASM,-4X26 FJS45/MJ(BH)	
21	518534D1	-	HOSE ASM,-6X42 4FJS/MJ(BH)	
24	521617D1	2	SPRING-EXTENSION,.63X5.5	

Copyright © 2008 AGCO Corporation

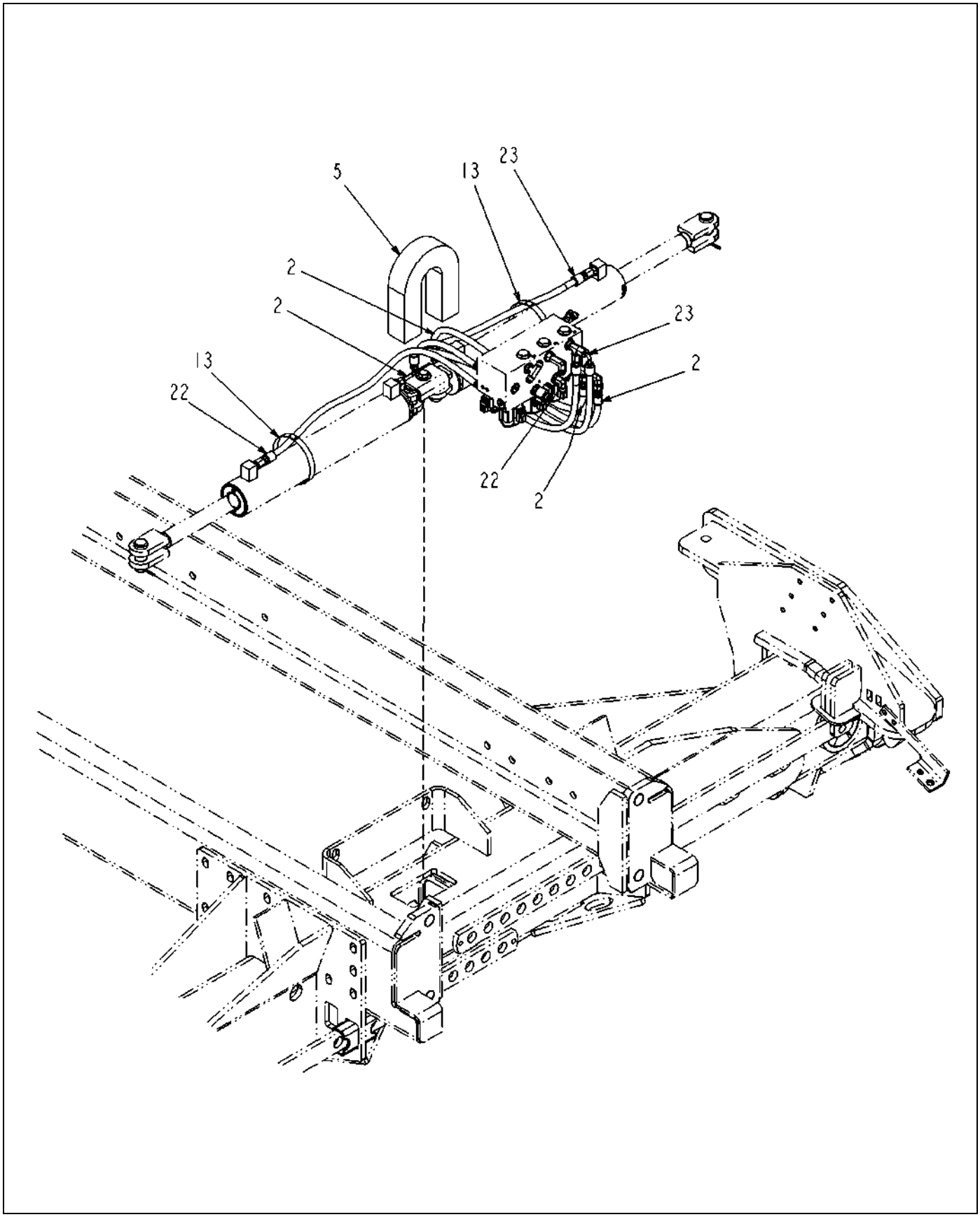

518391D1-02-R560-02.TIF

Copyright © 2008 AGCO Corporation

HOSE-INSTALL,REAR AXLE,120

ITEM	PART #	QTY	DESCRIPTION	COMMENTS
2	WR128678	-	HOSE ASM -4X38.00 6FJS/4FJS90	
5	WR134416	1	INSL-FOAM,2.00X2.00X14.00	[A]
13	AG561237	2	CLAMP 3.56-4.50 HOSE 64HS	
22	518535D1	-	HOSE ASM,-4X59 6FJS(2)	
23	518536D1	-	HOSE ASM,-4X59 6FJS/6FJS90	
	FOOTNOTE [A]		REFRENCE S.B.#0631	

Copyright © 2008 AGCO Corporation

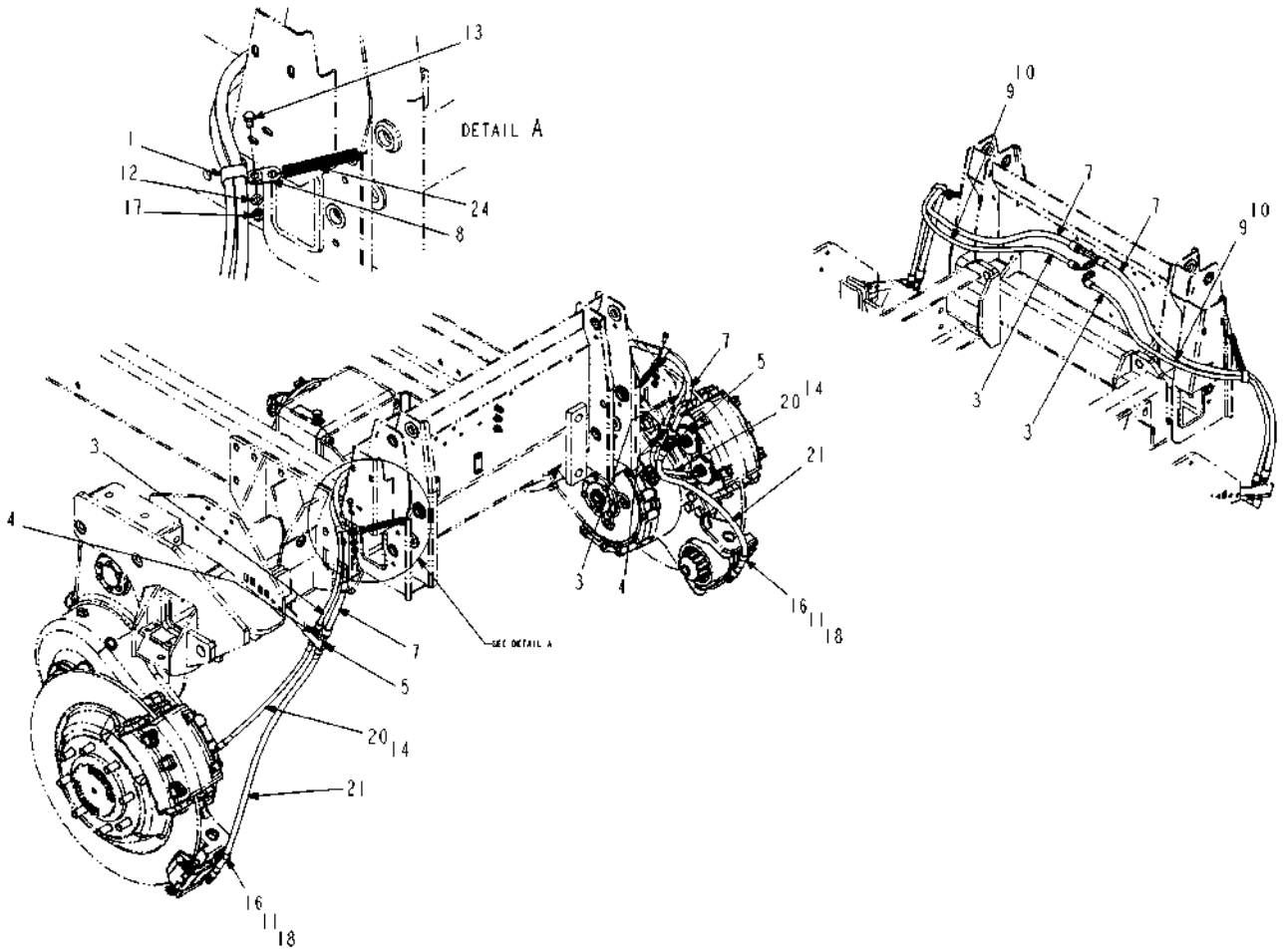

518396D1-03-R560-01.TIF

Copyright © 2008 AGCO Corporation

HOSE-INSTALL,REAR AXLE,88

ITEM	PART #	QTY	DESCRIPTION	COMMENTS
1	WR55247	2	CLAMP-SUPPORT CUSHION DBL	
3	WR129407	-	HOSE ASM -4X60 4FJS90/4FJS	
4	WR129997	2	NUT-HEX,.438-20UN2B,ZINC	
5	WR129998	2	NUT-HEX,.563-18UN2B,ZINC	
7	AG203866	-	HOSE ASM -6 60.00 R1AT	
8	AG263132	2	WASHER-DOUBLE HOLE,.50	
9	AG519861	AR	PROTECTOR HOSE 6.00 IN EPHA	
10	AG519862	AR	PROTECTOR HOSE 4 IN EPHA	
11	AG550671	2	WASHER 0.25 FL ZN SAE TYPE-A	
12	AG550981	2	WASHER 0.37 FL ZN NAR TYPE-B	
13	AG551503	2	BOLT 0.37-16NCX 0.75 G5 ZN HHD	
14	AG553557	AR	TIE CABLE 7.37 .06-1.37 BLACK	
16	AG562237	2	CLAMP CTD 0.75IDX0.75WIDE	
17	AG601411	2	NUT 0.37-16NC HEX ZN REG NY	
18	400152X1	2	BOLT-M6X1X16MM ZNDI HHD 10.9	
19	518397D1	-	HOSE-KIT,REAR AXLE,88	
20	518533D1	-	HOSE ASM,-4X26 FJS45/MJ(BH)	
21	518534D1	14	HOSE ASM,-6X42 4FJS/MJ(BH)	
24	521617D1	2	SPRING-EXTENSION,.63X5.5	

Copyright © 2008 AGCO Corporation

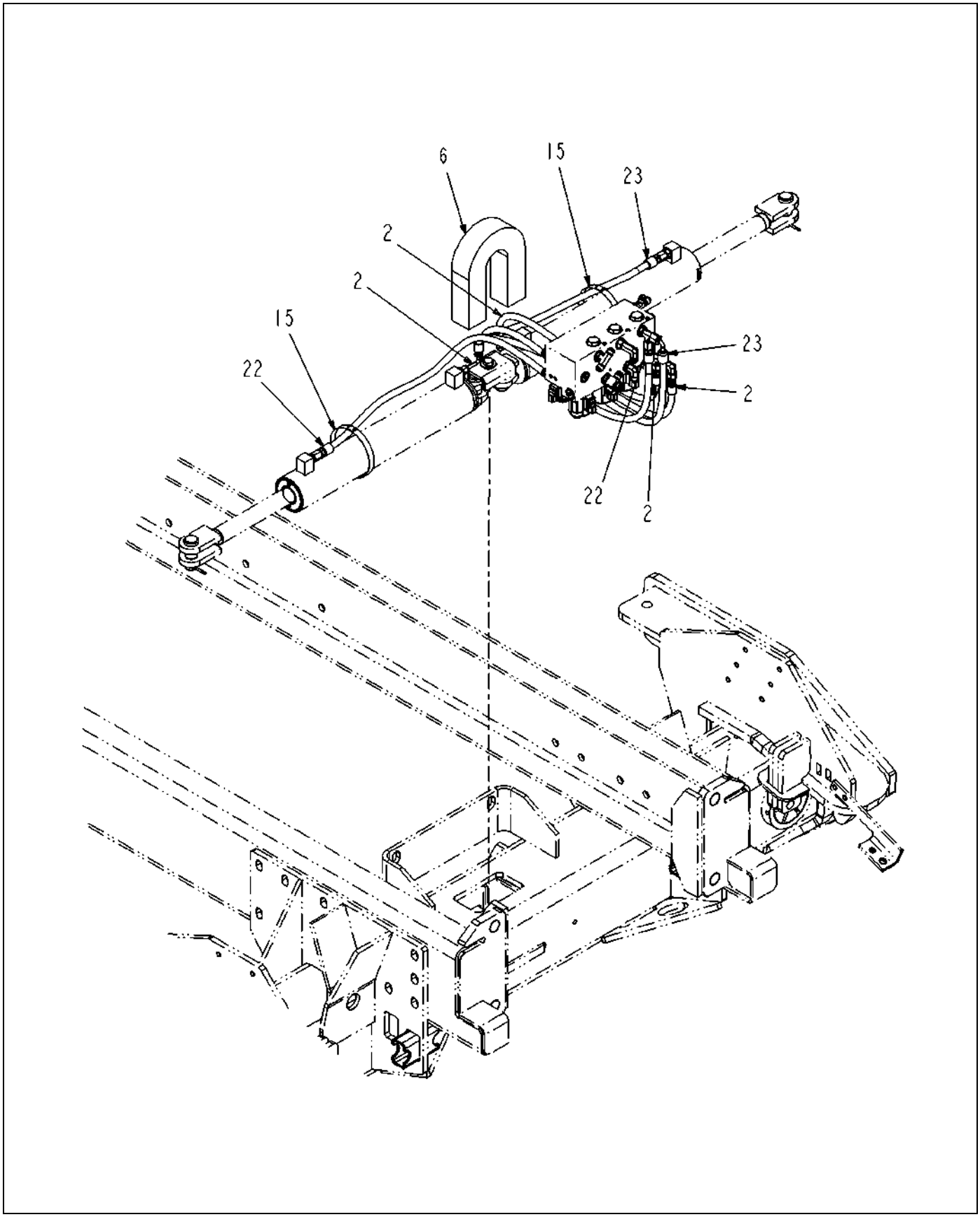

518396D1-03-R560-02.TIF

Copyright © 2008 AGCO Corporation

HOSE-INSTALL,REAR AXLE,88

ITEM	PART #	QTY	DESCRIPTION	COMMENTS
2	WR128678	-	HOSE ASM -4X38.00 6FJS/4FJS90	
6	WR134416	1	INSL-FOAM,2.00X2.00X14.00	[A]
15	AG561237	2	CLAMP 3.56-4.50 HOSE 64HS	
22	518535D1	-	HOSE ASM,-4X59 6FJS(2)	
23	518536D1	-	HOSE ASM,-4X59 6FJS/6FJS90	
	FOOTNOTE [A]		REFRENCE S.B.#0631	

Copyright © 2008 AGCO Corporation

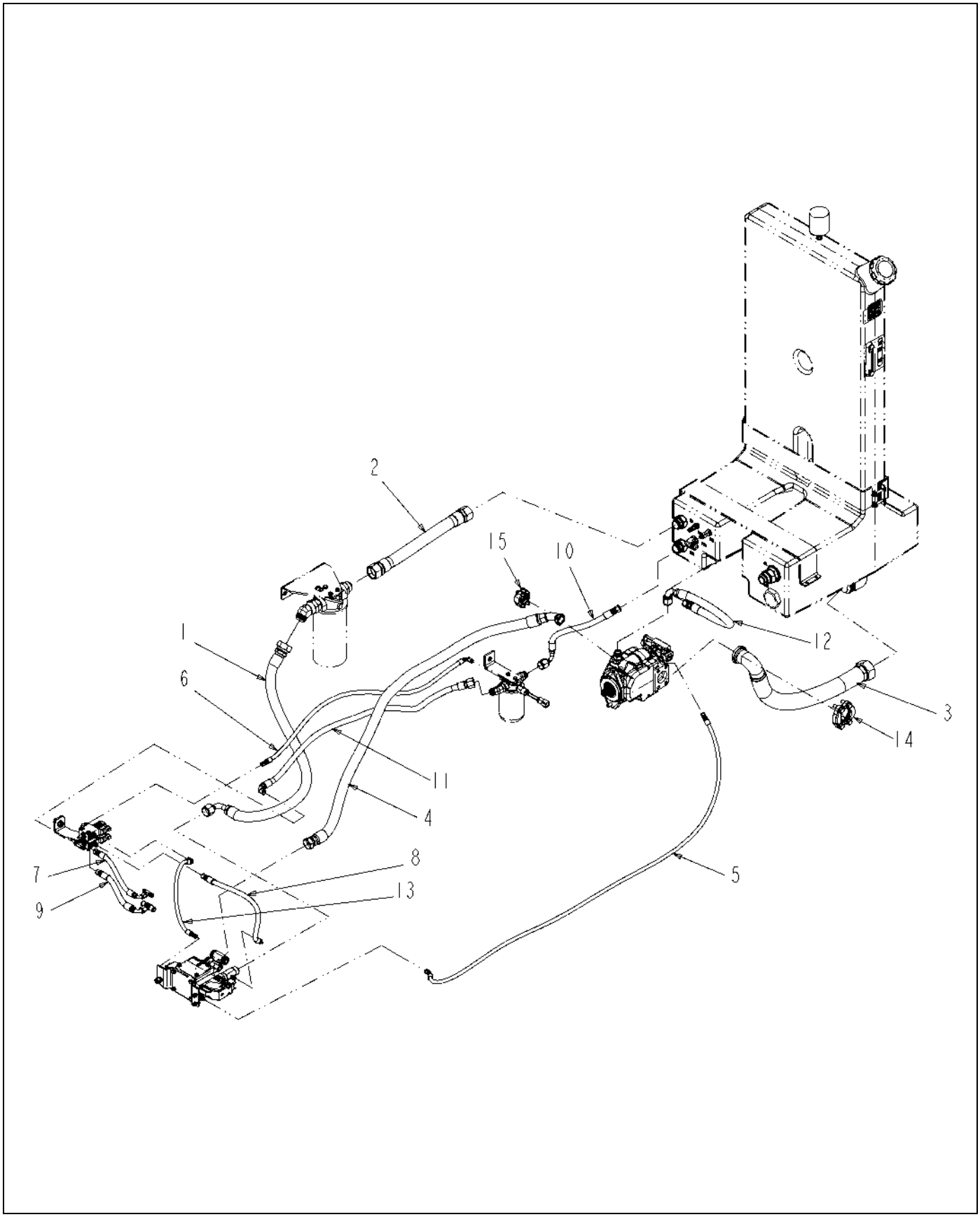

518948D1-01-R270-01.TIF

Copyright © 2008 AGCO Corporation

FWA,HOSE INSTALL,120

ITEM	PART #	QTY	DESCRIPTION	COMMENTS
1	WR128759	-	HOSE ASM-16X48.00 20FJS/FJS45	
2	WR128760	-	HOSE ASM -20X20.00 FJS/FJS	
3	WR128904	-	HOSE ASM -32X30.00 FJS/FJS90	
4	WR129215	-	HOSE ASM -16X66.00 FORFS/FL45	
5	WR129222	-	HOSE ASM -4X88.00 FJS/FJS45	
6	WR129223	-	HOSE ASM -4X46.00 FJS/FJS90	
7	WR129228	-	HOSE ASM -6X11.50 FJS/FJS90	
8	WR129229	-	HOSE ASM -6X17.00 FJS/4FJS90	
9	WR129233	-	HOSE ASM -8X11.50 6FJS/FJS90	
10	WR129234	-	HOSE ASM -8X18.00 FJS/12FJS90	
11	WR129282	-	HOSE ASM -8X48.00 12FJS/6FJS90	
12	AG220648	-	HOSE ASM -12X29.00 FJS/FJS90	
13	AG240932	-	HOSE ASM -4 20.00 R1AT	
14	AG519527	1	FLANGE SPLIT KIT CODE 61-32	
15	AG561044	1	KIT 1.00 SPLIT FLANGE	
16	518950D1	-	KIT-HOSE,FWA,120	

Copyright © 2008 AGCO Corporation

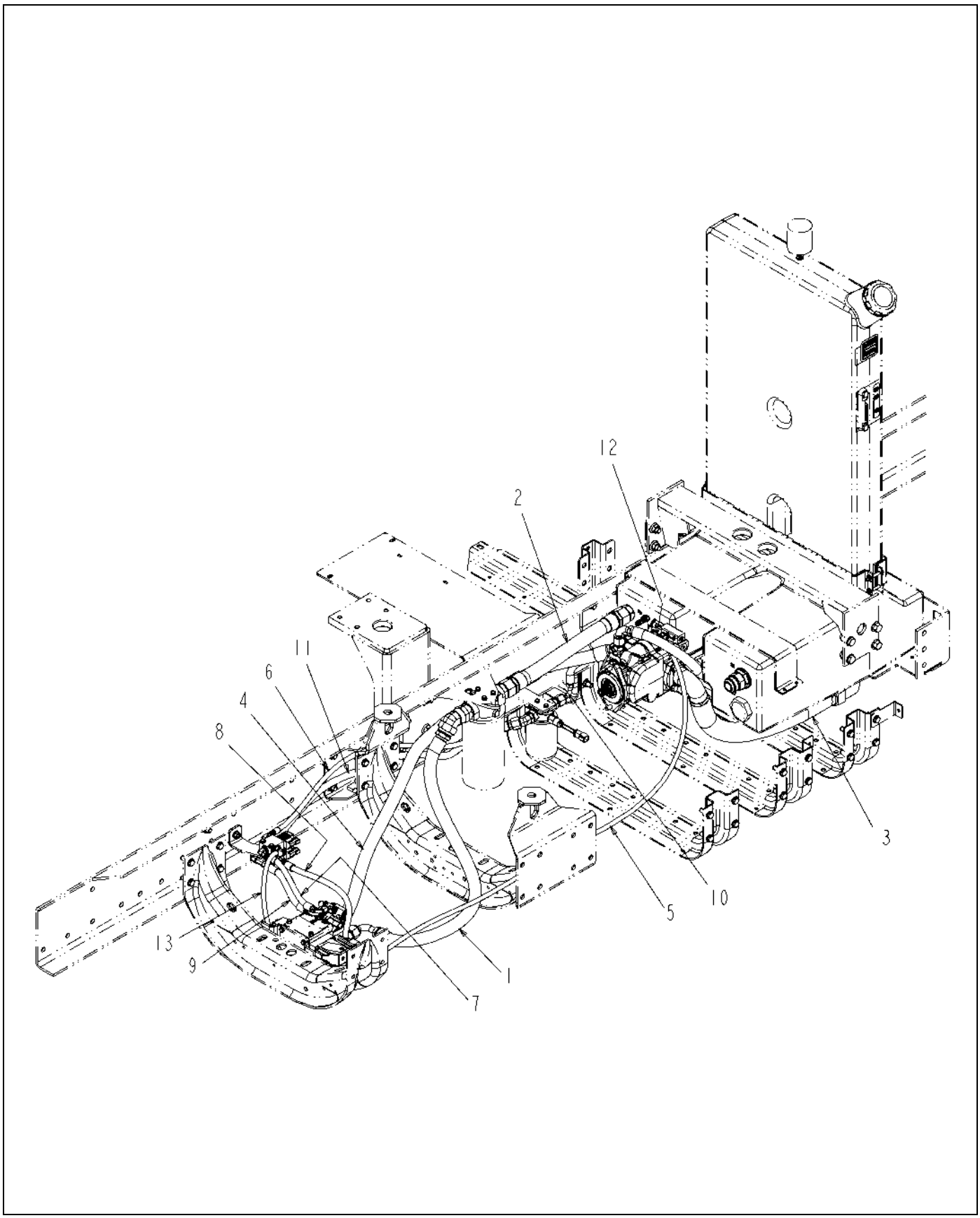

518948D1-01-R270-02.TIF

Copyright © 2008 AGCO Corporation

FWA,HOSE INSTALL,120

ITEM	PART #	QTY	DESCRIPTION	COMMENTS
1	WR128759	-	HOSE ASM-16X48.00 20FJS/FJS45	
2	WR128760	-	HOSE ASM -20X20.00 FJS/FJS	
3	WR128904	-	HOSE ASM -32X30.00 FJS/FJS90	
4	WR129215	-	HOSE ASM -16X66.00 FORFS/FL45	
5	WR129222	-	HOSE ASM -4X88.00 FJS/FJS45	
6	WR129223	-	HOSE ASM -4X46.00 FJS/FJS90	
7	WR129228	-	HOSE ASM -6X11.50 FJS/FJS90	
8	WR129229	-	HOSE ASM -6X17.00 FJS/4FJS90	
9	WR129233	-	HOSE ASM -8X11.50 6FJS/FJS90	
10	WR129234	-	HOSE ASM -8X18.00 FJS/12FJS90	
11	WR129282	-	HOSE ASM -8X48.00 12FJS/6FJS90	
12	AG220648	-	HOSE ASM -12X29.00 FJS/FJS90	
13	AG240932	-	HOSE ASM -4 20.00 R1AT	

Copyright © 2008 AGCO Corporation

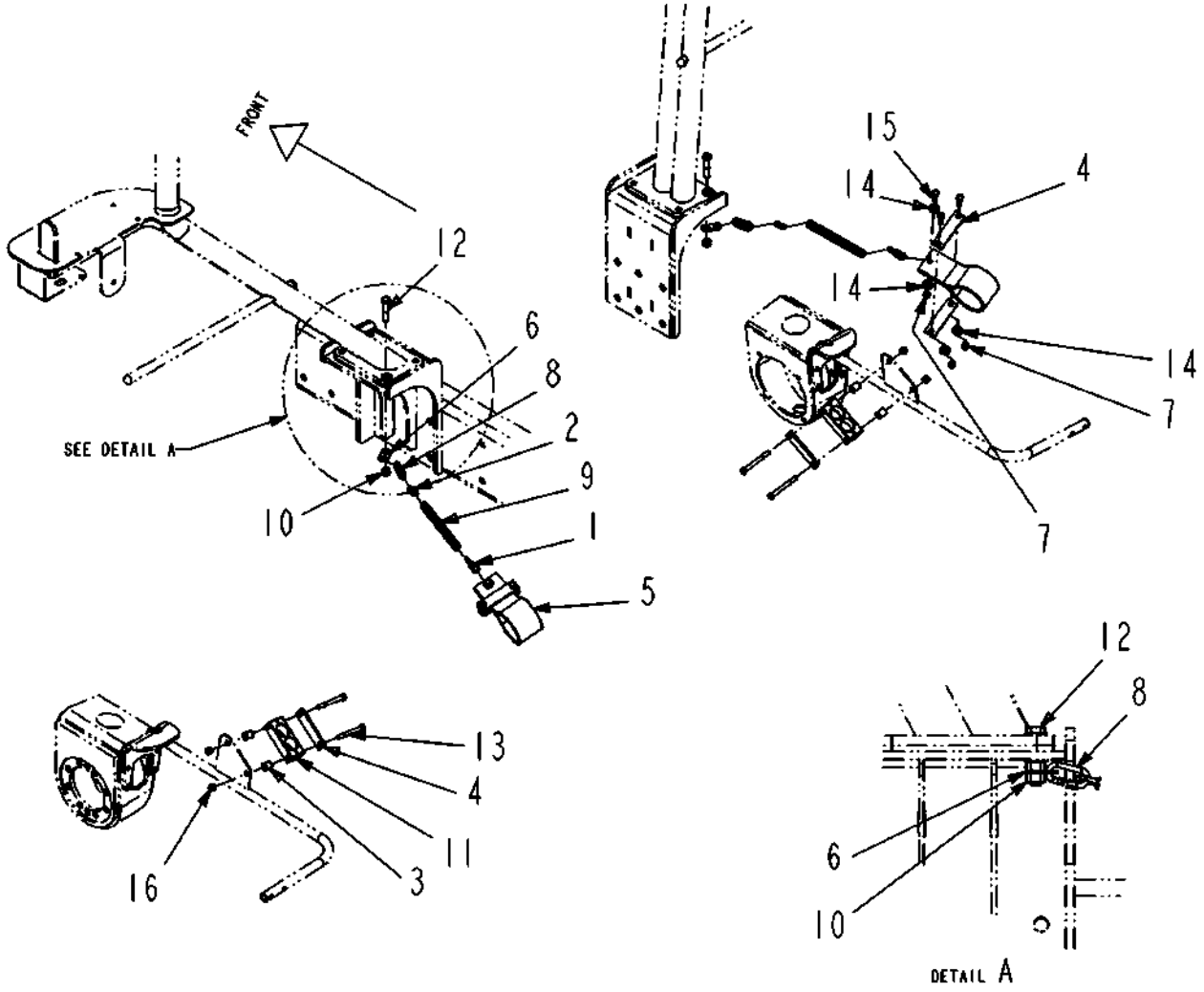

518951D1-02-R503-.TIF

Copyright © 2008 AGCO Corporation

HOSE SUPPORT INSTALL,120

ITEM	PART #	QTY	DESCRIPTION	COMMENTS
1	AG114698	2	CHAIN HOLD-UP (2 LINKS)	
2	AG115096	2	CHAIN LINK .19	
3	AG231952	4	TUBE	
4	AG237961	6	PLATE-COVER	
5	AG238315	2	STRAP-HOSE HANGER	
6	AG263132	2	WASHER-DOUBLE HOLE,.50	
7	AG515140	6	NUT 0.37-16NC HEX SS HVY NY	
8	AG516517	2	CONNECTOR THREADED CHAIN 0.25 IN	
9	AG517097	2	SPRING COIL EXTENSION	
10	AG520614	2	NUT-.50-13,G8,ZN,HH,C-LK	
11	AG521587	2	CLAMP-TWIN,1.50,POLY	
12	AG552240	2	BOLT 0.37-16NCX 2.00 G5 ZN HHD	
13	AG555126	4	BOLT 0.37-16NCX 3.75 G5 ZN HHD	
14	AG562073	8	WASHER 0.37 FL SS R/B 523061	
15	AG562159	6	BOLT 0.37-16NCX 1.50 SS HHD	
16	AG601411	4	NUT 0.37-16NC HEX ZN REG NY	

Copyright © 2008 AGCO Corporation

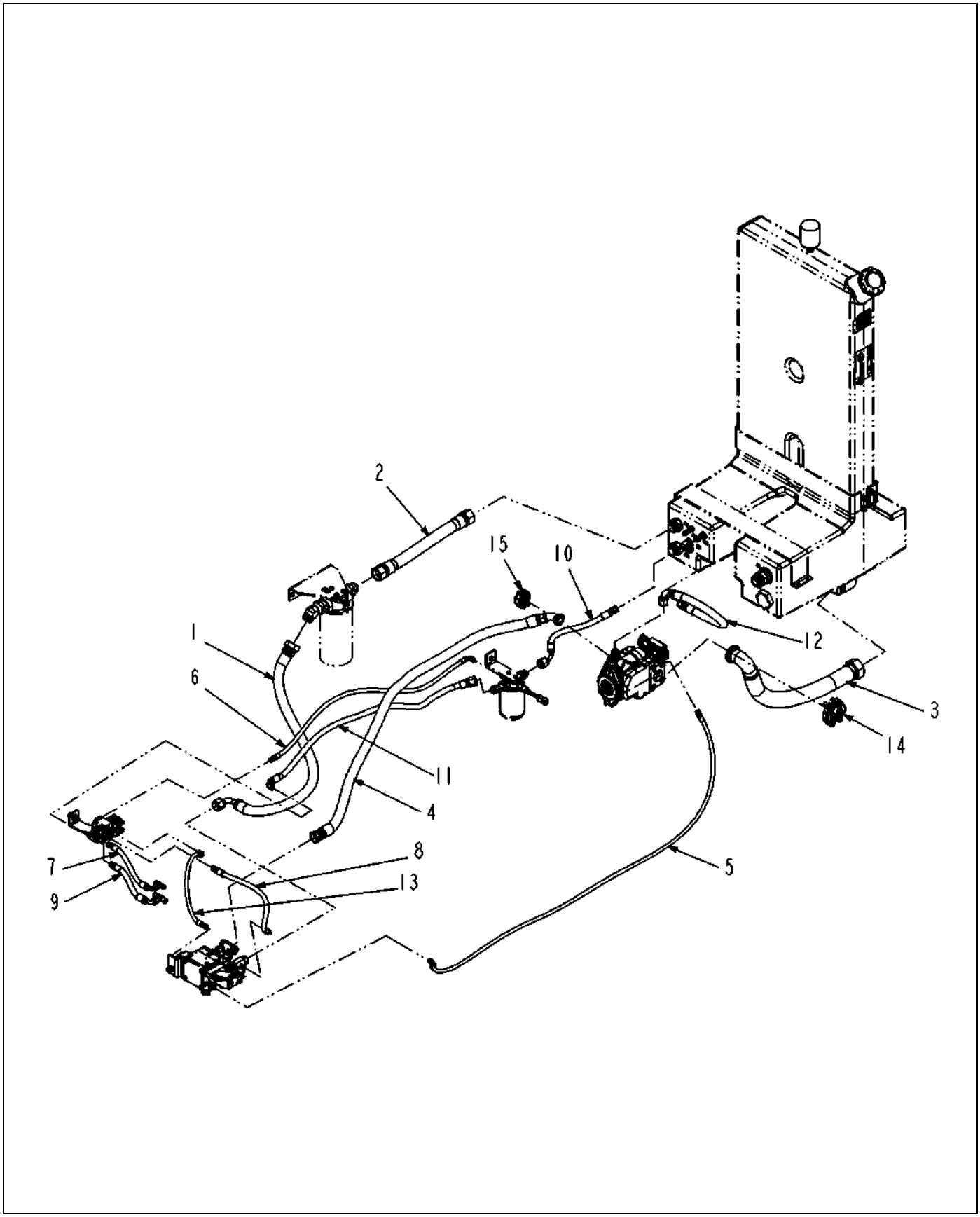

518956D1-01-R270-01.TIF

Copyright © 2008 AGCO Corporation

FWA,HOSE INSTALL,88

ITEM	PART #	QTY	DESCRIPTION	COMMENTS
1	WR128759	-	HOSE ASM-16X48.00 20FJS/FJS45	
2	WR128760	-	HOSE ASM -20X20.00 FJS/FJS	
3	WR128904	-	HOSE ASM -32X30.00 FJS/FJS90	
4	WR129215	-	HOSE ASM -16X66.00 FORFS/FL45	
5	WR129222	-	HOSE ASM -4X88.00 FJS/FJS45	
6	WR129223	-	HOSE ASM -4X46.00 FJS/FJS90	
7	WR129228	-	HOSE ASM -6X11.50 FJS/FJS90	
8	WR129229	-	HOSE ASM -6X17.00 FJS/4FJS90	
9	WR129233	-	HOSE ASM -8X11.50 6FJS/FJS90	
10	WR129234	-	HOSE ASM -8X18.00 FJS/12FJS90	
11	WR129282	-	HOSE ASM -8X48.00 12FJS/6FJS90	
12	AG220648	-	HOSE ASM -12X29.00 FJS/FJS90	
13	AG240932	-	HOSE ASM -4 20.00 R1AT	
14	AG519527	1	FLANGE SPLIT KIT CODE 61-32	
15	AG561044	1	KIT 1.00 SPLIT FLANGE	
16	518957D1	-	KIT-HOSE,FWA,88	

Copyright © 2008 AGCO Corporation

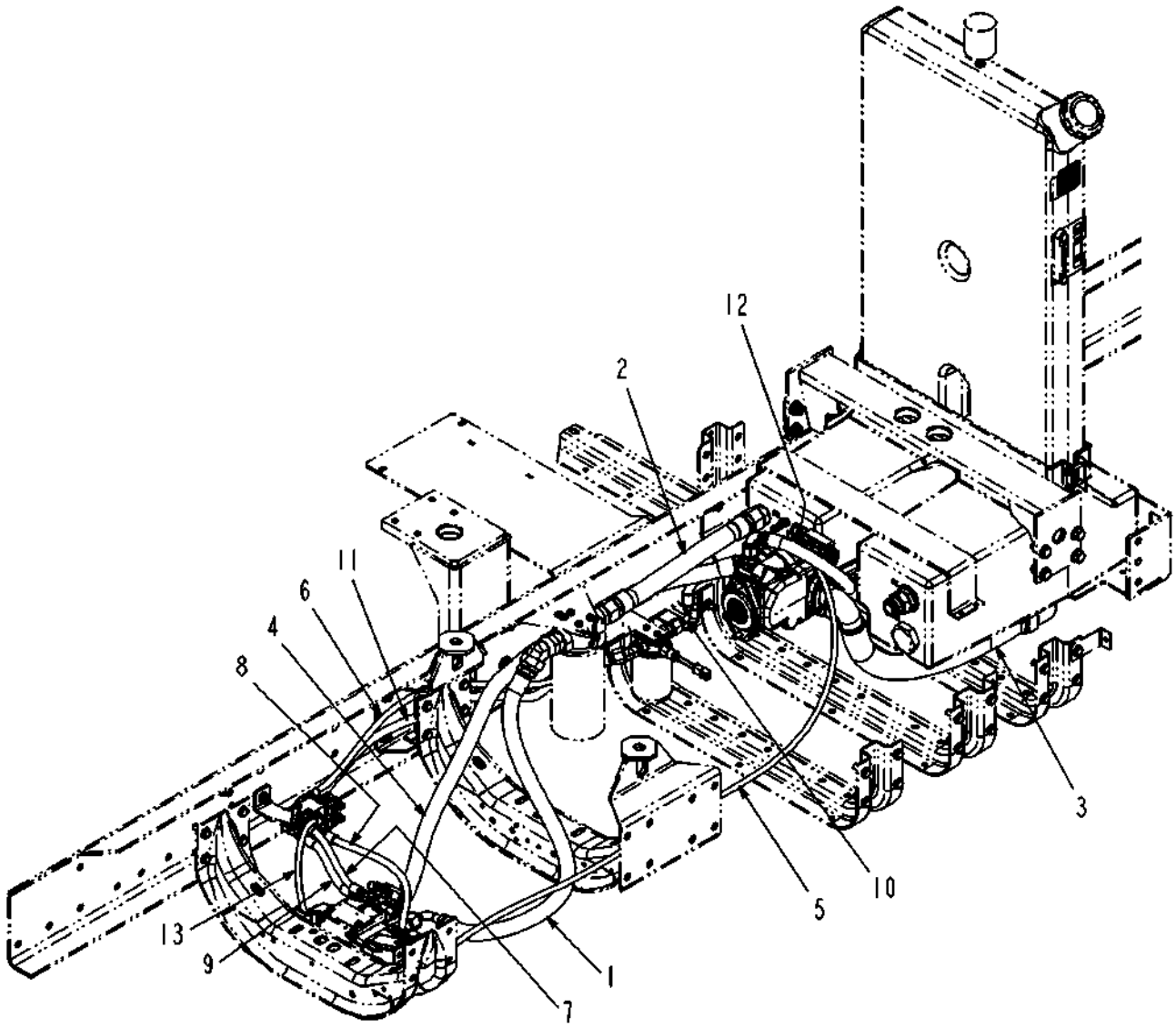

518956D1-01-R270-02.TIF

Copyright © 2008 AGCO Corporation

FWA,HOSE INSTALL,88

ITEM	PART #	QTY	DESCRIPTION	COMMENTS
1	WR128759	-	HOSE ASM-16X48.00 20FJS/FJS45	
2	WR128760	-	HOSE ASM -20X20.00 FJS/FJS	
3	WR128904	-	HOSE ASM -32X30.00 FJS/FJS90	
4	WR129215	-	HOSE ASM -16X66.00 FORFS/FL45	
5	WR129222	-	HOSE ASM -4X88.00 FJS/FJS45	
6	WR129223	-	HOSE ASM -4X46.00 FJS/FJS90	
7	WR129228	-	HOSE ASM -6X11.50 FJS/FJS90	
8	WR129229	-	HOSE ASM -6X17.00 FJS/4FJS90	
9	WR129233	-	HOSE ASM -8X11.50 6FJS/FJS90	
10	WR129234	-	HOSE ASM -8X18.00 FJS/12FJS90	
11	WR129282	-	HOSE ASM -8X48.00 12FJS/6FJS90	
12	AG220648	-	HOSE ASM -12X29.00 FJS/FJS90	
13	AG240932	-	HOSE ASM -4 20.00 R1AT	

Copyright © 2008 AGCO Corporation

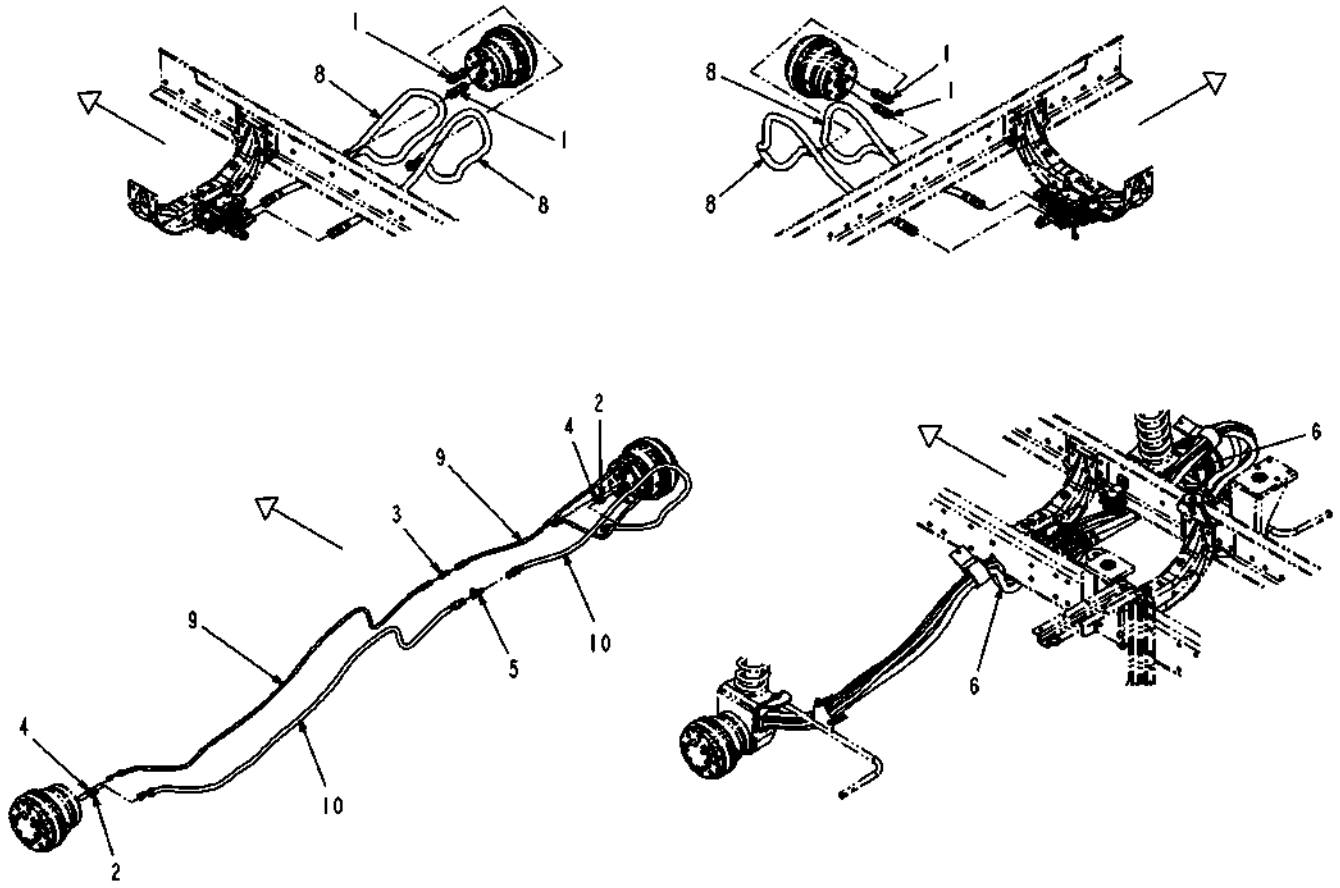

518996D1-02-R641-.TIF

Copyright © 2008 AGCO Corporation

WHEEL MTR,HOSE INSTALL,120

ITEM	PART #	QTY	DESCRIPTION	COMMENTS
1	WR128767	4	ADAPTER-12ORFS X -12MOR 90DEG	[A]
2	AG551139	2	ADAP STR 0.50MO-R X 0.50 MJIC	SEE PAGE 6-102
3	AG553514	1	TEE 0.37 MJIC (3)	
4	AG561360	2	ADAP STR -4MBX-4MJ	[B]
5	AG562346	1	TEE -8MJ	
6	AG562496	AR	TIE CABLE 15.0 .18-4.00 BLACK	
7	518950D1	-	KIT-HOSE,FWA,120	
8	518952D1	-	HOSE ASM,-12X103 ORFS/ORFS	
9	518953D1	-	HOSE ASM,-4X109 6FJS/FJS90L	
10	518954D1	-	HOSE ASM,-8X106 FJS/FJS90S	
	FOOTNOTE [A]		REPLACEMENT O-RING USE AG714806.	
	FOOTNOTE [B]		AG520428 O-RING	

Copyright © 2008 AGCO Corporation

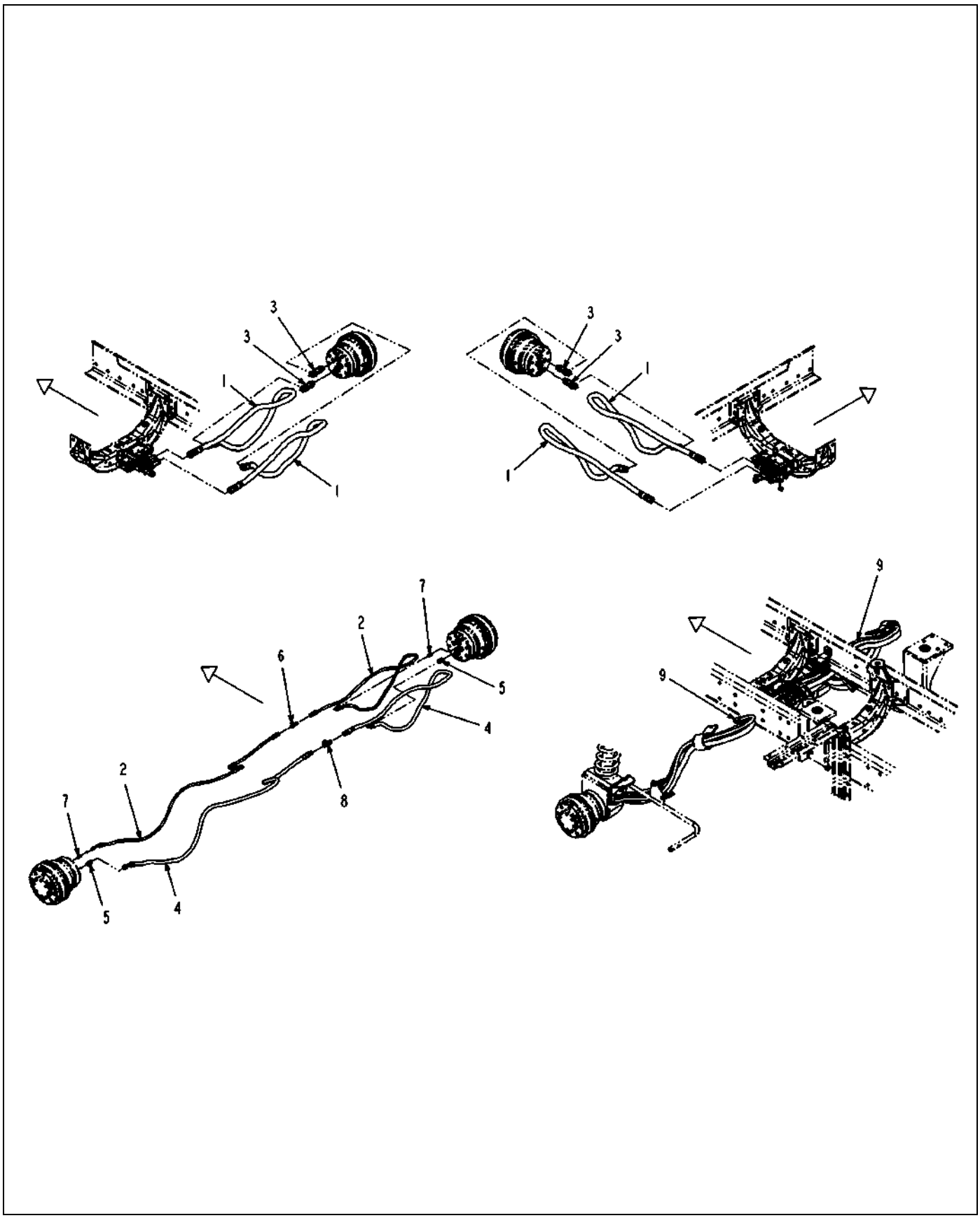

518997D1-02-R641-.TIF

Copyright © 2008 AGCO Corporation

WHEEL MTR,HOSE INSTALL,88

ITEM	PART #	QTY	DESCRIPTION	COMMENTS
1	WR128762	-	HOSE ASM -12X91.00 FORFS/FORFS	
2	WR128764	-	HOSE ASM -4X97.00 6FJS/FJS90L	
3	WR128767	4	ADAPTER-12ORFS X -12MOR 90DEG	[A]
4	WR134869	-	HOSE ASM -8X94.00 FJS/FJS90	
5	AG551139	2	ADAP STR 0.50MO-R X 0.50 MJIC	SEE PAGE 6-102
6	AG553514	1	TEE 0.37 MJIC (3)	
7	AG561360	2	ADAP STR -4MBX-4MJ	[B]
8	AG562346	1	TEE -8MJ	
9	AG562496	AR	TIE CABLE 15.0 .18-4.00 BLACK	
10	518957D1	-	KIT-HOSE,FWA,88	
	FOOTNOTE [A]		REPLACEMENT O-RING USE AG714806.	
	FOOTNOTE [B]		AG520428 O-RING	

Copyright © 2008 AGCO Corporation

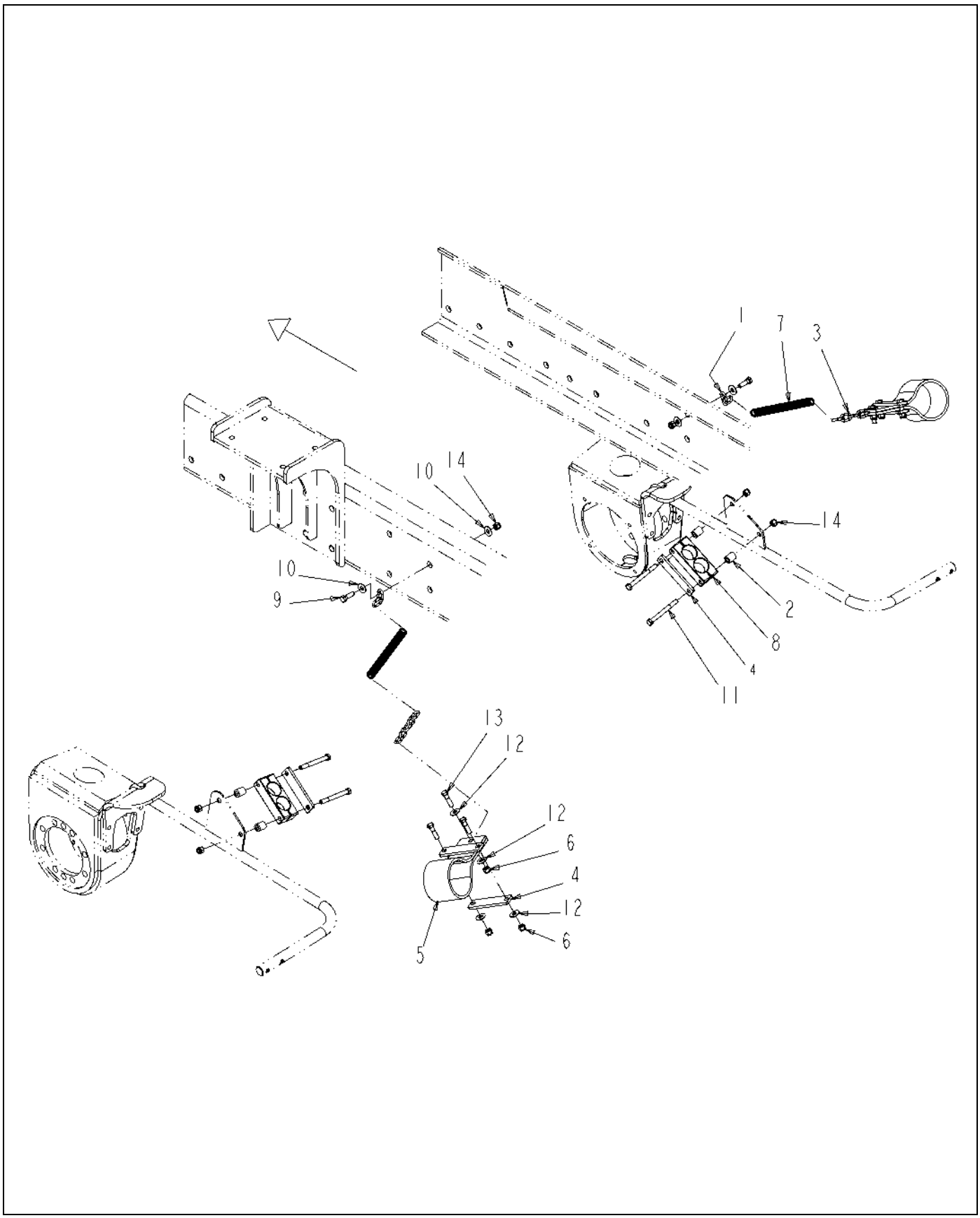

519127D1-01-R270-.TIF

Copyright © 2008 AGCO Corporation

HOSE SUPPORT INSTALL,88

ITEM	PART #	QTY	DESCRIPTION	COMMENTS
1	AG114698	2	CHAIN HOLD-UP (2 LINKS)	
2	AG231952	4	TUBE	
3	WR232770	2	CHAIN .19-5 LINKS	
4	AG237961	6	PLATE-COVER	
5	AG238315	2	STRAP-HOSE HANGER	
6	AG515140	6	NUT 0.37-16NC HEX SS HVY NY	
7	AG517097	2	SPRING COIL EXTENSION	
8	AG521587	2	CLAMP-TWIN,1.50,POLY	
9	AG550515	2	BOLT 0.37-16NCX 1.25 G5 ZN HHD	
10	AG551007	4	WASHER 0.37 FL ZN REG TYPE-B	
11	AG555126	4	BOLT 0.37-16NCX 3.75 G5 ZN HHD	
12	AG562073	8	WASHER 0.37 FL SS R/B 523061	
13	AG562159	6	BOLT 0.37-16NCX 1.50 SS HHD	
14	AG601411	6	NUT 0.37-16NC HEX ZN REG NY	

Copyright © 2008 AGCO Corporation

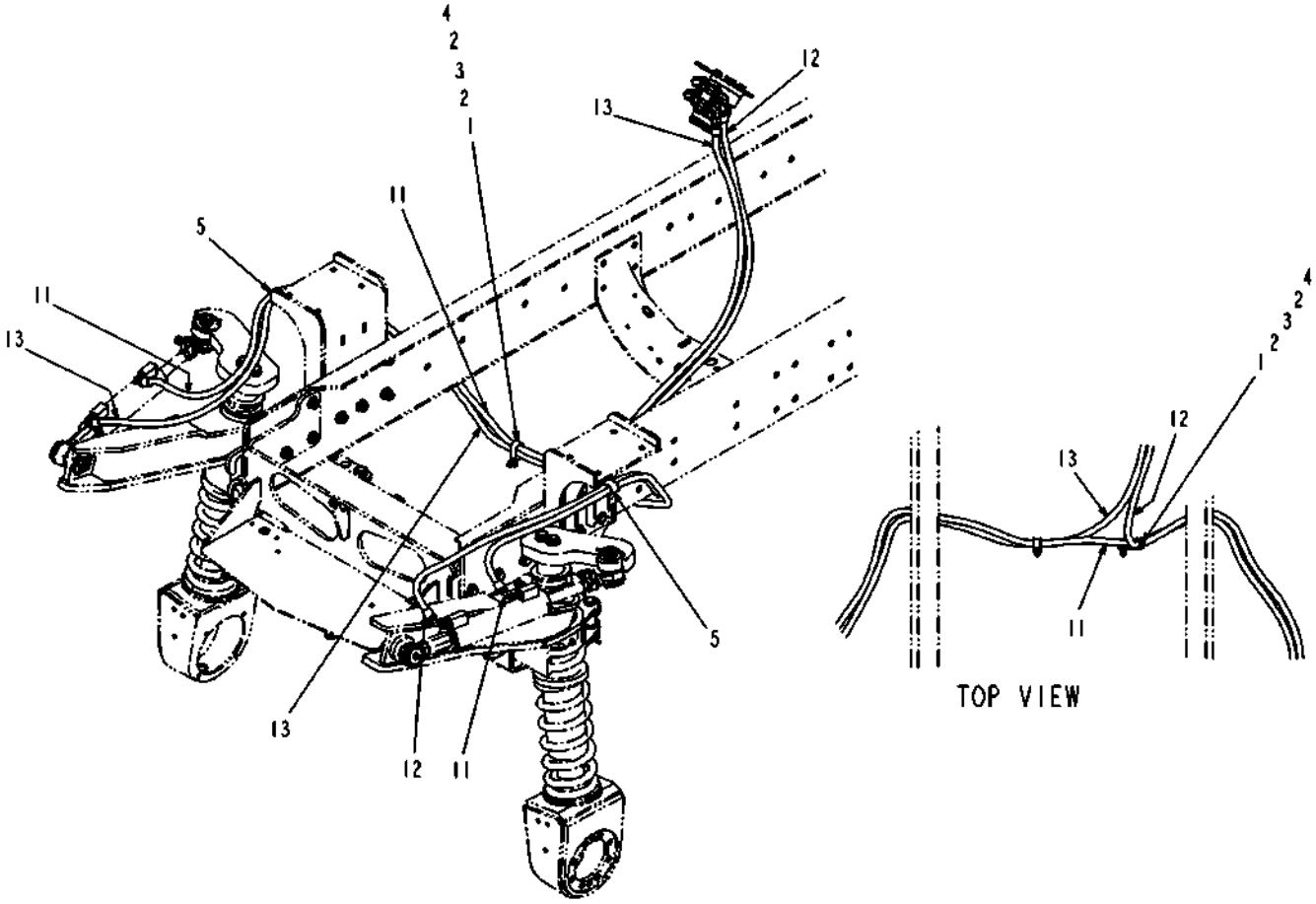

520826D1-02-T044-01.TIF

Copyright © 2008 AGCO Corporation

HOSE-INSTALL,FRONT AXLE,71

ITEM	PART #	QTY	DESCRIPTION	COMMENTS
1	WR55248	2	CLAMP-SUPPORT CUSHION DBL	
2	AG550671	4	WASHER 0.25 FL ZN SAE TYPE-A	
3	AG550698	2	BOLT 0.25-20NCX 1.00 G5 ZN HHD	
4	AG604216	2	NUT 0.25-20NC HEX ZN REG NY	
5	400667X1	2	CLIP-TWO TUBE COATED	
6	520827D1	-	HOSE-KIT,FRT AXLE,71	
11	521153D1	-	HOSE ASM,-6X144 FJS90S(2)	
12	521154D1	-	HOSE ASM,-6X121 8FJS/6FJS90S	
13	521155D1	-	HOSE ASM,-6X139 8FJS/6FJS90S	

Copyright © 2008 AGCO Corporation

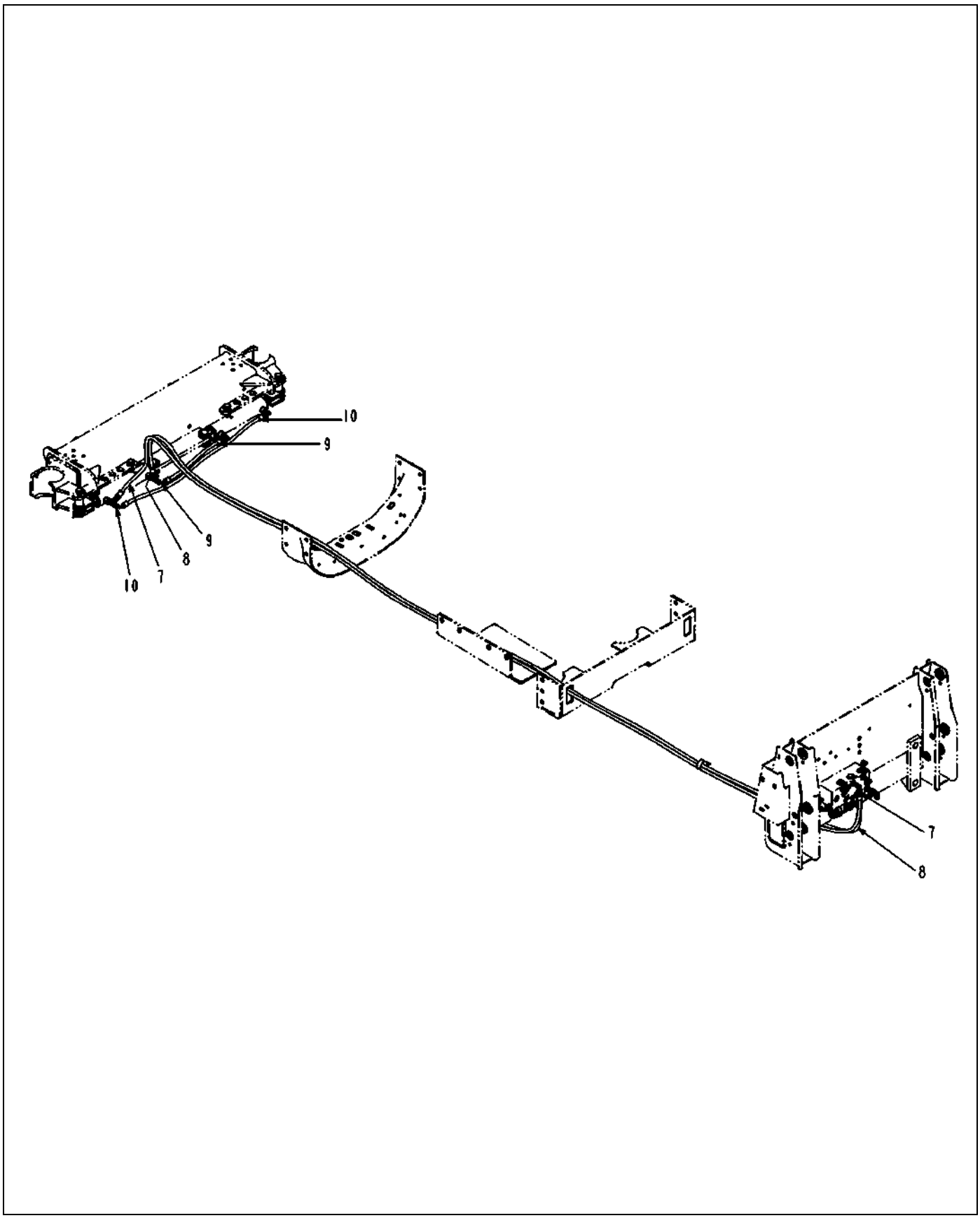

520826D1-02-T044-02.TIF

Copyright © 2008 AGCO Corporation

HOSE-INSTALL,FRONT AXLE,71

ITEM	PART #	QTY	DESCRIPTION	COMMENTS
7	521145D1	-	HOSE ASM,-4X203 6FJS(2)	
8	521146D1	-	HOSE ASM,-4X193 6FJS(2)	
9	521151D1	-	HOSE ASM,-4X19 FJS/6FJS90S	
10	521152D1	-	HOSE ASM,-4X39 FJS/6FJS90S	

Copyright © 2008 AGCO Corporation

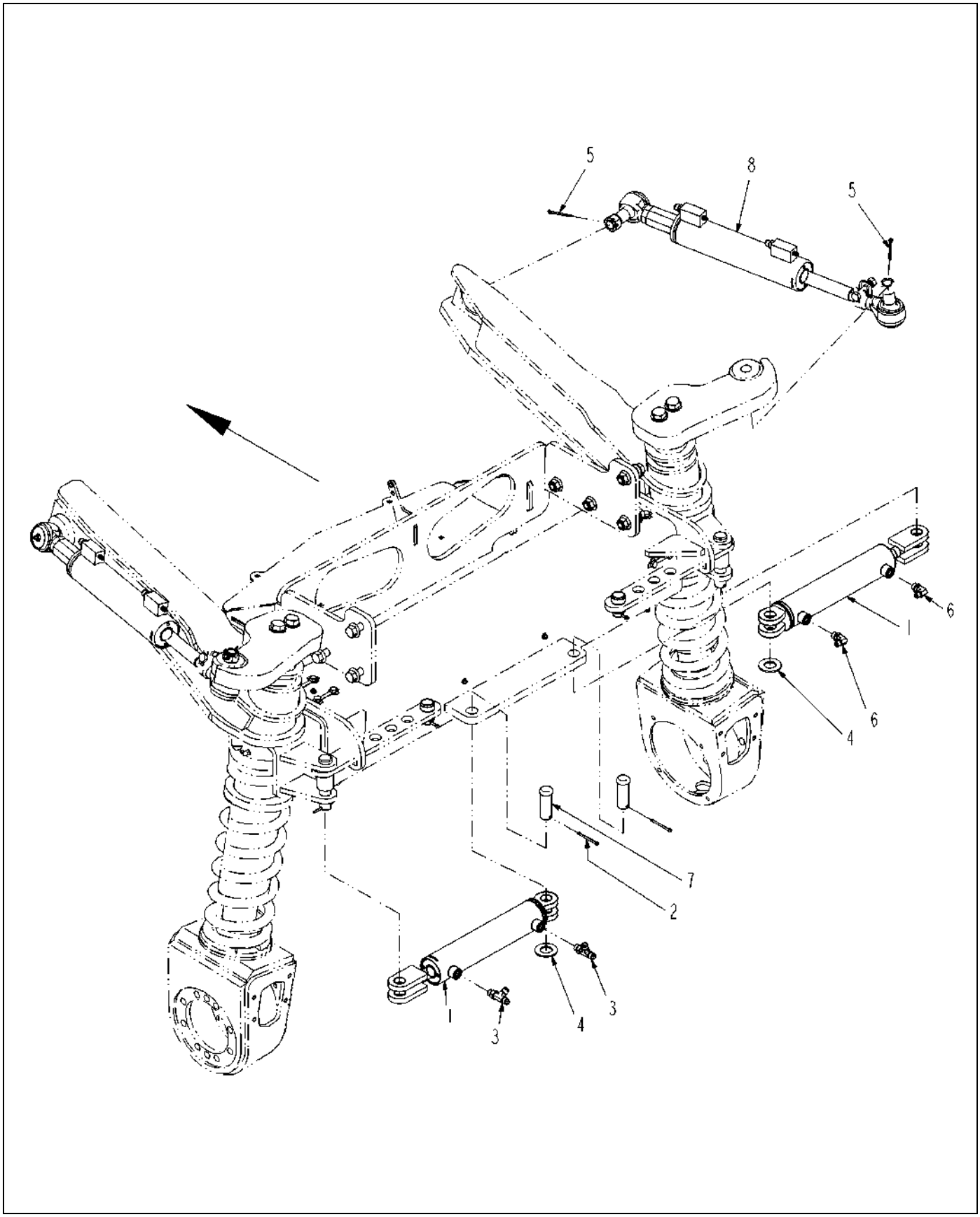

520828D1-01-R549-01.TIF

Copyright © 2008 AGCO Corporation

CYLINDER-INSTALL,FRONT AXLE,71

ITEM	PART #	QTY	DESCRIPTION	COMMENTS
1	WR128334	2	CYLINDER-HYD,TRACK ADJ,NARROW	SEE PAGE 6-2
2	AG515352	2	PIN COTTER 0.18X2.00 SS	
3	AG519123	2	TEE-RUN,STR THD -6	SEE PAGE 6-101
4	AG551856	2	WASHER 1.00 FL ZN SAE TYPE-A	
5	AG557838	4	PIN COTTER 0.12X2.00 ZN	
6	AG562354	2	ELBOW 90D 0.37MO-R X 0.25MJIC	[A]
7	AG602132	2	PIN CLEVIS 1.00X2.62 ZN	
8	515282D1	2	CYL-ASM,STEERING,7000	SEE PAGE 6-3
	FOOTNOTE [A]		AG713166 O-RING	

Copyright © 2008 AGCO Corporation

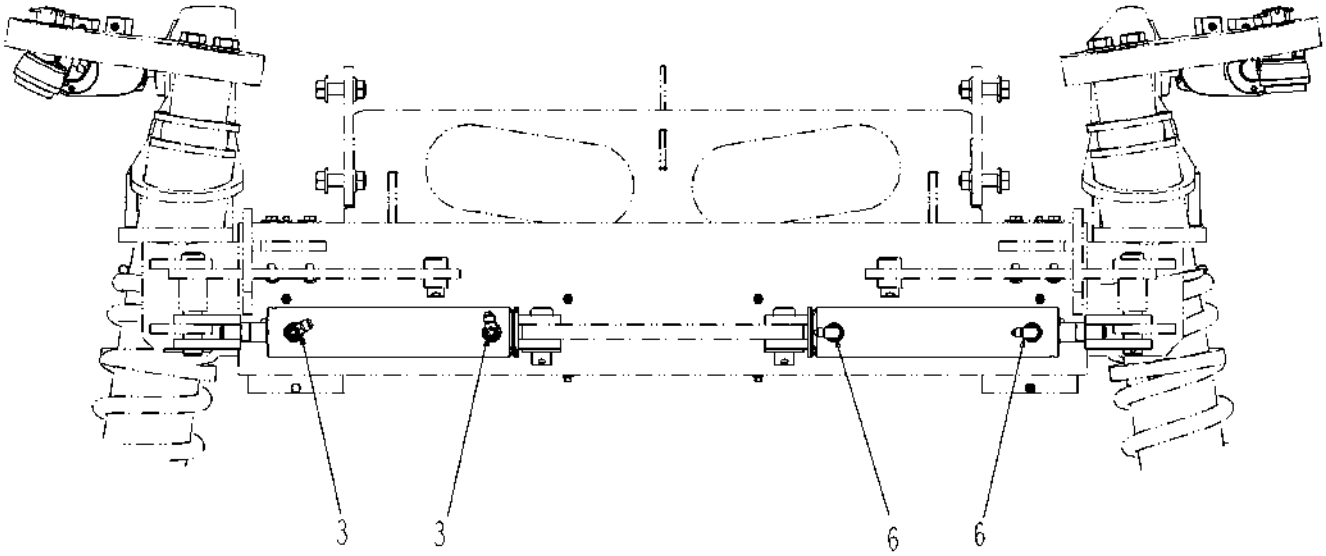

520828D1-01-R549-02.TIF

Copyright © 2008 AGCO Corporation

ITEM	PART #	QTY	DESCRIPTION	COMMENTS
3	AG519123	2	TEE-RUN,STR THD -6	SEE PAGE 6-101
6	AG562354	2	ELBOW 90D 0.37MO-R X 0.25MJIC	[A]
	FOOTNOTE [A]		AG713166 O-RING	

Copyright © 2008 AGCO Corporation

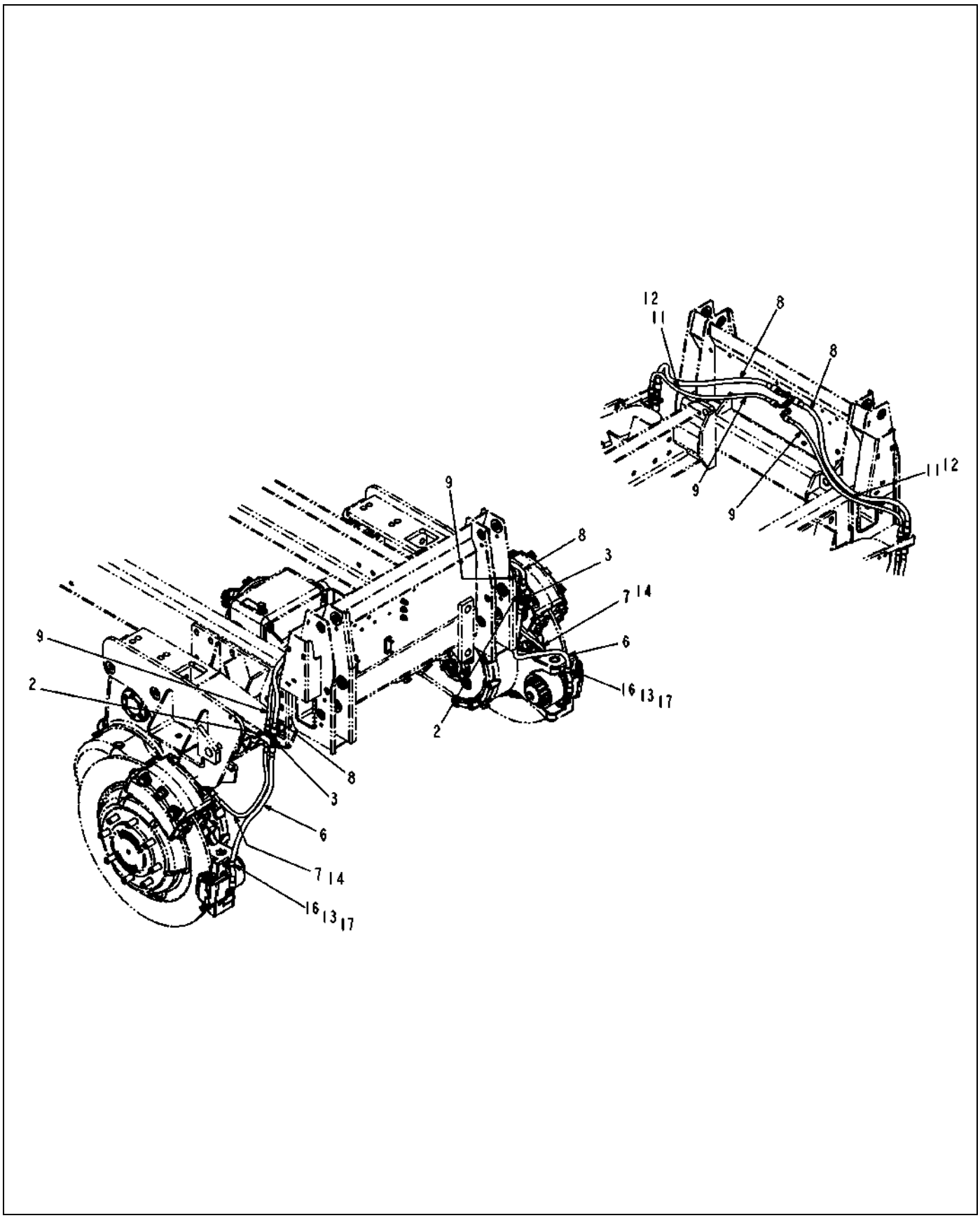

520824D1-02-T044-01.TIF

Copyright © 2008 AGCO Corporation

ITEM	PART #	QTY	DESCRIPTION	COMMENTS
2	WR129997	2	NUT-HEX,.438-20UN2B,ZINC	
3	WR129998	2	NUT-HEX,.563-18UN2B,ZINC	
6	AG132379	-	HOSE ASM-6X39.25 FJS/MJ (BH)	
7	AG132380	-	HOSE ASM-4X27.50 FJS/MJ (BH)	
8	AG132381	-	HOSE ASM-6X44.00 R1AT FJS/FJS	
9	AG132383	-	HOSE ASM-4X44 4FJS90/4FJS	
11	AG519861	AR	PROTECTOR HOSE 6.00 IN EPHA	
12	AG519862	AR	PROTECTOR HOSE 4 IN EPHA	
13	AG550671	2	WASHER 0.25 FL ZN SAE TYPE-A	
14	AG553557	AR	TIE CABLE 7.37 .06-1.37 BLACK	
16	AG562237	2	CLAMP CTD 0.75IDX0.75WIDE	
17	400152X1	2	BOLT-M6X1X16MM ZNDI HHD 10.9	
18	520823D1	-	HOSE-KIT,REAR AXLE,71	

Copyright © 2008 AGCO Corporation

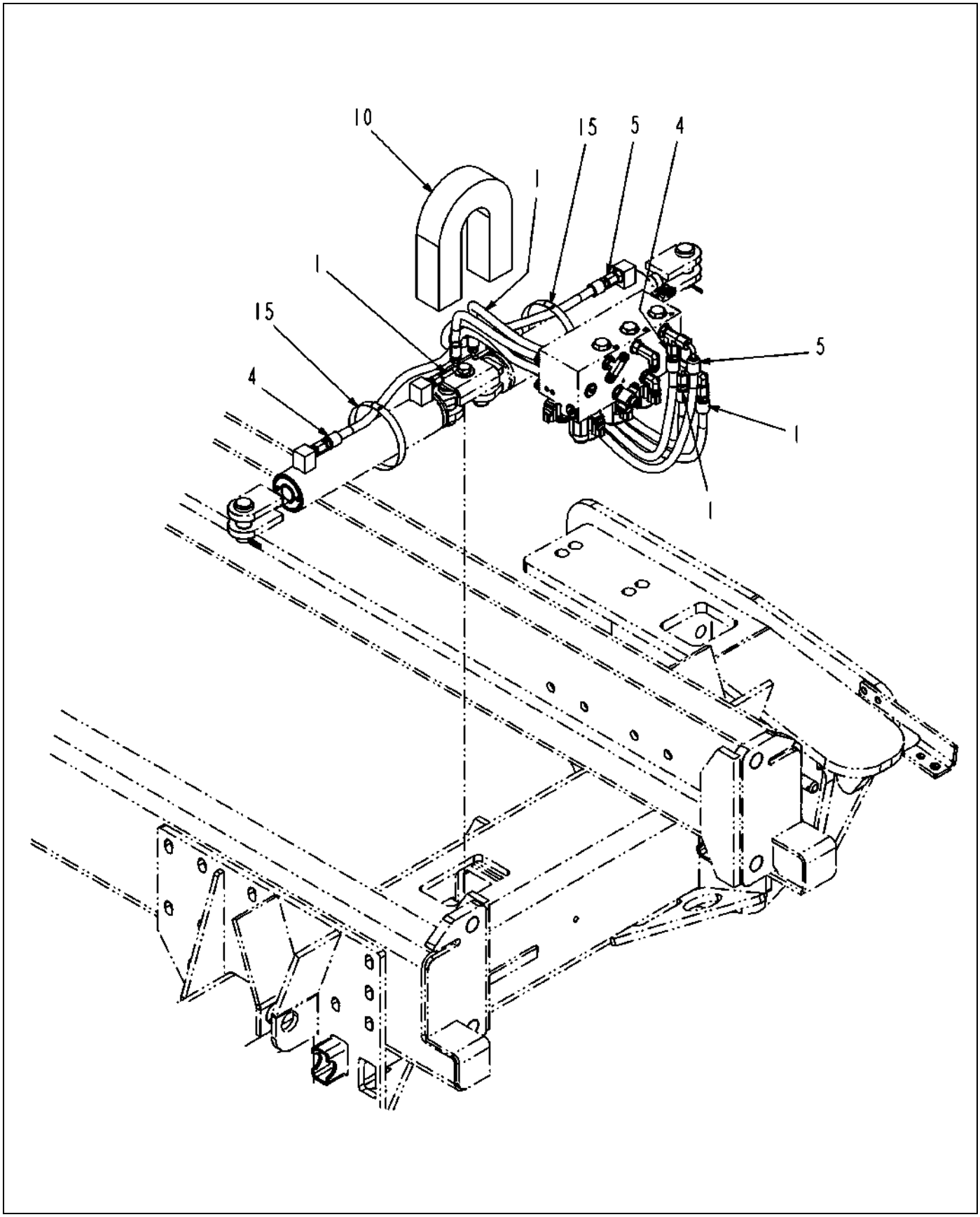

520824D1-02-T044-02.TIF

Copyright © 2008 AGCO Corporation

HOSE-INSTALL,REAR AXLE,71

ITEM	PART #	QTY	DESCRIPTION	COMMENTS
1	WR128678	-	HOSE ASM -4X38.00 6FJS/4FJS90	
4	AG132366	-	HOSE ASM-4X52.00 6FJS/6FJS	
5	AG132367	-	HOSE ASM-4X52.00 6FJS/6FJS90	
10	WR134416	1	INSL-FOAM,2.00X2.00X14.00	[A]
15	AG561237	2	CLAMP 3.56-4.50 HOSE 64HS	
	FOOTNOTE [A]		REFRENCE S.B.#0631	

Copyright © 2008 AGCO Corporation

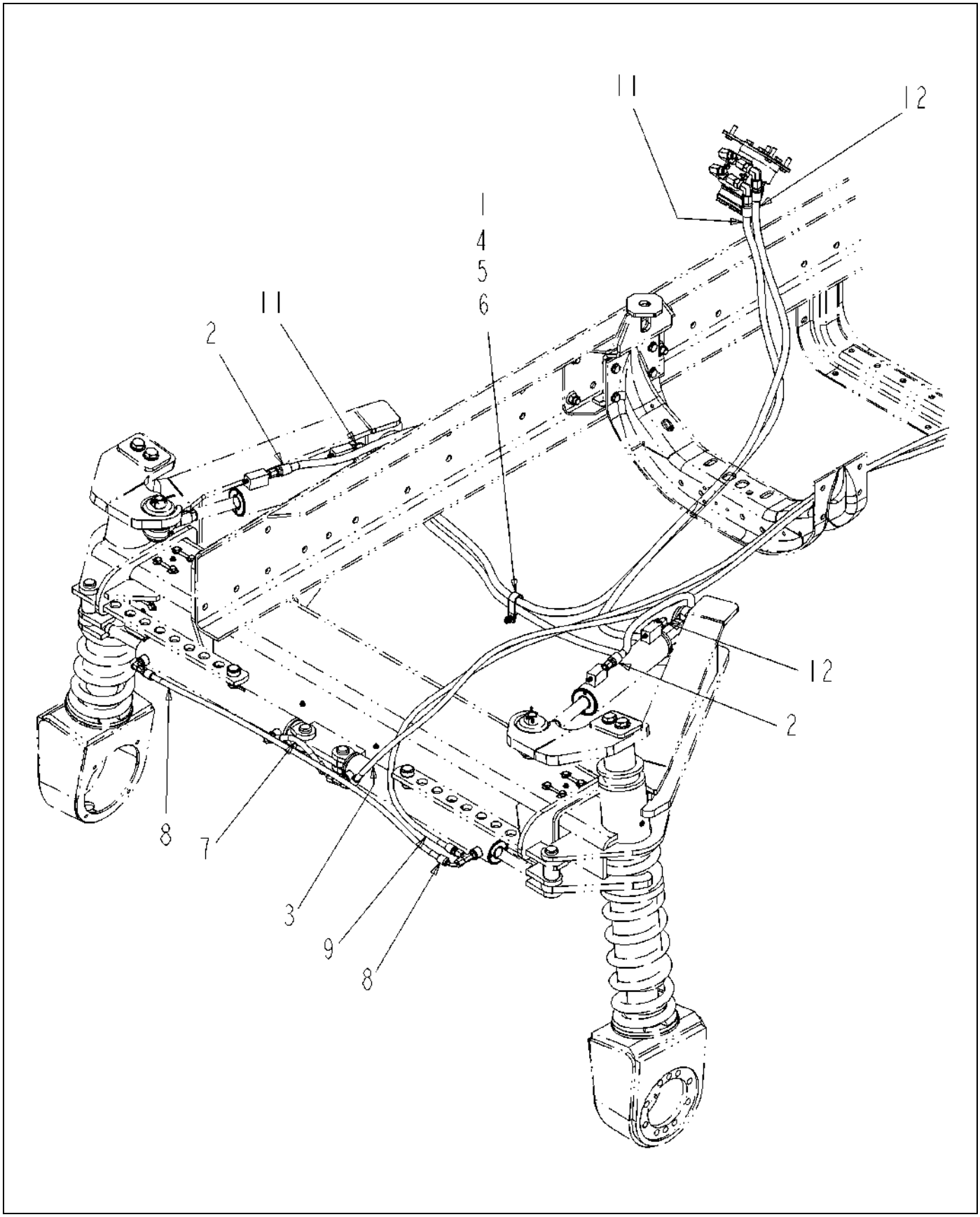

520815D1-02-R560-01.TIF

Copyright © 2008 AGCO Corporation

HOSE-INSTALL,FRONT AXLE,88

ITEM	PART #	QTY	DESCRIPTION	COMMENTS
1	WR55248	1	CLAMP-SUPPORT CUSHION DBL	
2	WR124852	-	HOSE ASM -6X114.00 FJS/FJS	
3	WR129209	-	HOSE ASM -4X205.00 6FJS/6FJS45	
4	AG550671	2	WASHER 0.25 FL ZN SAE TYPE-A	
5	AG550698	1	BOLT 0.25-20NCX 1.00 G5 ZN HHD	
6	AG604216	1	NUT 0.25-20NC HEX ZN REG NY	
7	520482D1	-	PLATE	
8	520493D1	-	HOSE ASM,-4X46 FJS/6FJS90	
9	520587D1	-	HOSE ASM,-4X225 6FJS(2)	
11	520887D1	-	HOSE ASM,-6X111 8FJS/FJS90S	
11	520816D1	-	HOSE-KIT,FRT AXLE,88	
12	520888D1	-	HOSE ASM,-6X84 8FJS/FJS90S	

Copyright © 2008 AGCO Corporation

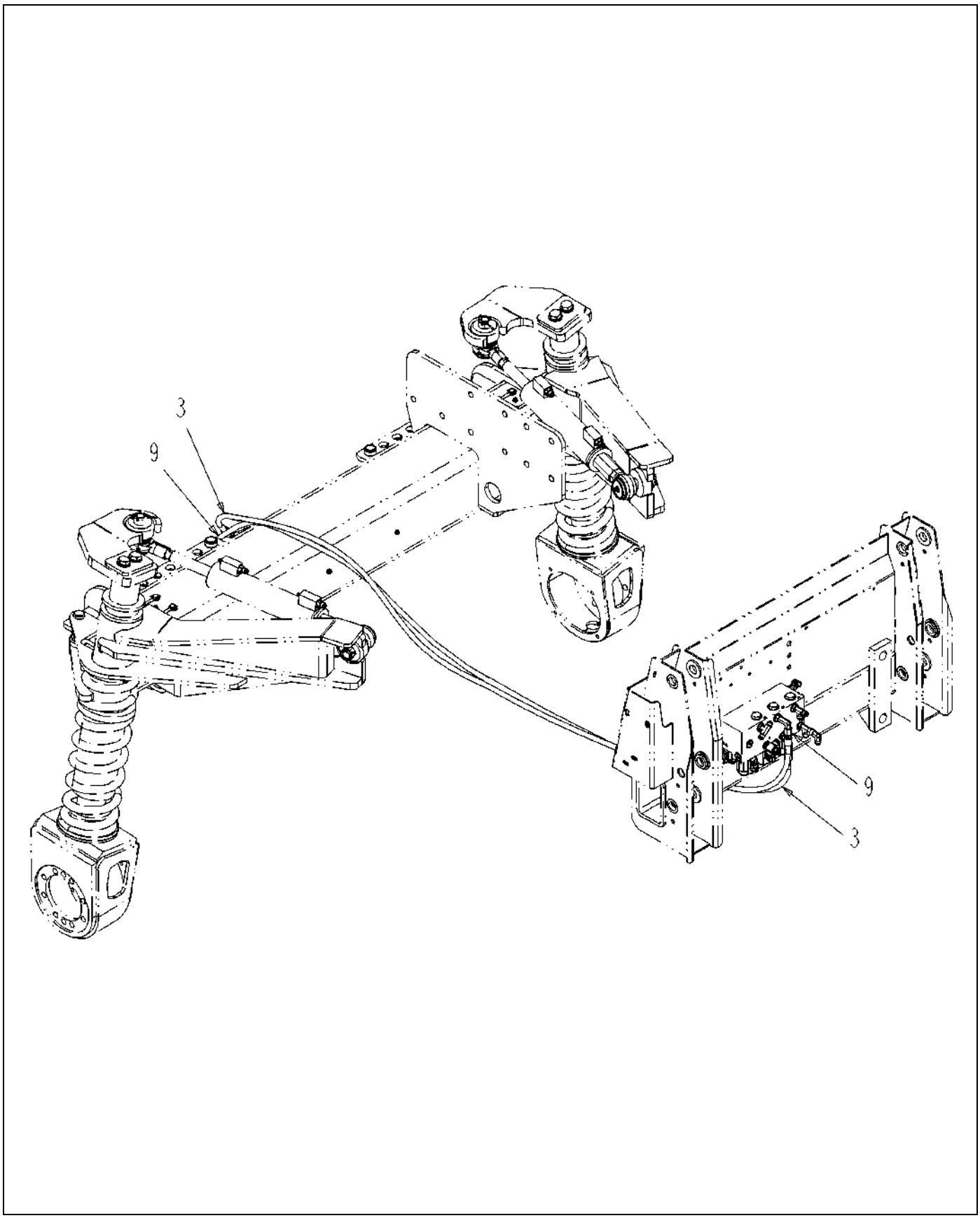

520815D1-02-R560-02.TIF

Copyright © 2008 AGCO Corporation

HOSE-INSTALL,FRONT AXLE,88

ITEM	PART #	QTY	DESCRIPTION	COMMENTS
3	WR129209	-	HOSE ASM -4X205.00 6FJS/6FJS45	
9	520587D1	-	HOSE ASM,-4X225 6FJS(2)	

Copyright © 2008 AGCO Corporation

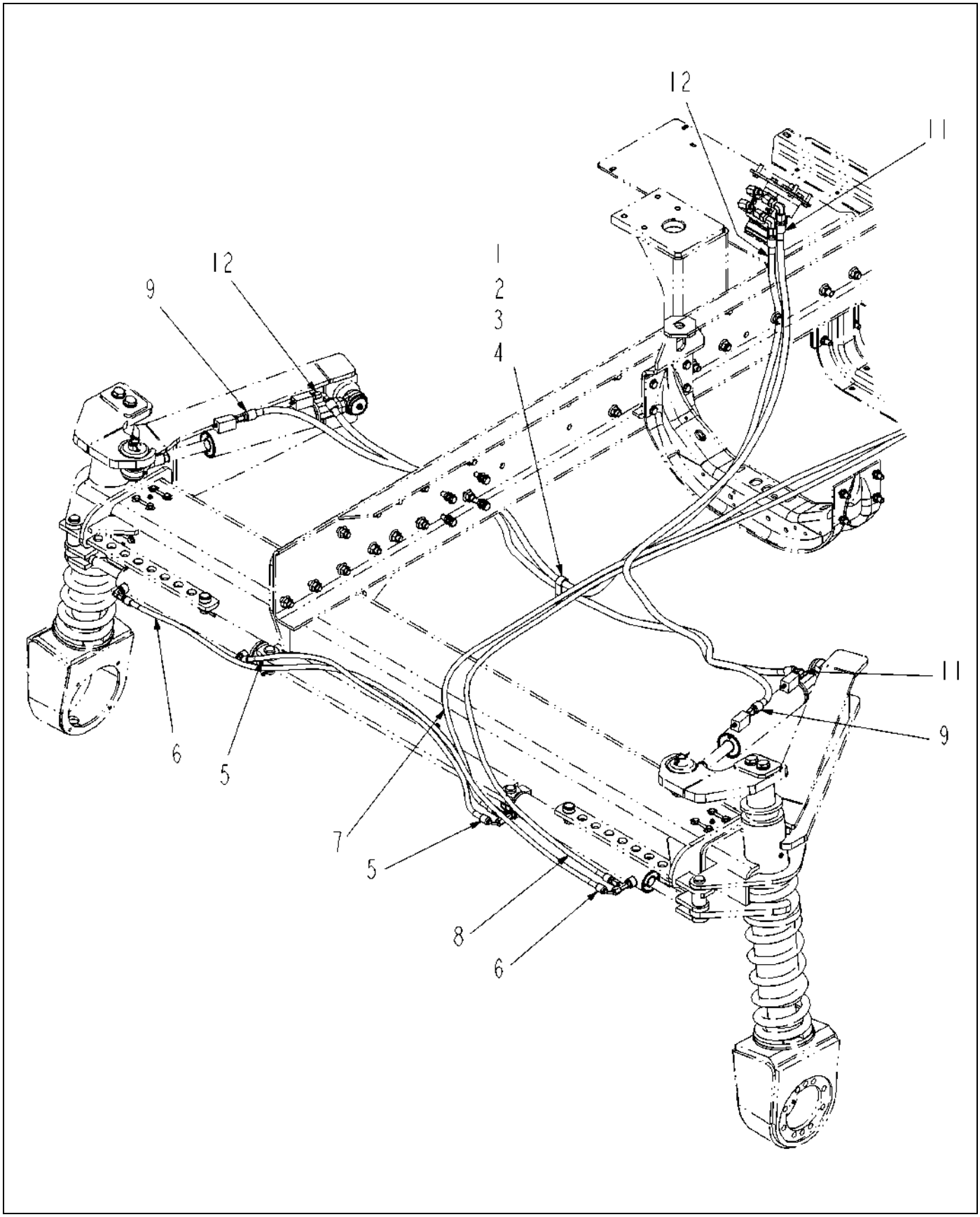

520818D1-02-R560-01.TIF

Copyright © 2008 AGCO Corporation

HOSE-INSTALL,FRONT AXLE,120

ITEM	PART #	QTY	DESCRIPTION	COMMENTS
1	WR55248	1	CLAMP-SUPPORT CUSHION DBL	
2	AG550671	2	WASHER 0.25 FL ZN SAE TYPE-A	
3	AG550698	1	BOLT 0.25-20NCX 1.00 G5 ZN HHD	
4	AG604216	1	NUT 0.25-20NC HEX ZN REG NY	
5	518354D1	-	HOSE ASM,-4X41 FJS/6FJS90	
6	518355D1	-	HOSE ASM,-4X76 FJS/6FJS90	
7	518356D1	-	HOSE ASM,-4X215 6FJS(2)	
8	518357D1	-	HOSE ASM,-4X234 6FJS(2)	
9	518359D1	-	HOSE ASM,-6X138 FJS(2)	
10	520819D1	-	HOSE-KIT,FRT AXLE,120	
11	520891D1	-	HOSE ASM,-6X96 8FJS/FJS90S	
12	520892D1	-	HOSE ASM,-6X123 8FJS/FJS90S	

Copyright © 2008 AGCO Corporation

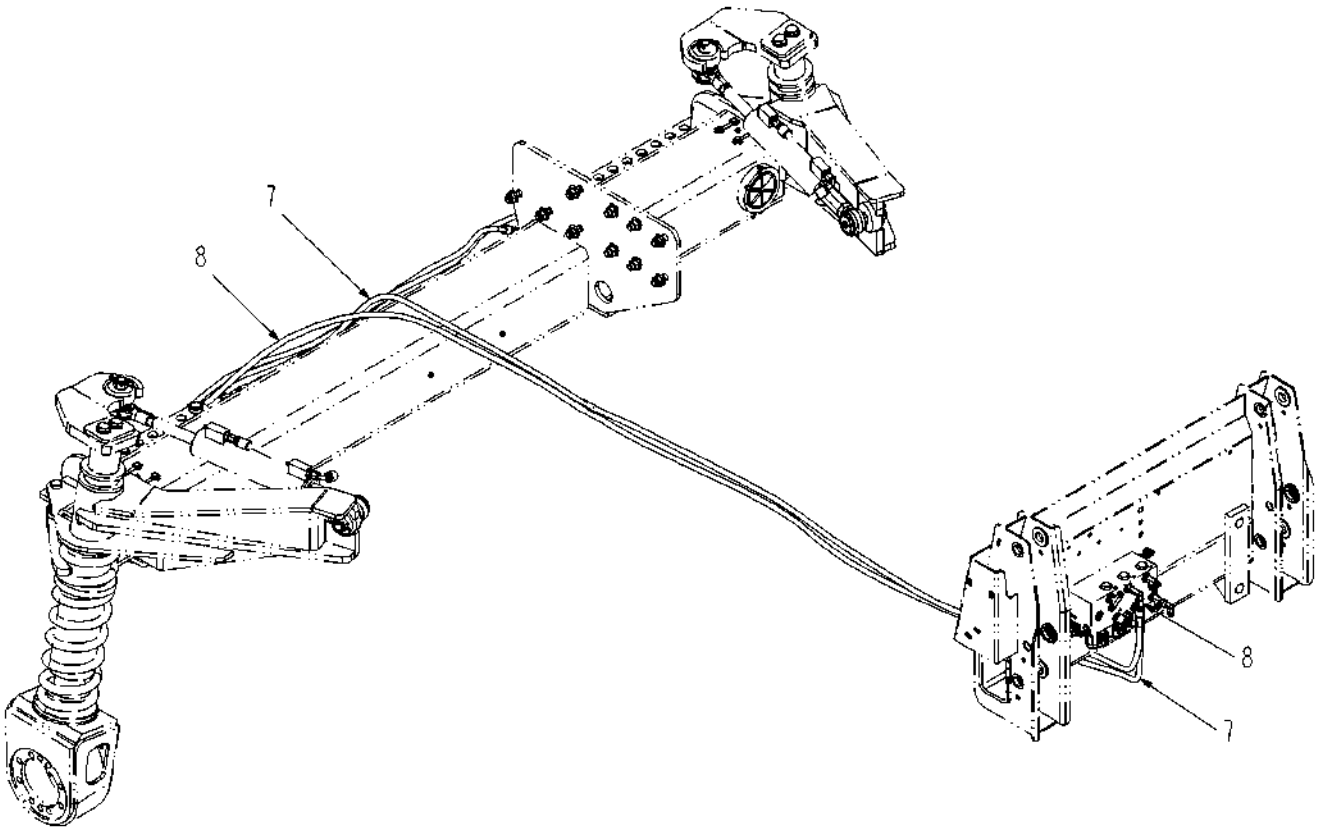

520818D1-02-R560-02.TIF

Copyright © 2008 AGCO Corporation

HOSE-INSTALL,FRONT AXLE,120

ITEM	PART #	QTY	DESCRIPTION	COMMENTS
7	518356D1	-	HOSE ASM,-4X215 6FJS(2)	
8	518357D1	-	HOSE ASM,-4X234 6FJS(2)	

Copyright © 2008 AGCO Corporation

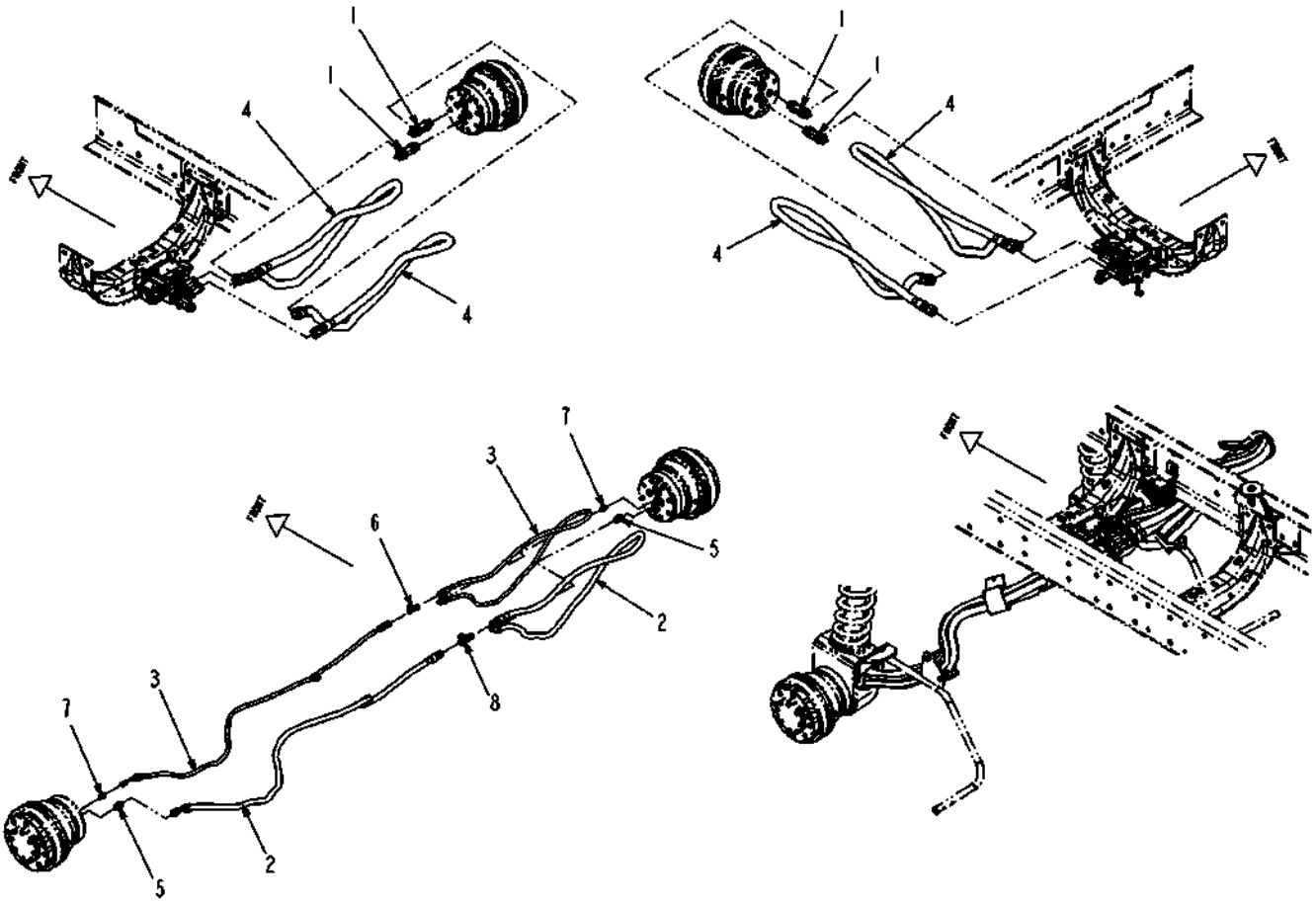

521183D1-01-R549-.TIF

Copyright © 2008 AGCO Corporation

WHEEL MOTOR,HOSE INSTALL,71

ITEM	PART #	QTY	DESCRIPTION	COMMENTS
1	WR128767	4	ADAPTER-12ORFS X -12MOR 90DEG	[A]
2	AG132360	-	HOSE ASM-8X79.00 FJS/FJS90	
3	AG132361	-	HOSE ASM-4X81.00 6FJS/FJS90L	
4	AG132362	-	HOSE ASM-12X75.50 FORFS/FORFS	
5	AG551139	2	ADAP STR 0.50MO-R X 0.50 MJIC	SEE PAGE 6-102
6	AG553514	1	TEE 0.37 MJIC (3)	
7	AG561360	2	ADAP STR -4MBX-4MJ	[B]
8	AG562346	1	TEE -8MJ	
9	521184D1	-	KIT-HOSE,FWA,71	
	FOOTNOTE [A]		REPLACEMENT O-RING USE AG714806.	
	FOOTNOTE [B]		AG520428 O-RING	

Copyright © 2008 AGCO Corporation

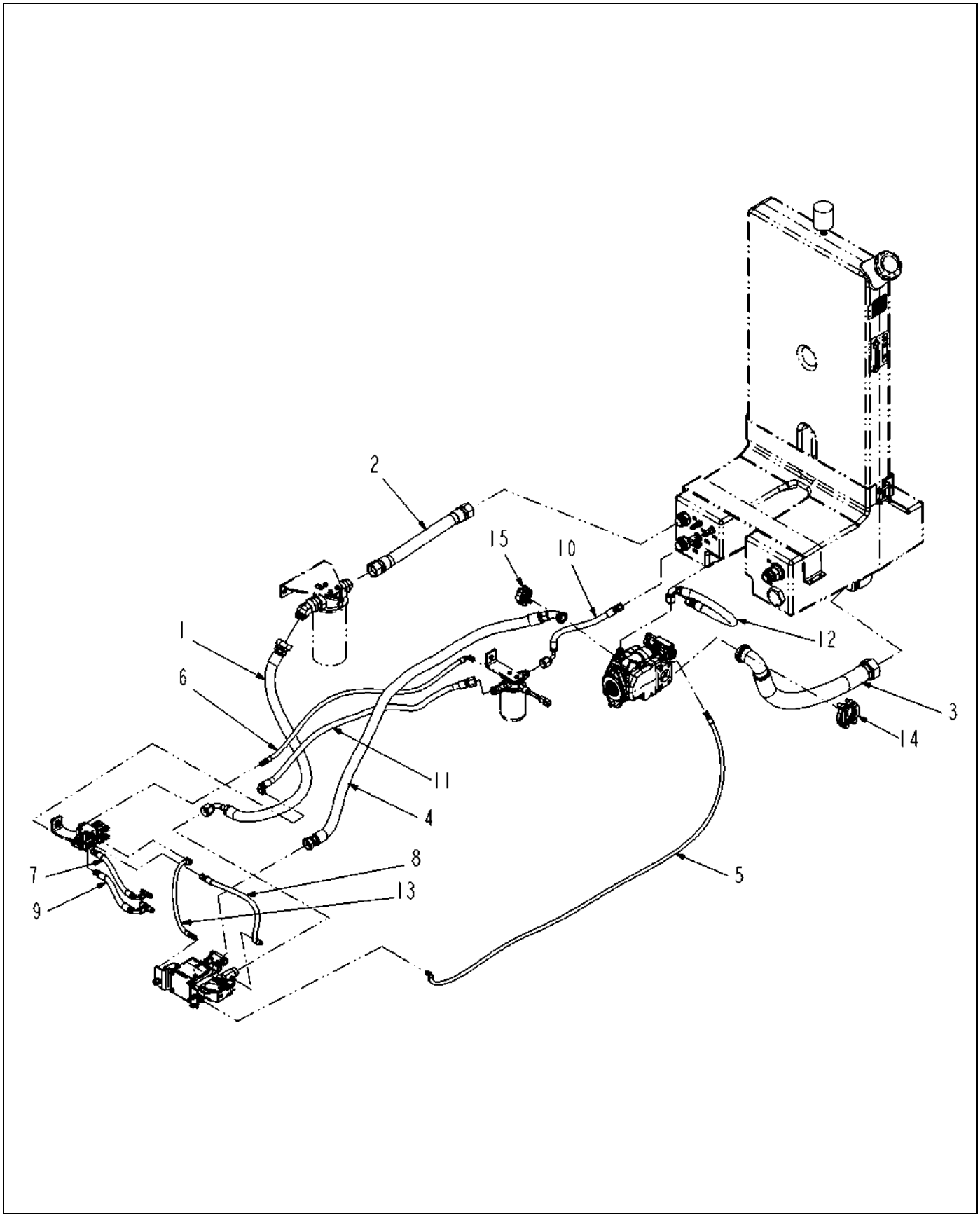

521185D1-01-R549-01.TIF

Copyright © 2008 AGCO Corporation

FWA,HOSE INSTALL,71

ITEM	PART #	QTY	DESCRIPTION	COMMENTS
1	WR128759	-	HOSE ASM-16X48.00 20FJS/FJS45	
2	WR128760	-	HOSE ASM -20X20.00 FJS/FJS	
3	WR128904	-	HOSE ASM -32X30.00 FJS/FJS90	
4	WR129215	-	HOSE ASM -16X66.00 FORFS/FL45	
5	WR129222	-	HOSE ASM -4X88.00 FJS/FJS45	
6	WR129223	-	HOSE ASM -4X46.00 FJS/FJS90	
7	WR129228	-	HOSE ASM -6X11.50 FJS/FJS90	
8	WR129229	-	HOSE ASM -6X17.00 FJS/4FJS90	
9	WR129233	-	HOSE ASM -8X11.50 6FJS/FJS90	
10	WR129234	-	HOSE ASM -8X18.00 FJS/12FJS90	
11	WR129282	-	HOSE ASM -8X48.00 12FJS/6FJS90	
12	AG220648	1	HOSE ASM -12X29.00 FJS/FJS90	
13	AG240932	1	HOSE ASM -4 20.00 R1AT	
14	AG519527	1	FLANGE SPLIT KIT CODE 61-32	
15	AG561044	1	KIT 1.00 SPLIT FLANGE	
16	521184D1	-	KIT-HOSE,FWA,71	

Copyright © 2008 AGCO Corporation

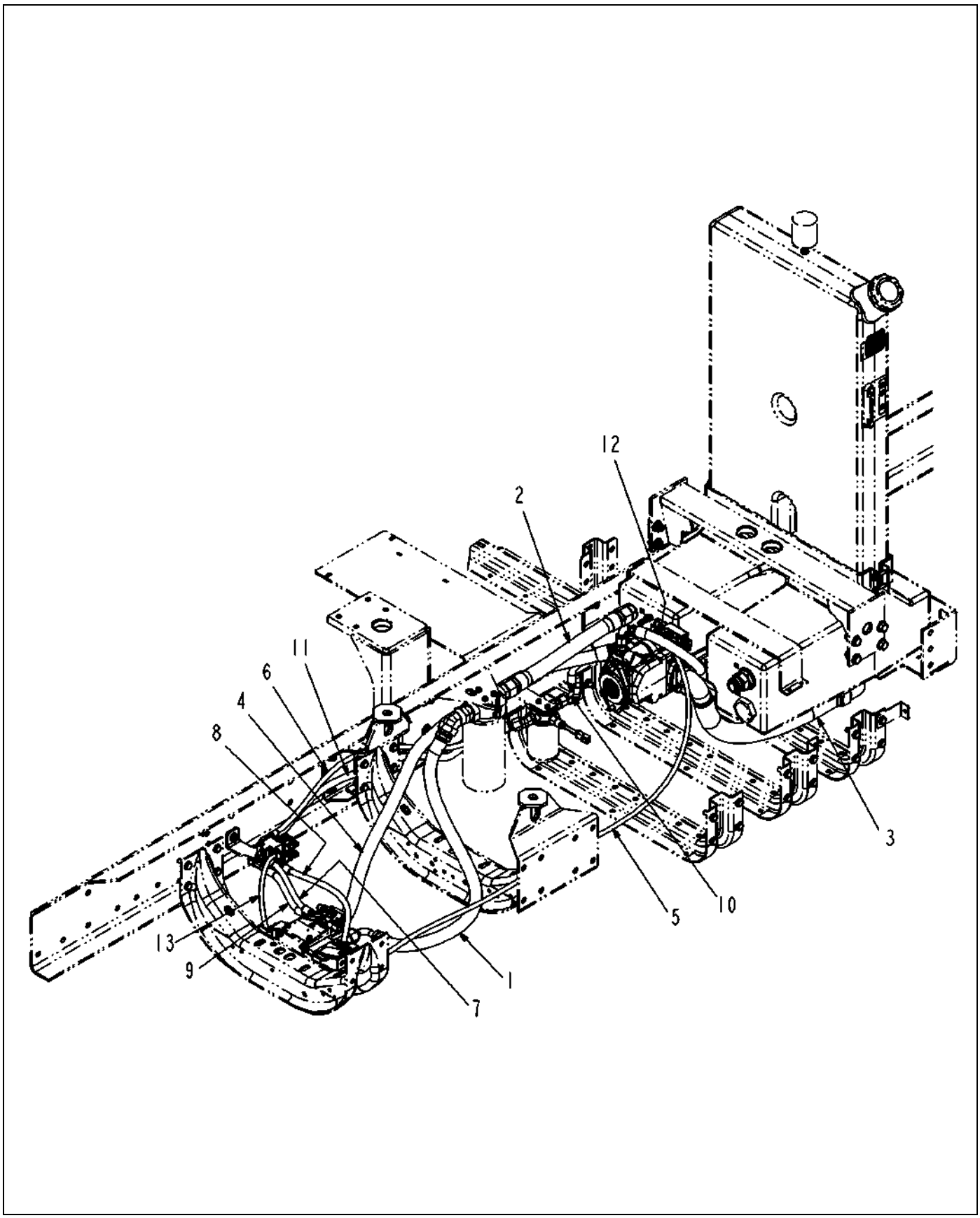

521185D1-01-R549-02.TIF

Copyright © 2008 AGCO Corporation

FWA,HOSE INSTALL,71

ITEM	PART #	QTY	DESCRIPTION	COMMENTS
1	WR128759	-	HOSE ASM-16X48.00 20FJS/FJS45	
2	WR128760	-	HOSE ASM -20X20.00 FJS/FJS	
3	WR128904	-	HOSE ASM -32X30.00 FJS/FJS90	
4	WR129215	-	HOSE ASM -16X66.00 FORFS/FL45	
5	WR129222	-	HOSE ASM -4X88.00 FJS/FJS45	
6	WR129223	-	HOSE ASM -4X46.00 FJS/FJS90	
7	WR129228	-	HOSE ASM -6X11.50 FJS/FJS90	
8	WR129229	-	HOSE ASM -6X17.00 FJS/4FJS90	
9	WR129233	-	HOSE ASM -8X11.50 6FJS/FJS90	
10	WR129234	-	HOSE ASM -8X18.00 FJS/12FJS90	
11	WR129282	-	HOSE ASM -8X48.00 12FJS/6FJS90	
12	AG220648	1	HOSE ASM -12X29.00 FJS/FJS90	
13	AG240932	1	HOSE ASM -4 20.00 R1AT	

Copyright © 2008 AGCO Corporation

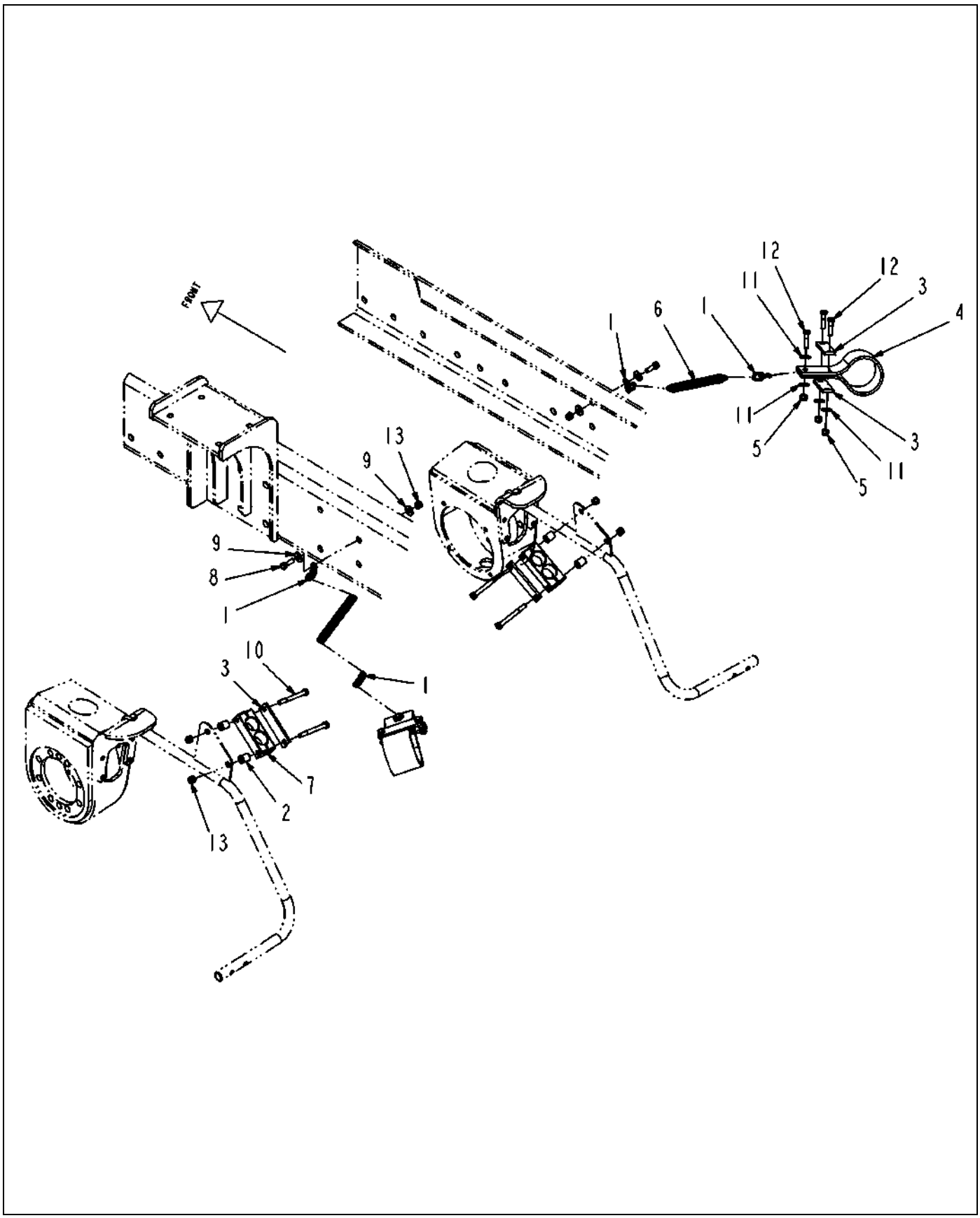

521182D1-01-R549-.TIF

Copyright © 2008 AGCO Corporation

HOSE SUPPORT INSTALL,71

ITEM	PART #	QTY	DESCRIPTION	COMMENTS
1	AG114698	4	CHAIN HOLD-UP (2 LINKS)	
2	AG231952	4	TUBE	
3	AG237961	6	PLATE-COVER	
4	AG238315	2	STRAP-HOSE HANGER	
5	AG515140	6	NUT 0.37-16NC HEX SS HVY NY	
6	AG517097	2	SPRING COIL EXTENSION	
7	AG521587	2	CLAMP-TWIN,1.50,POLY	
8	AG550515	2	BOLT 0.37-16NCX 1.25 G5 ZN HHD	
9	AG551007	4	WASHER 0.37 FL ZN REG TYPE-B	
10	AG555126	4	BOLT 0.37-16NCX 3.75 G5 ZN HHD	
11	AG562073	8	WASHER 0.37 FL SS R/B 523061	
12	AG562159	6	BOLT 0.37-16NCX 1.50 SS HHD	
13	AG601411	6	NUT 0.37-16NC HEX ZN REG NY	

Copyright © 2008 AGCO Corporation

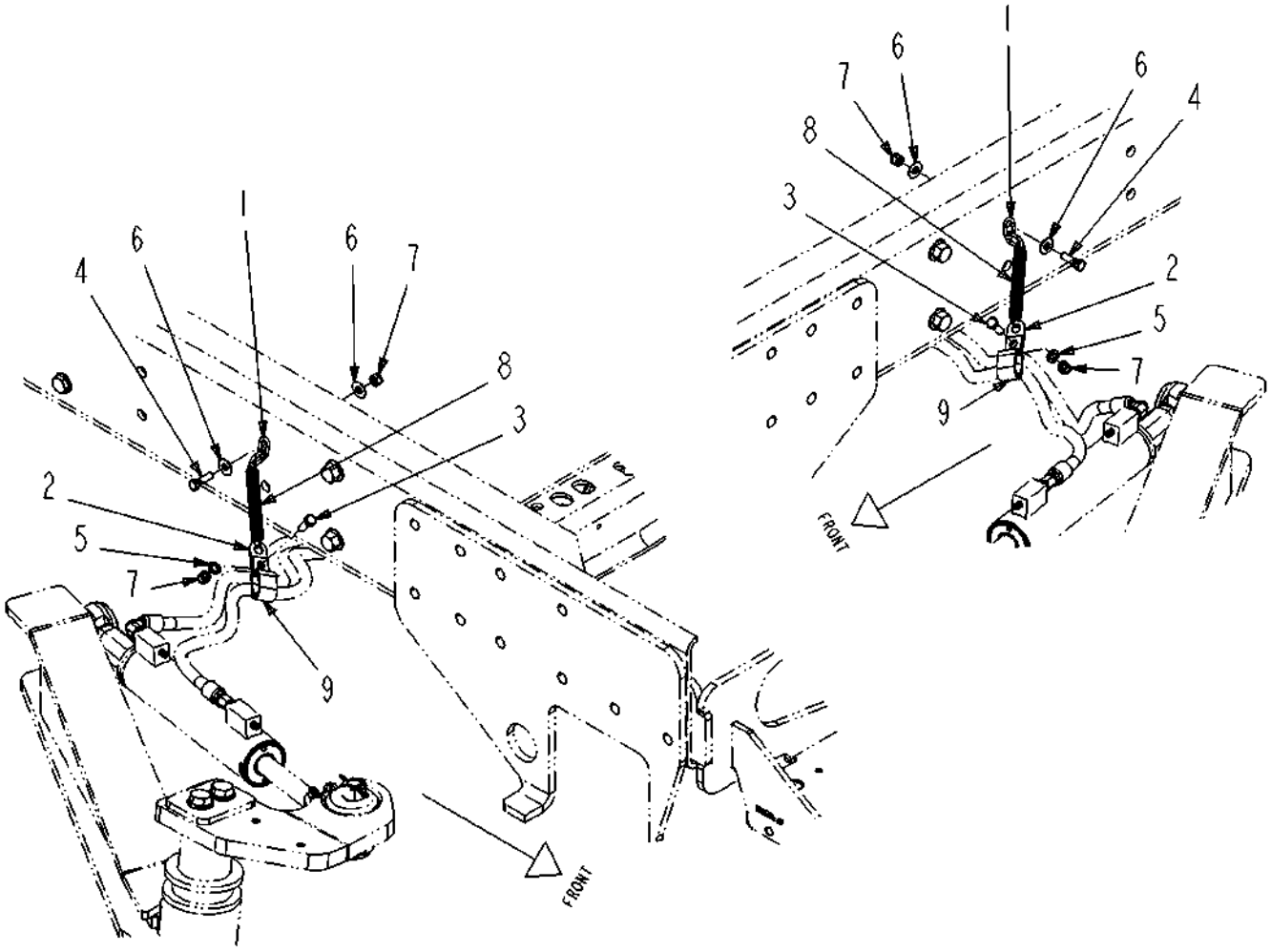

521763D1-01-R641-.TIF

Copyright © 2008 AGCO Corporation

HOSE-SUPPORT,STEERING

ITEM	PART #	QTY	DESCRIPTION	COMMENTS
1	AG114698	2	CHAIN HOLD-UP (2 LINKS)	
2	AG263132	2	WASHER-DOUBLE HOLE,.50	
3	AG550175	2	BOLT 0.37-16NCX 1.00 G5 ZN HHD	
4	AG550515	2	BOLT 0.37-16NCX 1.25 G5 ZN HHD	
5	AG550981	2	WASHER 0.37 FL ZN NAR TYPE-B	
6	AG551007	4	WASHER 0.37 FL ZN REG TYPE-B	
7	AG601411	4	NUT 0.37-16NC HEX ZN REG NY	
8	521617D1	2	SPRING-EXTENSION,.63X5.5	
9	CH100-4336	2	CLIP-LOOP 10.3 DBL	

Copyright © 2008 AGCO Corporation

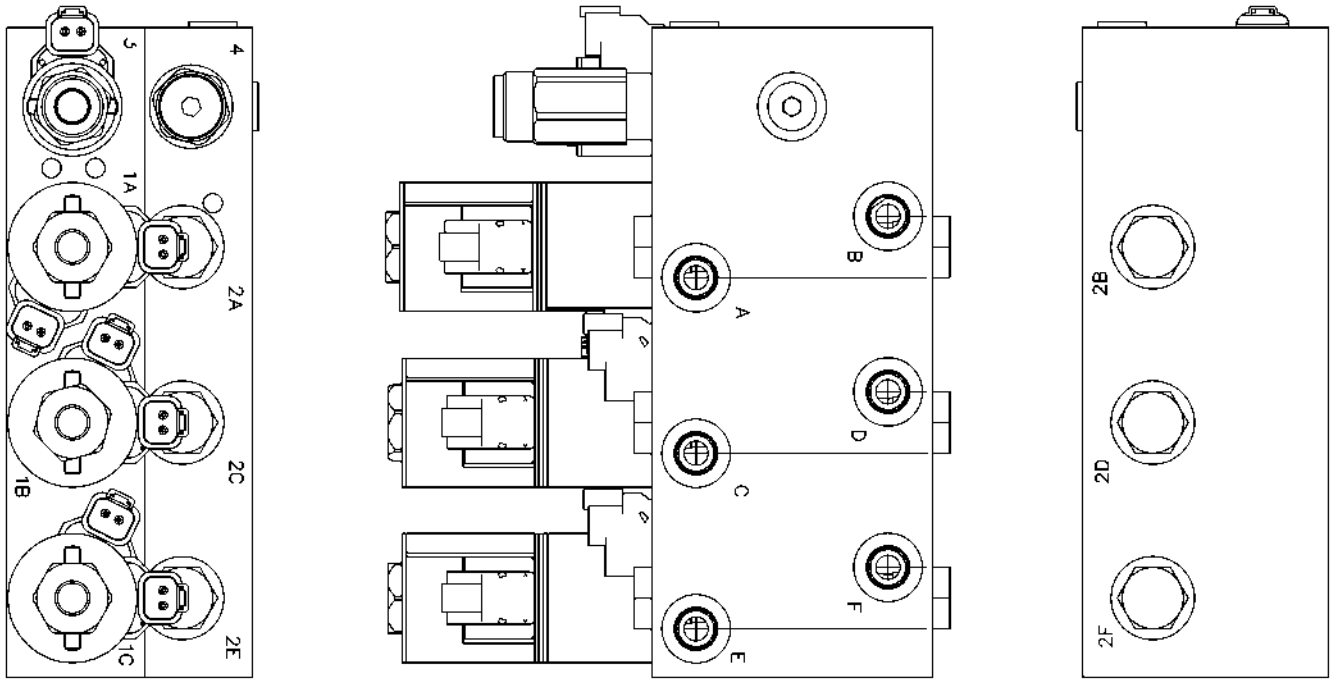

PORT A	6662881	ORIFICE-BOOM LIFT
4	WR38762	VALVE-CARTRIDGE,RELIEF-08
3	128405	NUT-PUSH,E-SERIES,#8
3	121483	COIL-E,12VDC DEUTCH W/DIODE,08
3	609465	HYDRAFORCE N D VALVE
2B,2D,2F	WR41967	PISTON-DBL PILOT, 4:1,
2A-2F,3,4	716811	KIT-ORING,ND VALVE(609465)
2A-2F	26528	VALVE-CHECK,CV08200N25
1A-1C	726854	NUT/PULL COIL E-SERIES
1A-1C	121485	SPACE-E COIL,10
1A-1C	121484	COIL-E,12VDC DEUTCH W/DIODE,10
1A-1C	715207	SEAL KIT
1A-1C	712150	VALVE CARTRIDGE 4WAY
CAVITY	PART NO	DESCRIPTION

122643.TIF

Copyright © 2008 AGCO Corporation

VALVE-HYD,BOOM LIFT/TRACK ADJUST,3 BANK

ITEM	PART #	QTY	DESCRIPTION	COMMENTS
REF	AG712150	-	VALVE CARTRIDGE 4WAY	
REF	6662881	-	ORIFICE-BOOM LIFT	
REF	AG609465	-	HYDRAFORCE N D VALVE	
REF	AG726854	-	NUT/PULL COIL E-SERIES	
REF	AG716811	-	KIT-ORING,ND VALVE(609465)	
REF	AG715207	-	SEAL KIT	
REF	WR26528	-	VALVE-CHECK,CV08200N25	SEE PAGE 6-88
REF	AG121483	-	COIL-E,12VDC DEUTCH W/DIODE,08	
REF	WR41967	-	PISTON-DBL PILOT, 4:1,	
REF	WR38762	-	VALVE-CARTRIDGE,RELIEF-08	
REF	WR128405	-	NUT-PUSH,E-SERIES,#8	
REF	AG121485	-	SPACER-E COIL,10	
REF	AG121484	-	COIL-E,12VDC DEUTCH W/DIODE,10	

Copyright © 2008 AGCO Corporation

Please refer to the Bill Of Material on the opposite page for related Installations, Assemblies, or Parts

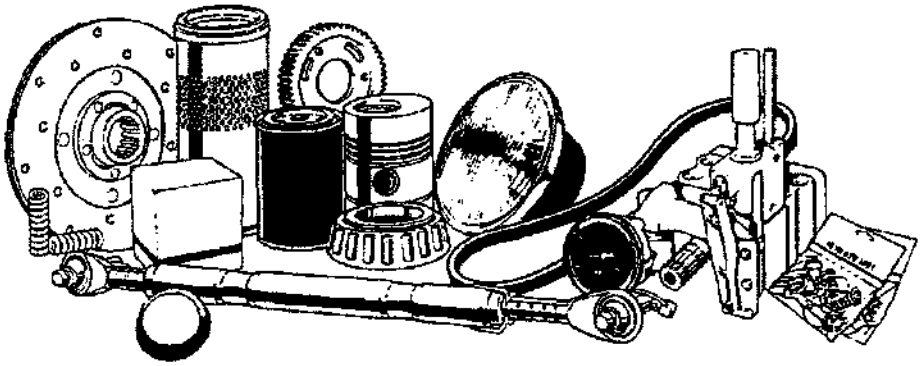

26528.TIF

Copyright © 2008 AGCO Corporation

VALVE-CHECK,CV08200N25

ITEM	PART #	QTY	DESCRIPTION	COMMENTS
REF	WR27671	1	SEAL KIT-HYDRA FRC,	

Copyright © 2008 AGCO Corporation

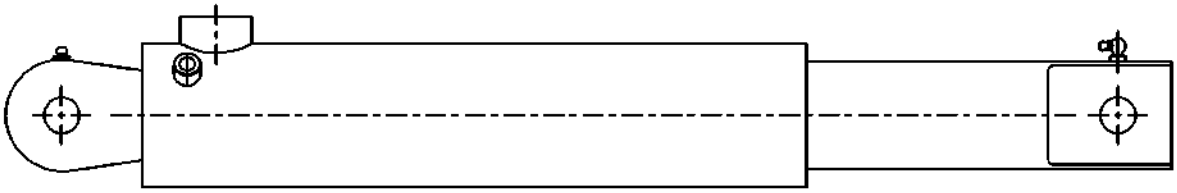

509945D1-02-R503-.TIF

Copyright © 2008 AGCO Corporation

CYLINDER-SINGLE ACT,3 X 12.00 IN

ITEM	PART #	QTY	DESCRIPTION	COMMENTS
REF	517063D1	1	SEAL-KIT, CYLINDER	

Copyright © 2008 AGCO Corporation

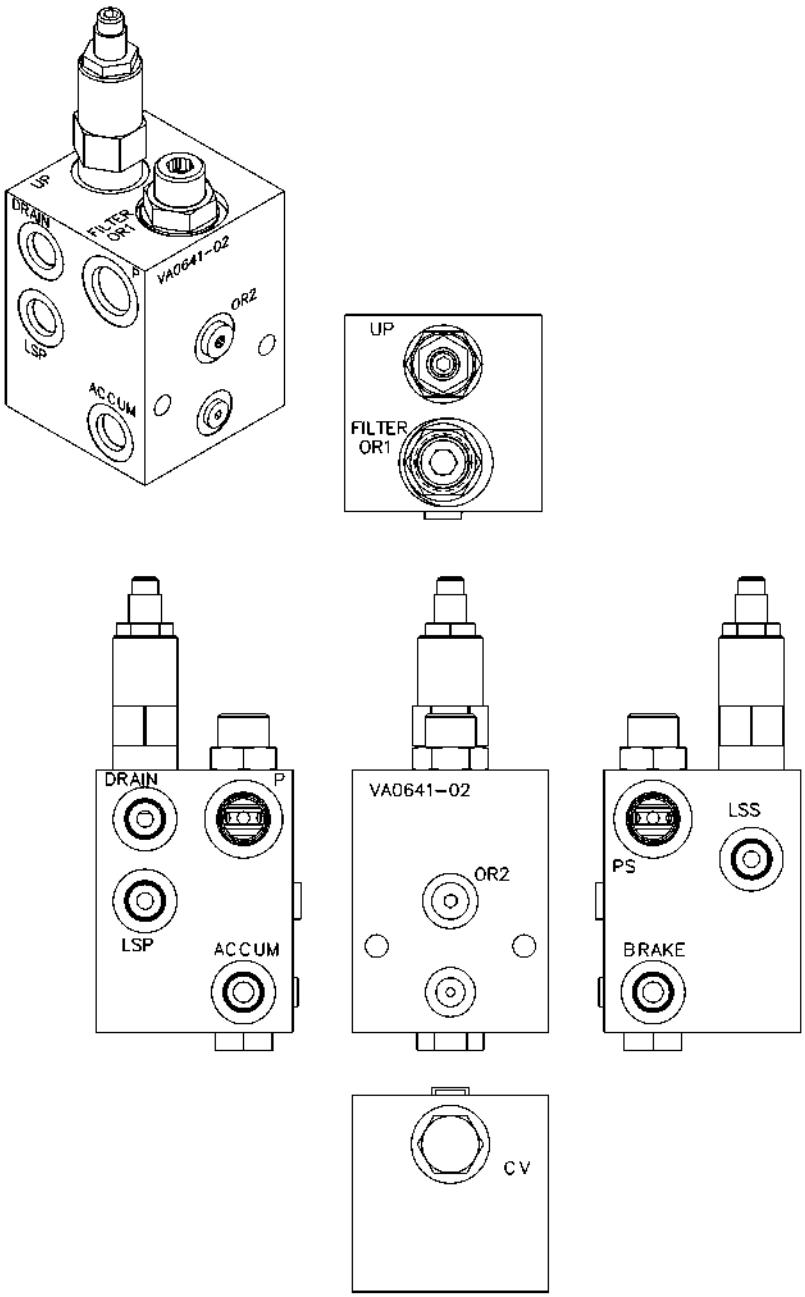

BILL OF MATERIALS				
CAV.	QTY.	PART NUMBER	DESCRIPTION	SERVICE SEAL KIT
	1	131720	BODY,BRAKE CHARGE VALVE	N/A
OR1	1	131721	1/16 NPTF X .109 DIA ORIFICE PLUG	N/A
FILTER	1	131722	FILTER 50 MICRON	N/A
FILTER	1	131723	WASHER, .780 OD X .640 ID X .060 THICK	N/A
FILTER	1	131724	FILTER RETAINER	131726
UP	1	131725	#10 PILOT UNLOADER, DYNAMIC 80% 1870 PSI	131727
CV	1	WR38768	#08 CHECK VALVE 4 PSI	131728

122664.TIF

Copyright © 2008 AGCO Corporation

VALVE-BRAKE CHARGE

ITEM	PART #	QTY	DESCRIPTION	COMMENTS
REF	WR131725	1	UNLOADER, PILOT #10	SEE PAGE 6-93
REF	WR131724	1	RETAINER, FILTER	SEE PAGE 6-92
REF	WR131726	-	KIT, SEAL	
REF	WR131728	-	KIT, SEAL	
REF	WR131727	-	KIT, SEAL	
REF	WR131720	1	BODY, VALVE	
REF	WR38768	1	VALVE-CARTRIDGE,CHECK-08	SEE PAGE 6-91
REF	WR131721	1	ORIFICE, PLUG	
REF	WR131723	1	WASHER	
REF	WR131722	1	FILTER, 50 MICRON	

Copyright © 2008 AGCO Corporation

Please refer to the Bill Of Material on the opposite page for related Installations, Assemblies, or Parts

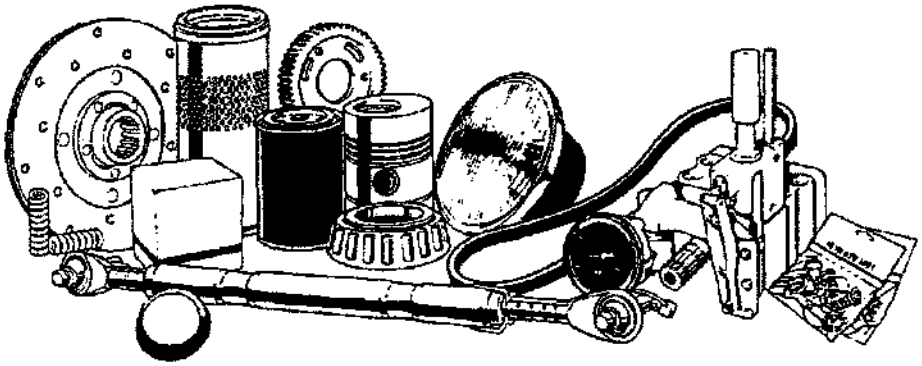

WR38768.tif

Copyright © 2008 AGCO Corporation

VALVE-CARTRIDGE,CHECK-08 (4 PSI)

ITEM	PART #	QTY	DESCRIPTION	COMMENTS
REF	WR131728	1	KIT, SEAL	

Copyright © 2008 AGCO Corporation

Please refer to the Bill Of Material on the opposite page for related Installations, Assemblies, or Parts

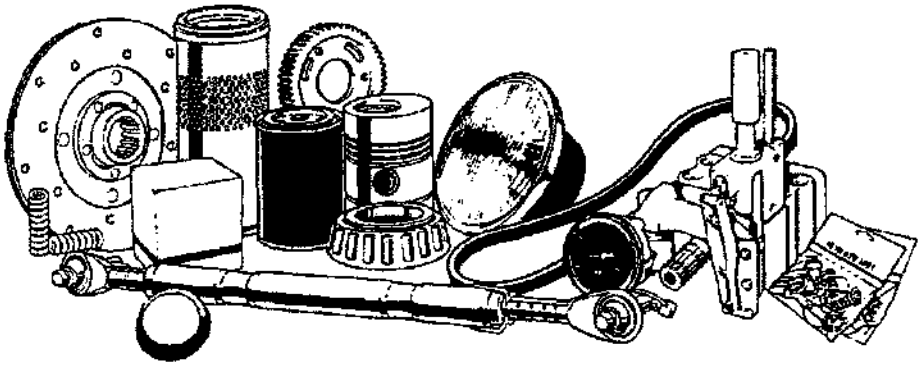

131724.tif

Copyright © 2008 AGCO Corporation

RETAINER, FILTER

ITEM	PART #	QTY	DESCRIPTION	COMMENTS
REF	WR131726	1	KIT, SEAL	

Copyright © 2008 AGCO Corporation

Please refer to the Bill Of Material on the opposite page for related Installations, Assemblies, or Parts

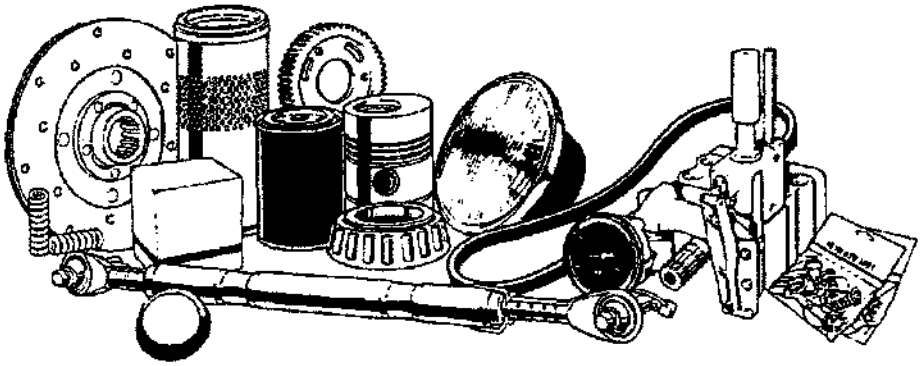

131725.tif

Copyright © 2008 AGCO Corporation

UNLOADER, PILOT #10

ITEM	PART #	QTY	DESCRIPTION	COMMENTS
REF	WR131727	1	KIT, SEAL	

Copyright © 2008 AGCO Corporation

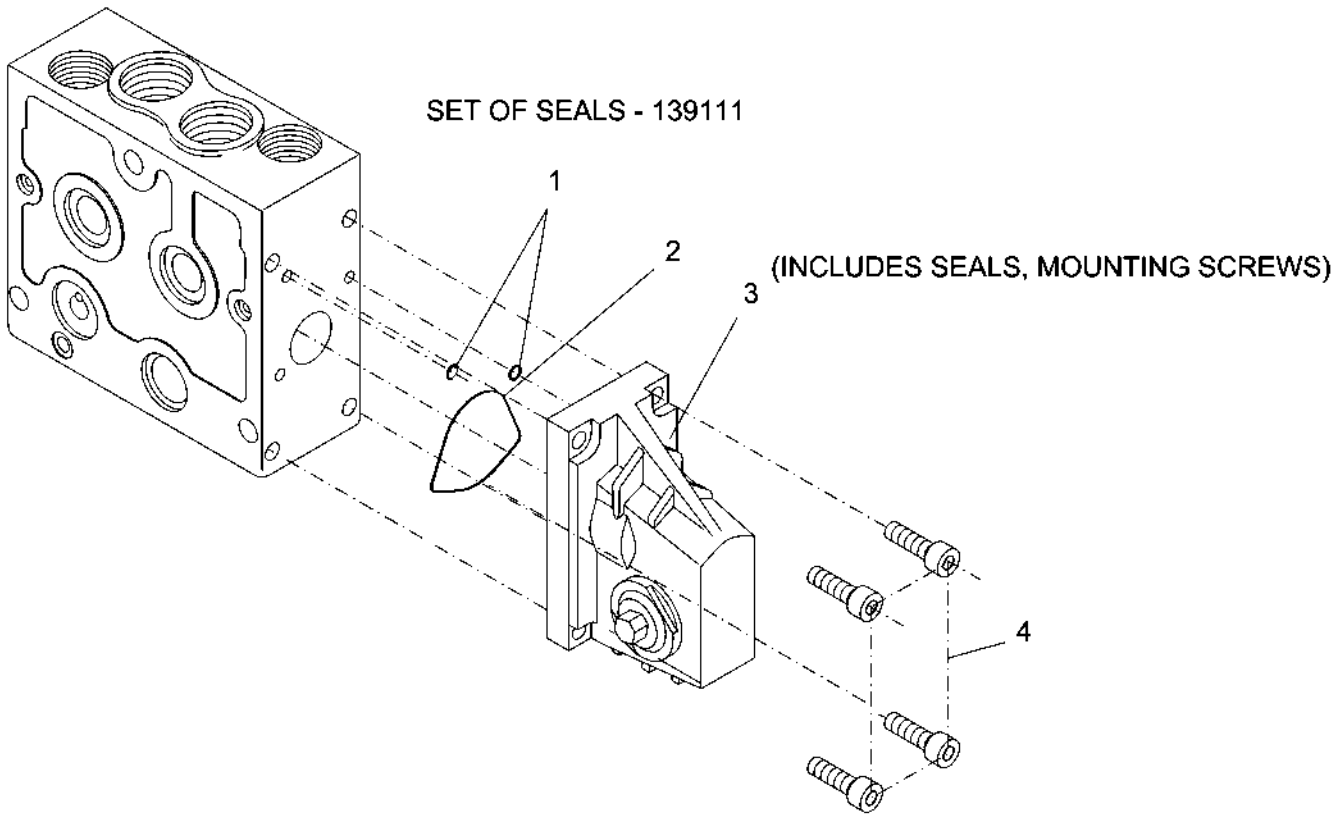

123748-1.TIF

Copyright © 2008 AGCO Corporation

ITEM	PART #	QTY	DESCRIPTION	COMMENTS
REF	WR139111	1	SEAL KIT	
REF	WR139343	1	SEAL/KIT	
REF	WR139348	1	TOOL/ADJUSTMENT	
1	WR139110	6	O-RING	
2	WR139112	1	SEAL	
3	WR139113	1	ACTIVATOR/MECHANICAL	
4	WR139114	1	BOLTS/MOUNTING	
	FOOTNOTE		ITEMS 19 - 24 CANNOT BE PURCHASED INDIVIDUALLY BUT ARE INCLUDED WITH ITEM 18.	

Copyright © 2008 AGCO Corporation

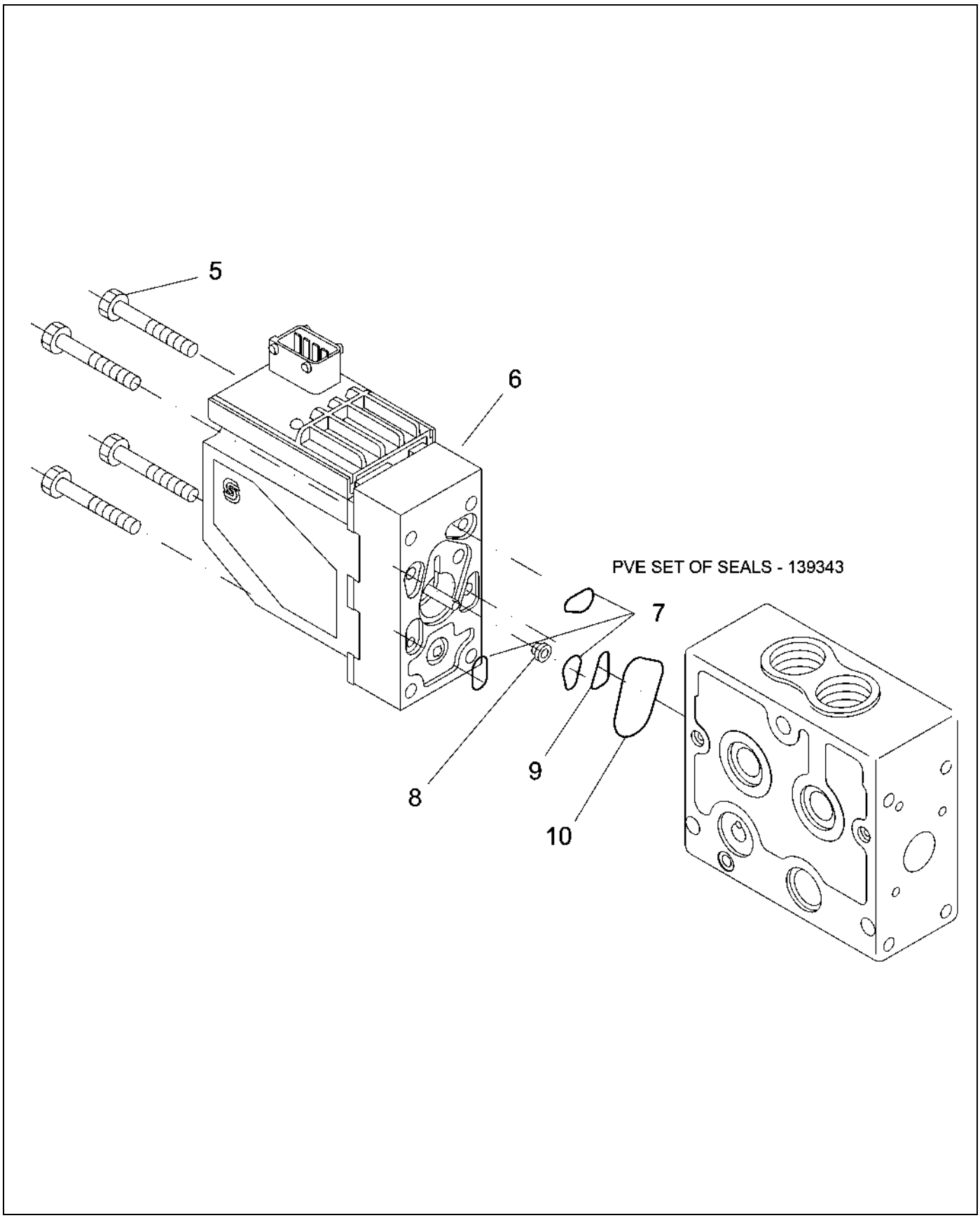

123748-2.TIF

Copyright © 2008 AGCO Corporation

ITEM	PART #	QTY	DESCRIPTION	COMMENTS
5	WR139115	4	BOLTS/MOUNTING	
6	WR139342	1	ACTIVATOR/ELECTRICAL	
7	WR139344	4	SEAL	
8	WR139345	1	FILTER/LAST CHANCE	
9	WR139346	1	SEAL	
10	WR139347	1	SEAL	
	FOOTNOTE		ITEMS 19 - 24 CANNOT BE PURCHASED INDIVIDUALLY BUT ARE INCLUDED WITH ITEM 18.	

Copyright © 2008 AGCO Corporation

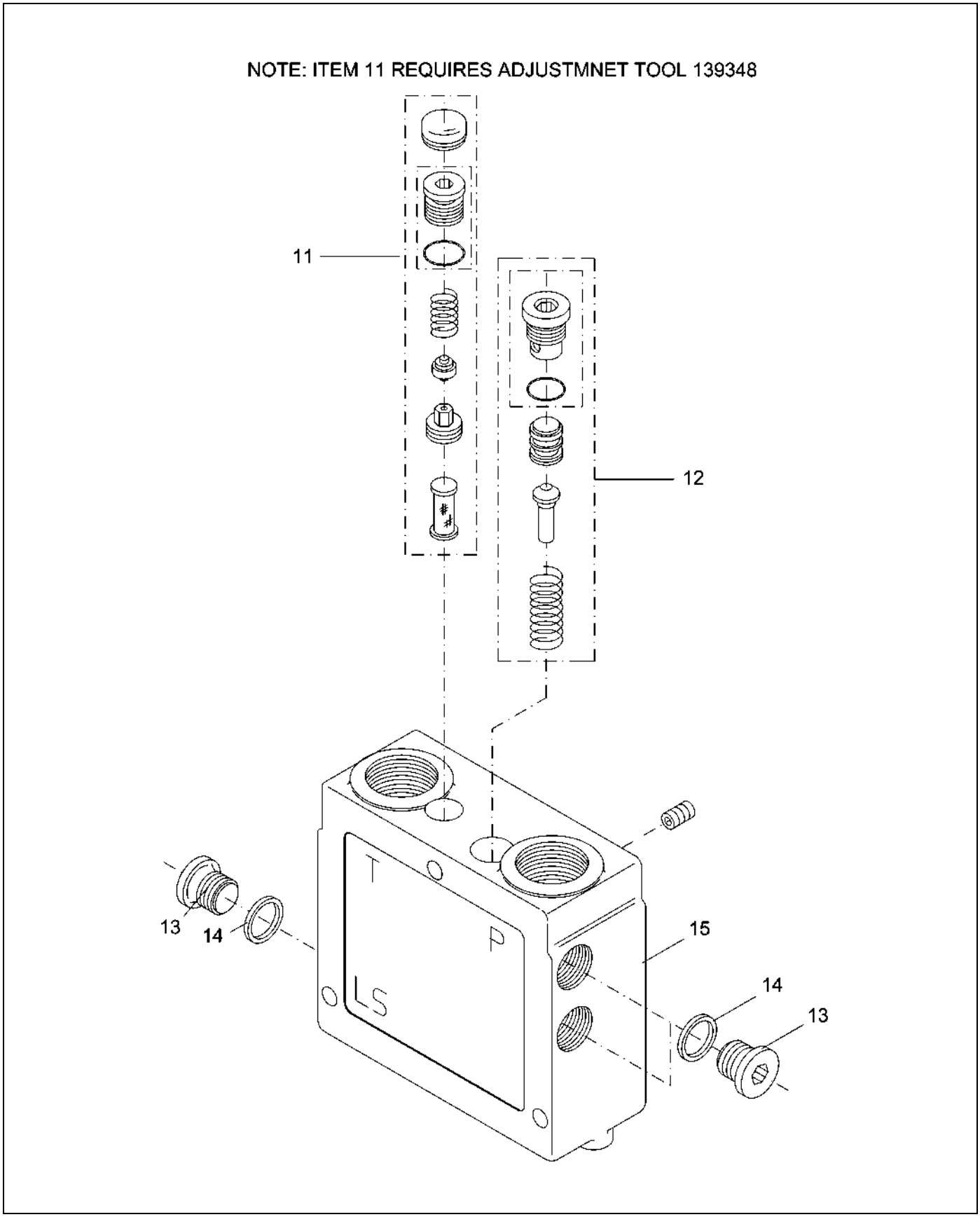

123748-3.TIF

Copyright © 2008 AGCO Corporation

ITEM	PART #	QTY	DESCRIPTION	COMMENTS
11	WR139366	1	VALVE/RELIEF	
12	WR139349	1	VALVE/PILOT SUPPLY	
13	WR139350	2	PLUG	
14	WR139351	2	SEAL	
15	WR139355	1	HOUSING/PROPORTIONAL VALVE	
	FOOTNOTE		ITEMS 19 - 24 CANNOT BE PURCHASED INDIVIDUALLY BUT ARE INCLUDED WITH ITEM 18.	

Copyright © 2008 AGCO Corporation

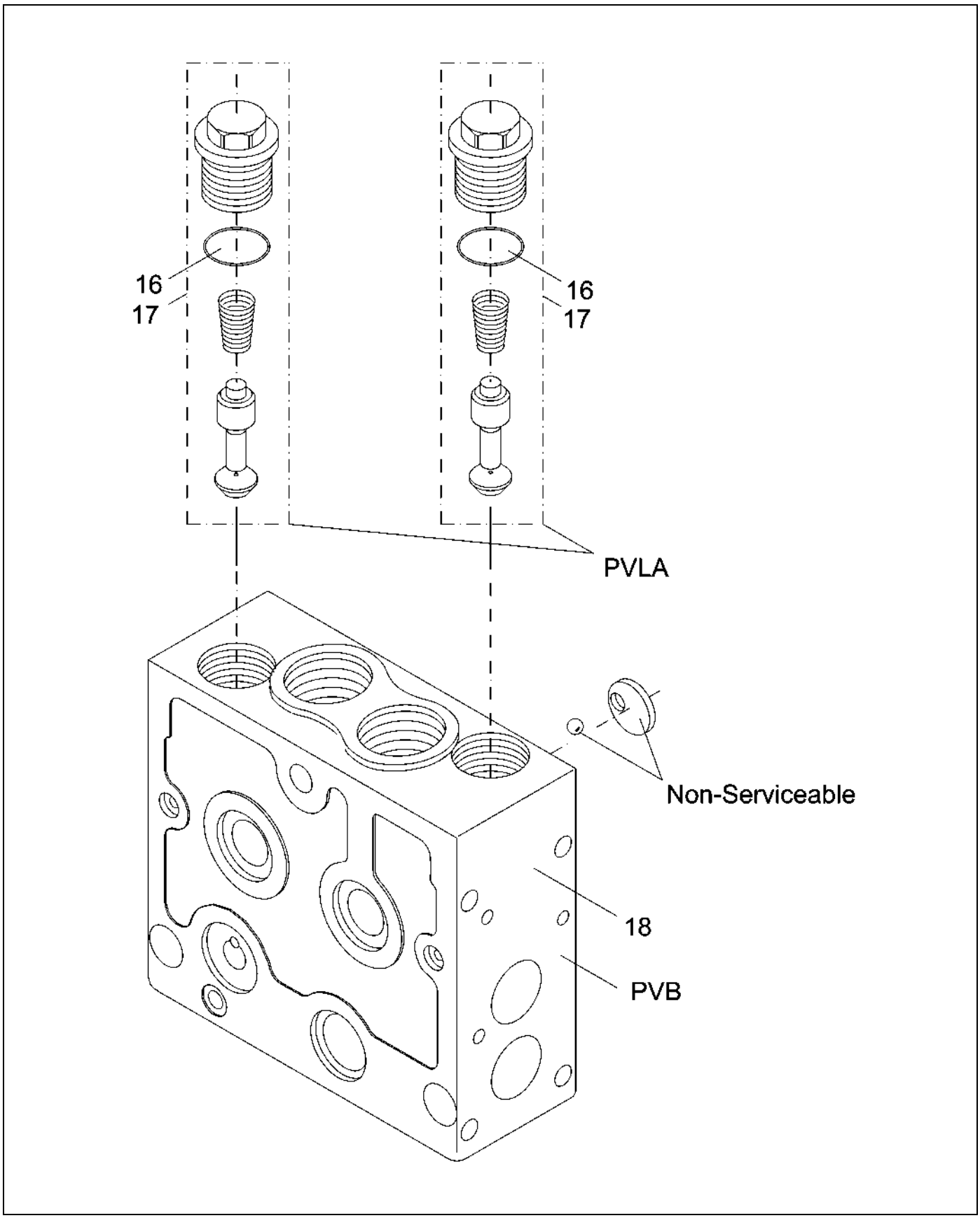

123748-4.TIF

Copyright © 2008 AGCO Corporation

ITEM	PART #	QTY	DESCRIPTION	COMMENTS
16	WR139352	2	O-RING	
17	WR139354	2	VALVE/PVLA	
18	WR139353	1	HOUSING/PVB	
	FOOTNOTE		ITEMS 19 - 24 CANNOT BE PURCHASED INDIVIDUALLY BUT ARE INCLUDED WITH ITEM 18.	

Copyright © 2008 AGCO Corporation

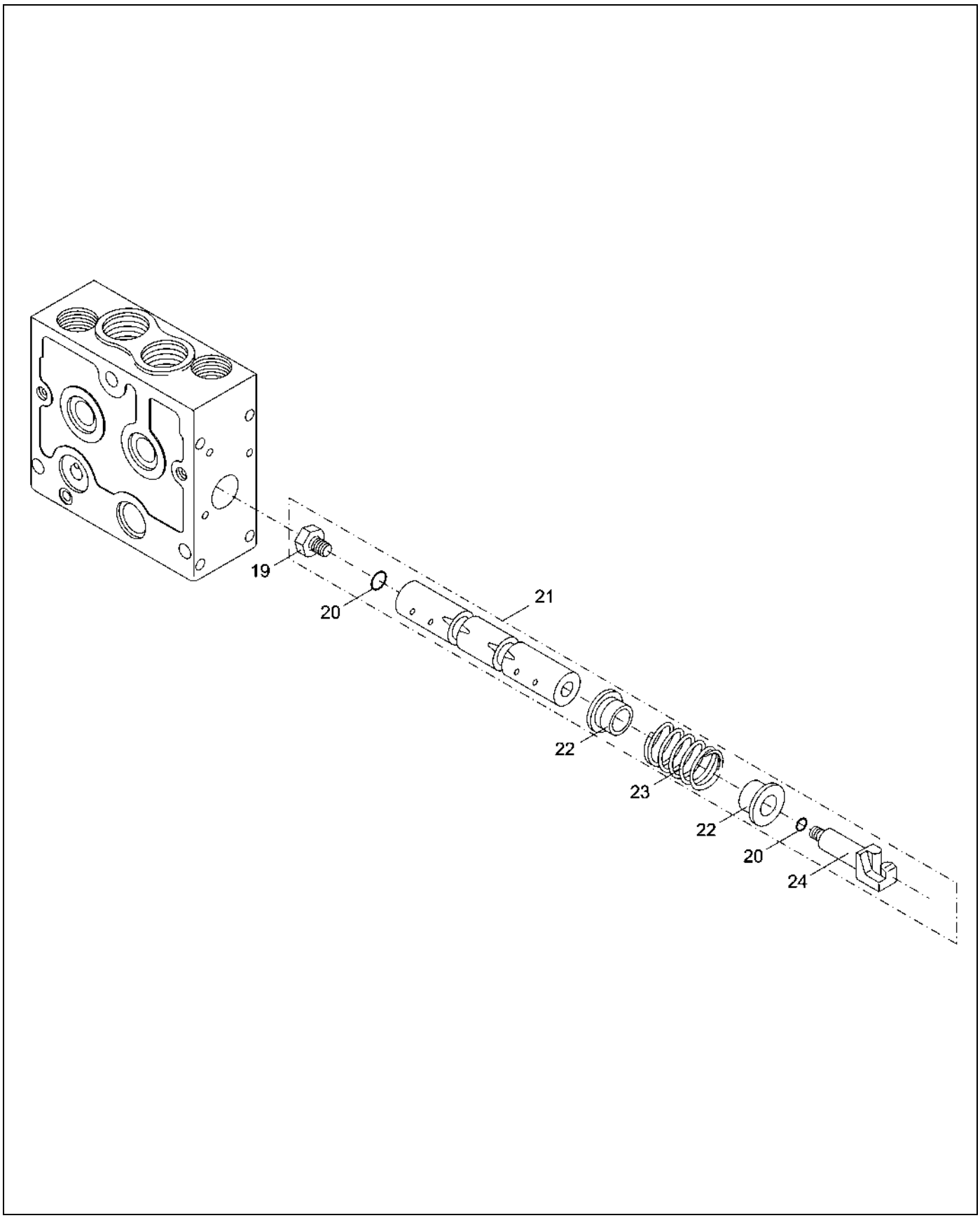

123748-5.TIF

Copyright © 2008 AGCO Corporation

ITEM	PART #	QTY	DESCRIPTION	COMMENTS
19	WR139356	1	SCREW	
20	WR139357	2	O-RING	
21	WR139358	1	SPOOL	
22	WR139359	2	STOP/SPRING	
23	WR139360	1	SPRING	
24	WR139361	1	ROD/TENSION	
	FOOTNOTE		ITEMS 19 - 24 CANNOT BE PURCHASED INDIVIDUALLY BUT ARE INCLUDED WITH ITEM 18.	

Copyright © 2008 AGCO Corporation

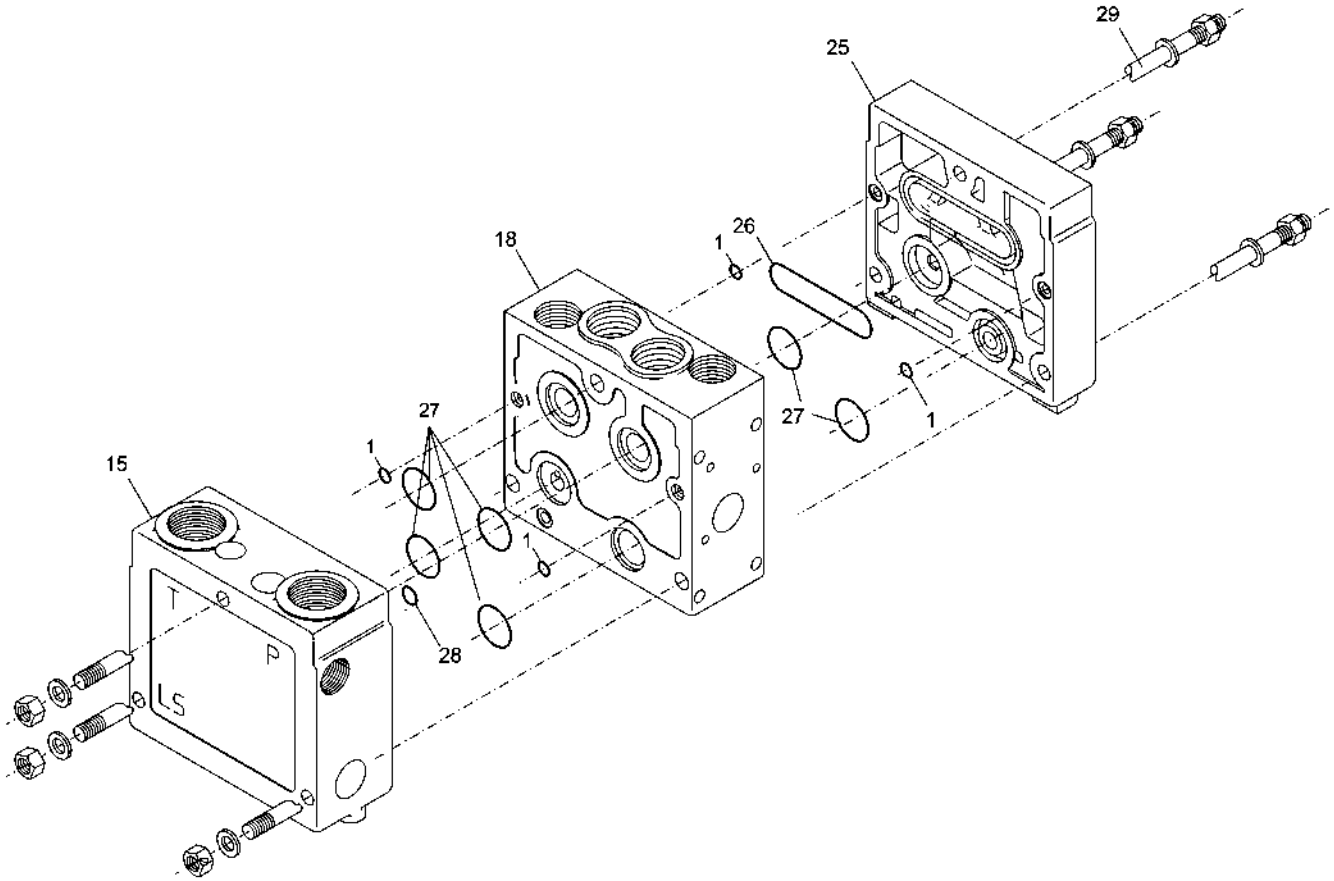

123748-6.TIF

Copyright © 2008 AGCO Corporation

VALVE-CONTROL,F.W.A. S/D

ITEM	PART #	QTY	DESCRIPTION	COMMENTS
1	WR139110	6	O-RING	
15	WR139355	1	HOUSING/PROPORTIONAL VALVE	
18	WR139353	1	HOUSING/PVB	
25	NS	-	NON-SERVICEABLE PART	
27	WR139110	6	O-RING	
28	AG139365	1	SEAL	
29	NS	-	NON-SERVICEABLE PART	
	FOOTNOTE		ITEMS 19 - 24 CANNOT BE PURCHASED INDIVIDUALLY BUT ARE INCLUDED WITH ITEM 18.	

Copyright © 2008 AGCO Corporation

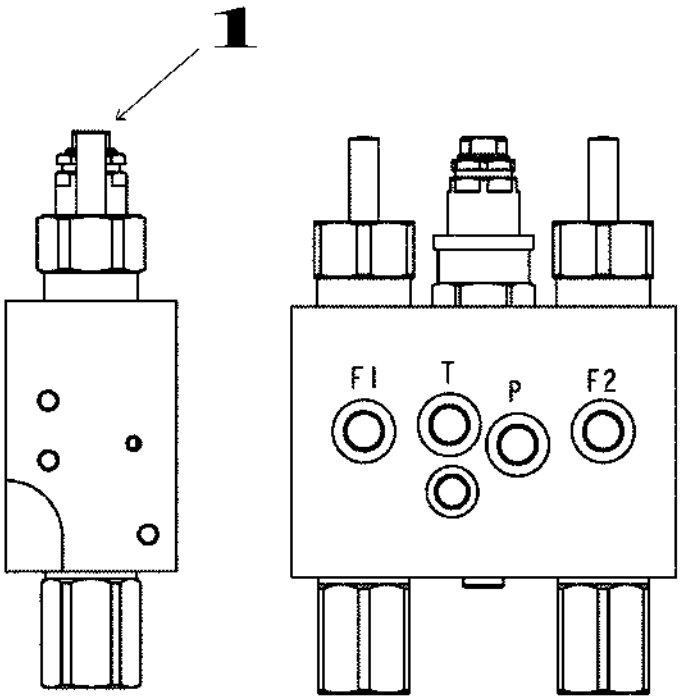

511983D1-01-N494-.TIF

Copyright © 2008 AGCO Corporation

VALVE-BRAKE,L/R,DUAL SLOPE

ITEM	PART #	QTY	DESCRIPTION	COMMENTS
1	WR139380	1	PROTECTOR/RUBBER	

Copyright © 2008 AGCO Corporation

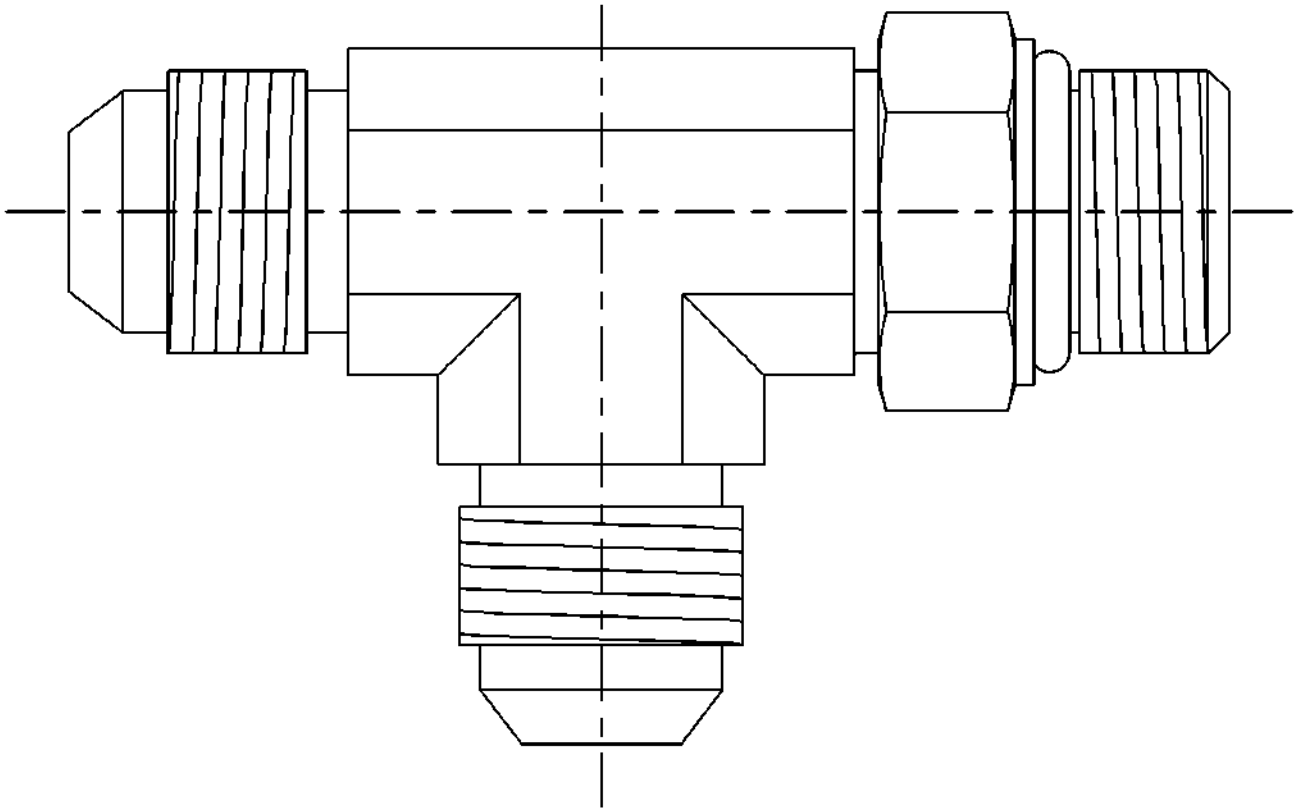

519123-B-J736-.TIF

Copyright © 2008 AGCO Corporation

TEE-RUN,STR THD -6

ITEM	PART #	QTY	DESCRIPTION	COMMENTS
REF	AG713166	1	O RING 3-906	
	FOOTNOTE		AG713166 O-RING	

Copyright © 2008 AGCO Corporation

Please refer to the Bill Of Material on the opposite page for related Installations, Assemblies, or Parts

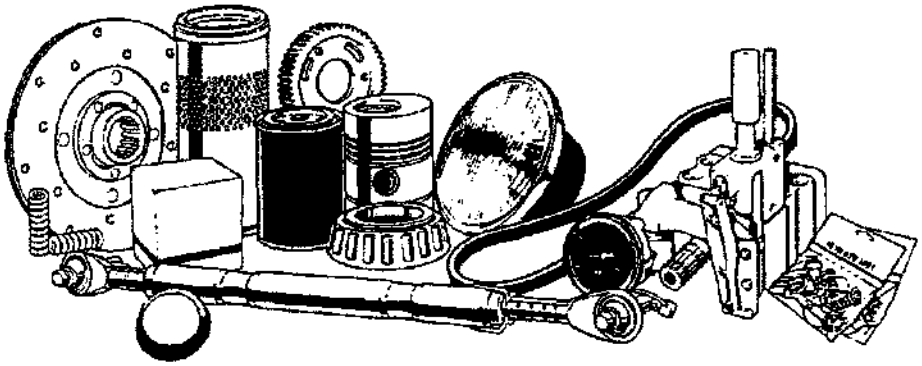

551139.tif

Copyright © 2008 AGCO Corporation

ADAP STR 0.50MO-R X 0.50 MJIC

ITEM	PART #	QTY	DESCRIPTION	COMMENTS
REF	AG713670	-	O RING POLY	

Copyright © 2008 AGCO Corporation

Please refer to the Bill Of Material on the opposite page for related Installations, Assemblies, or Parts

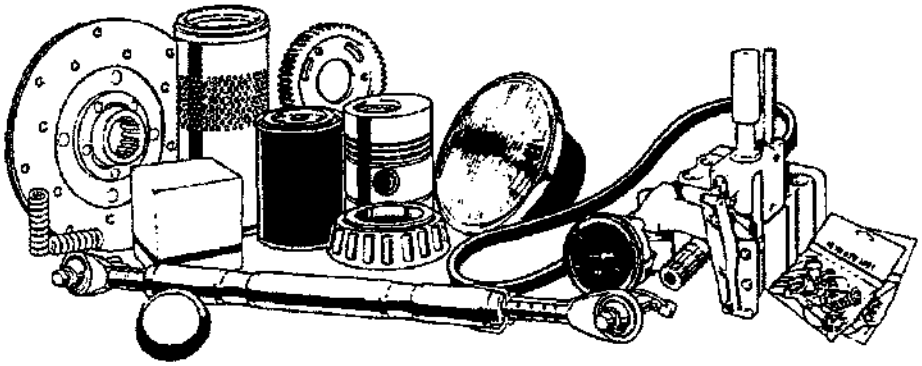

558877.tif

Copyright © 2008 AGCO Corporation

ADAP STR 1.00MO-R X 1.00MJIC

ITEM	PART #	QTY	DESCRIPTION	COMMENTS
REF	AG714389	-	O RING FOR 713255	
REF	AG714365	-	O RING 558877	
	FOOTNOTE		O-RING - 714365, POLY O-RING AG714389	

Copyright © 2008 AGCO Corporation

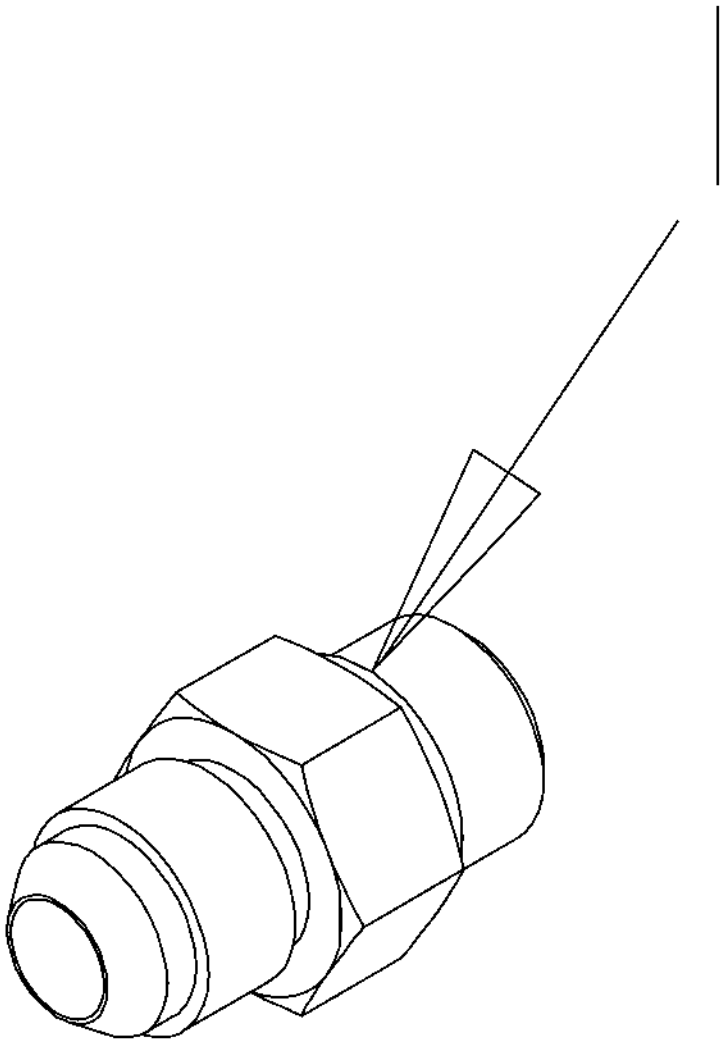

560693.TIF

Copyright © 2008 AGCO Corporation

ADAP STR 0.37MO-R X 0.37MJIC

ITEM	PART #	QTY	DESCRIPTION	COMMENTS
1	AG139107	1	O-RING,FLARE-O,BUNA	

Copyright © 2008 AGCO Corporation

Please refer to the Bill Of Material on the opposite page for related Installations, Assemblies, or Parts

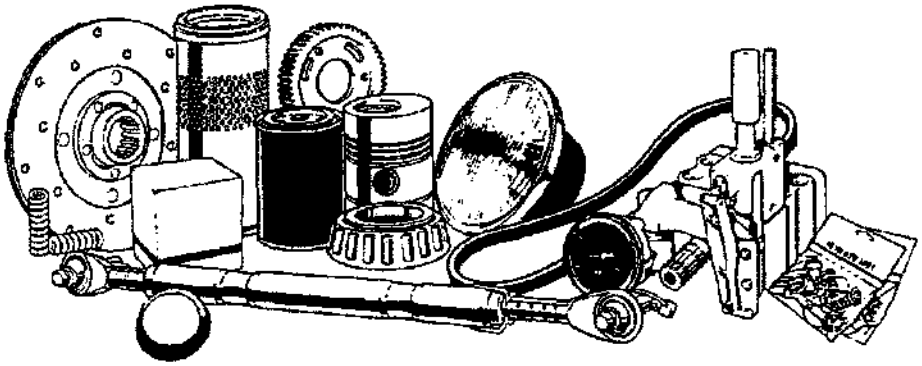

551112.tif

Copyright © 2008 AGCO Corporation

ELBOW 90D 0.50MO-R X 0.50MJIC

ITEM	PART #	QTY	DESCRIPTION	COMMENTS
REF	AG713670	1	O RING POLY	
	FOOTNOTE		AG713670-O-RING	

Copyright © 2008 AGCO Corporation

Please refer to the Bill Of Material on the opposite page for related Installations, Assemblies, or Parts

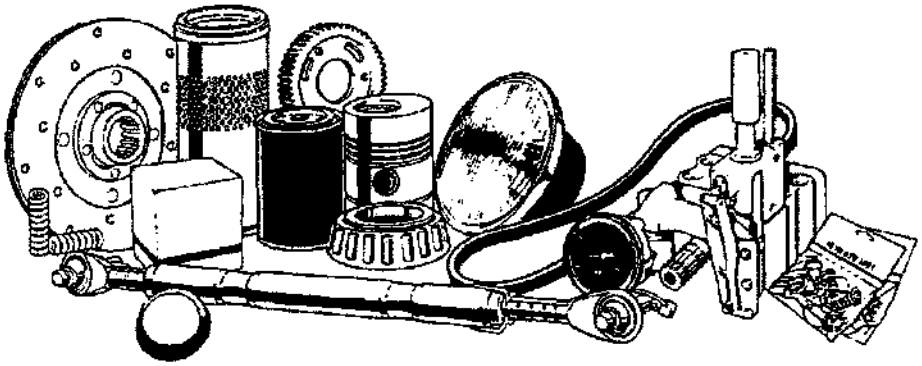

561677.tif

Copyright © 2008 AGCO Corporation

ELBOW 90D 0.25MO-R X 0.25MJIC

ITEM	PART #	QTY	DESCRIPTION	COMMENTS
REF	AG713670	-	O RING POLY	
	FOOTNOTE		AG713670 O-RING	

Copyright © 2008 AGCO Corporation

Please refer to the Bill Of Material on the opposite page for related Installations, Assemblies, or Parts

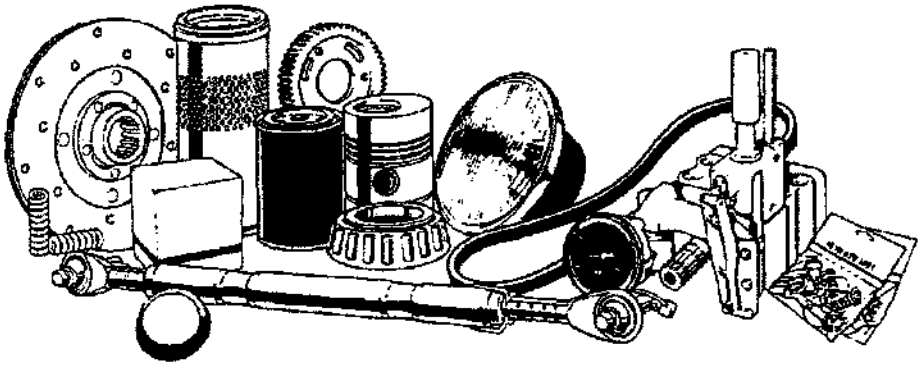

524047D1.tif

Copyright © 2008 AGCO Corporation

HYD-INSTALL,REAR AXLE,71,2009 SPR

ITEM	PART #	QTY	DESCRIPTION	COMMENTS
1	520822D1	1	CYL-INSTL,REAR AXLE,71	SEE PAGE 4-14
2	524053D1	1	HOSE-INSTL,REAR AXLE,71	SEE PAGE 6-108
3	524054D1	1	HOSE-KIT,REAR AXLE,71	

Copyright © 2008 AGCO Corporation

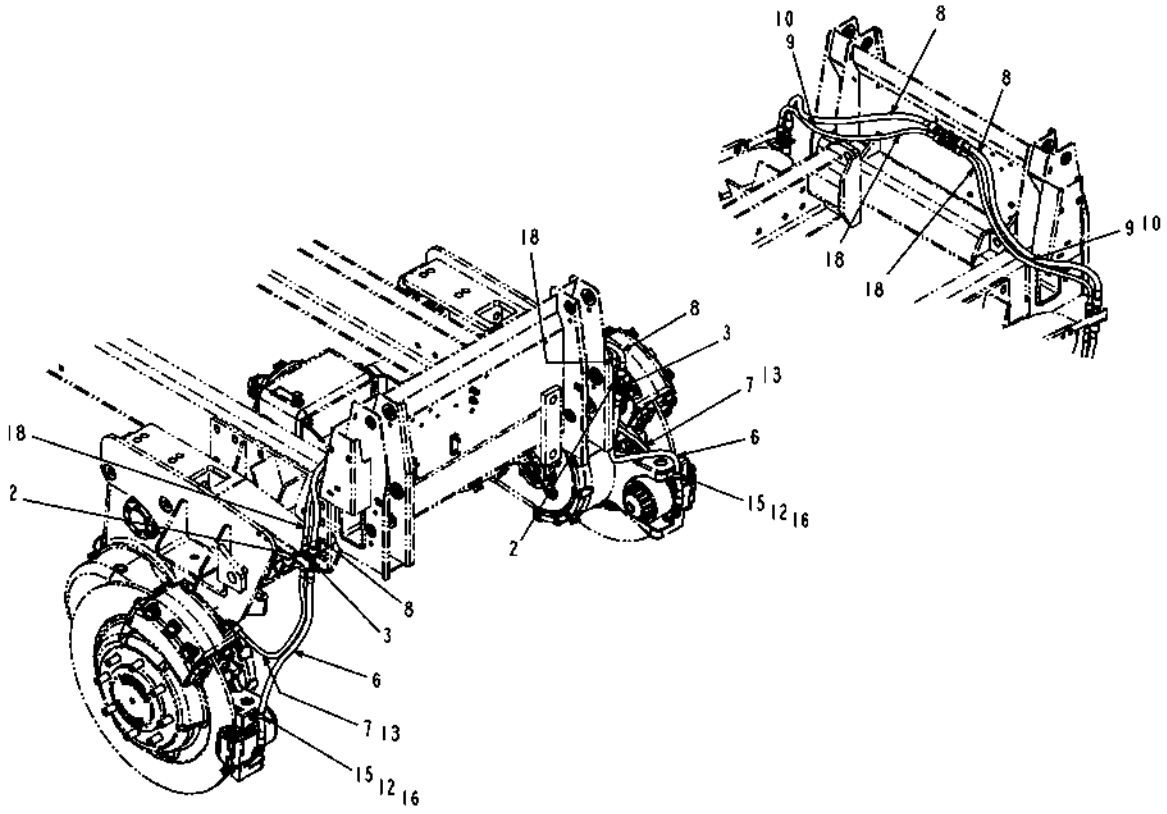

524053D1-01-T311-01.TIF

Copyright © 2008 AGCO Corporation

ITEM	PART #	QTY	DESCRIPTION	COMMENTS
2	WR129997	2	NUT-HEX,.438-20UN2B,ZINC	
3	WR129998	2	NUT-HEX,.563-18UN2B,ZINC	
6	AG132379	-	HOSE ASM-6X39.25 FJS/MJ (BH)	
7	AG132380	-	HOSE ASM-4X27.50 FJS/MJ (BH)	
8	AG132381	-	HOSE ASM-6X44.00 R1AT FJS/FJS	
9	WR134416	1	INSL-FOAM,2.00X2.00X14.00	[A]
10	AG519861	AR	PROTECTOR HOSE 6.00 IN EPHA	
11	AG519862	AR	PROTECTOR HOSE 4 IN EPHA	
12	AG550671	2	WASHER 0.25 FL ZN SAE TYPE-A	
13	AG553557	AR	TIE CABLE 7.37 .06-1.37 BLACK	
15	AG562237	2	CLAMP CTD 0.75IDX0.75WIDE	
16	400152X1	2	BOLT-M6X1X16MM ZNDI HHD 10.9	
17	524054D1	-	HOSE-KIT,REAR AXLE,71	
18	524059D1	-	HOSE ASM,-4X44 FJS(2)	
	FOOTNOTE [A]		REFRENCE S.B.#0631	

Copyright © 2008 AGCO Corporation

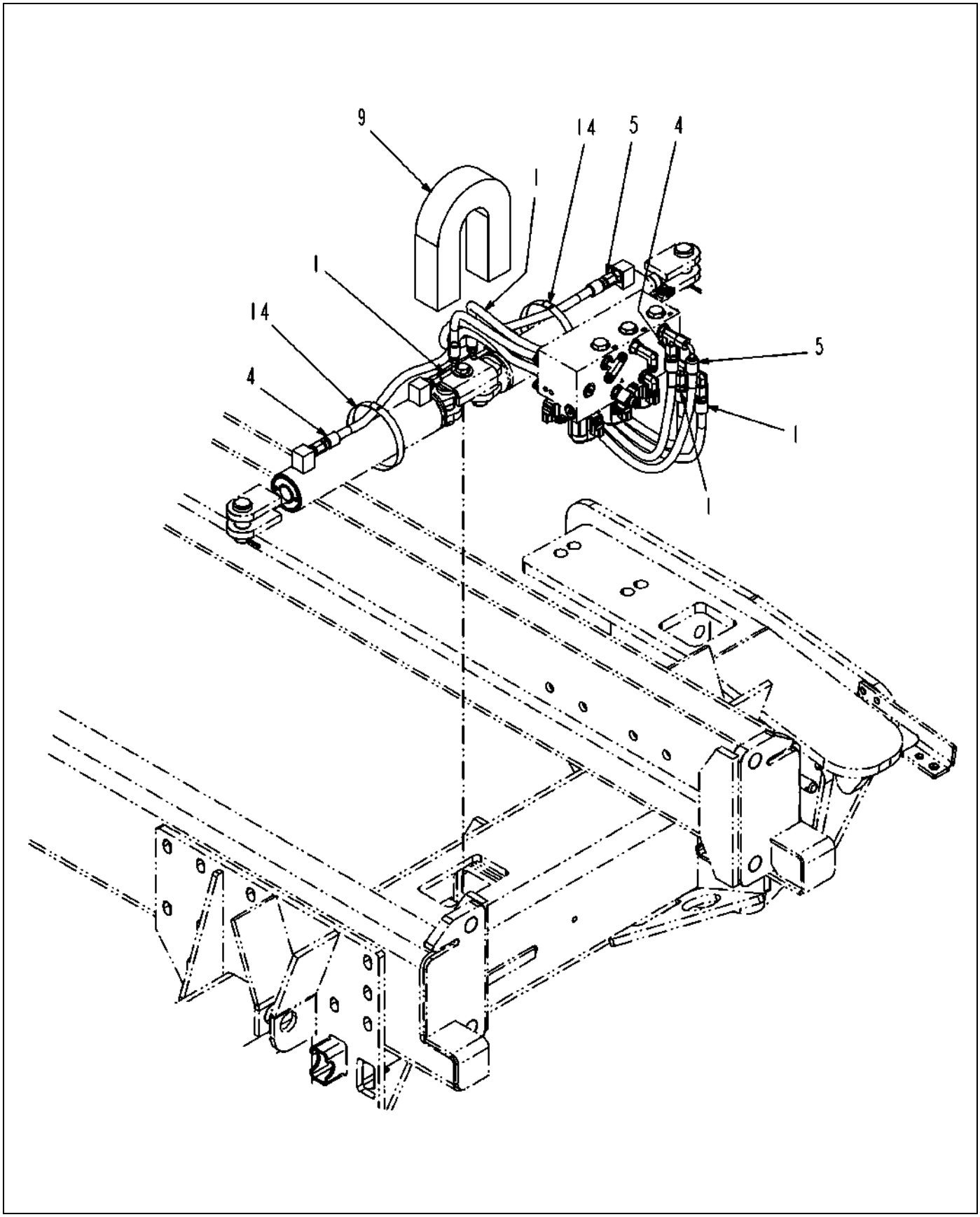

524053D1-01-T311-02.TIF

Copyright © 2008 AGCO Corporation

HOSE-INSTALL,REAR AXLE,71,2009

ITEM	PART #	QTY	DESCRIPTION	COMMENTS
1	WR128678	-	HOSE ASM -4X38.00 6FJS/4FJS90	
4	AG132366	-	HOSE ASM-4X52.00 6FJS/6FJS	
5	AG132367	-	HOSE ASM-4X52.00 6FJS/6FJS90	
9	WR134416	1	INSL-FOAM,2.00X2.00X14.00	[A]
14	AG561237	2	CLAMP 3.56-4.50 HOSE 64HS	
	FOOTNOTE [A]		REFRENCE S.B.#0631	

Copyright © 2008 AGCO Corporation

Please refer to the Bill Of Material on the opposite page for related Installations, Assemblies, or Parts

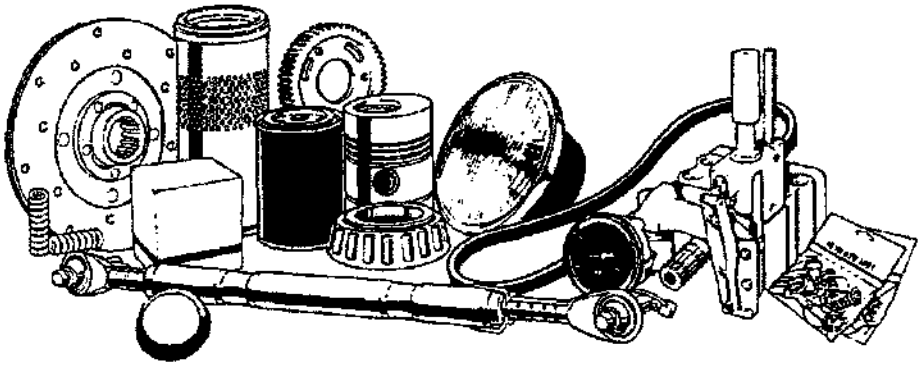

524048D1.tif

Copyright © 2008 AGCO Corporation

HYD-INSTALL,REAR AXLE,71, HYD,2009

ITEM	PART #	QTY	DESCRIPTION	COMMENTS
1	518400D1	1	HYD-INSTL, HYD SUSPENSION	SEE PAGE 6-6
2	520822D1	1	CYL-INSTL,REAR AXLE,71	SEE PAGE 4-14
3	524053D1	1	HOSE-INSTL,REAR AXLE,71	SEE PAGE 6-108
4	524054D1	1	HOSE-KIT,REAR AXLE,71	

Copyright © 2008 AGCO Corporation

Please refer to the Bill Of Material on the opposite page for related Installations, Assemblies, or Parts

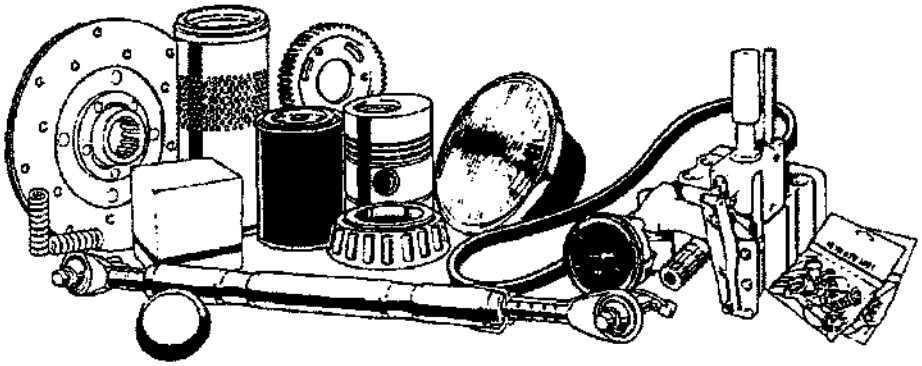

524049D1.tif

Copyright © 2008 AGCO Corporation

HYD-INSTALL,REAR AXLE,88 SPR,2009

ITEM	PART #	QTY	DESCRIPTION	COMMENTS
1	518398D1	1	CYL-INSTL,REAR AXLE,88	SEE PAGE 6-53
2	524055D1	1	HOSE-INSTL,REAR AXLE,88	SEE PAGE 6-112
3	524056D1	1	HOSE-KIT,REAR AXLE,88	

Copyright © 2008 AGCO Corporation

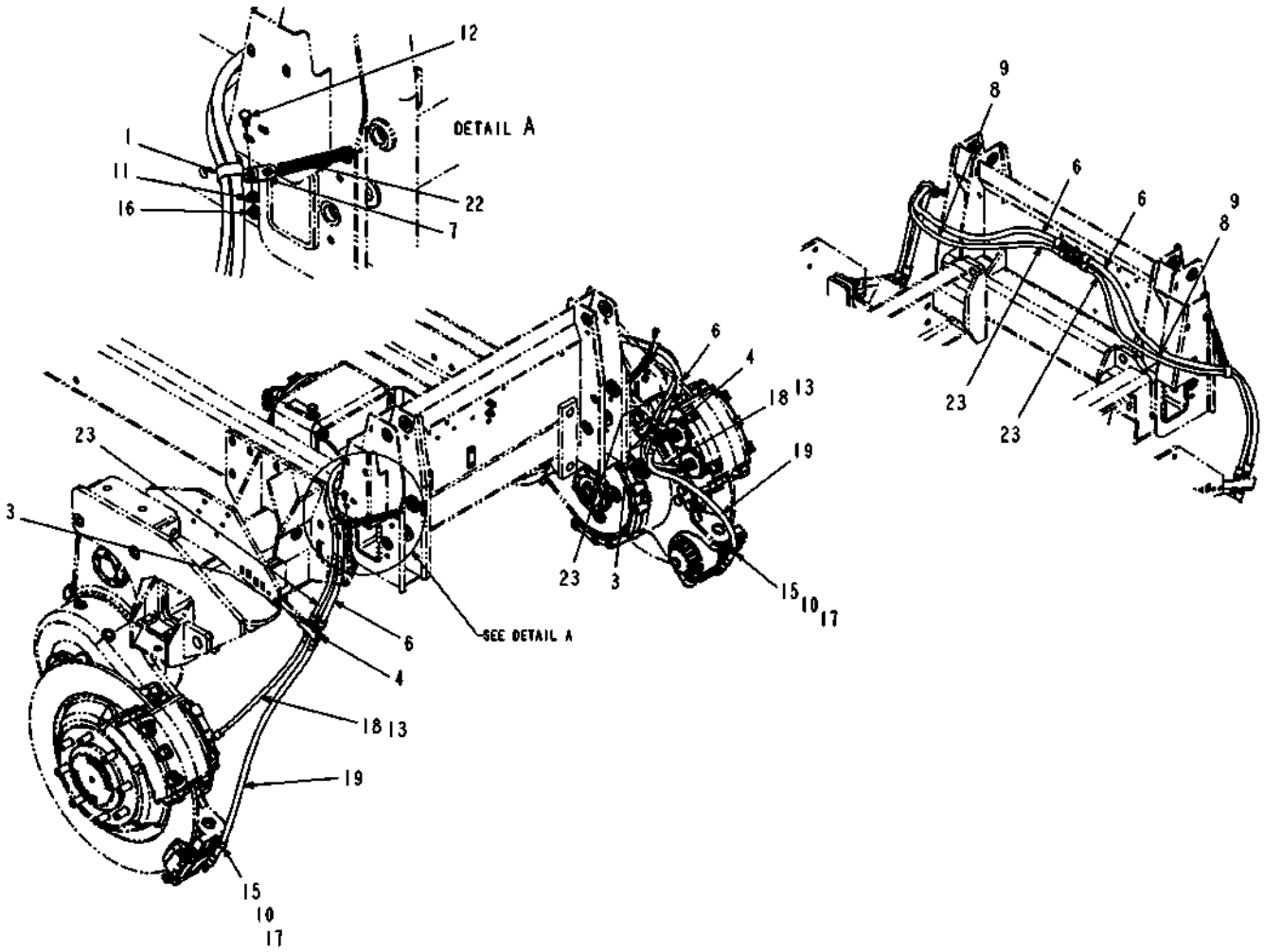

524055D1-01-T311-01.TIF

Copyright © 2008 AGCO Corporation

HOSE-INSTALL,REAR AXLE,88,2009

ITEM	PART #	QTY	DESCRIPTION	COMMENTS
1	WR55247	2	CLAMP-SUPPORT CUSHION DBL	
3	WR129997	2	NUT-HEX,.438-20UN2B,ZINC	
4	WR129998	2	NUT-HEX,.563-18UN2B,ZINC	
6	AG203866	-	HOSE ASM -6 60.00 R1AT	
7	AG263132	2	WASHER-DOUBLE HOLE,.50	
8	AG519861	AR	PROTECTOR HOSE 6.00 IN EPHA	
9	AG519862	AR	PROTECTOR HOSE 4 IN EPHA	
10	AG550671	2	WASHER 0.25 FL ZN SAE TYPE-A	
11	AG550981	2	WASHER 0.37 FL ZN NAR TYPE-B	
12	AG551503	2	BOLT 0.37-16NCX 0.75 G5 ZN HHD	
13	AG553557	AR	TIE CABLE 7.37 .06-1.37 BLACK	
15	AG562237	2	CLAMP CTD 0.75IDX0.75WIDE	
16	AG601411	2	NUT 0.37-16NC HEX ZN REG NY	
17	400152X1	2	BOLT-M6X1X16MM ZNDI HHD 10.9	
18	518533D1	-	HOSE ASM,-4X26 FJS45/MJ(BH)	
19	518534D1	-	HOSE ASM,-6X42 4FJS/MJ(BH)	
22	521617D1	2	SPRING-EXTENSION,.63X5.5	
23	524025D1	-	HOSE ASM,-4X60 FJS(2)	
24	524056D1	-	HOSE-KIT,REAR AXLE,88	

Copyright © 2008 AGCO Corporation

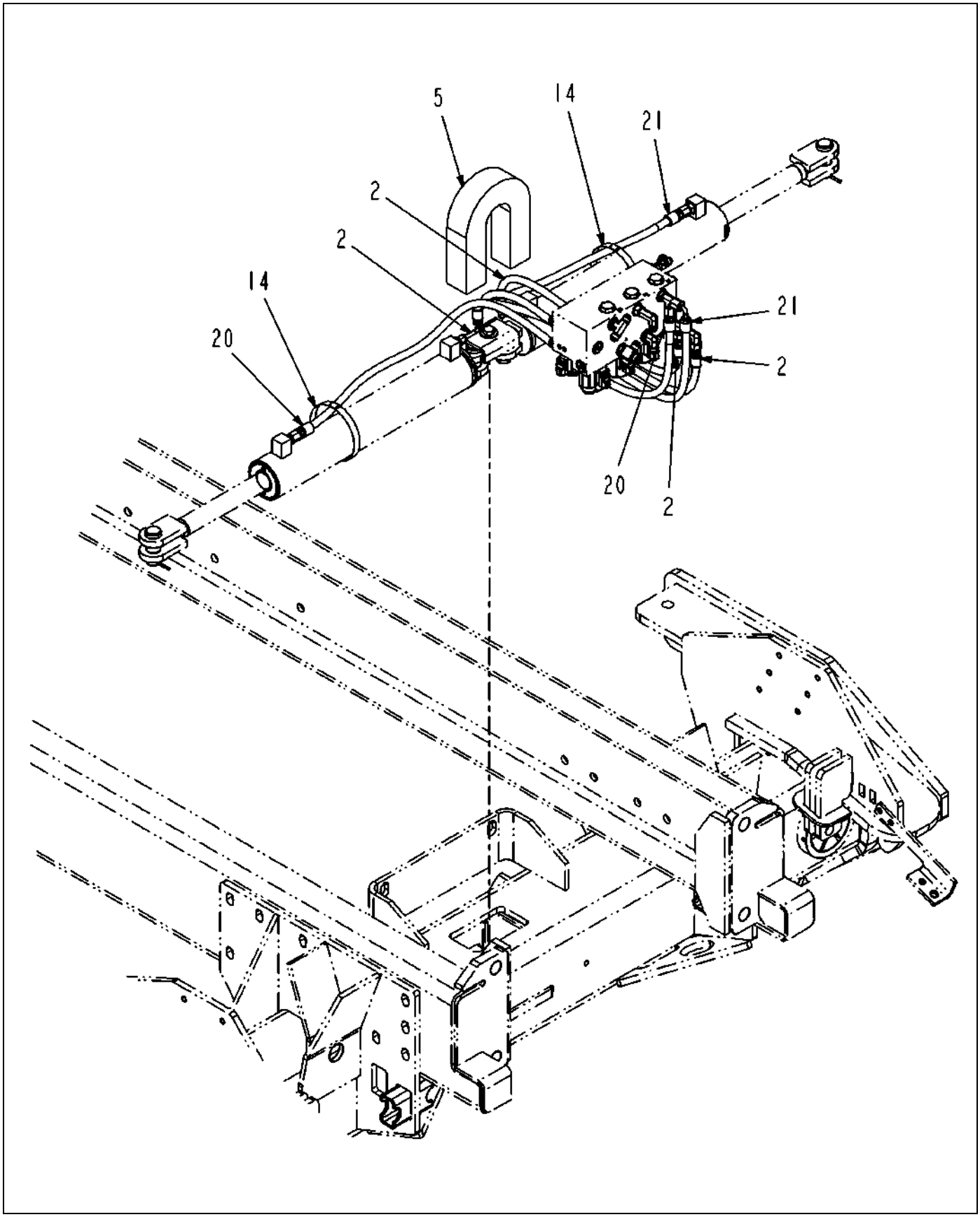

524055D1-01-T311-02.TIF

Copyright © 2008 AGCO Corporation

HOSE-INSTALL,REAR AXLE,88,2009

ITEM	PART #	QTY	DESCRIPTION	COMMENTS
2	WR128678	-	HOSE ASM -4X38.00 6FJS/4FJS90	
5	WR134416	1	INSL-FOAM,2.00X2.00X14.00	[A]
14	AG561237	2	CLAMP 3.56-4.50 HOSE 64HS	
20	518535D1	-	HOSE ASM,-4X59 6FJS(2)	
21	518536D1	-	HOSE ASM,-4X59 6FJS/6FJS90	
	FOOTNOTE [A]		REFRENCE S.B.#0631	

Copyright © 2008 AGCO Corporation

Please refer to the Bill Of Material on the opposite page for related Installations, Assemblies, or Parts

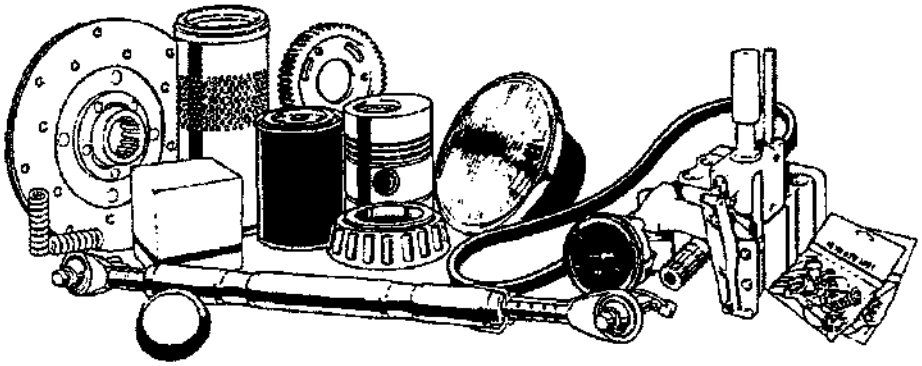

524050D1.tif

Copyright © 2008 AGCO Corporation

HYD-INSTALL,REAR AXLE,88 HYD,2009

ITEM	PART #	QTY	DESCRIPTION	COMMENTS
1	518398D1	1	CYL-INSTL,REAR AXLE,88	SEE PAGE 6-53
2	518400D1	1	HYD-INSTL, HYD SUSPENSION	SEE PAGE 6-6
3	524055D1	1	HOSE-INSTL,REAR AXLE,88	SEE PAGE 6-112
4	524056D1	1	HOSE-KIT,REAR AXLE,88	

Copyright © 2008 AGCO Corporation

Please refer to the Bill Of Material on the opposite page for related Installations, Assemblies, or Parts

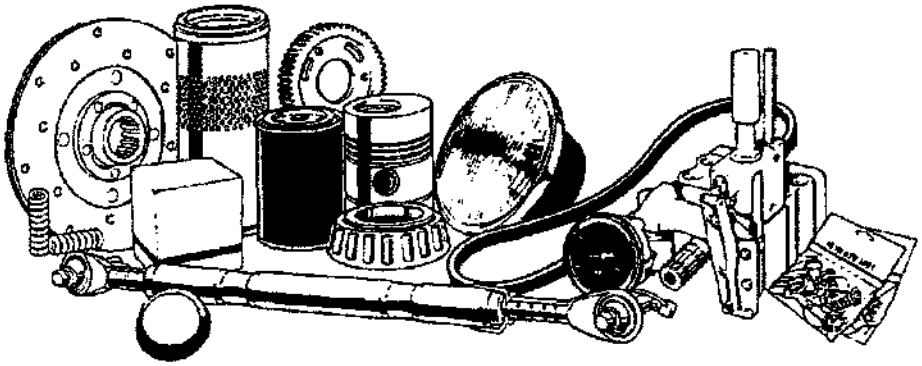

524051D1.tif

Copyright © 2008 AGCO Corporation

HYD-INSTALL,REAR AXLE,120 SPR,2009

ITEM	PART #	QTY	DESCRIPTION	COMMENTS
1	518393D1	1	CYL-INSTL,REAR AXLE,120	SEE PAGE 6-51
2	524057D1	1	HOSE-INSTL,REAR AXLE,120	SEE PAGE 6-116
3	524058D1	1	HOSE-KIT,REAR AXLE,120	

Copyright © 2008 AGCO Corporation

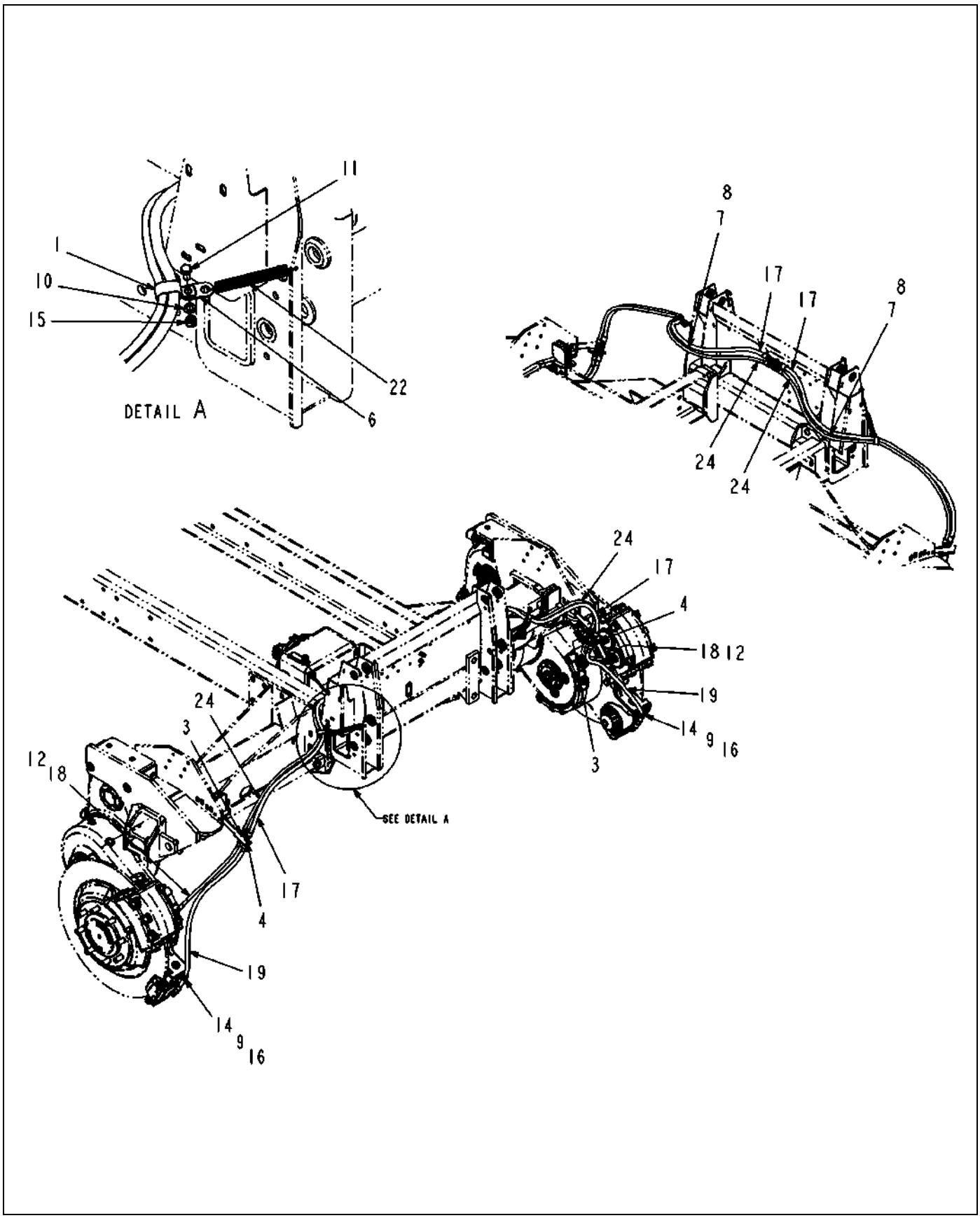

524057D1-01-T311-01.TIF

Copyright © 2008 AGCO Corporation

HOSE-INSTALL,REAR AXLE,120,2009

ITEM	PART #	QTY	DESCRIPTION	COMMENTS
1	WR55247	2	CLAMP-SUPPORT CUSHION DBL	
3	WR129997	2	NUT-HEX,.438-20UN2B,ZINC	
4	WR129998	2	NUT-HEX,.563-18UN2B,ZINC	
6	AG263132	2	WASHER-DOUBLE HOLE,.50	
7	AG519861	AR	PROTECTOR HOSE 6.00 IN EPHA	
8	AG519862	AR	PROTECTOR HOSE 4 IN EPHA	
9	AG550671	2	WASHER 0.25 FL ZN SAE TYPE-A	
10	AG550981	2	WASHER 0.37 FL ZN NAR TYPE-B	
11	AG551503	2	BOLT 0.37-16NCX 0.75 G5 ZN HHD	
12	AG553557	AR	TIE CABLE 7.37 .06-1.37 BLACK	
14	AG562237	2	CLAMP CTD 0.75IDX0.75WIDE	
15	AG601411	2	NUT 0.37-16NC HEX ZN REG NY	
16	400152X1	2	BOLT-M6X1X16MM ZNDI HHD 10.9	
17	518531D1	-	HOSE ASM,-6X72 FJS(2)	
18	518533D1	-	HOSE ASM,-4X26 FJS45/MJ(BH)	
19	518534D1	-	HOSE ASM,-6X42 4FJS/MJ(BH)	
22	521617D1	2	SPRING-EXTENSION,.63X5.5	
23	524058D1	-	HOSE-KIT,REAR AXLE,120	
24	524060D1	-	HOSE ASM,-4X72 FJS(2)	

Copyright © 2008 AGCO Corporation

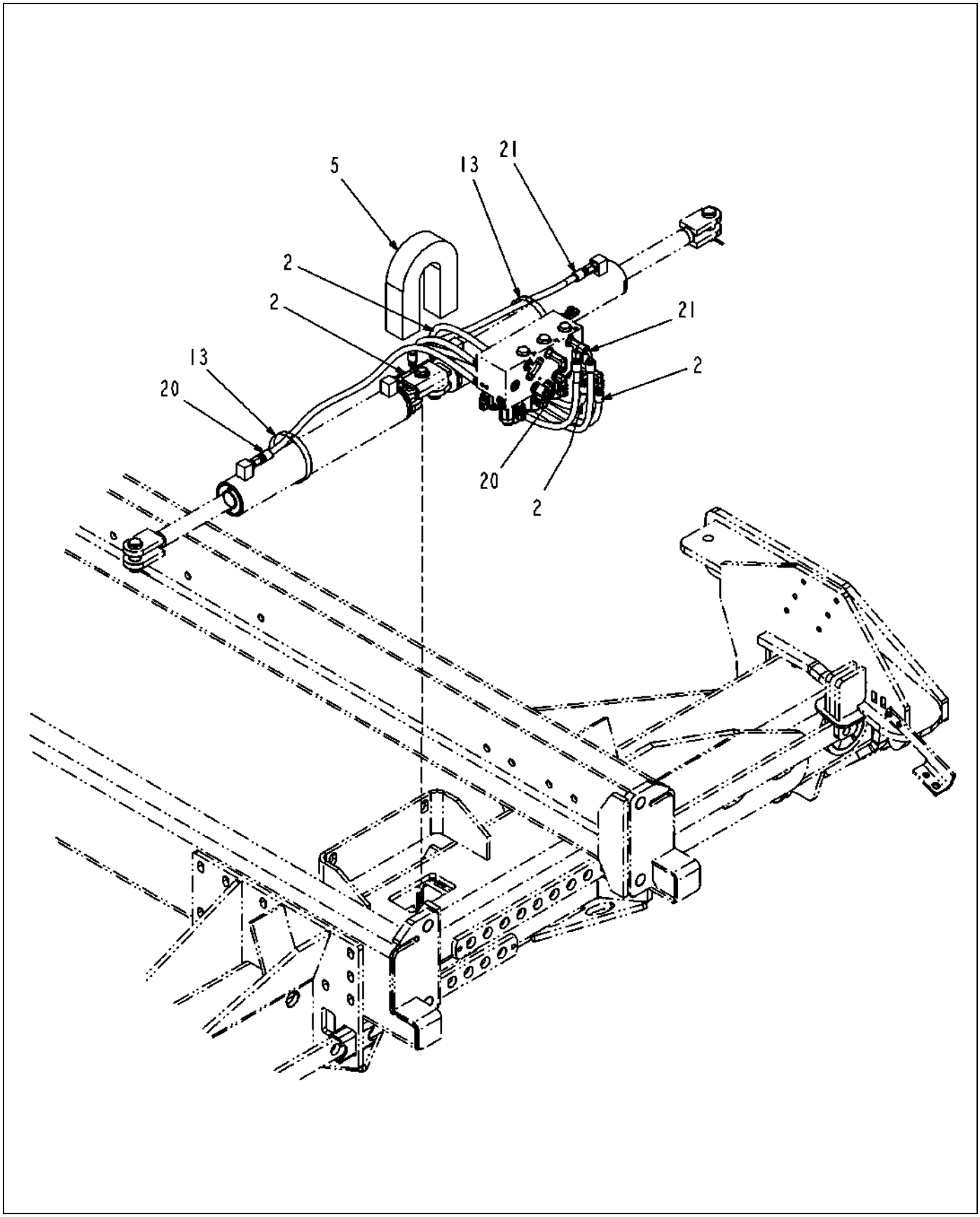

524057D1-01-T311-02.TIF

Copyright © 2008 AGCO Corporation

HOSE-INSTALL,REAR AXLE,120,2009

ITEM	PART #	QTY	DESCRIPTION	COMMENTS
2	WR128678	-	HOSE ASM -4X38.00 6FJS/4FJS90	
5	WR134416	1	INSL-FOAM,2.00X2.00X14.00	[A]
13	AG561237	2	CLAMP 3.56-4.50 HOSE 64HS	
20	518535D1	-	HOSE ASM,-4X59 6FJS(2)	
21	518536D1	-	HOSE ASM,-4X59 6FJS/6FJS90	
	FOOTNOTE [A]		REFRENCE S.B.#0631	

Copyright © 2008 AGCO Corporation

Please refer to the Bill Of Material on the opposite page for related Installations, Assemblies, or Parts

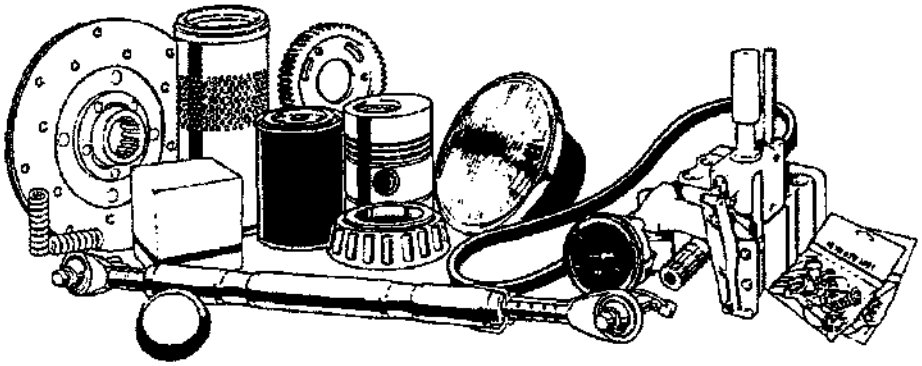

524052D1.tif

Copyright © 2008 AGCO Corporation

HYD-INSTALL,REAR AXLE,120 HYD,2009

ITEM	PART #	QTY	DESCRIPTION	COMMENTS
1	518393D1	1	CYL-INSTL,REAR AXLE,120	SEE PAGE 6-51
2	518400D1	1	HYD-INSTL, HYD SUSPENSION	SEE PAGE 6-6
3	524057D1	1	HOSE-INSTL,REAR AXLE,120	SEE PAGE 6-116
4	524058D1	1	HOSE-KIT,REAR AXLE,120	

Copyright © 2008 AGCO Corporation

CONSOLE INSTALL-SEAT,RH	7-1
CONSOLE ASM-SEAT,RH	7-2
PANEL ASM-FNR,CONSOLE	7-3
VALVE INSTALL-PARK BRAKE	7-4
VALVE ASM-PARK BRAKE	7-5
CONSOLE-ARMREST RH	7-6
FIREWALL INSTALL	7-7
PANEL INSTALL-INSTRUMENT CLUSTER	7-8
PANEL ASM-INSTRUMENT CLUSTER	7-9
PANEL ASM-INSTRUMENT CLUSTER	7-10
PEDAL INSTALL-BRAKE/THROTTLE	7-11
PEDAL-THROTTLE	7-12
VALVE ASM-BRAKE	7-13
SEAT INSTALL-DELUXE	7-14
SEAT ASM-DELUXE, SEMI ACTIVE	7-15
KIT-CUSHION,SEAT,SST	7-16
KIT-SUSPENSION	7-17
SEAT INSTALL-BASIC	7-18
SEAT ASM-BASIC, AIR	7-19
KIT-SUSP,AIR,LOW PROFILE	7-20
FLOORMAT INSTALL-CAB	7-21
STORAGE INSTALL	7-22
INSULATION INSTALL	7-23
KIT-RADIO,XM	7-24
KIT-RADIO,SIRIUS	7-25
GR-RADIO,DELUXE	7-26
CONSOLE INSTALL-GTA,SC7000	7-27
CONSOLE INSTALL-GTA,SC7000	7-28
INSTALL-ANTENNA,SAT	7-29
KIT-RADIO,AM/FM STEREO W/CD	7-30
GROUP-CAB,CHAL,STD HVAC	7-31
GROUP-CAB,CHAL,ATC	7-32
GROUP-CAB,CHAL,EURO,STD HVAC	7-33
GROUP-CAB,CHAL,EURO,ATC	7-34
KIT-ARM REST AS. (LH)	7-35
CAB-MIDSIZE,7X60,STD HVAC	7-36
CAB-MIDSIZE,7X60,WITH ATC	7-37
DOOR INSTALLATION	7-38
CAB GLASS GROUP	7-39
CAB GLASS GROUP	7-40
OUTER ROOF ASY	7-41
WIPER GROUP ASY	7-42
FLOORMATS/COVERS ASY	7-43
ROOF ELECTRIC ASY	7-44
INNER ROOF ASM	7-45
CONTROLS FRONT ASY	7-46
STEERING COLUMN COVER ASY	7-47
HVAC GROUP ASY	7-48
INTERIOR TRIM GROUP ASY	7-49
CAB ELECTRIC ASY	7-50
KEY,CAM ASM	7-51
GLASS DOOR ASM	7-52
A/C GROUP	7-53
RECEIVER DEHYDRATOR	7-54

HVAC/W/AND W/O ATC	7-55
HVAC/W/AND W/O ATC	7-56
HVAC/W/AND W/O ATC	7-57
COVER-ASM	7-58
GASKETS / KIT	7-59
MOTOR BLOWER ASM PRESSURE	7-60
CONTROL INSTALL-SMARTRAX,7X60 CAB	7-61
CONTROL INSTALL-SMARTRAX,7X60 CAB	7-62
VALVE INSTALL-SMARTRAX,7X60	7-63
VALVE INSTALL-SMARTRAX,7X60	7-64
VALVE INSTALL-SMARTRAX,7X60	7-65
KIT-CHASSIS,SMARTRAX,7X60	7-66
OPT-SMARTRAX,SC 7X60	7-67
INSTALL,AUTOGUIDE-READY SC7460	7-68
TERMINAL KIT	7-69
INSTALL-BRACKET,TERMINAL	7-70
ASM,ROOF-BRACKET,B4-TOPDOCK	7-71
INSTALL-WAS,AUTOGUIDE,7460	7-72
INSTALL-WAS,AUTOGUIDE,7660	7-73
BRKT INSTALL-SMARTRAX,PHX 200,SC	7-74
CAB GROUP-7X60,STD HVAC,CH, 2009	7-75
CONSOLE INSTALL-SEAT,RH,NA	7-76
CONSOLE ASM-SEAT,RH,NA	7-77
CONSOLE-ARMREST,RH	7-78
PANEL ASM-FNR,CONSOLE,NA	7-79
SWITCH-IGN,KEYED DIFFERENT	7-80
CONTROL ASM-FNR	7-81
HANDLE-MULTIFUNTION,SC,7000	7-82
MODULE-HANDLE,SC,7000	7-83
CAB GROUP-7X60,ATC,CH, 2009	7-84
CAB ASM-CHAL,ATC	7-85
CAB GROUP-7X60,EURO,STD HVAC,CH, 2009	7-86
CAB ASM-CHAL,EURO,STD HVAC,2009	7-87
PEDAL INSTALL-BRAKE/THROTTLE,2009	7-88
PEDAL INSTALL-BRAKE/THROTTLE,2009	7-89
PEDAL ASM,SERVICE BRAKE,2009	7-90
CONSOLE INSTALL-SEAT,RH,2009	7-91
CONSOLE ASM-SEAT,RH,2009	7-92
PANEL ASM-FNR,CONSOLE,2009	7-93
CAB GROUP-7X60,EURO,ATC,CH,2009	7-94
CAB ASM-CHAL,EURO,ATC,2009	7-95

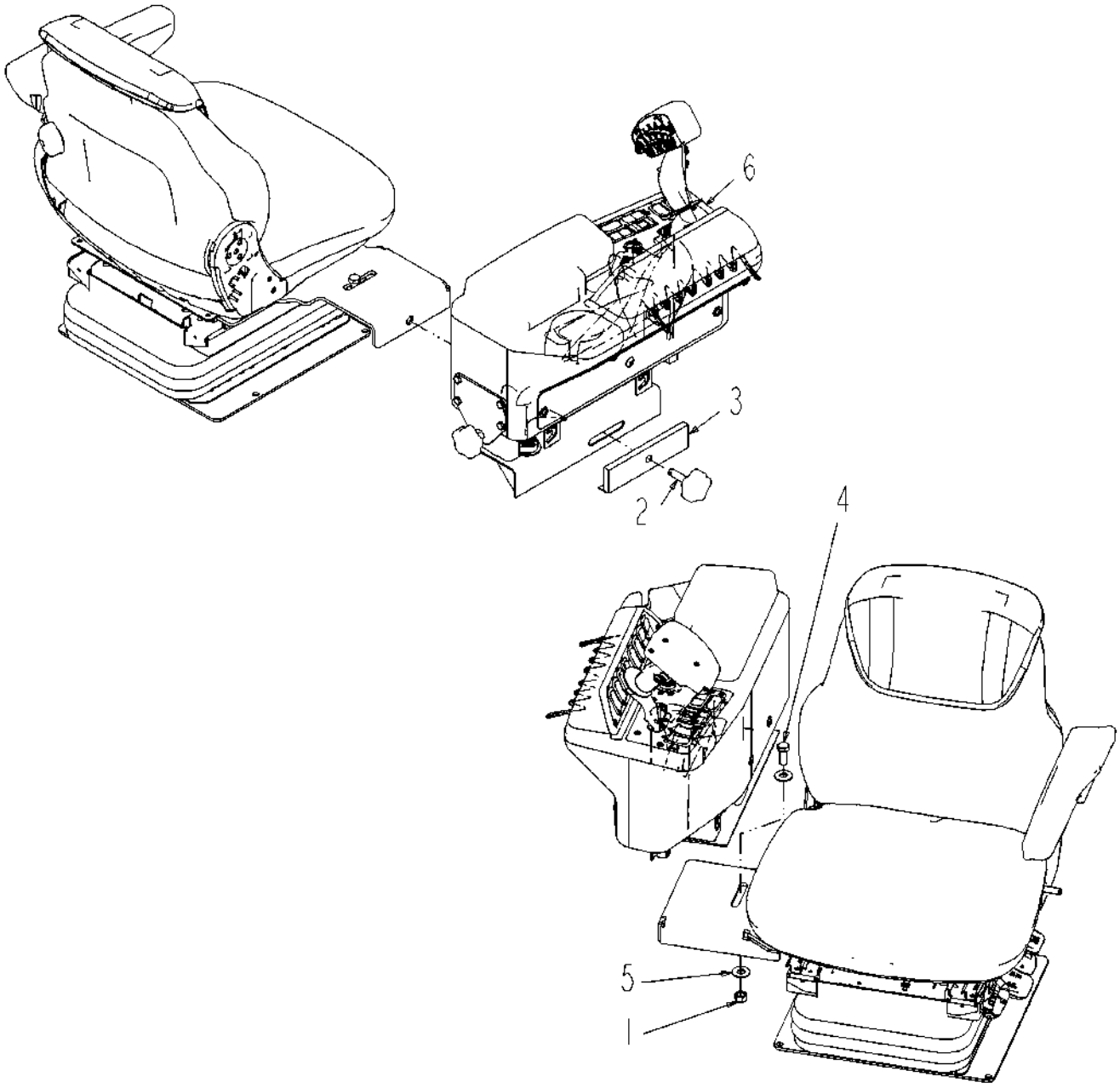

525080D1-01-T048-.TIF

Copyright © 2008 AGCO Corporation

CONSOLE INSTALL-SEAT,RH

ITEM	PART #	QTY	DESCRIPTION	COMMENTS
1	WR11528	1	NUT-TOPLOCK, 1/2-13UNC G5	
2	WR128024	1	KNOB-.50-13UNC X 2.00	
3	WR128027	1	BAR WLDMT-STABILIZER	
4	AG550256	1	BOLT.50-13NCX1.25 G5 ZN HHD	
5	AG550353	2	WASHER 0.50 FL ZN REG TYPE-B	
6	525081D1	1	CONSOLE ASM-SEAT, RH	SEE PAGE 7-2

Copyright © 2008 AGCO Corporation

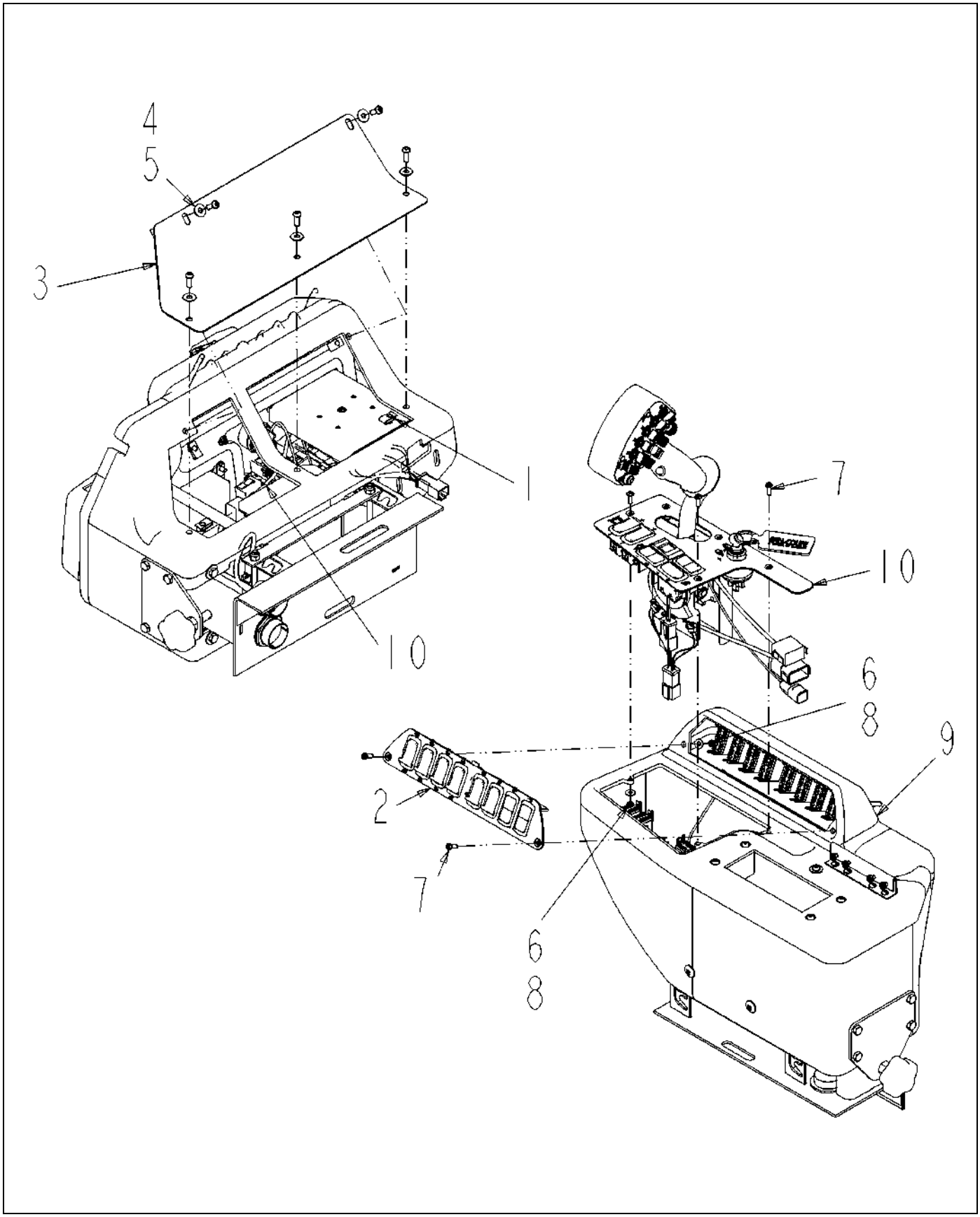

525081D1-01-T048-.TIF

Copyright © 2008 AGCO Corporation

CONSOLE ASM-SEAT,RH

ITEM	PART #	QTY	DESCRIPTION	COMMENTS
1	WR50851	4	NUT-SPEED,1/4-20	
2	WR127121	1	PANEL ASM-SWITCH,CONSOLE	SEE PAGE 8-2
3	WR128025	1	COVER-ACCESS,RH CONSOLE	
4	AG134415	5	WASHER-FLAT,.25 USS BLK OXIDE	
5	AG515457	5	SCREW BUTTON HEAD .25-20X0.75	
6	AG522231	5	NUT-M5-0.8,CL8.0,H,LK	
7	AG523508	5	SCR-M5-0.8X16,CL10.9,BLK,BHHS	
8	AG553670	5	WASHER #10 FL ZN REG TYPE-B	
9	507123D1	1	CONSOLE-ARMREST RH	SEE PAGE 7-6
10	516474D1	1	PANEL ASM-FNR,CONSOLE	SEE PAGE 7-3
11	525082D1	1	HARNESS INSTL-RH CONSOLE,SC	

Copyright © 2008 AGCO Corporation

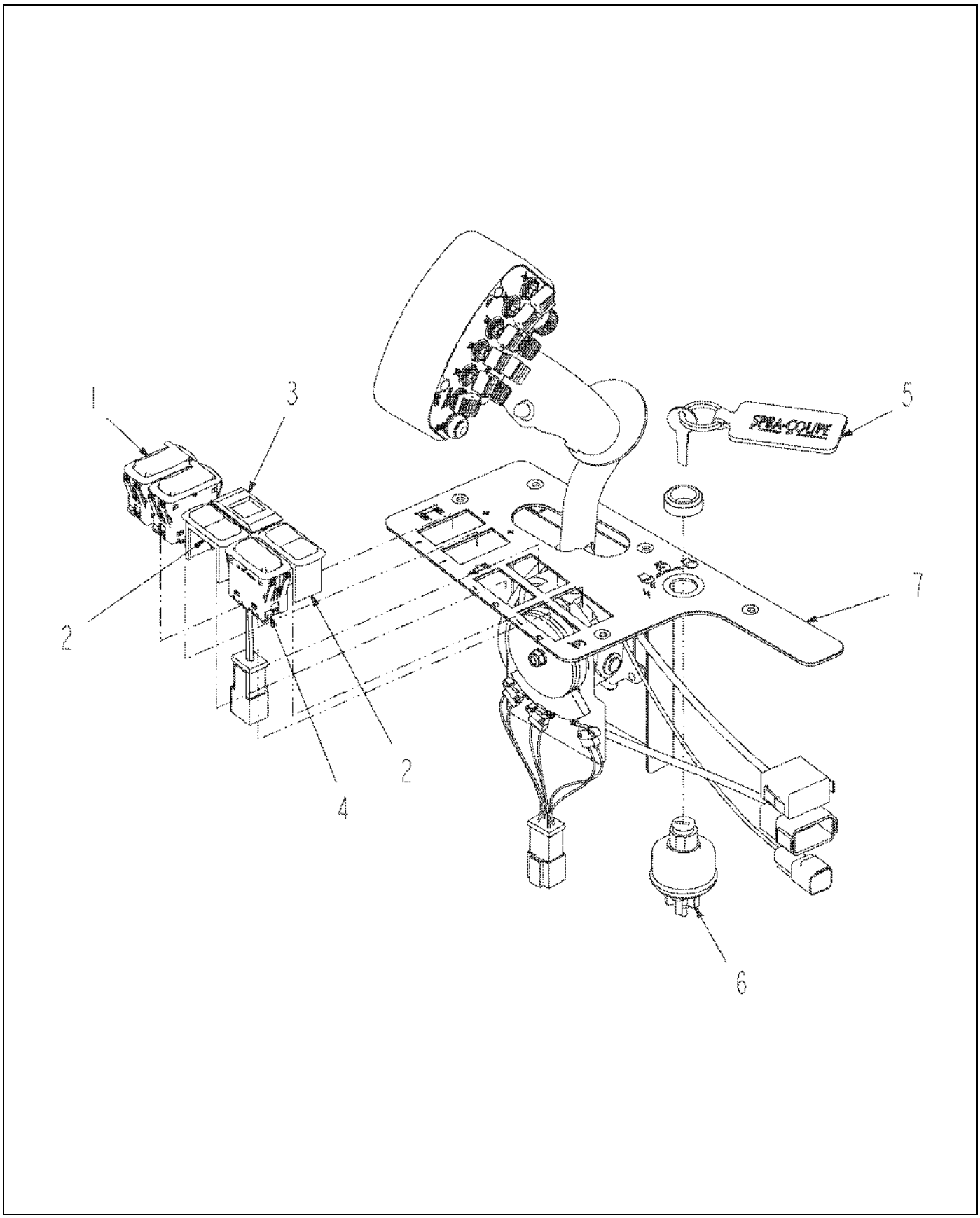

516474D1-01-N899-.TIF

Copyright © 2008 AGCO Corporation

PANEL ASM-FNR,CONSOLE

ITEM	PART #	QTY	DESCRIPTION	COMMENTS
1	AG124432	2	SWITCH-RKR,(ON)-OFF-(ON),CS-L	
2	AG124437	2	PLUG-HOLE,SWITCH,CS-L	
3	WR126925	1	DISPLAY-GEAR,TCU	
4	AG127131	1	SWITCH-RKR,ON-ON,CS-L	
5	WR129807	1	KEYCHAIN-LEATHER,SC	
6	AG520862	1	SWITCH-IGN,KEYED DIFFERENT	SEE PAGE 7-80
7	515352D1	1	CONTROL ASM-FNR	SEE PAGE 8-3

Copyright © 2008 AGCO Corporation

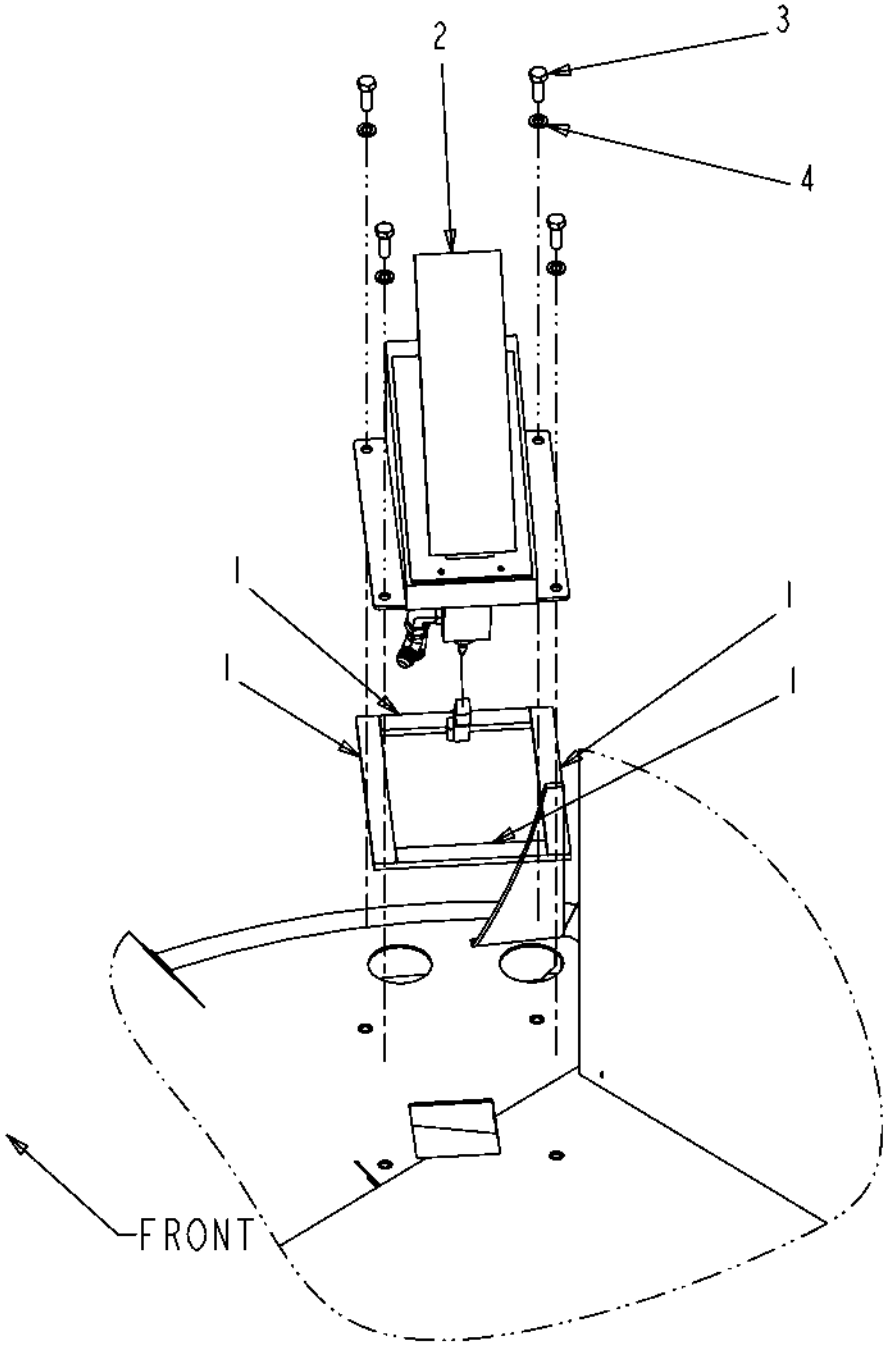

129182-B.TIF

Copyright © 2008 AGCO Corporation

VALVE INSTALL-PARK BRAKE

ITEM	PART #	QTY	DESCRIPTION	COMMENTS
1	WR17335	-	PAD-PVC FOAM BULK 1/4 X 3/4 [BULK: 2.080 FT]	
2	WR129181	1	VALVE ASM-PARK BRAKE	SEE PAGE 7-5
3	AG561255	4	BOLT M8 1.25X 25MM G8.8 ZN HH	
4	AG561679	4	WASHER LOCK M8 ZN	

Copyright © 2008 AGCO Corporation

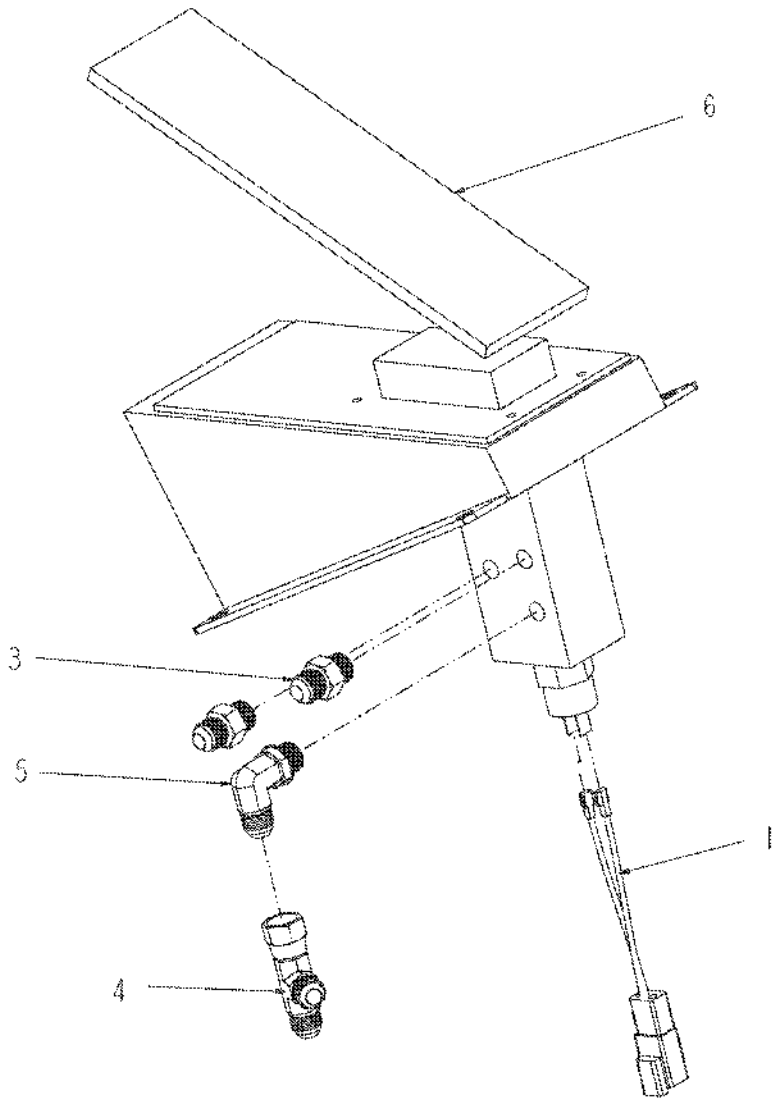

129181-03-N606-.TIF

Copyright © 2008 AGCO Corporation

VALVE ASM-PARK BRAKE

ITEM	PART #	QTY	DESCRIPTION	COMMENTS
1	WR132424	1	HARNESS-EXTENSION,SWITCH	
2	AG518989	AR	SEALANT NONCORROSIVE 10.3 OZ	
3	AG560693	2	ADAP STR 0.37MO-R X 0.37MJIC	SEE PAGE 6-104
4	AG561391	1	TEE 0.37FJIC SW X 0.37MJIC(2)	
5	AG562401	1	ELBOW -6MB90X-6MJ	
6	512906D1	1	VALVE-PARK BRAKE	SEE PAGE 6-1

Copyright © 2008 AGCO Corporation

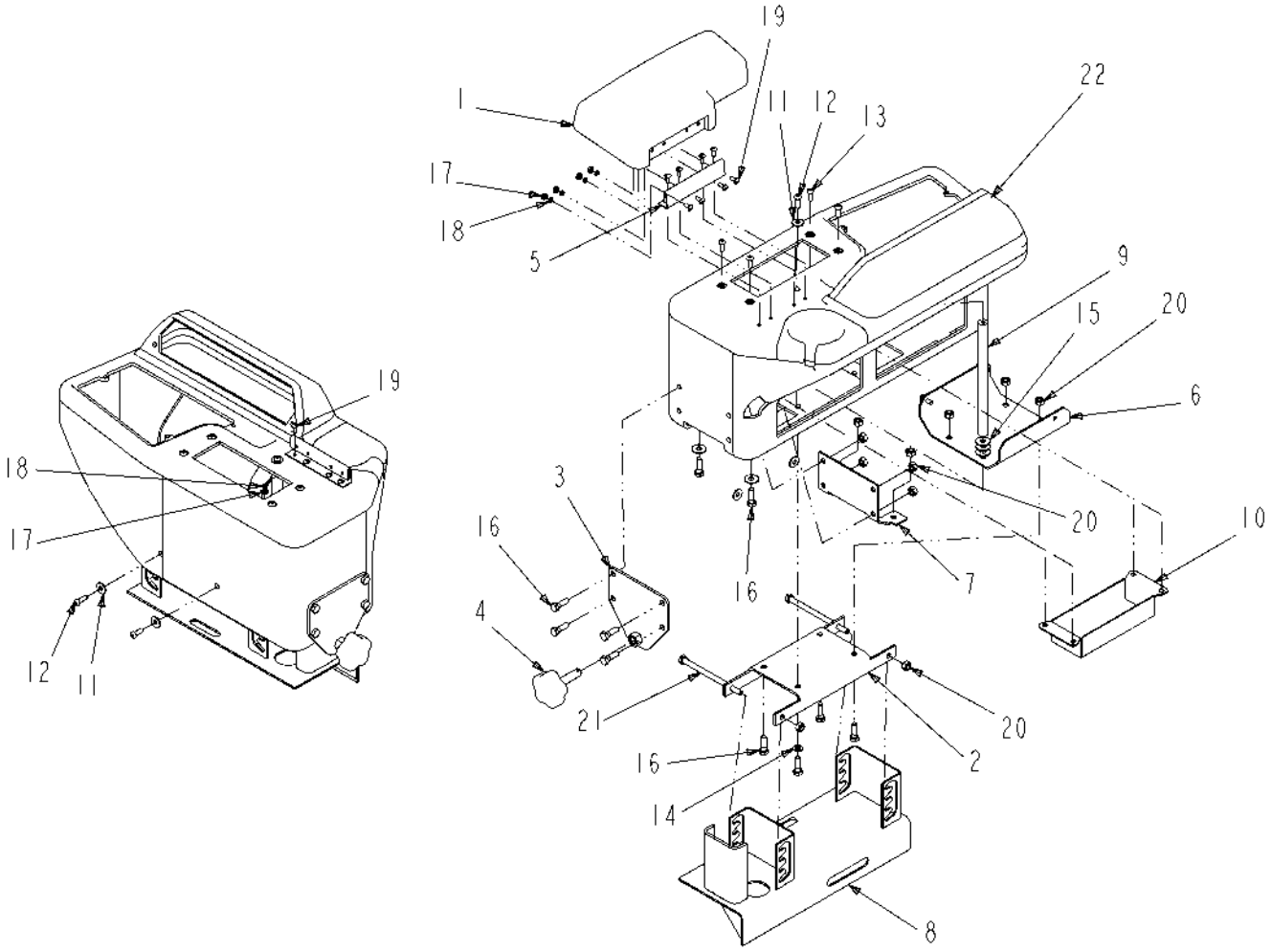

507123D1-01-K960-.TIF

Copyright © 2008 AGCO Corporation

CONSOLE-ARMREST RH

ITEM	PART #	QTY	DESCRIPTION	COMMENTS
1	WR128020	1	ARMREST	
2	WR128021	1	BASEPLATE	
3	WR128022	1	PLATE WLDMT-SUPPORT,KNOB	
4	WR128024	1	KNOB-.50-13UNC X 2.00	
5	WR128026	1	HINGE-ARMREST	
6	WR128030	1	STIFFENER-BOTTOM	
7	WR128031	1	STIFFENER-REAR	
8	WR128032	1	BRKT WLDMT-RH CONSOLE	
9	WR128037	1	ROD-STIFFENER,VERTICAL	
10	WR130585	1	BRKT WLDMT-TRAY	
11	AG134415	3	WASHER-FLAT,.25 USS BLK OXIDE	
12	AG515457	3	SCREW BUTTON HEAD .25-20X0.75	
13	AG520911	4	SCR-M6-1.0X16,CL10.9,BLK,BHHS	
14	AG550205	1	WASHER 0.31 LK ZN REG	
15	AG551015	5	WASHER 0.31 FL ZN REG TYPE-B	
16	AG551252	10	BOLT 0.31-18NCX 1.00 G5 ZN HHD	
17	AG551317	8	NUT 10-32NF HEX ZN REG	
18	AG553182	8	WASHER #10 LK ZN REG	
19	AG562285	8	SCREW 10-32X0.50MA SL RHD ZN	
20	AG601888	11	NUT 0.31-18NC HEX ZN REG NY	
21	AG704467	2	BOLT 0.31-18NCX 5.00 G5 ZN HHD	
22	507124D1	1	CONSOLE-MOLDED	

Copyright © 2008 AGCO Corporation

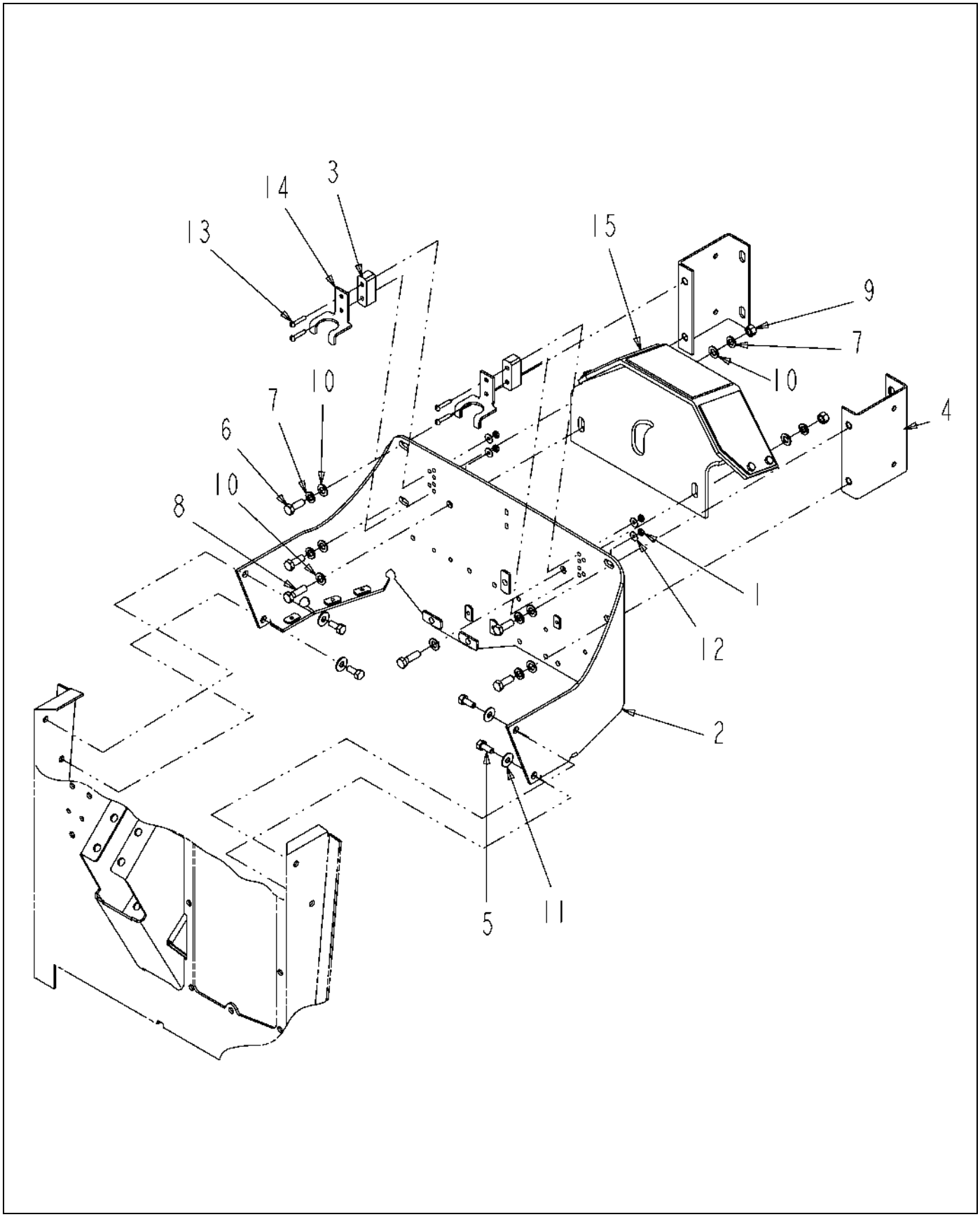

129238-05-N839-.TIF

Copyright © 2008 AGCO Corporation

ITEM	PART #	QTY	DESCRIPTION	COMMENTS
1	AG027274	4	NUT #10-24NC HEX SS REG NY	
2	AG123910	1	BRACKET WLDMT-HOOD SUPPORT	
3	AG126418	2	SPACER-HOOD LATCH	
4	AG237820	2	BRACKET WLDMT-DEAERATION TANK	
5	WR522279	4	BOLT-M8-1.25X20,CL10.9,ZN,HHD	
6	AG550175	4	BOLT 0.37-16NCX 1.00 G5 ZN HHD	
7	AG550191	6	WASHER 0.37 LK ZN REG	
8	AG550515	2	BOLT 0.37-16NCX 1.25 G5 ZN HHD	
9	AG550825	2	NUT 0.37-16NC HEX ZN REG	
10	AG550981	8	WASHER 0.37 FL ZN NAR TYPE-B	
11	AG551015	4	WASHER 0.31 FL ZN REG TYPE-B	
12	AG562082	4	WASHER #10 FL SS REG TYPE-B	
13	AG562086	4	SCREW 10-24X 1.50 MA SS SL RHD	
14	AG600016	2	BRACKET HOOD 510327 (P)	
15	511487D1	1	SUPPORT ASM-HOOD REAR	SEE PAGE 10-1

Copyright © 2008 AGCO Corporation

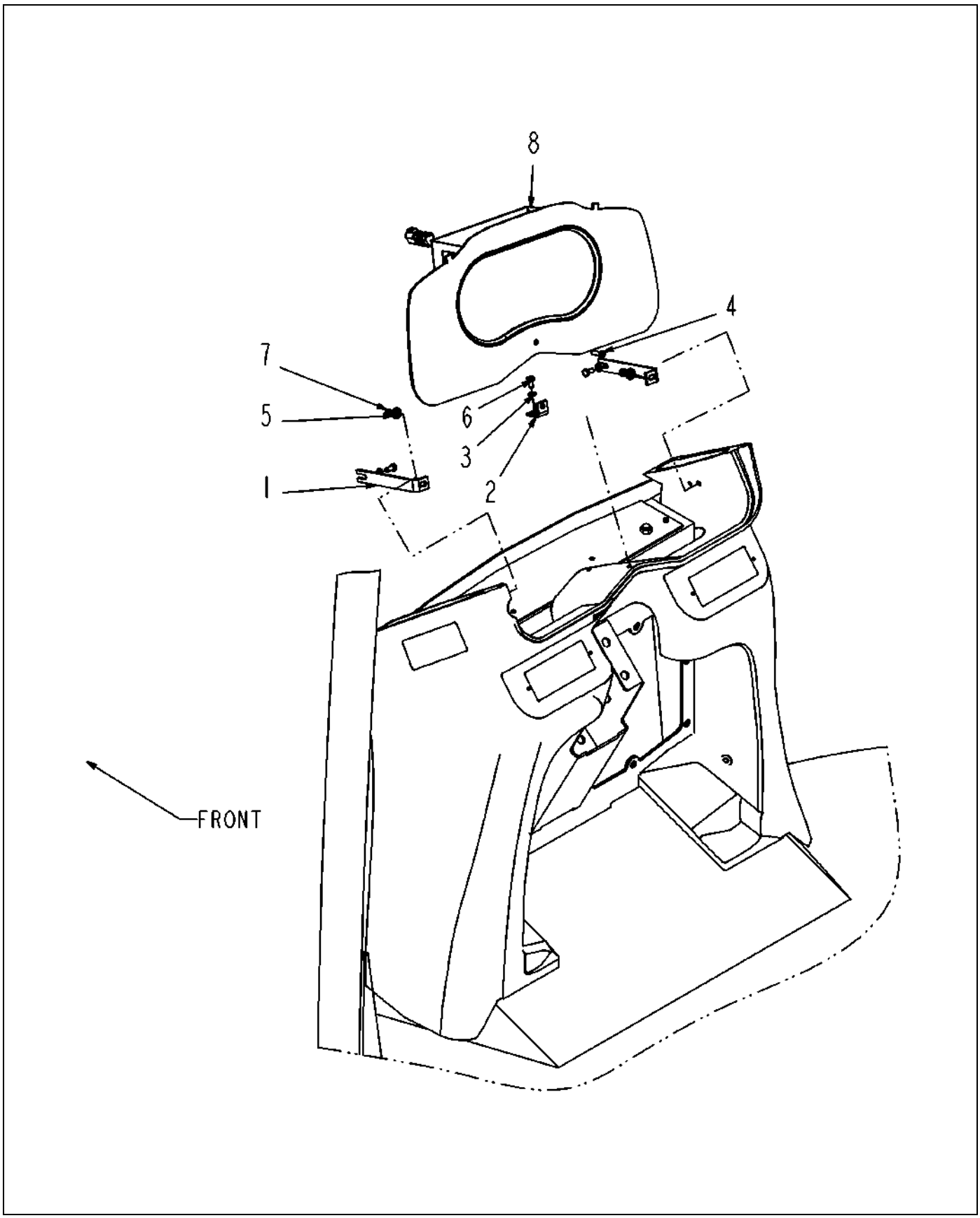

525384D1-01-T079-.TIF

Copyright © 2008 AGCO Corporation

PANEL INSTALL-INSTRUMENT CLUSTER

ITEM	PART #	QTY	DESCRIPTION	COMMENTS
1	WR127139	2	BRKT-MTG,PANEL,GAUGE	
2	AG134911	1	BRKT WLDMT-MTG,PANEL,CNTR	
3	AG520879	3	WASHER-FLAT,M6,ZN,REG	
4	AG521730	1	SCR-M6-1.0X20,CL10.9,BLK,BHHS	
5	AG550671	2	WASHER 0.25 FL ZN SAE TYPE-A	
6	AG562639	3	BOLT M6 1.00X12MM G8.8 ZN HHD	
7	AG713398	2	LOCK NUT M6	
8	525210D1	1	PANEL ASM-INSTRUMENT CLUSTER	SEE PAGE 7-10

Copyright © 2008 AGCO Corporation

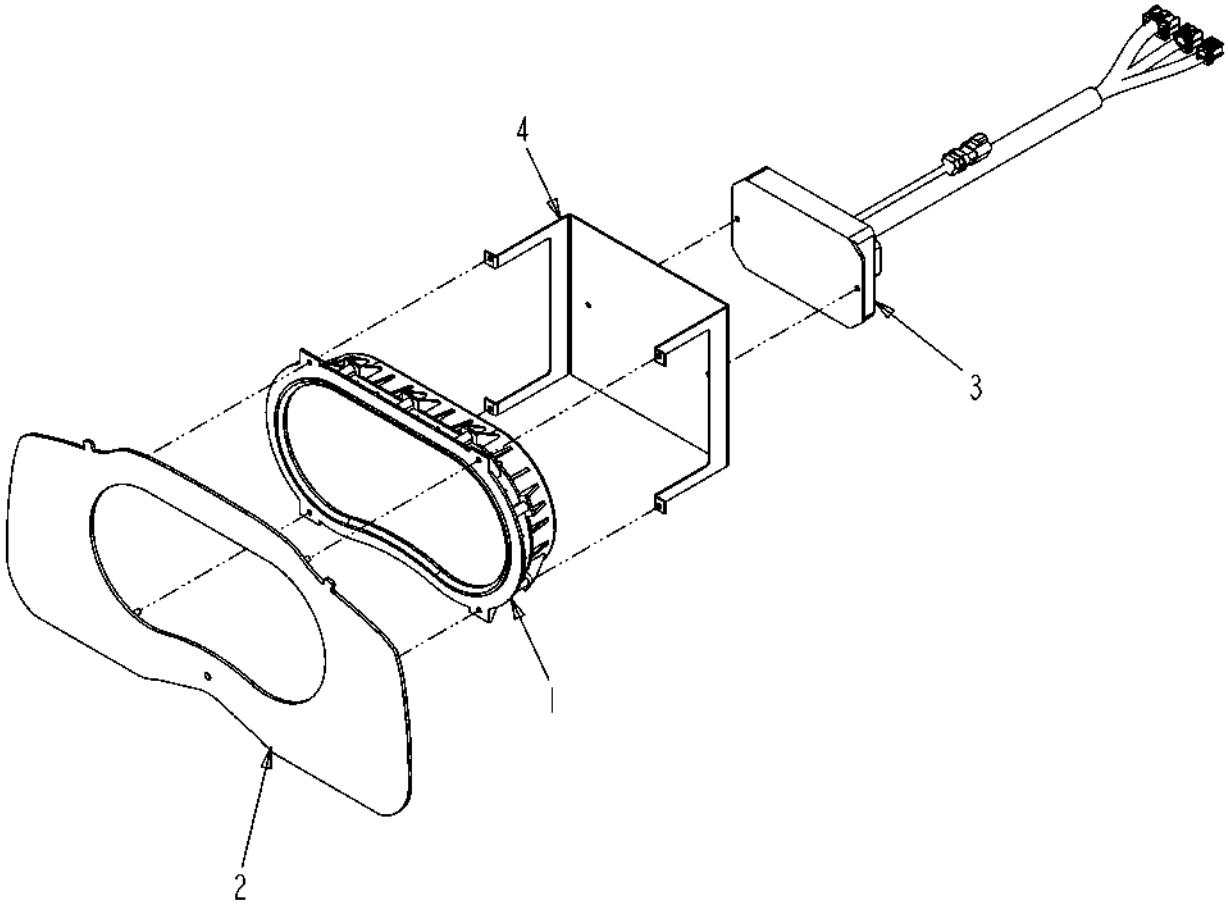

131484-01-M002-.TIF

Copyright © 2008 AGCO Corporation

PANEL ASM-INSTRUMENT CLUSTER

ITEM	PART #	QTY	DESCRIPTION	COMMENTS
1	AG131482	1	INSTRUMENT CLUSTER-WHITE	
2	AG131483	1	PANEL-MTG,INSTRUMENT CLUSTER	
3	AG132671	1	DRIVER-GAUGE,CAN,PRICOL	
4	AG134073	1	PLATE-MTG,DRIVER,GAUGE	

Copyright © 2008 AGCO Corporation

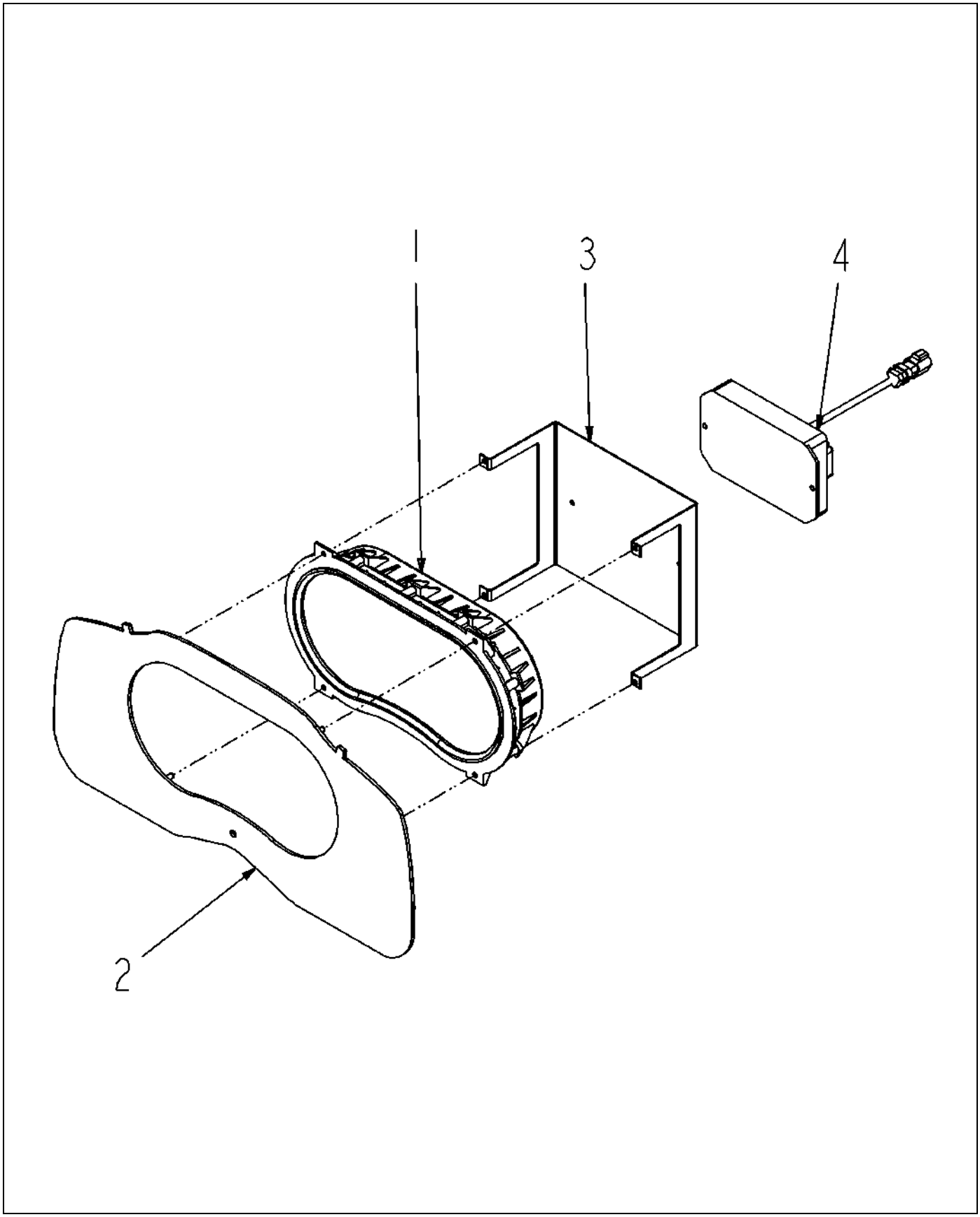

525210D1-01-T079-.TIF

Copyright © 2008 AGCO Corporation

PANEL ASM-INSTRUMENT CLUSTER

ITEM	PART #	QTY	DESCRIPTION	COMMENTS
1	AG131482	1	INSTRUMENT CLUSTER-WHITE	
2	AG131483	1	PANEL-MTG,INSTRUMENT CLUSTER	
3	AG134073	1	PLATE-MTG,DRIVER,GAUGE	
4	525211D1	1	DRIVER-GUAGE, CAN, PRICOL	

Copyright © 2008 AGCO Corporation

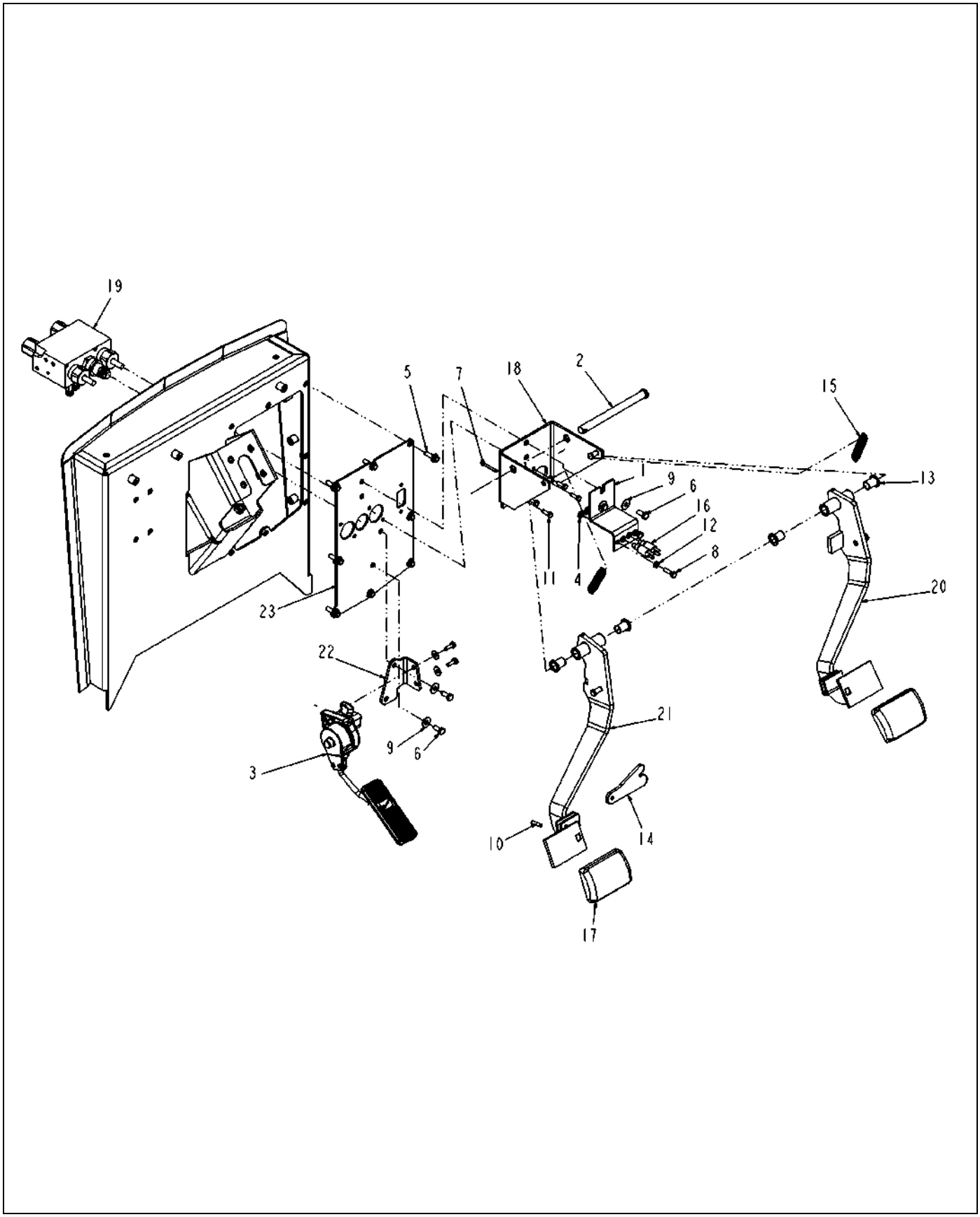

520664D1-01-R451-.TIF

Copyright © 2008 AGCO Corporation

PEDAL INSTALL-BRAKE/THROTTLE

ITEM	PART #	QTY	DESCRIPTION	COMMENTS
1	WR126599	1	PLATE-ACTUATOR	
2	WR126604	1	PIN-CLEVIS,.619DIA X 7.25LG	
3	WR126892	1	PEDAL-THROTTLE	SEE PAGE 7-12
4	AG520327	2	NUT-.47-32UNS,HEX,BLK	
5	AG520967	8	BOLT-M8-1.25X25,CL8.8,ZN FLG	
6	AG550183	4	BOLT 0.31-18NCX 0.75 G5 ZN HHD	
7	AG550337	1	PIN COTTER 0.18X1.25 ZN (D)	
8	AG550698	2	BOLT 0.25-20NCX 1.00 G5 ZN HHD	
9	AG551015	4	WASHER 0.31 FL ZN REG TYPE-B	
10	AG558214	1	PIN-SPRING .25X1.00LG ZN	
11	AG562327	4	BOLT M6-1.00X20MM G8.8 ZN HHD	
12	AG562945	2	NUT 0.25-20NC HEX ZN JAM	
13	AG605371	4	BUSHING BRAKE CLUTCH (P)	
14	6617524	1	ARM-LOCKING	
15	6627054	2	SPRING-EXTENSION	
16	6661516	2	SWITCH	
17	6800419	2	PAD-PEDAL,BRAKE	
18	504041D1	1	BRACKET-PEDAL, BRAKE	
19	511984D1	1	VALVE ASM-BRAKE	SEE PAGE 7-13
20	513994D1	1	PEDAL WLDMT-RH	
21	513995D1	1	PEDAL WLDMT-LH	
22	513996D1	1	BRKT-THROTTLE PEDAL	
23	520663D1	1	PLATE ASM.-MTG,BRAKE PEDAL	

Copyright © 2008 AGCO Corporation

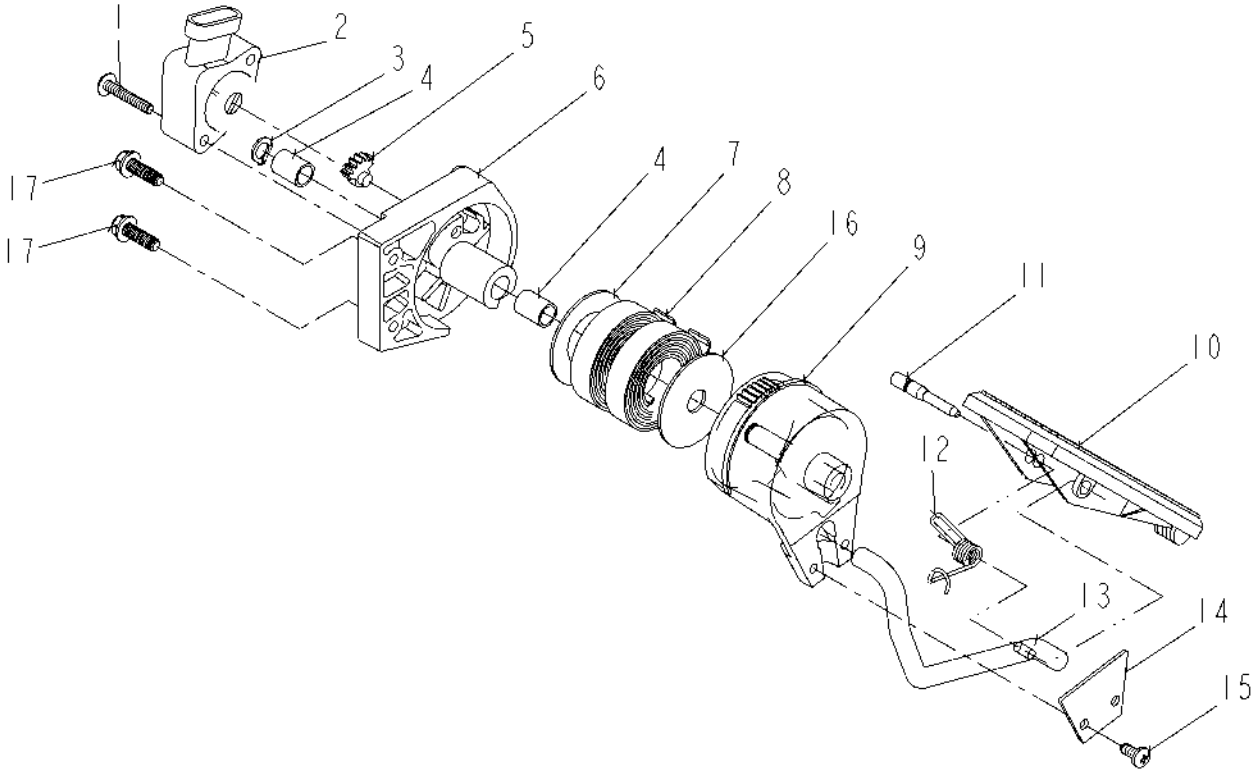

126892-04-K960-.TIF

Copyright © 2008 AGCO Corporation

PEDAL-THROTTLE

ITEM	PART #	QTY	DESCRIPTION	COMMENTS
REF	WR425679	1	SENSOR/THROTTLE	
1	WR139397	2	SCREW	
1	WR425857	1	SCREW/TRUSS 10.32X1.25 WM097	
2	AG330428	1	SENSOR/INTEGRATED	
3	WR139395	1	GRIP RING	
4	WR139394	2	BUSHING	
5	WR139393	1	GEAR/PINION	
6	WR425858	1	BODY/THROTTLE	
6	WR139392	1	BASE/THROTTLE	
7	WR139391	1	WASHER/SPACER	
8	WR139390	2	SPRING/THROTTLE	
9	WR139389	1	HOUSING	
10	AG721301	1	PEDAL GEAR DRIVE 519400	
11	AG722409	1	PIN-GAS PEDAL	
12	AG722408	1	SPRING-GAS PEDAL	
13	WR139387	1	LEVER/PEDAL	
14	WR139386	1	CLAMP/SADDLE	
15	WR139385	2	SCREW	
16	WR139384	1	WASHER/SPACER	
17	AG330427	2	SCREW	

Copyright © 2008 AGCO Corporation

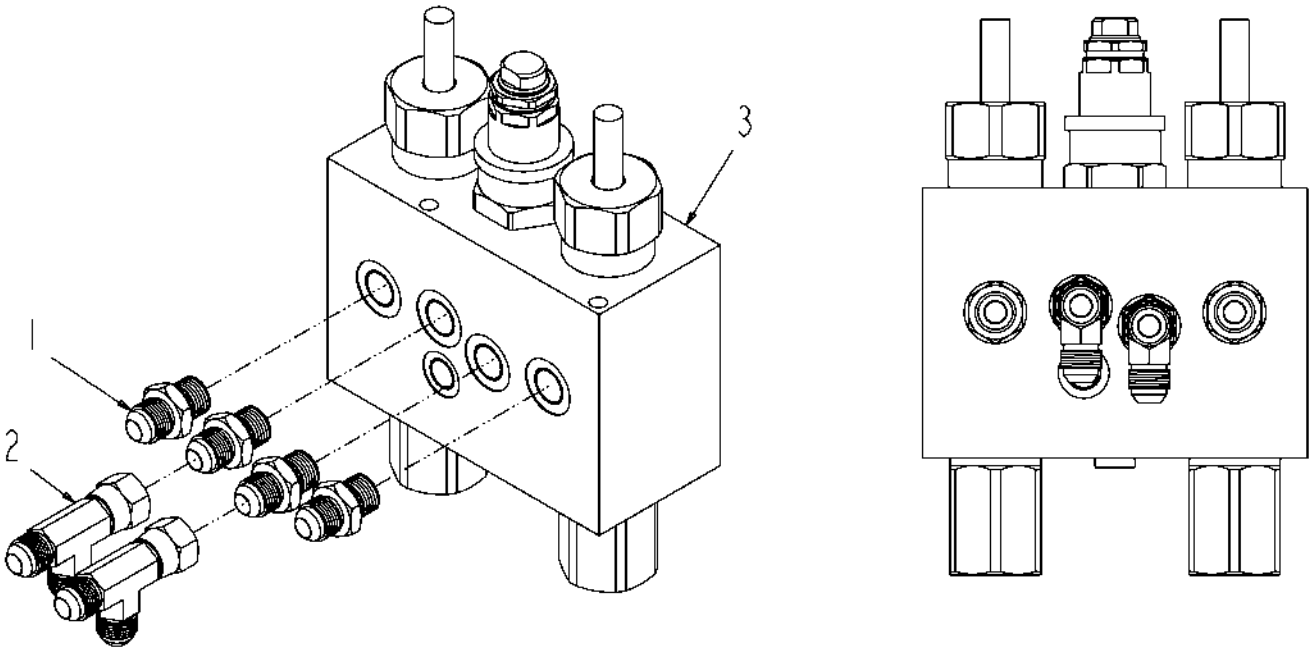

511984D1-01-N494-.TIF

Copyright © 2008 AGCO Corporation

VALVE ASM-BRAKE

ITEM	PART #	QTY	DESCRIPTION	COMMENTS
1	AG516580	4	ADAP STR M14-1.5 OR X 0.37MJIC	
2	AG561391	2	TEE 0.37FJIC SW X 0.37MJIC(2)	
3	511983D1	1	VALVE-BRAKE,L/R,DUAL SLOPE	SEE PAGE 6-100

Copyright © 2008 AGCO Corporation

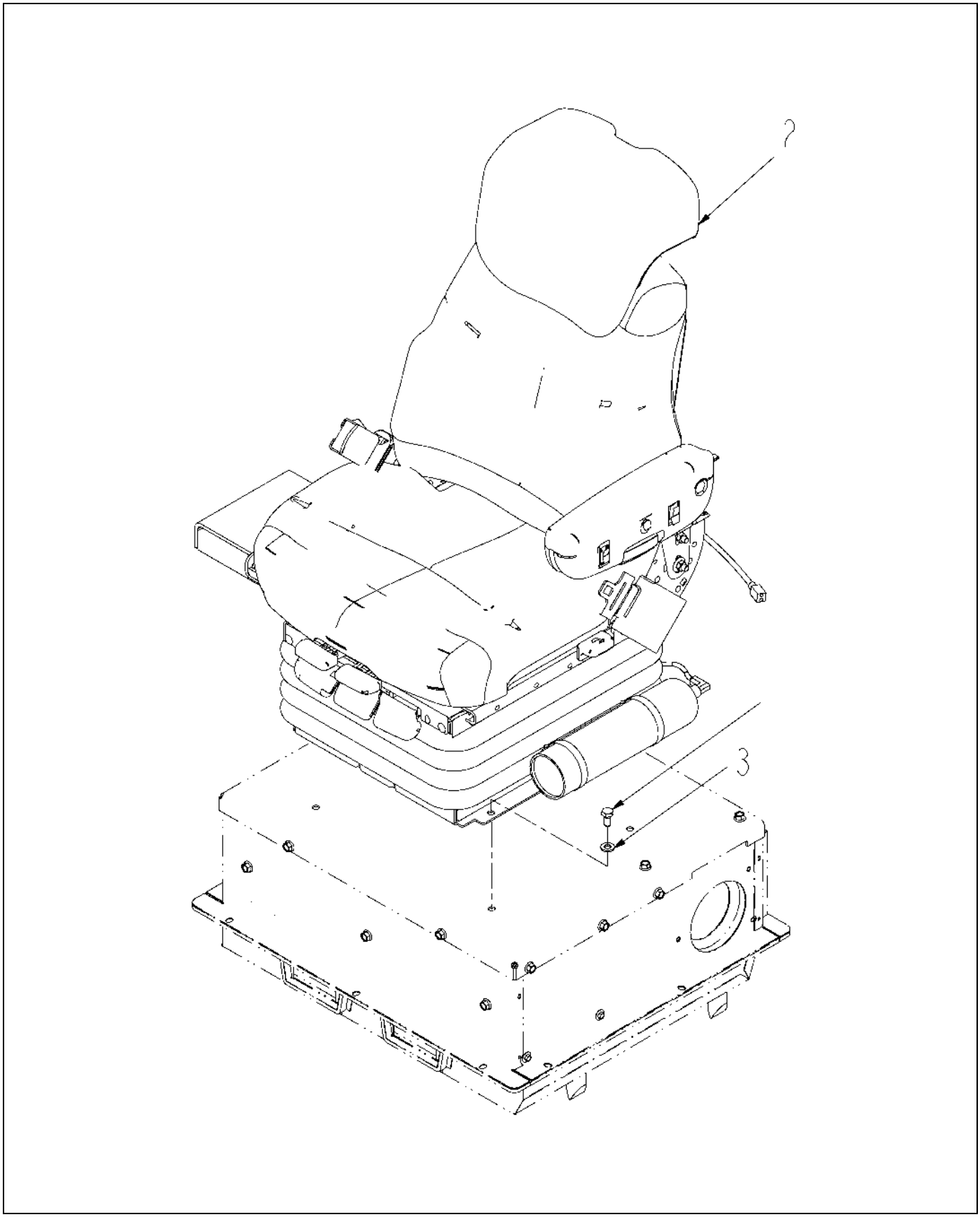

503035D1-03-M866-.TIF

Copyright © 2008 AGCO Corporation

SEAT INSTALL-DELUXE

ITEM	PART #	QTY	DESCRIPTION	COMMENTS
1	400167X1	4	BOLT-M10X1.5X20 PH&O HHD 10.9	
2	503036D2	1	SEAT ASM-DELUXE, SEMI ACTIVE	SEE PAGE 7-15
3	CH6V-5839	4	WASHER-HARD 11IDX21ODX2.5MM	

Copyright © 2008 AGCO Corporation

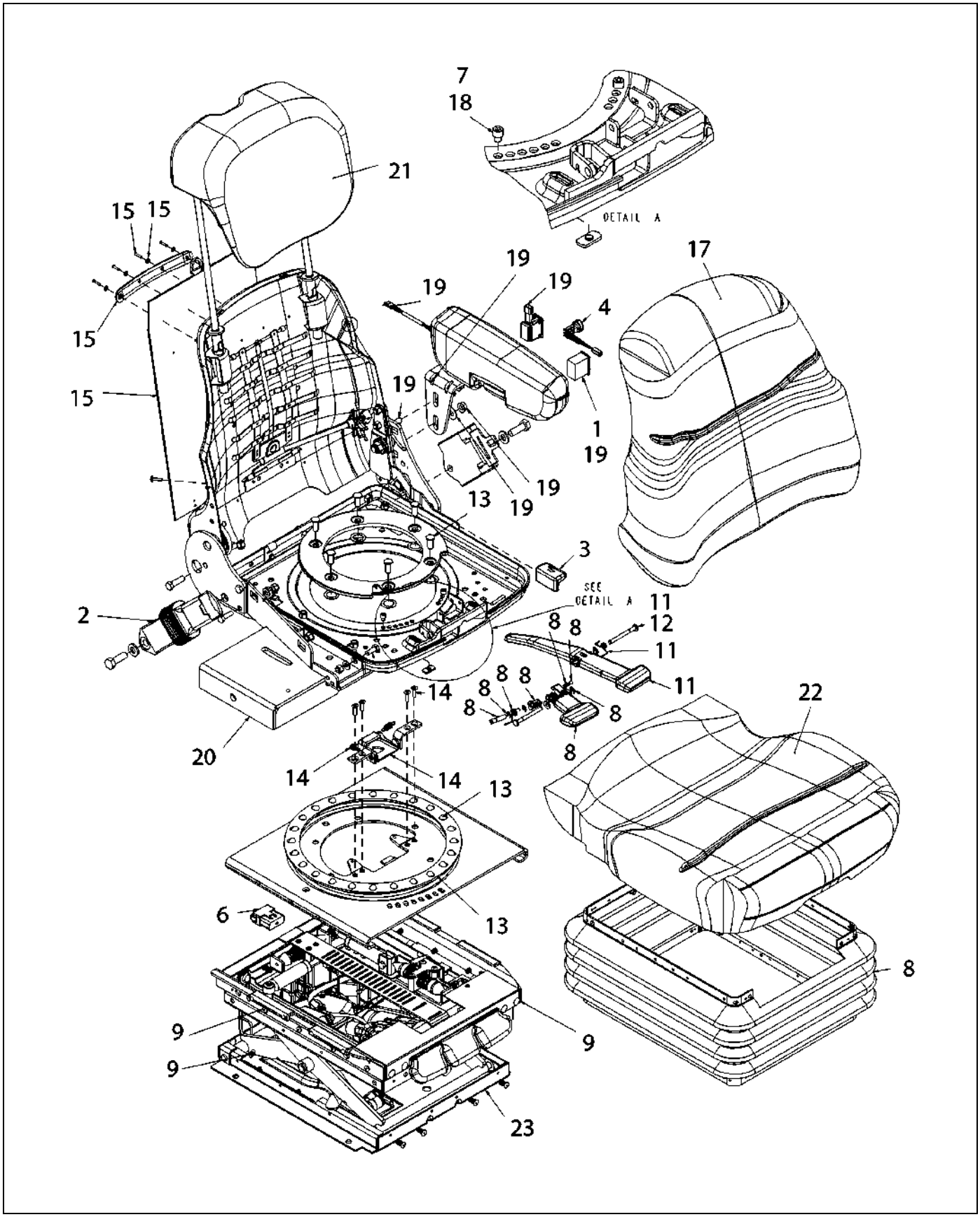

503036D2-05-R977-.TIF

Copyright © 2008 AGCO Corporation

SEAT ASM-DELUXE, SEMI ACTIVE

ITEM	PART #	QTY	DESCRIPTION	COMMENTS
1	197-4519	-	KIT - SWITCH AS.	
2	197-4527	-	KIT - SEAT BELT	
3	197-4521	-	KIT-RECLINER KNOB	
4	502929D1	-	KIT-SWITCH AS. (HEATER)	
5	514387D1	1	KIT-WIRE HARNESS	
6	501902D1	-	KIT-HARNESS (SUSPENSION)	
7	508229D1	-	KIT-BOLT, STOP, SWIVEL	
8	197-4546	-	KIT-BOOT	
9	197-4544	-	KIT-BOOT BUTTONS	
10	197-4520	-	KIT-RECLINER AS.	
11	197-4525	-	KIT-LEVER AS.	
12	197-4526	-	KIT-LEVER AS.	
13	197-4550	-	KIT - SWIVEL AS.	
14	197-4529	-	KIT-SLIDE LATCH AS.	
15	501899D1	-	KIT-MANUAL HOLDER	
16	508230D1	-	KIT-SEAT TOP, SST	
17	501911D1	-	KIT-BACK CUSHION AS.	
18	502925D1	-	KIT-SEAT AS. UPPER	
19	502928D1	-	KIT-ARM REST AS. (LH)	SEE PAGE 7-35
20	508231D1	-	KIT-W/MNT,MOUNT,CONSOLE	
21	508234D1	-	KIT-BACK,UPPER	
22	508235D1	-	KIT-CUSHION,SEAT,SST	SEE PAGE 7-16
23	524649D1	-	KIT-SUSPENSION	SEE PAGE 7-17

Copyright © 2008 AGCO Corporation

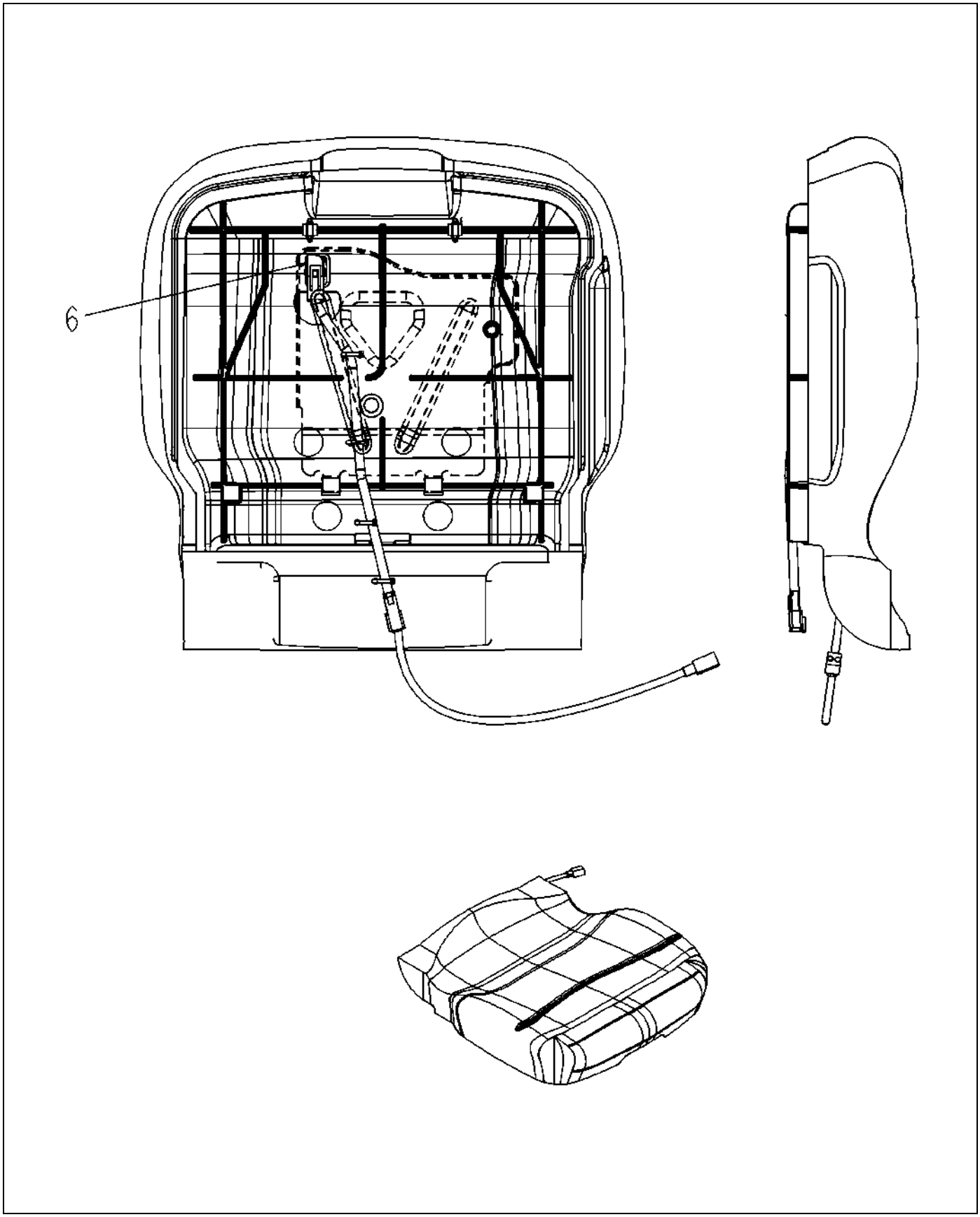

508235D1-01-M866-.TIF

Copyright © 2008 AGCO Corporation

KIT-CUSHION,SEAT,SST

ITEM	PART #	QTY	DESCRIPTION	COMMENTS
6	AG333405	1	SWITCH, SEAT	

Copyright © 2008 AGCO Corporation

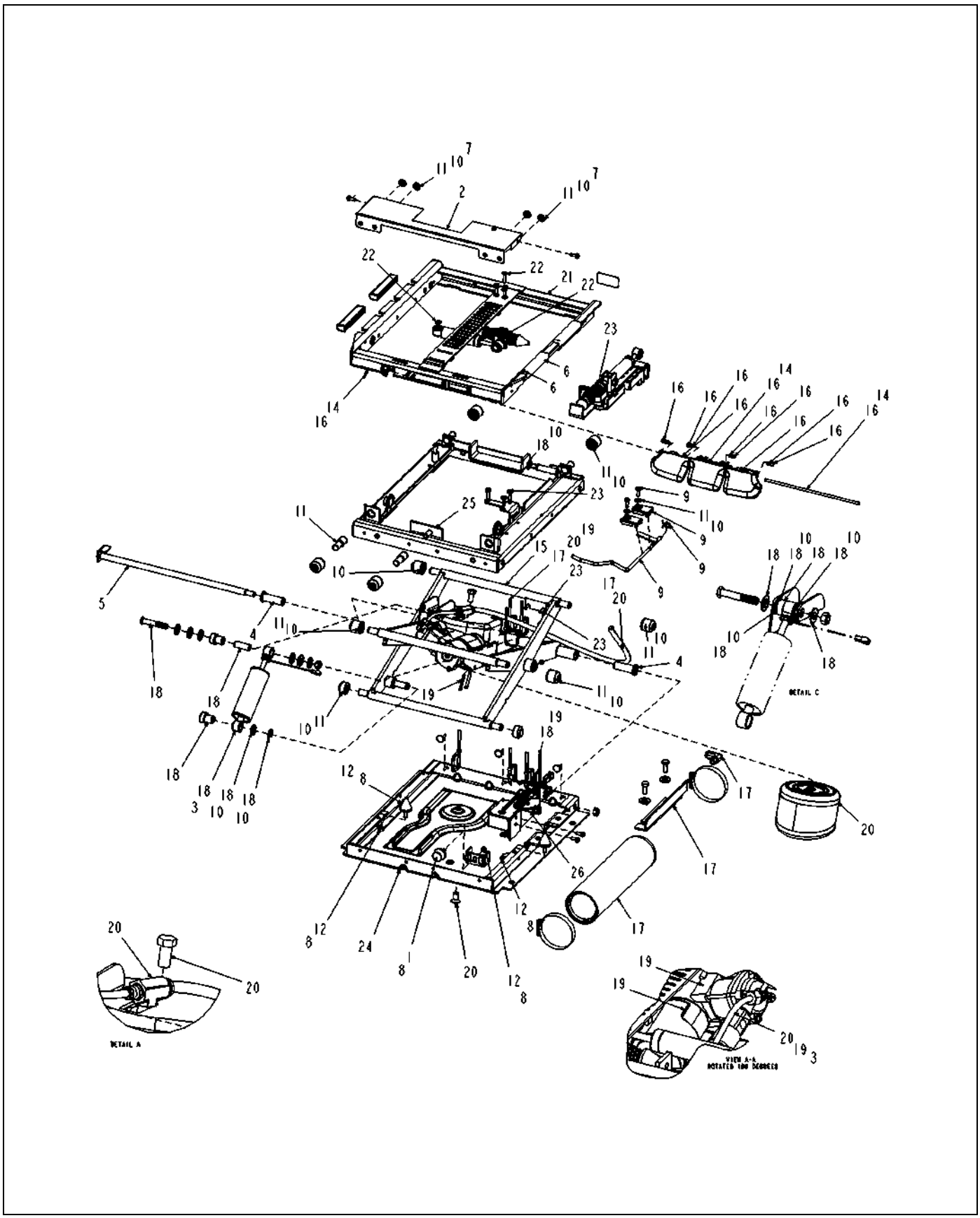

524649D1-01-R977-.TIF

Copyright © 2008 AGCO Corporation

KIT-SUSPENSION

ITEM	PART #	QTY	DESCRIPTION	COMMENTS
REF	197-4538	-	KIT-AIRLINE AS.	
1	AG137812	-	BUMPER	
2	197-4531	-	KIT-COVER PLATE AS.	
3	501917D1	-	KIT-SHOCK AS. (SUSP)	
4	71323841	-	BEARINGS	
5	197-4532	-	KIT - BEARING SHAFT	
6	197-4530	-	KIT-PUCK AS. (SLIDE)	
7	197-4544	-	KIT-BOOT BUTTONS	
8	524550D1	-	KIT-SUSP. BUMPER	
9	197-4547	-	KIT - FORE/AFT	
10	197-4533	-	KIT-ROLLER BEARINGS	
11	197-4534	-	KIT-ISOLATOR ROLLER	
12	197-4537	-	KIT-BUMPER AS. (SUSP)	
14	197-4548	-	KIT-CONTROL(LATERAL	
15	AG137799	-	WLDMT/ARM SUSP	
16	501919D1	-	KIT-KNOB AS. (SUSP)	
17	501918D1	-	KIT-AIR TANK	
18	501920D1	-	KIT-CONTROL AS. (SHOCK)	
19	524551D1	-	KIT-COMPRESSOR	
20	524552D1	-	KIT-AIR SPRING	
21	501903D1	-	KIT-HOUSING AS.	
22	501906D1	-	KIT-SPRING & SHOCK AS.	
23	501907D2	-	KIT-SPRING & SHOCK AS.	
24	AG137792	-	WLDMT/HOUSING LOWER	
25	524553D1	-	KIT-WELDMT. HOUSING, UPPER	
26	501922D1	-	KIT-CONTROL DAMPER	

Copyright © 2008 AGCO Corporation

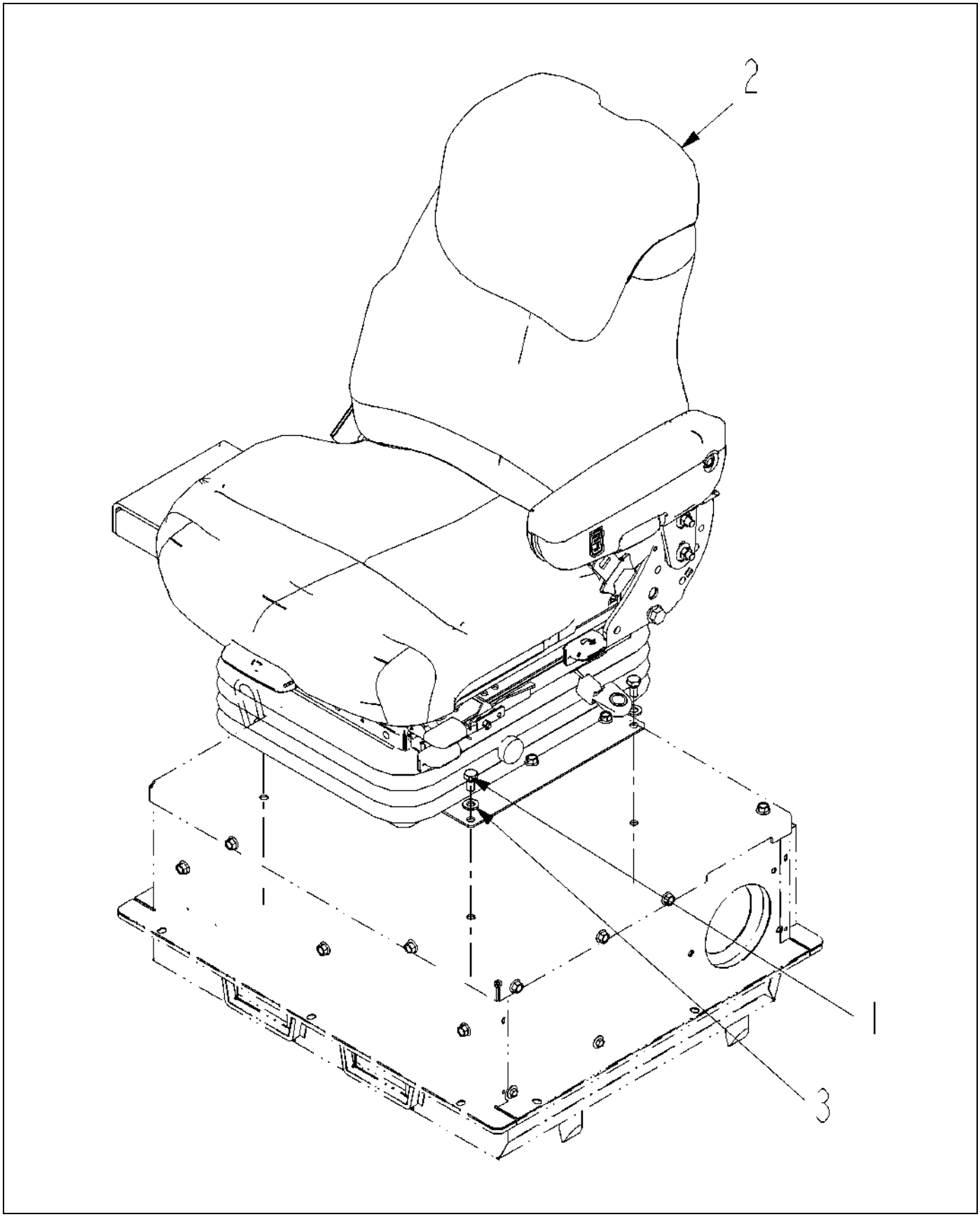

503078D1-04-N355-.TIF

Copyright © 2008 AGCO Corporation

SEAT INSTALL-BASIC

ITEM	PART #	QTY	DESCRIPTION	COMMENTS
1	400167X1	4	BOLT-M10X1.5X20 PH&O HHD 10.9	
2	503079D2	1	SEAT ASM-BASIC, AIR	SEE PAGE 7-19
3	CH6V-5839	4	WASHER-HARD 11IDX21ODX2.5MM	

Copyright © 2008 AGCO Corporation

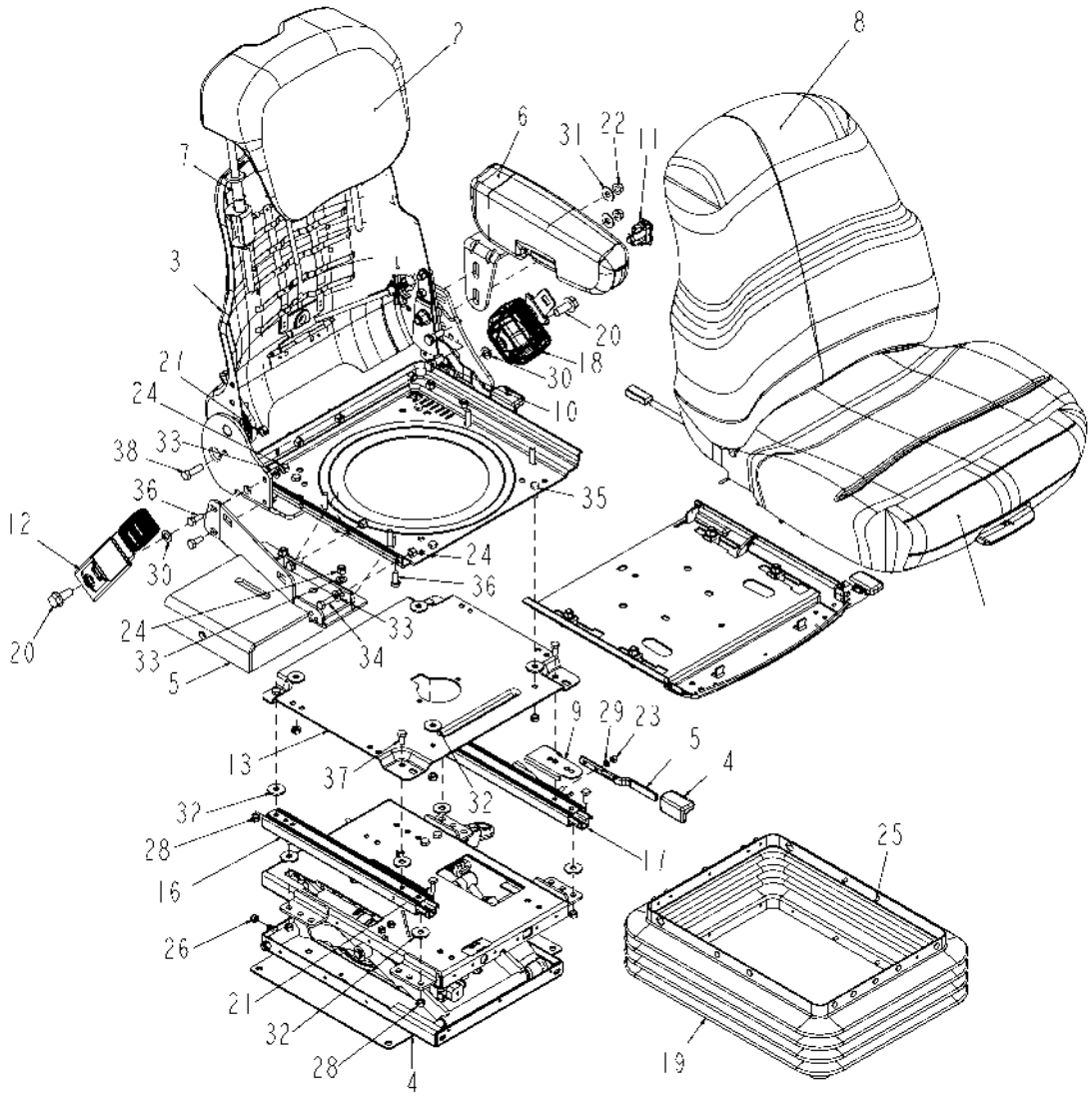

503079D2-01-M866-01.TIF

Copyright © 2008 AGCO Corporation

SEAT ASM-BASIC, AIR

ITEM	PART #	QTY	DESCRIPTION	COMMENTS
1	508261D1	1	KIT-CUSHION,SEAT,SST DLX,W/OPS	
2	508234D1	1	KIT-BACK,UPPER	
3	508260D1	1	KIT-SEAT TOP,SST DLX	
4	508259D1	1	KIT-SUSP,AIR,LOW PROFILE	SEE PAGE 7-20
5	508231D1	1	KIT-W/MNT,MOUNT,CONSOLE	
6	508239D1	1	KIT-ARM & BRKT,L.H.	
7	NS	-	NON-SERVICEABLE PART	
8	508258D1	1	KIT-CUSHION,BACK,SST	
9	508262D1	1	KIT-SERVICE,SLIDES	
10	NS	-	NON-SERVICEABLE PART	
11	508257D1	1	KIT-SWITCH,VALVE W/90 ELBOW	
12	508264D1	1	KIT-SERVICE,BELT,SEAT	
13	NS	-	NON-SERVICEABLE PART	
14	NS	-	NON-SERVICEABLE PART	
15	508262D1	-	KIT-SERVICE,SLIDES	
16	508262D1	-	KIT-SERVICE,SLIDES	
17	508262D1	-	KIT-SERVICE,SLIDES	
18	508264D1	-	KIT-SERVICE,BELT,SEAT	
19	508263D1	1	KIT-SERVICE,BOOT,LP AIR	
19	508256D1	1	KIT-BOOT, SUSPENSION	
20	508264D1	-	KIT-SERVICE,BELT,SEAT	
21	508262D1	-	KIT-SERVICE,SLIDES	
22	NS	-	NON-SERVICEABLE PART	
23	NS	-	NON-SERVICEABLE PART	
24	NS	-	NON-SERVICEABLE PART	
25	508263D1	-	KIT-SERVICE,BOOT,LP AIR	
26	508263D1	-	KIT-SERVICE,BOOT,LP AIR	
27	AG550825	1	NUT 0.37-16NC HEX ZN REG	
28	AG550213	12	NUT 0.31-18NC HEX ZN REG	
29	NS	-	NON-SERVICEABLE PART	
30	NS	-	NON-SERVICEABLE PART	
31	NS	-	NON-SERVICEABLE PART	
32	NS	-	NON-SERVICEABLE PART	
33	NS	-	NON-SERVICEABLE PART	
34	WR55036	2	SCREW-CAP HEX M8 X 25	
35	AG550183	4	BOLT 0.31-18NCX 0.75 G5 ZN HHD	
36	WR55035	4	SCREW-CAP HEX M8 X 20	
37	AG550183	4	BOLT 0.31-18NCX 0.75 G5 ZN HHD	
38	AG561187	1	BOLT 0.37-16NCX 1.25 G5 PL HHD	

Copyright © 2008 AGCO Corporation

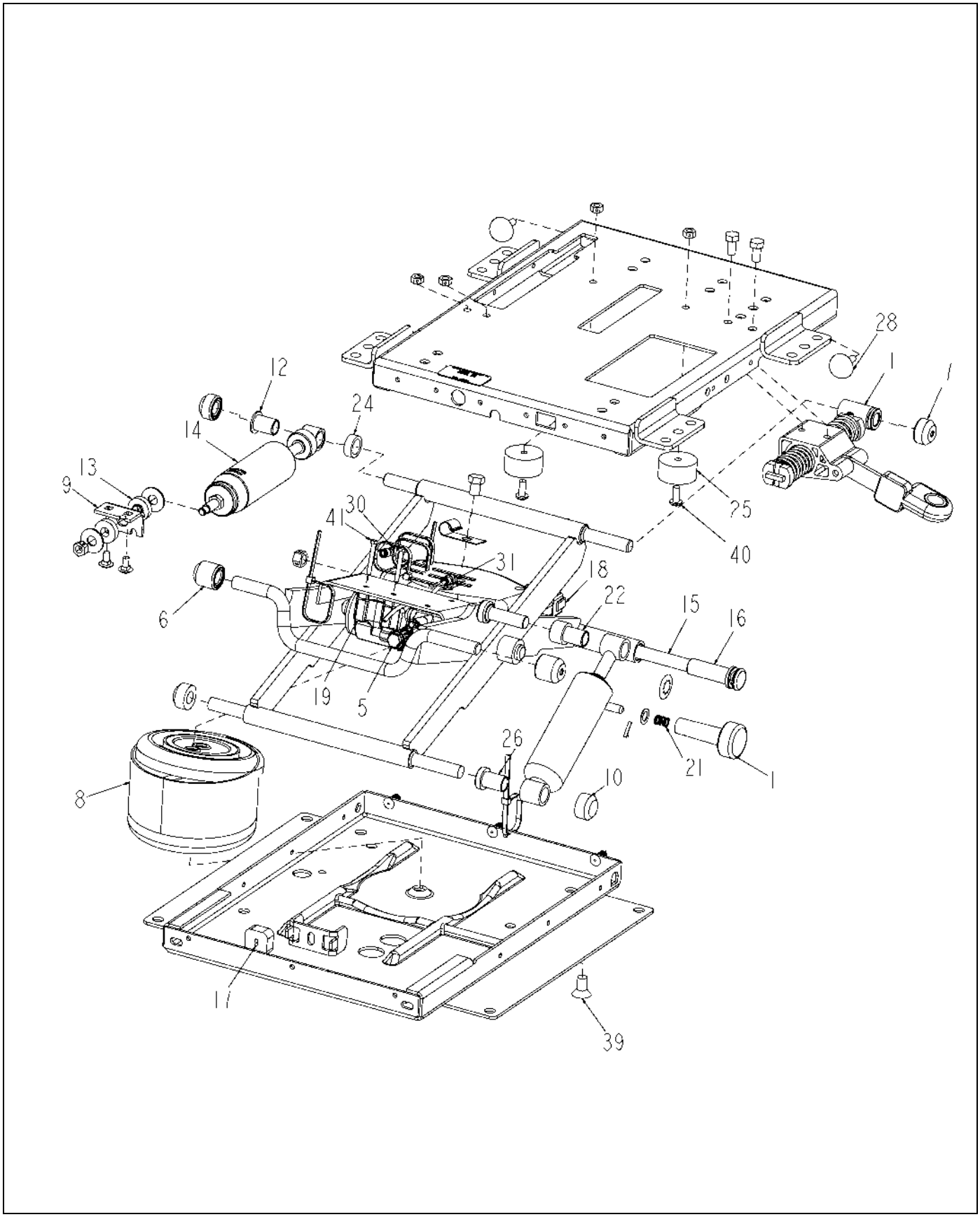

508259D1-01-M866-.TIF

Copyright © 2008 AGCO Corporation

KIT-SUSP,AIR,LOW PROFILE

ITEM	PART #	QTY	DESCRIPTION	COMMENTS
1	508274D1	1	KIT-LATCH,ISOLATOR	
5	508272D1	-	KIT-SERVICE,COMPRESSOR,	
6	508269D1	1	KIT-SUSPENSION BEARING/ROLLER	
7	508269D1	2	KIT-SUSPENSION BEARING/ROLLER	
8	508271D1	1	KIT-AIR SPRING	
9	508275D1	1	KIT-FORE-AFT ISOLATOR SHOCK	
10	508269D1	-	KIT-SUSPENSION BEARING/ROLLER	
11	508273D1	1	KIT-SERVICE,SHOCK,ADJUSTABLE	
12	508269D1	-	KIT-SUSPENSION BEARING/ROLLER	
13	508275D1	-	KIT-FORE-AFT ISOLATOR SHOCK	
14	508275D1	-	KIT-FORE-AFT ISOLATOR SHOCK	
15	508268D1	1	KIT-SHAFT,BEARING	
16	508269D1	-	KIT-SUSPENSION BEARING/ROLLER	
17	508267D1	-	KIT-BUMPER	
17	508270D1	1	KIT-BUMPER SERVICE	
18	508266D1	-	KIT-WIRE HARNESS,SEAT	
19	508272D1	-	KIT-SERVICE,COMPRESSOR,	
21	508273D1	-	KIT-SERVICE,SHOCK,ADJUSTABLE	
22	508269D1	-	KIT-SUSPENSION BEARING/ROLLER	
24	508275D1	-	KIT-FORE-AFT ISOLATOR SHOCK	
25	508270D1	-	KIT-BUMPER SERVICE	
26	508269D1	-	KIT-SUSPENSION BEARING/ROLLER	
28	508265D1	-	KIT-BUMPER	
30	508272D1	-	KIT-SERVICE,COMPRESSOR,	
31	508271D1	-	KIT-AIR SPRING	
39	508271D1	-	KIT-AIR SPRING	
40	508270D1	-	KIT-BUMPER SERVICE	
41	508272D1	-	KIT-SERVICE,COMPRESSOR,	

Copyright © 2008 AGCO Corporation

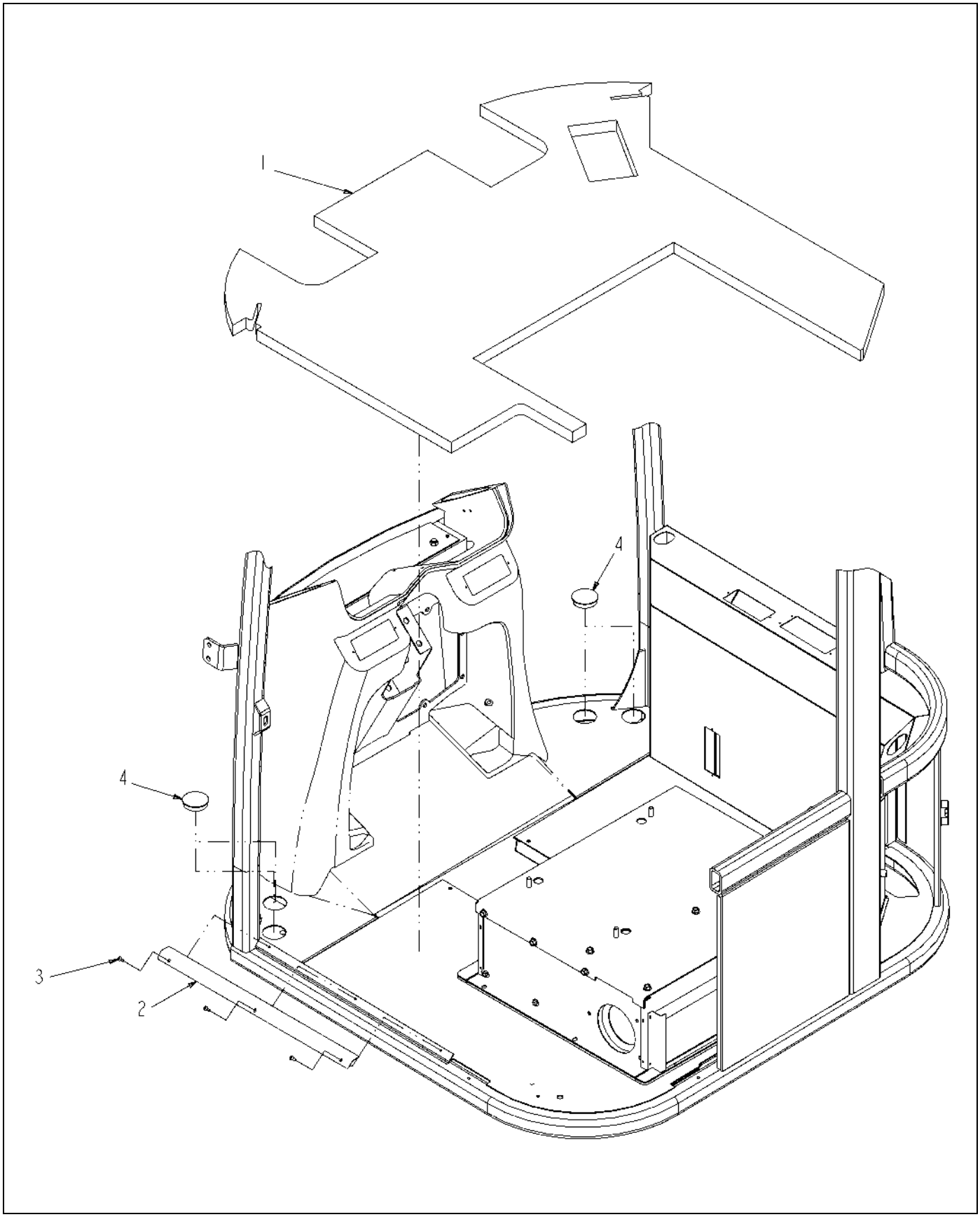

127687-04-K960-.TIF

Copyright © 2008 AGCO Corporation

FLOORMAT INSTALL-CAB

ITEM	PART #	QTY	DESCRIPTION	COMMENTS
1	508116D1	1	FLOOR MAT	
2	WR128019	1	PLATE-THRESHOLD	
3	AG521792	3	SCR-10-24X.63,SS,PNH,TC,SLFTPG	
4	WR29674	4	PLUG-HOLE, PLASTIC	

Copyright © 2008 AGCO Corporation

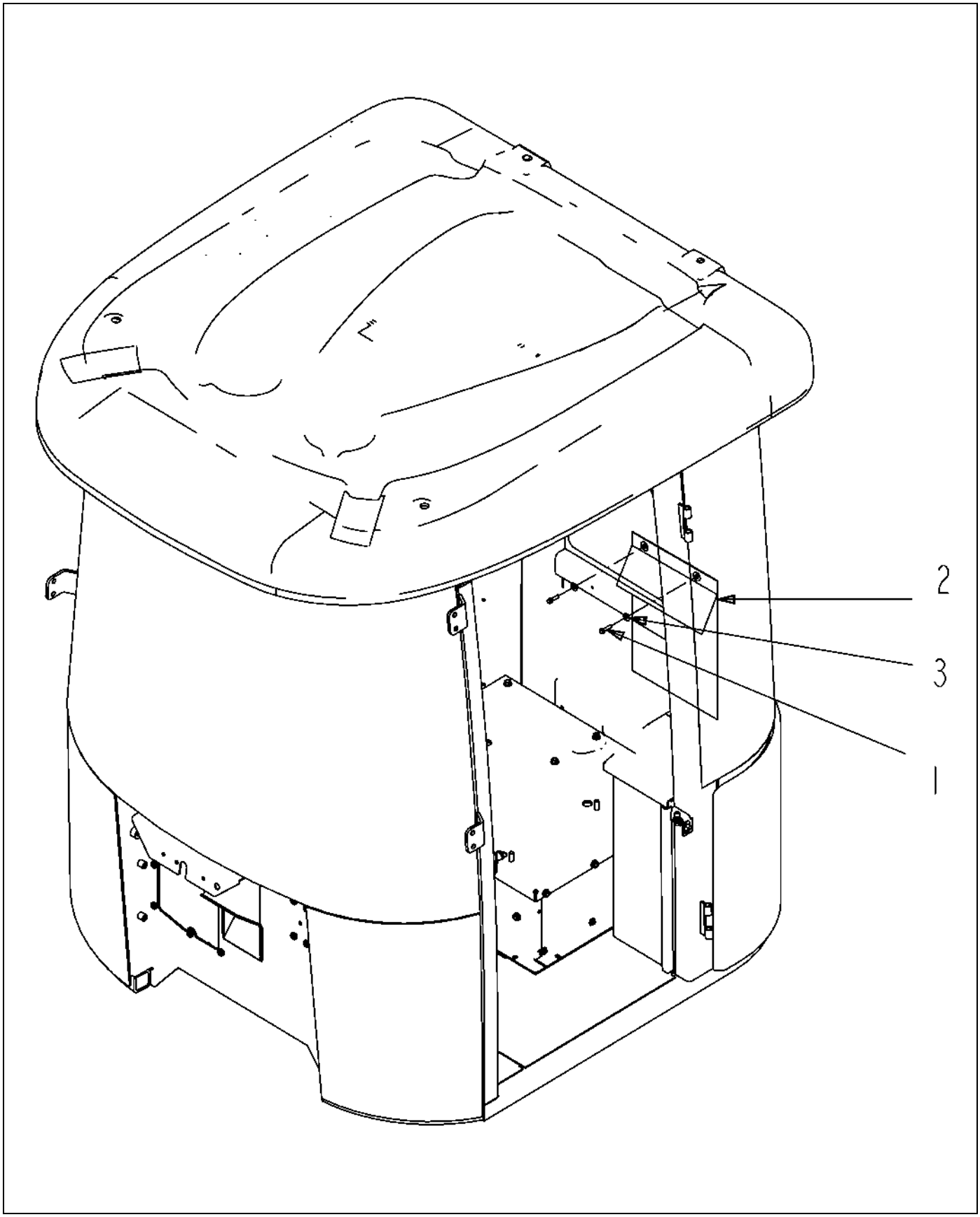

507125D1-02-N397-.TIF

Copyright © 2008 AGCO Corporation

ITEM	PART #	QTY	DESCRIPTION	COMMENTS
1	WR34612	2	SCREW-SELF DRILLING 1/4 X	
2	WR129191	1	DOCUMENT HOLDER	
3	AG550507	2	WASHER 0.25 FL ZN REG TYPE-B	

Copyright © 2008 AGCO Corporation

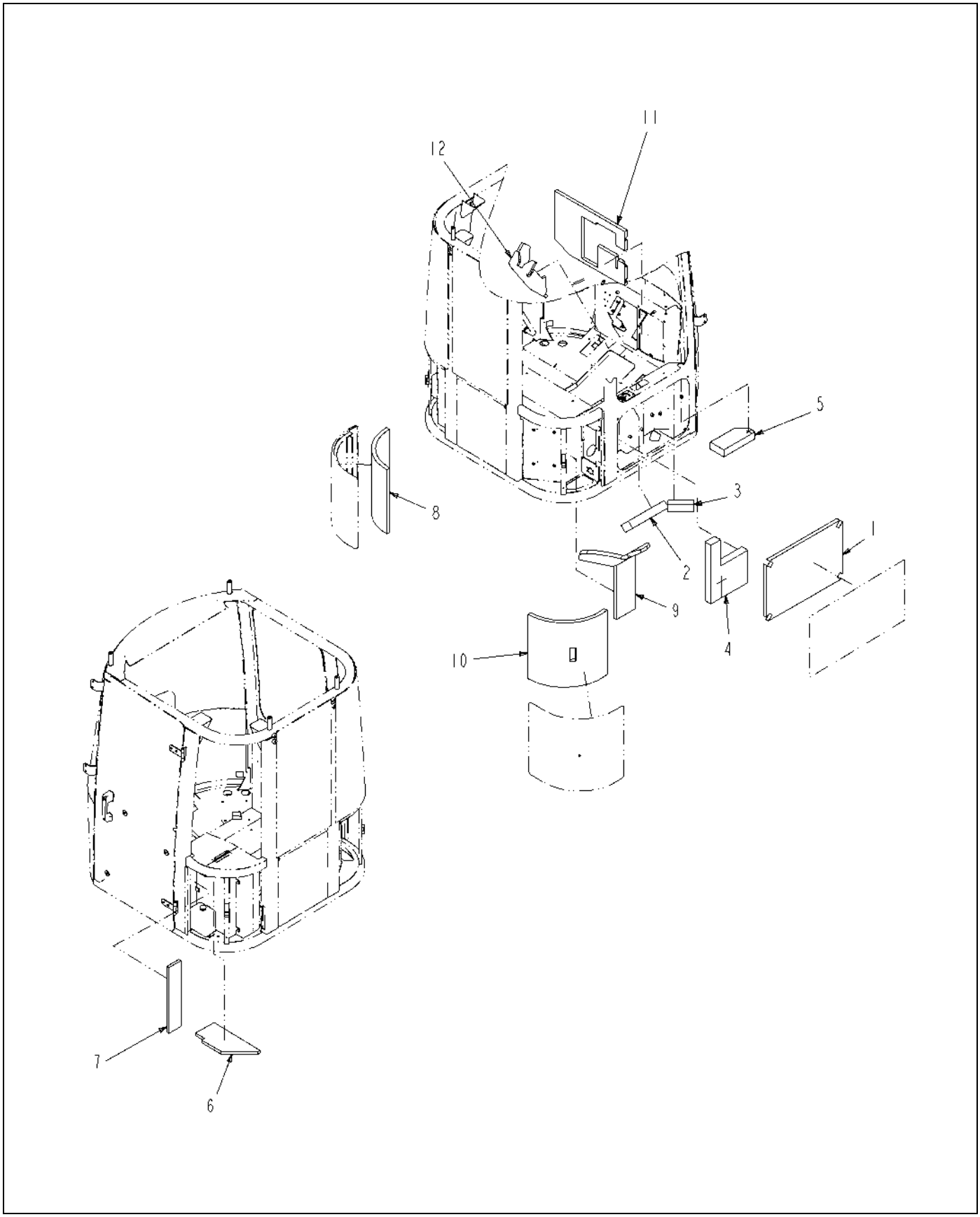

508130D1-01-K960-.TIF

Copyright © 2008 AGCO Corporation

ITEM	PART #	QTY	DESCRIPTION	COMMENTS
1	508099D1	1	PANEL-RH ELEC DOOR COVER	
2	508100D1	1	PANEL,ELEC HOUSING BLOCK 1	
3	508101D1	1	PANEL,ELEC HOUSING BLOCK 2	
4	508102D1	1	PANEL,ELEC HOUSING BLOCK 3	
5	508103D1	1	PANEL,ELEC HOUSING BLOCK 4	
6	508104D1	1	PANEL,LH CAB CORNER TOP	
7	508105D1	1	PANEL,LH CAB CORNER BLOCK 1	
8	508106D1	1	PANEL,LH CAB CORNER ACCESS	
9	508107D1	1	PANEL,RH CAB CORNER BACK WALL	
10	508108D1	1	PANEL,RH CAB CORNER ACCESS	
11	508112D1	1	PANEL,INTERIOR FIREWALL	
12	508113D1	1	PANEL,INTERIOR FIREWALL	

Copyright © 2008 AGCO Corporation

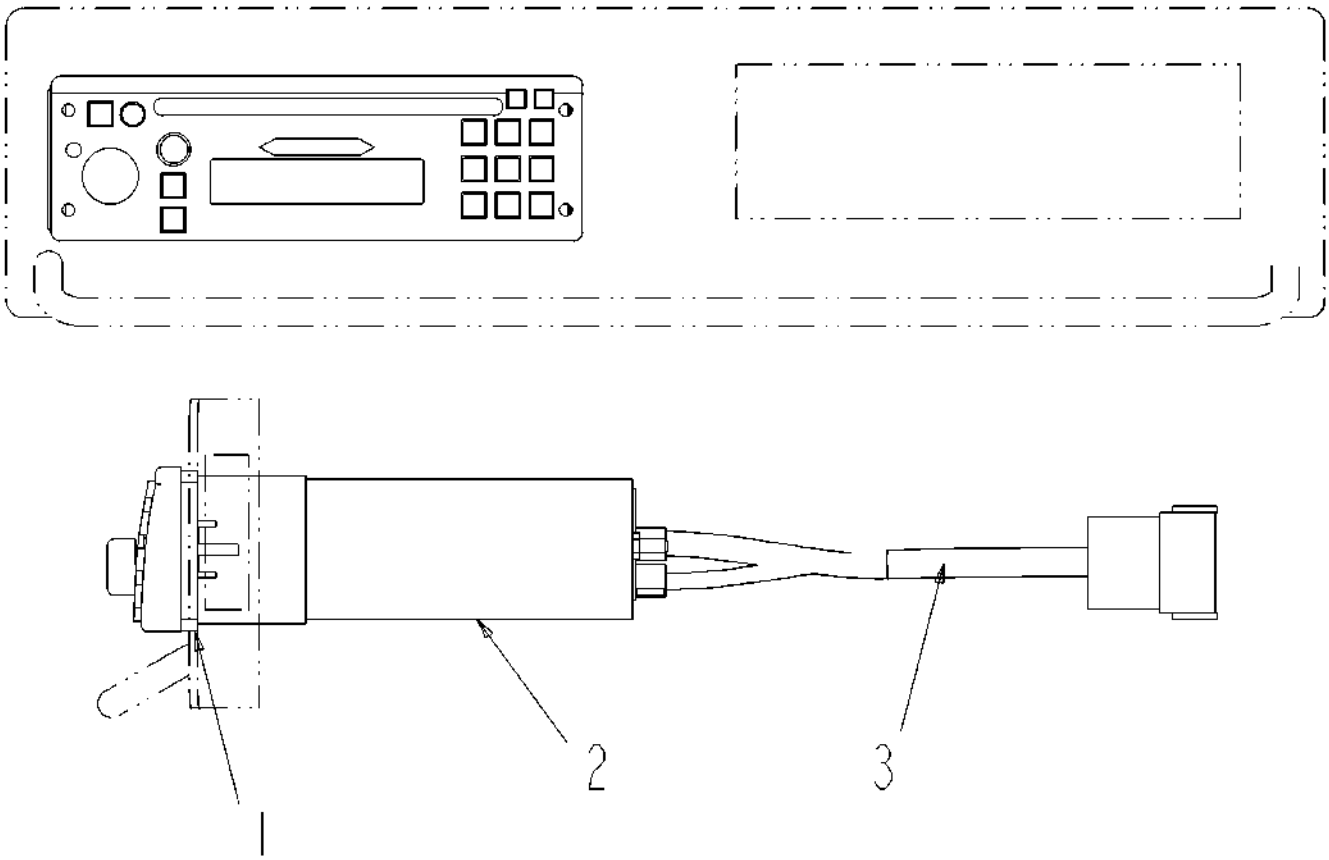

514381D1-02-R530-.TIF

Copyright © 2008 AGCO Corporation

KIT-RADIO,XM

ITEM	PART #	QTY	DESCRIPTION	COMMENTS
1	506596D1	1	SPACER - RADIO	
2	509630D1	1	RADIO-CD (XM)	
3	514906D1	1	HARNESS AS.-RADIO ADAPTER	

Copyright © 2008 AGCO Corporation

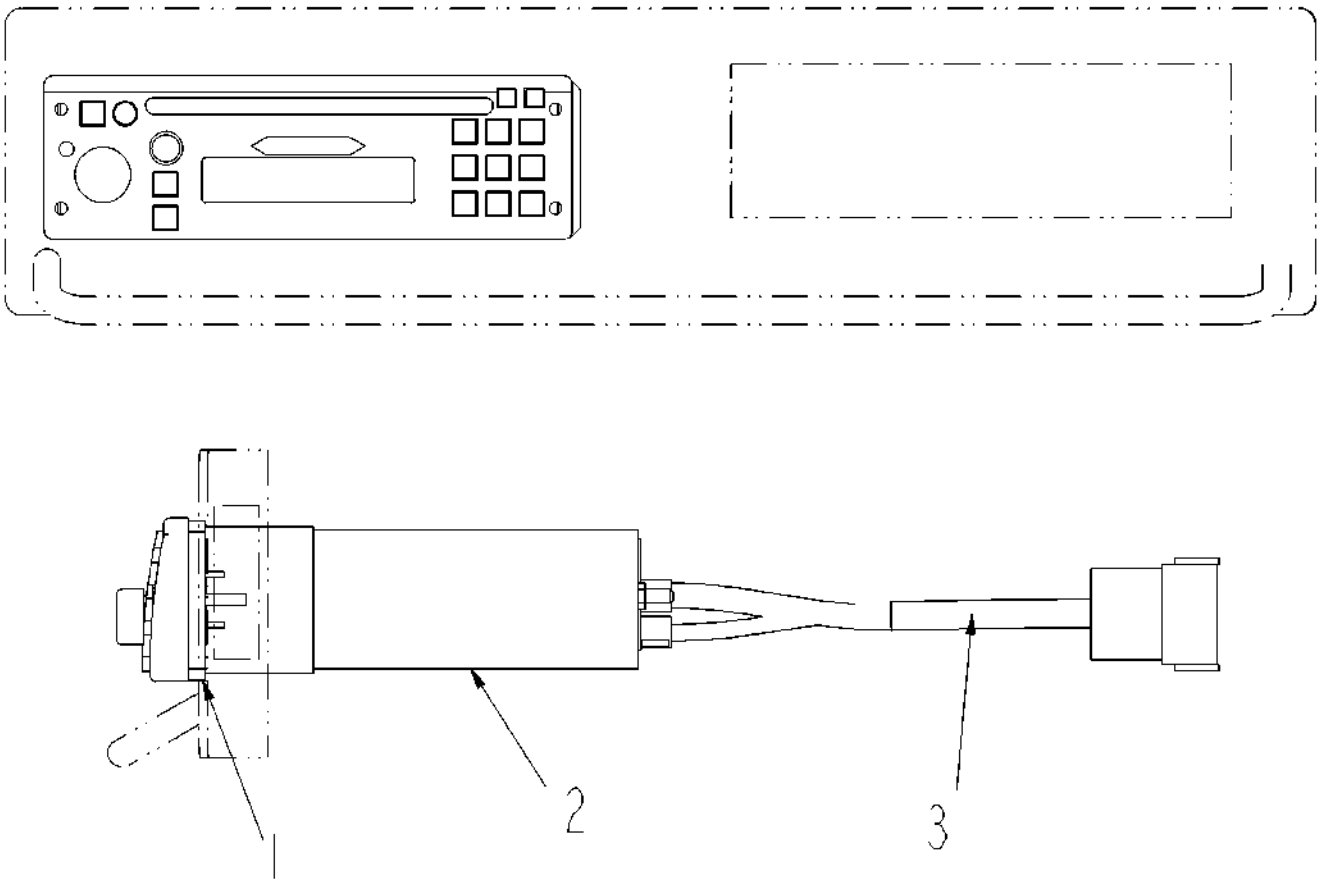

514382D1-02-R530-.TIF

Copyright © 2008 AGCO Corporation

KIT-RADIO,SIRIUS

ITEM	PART #	QTY	DESCRIPTION	COMMENTS
1	506596D1	1	SPACER - RADIO	
2	509631D1	1	RADIO-CD (SIRIUS)	
3	514906D1	1	HARNESS AS.-RADIO ADAPTER	

Copyright © 2008 AGCO Corporation

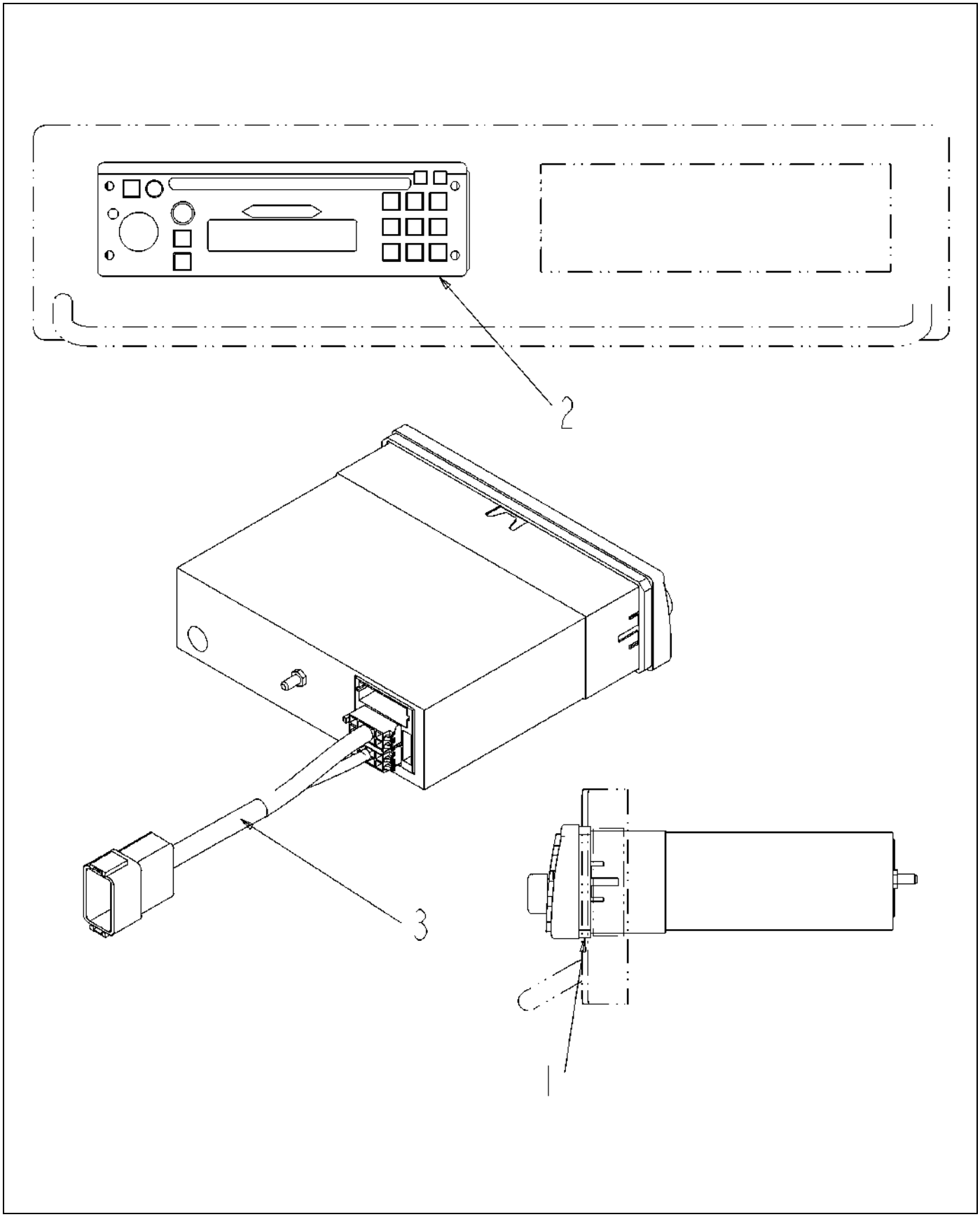

515487D1-02-R530-.TIF

Copyright © 2008 AGCO Corporation

GR-RADIO,DELUXE

ITEM	PART #	QTY	DESCRIPTION	COMMENTS
1	506596D1	1	SPACER - RADIO	
2	509632D1	1	RADIO-CD	
3	514906D1	1	HARNESS AS.-RADIO ADAPTER	

Copyright © 2008 AGCO Corporation

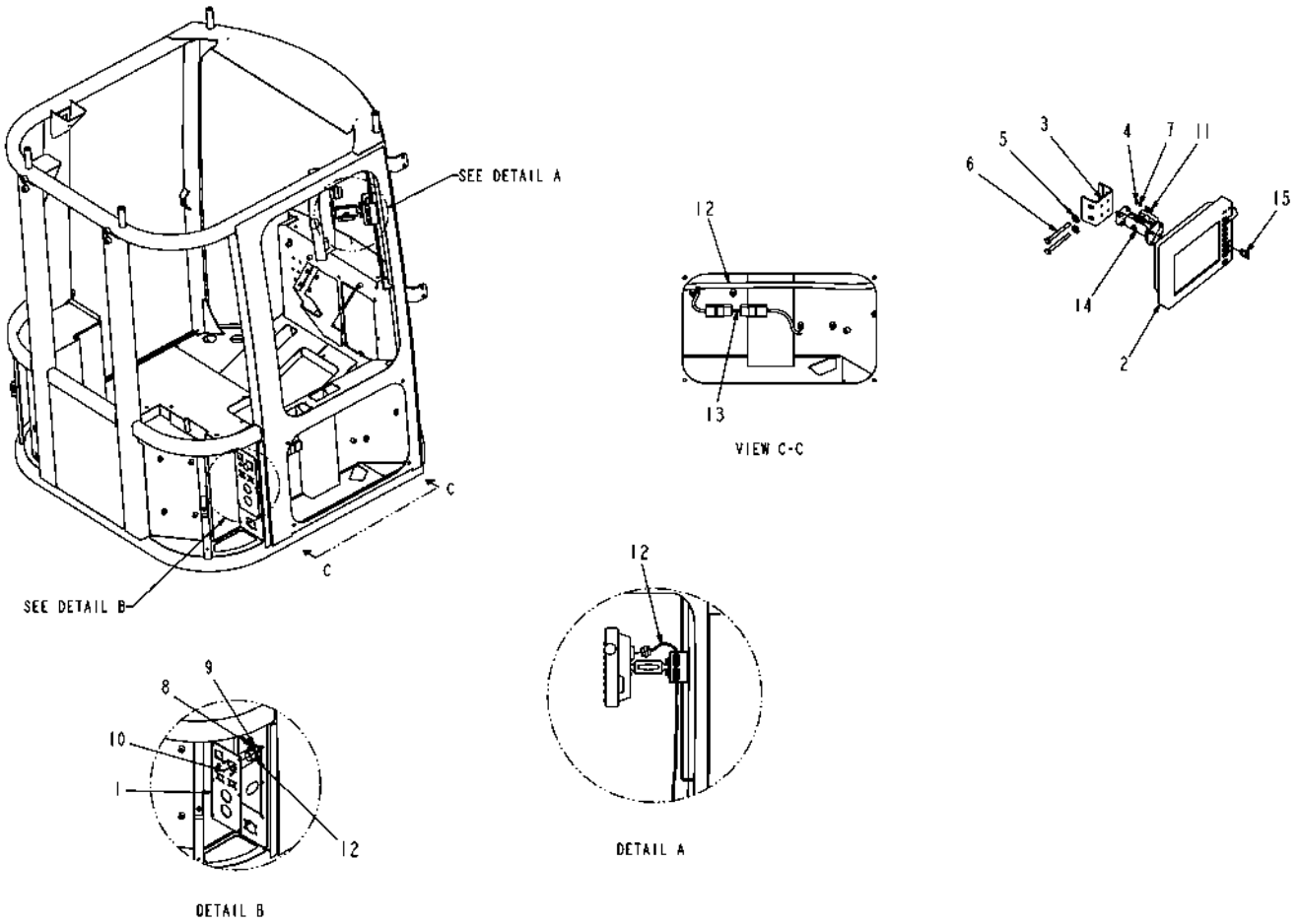

509488D1-05-R014-01.TIF

Copyright © 2008 AGCO Corporation

CONSOLE INSTALL-GTA,SC7000

ITEM	PART #	QTY	DESCRIPTION	COMMENTS
1	WR127138	-	PLATE-BULKHEAD	
2	AG131503	1	DISPLAY-VIRTUAL TERMINAL	
3	AG326925	1	CLAMP WLDMT-MTG,CTRL/MONITOR	
4	AG520879	8	WASHER-FLAT,M6,ZN,REG	
5	AG551007	2	WASHER 0.37 FL ZN REG TYPE-B	
6	AG562364	2	BOLT M10-1.5X100MM G8.8 ZN HHD	
7	AG562792	8	WASHER LOCK M6 SPRING ZN	
8	AG563174	4	WASHER #4 FL SS NAR TYPE-B	
9	AG563175	4	NUT #4-40NC HEX SS REG NY	
10	AG710181	4	SCREW #4-40 X .50LG PAN HD SS	
11	400221X1	8	BOLT-M6X1X20MM ZNDI HHD 10.9	
12	505696D1	1	HARNESS-CONSOLE II,GTA	
13	511798D1	1	HARNESS-ADAPTER,PWR,CONSOLE	
14	513214D1	1	CLAMP ASM-MTG,BALL,4.00,GTA	
15	516698D1	1	SOFTWARE INSTL-FALCON VT	

Copyright © 2008 AGCO Corporation

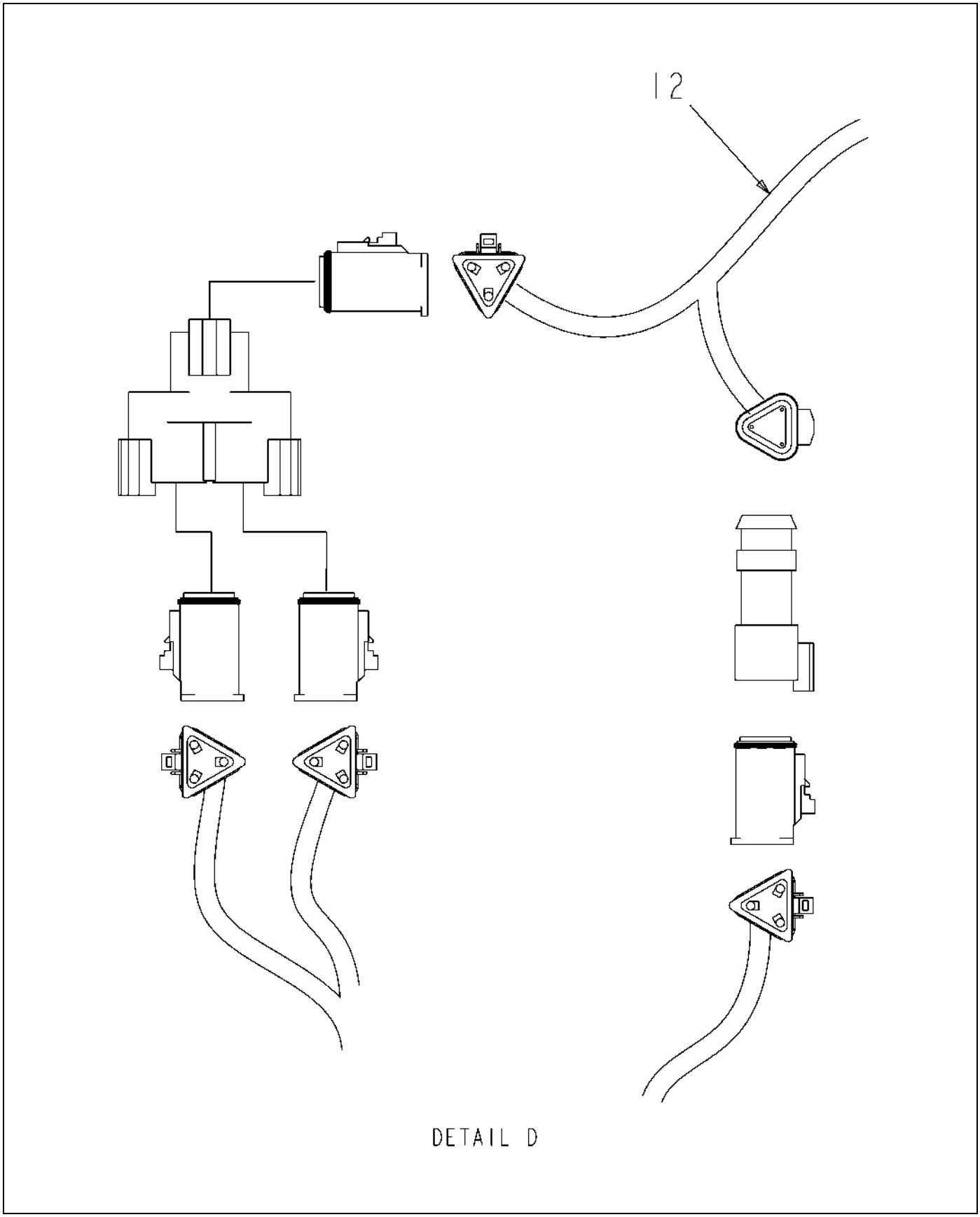

509488D1-05-R014-02.TIF

Copyright © 2008 AGCO Corporation

ITEM	PART #	QTY	DESCRIPTION	COMMENTS
12	505696D1	1	HARNESS-CONSOLE II,GTA	

Copyright © 2008 AGCO Corporation

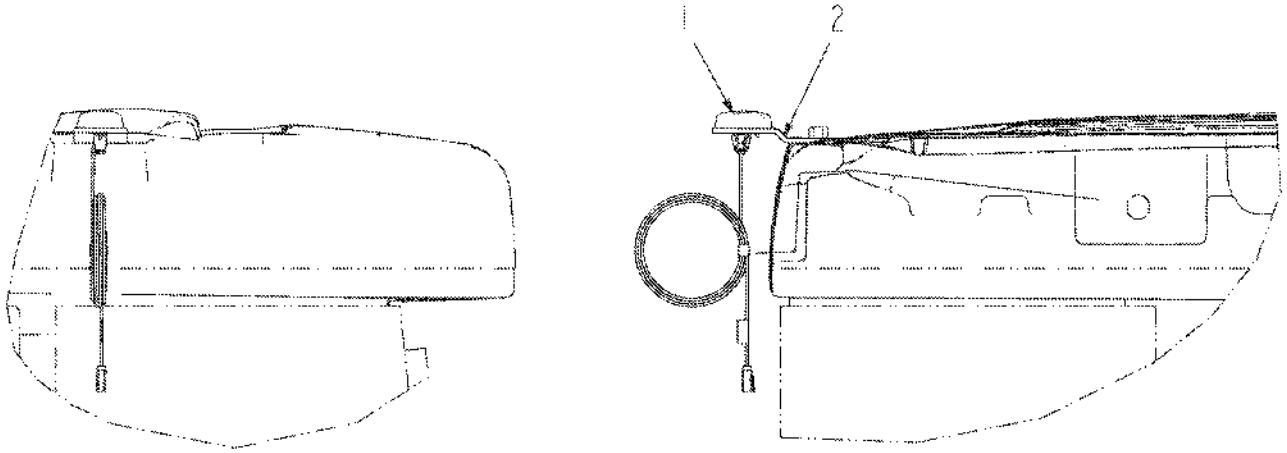

514383D1-01-N899-.TIF

Copyright © 2008 AGCO Corporation

INSTALL-ANTENNA,SAT

ITEM	PART #	QTY	DESCRIPTION	COMMENTS
1	509637D1	1	SATELLITE-RADIO ANTENNA	
2	514384D1	1	BRKT-MNT,ANTENNA,SAT	

Copyright © 2008 AGCO Corporation

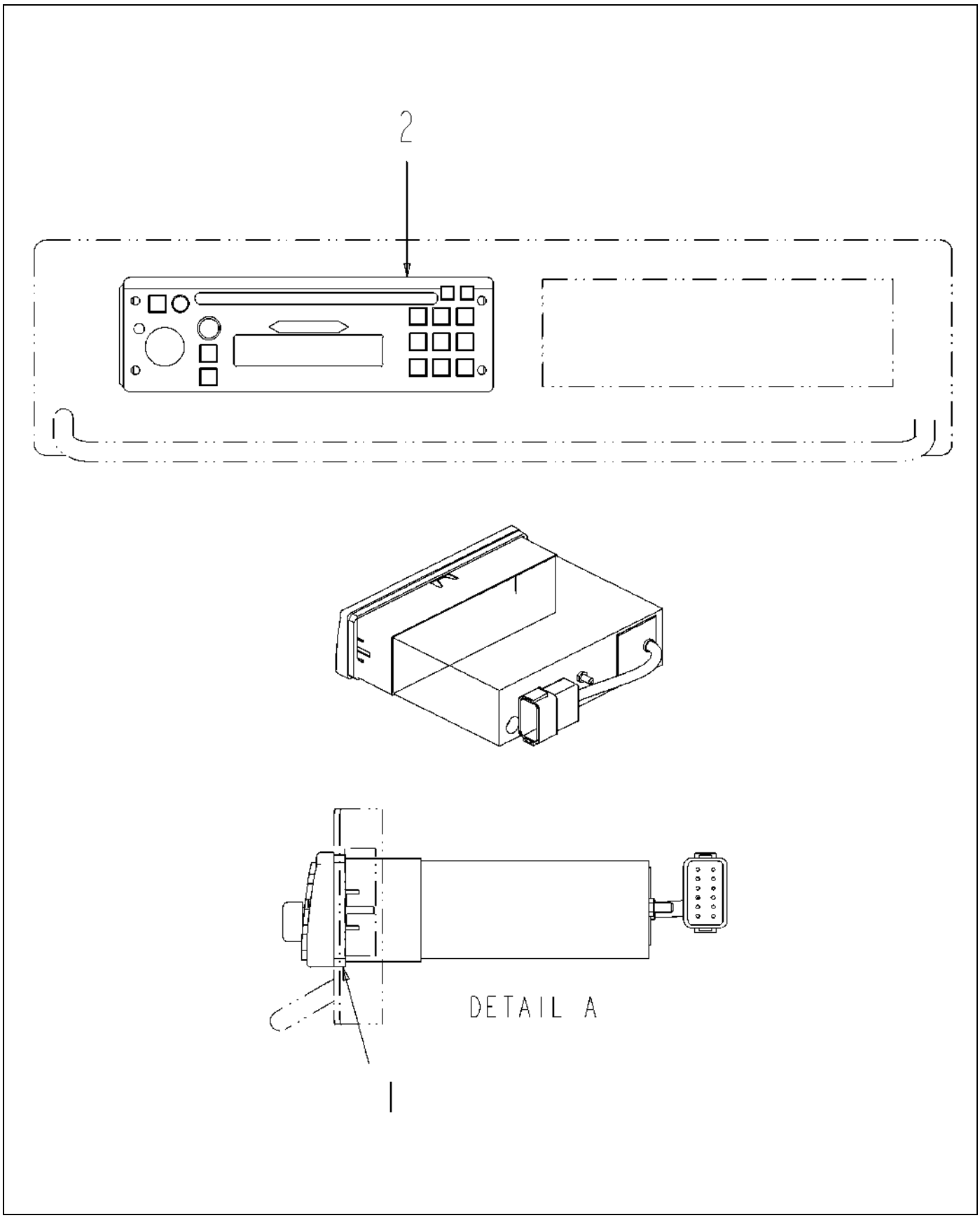

514911D1-03-T173-.TIF

Copyright © 2008 AGCO Corporation

KIT-RADIO,AM/FM STEREO W/CD

ITEM	PART #	QTY	DESCRIPTION	COMMENTS
1	506596D1	1	SPACER - RADIO	
2	525861D1	1	RADIO-AM/FM STEREO W/CD	

Copyright © 2008 AGCO Corporation

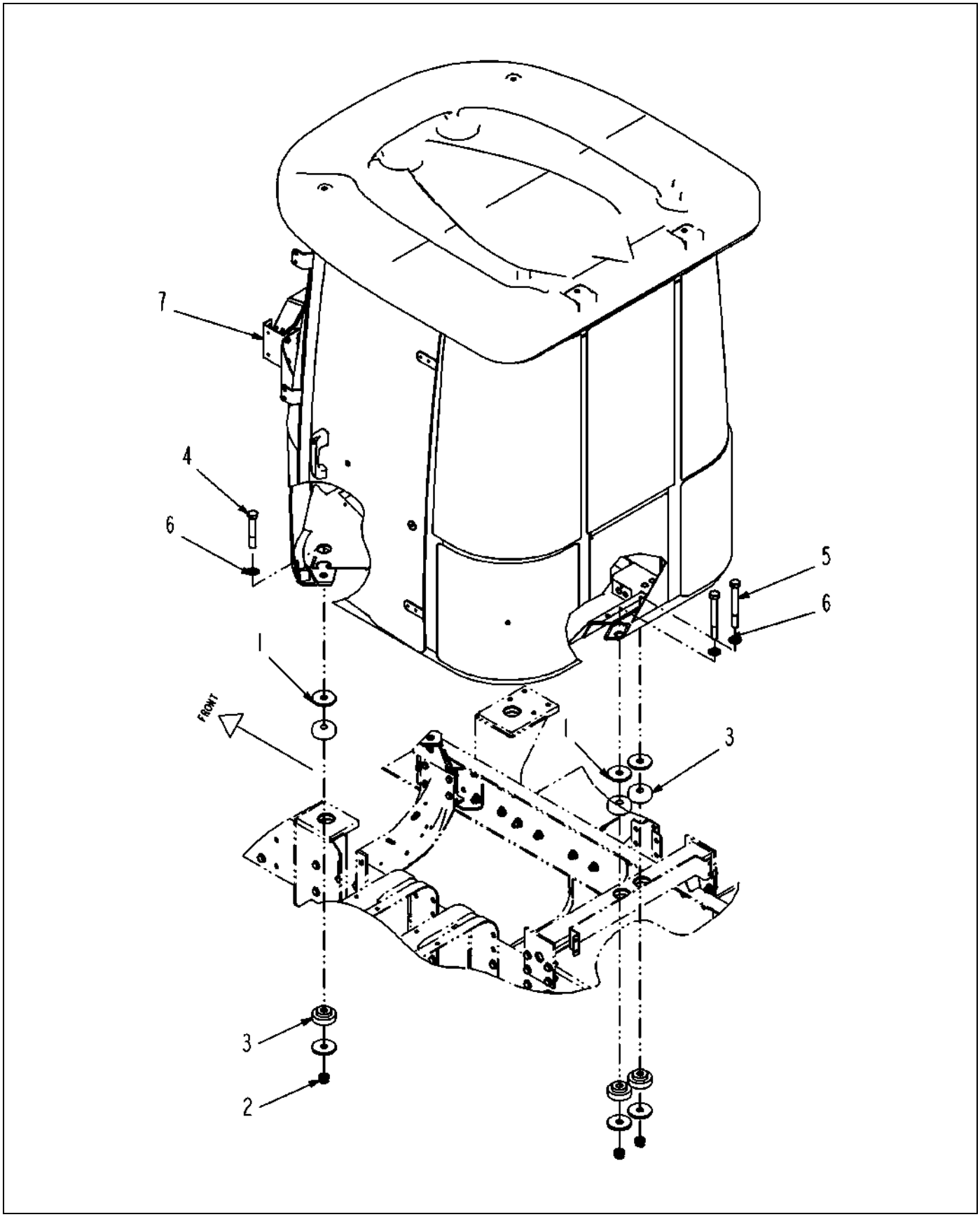

520045D1-02-R624-.TIF

Copyright © 2008 AGCO Corporation

GROUP-CAB,CHAL,STD HVAC

ITEM	PART #	QTY	DESCRIPTION	COMMENTS
1	AG236575	8	SLUG-ISOLATOR,CAB MT	
2	AG516176	4	NUT 0.87-9NC HVY HX FLEX LK PL	
3	AG520640	8	ISOLATOR-SHOCK	
4	AG522710	2	BOLT .87-9UNCX 5.50 G8 ZN HHD	
5	AG561699	2	BOLT 0.87- 9NCX 7.50 G8 ZN HHD	
6	AG606258	4	WASHER 1.75ODX0.93ID G8 ZN	
7	520179D1	1	CAB ASM,CHAL STD HVAC	

Copyright © 2008 AGCO Corporation

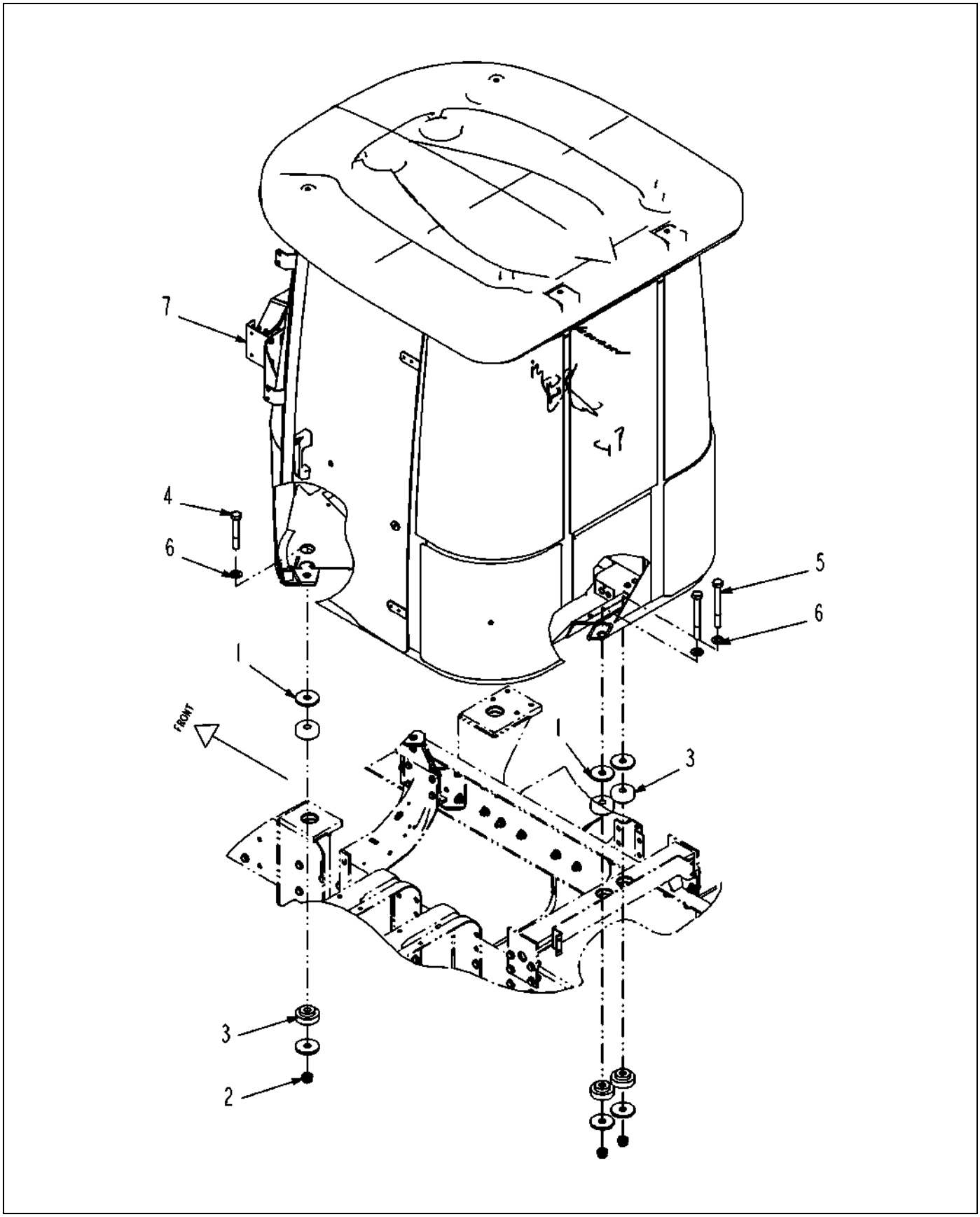

520046D1-02-R624-.TIF

Copyright © 2008 AGCO Corporation

GROUP-CAB,CHAL,ATC

ITEM	PART #	QTY	DESCRIPTION	COMMENTS
1	AG236575	8	SLUG-ISOLATOR,CAB MT	
2	AG516176	4	NUT 0.87-9NC HVY HX FLEX LK PL	
3	AG520640	8	ISOLATOR-SHOCK	
4	AG522710	2	BOLT .87-9UNCX 5.50 G8 ZN HHD	
5	AG561699	2	BOLT 0.87- 9NCX 7.50 G8 ZN HHD	
6	AG606258	4	WASHER 1.75ODX0.93ID G8 ZN	
7	520180D1	1	CAB ASM,CHAL W/ATC	

Copyright © 2008 AGCO Corporation

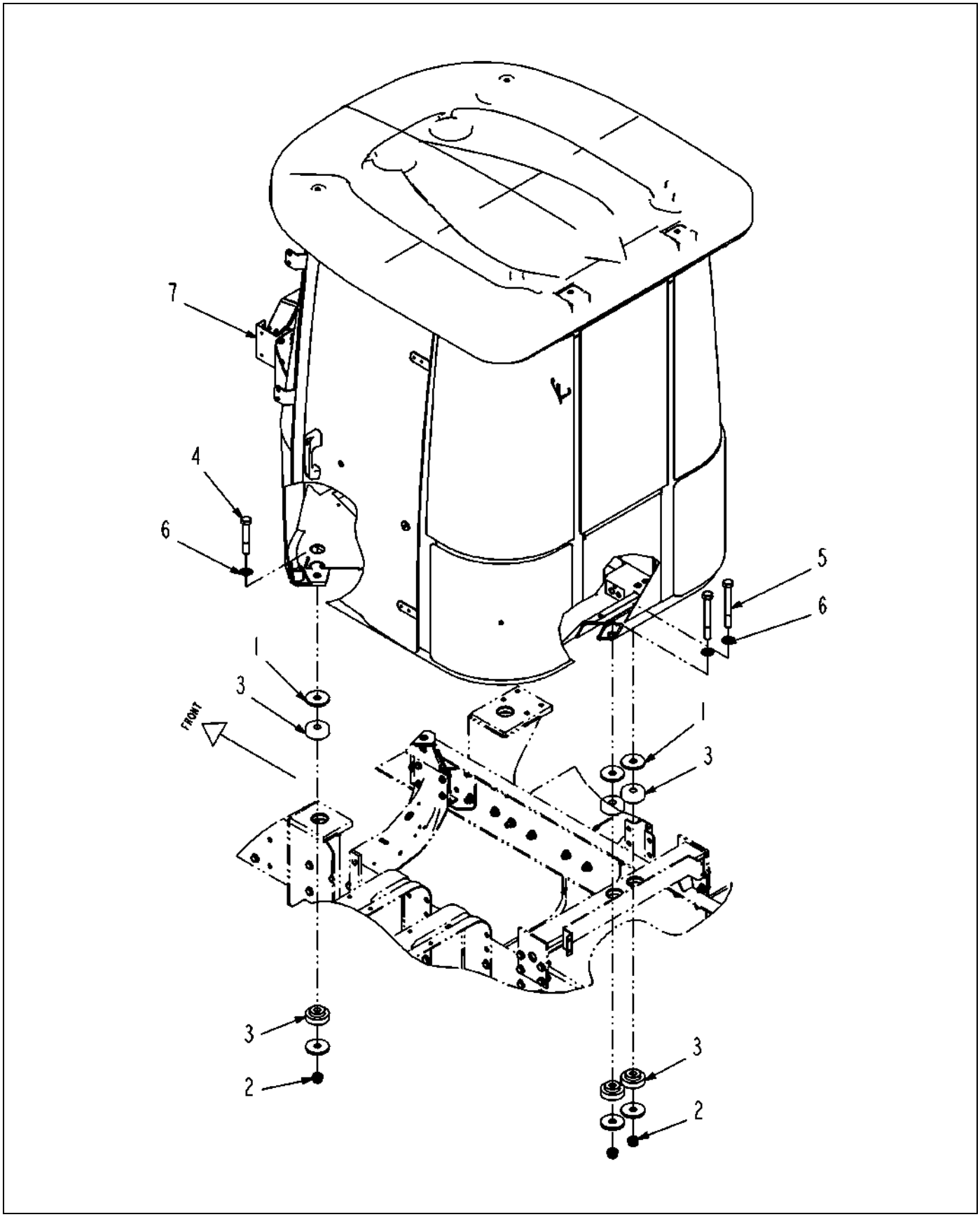

520047D1-02-R624-.TIF

Copyright © 2008 AGCO Corporation

GROUP-CAB,CHAL,EURO,STD HVAC

ITEM	PART #	QTY	DESCRIPTION	COMMENTS
1	AG236575	8	SLUG-ISOLATOR,CAB MT	
2	AG516176	4	NUT 0.87-9NC HVY HX FLEX LK PL	
3	AG520640	8	ISOLATOR-SHOCK	
4	AG522710	2	BOLT .87-9UNCX 5.50 G8 ZN HHD	
5	AG561699	2	BOLT 0.87- 9NCX 7.50 G8 ZN HHD	
6	AG606258	4	WASHER 1.75ODX0.93ID G8 ZN	
7	520181D1	1	CAB ASM,EURO,CHAL,STD HVAC	

Copyright © 2008 AGCO Corporation

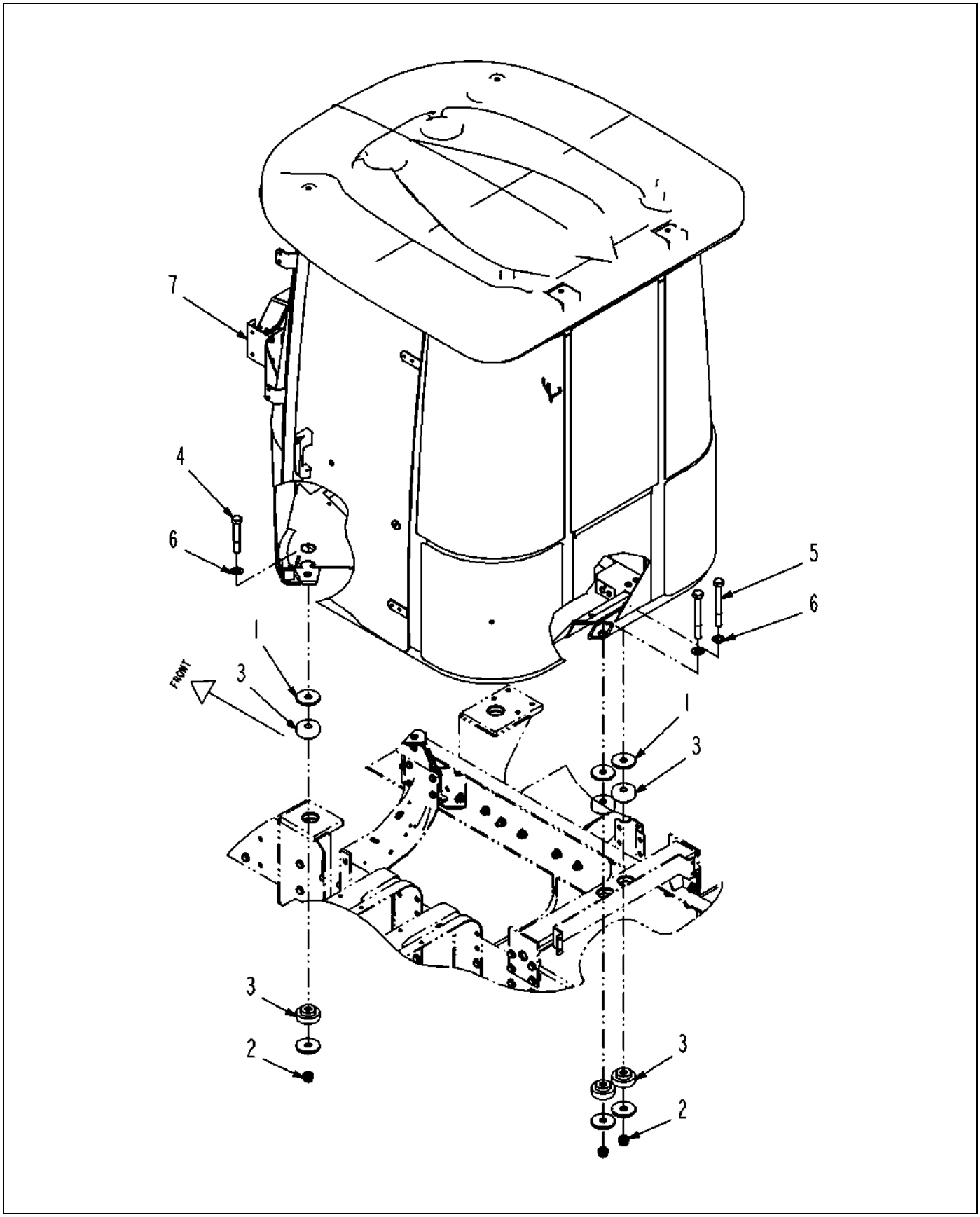

520048D1-02-R624-.TIF

Copyright © 2008 AGCO Corporation

GROUP-CAB,CHAL,EURO,ATC

ITEM	PART #	QTY	DESCRIPTION	COMMENTS
1	AG236575	8	SLUG-ISOLATOR,CAB MT	
2	AG516176	4	NUT 0.87-9NC HVY HX FLEX LK PL	
3	AG520640	8	ISOLATOR-SHOCK	
4	AG522710	2	BOLT .87-9UNCX 5.50 G8 ZN HHD	
5	AG561699	2	BOLT 0.87- 9NCX 7.50 G8 ZN HHD	
6	AG606258	4	WASHER 1.75ODX0.93ID G8 ZN	
7	520182D1	1	CAB ASM,EURO,CHAL W/ATC	

Copyright © 2008 AGCO Corporation

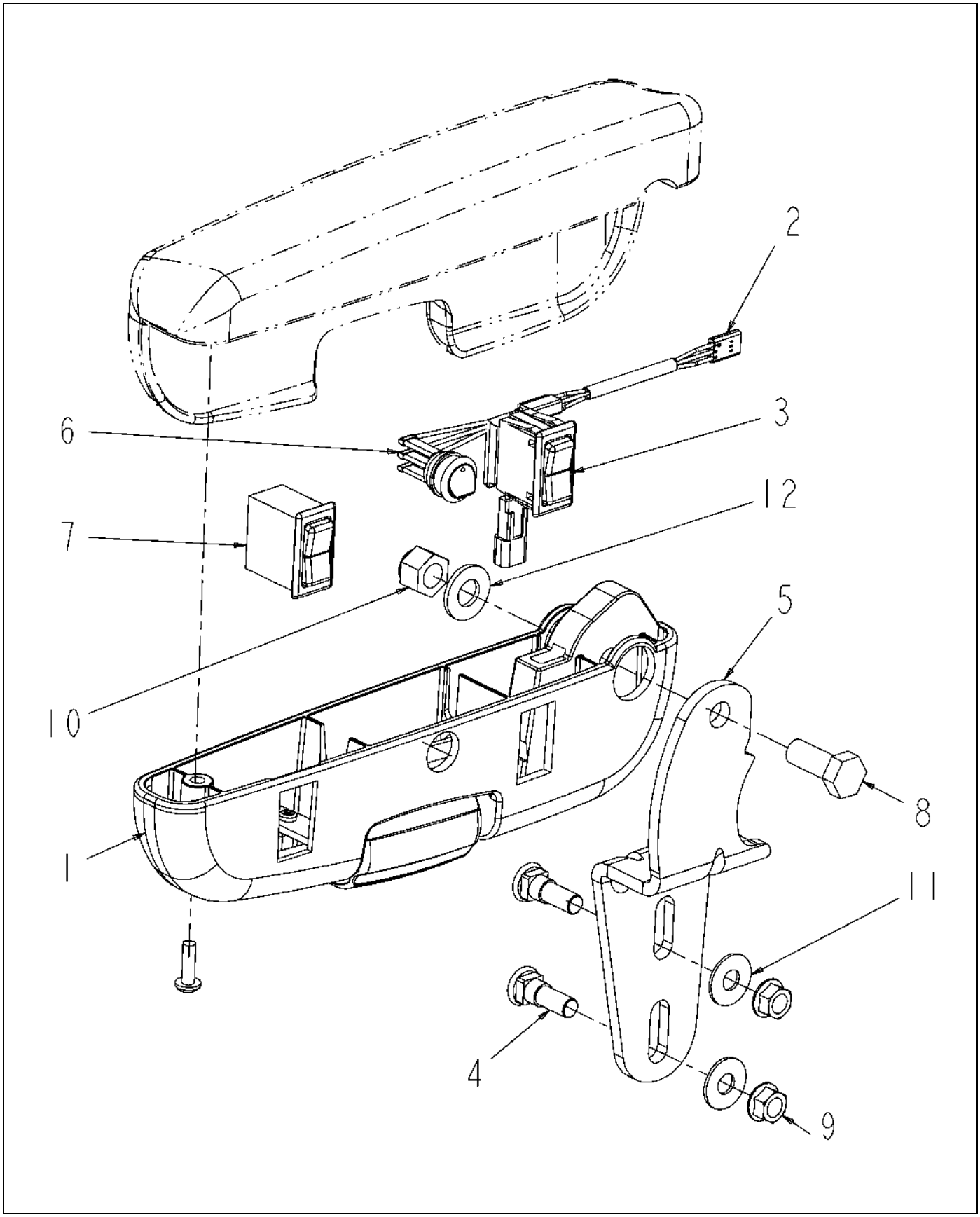

502928D1-01-K791.TIF

Copyright © 2008 AGCO Corporation

KIT-ARM REST AS. (LH)

ITEM	PART #	QTY	DESCRIPTION	COMMENTS
1	AG330813	1	ARMREST/ASSY LH	
2	AG330578	1	HARNESS/WIRE	
3	AG137735	1	SWITCH/ROCKER	
4	NS	-	NON-SERVICEABLE PART	
5	AG330815	1	ARMREST/BRKT LH	
6	AG330816	1	HEATER/SWITCH	
7	AG137722	1	SWITCH/ROCKER	
8	AG330817	1	BOLT/FLANGE - M12 X 1.75	
9	AG330818	2	NUT/FLANGE 3/8 - 16	
10	AG330819	1	LOCKNUT/NYLOC INS M12 X 1.75	
11	AG330820	2	WASHER/FLAT .4061D	
12	AG330821	1	WASHER/FLAT .5311D	

Copyright © 2008 AGCO Corporation

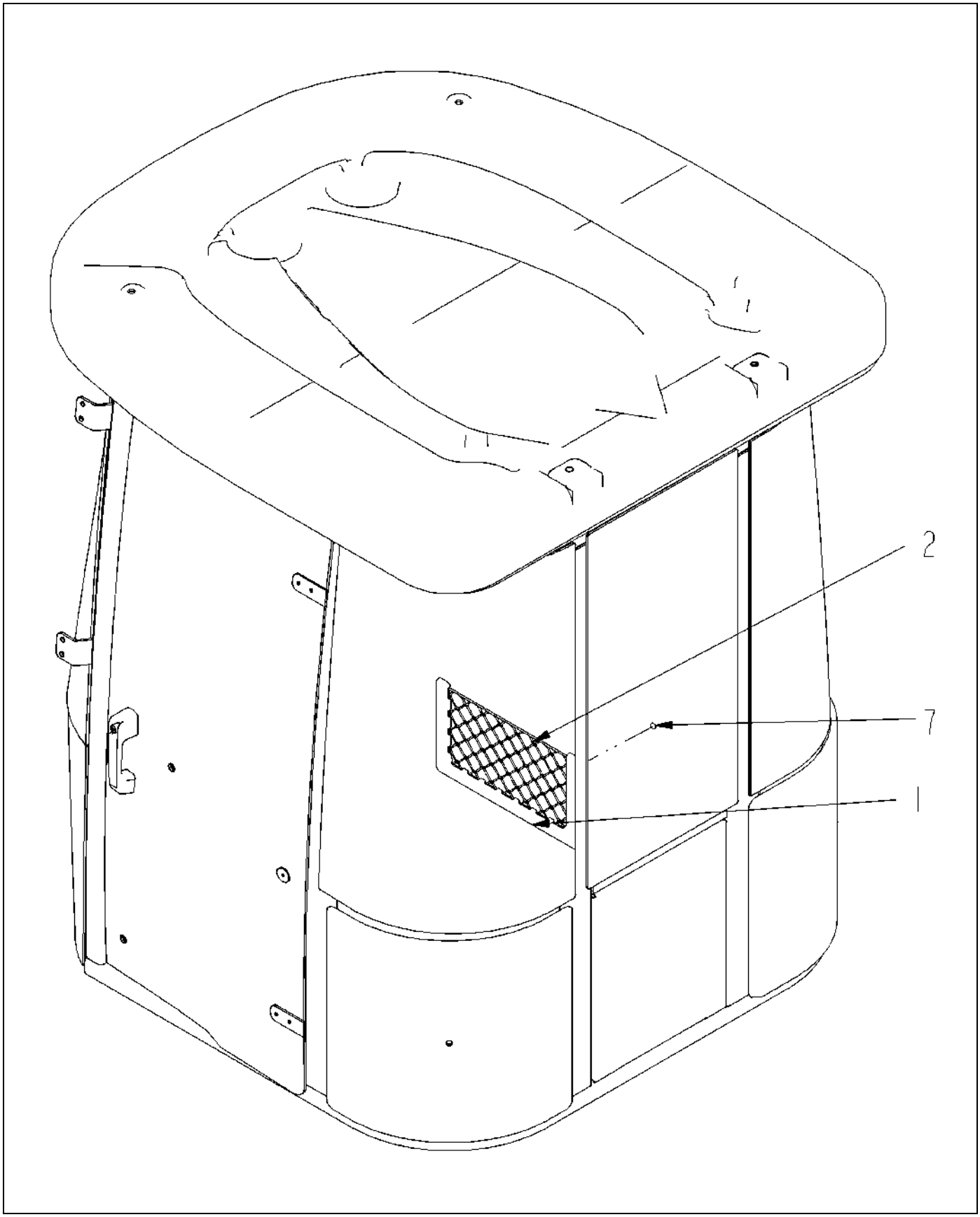

520050D1-01-R451-.TIF

Copyright © 2008 AGCO Corporation

ITEM	PART #	QTY	DESCRIPTION	COMMENTS
REF	WR139281	-	CONTROLS FRONT ASM	SEE PAGE 7-46
REF	WR139280	-	INNER ROOF ASM	SEE PAGE 7-45
REF	WR139279	-	ROOF ELECTRIC ASM	SEE PAGE 7-44
REF	WR139282	-	STEERING COLUMN COVER ASM	SEE PAGE 7-47
REF	WR139285	-	CAB ELECTRICAL ASM	SEE PAGE 7-50
REF	WR139284	-	INTERIOR TRIM GROUP ASM	SEE PAGE 7-49
REF	WR139283	-	HVAC GROUP ASM	SEE PAGE 7-48
REF	WR139278	-	FLOORMATS/COVERS ASM	SEE PAGE 7-43
REF	WR130525	-	GLASS DOOR ASM	SEE PAGE 7-52
REF	WR139299	-	KEY,CAM ASM	SEE PAGE 7-51
REF	AG330738	-	HVAC/W/AND W/O ATC	SEE PAGE 7-55
REF	WR139274	-	DOOR INSTALLATION	SEE PAGE 7-38
REF	WR139277	-	WIPER GROUP ASM	SEE PAGE 7-42
REF	WR139276	-	OUTER ROOF ASM	SEE PAGE 7-41
REF	WR139275	-	CAB GLASS GROUP	SEE PAGE 7-39
1	180-2825	1	RETAINER (CARGO NET)	
2	184-1704	1	HOLDER-NET	
3	AG523347	1	FILTER-AIR,NEW CAB,RECIRC	
4	AG523348	1	FILTER-AIR,NEW CAB,VAPOR/DUST	
5	513965D1	1	ANTENNA-RADIO	
6	520184D1	1	STEERING COLUMN	
7	CH5V-1496	5	RETAINER-6.4 DIA STUD 13.5 OD	
8	WR127688	1	HARNESS-ROOF,INNER	
9	516694D1	1	HARNESS-ROOF,MAIN	

Copyright © 2008 AGCO Corporation

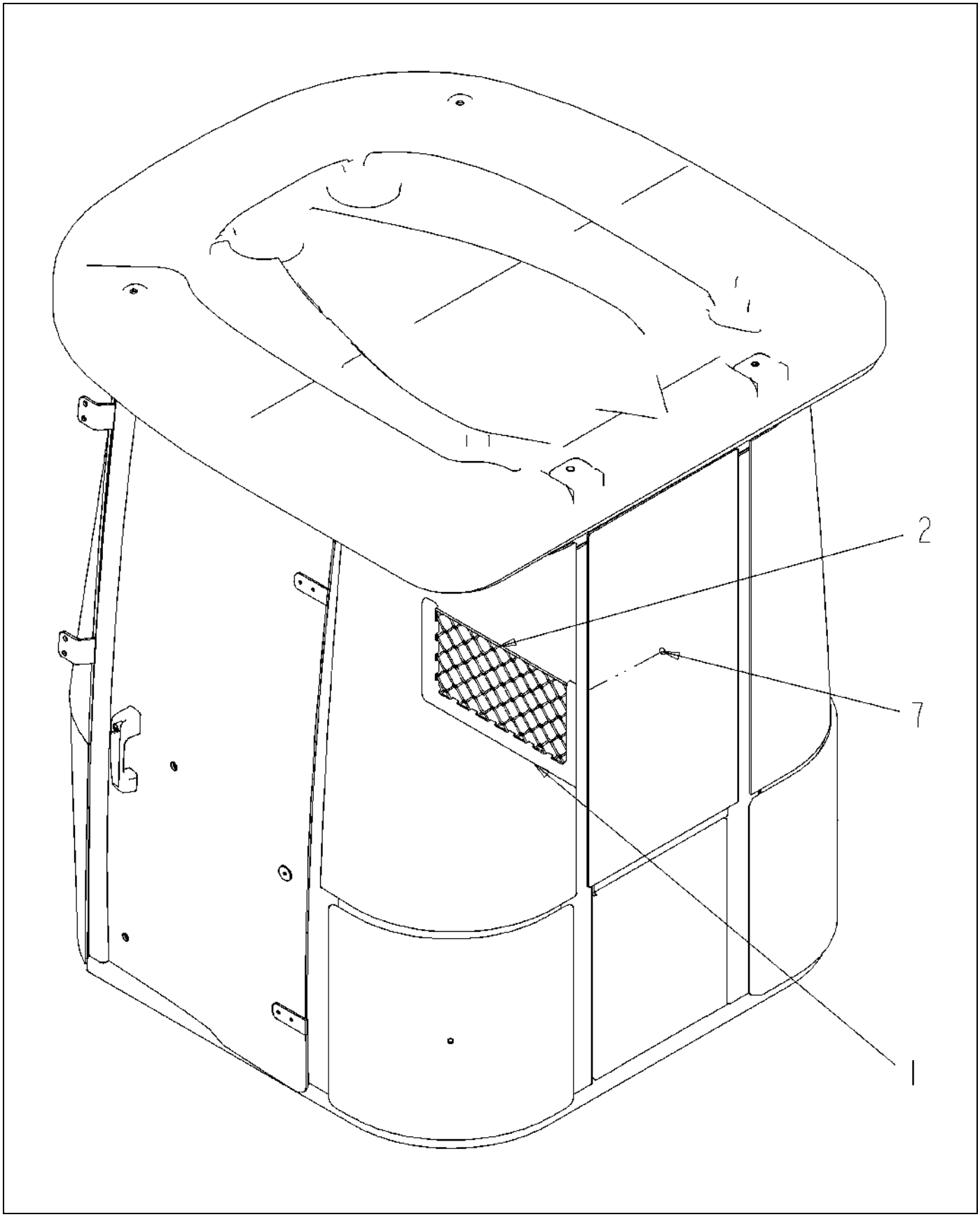

520052D1-01-R451-.TIF

Copyright © 2008 AGCO Corporation

ITEM	PART #	QTY	DESCRIPTION	COMMENTS
REF	WR139281	-	CONTROLS FRONT ASM	SEE PAGE 7-46
REF	WR139280	-	INNER ROOF ASM	SEE PAGE 7-45
REF	WR139278	-	FLOORMATS/COVERS ASM	SEE PAGE 7-43
REF	WR139282	-	STEERING COLUMN COVER ASM	SEE PAGE 7-47
REF	WR139285	-	CAB ELECTRICAL ASM	SEE PAGE 7-50
REF	WR139284	-	INTERIOR TRIM GROUP ASM	SEE PAGE 7-49
REF	WR139283	-	HVAC GROUP ASM	SEE PAGE 7-48
REF	WR130525	-	GLASS DOOR ASM	SEE PAGE 7-52
REF	WR139299	-	KEY,CAM ASM	SEE PAGE 7-51
REF	AG330738	-	HVAC/W/AND W/O ATC	SEE PAGE 7-55
REF	WR139274	-	DOOR INSTALLATION	SEE PAGE 7-38
REF	WR139277	-	WIPER GROUP ASM	SEE PAGE 7-42
REF	WR139276	-	OUTER ROOF ASM	SEE PAGE 7-41
REF	WR139275	-	CAB GLASS GROUP	SEE PAGE 7-39
1	180-2825	1	RETAINER (CARGO NET)	
2	184-1704	1	HOLDER-NET	
3	AG523347	1	FILTER-AIR,NEW CAB,RECIRC	
4	AG523348	1	FILTER-AIR,NEW CAB,VAPOR/DUST	
5	513965D1	1	ANTENNA-RADIO	
6	520184D1	1	STEERING COLUMN	
7	CH5V-1496	5	RETAINER-6.4 DIA STUD 13.5 OD	
8	WR127688	1	HARNESS-ROOF,INNER	
9	516693D1	1	HARNESS-ROOF,MAIN	

Copyright © 2008 AGCO Corporation

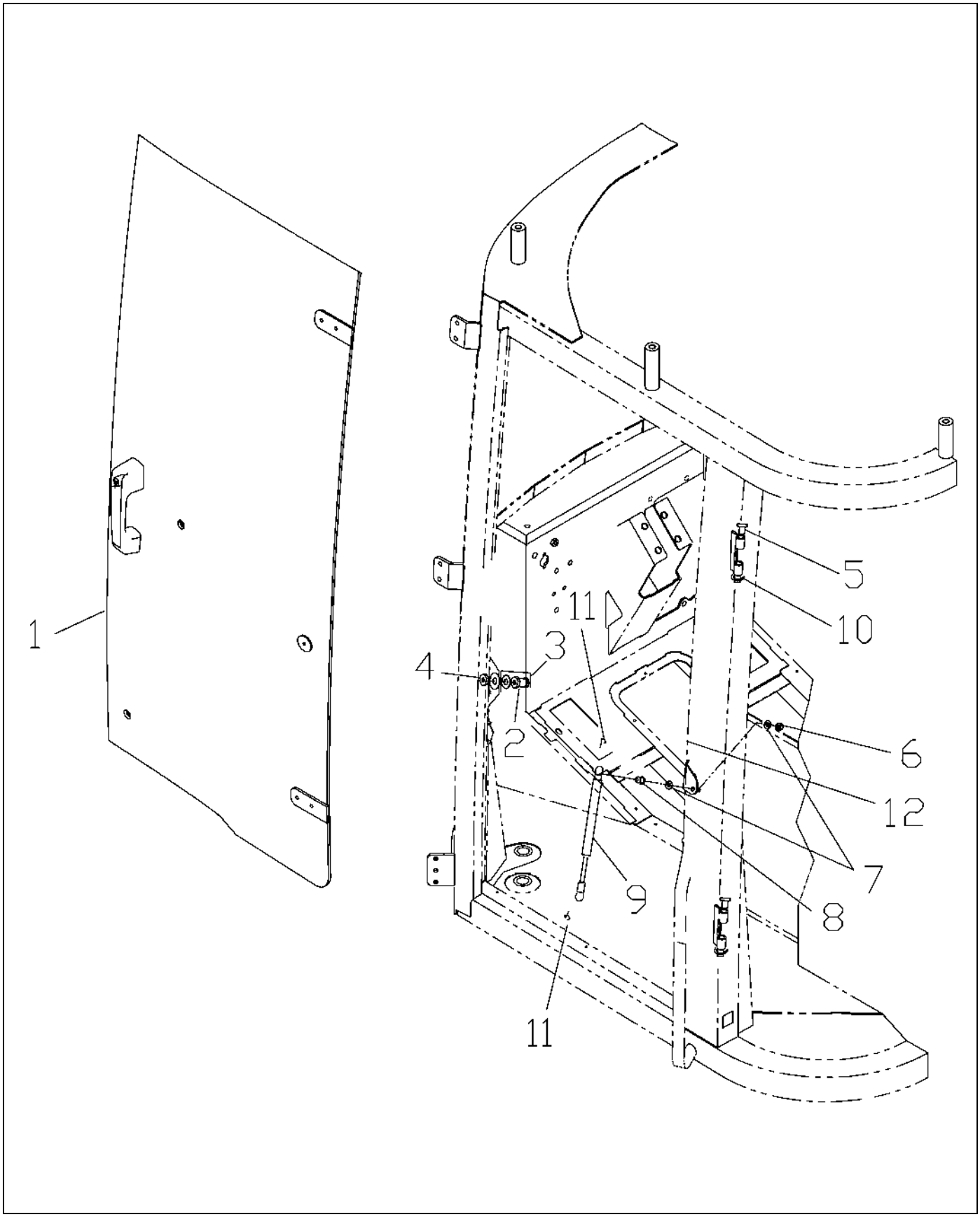

139274.TIF

Copyright © 2008 AGCO Corporation

ITEM	PART #	QTY	DESCRIPTION	COMMENTS
1	WR130525	1	GLASS DOOR ASM	SEE PAGE 7-52
2	WR130718	1	STRIKER, DOOR	
3	WR130550	1	GUARD	
4	WR139286	1	NUT	
5	WR139287	2	PIN	
6	WR139288	1	NUT/HEX,M8XA.25 DIN 985	
7	WR139289	2	WASHER/FLAT	
8	WR130714	2	STUD	
9	WR130713	1	SPRING	
10	WR139290	2	RING,SNAP	
11	WR130715	2	CLIP GAS SPRING	
12	AG130720	1	SWITCH	

Copyright © 2008 AGCO Corporation

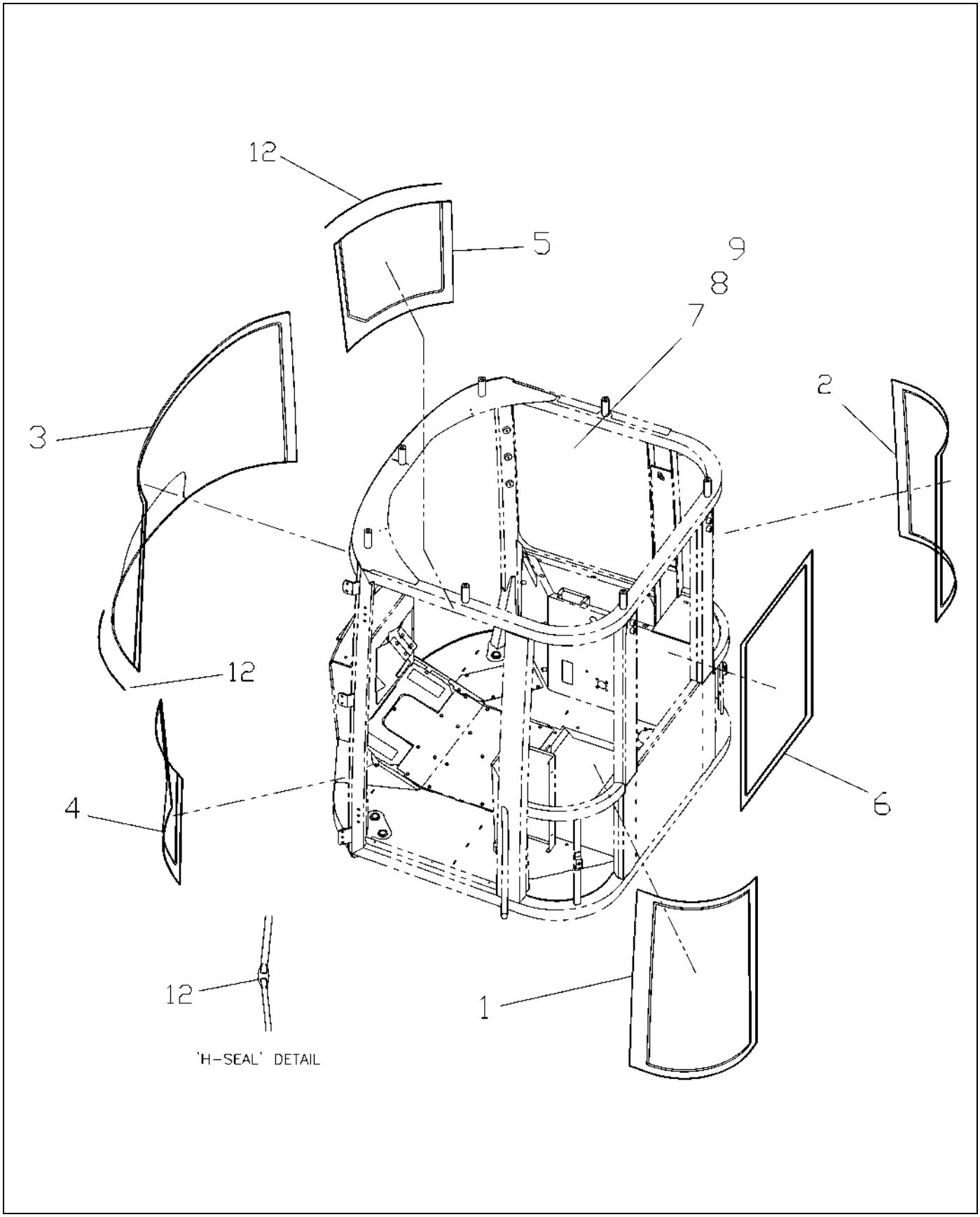

139275-1.TIF

Copyright © 2008 AGCO Corporation

ITEM	PART #	QTY	DESCRIPTION	COMMENTS
REF	WR139292	1	PRIMER/GLASS	
REF	WR139291	1	CLEANER/GLASS	
REF	AG139295	1	ADHESIVE/GLASS	
REF	AG139297	1	SPACER/BLACK WINDSHIELD	
REF	AG139296	1	PRIMER/PRD METAL	
1	AG718367	1	GLASS-LH,REAR	
2	AG718368	1	GLASS-RH,REAR	
3	WR130700	1	GLASS	
4	WR130701	1	GLASS	
5	WR130702	1	GLASS	
6	WR130703	1	GLASS	
7	WR130704	1	GLASS	
8	WR130722	10	RUBBER	
9	WR130723	10	STRIP	
12	AG139298	1	EXTRUSION/GLASS	

Copyright © 2008 AGCO Corporation

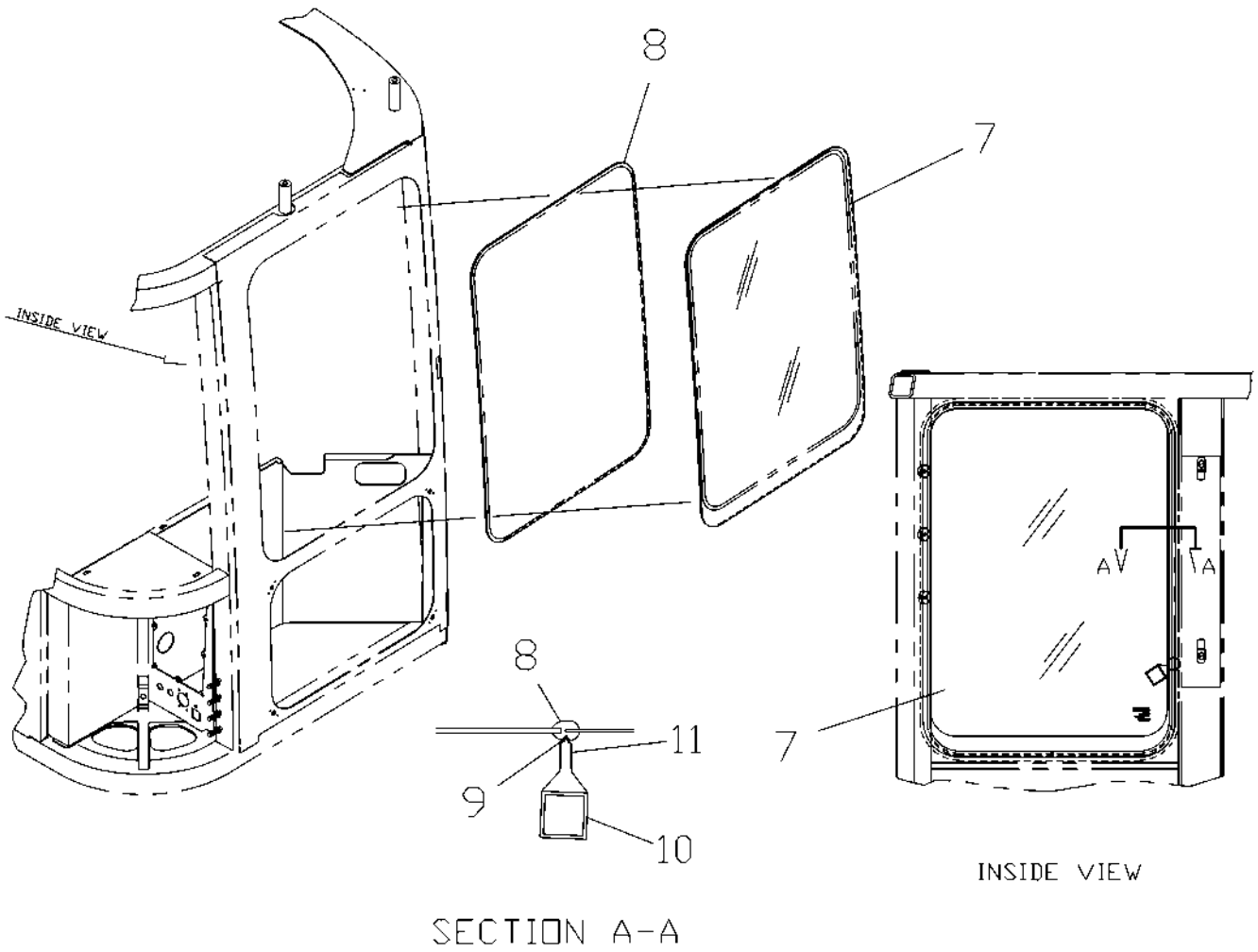

139275-2.TIF

Copyright © 2008 AGCO Corporation

ITEM	PART #	QTY	DESCRIPTION	COMMENTS
7	WR130704	1	GLASS	
8	WR130722	10	RUBBER	
9	WR130723	10	STRIP	
10	WR139293	1	LABEL/RH WINDOW EXIT	
11	WR139294	1	TIE/BAND	

Copyright © 2008 AGCO Corporation

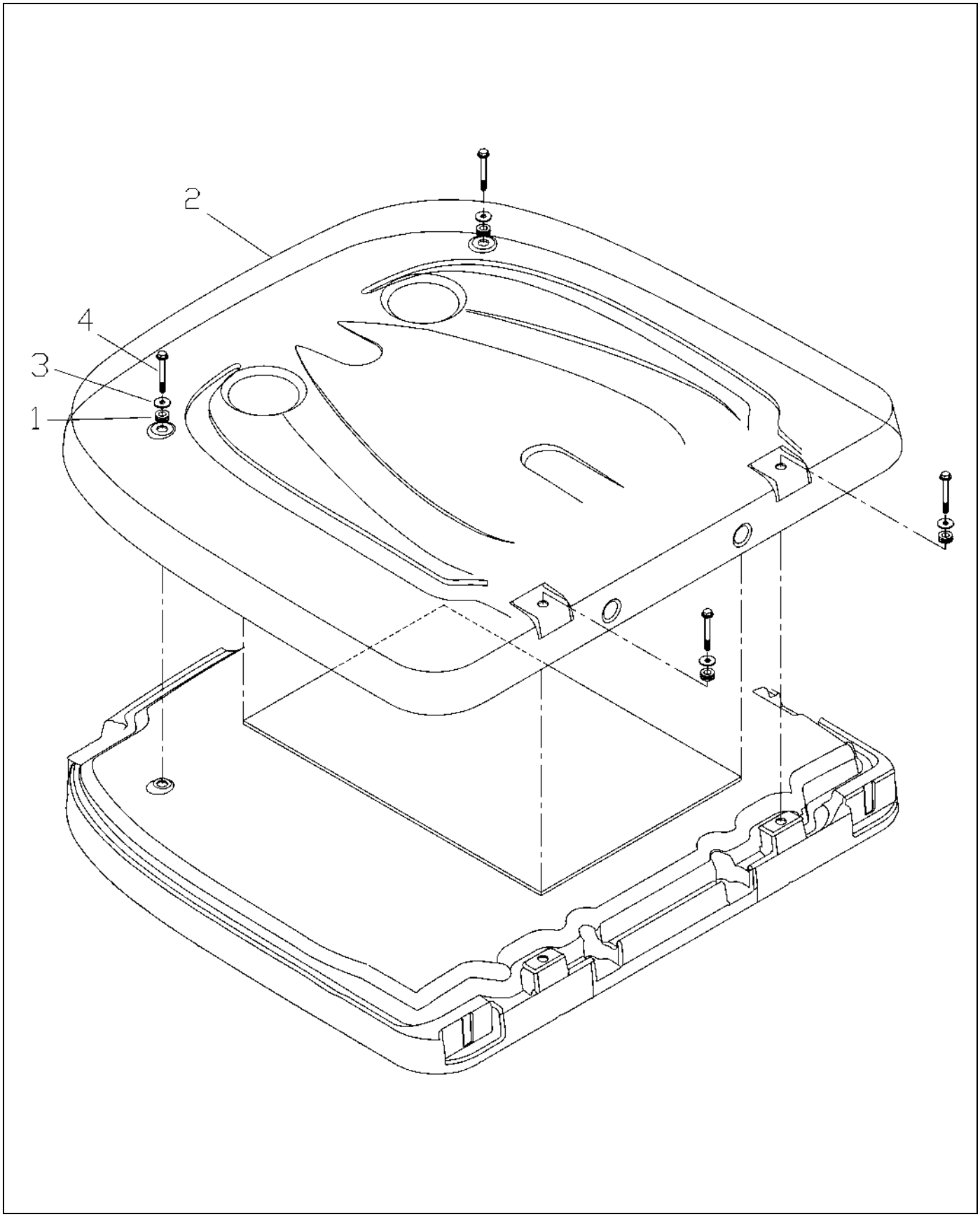

139276.TIF

Copyright © 2008 AGCO Corporation

OUTER ROOF ASY

ITEM	PART #	QTY	DESCRIPTION	COMMENTS
1	WR133797	4	BUSHING	
2	WR130709	1	ROOF	
3	WR133793	4	WASHER	
4	WR139301	4	SCREW M12X	

Copyright © 2008 AGCO Corporation

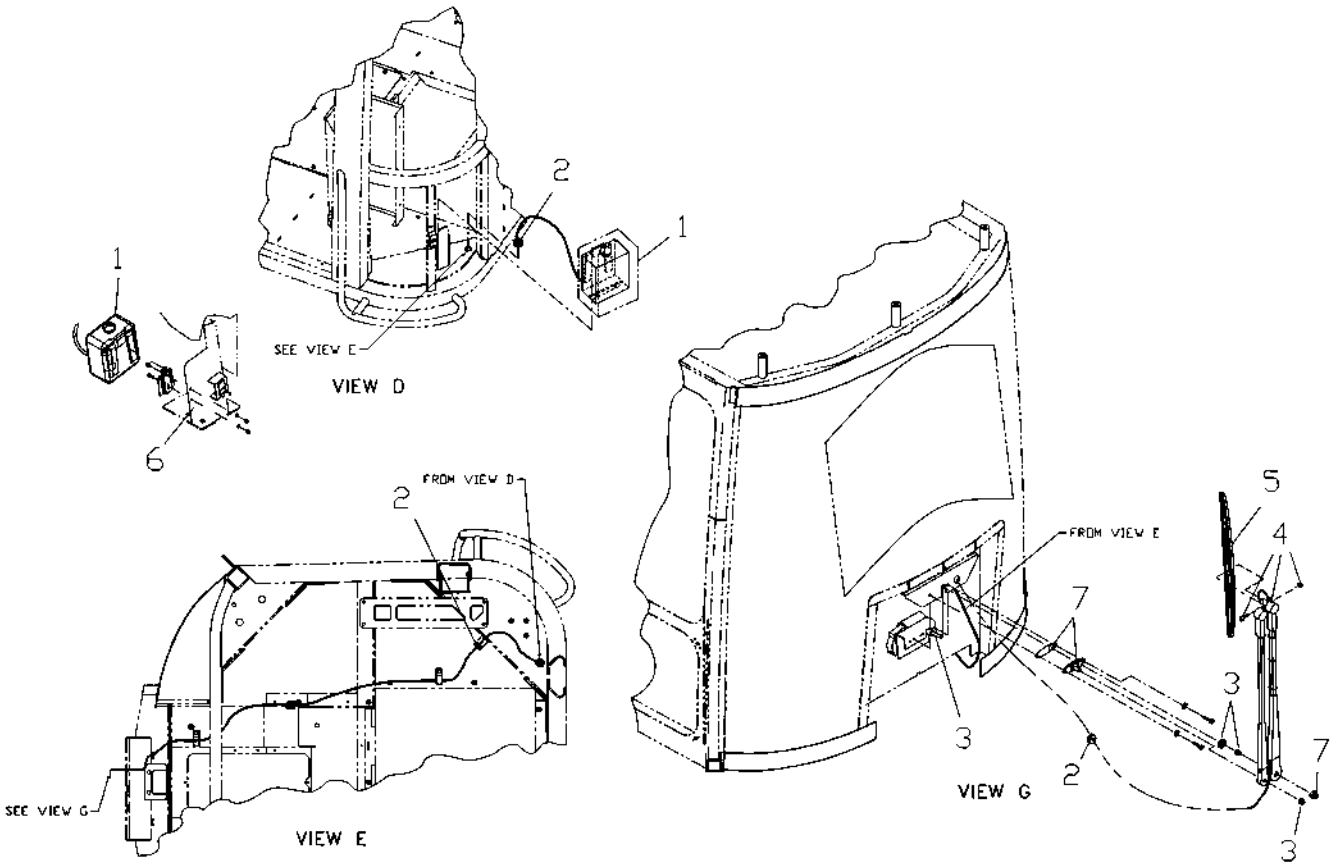

139277.TIF

Copyright © 2008 AGCO Corporation

ITEM	PART #	QTY	DESCRIPTION	COMMENTS
REF	WR130727	1	FLUID	
REF	WR130729	1	CONNECTOR	
REF	WR139302	3	SCREW 1/4-28X.88 HEX SEMS DOG	
REF	AG723374	4	PULL TAB EMERGENCY	
REF	WR130593	1	TERMINAL	
REF	WR139304	5	SCREW HXFL M6X1.00X12 10.9 ZN	
1	WR130712	1	BOTTLE	
2	WR139303	3	GROMMET	
3	AG718455	1	MOTOR-WIPER,1IN	
4	AG718289	1	WIPER ARM-PANTO	
5	AG718290	1	WIPER BLADE ASM	[A]
6	WR130514	1	WELDMENT	
7	AG718288	1	KIT-PANTOGRAPH	
	FOOTNOTE [A]		NOZZLE KIT - AG606844	

Copyright © 2008 AGCO Corporation

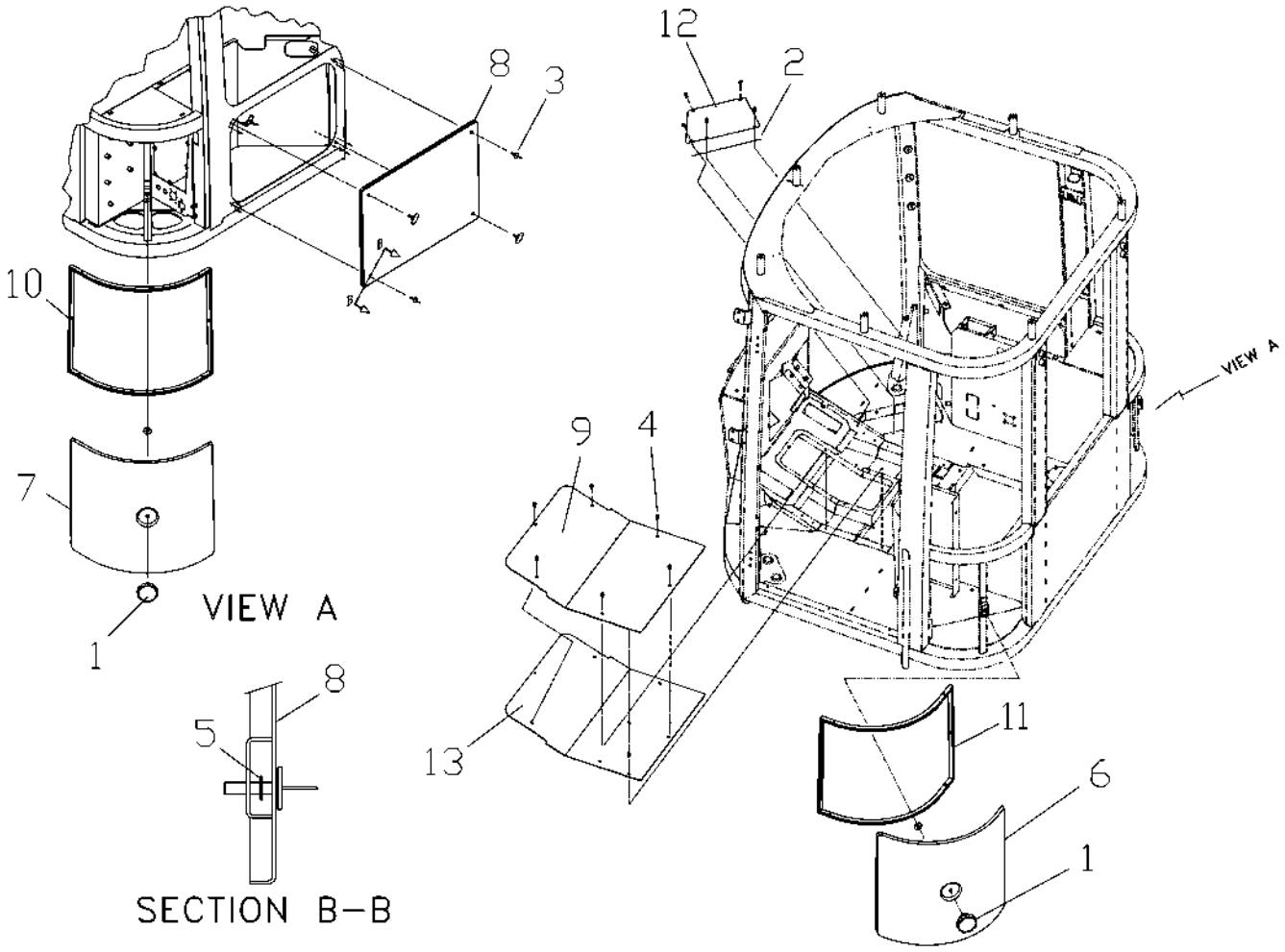

139278.TIF

Copyright © 2008 AGCO Corporation

FLOORMATS/COVERS ASY

ITEM	PART #	QTY	DESCRIPTION	COMMENTS
1	AG723805	2	KNOB FLATED W/.37-16 STUD	
2	AG718320	1	GASKET-RH,ACCESS	
3	WR139331	4	SCREW WING HEAD SS RUB WASHER	
4	WR139304	6	SCREW HXFL M6X1.00X12 10.9 ZN	
5	AG121110	6	CHANNEL-SCREEN EDGE,9.47	
6	AG718319	1	DOOR-REAR,LH	
7	AG718322	1	DOOR-REAR,RH	
8	WR139305	1	WELDMENT DOOR ACCESS RH	
9	WR130659	1	PANEL	
10	AG718328	1	GASKET-RH,REAR	[A]
11	AG718329	1	GASKET-LH,REAR	[B]
12	WR130659	1	PANEL	
13	WR130733	1	SEAL	
	FOOTNOTE [A]		REPLACED BY AG718381	
	FOOTNOTE [B]		REPLACED BY AG718381	

Copyright © 2008 AGCO Corporation

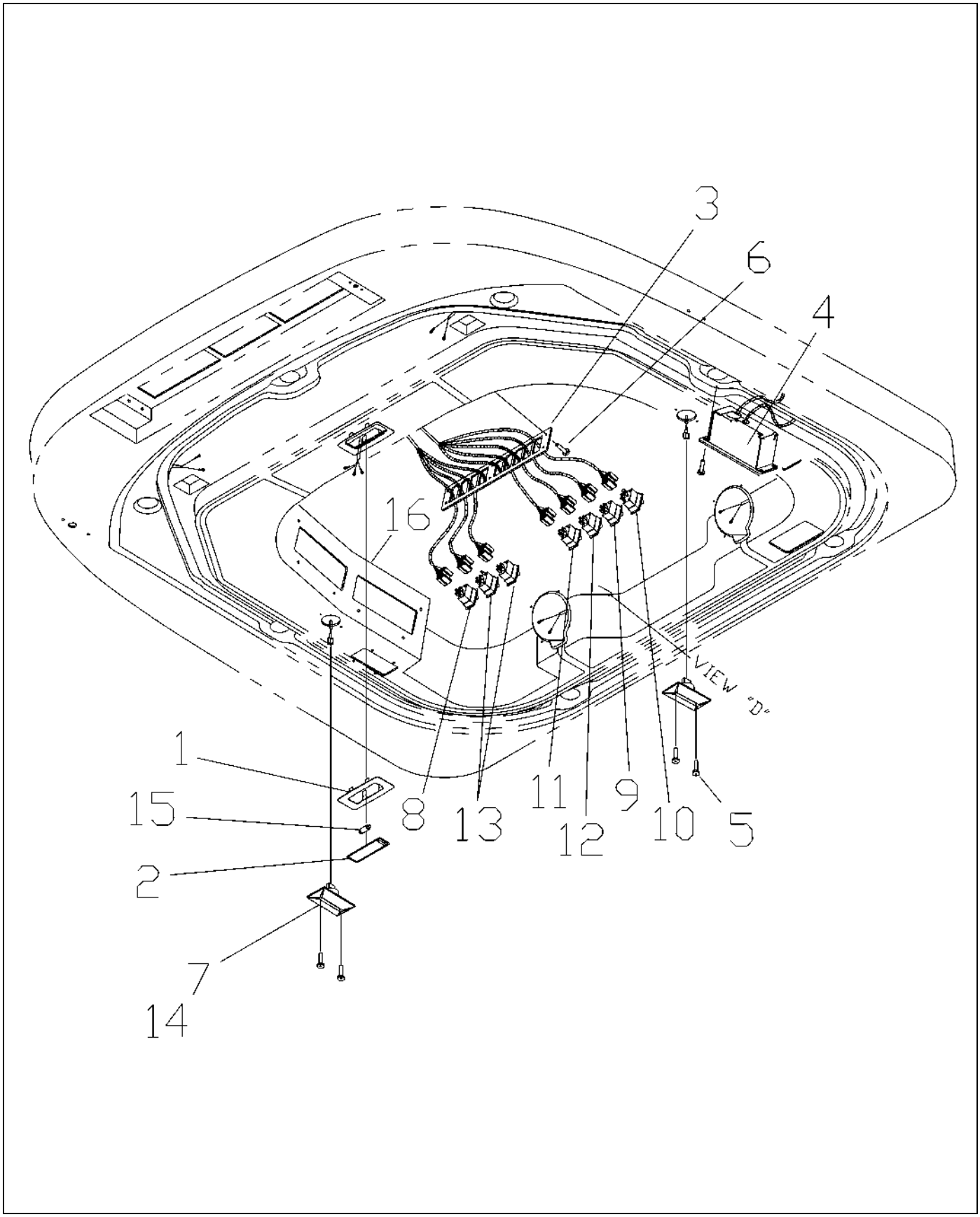

139279.TIF

Copyright © 2008 AGCO Corporation

ROOF ELECTRIC ASY

ITEM	PART #	QTY	DESCRIPTION	COMMENTS
REF	AG719984	1	DECAL GROUP LIGHT PANEL	
1	AG722838	1	HOUSING-DOME LAMP	
2	WR130629	1	BEZEL	
3	WR130680	1	PANEL	
4	AG330507	1	CONTROL PANEL HVAC ATC	
4	WR130728	1	CONTROL PANEL HVAC NON ATC	
5	WR130747	4	SCREW	
6	WR130738	12	SCREW	
7	AG725237	1	DOME LIGHT ASSY	
8	WR139306	1	SWITCH/ROCKER ON-ONON,LTS,CS-L	
9	WR139307	1	SWITCH/ROCKER ON-ONON,WPR,CS-L	
10	WR139308	1	SWITCH/ROCKER OFF-ON,WSHR,CS-L	
11	WR139309	1	SWITCH/ROCKER OFF-ON,HAZ,CS-L	
12	WR139310	1	SWITCH/ROCKER OFF-ON,BCN,CS-L	
13	WR139311	1	SWITCH/ROCKER OFF-ON,WRKLT,CS-	
14	AG721040	1	BULB FRONT #1156 TURN SIGNAL	
15	AG721357	1	BULB-DOME LIGHT 8103	
16	AG334010	1	WLDMT-RADIO BEZEL W/ ATC	
16	AG334011	1	WLDMT-RADIO BEZEL W/ O ATC	

Copyright © 2008 AGCO Corporation

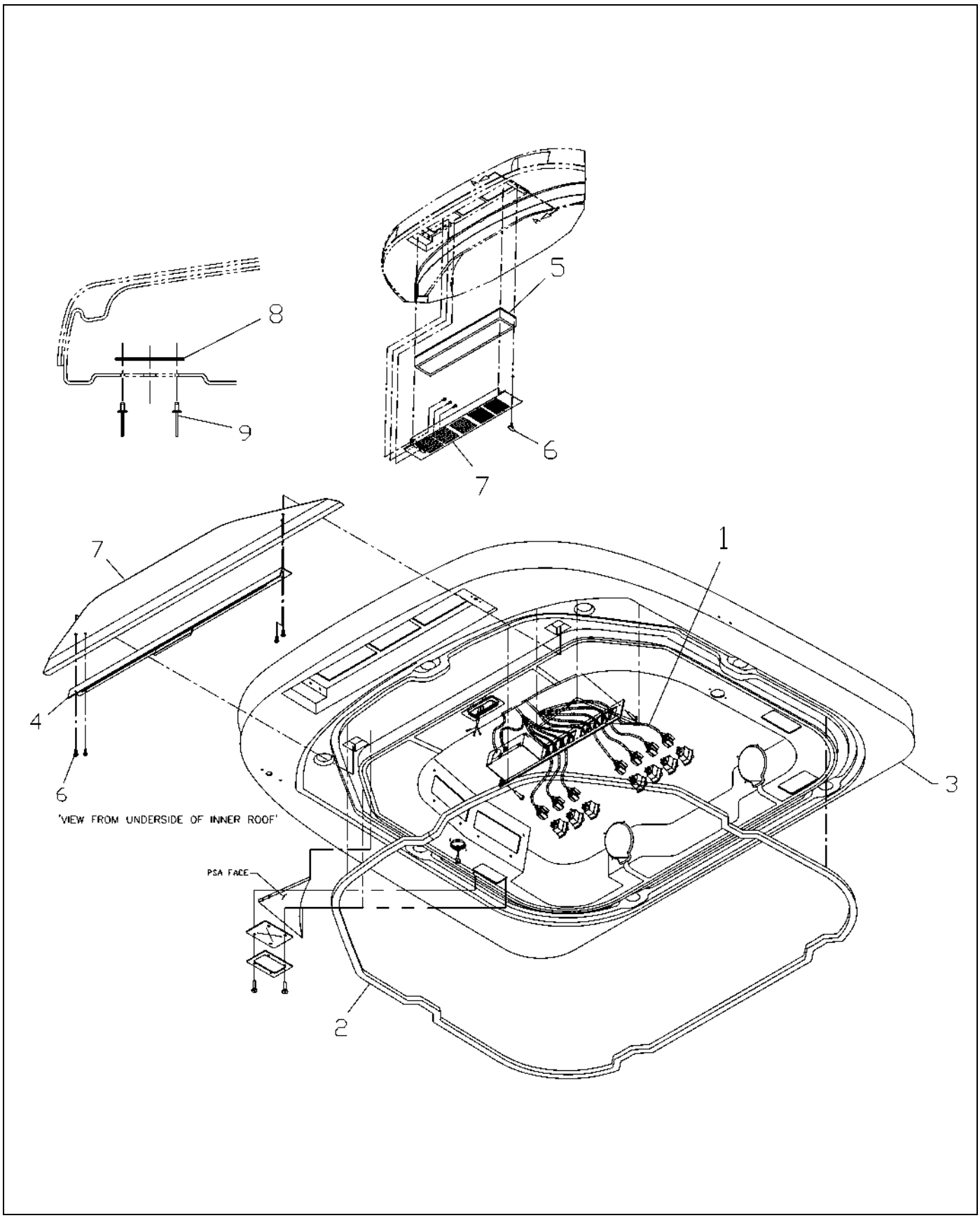

139280.TIF

Copyright © 2008 AGCO Corporation

INNER ROOF ASM

ITEM	PART #	QTY	DESCRIPTION	COMMENTS
REF	WR130747	2	SCREW	
REF	WR130730	1	PLUG	
REF	AG718297	1	RETAINER-PUSH ON	
REF	WR139304	3	SCREW HXFL M6X1.00X12 10.9 ZN	
1	WR126888	1	HARNESS-ROOF,MAIN	
2	WR130739	1	SEAL	
3	WR130708	1	ROOF	
4	WR130719	1	BLIND, WINDOW	
5	WR130711	1	FILTER	
6	AG139312	1	SCREW/WING HEAD SS RUB WASHER	
7	AG130512	1	WELDMENT	
8	AG718296	1	RECEPTACLE-FLAT	
9	WR130746	1	RIVET	

Copyright © 2008 AGCO Corporation

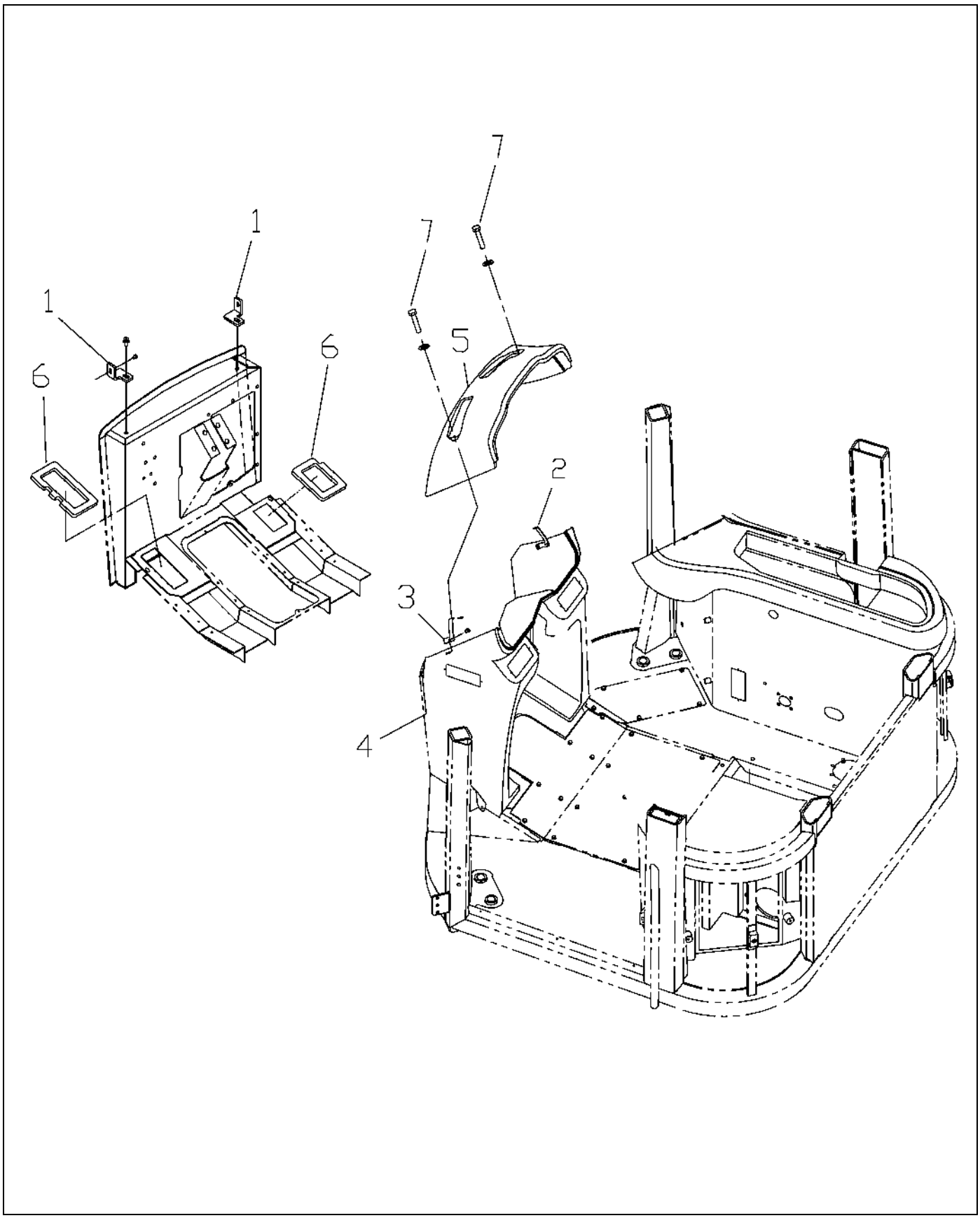

139281.TIF

Copyright © 2008 AGCO Corporation

ITEM	PART #	QTY	DESCRIPTION	COMMENTS
REF	WR139304	6	SCREW HXFL M6X1.00X12 10.9 ZN	
REF	WR139314	1	NUT/TINNERMAN M6X1	
REF	AG139316	1	SCREW/M6X140	
REF	AG139317	1	SCREW/M6X100	
REF	WR139321	4	WASHER/FLAT 6.4AAX18X	
REF	WR139319	2	SCREW/HXFL M8X1.25X16	
REF	AG139318	1	CLIP/X-MAS TREE	
1	WR130690	2	BRACKET	
2	WR130675	1	BRACKET	
3	WR130674	1	BRACKET	
4	AG060814	1	CONSOLE/BASE	
5	AG719992	1	CONSOLE TOP CENTER	
6	WR139515	1	LINE/LUBRICATION OIL ASM	
7	WR139320	2	SCREW/HXFL M6X1.00X70	

Copyright © 2008 AGCO Corporation

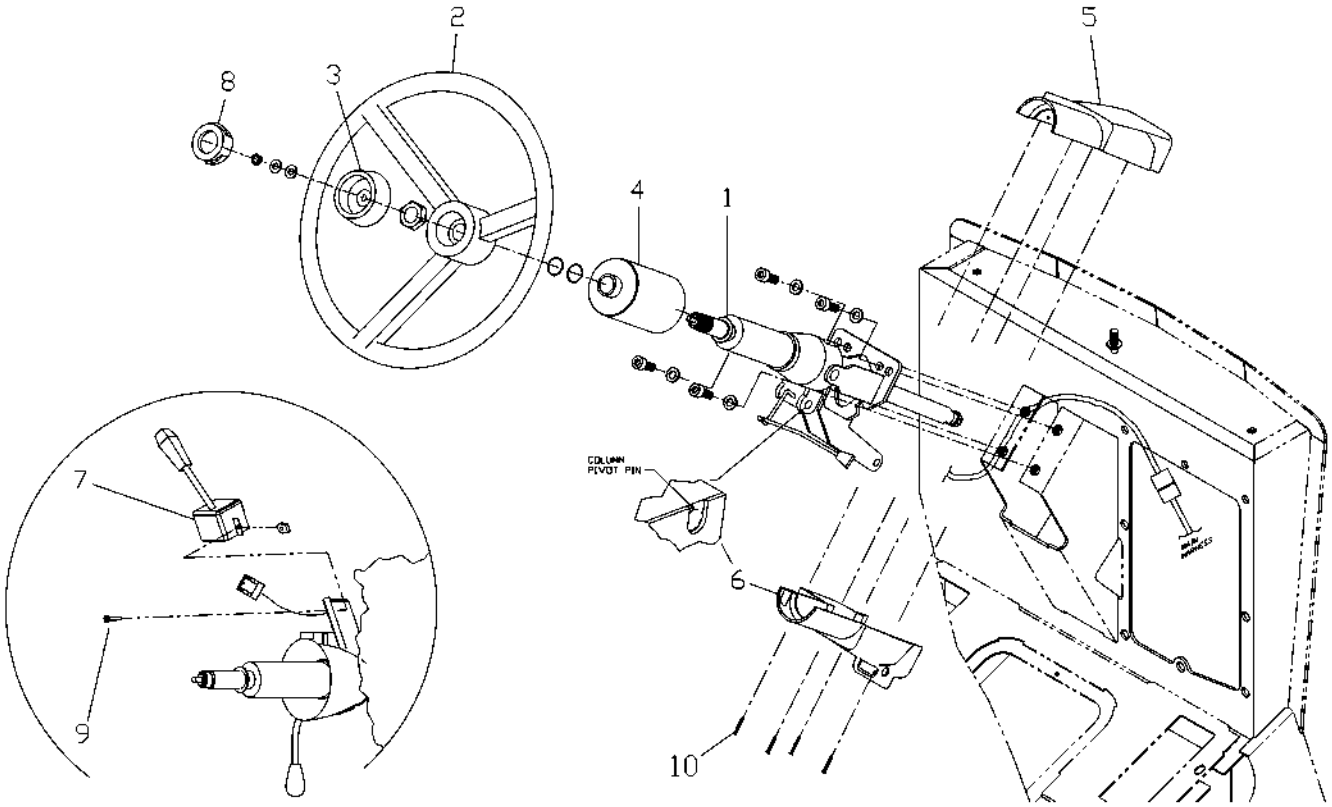

139282.TIF

Copyright © 2008 AGCO Corporation

STEERING COLUMN COVER ASY

ITEM	PART #	QTY	DESCRIPTION	COMMENTS
REF	WR139325	4	SCREW/HEX SCKT CAP M10X1.50X30	
REF	AG722182	1	PLUG-COLD SWITCH	
REF	WR139327	4	WASHER/FLAT 10.5X18X1.6ZN	
REF	WR139324	2	NUT/HEX M4X0.70 DIN985	
REF	AG725549	2	WASHER 8.4X16X16MM	
REF	WR139288	1	NUT/HEX,M8XA.25 DIN 985	
REF	WR139322	3	O-RING	
1	AG721714	1	STEERING COLUMN ASM	
2	AG721717	1	STEERING WHEEL	
3	AG721719	1	KNOB-STEERING WHEEL ADJ	
4	AG721720	1	COVER-TELESCOPE	
5	AG721721	1	COLUMN COVER,UPPER	
6	AG721723	1	COLUMN COVER,LOWER	
7	AG719075	1	SWITCH-TURN SIGNAL	
8	AG721722	1	HUB CAP	
9	WR139326	2	SCREW/PANHD M4X0.70X12 4.8ZN	
10	WR130745	4	SCREW	

Copyright © 2008 AGCO Corporation

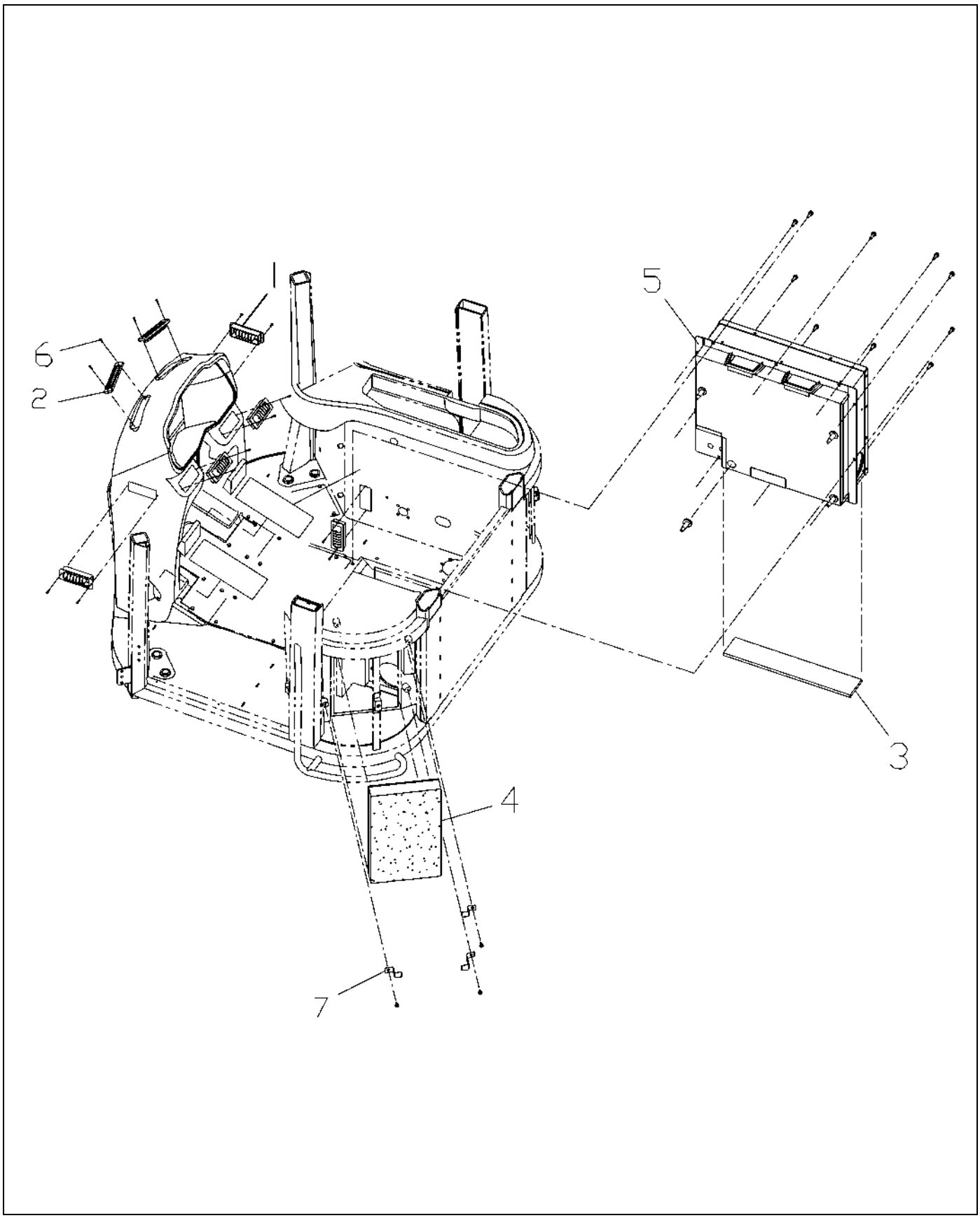

139283.TIF

Copyright © 2008 AGCO Corporation

ITEM	PART #	QTY	DESCRIPTION	COMMENTS
REF	WR130737	1	SEAL	
REF	WR139304	7	SCREW HXFL M6X1.00X12 10.9 ZN	
REF	WR130732	1	SEAL	
REF	WR139329	10	SCREW/HXFL M8X1.25X25	
REF	WR130515	1	WELDMENT	
1	AG718279	1	LOUVER-HVAC	
2	AG718280	1	LOUVER-AIR	
3	AG718303	1	FILTER-RECIRCUL	
4	AG523348	1	FILTER-AIR,NEW CAB,VAPOR/DUST	
5	AG126272	1	HVAC UNIT	
6	WR130738	16	SCREW	
7	AG332771	3	BRACKET INTAKE/FILTER RETAINER	

Copyright © 2008 AGCO Corporation

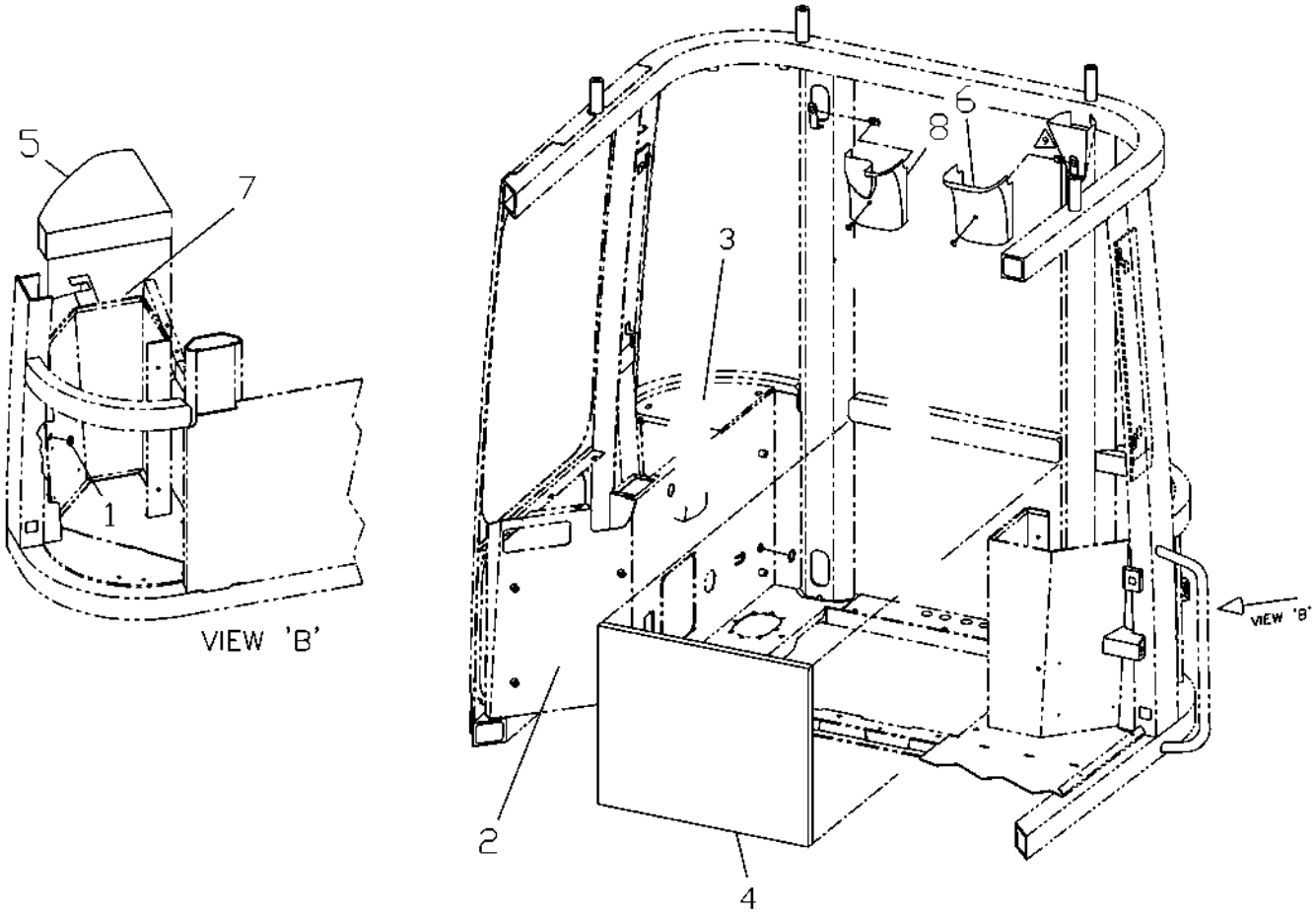

139284.TIF

Copyright © 2008 AGCO Corporation

INTERIOR TRIM GROUP ASY

ITEM	PART #	QTY	DESCRIPTION	COMMENTS
REF	WR130747	4	SCREW	
REF	WR133795	1	NUT	
1	WR139303	1	GROMMET	
2	WR130752	1	PANEL	
3	WR130751	1	PANEL	
4	WR130726	1	FOAM	
5	WR130740	1	COVER	
6	WR130742	2	COVER	
7	WR130749	1	PANEL	
8	WR130741	1	COVER	

Copyright © 2008 AGCO Corporation

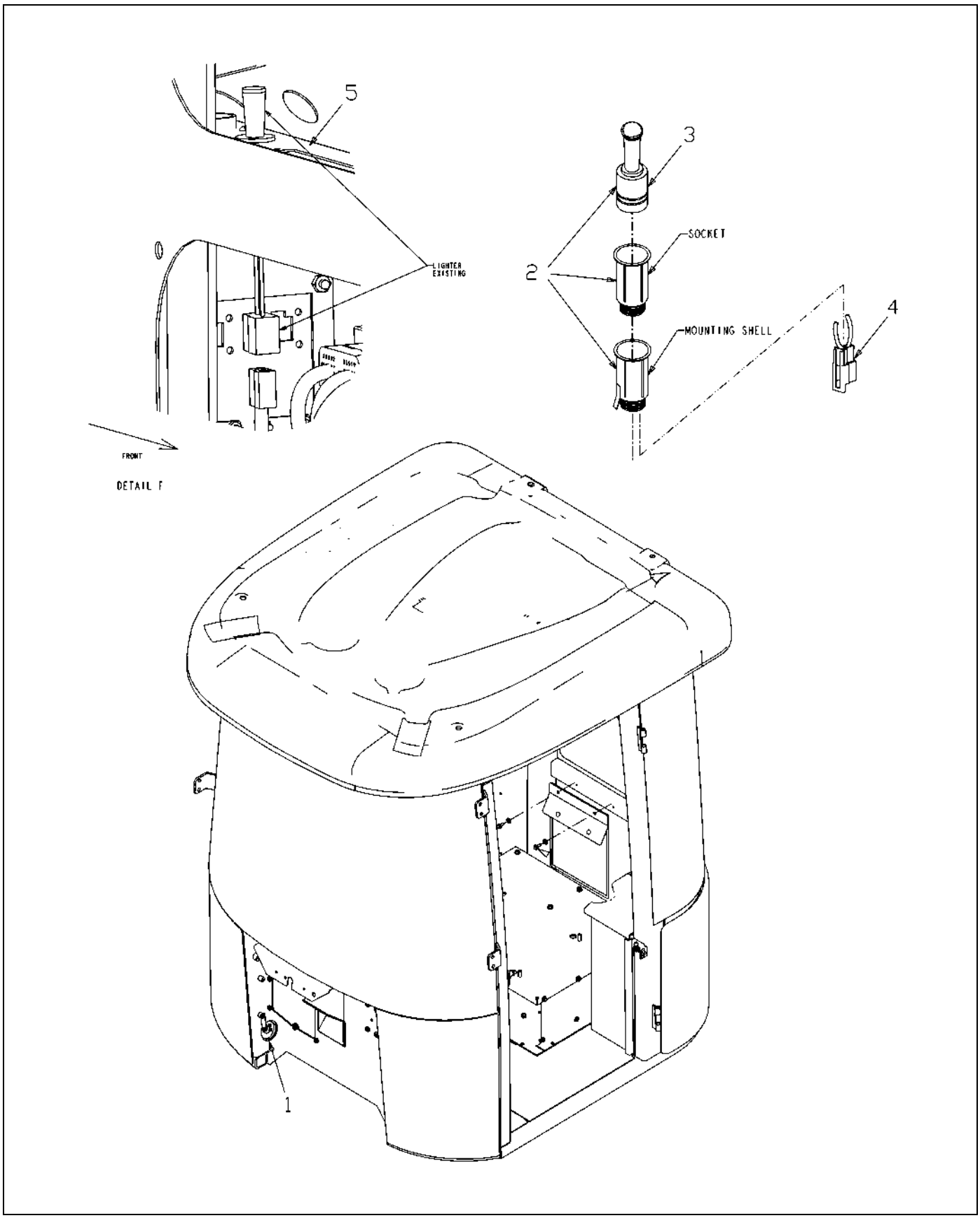

139285.TIF

Copyright © 2008 AGCO Corporation

ITEM	PART #	QTY	DESCRIPTION	COMMENTS
REF	WR139336	1	WASHER/LOCK .164 INT TOOTH ZN	
REF	WR139335	1	WASHER/SPRING	
REF	WR139334	1	SPACER	
REF	WR139304	1	SCREW HXFL M6X1.00X12 10.9 ZN	
REF	WR139337	1	NUT/HEX 8MM	
REF	WR130738	1	SCREW	
REF	WR130745	1	SCREW	
1	WR139332	1	SIGNAL/HORN ZSB	
2	WR139333	1	LIGHTER	
3	AG717883	1	LIGHTER-CIGAR	
4	WR139338	1	JUMPER WIRE/LIGHTER	
5	NS	-	NON-SERVICEABLE PART	

Copyright © 2008 AGCO Corporation

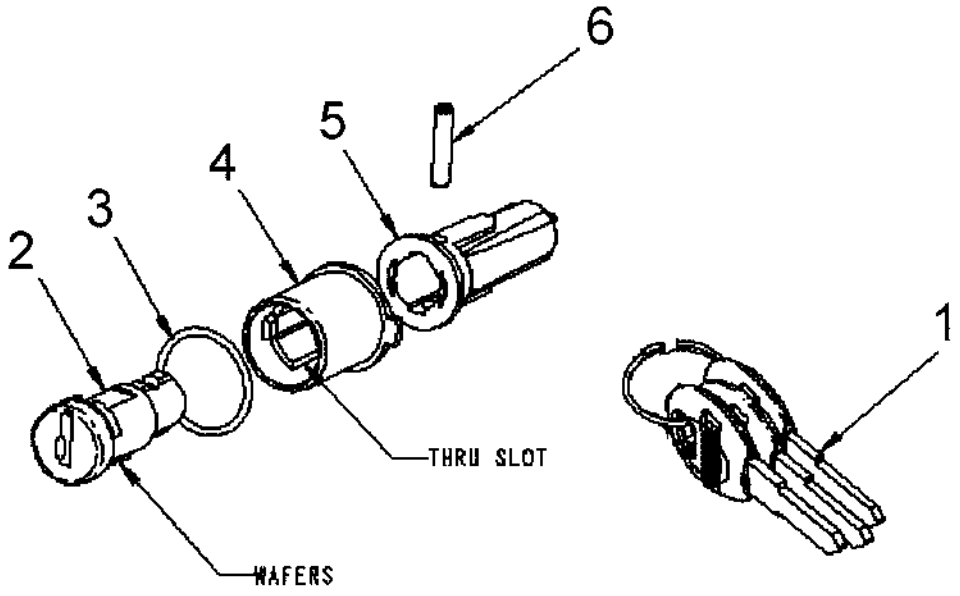

139299-A.TIF

Copyright © 2008 AGCO Corporation

KEY,CAM ASM

ITEM	PART #	QTY	DESCRIPTION	COMMENTS
1	WR139313	1	KEY/SET	
2	WR139339	1	LKCYL,SS,KS900,CH751	
3	WR139340	1	O-RING	
4	WR139330	1	PUSHBUTTON	
5	WR139300	1	ACTUATOR	
6	WR139341	1	PIN,RL.133X.625	

Copyright © 2008 AGCO Corporation

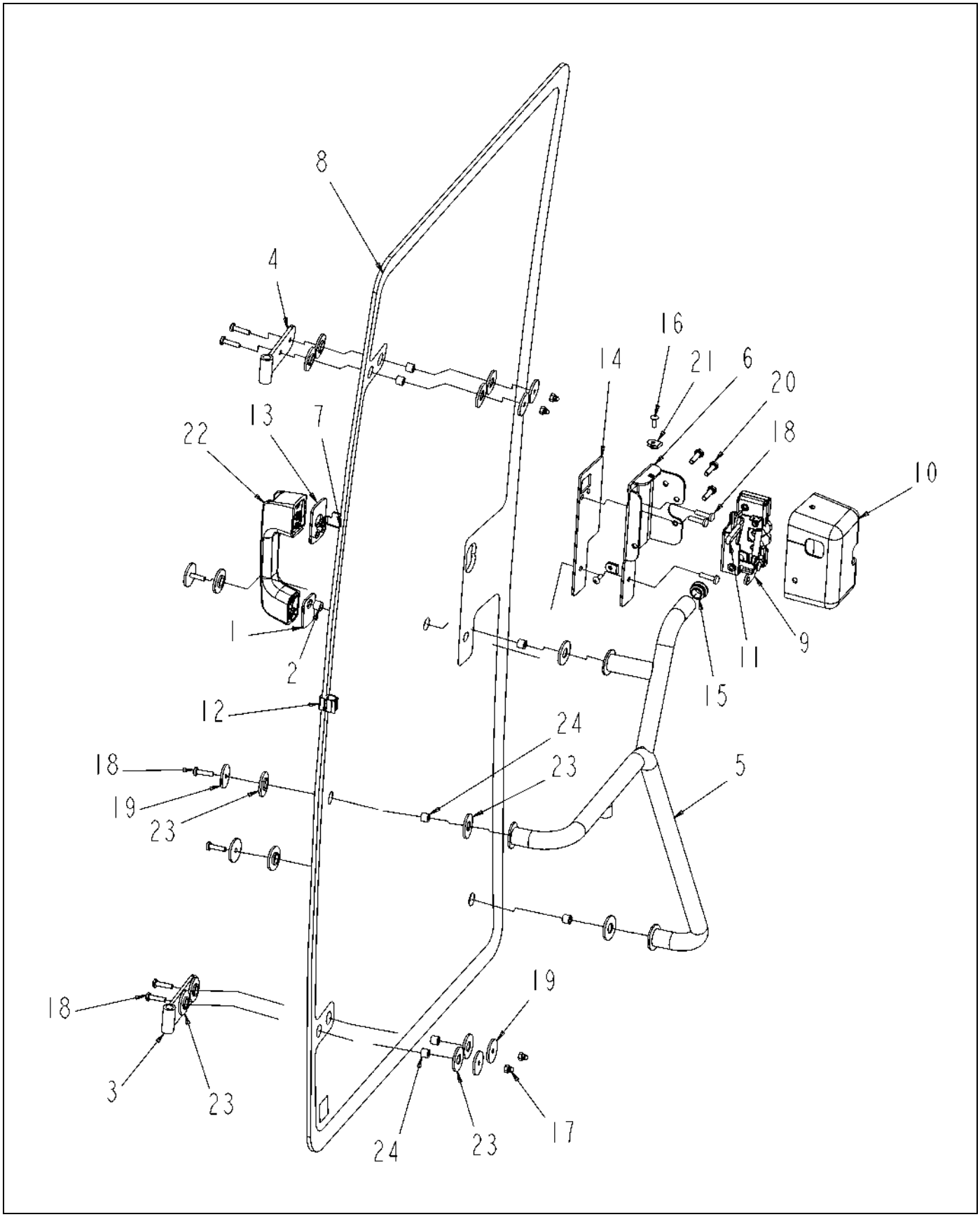

130525.TIF

Copyright © 2008 AGCO Corporation

GLASS DOOR ASM

ITEM	PART #	QTY	DESCRIPTION	COMMENTS
1	AG718348	1	GASKET-DOOR HANDLE	
2	AG718403	3	SPACER-WINDOW DO	
3	AG130506	1	WELDMENT	
4	WR130507	1	WELDMENT	
5	WR130508	1	WELDMENT	
6	WR130635	1	BRACKET	
7	WR130673	1	PAWL	
8	WR130705	1	GLASS	
9	WR130707	1	LATCH	
10	WR130710	1	COVER, DOOR LATCH	
11	WR130721	1	SLEEVE	
12	WR130724	1	SEAL	
13	WR130734	1	GASKET	
14	WR130735	1	GASKET	
15	WR130736	1	CAP	
16	WR130747	2	SCREW	
17	WR133791	4	NUT/LOCK	
18	WR133792	10	SCREW	
19	WR133793	7	WASHER	
20	WR133794	3	BOLT	
21	WR133795	2	NUT	
22	WR133796	1	BUTTON/PUSH	
23	WR133797	14	BUSHING	
24	WR133798	7	BUSHING	

Copyright © 2008 AGCO Corporation

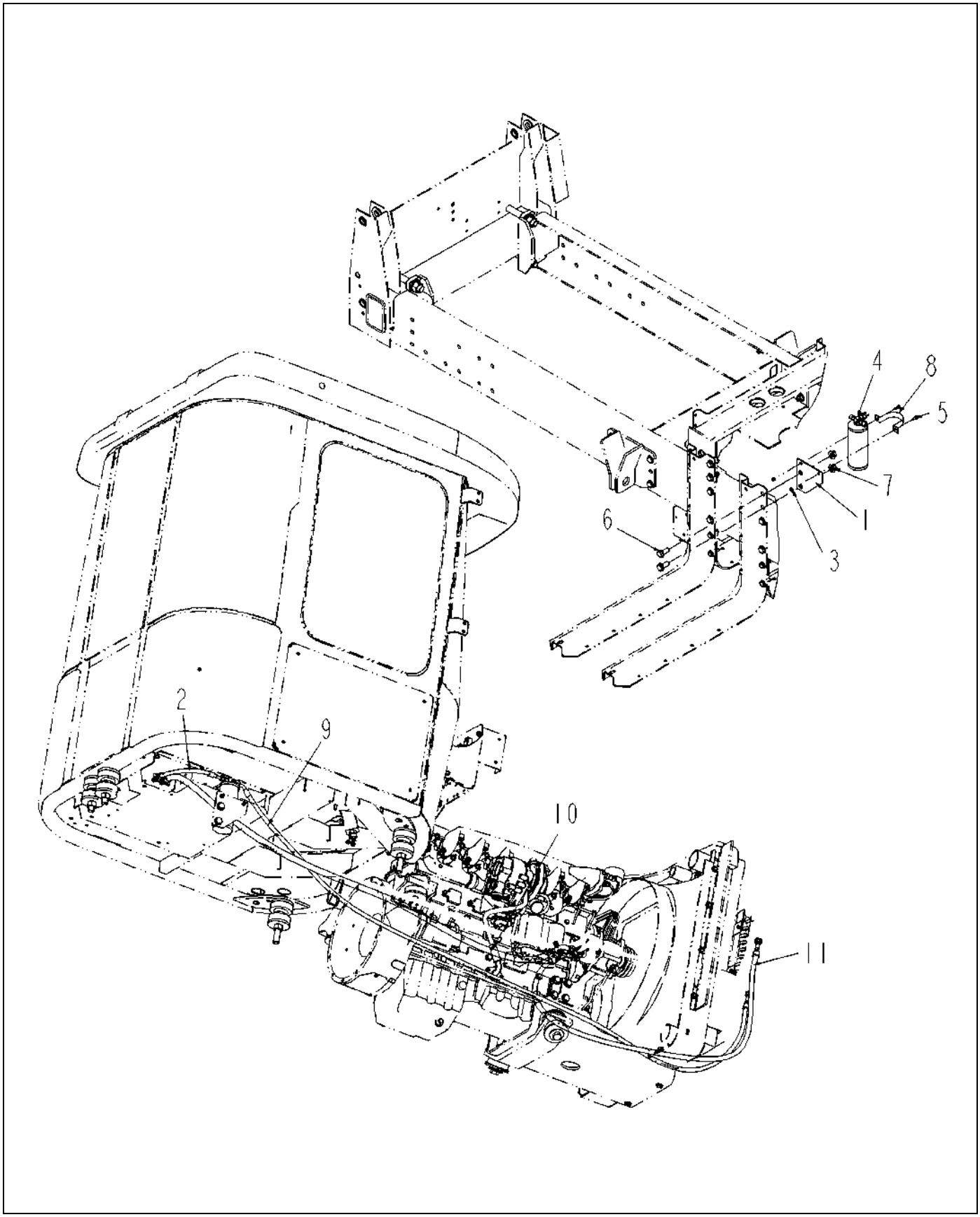

522328D1-02-T074-.TIF

Copyright © 2008 AGCO Corporation

ITEM	PART #	QTY	DESCRIPTION	COMMENTS
1	WR126829	1	BRACKET-A/C DRYER	
2	WR129633	1	HOSE ASM A/C (R134A) -8	
3	AG515123	2	NUT .25-20NC HEX SS REG	
4	AG519278	1	RECEIVER DEHYDRATOR	SEE PAGE 7-54
5	AG562054	2	BOLT 0.25-20NCX 0.75 SS HHD	
6	AG609312	2	BOLT 0.62-18 X 1.50 G8 HXFLG	
7	AG609313	2	NUT HX FLG 0.62-18NF	
8	AG704540	1	CLAMP BRACKET DRIER	
9	522326D1	1	HOSE ASM A/C (R134A)-8	
10	525213D1	1	HOSE ASM A/C (R134A)-12	
11	525214D1	1	HOSE ASM A/C (R134A)-8	

Copyright © 2008 AGCO Corporation

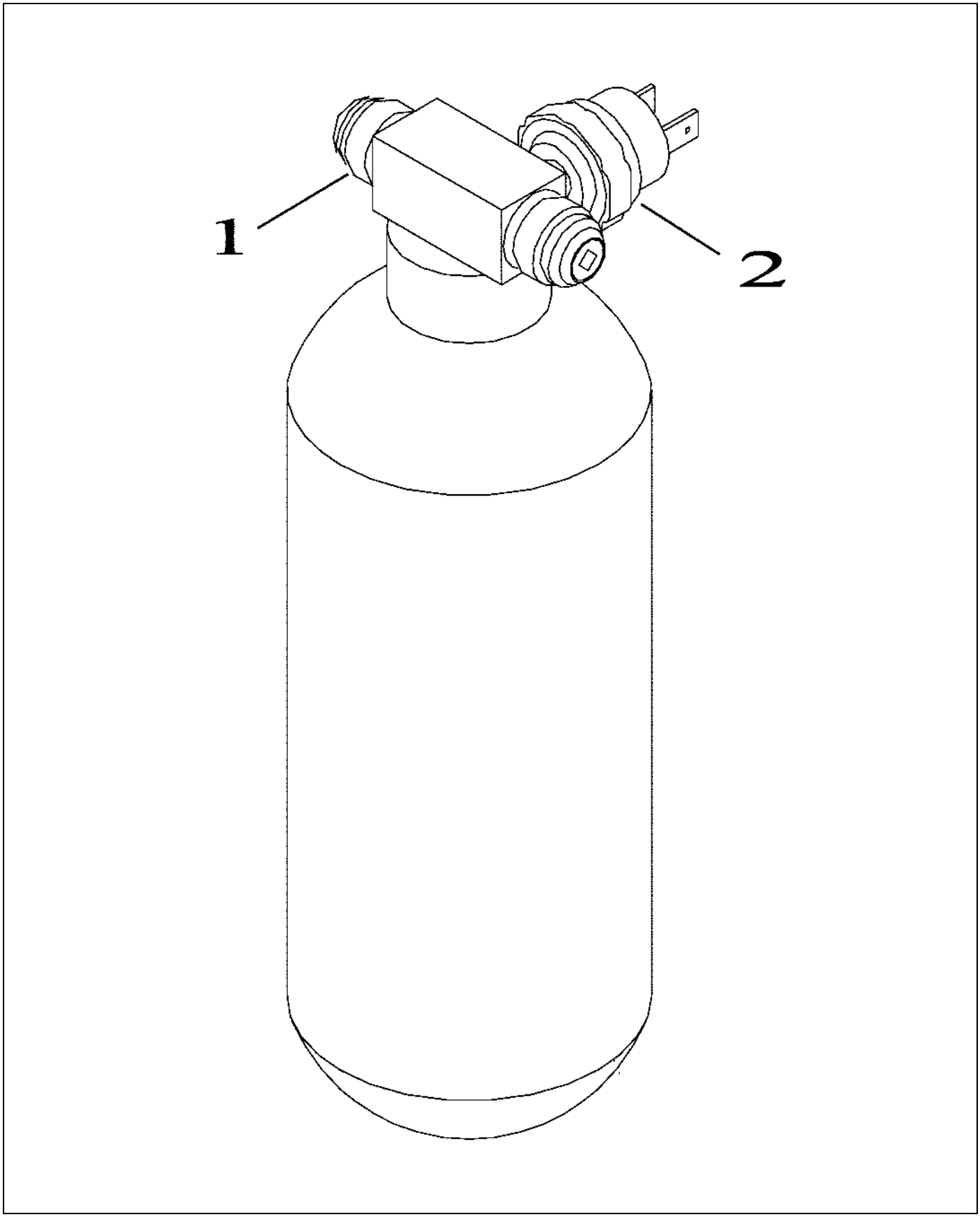

519278.TIF

Copyright © 2008 AGCO Corporation

RECEIVER DEHYDRATOR

ITEM	PART #	QTY	DESCRIPTION	COMMENTS
1	AG518524	2	O-RING -06	
2	AG607237	1	SWITCH FREON PRESSURE (514632)	

Copyright © 2008 AGCO Corporation

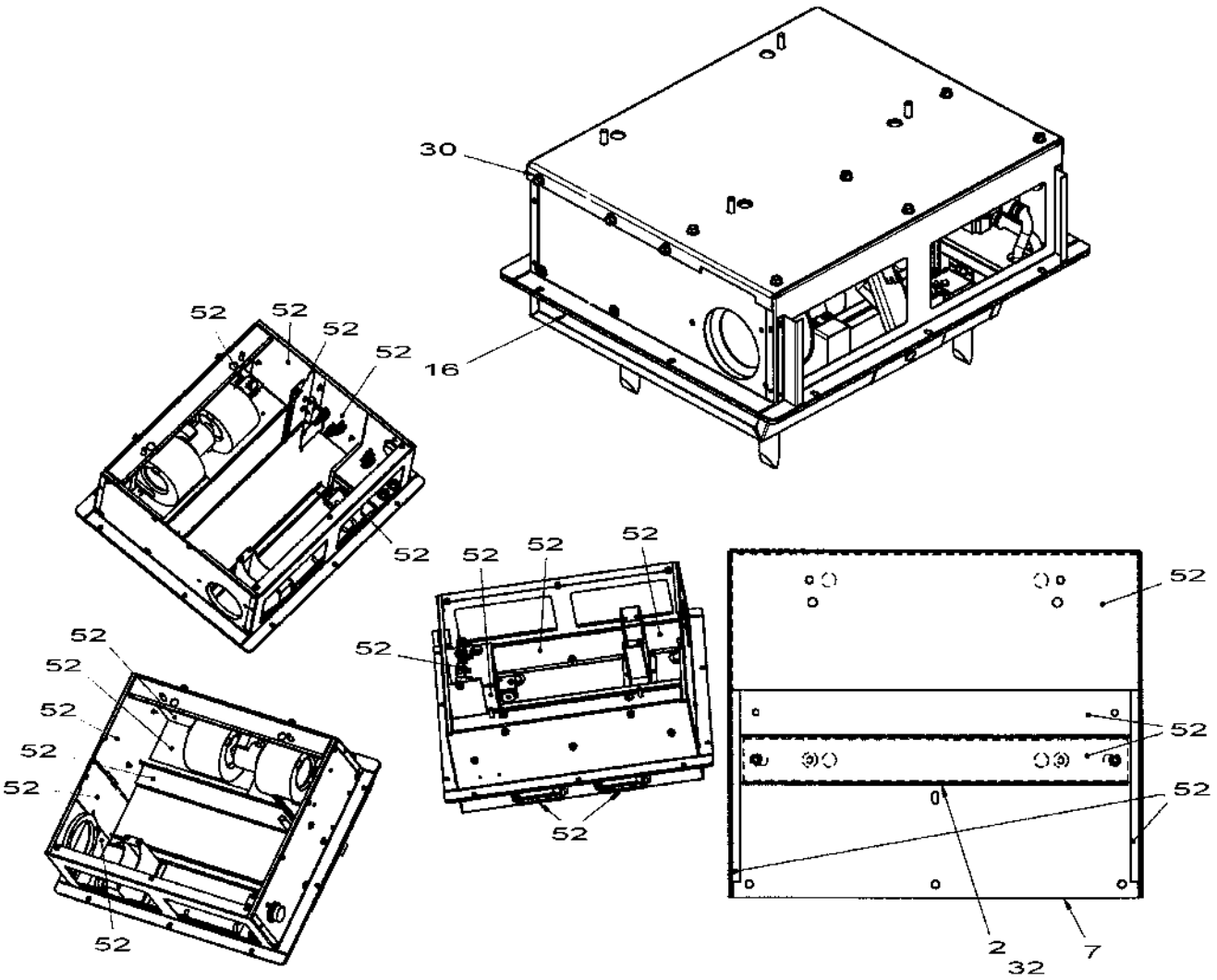

330738-A-01.tif

Copyright © 2008 AGCO Corporation

ITEM	PART #	QTY	DESCRIPTION	COMMENTS
REF	AG330742	AR	SEALANT/TAMPER PROOF	
2	AG132143	1	BRACKET	
7	AG330762	1	COVER/HOUSING	
16	AG330739	1	KIT/GASKET	
30	AG330747	18	SCREW/M8X1.25 HEX WSHR HEAD	
32	AG330741	AR	SEALANT/ADHESIVE	
52	AG330739	AR	KIT/GASKET	

Copyright © 2008 AGCO Corporation

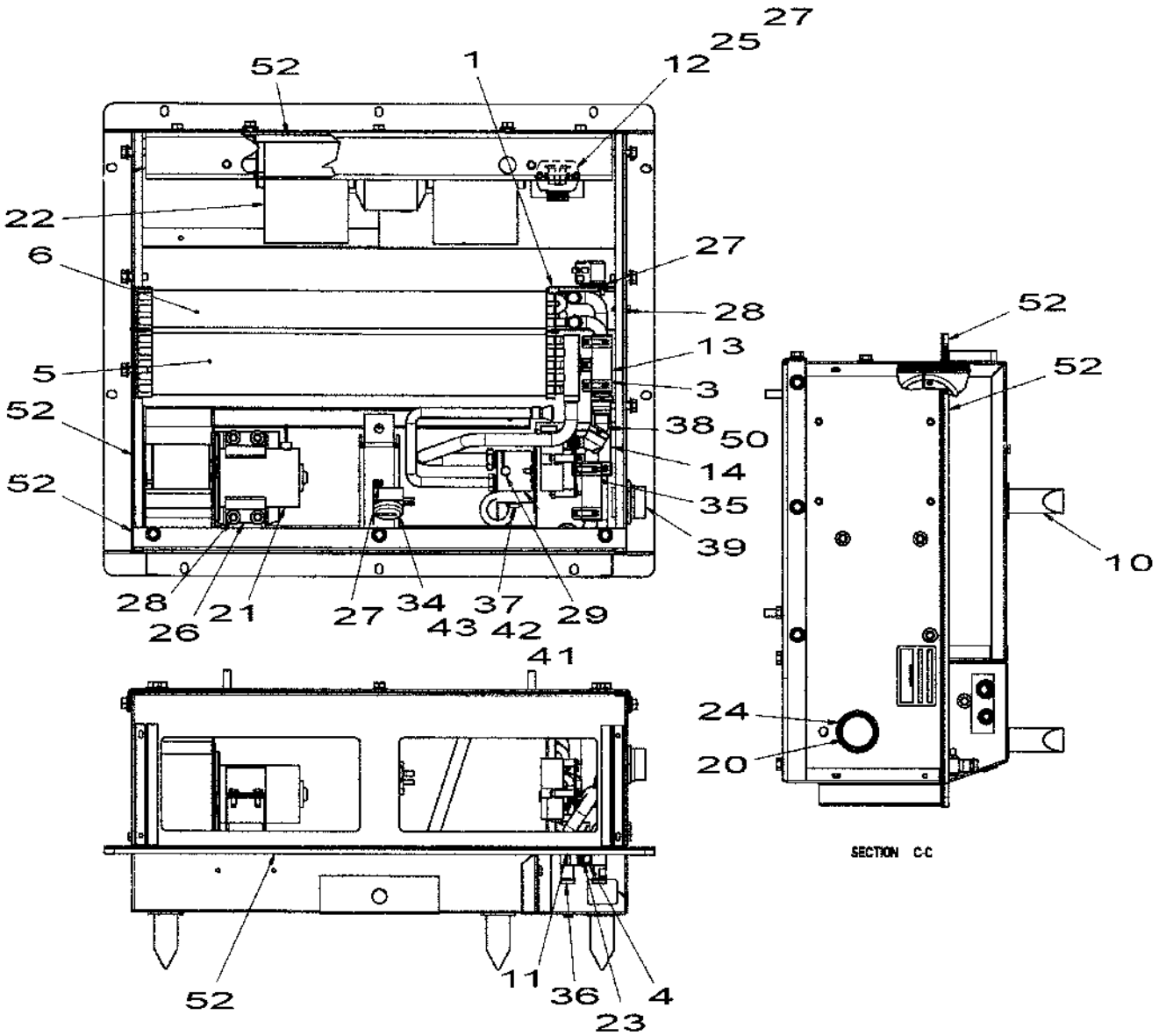

330738-A-02.tif

Copyright © 2008 AGCO Corporation

ITEM	PART #	QTY	DESCRIPTION	COMMENTS
1	AG330767	1	ANGLE/CORE SEAL ASM	
3	AG330766	6	CLAMP/SPRING BAND	
4	AG719303	2	CLAMP TUBE .62 DIA	
5	AG330764	1	EVAPORATOR/CORE	
6	AG727097	1	CORE/HEATER R4460	
10	AG330759	4	FITTING/DRAIN-DUCK BILL	
11	AG727096	2	GROMMET	
12	502269D1	1	RELAY GUARD	
13	AG330757	2	HOSE/HEATER 5/8 ID X .94	
14	AG330756	1	HOSE/HEATER 8/8 ID X .94	
20	AG330754	1	WASHER/LOCK	
21	AG332162	1	WHEEL/BLOWER-CW	
21	AG718805	1	MOTOR BLOWER ASM PRESSURE	SEE PAGE 7-60
21	AG332161	1	MOTOR/PRESSURE-BLOWER	
22	AG330576	1	MOTOR/BLOWER FAN	[A]
23	AG330753	2	NUT/M8 W/CONICAL WASHER	
24	AG330752	1	NUT/PANEL	
25	AG718806	1	RESISTOR-SPEED CONTROL	
26	AG330751	1	RETAINER/MOTOR	
27	AG330750	6	SCREW/M5X.86G HEX WSHR HD	
28	AG330749	12	SCREW/M6X1.0-6G	
29	AG330748	1	SCREW/M8X1.00 5G METRIC HEX HD	
34	AG718798	1	THERMOSTAT	
35	AG718788	1	TUBE-HEATER,INLET	
36	AG718789	1	TUBE-HEATER,OUTLET	
37	AG718801	1	VALVE-EXPANSION	
38	AG718787	1	VALVE-WATER,ELECTRONIC	
39	AG727094	1	HARNESS/WIRE	
41	AG330221	1	O-RING/#8	
42	AG330220	1	O-RING/#10	
43	AG330744	1	TUBE/1/8 ID	
50	AG330209	1	VALVE/WATER ELECTRONIC	
52	AG330739	AR	KIT/GASKET	
	FOOTNOTE [A]		2006 AND NEWER	

Copyright © 2008 AGCO Corporation

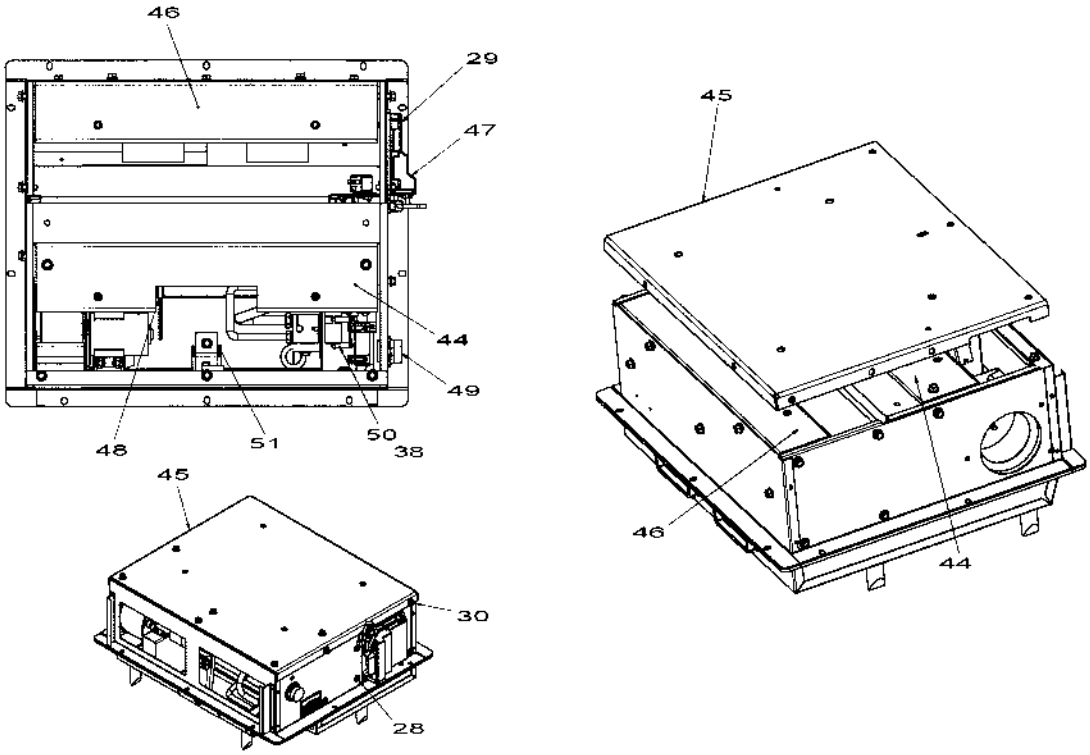

330738-A-03.tif

Copyright © 2008 AGCO Corporation

ITEM	PART #	QTY	DESCRIPTION	COMMENTS
28	AG330749	12	SCREW/M6X1.0-6G	
29	AG330748	1	SCREW/M8X1.00 5G METRIC HEX HD	
30	AG330747	18	SCREW/M8X1.25 HEX WSHR HEAD	
38	AG718787	1	VALVE-WATER,ELECTRONIC	
44	507159D1	1	CHANNEL ASM-COVER	
45	507158D1	1	COVER-ASM	SEE PAGE 7-58
46	507160D1	1	SUPPORT-ASM	
47	AG330743	1	CONTROL/AUTO TEMP ECU MODULE	
48	AG330219	1	THERMOSTAT/PROBE	
49	AG330218	1	HARNESS/WIRE ASM ATC	
50	AG330209	1	VALVE/WATER ELECTRONIC	
51	AG330740	1	COVER ASM/SUPPORT	

Copyright © 2008 AGCO Corporation

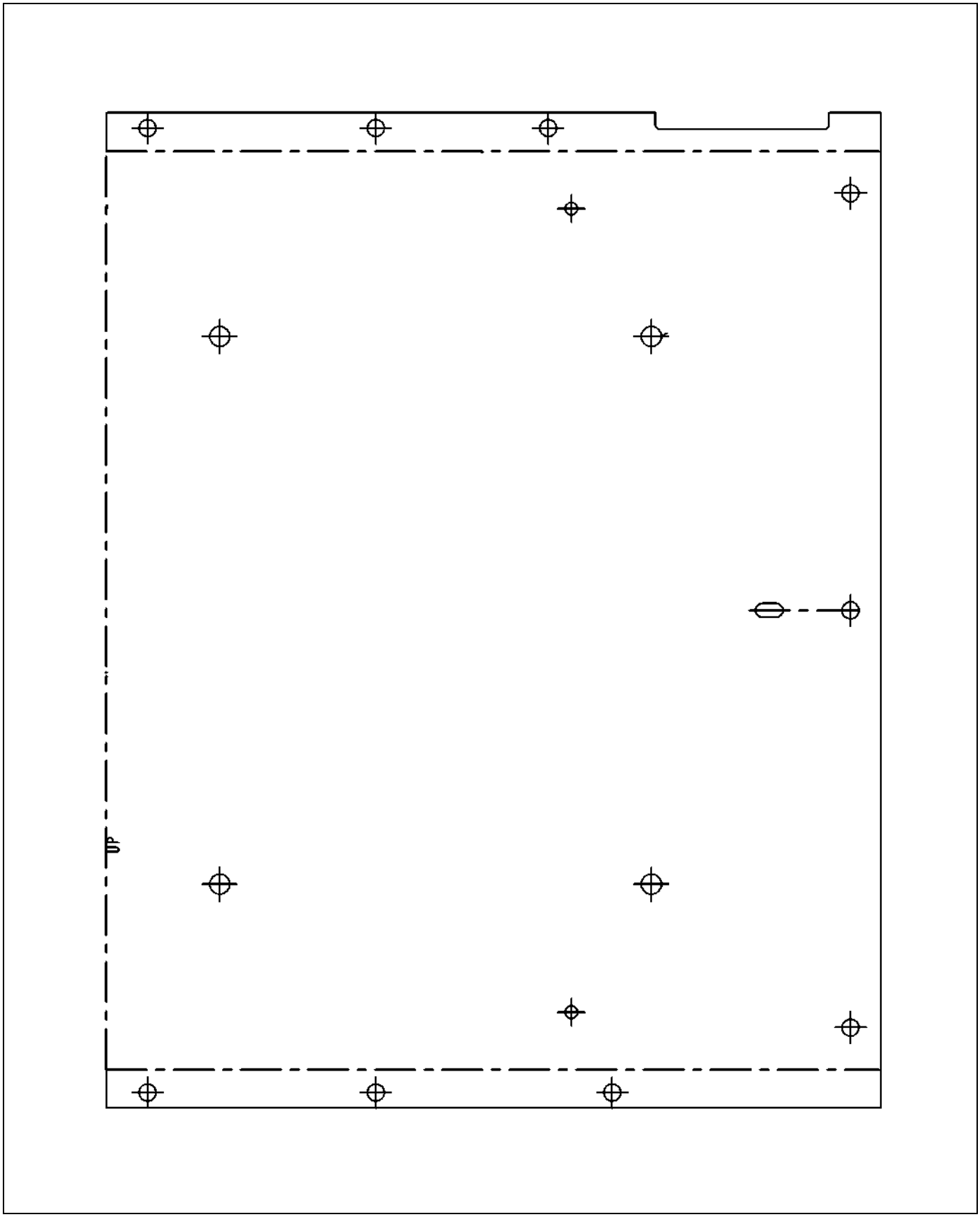

507158D1-02-N068-.TIF

Copyright © 2008 AGCO Corporation

ITEM	PART #	QTY	DESCRIPTION	COMMENTS
REF	AG727095	1	GASKETS /KIT	SEE PAGE 7-59

Copyright © 2008 AGCO Corporation

Please refer to the Bill Of Material on the opposite page for related Installations, Assemblies, or Parts

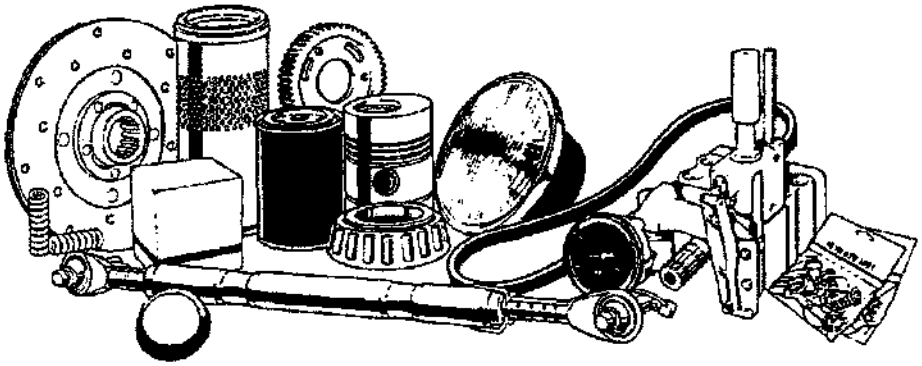

727095.tif

Copyright © 2008 AGCO Corporation

GASKETS / KIT

ITEM	PART #	QTY	DESCRIPTION	COMMENTS
REF	AG330426	2	GASKET	
REF	AG330425	1	GASKET	
REF	AG330424	1	GASKET	

Copyright © 2008 AGCO Corporation

Please refer to the Bill Of Material on the opposite page for related Installations, Assemblies, or Parts

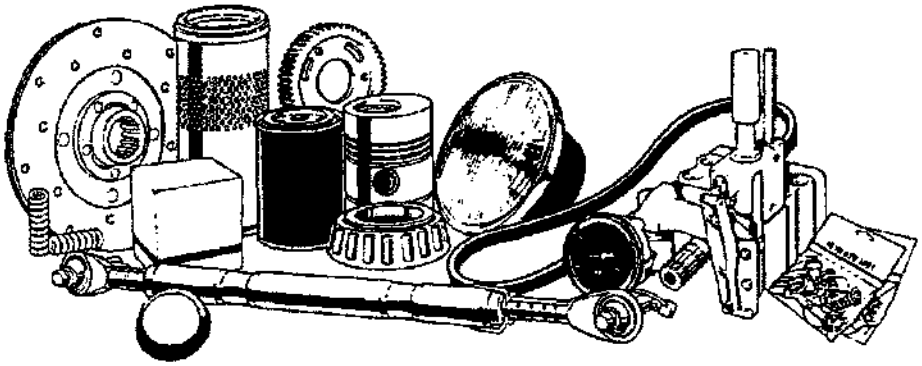

718805.tif

Copyright © 2008 AGCO Corporation

MOTOR BLOWER ASM PRESSURE

ITEM	PART #	QTY	DESCRIPTION	COMMENTS
REF	AG332162	1	WHEEL/BLOWER-CW	
REF	AG332161	1	MOTOR/PRESSURE-BLOWER	

Copyright © 2008 AGCO Corporation

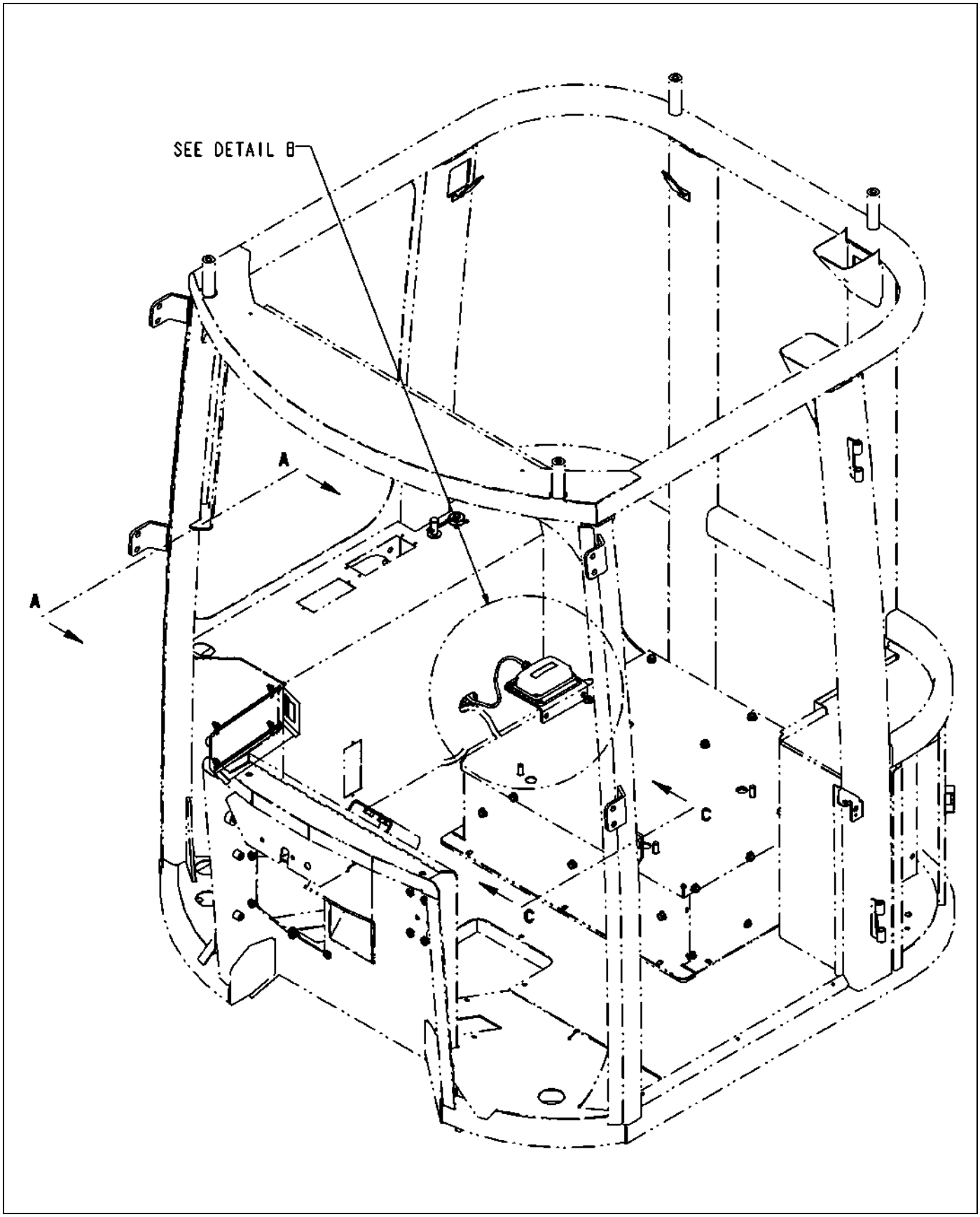

523121D1-01-R784-01.TIF

Copyright © 2008 AGCO Corporation

ITEM	PART #	QTY	DESCRIPTION	COMMENTS
6	523114D1	1	KIT-CAB,SMARTRAX,TG	

Copyright © 2008 AGCO Corporation

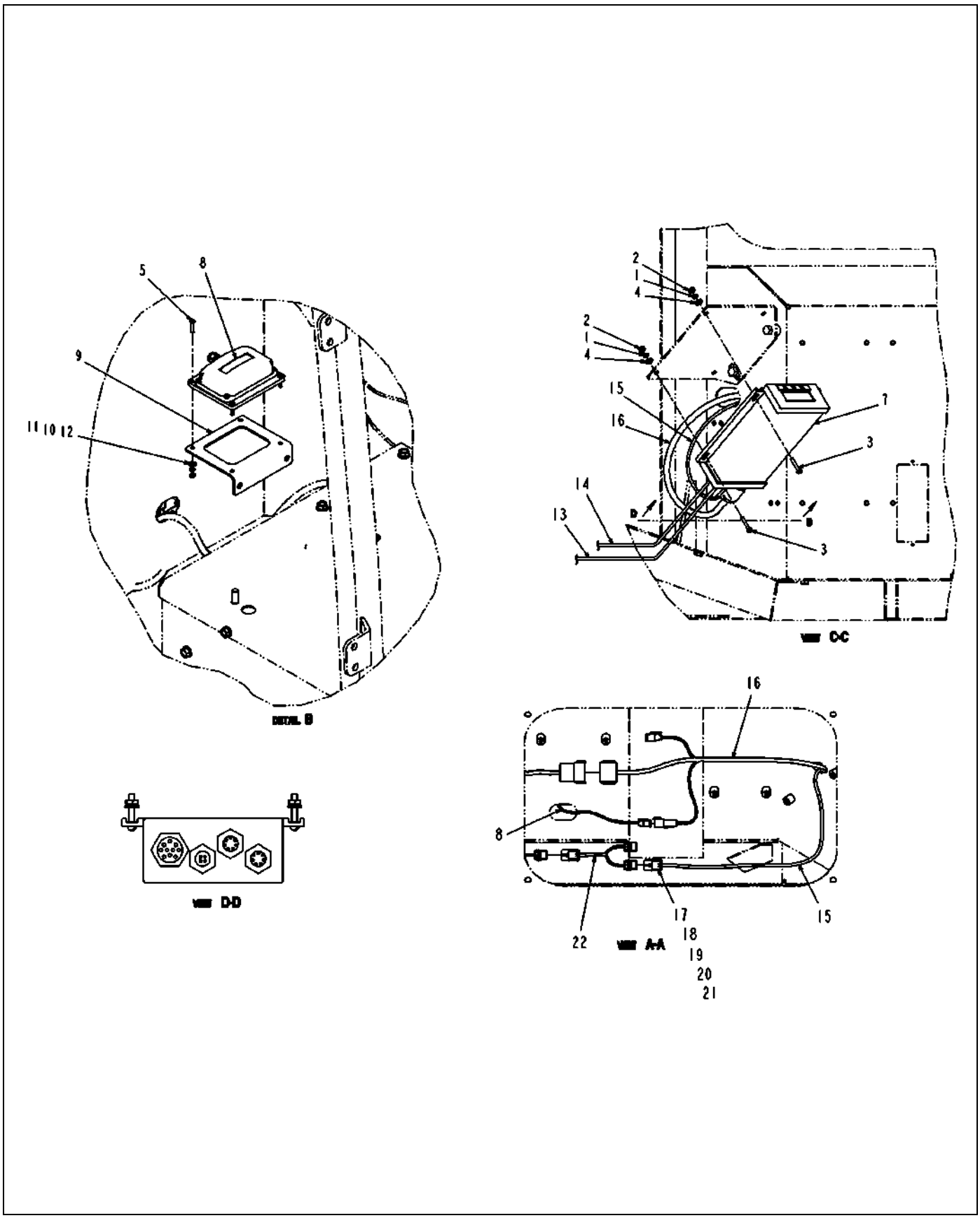

523121D1-01-R784-02.TIF

Copyright © 2008 AGCO Corporation

ITEM	PART #	QTY	DESCRIPTION	COMMENTS
1	AG550914	-	WASHER #8 LK ZN REG	
2	AG550922	-	NUT #8-32NC HEX ZN REG	
3	AG550957	4	SCREW 8-32X 1 MA ZN SL RHD (D)	
4	AG562196	-	WASHER #8 FL ZN SAE TYPE-A	
5	401658X1	4	SCREW-M4X20	
7	523125D1	-	CONTROLLER-SMARTRAX	
8	523127D1	-	SENSOR-YAW,SMARTRAX	
9	524286D1	1	BRKT-YAW SENSOR	
10	CH3B-4501	4	WASHER LOCK SPLIT 4.4IDX1.02	
11	CH5C-8312	4	NUT-M4X0.7 THD HEX	
12	CH8T-0328	4	WASHER-HARD 5.5IDX10ODX1MM	
13	524291D1	-	CABLE-LIGHTBAR,SMARTRAX	
14	524292D1	-	CABLE-GPS,SMARTRAX	
15	524289D1	-	CABLE-PWR,SMARTRAX	
16	524801D1	-	CABLE-SMARTRAX,CAB	
17	AG515764	2	SEAL CABLE GREEN REEL 18-16 GA	
18	AG515766	1	CAVITY PLUG	
19	AG517618	1	CONNECTOR MA 3 WAY 280 SEALED	
20	AG519288	2	TERM METRI-PACK M280/20-16 GA	
21	AG520270	1	LOCK-METRIPACK,280/3 WAY	
22	AG134156	1	HARNESS-ADAPTOR,T,GPS	

Copyright © 2008 AGCO Corporation

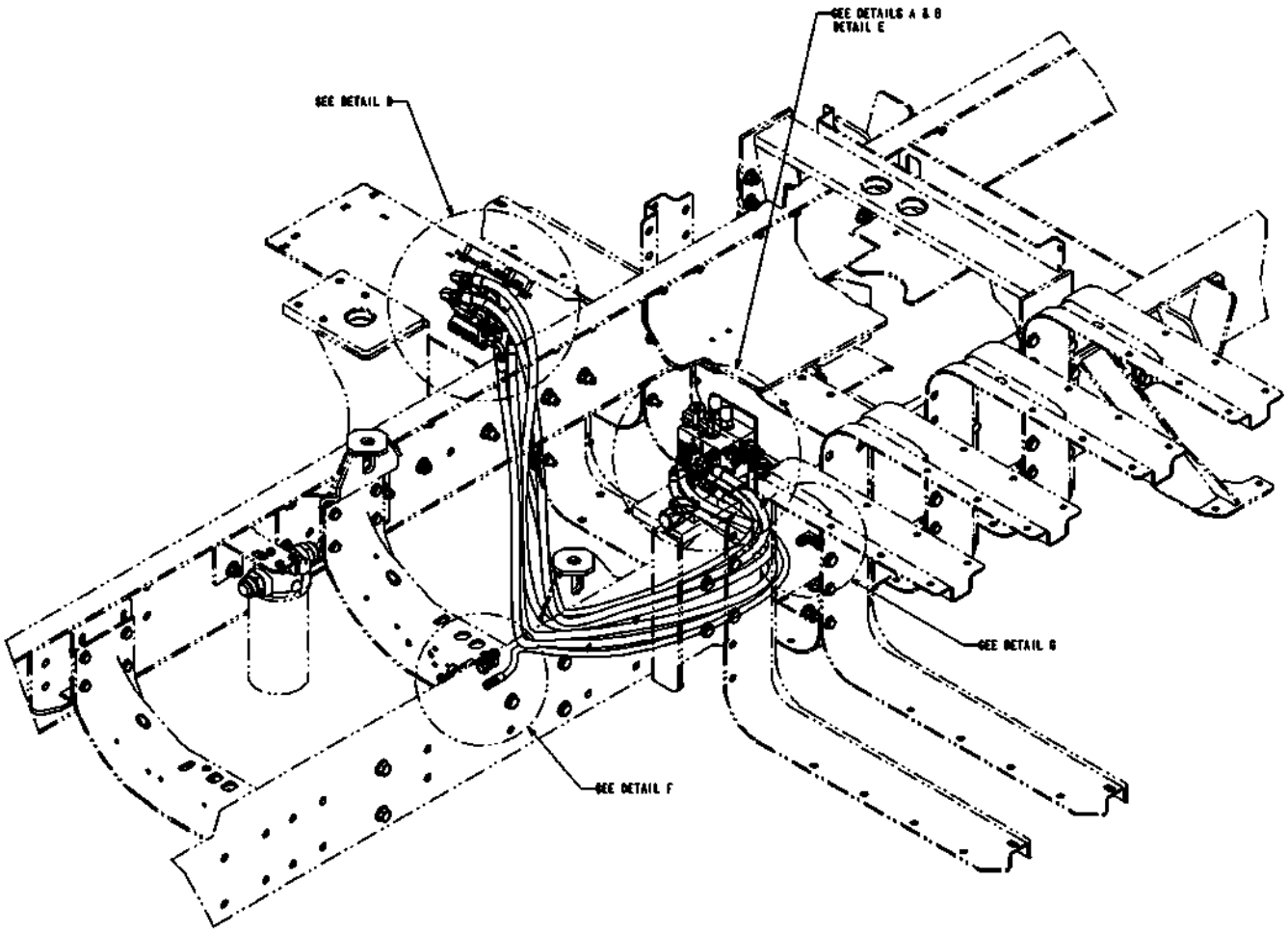

523124D1-01-R784-01.TIF

Copyright © 2008 AGCO Corporation

ITEM	PART #	QTY	DESCRIPTION	COMMENTS
11	523116D1	1	KIT-CHASSIS,SMARTRAX,7X60	SEE PAGE 7-66

Copyright © 2008 AGCO Corporation

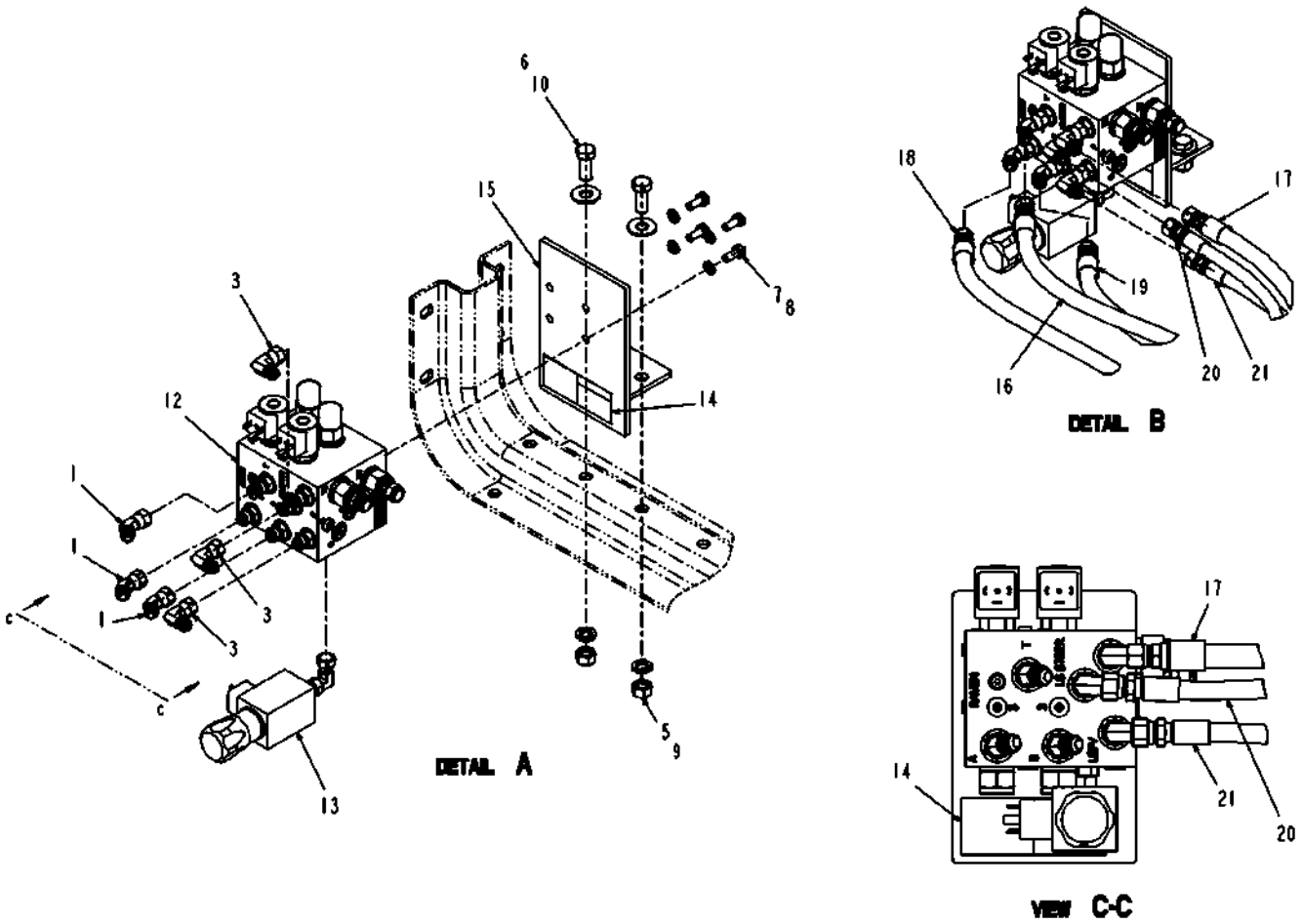

523124D1-01-R784-02.TIF

Copyright © 2008 AGCO Corporation

VALVE INSTALL-SMARTRAX,7X60

ITEM	PART #	QTY	DESCRIPTION	COMMENTS
1	AG523227	3	ADAPTER-45D,-6FJIC SWX-6MJIC	
3	AG561629	3	ELBOW -6FJS90X -6MJ	
5	AG562045	2	NUT 0.50-13NC HEX SS REG	
6	AG562046	2	WASHER 0.50 FL SS REG TYPE-B	
7	AG562049	4	BOLT 0.31-18NCX 0.75 SS HHD	
8	AG562051	4	WASHER 0.31 LK SS REG	
9	AG562053	2	WASHER 0.50 LK SS REG	
10	AG562115	2	BOLT 0.50-13NCX 1.25 S.S. HHD	
12	523126D1	-	VALVE ASM-HYD,SMARTRAX	
13	523129D1	-	SWITCH-PRESSURE,ADJ,15-100 BAR	
14	524287D1	-	LABEL-WARNING,TAMPERING	
15	524290D1	-	MTG WLDMT-VLV ASM,SMARTRAX	
16	524298D1	-	HOSE ASM-HYD,-8 90DX-6 FJIC,82	
17	524298D1	-	HOSE ASM-HYD,-8 90DX-6 FJIC,82	
18	524298D1	-	HOSE ASM-HYD,-8 90DX-6 FJIC,82	
19	524298D1	-	HOSE ASM-HYD,-8 90DX-6 FJIC,82	
20	524299D1	-	HOSE ASM-HYD,-4X-6 FJIC,70 IN	
21	524300D1	-	HOSE ASM-HYD,-4X-6 FJIC,55 IN	

Copyright © 2008 AGCO Corporation

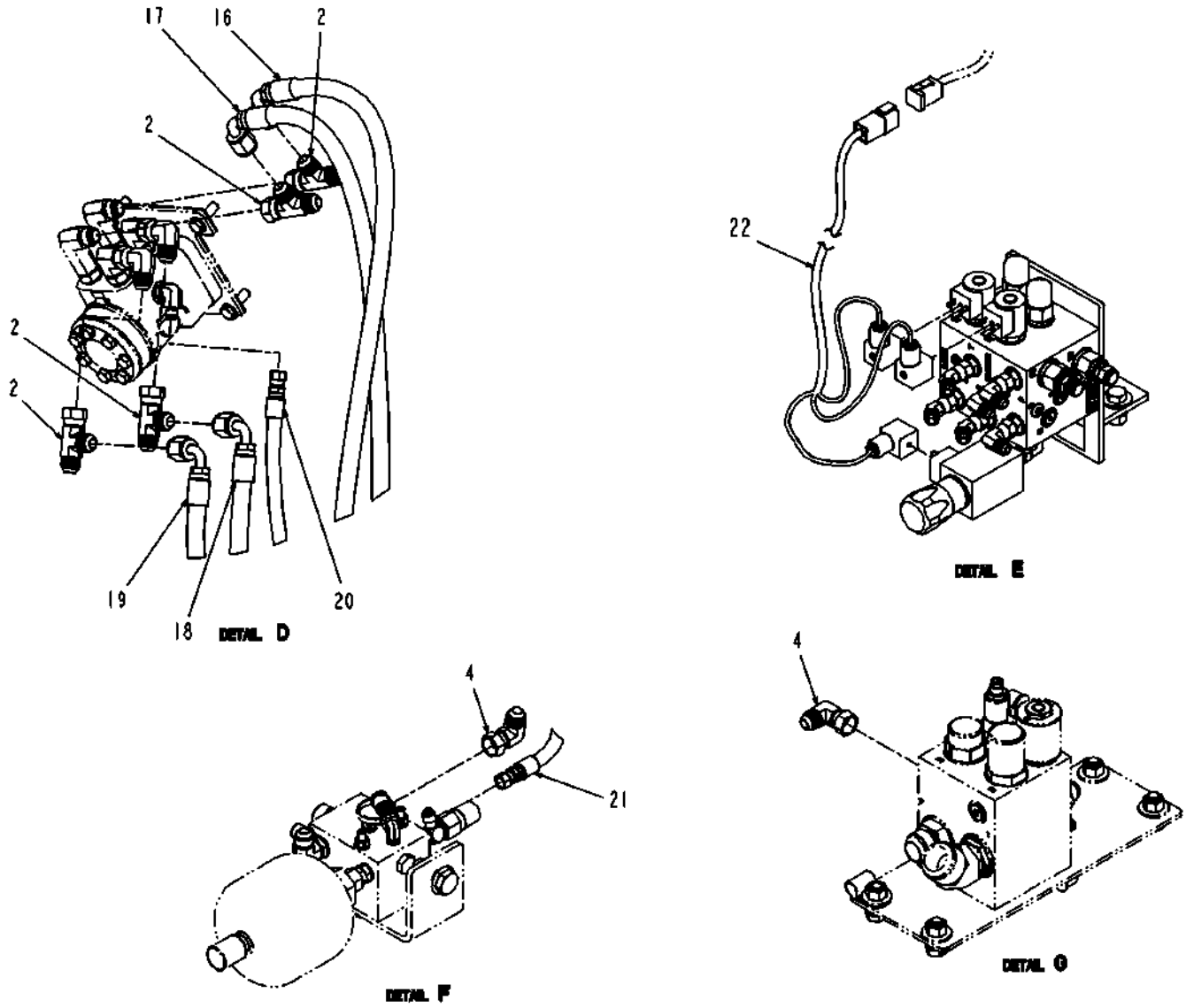

523124D1-01-R784-03.TIF

Copyright © 2008 AGCO Corporation

ITEM	PART #	QTY	DESCRIPTION	COMMENTS
2	AG560278	4	TEE 0.50JIC SWIVELX0.50 JIC(2)	
4	AG561941	2	ELBOW -8FJS90 X-8MJ	
16	524298D1	-	HOSE ASM-HYD,-8 90DX-6 FJIC,82	
17	524298D1	-	HOSE ASM-HYD,-8 90DX-6 FJIC,82	
18	524298D1	-	HOSE ASM-HYD,-8 90DX-6 FJIC,82	
19	524298D1	-	HOSE ASM-HYD,-8 90DX-6 FJIC,82	
20	524299D1	-	HOSE ASM-HYD,-4X-6 FJIC,70 IN	
21	524300D1	-	HOSE ASM-HYD,-4X-6 FJIC,55 IN	
22	524802D1	-	CABLE-SMARTRAX,CHASSIS	

Copyright © 2008 AGCO Corporation

Please refer to the Bill Of Material on the opposite page for related Installations, Assemblies, or Parts

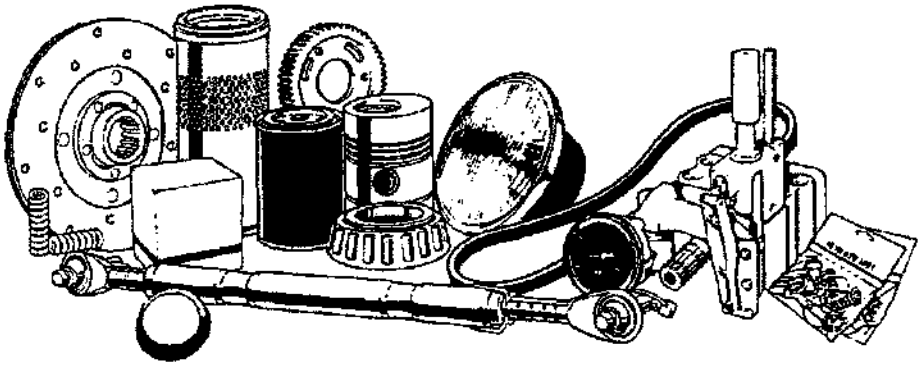

523116D1.tif

Copyright © 2008 AGCO Corporation

KIT-CHASSIS,SMARTRAX,7X60

ITEM	PART #	QTY	DESCRIPTION	COMMENTS
REF	524299D1	1	HOSE ASM-HYD,-4X-6 FJIC,70 IN	
REF	524298D1	1	HOSE ASM-HYD,-8 90DX-6 FJIC,82	
REF	524802D1	1	CABLE-SMARTRAX,CHASSIS	
REF	524300D1	1	HOSE ASM-HYD,-4X-6 FJIC,55 IN	
REF	523129D1	1	SWITCH-PRESSURE,ADJ,15-100 BAR	
REF	523126D1	1	VALVE ASM-HYD,SMARTRAX	
REF	524290D1	1	MTG WLDMT-VLV ASM,SMARTRAX	
REF	524287D1	1	LABEL-WARNING,TAMPERING	

Copyright © 2008 AGCO Corporation

Please refer to the Bill Of Material on the opposite page for related Installations, Assemblies, or Parts

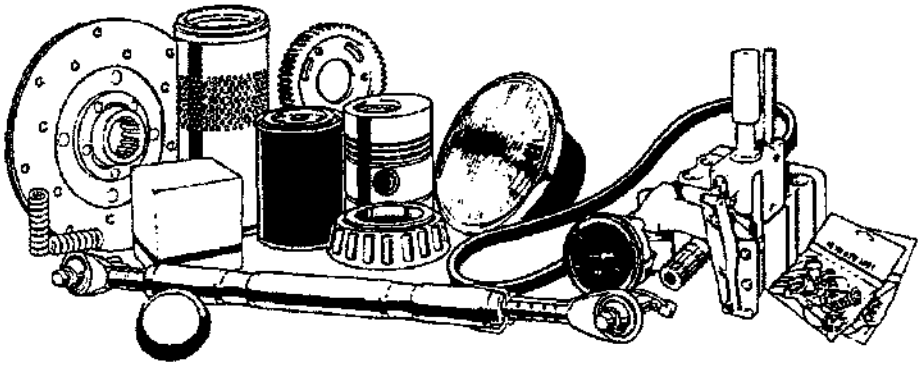

523113D1.tif

Copyright © 2008 AGCO Corporation

OPT-SMARTRAX,SC 7X60

ITEM	PART #	QTY	DESCRIPTION	COMMENTS
1	523121D1	1	CTRL INSTL-SMARTRAX,7X60 CAB	SEE PAGE 7-61
2	523124D1	1	VALVE INSTL-SMARTRAX,7X60	SEE PAGE 7-63
3	520283D1	1	STEERING UNIT INSTL	SEE PAGE 4-20

Copyright © 2008 AGCO Corporation

Please refer to the Bill Of Material on the opposite page for related Installations, Assemblies, or Parts

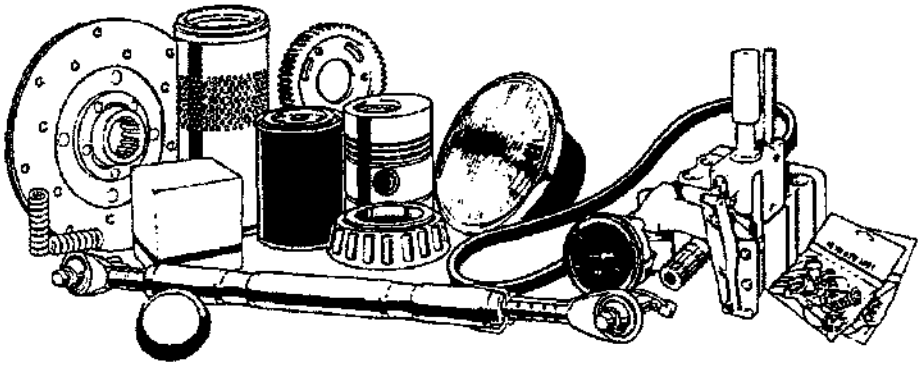

523659D1.tif

Copyright © 2008 AGCO Corporation

ITEM	PART #	QTY	DESCRIPTION	COMMENTS
1	503365D1	1	INSTL-BRACKET,TERMINAL	SEE PAGE 7-70
2	508703D1	1	INSTL-ELECTRICAL,AUTOGUIDE	SEE PAGE 8-67
3	515149D1	1	ASM,ROOF-BRACKET,B4-TOPDOCK	SEE PAGE 7-71
4	523617D1	1	INSTL-WAS,AUTOGUIDE,7460	SEE PAGE 7-72
5	523657D1	1	SWITCH-INSTL,AUTOGUIDE	SEE PAGE 8-66

Copyright © 2008 AGCO Corporation

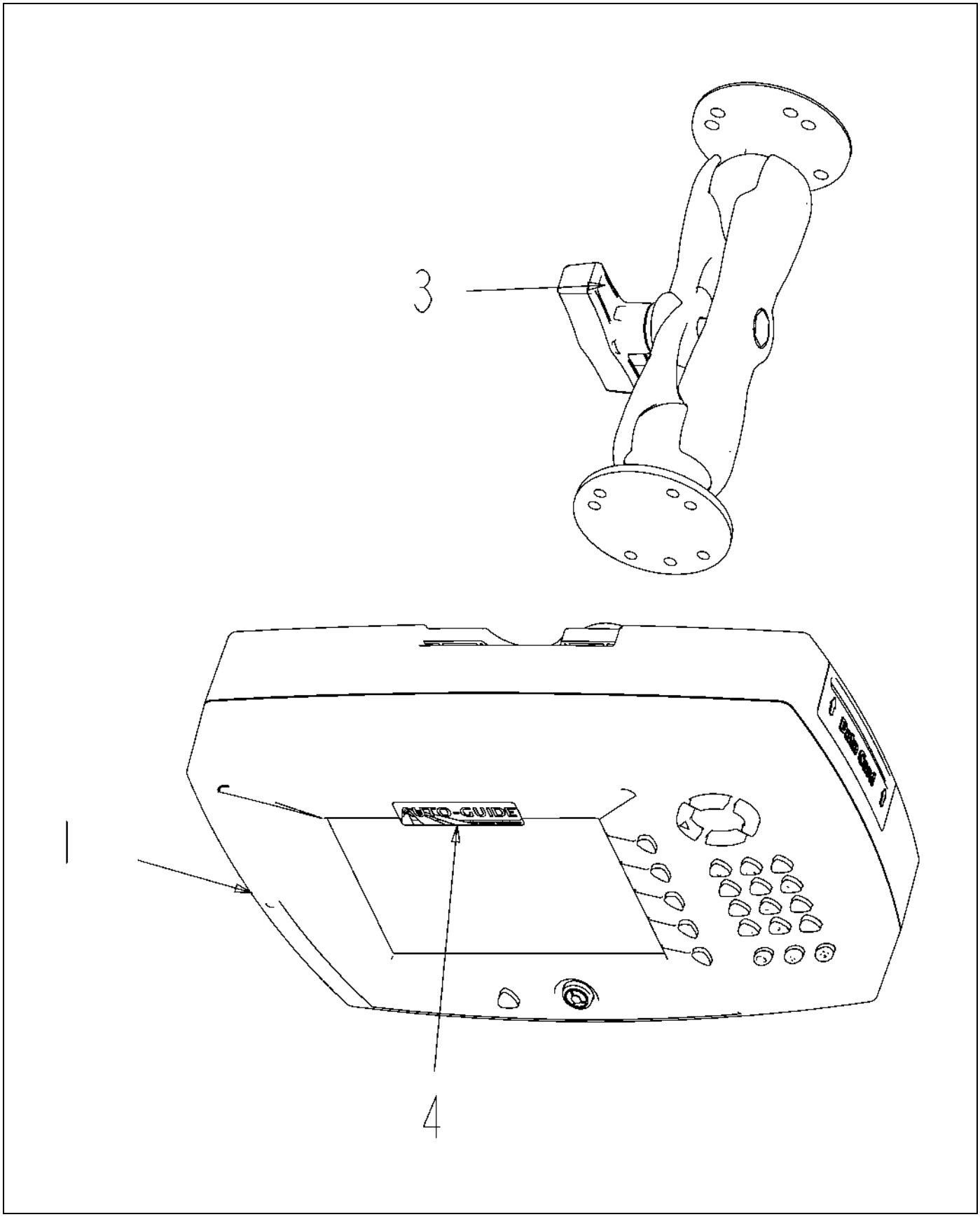

133891-04-N844-.TIF

Copyright © 2008 AGCO Corporation

TERMINAL KIT

ITEM	PART #	QTY	DESCRIPTION	COMMENTS
REF	AG132498	1	SOFTWARE,TERMINAL,AG	
1	AG129560	1	AUTO-GUIDE TERMINAL	
3	AG523464	1	CLAMP ASM-MTG,BALL,7.50	
4	72571170	1	DECAL - AUTO GUIDE	

Copyright © 2008 AGCO Corporation

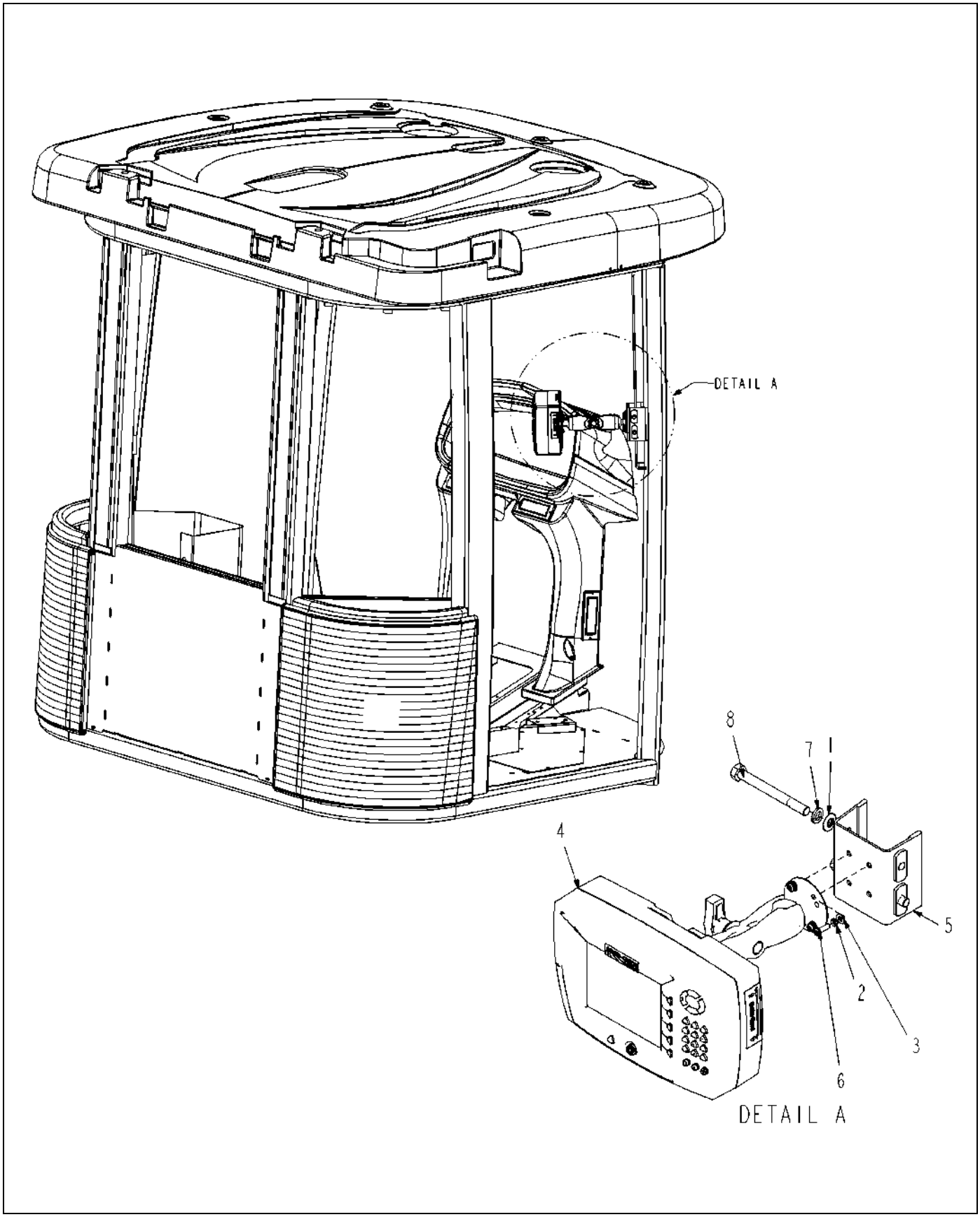

503365D1-03-N975-.TIF

Copyright © 2008 AGCO Corporation

INSTALL-BRACKET,TERMINAL

ITEM	PART #	QTY	DESCRIPTION	COMMENTS
1	WR55075	2	WASHER-FL,M10,ZN,REG	
2	AG125889	4	WASHER-SPRING,M5,ZINC	
3	AG125890	4	WASHER FLAT,M5X100ODX1THK,ZINC	
4	AG133891	1	TERMINAL KIT	SEE PAGE 7-69
5	AG326925	1	CLAMP WLDMT-MTG,CTRL/MONITOR	
6	AG523508	4	SCR-M5-0.8X16,CL10.9,BLK,BHHS	
7	AG550191	2	WASHER 0.37 LK ZN REG	
8	AG562364	2	BOLT M10-1.5X100MM G8.8 ZN HHD	

Copyright © 2008 AGCO Corporation

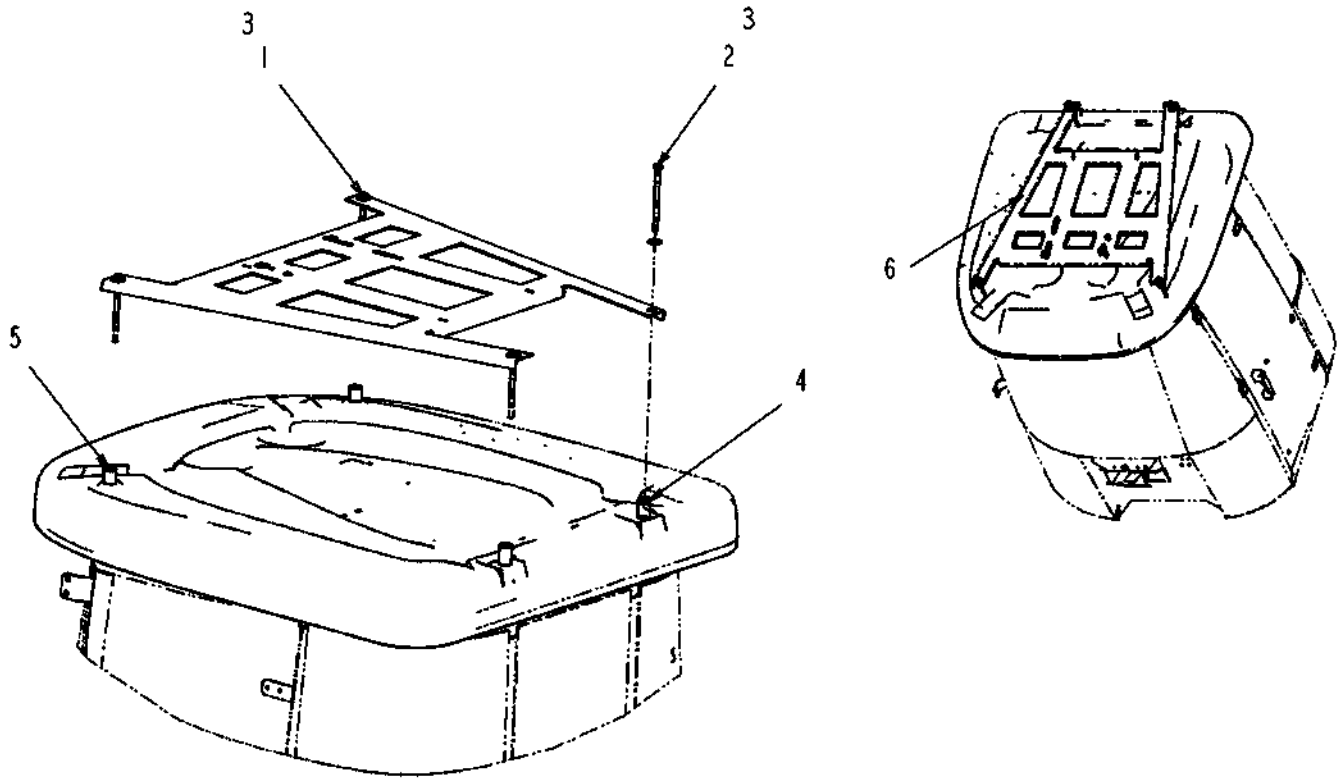

515149D1-01-T026-.TIF

Copyright © 2008 AGCO Corporation

ASM,ROOF-BRACKET,B4-TOPDOCK

ITEM	PART #	QTY	DESCRIPTION	COMMENTS
1	WR55063	2	SCREW-CAP HEX M12 X 130	
2	WR55064	2	SCREW-CAP HEX M12 X 140	
3	AG562790	4	WASHER FL METRIC#12 GEN PUR ZN	
4	515093D1	2	BOSS,ROUND 1.25 IN X.37X1.9 IN	
5	515094D1	2	BOSS,ROUND 1.25 IN X.37 IN X1.4 IN	
6	515148D1	1	WLDMT-TOPDOCK,B4,SC7X60	

Copyright © 2008 AGCO Corporation

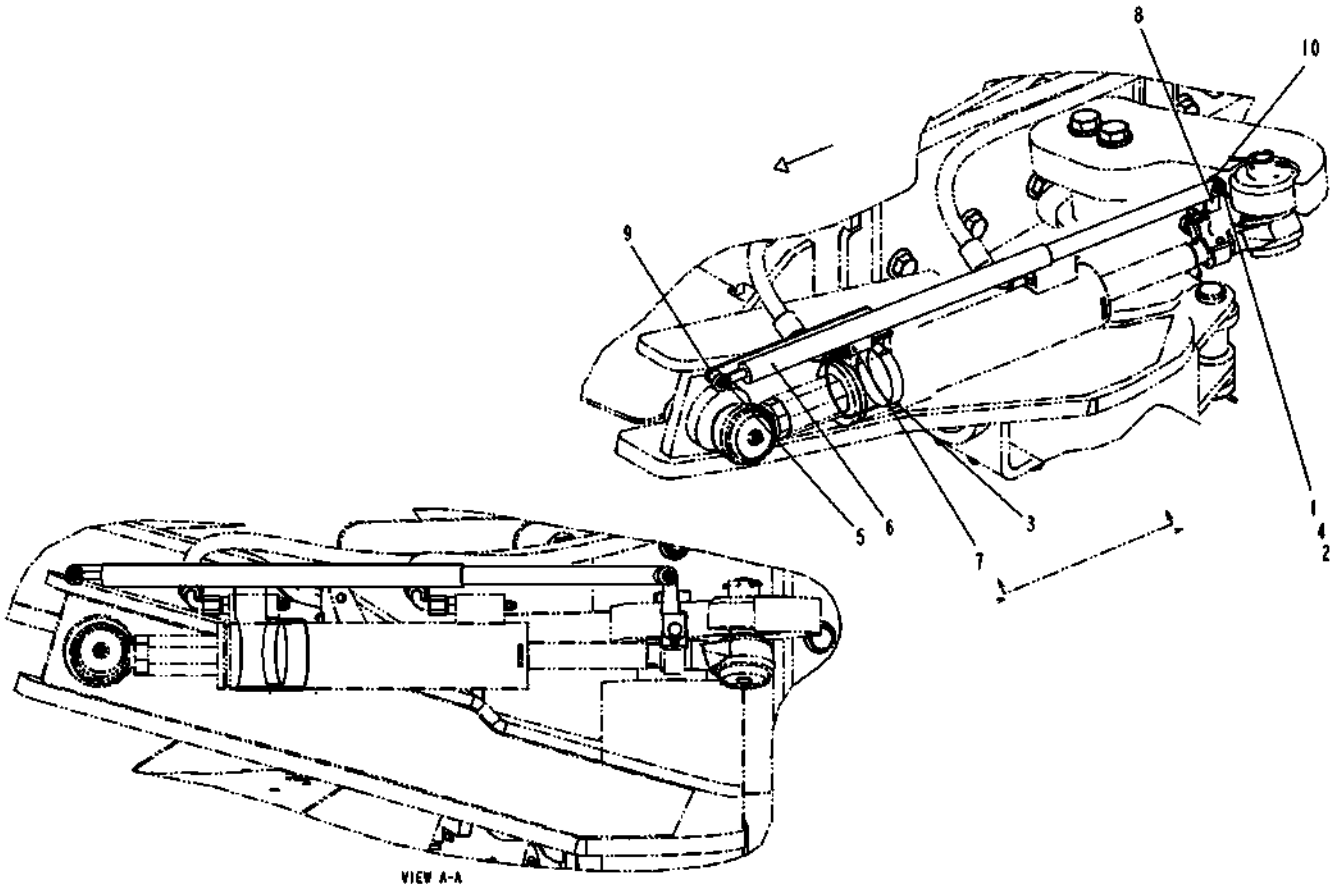

523617D1-01-T026-.TIF

Copyright © 2008 AGCO Corporation

INSTALL-WAS,AUTOGUIDE,7460

ITEM	PART #	QTY	DESCRIPTION	COMMENTS
1	AG550914	2	WASHER #8 LK ZN REG	
2	AG550922	2	NUT #8-32NC HEX ZN REG	
3	AG561234	1	CLAMP 2.06-3.00 HOSE 40HS	
4	AG562196	2	WASHER #8 FL ZN SAE TYPE-A	
5	AG562199	2	SCREW 8-32X1.25 ZN RD HD	
6	523605D1	1	SENSOR-LINEAR,EXT,300MM,7X60	
7	523614D1	1	BRKT-AUTOGUIDE,WAS,MAIN,7X60	
8	523615D1	1	BRKT-AUTOGUIDE,WAS,2ND,7X60	
9	524600D1	1	SPACER,SENSOR,SC 7X60	
10	524601D1	1	SPACER,SENSOR,SC 7X60	

Copyright © 2008 AGCO Corporation

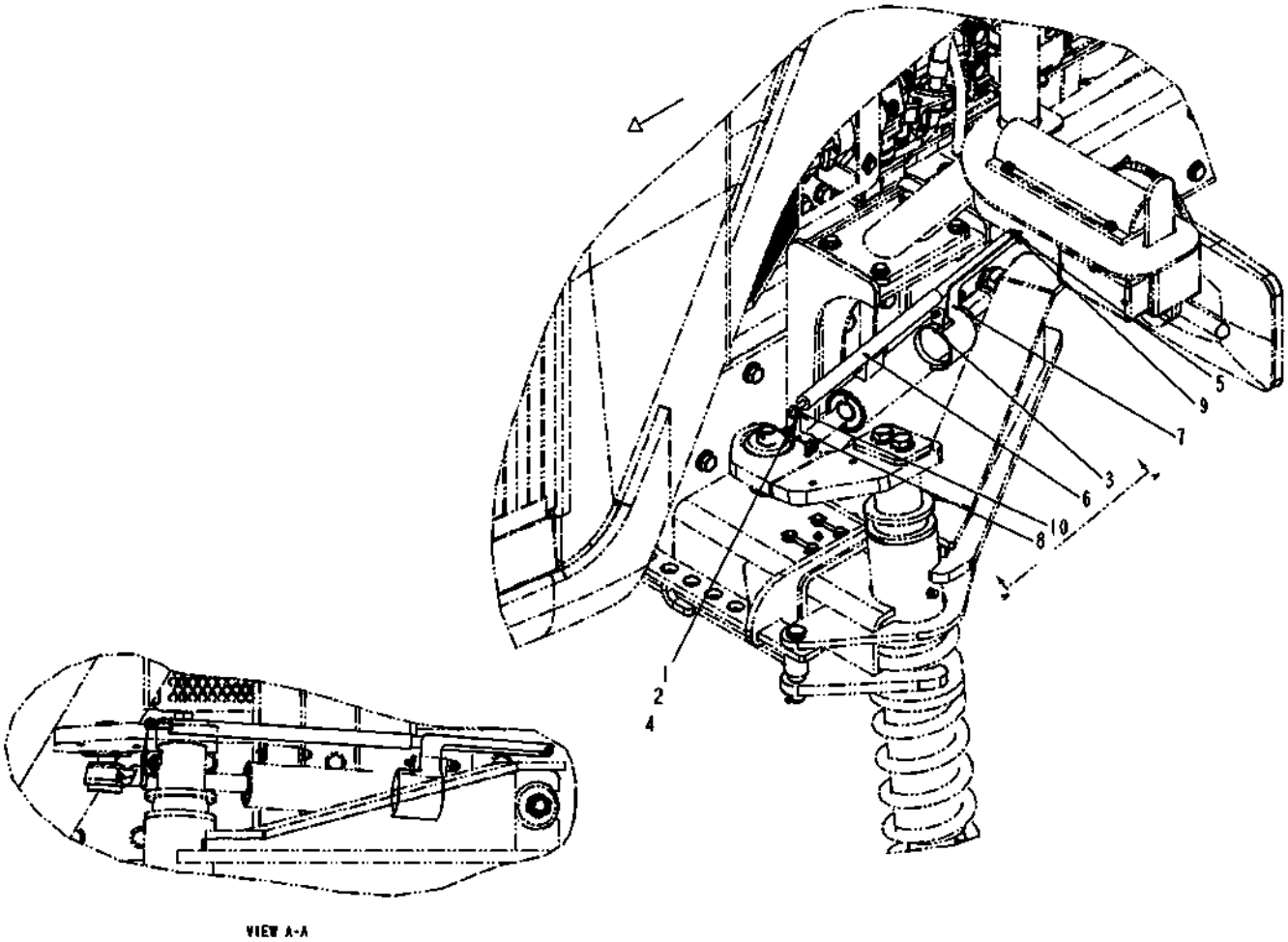

523616D1-01-T026-.TIF

Copyright © 2008 AGCO Corporation

INSTALL-WAS,AUTOGUIDE,7660

ITEM	PART #	QTY	DESCRIPTION	COMMENTS
1	AG550914	2	WASHER #8 LK ZN REG	
2	AG550922	2	NUT #8-32NC HEX ZN REG	
3	AG561234	1	CLAMP 2.06-3.00 HOSE 40HS	
4	AG562196	2	WASHER #8 FL ZN SAE TYPE-A	
5	AG562199	2	SCREW 8-32X1.25 ZN RD HD	
6	523605D1	1	SENSOR-LINEAR,EXT,300MM,7X60	
7	523614D1	1	BRKT-AUTOGUIDE,WAS,MAIN,7X60	
8	523615D1	1	BRKT-AUTOGUIDE,WAS,2ND,7X60	
9	524600D1	1	SPACER,SENSOR,SC 7X60	
10	524601D1	1	SPACER,SENSOR,SC 7X60	

Copyright © 2008 AGCO Corporation

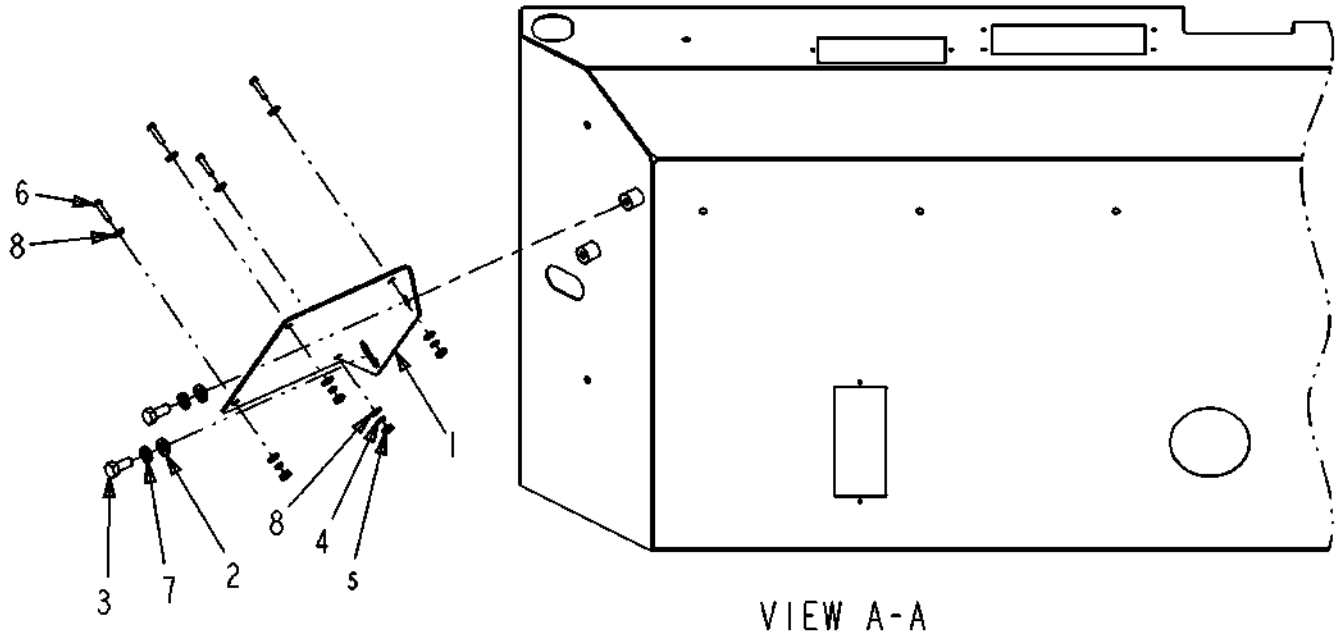

524910D1-01-R784-.TIF

Copyright © 2008 AGCO Corporation

BRKT INSTALL-SMARTRAX,PHX 200,SC

ITEM	PART #	QTY	DESCRIPTION	COMMENTS
1	WR129240	1	BRKT-MTG,RCVR,GPS	
2	AG520880	2	WASHER-FL,M8,ZN,REG	
3	WR522279	2	BOLT-M8-1.25X20,CL10.9,ZN,HHD	
4	AG550914	4	WASHER #8 LK ZN REG	
5	AG550922	4	NUT #8-32NC HEX ZN REG	
6	AG550930	4	SCREW 8-32 X.75 MA ZN SL RD HD	
7	AG561679	2	WASHER LOCK M8 ZN	
8	AG562196	8	WASHER #8 FL ZN SAE TYPE-A	

Copyright © 2008 AGCO Corporation

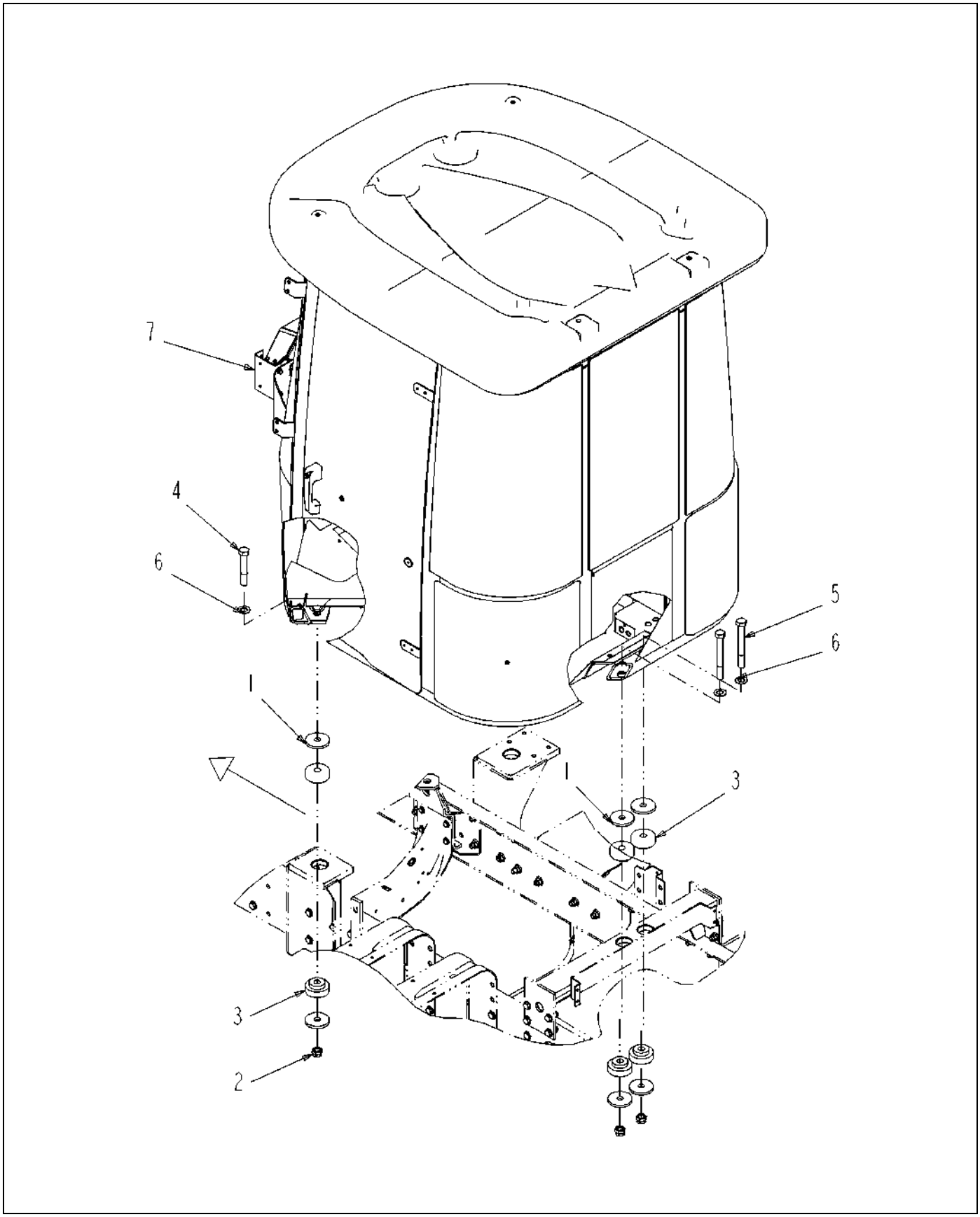

523716D1-01-T041-.TIF

Copyright © 2008 AGCO Corporation

CAB GROUP-7X60,STD HVAC,CH, 2009

ITEM	PART #	QTY	DESCRIPTION	COMMENTS
1	AG236575	8	SLUG-ISOLATOR,CAB MT	
2	AG516176	4	NUT 0.87-9NC HVY HX FLEX LK PL	
3	AG520640	8	ISOLATOR-SHOCK	
4	AG522710	2	BOLT .87-9UNCX 5.50 G8 ZN HHD	
5	AG561699	2	BOLT 0.87- 9NCX 7.50 G8 ZN HHD	
6	AG606258	4	WASHER 1.75ODX0.93ID G8 ZN	
7	523736D1	1	CAB ASM-CHAL,STD HVAC	

Copyright © 2008 AGCO Corporation

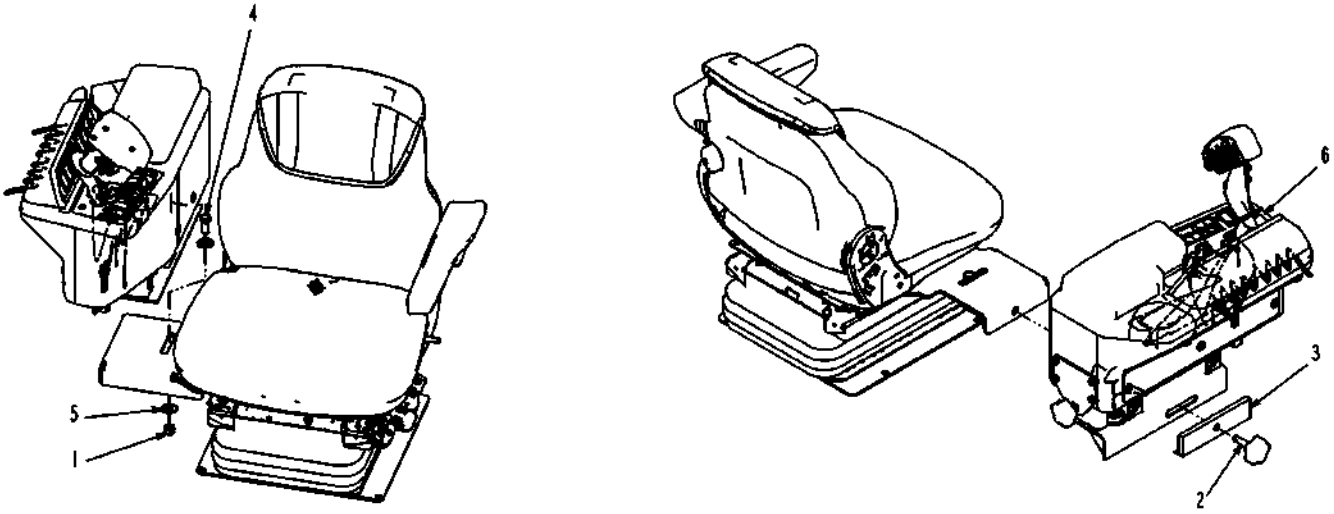

523759D1-01-T041-.TIF

Copyright © 2008 AGCO Corporation

CONSOLE INSTALL-SEAT,RH,NA

ITEM	PART #	QTY	DESCRIPTION	COMMENTS
1	WR11528	1	NUT-TOPLOCK, 1/2-13UNC G5	
2	WR128024	1	KNOB-.50-13UNC X 2.00	
3	WR128027	1	BAR WLDMT-STABILIZER	
4	AG550256	1	BOLT.50-13NCX1.25 G5 ZN HHD	
5	AG550353	2	WASHER 0.50 FL ZN REG TYPE-B	
6	523760D1	1	CONSOLE ASM-SEAT,RH,NA	SEE PAGE 7-77

Copyright © 2008 AGCO Corporation

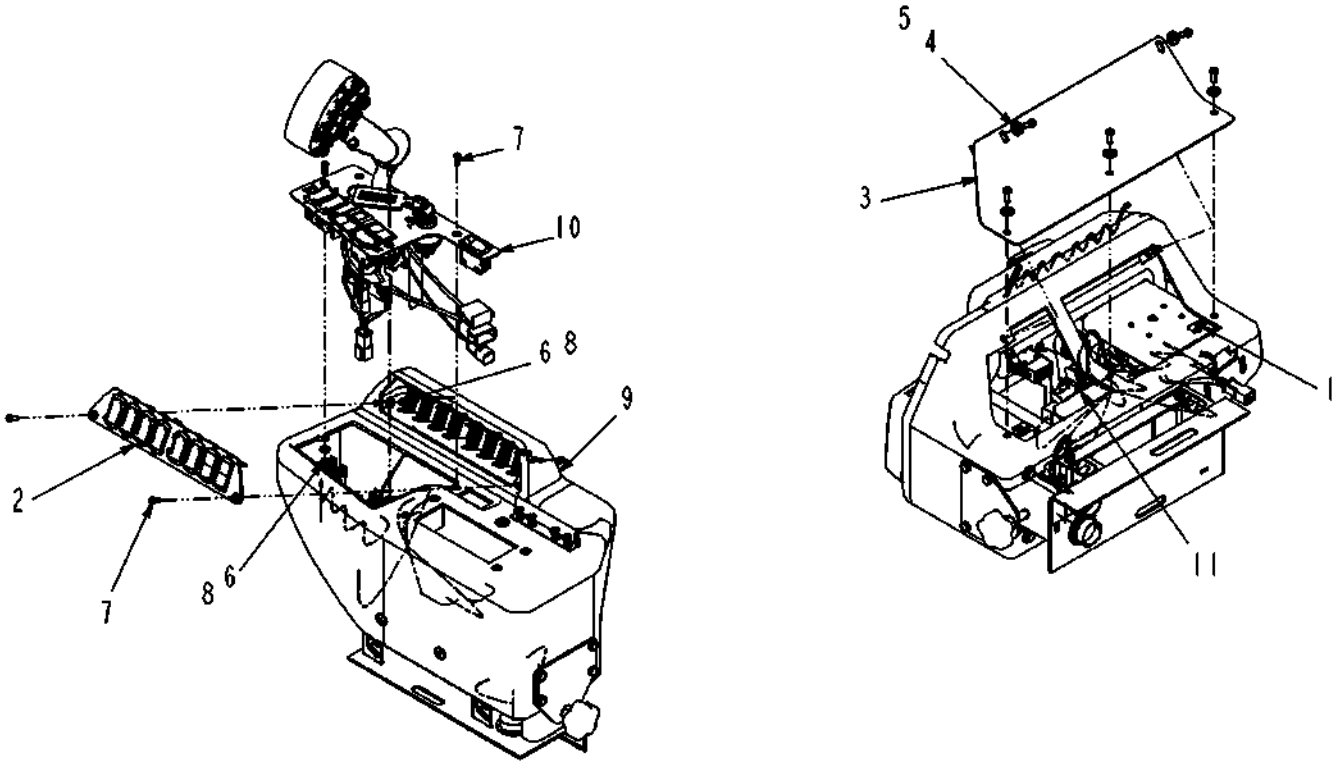

523760D1-01-T041-.TIF

Copyright © 2008 AGCO Corporation

CONSOLE ASM-SEAT,RH,NA

ITEM	PART #	QTY	DESCRIPTION	COMMENTS
1	WR50851	4	NUT-SPEED,1/4-20	
2	WR127121	1	PANEL ASM-SWITCH,CONSOLE	SEE PAGE 8-2
3	WR128025	1	COVER-ACCESS,RH CONSOLE	
4	AG134415	5	WASHER-FLAT,.25 USS BLK OXIDE	
5	AG515457	5	SCREW BUTTON HEAD .25-20X0.75	
6	AG522231	5	NUT-M5-0.8,CL8.0,H,LK	
7	AG523508	5	SCR-M5-0.8X16,CL10.9,BLK,BHHS	
8	AG553670	5	WASHER #10 FL ZN REG TYPE-B	
9	523761D1	1	CONSOLE-ARMREST,RH	SEE PAGE 7-78
10	523763D1	1	PANEL ASM-FNR,CONSOLE,NA	SEE PAGE 7-79
11	523994D1	1	HARNESS INSTL-RH CONSOLE,SC	SEE PAGE 8-70

Copyright © 2008 AGCO Corporation

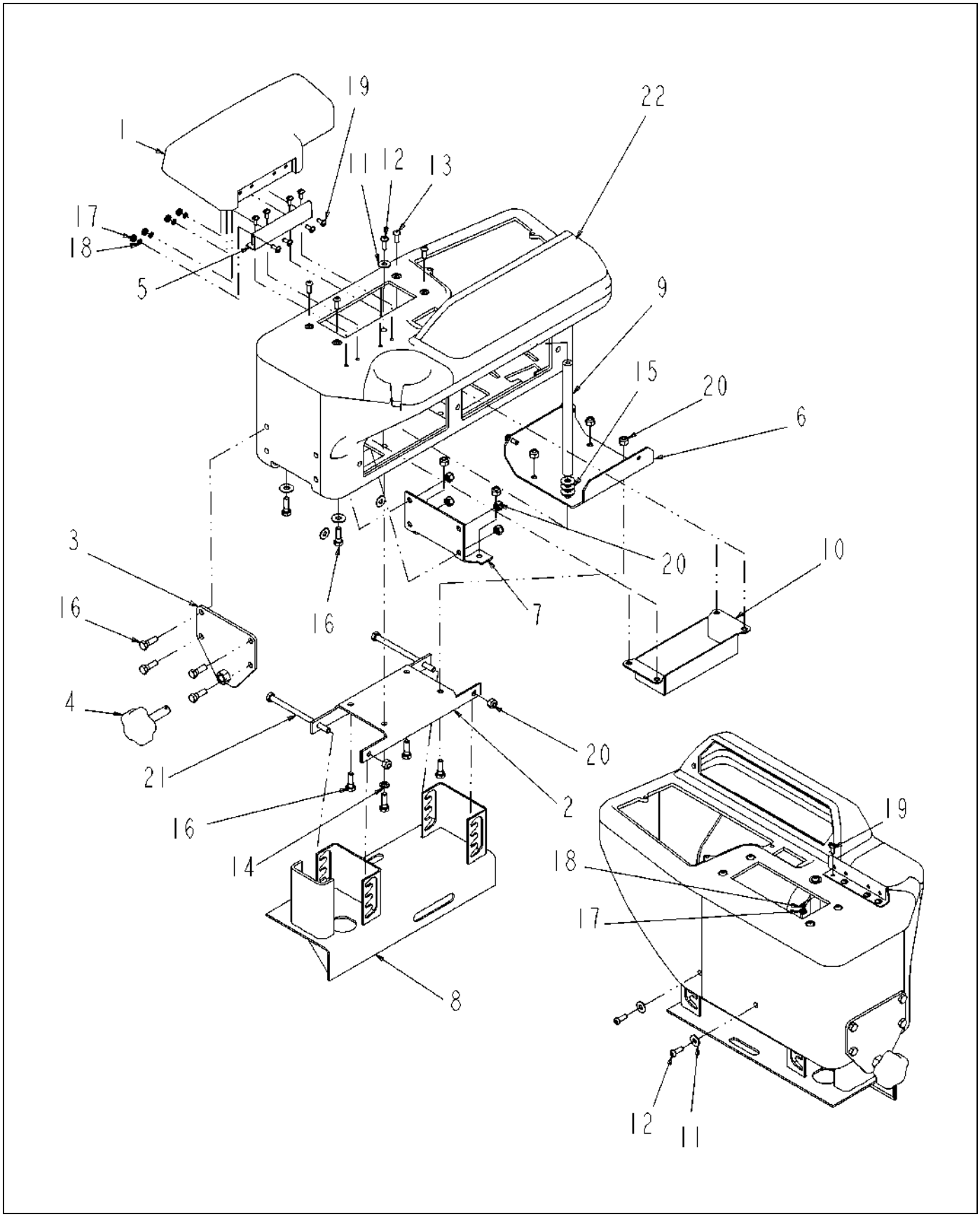

523761D1-01-T041-.TIF

Copyright © 2008 AGCO Corporation

CONSOLE-ARMREST,RH

ITEM	PART #	QTY	DESCRIPTION	COMMENTS
1	WR128020	1	ARMREST	
2	WR128021	1	BASEPLATE	
3	WR128022	1	PLATE WLDMT-SUPPORT,KNOB	
4	WR128024	1	KNOB-.50-13UNC X 2.00	
5	WR128026	1	HINGE-ARMREST	
6	WR128030	1	STIFFENER-BOTTOM	
7	WR128031	1	STIFFENER-REAR	
8	WR128032	1	BRKT WLDMT-RH CONSOLE	
9	WR128037	1	ROD-STIFFENER,VERTICAL	
10	WR130585	1	BRKT WLDMT-TRAY	
11	AG134415	3	WASHER-FLAT,.25 USS BLK OXIDE	
12	AG515457	3	SCREW BUTTON HEAD .25-20X0.75	
13	AG520911	4	SCR-M6-1.0X16,CL10.9,BLK,BHHS	
14	AG550205	1	WASHER 0.31 LK ZN REG	
15	AG551015	5	WASHER 0.31 FL ZN REG TYPE-B	
16	AG551252	10	BOLT 0.31-18NCX 1.00 G5 ZN HHD	
17	AG551317	8	NUT 10-32NF HEX ZN REG	
18	AG553182	8	WASHER #10 LK ZN REG	
19	AG562285	8	SCREW 10-32X0.50MA SL RHD ZN	
20	AG601888	11	NUT 0.31-18NC HEX ZN REG NY	
21	AG704467	2	BOLT 0.31-18NCX 5.00 G5 ZN HHD	
22	523762D1	1	CONSOLE-MOLDED	

Copyright © 2008 AGCO Corporation

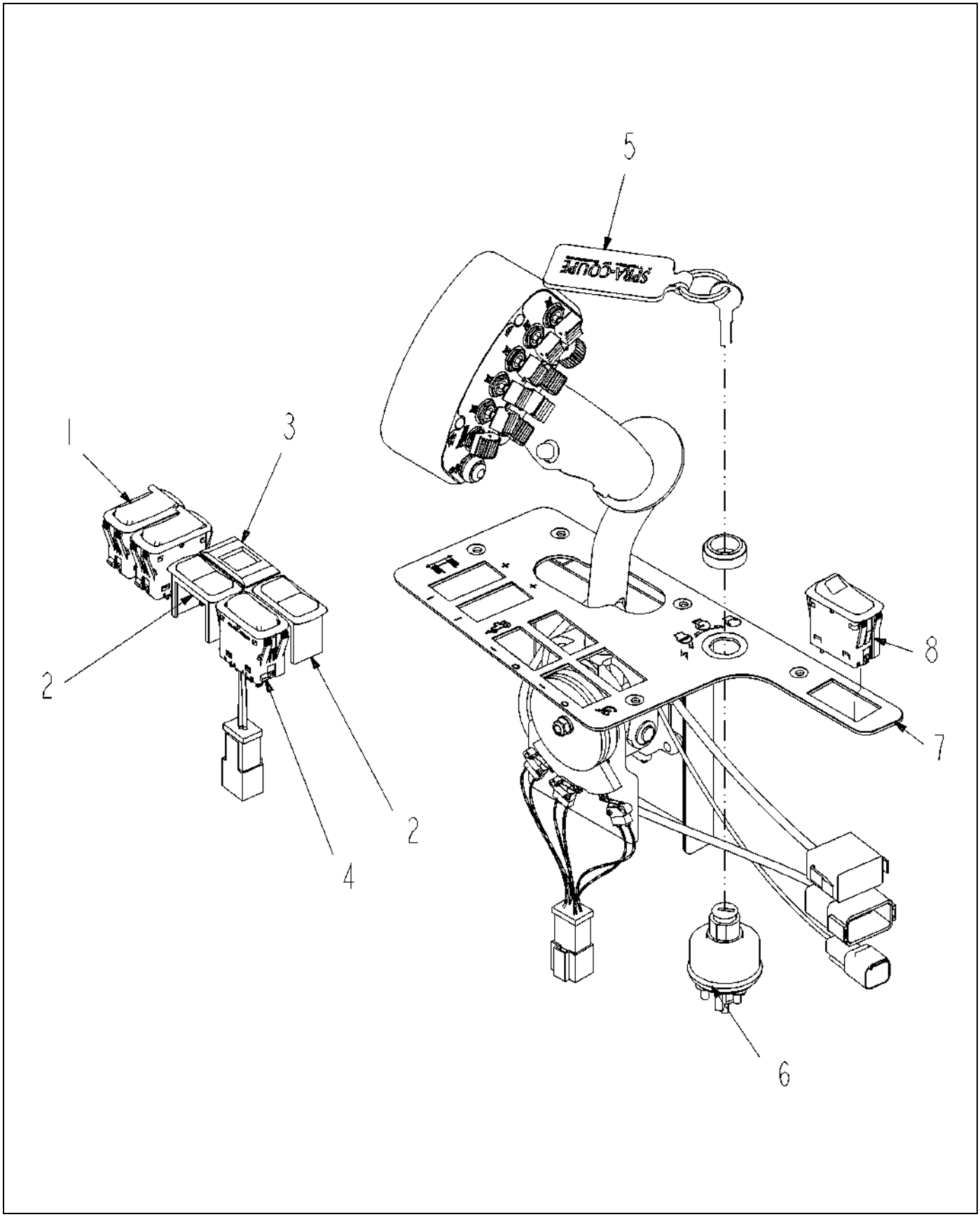

523763D1-02-T373-.TIF

Copyright © 2008 AGCO Corporation

PANEL ASM-FNR,CONSOLE,NA

ITEM	PART #	QTY	DESCRIPTION	COMMENTS
1	AG124432	2	SWITCH-RKR,(ON)-OFF-(ON),CS-L	
2	AG124437	2	PLUG-HOLE,SWITCH,CS-L	
3	WR126925	1	DISPLAY-GEAR,TCU	
4	AG127131	1	SWITCH-RKR,ON-ON,CS-L	
5	WR129807	1	KEYCHAIN-LEATHER,SC	
6	AG520862	1	SWITCH-IGN,KEYED DIFFERENT	SEE PAGE 7-80
7	523764D1	1	CONTROL ASM-FNR	SEE PAGE 7-81
8	527287D1	1	SWITCH ASM-ROCKER (PARK BRAKE)	

Copyright © 2008 AGCO Corporation

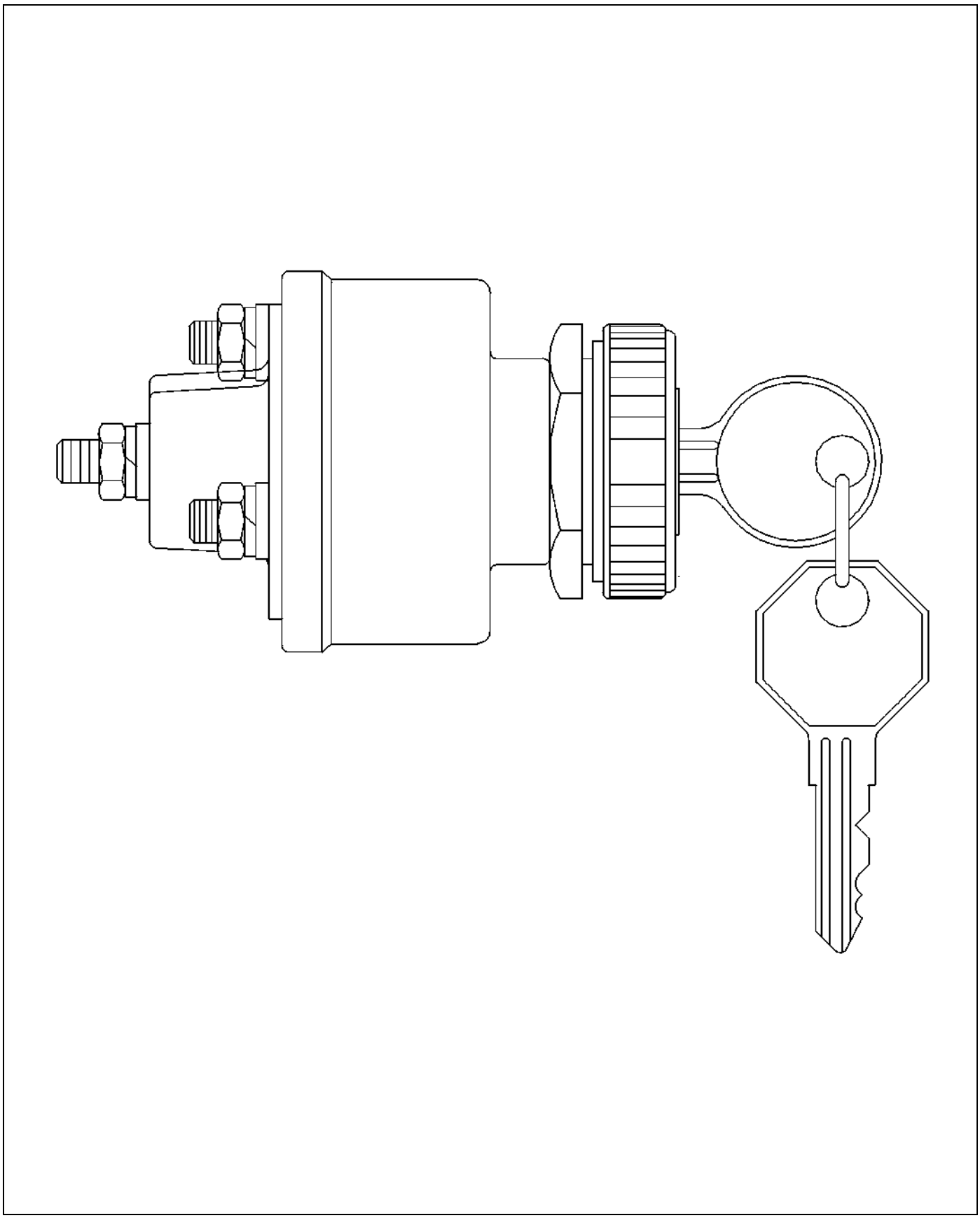

520862-A.TIF

Copyright © 2008 AGCO Corporation

SWITCH-IGN,KEYED DIFFERENT

ITEM	PART #	QTY	DESCRIPTION	COMMENTS
REF	AG524244	1	KEY-BLANK	

Copyright © 2008 AGCO Corporation

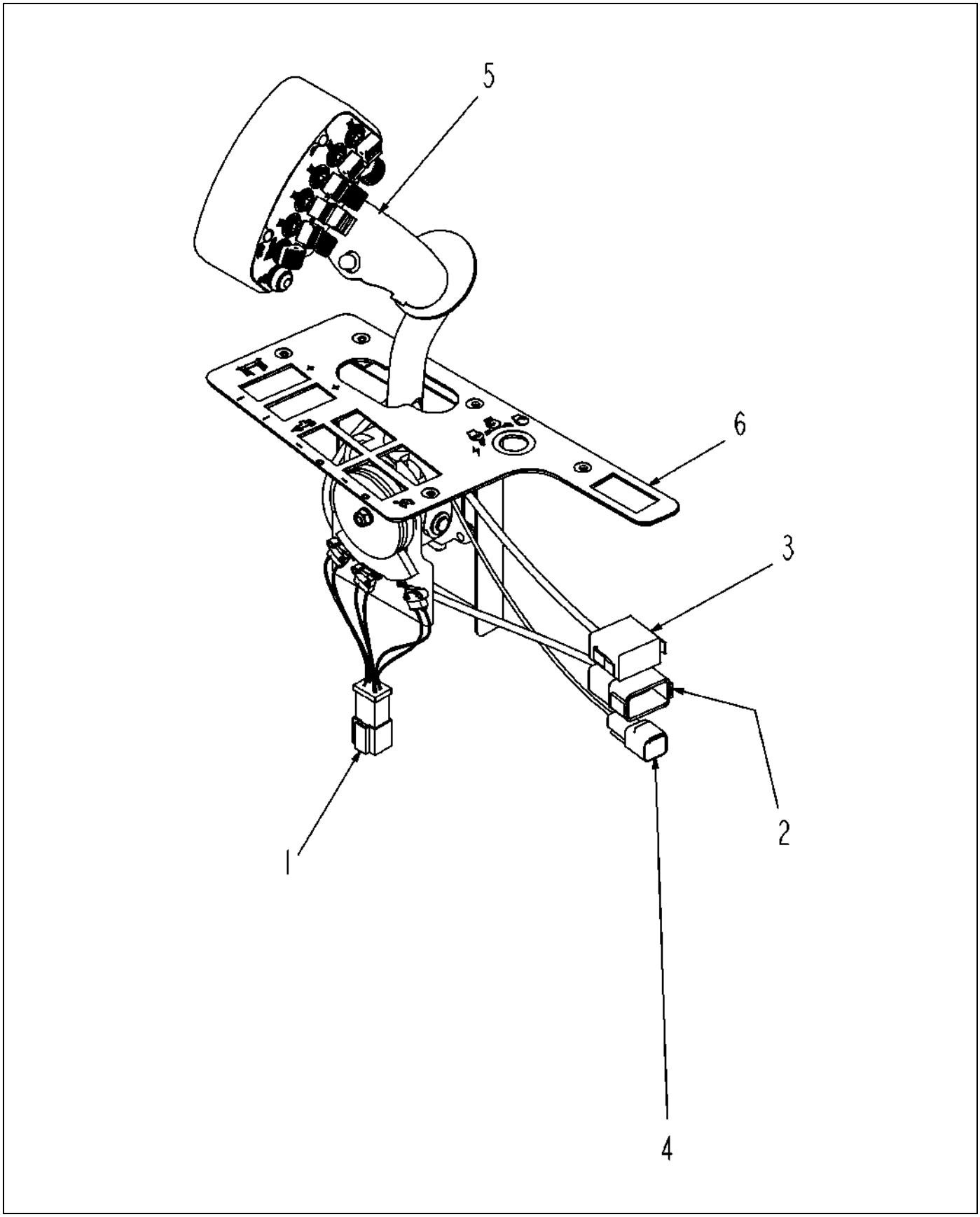

523764D1-01-T041-.TIF

Copyright © 2008 AGCO Corporation

CONTROL ASM-FNR

ITEM	PART #	QTY	DESCRIPTION	COMMENTS
1	AG523074	1	CONN-RCPT,4 WAY,18-14 GA	
2	AG523785	1	CONN-RCPT,12 WAY,20-16 GA	
3	AG523786	1	CONN-PLUG,12 WAY,20-16 GA	
4	AG523787	1	CONN-PLUG,4 WAY,20-16 GA	
5	514620D1	1	HANDLE-MULTIFUNTION,SC,7000	SEE PAGE 7-82
6	523951D1	1	DECAL-PLATE,FNR	

Copyright © 2008 AGCO Corporation

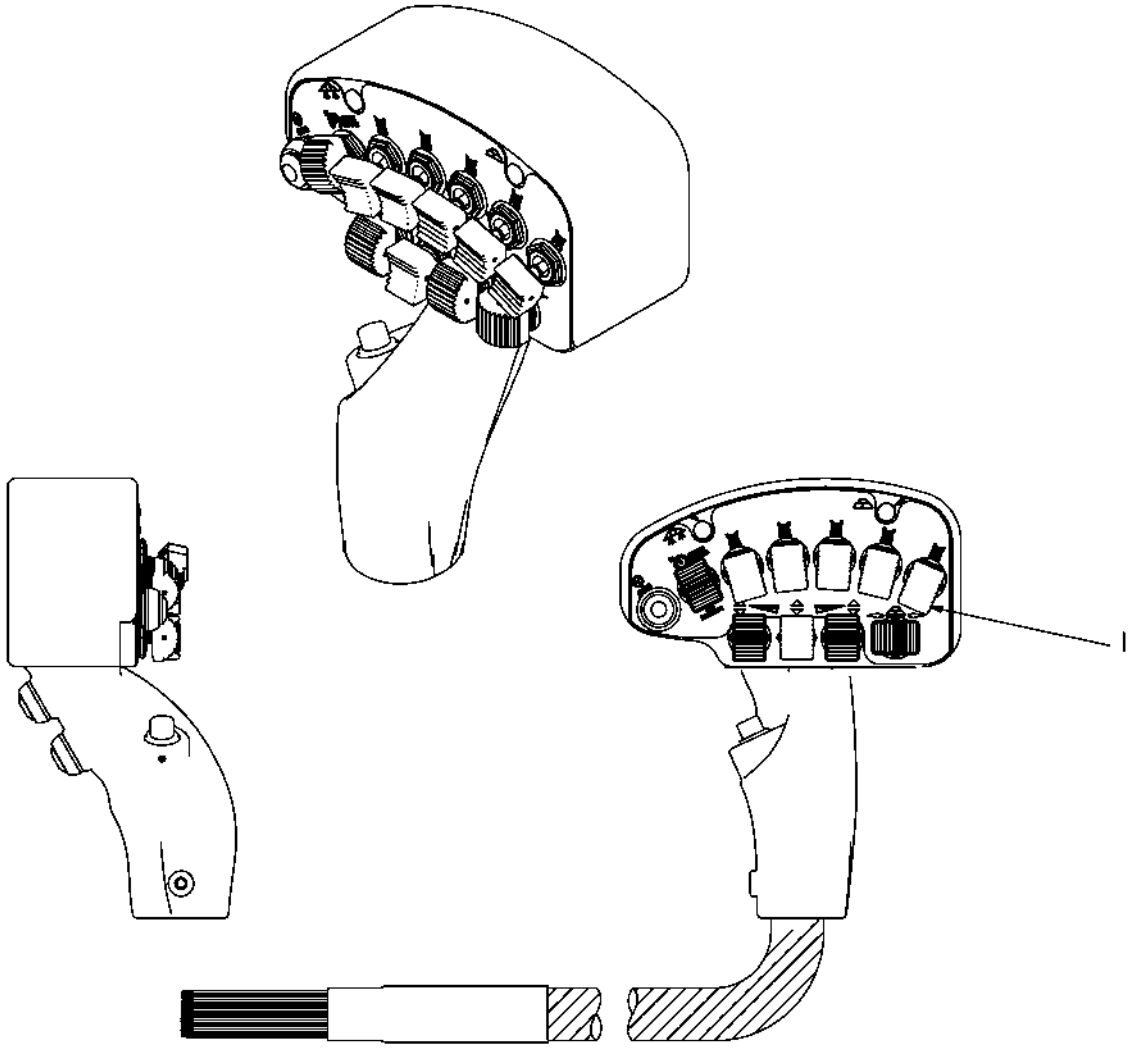

514620D1-01-N899-.TIF

Copyright © 2008 AGCO Corporation

HANDLE-MULTIFUNTION,SC,7000

ITEM	PART #	QTY	DESCRIPTION	COMMENTS
REF	AG610767	AR	SCR-10-32X1.75,SH (424068)	
REF	AG610774	1	GRIP-HANDLE,HYDRO (424008)	
REF	AG610766	1	SWITCH-PRODUCT MASTER (424068)	
REF	AG610775	1	SWITCH-RANGE SELECT (424068)	
REF	AG610765	1	LED-PRODUCT MASTER (424068)	
1	516596D1	1	MODULE-HANDLE,SC,7000	SEE PAGE 7-83

Copyright © 2008 AGCO Corporation

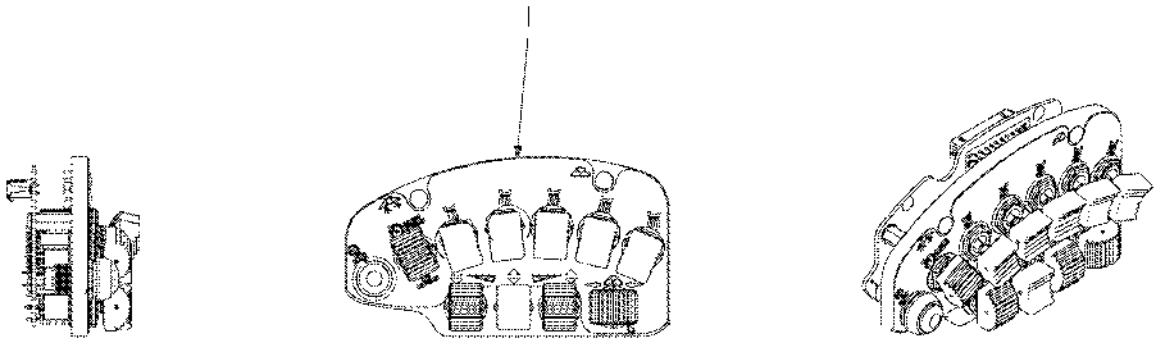

516596D1-01-N899-.TIF

Copyright © 2008 AGCO Corporation

ITEM	PART #	QTY	DESCRIPTION	COMMENTS
REF	AG610762	5	SWITCH-BOOM SECTION (424068)	
REF	AG610763	5	BUTTON-SWITCH,BM SECT (424068)	
REF	AG610761	11	PIN-ROLL,SWITCH (424068)	
REF	AG610892	3	SWITCH-BOOM TILT (424068)	
REF	AG610760	2	BUTTON-SWITCH,BM TILT (424068)	
1	514600D1	1	DECAL-MULTIFUNCTION,SC,7000	

Copyright © 2008 AGCO Corporation

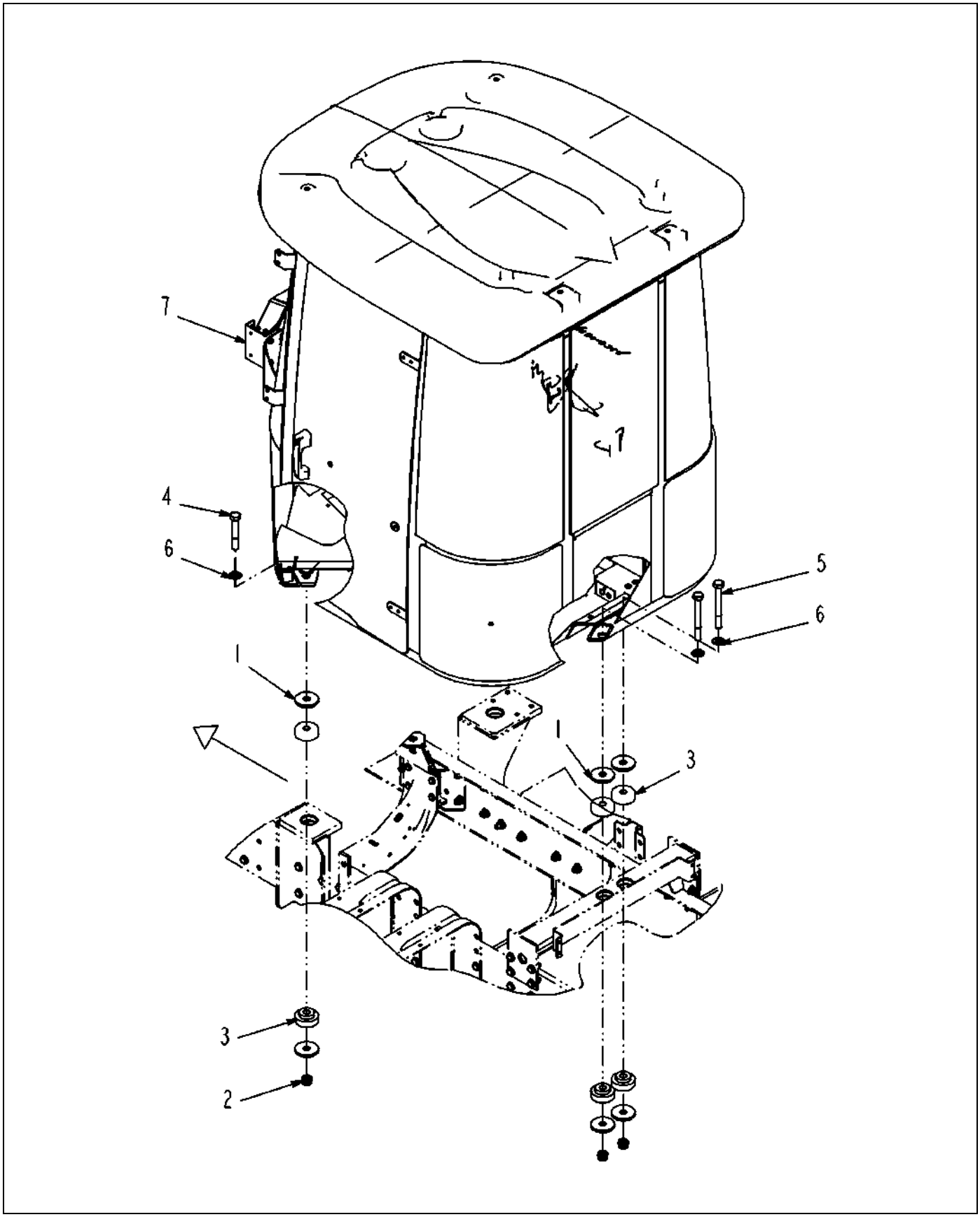

523717D1-01-T041-.TIF

Copyright © 2008 AGCO Corporation

CAB GROUP-7X60,ATC,CH, 2009

ITEM	PART #	QTY	DESCRIPTION	COMMENTS
1	AG236575	8	SLUG-ISOLATOR,CAB MT	
2	AG516176	4	NUT 0.87-9NC HVY HX FLEX LK PL	
3	AG520640	8	ISOLATOR-SHOCK	
4	AG522710	2	BOLT .87-9UNCX 5.50 G8 ZN HHD	
5	AG561699	2	BOLT 0.87- 9NCX 7.50 G8 ZN HHD	
6	AG606258	4	WASHER 1.75ODX0.93ID G8 ZN	
7	523737D1	1	CAB ASM-CHAL,ATC	SEE PAGE 7-85

Copyright © 2008 AGCO Corporation

Please refer to the Bill Of Material on the opposite page for related Installations, Assemblies, or Parts

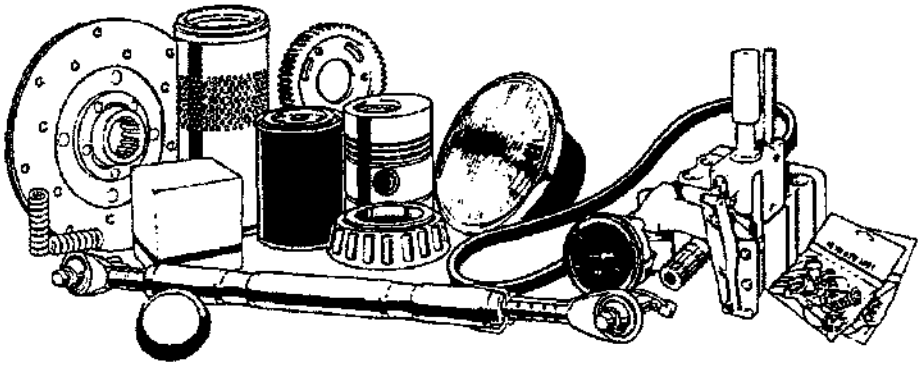

523737D1.tif

Copyright © 2008 AGCO Corporation

CAB ASM-CHAL,ATC

ITEM	PART #	QTY	DESCRIPTION	COMMENTS
1	AG129238	1	FIREWALL INSTL	SEE PAGE 7-7
2	507125D1	1	STORAGE INSTL	SEE PAGE 7-22
3	508130D1	1	INSULATION INSTL	SEE PAGE 7-23
4	520052D1	1	CAB-MIDSIZE,7X60,WITH ATC	SEE PAGE 7-37
5	523759D1	1	CONSOLE INSTL-SEAT,RH,NA	SEE PAGE 7-76
6	523765D1	1	PEDAL INSTL-BRAKE/THROTTLE	SEE PAGE 7-88
7	523767D1	1	FLOORMAT INSTL-CAB	
8	523858D1	1	PEDAL ASM-PARK BRAKE	
9	525384D1	1	PANEL INSTL-INSTRUMENT CLUSTER	SEE PAGE 7-8
10	523985D1	1	ELEC INSTL-CAB,ATC,7X60	
11	523970D1	1	HARNESS INSTL-CENTER CONSOLE	SEE PAGE 8-71

Copyright © 2008 AGCO Corporation

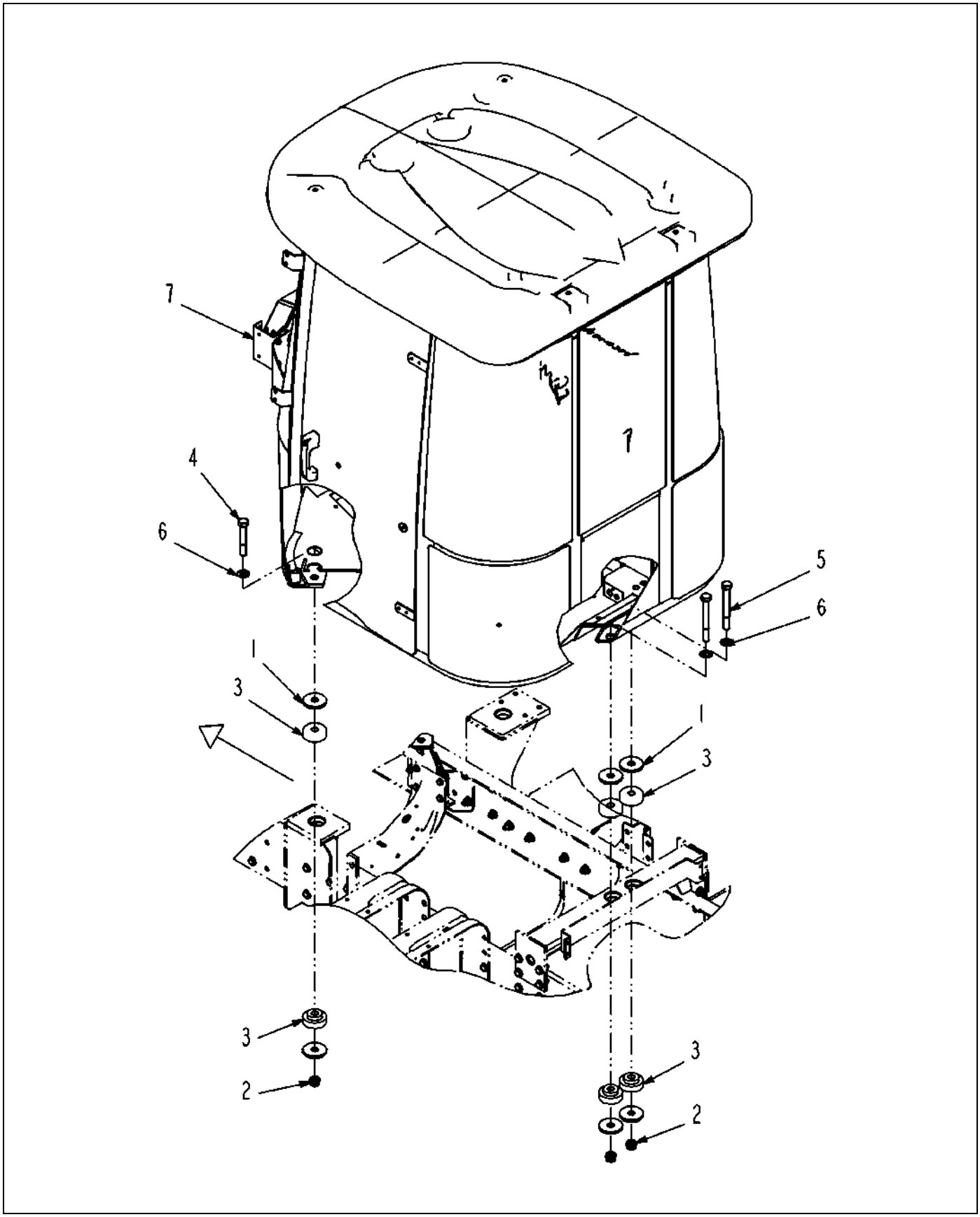

523718D1-01-T041-.TIF

Copyright © 2008 AGCO Corporation

CAB GROUP-7X60,EURO,STD HVAC,CH, 2009

ITEM	PART #	QTY	DESCRIPTION	COMMENTS
1	AG236575	8	SLUG-ISOLATOR,CAB MT	
2	AG516176	4	NUT 0.87-9NC HVY HX FLEX LK PL	
3	AG520640	8	ISOLATOR-SHOCK	
4	AG522710	2	BOLT .87-9UNCX 5.50 G8 ZN HHD	
5	AG561699	2	BOLT 0.87- 9NCX 7.50 G8 ZN HHD	
6	AG606258	4	WASHER 1.75ODX0.93ID G8 ZN	
7	523738D1	1	CAB ASM-CHAL,EURO,STD HVAC	SEE PAGE 7-87

Copyright © 2008 AGCO Corporation

Please refer to the Bill Of Material on the opposite page for related Installations, Assemblies, or Parts

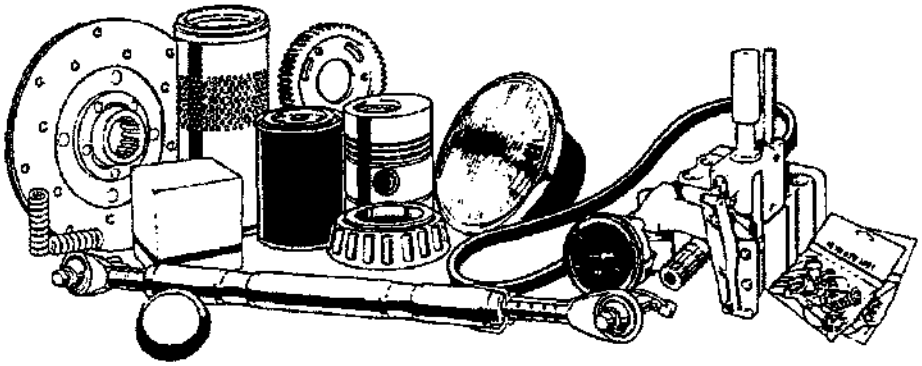

523738D1.tif

Copyright © 2008 AGCO Corporation

CAB ASM-CHAL,EURO,STD HVAC,2009

ITEM	PART #	QTY	DESCRIPTION	COMMENTS
1	AG129182	1	VALVE INSTL-PARK BRAKE	SEE PAGE 7-4
2	AG129238	1	FIREWALL INSTL	SEE PAGE 7-7
3	507125D1	1	STORAGE INSTL	SEE PAGE 7-22
4	508130D1	1	INSULATION INSTL	SEE PAGE 7-23
5	520050D1	1	CAB-MIDSIZE,CHAL,STD HVAC	SEE PAGE 7-36
6	523765D1	1	PEDAL INSTL-BRAKE/THROTTLE	SEE PAGE 7-88
7	523955D1	1	CONSOLE INSTL-SEAT,RH	SEE PAGE 7-91
8	525384D1	1	PANEL INSTL-INSTRUMENT CLUSTER	SEE PAGE 7-8
9	AG127687	1	FLOORMAT INSTL-CAB	SEE PAGE 7-21
10	523972D1	1	ELEC INSTL-CAB, 7X60, EURO	SEE PAGE 8-73
11	523970D1	1	HARNESS INSTL-CENTER CONSOLE	SEE PAGE 8-71

Copyright © 2008 AGCO Corporation

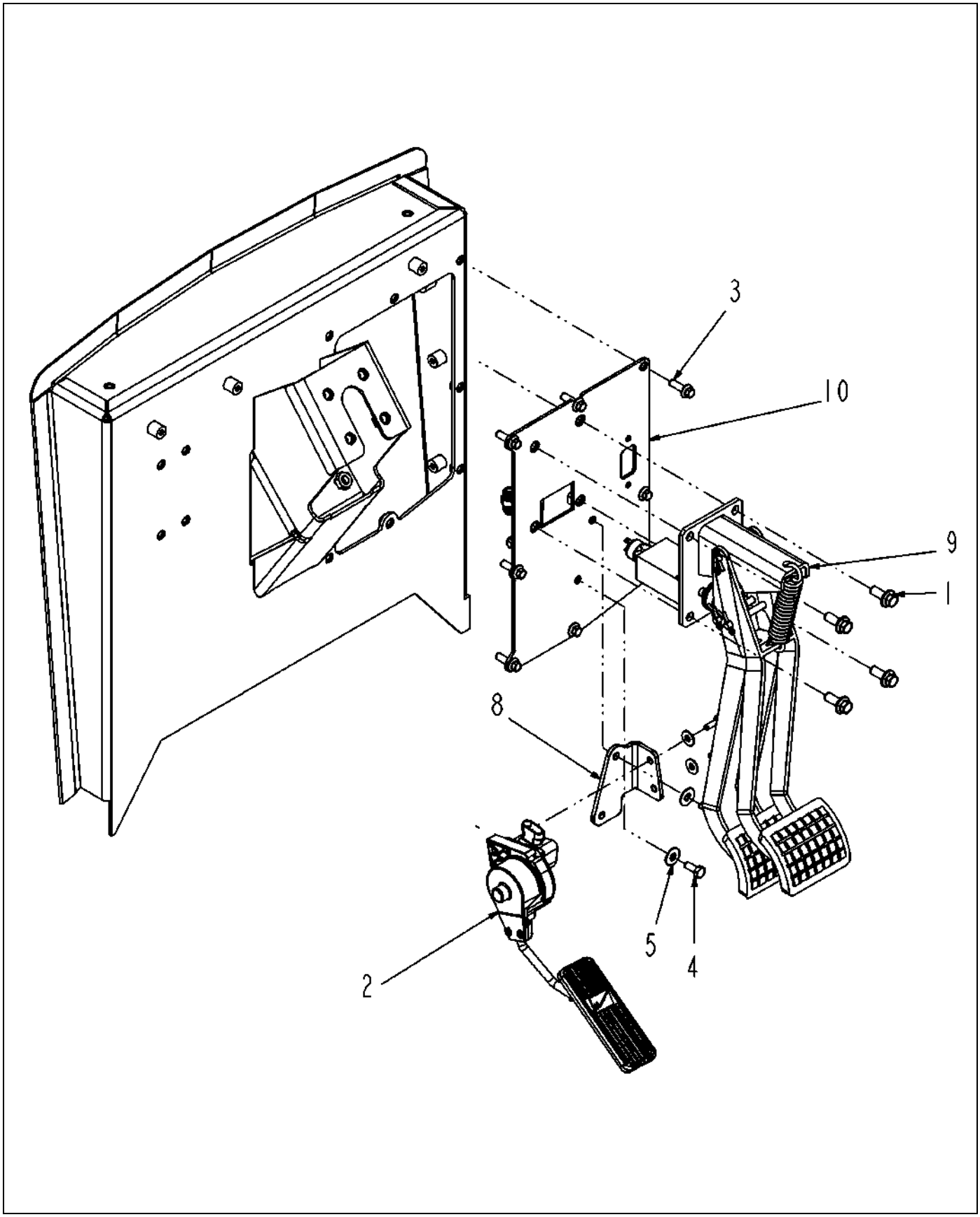

523765D1-01-T041-01.TIF

Copyright © 2008 AGCO Corporation

PEDAL INSTALL-BRAKE/THROTTLE,2009

ITEM	PART #	QTY	DESCRIPTION	COMMENTS
1	WR55215	4	SCREW-HEX FLG,M10X1.5X25 CL8.8	
2	WR126892	1	PEDAL-THROTTLE	SEE PAGE 7-12
3	AG520967	8	BOLT-M8-1.25X25,CL8.8,ZN FLG	
4	AG550183	2	BOLT 0.31-18NCX 0.75 G5 ZN HHD	
5	AG551015	2	WASHER 0.31 FL ZN REG TYPE-B	
8	513996D1	1	BRKT-THROTTLE PEDAL	
9	523745D1	1	PEDAL ASM,SERVICE BRAKE	SEE PAGE 7-90
10	523766D1	1	PLATE ASM.- MTG, BRAKE PEDAL	

Copyright © 2008 AGCO Corporation

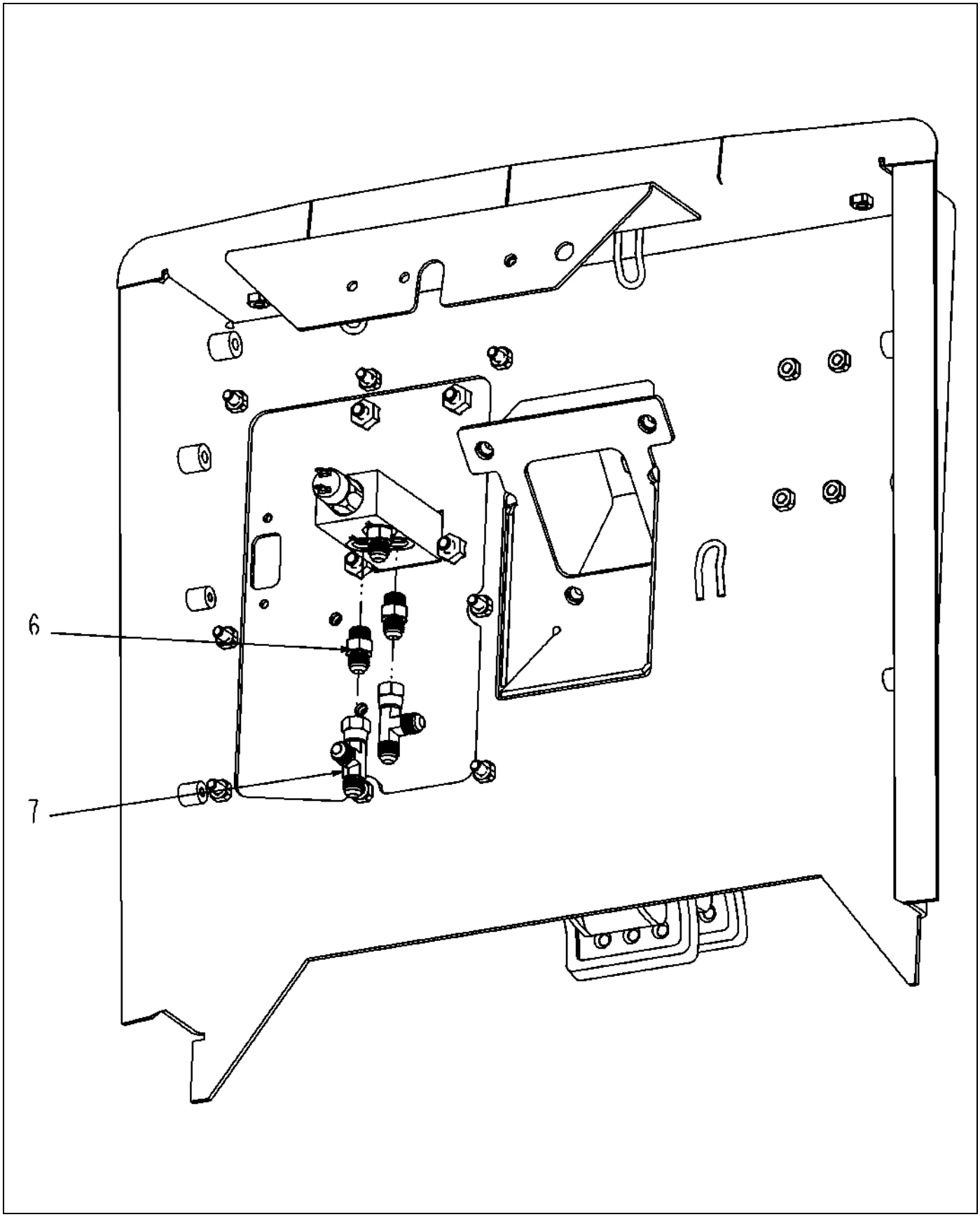

523765D1-01-T041-02.TIF

Copyright © 2008 AGCO Corporation

ITEM	PART #	QTY	DESCRIPTION	COMMENTS
6	AG560693	3	ADAP STR 0.37MO-R X 0.37MJIC	SEE PAGE 6-104
7	AG561391	2	TEE 0.37FJIC SW X 0.37MJIC(2)	

Copyright © 2008 AGCO Corporation

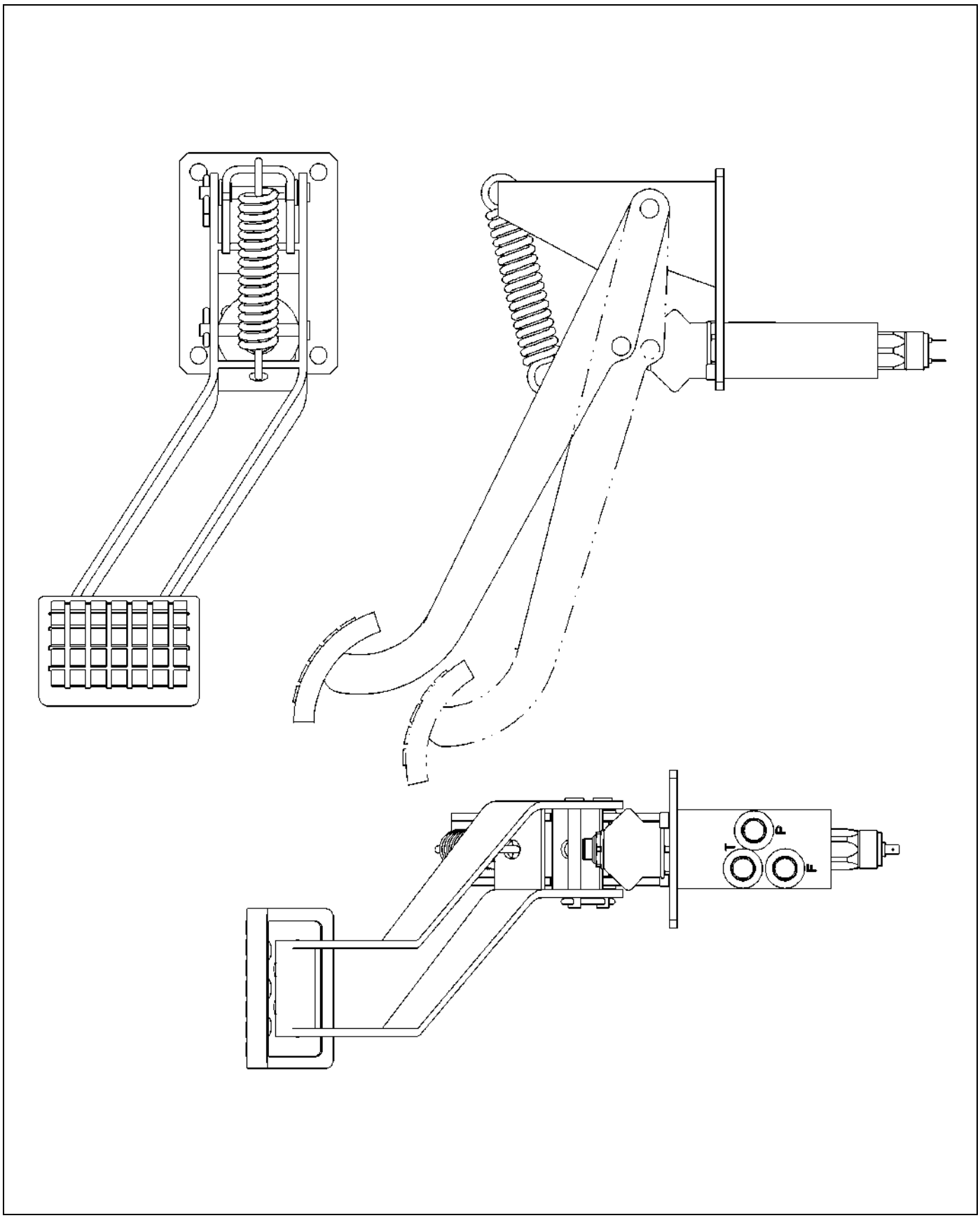

523745D1-01-T041-.TIF

Copyright © 2008 AGCO Corporation

PEDAL ASM,SERVICE BRAKE,2009

ITEM	PART #	QTY	DESCRIPTION	COMMENTS
REF	524068D1	-	VALVE,SERVICE BRAKE W/O PEDAL	
REF	524069D1	-	VALVE,SERVICE BRAKE W/O PEDAL	
REF	524066D1	-	PEDAL COVER, RUBBER	
REF	524067D1	1	SWITCH,PRESSURE,5 BAR,NO	

Copyright © 2008 AGCO Corporation

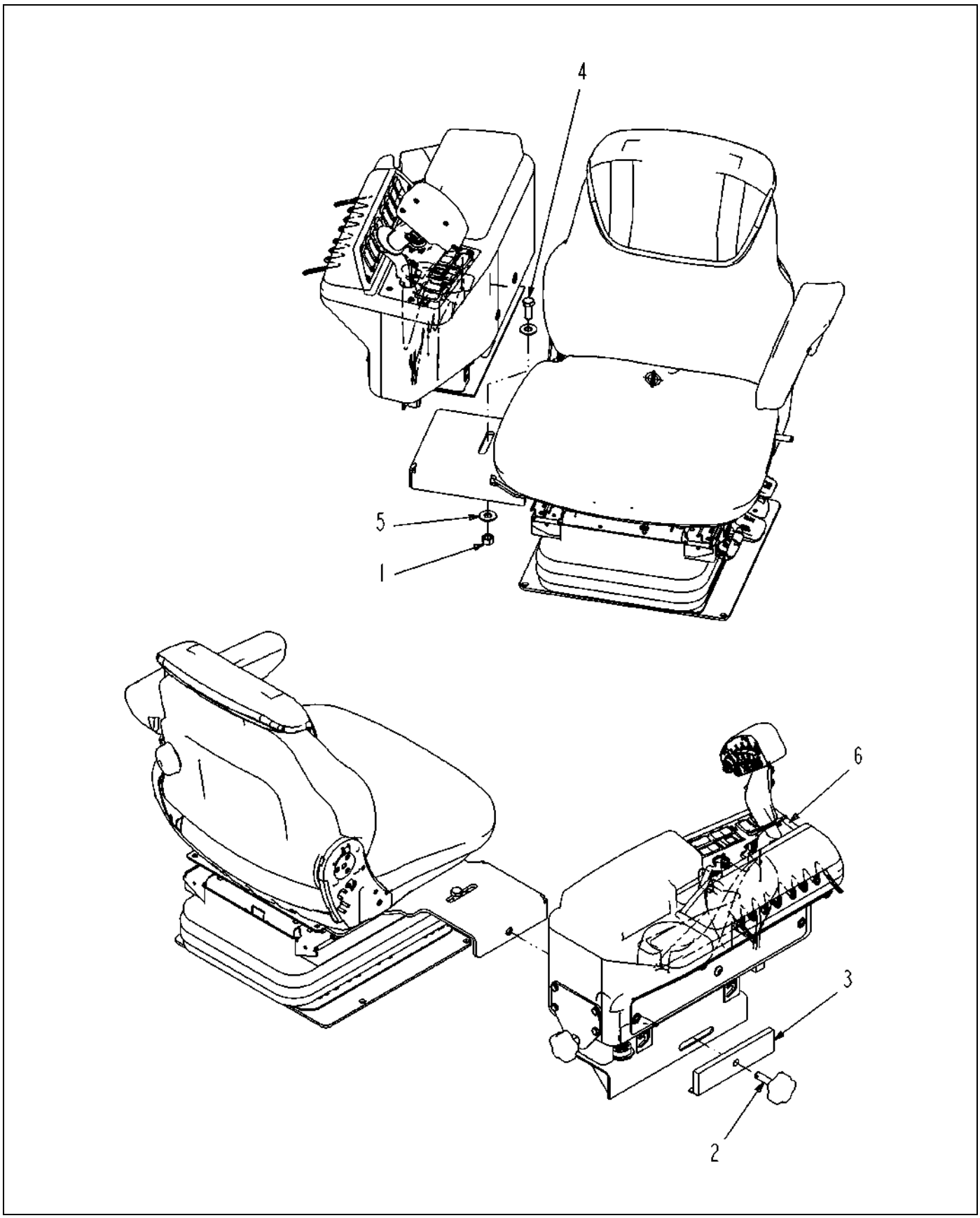

523955D1-01-T041-.TIF

Copyright © 2008 AGCO Corporation

CONSOLE INSTALL-SEAT,RH,2009

ITEM	PART #	QTY	DESCRIPTION	COMMENTS
1	WR11528	1	NUT-TOPLOCK, 1/2-13UNC G5	
2	WR128024	1	KNOB-.50-13UNC X 2.00	
3	WR128027	1	BAR WLDMT-STABILIZER	
4	AG550256	1	BOLT.50-13NCX1.25 G5 ZN HHD	
5	AG550353	2	WASHER 0.50 FL ZN REG TYPE-B	
6	523956D1	1	CONSOLE ASM-SEAT,RH	SEE PAGE 7-92

Copyright © 2008 AGCO Corporation

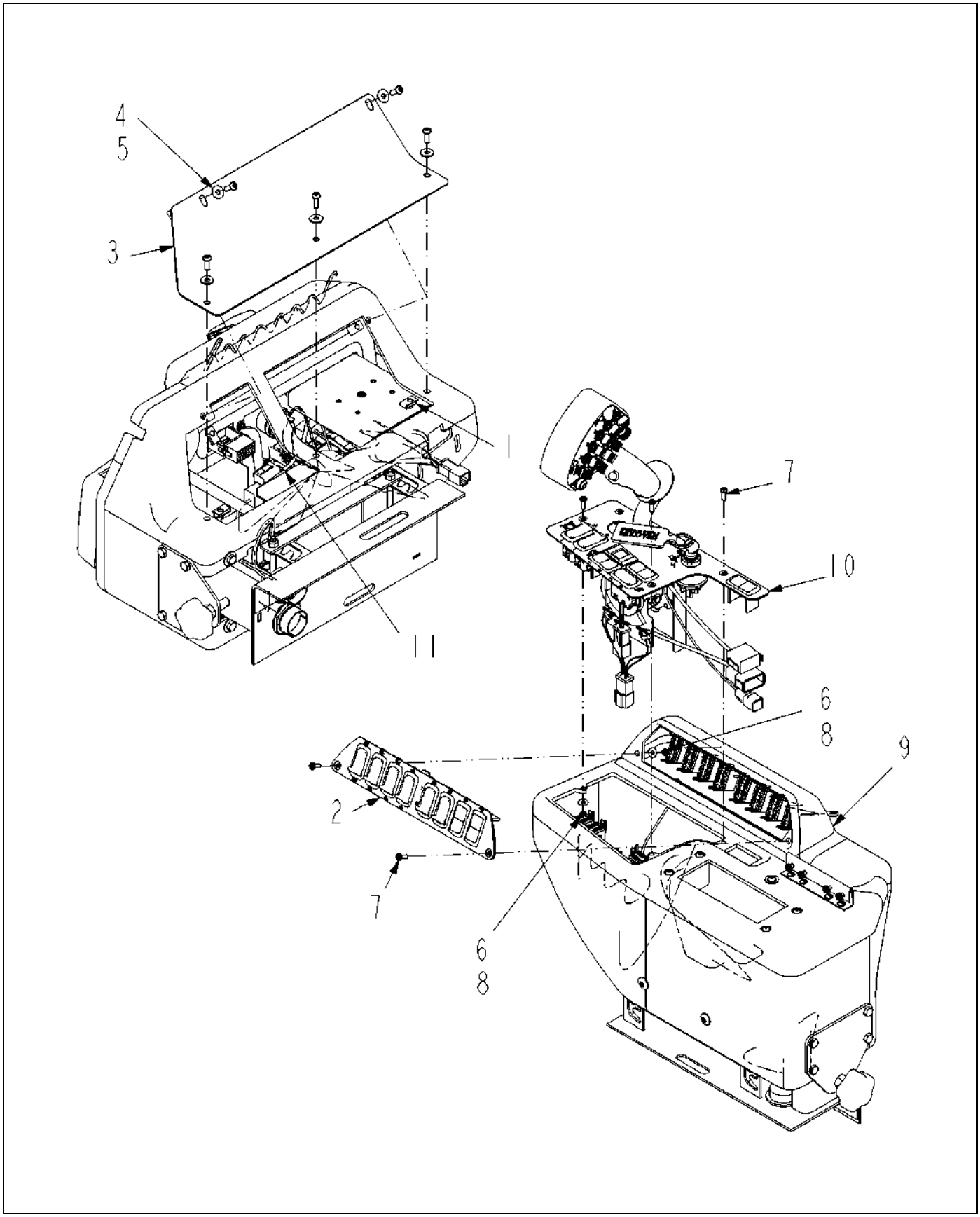

523956D1-01-T041-.TIF

Copyright © 2008 AGCO Corporation

CONSOLE ASM-SEAT,RH,2009

ITEM	PART #	QTY	DESCRIPTION	COMMENTS
1	WR50851	4	NUT-SPEED,1/4-20	
2	WR127121	1	PANEL ASM-SWITCH,CONSOLE	SEE PAGE 8-2
3	WR128025	1	COVER-ACCESS,RH CONSOLE	
4	AG134415	5	WASHER-FLAT,.25 USS BLK OXIDE	
5	AG515457	5	SCREW BUTTON HEAD .25-20X0.75	
6	AG522231	5	NUT-M5-0.8,CL8.0,H,LK	
7	AG523508	5	SCR-M5-0.8X16,CL10.9,BLK,BHHS	
8	AG553670	5	WASHER #10 FL ZN REG TYPE-B	
9	523761D1	1	CONSOLE-ARMREST,RH	SEE PAGE 7-78
10	523957D1	1	PANEL ASM-FNR,CONSOLE	SEE PAGE 7-93
11	523994D1	1	HARNESS INSTL-RH CONSOLE,SC	SEE PAGE 8-70

Copyright © 2008 AGCO Corporation

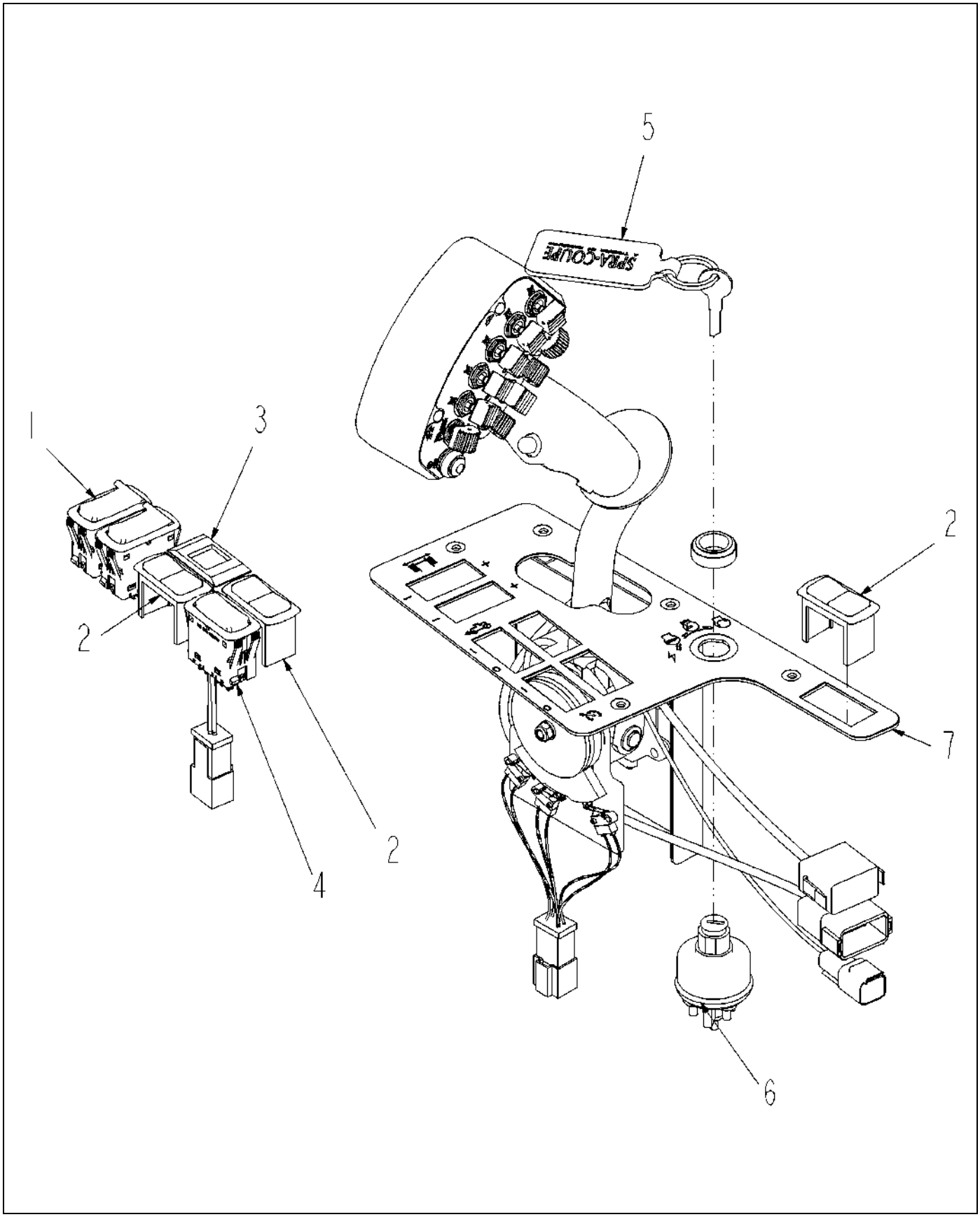

523957D1-01-T041-.TIF

Copyright © 2008 AGCO Corporation

PANEL ASM-FNR,CONSOLE,2009

ITEM	PART #	QTY	DESCRIPTION	COMMENTS
1	AG124432	2	SWITCH-RKR,(ON)-OFF-(ON),CS-L	
2	AG124437	3	PLUG-HOLE,SWITCH,CS-L	
3	WR126925	1	DISPLAY-GEAR,TCU	
4	AG127131	1	SWITCH-RKR,ON-ON,CS-L	
5	WR129807	1	KEYCHAIN-LEATHER,SC	
6	AG520862	1	SWITCH-IGN,KEYED DIFFERENT	SEE PAGE 7-80
7	523764D1	1	CONTROL ASM-FNR	SEE PAGE 7-81

Copyright © 2008 AGCO Corporation

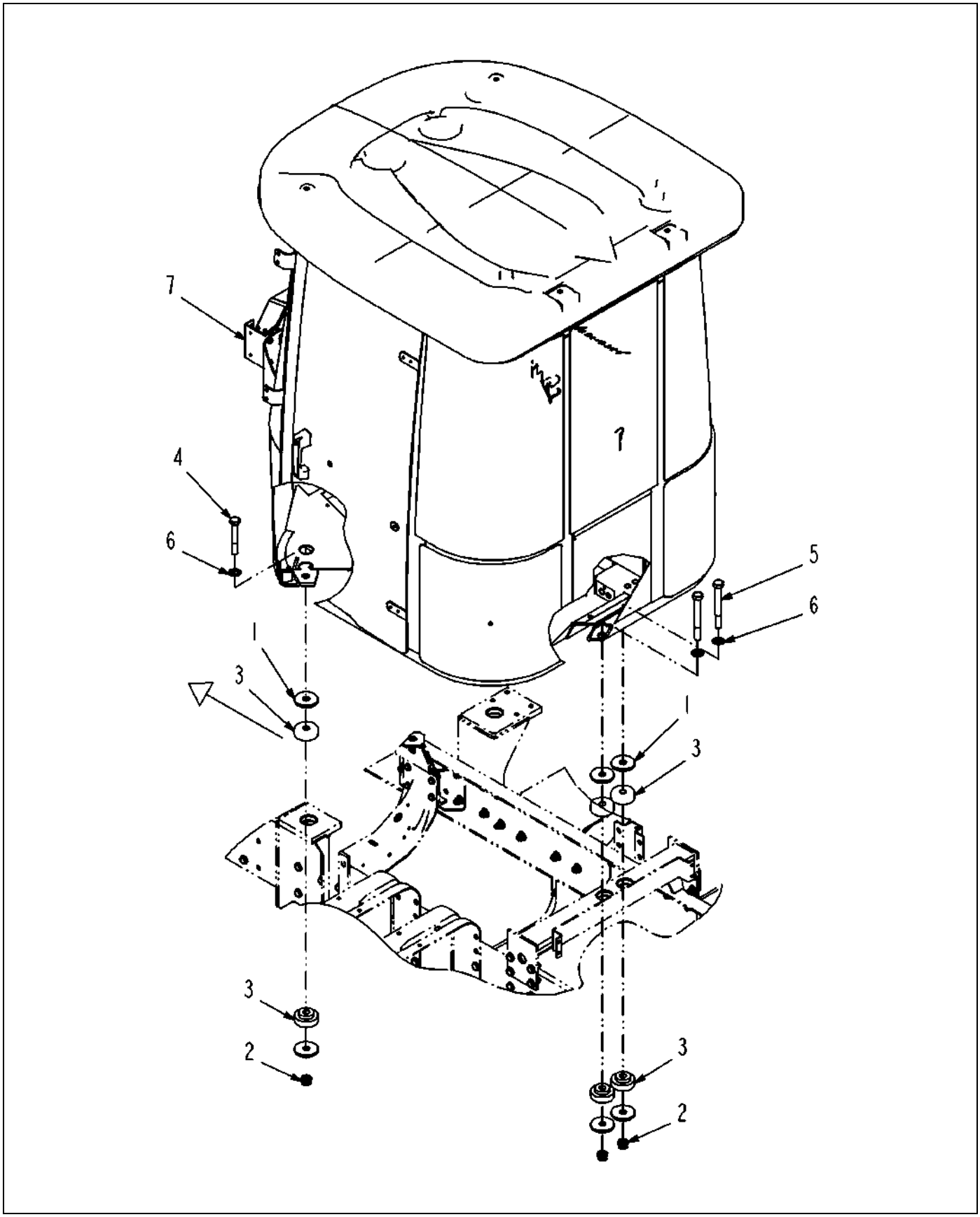

523719D1-01-T041-.TIF

Copyright © 2008 AGCO Corporation

CAB GROUP-7X60,EURO,ATC,CH,2009

ITEM	PART #	QTY	DESCRIPTION	COMMENTS
1	AG236575	8	SLUG-ISOLATOR,CAB MT	
2	AG516176	4	NUT 0.87-9NC HVY HX FLEX LK PL	
3	AG520640	8	ISOLATOR-SHOCK	
4	AG522710	2	BOLT .87-9UNCX 5.50 G8 ZN HHD	
5	AG561699	2	BOLT 0.87- 9NCX 7.50 G8 ZN HHD	
6	AG606258	4	WASHER 1.75ODX0.93ID G8 ZN	
7	523739D1	1	CAB ASM-CHAL,EURO,ATC	SEE PAGE 7-95

Copyright © 2008 AGCO Corporation

Please refer to the Bill Of Material on the opposite page for related Installations, Assemblies, or Parts

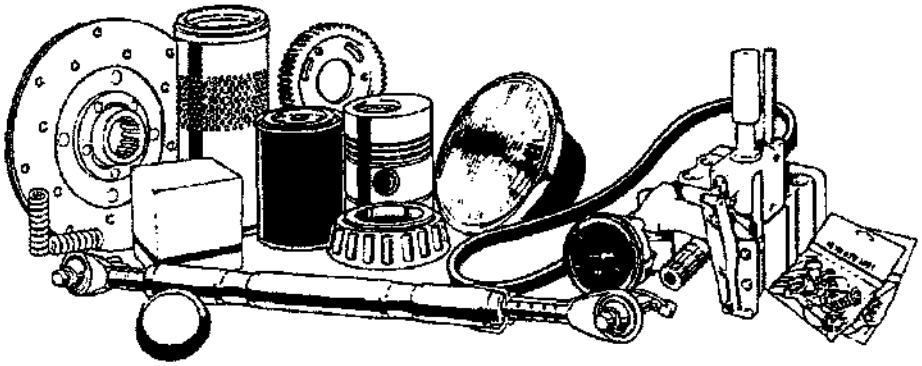

523739D1.tif

Copyright © 2008 AGCO Corporation

CAB ASM-CHAL,EURO,ATC,2009

ITEM	PART #	QTY	DESCRIPTION	COMMENTS
1	AG129182	1	VALVE INSTL-PARK BRAKE	SEE PAGE 7-4
2	AG129238	1	FIREWALL INSTL	SEE PAGE 7-7
3	507125D1	1	STORAGE INSTL	SEE PAGE 7-22
4	508130D1	1	INSULATION INSTL	SEE PAGE 7-23
5	520052D1	1	CAB-MIDSIZE,7X60,WITH ATC	SEE PAGE 7-37
6	523765D1	1	PEDAL INSTL-BRAKE/THROTTLE	SEE PAGE 7-88
7	523955D1	1	CONSOLE INSTL-SEAT,RH	SEE PAGE 7-91
8	525384D1	1	PANEL INSTL-INSTRUMENT CLUSTER	SEE PAGE 7-8
9	AG127687	1	FLOORMAT INSTL-CAB	SEE PAGE 7-21
10	523986D1	1	ELEC INSTAL-CAB, ATC, EURO	SEE PAGE 8-79
11	523970D1	1	HARNESS INSTL-CENTER CONSOLE	SEE PAGE 8-71

Copyright © 2008 AGCO Corporation

HARNESS INSTALL-RH CONSOLE,SC	8-1
PANEL ASM-SWITCH,CONSOLE	8-2
CONTROL ASM-FNR	8-3
HARNESS-INSTALL,CHASSIS,7X60, 2008	8-4
HARNESS-INSTALL,CHASSIS,7X60, 2008	8-5
HARNESS-INSTALL,CHASSIS,7X60, 2008	8-6
HARNESS-INSTALL,CHASSIS,7X60, 2008	8-7
HARNESS-INSTALL,CHASSIS,7X60, 2008	8-8
HARN-INSTALL,CHASSIS,7X60,EURO, 2008	8-9
HARN-INSTALL,CHASSIS,7X60,EURO, 2008	8-10
HARN-INSTALL,CHASSIS,7X60,EURO, 2008	8-11
HARN-INSTALL,CHASSIS,7X60,EURO, 2008	8-12
HARN-INSTALL,CHASSIS,7X60,EURO, 2008	8-13
HARNESS-INSTALL,CHASSIS,7X50, 2009	8-14
HARNESS-INSTALL,CHASSIS,7X50, 2009	8-15
HARNESS-INSTALL,CHASSIS,7X50, 2009	8-16
HARNESS-INSTALL,CHASSIS,7X50, 2009	8-17
HARNESS-INSTALL,CHASSIS,7X50, 2009	8-18
HARNESS INSTALL, CHASSIS, 7X60, 2009	8-19
HARNESS INSTALL, CHASSIS, 7X60, 2009	8-20
HARNESS INSTALL, CHASSIS, 7X60, 2009	8-21
HARNESS INSTALL, CHASSIS, 7X60, 2009	8-22
HARNESS INSTALL, CHASSIS, 7X60, 2009	8-23
ELEC INSTALL-CAB, 7X60	8-24
ELEC INSTALL-CAB, 7X60	8-25
ELEC INSTALL-CAB, 7X60	8-26
ELEC INSTALL-CAB, 7X60	8-27
INSTALL-MASTER MODULE,AED	8-28
ELEC INSTALL-JUMPER,STD HVAC	8-29
ELEC INSTALL-CAB, ATC, 7X60	8-30
ELEC INSTALL-CAB, ATC, 7X60	8-31
ELEC INSTALL-CAB, ATC, 7X60	8-32
ELEC INSTALL-CAB, ATC, 7X60	8-33
ELEC INSTALL-JUMPER,ATC HVAC	8-34
ELEC INSTALL-CAB, 7X60,EURO	8-35
ELEC INSTALL-CAB, 7X60,EURO	8-36
ELEC INSTALL-CAB, 7X60,EURO	8-37
ELEC INSTALL-CAB, 7X60,EURO	8-38
ELEC INSTALL-CAB, ATC, 7X60,EURO	8-39
ELEC INSTALL-CAB, ATC, 7X60,EURO	8-40
ELEC INSTALL-CAB, ATC, 7X60,EURO	8-41
ELEC INSTALL-CAB, ATC, 7X60,EURO	8-42
ELEC INSTALL-RADAR/PROD CONT	8-43
ELEC INSTALL-RADAR/PROD CONT	8-44
ELEC INSTALL-RADAR/PROD CONT	8-45
ASM-I/O,HIGH CURRENT,REAR	8-46
BATTERY-INSTALL,7X60	8-47
ASM-MAG SW.BREAKER,80 AMP	8-48
ASM-I/O,HIGH CURRENT	8-49
ASM-I/O,HIGH CURRENT	8-50
ASM-I/O,HIGH CURRENT,REAR	8-51
HARNESS INSTALL-CENTER CONSOLE	8-52
HARNESS INSTALL-CENTER CONSOLE	8-53
SENSOR INSTALL-TILT,SC	8-54

SENSOR INSTALL-TILT,SC	8-55
BATTERY CABLE-INSTALL,7X60	8-56
BATTERY CABLE-INSTALL,7X60	8-57
BATTERY CABLE-INSTALL,7X60	8-58
INSTALL-ELEC,BACKUP ALARM,7X50	8-59
HARNESS-INSTALL,FWA	8-60
HARNESS-INSTALL,FWA	8-61
ELEC GROUP-INSTALL,2WD	8-62
ELEC INSTALL-BEACON,AMBER,7X50	8-63
VALVE-BALL,1.00FP FLGXNPT,ELEC	8-64
LAMP-ROTATING,AMBER	8-65
SWITCH-INSTALL,AUTOGUIDE	8-66
INSTALL-ELECTRICAL,AUTOGUIDE	8-67
INSTALL-ELECTRICAL,AUTOGUIDE	8-68
INSTALL-ELECTRICAL,AUTOGUIDE	8-69
HARNESS INSTALL-RH CONSOLE,SC	8-70
HARNESS INSTALL-CENTER CONSOLE	8-71
HARNESS INSTALL-CENTER CONSOLE	8-72
ELEC INSTALL-CAB, 7X60, EURO	8-73
ELEC INSTALL-CAB, 7X60, EURO	8-74
ELEC INSTALL-CAB, 7X60, EURO	8-75
ELEC INSTALL-CAB, 7X60, EURO	8-76
MODULE-POWER DIST,11 FUSE	8-77
MODULE-POWER DIST,HI CURRENT	8-78
ELEC INSTAL-CAB, ATC, EURO,2009	8-79
ELEC INSTAL-CAB, ATC, EURO,2009	8-80
ELEC INSTAL-CAB, ATC, EURO,2009	8-81
ELEC INSTAL-CAB, ATC, EURO,2009	8-82

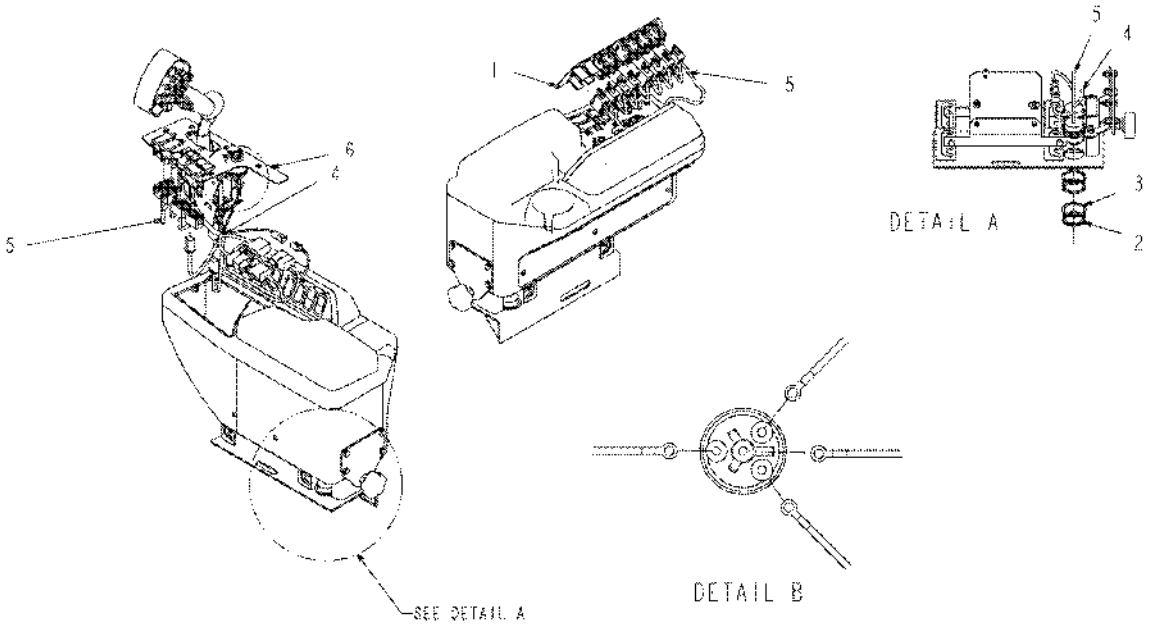

515522D1-01-N899-.TIF

Copyright © 2008 AGCO Corporation

HARNESS INSTALL-RH CONSOLE,SC

ITEM	PART #	QTY	DESCRIPTION	COMMENTS
1	WR127121	-	PANEL ASM-SWITCH,CONSOLE	SEE PAGE 8-2
2	AG515697	2	NUT PANEL ELEC CONNECTOR	
3	AG515698	2	WASHER LOCK ELEC CONNECTOR	
4	515520D1	1	HARNESS-RH CONSOLE,SC	
5	515521D1	1	HARNESS-SWITCHES,RH CONSOLE,SC	
6	516474D1	-	PANEL ASM-FNR,CONSOLE	SEE PAGE 7-3

Copyright © 2008 AGCO Corporation

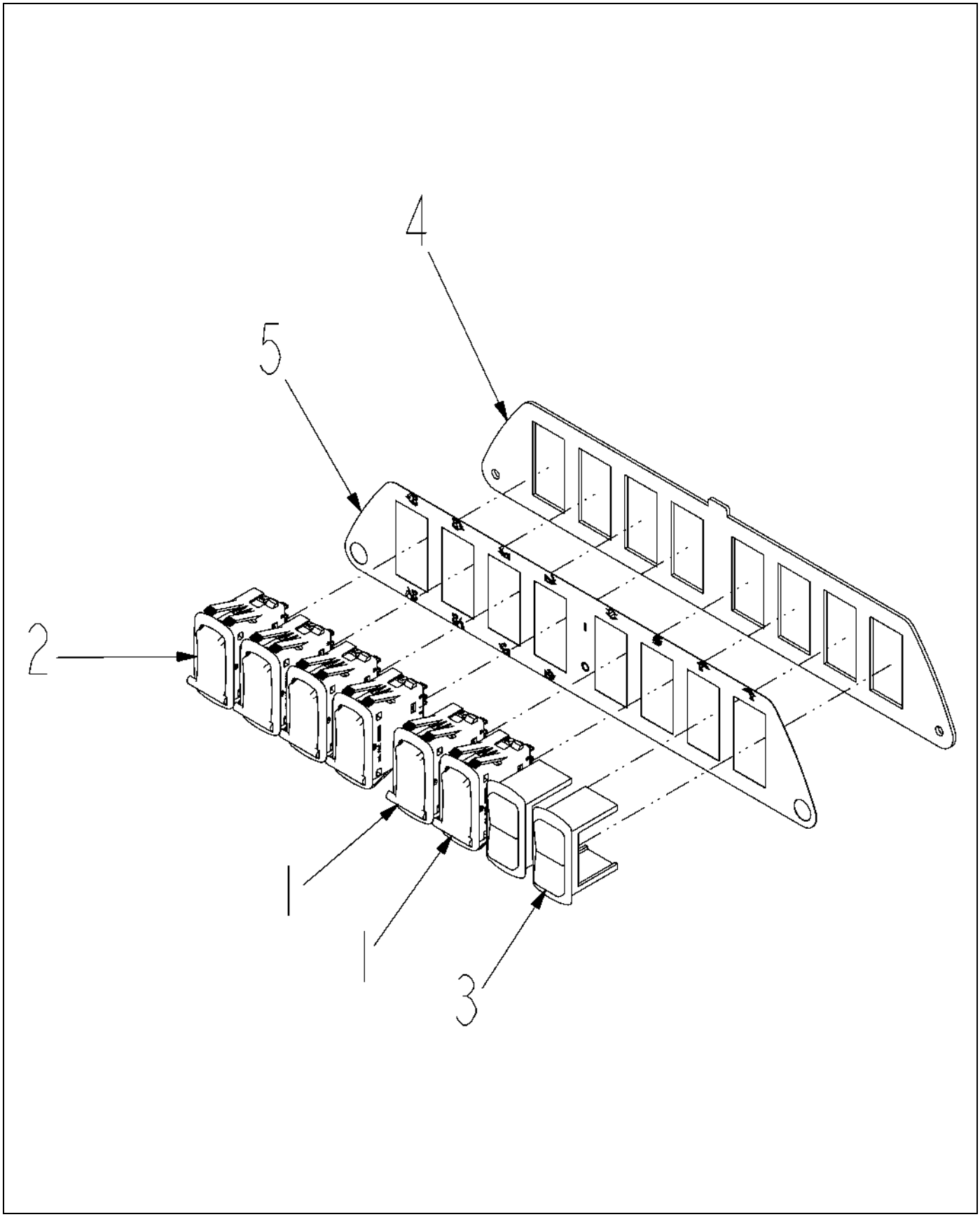

127121-03-N398-.TIF

Copyright © 2008 AGCO Corporation

PANEL ASM-SWITCH,CONSOLE

ITEM	PART #	QTY	DESCRIPTION	COMMENTS
1	AG124431	2	SWITCH-RKR,OFF-ON,W/LT,CS-L	
2	AG124432	4	SWITCH-RKR,(ON)-OFF-(ON),CS-L	
3	AG124437	2	PLUG-HOLE,SWITCH,CS-L	
4	WR125983	1	PLATE-MTG,SWITCHES	
5	WR127119	1	DECAL-PLATE,SWITCHES	

Copyright © 2008 AGCO Corporation

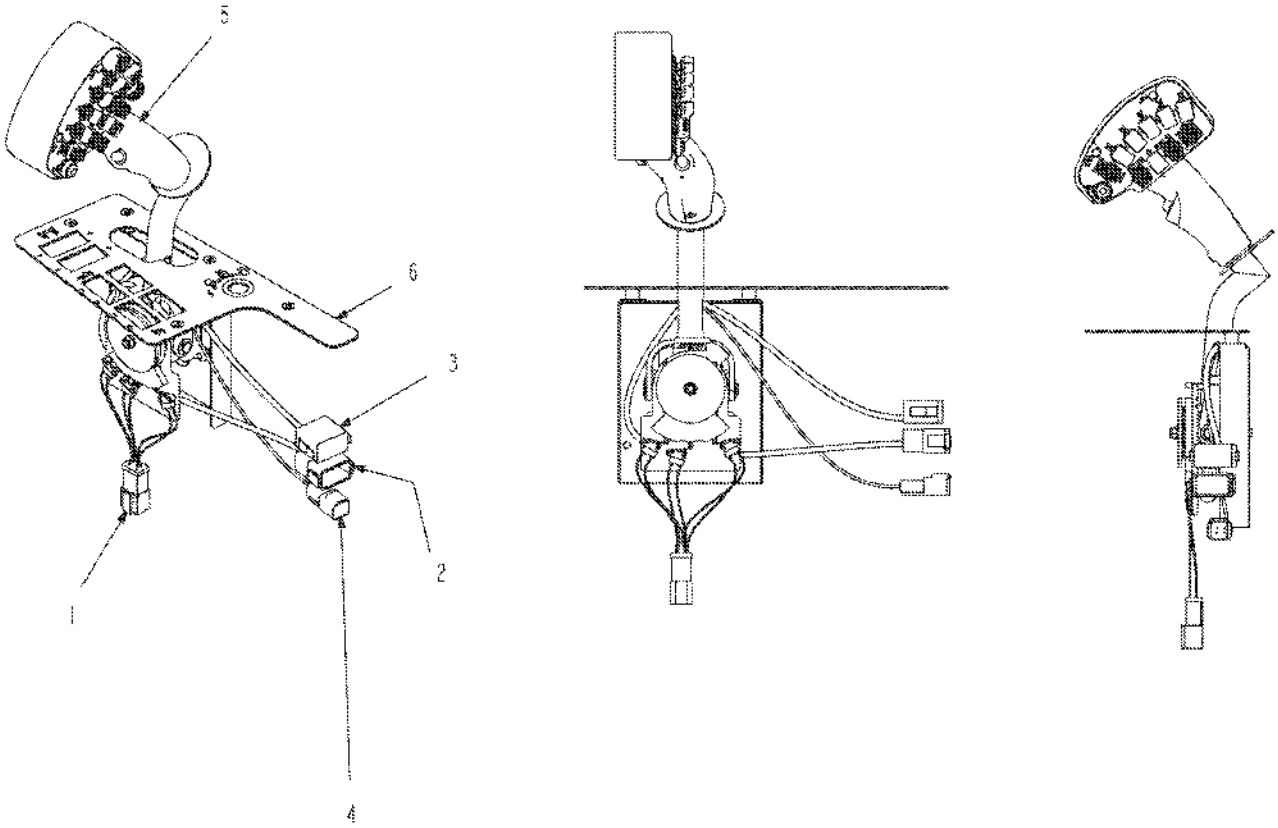

515352D1-01-N899-.TIF

Copyright © 2008 AGCO Corporation

CONTROL ASM-FNR

ITEM	PART #	QTY	DESCRIPTION	COMMENTS
1	AG523074	1	CONN-RCPT,4 WAY,18-14 GA	
2	AG523785	1	CONN-RCPT,12 WAY,20-16 GA	
3	AG523786	1	CONN-PLUG,12 WAY,20-16 GA	
4	AG523787	1	CONN-PLUG,4 WAY,20-16 GA	
5	514620D1	1	HANDLE-MULTIFUNTION,SC,7000	SEE PAGE 7-82
6	516588D1	1	DECAL-PLATE,FNR	

Copyright © 2008 AGCO Corporation

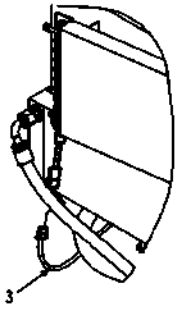

DETAIL A

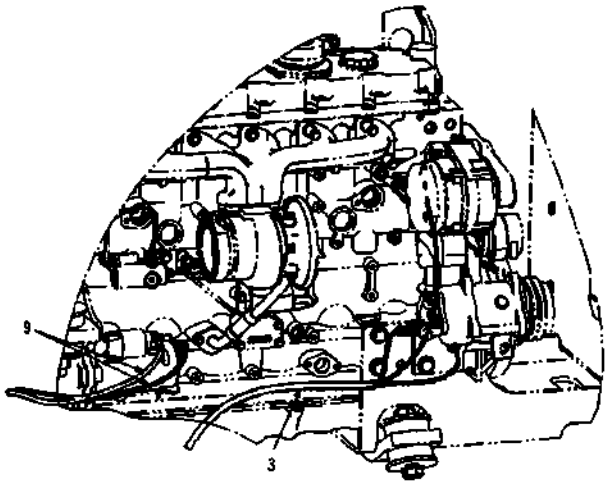

DETAIL C

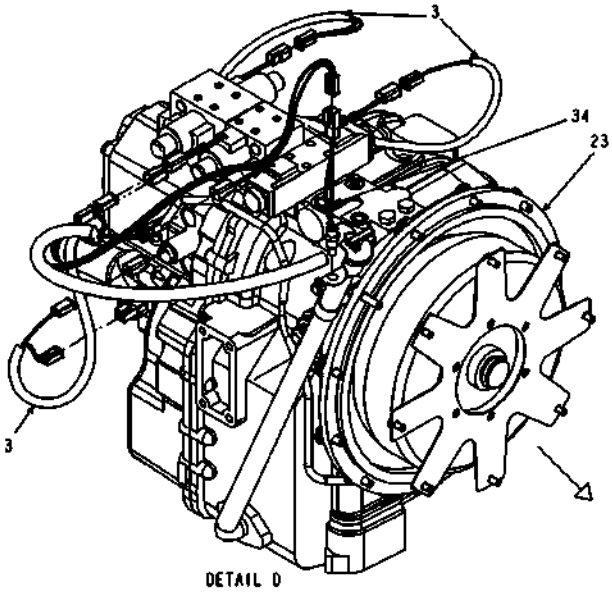

DETAIL D

517976D1-02-T353-01.TIF

Copyright © 2008 AGCO Corporation

HARNESS-INSTALL,CHASSIS,7X60, 2008

ITEM	PART #	QTY	DESCRIPTION	COMMENTS
3	513044D1	1	HARNESS-CHASSIS,ENGINE,TRANS	
4	AG518989	AR	SEALANT NONCORROSIVE 10.3 OZ	
9	512671D1	1	HARNESS-I/O,TRACK ADJUST,TLLT	[A]
21	AG553557	AR	TIE CABLE 7.37 .06-1.37 BLACK	
22	AG123758	-	ENGINE,174HP,PERKINS 1106E,PS	
22	513772D1	-	ENGINE-PERKINS 1106D,174HP T3	
23	AG136436	-	TRANS-POWERSHIFT,6SP 1.94TC	SEE PAGE 2-1
34	AG131763	-	SWITCH-TEMP,120DC,-6 O-RING	
37	525203D1	-	HARNESS-MAG SWITCH, PWR	
	FOOTNOTE [A]		1ST USED ON S/N 7650VNS8P1011	

Copyright © 2008 AGCO Corporation

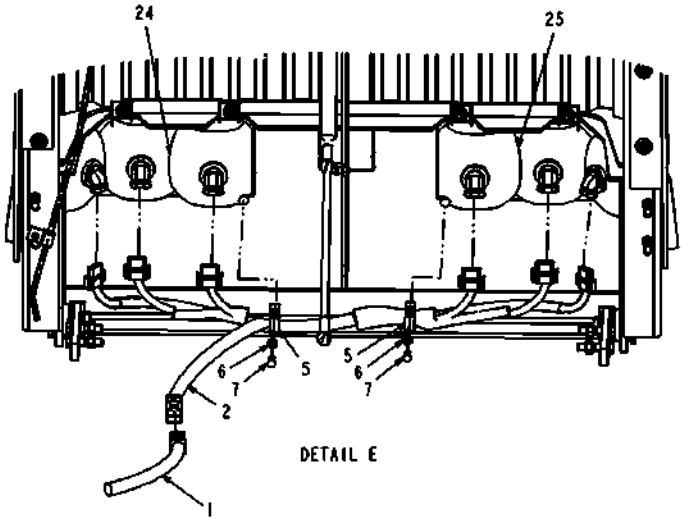

DETAIL E

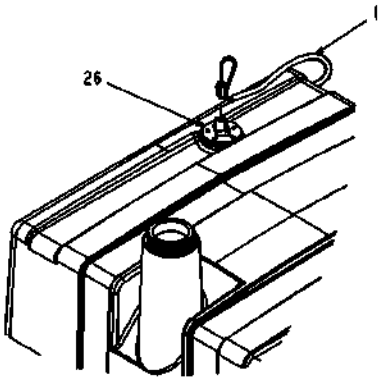

DETAIL F

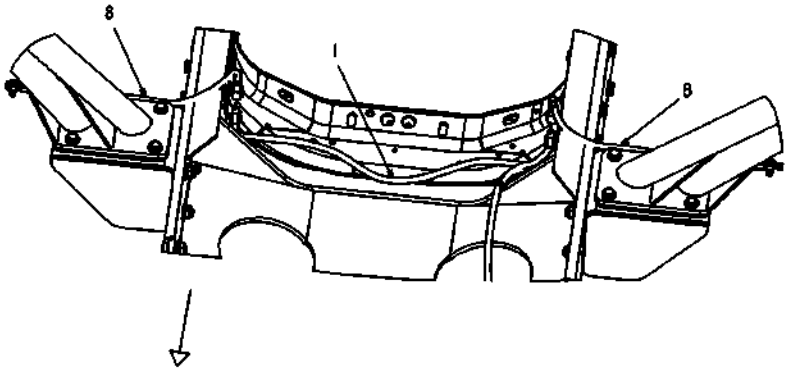

DETAIL G

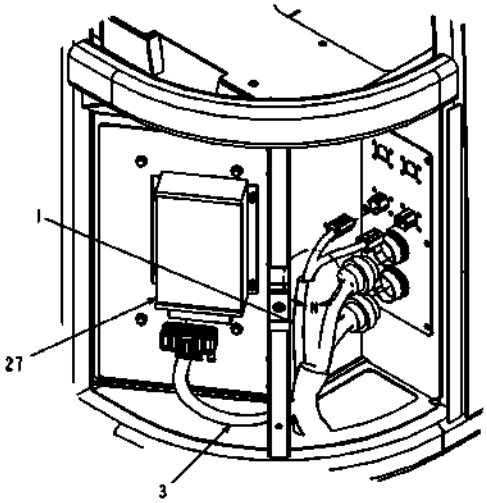

DETAIL H

517976D1-02-T353-02.TIF

Copyright © 2008 AGCO Corporation

HARNESS-INSTALL,CHASSIS,7X60, 2008

ITEM	PART #	QTY	DESCRIPTION	COMMENTS
1	512670D1	1	HARNESS-I/O,LIGHTS,FRONT	[A]
2	WR126891	1	HARNESS-LGIHTS,ROAD,WL	
3	513044D1	1	HARNESS-CHASSIS,ENGINE,TRANS	
5	AG561489	2	CLAMP 0.75 COATED HOSE	
6	AG522242	2	WASHER-LK,M6,SS	
7	AG521728	3	BOLT-M6-1.0X16,,SS,HHD	
8	517950D1	-	HARNESS-BOOM REST	
24	AG421135	-	HEADLIGHT-HALOGEN,WRAPPING,LH	SEE PAGE 10-12
25	AG421136	-	HEADLIGHT-HALOGEN,WRAPPING,RH	SEE PAGE 10-13
26	AG122986	-	FUEL SENDER-TUBE TYPE	
27	505565D1	-	TCU-TURNER,SPRA-COUPE	
	FOOTNOTE [A]		1ST USED ON S/N S7450PNS7P1005 AND S7650CNS8P1007	

Copyright © 2008 AGCO Corporation

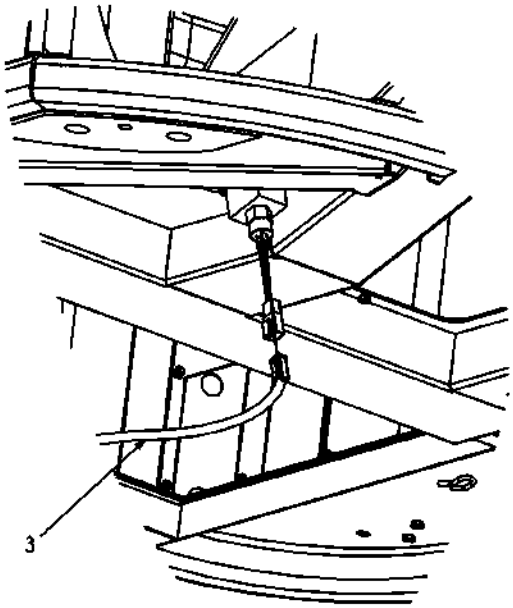

DETAIL J

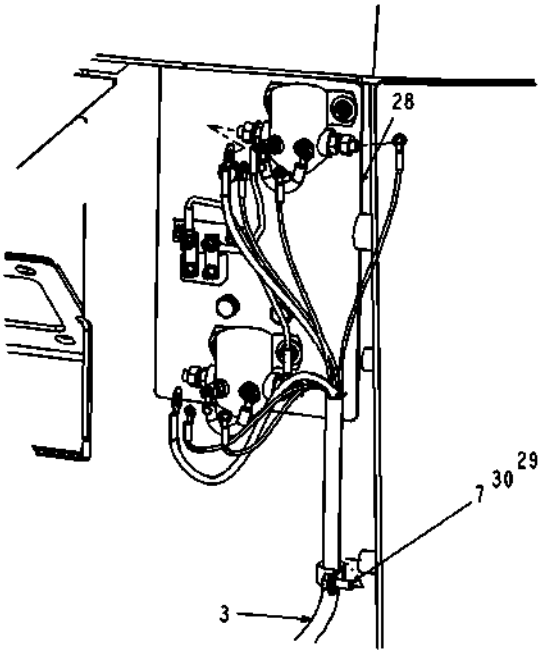

DETAIL K

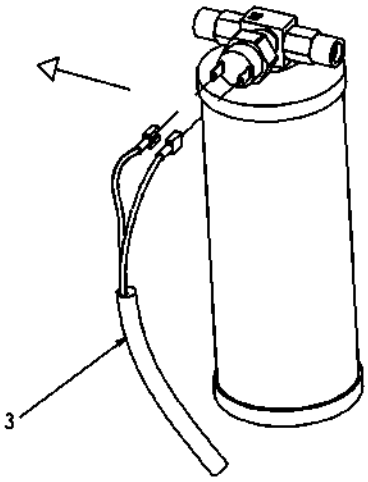

DETAIL L

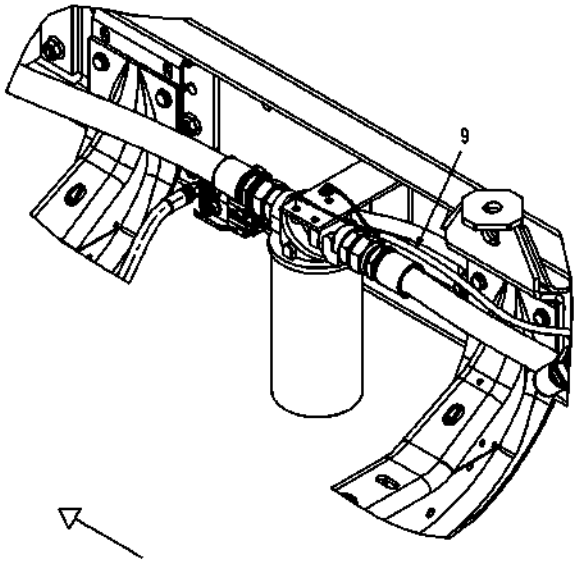

DETAIL M

517976D1-02-T353-03.TIF

Copyright © 2008 AGCO Corporation

HARNESS-INSTALL,CHASSIS,7X60, 2008

ITEM	PART #	QTY	DESCRIPTION	COMMENTS
3	513044D1	1	HARNESS-CHASSIS,ENGINE,TRANS	
7	AG521728	3	BOLT-M6-1.0X16,,SS,HHD	
9	512671D1	1	HARNESS-I/O,TRACK ADJUST,TLLT	[A]
28	513764D1	-	ASM-MAG SW.BREAKER,80 AMP	SEE PAGE 8-48
29	AG521359	1	CLAMP-HOSE,COATED,.687 IDX.50	
30	AG562792	1	WASHER LOCK M6 SPRING ZN	
	FOOTNOTE [A]		1ST USED ON S/N 7650VNS8P1011	

Copyright © 2008 AGCO Corporation

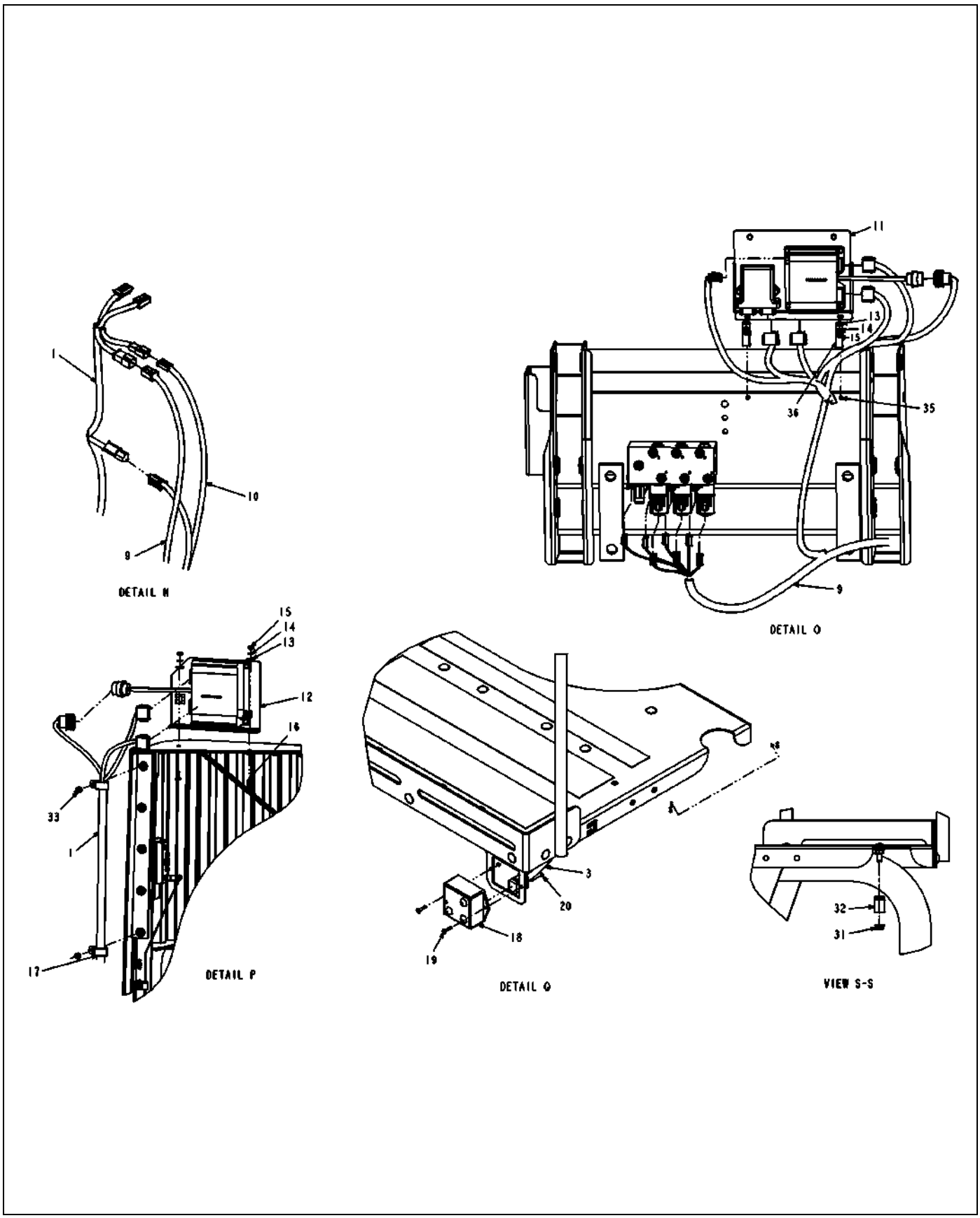

517976D1-02-T353-04.TIF

Copyright © 2008 AGCO Corporation

ITEM	PART #	QTY	DESCRIPTION	COMMENTS
1	512670D1	1	HARNESS-I/O,LIGHTS,FRONT	[A]
3	513044D1	1	HARNESS-CHASSIS,ENGINE,TRANS	
9	512671D1	1	HARNESS-I/O,TRACK ADJUST,TLLT	[B]
10	AG127321	-	HARNESS-PUMP/RADAR/FOAM MRKR	
11	WR132177	1	ASM-I/O,HIGH CURRENT,REAR	SEE PAGE 8-51
12	WR132176	1	ASM-I/O,HIGH CURRENT	SEE PAGE 8-49
13	AG515121	4	WASHER 0.25 FL SS REG TYPE-B	
14	AG515122	4	WASHER 0.25 LK SS REG	
15	AG515123	4	NUT .25-20NC HEX SS REG	
16	AG562054	2	BOLT 0.25-20NCX 0.75 SS HHD	
17	AG010359	2	CLAMP LOOM 1.25 PER DWG	
18	AG121751	1	MODULE-REMOTE THROTTLE	
19	AG562067	2	SCREW 8-32X 0.75 MA SS SL RHD	
20	AG563176	2	NUT #8-32NC HEX SS REG NY	
31	AG522562	1	NUT-.38-16,SS,SFLG,H	
32	AG562821	1	CLAMP 1.12-COATED HOSE	
33	AG601888	2	NUT 0.31-18NC HEX ZN REG NY	
35	AG562064	2	BOLT 0.25-20NCX 1.00 SS HHD	
36	AG554898	2	CLAMP 1.12-COATED HOSE	
	FOOTNOTE [A]		1ST USED ON S/N S7450PNS7P1005 AND S7650CNS8P1007	
	FOOTNOTE [B]		1ST USED ON S/N 7650VNS8P1011	

Copyright © 2008 AGCO Corporation

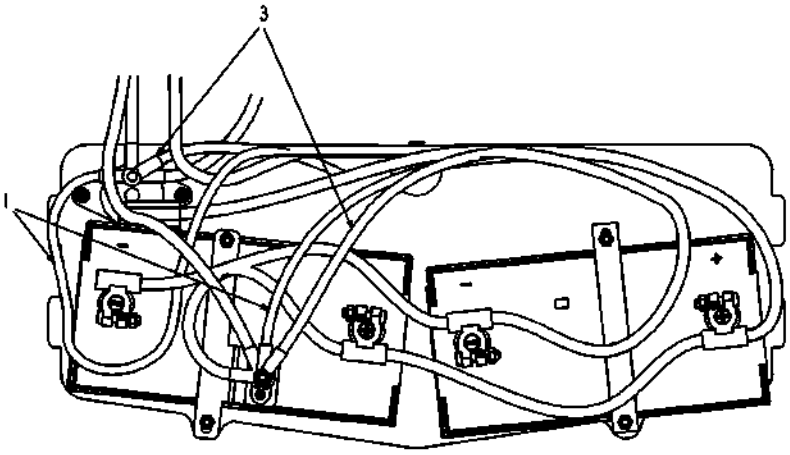

DETAIL R

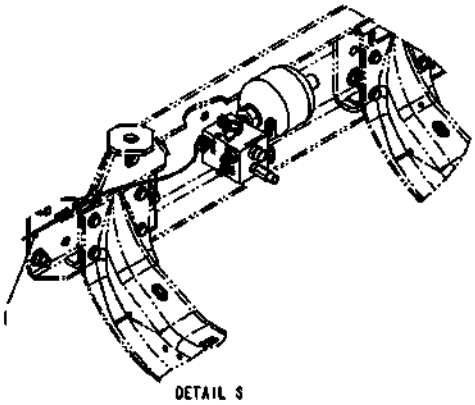

DETAIL S

517976D1-02-T353-05.TIF

Copyright © 2008 AGCO Corporation

ITEM	PART #	QTY	DESCRIPTION	COMMENTS
1	512670D1	1	HARNESS-I/O,LIGHTS,FRONT	[A]
3	513044D1	1	HARNESS-CHASSIS,ENGINE,TRANS	
	FOOTNOTE [A]		1ST USED ON S/N S7450PNS7P1005 AND S7650CNS8P1007	

Copyright © 2008 AGCO Corporation

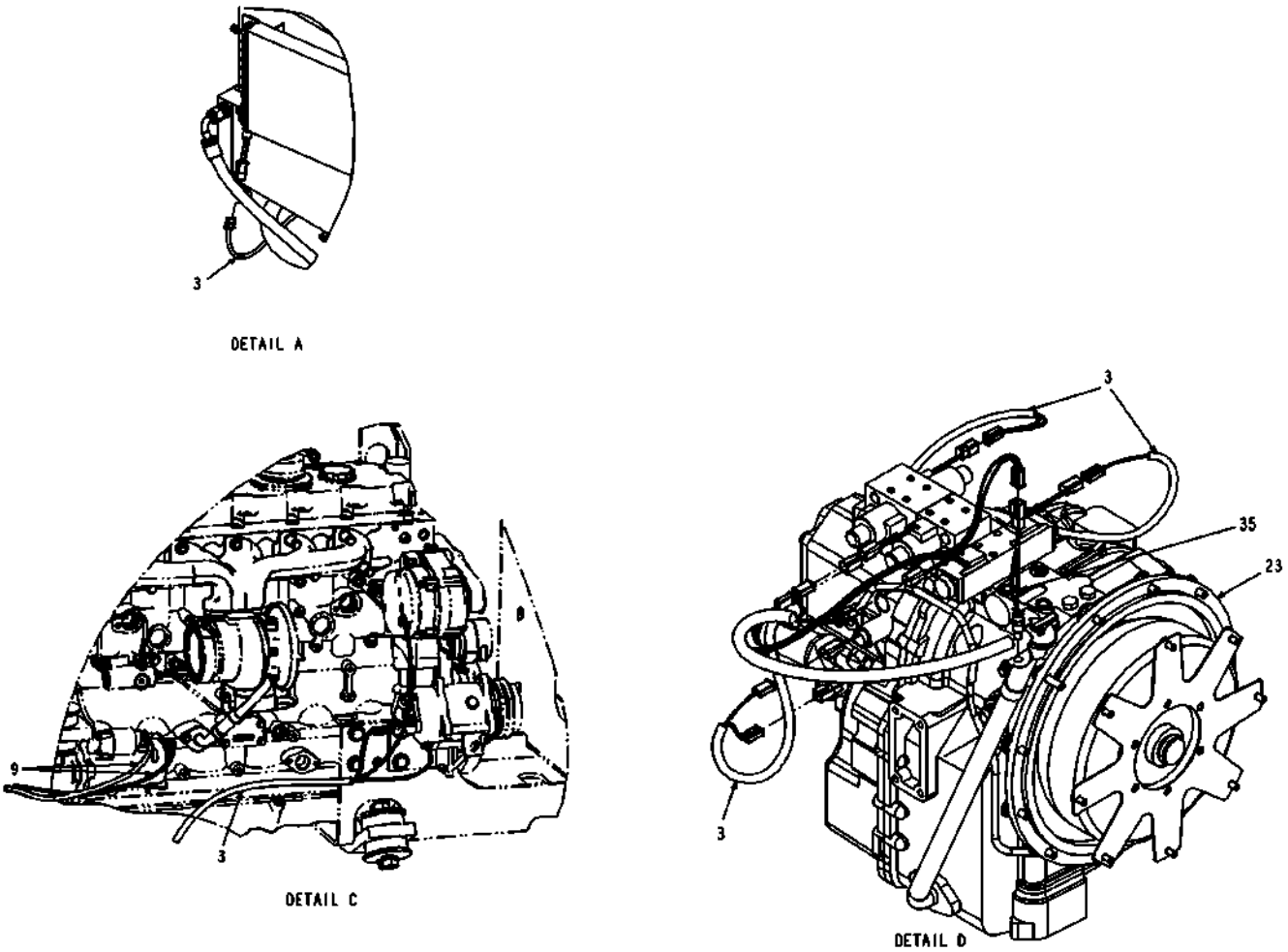

517977D1-02-T353-01.TIF

Copyright © 2008 AGCO Corporation

ITEM	PART #	QTY	DESCRIPTION	COMMENTS
3	513044D1	1	HARNESS-CHASSIS,ENGINE,TRANS	
4	AG518989	AR	SEALANT NONCORROSIVE 10.3 OZ	
8	517950D1	-	HARNESS-BOOM REST	
9	512671D1	1	HARNESS-I/O,TRACK ADJUST,TLLT	[A]
21	AG553557	AR	TIE CABLE 7.37 .06-1.37 BLACK	
22	513772D1	-	ENGINE-PERKINS 1106D,174HP T3	
22	AG123758	-	ENGINE,174HP,PERKINS 1106E,PS	
23	AG136436	-	TRANS-POWERSHIFT,6SP 1.94TC	SEE PAGE 2-1
35	AG562064	2	BOLT 0.25-20NCX 1.00 SS HHD	
36	AG554898	2	CLAMP 1.12-COATED HOSE	
	FOOTNOTE [A]		1ST USED ON S/N 7650VNS8P1011	

Copyright © 2008 AGCO Corporation

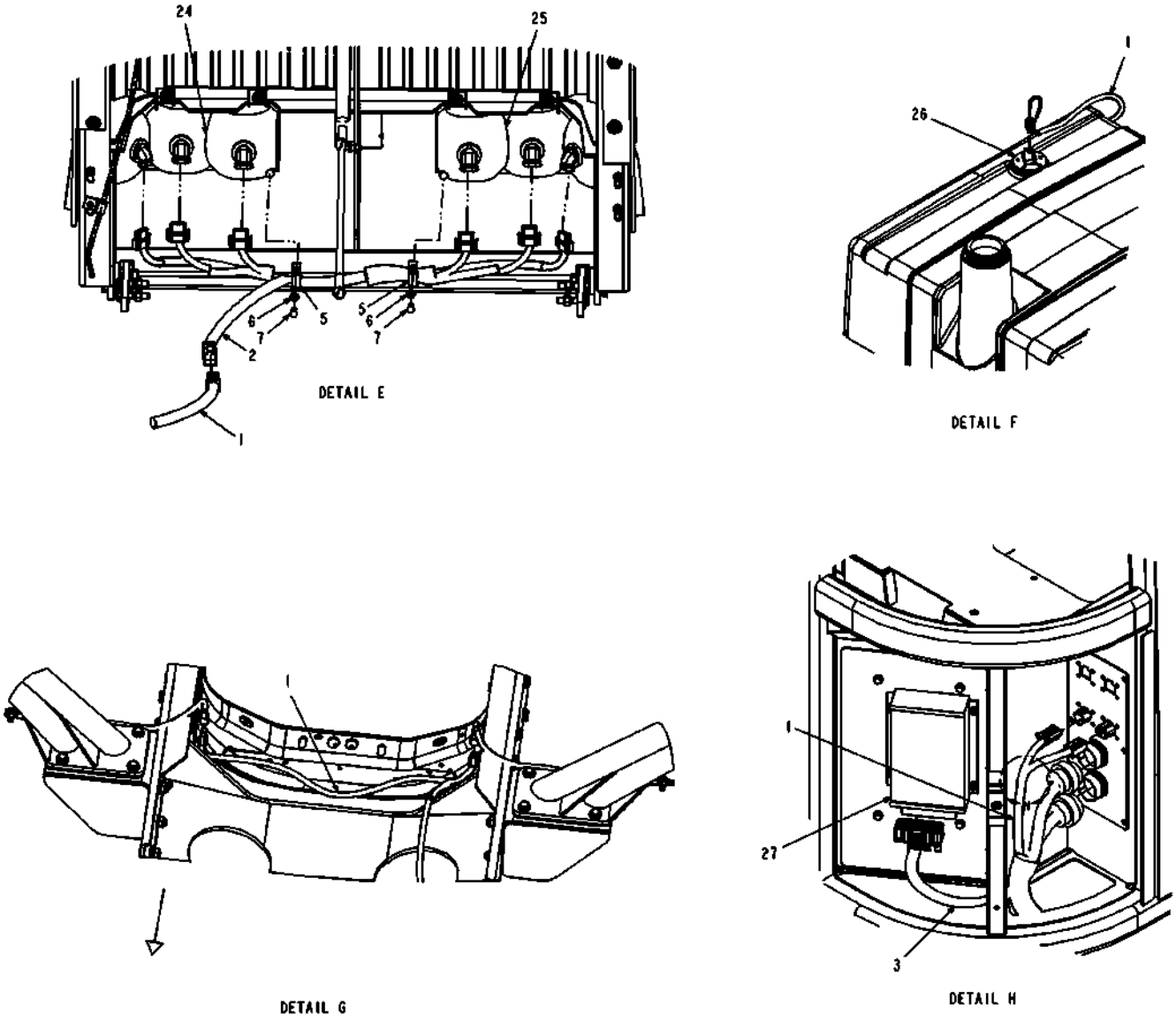

517977D1-02-T353-02.TIF

Copyright © 2008 AGCO Corporation

HARN-INSTALL,CHASSIS,7X60,EURO, 2008

ITEM	PART #	QTY	DESCRIPTION	COMMENTS
1	512670D1	1	HARNESS-I/O,LIGHTS,FRONT	[A]
2	WR126891	1	HARNESS-LGIHTS,ROAD,WL	
3	513044D1	1	HARNESS-CHASSIS,ENGINE,TRANS	
5	AG561489	2	CLAMP 0.75 COATED HOSE	
6	AG522242	2	WASHER-LK,M6,SS	
7	AG521728	3	BOLT-M6-1.0X16,,SS,HHD	
24	AG421135	-	HEADLIGHT-HALOGEN,WRAPPING,LH	SEE PAGE 10-12
25	AG421136	-	HEADLIGHT-HALOGEN,WRAPPING,RH	SEE PAGE 10-13
26	AG122986	-	FUEL SENDER-TUBE TYPE	
27	505565D1	-	TCU-TURNER,SPRA-COUPE	
	FOOTNOTE [A]		1ST USED ON S/N S7450PNS7P1005 AND S7650CNS8P1007	

Copyright © 2008 AGCO Corporation

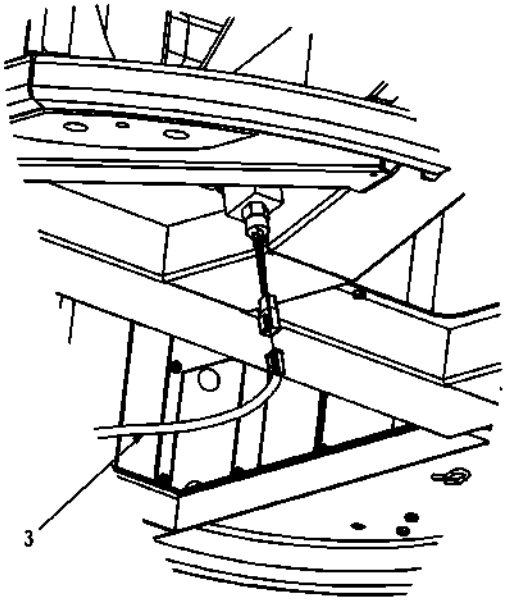

DETAIL J

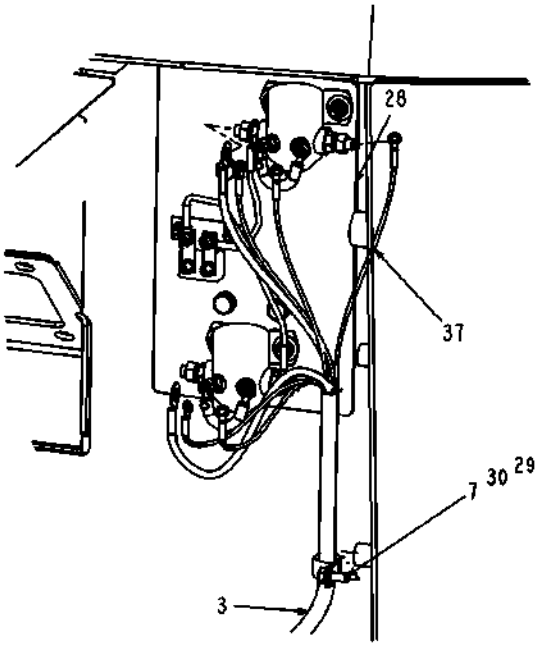

DETAIL K

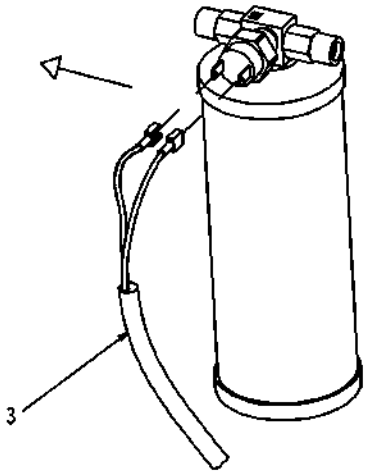

DETAIL L

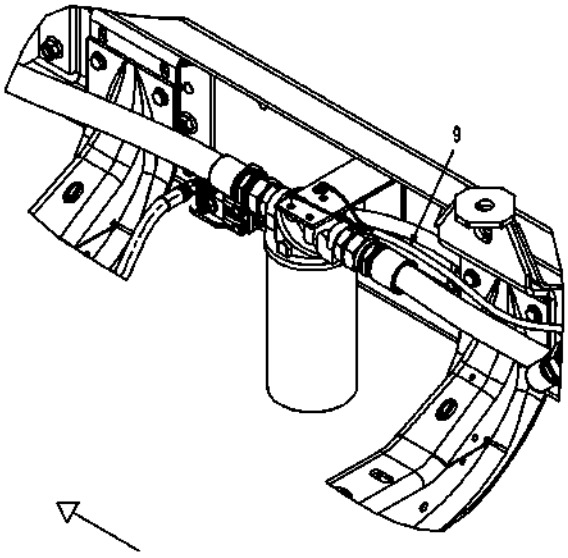

DETAIL N

517977D1-02-T353-03.TIF

Copyright © 2008 AGCO Corporation

HARN-INSTALL,CHASSIS,7X60,EURO, 2008

ITEM	PART #	QTY	DESCRIPTION	COMMENTS
3	513044D1	1	HARNESS-CHASSIS,ENGINE,TRANS	
7	AG521728	3	BOLT-M6-1.0X16,,SS,HHD	
9	512671D1	1	HARNESS-I/O,TRACK ADJUST,TLLT	[A]
28	513764D1	-	ASM-MAG SW.BREAKER,80 AMP	SEE PAGE 8-48
29	AG521359	1	CLAMP-HOSE,COATED,.687 IDX.50	
30	AG562792	1	WASHER LOCK M6 SPRING ZN	
37	525203D1	-	HARNESS-MAG SWITCH, PWR	
	FOOTNOTE [A]		1ST USED ON S/N 7650VNS8P1011	

Copyright © 2008 AGCO Corporation

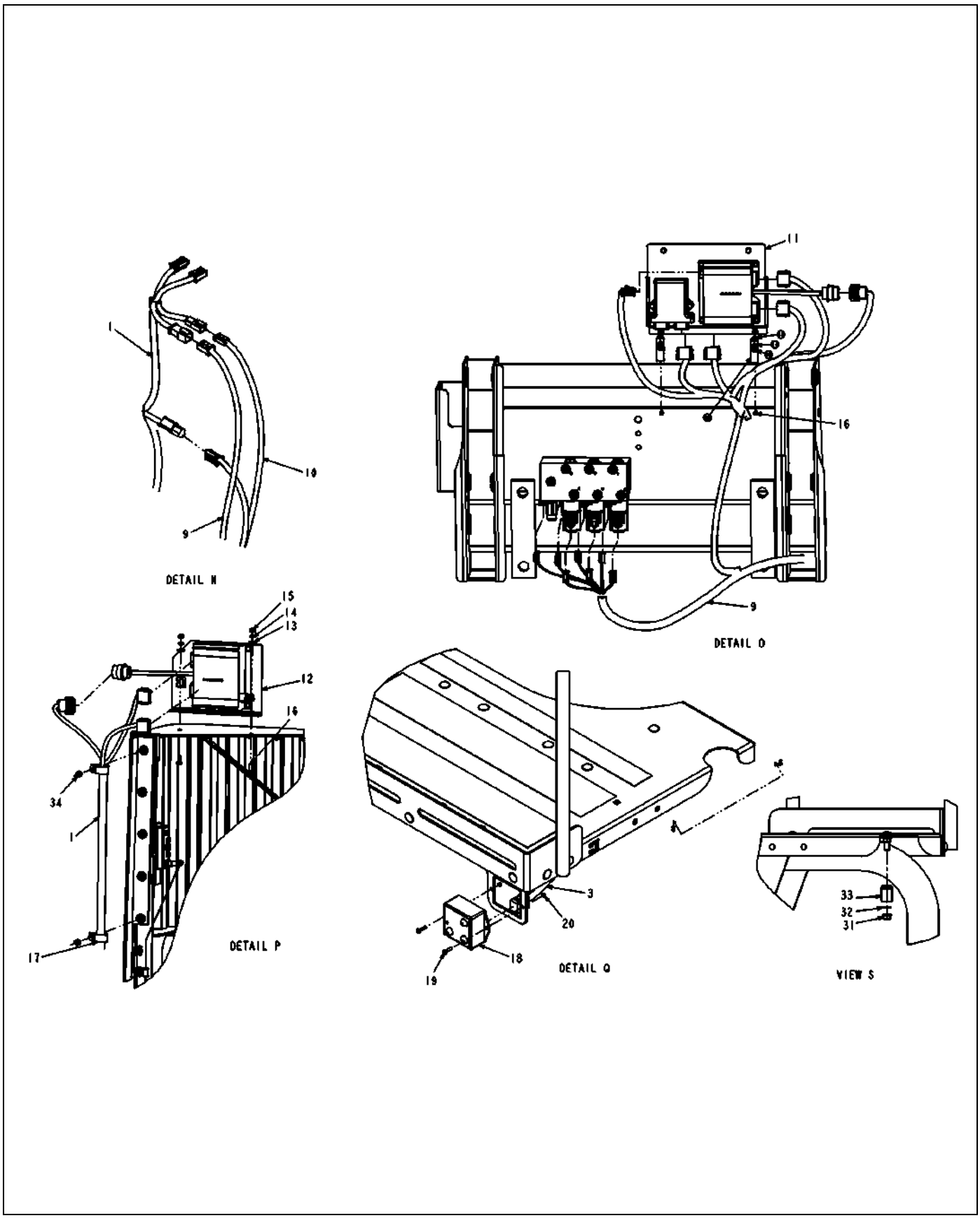

517977D1-02-T353-04.TIF

Copyright © 2008 AGCO Corporation

HARN-INSTALL,CHASSIS,7X60,EURO, 2008

ITEM	PART #	QTY	DESCRIPTION	COMMENTS
1	512670D1	1	HARNESS-I/O,LIGHTS,FRONT	[A]
3	513044D1	1	HARNESS-CHASSIS,ENGINE,TRANS	
9	512671D1	1	HARNESS-I/O,TRACK ADJUST,TLLT	[B]
10	AG127321	-	HARNESS-PUMP/RADAR/FOAM MRKR	
11	WR132177	1	ASM-I/O,HIGH CURRENT,REAR	SEE PAGE 8-51
12	WR132176	1	ASM-I/O,HIGH CURRENT	SEE PAGE 8-49
13	AG515121	4	WASHER 0.25 FL SS REG TYPE-B	
14	AG515122	4	WASHER 0.25 LK SS REG	
15	AG515123	4	NUT .25-20NC HEX SS REG	
16	AG562054	2	BOLT 0.25-20NCX 0.75 SS HHD	
17	AG010359	2	CLAMP LOOM 1.25 PER DWG	
18	AG121751	1	MODULE-REMOTE THROTTLE	
19	AG562067	2	SCREW 8-32X 0.75 MA SS SL RHD	
20	AG563176	2	NUT #8-32NC HEX SS REG NY	
31	AG522562	1	NUT-.38-16,SS,SFLG,H	
32	AG562821	1	CLAMP 1.12-COATED HOSE	
33	AG601888	2	NUT 0.31-18NC HEX ZN REG NY	
34	AG131763	-	SWITCH-TEMP,120DC,-6 O-RING	
	FOOTNOTE [A]		1ST USED ON S/N S7450PNS7P1005 AND S7650CNS8P1007	
	FOOTNOTE [B]		1ST USED ON S/N 7650VNS8P1011	

Copyright © 2008 AGCO Corporation

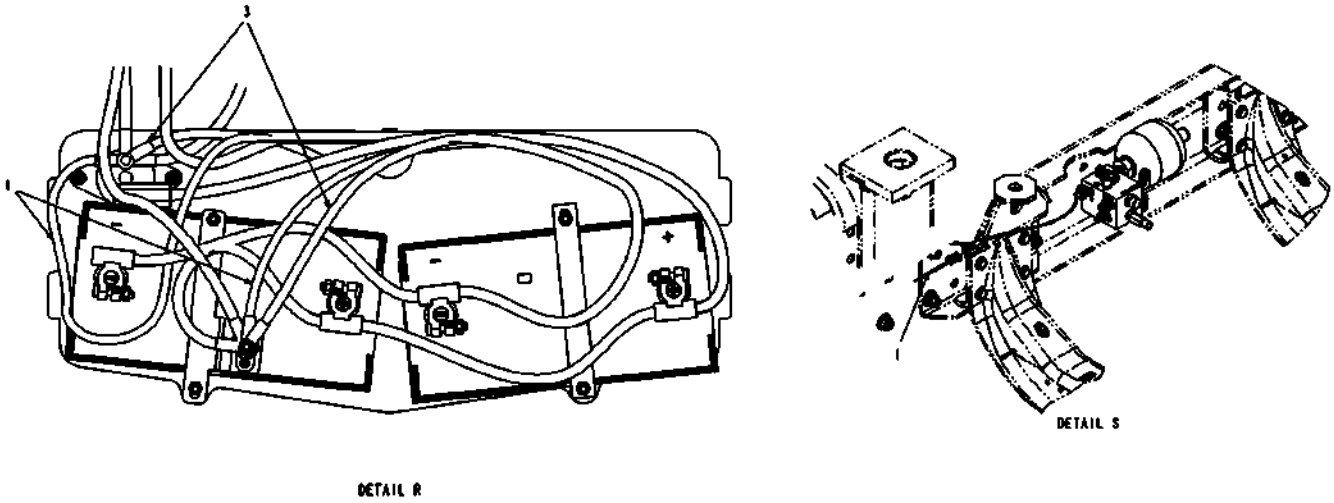

517977D1-02-T353-05.TIF

Copyright © 2008 AGCO Corporation

HARN-INSTALL,CHASSIS,7X60,EURO, 2008

ITEM	PART #	QTY	DESCRIPTION	COMMENTS
1	512670D1	1	HARNESS-I/O,LIGHTS,FRONT	[A]
3	513044D1	1	HARNESS-CHASSIS,ENGINE,TRANS	
	FOOTNOTE [A]		1ST USED ON S/N S7450PNS7P1005 AND S7650CNS8P1007	

Copyright © 2008 AGCO Corporation

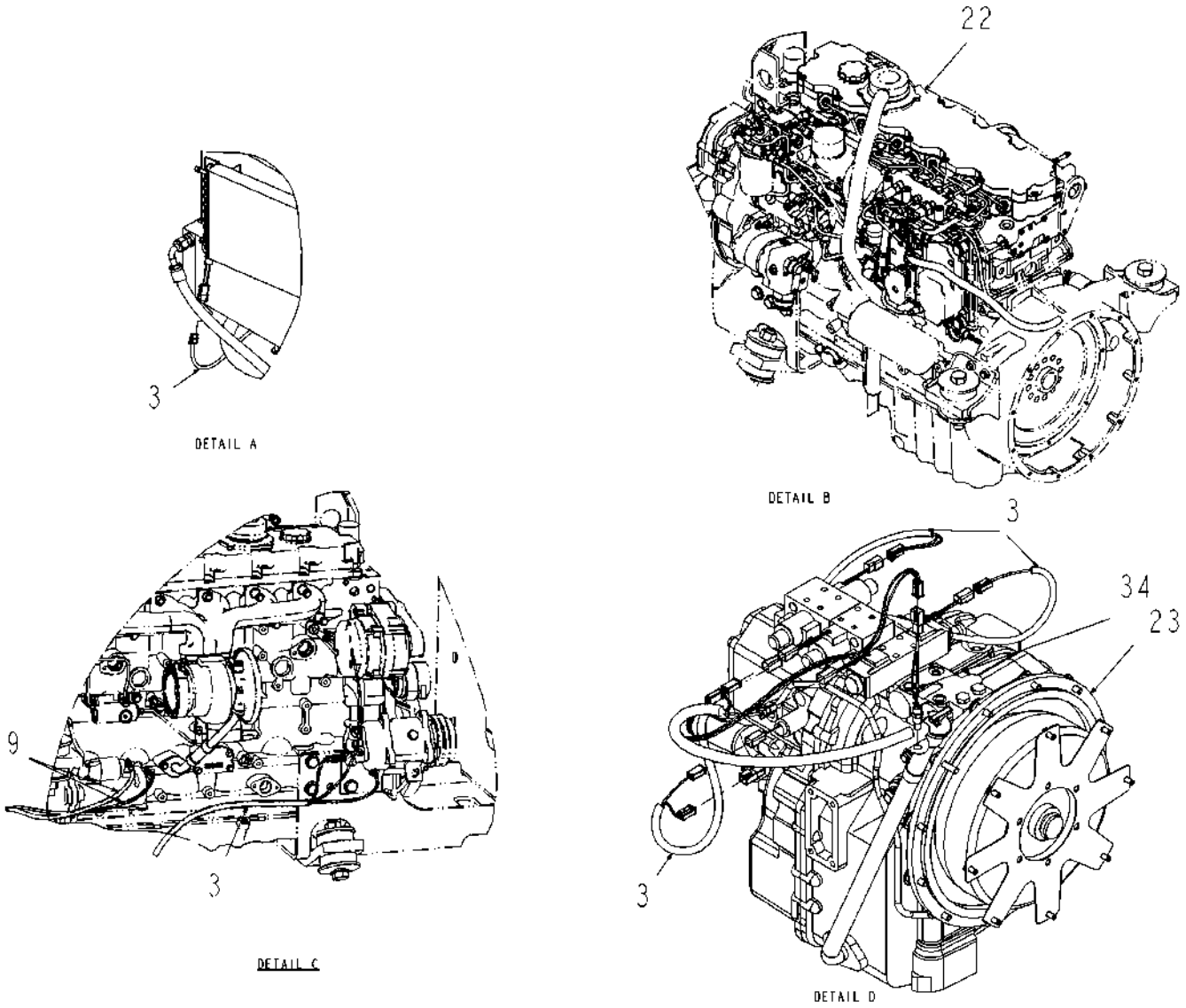

523978D1-03-T499-01.TIF

Copyright © 2008 AGCO Corporation

HARNESS-INSTALL,CHASSIS,7X50, 2009

ITEM	PART #	QTY	DESCRIPTION	COMMENTS
3	523977D1	1	HARNESS-CHASSIS,ENG TRANS	
4	AG518989	AR	SEALANT NONCORROSIVE 10.3 OZ	
9	512671D1	1	HARNESS-I/O,TRACK ADJUST,TLLT	[A]
21	AG553557	AR	TIE CABLE 7.37 .06-1.37 BLACK	
22	513772D1	-	ENGINE-PERKINS 1106D,174HP T3	
23	AG136436	-	TRANS-POWERSHIFT,6SP 1.94TC	SEE PAGE 2-1
34	AG131763	-	SWITCH-TEMP,120DC,-6 O-RING	
	FOOTNOTE [A]		1ST USED ON S/N 7650VNS8P1011	

Copyright © 2008 AGCO Corporation

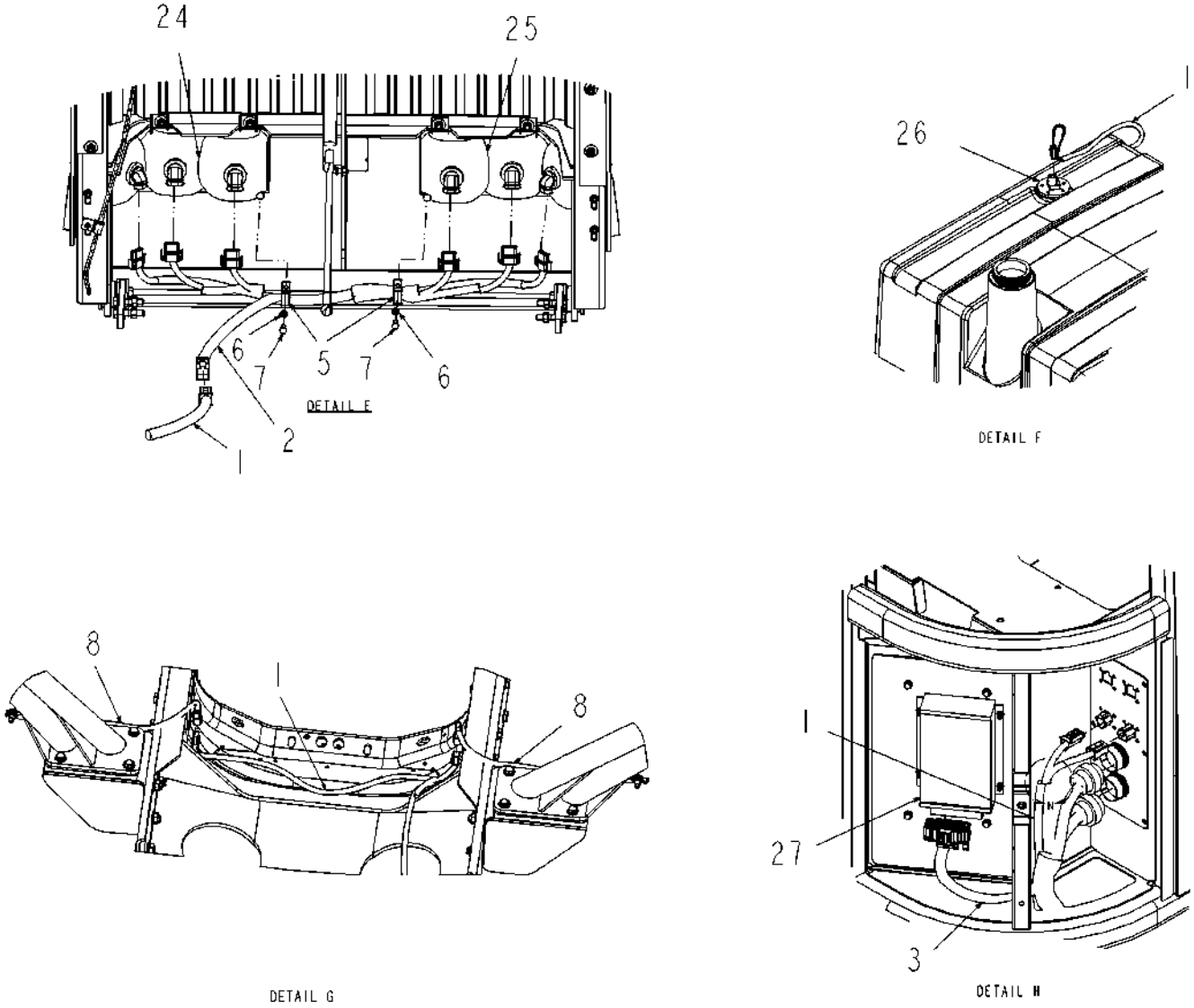

523978D1-03-T499-02.TIF

Copyright © 2008 AGCO Corporation

HARNESS-INSTALL,CHASSIS,7X50, 2009

ITEM	PART #	QTY	DESCRIPTION	COMMENTS
1	512670D1	1	HARNESS-I/O,LIGHTS,FRONT	[A]
2	WR126891	1	HARNESS-LGIHTS,ROAD,WL	
3	523977D1	1	HARNESS-CHASSIS,ENG TRANS	
5	AG561489	2	CLAMP 0.75 COATED HOSE	
6	AG522242	2	WASHER-LK,M6,SS	
7	AG521728	3	BOLT-M6-1.0X16,,SS,HHD	
8	517950D1	-	HARNESS-BOOM REST	
24	AG421135	-	HEADLIGHT-HALOGEN,WRAPPING,LH	SEE PAGE 10-12
25	AG421136	-	HEADLIGHT-HALOGEN,WRAPPING,RH	SEE PAGE 10-13
26	AG122986	-	FUEL SENDER-TUBE TYPE	
27	505565D1	-	TCU-TURNER,SPRA-COUPE	
	FOOTNOTE [A]		1ST USED ON S/N S7450PNS7P1005 AND S7650CNS8P1007	

Copyright © 2008 AGCO Corporation

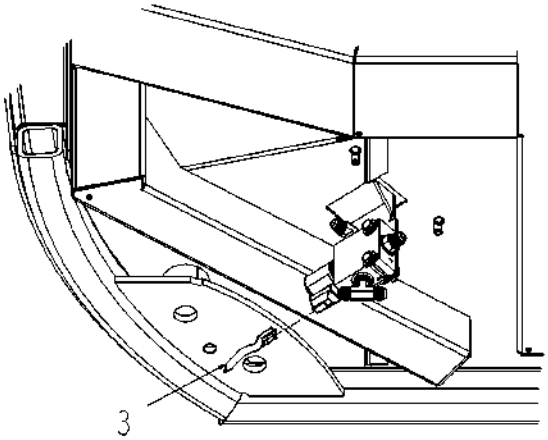

DETAIL J

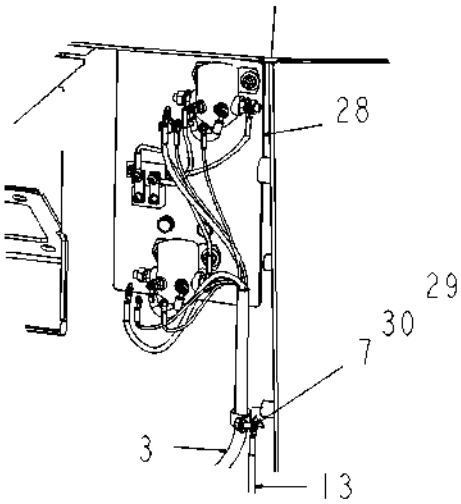

DETAIL K

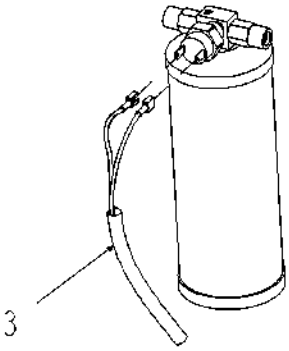

DETAIL L

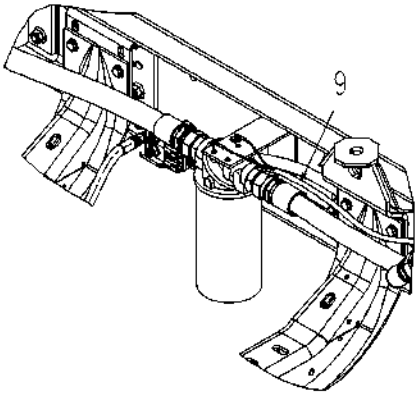

DETAIL M

523978D1-03-T499-03.TIF

Copyright © 2008 AGCO Corporation

ITEM	PART #	QTY	DESCRIPTION	COMMENTS
3	523977D1	1	HARNESS-CHASSIS,ENG TRANS	
7	AG521728	3	BOLT-M6-1.0X16,,SS,HHD	
9	512671D1	1	HARNESS-I/O,TRACK ADJUST,TLLT	[A]
13	WR129305	1	CABLE-GND,CAB	
28	513764D1	-	ASM-MAG SW.BREAKER,80 AMP	SEE PAGE 8-48
29	AG521359	1	CLAMP-HOSE,COATED,.687 IDX.50	
30	AG562792	1	WASHER LOCK M6 SPRING ZN	
	FOOTNOTE [A]		1ST USED ON S/N 7650VNS8P1011	

Copyright © 2008 AGCO Corporation

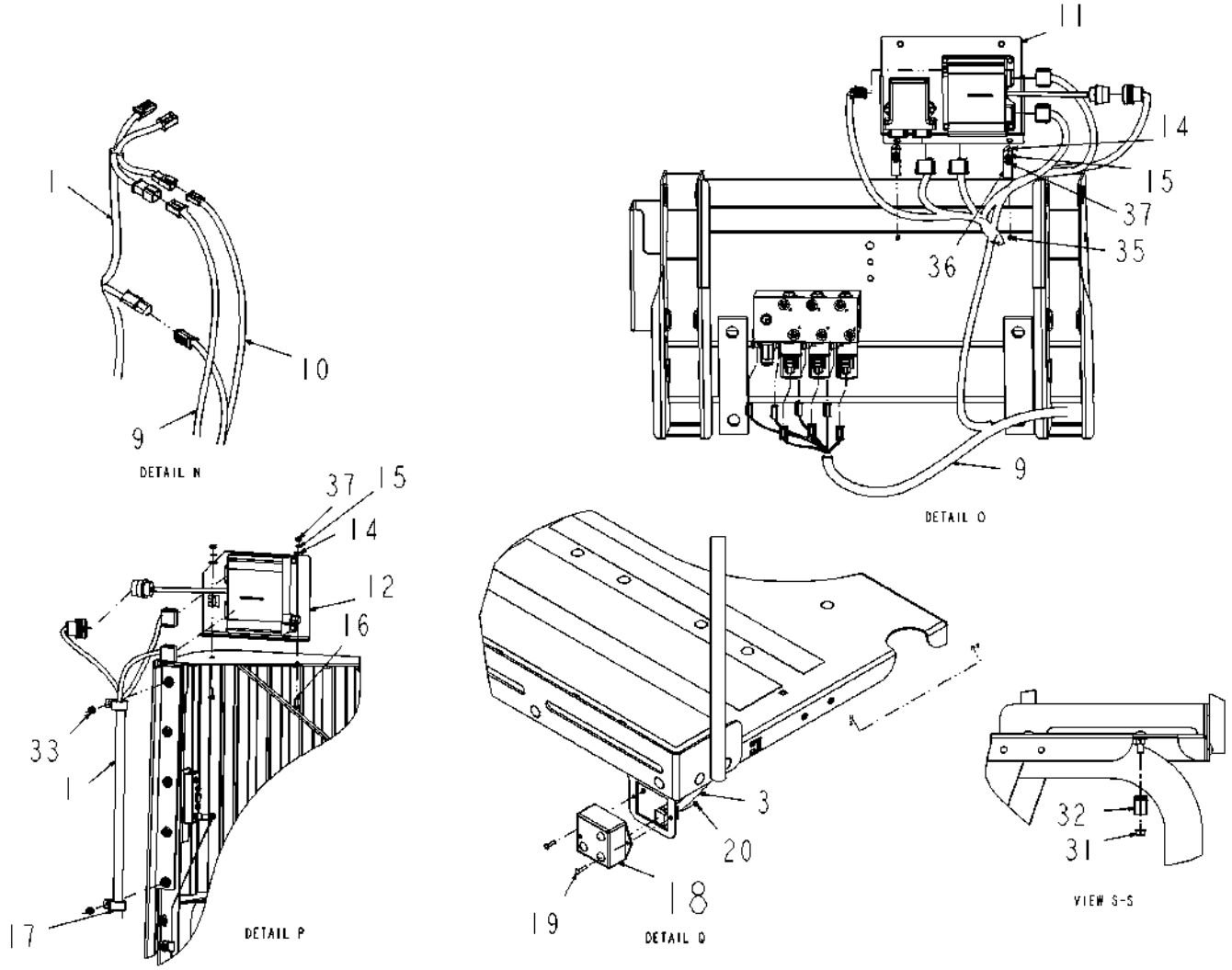

523978D1-03-T499-04.TIF

Copyright © 2008 AGCO Corporation

ITEM	PART #	QTY	DESCRIPTION	COMMENTS
1	512670D1	1	HARNESS-I/O,LIGHTS,FRONT	[A]
3	523977D1	1	HARNESS-CHASSIS,ENG TRANS	
9	512671D1	1	HARNESS-I/O,TRACK ADJUST,TLLT	[B]
10	AG127321	-	HARNESS-PUMP/RADAR/FOAM MRKR	
11	WR132177	1	ASM-I/O,HIGH CURRENT,REAR	SEE PAGE 8-51
12	WR132176	1	ASM-I/O,HIGH CURRENT	SEE PAGE 8-49
14	AG515121	4	WASHER 0.25 FL SS REG TYPE-B	
15	AG515122	4	WASHER 0.25 LK SS REG	
16	AG562054	2	BOLT 0.25-20NCX 0.75 SS HHD	
17	AG010359	2	CLAMP LOOM 1.25 PER DWG	
18	AG121751	1	MODULE-REMOTE THROTTLE	
19	AG562067	2	SCREW 8-32X 0.75 MA SS SL RHD	
20	AG563176	2	NUT #8-32NC HEX SS REG NY	
31	AG522562	1	NUT-.38-16,SS,SFLG,H	
32	AG561793	1	CLAMP-HOSE,2,.75 WIDE,RUB-COAT	
33	AG601888	2	NUT 0.31-18NC HEX ZN REG NY	
35	AG562064	2	BOLT 0.25-20NCX 1.00 SS HHD	
36	AG554898	2	CLAMP 1.12-COATED HOSE	
37	AG515123	4	NUT .25-20NC HEX SS REG	
	FOOTNOTE [A]		1ST USED ON S/N S7450PNS7P1005 AND S7650CNS8P1007	
	FOOTNOTE [B]		1ST USED ON S/N 7650VNS8P1011	

Copyright © 2008 AGCO Corporation

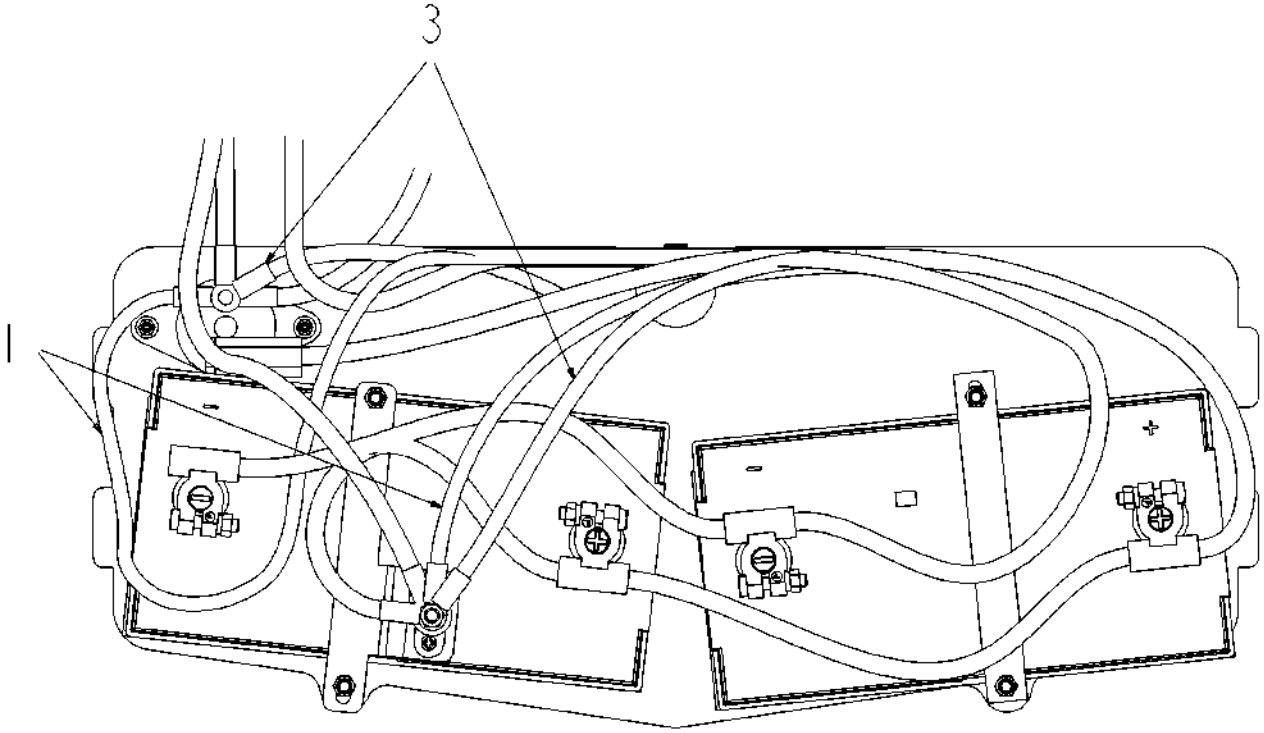

DETAIL R

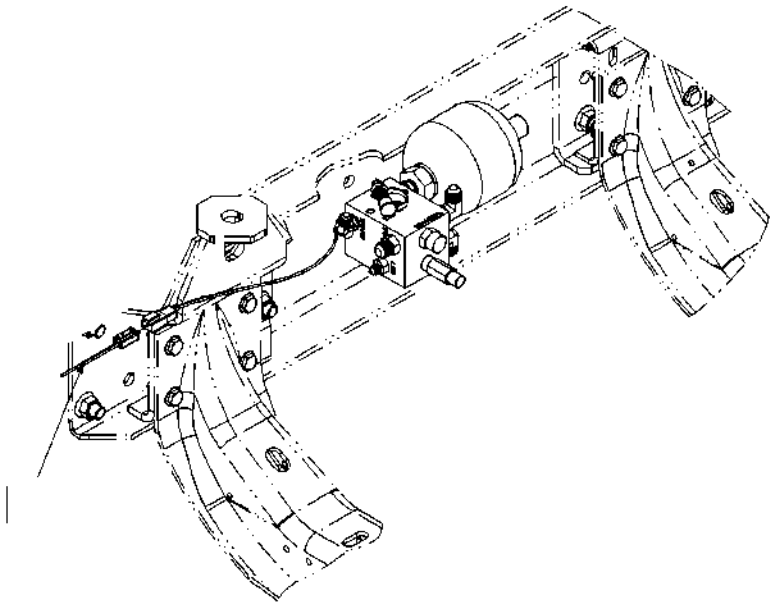

DETAIL S

523978D1-03-T499-05.TIF

Copyright © 2008 AGCO Corporation

HARNESS-INSTALL,CHASSIS,7X50, 2009

ITEM	PART #	QTY	DESCRIPTION	COMMENTS
1	512670D1	1	HARNESS-I/O,LIGHTS,FRONT	[A]
3	523977D1	1	HARNESS-CHASSIS,ENG TRANS	
	FOOTNOTE [A]		1ST USED ON S/N S7450PNS7P1005 AND S7650CNS8P1007	

Copyright © 2008 AGCO Corporation

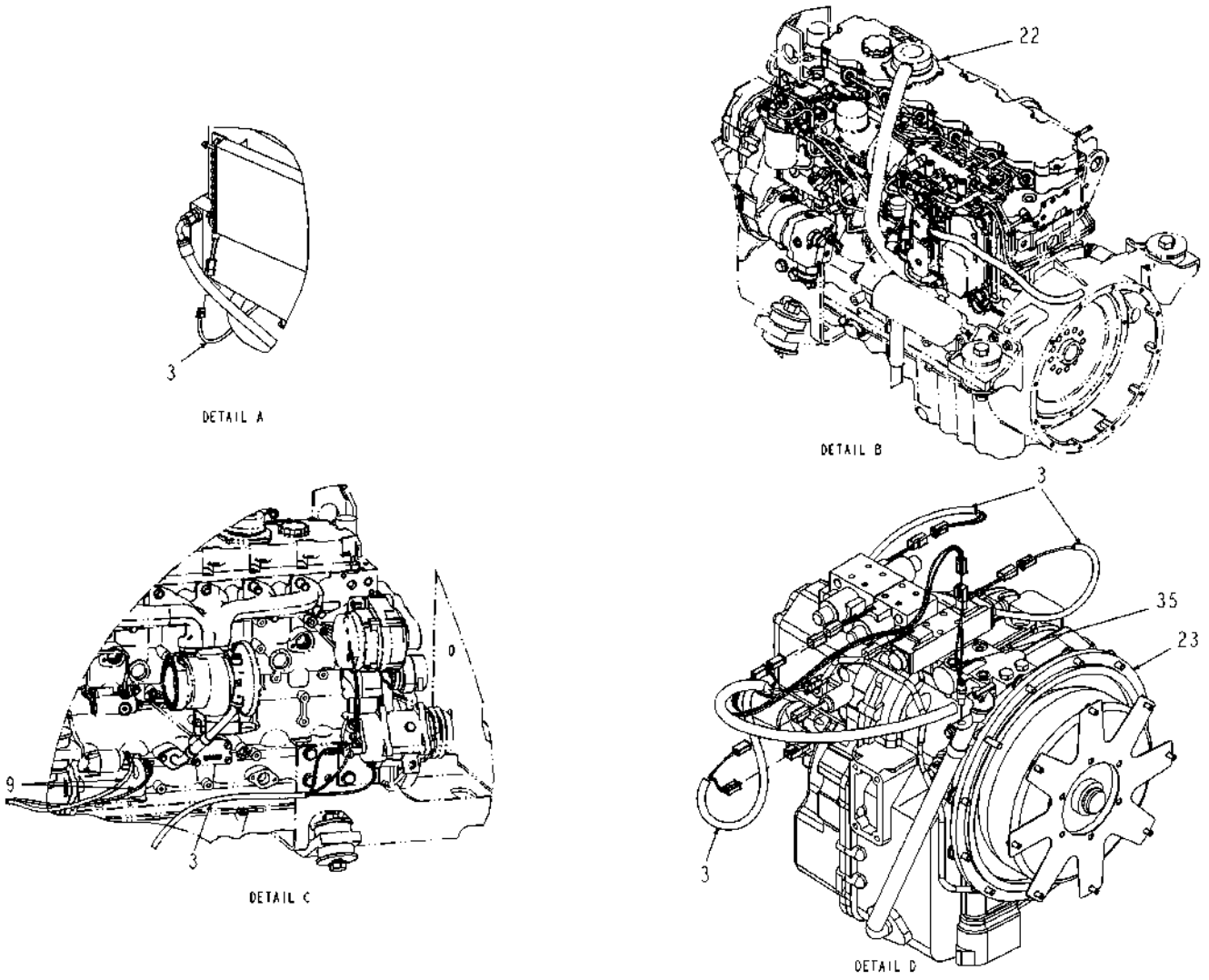

523979D1-03-T499-01.TIF

Copyright © 2008 AGCO Corporation

ITEM	PART #	QTY	DESCRIPTION	COMMENTS
3	524622D1	1	HARNESS-CHASSIS, ENG TRANS,EUR	
4	AG518989	AR	SEALANT NONCORROSIVE 10.3 OZ	
9	512671D1	1	HARNESS-I/O,TRACK ADJUST,TLLT	[A]
21	AG553557	AR	TIE CABLE 7.37 .06-1.37 BLACK	
22	513772D1	-	ENGINE-PERKINS 1106D,174HP T3	
23	AG136436	-	TRANS-POWERSHIFT,6SP 1.94TC	SEE PAGE 2-1
35	AG562064	2	BOLT 0.25-20NCX 1.00 SS HHD	
35	AG131763	-	SWITCH-TEMP,120DC,-6 O-RING	
	FOOTNOTE [A]		1ST USED ON S/N 7650VNS8P1011	

Copyright © 2008 AGCO Corporation

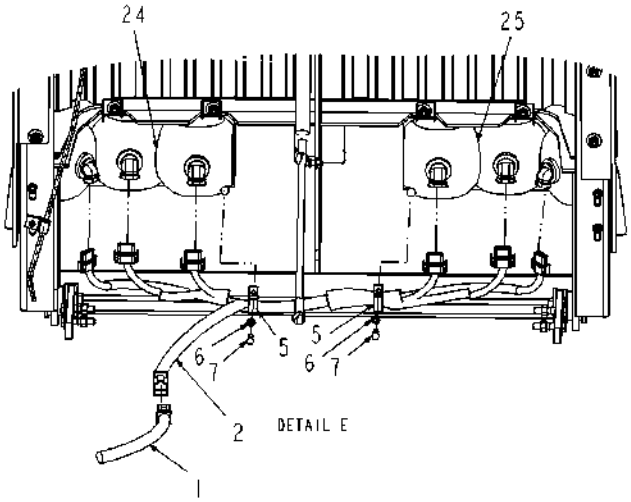

DETAIL E

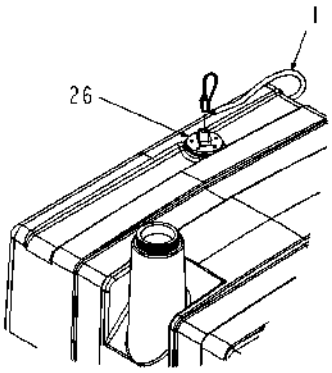

DETAIL F

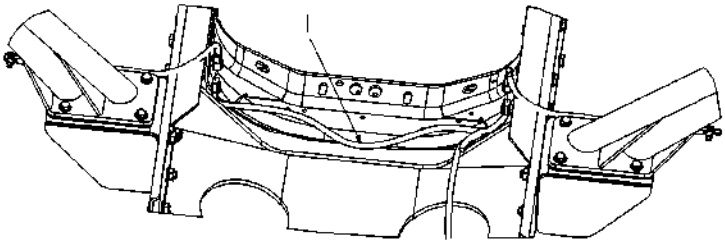

DETAIL G

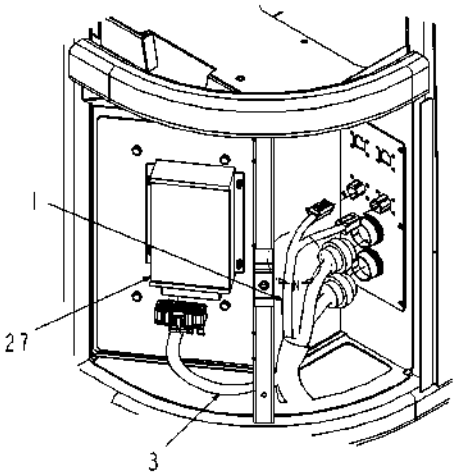

DETAIL H

523979D1-03-T499-02.TIF

Copyright © 2008 AGCO Corporation

HARNESS INSTALL, CHASSIS, 7X60, 2009

ITEM	PART #	QTY	DESCRIPTION	COMMENTS
1	512672D1	1	HARNESS-I/O, LIGHTS,FRONT,EURO	
2	WR126891	1	HARNESS-LGIHTS,ROAD,WL	
3	524622D1	1	HARNESS-CHASSIS, ENG TRANS,EUR	
5	AG561489	2	CLAMP 0.75 COATED HOSE	
6	AG522242	2	WASHER-LK,M6,SS	
7	AG521728	3	BOLT-M6-1.0X16,,SS,HHD	
24	AG421135	-	HEADLIGHT-HALOGEN,WRAPPING,LH	SEE PAGE 10-12
25	AG421136	-	HEADLIGHT-HALOGEN,WRAPPING,RH	SEE PAGE 10-13
26	AG122986	-	FUEL SENDER-TUBE TYPE	
27	505565D1	-	TCU-TURNER,SPRA-COUPE	

Copyright © 2008 AGCO Corporation

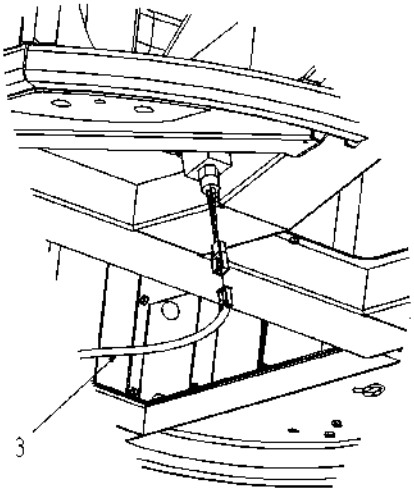

DETAIL J

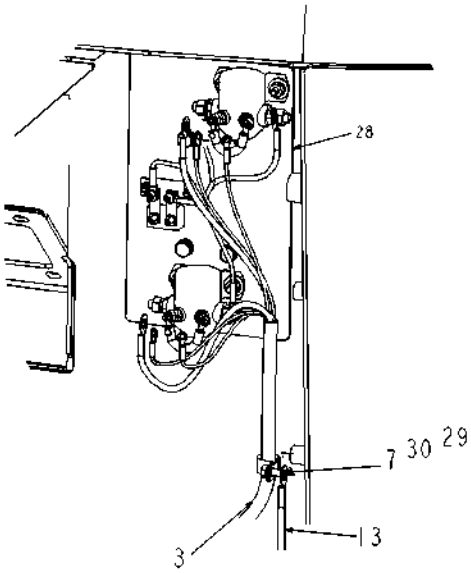

DETAIL K

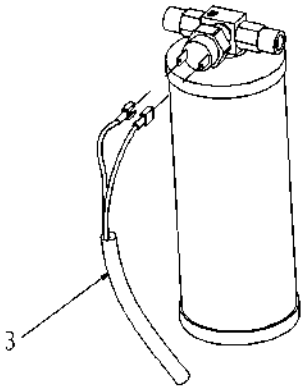

DETAIL L

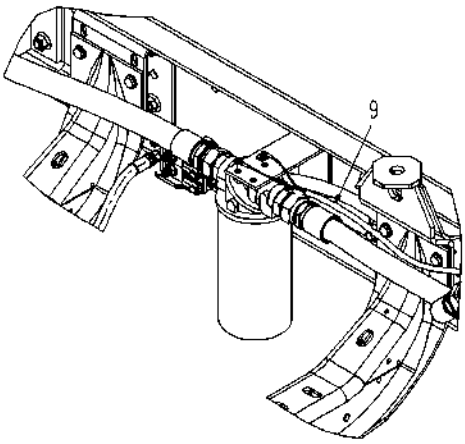

DETAIL M

523979D1-03-T499-03.TIF

Copyright © 2008 AGCO Corporation

HARNESS INSTALL, CHASSIS, 7X60, 2009

ITEM	PART #	QTY	DESCRIPTION	COMMENTS
3	524622D1	1	HARNESS-CHASSIS, ENG TRANS,EUR	
7	AG521728	3	BOLT-M6-1.0X16,,SS,HHD	
9	512671D1	1	HARNESS-I/O,TRACK ADJUST,TLLT	[A]
13	WR129305	1	CABLE-GND,CAB	
28	513764D1	-	ASM-MAG SW.BREAKER,80 AMP	SEE PAGE 8-48
29	AG521359	1	CLAMP-HOSE,COATED,.687 IDX.50	
30	AG562792	1	WASHER LOCK M6 SPRING ZN	
	FOOTNOTE [A]		1ST USED ON S/N 7650VNS8P1011	

Copyright © 2008 AGCO Corporation

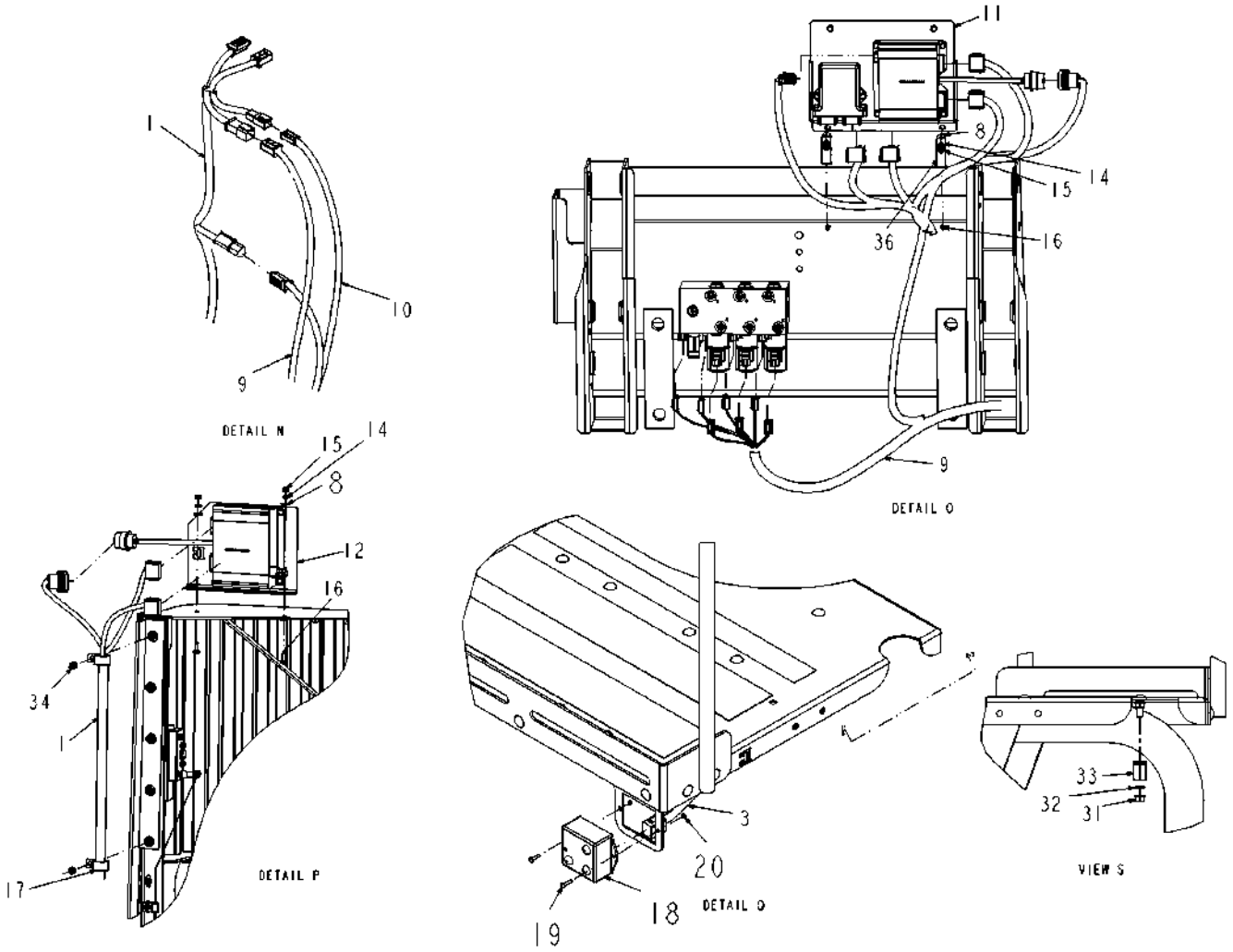

523979D1-03-T499-04.TIF

Copyright © 2008 AGCO Corporation

ITEM	PART #	QTY	DESCRIPTION	COMMENTS
1	512672D1	1	HARNESS-I/O, LIGHTS,FRONT,EURO	
3	524622D1	1	HARNESS-CHASSIS, ENG TRANS,EUR	
8	AG515121	4	WASHER 0.25 FL SS REG TYPE-B	
9	512671D1	1	HARNESS-I/O,TRACK ADJUST,TLLT	[A]
10	AG127321	-	HARNESS-PUMP/RADAR/FOAM MRKR	
11	WR132177	1	ASM-I/O,HIGH CURRENT,REAR	SEE PAGE 8-51
12	WR132176	1	ASM-I/O,HIGH CURRENT	SEE PAGE 8-49
14	AG515122	4	WASHER 0.25 LK SS REG	
15	AG515123	4	NUT .25-20NC HEX SS REG	
16	AG562054	2	BOLT 0.25-20NCX 0.75 SS HHD	
17	AG010359	2	CLAMP LOOM 1.25 PER DWG	
18	AG121751	1	MODULE-REMOTE THROTTLE	
19	AG562067	2	SCREW 8-32X 0.75 MA SS SL RHD	
20	AG563176	2	NUT #8-32NC HEX SS REG NY	
31	AG522562	1	NUT-.38-16,SS,SFLG,H	
32	AG562050	1	WASHER 0.37 LK SS REG	
33	AG561793	1	CLAMP-HOSE,2,.75 WIDE,RUB-COAT	
34	AG601888	2	NUT 0.31-18NC HEX ZN REG NY	
36	AG554898	2	CLAMP 1.12-COATED HOSE	
	FOOTNOTE [A]		1ST USED ON S/N 7650VNS8P1011	

Copyright © 2008 AGCO Corporation

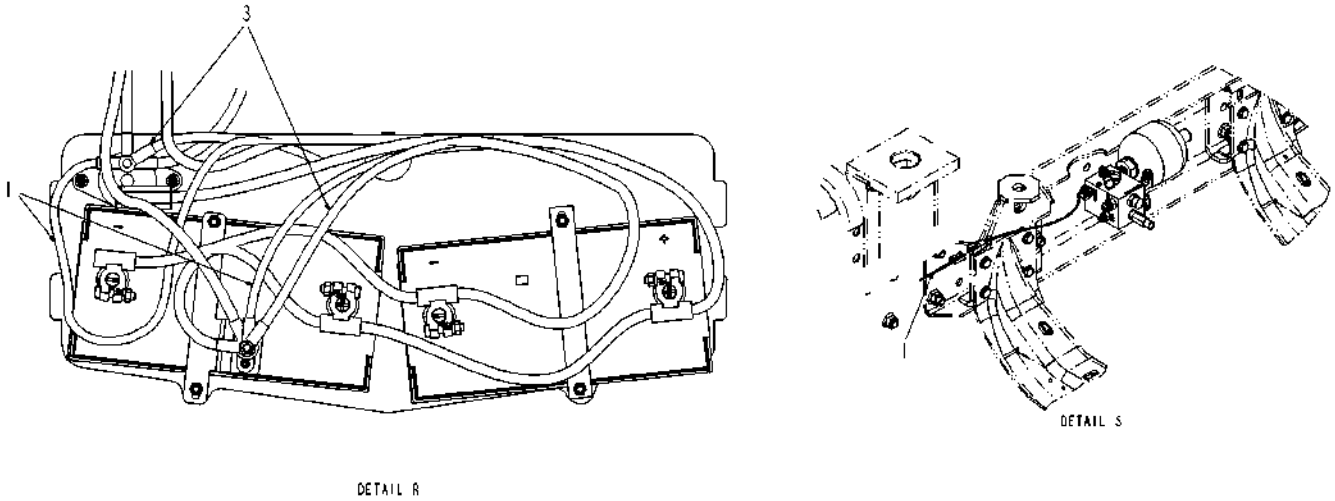

523979D1-03-T499-05.TIF

Copyright © 2008 AGCO Corporation

HARNESS INSTALL, CHASSIS, 7X60, 2009

ITEM	PART #	QTY	DESCRIPTION	COMMENTS
1	512672D1	1	HARNESS-I/O, LIGHTS,FRONT,EURO	
3	524622D1	1	HARNESS-CHASSIS, ENG TRANS,EUR	

Copyright © 2008 AGCO Corporation

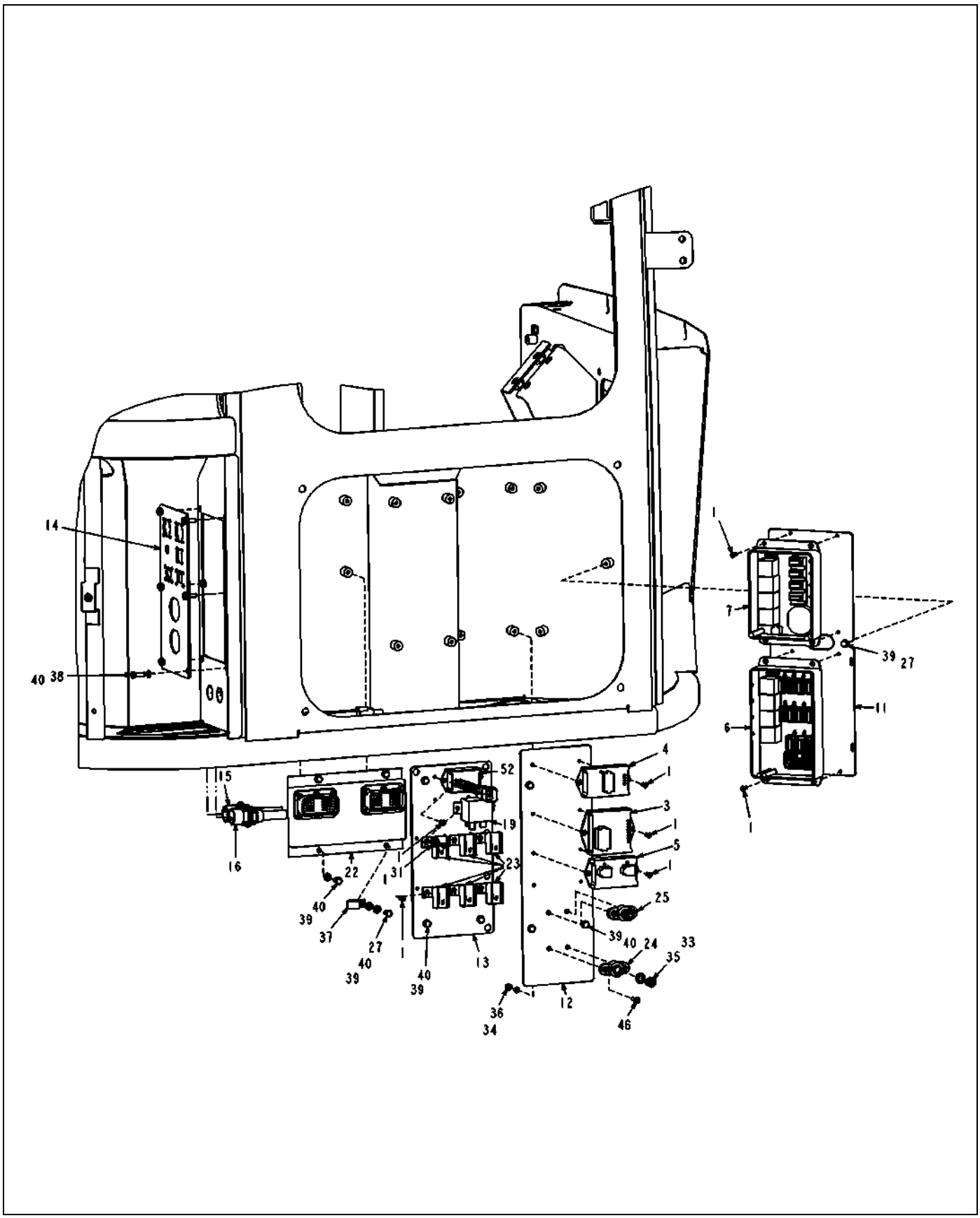

517972D1-02-R703-01.TIF

Copyright © 2008 AGCO Corporation

ITEM	PART #	QTY	DESCRIPTION	COMMENTS
1	AG029293	27	SCREW 10-24X0.50 TAP IWHHD	
2	515100D1	1	INSTL-MASTER MODULE,AED	SEE PAGE 8-28
3	AG121748	1	MODULE-FLASHER,DUAL RATE	
4	AG121749	1	MODULE-RELAY,4 PACK,NO	[A]
5	AG121750	1	MODULE-RELAY,2 PACK	
6	AG124451	1	MODULE-POWER DIST,11 FUSE	SEE PAGE 8-77
7	AG124452	1	MODULE-POWER DIST,HI CURRENT	SEE PAGE 8-78
11	WR126905	1	PLATE-PDM,MINI CAB	
12	WR126906	1	PLATE-RELAY,MINI CAB	
13	513766D1	1	PLATE-AUX,MINI CAB	
14	517403D1	1	PLATE-BULKHEAD	
15	WR133978	1	CABLE-PWR STUD,CAB BLKHD	
16	WR133979	1	CABLE-GND STUD,CAB BLKHD	
19	AG516864	1	RELAY-ELEC,12VDC,75AMP	
22	AG517158	4	WASHER #6 FL ZN REG TYPE-B	
23	AG520052	6	CAP METRI PACK 630 P2S 2-WAY	
24	AG520092	1	JUNCTION BLOCK-STUD TYPE,BLK	
25	AG520093	1	JUNCTION BLOCK-STUD TYPE,RED	
27	AG520879	2	WASHER-FLAT,M6,ZN,REG	
30	AG553557	-	TIE CABLE 7.37 .06-1.37 BLACK	
31	AG553670	2	WASHER #10 FL ZN REG TYPE-B	
33	AG562050	2	WASHER 0.37 LK SS REG	
34	AG562061	4	NUT #10-24NC HEX SS REG	
35	AG562065	2	NUT 0.37-16NC HEX SS REG	
36	AG562081	4	WASHER #10 LK SS REG	
37	AG562238	1	CLAMP CTD 1.50IDX 0.75WIDE	
38	AG562327	6	BOLT M6-1.00X20MM G8.8 ZN HHD	
39	AG562639	15	BOLT M6 1.00X12MM G8.8 ZN HHD	
40	AG562792	20	WASHER LOCK M6 SPRING ZN	
41	AG562925	1	FUSE BLADE 30A ATC	
42	AG562929	1	FUSE 20A BLADE ATC	
43	AG562930	5	FUSE 15A BLADE ATC	
44	AG562931	5	FUSE 10A BLADE ATC	
45	AG562933	2	FUSE 5A BLADE ATC	
46	AG563094	4	SCREW 10-24X0.75 PH PHS SS	
50	AG562928	2	FUSE 25A BLADE ATC	
51	508170D1	1	ELEC INSTL-JUMPER,STD HVAC	SEE PAGE 8-29
52	513016D1	1	MODULE-RELAY,3 SECOND DELAY	
	FOOTNOTE [A]		AG719617 - RELAYS (4)	

Copyright © 2008 AGCO Corporation

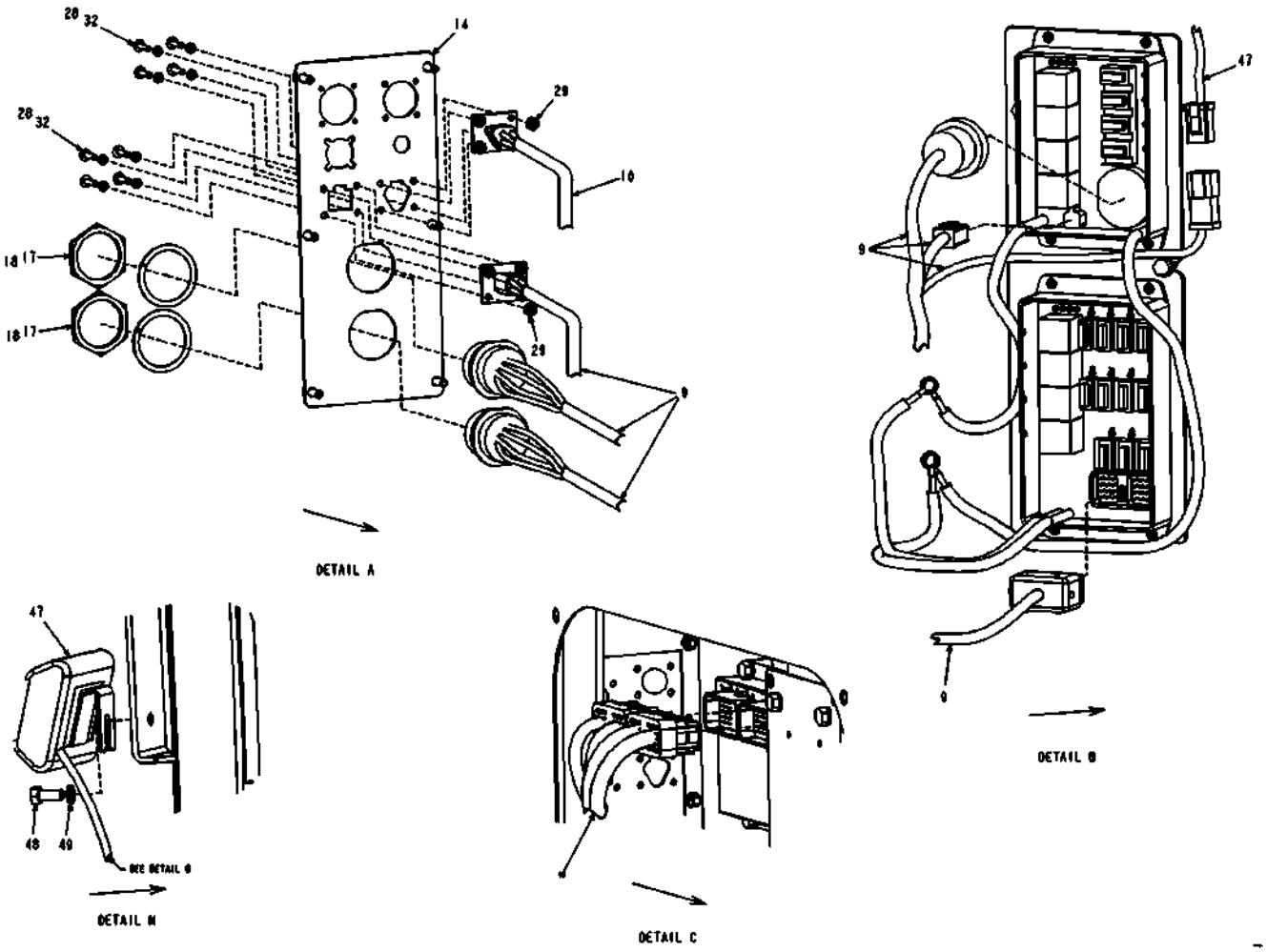

517972D1-02-R703-02.TIF

Copyright © 2008 AGCO Corporation

ITEM	PART #	QTY	DESCRIPTION	COMMENTS
9	513775D1	1	HARNESS-ADAPTER,7X60	
10	515523D1	1	HARNESS-MASTER MODULE	
14	517403D1	1	PLATE-BULKHEAD	
17	AG515697	2	NUT PANEL ELEC CONNECTOR	
18	AG515698	2	WASHER LOCK ELEC CONNECTOR	
28	AG550914	8	WASHER #8 LK ZN REG	
29	AG550922	8	NUT #8-32NC HEX ZN REG	
32	AG560227	8	SCREW 8-32X 0.75 MA ZN SL PHD	
47	WR134754	1	MODULE-LCD,CAN	
48	WR522279	1	BOLT-M8-1.25X20,CL10.9,ZN,HHD	
49	AG561679	1	WASHER LOCK M8 ZN	

Copyright © 2008 AGCO Corporation

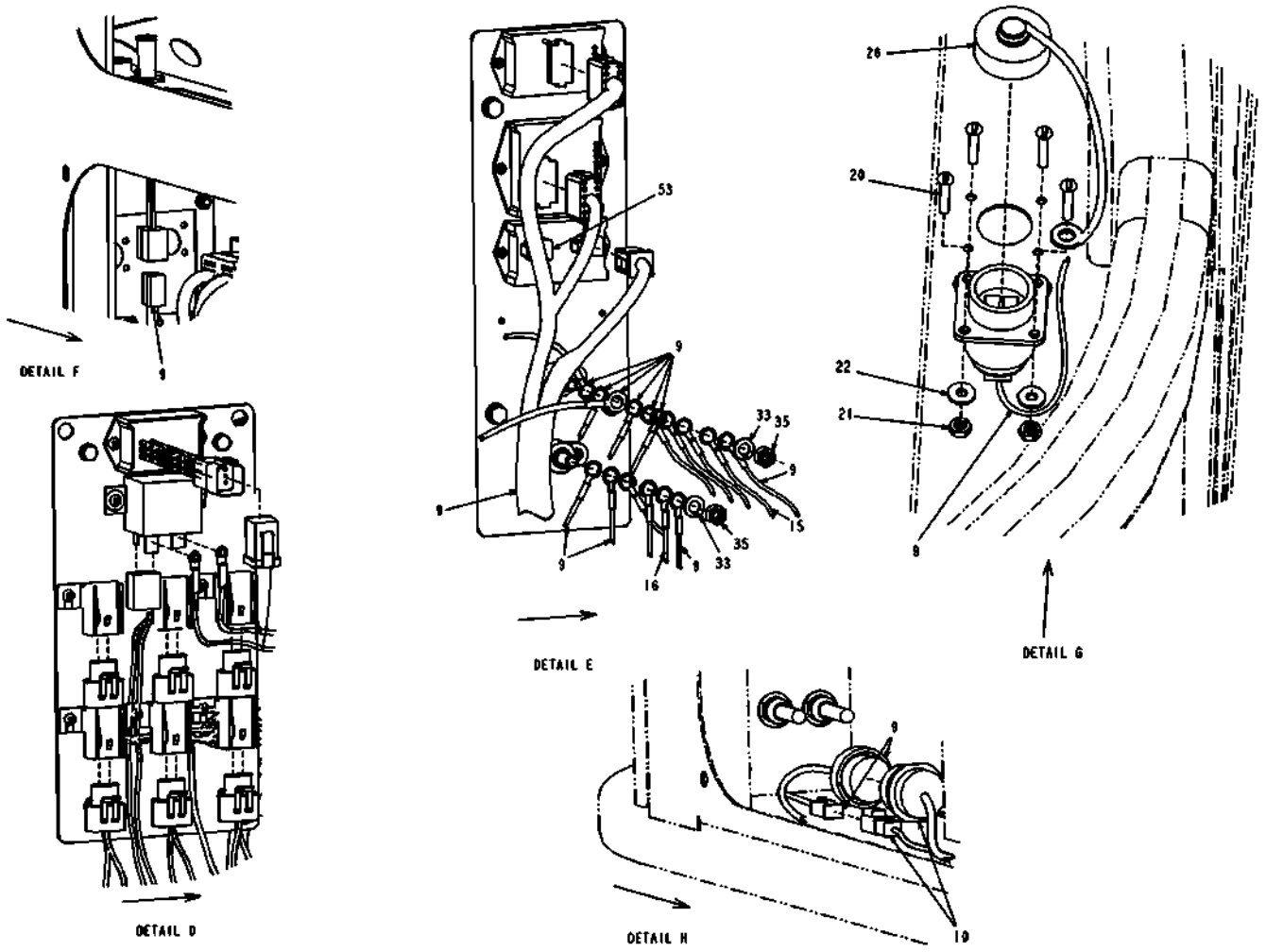

517972D1-02-R703-03.TIF

Copyright © 2008 AGCO Corporation

ITEM	PART #	QTY	DESCRIPTION	COMMENTS
9	513775D1	1	HARNESS-ADAPTER,7X60	
10	515523D1	1	HARNESS-MASTER MODULE	
15	WR133978	1	CABLE-PWR STUD,CAB BLKHD	
16	WR133979	1	CABLE-GND STUD,CAB BLKHD	
20	AG517156	4	SCREW #6-32X.75 MA RDHD SLOTZN	
21	AG517157	4	NUT #6-32NC HEX ZN REG	
22	AG517158	4	WASHER #6 FL ZN REG TYPE-B	
26	AG520318	1	CAP-SEALING,SIZE 17	
33	AG562050	2	WASHER 0.37 LK SS REG	
35	AG562065	2	NUT 0.37-16NC HEX SS REG	
53	AG520746	1	CONN-PLUG,6 WAY,18-14 GA	

Copyright © 2008 AGCO Corporation

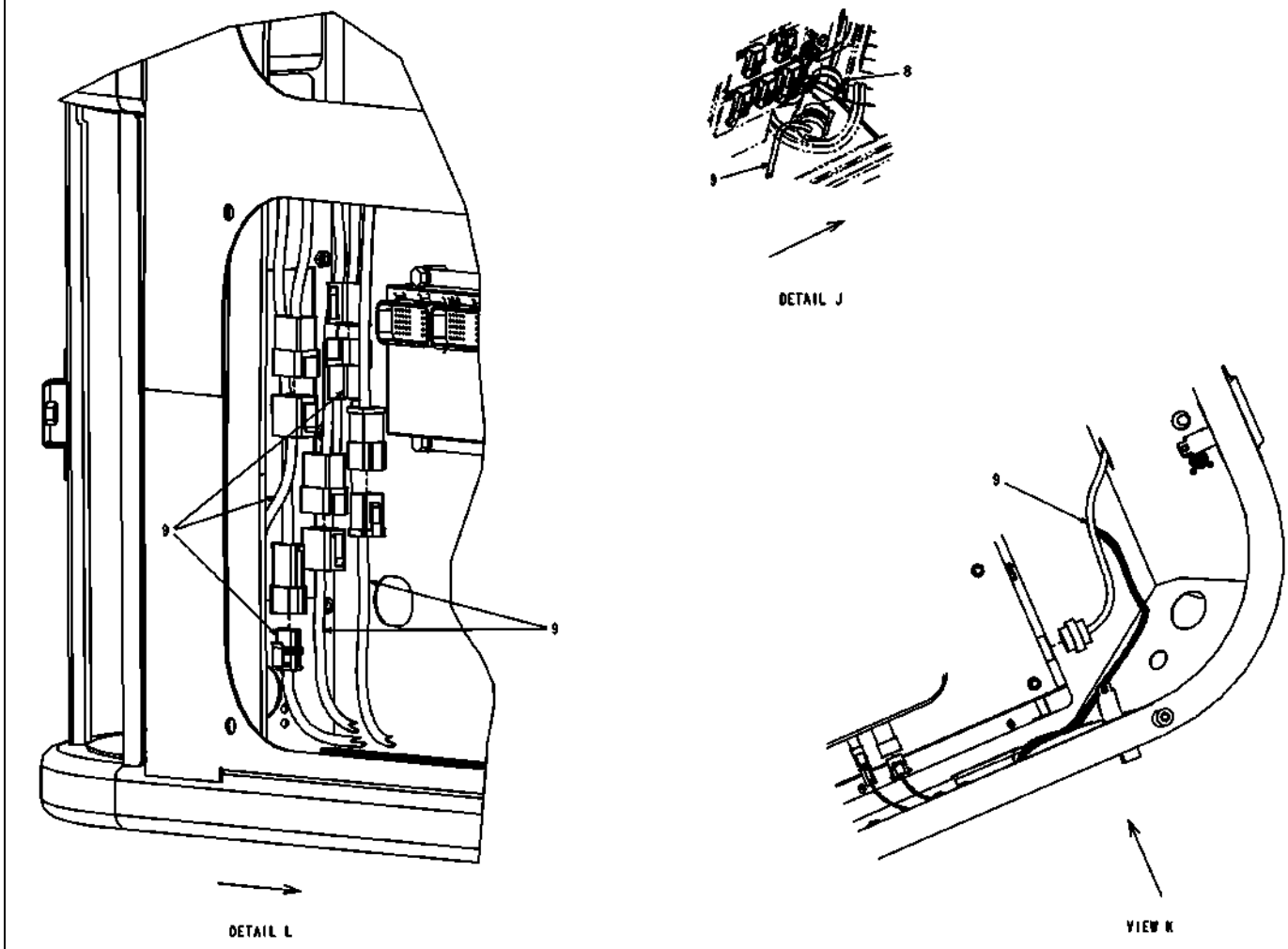

517972D1-02-R703-04.TIF

Copyright © 2008 AGCO Corporation

ITEM	PART #	QTY	DESCRIPTION	COMMENTS
8	507952D1	-	HARNESS-CONSOLE,CENTER	
9	513775D1	1	HARNESS-ADAPTER,7X60	

Copyright © 2008 AGCO Corporation

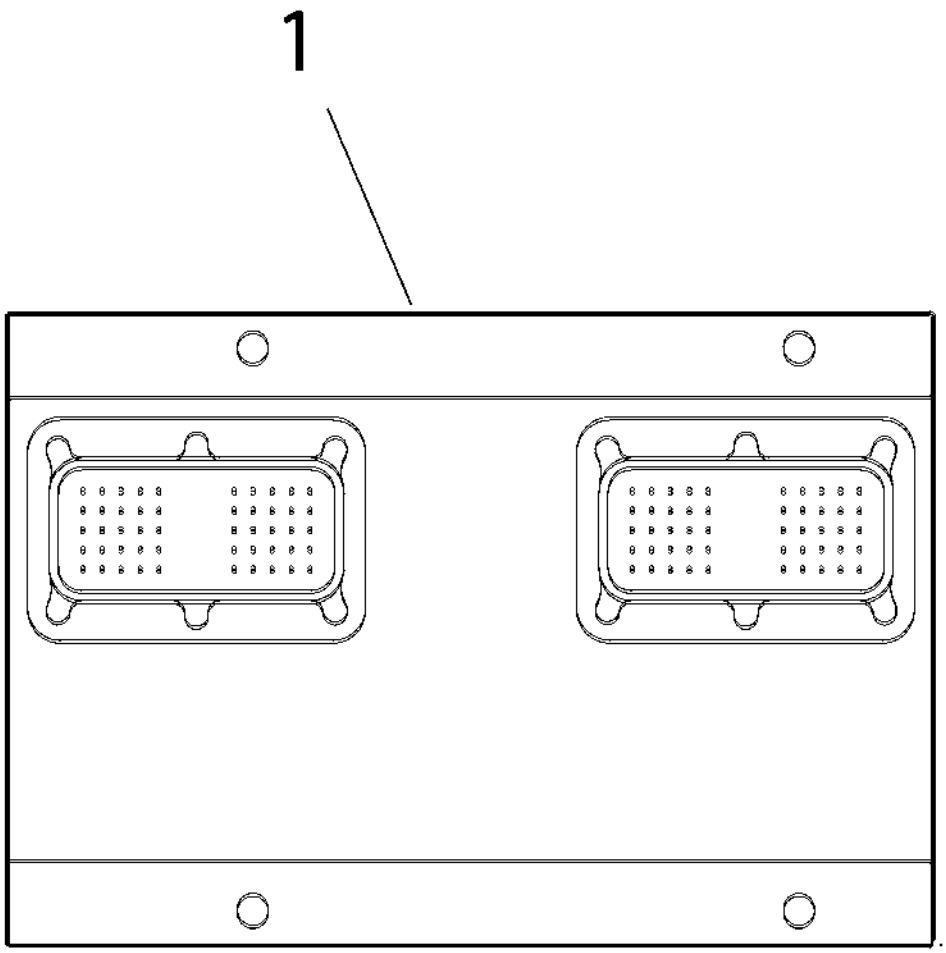

515100D1.TIF

Copyright © 2008 AGCO Corporation

INSTALL-MASTER MODULE,AED

ITEM	PART #	QTY	DESCRIPTION	COMMENTS
1	527134D1	1	MODULE-MASTER,CAN,VER 2.2,DMR	

Copyright © 2008 AGCO Corporation

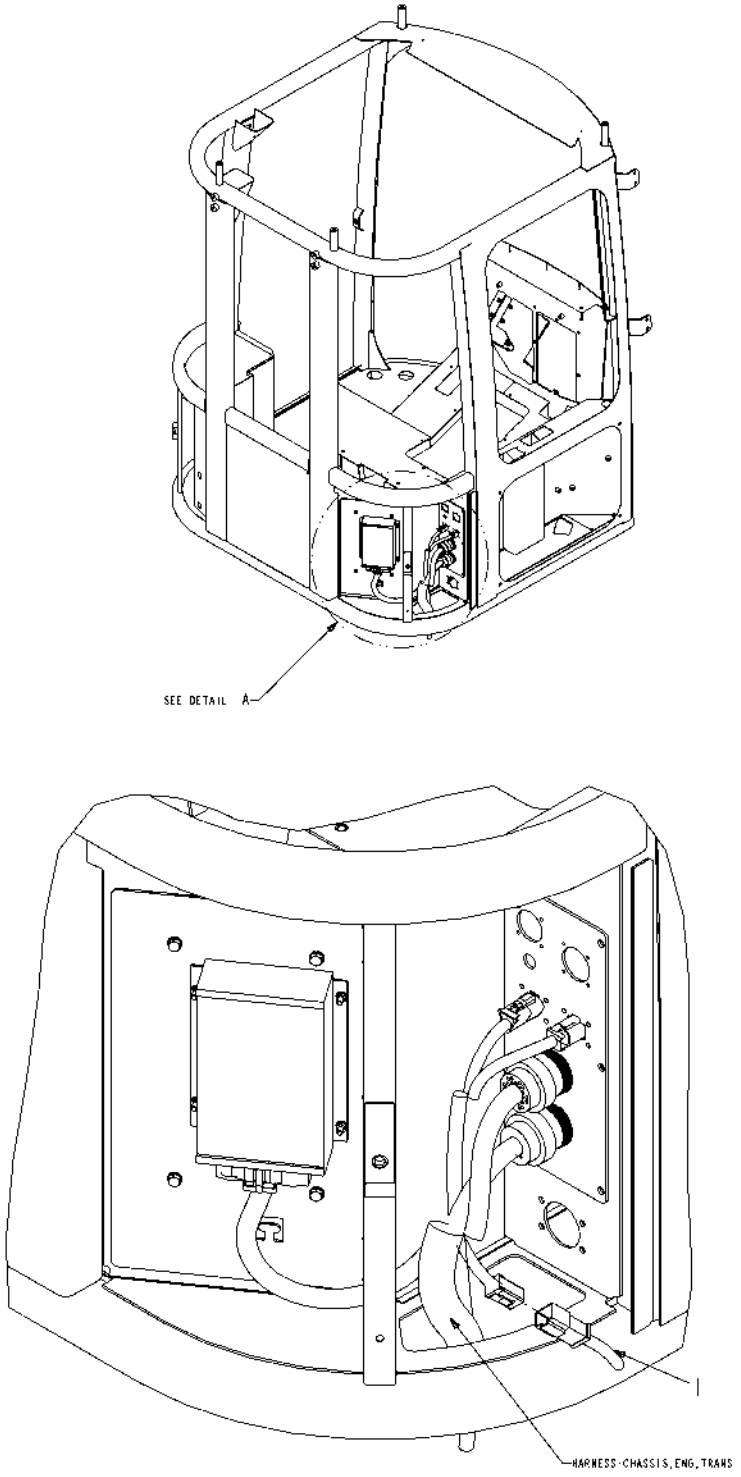

508170D1-01-K960-.TIF

Copyright © 2008 AGCO Corporation

ELEC INSTALL-JUMPER,STD HVAC

ITEM	PART #	QTY	DESCRIPTION	COMMENTS
1	507951D1	1	HARNESS-JUMPER,HVAC,STD	

Copyright © 2008 AGCO Corporation

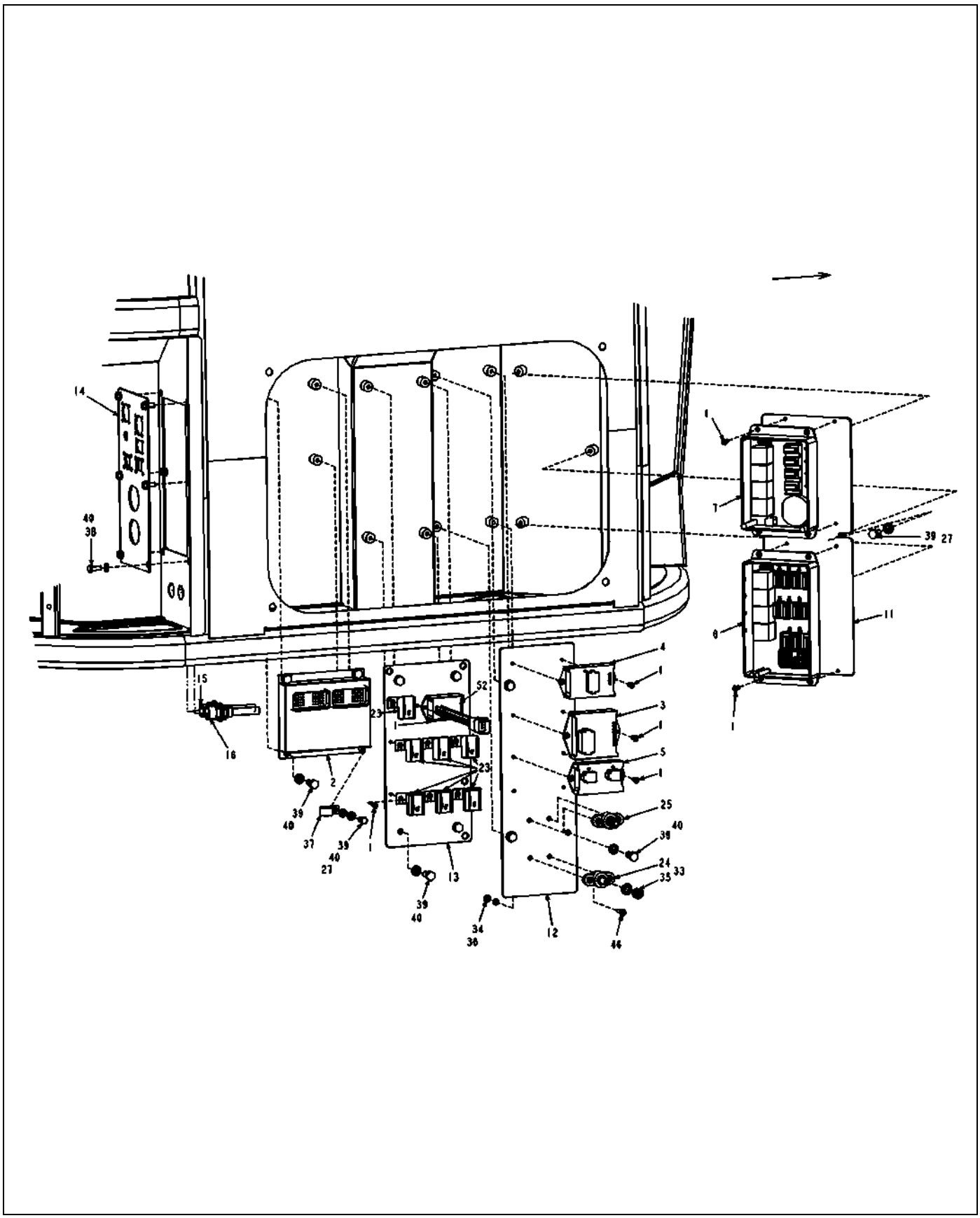

517974D1-02-R694-01.TIF

Copyright © 2008 AGCO Corporation

ITEM	PART #	QTY	DESCRIPTION	COMMENTS
1	AG029293	23	SCREW 10-24X0.50 TAP IWHHD	
2	515100D1	1	INSTL-MASTER MODULE,AED	SEE PAGE 8-28
3	AG121748	1	MODULE-FLASHER,DUAL RATE	
4	AG121749	1	MODULE-RELAY,4 PACK,NO	[A]
5	AG121750	1	MODULE-RELAY,2 PACK	
6	AG124451	1	MODULE-POWER DIST,11 FUSE	SEE PAGE 8-77
7	AG124452	1	MODULE-POWER DIST,HI CURRENT	SEE PAGE 8-78
11	WR126905	1	PLATE-PDM,MINI CAB	
12	WR126906	1	PLATE-RELAY,MINI CAB	
13	515778D1	1	PLATE-AUX,MINI CAB,ATC	
14	517403D1	1	PLATE-BULKHEAD	
15	WR133978	1	CABLE-PWR STUD,CAB BLKHD	
16	WR133979	1	CABLE-GND STUD,CAB BLKHD	
19	AG515669	6	PLUG-SEAL,SIZE 16 CONTACT	
23	AG520052	7	CAP METRI PACK 630 P2S 2-WAY	
24	AG520092	1	JUNCTION BLOCK-STUD TYPE,BLK	
25	AG520093	1	JUNCTION BLOCK-STUD TYPE,RED	
27	AG520879	2	WASHER-FLAT,M6,ZN,REG	
30	AG553557	AR	TIE CABLE 7.37 .06-1.37 BLACK	
33	AG562050	2	WASHER 0.37 LK SS REG	
34	AG562061	4	NUT #10-24NC HEX SS REG	
35	AG562065	2	NUT 0.37-16NC HEX SS REG	
36	AG562081	4	WASHER #10 LK SS REG	
37	AG562238	1	CLAMP CTD 1.50IDX 0.75WIDE	
38	AG562327	6	BOLT M6-1.00X20MM G8.8 ZN HHD	
39	AG562639	15	BOLT M6 1.00X12MM G8.8 ZN HHD	
40	AG562792	20	WASHER LOCK M6 SPRING ZN	
41	AG562925	1	FUSE BLADE 30A ATC	
42	AG562929	1	FUSE 20A BLADE ATC	
43	AG562930	5	FUSE 15A BLADE ATC	
44	AG562931	5	FUSE 10A BLADE ATC	
45	AG562933	2	FUSE 5A BLADE ATC	
46	AG563094	4	SCREW 10-24X0.75 PH PHS SS	
50	AG562928	2	FUSE 25A BLADE ATC	
51	508171D1	1	ELEC INSTL-JUMPER,ATC HVAC	SEE PAGE 8-34
52	513016D1	1	MODULE-RELAY,3 SECOND DELAY	
	FOOTNOTE [A]		AG719617 - RELAYS (4)	

Copyright © 2008 AGCO Corporation

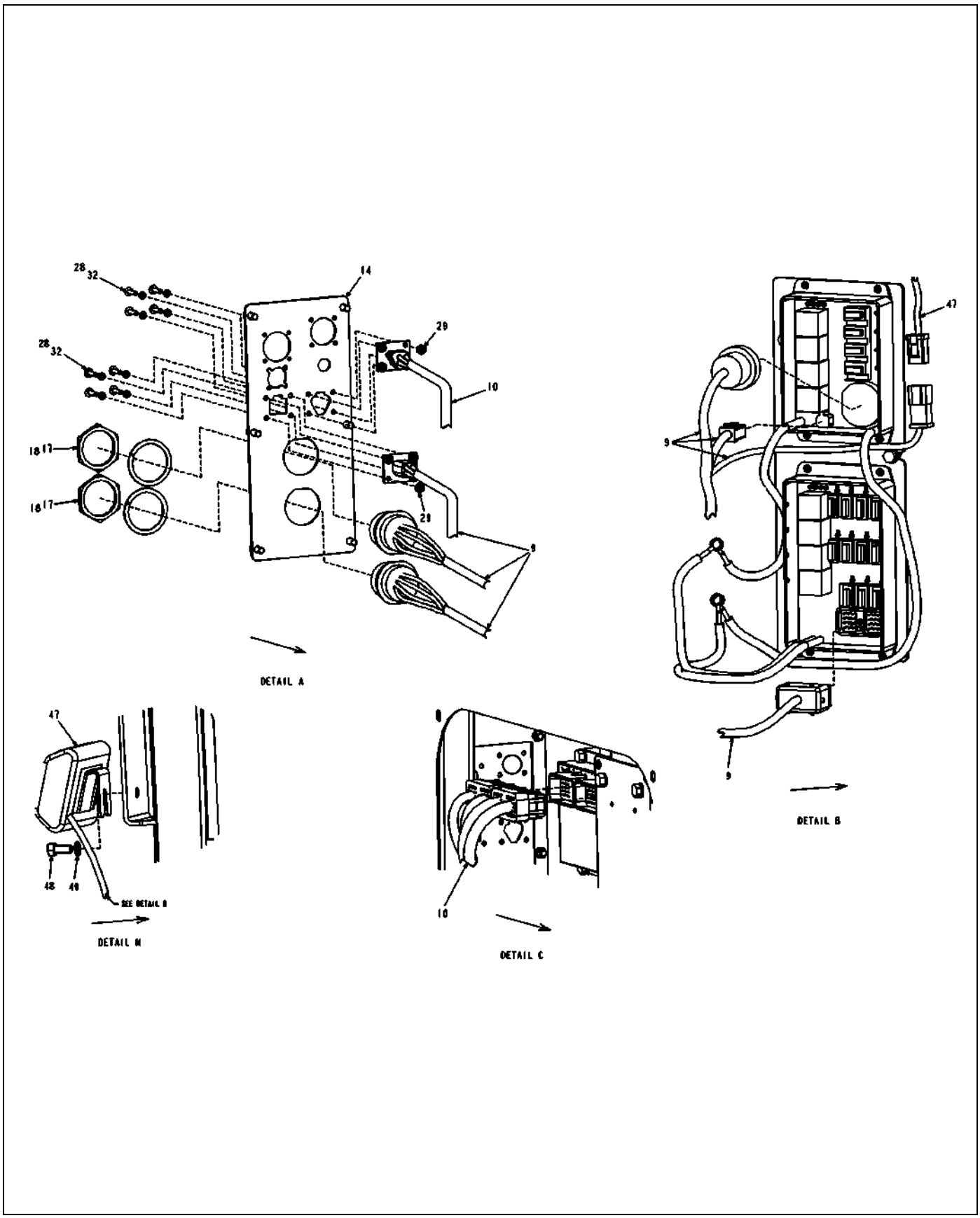

517974D1-02-R694-02.TIF

Copyright © 2008 AGCO Corporation

ITEM	PART #	QTY	DESCRIPTION	COMMENTS
9	513765D1	1	HARNESS-ADAPTER,ATC,7X60	
10	515523D1	1	HARNESS-MASTER MODULE	
14	517403D1	1	PLATE-BULKHEAD	
17	AG515697	2	NUT PANEL ELEC CONNECTOR	
18	AG515698	2	WASHER LOCK ELEC CONNECTOR	
28	AG550914	8	WASHER #8 LK ZN REG	
29	AG550922	8	NUT #8-32NC HEX ZN REG	
32	AG560227	8	SCREW 8-32X 0.75 MA ZN SL PHD	
47	WR134754	1	MODULE-LCD,CAN	
48	WR522279	1	BOLT-M8-1.25X20,CL10.9,ZN,HHD	
49	AG561679	1	WASHER LOCK M8 ZN	

Copyright © 2008 AGCO Corporation

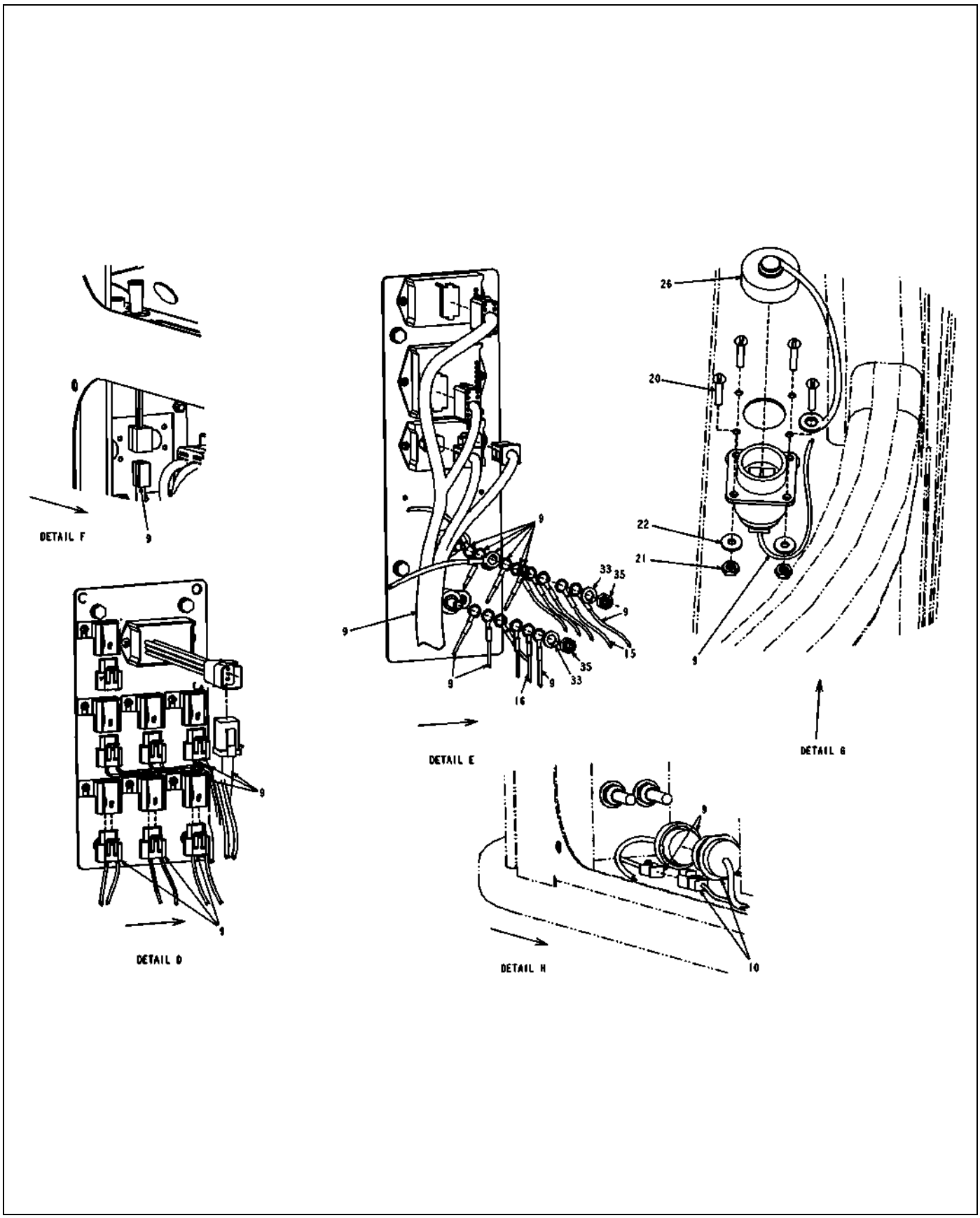

517974D1-02-R694-03.TIF

Copyright © 2008 AGCO Corporation

ELEC INSTALL-CAB, ATC, 7X60

ITEM	PART #	QTY	DESCRIPTION	COMMENTS
1	AG029293	23	SCREW 10-24X0.50 TAP IWHHD	
9	513765D1	1	HARNESS-ADAPTER,ATC,7X60	
10	515523D1	1	HARNESS-MASTER MODULE	
15	WR133978	1	CABLE-PWR STUD,CAB BLKHD	
16	WR133979	1	CABLE-GND STUD,CAB BLKHD	
20	AG517156	4	SCREW #6-32X.75 MA RDHD SLOTZN	
21	AG517157	4	NUT #6-32NC HEX ZN REG	
22	AG517158	4	WASHER #6 FL ZN REG TYPE-B	
26	AG520318	1	CAP-SEALING,SIZE 17	
33	AG562050	2	WASHER 0.37 LK SS REG	
35	AG562065	2	NUT 0.37-16NC HEX SS REG	

Copyright © 2008 AGCO Corporation

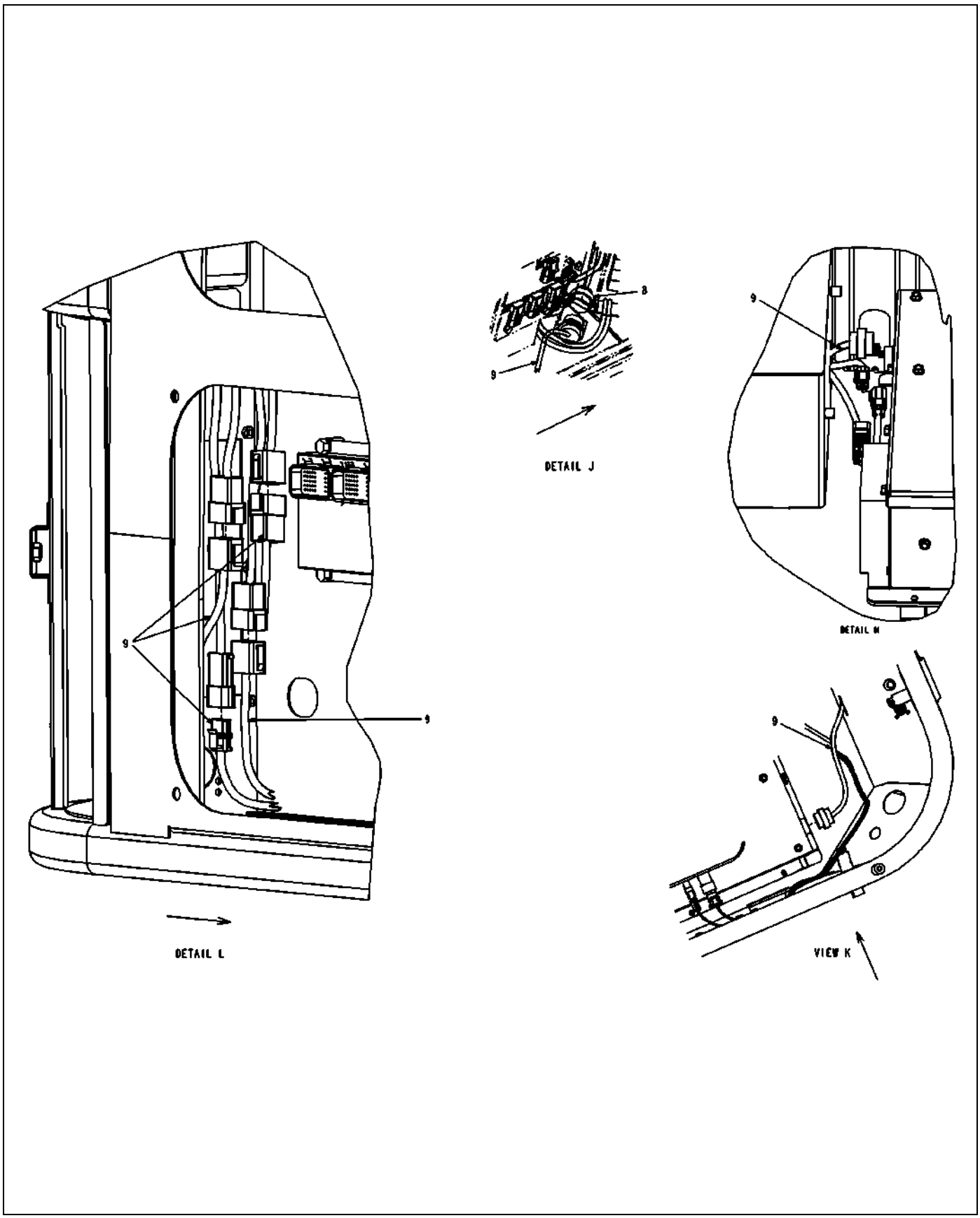

517974D1-02-R694-04.TIF

Copyright © 2008 AGCO Corporation

ITEM	PART #	QTY	DESCRIPTION	COMMENTS
8	507952D1	-	HARNESS-CONSOLE,CENTER	
9	513765D1	1	HARNESS-ADAPTER,ATC,7X60	

Copyright © 2008 AGCO Corporation

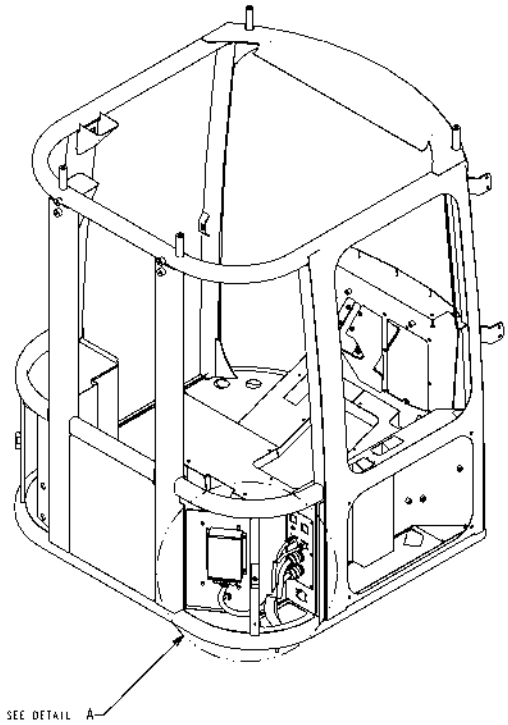

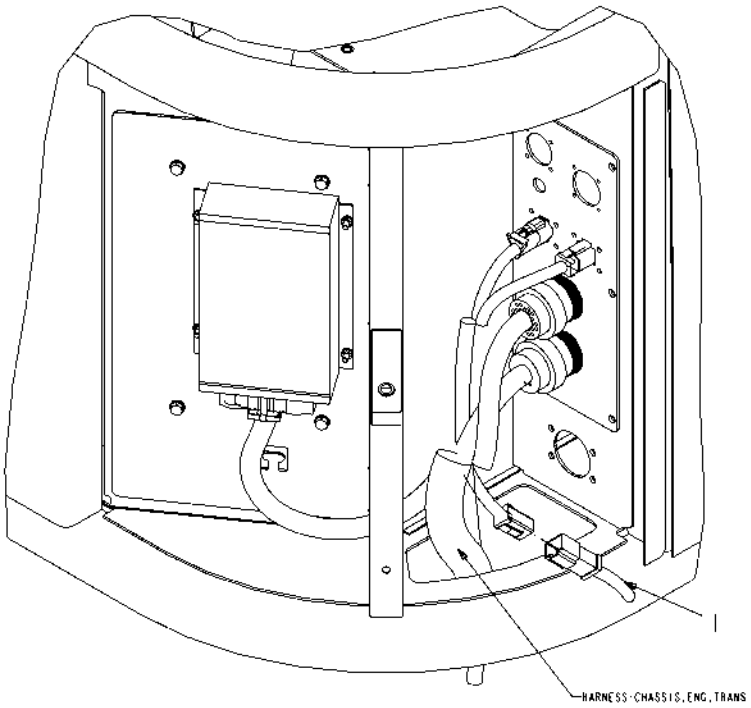

508171D1-01-K960-.TIF

Copyright © 2008 AGCO Corporation

ELEC INSTALL-JUMPER,ATC HVAC

ITEM	PART #	QTY	DESCRIPTION	COMMENTS
1	507955D1	1	HARNESS-JUMPER,HVAC,ATC	

Copyright © 2008 AGCO Corporation

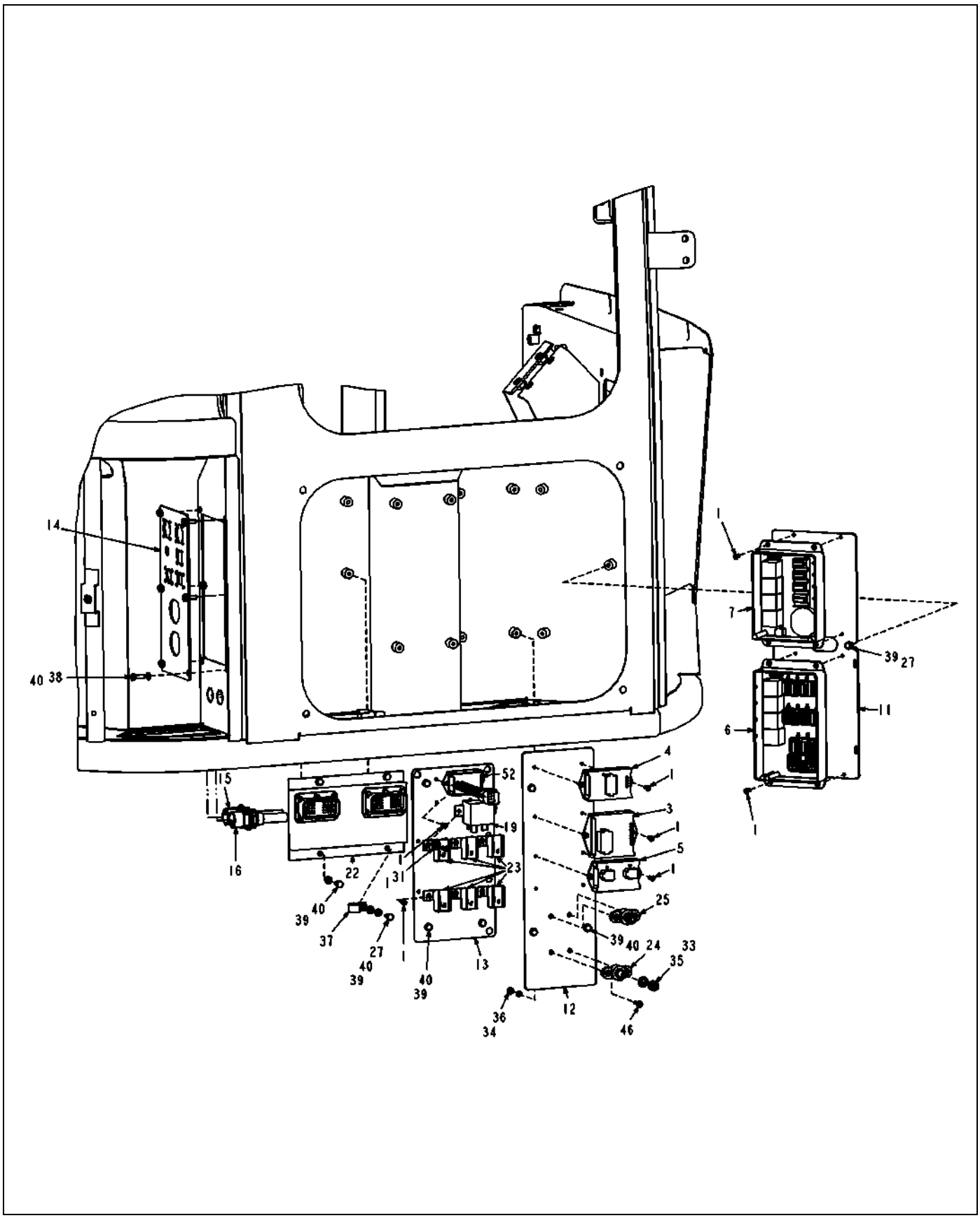

517973D1-02-R703-01.TIF

Copyright © 2008 AGCO Corporation

ELEC INSTALL-CAB, 7X60,EURO

ITEM	PART #	QTY	DESCRIPTION	COMMENTS
1	AG029293	24	SCREW 10-24X0.50 TAP IWHHD	
2	515100D1	1	INSTL-MASTER MODULE,AED	SEE PAGE 8-28
3	AG129242	1	MODULE-FLASHER,EURO	
4	AG121749	1	MODULE-RELAY,4 PACK,NO	[A]
5	AG121750	1	MODULE-RELAY,2 PACK	
6	AG124451	1	MODULE-POWER DIST,11 FUSE	SEE PAGE 8-77
7	AG124452	1	MODULE-POWER DIST,HI CURRENT	SEE PAGE 8-78
11	WR126905	1	PLATE-PDM,MINI CAB	
12	WR126906	1	PLATE-RELAY,MINI CAB	
13	513766D1	1	PLATE-AUX,MINI CAB	
14	517403D1	1	PLATE-BULKHEAD	
15	WR133978	1	CABLE-PWR STUD,CAB BLKHD	
16	WR133979	1	CABLE-GND STUD,CAB BLKHD	
19	AG516864	1	RELAY-ELEC,12VDC,75AMP	
22	AG517158	4	WASHER #6 FL ZN REG TYPE-B	
23	AG520052	6	CAP METRI PACK 630 P2S 2-WAY	
24	AG520092	1	JUNCTION BLOCK-STUD TYPE,BLK	
25	AG520093	1	JUNCTION BLOCK-STUD TYPE,RED	
27	AG520879	2	WASHER-FLAT,M6,ZN,REG	
30	AG553557	AR	TIE CABLE 7.37 .06-1.37 BLACK	
31	AG553670	2	WASHER #10 FL ZN REG TYPE-B	
33	AG562050	2	WASHER 0.37 LK SS REG	
34	AG562061	4	NUT #10-24NC HEX SS REG	
35	AG562065	2	NUT 0.37-16NC HEX SS REG	
36	AG562081	4	WASHER #10 LK SS REG	
37	AG562238	1	CLAMP CTD 1.50IDX 0.75WIDE	
38	AG562327	6	BOLT M6-1.00X20MM G8.8 ZN HHD	
39	AG562639	15	BOLT M6 1.00X12MM G8.8 ZN HHD	
40	AG562792	20	WASHER LOCK M6 SPRING ZN	
41	AG562925	1	FUSE BLADE 30A ATC	
42	AG562929	1	FUSE 20A BLADE ATC	
43	AG562930	5	FUSE 15A BLADE ATC	
44	AG562931	5	FUSE 10A BLADE ATC	
45	AG562933	2	FUSE 5A BLADE ATC	
46	AG563094	4	SCREW 10-24X0.75 PH PHS SS	
50	AG562928	2	FUSE 25A BLADE ATC	
51	508170D1	1	ELEC INSTL-JUMPER,STD HVAC	SEE PAGE 8-29
52	513016D1	1	MODULE-RELAY,3 SECOND DELAY	
	FOOTNOTE [A]		AG719617 - RELAYS (4)	

Copyright © 2008 AGCO Corporation

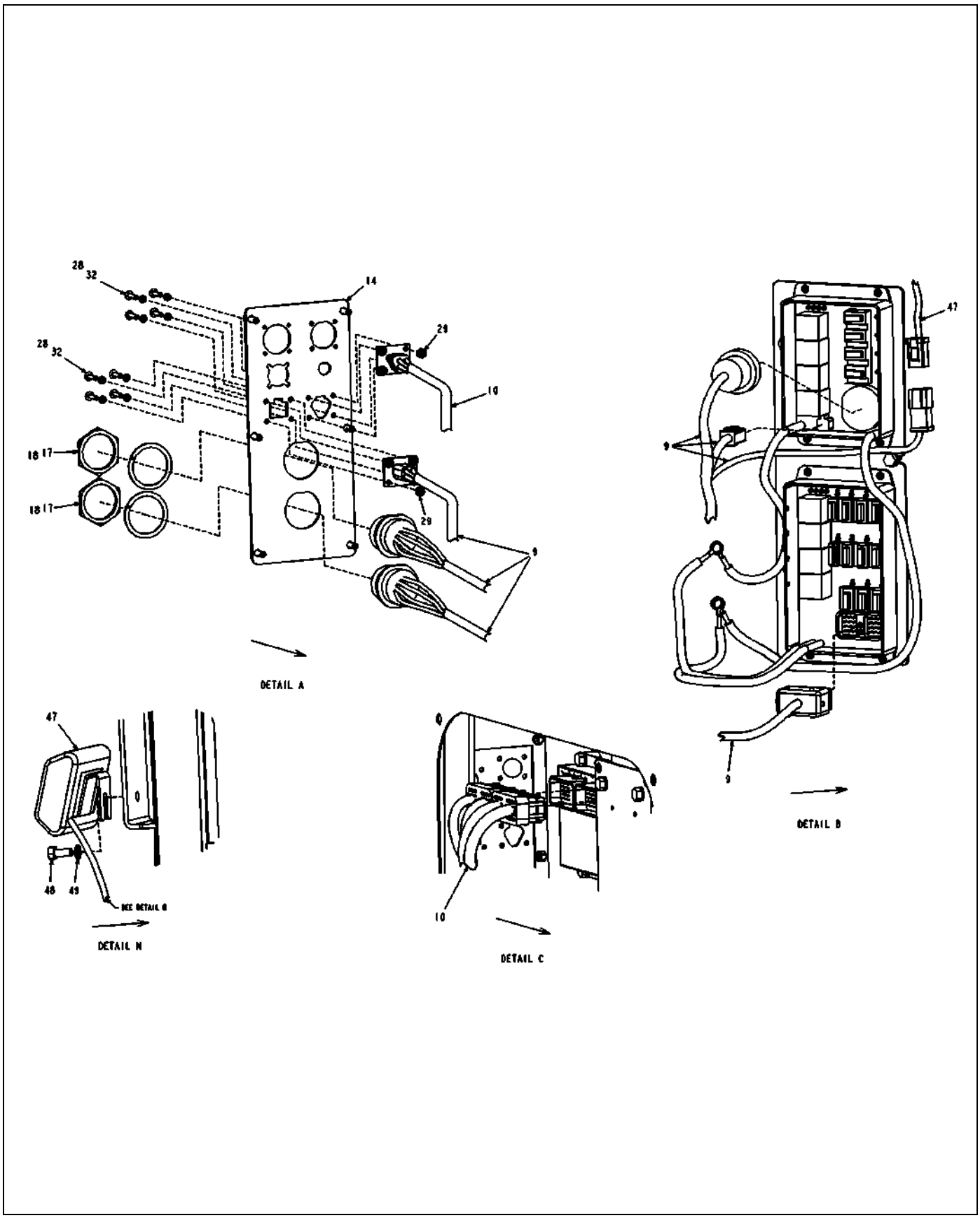

517973D1-02-R703-02.TIF

Copyright © 2008 AGCO Corporation

ITEM	PART #	QTY	DESCRIPTION	COMMENTS
9	513775D1	1	HARNESS-ADAPTER,7X60	
10	515523D1	1	HARNESS-MASTER MODULE	
14	517403D1	1	PLATE-BULKHEAD	
17	AG515697	2	NUT PANEL ELEC CONNECTOR	
18	AG515698	2	WASHER LOCK ELEC CONNECTOR	
28	AG550914	8	WASHER #8 LK ZN REG	
29	AG550922	8	NUT #8-32NC HEX ZN REG	
32	AG560227	8	SCREW 8-32X 0.75 MA ZN SL PHD	
47	WR134754	1	MODULE-LCD,CAN	
48	WR522279	1	BOLT-M8-1.25X20,CL10.9,ZN,HHD	
49	AG561679	1	WASHER LOCK M8 ZN	

Copyright © 2008 AGCO Corporation

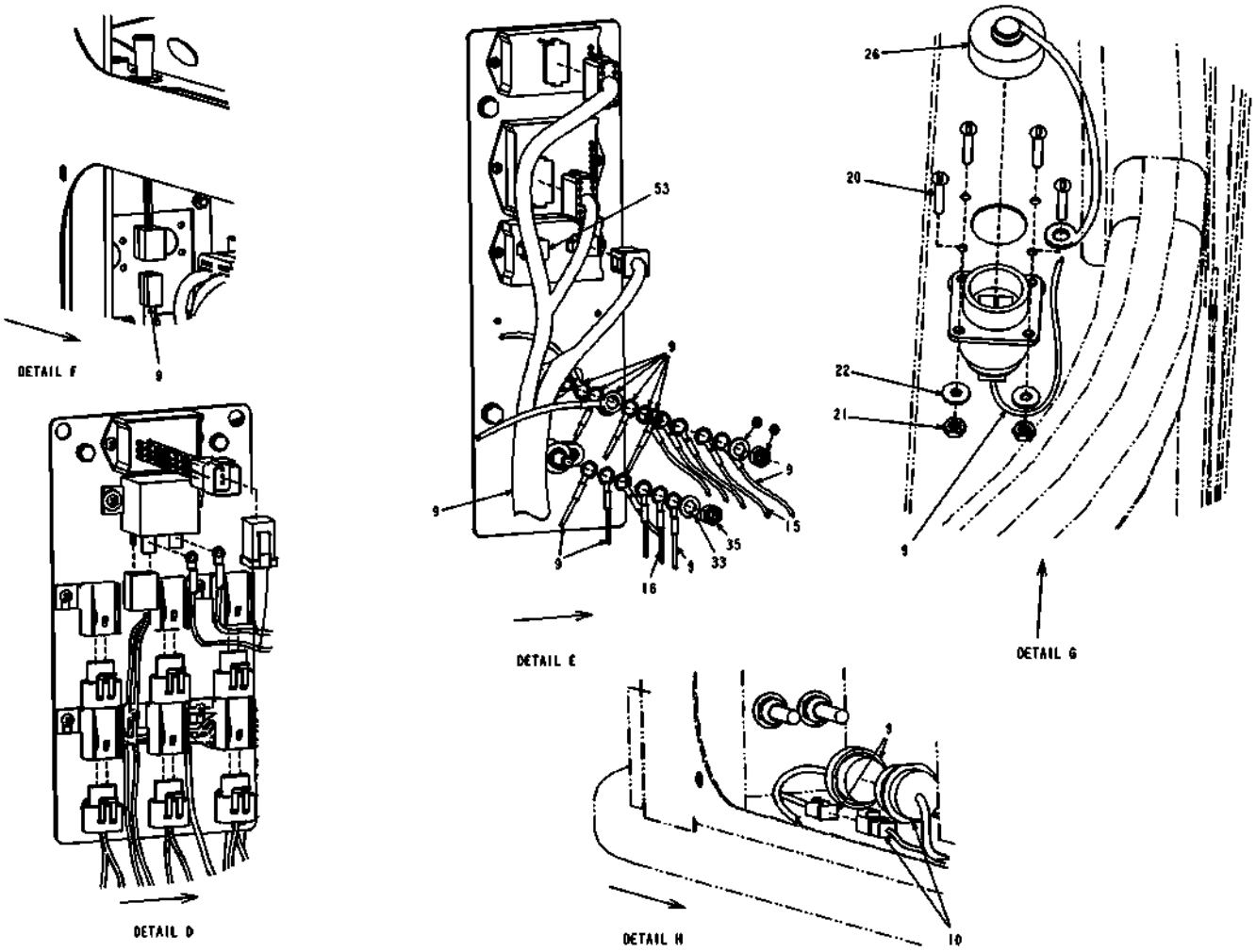

517973D1-02-R703-03.TIF

Copyright © 2008 AGCO Corporation

ITEM	PART #	QTY	DESCRIPTION	COMMENTS
9	513775D1	1	HARNESS-ADAPTER,7X60	
10	515523D1	1	HARNESS-MASTER MODULE	
15	WR133978	1	CABLE-PWR STUD,CAB BLKHD	
16	WR133979	1	CABLE-GND STUD,CAB BLKHD	
20	AG517156	4	SCREW #6-32X.75 MA RDHD SLOTZN	
21	AG517157	4	NUT #6-32NC HEX ZN REG	
22	AG517158	4	WASHER #6 FL ZN REG TYPE-B	
26	AG520318	1	CAP-SEALING,SIZE 17	
33	AG562050	2	WASHER 0.37 LK SS REG	
35	AG562065	2	NUT 0.37-16NC HEX SS REG	
53	AG520746	1	CONN-PLUG,6 WAY,18-14 GA	

Copyright © 2008 AGCO Corporation

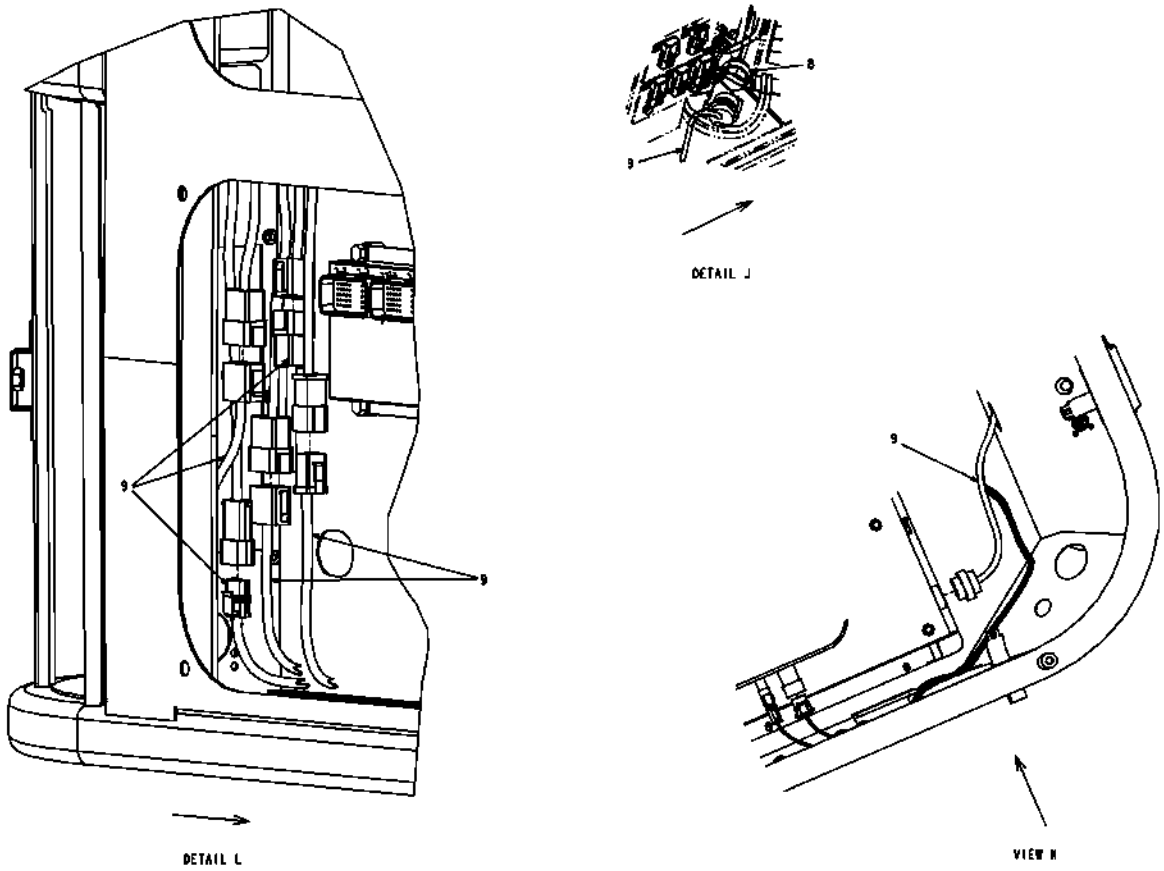

517973D1-02-R703-04.TIF

Copyright © 2008 AGCO Corporation

ITEM	PART #	QTY	DESCRIPTION	COMMENTS
8	507952D1	-	HARNESS-CONSOLE,CENTER	
9	513775D1	1	HARNESS-ADAPTER,7X60	

Copyright © 2008 AGCO Corporation

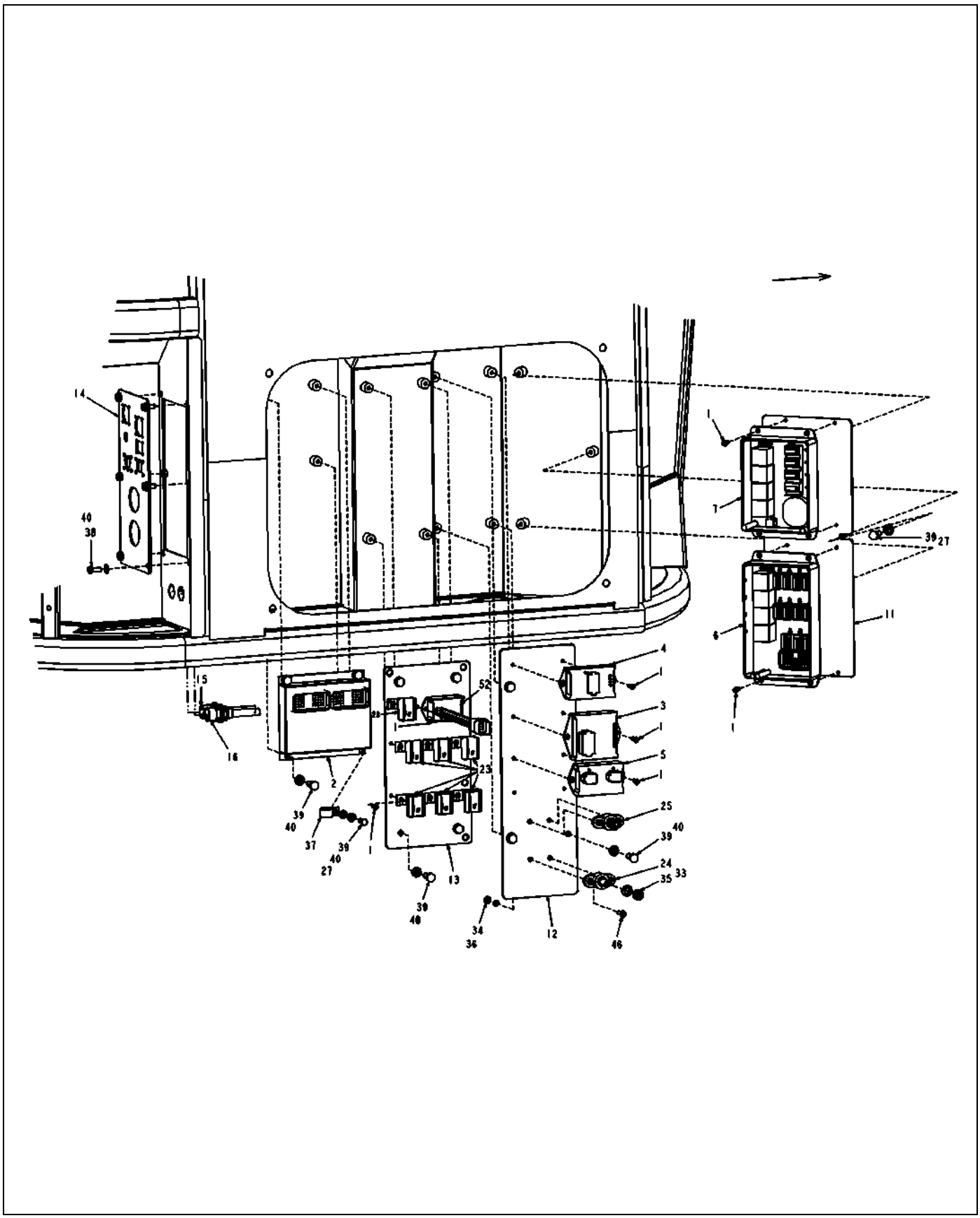

517975D1-02-R694-01.TIF

Copyright © 2008 AGCO Corporation

ITEM	PART #	QTY	DESCRIPTION	COMMENTS
1	AG029293	23	SCREW 10-24X0.50 TAP IWHHD	
2	515100D1	1	INSTL-MASTER MODULE,AED	SEE PAGE 8-28
3	AG129242	1	MODULE-FLASHER,EURO	
4	AG121749	1	MODULE-RELAY,4 PACK,NO	[A]
5	AG121750	1	MODULE-RELAY,2 PACK	
6	AG124451	1	MODULE-POWER DIST,11 FUSE	SEE PAGE 8-77
7	AG124452	1	MODULE-POWER DIST,HI CURRENT	SEE PAGE 8-78
11	WR126905	1	PLATE-PDM,MINI CAB	
12	WR126906	1	PLATE-RELAY,MINI CAB	
13	515778D1	1	PLATE-AUX,MINI CAB,ATC	
14	517403D1	1	PLATE-BULKHEAD	
15	WR133978	1	CABLE-PWR STUD,CAB BLKHD	
16	WR133979	1	CABLE-GND STUD,CAB BLKHD	
19	AG515669	6	PLUG-SEAL,SIZE 16 CONTACT	
23	AG520052	7	CAP METRI PACK 630 P2S 2-WAY	
24	AG520092	1	JUNCTION BLOCK-STUD TYPE,BLK	
25	AG520093	1	JUNCTION BLOCK-STUD TYPE,RED	
27	AG520879	2	WASHER-FLAT,M6,ZN,REG	
30	AG553557	AR	TIE CABLE 7.37 .06-1.37 BLACK	
33	AG562050	2	WASHER 0.37 LK SS REG	
34	AG562061	4	NUT #10-24NC HEX SS REG	
35	AG562065	2	NUT 0.37-16NC HEX SS REG	
36	AG562081	4	WASHER #10 LK SS REG	
37	AG562238	1	CLAMP CTD 1.50IDX 0.75WIDE	
38	AG562327	6	BOLT M6-1.00X20MM G8.8 ZN HHD	
39	AG562639	15	BOLT M6 1.00X12MM G8.8 ZN HHD	
40	AG562792	20	WASHER LOCK M6 SPRING ZN	
41	AG562925	1	FUSE BLADE 30A ATC	
42	AG562929	1	FUSE 20A BLADE ATC	
43	AG562930	5	FUSE 15A BLADE ATC	
44	AG562931	5	FUSE 10A BLADE ATC	
45	AG562933	2	FUSE 5A BLADE ATC	
46	AG563094	4	SCREW 10-24X0.75 PH PHS SS	
50	AG562928	2	FUSE 25A BLADE ATC	
51	508171D1	1	ELEC INSTL-JUMPER,ATC HVAC	SEE PAGE 8-34
52	513016D1	1	MODULE-RELAY,3 SECOND DELAY	
	FOOTNOTE [A]		AG719617 - RELAYS (4)	

Copyright © 2008 AGCO Corporation

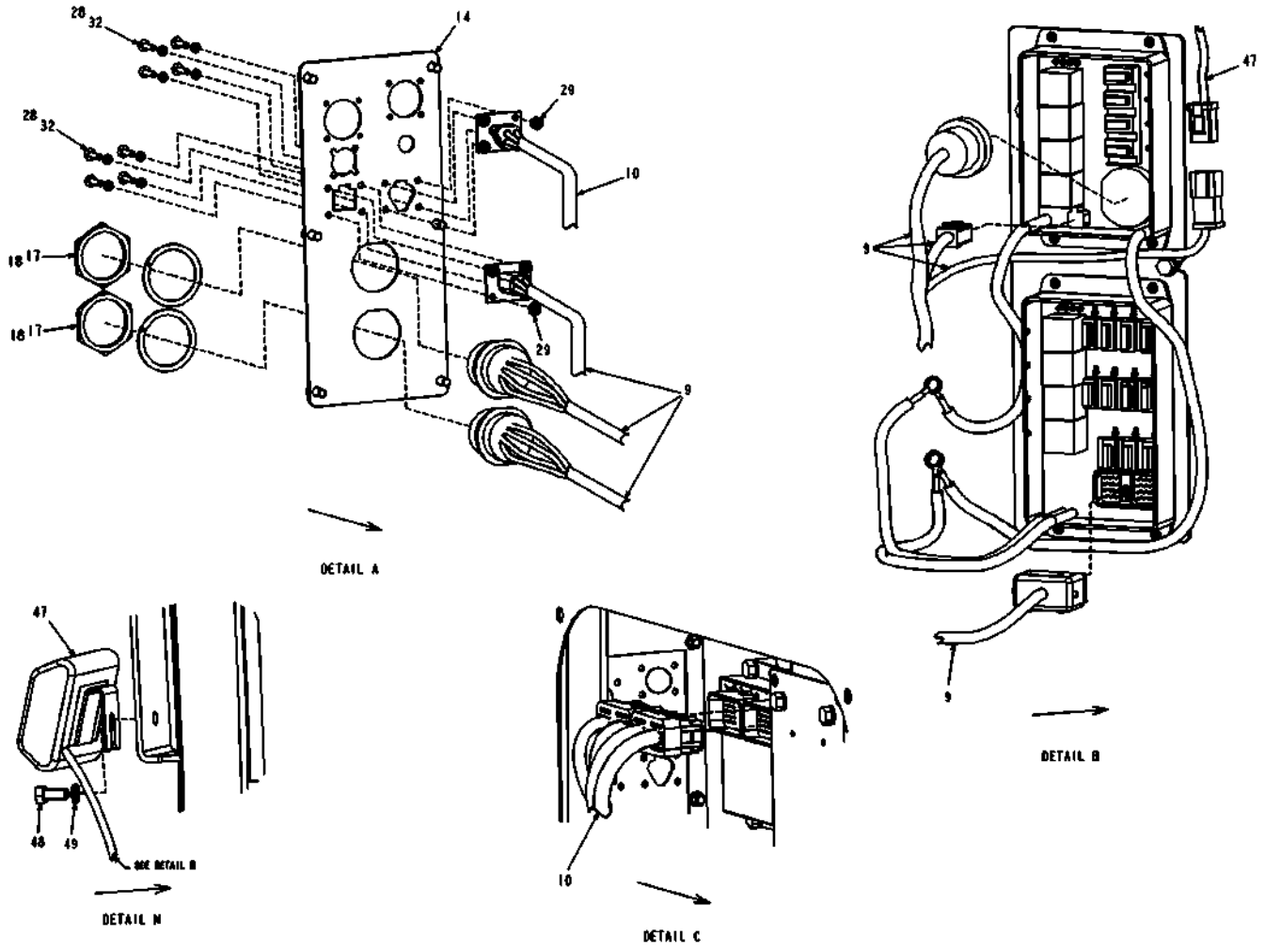

517975D1-02-R694-02.TIF

Copyright © 2008 AGCO Corporation

ITEM	PART #	QTY	DESCRIPTION	COMMENTS
9	513765D1	1	HARNESS-ADAPTER,ATC,7X60	
10	515523D1	1	HARNESS-MASTER MODULE	
14	517403D1	1	PLATE-BULKHEAD	
17	AG515697	2	NUT PANEL ELEC CONNECTOR	
18	AG515698	2	WASHER LOCK ELEC CONNECTOR	
28	AG550914	8	WASHER #8 LK ZN REG	
29	AG550922	8	NUT #8-32NC HEX ZN REG	
32	AG560227	8	SCREW 8-32X 0.75 MA ZN SL PHD	
47	WR134754	1	MODULE-LCD,CAN	
48	WR522279	1	BOLT-M8-1.25X20,CL10.9,ZN,HHD	
49	AG561679	1	WASHER LOCK M8 ZN	

Copyright © 2008 AGCO Corporation

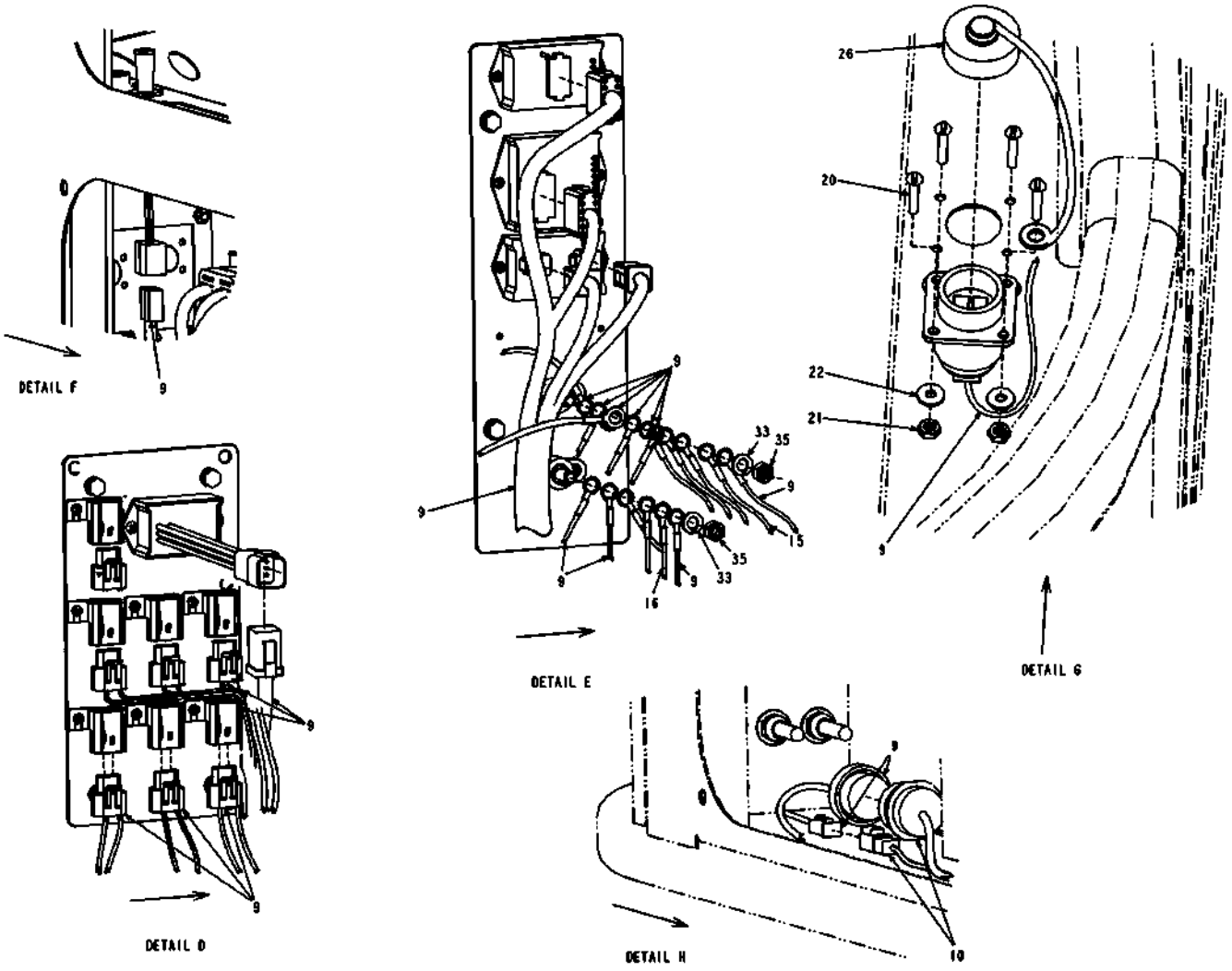

517975D1-02-R694-03.TIF

Copyright © 2008 AGCO Corporation

ITEM	PART #	QTY	DESCRIPTION	COMMENTS
9	513765D1	1	HARNESS-ADAPTER,ATC,7X60	
10	515523D1	1	HARNESS-MASTER MODULE	
15	WR133978	1	CABLE-PWR STUD,CAB BLKHD	
16	WR133979	1	CABLE-GND STUD,CAB BLKHD	
20	AG517156	4	SCREW #6-32X.75 MA RDHD SLOTZN	
21	AG517157	4	NUT #6-32NC HEX ZN REG	
22	AG517158	4	WASHER #6 FL ZN REG TYPE-B	
26	AG520318	1	CAP-SEALING,SIZE 17	
33	AG562050	2	WASHER 0.37 LK SS REG	
35	AG562065	2	NUT 0.37-16NC HEX SS REG	

Copyright © 2008 AGCO Corporation

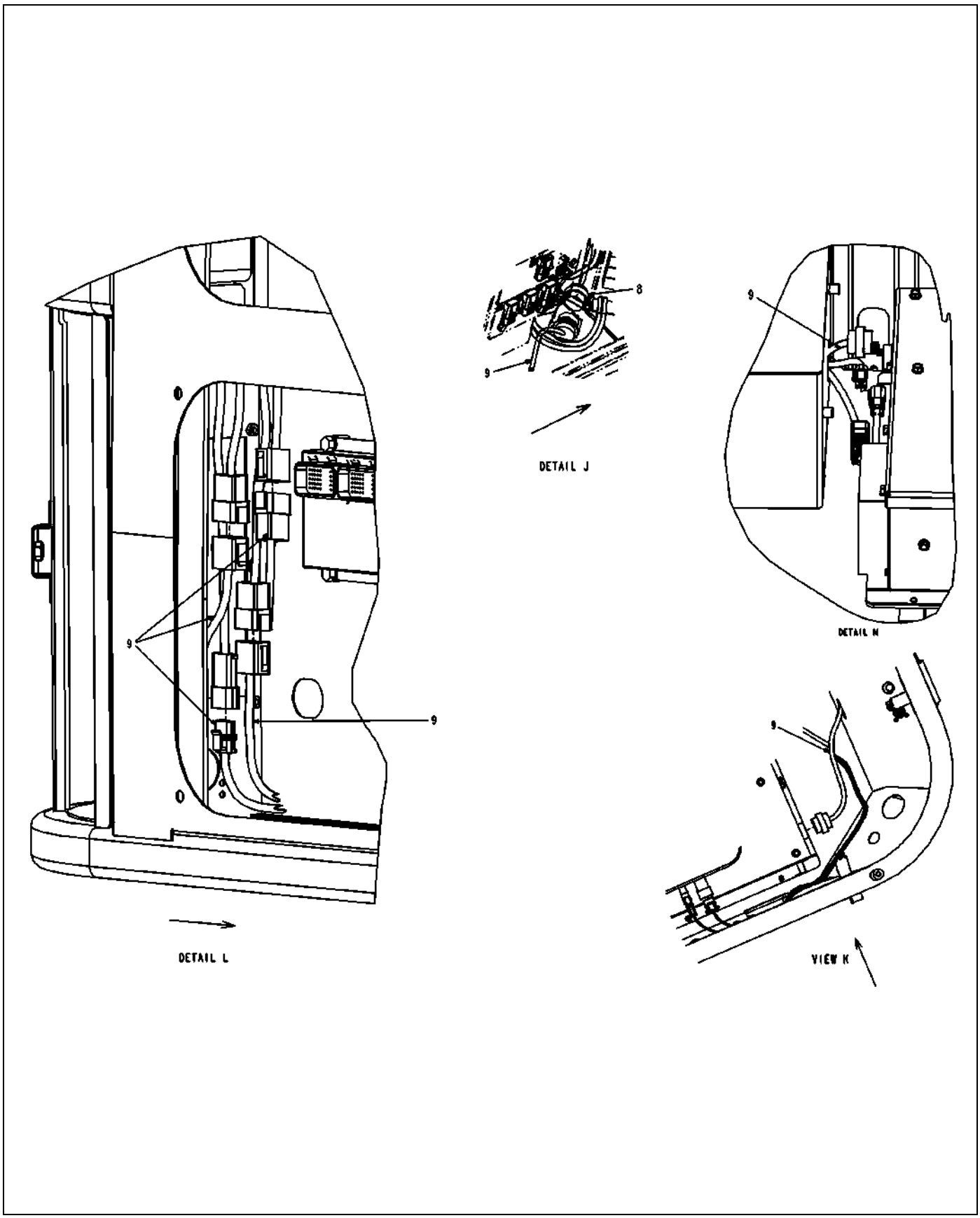

517975D1-02-R694-04.TIF

Copyright © 2008 AGCO Corporation

ITEM	PART #	QTY	DESCRIPTION	COMMENTS
8	507952D1	-	HARNESS-CONSOLE,CENTER	
9	513765D1	1	HARNESS-ADAPTER,ATC,7X60	

Copyright © 2008 AGCO Corporation

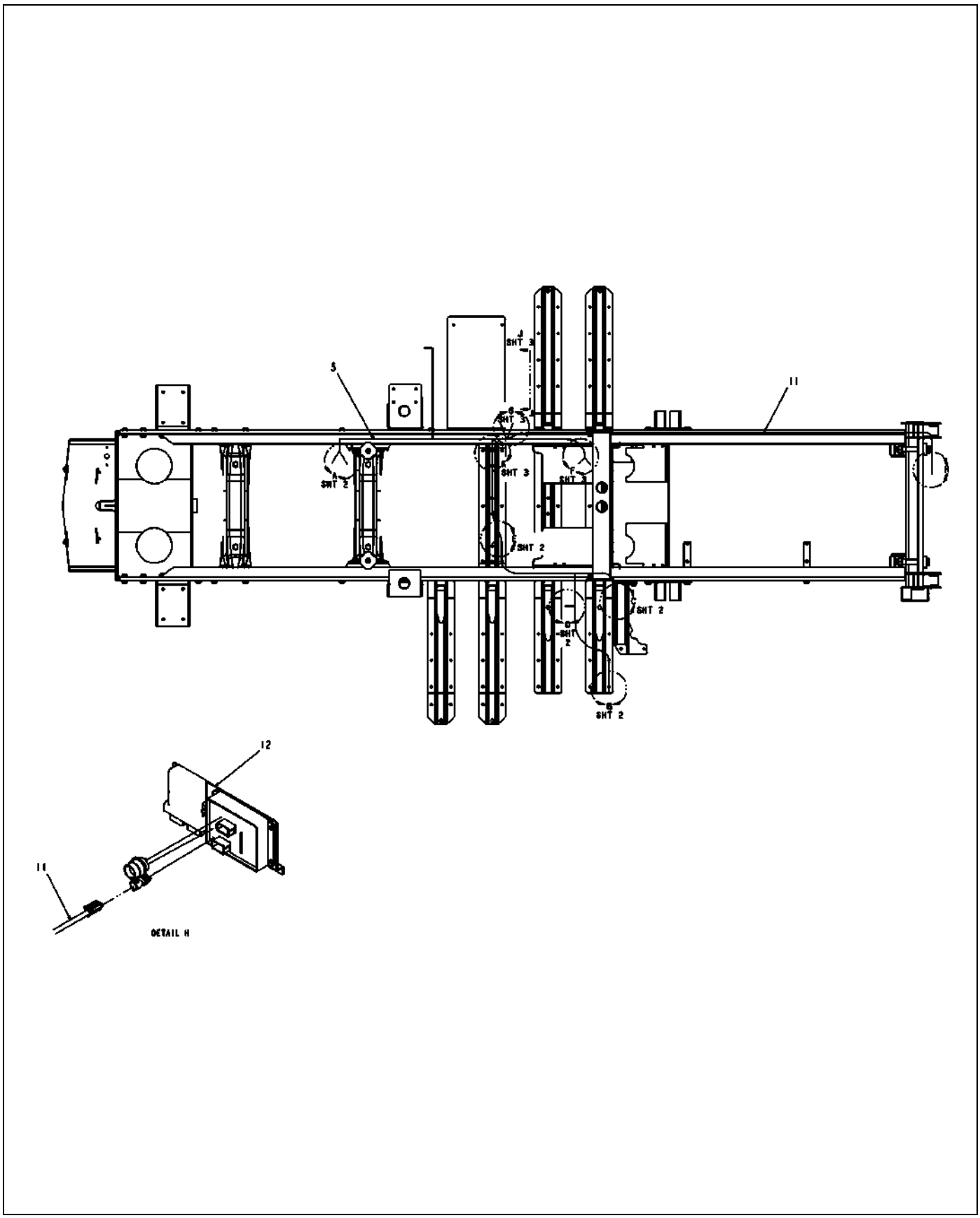

509112D1-05-R776-01.TIF

Copyright © 2008 AGCO Corporation

ITEM	PART #	QTY	DESCRIPTION	COMMENTS
5	509111D1	1	HARNESS-PUMP/RADAR/FOAM MRKR	
11	WR126927	1	HARNESS-BACKBONE,CAN	
12	AG128727	-	ASM-I/O,HIGH CURRENT,REAR	SEE PAGE 8-46

Copyright © 2008 AGCO Corporation

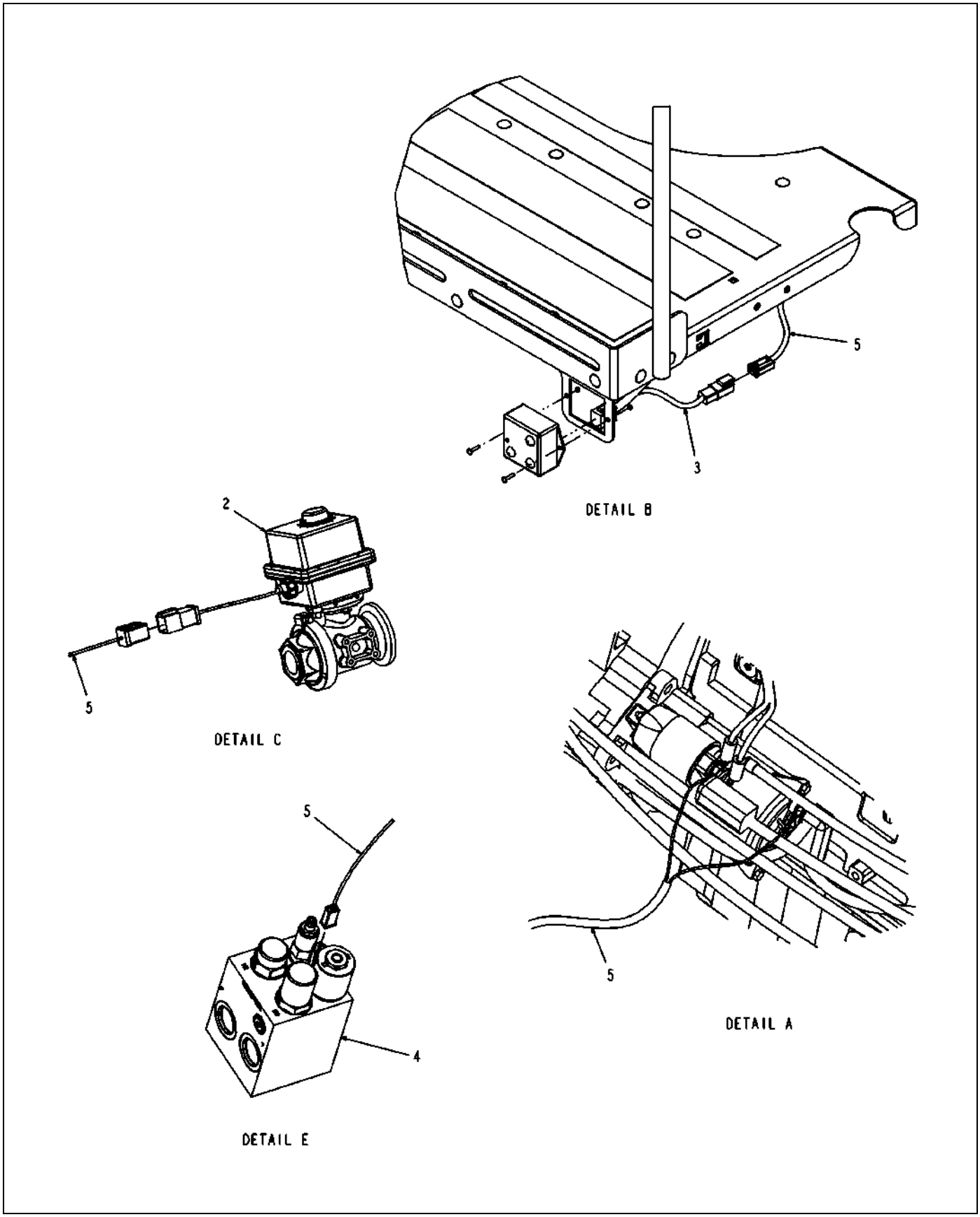

509112D1-05-R776-02.TIF

Copyright © 2008 AGCO Corporation

ITEM	PART #	QTY	DESCRIPTION	COMMENTS
2	AG121883	-	VALVE-BALL,1.00FP FLGXNPT,ELEC	SEE PAGE 8-64
3	AG126910	-	HARNESS-CHASSIS,ENG,TRANS	
4	WR128478	-	VALVE-PRODUCT/BOOM PRIORITY	SEE PAGE 6-10
5	509111D1	1	HARNESS-PUMP/RADAR/FOAM MRKR	

Copyright © 2008 AGCO Corporation

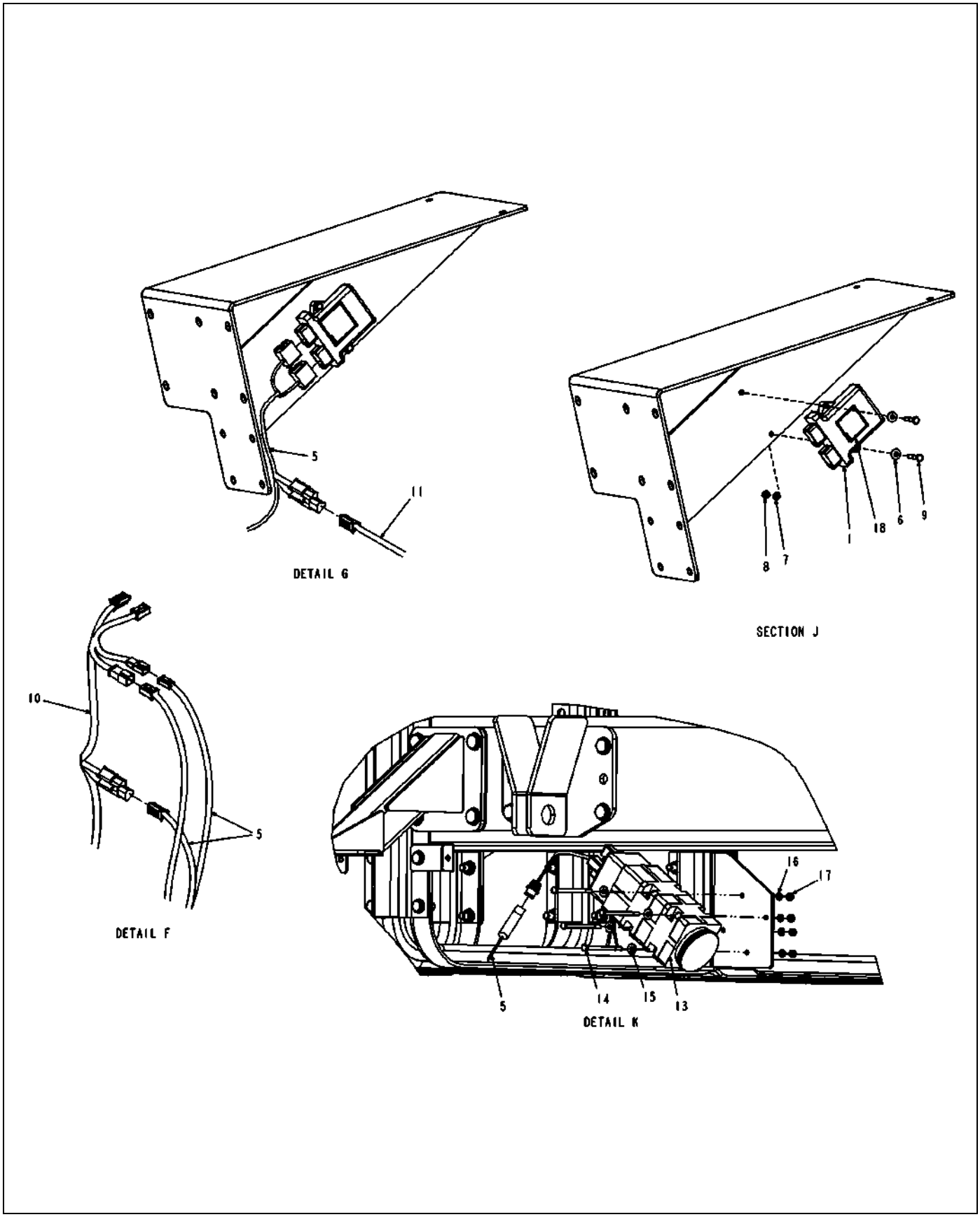

509112D1-05-R776-03.TIF

Copyright © 2008 AGCO Corporation

ITEM	PART #	QTY	DESCRIPTION	COMMENTS
1	516006D1	1	MODULE ASM-I/O,CAN	
5	509111D1	1	HARNESS-PUMP/RADAR/FOAM MRKR	
6	AG515121	2	WASHER 0.25 FL SS REG TYPE-B	
7	AG515122	2	WASHER 0.25 LK SS REG	
8	AG515123	2	NUT .25-20NC HEX SS REG	
9	AG562068	2	BOLT 0.25-20NCX 1.50 SS HHD	
10	WR126889	-	HARNESS-I/O,LIGHTS-FRONT	
11	WR126927	1	HARNESS-BACKBONE,CAN	
13	AG520859	1	RADAR-DJ,7.5FT	
14	AG562148	4	BOLT 0.25-20NCX 4.00 G5 ZN HHD	
15	AG550507	4	WASHER 0.25 FL ZN REG TYPE-B	
16	AG550493	4	WASHER 0.25 LK ZN REG	
17	AG550612	4	NUT 0.25-20NC HEX ZN REG	
18	520330D1	1	DECAL-DO NOT PRESSURE WASH	

Copyright © 2008 AGCO Corporation

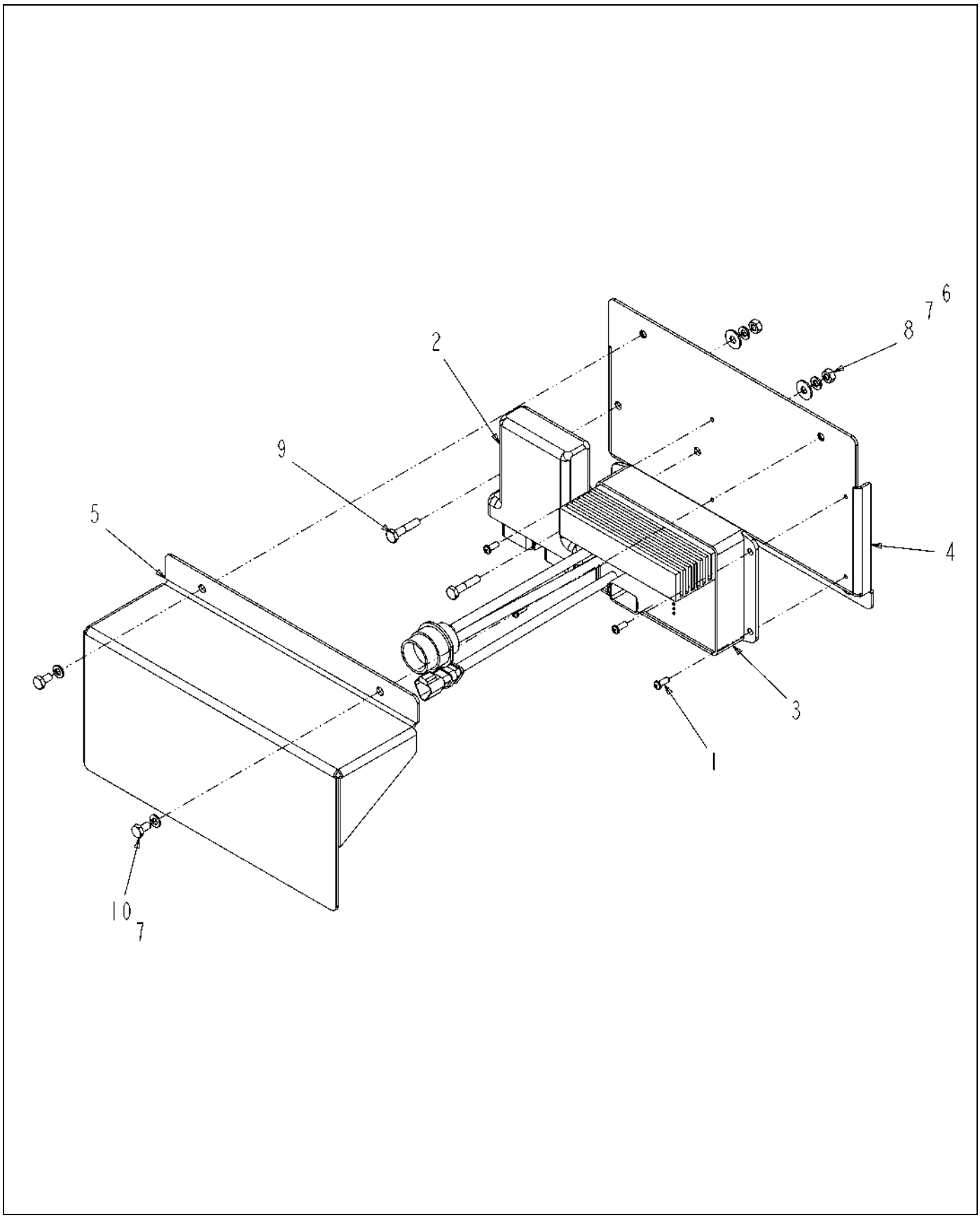

128727-B-01.tif

Copyright © 2008 AGCO Corporation

ASM-I/O,HIGH CURRENT,REAR

ITEM	PART #	QTY	DESCRIPTION	COMMENTS
1	AG029293	4	SCREW 10-24X0.50 TAP IWHHD	
2	AG121198	1	MODULE-I/O,CAN R/B 136734	
3	AG128285	1	MODULE-I/O,HIGH,CURRENT	
4	WR129476	1	BRKT WLDMT-I/O,HIGH CURRENT	
5	WR129477	1	PLATE-COVER,I/0,REAR	
6	AG515121	2	WASHER 0.25 FL SS REG TYPE-B	
7	AG515122	4	WASHER 0.25 LK SS REG	
8	AG515123	2	NUT .25-20NC HEX SS REG	
9	AG561952	2	BOLT 0.25-20NCX 1.25 SS HHD	
10	AG562047	2	BOLT 0.25-20NCX 0.50 SS HHD	

Copyright © 2008 AGCO Corporation

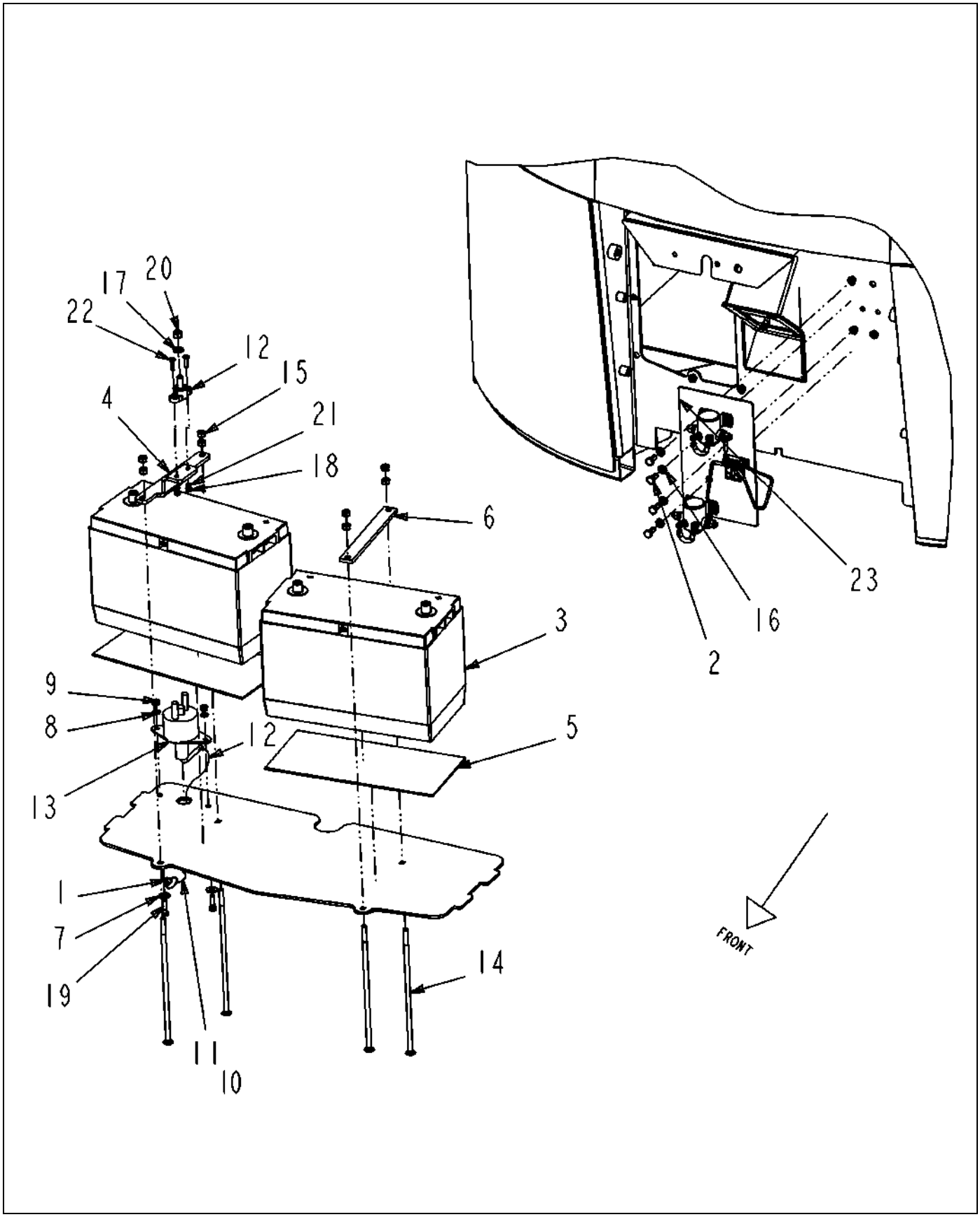

515781D1-02-T048-.TIF

Copyright © 2008 AGCO Corporation

ITEM	PART #	QTY	DESCRIPTION	COMMENTS
1	AG010350	1	CLAMP LOOM 0.25 PER DWG	
2	WR25752	4	SCREW-CAP HEX M8 X 16,	
3	AG123761	2	BATTERY-GROUP 31	
4	WR128788	1	STRAP-HOLD DOWN,BATTERY	
5	AG223413	2	MAT BATTERY	
6	AG223415	1	STRAP HOLD DOWN	
7	AG515121	2	WASHER 0.25 FL SS REG TYPE-B	
8	AG515122	2	WASHER 0.25 LK SS REG	
9	AG515123	2	NUT .25-20NC HEX SS REG	
10	AG515981	2	COMPRESSION SLEEVE	
11	AG516060	-	CABLE NYLON COATED [BULK: 15 FT]	
12	AG520093	1	JUNCTION BLOCK-STUD TYPE,RED	
13	AG520910	1	SWITCH-BATTERY,SHUTOFF	
14	AG523581	4	BOLT .31-18NCX 10.00 SS CRG	
15	AG550213	8	NUT 0.31-18NC HEX ZN REG	
16	AG561679	4	WASHER LOCK M8 ZN	
17	AG562050	1	WASHER 0.37 LK SS REG	
18	AG562061	2	NUT #10-24NC HEX SS REG	
19	AG562064	2	BOLT 0.25-20NCX 1.00 SS HHD	
20	AG562065	1	NUT 0.37-16NC HEX SS REG	
21	AG562081	2	WASHER #10 LK SS REG	
22	AG563094	2	SCREW 10-24X0.75 PH PHS SS	
23	513764D1	1	ASM-MAG SW.BREAKER,80 AMP	SEE PAGE 8-48

Copyright © 2008 AGCO Corporation

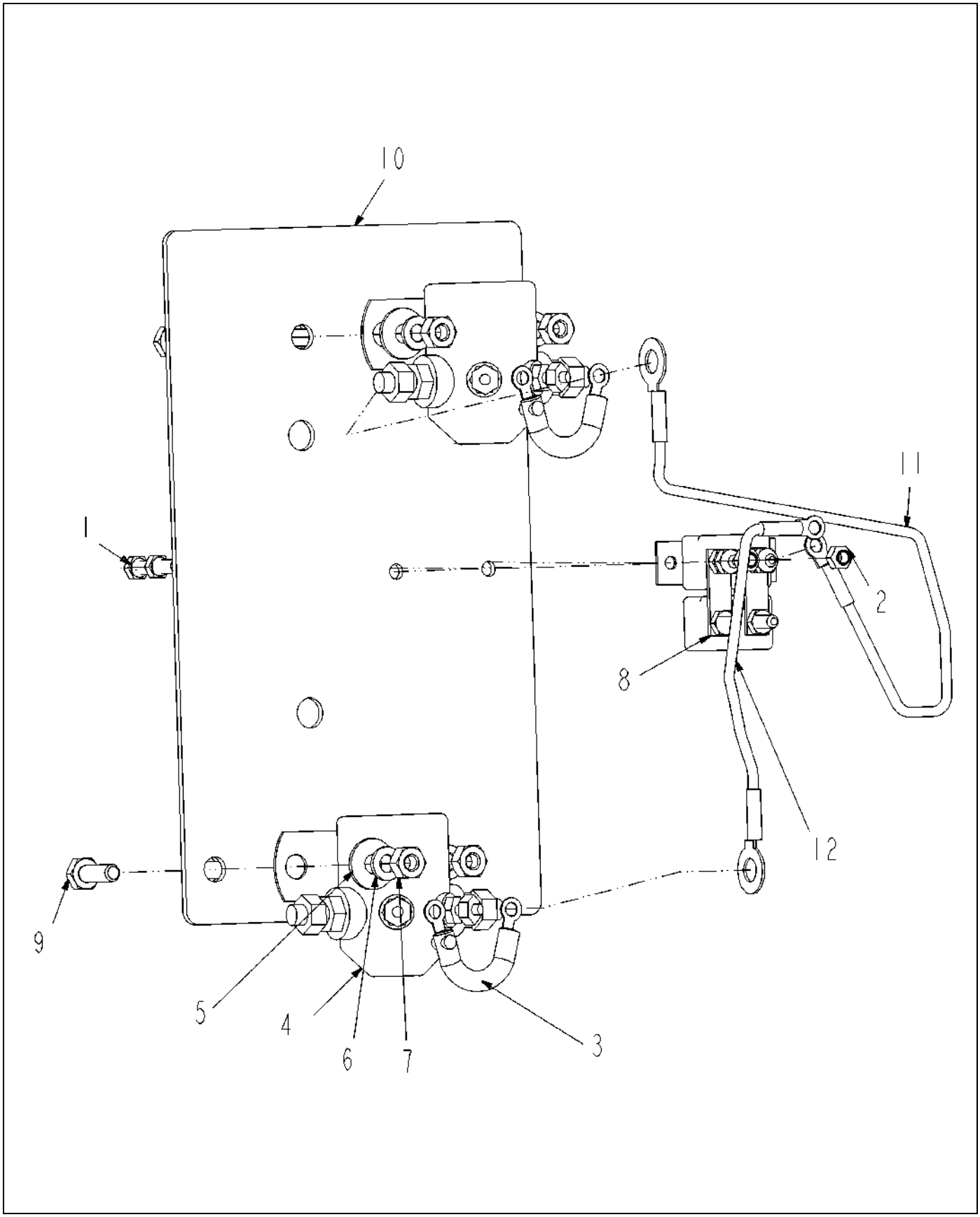

513764D1-04-T353-.TIF

Copyright © 2008 AGCO Corporation

ASM-MAG SW.BREAKER,80 AMP

ITEM	PART #	QTY	DESCRIPTION	COMMENTS
1	WR55026	2	SCREW-CAP HEX M5 X 12	
2	WR55412	2	NUT-LOCK,M5 X .8,PREV	
3	AG232490	2	SUPPRESSOR DIODE	
4	AG510734	2	SWITCH MAGNETIC	
5	AG515121	4	WASHER 0.25 FL SS REG TYPE-B	
6	AG515122	4	WASHER 0.25 LK SS REG	
7	AG515123	4	NUT .25-20NC HEX SS REG	
8	AG515263	1	CIRCUIT BREAKER 80 AMP	
9	AG562054	4	BOLT 0.25-20NCX 0.75 SS HHD	
10	513763D1	1	PLATE-BLKHD,BKR/MAG SW,MNT	
11	515779D1	1	CABLE-MAG SW/ CKT BRKR	
12	515780D1	1	CABLE-MAG SW/ CKT BRKR	

Copyright © 2008 AGCO Corporation

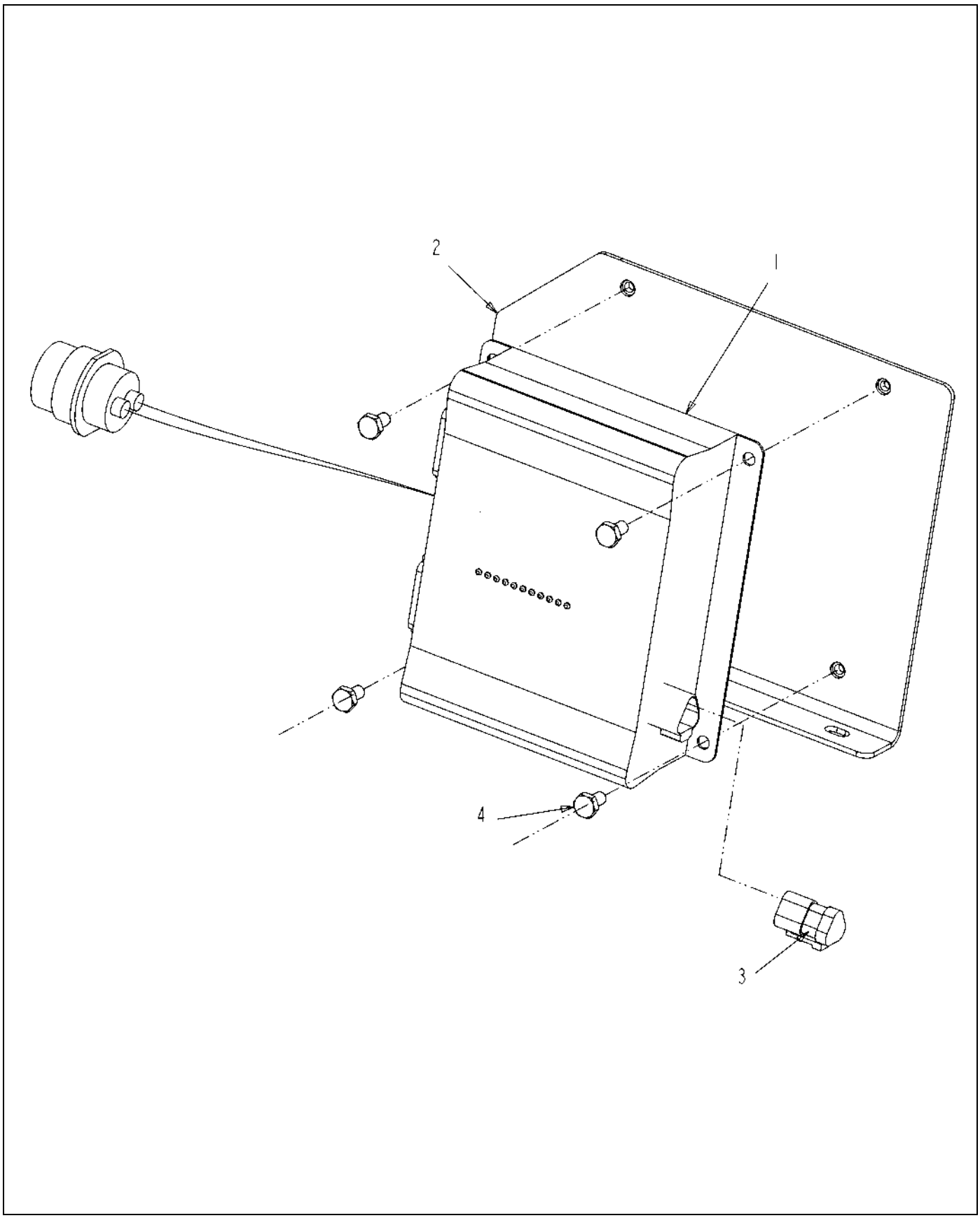

132176.TIF

Copyright © 2008 AGCO Corporation

ASM-I/O,HIGH CURRENT

ITEM	PART #	QTY	DESCRIPTION	COMMENTS
1	AG128285	1	MODULE-I/O,HIGH,CURRENT	
2	WR132246	1	BRKT WLDMT-I/O,HC,FRONT	
3	AG521048	4	SCR-.25-20NCX.75,SS,BTN HD,SKT	
4	AG522410	1	TERMINATOR-PLUG,3WAY,J1939	

Copyright © 2008 AGCO Corporation

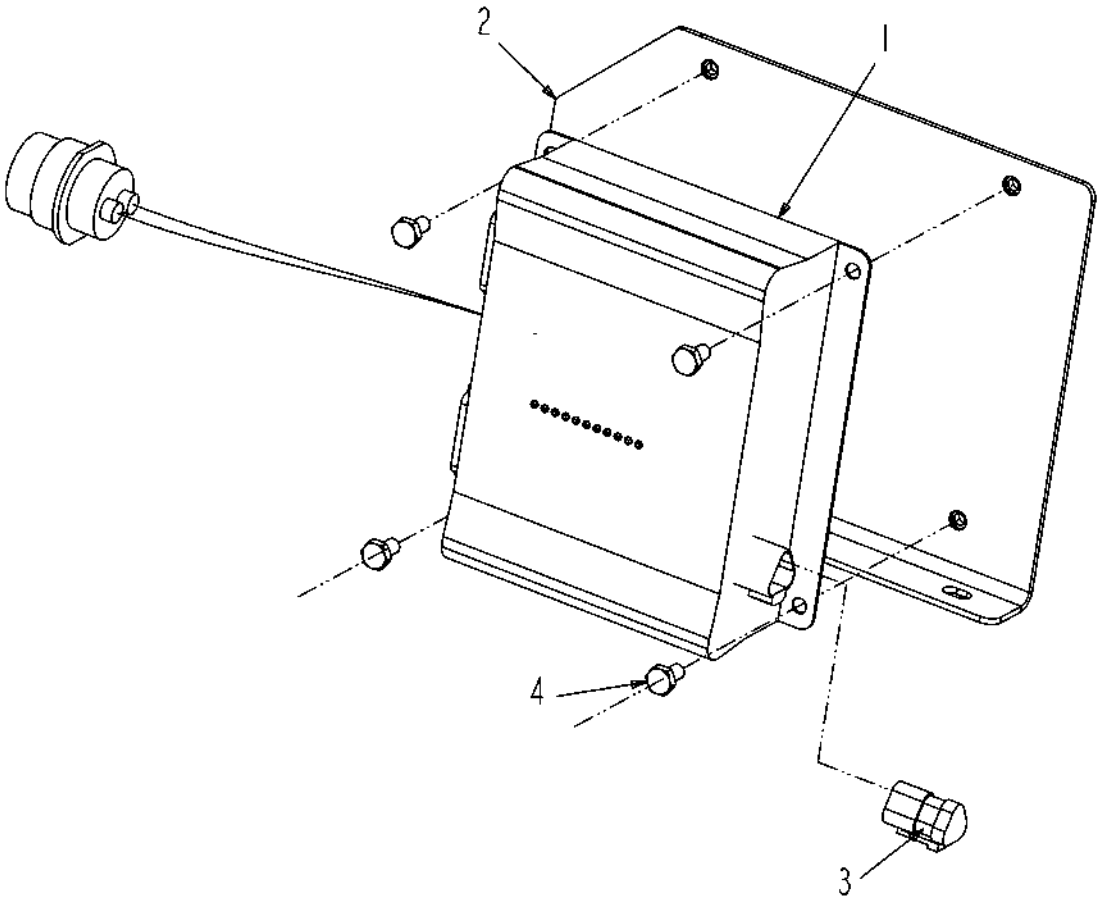

132176-A.TIF

Copyright © 2008 AGCO Corporation

ASM-I/O,HIGH CURRENT

ITEM	PART #	QTY	DESCRIPTION	COMMENTS
1	AG128285	1	MODULE-I/O,HIGH,CURRENT	
2	WR132246	1	BRKT WLDMT-I/O,HC,FRONT	
3	AG521048	4	SCR-.25-20NCX.75,SS,BTN HD,SKT	
4	AG522410	1	TERMINATOR-PLUG,3WAY,J1939	

Copyright © 2008 AGCO Corporation

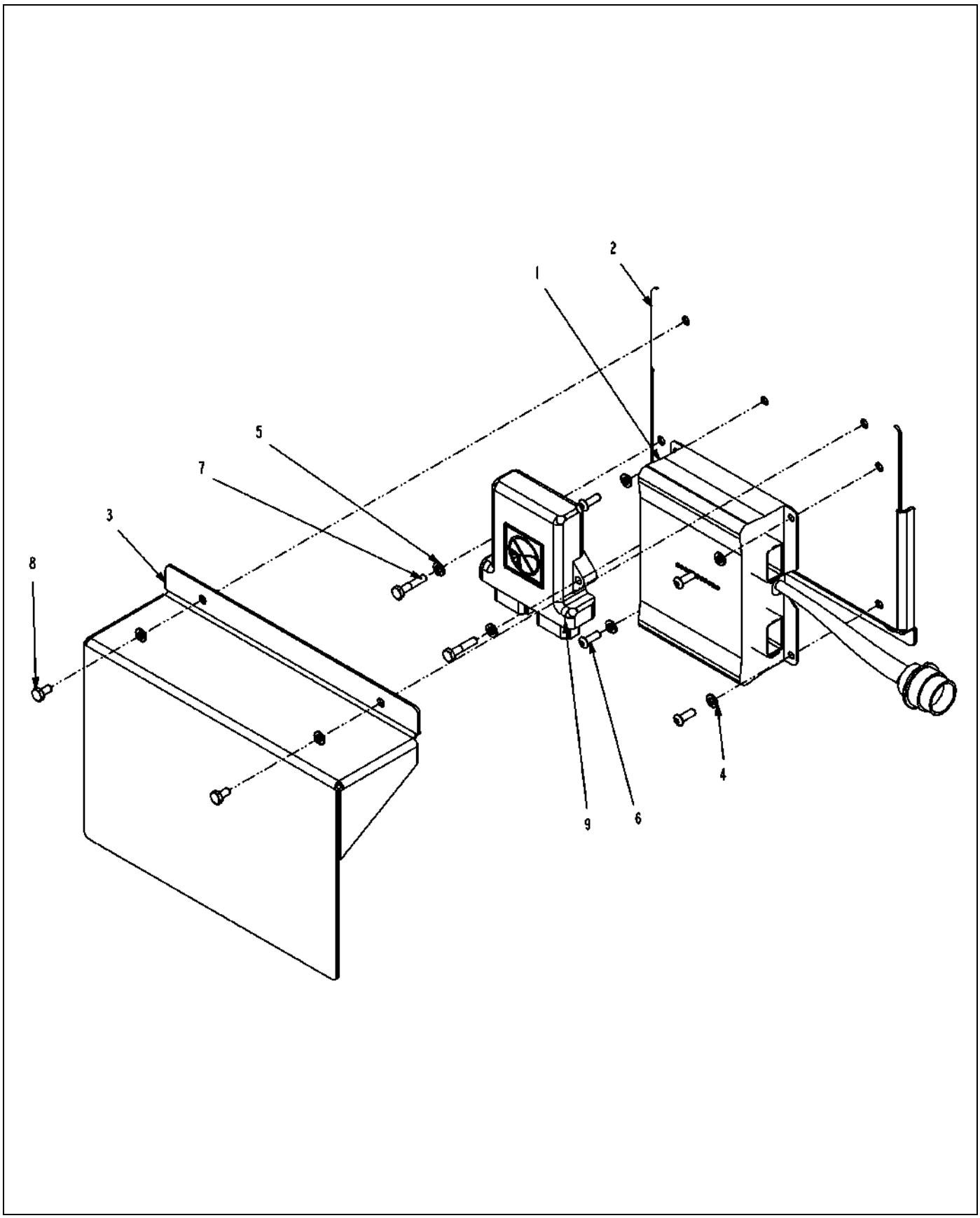

132177-07-T541-.TIF

Copyright © 2008 AGCO Corporation

ASM-I/O,HIGH CURRENT,REAR

ITEM	PART #	QTY	DESCRIPTION	COMMENTS
1	AG128285	1	MODULE-I/O,HIGH,CURRENT	
2	WR132179	1	BRKT WLDMT-I/O,HIGH CURRENT	
3	WR132180	1	PLATE-COVER,I/O,REAR	
4	AG515122	6	WASHER 0.25 LK SS REG	
5	AG517724	2	WASHER FLAT NARROW	
6	AG521048	4	SCR-.25-20NCX.75,SS,BTN HD,SKT	
7	AG561952	2	BOLT 0.25-20NCX 1.25 SS HHD	
8	AG562047	2	BOLT 0.25-20NCX 0.50 SS HHD	
9	516006D1	1	MODULE ASM-I/O,CAN	

Copyright © 2008 AGCO Corporation

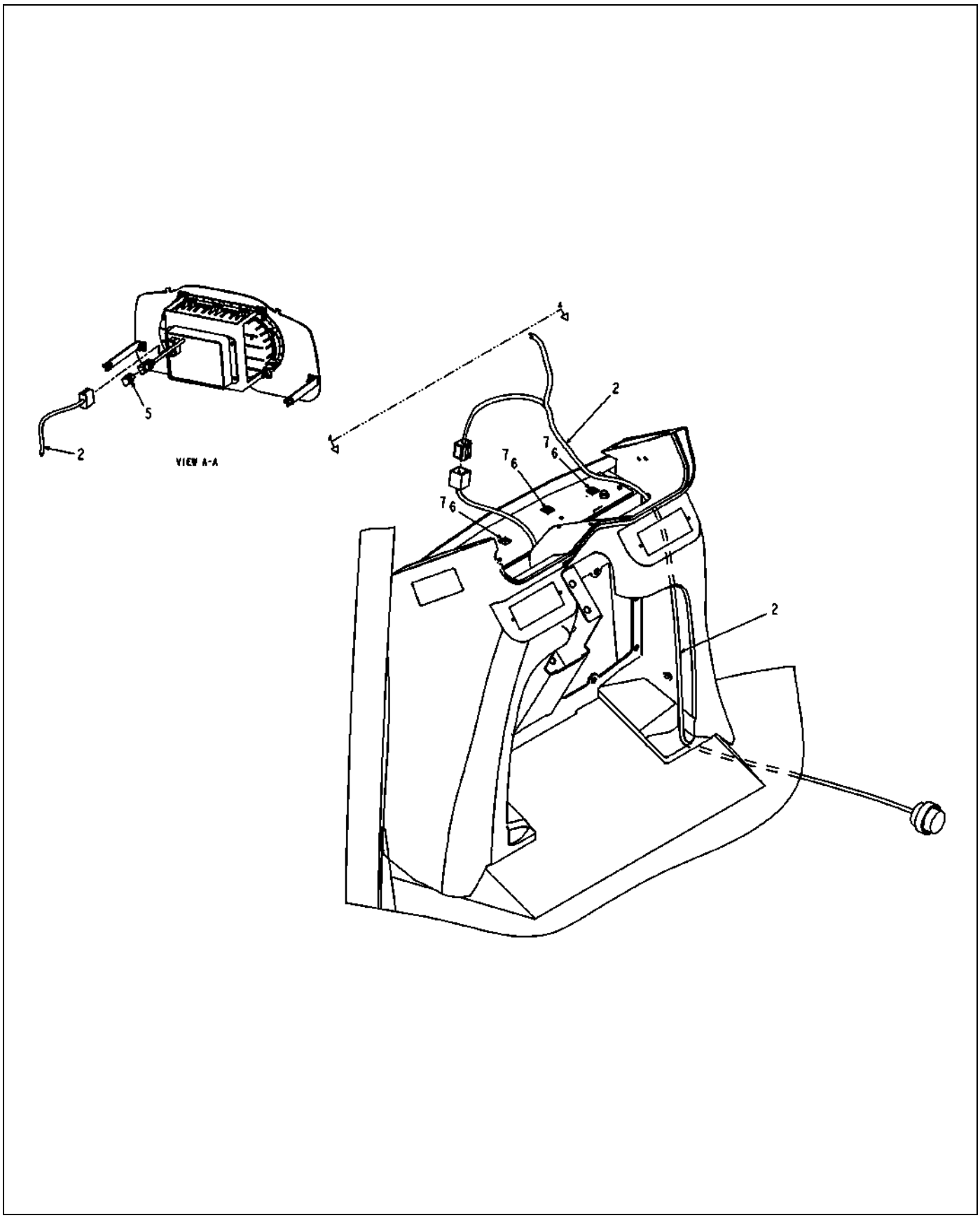

508063D1-02-R703-01.TIF

Copyright © 2008 AGCO Corporation

HARNESS INSTALL-CENTER CONSOLE

ITEM	PART #	QTY	DESCRIPTION	COMMENTS
2	507952D1	1	HARNESS-CONSOLE,CENTER	
5	AG522410	1	TERMINATOR-PLUG,3WAY,J1939	
6	AG517942	3	MOUNT WIRE TIE ADHESIVE B 4WAY	
7	AG553557	3	TIE CABLE 7.37 .06-1.37 BLACK	

Copyright © 2008 AGCO Corporation

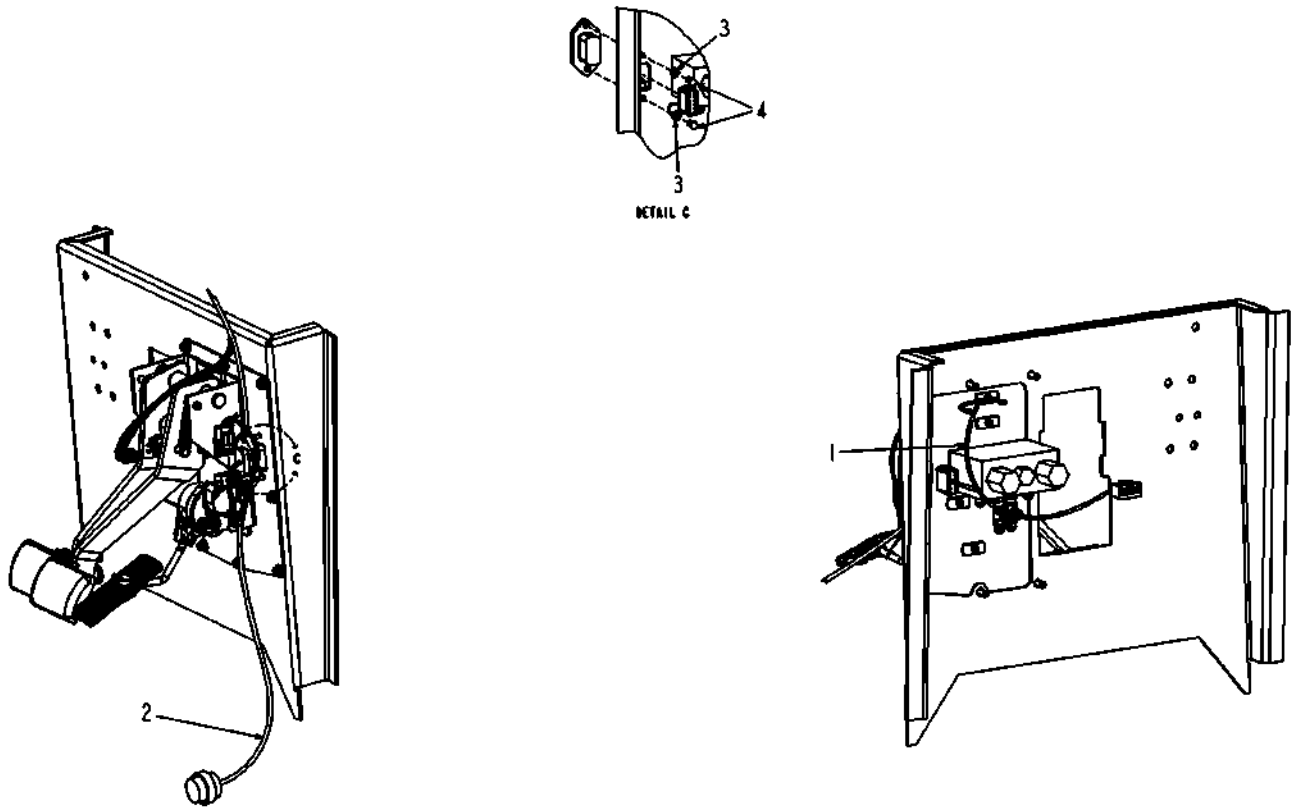

508063D1-02-R703-02.TIF

Copyright © 2008 AGCO Corporation

HARNESS INSTALL-CENTER CONSOLE

ITEM	PART #	QTY	DESCRIPTION	COMMENTS
1	507953D1	1	HARNESS-WIPER/HORN	
2	507952D1	1	HARNESS-CONSOLE,CENTER	
3	AG515122	2	WASHER 0.25 LK SS REG	
4	AG521728	2	BOLT-M6-1.0X16,,SS,HHD	

Copyright © 2008 AGCO Corporation

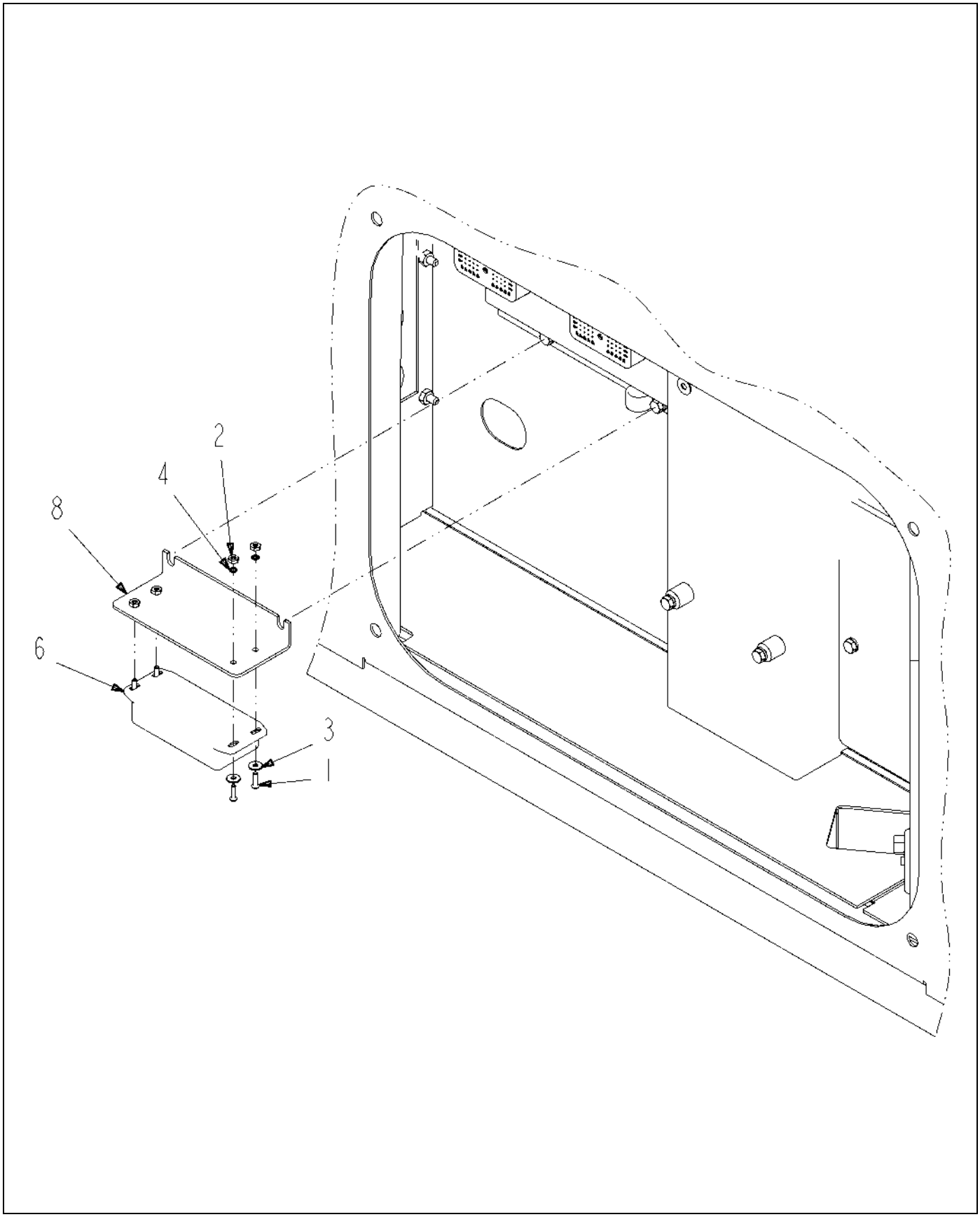

517892D1-01-N828-01.TIF

Copyright © 2008 AGCO Corporation

SENSOR INSTALL-TILT,SC

ITEM	PART #	QTY	DESCRIPTION	COMMENTS
1	AG000748	4	SCREW #6-32X.50 MA RDHD SS	
2	AG517157	4	NUT #6-32NC HEX ZN REG	
3	AG517158	4	WASHER #6 FL ZN REG TYPE-B	
4	AG517159	4	WASHER #6 LK ZN REG	
5	517803D1	1	KIT-SENSOR,TILT	SEE PAGE 13-2
6	517804D1	-	SENSOR-TILT	
8	517960D1	1	BRKT-MTG,TILT SENSOR,SC	

Copyright © 2008 AGCO Corporation

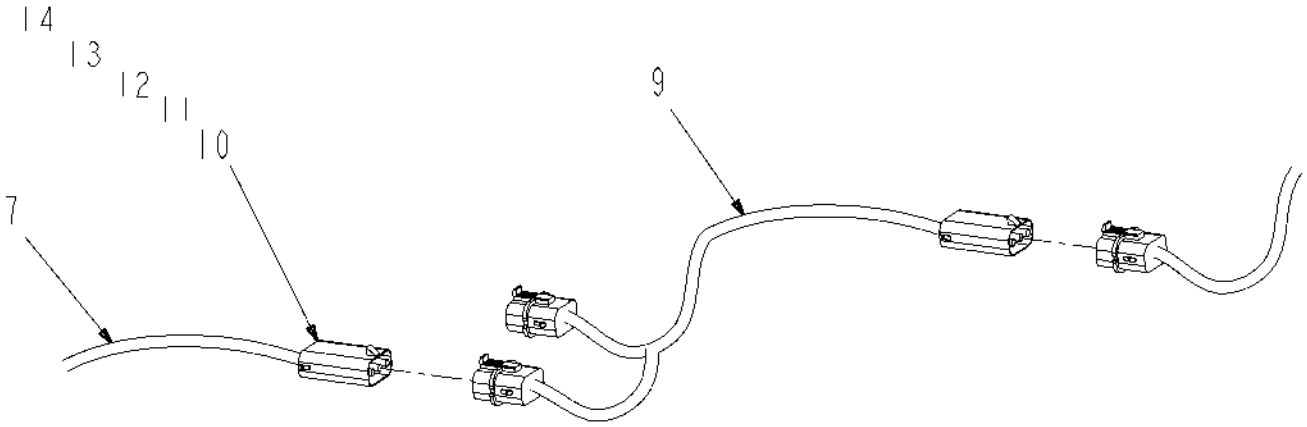

517892D1-01-N828-02.TIF

Copyright © 2008 AGCO Corporation

SENSOR INSTALL-TILT,SC

ITEM	PART #	QTY	DESCRIPTION	COMMENTS
7	517805D1	-	CABLE-SENSOR,TILT	
9	AG134156	1	HARNESS-ADAPTOR,T,GPS	
10	AG515764	2	SEAL CABLE GREEN REEL 18-16 GA	
11	AG515766	1	CAVITY PLUG	
12	AG517618	1	CONNECTOR MA 3 WAY 280 SEALED	
13	AG519288	2	TERM METRI-PACK M280/20-16 GA	
14	AG520270	1	LOCK-METRIPACK,280/3 WAY	

Copyright © 2008 AGCO Corporation

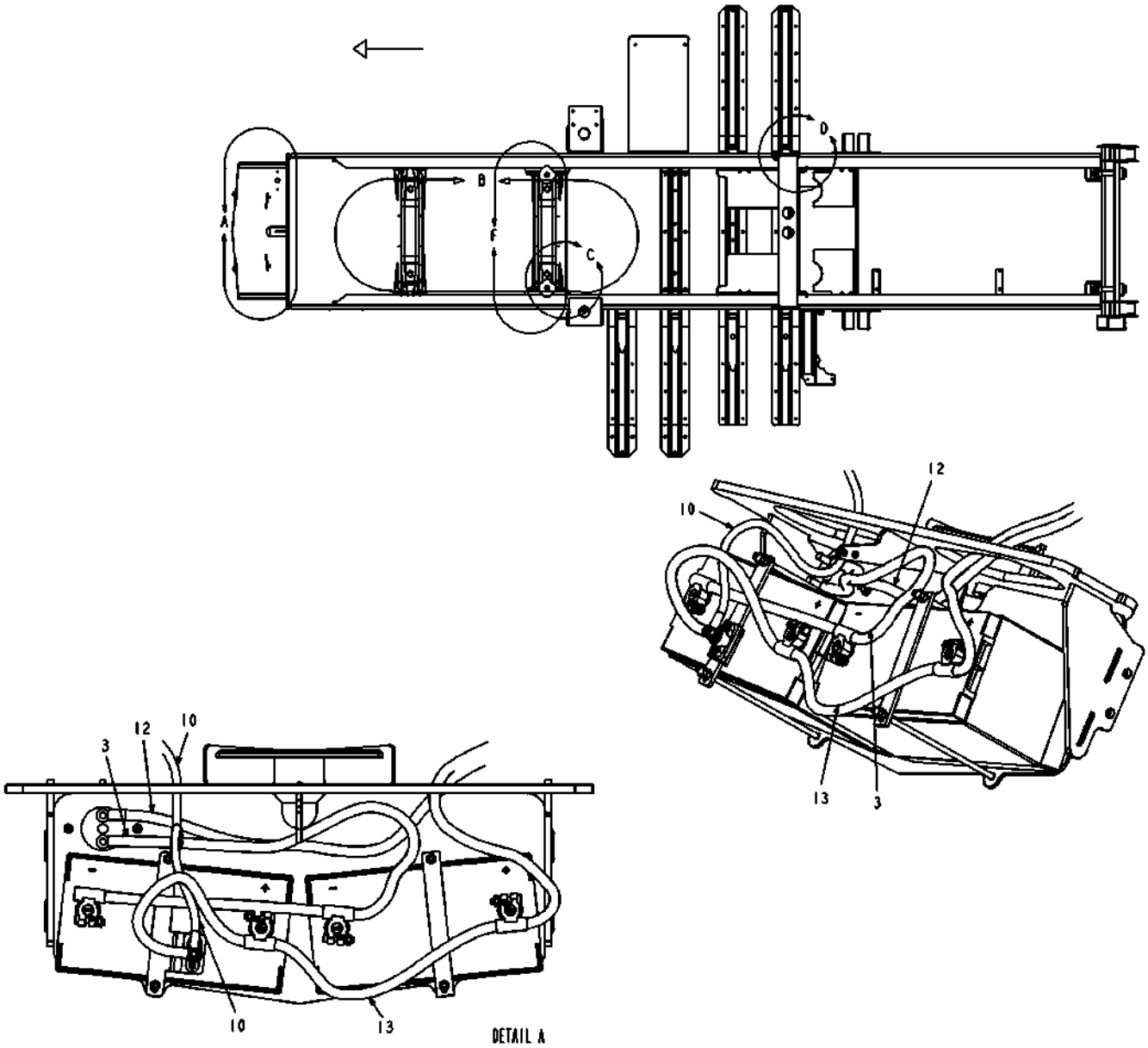

517971D1-03-T048-01.TIF

Copyright © 2008 AGCO Corporation

BATTERY CABLE-INSTALL,7X60

ITEM	PART #	QTY	DESCRIPTION	COMMENTS
2	512671D1	-	HARNESS-I/O,TRACK ADJUST,TLLT	[A]
3	WR126918	1	CABLE-BATTERY,NEGATIVE	
6	WR126321	-	SCHMATIC-HYDRAULIC,3000	
10	WR133976	1	CABLE-BATTERY,POS,CAB	
12	WR134369	1	CABLE-BATTERY,NEG,START,DISC	
13	WR134370	1	CABLE-BATTERY,POSITIVE	
20	AG521359	-	CLAMP-HOSE,COATED,.687 IDX.50	
21	AG521728	-	BOLT-M6-1.0X16,,SS,HHD	
34	AG562821	1	CLAMP 1.12-COATED HOSE	
35	AG562792	-	WASHER LOCK M6 SPRING ZN	
	FOOTNOTE [A]		1ST USED ON S/N 7650VNS8P1011	

Copyright © 2008 AGCO Corporation

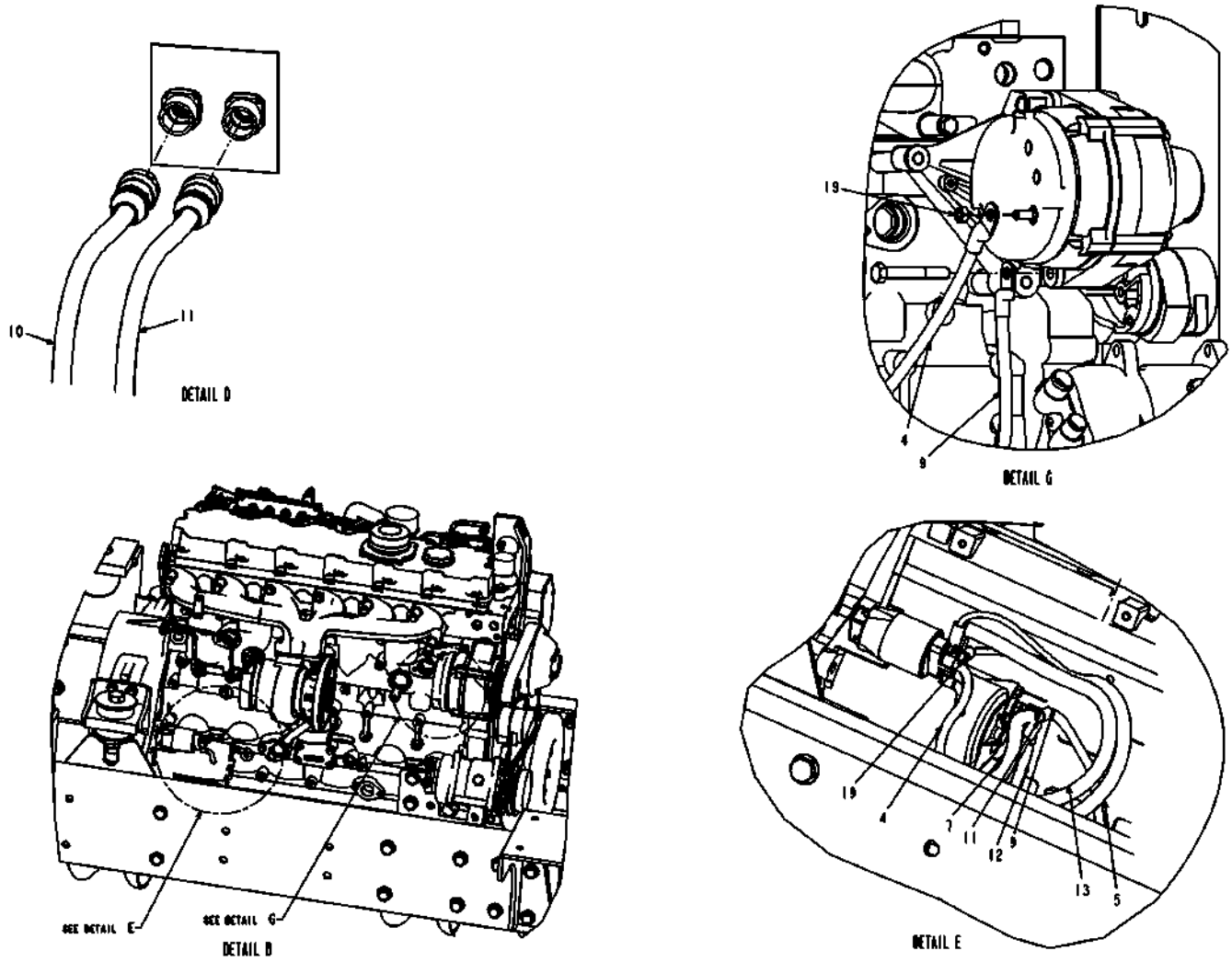

517971D1-03-T048-02.TIF

Copyright © 2008 AGCO Corporation

BATTERY CABLE-INSTALL,7X60

ITEM	PART #	QTY	DESCRIPTION	COMMENTS
4	WR126920	1	CABLE-BATTERY,STARTER,ALT	
5	525203D1	1	HARNESS-MAG SWITCH, PWR	
7	WR128273	1	CABLE-BATTERY,FRAME,GND	
9	525514D1	1	CABLE-GND,ALT,STARTER	
10	WR133976	1	CABLE-BATTERY,POS,CAB	
11	WR133977	1	CABLE-BATTERY,NEG,CAB	
12	WR134369	1	CABLE-BATTERY,NEG,START,DISC	
13	WR134370	1	CABLE-BATTERY,POSITIVE	
19	AG520772	3	NUT-M8-1.25,,SS,HHD	

Copyright © 2008 AGCO Corporation

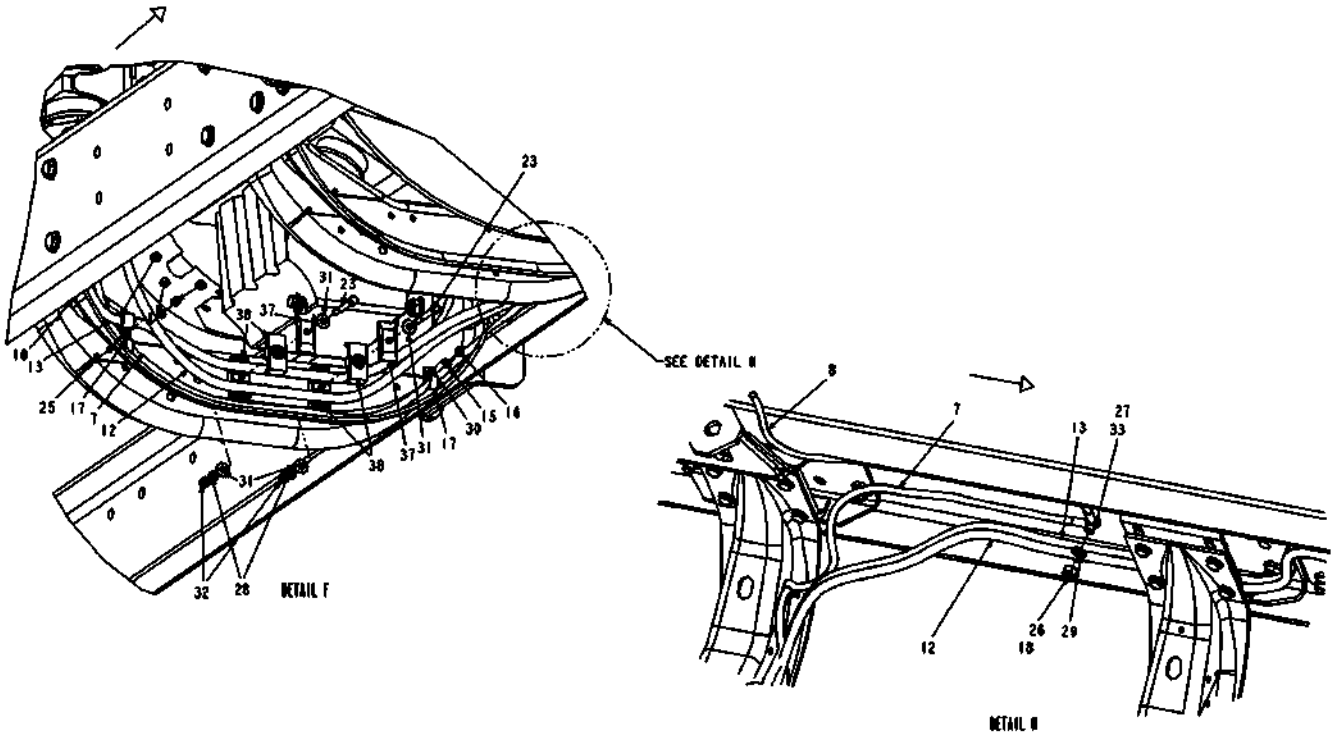

517971D1-03-T048-03.TIF

Copyright © 2008 AGCO Corporation

BATTERY CABLE-INSTALL,7X60

ITEM	PART #	QTY	DESCRIPTION	COMMENTS
7	WR128273	1	CABLE-BATTERY,FRAME,GND	
8	WR129305	1	CABLE-GND,CAB	
10	WR133976	1	CABLE-BATTERY,POS,CAB	
12	WR134369	1	CABLE-BATTERY,NEG,START,DISC	
13	WR134370	1	CABLE-BATTERY,POSITIVE	
15	AG515122	2	WASHER 0.25 LK SS REG	
16	AG515123	2	NUT .25-20NC HEX SS REG	
17	AG515373	2	CLIP,WIRING	
18	AG518989	-	SEALANT NONCORROSIVE 10.3 OZ	
23	AG561384	2	BOLT 0.31-18NCX 2.50 G5 ZN HHD	
25	AG561952	1	BOLT 0.25-20NCX 1.25 SS HHD	
26	AG562045	1	NUT 0.50-13NC HEX SS REG	
27	AG562046	1	WASHER 0.50 FL SS REG TYPE-B	
28	AG562051	3	WASHER 0.31 LK SS REG	
29	AG562053	1	WASHER 0.50 LK SS REG	
30	AG562064	2	BOLT 0.25-20NCX 1.00 SS HHD	
31	AG562074	4	WASHER 0.31 FL SS REG TYPE-B	
32	AG562090	2	NUT 0.31-18NC HEX SS REG	
33	AG562115	1	BOLT 0.50-13NCX 1.25 S.S. HHD	
37	AG608535	2	TWIN COVER PLATE-TCP-T3	
38	AG608580	4	CLAMP 1.00 TWIN PP	

Copyright © 2008 AGCO Corporation

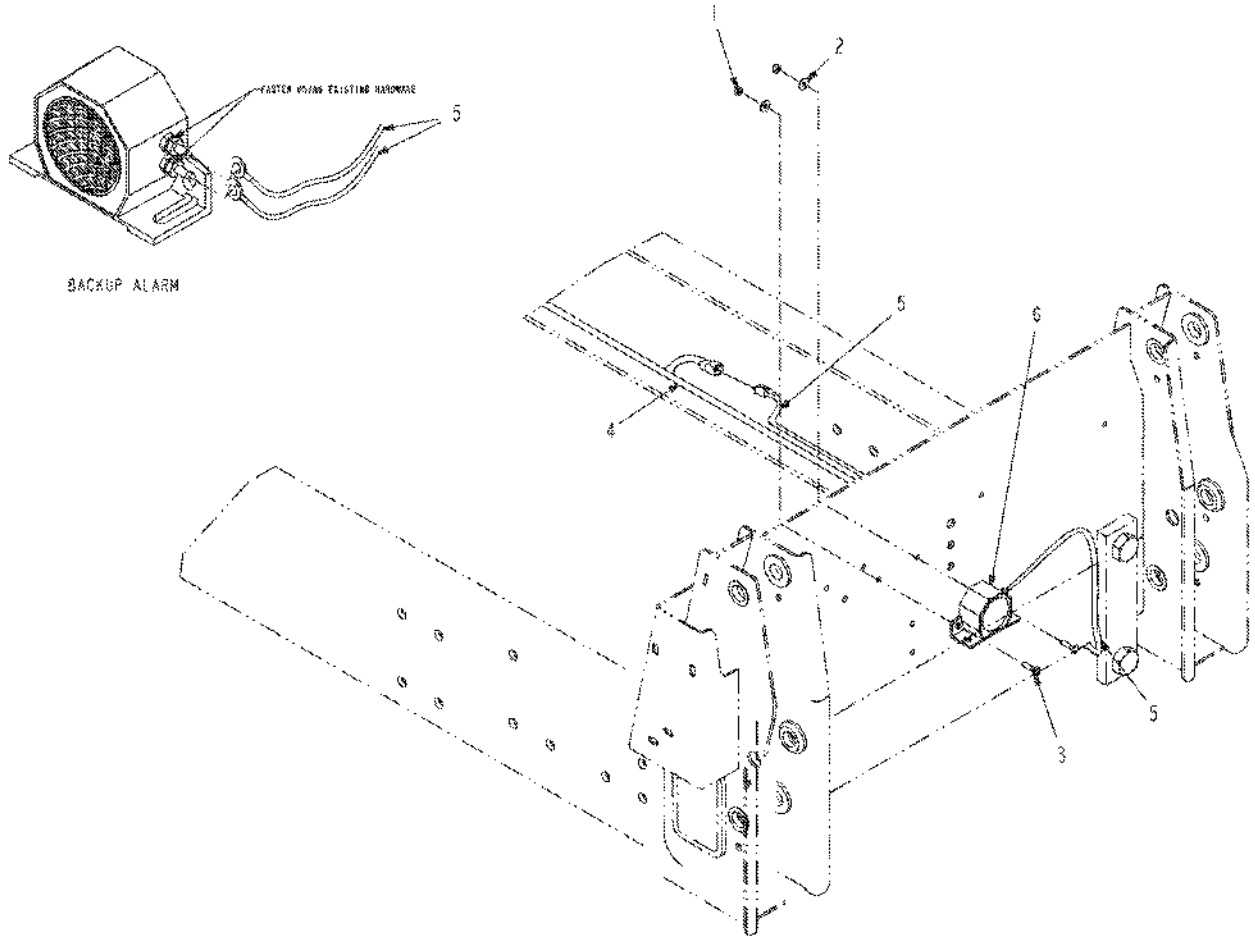

505701D1-02-N547-.TIF

Copyright © 2008 AGCO Corporation

INSTALL-ELEC,BACKUP ALARM,7X50

ITEM	PART #	QTY	DESCRIPTION	COMMENTS
1	WR11494	2	NUT-CENTERLOCK, 1/4	
2	AG550507	2	WASHER 0.25 FL ZN REG TYPE-B	
3	AG550698	2	BOLT 0.25-20NCX 1.00 G5 ZN HHD	
4	512671D1	-	HARNESS-I/O,TRACK ADJUST,TLLT	[A]
5	505561D1	1	HARNESS-BACKUP,7X50	
6	6579858	1	ALARM-BACKUP	
	FOOTNOTE [A]		1ST USED ON S/N 7650VNS8P1011	

Copyright © 2008 AGCO Corporation

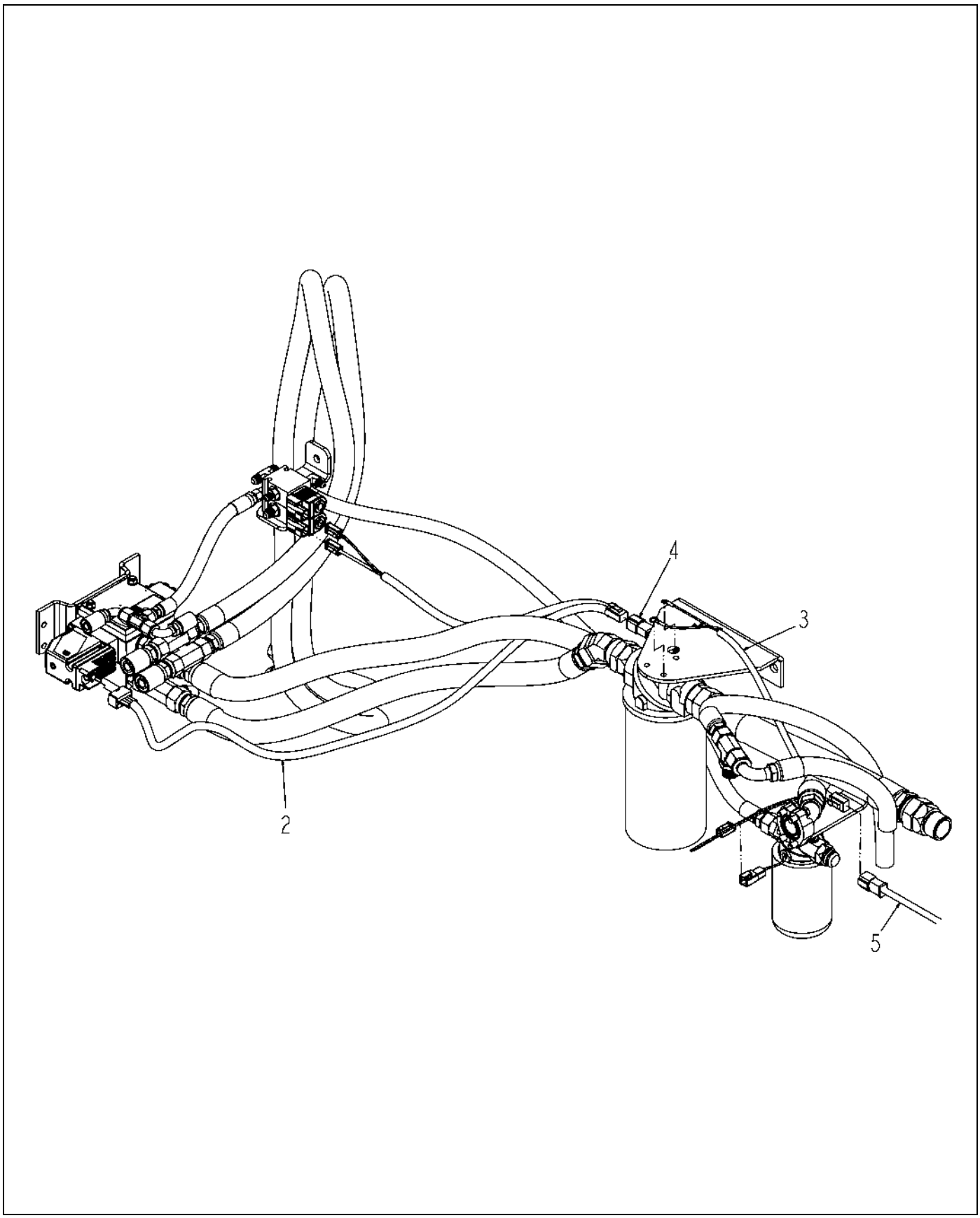

128250-02-N547-01.TIF

Copyright © 2008 AGCO Corporation

ITEM	PART #	QTY	DESCRIPTION	COMMENTS
2	WR128251	1	HARNESS-FRONT,WHEEL,ASSIST	
3	WR129082	1	HARNESS-FILTERS,FWA	
4	AG126910	-	HARNESS-CHASSIS,ENG,TRANS	
5	512671D1	-	HARNESS-I/O,TRACK ADJUST,TLLT	[A]
6	AG518989	AR	SEALANT NONCORROSIVE 10.3 OZ	
	FOOTNOTE [A]		1ST USED ON S/N 7650VNS8P1011	

Copyright © 2008 AGCO Corporation

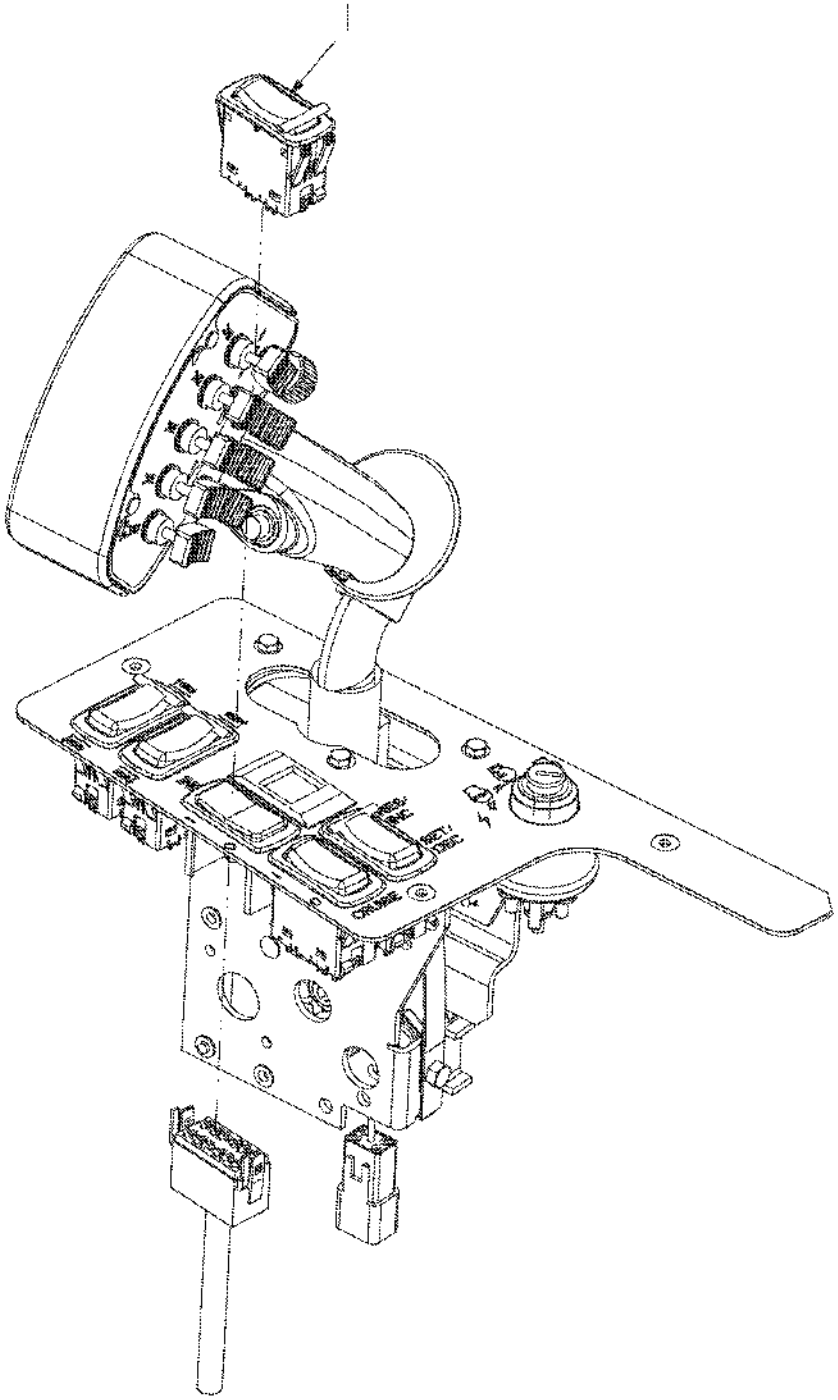

128250-02-N547-02.TIF

Copyright © 2008 AGCO Corporation

ITEM	PART #	QTY	DESCRIPTION	COMMENTS
1	AG124431	1	SWITCH-RKR,OFF-ON,W/LT,CS-L	

Copyright © 2008 AGCO Corporation

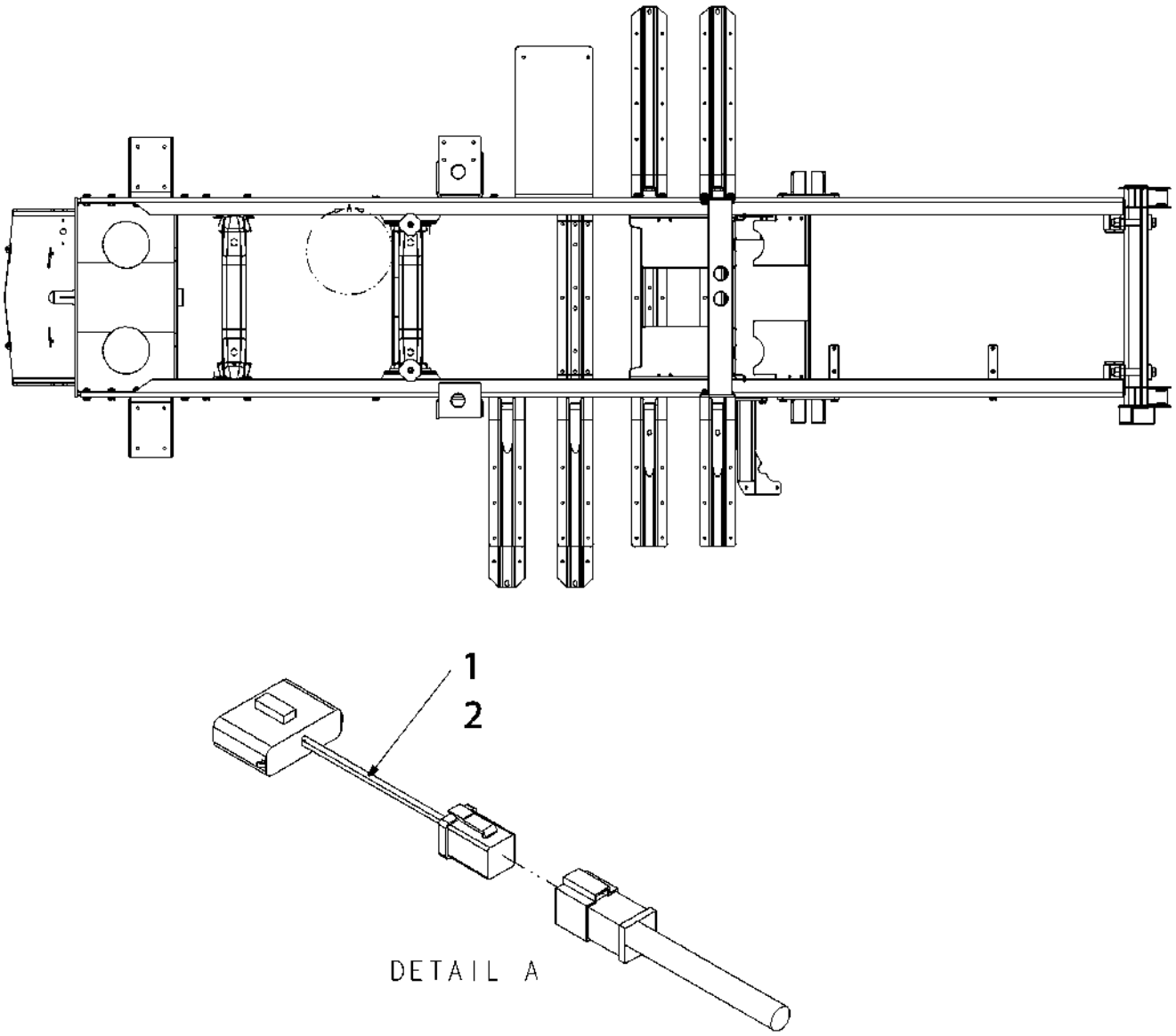

135439-02-T387-.TIF

Copyright © 2008 AGCO Corporation

ELEC GROUP-INSTALL,2WD

ITEM	PART #	QTY	DESCRIPTION	COMMENTS
1	WR135437	1	HARNESS-LOAD,FWA	
2	AG553557	1	TIE CABLE 7.37 .06-1.37 BLACK	

Copyright © 2008 AGCO Corporation

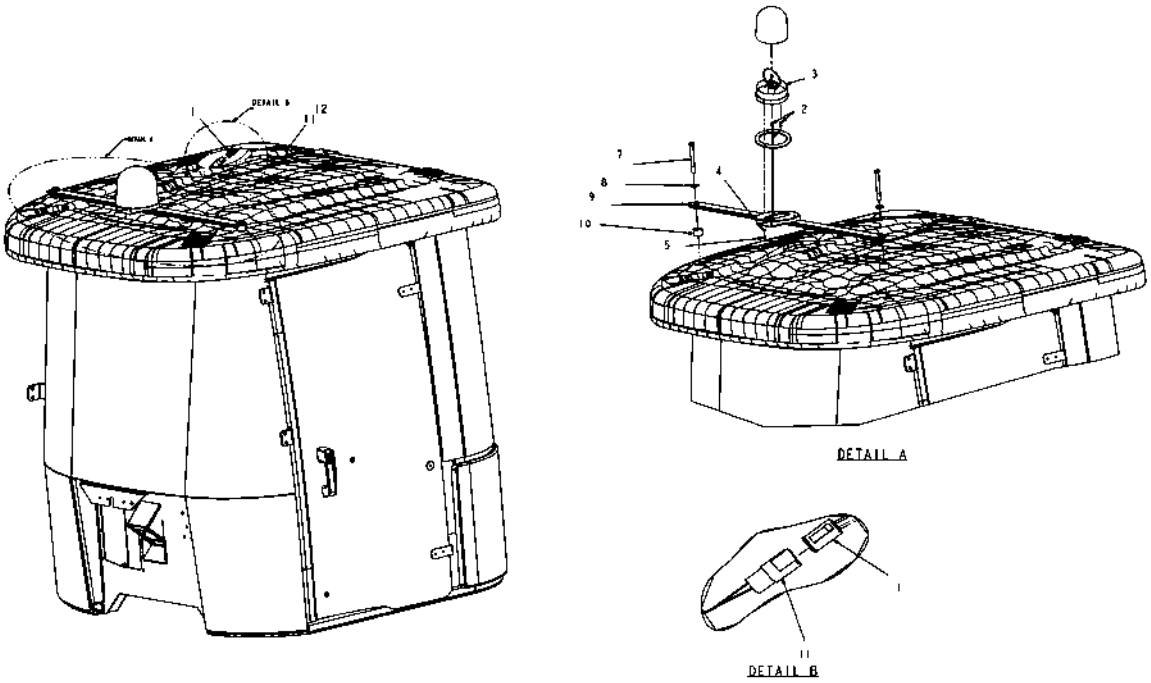

505737D1-03-N276-.TIF

Copyright © 2008 AGCO Corporation

ELEC INSTALL-BEACON,AMBER,7X50

ITEM	PART #	QTY	DESCRIPTION	COMMENTS
1	WR126888	-	HARNESS-ROOF,MAIN	
2	AG518989	AR	SEALANT NONCORROSIVE 10.3 OZ	
3	AG522715	1	LAMP-ROTATING,AMBER	SEE PAGE 8-65
4	AG522717	3	WASHER #8 FL SS REG TYPE-B	
5	AG522753	3	SCR-#8 X .75,SS,HWH,TPG	
6	AG553557	AR	TIE CABLE 7.37 .06-1.37 BLACK	
7	400231X1	2	BOLT-M12X1.75X120 ZNDI HHD10.9	
8	400381X1	2	WASHER-HARD-13.5IDX30 ODX4THK	
9	508718D1	1	WLDMT-LAMP,ROTATING,RG	
10	505671D1	2	TUBE-ROUND,1.25 DIA X 1.00	
11	505802D1	1	HARNESS-BEACON,7X50	
12	AG517942	4	MOUNT WIRE TIE ADHESIVE B 4WAY	

Copyright © 2008 AGCO Corporation

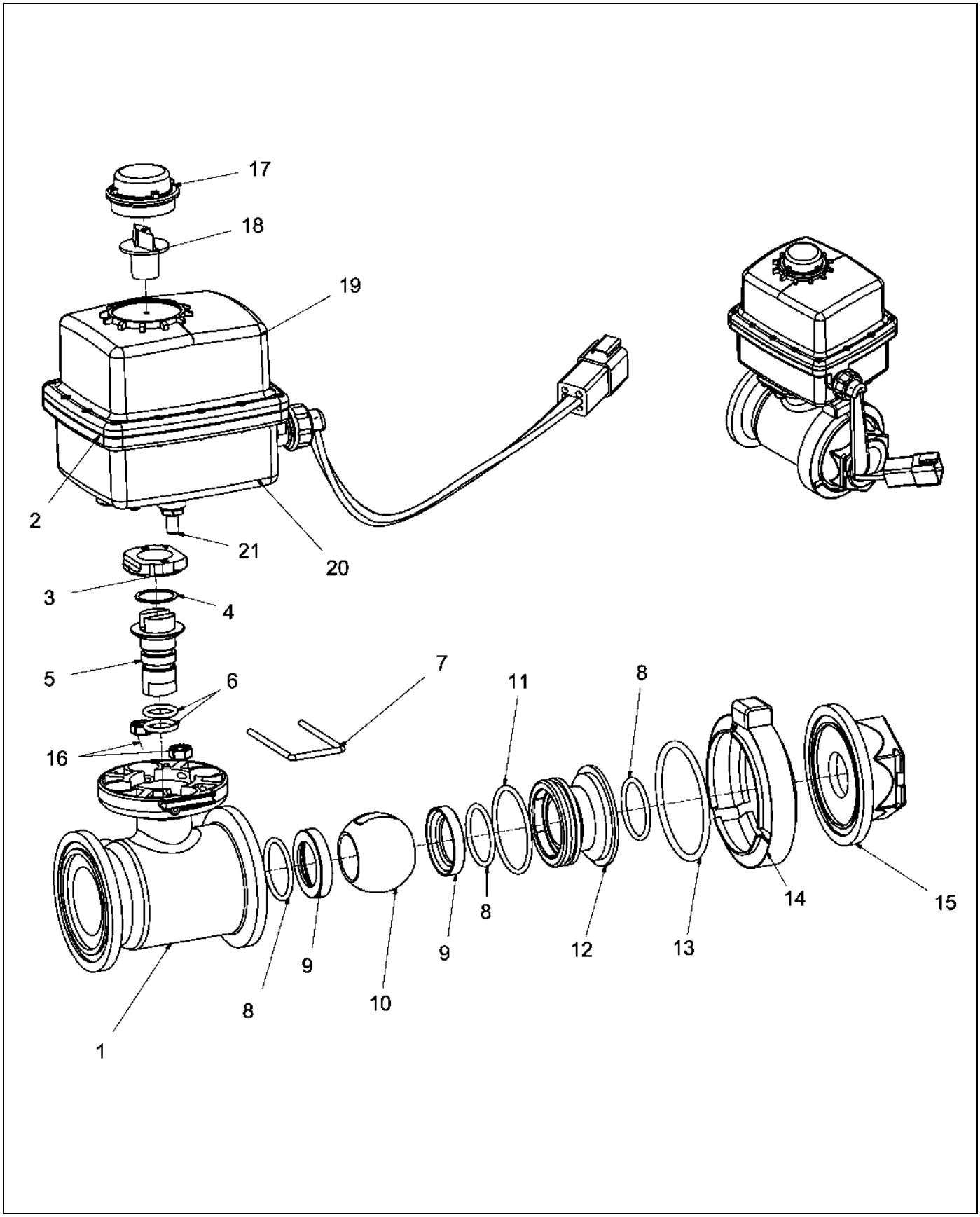

121883-A.TIF

Copyright © 2008 AGCO Corporation

VALVE-BALL,1.00FP FLGXNPT,ELEC

ITEM	PART #	QTY	DESCRIPTION	COMMENTS
REF	AG131748	-	MOTOR, GEAR ASM	
REF	AG131739	-	BOARD, CIRCUIT W/CABLE	
REF	AG060921	1	KIT/REPAIR,KZ VALVE 121924	
REF	AG331436	-	SEAL/KIT-VITON	
1	AG121924	1	BODY-VALVE,FLG OUTLET,1.00,2W	
2	AG121929	1	ACTUATOR-000-60-M-9	
3	AG131731	1	RETAINER, STEM	
4	AG131732	1	WASHER, THRUST	
5	AG131733	1	STEM, SS	
6	AG131734	2	O-RING, STEM	
7	AG726981	1	PIN / HAIR	
8	AG131735	3	O-RING, SEAT	
9	AG131776	2	COLLECTOR, OIL	
10	AG726982	1	BALL / 2-WAY	
11	AG131737	1	O-RING	
12	AG131738	1	FLANGE	
13	WR35020	1	ORING-SEAL,VALVE,QC3	
14	AG121922	1	CLAMP-V BAND,QX4	
15	AG121925	1	CAP-END,1.00 FNPT	
16	AG121926	2	NUT-KEP"S,.50-20NC	
17	AG131743	1	DOME, CLEAR	
18	AG131744	1	FLAG	
19	AG131745	1	DOME, LID	
20	AG131746	2	CASE, BOTTOM	
21	AG131747	2	STUD, MOUNTING	

Copyright © 2008 AGCO Corporation

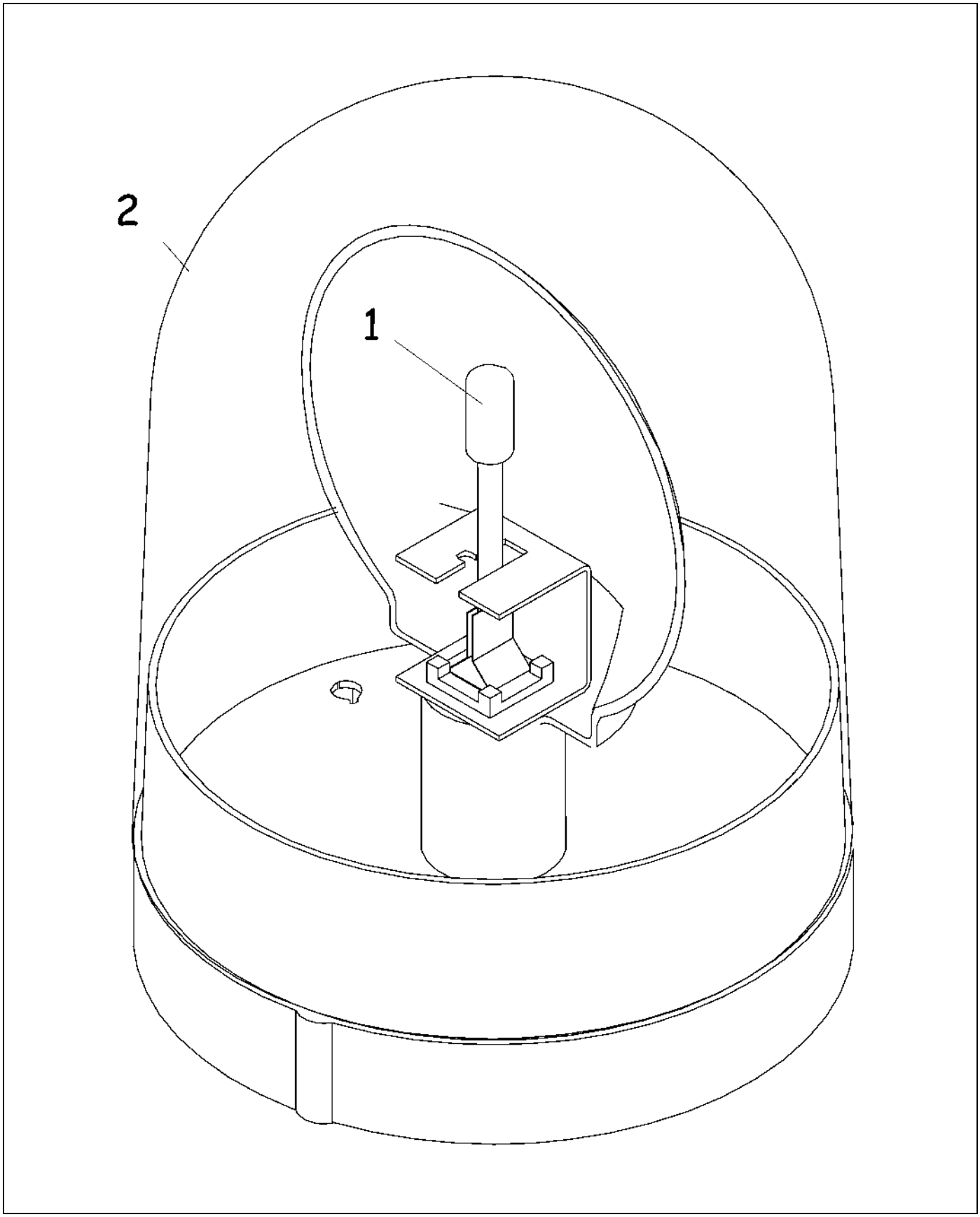

522715-A.TIF

Copyright © 2008 AGCO Corporation

LAMP-ROTATING,AMBER

ITEM	PART #	QTY	DESCRIPTION	COMMENTS
1	AG331620	1	BULB	
2	AG425755	1	LENS/AMBER-522715	

Copyright © 2008 AGCO Corporation

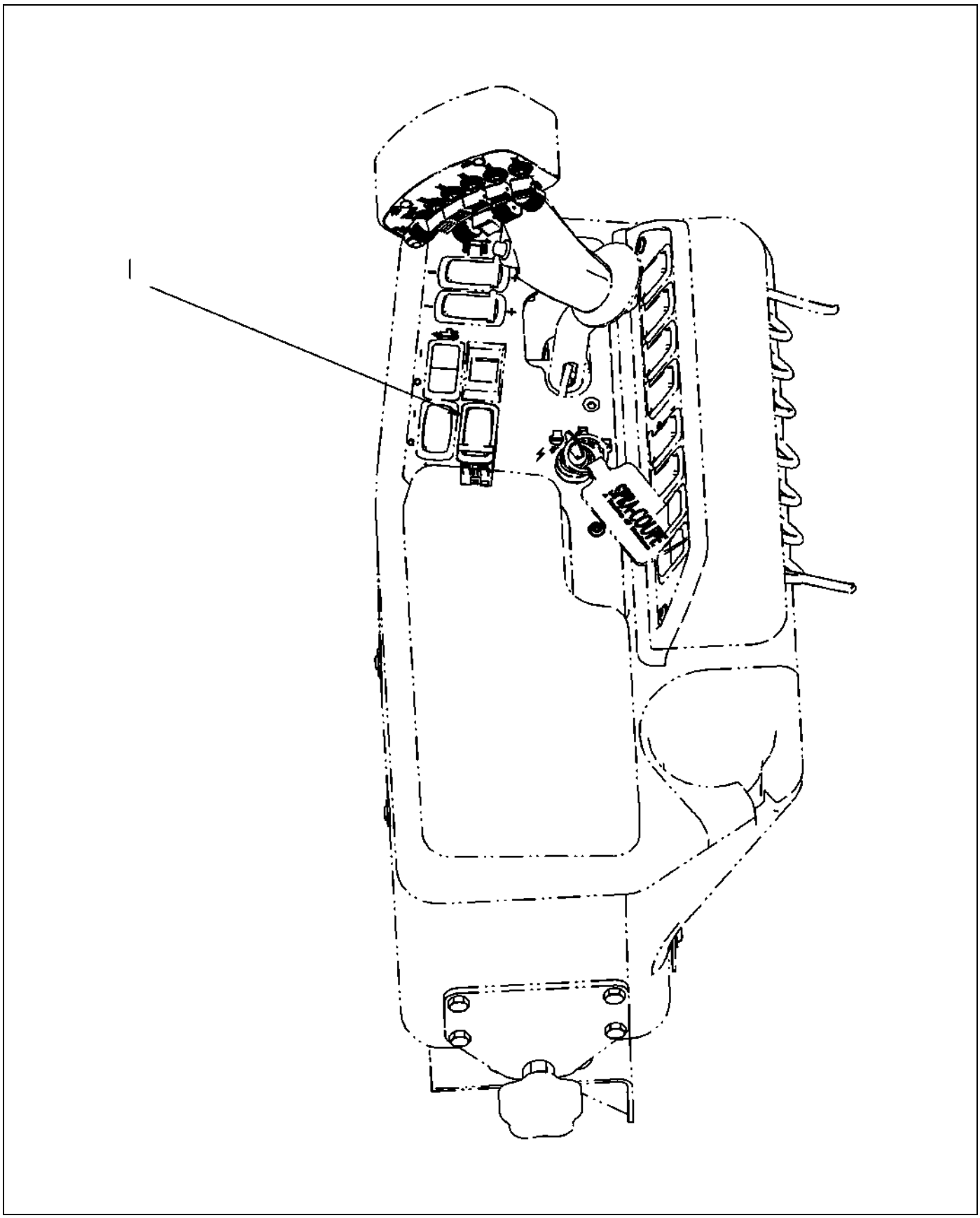

523657D1-01-T026-.TIF

Copyright © 2008 AGCO Corporation

SWITCH-INSTALL,AUTOGUIDE

ITEM	PART #	QTY	DESCRIPTION	COMMENTS
1	AG129570	1	SWITCH-RKR,OFF-ON-ON,AS,CS-L	

Copyright © 2008 AGCO Corporation

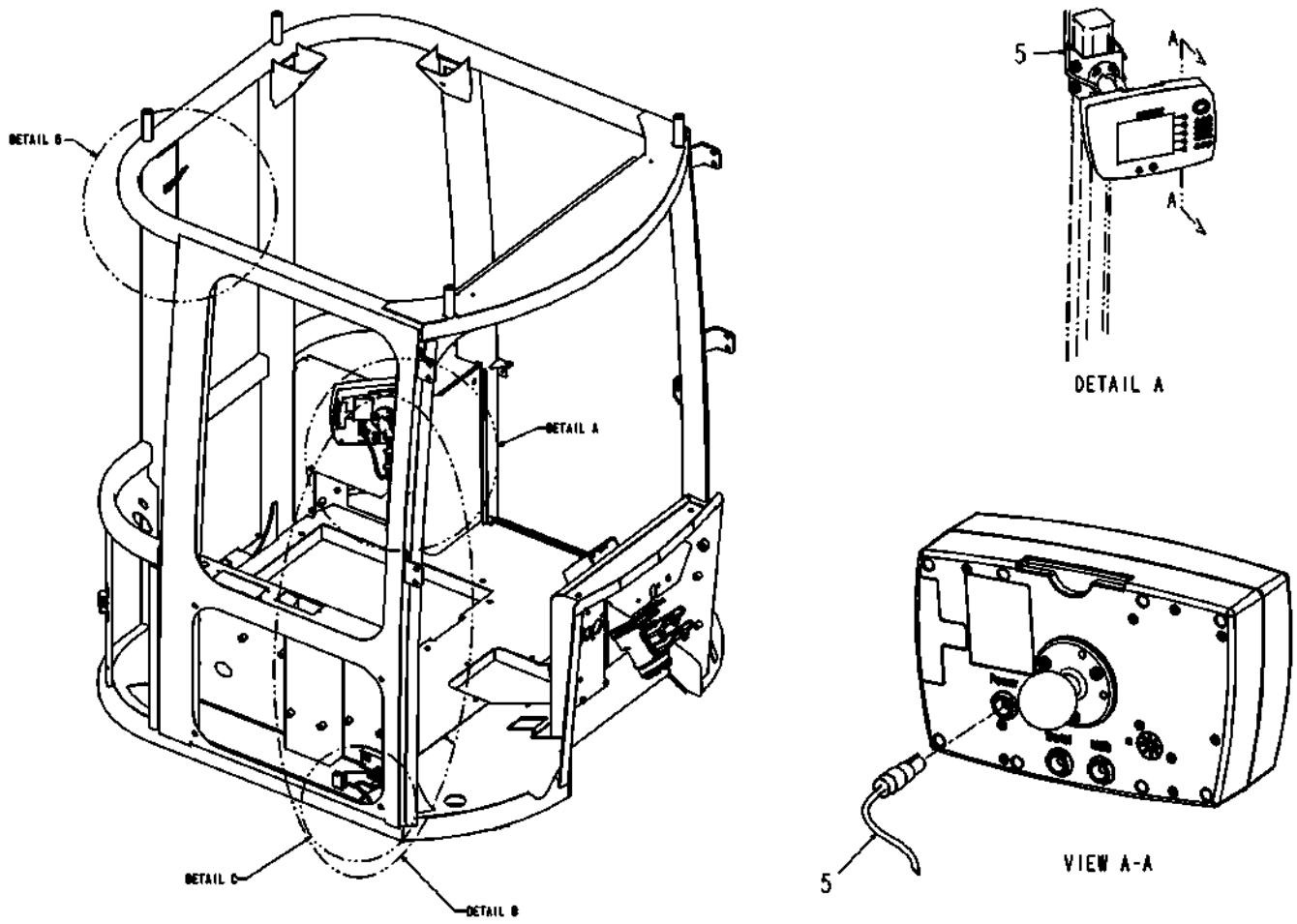

508703D1-02-T387-01.TIF

Copyright © 2008 AGCO Corporation

ITEM	PART #	QTY	DESCRIPTION	COMMENTS
5	524390D1	1	HARNESS-TERMINAL,MITRON,AG	

Copyright © 2008 AGCO Corporation

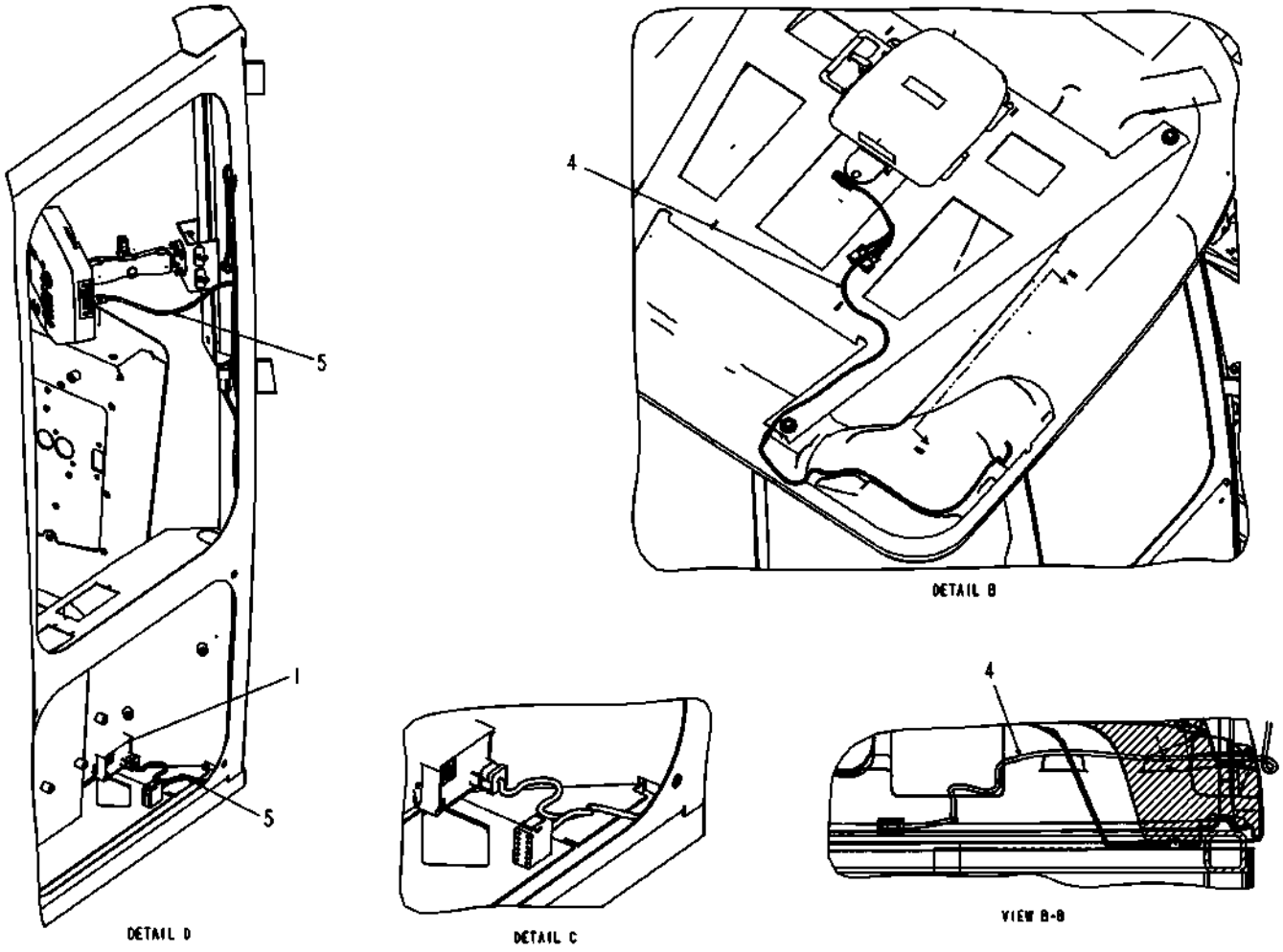

508703D1-02-T387-02.TIF

Copyright © 2008 AGCO Corporation

ITEM	PART #	QTY	DESCRIPTION	COMMENTS
1	515784D1	1	MODULE-CAN,AUTOGUIDE	
4	524389D1	1	HARNESS-TOPDOCK,CAB,AG	
5	524390D1	1	HARNESS-TERMINAL,MITRON,AG	

Copyright © 2008 AGCO Corporation

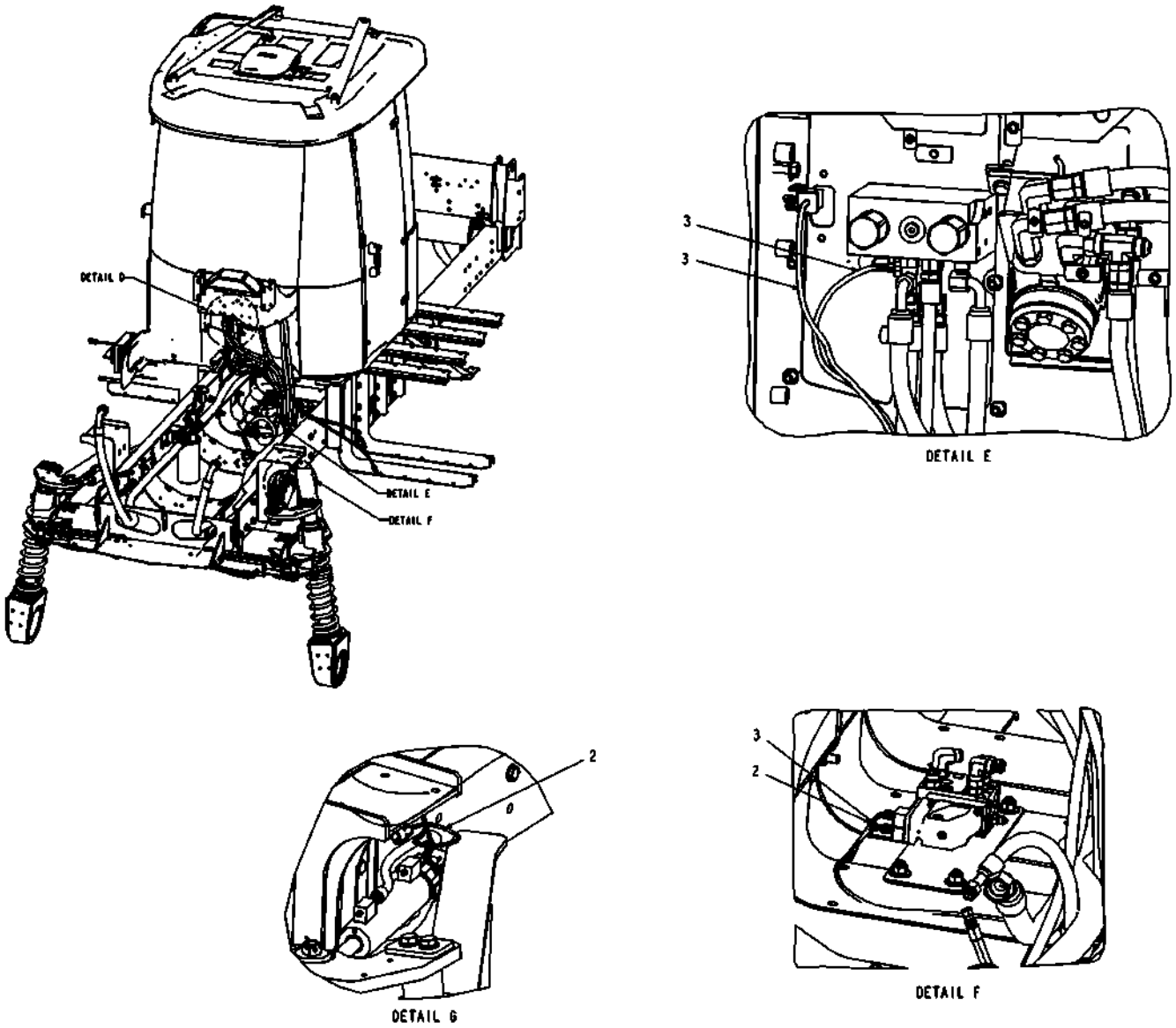

508703D1-02-T387-03.TIF

Copyright © 2008 AGCO Corporation

ITEM	PART #	QTY	DESCRIPTION	COMMENTS
2	524387D1	1	HARNESS-WAS,7X60	
3	524388D1	1	HARNESS-VALVE,AUTOGUIDE	

Copyright © 2008 AGCO Corporation

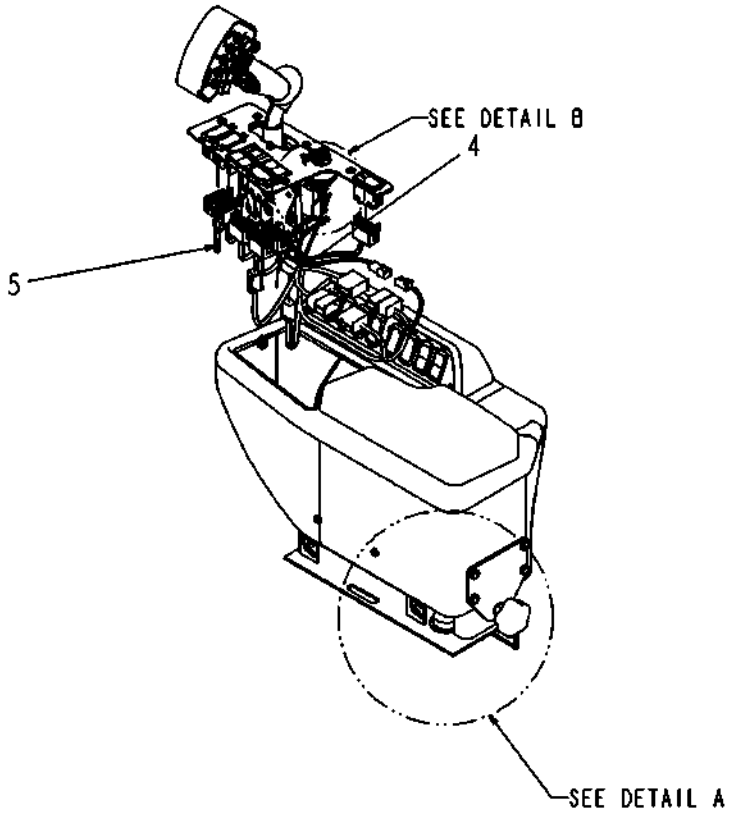

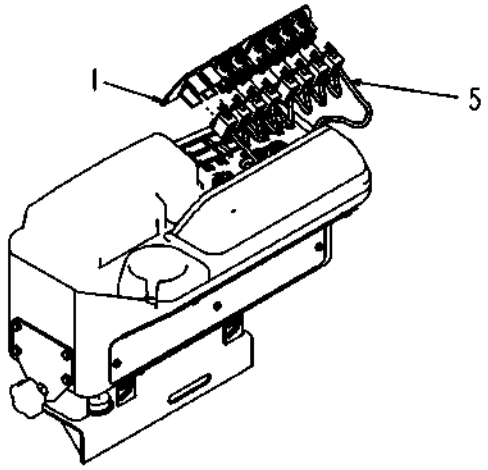

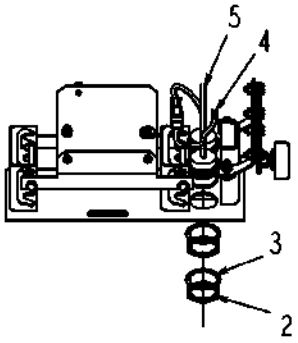

DETAIL A

523994D1-01-R993-.TIF

Copyright © 2008 AGCO Corporation

HARNESS INSTALL-RH CONSOLE,SC

ITEM	PART #	QTY	DESCRIPTION	COMMENTS
1	WR127121	-	PANEL ASM-SWITCH,CONSOLE	SEE PAGE 8-2
2	AG515697	2	NUT PANEL ELEC CONNECTOR	
3	AG515698	2	WASHER LOCK ELEC CONNECTOR	
4	515520D1	1	HARNESS-RH CONSOLE,SC	
5	523975D1	1	HARNESS-SWITCHES,RH CONSOLE,SC	

Copyright © 2008 AGCO Corporation

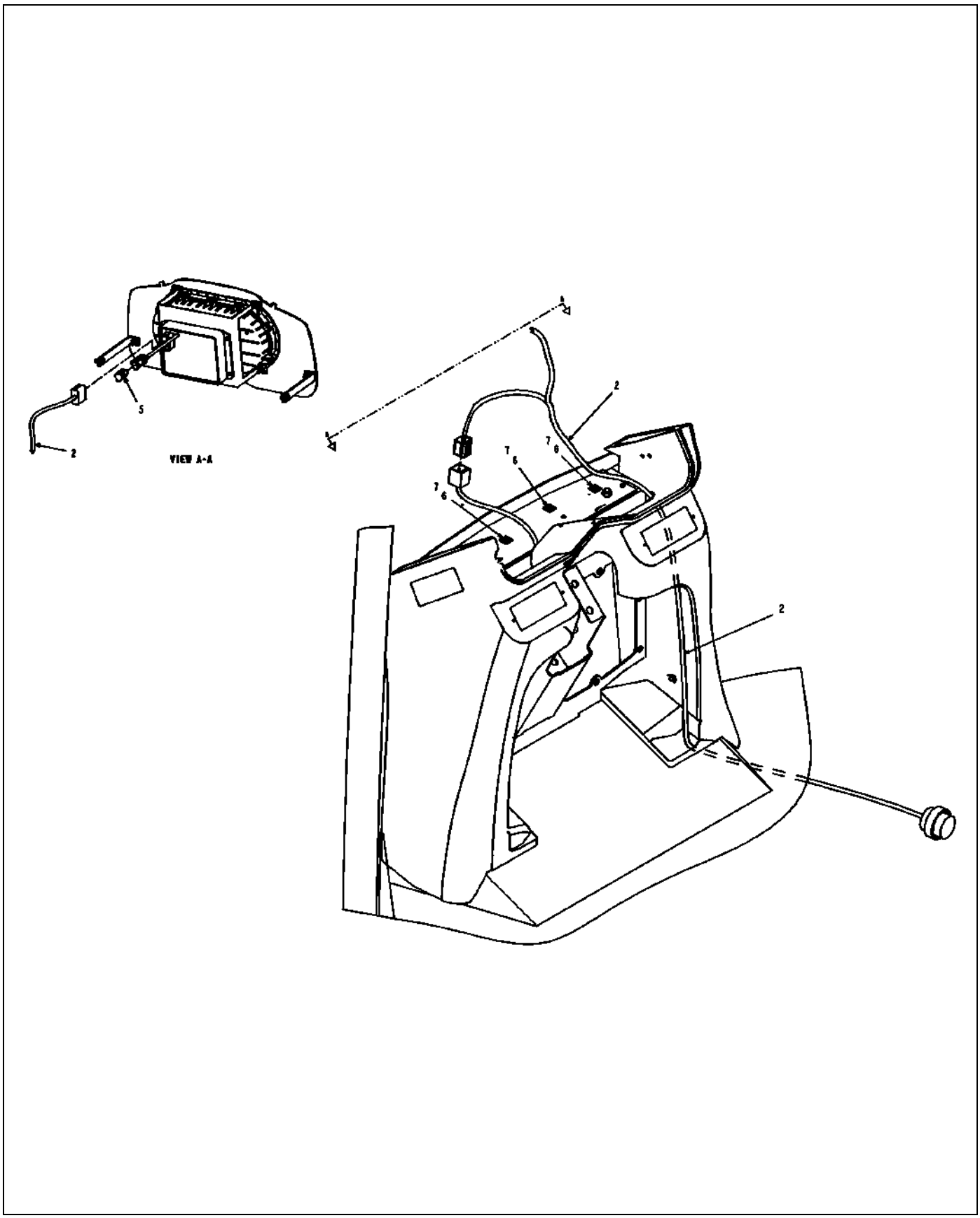

523970D1-01-R993-01.TIF

Copyright © 2008 AGCO Corporation

HARNESS INSTALL-CENTER CONSOLE

ITEM	PART #	QTY	DESCRIPTION	COMMENTS
2	524072D1	1	HARNESS-CONSOLE,CENTER	
5	AG522410	1	TERMINATOR-PLUG,3WAY,J1939	
6	AG517942	3	MOUNT WIRE TIE ADHESIVE B 4WAY	
7	AG553557	3	TIE CABLE 7.37 .06-1.37 BLACK	

Copyright © 2008 AGCO Corporation

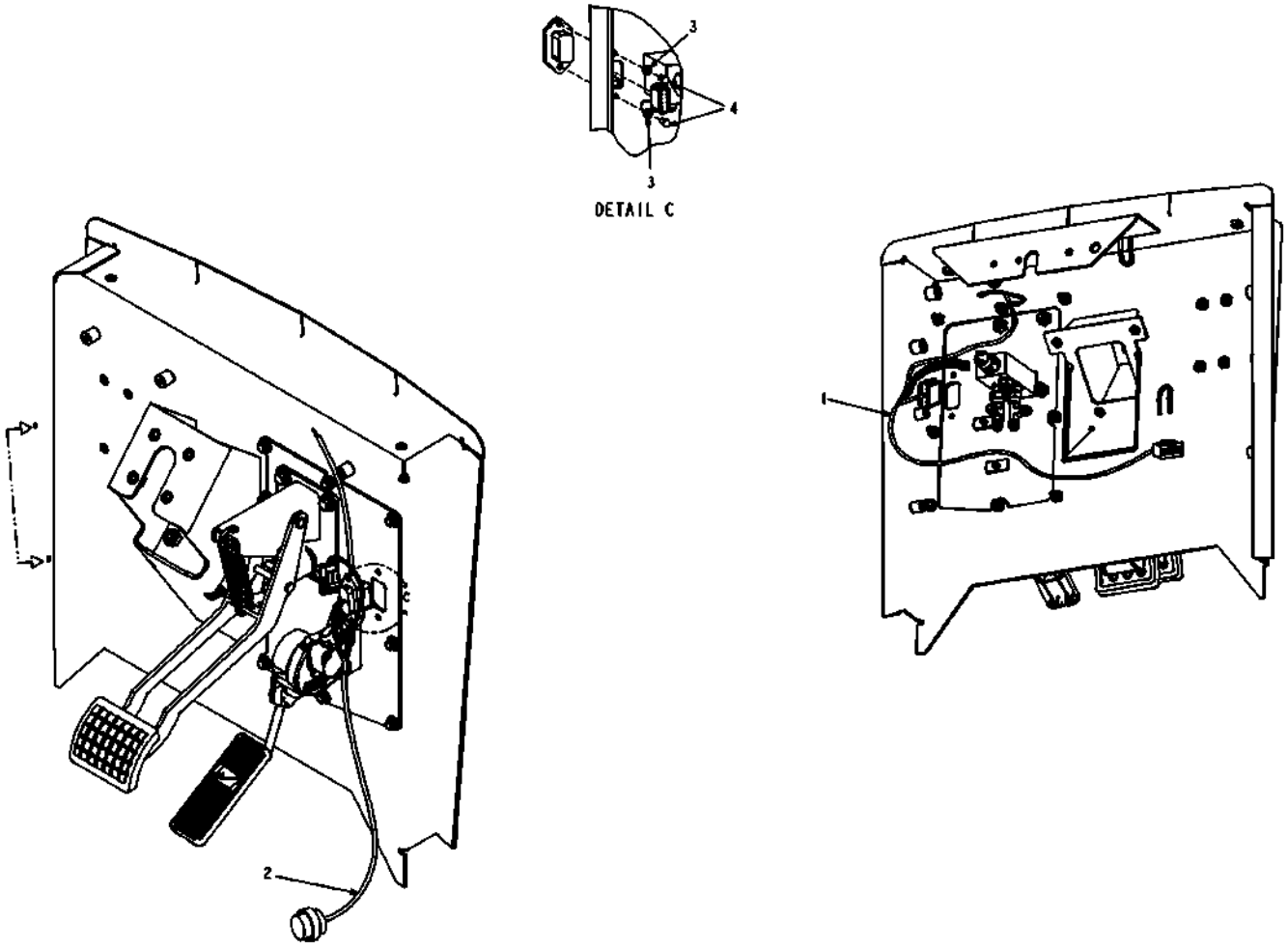

523970D1-01-R993-02.TIF

Copyright © 2008 AGCO Corporation

HARNESS INSTALL-CENTER CONSOLE

ITEM	PART #	QTY	DESCRIPTION	COMMENTS
1	524073D1	1	HARNESS-WIPER/HORN	
2	524072D1	1	HARNESS-CONSOLE,CENTER	
3	AG515122	2	WASHER 0.25 LK SS REG	
4	AG521728	2	BOLT-M6-1.0X16,,SS,HHD	

Copyright © 2008 AGCO Corporation

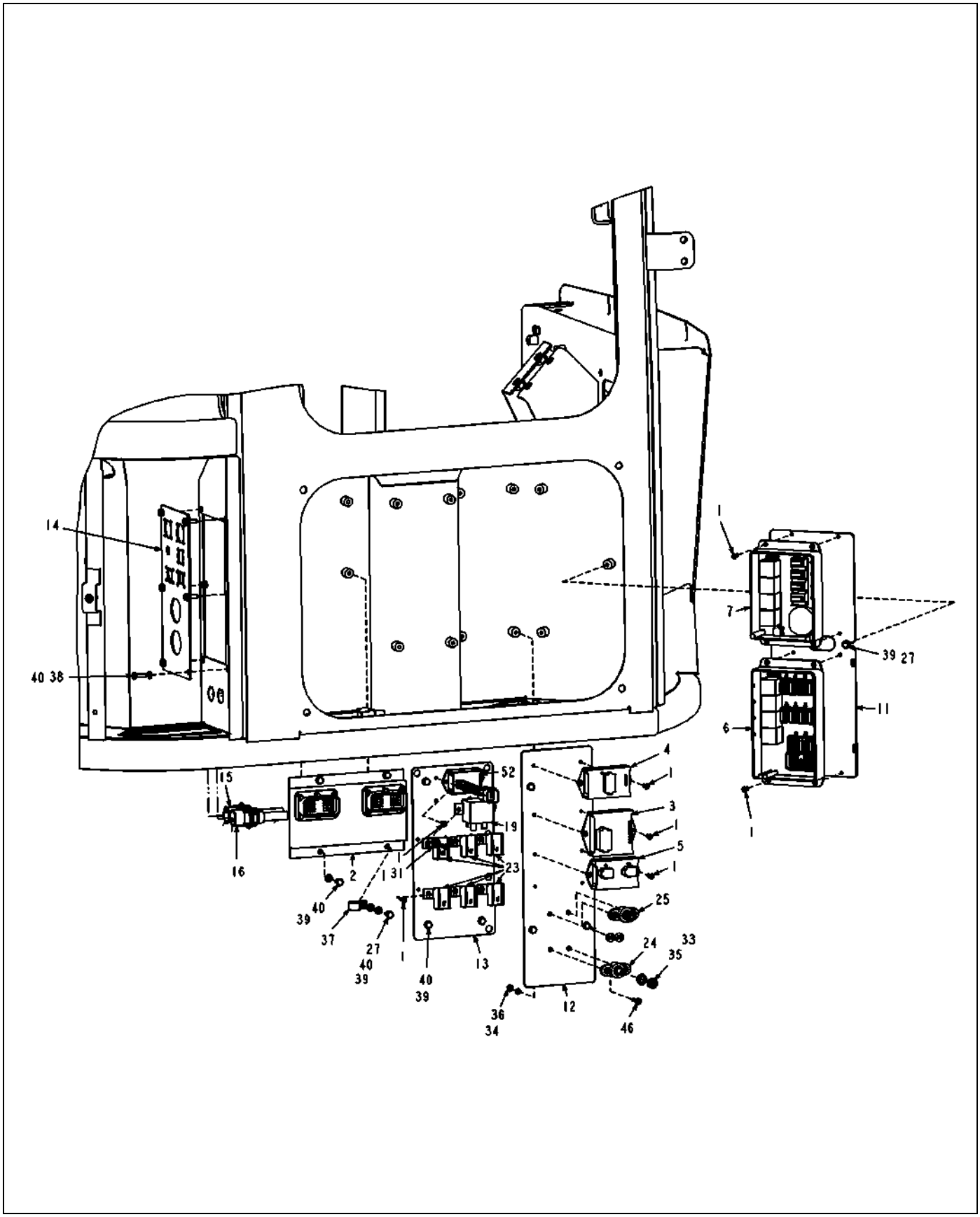

523972D1-02-T216-01.TIF

Copyright © 2008 AGCO Corporation

ELEC INSTALL-CAB, 7X60, EURO

ITEM	PART #	QTY	DESCRIPTION	COMMENTS
1	AG029293	24	SCREW 10-24X0.50 TAP IWHHD	
2	515100D1	1	INSTL-MASTER MODULE,AED	SEE PAGE 8-28
3	AG129242	1	MODULE-FLASHER,EURO	
4	AG121749	1	MODULE-RELAY,4 PACK,NO	[A]
5	AG121750	1	MODULE-RELAY,2 PACK	
6	AG124451	1	MODULE-POWER DIST,11 FUSE	SEE PAGE 8-77
7	AG124452	1	MODULE-POWER DIST,HI CURRENT	SEE PAGE 8-78
11	WR126905	1	PLATE-PDM,MINI CAB	
12	WR126906	1	PLATE-RELAY,MINI CAB	
13	513766D1	1	PLATE-AUX,MINI CAB	
14	517403D1	1	PLATE-BULKHEAD	
15	WR133978	1	CABLE-PWR STUD,CAB BLKHD	
16	WR133979	1	CABLE-GND STUD,CAB BLKHD	
19	AG516864	1	RELAY-ELEC,12VDC,75AMP	
23	AG520052	6	CAP METRI PACK 630 P2S 2-WAY	
24	AG520092	1	JUNCTION BLOCK-STUD TYPE,BLK	
25	AG520093	1	JUNCTION BLOCK-STUD TYPE,RED	
27	AG520879	2	WASHER-FLAT,M6,ZN,REG	
30	AG553557	-	TIE CABLE 7.37 .06-1.37 BLACK	
31	AG553670	2	WASHER #10 FL ZN REG TYPE-B	
33	AG562050	2	WASHER 0.37 LK SS REG	
34	AG562061	4	NUT #10-24NC HEX SS REG	
35	AG562065	2	NUT 0.37-16NC HEX SS REG	
36	AG562081	4	WASHER #10 LK SS REG	
37	AG562238	1	CLAMP CTD 1.50IDX 0.75WIDE	
38	AG562327	6	BOLT M6-1.00X20MM G8.8 ZN HHD	
39	AG562639	15	BOLT M6 1.00X12MM G8.8 ZN HHD	
40	AG562792	20	WASHER LOCK M6 SPRING ZN	
41	AG562925	1	FUSE BLADE 30A ATC	
42	AG562929	1	FUSE 20A BLADE ATC	
43	AG562930	5	FUSE 15A BLADE ATC	
44	AG562931	5	FUSE 10A BLADE ATC	
45	AG562933	2	FUSE 5A BLADE ATC	
46	AG563094	4	SCREW 10-24X0.75 PH PHS SS	
50	AG562928	2	FUSE 25A BLADE ATC	
51	508170D1	1	ELEC INSTL-JUMPER,STD HVAC	SEE PAGE 8-29
52	513016D1	1	MODULE-RELAY,3 SECOND DELAY	
	FOOTNOTE [A]		AG719617 - RELAYS (4)	

Copyright © 2008 AGCO Corporation

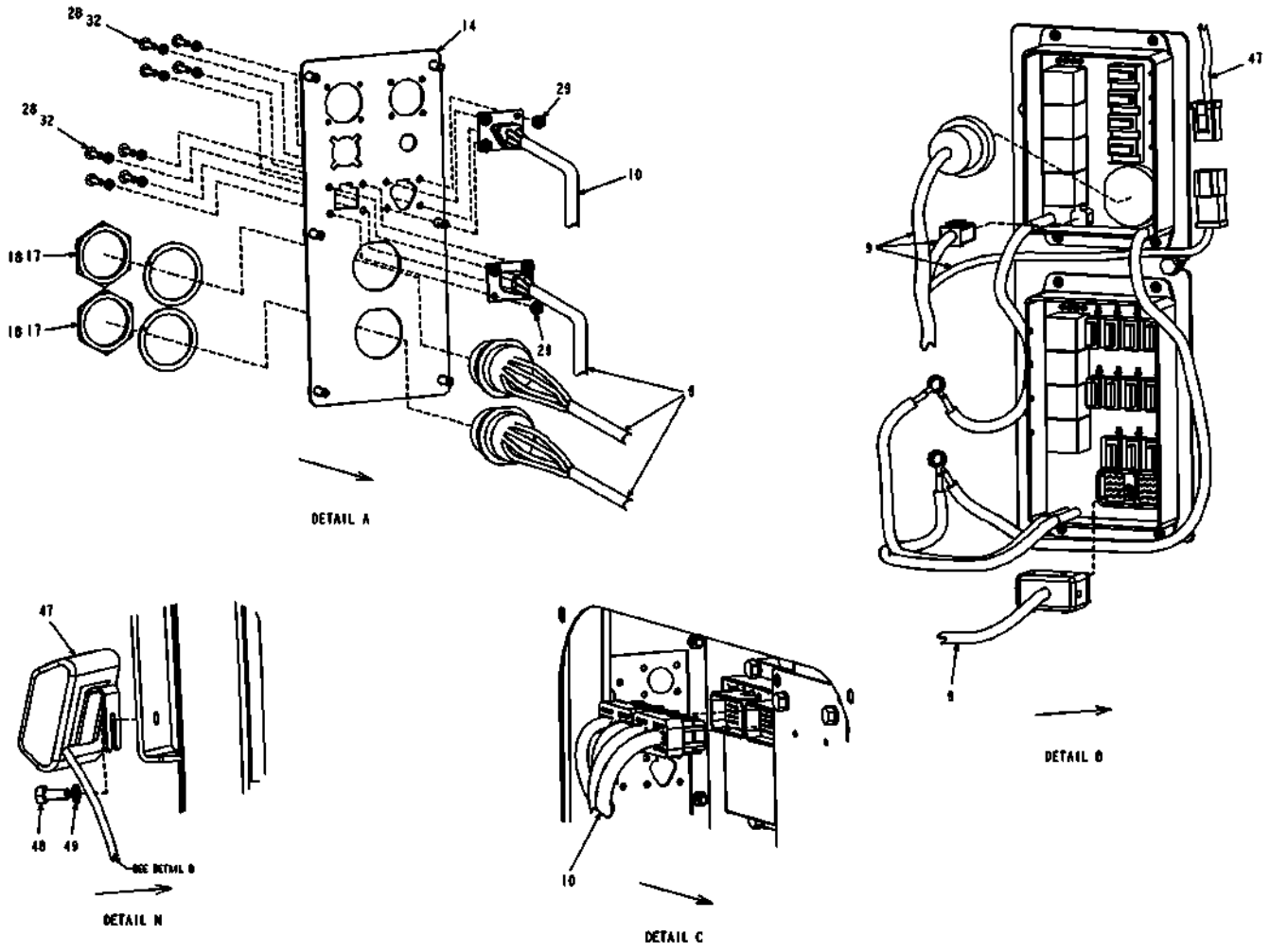

523972D1-02-T216-02.TIF

Copyright © 2008 AGCO Corporation

ITEM	PART #	QTY	DESCRIPTION	COMMENTS
9	524624D1	1	HARNESS-ADAPTER, 7X60,EURO	
10	524625D1	1	HARNESS-MASTER MODULE,SC,EURO	
14	517403D1	1	PLATE-BULKHEAD	
17	AG515697	2	NUT PANEL ELEC CONNECTOR	
18	AG515698	2	WASHER LOCK ELEC CONNECTOR	
28	AG550914	8	WASHER #8 LK ZN REG	
29	AG550922	8	NUT #8-32NC HEX ZN REG	
32	AG560227	8	SCREW 8-32X 0.75 MA ZN SL PHD	
47	WR134754	1	MODULE-LCD,CAN	
48	WR522279	1	BOLT-M8-1.25X20,CL10.9,ZN,HHD	
49	AG561679	1	WASHER LOCK M8 ZN	

Copyright © 2008 AGCO Corporation

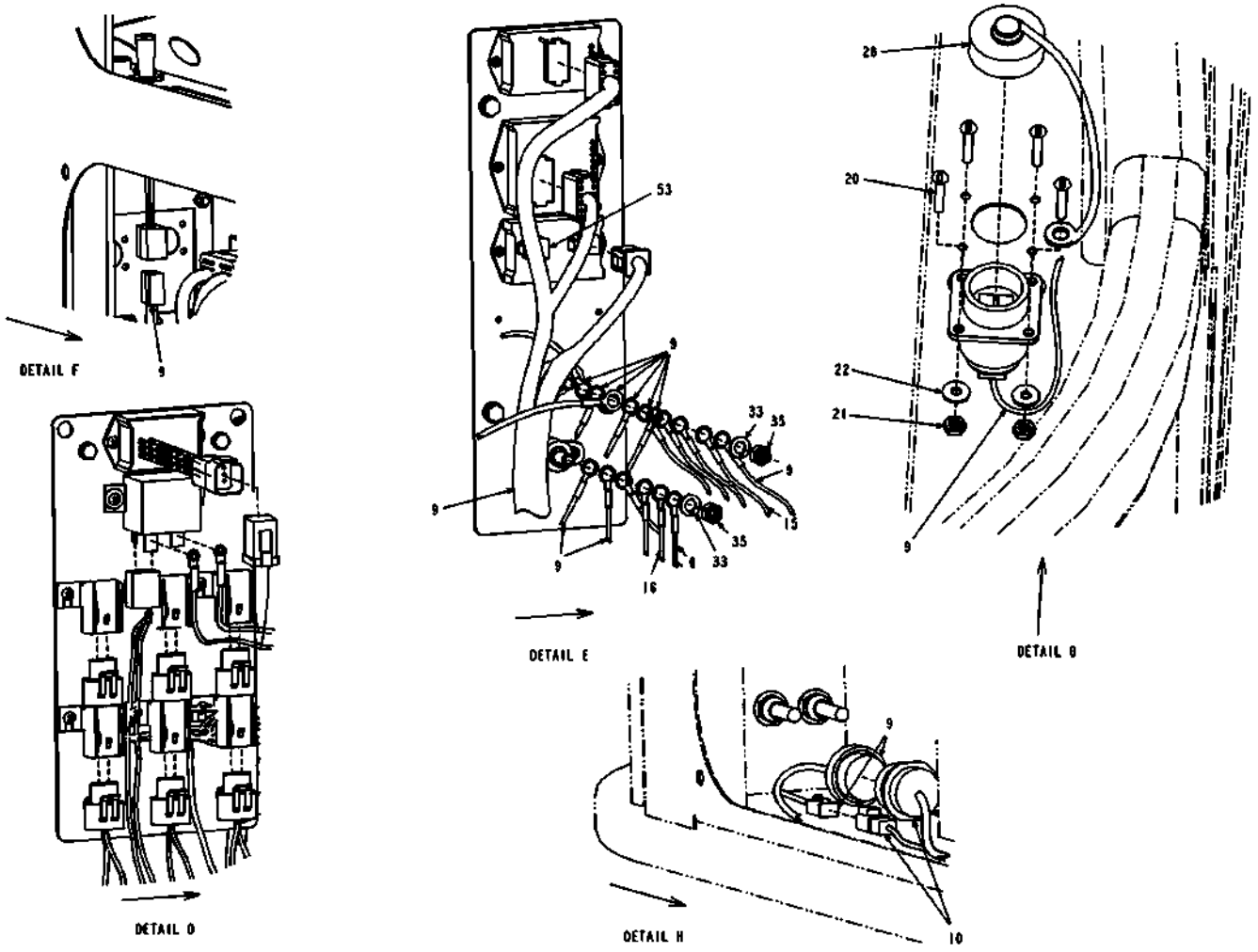

523972D1-02-T216-03.TIF

Copyright © 2008 AGCO Corporation

ITEM	PART #	QTY	DESCRIPTION	COMMENTS
9	524624D1	1	HARNESS-ADAPTER, 7X60,EURO	
10	524625D1	1	HARNESS-MASTER MODULE,SC,EURO	
15	WR133978	1	CABLE-PWR STUD,CAB BLKHD	
16	WR133979	1	CABLE-GND STUD,CAB BLKHD	
20	AG517156	4	SCREW #6-32X.75 MA RDHD SLOTZN	
21	AG517157	4	NUT #6-32NC HEX ZN REG	
22	AG517158	4	WASHER #6 FL ZN REG TYPE-B	
26	AG520318	1	CAP-SEALING,SIZE 17	
33	AG562050	2	WASHER 0.37 LK SS REG	
35	AG562065	2	NUT 0.37-16NC HEX SS REG	
53	AG520746	1	CONN-PLUG,6 WAY,18-14 GA	

Copyright © 2008 AGCO Corporation

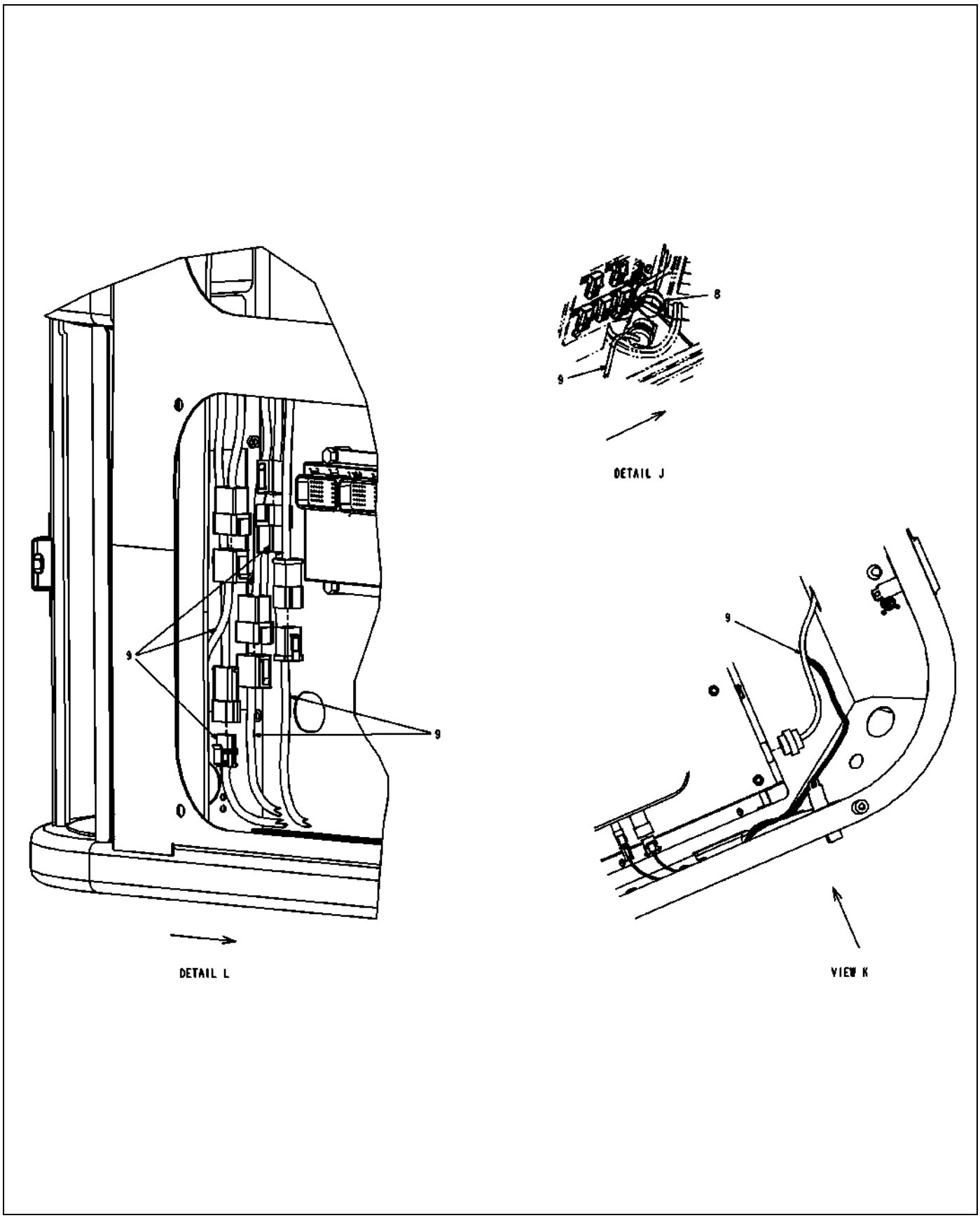

523972D1-02-T216-04.TIF

Copyright © 2008 AGCO Corporation

ITEM	PART #	QTY	DESCRIPTION	COMMENTS
8	524072D1	-	HARNESS-CONSOLE,CENTER	
9	524624D1	1	HARNESS-ADAPTER, 7X60,EURO	

Copyright © 2008 AGCO Corporation

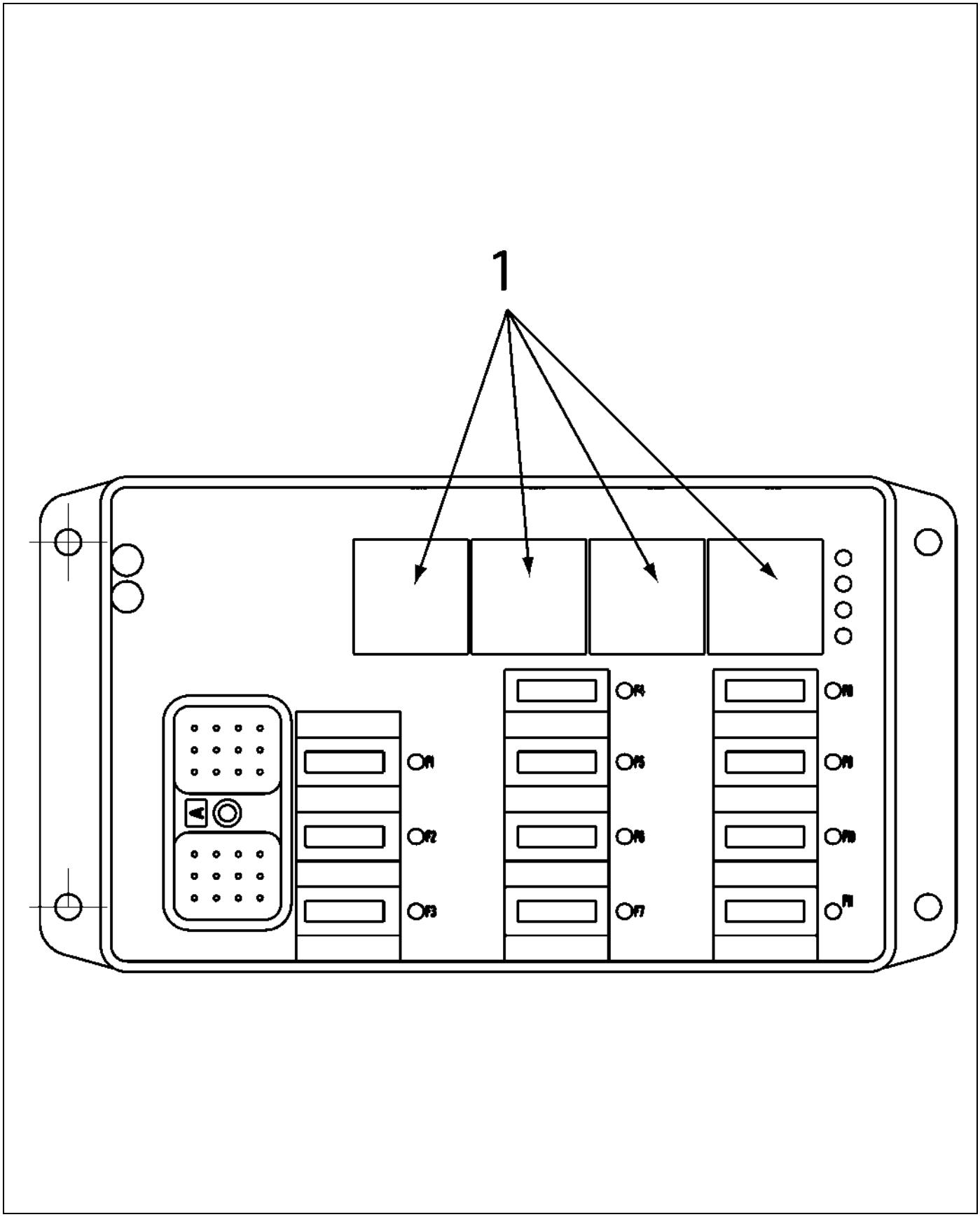

124451.TIF

Copyright © 2008 AGCO Corporation

MODULE-POWER DIST,11 FUSE

ITEM	PART #	QTY	DESCRIPTION	COMMENTS
1	AG719617	4	RELAY 40/30A	

Copyright © 2008 AGCO Corporation

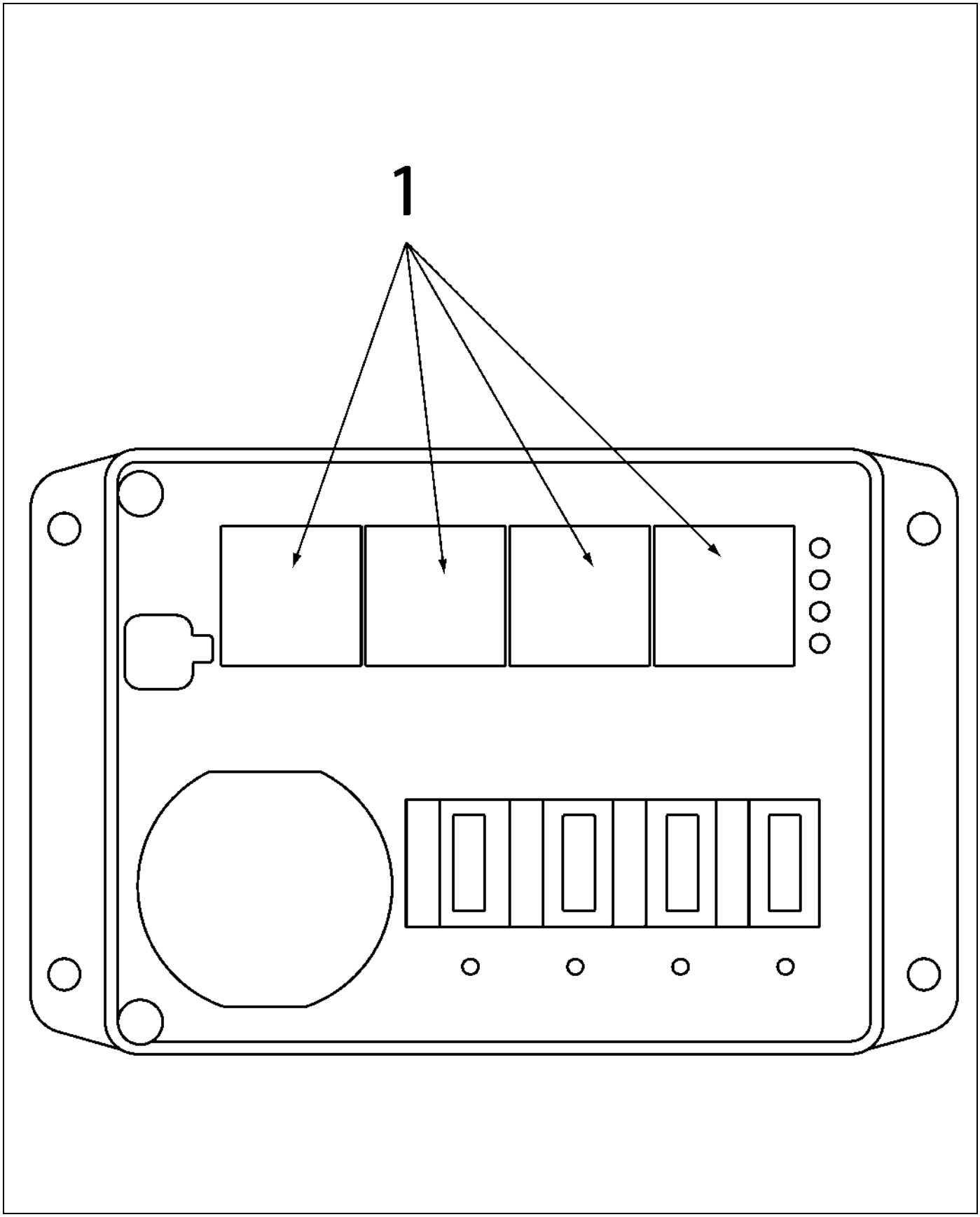

124452.TIF

Copyright © 2008 AGCO Corporation

MODULE-POWER DIST,HI CURRENT

ITEM	PART #	QTY	DESCRIPTION	COMMENTS
1	AG719617	4	RELAY 40/30A	

Copyright © 2008 AGCO Corporation

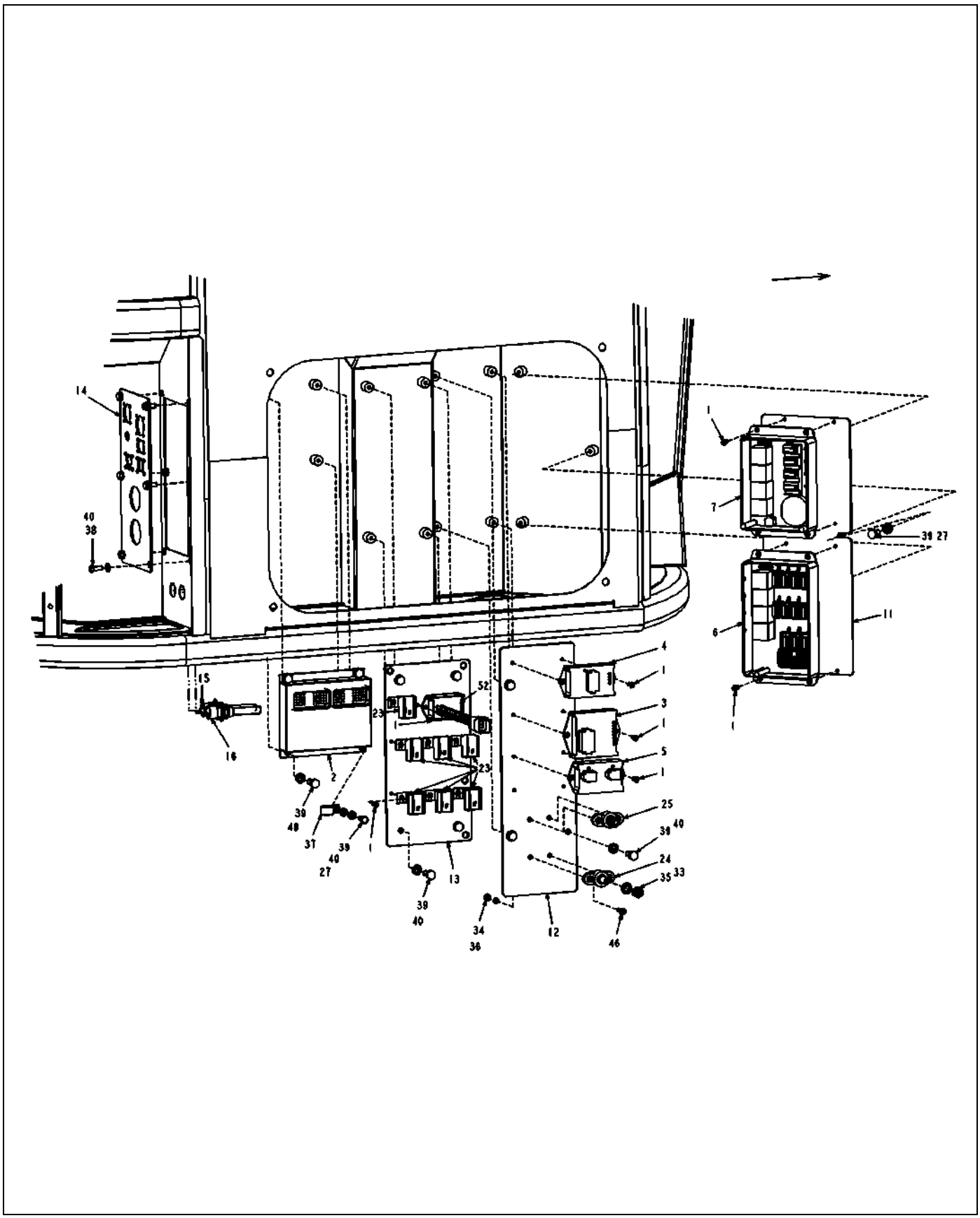

523986D1-02-T216-01.TIF

Copyright © 2008 AGCO Corporation

ITEM	PART #	QTY	DESCRIPTION	COMMENTS
1	AG029293	23	SCREW 10-24X0.50 TAP IWHHD	
2	515100D1	1	INSTL-MASTER MODULE,AED	SEE PAGE 8-28
3	AG129242	1	MODULE-FLASHER,EURO	
4	AG121749	1	MODULE-RELAY,4 PACK,NO	[A]
5	AG121750	1	MODULE-RELAY,2 PACK	
6	AG124451	1	MODULE-POWER DIST,11 FUSE	SEE PAGE 8-77
7	AG124452	1	MODULE-POWER DIST,HI CURRENT	SEE PAGE 8-78
11	WR126905	1	PLATE-PDM,MINI CAB	
12	WR126906	1	PLATE-RELAY,MINI CAB	
13	515778D1	1	PLATE-AUX,MINI CAB,ATC	
14	517403D1	1	PLATE-BULKHEAD	
15	WR133978	1	CABLE-PWR STUD,CAB BLKHD	
16	WR133979	1	CABLE-GND STUD,CAB BLKHD	
19	AG515669	6	PLUG-SEAL,SIZE 16 CONTACT	
23	AG520052	7	CAP METRI PACK 630 P2S 2-WAY	
24	AG520092	1	JUNCTION BLOCK-STUD TYPE,BLK	
25	AG520093	1	JUNCTION BLOCK-STUD TYPE,RED	
27	AG520879	2	WASHER-FLAT,M6,ZN,REG	
30	AG553557	-	TIE CABLE 7.37 .06-1.37 BLACK	
33	AG562050	2	WASHER 0.37 LK SS REG	
34	AG562061	4	NUT #10-24NC HEX SS REG	
35	AG562065	2	NUT 0.37-16NC HEX SS REG	
36	AG562081	4	WASHER #10 LK SS REG	
37	AG562238	1	CLAMP CTD 1.50IDX 0.75WIDE	
38	AG562327	6	BOLT M6-1.00X20MM G8.8 ZN HHD	
39	AG562639	15	BOLT M6 1.00X12MM G8.8 ZN HHD	
40	AG562792	20	WASHER LOCK M6 SPRING ZN	
41	AG562925	1	FUSE BLADE 30A ATC	
42	AG562929	1	FUSE 20A BLADE ATC	
43	AG562930	5	FUSE 15A BLADE ATC	
44	AG562931	5	FUSE 10A BLADE ATC	
45	AG562933	2	FUSE 5A BLADE ATC	
46	AG563094	4	SCREW 10-24X0.75 PH PHS SS	
50	AG562928	1	FUSE 25A BLADE ATC	
51	508171D1	1	ELEC INSTL-JUMPER,ATC HVAC	SEE PAGE 8-34
52	513016D1	1	MODULE-RELAY,3 SECOND DELAY	
	FOOTNOTE [A]		AG719617 - RELAYS (4)	

Copyright © 2008 AGCO Corporation

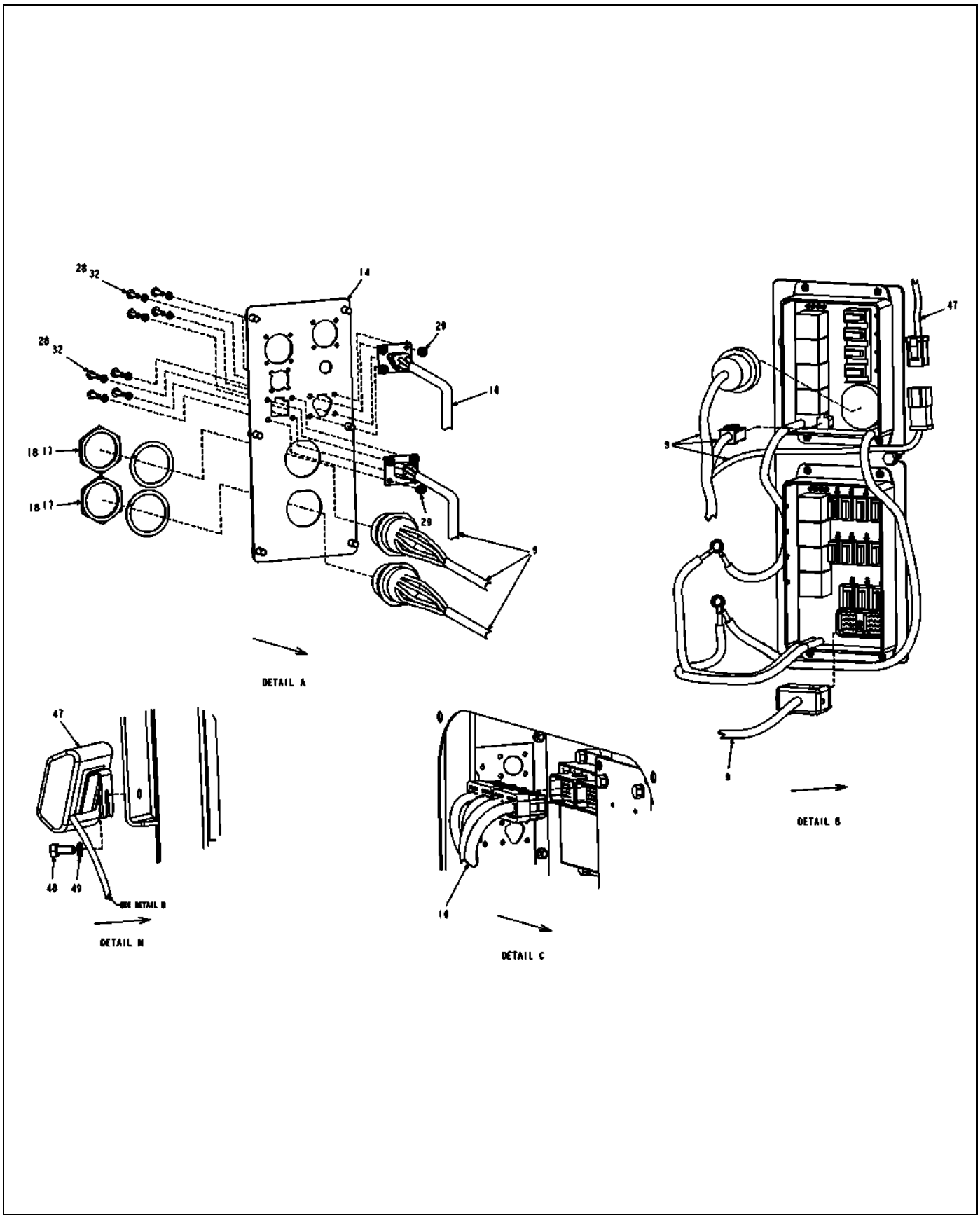

523986D1-02-T216-02.TIF

Copyright © 2008 AGCO Corporation

ITEM	PART #	QTY	DESCRIPTION	COMMENTS
9	524623D1	1	HARNESS-ADAPTER, ATC, 7X60,EUR	
10	524625D1	1	HARNESS-MASTER MODULE,SC,EURO	
14	517403D1	1	PLATE-BULKHEAD	
17	AG515697	2	NUT PANEL ELEC CONNECTOR	
18	AG515698	2	WASHER LOCK ELEC CONNECTOR	
28	AG550914	8	WASHER #8 LK ZN REG	
29	AG550922	8	NUT #8-32NC HEX ZN REG	
32	AG560227	8	SCREW 8-32X 0.75 MA ZN SL PHD	
47	WR134754	1	MODULE-LCD,CAN	
48	WR522279	1	BOLT-M8-1.25X20,CL10.9,ZN,HHD	
49	AG561679	1	WASHER LOCK M8 ZN	

Copyright © 2008 AGCO Corporation

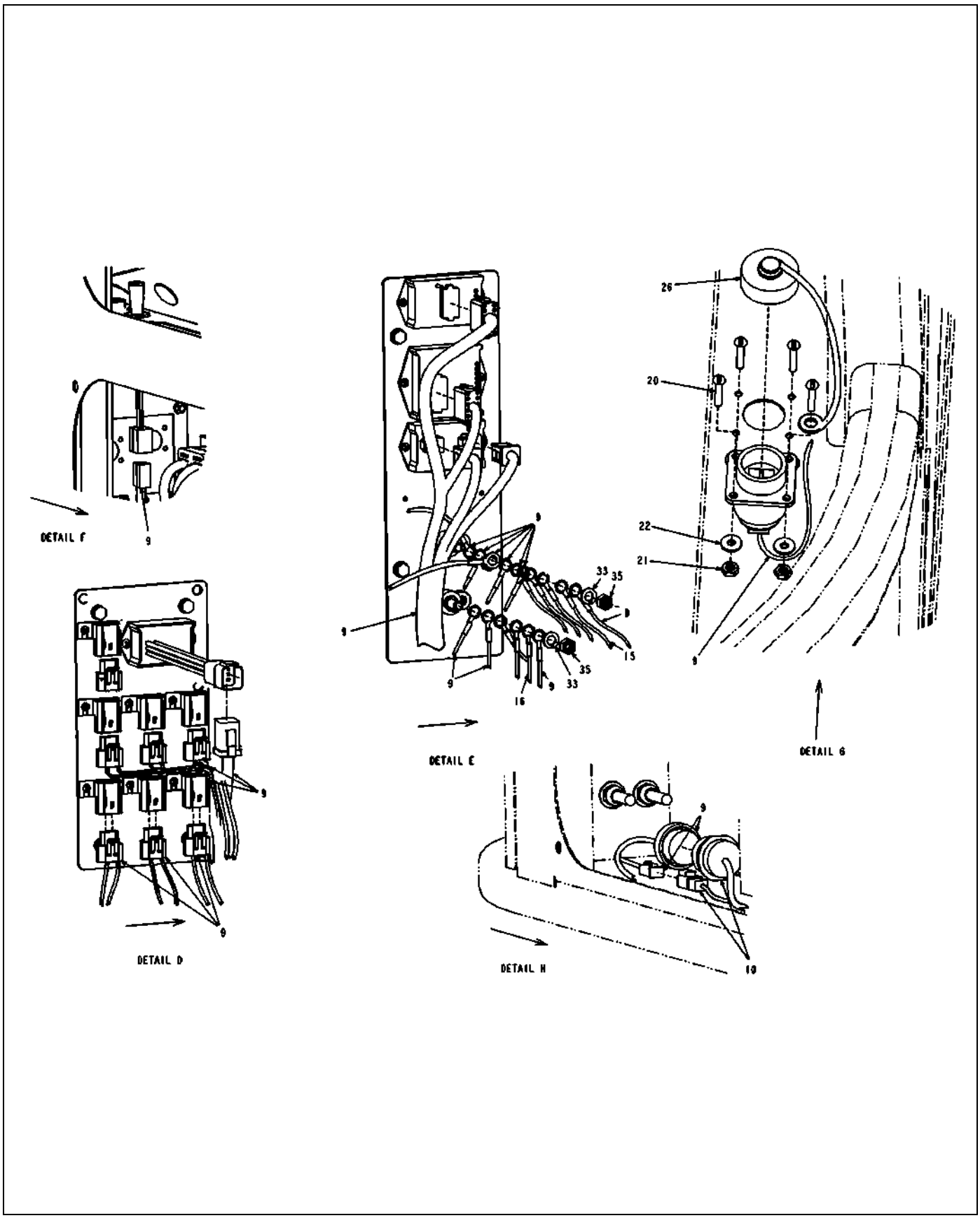

523986D1-02-T216-03.TIF

Copyright © 2008 AGCO Corporation

ITEM	PART #	QTY	DESCRIPTION	COMMENTS
9	524623D1	1	HARNESS-ADAPTER, ATC, 7X60,EUR	
10	524625D1	1	HARNESS-MASTER MODULE,SC,EURO	
15	WR133978	1	CABLE-PWR STUD,CAB BLKHD	
16	WR133979	1	CABLE-GND STUD,CAB BLKHD	
20	AG517156	4	SCREW #6-32X.75 MA RDHD SLOTZN	
21	AG517157	4	NUT #6-32NC HEX ZN REG	
22	AG517158	4	WASHER #6 FL ZN REG TYPE-B	
26	AG520318	1	CAP-SEALING,SIZE 17	
33	AG562050	2	WASHER 0.37 LK SS REG	
35	AG562065	2	NUT 0.37-16NC HEX SS REG	

Copyright © 2008 AGCO Corporation

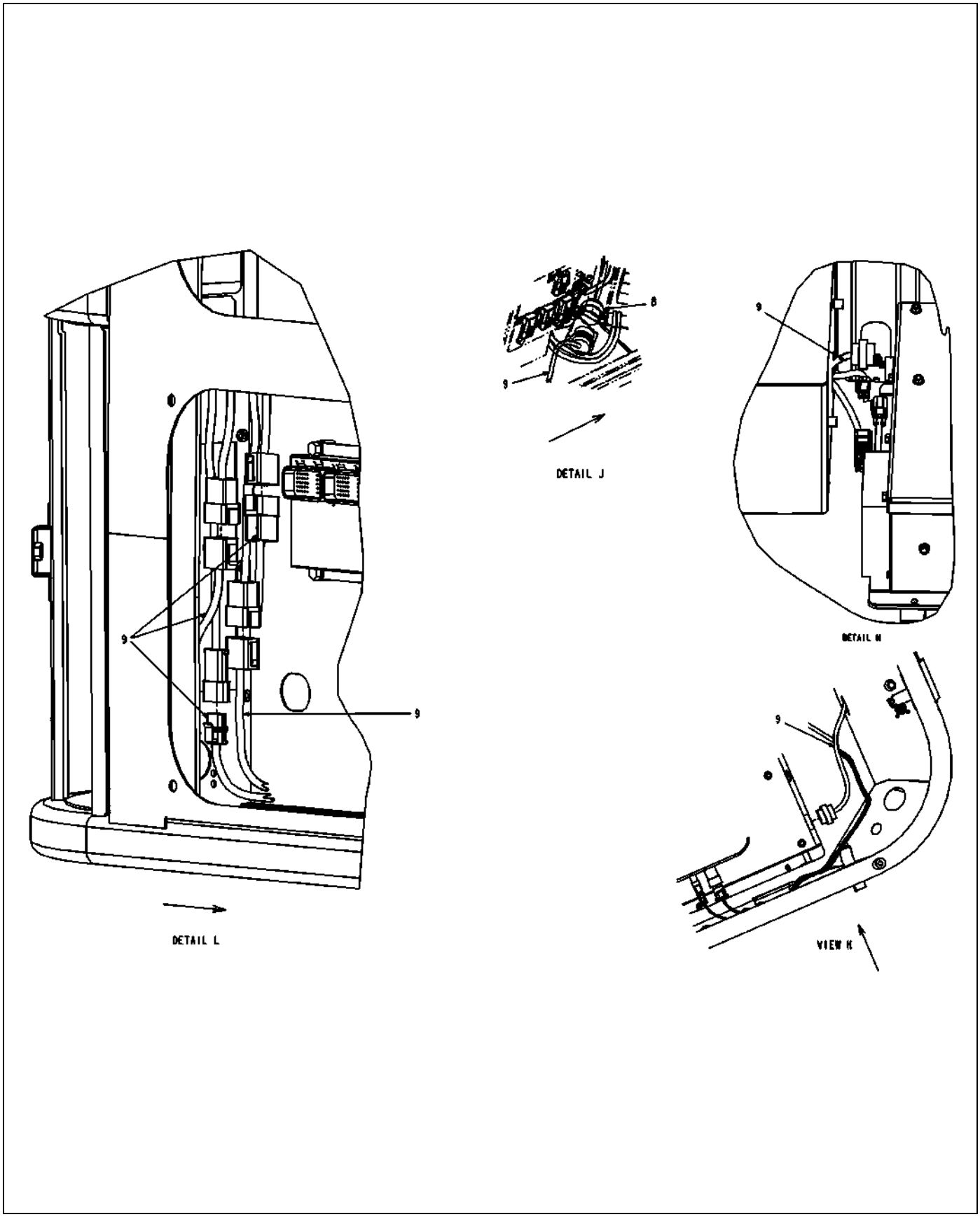

523986D1-02-T216-04.TIF

Copyright © 2008 AGCO Corporation

ITEM	PART #	QTY	DESCRIPTION	COMMENTS
8	524072D1	-	HARNESS-CONSOLE,CENTER	
9	524623D1	1	HARNESS-ADAPTER, ATC, 7X60,EUR	

Copyright © 2008 AGCO Corporation

LIGHT INSTALL-WORK,BOOMREST	9-1
LIGHT INSTALL-WORK,BOOMREST	9-2
LIGHT INSTALL-WORK,BOOMREST	9-3
F/A LIGHT INSTALL-WORK,CAB,MINI	9-4
F/A LIGHT INSTALL-WORK,CAB,MINI	9-5
F/A LIGHT INSTALL-HID,CAB,MINI	9-6
LIGHT-WORK,HID	9-7
LIGHT INSTALL-WORK,CAB,MINI	9-8
LIGHT INSTALL-WORK,CAB,MINI	9-9
LIGHT INSTALL-HID,CAB,MINI	9-10
OPTION-TUV LIGHTING	9-11
HEADLIGHT ASM-WIRING,LH	9-12
OPTION-TUV LIGHTING	9-13
HEADLIGHT ASM-WIRING, RH	9-14
F/A LIGHT INSTALL-HID, BOOM REST	9-15
F/A LIGHT INSTALL-WORK,BOOM REST	9-16
LIGHTBAR INSTALL-7X50	9-17
LIGHTBAR INSTALL-7X50	9-18
WORK LIGHT	9-19
WORK LIGHT	9-20
LIGHT-WORK,HID,PENDENT MOUNT	9-21
LIGHT-WORK,DUAL BEAM,PENDENT MNT	9-22

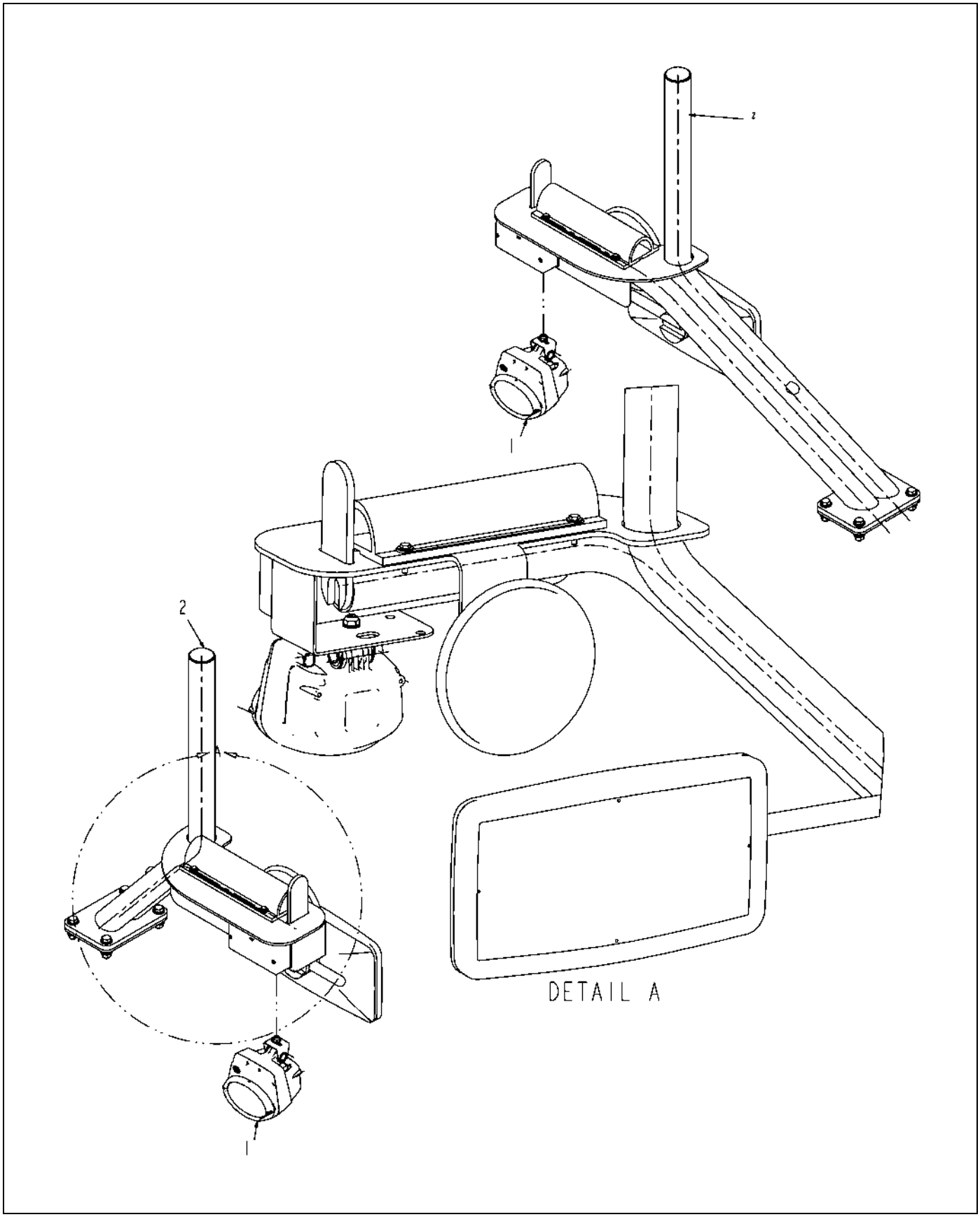

517844D1-01-R164-.TIF

Copyright © 2008 AGCO Corporation

LIGHT INSTALL-WORK,BOOMREST

ITEM	PART #	QTY	DESCRIPTION	COMMENTS
1	515468D1	2	LIGHT-WORK,HID,PENDENT MOUNT	SEE PAGE 9-21
2	517863D1	-	BOOM REST INSTL-DOM	SEE PAGE 3-4

Copyright © 2008 AGCO Corporation

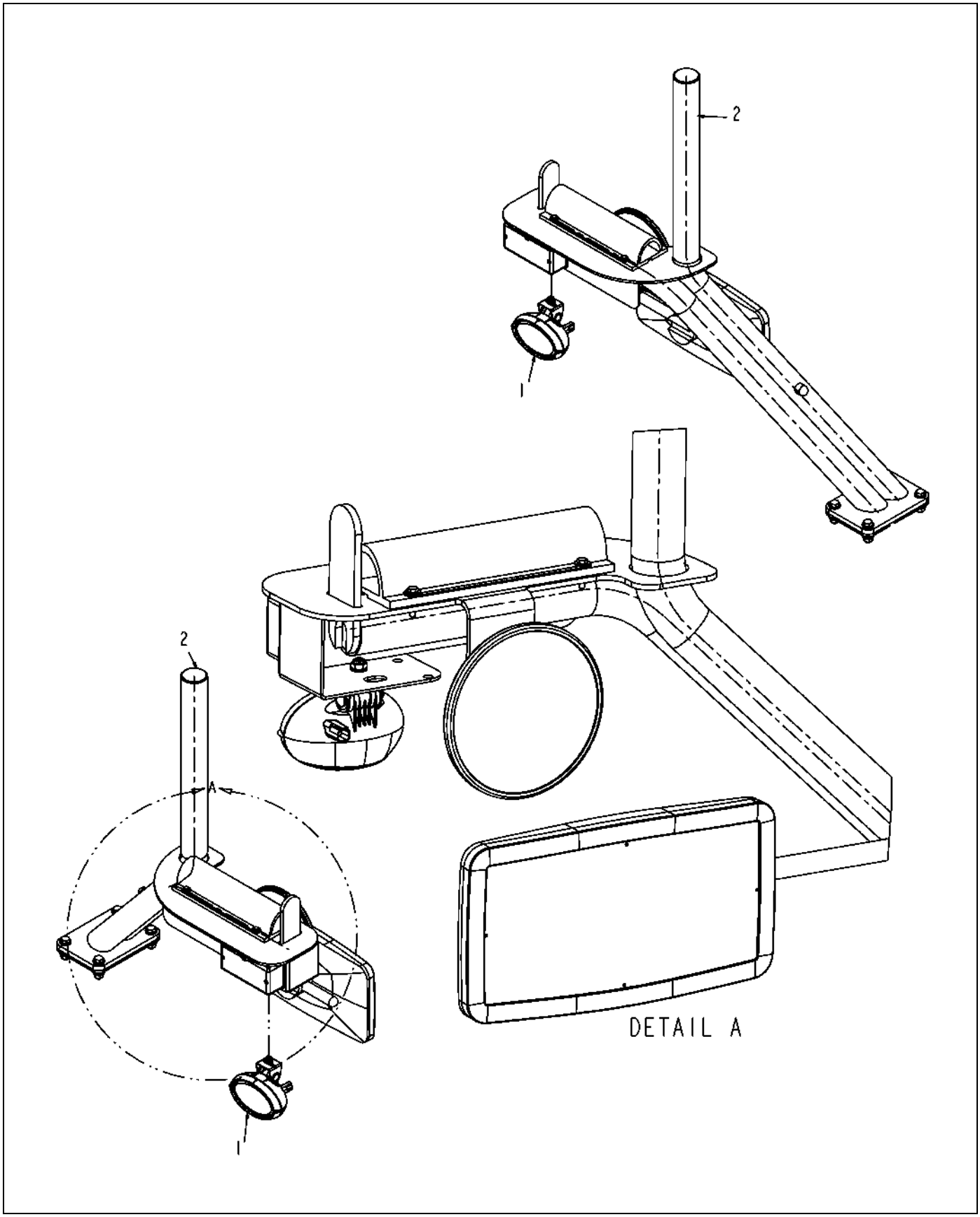

517845D1-01-R164-.TIF

Copyright © 2008 AGCO Corporation

LIGHT INSTALL-WORK,BOOMREST

ITEM	PART #	QTY	DESCRIPTION	COMMENTS
1	515469D1	2	LGT-WORK,DUAL BEAM,PENDENT MNT	SEE PAGE 9-22
2	517863D1	-	BOOM REST INSTL-DOM	SEE PAGE 3-4

Copyright © 2008 AGCO Corporation

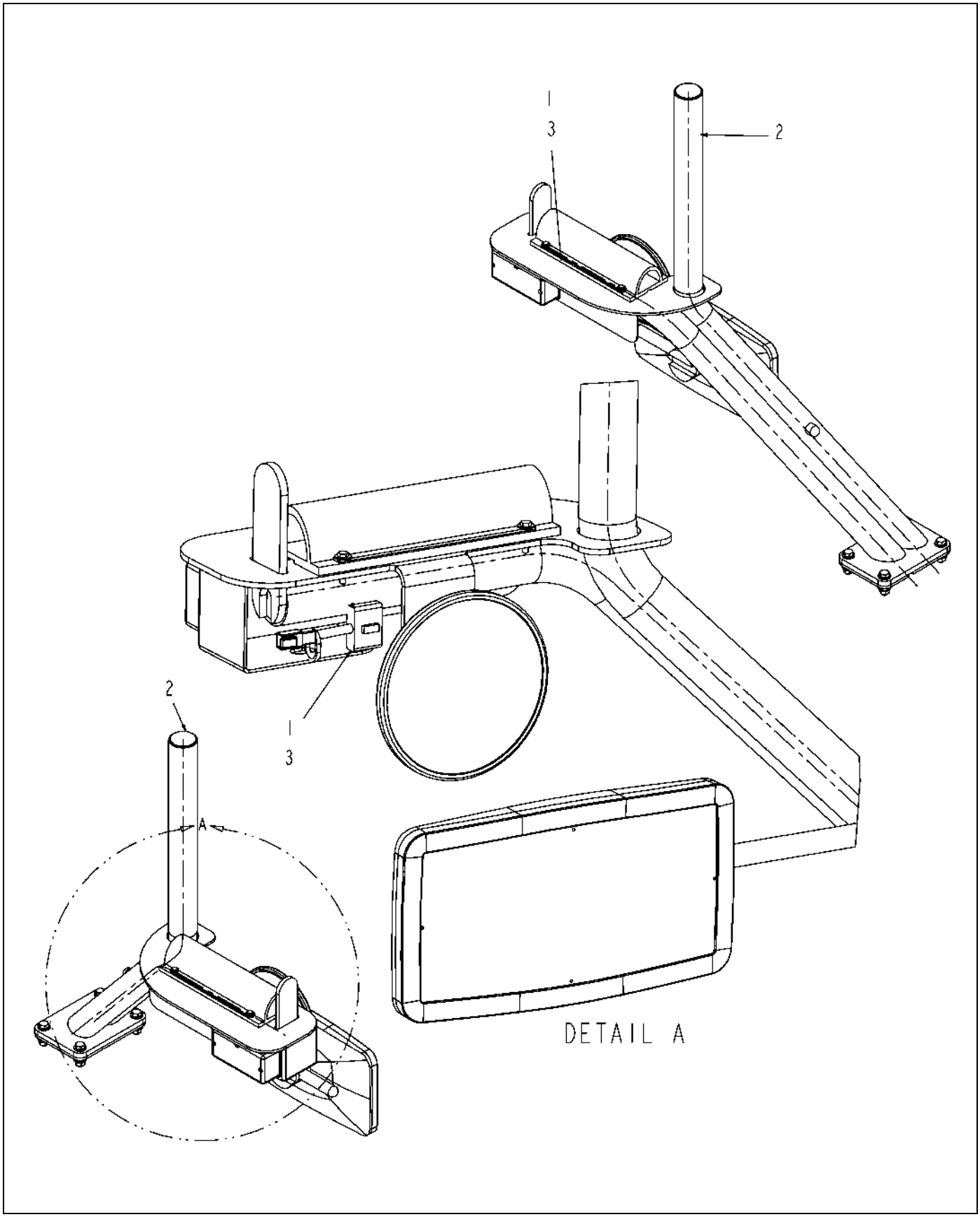

517846D1-01-R164-.TIF

Copyright © 2008 AGCO Corporation

LIGHT INSTALL-WORK,BOOMREST

ITEM	PART #	QTY	DESCRIPTION	COMMENTS
1	515894D1	2	HARNESS-I/O, LOAD STIMULATOR	
2	517863D1	-	BOOM REST INSTL-DOM	SEE PAGE 3-4
3	CH7K-1181	2	STRAP - CABLE 0.19-4.00	

Copyright © 2008 AGCO Corporation

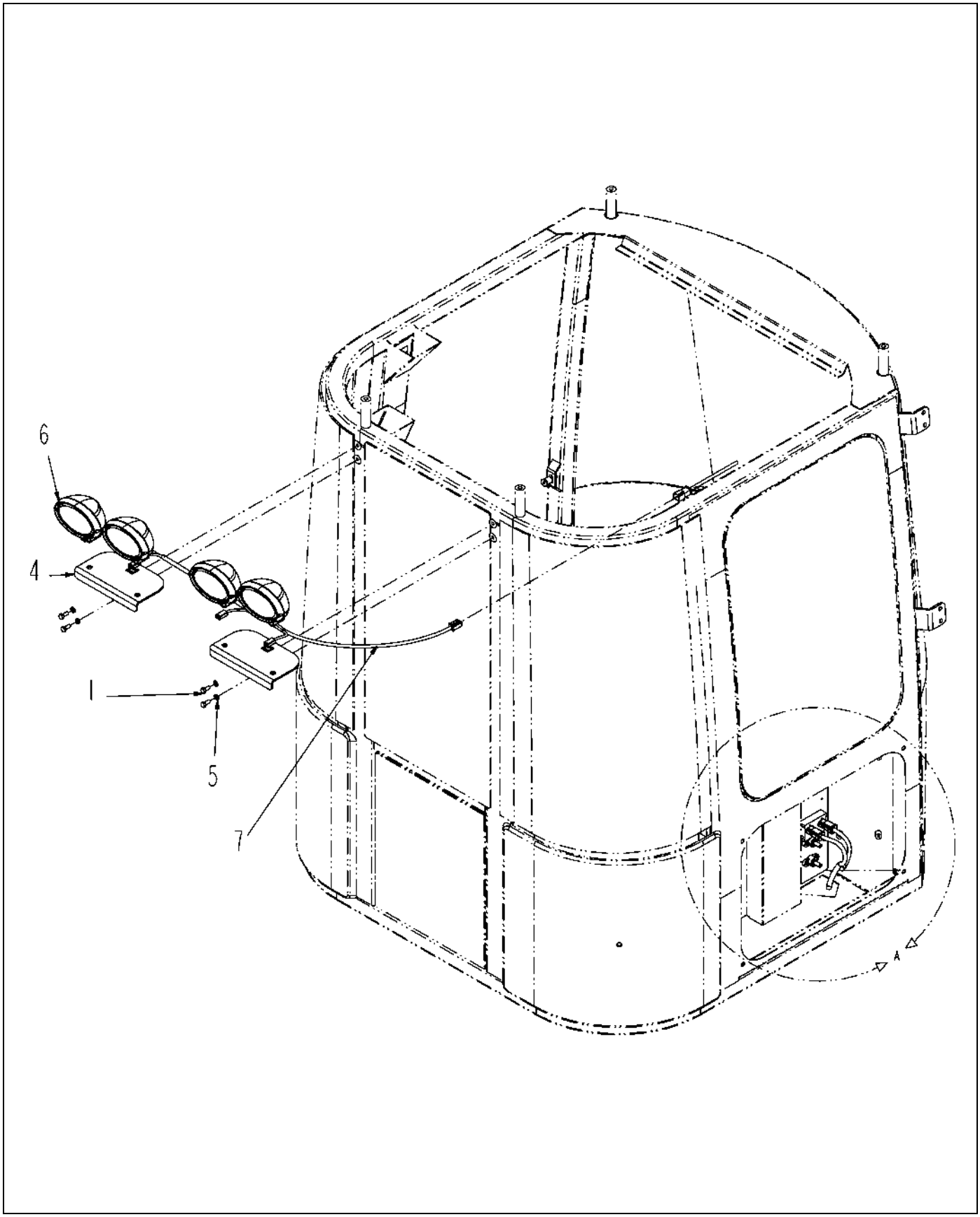

517847D1-01-R164-01.TIF

Copyright © 2008 AGCO Corporation

F/A LIGHT INSTALL-WORK,CAB,MINI

ITEM	PART #	QTY	DESCRIPTION	COMMENTS
1	AG028995	4	BOLT,M8-1.25 X 20 CL8.8	
4	AG128276	2	WLDMT-WL,CAB,MINI	
5	AG561679	4	WASHER LOCK M8 ZN	
6	505081D1	4	WORK LIGHT	SEE PAGE 9-19
7	517949D1	1	HARNESS-REAR,CAB,LIGHTS	
8	517852D1	1	PACKAGING	
9	517851D1	1	INSTALL INSTRUCTIONS	

Copyright © 2008 AGCO Corporation

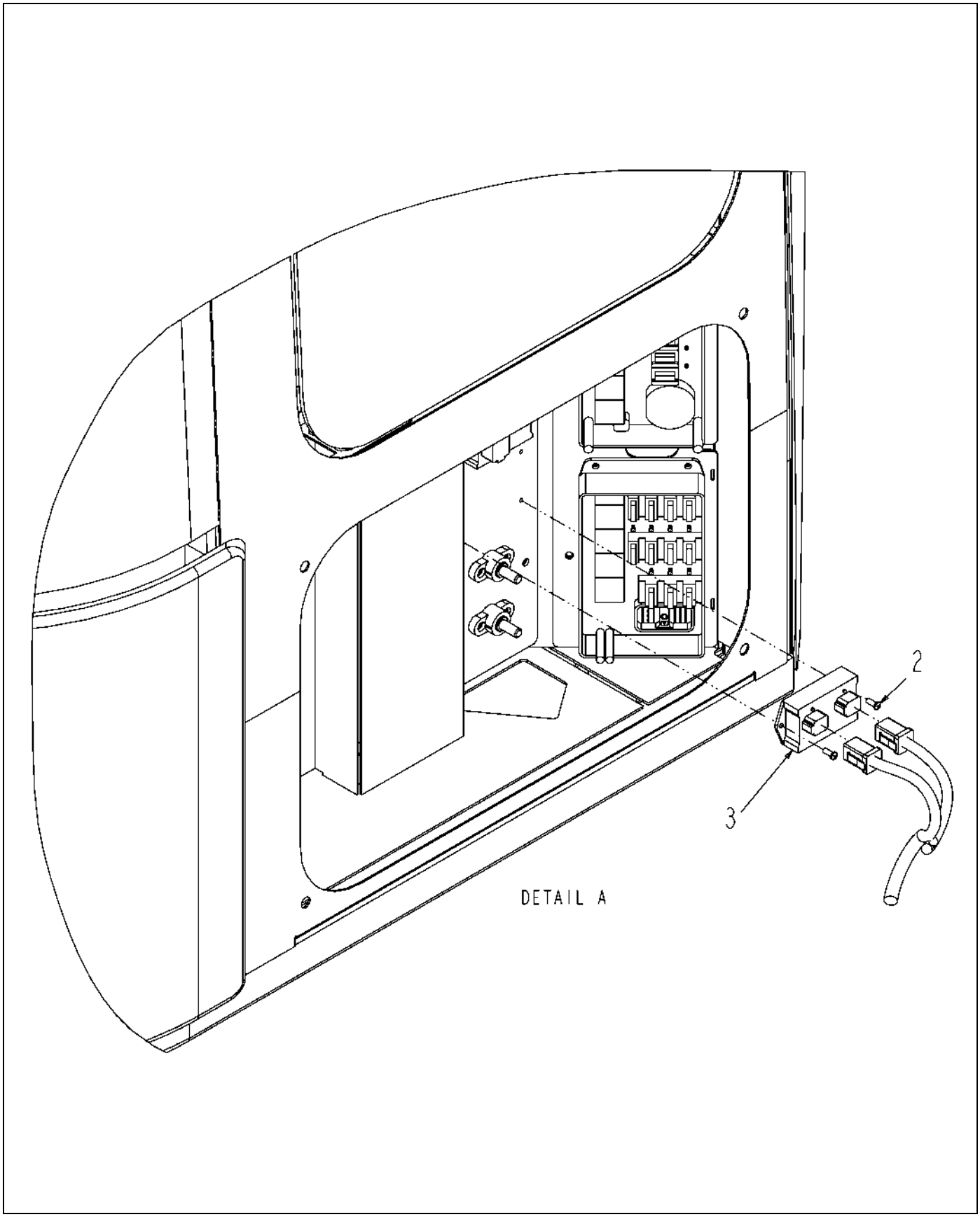

517847D1-01-R164-02.TIF

Copyright © 2008 AGCO Corporation

ITEM	PART #	QTY	DESCRIPTION	COMMENTS
2	AG029293	2	SCREW 10-24X0.50 TAP IWHHD	
3	AG121750	1	MODULE-RELAY,2 PACK	

Copyright © 2008 AGCO Corporation

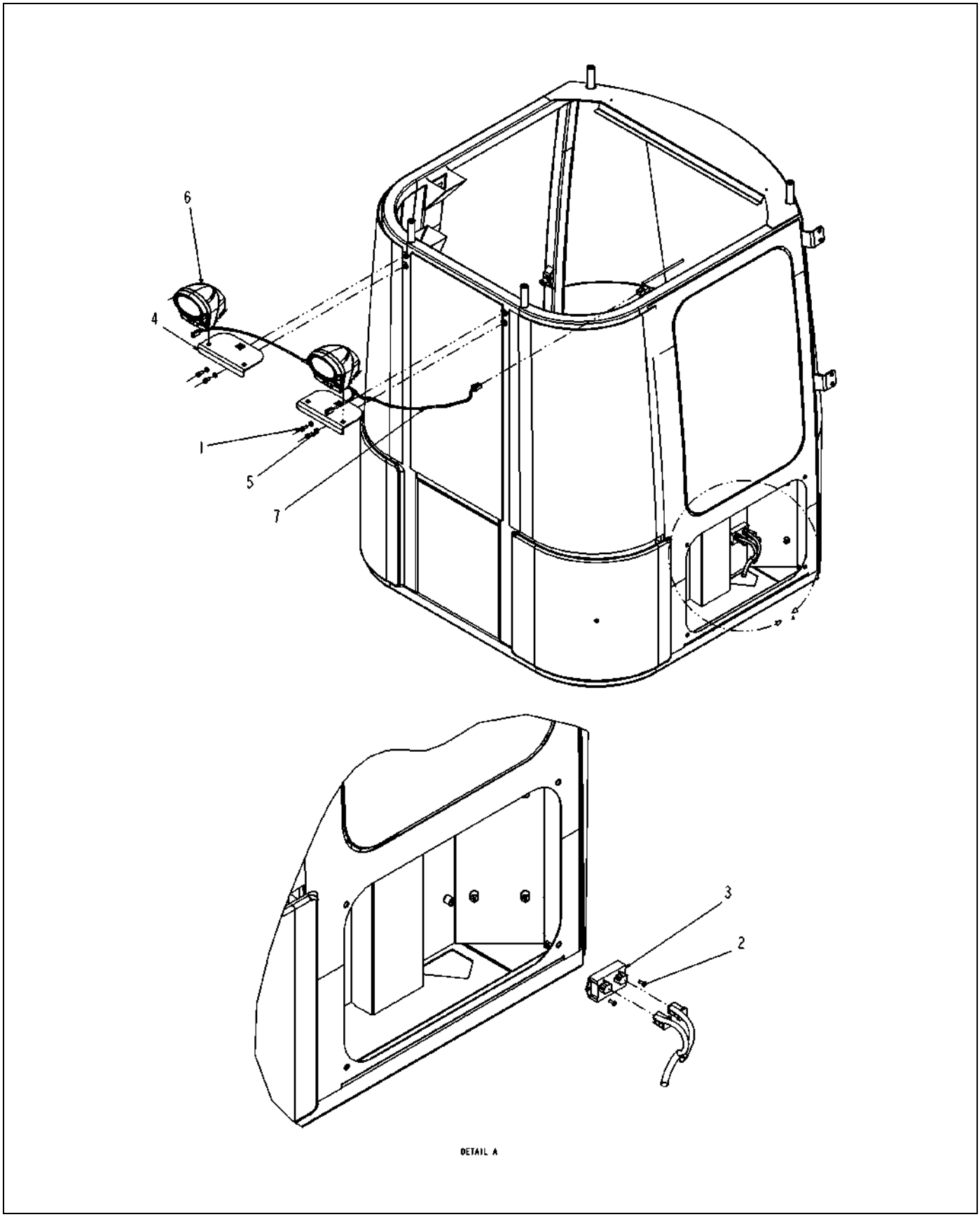

517848D1-02-R940-.TIF

Copyright © 2008 AGCO Corporation

F/A LIGHT INSTALL-HID,CAB,MINI

ITEM	PART #	QTY	DESCRIPTION	COMMENTS
1	AG028995	4	BOLT,M8-1.25 X 20 CL8.8	
2	AG029293	2	SCREW 10-24X0.50 TAP IWHHD	
3	AG121750	1	MODULE-RELAY,2 PACK	
4	AG128276	2	WLDMT-WL,CAB,MINI	
5	AG561679	4	WASHER LOCK M8 ZN	
6	509644D1	2	LIGHT-WORK,HID	SEE PAGE 9-7
7	517948D1	1	HARNESS-REAR CAB,HID	
8	517850D1	1	PACKAGING	
9	517849D1	1	INSTALL INSTRUCTIONS	

Copyright © 2008 AGCO Corporation

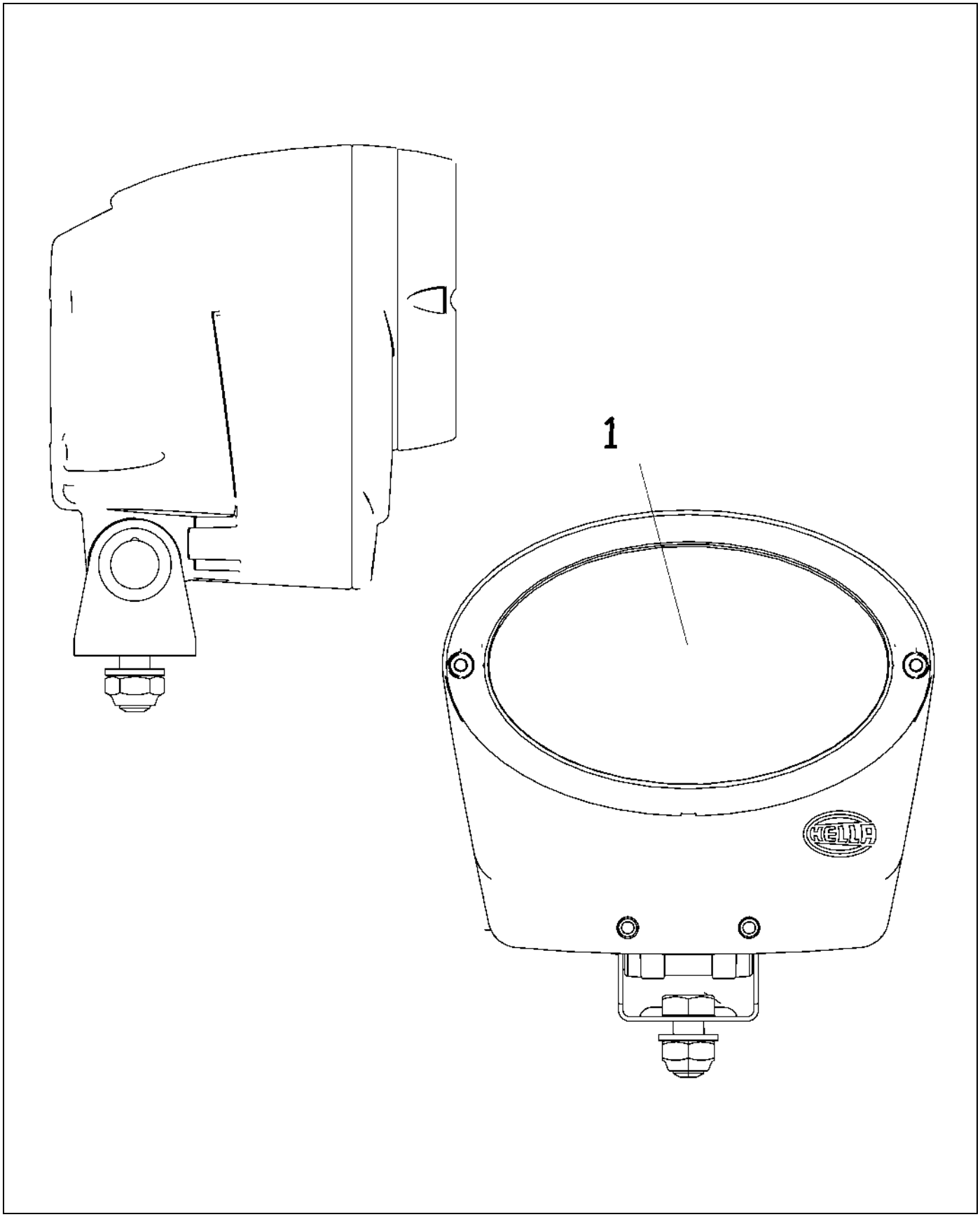

509644D1-02-N441-.TIF

Copyright © 2008 AGCO Corporation

LIGHT-WORK,HID

ITEM	PART #	QTY	DESCRIPTION	COMMENTS
1	136-5598	1	BULB-HID	

Copyright © 2008 AGCO Corporation

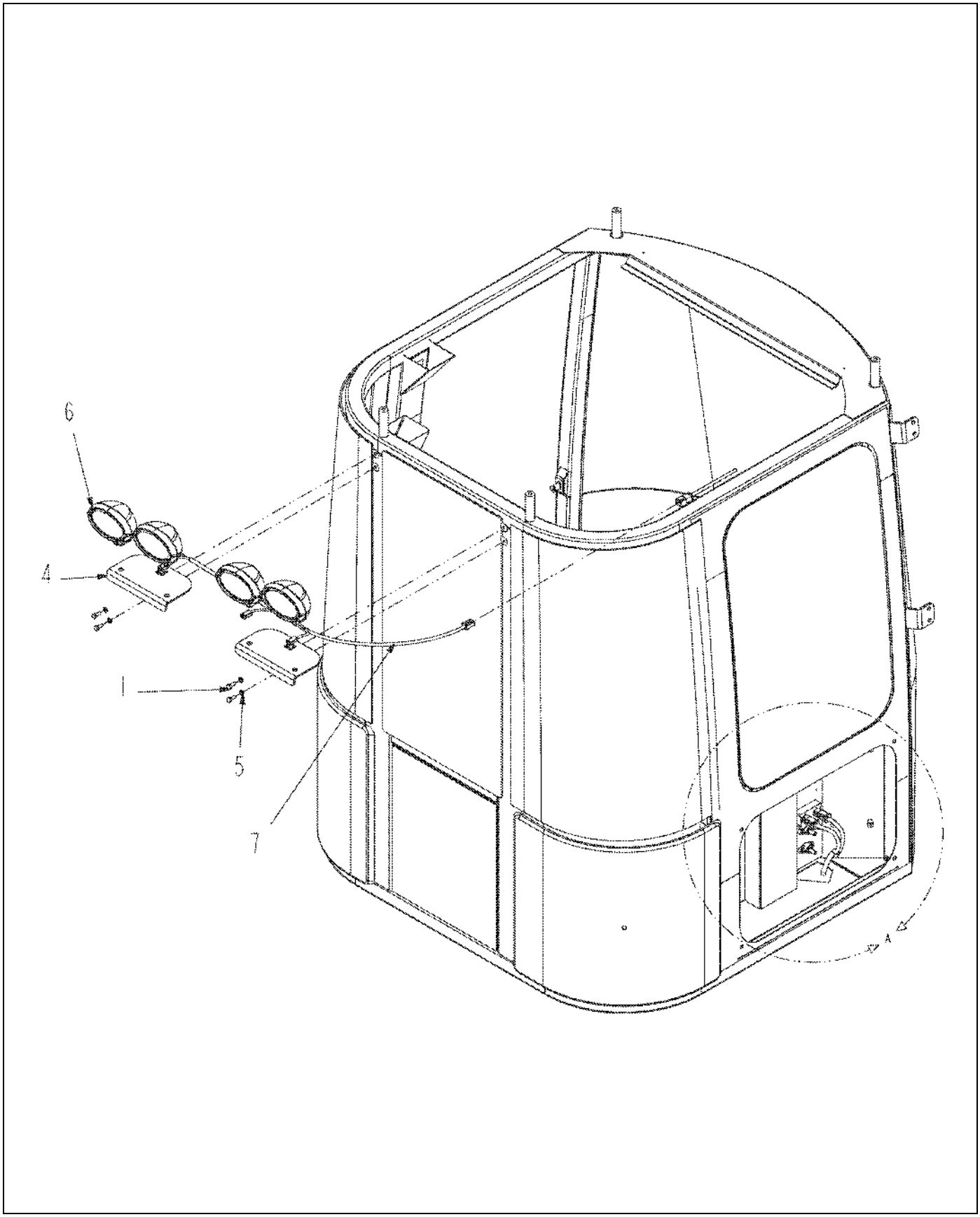

517946D1-01-R164-01.TIF

Copyright © 2008 AGCO Corporation

ITEM	PART #	QTY	DESCRIPTION	COMMENTS
1	AG028995	4	BOLT,M8-1.25 X 20 CL8.8	
4	AG128276	2	WLDMT-WL,CAB,MINI	
5	AG561679	4	WASHER LOCK M8 ZN	
6	505081D1	4	WORK LIGHT	SEE PAGE 9-19
7	517949D1	1	HARNESS-REAR,CAB,LIGHTS	

Copyright © 2008 AGCO Corporation

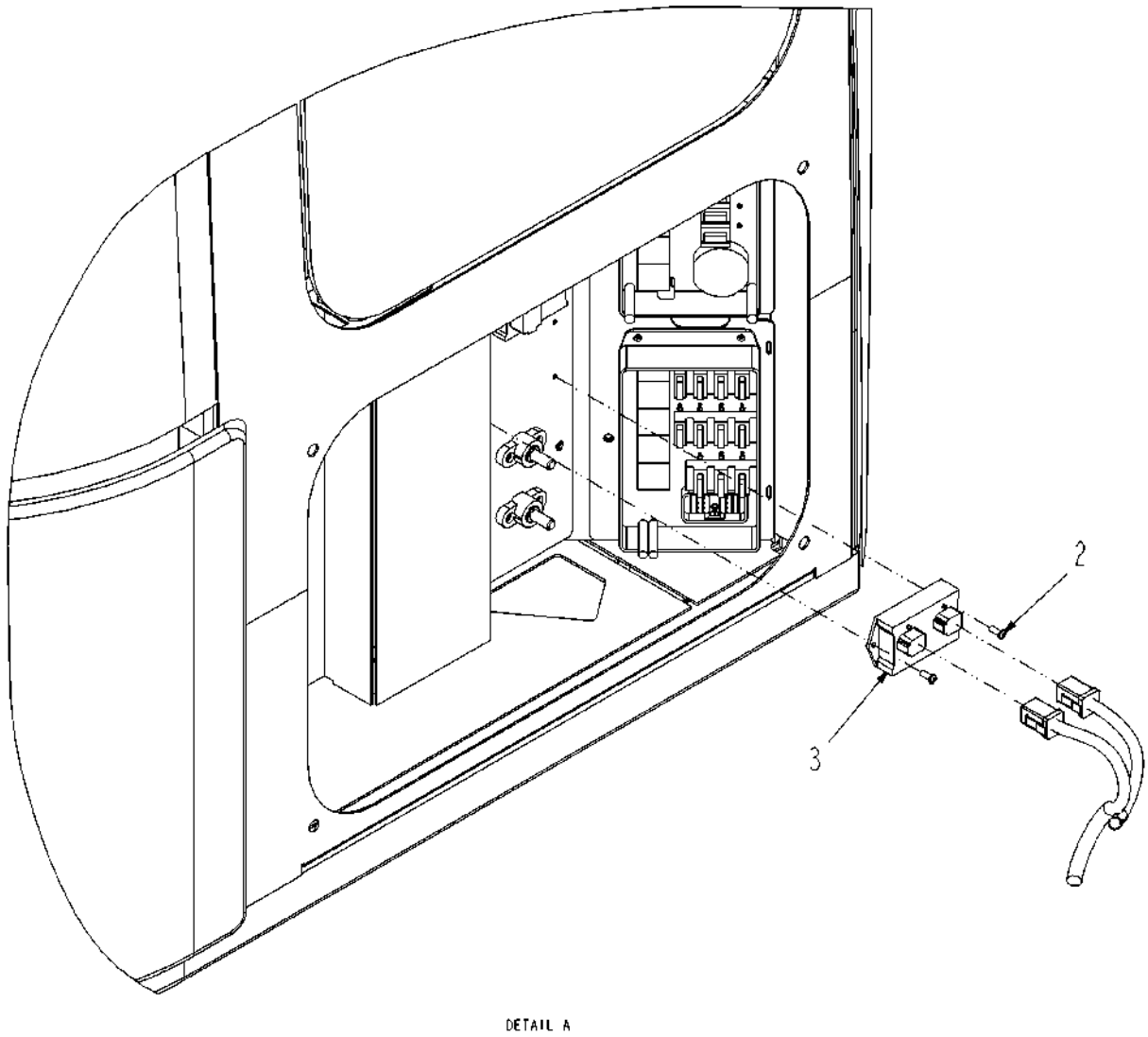

517946D1-01-R164-02.TIF

Copyright © 2008 AGCO Corporation

ITEM	PART #	QTY	DESCRIPTION	COMMENTS
2	AG029293	2	SCREW 10-24X0.50 TAP IWHHD	
3	AG121750	1	MODULE-RELAY,2 PACK	

Copyright © 2008 AGCO Corporation

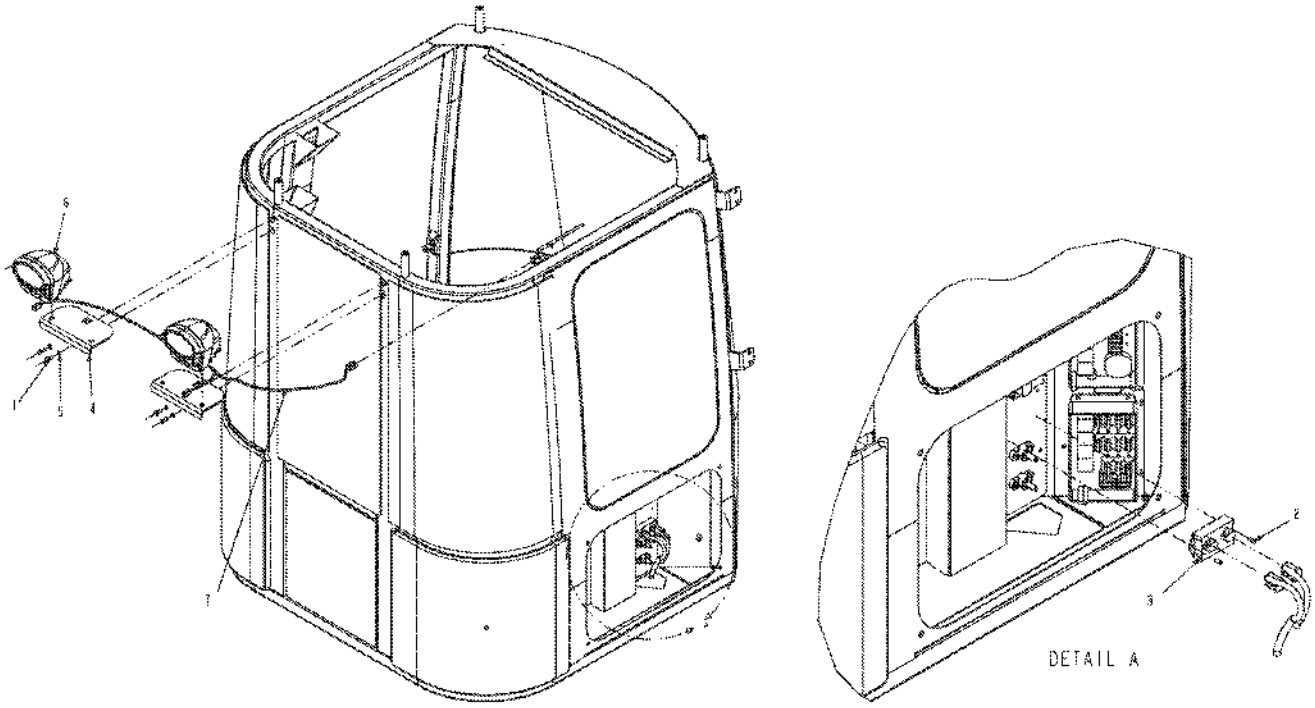

517947D1-01-R164-.TIF

Copyright © 2008 AGCO Corporation

LIGHT INSTALL-HID,CAB,MINI

ITEM	PART #	QTY	DESCRIPTION	COMMENTS
1	AG028995	4	BOLT,M8-1.25 X 20 CL8.8	
2	AG029293	2	SCREW 10-24X0.50 TAP IWHHD	
3	AG121750	1	MODULE-RELAY,2 PACK	
4	AG128276	2	WLDMT-WL,CAB,MINI	
5	AG561679	4	WASHER LOCK M8 ZN	
6	509644D1	2	LIGHT-WORK,HID	SEE PAGE 9-7
7	517948D1	1	HARNESS-REAR CAB,HID	

Copyright © 2008 AGCO Corporation

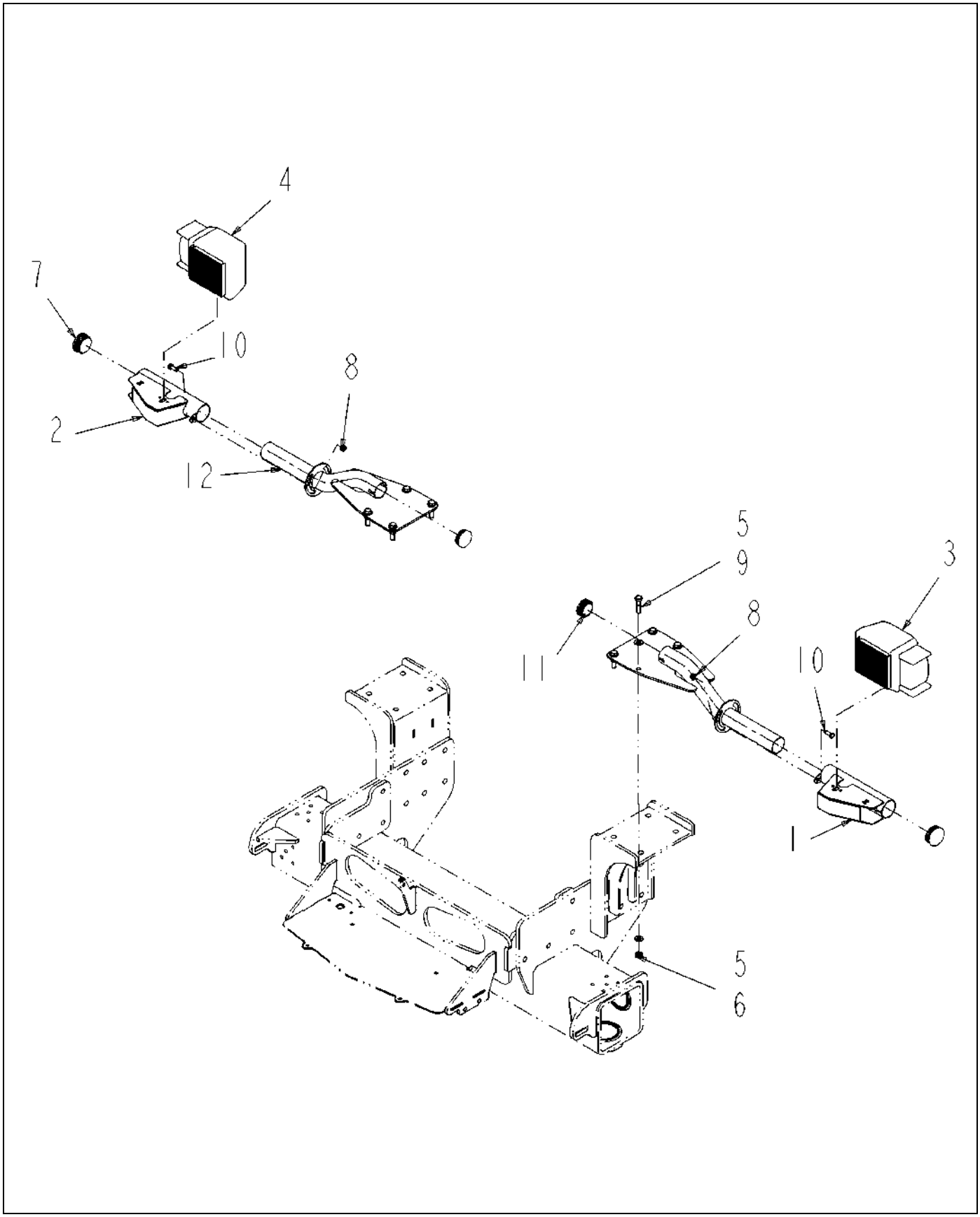

519280D1-01-R536-.TIF

Copyright © 2008 AGCO Corporation

ITEM	PART #	QTY	DESCRIPTION	COMMENTS
1	WR132227	1	BRACKET WLDMT-MTG,LIGHT,LH	
2	WR132231	1	BRACKET WLDMT-MTG,LIGHT,RH	
3	AG420939	1	HEADLIGHT ASM-WIRING,LH	SEE PAGE 9-12
4	AG420940	1	HEADLIGHT ASM-WIRING, RH	SEE PAGE 9-14
5	AG514554	16	WASHER 0.50 FL ZN SAE TYP-A G8	
6	AG520614	8	NUT-.50-13,G8,ZN,HH,C-LK	
7	AG521891	2	PLUG-PLASTIC,2.50,14-18GA	
8	AG522562	2	NUT-.38-16,SS,SFLG,H	
9	AG561665	8	BOLT 0.50-13NCX 2.00 G8 ZN HHD	
10	AG562048	2	BOLT 0.37-16NCX 1.00 S.S. HHD	
11	401559X1	2	PLUG-PLASTIC,2.25,10-14GA	
12	519275D1	2	WLDMT-TUV MOUNT	

Copyright © 2008 AGCO Corporation

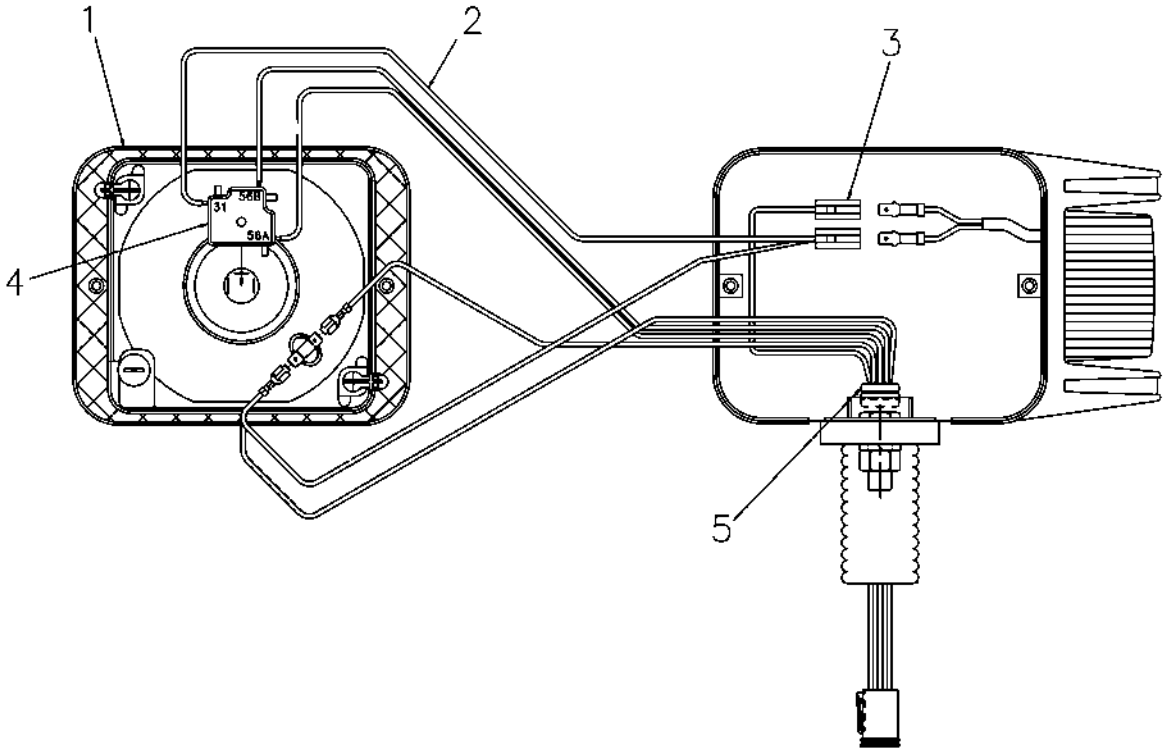

420939-B.TIF

Copyright © 2008 AGCO Corporation

HEADLIGHT ASM-WIRING,LH

ITEM	PART #	QTY	DESCRIPTION	COMMENTS
1	AG519211	1	HEADLIGHT-LEFT,HELLA	
2	AG420779	1	HARNESS-HEADLIGHT	
3	AG515203	2	BODY CONNECTOR MALE 1-CONTACT	
4	AG609486	1	HEADLAMP CONNECTOR 517372	
5	AG518038	1	GROMMET INSULATION 0.50 ID	

Copyright © 2008 AGCO Corporation

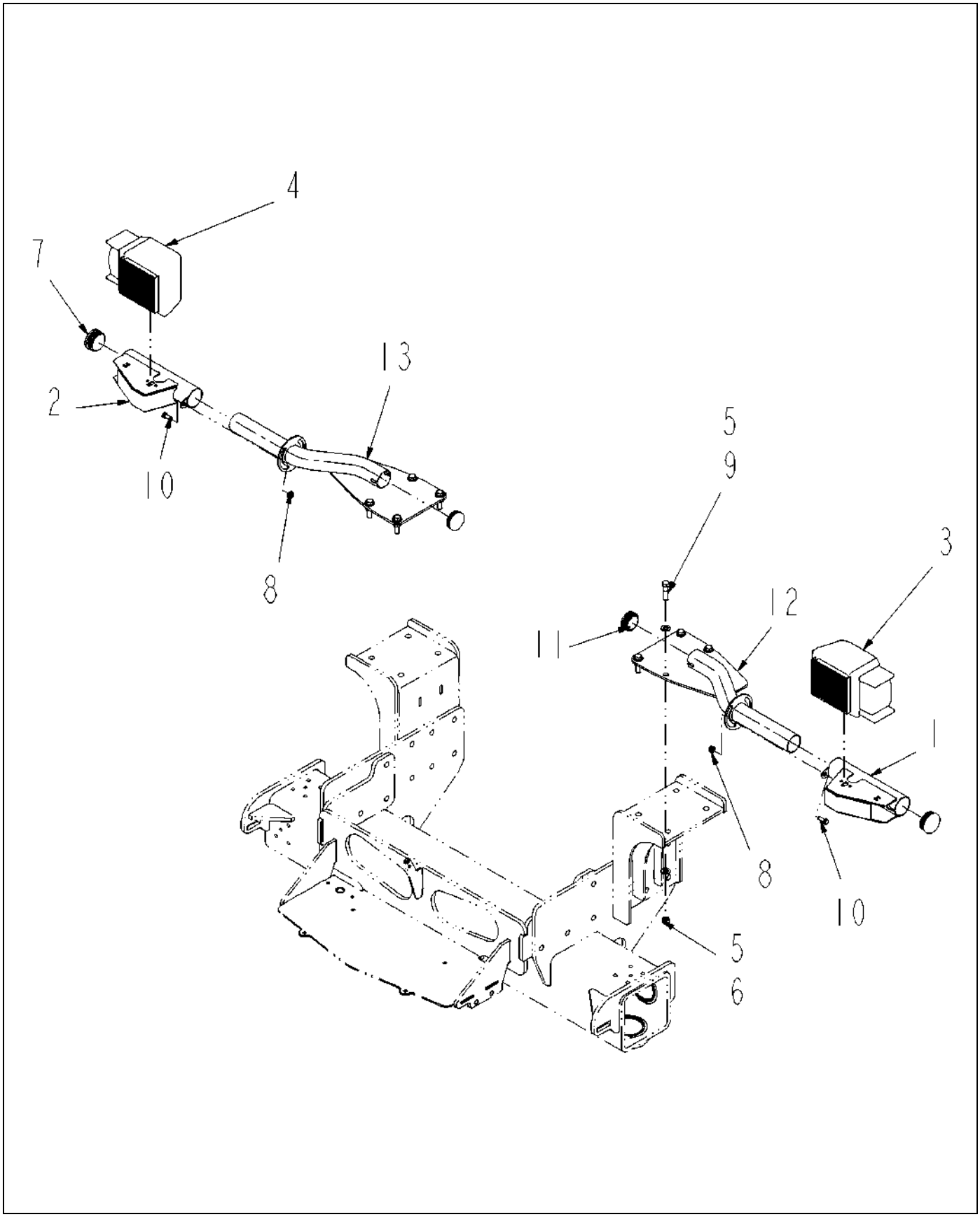

520954D1-01-R525-.TIF

Copyright © 2008 AGCO Corporation

ITEM	PART #	QTY	DESCRIPTION	COMMENTS
1	WR132227	1	BRACKET WLDMT-MTG,LIGHT,LH	
2	WR132231	1	BRACKET WLDMT-MTG,LIGHT,RH	
3	AG420939	1	HEADLIGHT ASM-WIRING,LH	SEE PAGE 9-12
4	AG420940	1	HEADLIGHT ASM-WIRING, RH	SEE PAGE 9-14
5	AG514554	16	WASHER 0.50 FL ZN SAE TYP-A G8	
6	AG520614	8	NUT-.50-13,G8,ZN,HH,C-LK	
7	AG521891	2	PLUG-PLASTIC,2.50,14-18GA	
8	AG522562	2	NUT-.38-16,SS,SFLG,H	
9	AG561665	8	BOLT 0.50-13NCX 2.00 G8 ZN HHD	
10	AG562048	2	BOLT 0.37-16NCX 1.00 S.S. HHD	
11	401559X1	2	PLUG-PLASTIC,2.25,10-14GA	
12	521189D1	1	WLDMT-TUV,MOUNT,LH	
13	521190D1	1	WLDMT-TUV,MOUNT,RH	

Copyright © 2008 AGCO Corporation

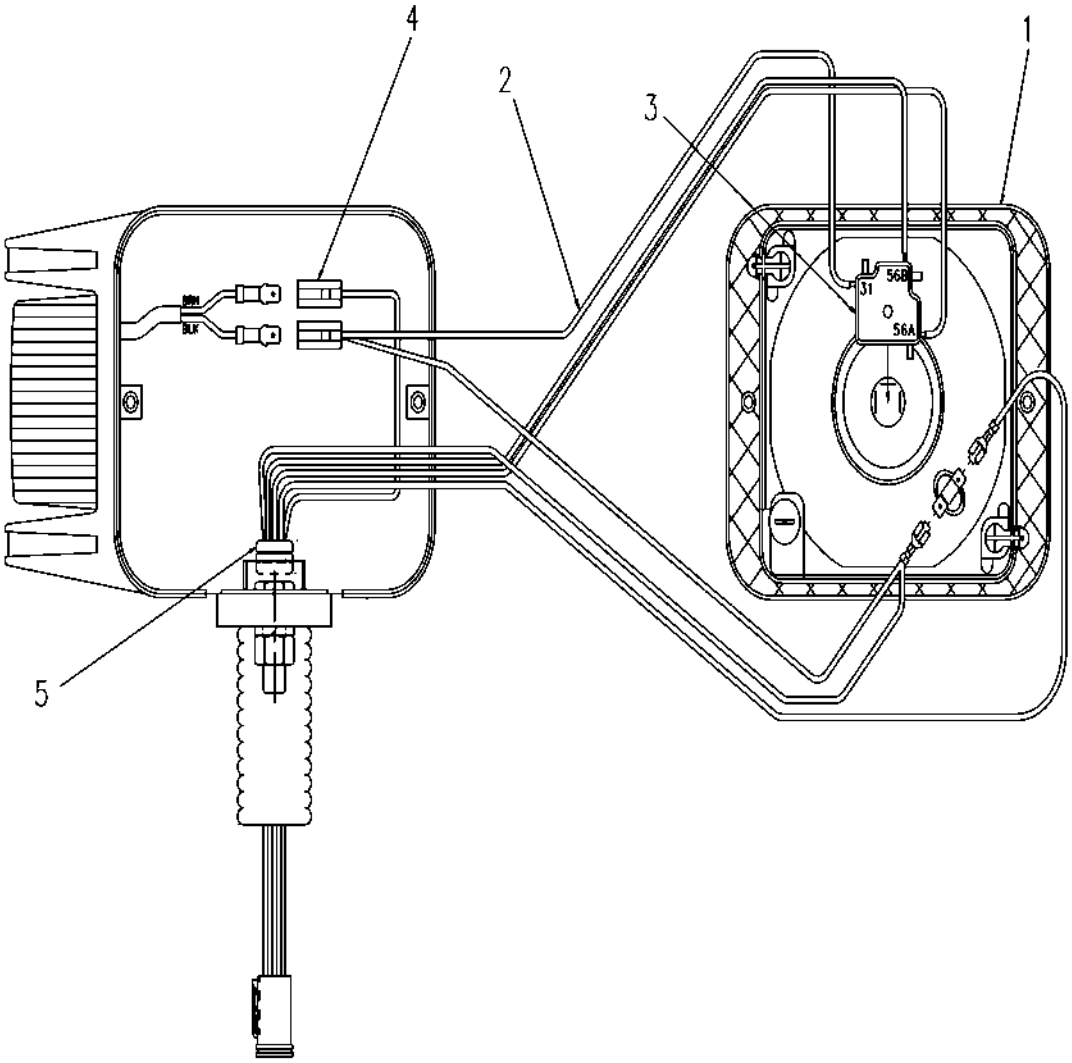

420940-B.TIF

Copyright © 2008 AGCO Corporation

HEADLIGHT ASM-WIRING, RH

ITEM	PART #	QTY	DESCRIPTION	COMMENTS
1	AG519210	1	HEADLIGHT-RIGHT,HELLA	
2	AG420779	1	HARNESS-HEADLIGHT	
3	AG609486	1	HEADLAMP CONNECTOR 517372	
4	AG515203	2	BODY CONNECTOR MALE 1-CONTACT	
5	AG518038	1	GROMMET INSULATION 0.50 ID	

Copyright © 2008 AGCO Corporation

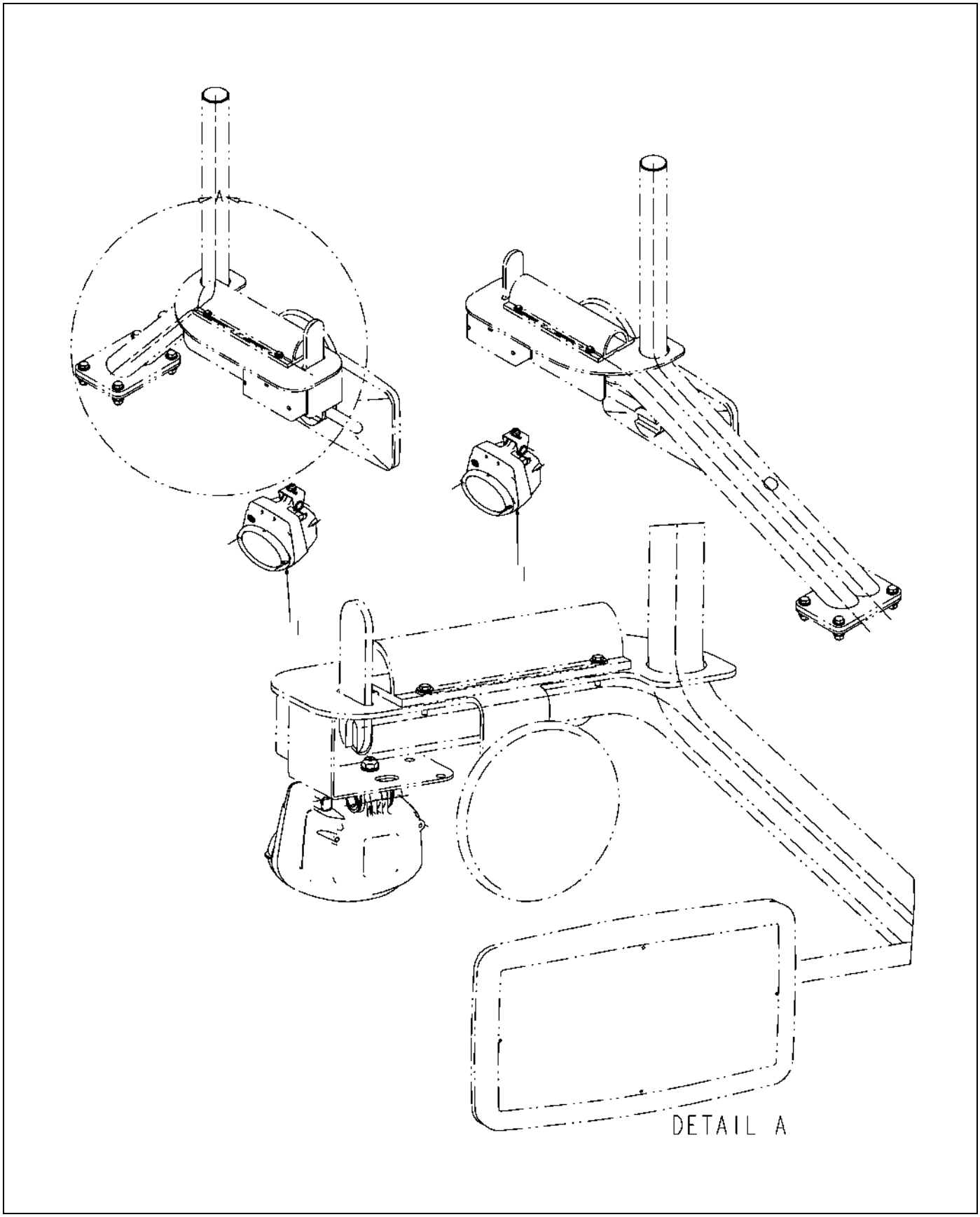

517853D1-01-R164-.TIF

Copyright © 2008 AGCO Corporation

F/A LIGHT INSTALL-HID, BOOM REST

ITEM	PART #	QTY	DESCRIPTION	COMMENTS
1	515468D1	2	LIGHT-WORK,HID,PENDENT MOUNT	SEE PAGE 9-21
2	517856D1	1	PACKAGING	
3	517855D1	1	INSTALL INSTRUCTIONS	

Copyright © 2008 AGCO Corporation

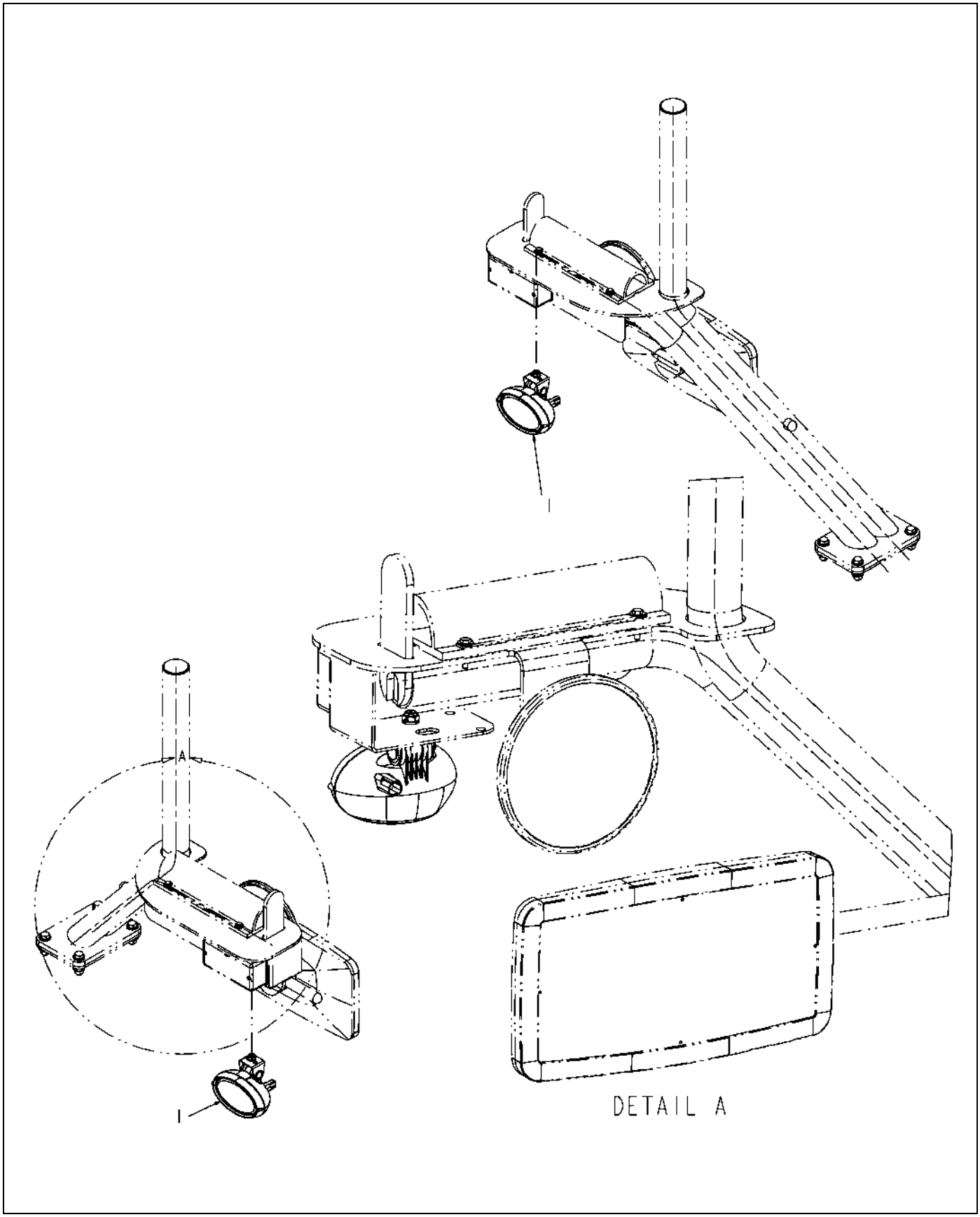

517854D1-01-R164-.TIF

Copyright © 2008 AGCO Corporation

F/A LIGHT INSTALL-WORK,BOOM REST

ITEM	PART #	QTY	DESCRIPTION	COMMENTS
1	515469D1	2	LGT-WORK,DUAL BEAM,PENDENT MNT	SEE PAGE 9-22
2	517858D1	1	PACKAGING	
3	517857D1	1	INSTALL INSTRUCTIONS	

Copyright © 2008 AGCO Corporation

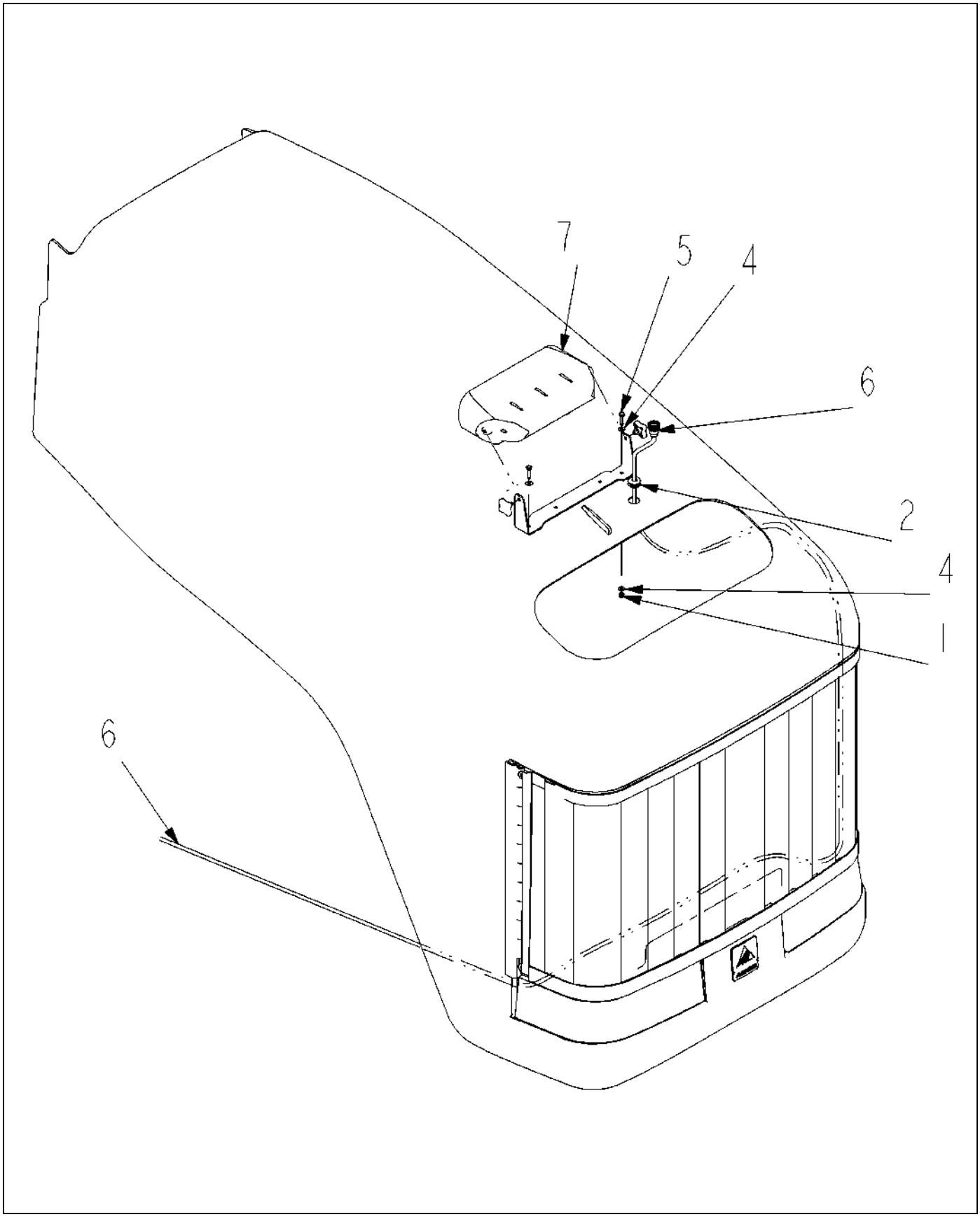

517862D1-02-T066-01.TIF

Copyright © 2008 AGCO Corporation

LIGHTBAR INSTALL-7X50

ITEM	PART #	QTY	DESCRIPTION	COMMENTS
1	AG027274	2	NUT #10-24NC HEX SS REG NY	
2	AG522907	1	GROMMET-RUBBER	
3	517815D1	1	KIT-LIGHTBAR,RGL600	
4	AG562082	4	WASHER #10 FL SS REG TYPE-B	
5	AG562127	2	SCREW 10-24X1.00 MACH HHD SS	
6	AG610787	-	CABLE-LIGHTBAR,28 FT	
7	517817D1	-	LIGHTBAR-RGL 600	

Copyright © 2008 AGCO Corporation

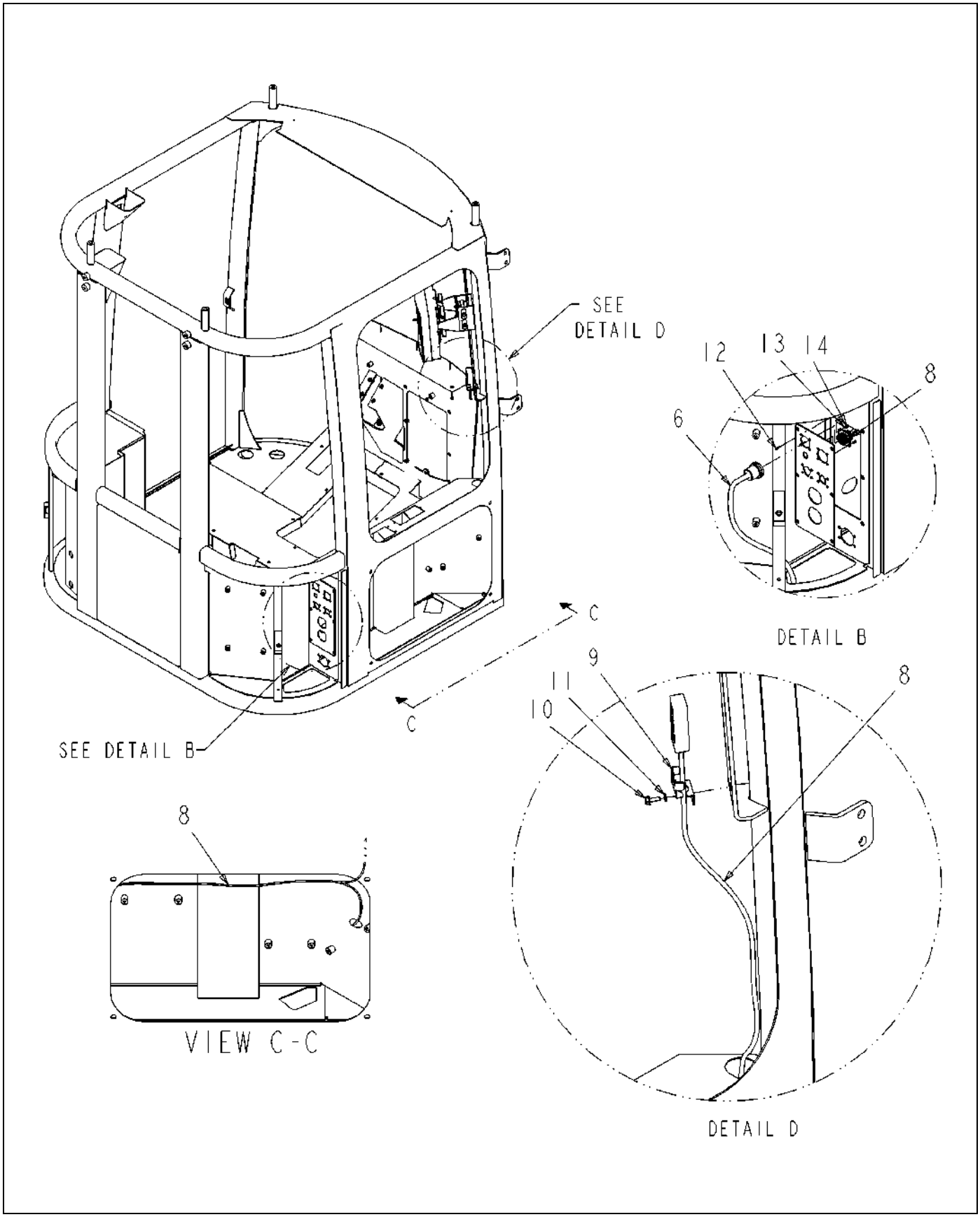

517862D1-02-T066-02.TIF

Copyright © 2008 AGCO Corporation

ITEM	PART #	QTY	DESCRIPTION	COMMENTS
6	AG610787	-	CABLE-LIGHTBAR,28 FT	
8	517816D1	-	CABLE-ADAPTER,CONXALL TO DB9	
9	WR129339	1	BRK-MTG,BUTTON BOX,LIGHTBAR	
10	AG561905	1	SCREW .25-20X 0.75 TAP ZN IWHD	
11	AG550493	1	WASHER 0.25 LK ZN REG	
12	AG560227	4	SCREW 8-32X 0.75 MA ZN SL PHD	
13	AG550914	4	WASHER #8 LK ZN REG	
14	AG550922	4	NUT #8-32NC HEX ZN REG	

Copyright © 2008 AGCO Corporation

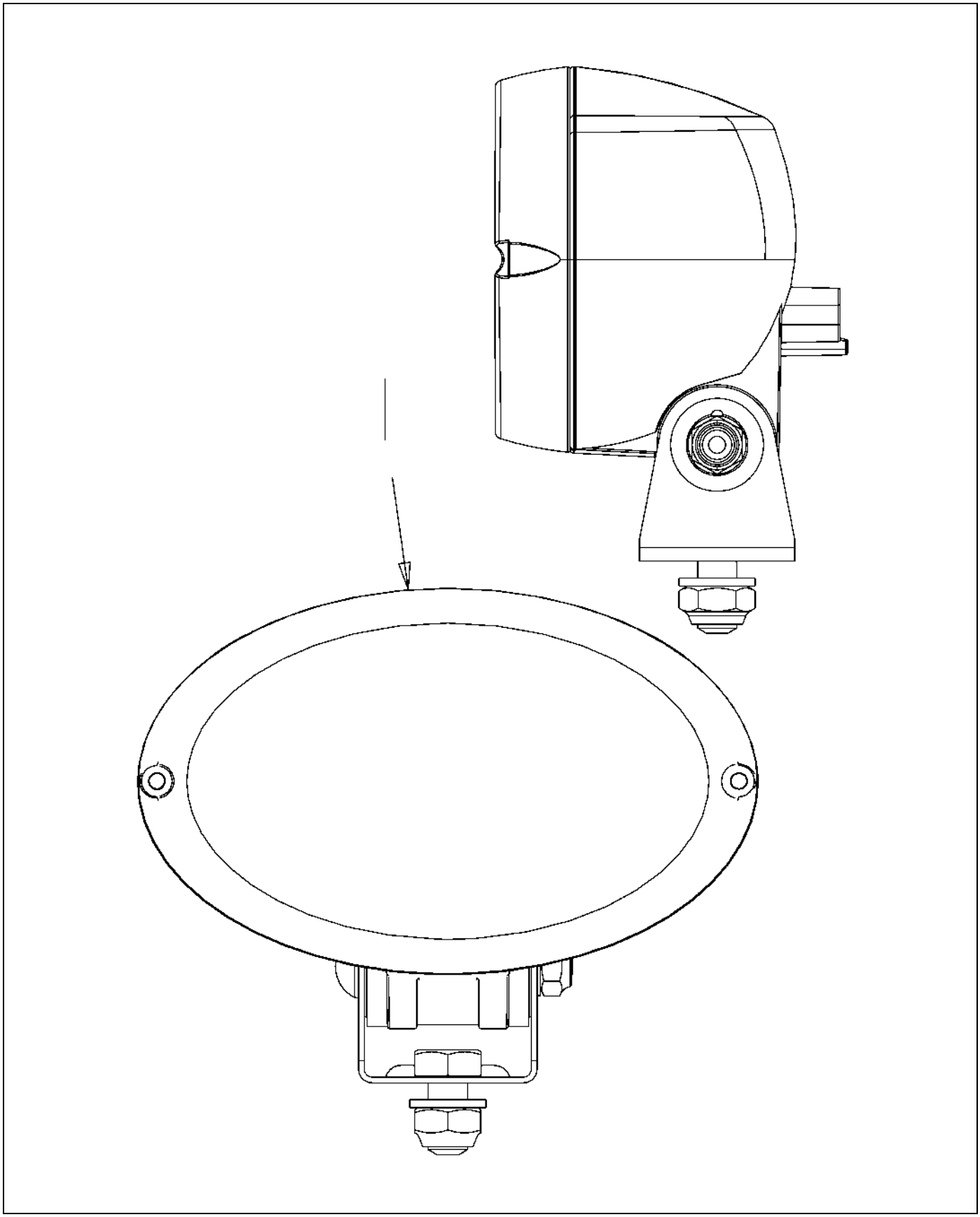

505081D1-03-N296-.TIF

Copyright © 2008 AGCO Corporation

WORK LIGHT

ITEM	PART #	QTY	DESCRIPTION	COMMENTS
1	505082D1	1	WORK LIGHT	SEE PAGE 9-20

Copyright © 2008 AGCO Corporation

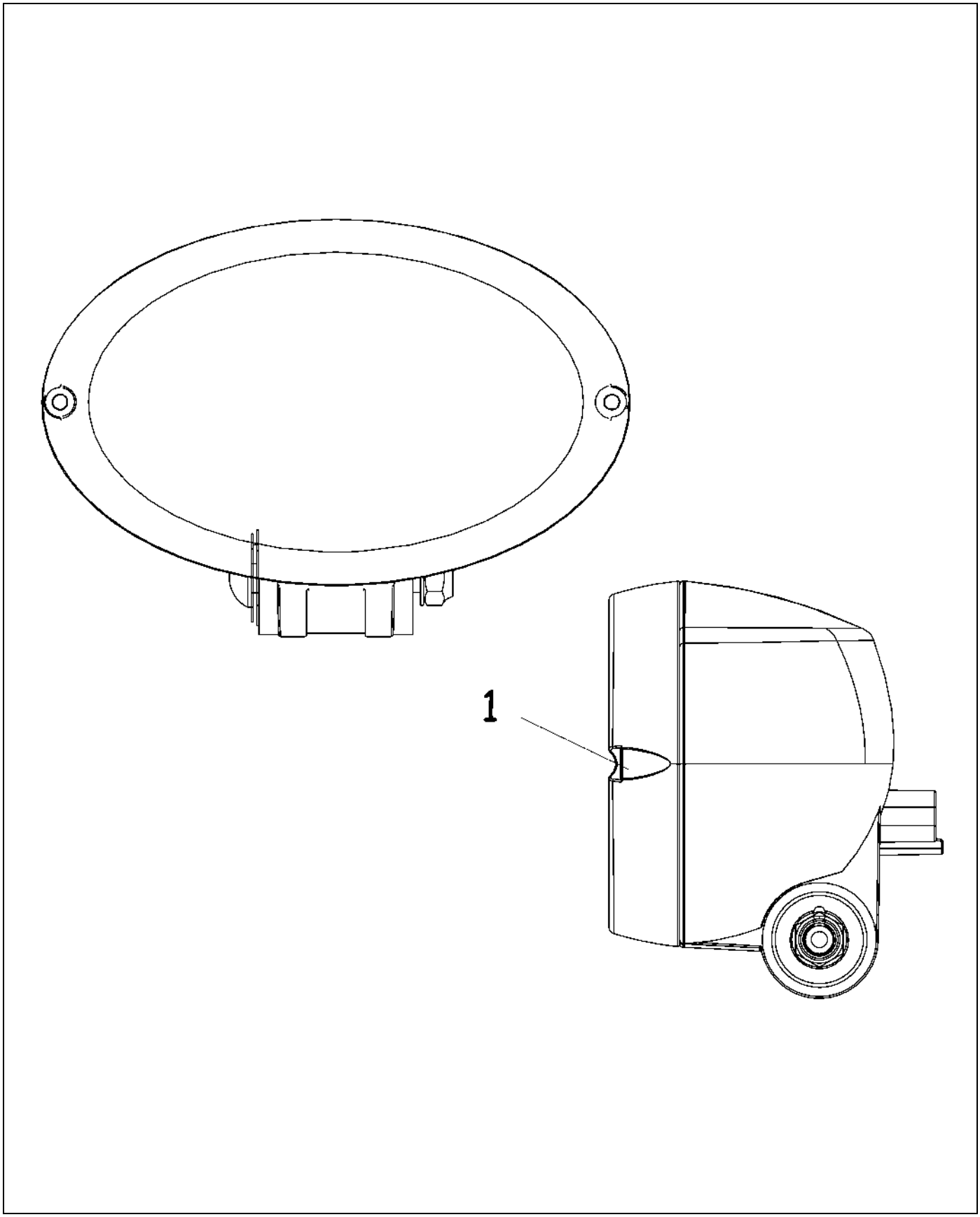

505082D1-02-N440-.TIF

Copyright © 2008 AGCO Corporation

WORK LIGHT

ITEM	PART #	QTY	DESCRIPTION	COMMENTS
1	AG331695	1	BULB (505081D1)	

Copyright © 2008 AGCO Corporation

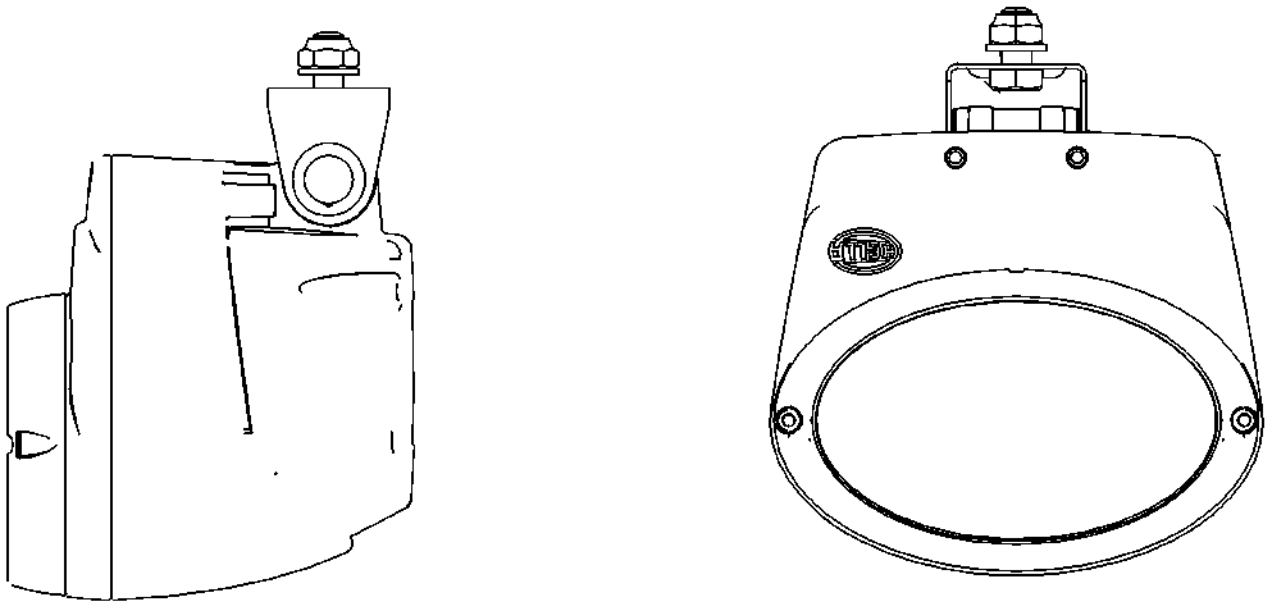

515468D1-01-N770-.TIF

Copyright © 2008 AGCO Corporation

LIGHT-WORK,HID,PENDENT MOUNT

ITEM	PART #	QTY	DESCRIPTION	COMMENTS
REF	136-5598	1	BULB-HID	

Copyright © 2008 AGCO Corporation

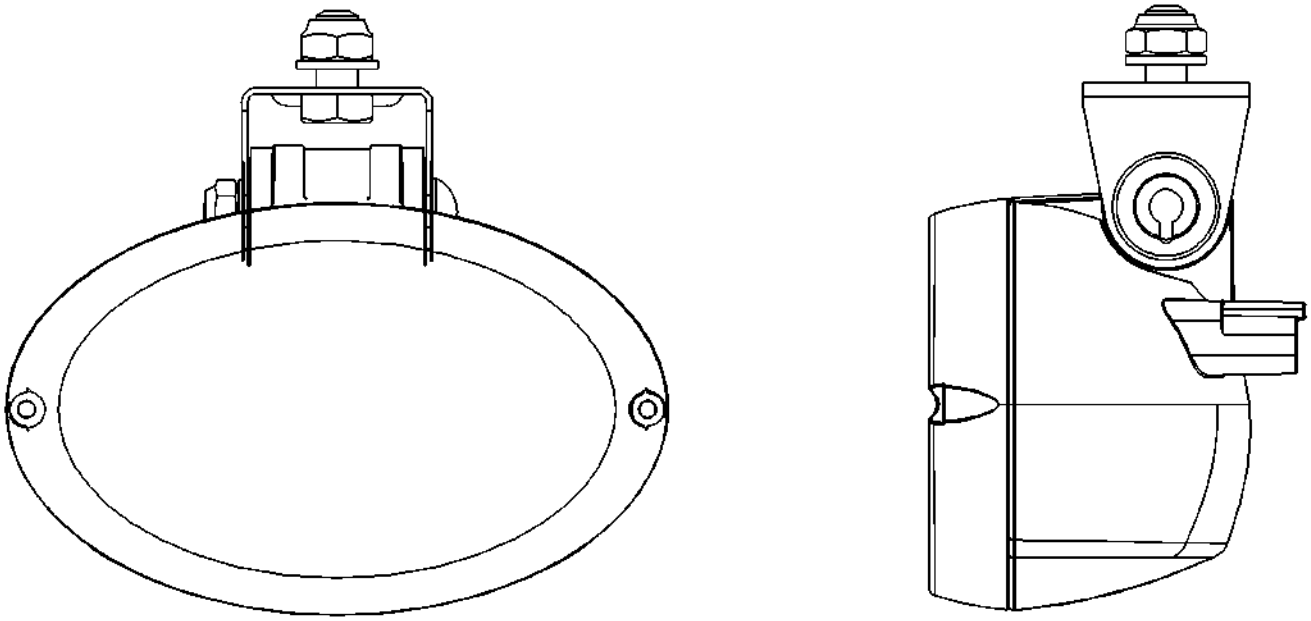

515469D1-01-N770-.TIF

Copyright © 2008 AGCO Corporation

LIGHT-WORK,DUAL BEAM,PENDENT MNT

ITEM	PART #	QTY	DESCRIPTION	COMMENTS
REF	AG332714	-	BULB/HEAVY DUTY H3	
REF	AG133566	-	12V 55W H3 BULB	

Copyright © 2008 AGCO Corporation

SUPPORT ASM-HOOD REAR	10-1
INSTALL-REAR,FENDER,COUPE	10-2
INSTALL-FRONT,FENDER,COUPE,7450	10-3
F/A-FRONT,FENDER,COUPE,7450	10-4
HANDRAIL INSTALL,7650,SS	10-5
HANDRAIL INSTALL,7650,POLY	10-6
INSTALL-REAR,FENDER,COUPE	10-7
F/A-FENDER,7460,REAR,SPRING	10-8
HOOD GROUP INSTALL-CHAL	10-9
HOOD GROUP INSTALL-CHAL	10-10
HOOD GROUP INSTALL-CHAL	10-11
HEADLIGHT-HALOGEN,WRAPPING,LH	10-12
HEADLIGHT-HALOGEN,WRAPPING,RH	10-13

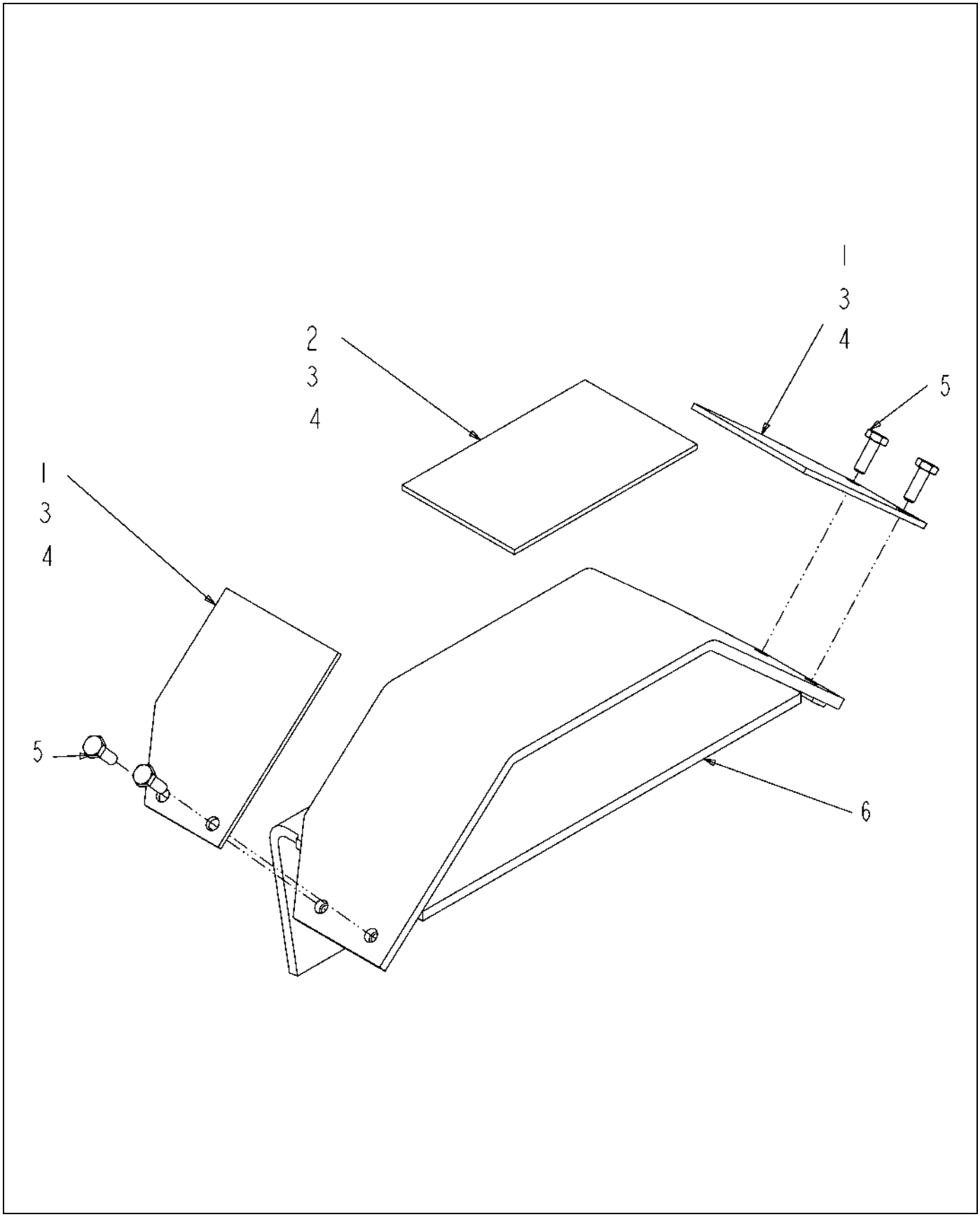

511487D1-01-N389.TIF

Copyright © 2008 AGCO Corporation

SUPPORT ASM-HOOD REAR

ITEM	PART #	QTY	DESCRIPTION	COMMENTS
1	AG261591	2	PLATE-WEAR,HOOD,SIDE	
2	AG261592	1	PLATE-WEAR,HOOD,TOP	
3	AG523200	AR	3M 94 1/2 PT TAPE PRIMER	
4	AG523201	-	TAPE-ADHESIVE,4.00,HIGH BOND [BULK: 1.330 FT]	
5	AG550485	4	BOLT 0.25-20NCX 0.75 G5 ZN HHD	
6	511486D1	1	SUPPORT WLDMT-HOOD,REAR	

Copyright © 2008 AGCO Corporation

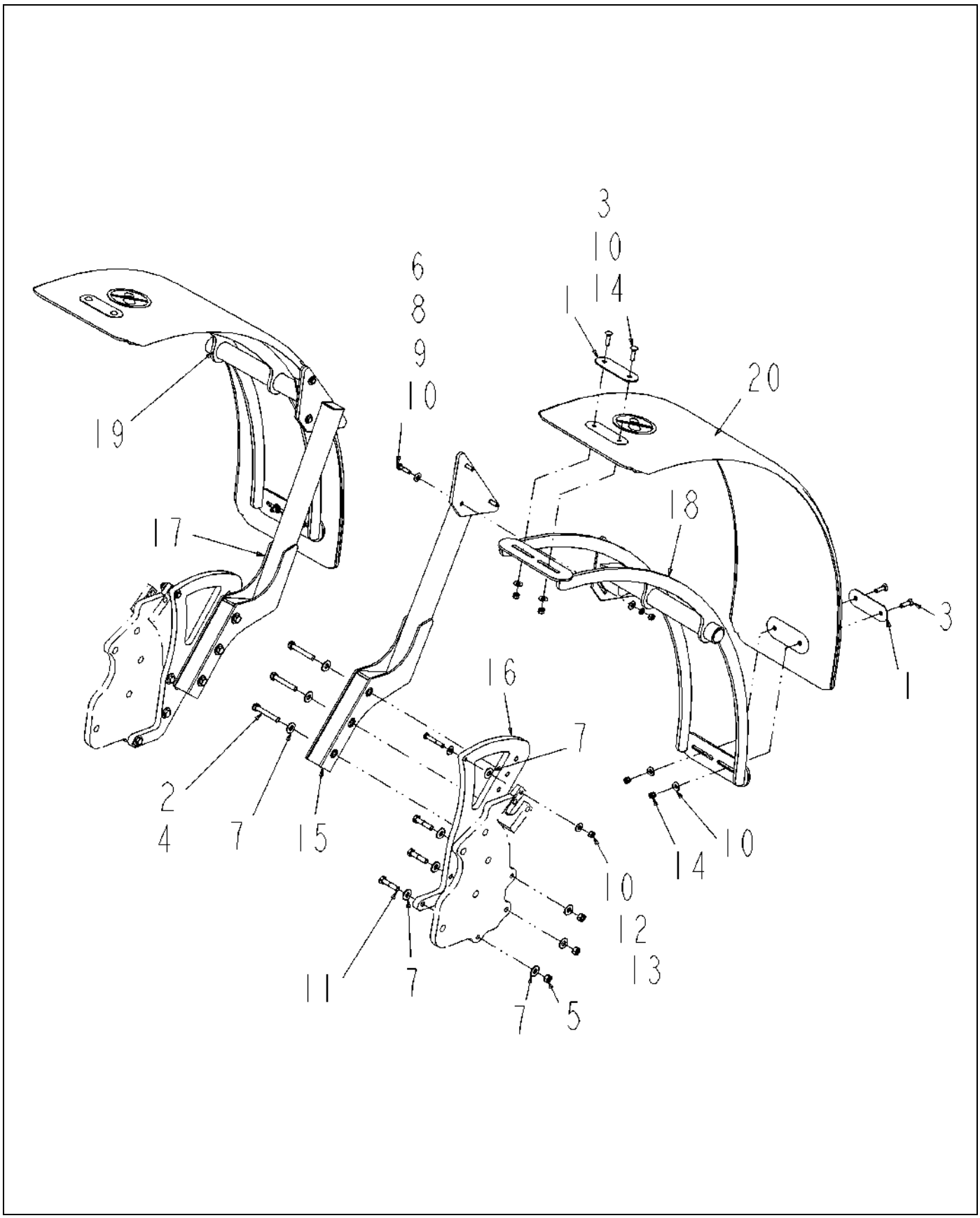

524364D1-01-R911-.TIF

Copyright © 2008 AGCO Corporation

INSTALL-REAR,FENDER,COUPE

ITEM	PART #	QTY	DESCRIPTION	COMMENTS
1	AG236763	4	PLATE-MOUNTING,FENDER	
2	AG512885	AR	LOCTITE ADHESIVE SEALANT BLUE	
3	AG520944	8	BOLT-.38-16X1.5,G5,BLK,CRG	
4	AG524262	6	BOLT-.50-20X4.00,G8,ZN,HHD	
5	AG550124	6	NUT 0.50-13NC HEX ZN REG	
6	AG550191	6	WASHER 0.37 LK ZN REG	
7	AG550353	20	WASHER 0.50 FL ZN REG TYPE-B	
8	AG550779	6	BOLT 0.37-16NCX 1.50 G5 ZN HHD	
9	AG550825	6	NUT 0.37-16NC HEX ZN REG	
10	AG551007	24	WASHER 0.37 FL ZN REG TYPE-B	
11	AG551244	6	BOLT.50-13NCX 2.25G5 ZN HHD	
12	AG556203	2	BOLT 0.37-16NCX 2.50 G8 ZN HHD	
13	AG557676	2	NUT 0.37-16NC HEX ZN C-LK	
14	AG601411	8	NUT 0.37-16NC HEX ZN REG NY	
15	512058D1	1	WLDMT-MNT,FENDER,LH	
16	512061D1	2	PLATE-REAR,FENDER MOUNT	
17	512063D1	1	WLDMT-MNT,FENDER,RH	
18	522259D1	1	WLDMT-FENDER,SUPPORT,REAR	
19	522260D1	1	WLDMT-FENDER,SUPPORT,REAR	
20	524194D1	2	FENDER-AGCO,POLY	

Copyright © 2008 AGCO Corporation

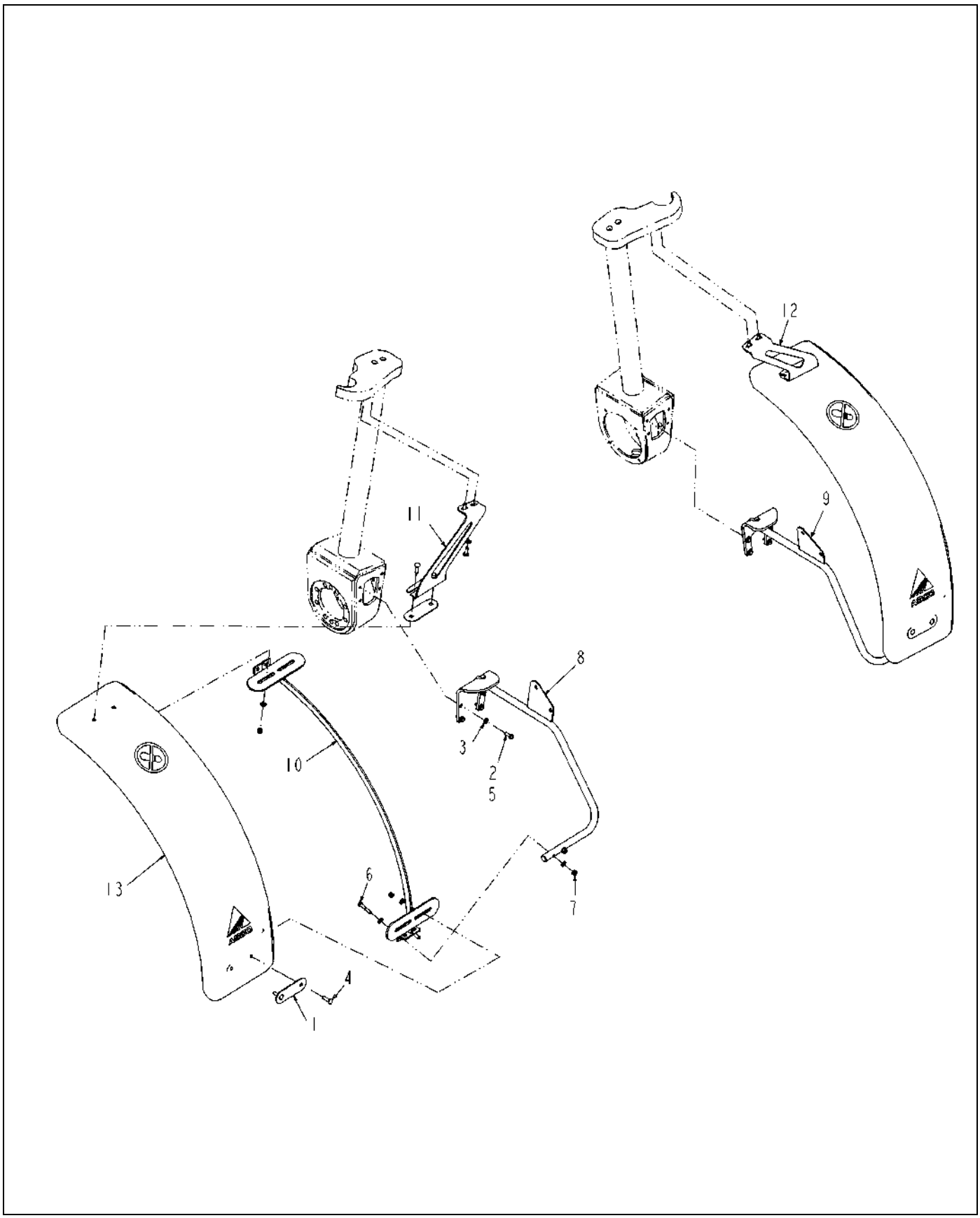

524360D1-01-R911-.TIF

Copyright © 2008 AGCO Corporation

INSTALL-FRONT,FENDER,COUPE,7450

ITEM	PART #	QTY	DESCRIPTION	COMMENTS
1	AG236763	4	PLATE-MOUNTING,FENDER	
2	AG512885	AR	LOCTITE ADHESIVE SEALANT BLUE	
3	AG514559	28	WASHER 0.37 FL ZN SAE TYP-A G8	
4	AG520944	8	BOLT-.38-16X1.5,G5,BLK,CRG	
5	AG550175	12	BOLT 0.37-16NCX 1.00 G5 ZN HHD	
6	AG552240	4	BOLT 0.37-16NCX 2.00 G5 ZN HHD	
7	AG601411	12	NUT 0.37-16NC HEX ZN REG NY	
8	507634D1	1	WLDMT-FENDER,MOUNT,LH	
9	509054D1	1	WLDMT-FENDER,MOUNT,RH	
10	522061D1	2	WLDMT-FENDER BRKT,MAIN,FRONT	
11	523260D1	1	PLATE-FENDER MNT,TOP,LH	
12	523261D1	1	PLATE-FENDER MNT,TOP,RH	
13	524195D1	2	FENDER-AGCO,POLY	

Copyright © 2008 AGCO Corporation

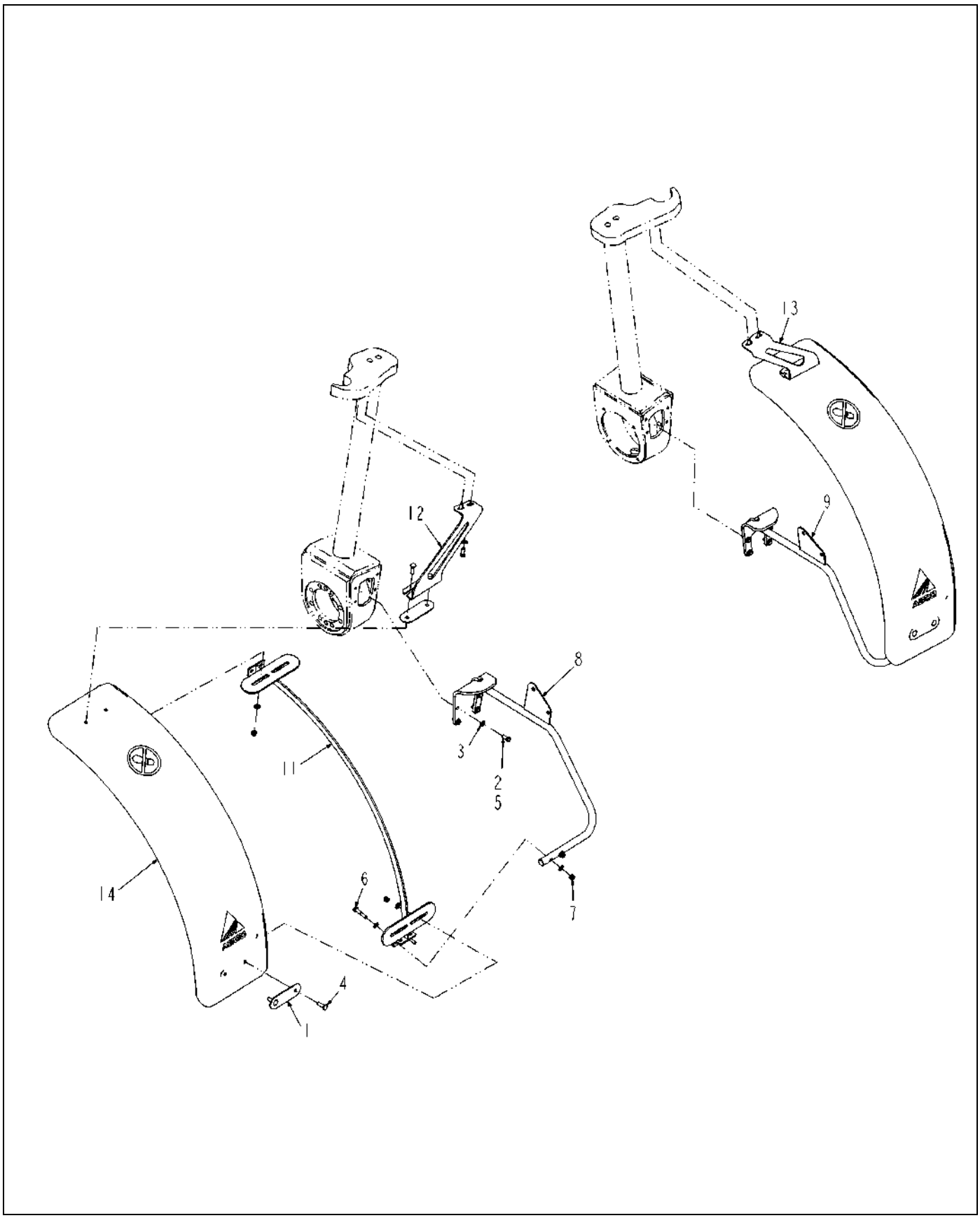

524361D1-01-R911-.TIF

Copyright © 2008 AGCO Corporation

F/A-FRONT,FENDER,COUPE,7450

ITEM	PART #	QTY	DESCRIPTION	COMMENTS
1	AG236763	4	PLATE-MOUNTING,FENDER	
2	AG512885	AR	LOCTITE ADHESIVE SEALANT BLUE	
3	AG514559	28	WASHER 0.37 FL ZN SAE TYP-A G8	
4	AG520944	8	BOLT-.38-16X1.5,G5,BLK,CRG	
5	AG550175	12	BOLT 0.37-16NCX 1.00 G5 ZN HHD	
6	AG552240	4	BOLT 0.37-16NCX 2.00 G5 ZN HHD	
7	AG601411	12	NUT 0.37-16NC HEX ZN REG NY	
8	507634D1	1	WLDMT-FENDER,MOUNT,LH	
9	509054D1	1	WLDMT-FENDER,MOUNT,RH	
10	519210D1	1	PKG-FRONT,FENDER,COUPE	
11	522061D1	2	WLDMT-FENDER BRKT,MAIN,FRONT	
12	523260D1	1	PLATE-FENDER MNT,TOP,LH	
13	523261D1	1	PLATE-FENDER MNT,TOP,RH	
14	524195D1	2	FENDER-AGCO,POLY	
15	524370D1	1	INSTR-FRONT,FENDER,7460	

Copyright © 2008 AGCO Corporation

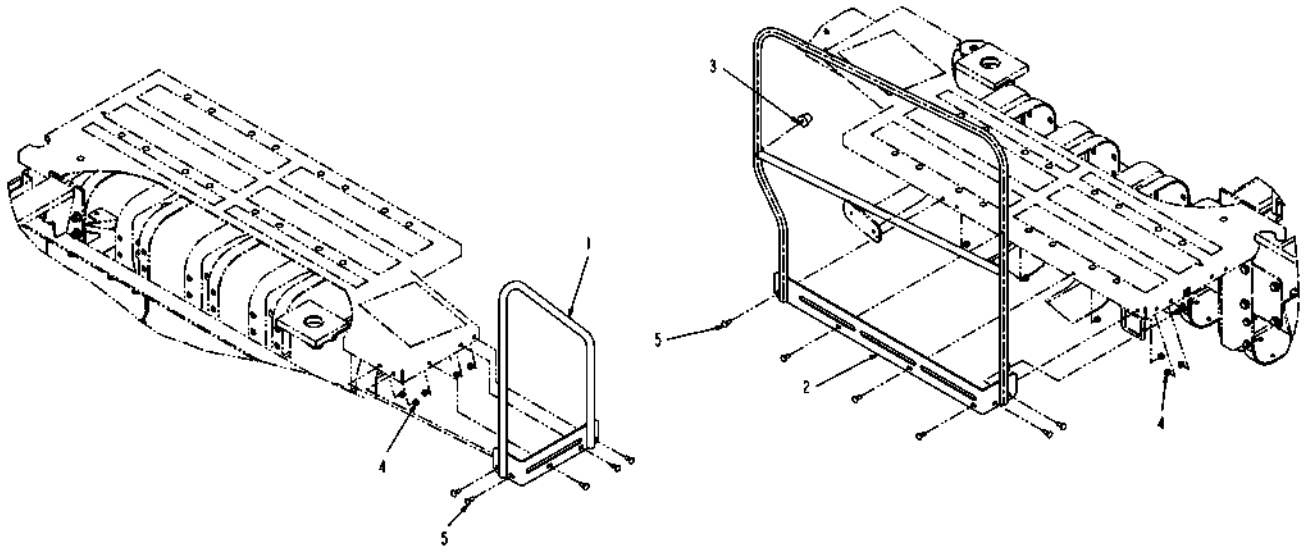

128749-04-M472-.TIF

Copyright © 2008 AGCO Corporation

HANDRAIL INSTALL,7650,SS

ITEM	PART #	QTY	DESCRIPTION	COMMENTS
1	WR127201	1	HANDRAIL-WLDMT,FRONT	
2	WR135374	1	WLDMT-HANDRAIL,SIDE,SS	
3	AG519802	1	BUMPER, RUBBER VIBRATION	
4	AG522562	11	NUT-.38-16,SS,SFLG,H	
5	AG609084	11	BOLT 0.37-16NCX 1.00 SS CRG	

Copyright © 2008 AGCO Corporation

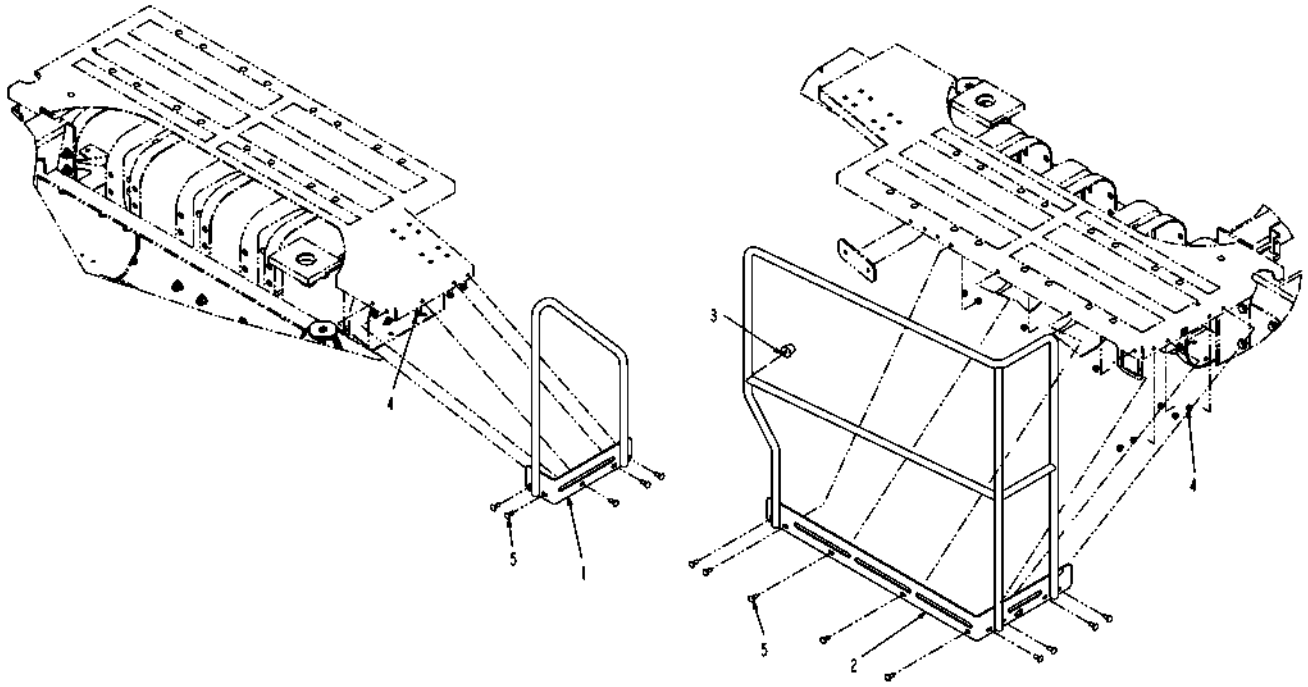

128750-D-M320-.TIF

Copyright © 2008 AGCO Corporation

HANDRAIL INSTALL,7650,POLY

ITEM	PART #	QTY	DESCRIPTION	COMMENTS
1	WR127201	1	HANDRAIL-WLDMT,FRONT	
2	WR135376	1	WLDMT-HANDRAIL,SIDE,POLY	
3	AG519802	1	BUMPER, RUBBER VIBRATION	
4	AG522562	13	NUT-.38-16,SS,SFLG,H	
5	AG609084	13	BOLT 0.37-16NCX 1.00 SS CRG	

Copyright © 2008 AGCO Corporation

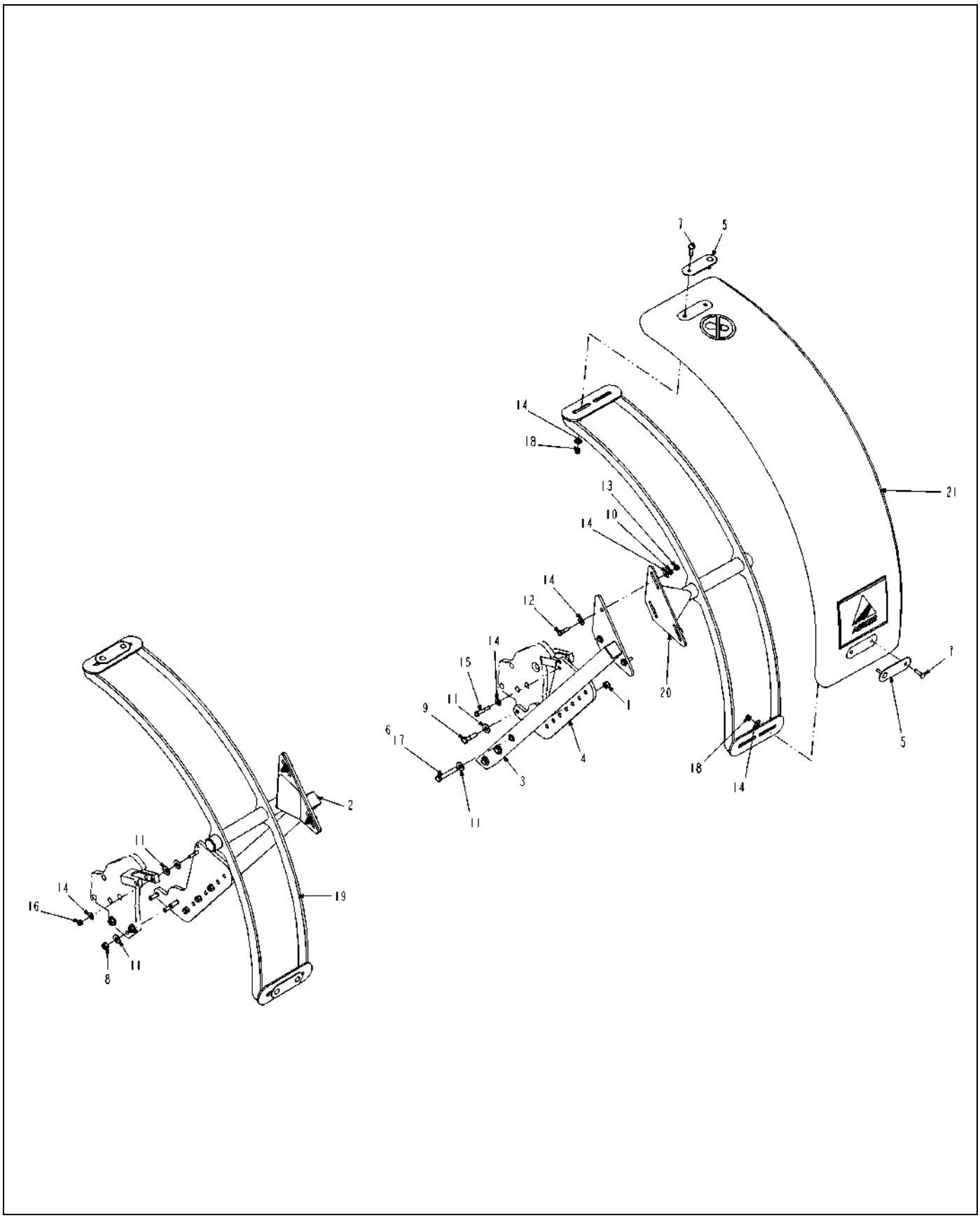

524362D1-01-R911-.TIF

Copyright © 2008 AGCO Corporation

INSTALL-REAR,FENDER,COUPE

ITEM	PART #	QTY	DESCRIPTION	COMMENTS
1	WR55330	6	NUT-HEX,1/2-20UNF G8	
2	WR135931	1	WLDMT-BRKT ATTACH,REAR,LH	
3	WR135932	1	WLDMT-BRKT ATTACH,REAR,RH	
4	WR135933	2	PLATE-REAR,FENDER MOUNT	
5	AG236763	4	PLATE-MOUNTING,FENDER	
6	AG512885	AR	LOCTITE ADHESIVE SEALANT BLUE	
7	AG520944	8	BOLT-.38-16X1.5,G5,BLK,CRG	
8	AG550124	6	NUT 0.50-13NC HEX ZN REG	
9	AG550132	6	BOLT .50-13NCX 2 G5 ZN HHD	
10	AG550191	6	WASHER 0.37 LK ZN REG	
11	AG550353	22	WASHER 0.50 FL ZN REG TYPE-B	
12	AG550779	6	BOLT 0.37-16NCX 1.50 G5 ZN HHD	
13	AG550825	6	NUT 0.37-16NC HEX ZN REG	
14	AG551007	24	WASHER 0.37 FL ZN REG TYPE-B	
15	AG552127	2	BOLT 0.37-16NCX 2.25 G5 ZN HHD	
16	AG557676	2	NUT 0.37-16NC HEX ZN C-LK	
17	AG561058	6	BOLT 0.50-20NFX 3.25 G8 ZN HHD	
18	AG601411	8	NUT 0.37-16NC HEX ZN REG NY	
19	522259D1	1	WLDMT-FENDER,SUPPORT,REAR	
20	522260D1	1	WLDMT-FENDER,SUPPORT,REAR	
21	524194D1	2	FENDER-AGCO,POLY	

Copyright © 2008 AGCO Corporation

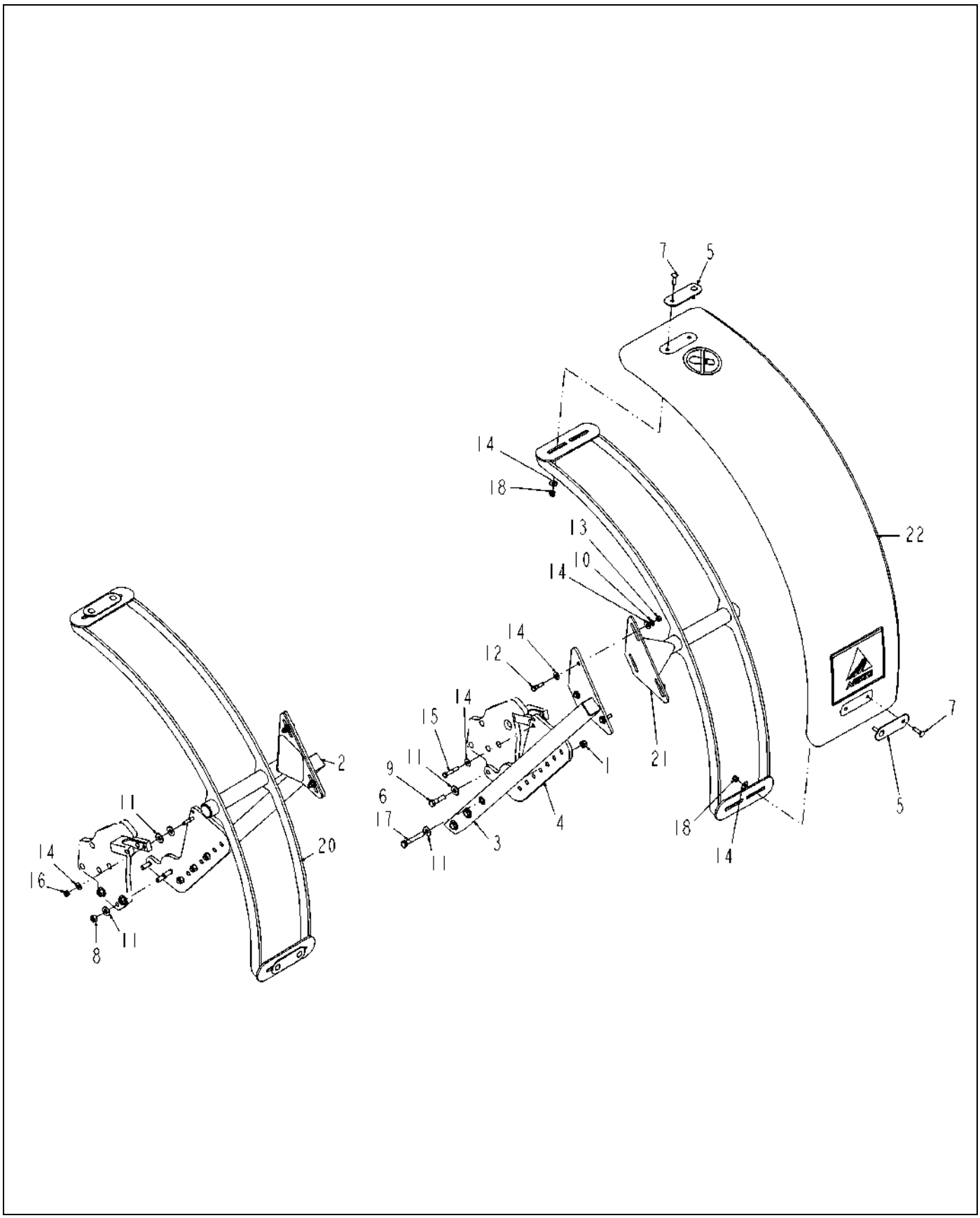

524363D1-01-R911-.TIF

Copyright © 2008 AGCO Corporation

F/A-FENDER,7460,REAR,SPRING

ITEM	PART #	QTY	DESCRIPTION	COMMENTS
1	WR55330	6	NUT-HEX,1/2-20UNF G8	
2	WR135931	1	WLDMT-BRKT ATTACH,REAR,LH	
3	WR135932	1	WLDMT-BRKT ATTACH,REAR,RH	
4	WR135933	2	PLATE-REAR,FENDER MOUNT	
5	AG236763	4	PLATE-MOUNTING,FENDER	
6	AG512885	AR	LOCTITE ADHESIVE SEALANT BLUE	
7	AG520944	8	BOLT-.38-16X1.5,G5,BLK,CRG	
8	AG550124	6	NUT 0.50-13NC HEX ZN REG	
9	AG550132	6	BOLT .50-13NCX 2 G5 ZN HHD	
10	AG550191	6	WASHER 0.37 LK ZN REG	
11	AG550353	22	WASHER 0.50 FL ZN REG TYPE-B	
12	AG550779	6	BOLT 0.37-16NCX 1.50 G5 ZN HHD	
13	AG550825	6	NUT 0.37-16NC HEX ZN REG	
14	AG551007	24	WASHER 0.37 FL ZN REG TYPE-B	
15	AG552127	2	BOLT 0.37-16NCX 2.25 G5 ZN HHD	
16	AG557676	2	NUT 0.37-16NC HEX ZN C-LK	
17	AG561058	6	BOLT 0.50-20NFX 3.25 G8 ZN HHD	
18	AG601411	8	NUT 0.37-16NC HEX ZN REG NY	
19	519212D1	1	PKG-REAR,FENDER,COUPE	
20	522259D1	1	WLDMT-FENDER,SUPPORT,REAR	
21	522260D1	1	WLDMT-FENDER,SUPPORT,REAR	
22	524194D1	2	FENDER-AGCO,POLY	
23	524371D1	1	INSTR-REAR,FENDER,7460,SPRING	

Copyright © 2008 AGCO Corporation

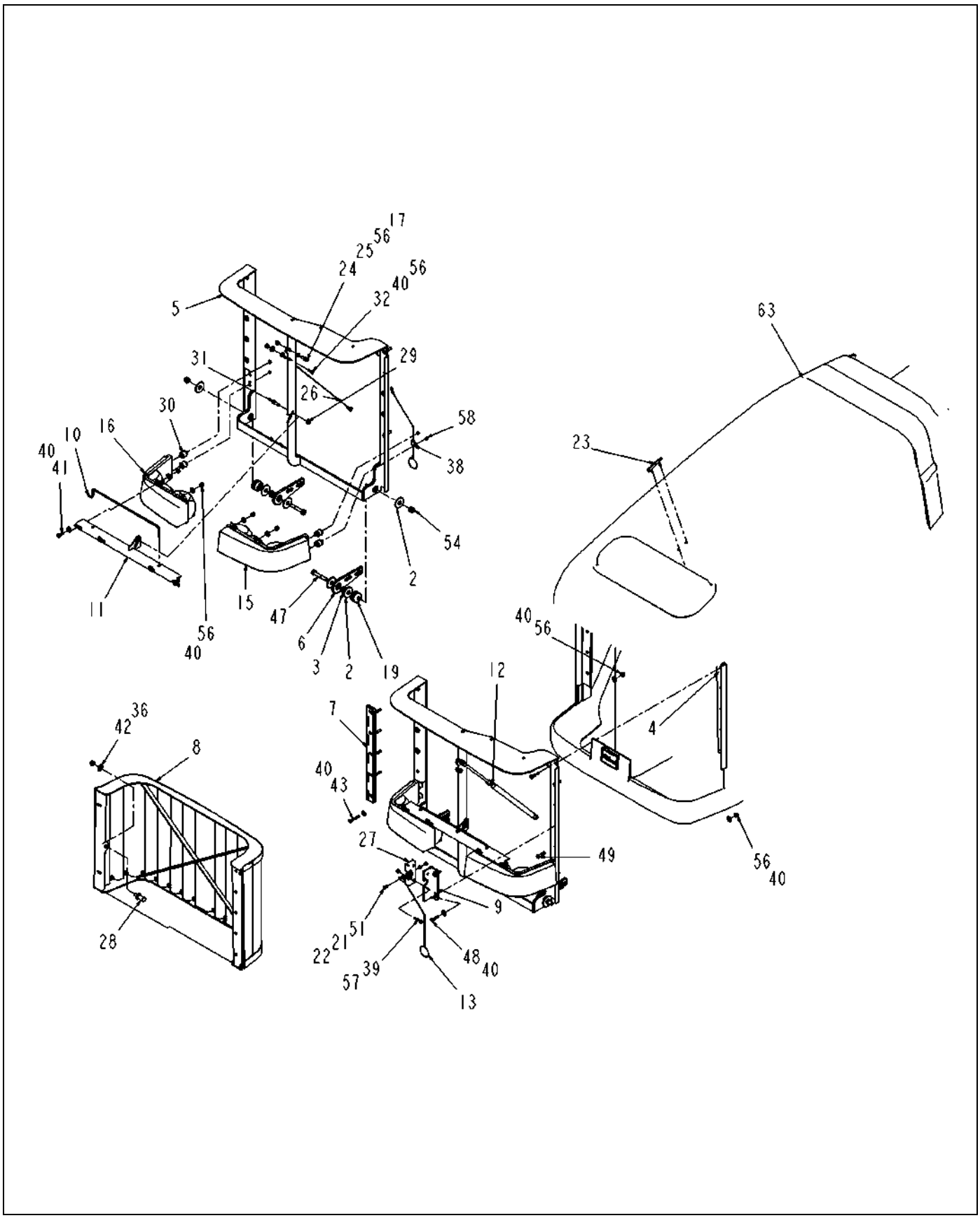

523721D1-02-R949-01.TIF

Copyright © 2008 AGCO Corporation

ITEM	PART #	QTY	DESCRIPTION	COMMENTS
2	AG109445	6	WASHER-SHOCK MOUNT	
3	AG120283	2	BUSHING-HOOD HINGE	
4	AG123817	2	NUT-M5 PALNUT, SELF TAP	
5	WR126297	1	FRAME-GRILL	
6	WR126298	2	PLATE-HINGE	
7	WR127811	1	HINGE-GRILL	
8	WR127841	1	WLDMT-GRILL ASM	
9	WR127883	1	PLATE-LATCH MTG	
10	WR128278	1	ROD-GRILL,STAND OUT	
11	WR128650	1	BRKT WLDMT-HEADLIGHT,ADJ	
12	WR128654	1	SPRING-GAS,100LB,10.00 STROKE	
13	WR128680	1	CABLE-LATCH PULL	
15	AG421135	1	HEADLIGHT-HALOGEN,WRAPPING,LH	SEE PAGE 10-12
16	AG421136	1	HEADLIGHT-HALOGEN,WRAPPING,RH	SEE PAGE 10-13
17	AG512885	AR	LOCTITE ADHESIVE SEALANT BLUE	
19	AG519742	2	MOUNT-CENTER BONDED	
21	AG520879	1	WASHER-FLAT,M6,ZN,REG	
22	AG520905	1	NUT-M6-1.0,CL10.9,ZN,H,LK	
23	AG521283	1	SIGHT-HOOD	
24	AG521557	2	STUD-BALL,.31-18NC	
25	AG521558	2	CLIP-RETAINING,BALL STUD	
26	AG521657	1	TETHER-HOOD,.06DIAX26.50,SS	
27	AG521943	1	LATCH-GRILLE	
28	AG521944	1	STRIKER-LATCH	
29	AG522562	1	NUT-.38-16,SS,SFLG,H	
30	AG523877	4	MOUNT-STUD,CYLINDRICAL,M6-1.00	
31	AG550175	1	BOLT 0.37-16NCX 1.00 G5 ZN HHD	
32	AG550183	7	BOLT 0.31-18NCX 0.75 G5 ZN HHD	
36	AG550566	1	NUT 0.43-14NC HEX ZN REG	
38	AG550892	1	CLAMP 0.31 COATED HOSE CO	
39	AG550949	4	BOLT 0.25-20NCX 1.50 G5 ZN HHD	
40	AG551015	32	WASHER 0.31 FL ZN REG TYPE-B	
41	AG551252	4	BOLT 0.31-18NCX 1.00 G5 ZN HHD	
42	AG551406	1	WASHER 0.43 FL ZN REG TYPE-B	
43	AG552275	5	BOLT 0.31-18NCX 2.00 G5 ZN HHD	
47	AG556103	2	BOLT 0.50-13NCX 3.00 G5 ZN HHD	
48	AG559105	3	BOLT 0.31-18NCX 1.25 G5 ZN HHD	
49	AG559911	2	BOLT 0.31-18NCX 1.50 G5 ZN HHD	
51	AG562639	1	BOLT M6 1.00X12MM G8.8 ZN HHD	
54	AG601152	2	NUT 0.50-13NC HEX ZN REG NY	
56	AG601888	16	NUT 0.31-18NC HEX ZN REG NY	
57	AG604216	4	NUT 0.25-20NC HEX ZN REG NY	
58	AG713398	4	LOCK NUT M6	
63	523387D1	1	HOOD ASM-SC7X, CHAL	

Copyright © 2008 AGCO Corporation

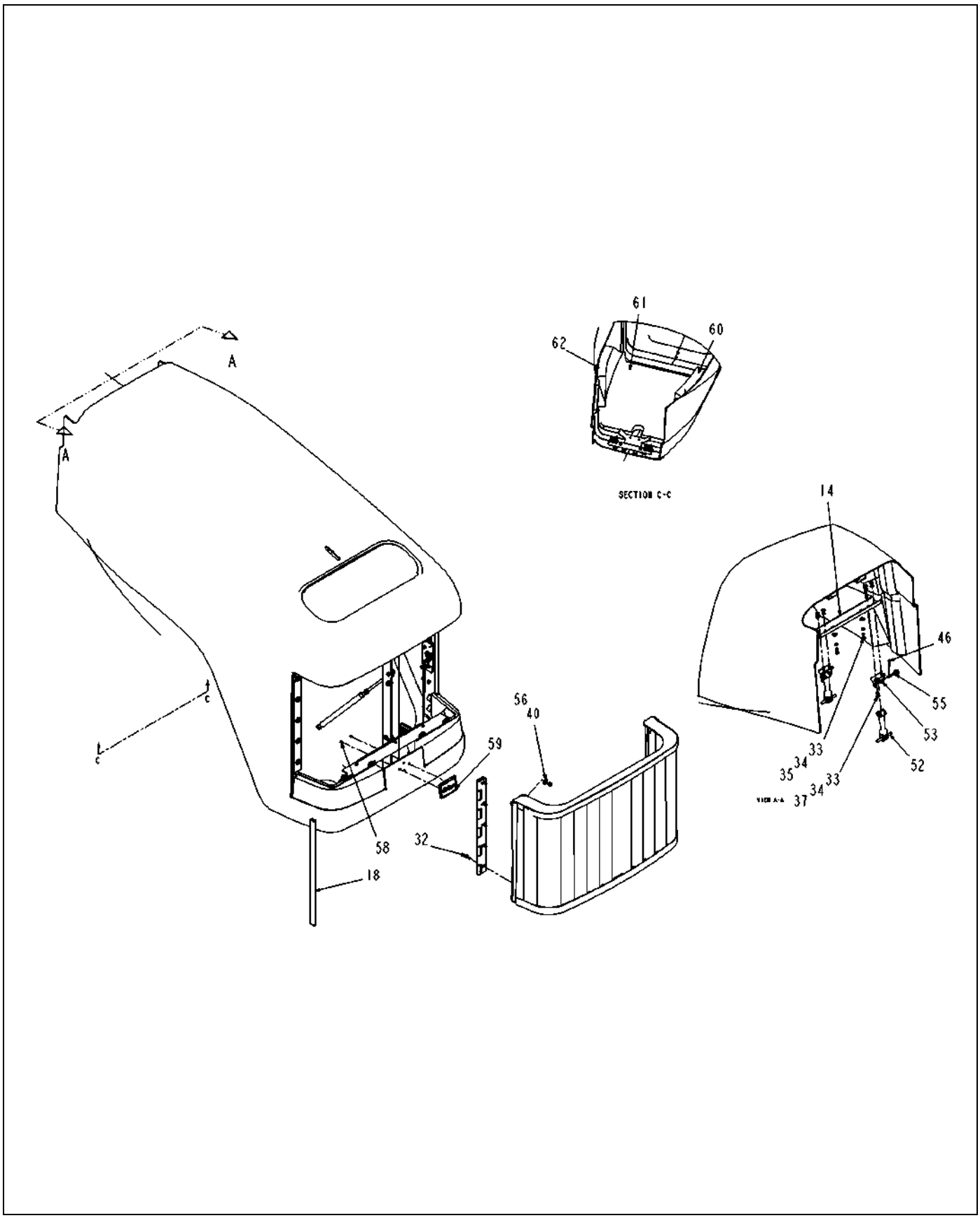

523721D1-02-R949-02.TIF

Copyright © 2008 AGCO Corporation

ITEM	PART #	QTY	DESCRIPTION	COMMENTS
14	AG260905	1	CHANNEL-TIEDOWN,HOOD	
18	AG513654	-	EDGE LINER .19 IN TK MAT PVC [BULK: 3.730 FT]	
32	AG550183	7	BOLT 0.31-18NCX 0.75 G5 ZN HHD	
33	AG550485	6	BOLT 0.25-20NCX 0.75 G5 ZN HHD	
34	AG550493	6	WASHER 0.25 LK ZN REG	
35	AG550507	2	WASHER 0.25 FL ZN REG TYPE-B	
37	AG550612	4	NUT 0.25-20NC HEX ZN REG	
40	AG551015	32	WASHER 0.31 FL ZN REG TYPE-B	
46	AG554855	2	PIN COTTER 0.12X1.00 ZN	
52	AG600008	2	HOOK RUBBER 510327 (P)	
53	AG600024	2	BRACKET ANCHOR 510327 (P)	
55	AG601225	2	PIN ANCHOR 510327 W/O CTKEY(P)	
56	AG601888	16	NUT 0.31-18NC HEX ZN REG NY	
58	AG713398	4	LOCK NUT M6	
59	4274275M91	1	LOGO CHALLENGER	
60	508109D1	1	PANEL,LHS HOOD FOAM	
61	508110D1	1	PANEL,CENTER HOOD FOAM	
62	508111D1	1	PANEL,RHS HOOD FOAM	

Copyright © 2008 AGCO Corporation

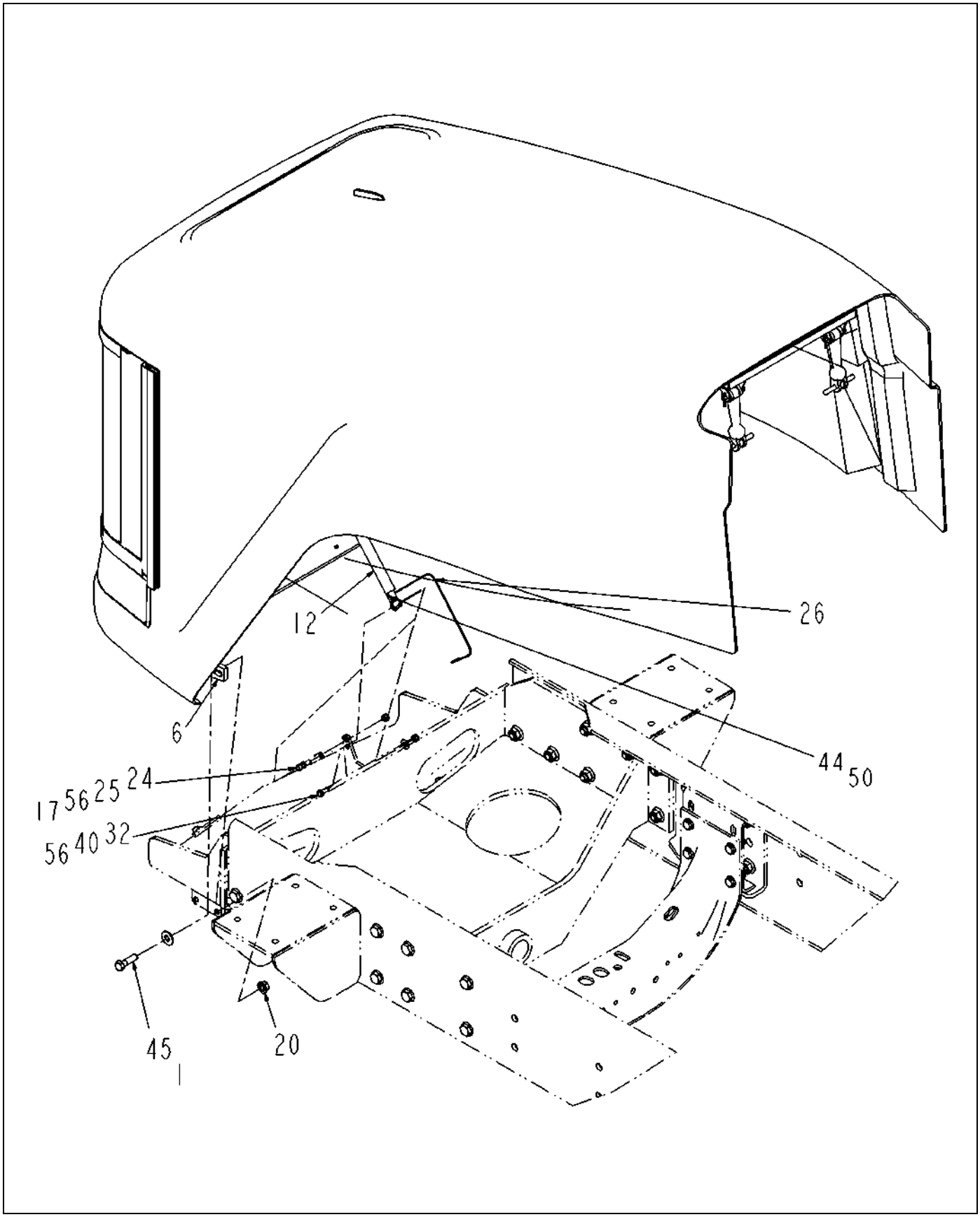

523721D1-02-R949-03.TIF

Copyright © 2008 AGCO Corporation

HOOD GROUP INSTALL-CHAL

ITEM	PART #	QTY	DESCRIPTION	COMMENTS
1	WR31555	4	WASHER-FLAT,STD, 1/2 ID,	
6	WR126298	2	PLATE-HINGE	
12	WR128654	1	SPRING-GAS,100LB,10.00 STROKE	
17	AG512885	AR	LOCTITE ADHESIVE SEALANT BLUE	
20	AG520628	4	NUT-.50-13,G5,ZN,FLG,HHD	
24	AG521557	2	STUD-BALL,.31-18NC	
25	AG521558	2	CLIP-RETAINING,BALL STUD	
26	AG521657	1	TETHER-HOOD,.06DIAX26.50,SS	
32	AG550183	7	BOLT 0.31-18NCX 0.75 G5 ZN HHD	
40	AG551015	32	WASHER 0.31 FL ZN REG TYPE-B	
44	AG553557	AR	TIE CABLE 7.37 .06-1.37 BLACK	
45	AG553956	4	BOLT 0.50-13NCX 1.75 G5 ZN HHD	
50	AG562330	-	FLEX GUARD .250 [BULK: 1 FT]	
56	AG601888	16	NUT 0.31-18NC HEX ZN REG NY	

Copyright © 2008 AGCO Corporation

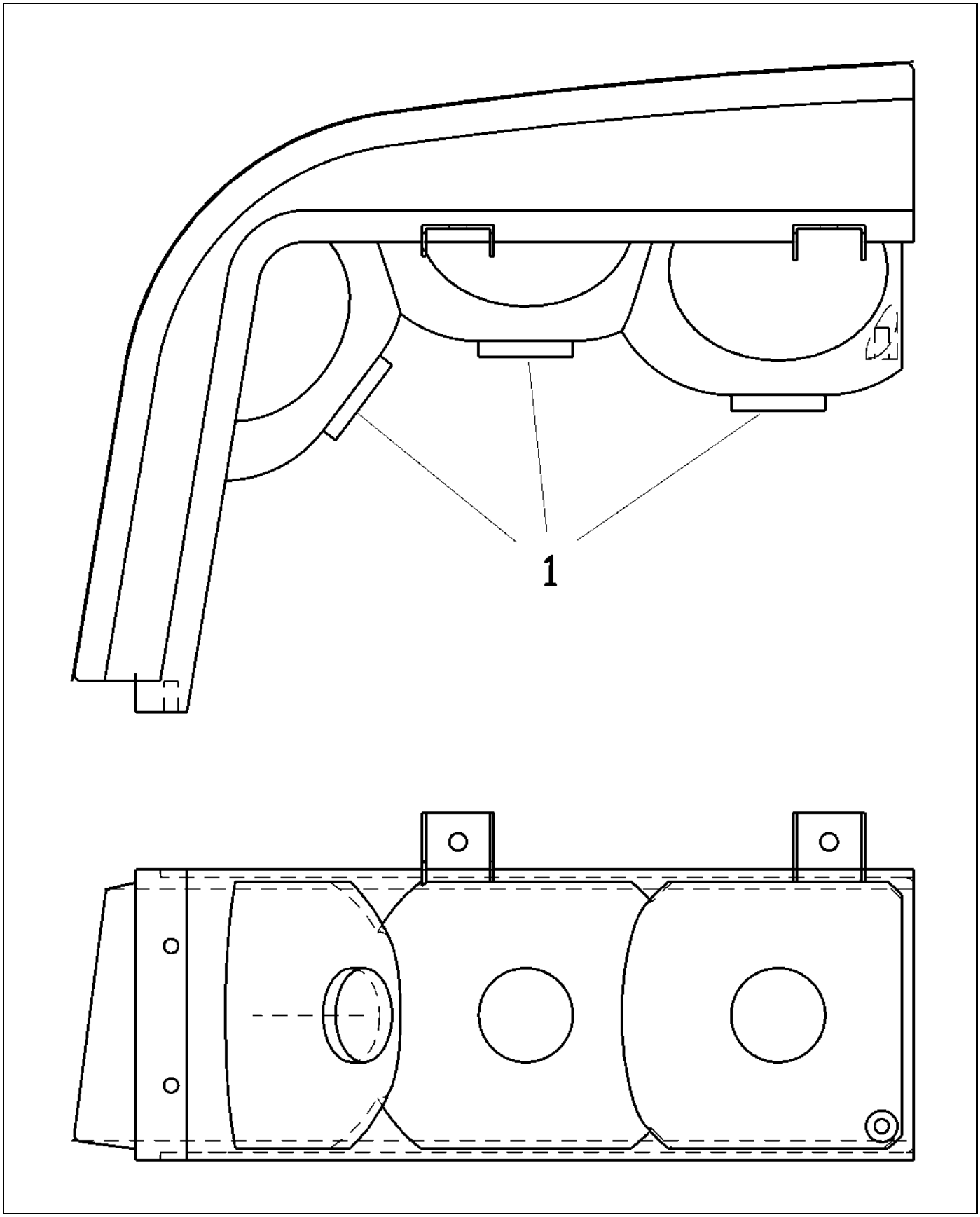

421135.TIF

Copyright © 2008 AGCO Corporation

HEADLIGHT-HALOGEN,WRAPPING,LH

ITEM	PART #	QTY	DESCRIPTION	COMMENTS
1	AG520989	3	LAMP-HALOGEN,3.90 AMPS	

Copyright © 2008 AGCO Corporation

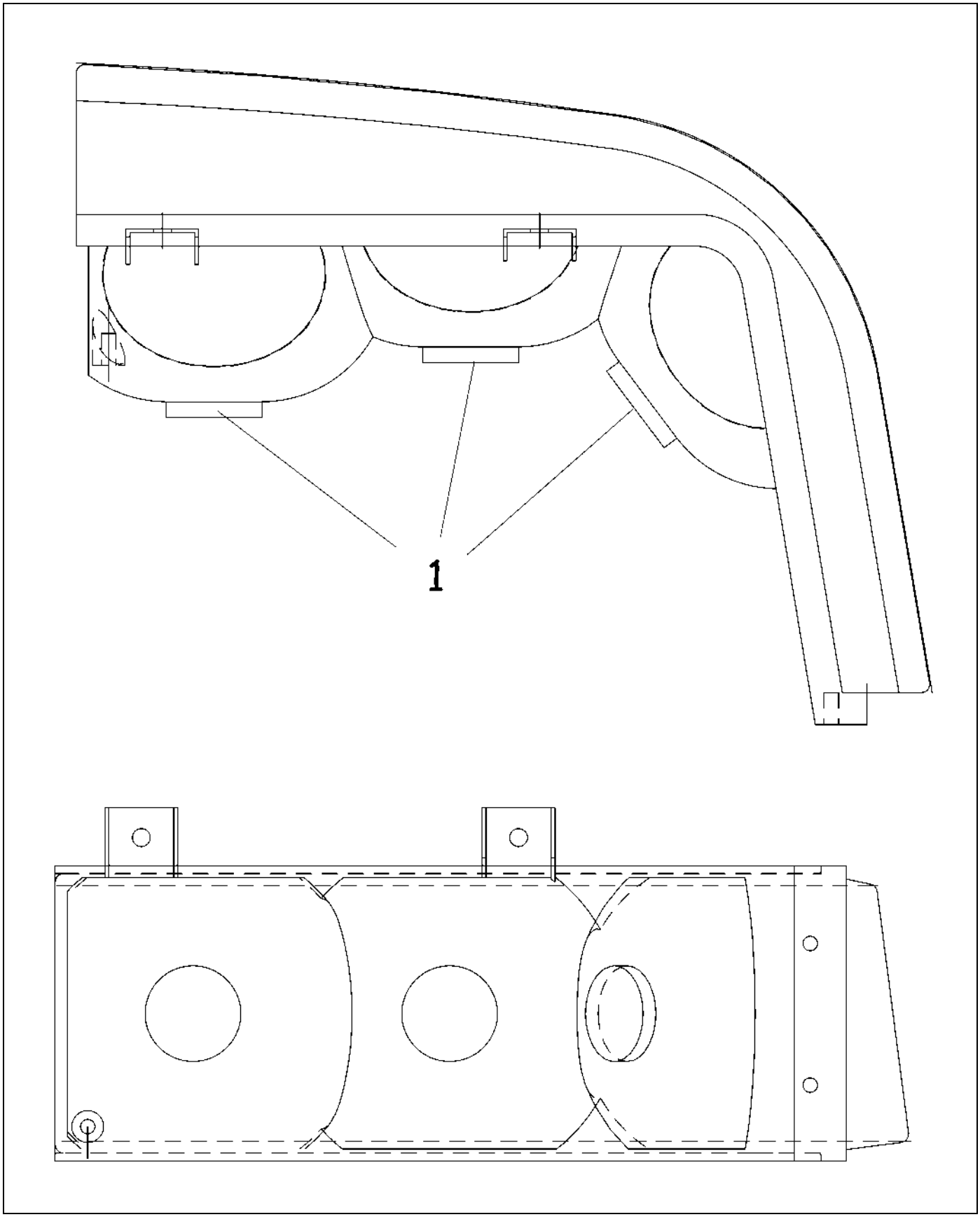

421136.TIF

Copyright © 2008 AGCO Corporation

HEADLIGHT-HALOGEN,WRAPPING,RH

ITEM	PART #	QTY	DESCRIPTION	COMMENTS
1	AG520989	3	LAMP-HALOGEN,3.90 AMPS	

Copyright © 2008 AGCO Corporation

OPT-TIRE,320/85R38,GY,CHAL	11-1
WHEEL/TIRE-320/85R38,RH,CHAL	11-2
WHEEL/TIRE-320/85R38,LH,CHAL	11-3
OPT-TIRE,380/80R38,GY,CHAL	11-4
WHEEL/TIRE-380/80R38,RH,CHAL	11-5
WHEEL/TIRE-380/80R38,LH,CHAL	11-6
OPTION-TIRE,620/70R42,CHAL	11-7
WHEEL/TIRE-620/70R42,RH,CHAL	11-8
WHEEL/TIRE-620/70R42,LH,CHAL	11-9
OPTION-TIRE,320/85R38,CHAL	11-10
WHEEL/TIRE-320/85R38,RH,CHAL	11-11
WHEEL/TIRE-320/85R38,LH,CHAL	11-12
OPTION-TIRE,380/80R38,CHAL	11-13
WHEEL/TIRE-380/80R38,RH,CHAL	11-14
WHEEL/TIRE-380/80R38,LH,CHAL	11-15
FA-TIRE,GY 620/70R42,CHAL	11-16
F/A-TIRE,GY 320/85R38 2WD,CHAL	11-17
F/A-TIRE,GY 380/80R38 2WD,CHAL	11-18
F/A-TIRE,FWA,GY,320/85R38,CHAL	11-19
F/A-TIRE,FWA,GY,380/80R38,CHAL	11-20
DEFLECTOR INSTALL-CROP,7X50 SC	11-21
DEFLECTOR ASM-CROP,7X50,SC	11-22
MOUNTING HARDWARE	11-23
HARDWARE-FRONT,WHEEL,28 IN	11-24
HARDWARE-FRONT,WHEEL,38 IN	11-25
OPTION-TIRE,GY,320/90R46,CHAL	11-26
OPTION-TIRE,GY,380/90R46,CHAL	11-27
OPTION-TIRE,GY,480/80R46,CHAL	11-28
INSTALL-REAR,FENDER,COUPE	11-29
F/A-TIRE,GY 320/90R46,CHAL	11-30
F/A-TIRE,GY 380/90R46,CHAL	11-31
F/A-TIRE,GY 480/80R46,CHAL	11-32
INSTALL-FRONT,FENDER,COUPE	11-33
F/A-FRONT,FENDER,COUPE	11-34
F/A-REAR,FENDER,COUPE	11-35
OPT-TIRE,12.4X28-8,GY,5.5,CHAL	11-36
OPTION-TIRE,12.4 X 28-8,CHAL	11-37
OPT-TIRE,540/65R34,GY,10 HOLE	11-38
F/A-TIRE,540/65R34,GY,10 HOLE	11-39
TIRE/RIM ASM-540/65R34 R1W,LH	11-40
TIRE/RIM ASM-540/65R34 R1W,RH	11-41

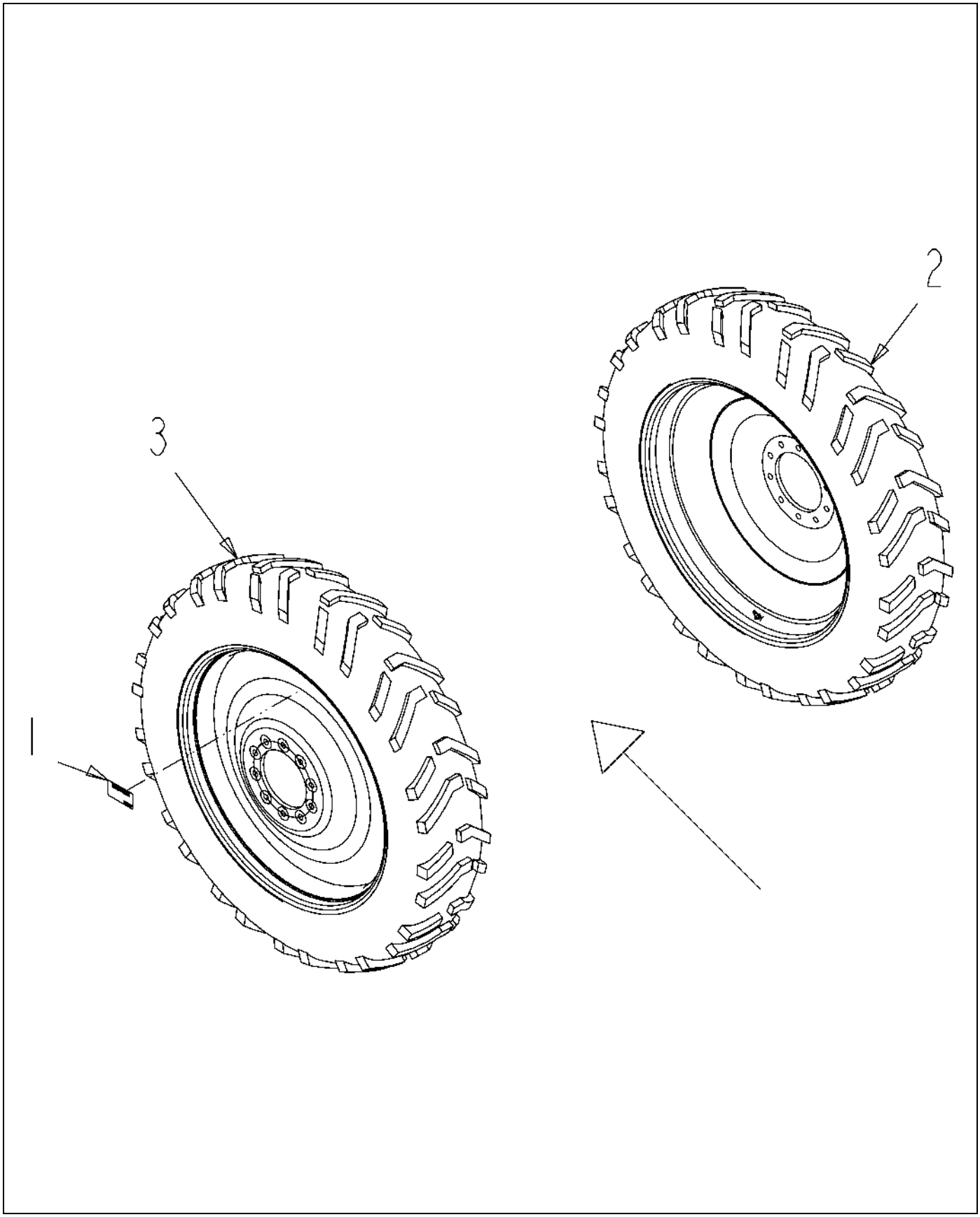

514646D1-01-R189-.TIF

Copyright © 2008 AGCO Corporation

OPT-TIRE,320/85R38,GY,CHAL

ITEM	PART #	QTY	DESCRIPTION	COMMENTS
1	AG262948	2	DECAL-WARNING,REPL TIRE,ENG	
2	514647D1	1	WHEEL/TIRE-320/85R38,RH,CHAL	SEE PAGE 11-2
3	514648D1	1	WHEEL/TIRE-320/85R38,LH,CHAL	SEE PAGE 11-3

Copyright © 2008 AGCO Corporation

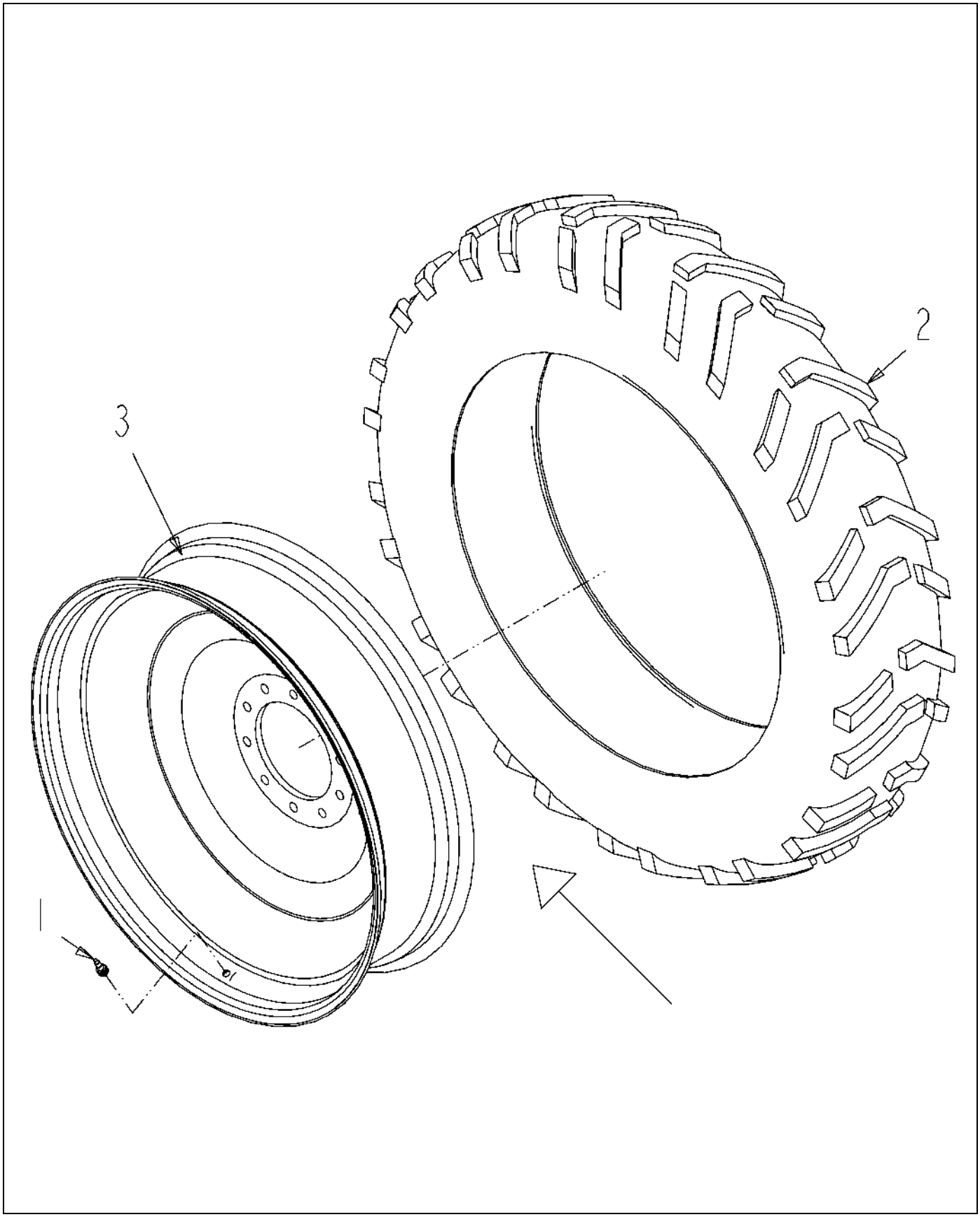

514647D1-01-R189-.TIF

Copyright © 2008 AGCO Corporation

WHEEL/TIRE-320/85R38,RH,CHAL

ITEM	PART #	QTY	DESCRIPTION	COMMENTS
1	AG517766	1	VALVE TIRE	
2	512328D1	1	TIRE-320/85R38,R1W,138A8/B,GY	
3	514649D1	1	WHEEL-38XW10,4.73 IN,GRAY	

Copyright © 2008 AGCO Corporation

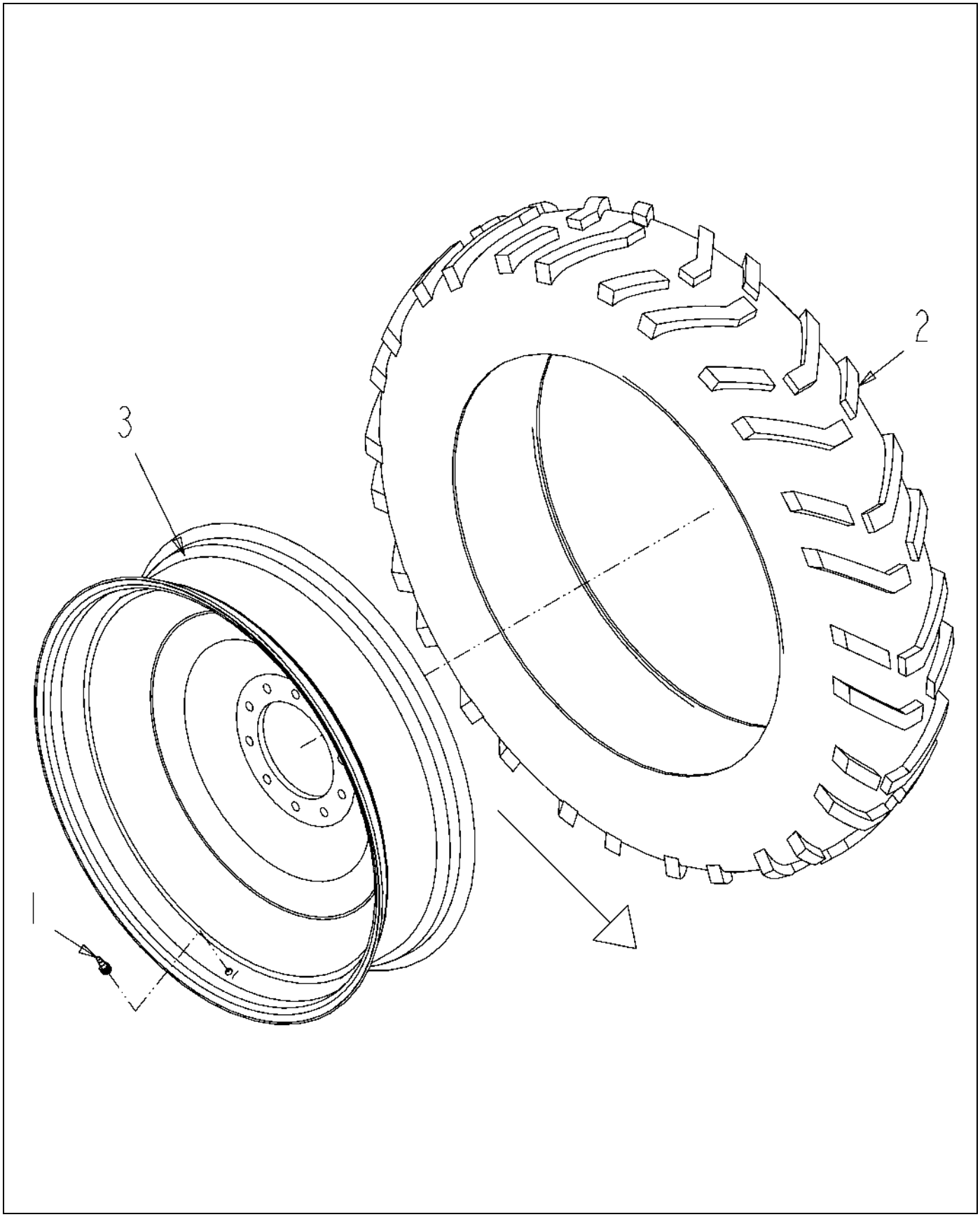

514648D1-01-R189-.TIF

Copyright © 2008 AGCO Corporation

WHEEL/TIRE-320/85R38,LH,CHAL

ITEM	PART #	QTY	DESCRIPTION	COMMENTS
1	AG517766	1	VALVE TIRE	
2	512328D1	1	TIRE-320/85R38,R1W,138A8/B,GY	
3	514649D1	1	WHEEL-38XW10,4.73 IN,GRAY	

Copyright © 2008 AGCO Corporation

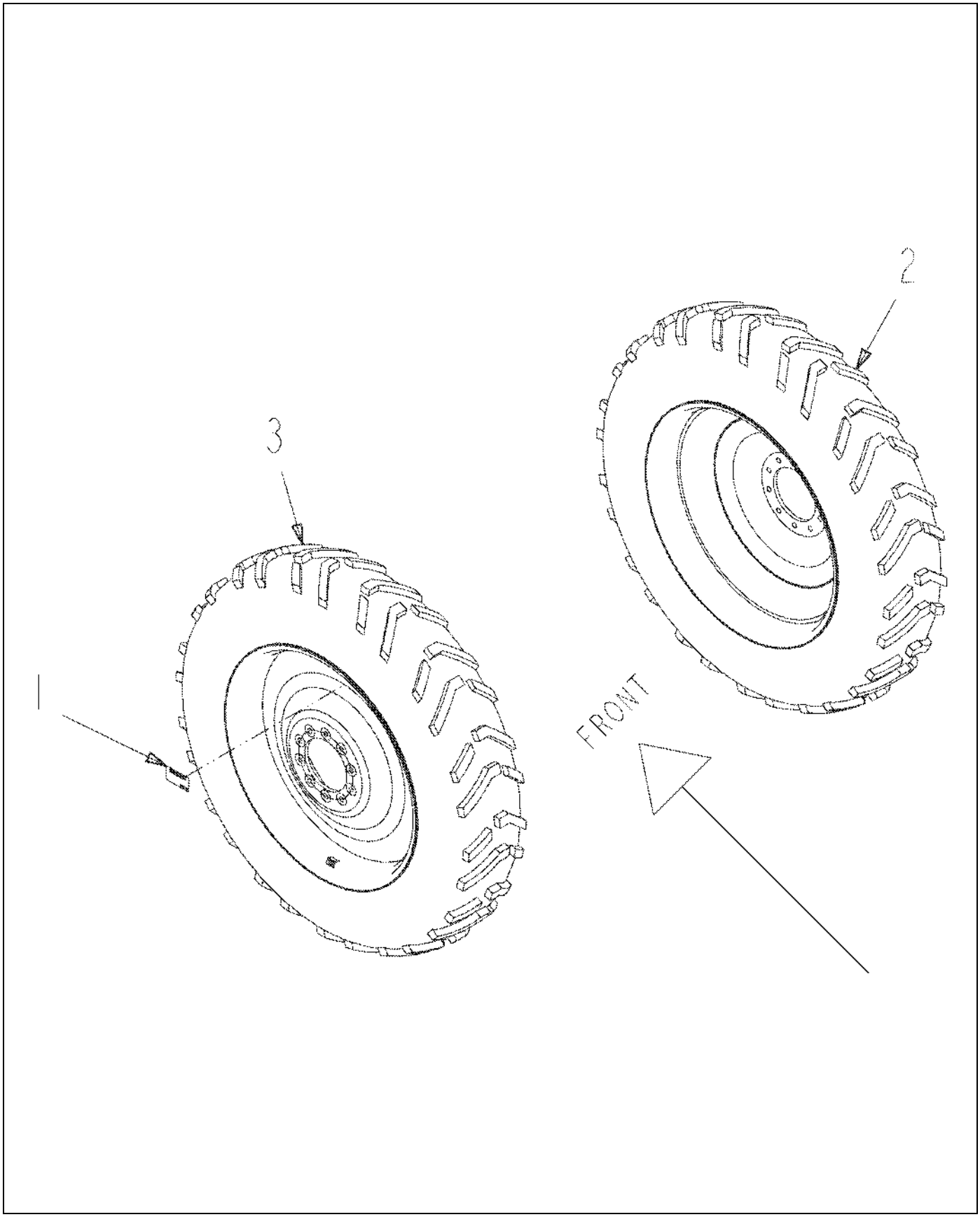

514650D1-01-R189-.TIF

Copyright © 2008 AGCO Corporation

OPT-TIRE,380/80R38,GY,CHAL

ITEM	PART #	QTY	DESCRIPTION	COMMENTS
1	AG262948	2	DECAL-WARNING,REPL TIRE,ENG	
2	514651D1	1	WHEEL/TIRE-380/80R38,RH,CHAL	SEE PAGE 11-5
3	514652D1	1	WHEEL/TIRE-380/80R38,LH,CHAL	SEE PAGE 11-6

Copyright © 2008 AGCO Corporation

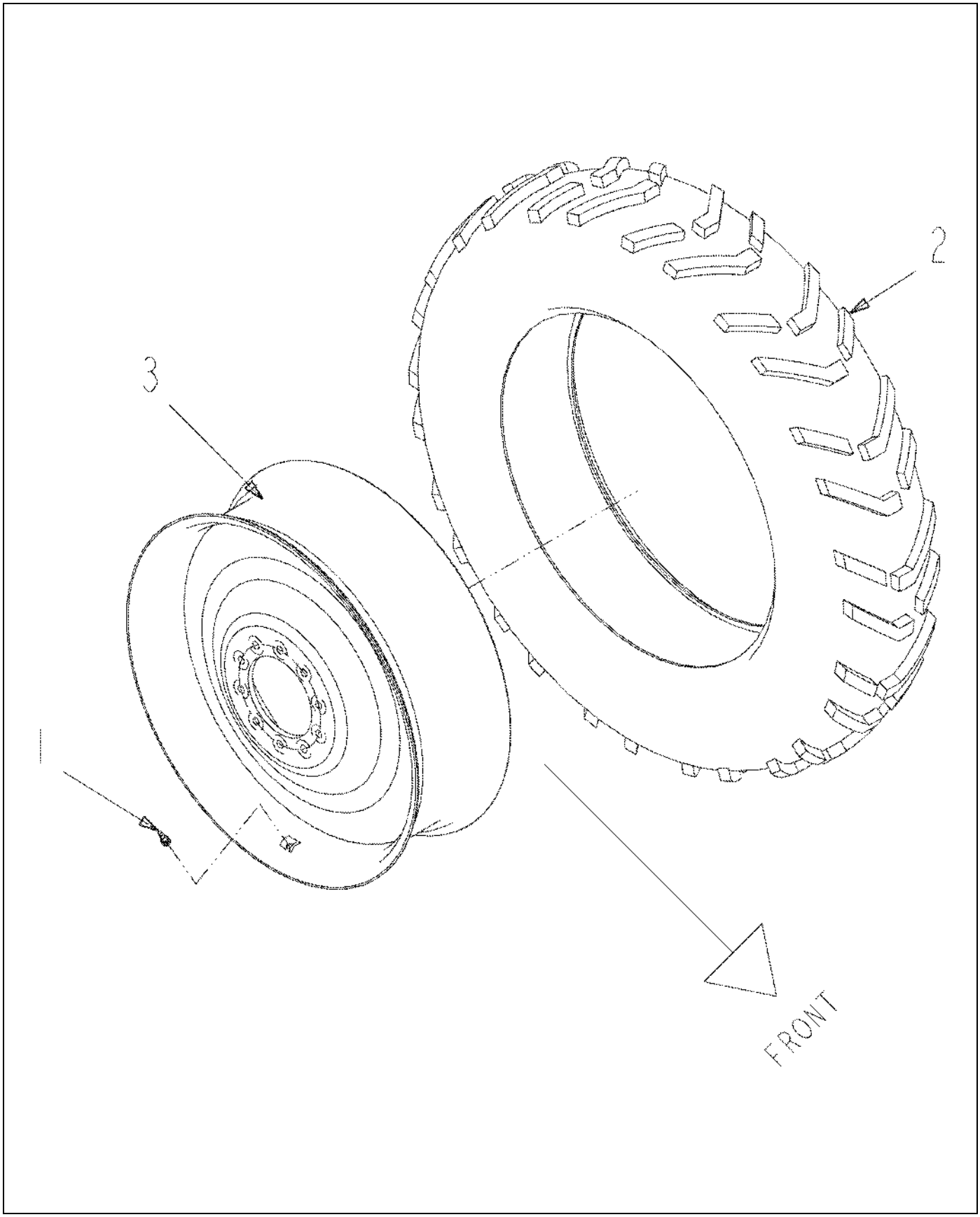

514651D1-01-R189-.TIF

Copyright © 2008 AGCO Corporation

WHEEL/TIRE-380/80R38,RH,CHAL

ITEM	PART #	QTY	DESCRIPTION	COMMENTS
1	AG517766	1	VALVE TIRE	
2	511890D1	1	TIRE-380/80R38,R1W,142A8/B,GY	
3	514653D1	1	WHEEL-38XW12,4.73 IN,GRAY	

Copyright © 2008 AGCO Corporation

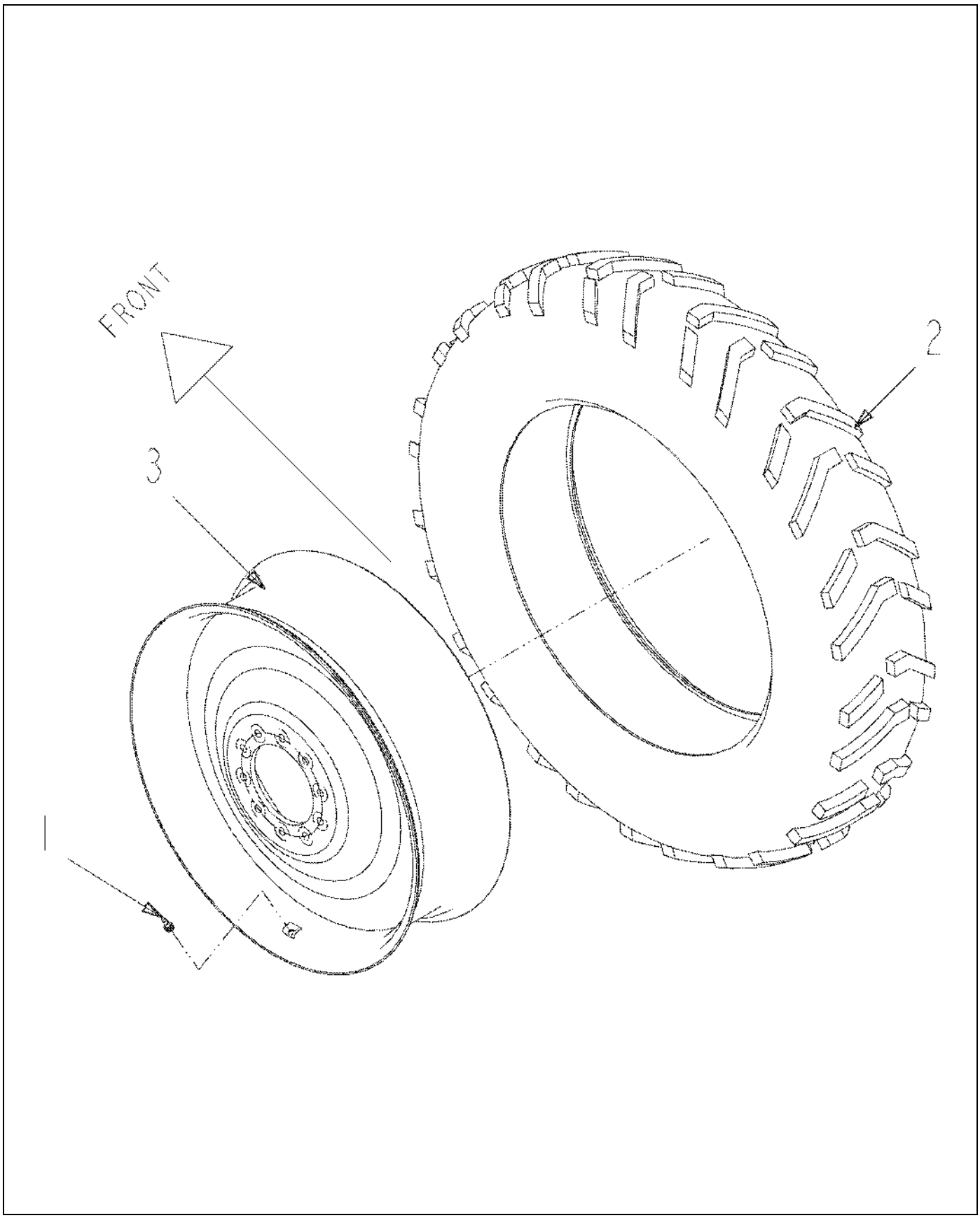

514652D1-01-R189-.TIF

Copyright © 2008 AGCO Corporation

WHEEL/TIRE-380/80R38,LH,CHAL

ITEM	PART #	QTY	DESCRIPTION	COMMENTS
1	AG517766	1	VALVE TIRE	
2	511890D1	1	TIRE-380/80R38,R1W,142A8/B,GY	
3	514653D1	1	WHEEL-38XW12,4.73 IN,GRAY	

Copyright © 2008 AGCO Corporation

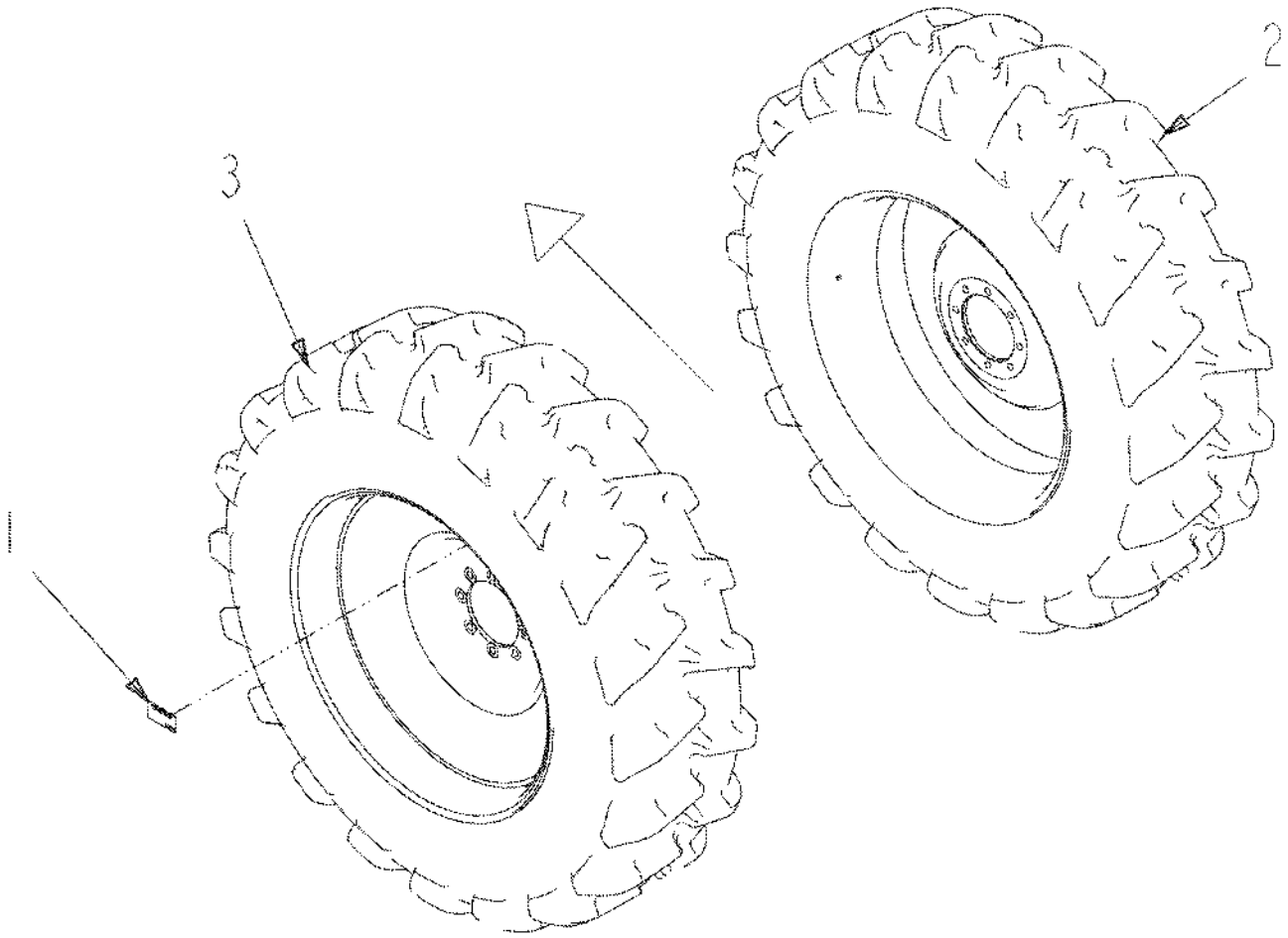

515003D1-01-N946-.TIF

Copyright © 2008 AGCO Corporation

OPTION-TIRE,620/70R42,CHAL

ITEM	PART #	QTY	DESCRIPTION	COMMENTS
1	AG262948	2	DECAL-WARNING,REPL TIRE,ENG	
2	515004D1	1	WHEEL/TIRE-620/70R42,RH,CHAL	SEE PAGE 11-8
3	515005D1	1	WHEEL/TIRE-620/70R42,LH,CHAL	SEE PAGE 11-9

Copyright © 2008 AGCO Corporation

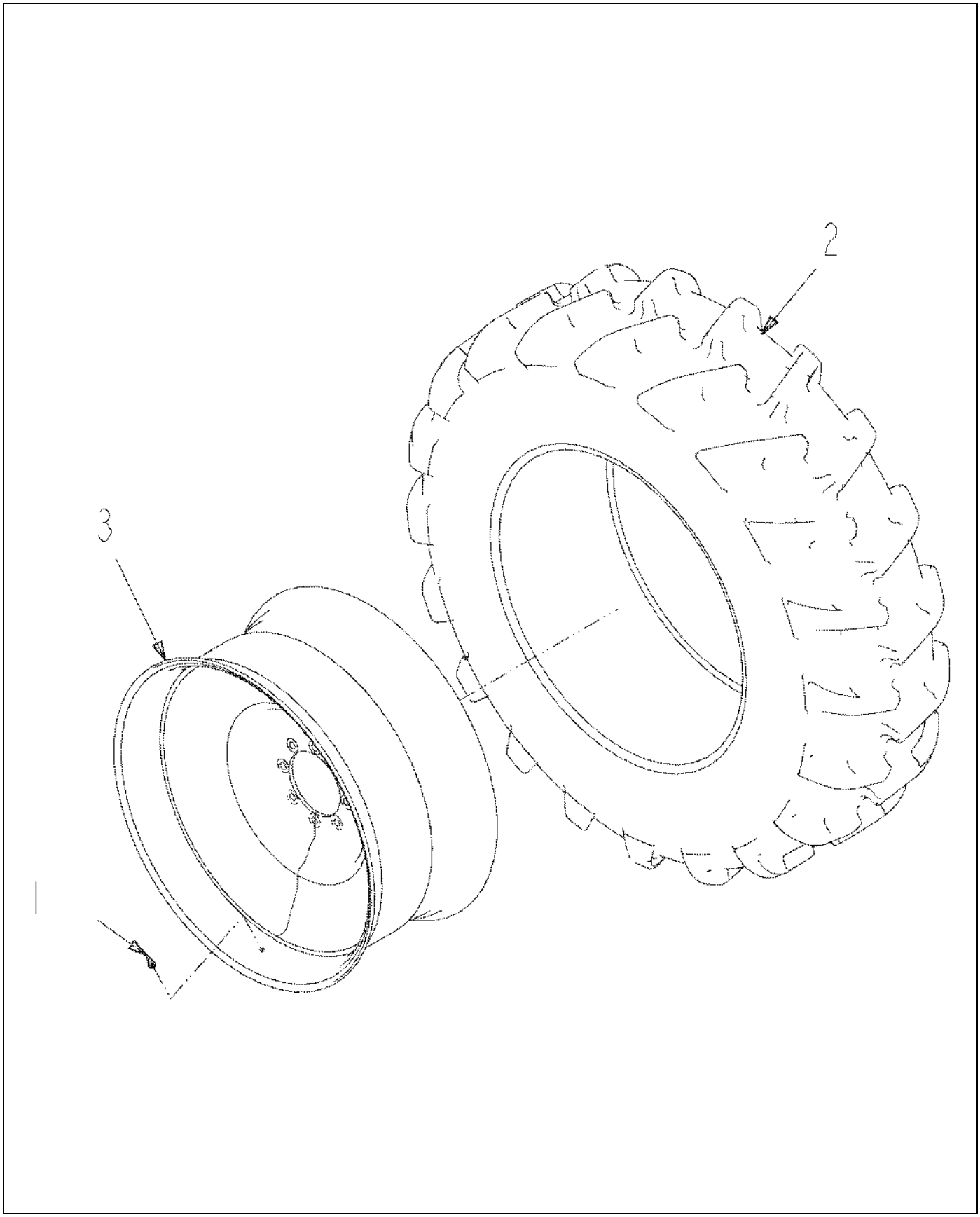

515004D1-01-N946-.TIF

Copyright © 2008 AGCO Corporation

WHEEL/TIRE-620/70R42,RH,CHAL

ITEM	PART #	QTY	DESCRIPTION	COMMENTS
1	AG517766	1	VALVE TIRE	
2	511920D1	1	TIRE-620/70R42,R1W,160A8/B,GY	
3	515006D1	1	WHEEL-42XMW20A,2.18 OUT,GRAY	

Copyright © 2008 AGCO Corporation

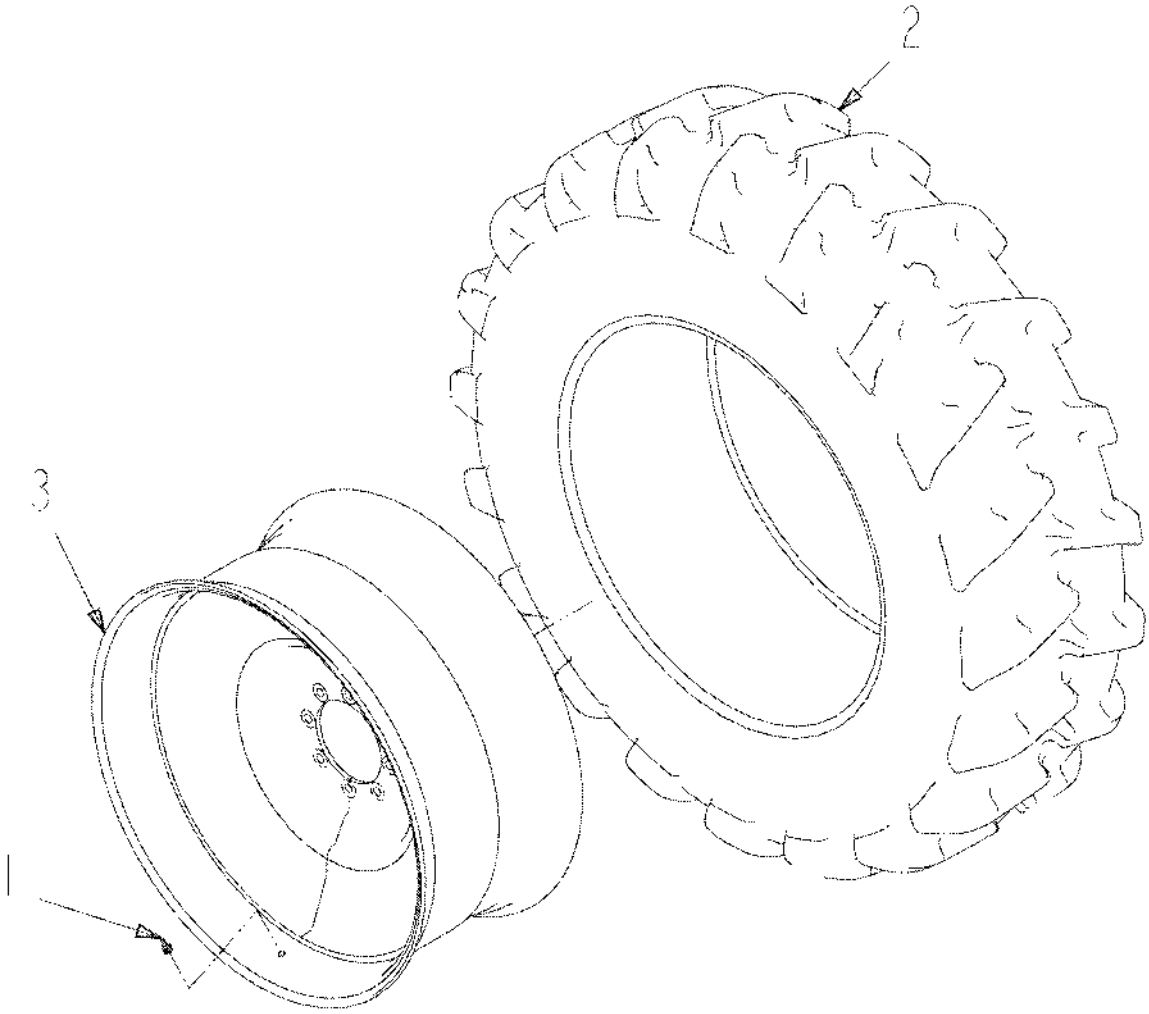

515005D1-01-N946-.TIF

Copyright © 2008 AGCO Corporation

WHEEL/TIRE-620/70R42,LH,CHAL

ITEM	PART #	QTY	DESCRIPTION	COMMENTS
1	AG517766	1	VALVE TIRE	
2	511920D1	1	TIRE-620/70R42,R1W,160A8/B,GY	
3	515006D1	1	WHEEL-42XMW20A,2.18 OUT,GRAY	

Copyright © 2008 AGCO Corporation

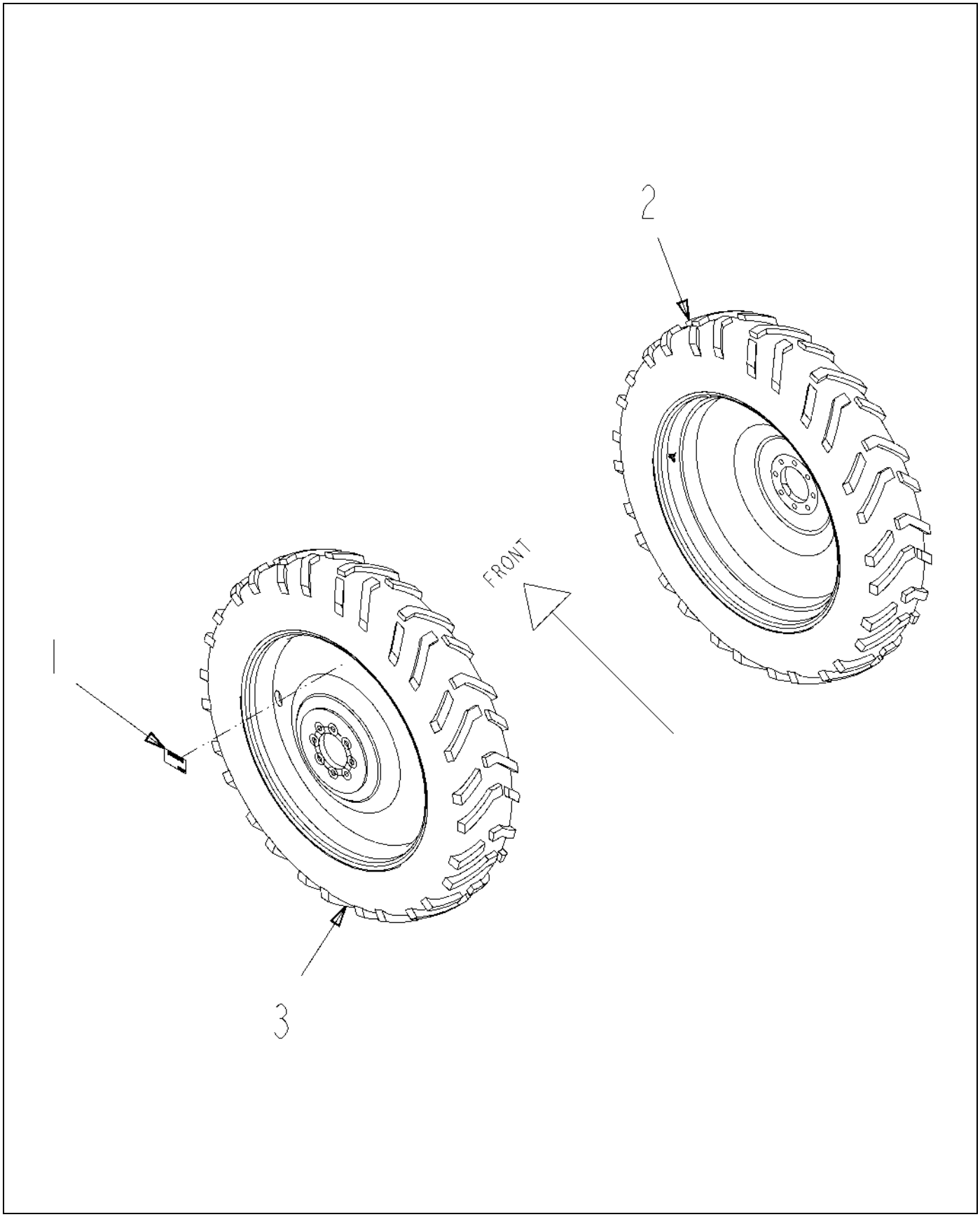

515007D1-01-R282-.TIF

Copyright © 2008 AGCO Corporation

OPTION-TIRE,320/85R38,CHAL

ITEM	PART #	QTY	DESCRIPTION	COMMENTS
1	AG262948	2	DECAL-WARNING,REPL TIRE,ENG	
2	515008D1	1	WHEEL/TIRE-320/85R38,RH,CHAL	SEE PAGE 11-11
3	515009D1	1	WHEEL/TIRE-320/85R38,LH,CHAL	SEE PAGE 11-12

Copyright © 2008 AGCO Corporation

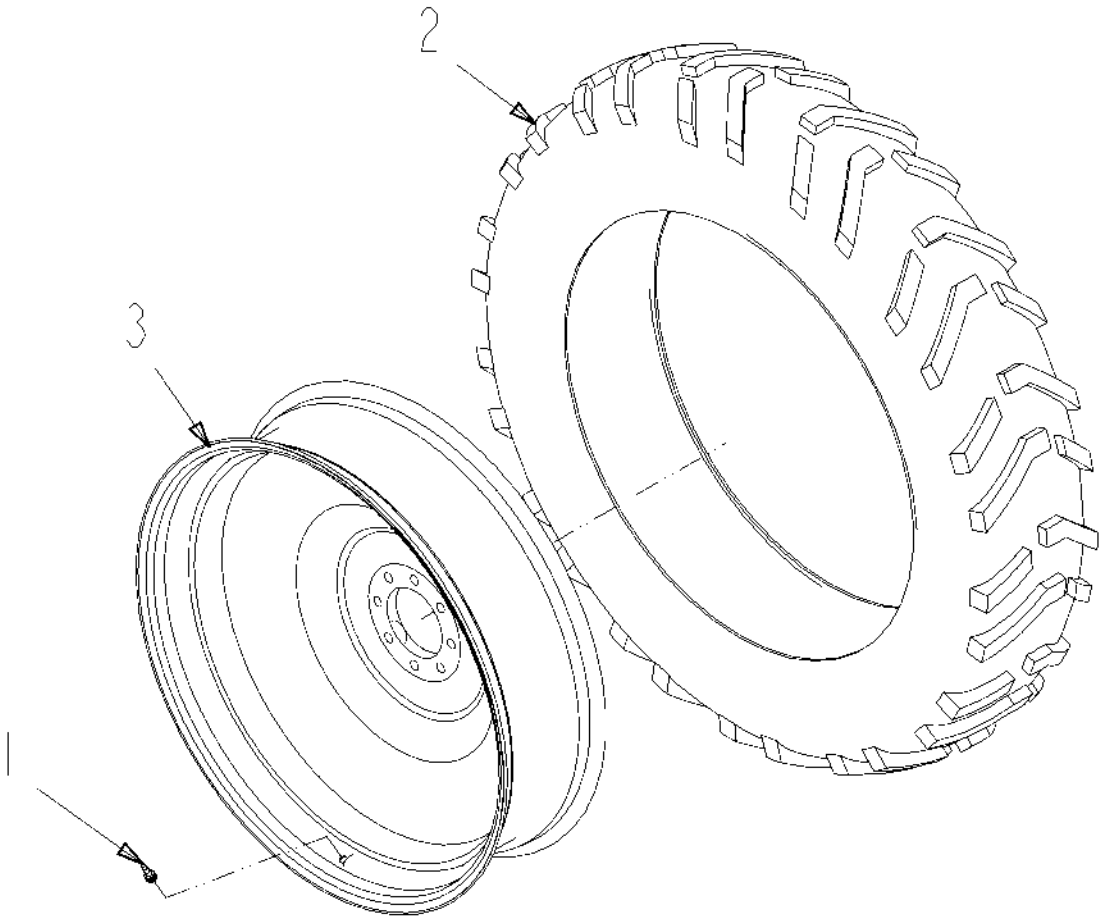

515008D1-01-R282-.TIF

Copyright © 2008 AGCO Corporation

WHEEL/TIRE-320/85R38,RH,CHAL

ITEM	PART #	QTY	DESCRIPTION	COMMENTS
1	AG517766	1	VALVE TIRE	
2	512328D1	1	TIRE-320/85R38,R1W,138A8/B,GY	
3	515010D1	1	WHEEL-38XW10,4.73 OFS,GRAY	

Copyright © 2008 AGCO Corporation

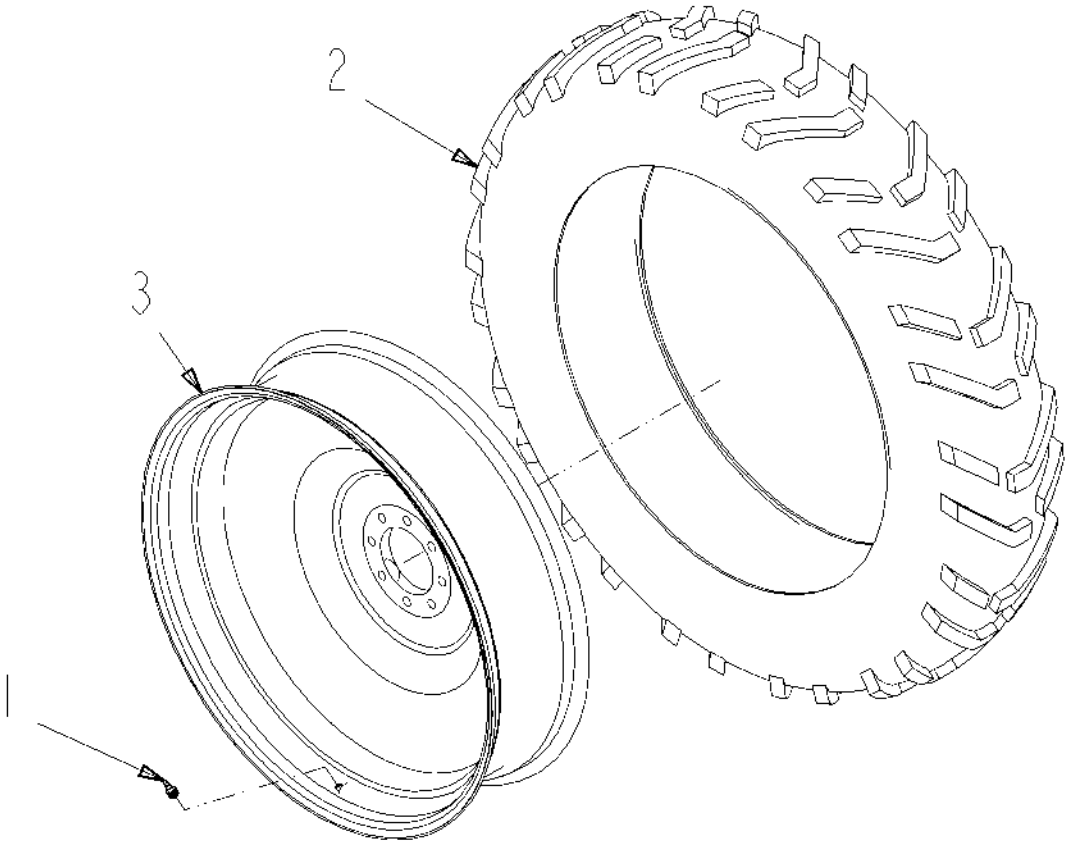

515009D1-01-R282-.TIF

Copyright © 2008 AGCO Corporation

WHEEL/TIRE-320/85R38,LH,CHAL

ITEM	PART #	QTY	DESCRIPTION	COMMENTS
1	AG517766	1	VALVE TIRE	
2	512328D1	1	TIRE-320/85R38,R1W,138A8/B,GY	
3	515010D1	1	WHEEL-38XW10,4.73 OFS,GRAY	

Copyright © 2008 AGCO Corporation

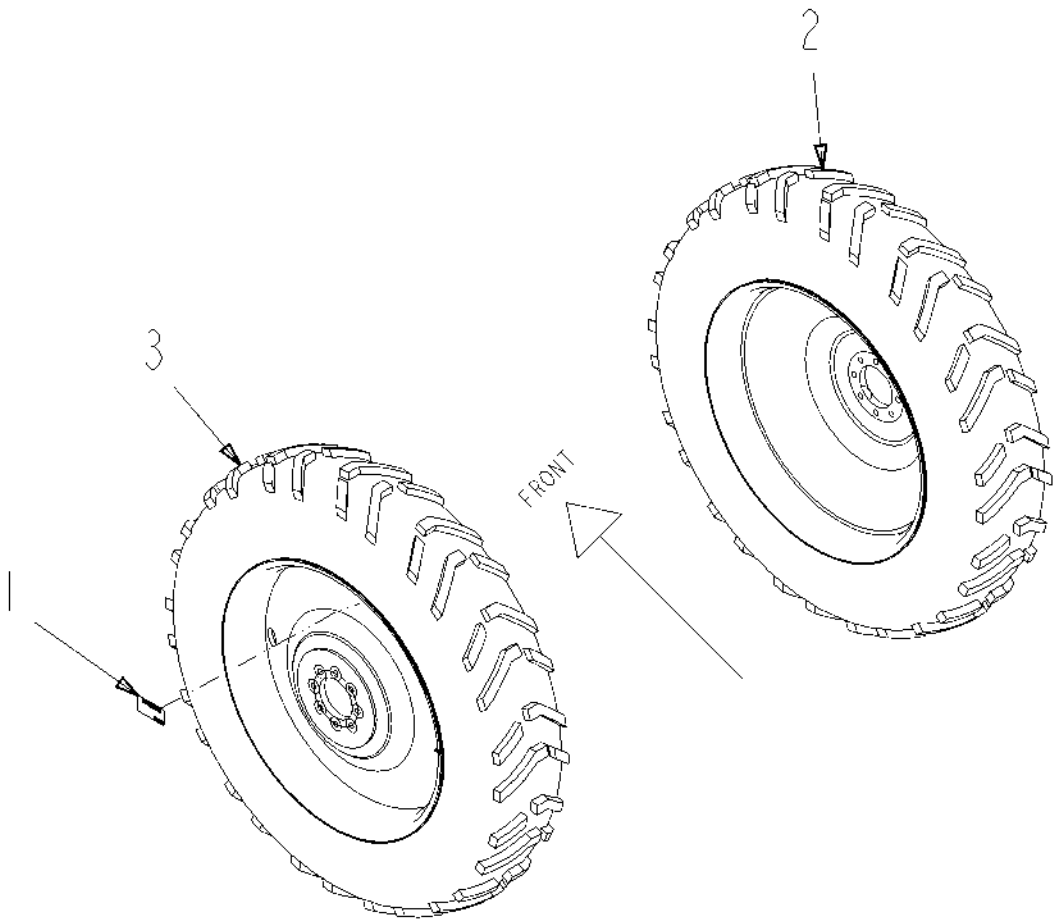

515011D1-01-R282-.TIF

Copyright © 2008 AGCO Corporation

OPTION-TIRE,380/80R38,CHAL

ITEM	PART #	QTY	DESCRIPTION	COMMENTS
1	AG262948	2	DECAL-WARNING,REPL TIRE,ENG	
2	515012D1	1	WHEEL/TIRE-380/80R38,RH,CHAL	SEE PAGE 11-14
3	515013D1	1	WHEEL/TIRE-380/80R38,LH,CHAL	SEE PAGE 11-15

Copyright © 2008 AGCO Corporation

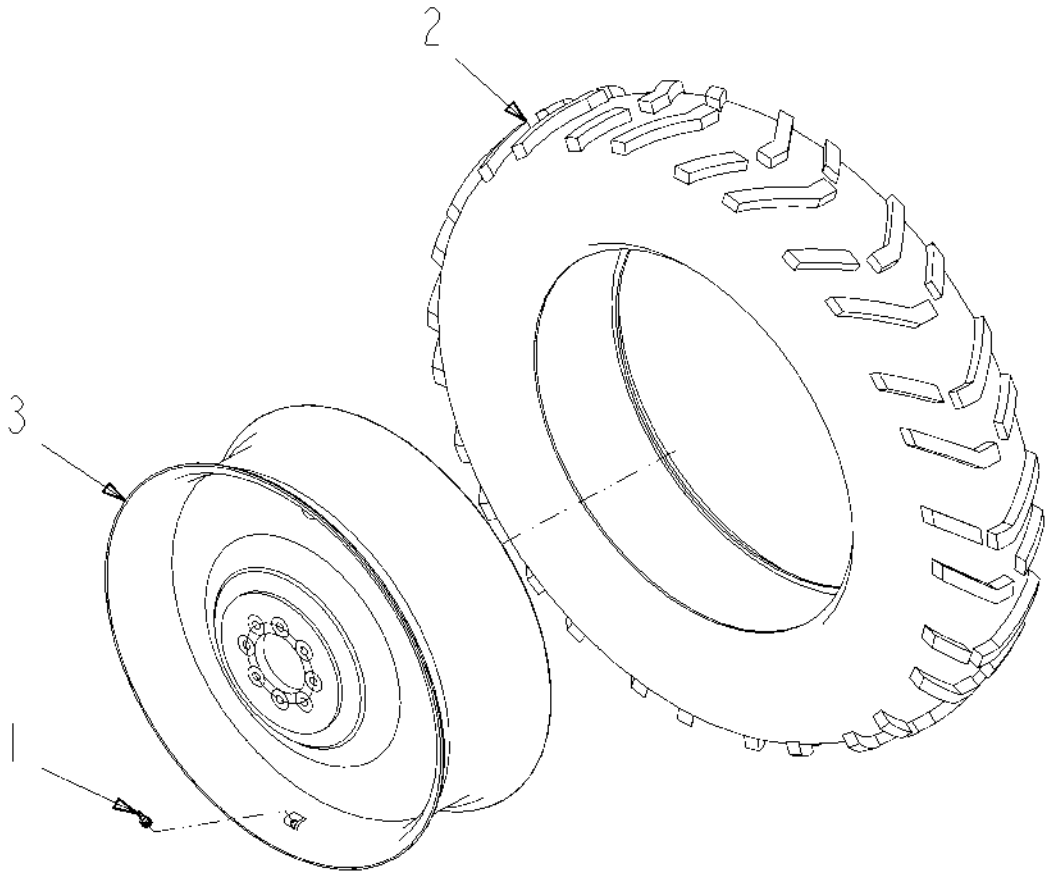

515012D1-01-R282-.TIF

Copyright © 2008 AGCO Corporation

WHEEL/TIRE-380/80R38,RH,CHAL

ITEM	PART #	QTY	DESCRIPTION	COMMENTS
1	AG517766	1	VALVE TIRE	
2	511890D1	1	TIRE-380/80R38,R1W,142A8/B,GY	
3	515014D1	1	WHEEL-38XW12,4.73 OFS,GRAY	

Copyright © 2008 AGCO Corporation

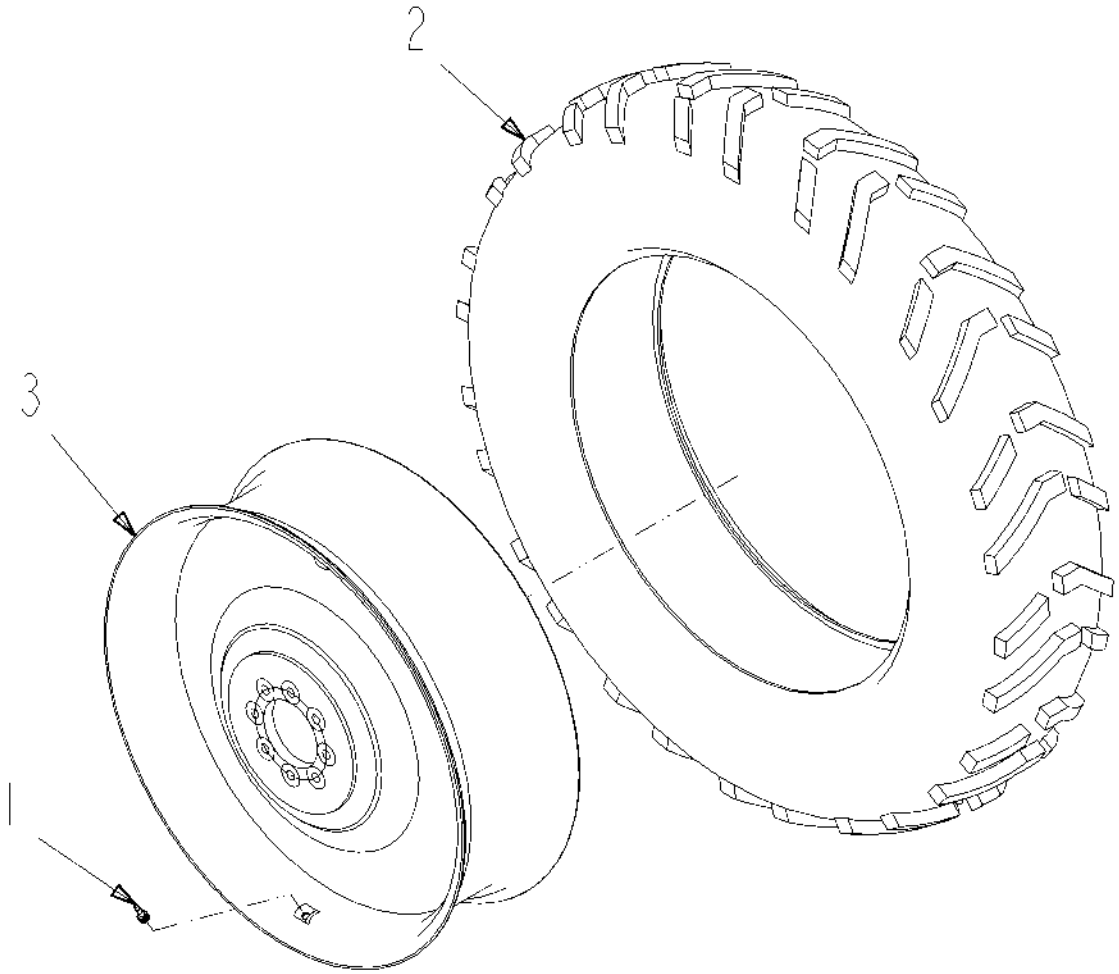

515013D1-01-R282-.TIF

Copyright © 2008 AGCO Corporation

WHEEL/TIRE-380/80R38,LH,CHAL

ITEM	PART #	QTY	DESCRIPTION	COMMENTS
1	AG517766	1	VALVE TIRE	
2	511890D1	1	TIRE-380/80R38,R1W,142A8/B,GY	
3	515014D1	1	WHEEL-38XW12,4.73 OFS,GRAY	

Copyright © 2008 AGCO Corporation

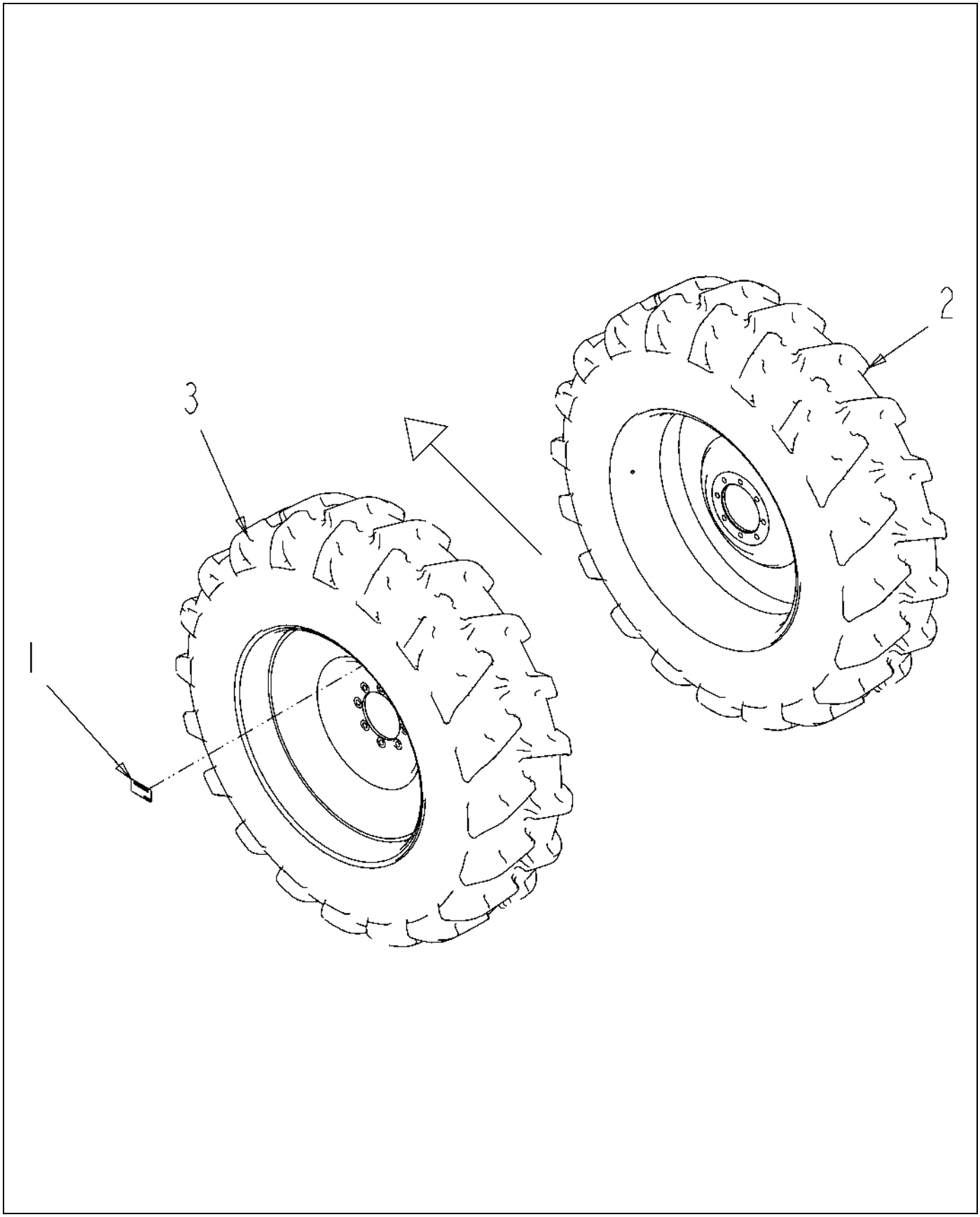

516616D1-01-R023-.TIF

Copyright © 2008 AGCO Corporation

FA-TIRE,GY 620/70R42,CHAL

ITEM	PART #	QTY	DESCRIPTION	COMMENTS
1	AG262948	2	DECAL-WARNING,REPL TIRE,ENG	
2	515004D1	1	WHEEL/TIRE-620/70R42,RH,CHAL	SEE PAGE 11-8
3	515005D1	1	WHEEL/TIRE-620/70R42,LH,CHAL	SEE PAGE 11-9

Copyright © 2008 AGCO Corporation

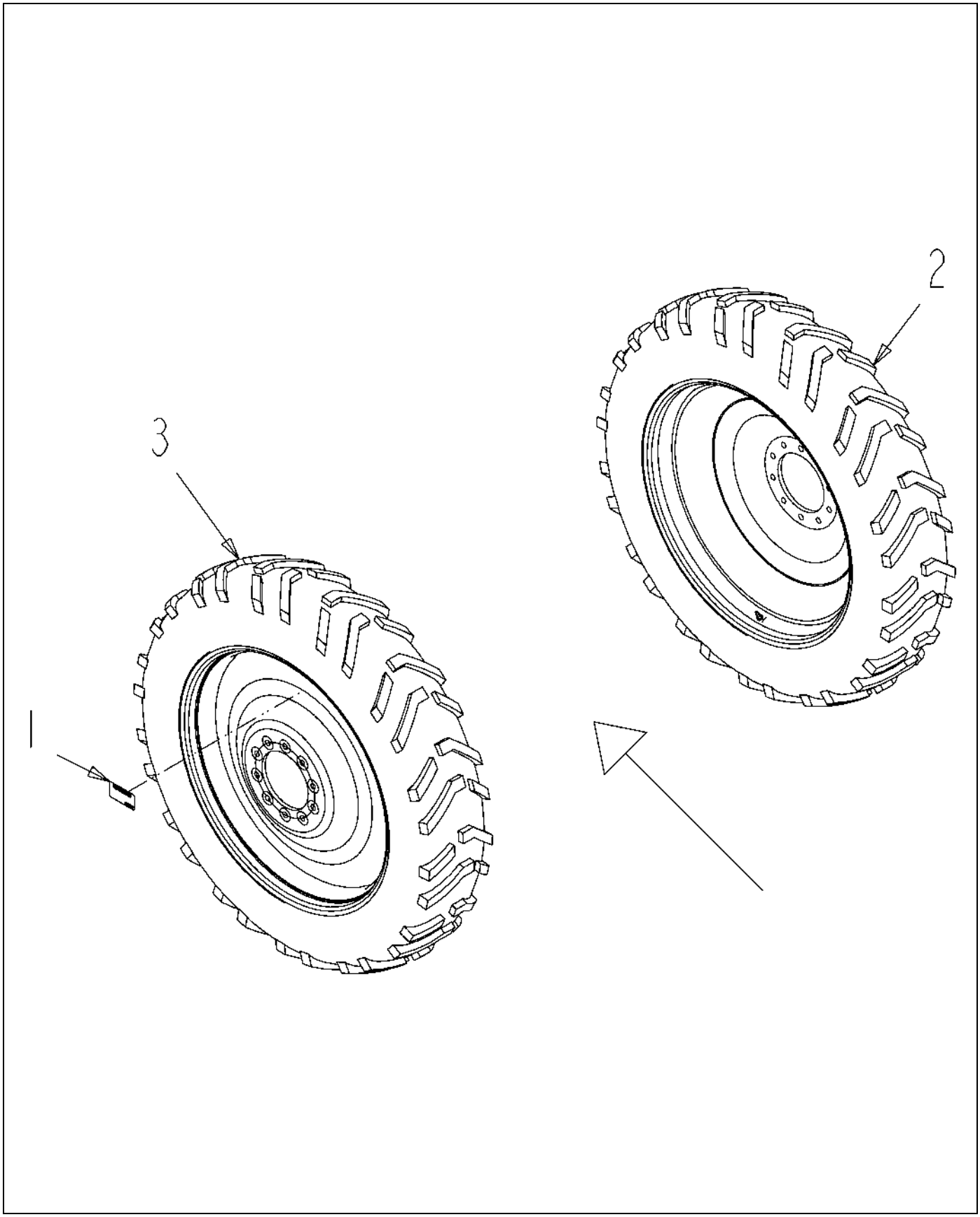

518217D1-01-R189-.TIF

Copyright © 2008 AGCO Corporation

F/A-TIRE,GY 320/85R38 2WD,CHAL

ITEM	PART #	QTY	DESCRIPTION	COMMENTS
1	AG262948	2	DECAL-WARNING,REPL TIRE,ENG	
2	514647D1	1	WHEEL/TIRE-320/85R38,RH,CHAL	SEE PAGE 11-2
3	514648D1	1	WHEEL/TIRE-320/85R38,LH,CHAL	SEE PAGE 11-3

Copyright © 2008 AGCO Corporation

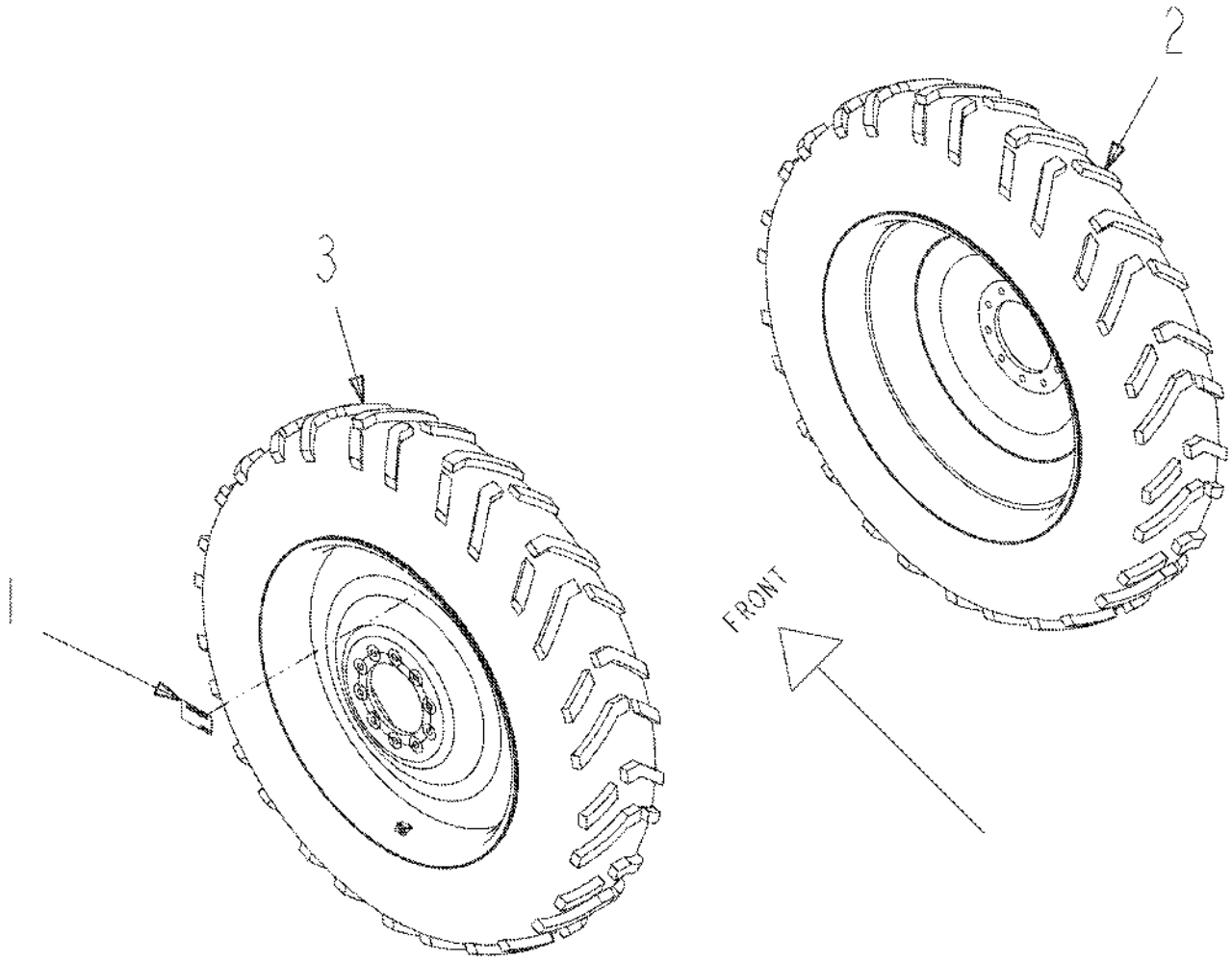

518218D1-01-R189-.TIF

Copyright © 2008 AGCO Corporation

F/A-TIRE,GY 380/80R38 2WD,CHAL

ITEM	PART #	QTY	DESCRIPTION	COMMENTS
1	AG262948	2	DECAL-WARNING,REPL TIRE,ENG	
2	514651D1	1	WHEEL/TIRE-380/80R38,RH,CHAL	SEE PAGE 11-5
3	514652D1	1	WHEEL/TIRE-380/80R38,LH,CHAL	SEE PAGE 11-6

Copyright © 2008 AGCO Corporation

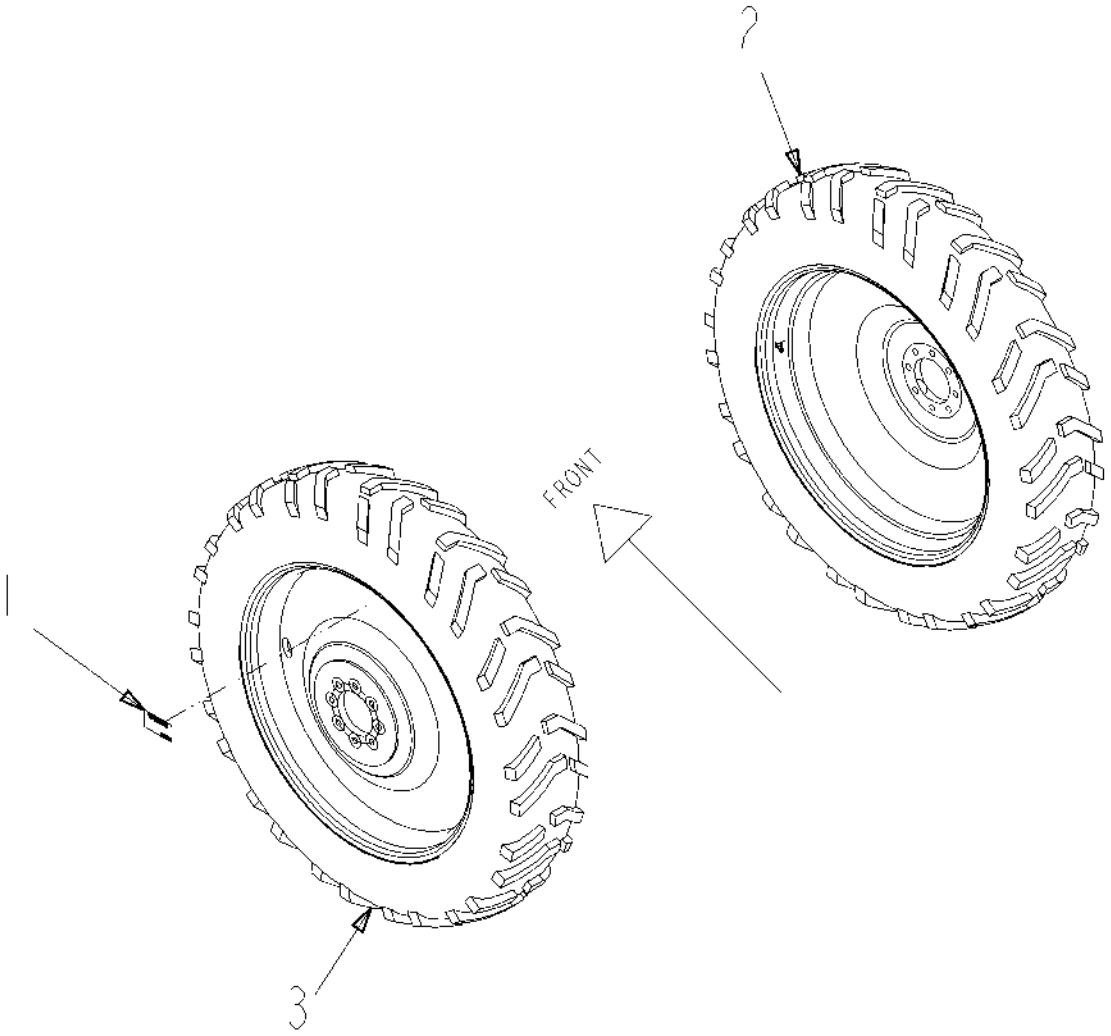

519084D1-01-R282-.TIF

Copyright © 2008 AGCO Corporation

F/A-TIRE,FWA,GY,320/85R38,CHAL

ITEM	PART #	QTY	DESCRIPTION	COMMENTS
1	AG262948	2	DECAL-WARNING,REPL TIRE,ENG	
2	515008D1	1	WHEEL/TIRE-320/85R38,RH,CHAL	SEE PAGE 11-11
3	515009D1	1	WHEEL/TIRE-320/85R38,LH,CHAL	SEE PAGE 11-12

Copyright © 2008 AGCO Corporation

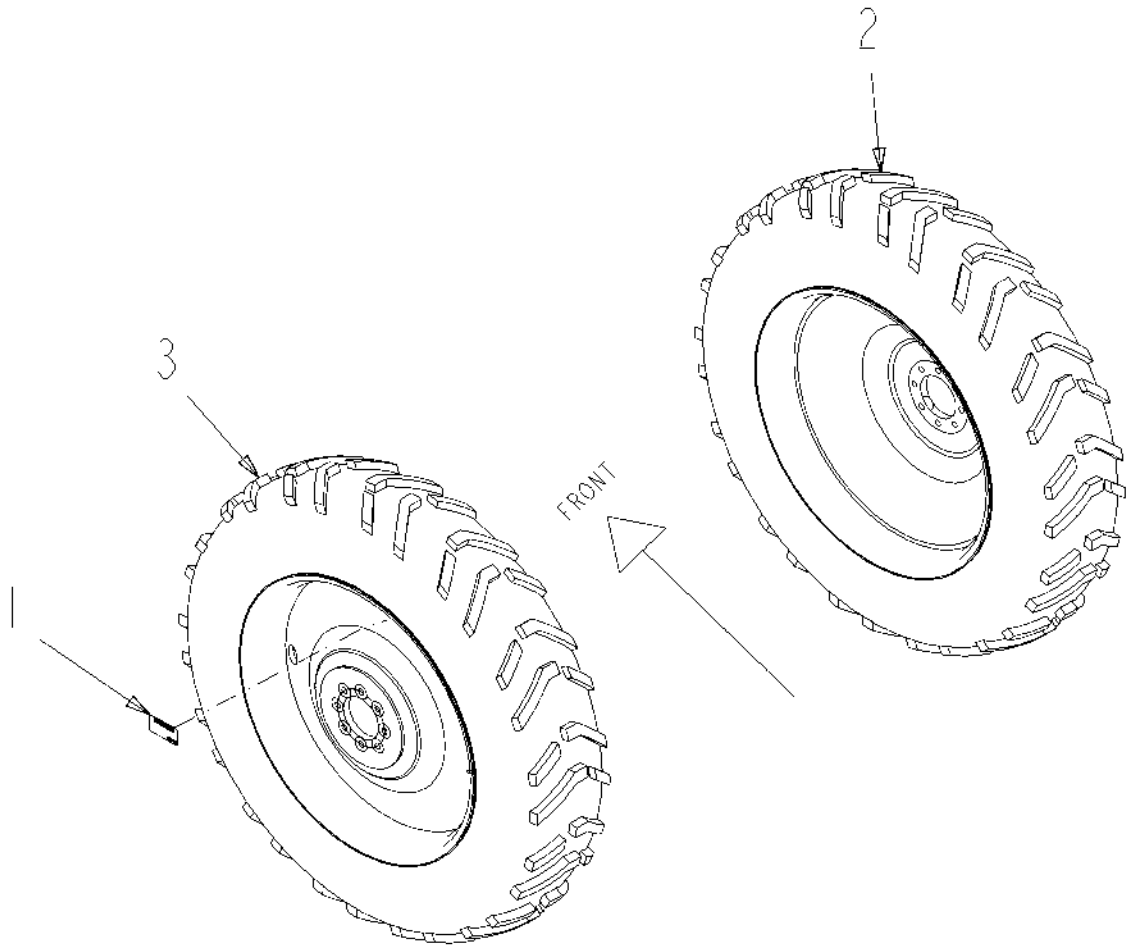

519085D1-01-R282-.TIF

Copyright © 2008 AGCO Corporation

F/A-TIRE,FWA,GY,380/80R38,CHAL

ITEM	PART #	QTY	DESCRIPTION	COMMENTS
1	AG262948	2	DECAL-WARNING,REPL TIRE,ENG	
2	515012D1	1	WHEEL/TIRE-380/80R38,RH,CHAL	SEE PAGE 11-14
3	515013D1	1	WHEEL/TIRE-380/80R38,LH,CHAL	SEE PAGE 11-15

Copyright © 2008 AGCO Corporation

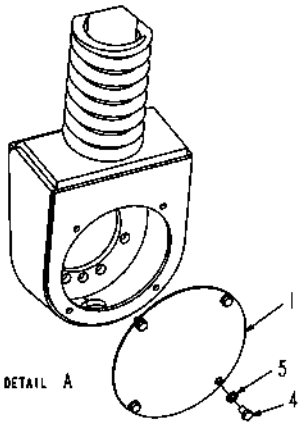

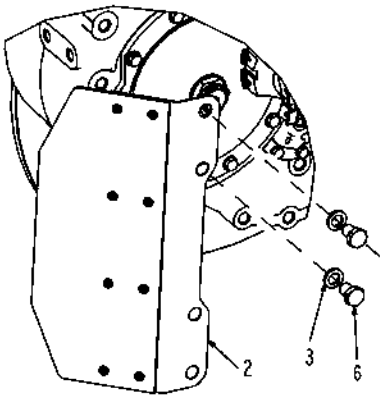

128327-02-M461-.TIF

Copyright © 2008 AGCO Corporation

DEFLECTOR INSTALL-CROP,7X50 SC

ITEM	PART #	QTY	DESCRIPTION	COMMENTS
1	WR128328	2	PLATE-COVER WHEEL LEG	
2	WR128331	2	DEFLECTOR ASM-CROP,7X50,SC	SEE PAGE 11-22
3	AG550108	4	WASHER 0.75 LK ZN REG	
4	AG550167	8	BOLT 0.37-16NCX 0.62 G5 ZN HHD	
5	AG550191	8	WASHER 0.37 LK ZN REG	
6	AG561419	4	BOLT 0.75-10NCX 1.00 G5 ZN HHD	

Copyright © 2008 AGCO Corporation

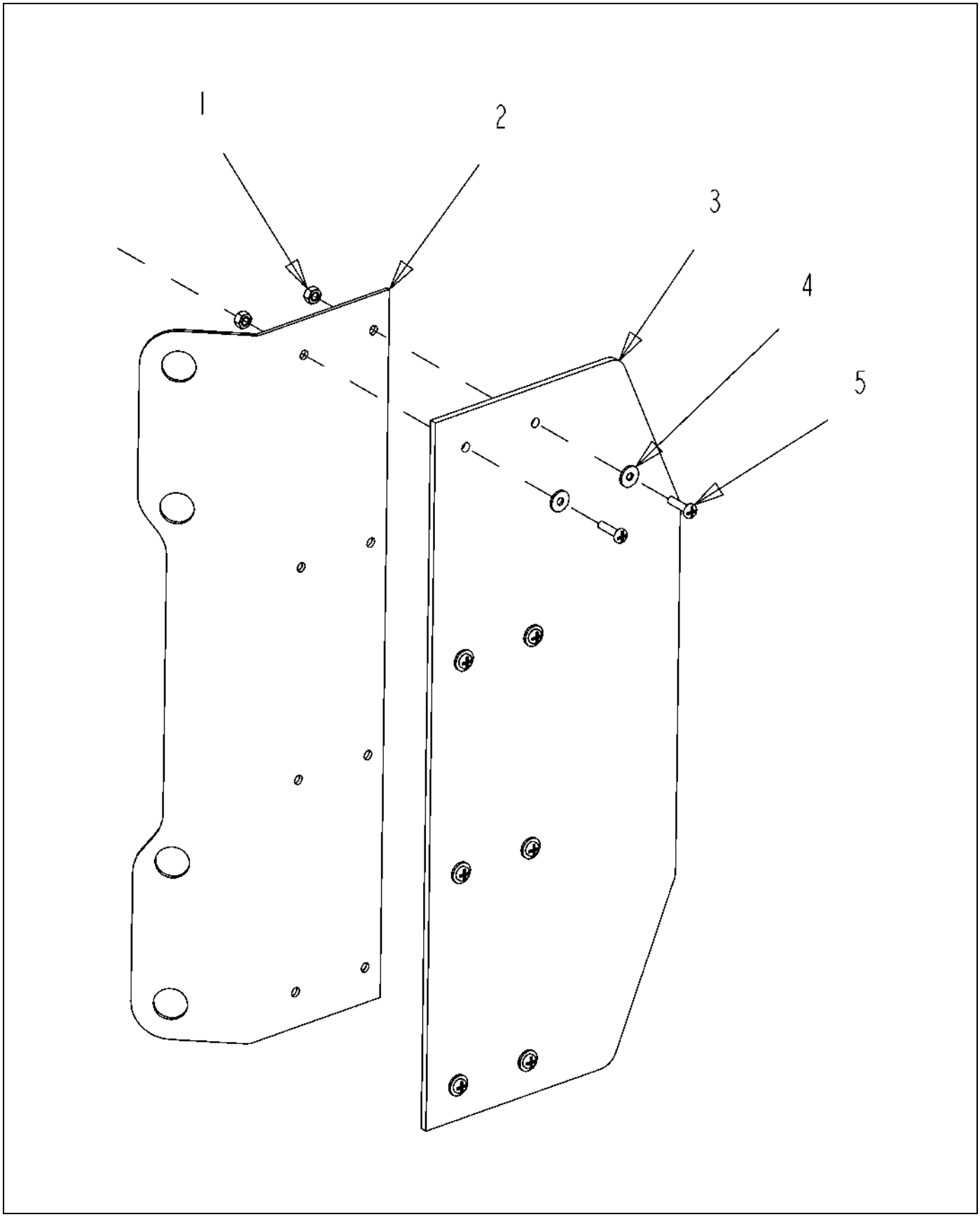

128331-A-1.TIF

Copyright © 2008 AGCO Corporation

DEFLECTOR ASM-CROP,7X50,SC

ITEM	PART #	QTY	DESCRIPTION	COMMENTS
1	AG027274	8	NUT #10-24NC HEX SS REG NY	
2	WR128329	1	BRACKET-CROP DEFLECTOR	
3	WR128330	1	PLATE-DEFLECTOR,CROP,POLY	
4	AG562082	8	WASHER #10 FL SS REG TYPE-B	
5	AG563094	8	SCREW 10-24X0.75 PH PHS SS	

Copyright © 2008 AGCO Corporation

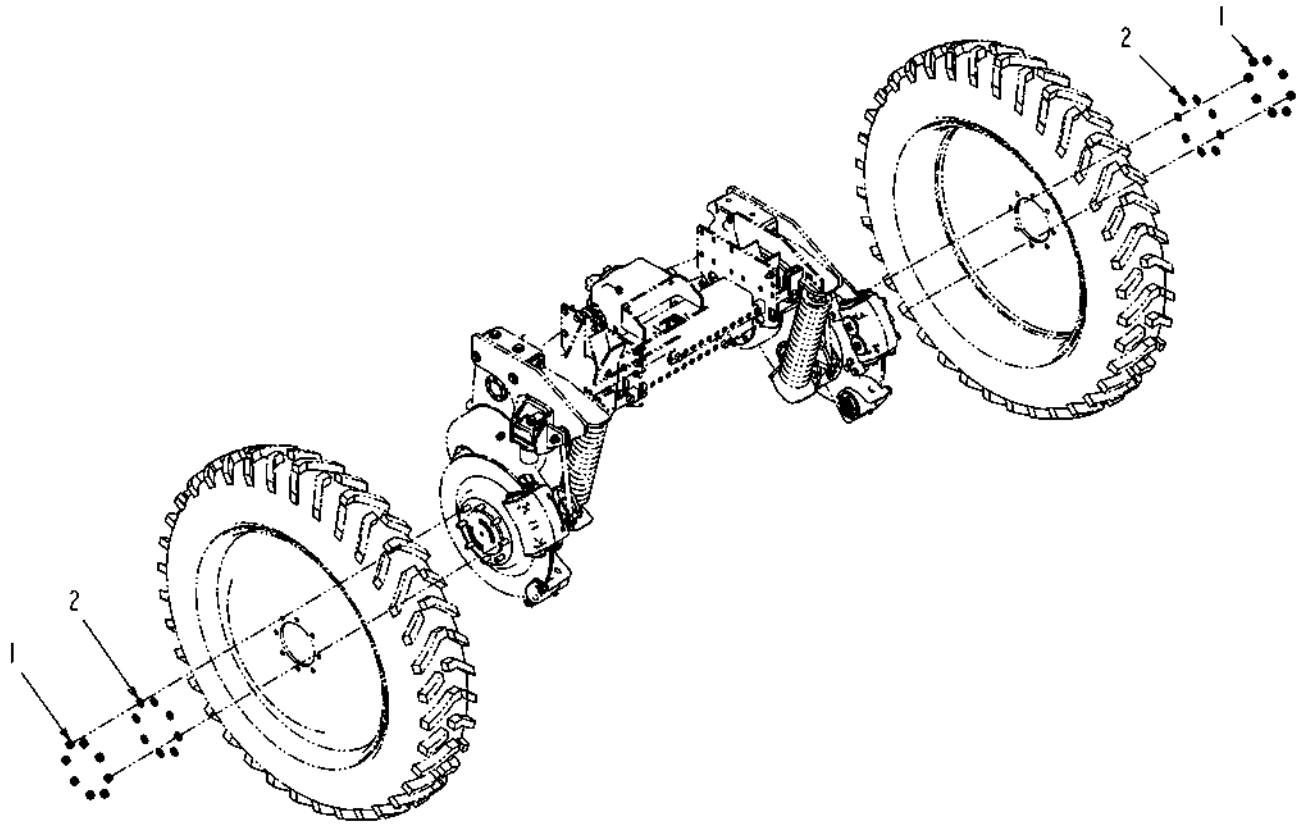

128627-02-M596-.TIF

Copyright © 2008 AGCO Corporation

MOUNTING HARDWARE

ITEM	PART #	QTY	DESCRIPTION	COMMENTS
1	WR124130	16	NUT-M22-1.5,DIN P34-10	
2	WR124131	16	WASHER-M22,DIN 6919	

Copyright © 2008 AGCO Corporation

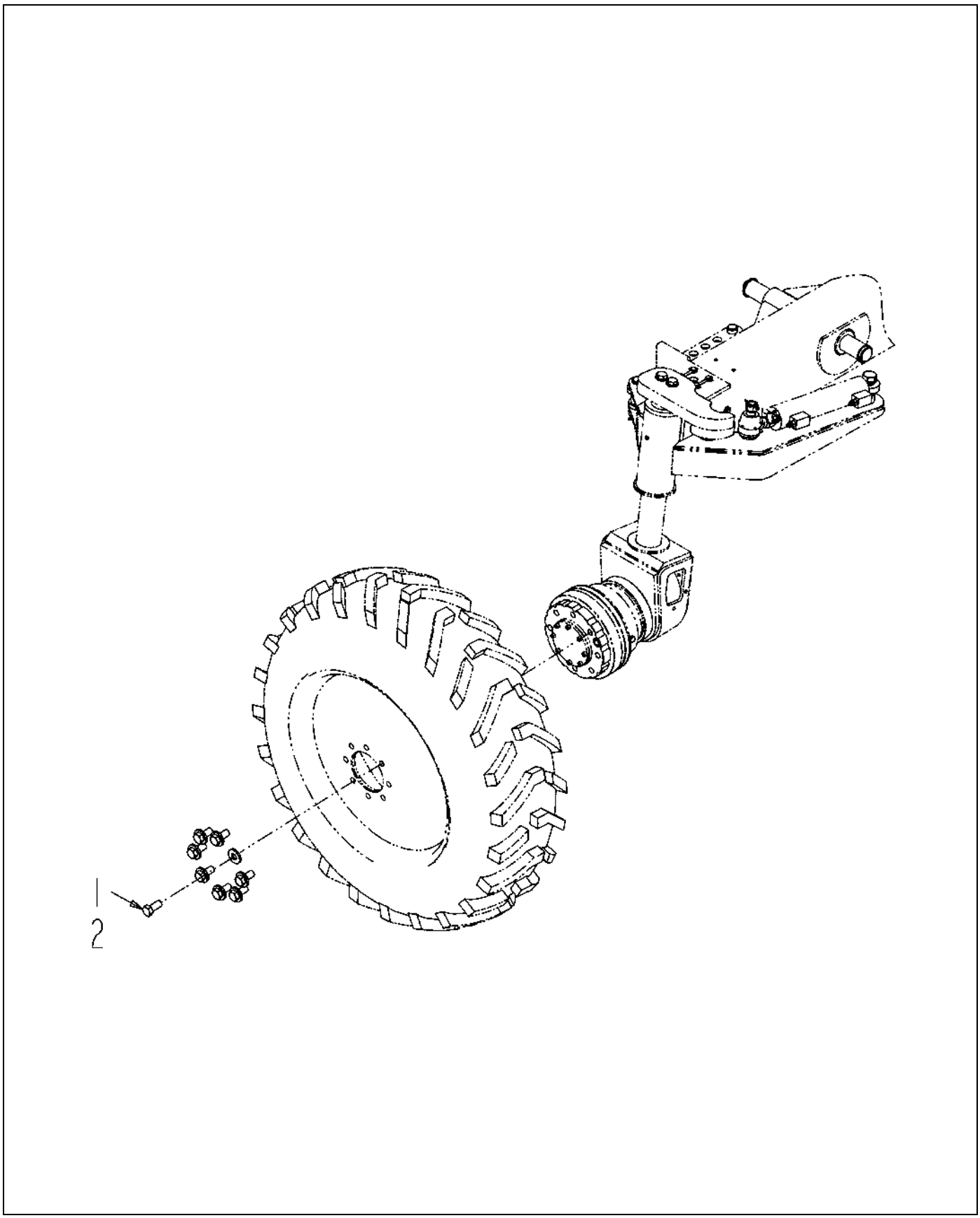

133903-A.TIF

Copyright © 2008 AGCO Corporation

HARDWARE-FRONT,WHEEL,28 IN

ITEM	PART #	QTY	DESCRIPTION	COMMENTS
1	WR133906	16	BOLT-M20-1.5X45,10.9,S,HHD,BLK	
2	AG521690	16	WSHR-FLT,1.88X.81X.25,BLK,HARD	

Copyright © 2008 AGCO Corporation

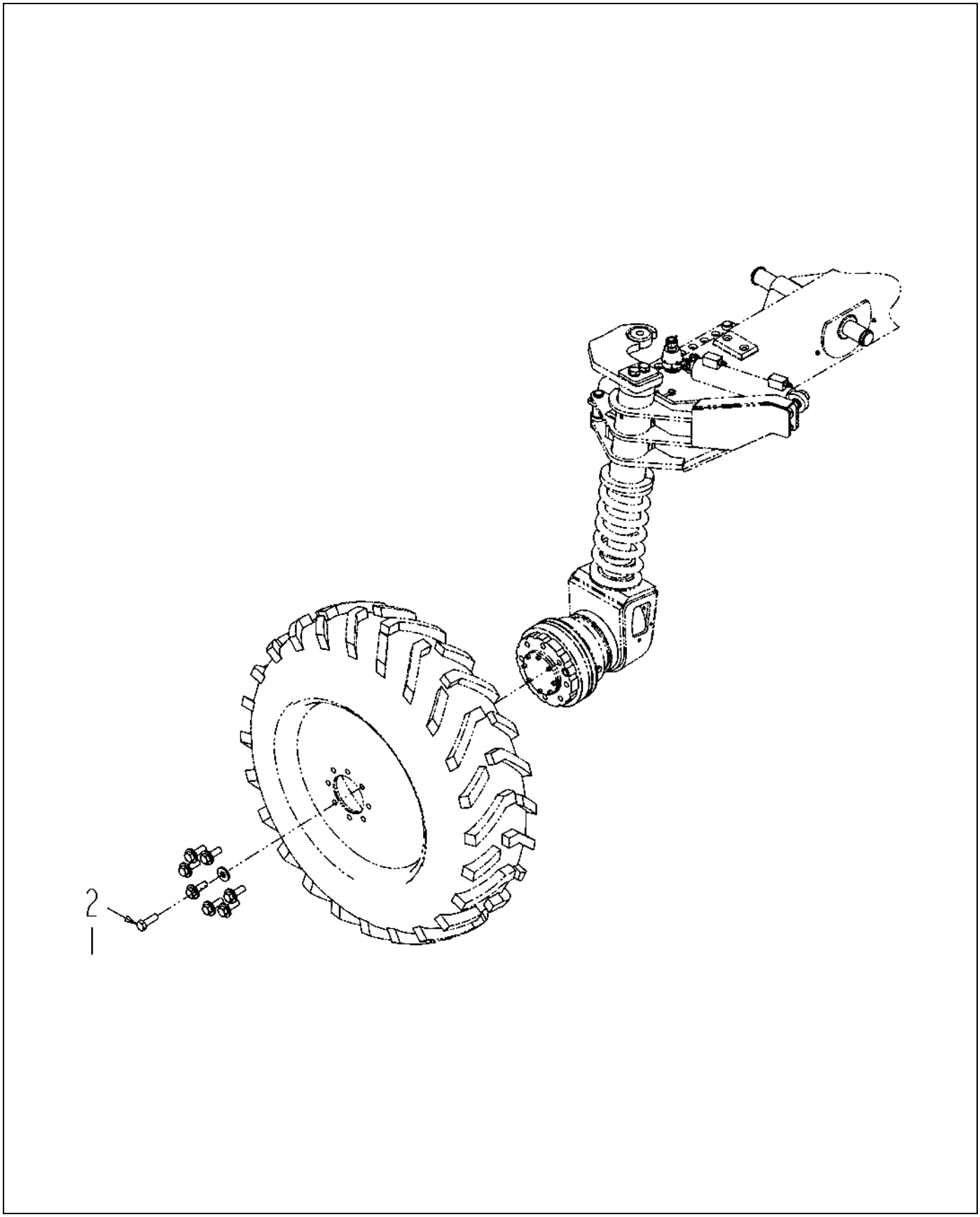

133904-A.TIF

Copyright © 2008 AGCO Corporation

HARDWARE-FRONT,WHEEL,38 IN

ITEM	PART #	QTY	DESCRIPTION	COMMENTS
1	AG521690	16	WSHR-FLT,1.88X.81X.25,BLK,HARD	
2	AG523111	16	BOLT-M20-1.5X60,10.9,S,HHD,BLK	

Copyright © 2008 AGCO Corporation

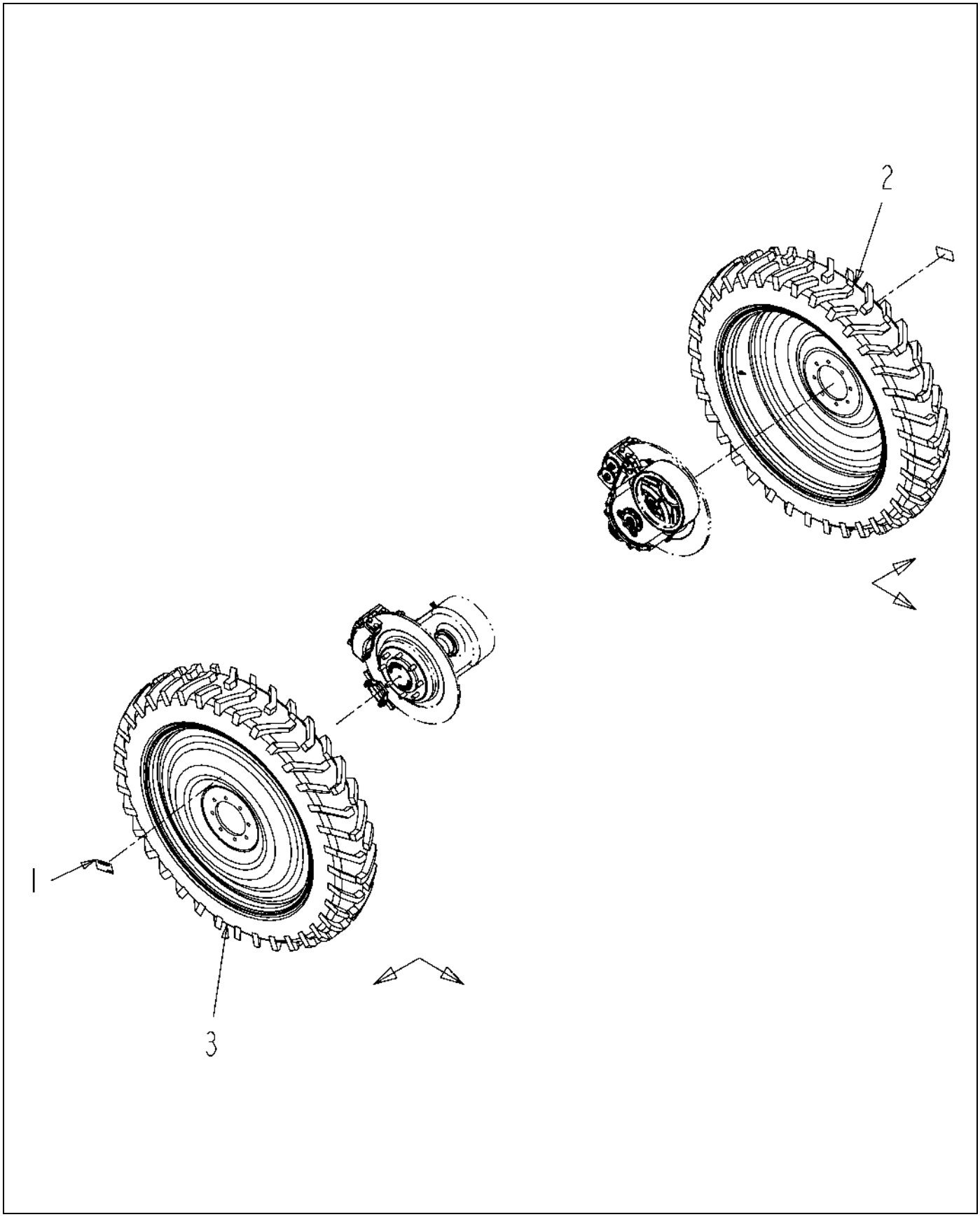

514608D1-01-R189-.TIF

Copyright © 2008 AGCO Corporation

OPTION-TIRE,GY,320/90R46,CHAL

ITEM	PART #	QTY	DESCRIPTION	COMMENTS
1	AG262948	2	DECAL-WARNING,REPL TIRE,ENG	
2	514613D1	1	WHEEL/TIRE-320/90R46,LH,CHAL	
3	514614D1	1	WHEEL/TIRE-320/90R46,RH,CHAL	

Copyright © 2008 AGCO Corporation

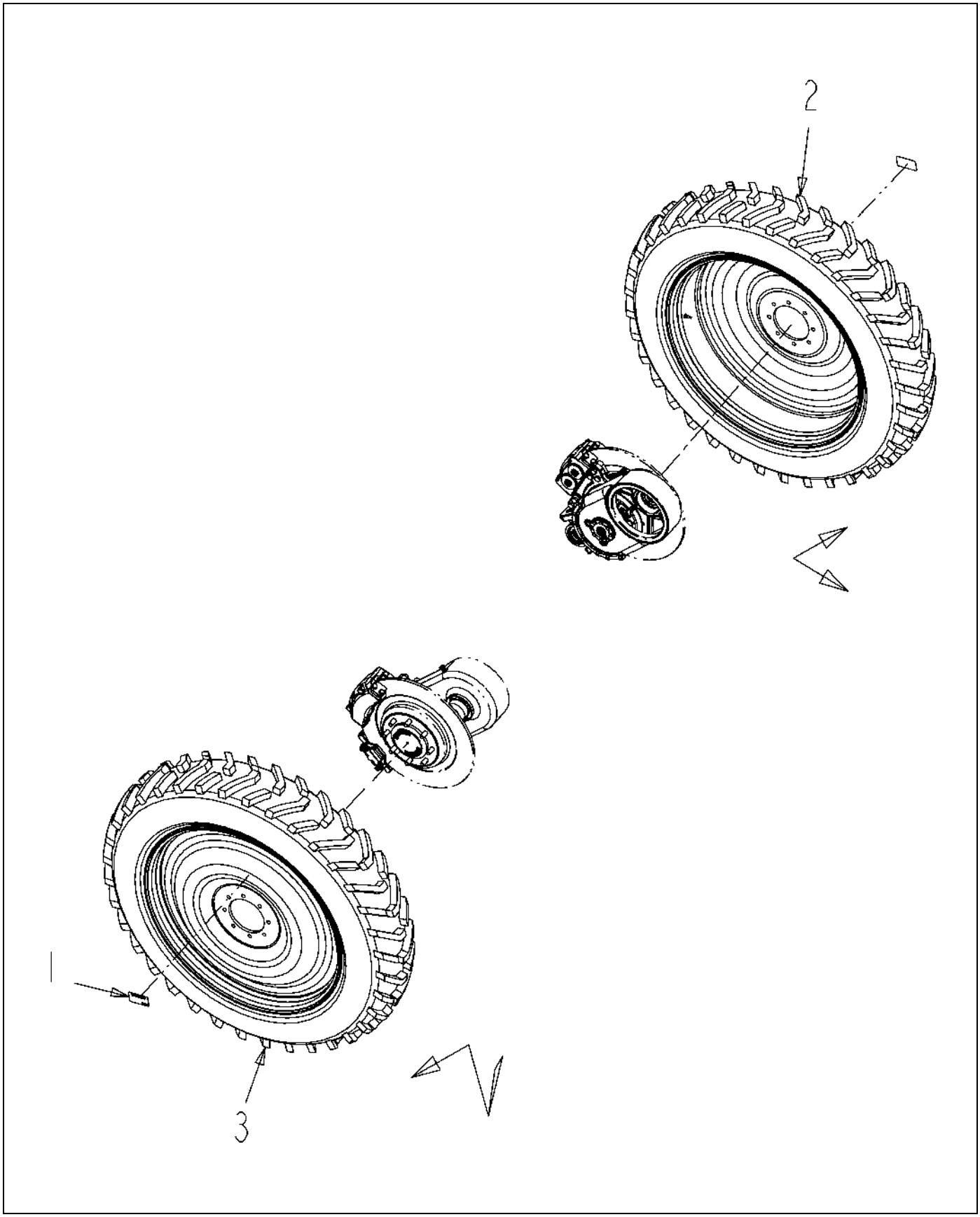

514615D1-01-R189-.TIF

Copyright © 2008 AGCO Corporation

OPTION-TIRE,GY,380/90R46,CHAL

ITEM	PART #	QTY	DESCRIPTION	COMMENTS
1	AG262948	2	DECAL-WARNING,REPL TIRE,ENG	
2	514616D1	1	WHEEL/TIRE-380/90R46,LH,CHAL	
3	514617D1	1	WHEEL/TIRE-380/90R46,RH,CHAL	

Copyright © 2008 AGCO Corporation

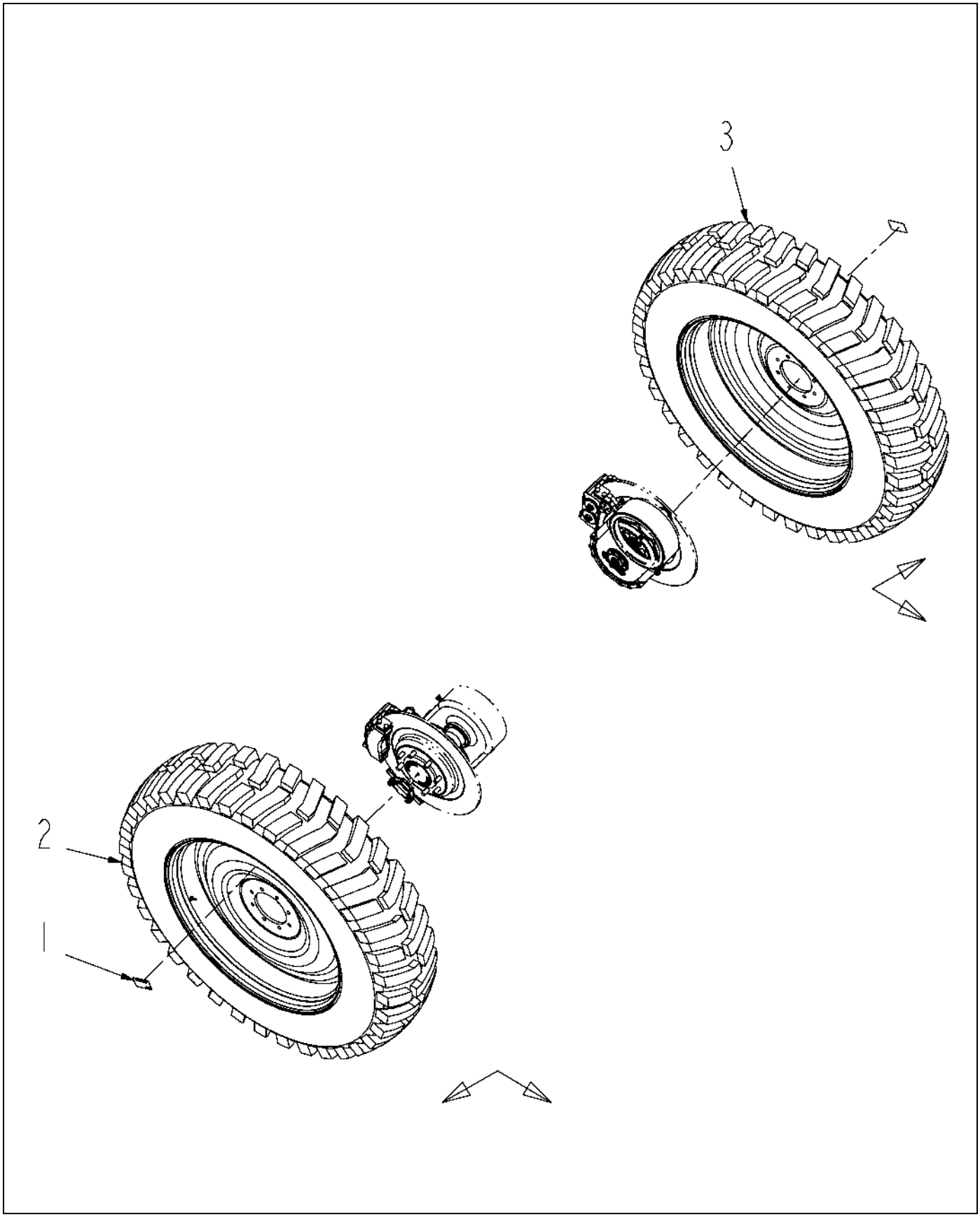

514624D1-01-R189-.TIF

Copyright © 2008 AGCO Corporation

OPTION-TIRE,GY,480/80R46,CHAL

ITEM	PART #	QTY	DESCRIPTION	COMMENTS
1	AG262948	2	DECAL-WARNING,REPL TIRE,ENG	
2	514618D1	1	WHEEL/TIRE-480/80R46,RH,CHAL	
3	514619D1	1	WHEEL/TIRE-480/80R46,LH,CHAL	

Copyright © 2008 AGCO Corporation

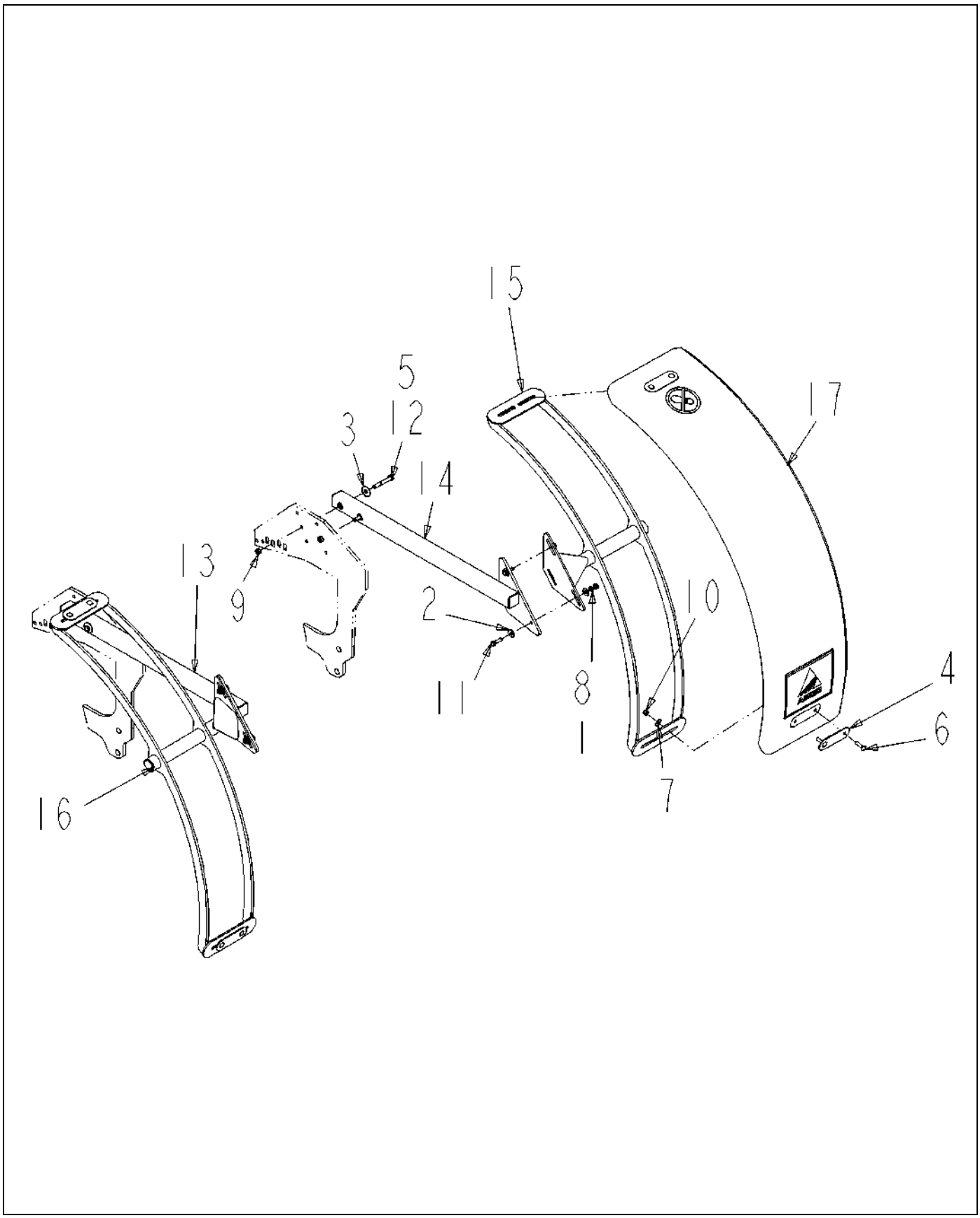

524368D1-01-R911-.TIF

Copyright © 2008 AGCO Corporation

INSTALL-REAR,FENDER,COUPE

ITEM	PART #	QTY	DESCRIPTION	COMMENTS
1	WR50838	6	NUT-HEX,METRIC M10-1.5	
2	WR55158	12	WASHER-FLAT,10MM ID,	
3	WR55159	4	WASHER-FLAT,12MM ID,	
4	AG236763	4	PLATE-MOUNTING,FENDER	
5	AG512885	AR	LOCTITE ADHESIVE SEALANT BLUE	
6	AG520944	8	BOLT-.38-16X1.5,G5,BLK,CRG	
7	AG551007	8	WASHER 0.37 FL ZN REG TYPE-B	
8	AG562271	6	WASHER M10 LK ZN REG	
9	AG562797	4	NUT HEX M12 X 1.75	
10	AG601411	8	NUT 0.37-16NC HEX ZN REG NY	
11	400059X1	6	BOLT-M10X1.5X35 ZNDI HHD 10.9	
12	400241X1	4	BOLT-M12X1.75X80 ZNDI HHD 10.9	
13	514801D1	1	WLDMT-BRKT ATTACH,REAR,LH	
14	514802D1	1	WLDMT-BRKT ATTACH,REAR,RH	
15	522259D1	1	WLDMT-FENDER,SUPPORT,REAR	
16	522260D1	1	WLDMT-FENDER,SUPPORT,REAR	
17	524194D1	2	FENDER-AGCO,POLY	

Copyright © 2008 AGCO Corporation

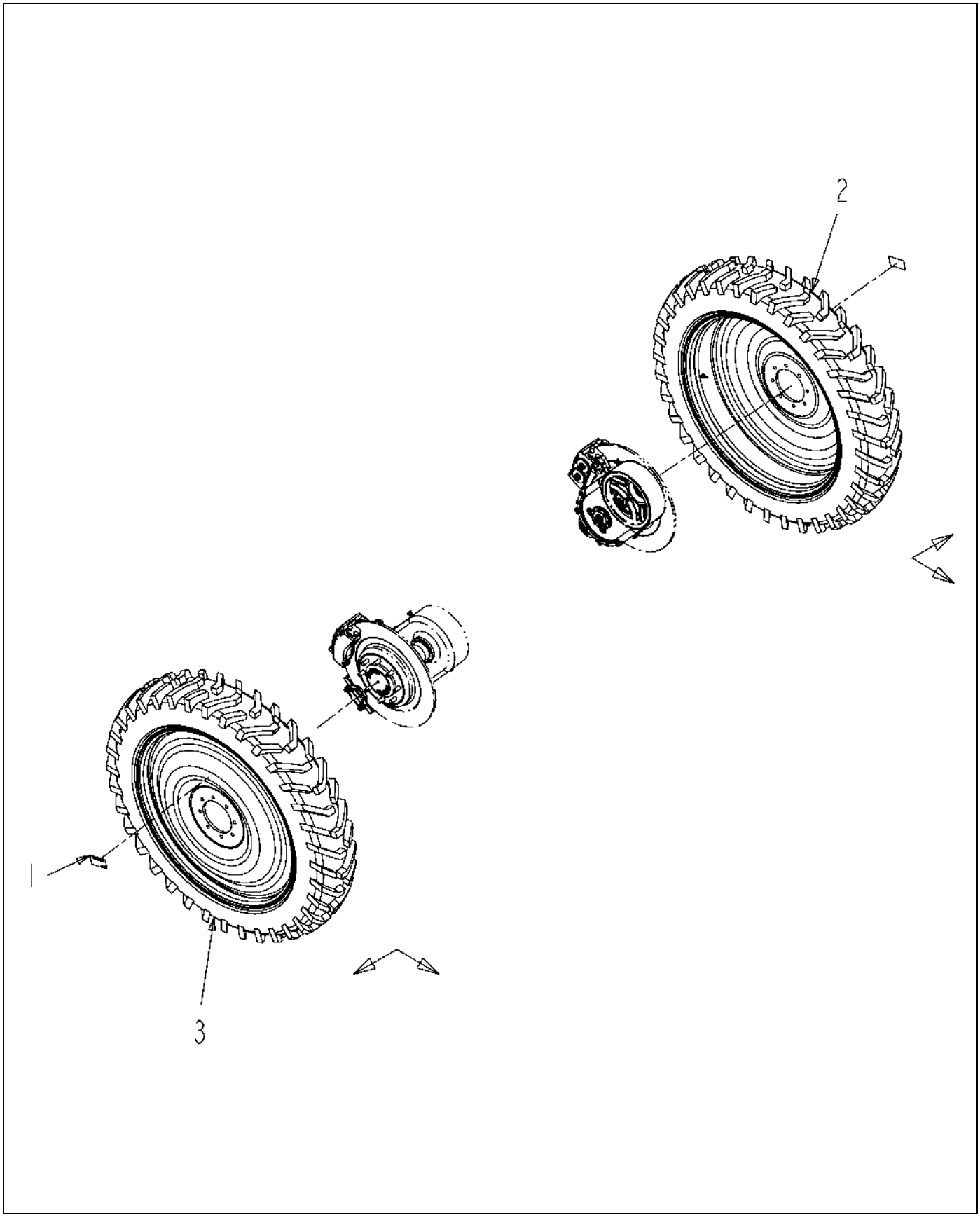

518219D1-01-R189-.TIF

Copyright © 2008 AGCO Corporation

F/A-TIRE,GY 320/90R46,CHAL

ITEM	PART #	QTY	DESCRIPTION	COMMENTS
1	AG262948	2	DECAL-WARNING,REPL TIRE,ENG	
2	514613D1	1	WHEEL/TIRE-320/90R46,LH,CHAL	
3	514614D1	1	WHEEL/TIRE-320/90R46,RH,CHAL	

Copyright © 2008 AGCO Corporation

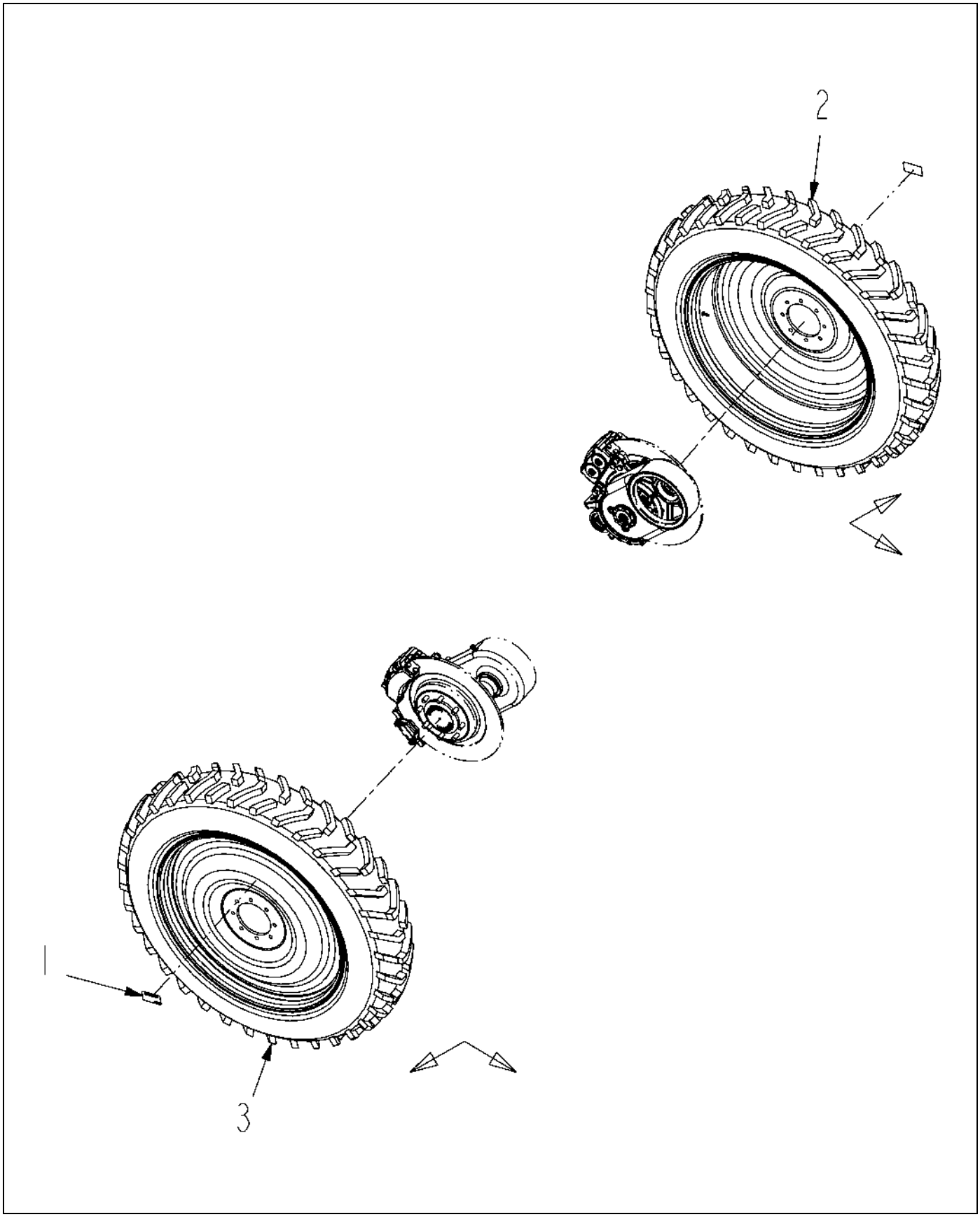

518220D1-01-R189-.TIF

Copyright © 2008 AGCO Corporation

F/A-TIRE,GY 380/90R46,CHAL

ITEM	PART #	QTY	DESCRIPTION	COMMENTS
1	AG262948	2	DECAL-WARNING,REPL TIRE,ENG	
2	514616D1	1	WHEEL/TIRE-380/90R46,LH,CHAL	
3	514617D1	1	WHEEL/TIRE-380/90R46,RH,CHAL	

Copyright © 2008 AGCO Corporation

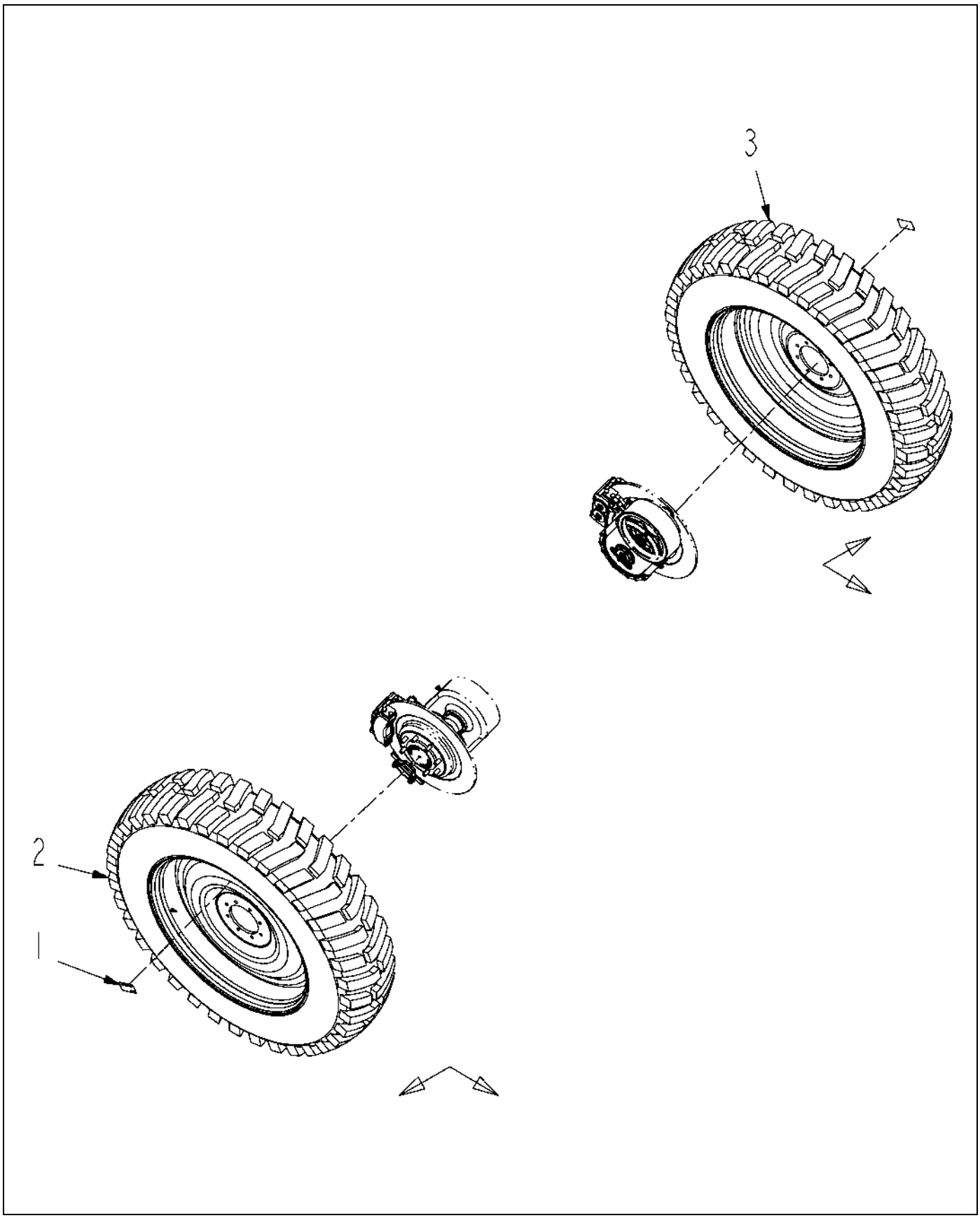

518221D1-01-R189-.TIF

Copyright © 2008 AGCO Corporation

F/A-TIRE,GY 480/80R46,CHAL

ITEM	PART #	QTY	DESCRIPTION	COMMENTS
1	AG262948	2	DECAL-WARNING,REPL TIRE,ENG	
2	514618D1	1	WHEEL/TIRE-480/80R46,RH,CHAL	
3	514619D1	1	WHEEL/TIRE-480/80R46,LH,CHAL	

Copyright © 2008 AGCO Corporation

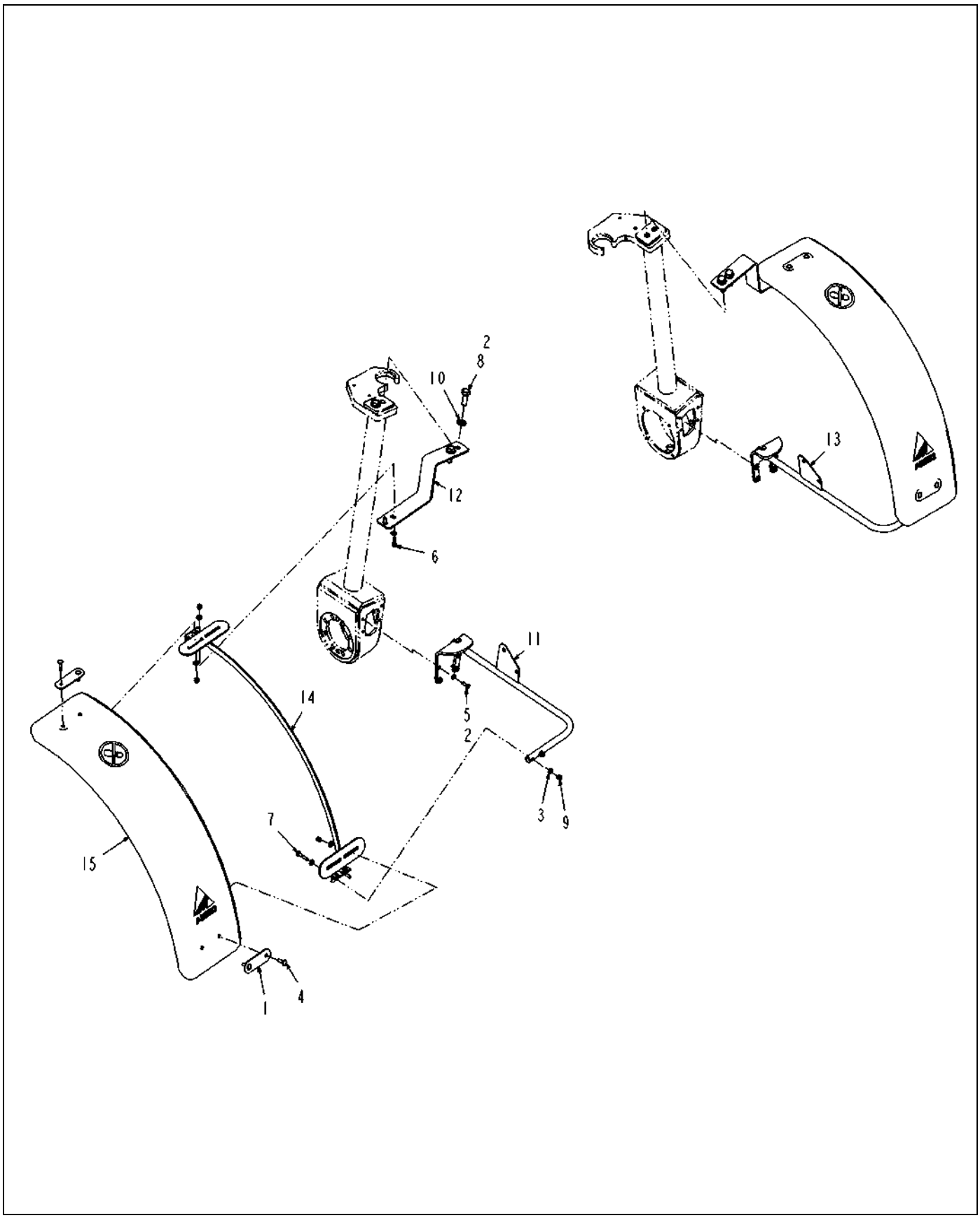

524366D1-02-T555-.TIF

Copyright © 2008 AGCO Corporation

INSTALL-FRONT,FENDER,COUPE

ITEM	PART #	QTY	DESCRIPTION	COMMENTS
1	AG236763	4	PLATE-MOUNTING,FENDER	
2	AG512885	AR	LOCTITE ADHESIVE SEALANT BLUE	
3	AG514559	32	WASHER 0.37 FL ZN SAE TYP-A G8	
4	AG520944	8	BOLT-.38-16X1.5,G5,BLK,CRG	
5	AG550175	8	BOLT 0.37-16NCX 1.00 G5 ZN HHD	
6	AG550515	4	BOLT 0.37-16NCX 1.25 G5 ZN HHD	
7	AG552240	4	BOLT 0.37-16NCX 2.00 G5 ZN HHD	
8	AG561124	4	BOLT 0.75-10NCX 2.00 G8 ZN HHD	
9	AG601411	16	NUT 0.37-16NC HEX ZN REG NY	
10	AG604203	-	WASHER 0.75 FL ZN SAE TYP-A G8	
11	516443D1	1	WLDMT-FENDER BRKT,FRONT,LH	
12	516446D1	2	PLATE-FENDER SUPPORT,TOP	
13	517470D1	1	WLDMT-FENDER BRKT,FRONT,RH	
14	522061D1	2	WLDMT-FENDER BRKT,MAIN,FRONT	
15	524195D1	2	FENDER-AGCO,POLY	

Copyright © 2008 AGCO Corporation

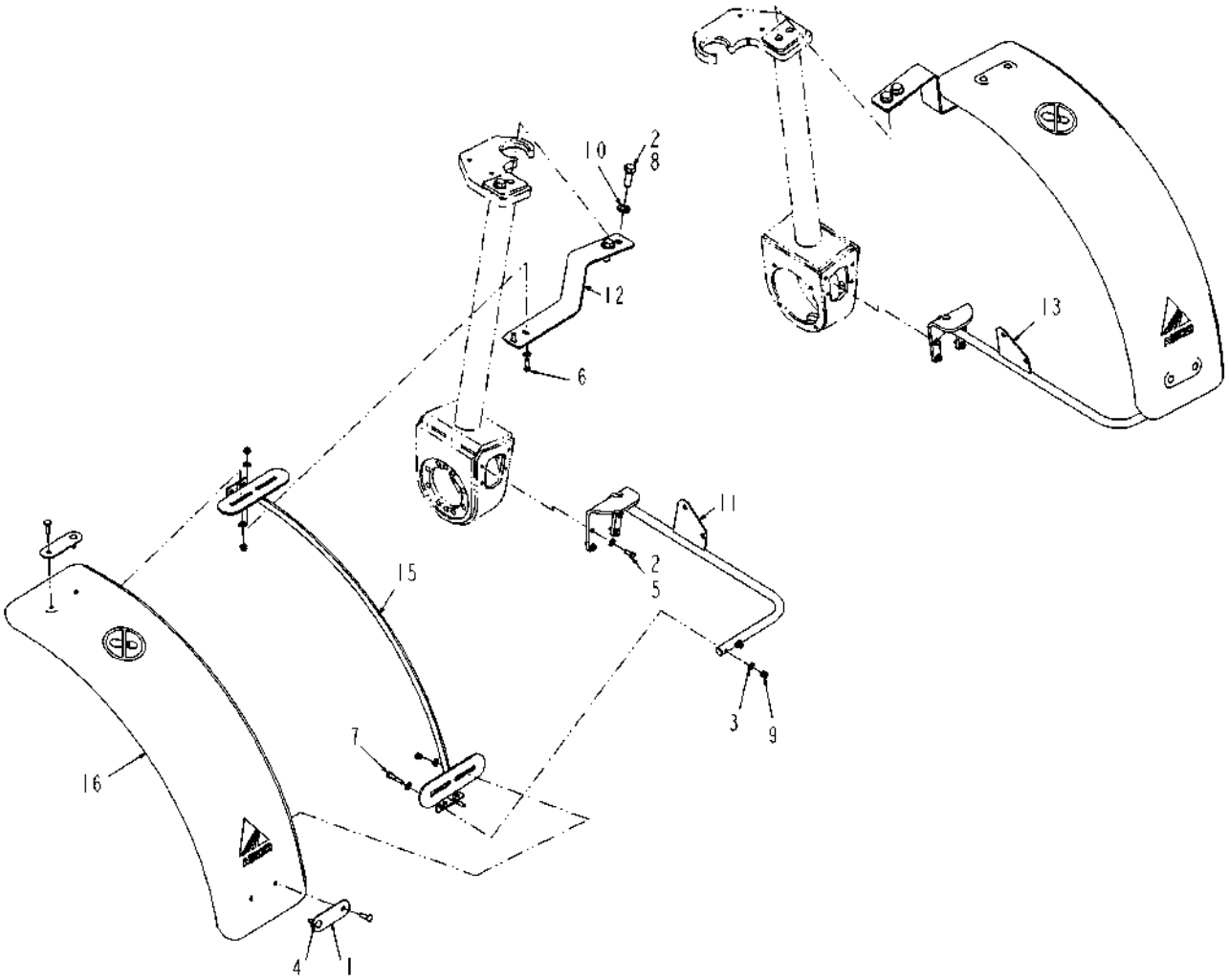

524367D1-01-R911-.TIF

Copyright © 2008 AGCO Corporation

F/A-FRONT,FENDER,COUPE

ITEM	PART #	QTY	DESCRIPTION	COMMENTS
1	AG236763	4	PLATE-MOUNTING,FENDER	
2	AG512885	AR	LOCTITE ADHESIVE SEALANT BLUE	
3	AG514559	32	WASHER 0.37 FL ZN SAE TYP-A G8	
4	AG520944	8	BOLT-.38-16X1.5,G5,BLK,CRG	
5	AG550175	8	BOLT 0.37-16NCX 1.00 G5 ZN HHD	
6	AG550515	4	BOLT 0.37-16NCX 1.25 G5 ZN HHD	
7	AG552240	4	BOLT 0.37-16NCX 2.00 G5 ZN HHD	
8	AG561124	4	BOLT 0.75-10NCX 2.00 G8 ZN HHD	
9	AG601411	16	NUT 0.37-16NC HEX ZN REG NY	
10	AG604203	-	WASHER 0.75 FL ZN SAE TYP-A G8	
11	516443D1	1	WLDMT-FENDER BRKT,FRONT,LH	
12	516446D1	2	PLATE-FENDER SUPPORT,TOP	
13	517470D1	1	WLDMT-FENDER BRKT,FRONT,RH	
14	519210D1	1	PKG-FRONT,FENDER,COUPE	
15	522061D1	2	WLDMT-FENDER BRKT,MAIN,FRONT	
16	524195D1	2	FENDER-AGCO,POLY	
17	524373D1	1	INSTR-FRONT,FENDER,76XX	

Copyright © 2008 AGCO Corporation

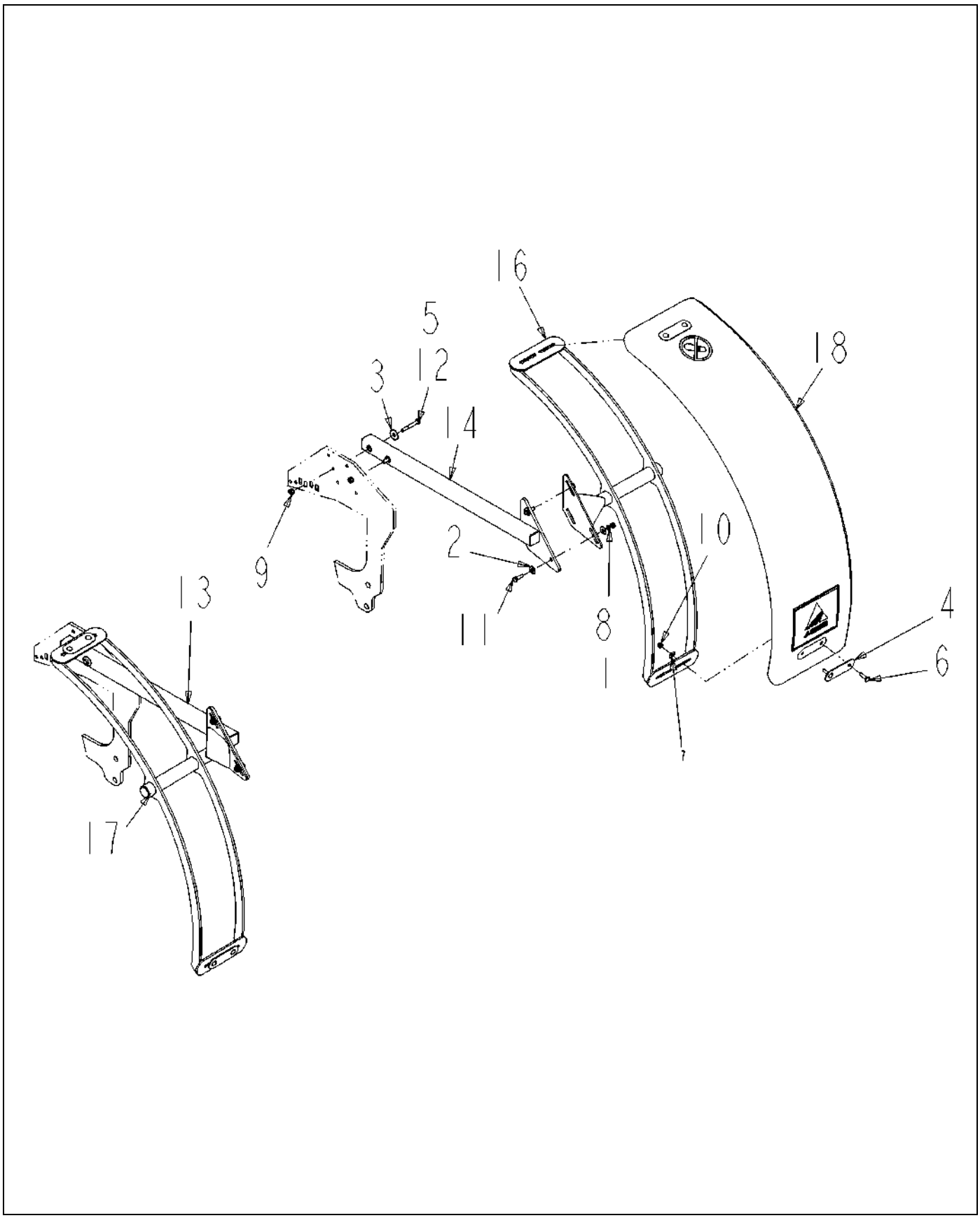

524369D1-01-R911-.TIF

Copyright © 2008 AGCO Corporation

ITEM	PART #	QTY	DESCRIPTION	COMMENTS
1	WR50838	6	NUT-HEX,METRIC M10-1.5	
2	WR55158	12	WASHER-FLAT,10MM ID,	
3	WR55159	4	WASHER-FLAT,12MM ID,	
4	AG236763	4	PLATE-MOUNTING,FENDER	
5	AG512885	AR	LOCTITE ADHESIVE SEALANT BLUE	
6	AG520944	8	BOLT-.38-16X1.5,G5,BLK,CRG	
7	AG551007	8	WASHER 0.37 FL ZN REG TYPE-B	
8	AG562271	6	WASHER M10 LK ZN REG	
9	AG562797	4	NUT HEX M12 X 1.75	
10	AG601411	8	NUT 0.37-16NC HEX ZN REG NY	
11	400059X1	6	BOLT-M10X1.5X35 ZNDI HHD 10.9	
12	400241X1	4	BOLT-M12X1.75X80 ZNDI HHD 10.9	
13	514801D1	1	WLDMT-BRKT ATTACH,REAR,LH	
14	514802D1	1	WLDMT-BRKT ATTACH,REAR,RH	
15	519212D1	1	PKG-REAR,FENDER,COUPE	
16	522259D1	1	WLDMT-FENDER,SUPPORT,REAR	
17	522260D1	1	WLDMT-FENDER,SUPPORT,REAR	
18	524194D1	2	FENDER-AGCO,POLY	
19	524374D1	1	INSTR-REAR,FENDER,76XX	

Copyright © 2008 AGCO Corporation

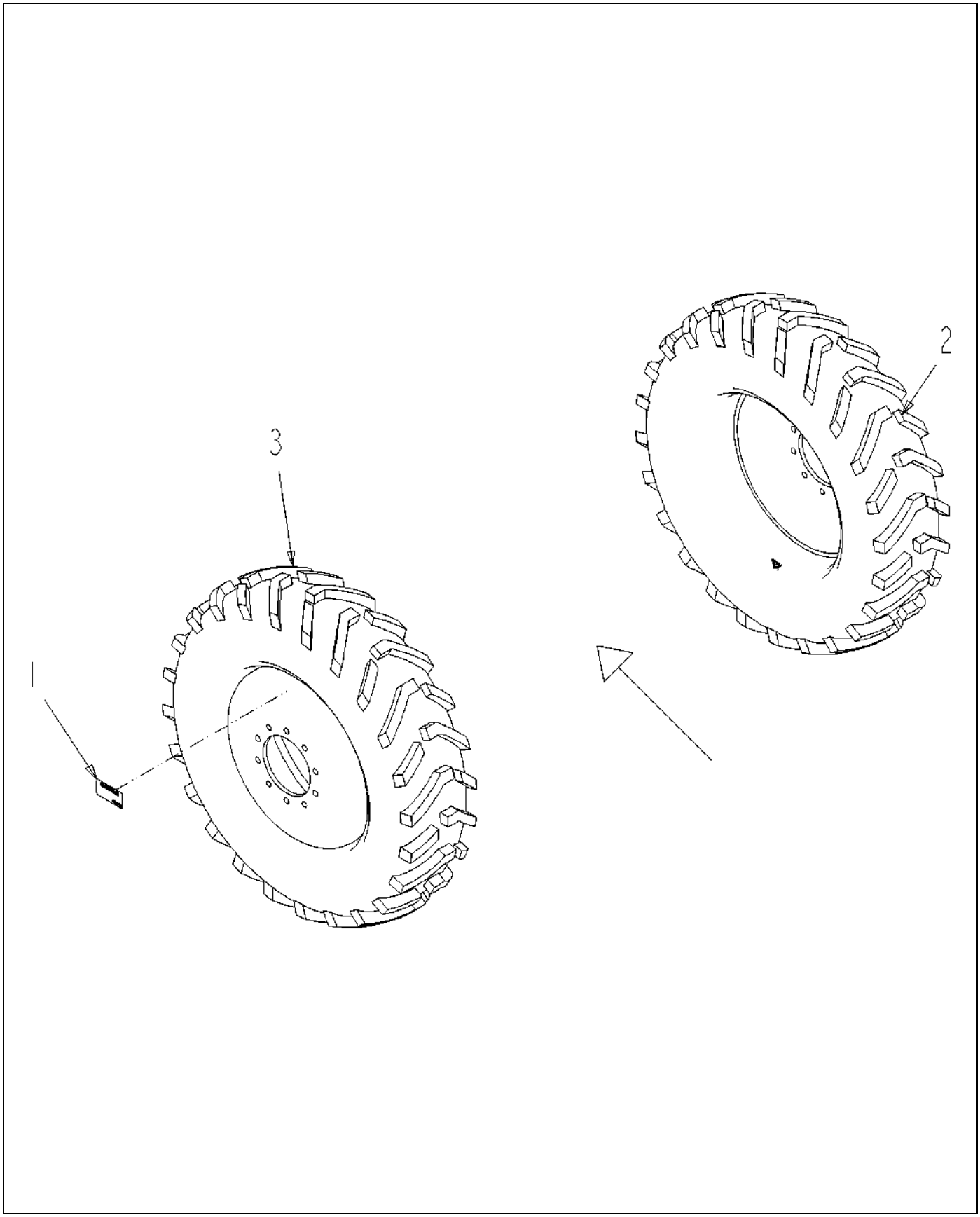

515016D1-01-R525-.TIF

Copyright © 2008 AGCO Corporation

OPT-TIRE,12.4X28-8,GY,5.5,CHAL

ITEM	PART #	QTY	DESCRIPTION	COMMENTS
1	AG262948	2	DECAL-WARNING,REPL TIRE,ENG	
2	515017D1	1	WHEEL/TIRE-12.4X28-8,RH,CHAL	
3	515018D1	1	WHEEL/TIRE-12.4X28-8,LH,CHAL	

Copyright © 2008 AGCO Corporation

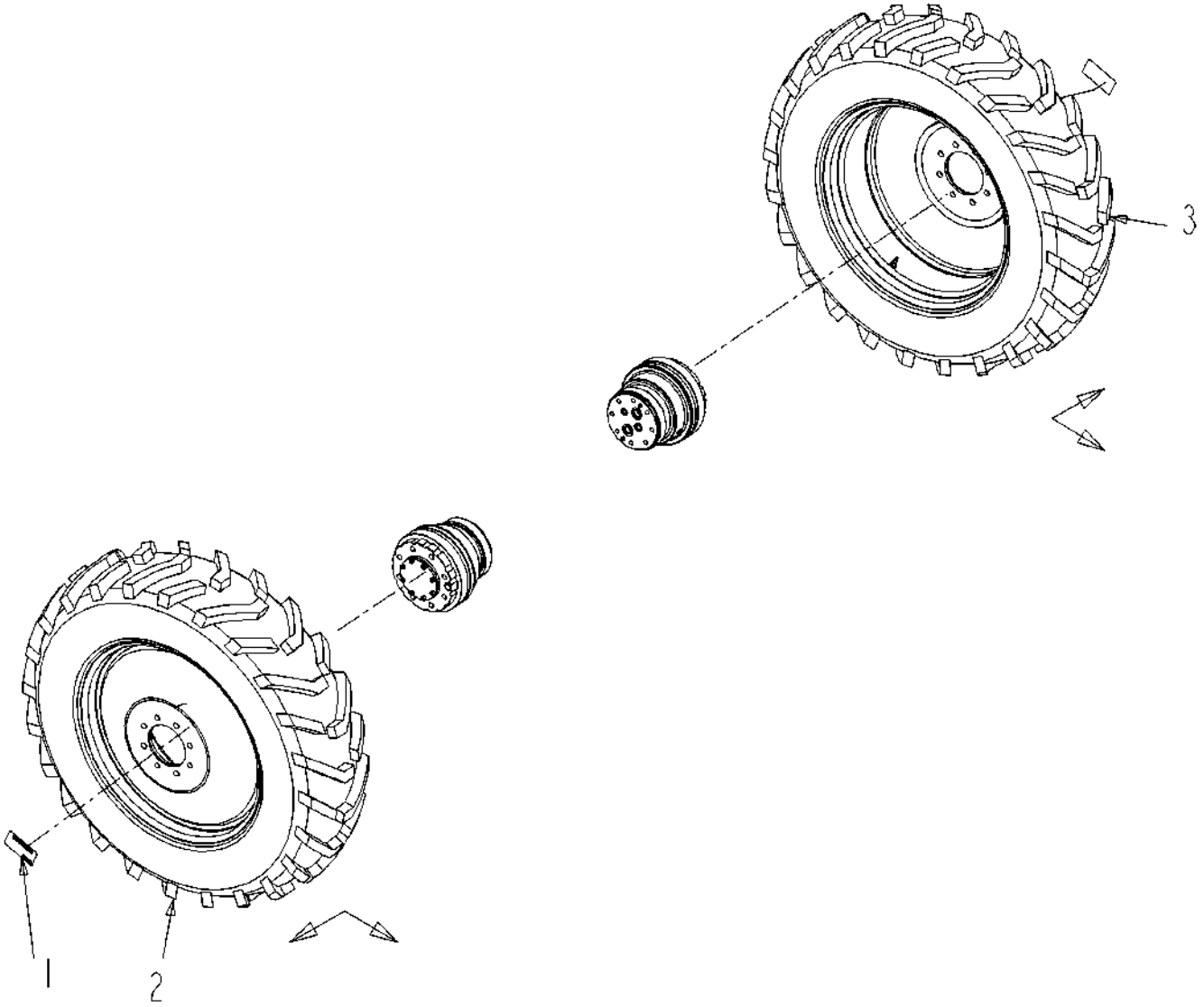

514977D1-01-R525-.TIF

Copyright © 2008 AGCO Corporation

OPTION-TIRE,12.4 X 28-8,CHAL

ITEM	PART #	QTY	DESCRIPTION	COMMENTS
1	AG262948	2	DECAL-WARNING,REPL TIRE,ENG	
2	514978D1	1	WHEEL/TIRE-12.4 X 28.8,RH,CHAL	
3	514979D1	1	WHEEL/TIRE-12.4 X 28.8,RH,CHAL	

Copyright © 2008 AGCO Corporation

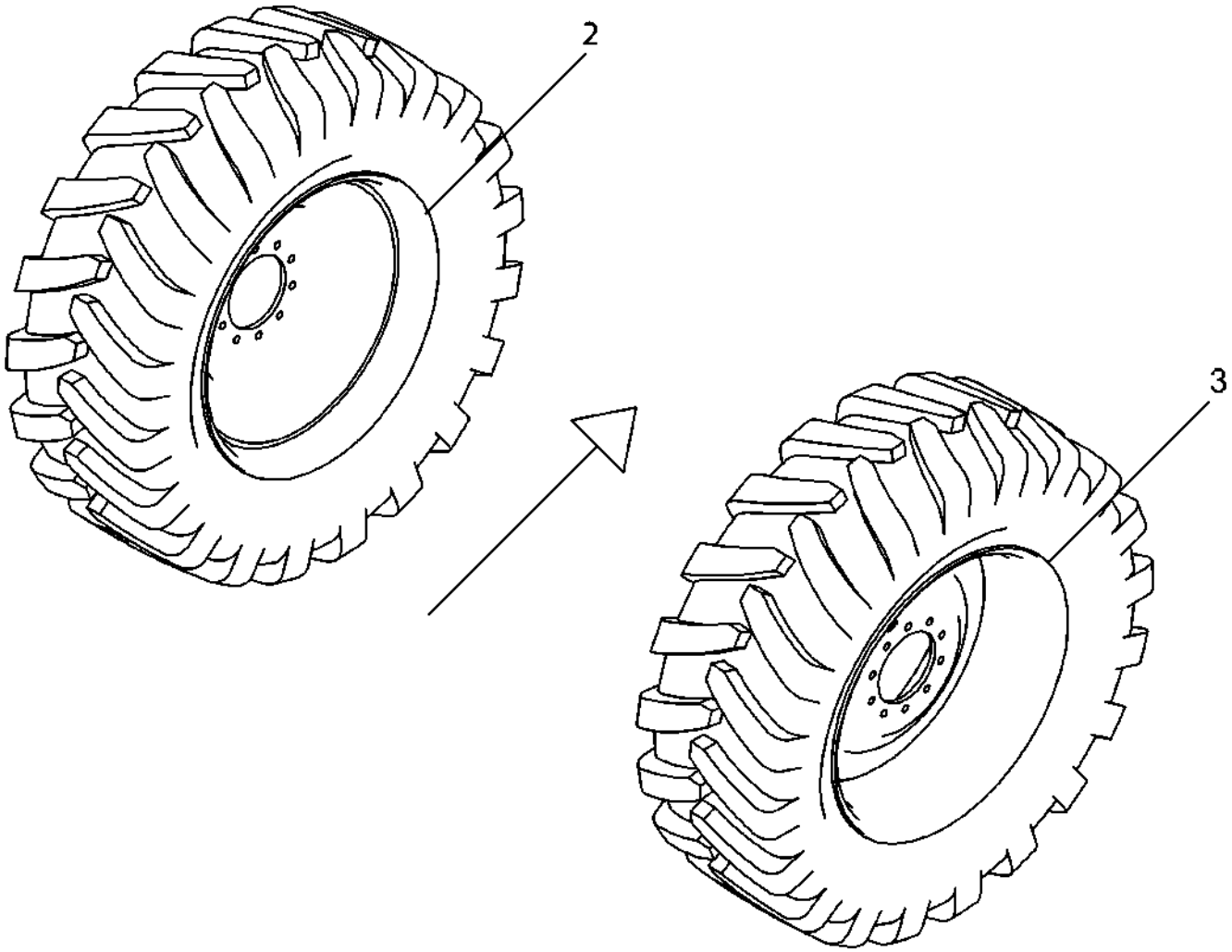

528003D1-01-T461-.TIF

Copyright © 2008 AGCO Corporation

OPT-TIRE,540/65R34,GY,10 HOLE

ITEM	PART #	QTY	DESCRIPTION	COMMENTS
1	AG262948	2	DECAL-WARNING,REPL TIRE,ENG	
2	528004D1	1	TIRE/RIM ASM-540/65R34 R1W,LH	SEE PAGE 11-40
3	528005D1	1	TIRE/RIM ASM-540/65R34 R1W,RH	SEE PAGE 11-41

Copyright © 2008 AGCO Corporation

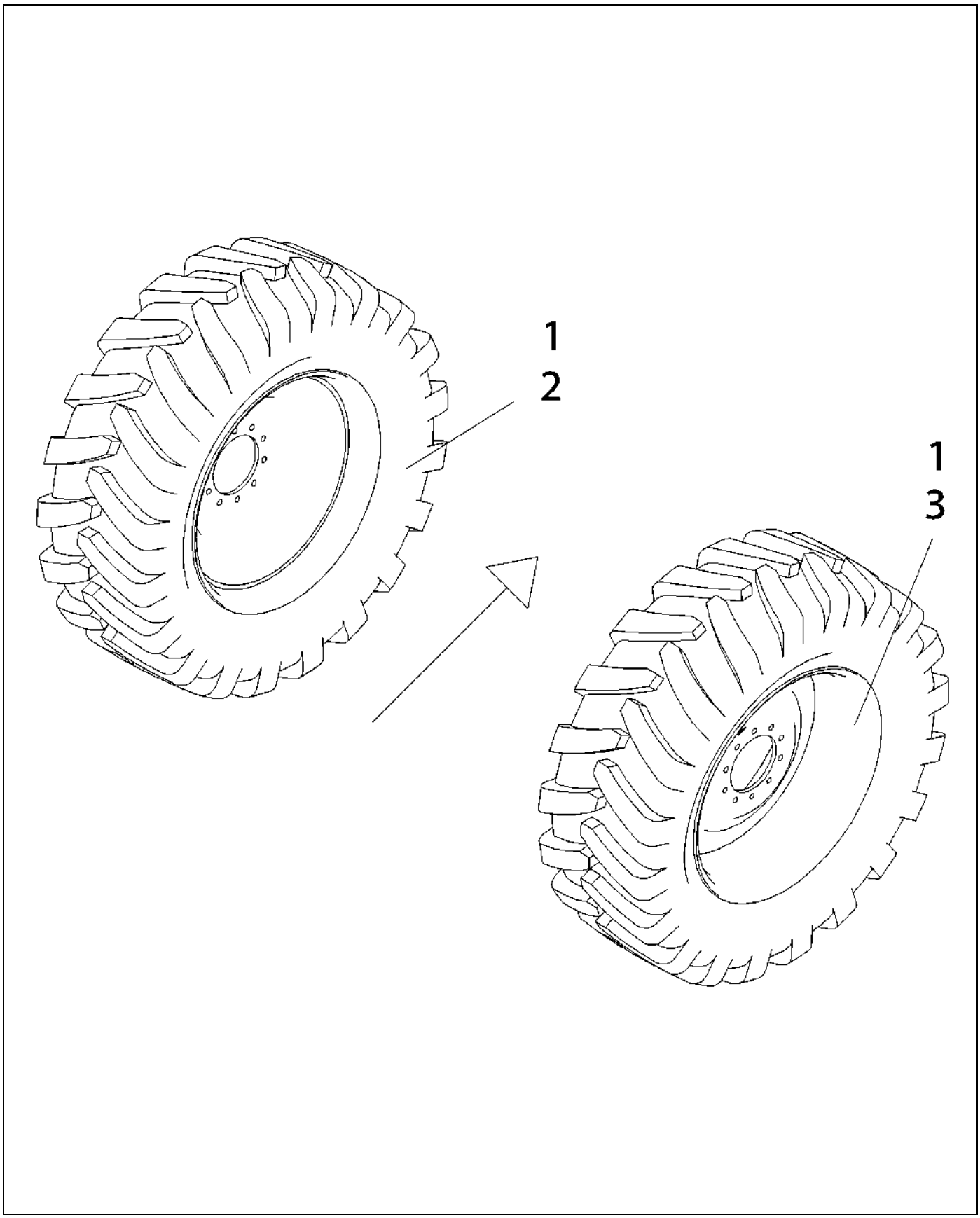

528316D1-01-T461-.TIF

Copyright © 2008 AGCO Corporation

F/A-TIRE,540/65R34,GY,10 HOLE

ITEM	PART #	QTY	DESCRIPTION	COMMENTS
1	AG262948	2	DECAL-WARNING,REPL TIRE,ENG	
2	528004D1	1	TIRE/RIM ASM-540/65R34 R1W,LH	SEE PAGE 11-40
3	528005D1	1	TIRE/RIM ASM-540/65R34 R1W,RH	SEE PAGE 11-41

Copyright © 2008 AGCO Corporation

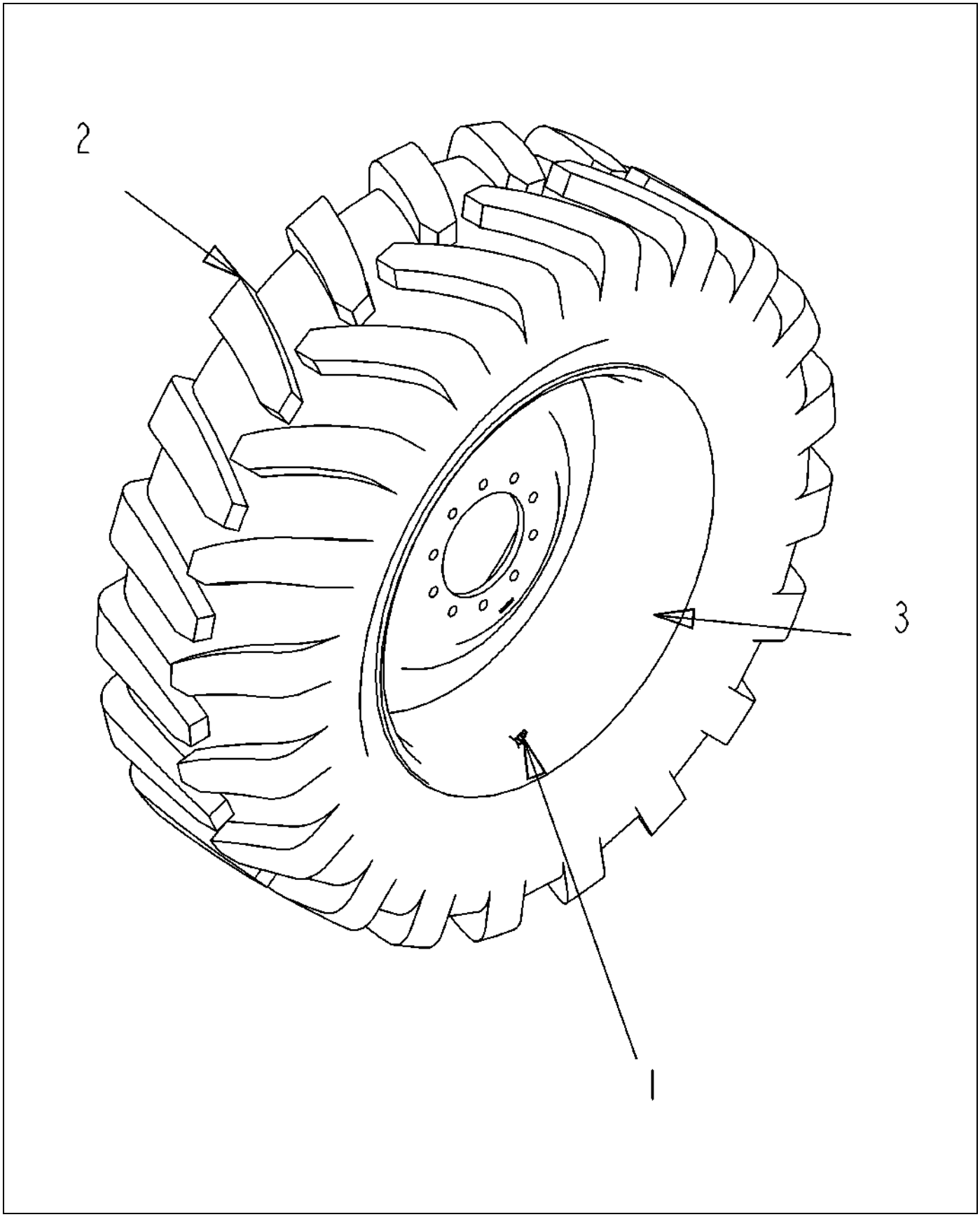

528004D1-01-T461-.TIF

Copyright © 2008 AGCO Corporation

TIRE/RIM ASM-540/65R34 R1W,LH

ITEM	PART #	QTY	DESCRIPTION	COMMENTS
1	AG517766	1	VALVE TIRE	
2	520794D1	1	TIRE-540/65R34,R1W,145A8/B,GY	
3	528006D1	1	WHEEL-34XWH16A,1.25OFF,GRAY	

Copyright © 2008 AGCO Corporation

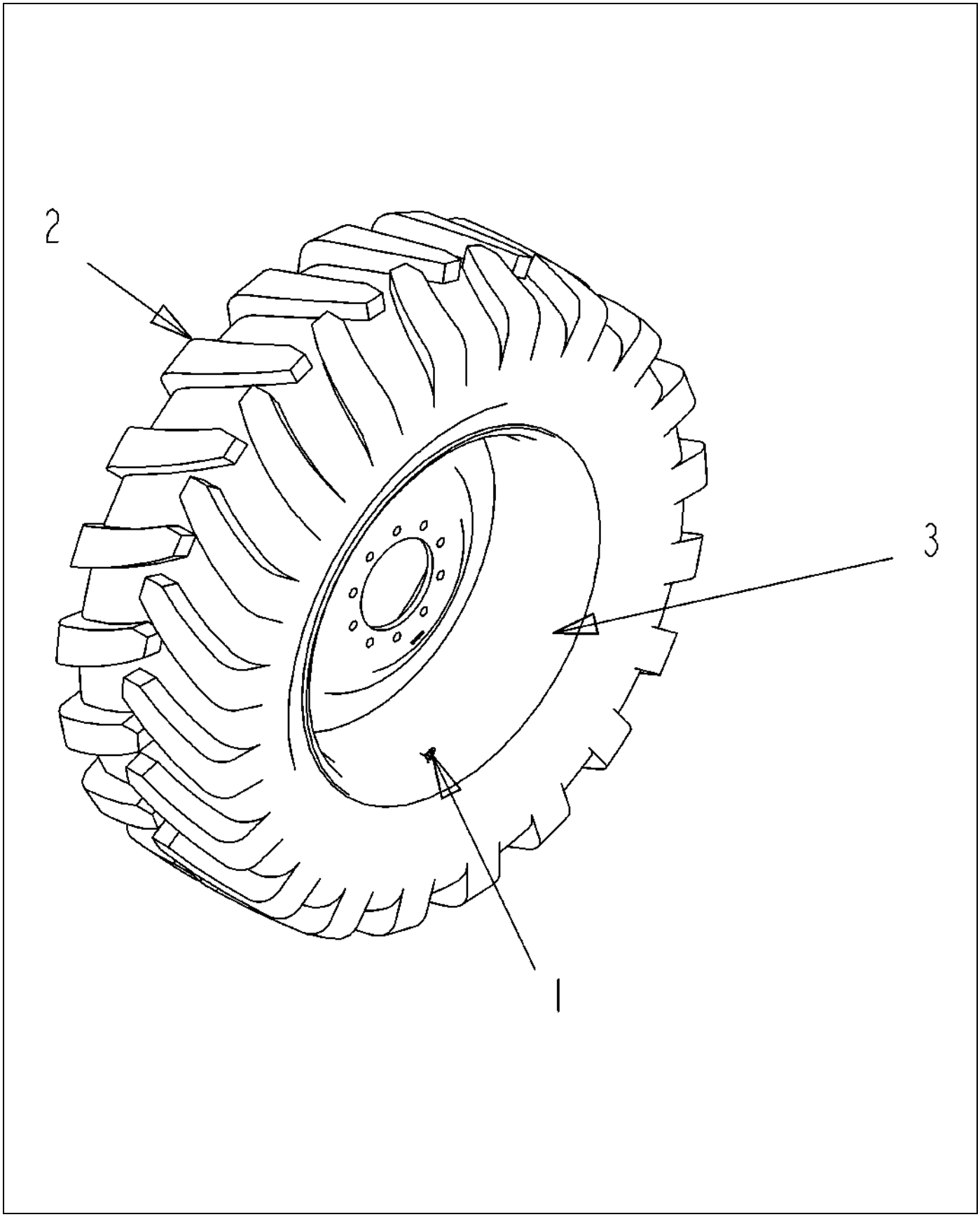

528005D1-01-T461-.TIF

Copyright © 2008 AGCO Corporation

TIRE/RIM ASM-540/65R34 R1W,RH

ITEM	PART #	QTY	DESCRIPTION	COMMENTS
1	AG517766	1	VALVE TIRE	
2	520794D1	1	TIRE-540/65R34,R1W,145A8/B,GY	
3	528006D1	1	WHEEL-34XWH16A,1.25OFF,GRAY	

Copyright © 2008 AGCO Corporation

DECAL-FRAME/CHASSIS INSTALL	12-1
DECAL-FRAME/CHASSIS INSTALL	12-2
DECAL-FRAME/CHASSIS INSTALL	12-3
DECAL-HOOD INSTALL,CHAL	12-4
DECAL-CAB INSTALL,7460,CHAL	12-5
DECAL-CAB INSTALL,7460,CHAL,ATC	12-6
DECAL-CAB INSTALL,7660,CHAL	12-7
DECAL-CAB INSTALL,7660,CHAL,ATC	12-8
DECAL INSTALL-7460,CHAL, 2009	12-9
DECAL INSTALL-7660, 2009	12-10
DECAL INSTALL-SC7XXX,NA,STD HVAC	12-11
DECAL INSTALL-SC7XXX,NA,STD HVAC	12-12
DECAL INSTALL-SC7XXX,NA,STD HVAC	12-13
DECAL INSTALL-SC7XXX,NA,STD HVAC	12-14
DECAL INSTALL-SC7XXX,INT,STD HVA	12-15
DECAL INSTALL-SC7XXX,INT,STD HVA	12-16
DECAL INSTALL-SC7XXX,INT,STD HVA	12-17
DECAL INSTALL-SC7XXX,INT,STD HVA	12-18
DECAL INSTALL-SC7XXX,NA,ATC HVAC	12-19
DECAL INSTALL-SC7XXX,NA,ATC HVAC	12-20
DECAL INSTALL-SC7XXX,NA,ATC HVAC	12-21
DECAL INSTALL-SC7XXX,NA,ATC HVAC	12-22
DECAL INSTALL-SC7XXX,INT,ATC HVA	12-23
DECAL INSTALL-SC7XXX,INT,ATC HVA	12-24
DECAL INSTALL-SC7XXX,INT,ATC HVA	12-25
DECAL INSTALL-SC7XXX,INT,ATC HVA	12-26

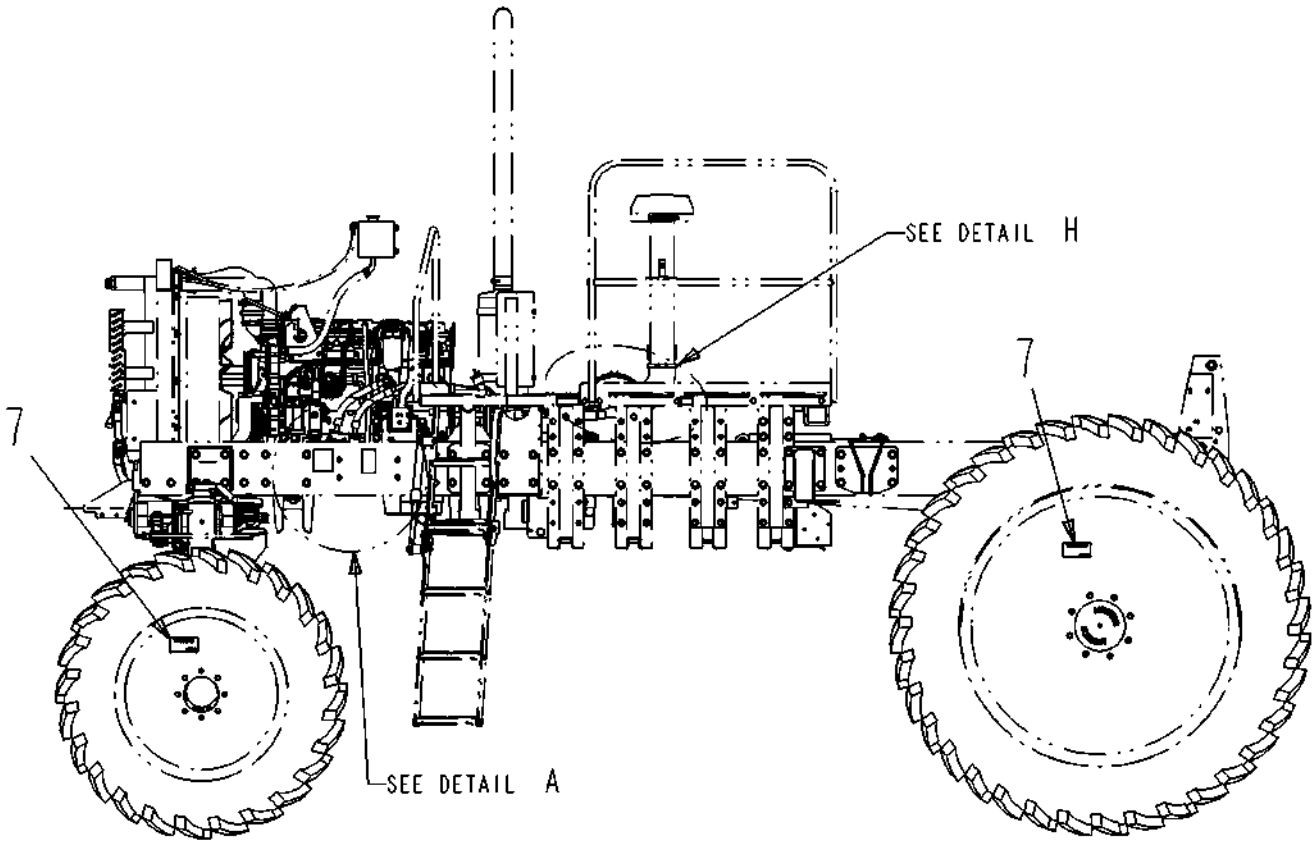

129169-04-R609-01.TIF

Copyright © 2008 AGCO Corporation

ITEM	PART #	QTY	DESCRIPTION	COMMENTS
7	AG262948	-	DECAL-WARNING,REPL TIRE,ENG	

Copyright © 2008 AGCO Corporation

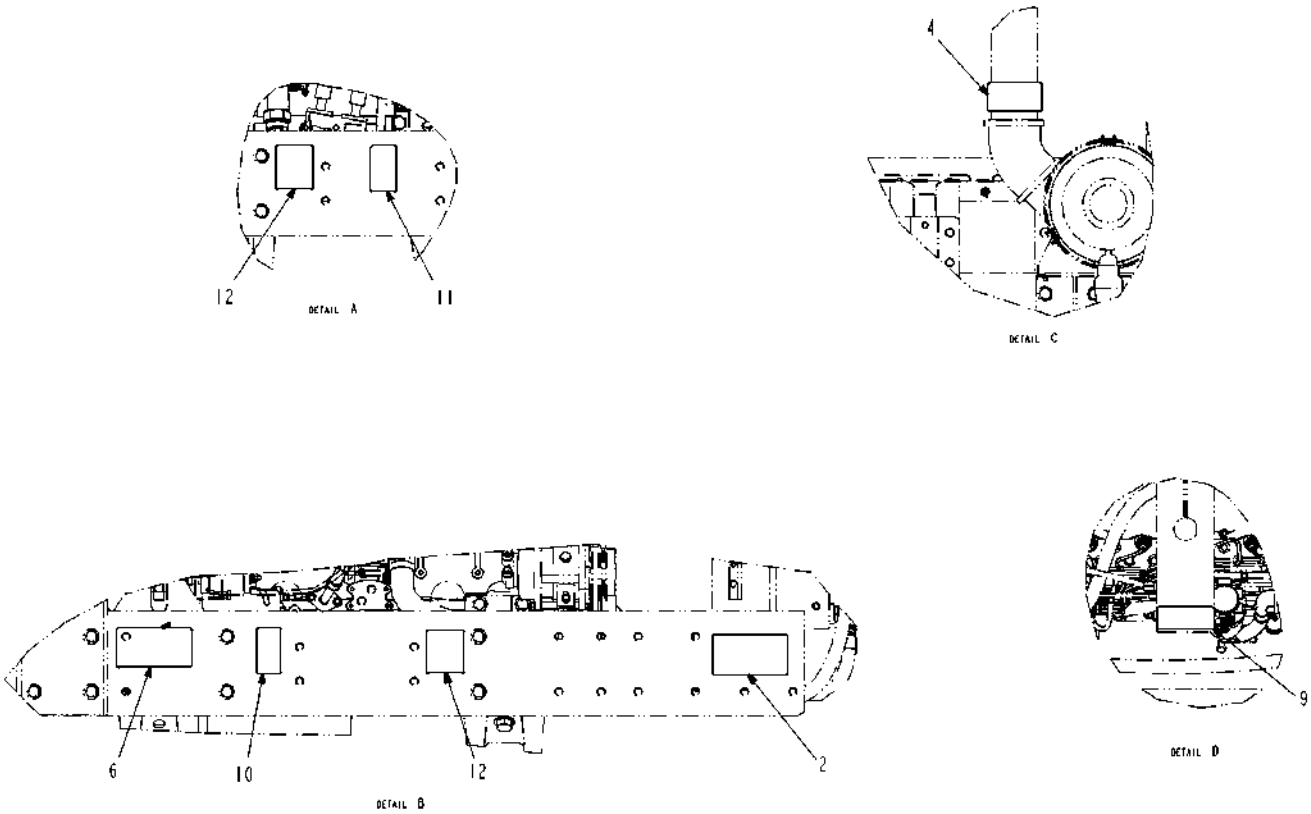

129169-04-R609-02.TIF

Copyright © 2008 AGCO Corporation

ITEM	PART #	QTY	DESCRIPTION	COMMENTS
2	WR50955	1	DECAL-WARNING,BATTERY	
4	AG235004	1	DECAL WARNING ETHER	
6	AG238366	1	DECAL-HAZARD,HOT SURF,MUF,SYM	
9	3808561M2	1	DECAL-WARNING, STEAM	
10	WR37159	1	DECAL-DANGER,BY-PASS,	
11	WR37164	1	DECAL-WARNING,HIGH	
12	WR38199	2	DECAL-WARNING,ENGINE	

Copyright © 2008 AGCO Corporation

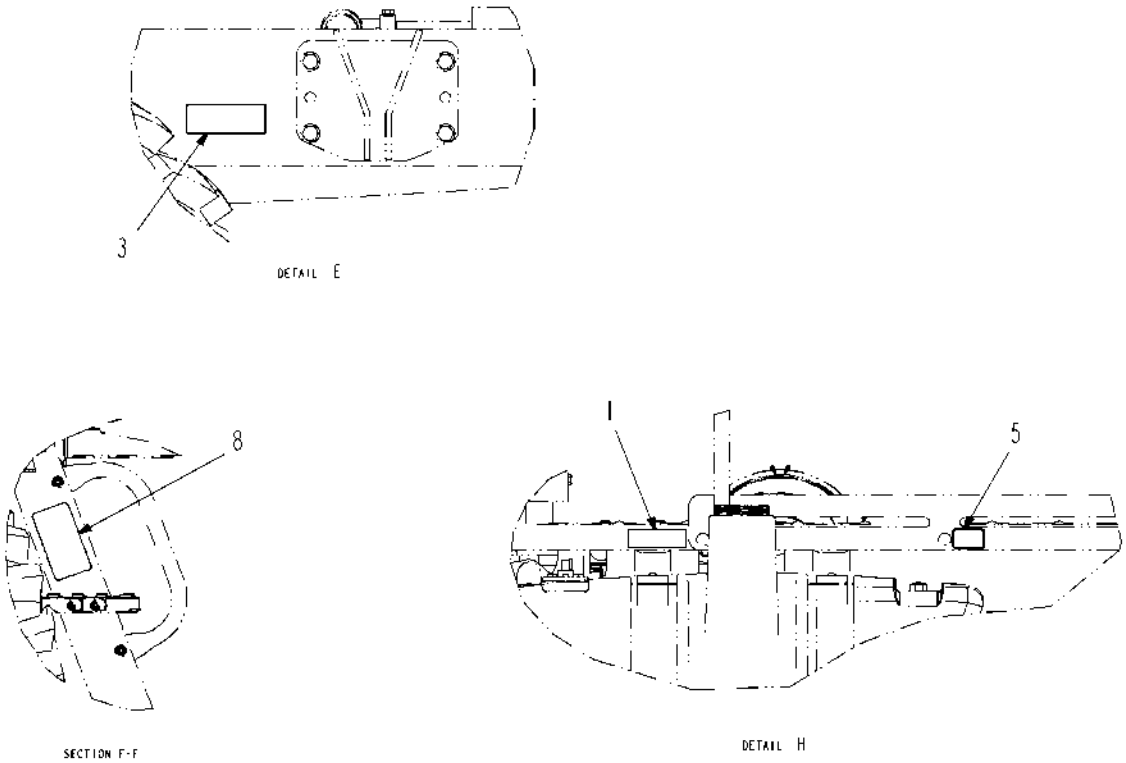

129169-04-R609-03.TIF

Copyright © 2008 AGCO Corporation

DECAL-FRAME/CHASSIS INSTALL

ITEM	PART #	QTY	DESCRIPTION	COMMENTS
1	WR33284	1	DECAL-DIESEL FUEL ONLY	
3	WR125524	1	DECAL-WARNING,RADAR	
5	AG237562	1	DECAL-FRESH WATER RELOAD	
8	AG263013	1	DECAL-CAUTION,LADDER,FOLD	

Copyright © 2008 AGCO Corporation

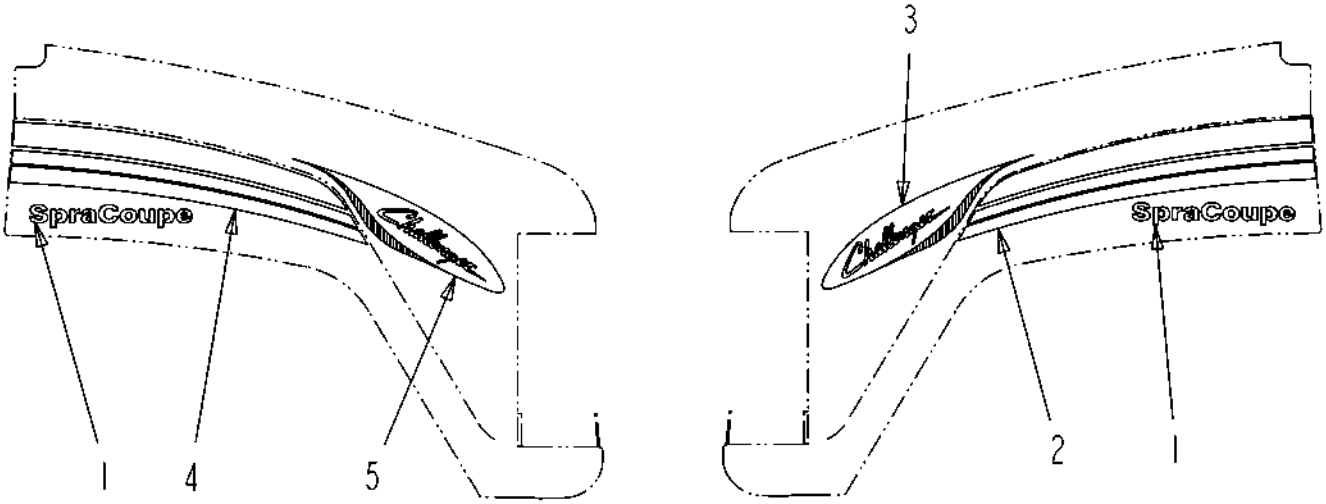

504163D1-01-M567-.TIF

Copyright © 2008 AGCO Corporation

DECAL-HOOD INSTALL,CHAL

ITEM	PART #	QTY	DESCRIPTION	COMMENTS
1	504038D1	1	DECAL-SPRA COUPE, CHAL	
2	504166D1	1	DECAL-HOOD,REAR,LH,7000,CHAL	
3	504167D1	1	DECAL-HOOD,FRONT,LH,7000,CHAL	
4	504168D1	1	DECAL-HOOD,REAR,RH,7000,CHAL	
5	504169D1	1	DECAL-HOOD,FRONT,RH,7000,CHAL	

Copyright © 2008 AGCO Corporation

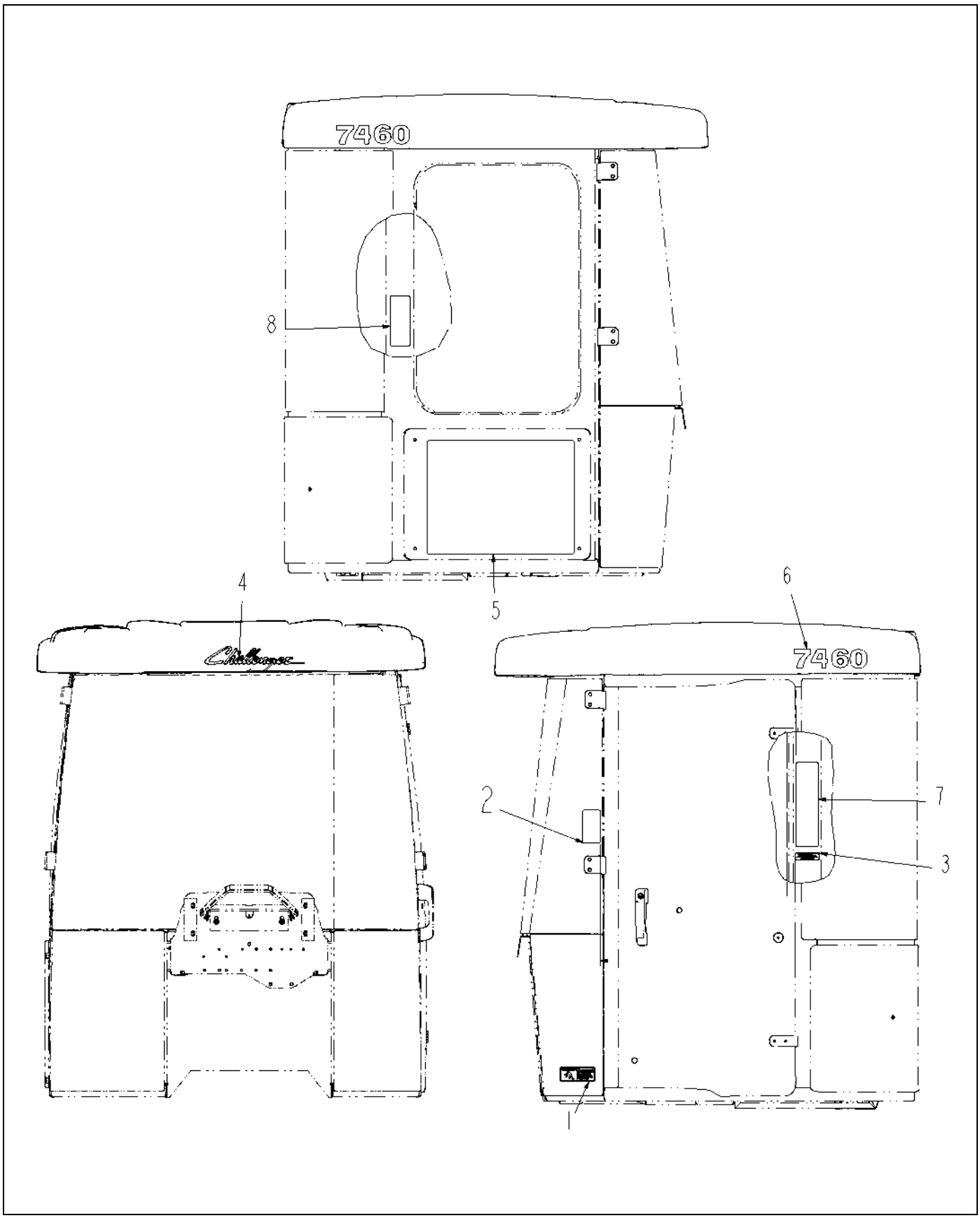

517250D1-01-R085-.TIF

Copyright © 2008 AGCO Corporation

DECAL-CAB INSTALL,7460,CHAL

ITEM	PART #	QTY	DESCRIPTION	COMMENTS
1	WR129172	1	DECAL-WARNING,OVERHEAD HAZARD	
2	AG238783	1	DECAL-WARNING,BOOM MOTION	
3	AG239436	1	DECAL-IMPORTANT,ELEC EQUIPMENT	
4	500749D1	1	FILM-CHALLENGER	
5	503052D1	1	DECAL-FUSE PANEL,7X50,06	
6	517254D1	2	DECAL-7460	
7	WR36453	1	DECAL-HAZARD,SHOCK/READ	
8	WR38841	1	DECAL-WARNING,CHEMICAL	

Copyright © 2008 AGCO Corporation

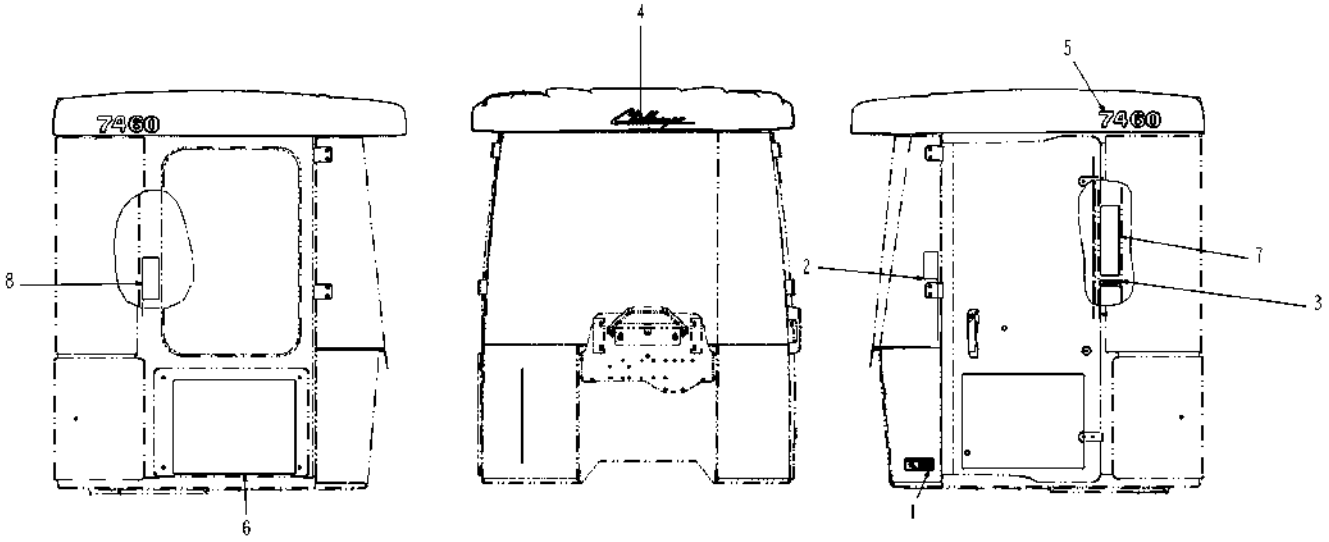

517251D1-02-T499-.TIF

Copyright © 2008 AGCO Corporation

DECAL-CAB INSTALL,7460,CHAL,ATC

ITEM	PART #	QTY	DESCRIPTION	COMMENTS
1	WR129172	1	DECAL-WARNING,OVERHEAD HAZARD	
2	AG238783	1	DECAL-WARNING,BOOM MOTION	
3	AG239436	1	DECAL-IMPORTANT,ELEC EQUIPMENT	
4	500749D1	1	FILM-CHALLENGER	
5	517254D1	2	DECAL-7460	
6	528431D1	1	DECAL-FUSE PANEL,7X60,ATC	
7	WR36453	1	DECAL-HAZARD,SHOCK/READ	
8	WR38841	1	DECAL-WARNING,CHEMICAL	

Copyright © 2008 AGCO Corporation

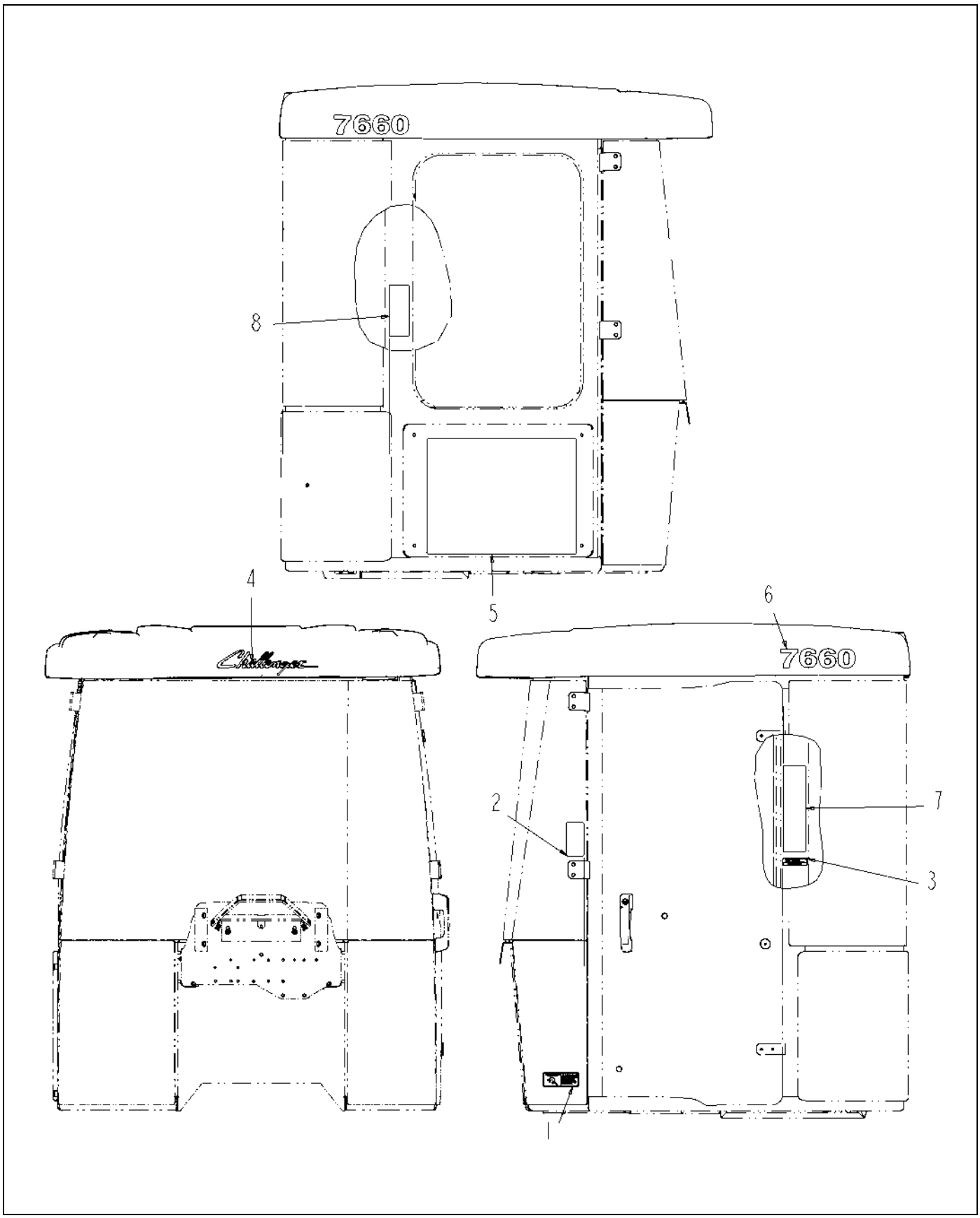

517252D1-01-R085-.TIF

Copyright © 2008 AGCO Corporation

DECAL-CAB INSTALL,7660,CHAL

ITEM	PART #	QTY	DESCRIPTION	COMMENTS
1	WR129172	1	DECAL-WARNING,OVERHEAD HAZARD	
2	AG238783	1	DECAL-WARNING,BOOM MOTION	
3	AG239436	1	DECAL-IMPORTANT,ELEC EQUIPMENT	
4	500749D1	1	FILM-CHALLENGER	
5	503052D1	1	DECAL-FUSE PANEL,7X50,06	
6	517255D1	2	DECAL-7660	
7	WR36453	1	DECAL-HAZARD,SHOCK/READ	
8	WR38841	1	DECAL-WARNING,CHEMICAL	

Copyright © 2008 AGCO Corporation

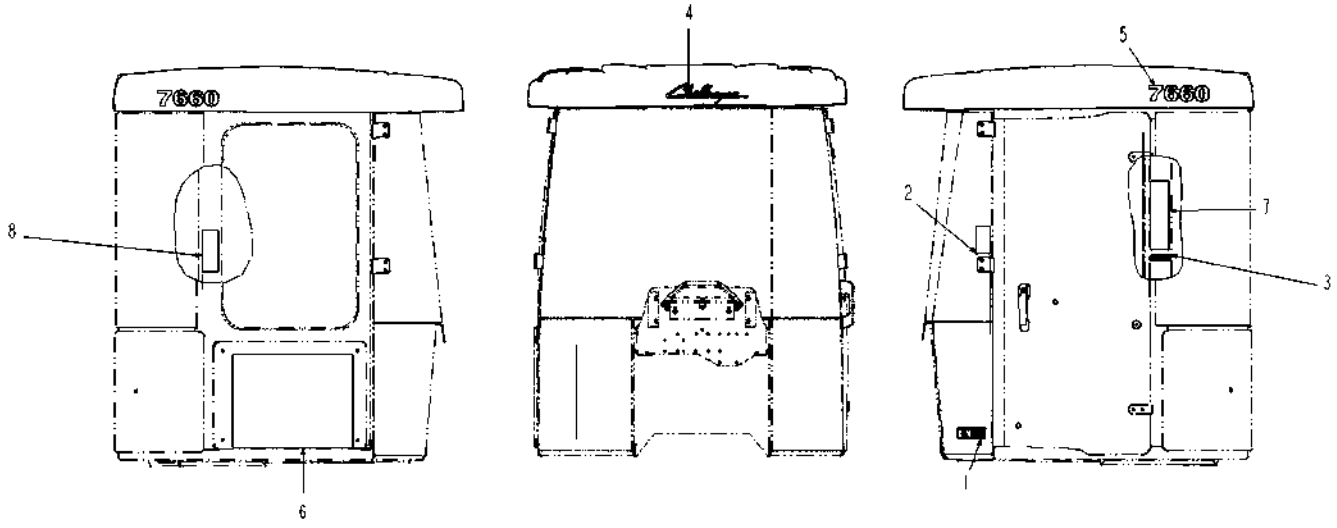

517253D1-02-T499-.TIF

Copyright © 2008 AGCO Corporation

DECAL-CAB INSTALL,7660,CHAL,ATC

ITEM	PART #	QTY	DESCRIPTION	COMMENTS
1	WR129172	1	DECAL-WARNING,OVERHEAD HAZARD	
2	AG238783	1	DECAL-WARNING,BOOM MOTION	
3	AG239436	1	DECAL-IMPORTANT,ELEC EQUIPMENT	
4	500749D1	1	FILM-CHALLENGER	
5	517255D1	2	DECAL-7660	
6	528431D1	1	DECAL-FUSE PANEL,7X60,ATC	
7	WR36453	1	DECAL-HAZARD,SHOCK/READ	
8	WR38841	1	DECAL-WARNING,CHEMICAL	

Copyright © 2008 AGCO Corporation

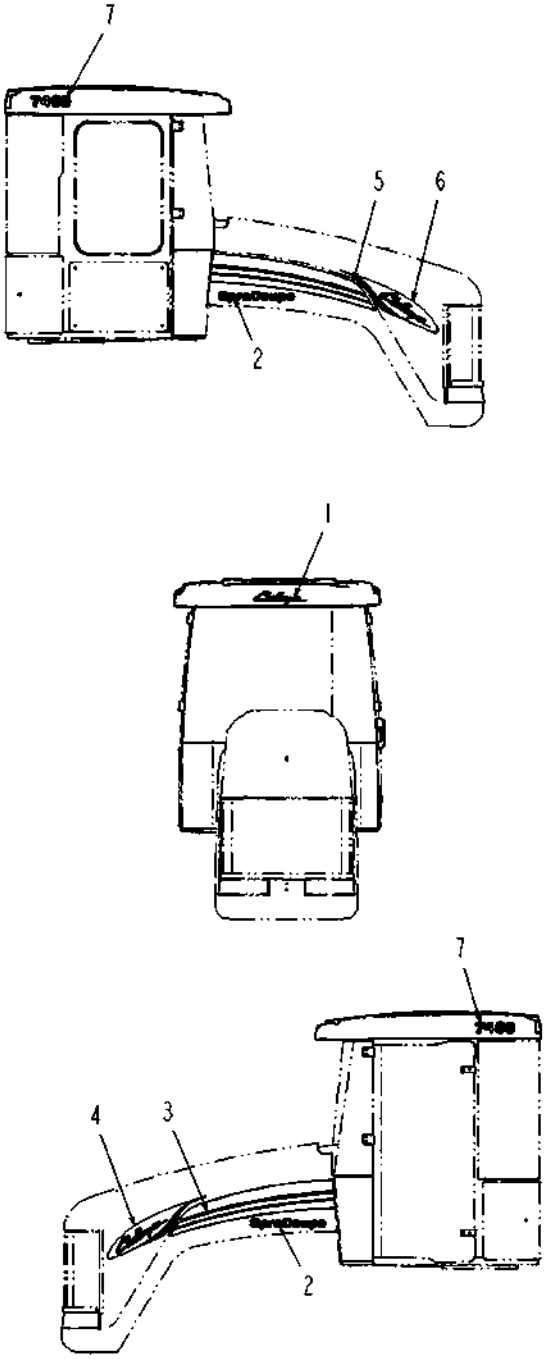

523244D1-01-R860-.TIF

Copyright © 2008 AGCO Corporation

DECAL INSTALL-7460,CHAL, 2009

ITEM	PART #	QTY	DESCRIPTION	COMMENTS
1	500749D1	1	FILM-CHALLENGER	
2	504038D1	2	DECAL-SPRA COUPE, CHAL	
3	504166D1	1	DECAL-HOOD,REAR,LH,7000,CHAL	
4	504167D1	1	DECAL-HOOD,FRONT,LH,7000,CHAL	
5	504168D1	1	DECAL-HOOD,REAR,RH,7000,CHAL	
6	504169D1	1	DECAL-HOOD,FRONT,RH,7000,CHAL	
7	517254D1	2	DECAL-7460	

Copyright © 2008 AGCO Corporation

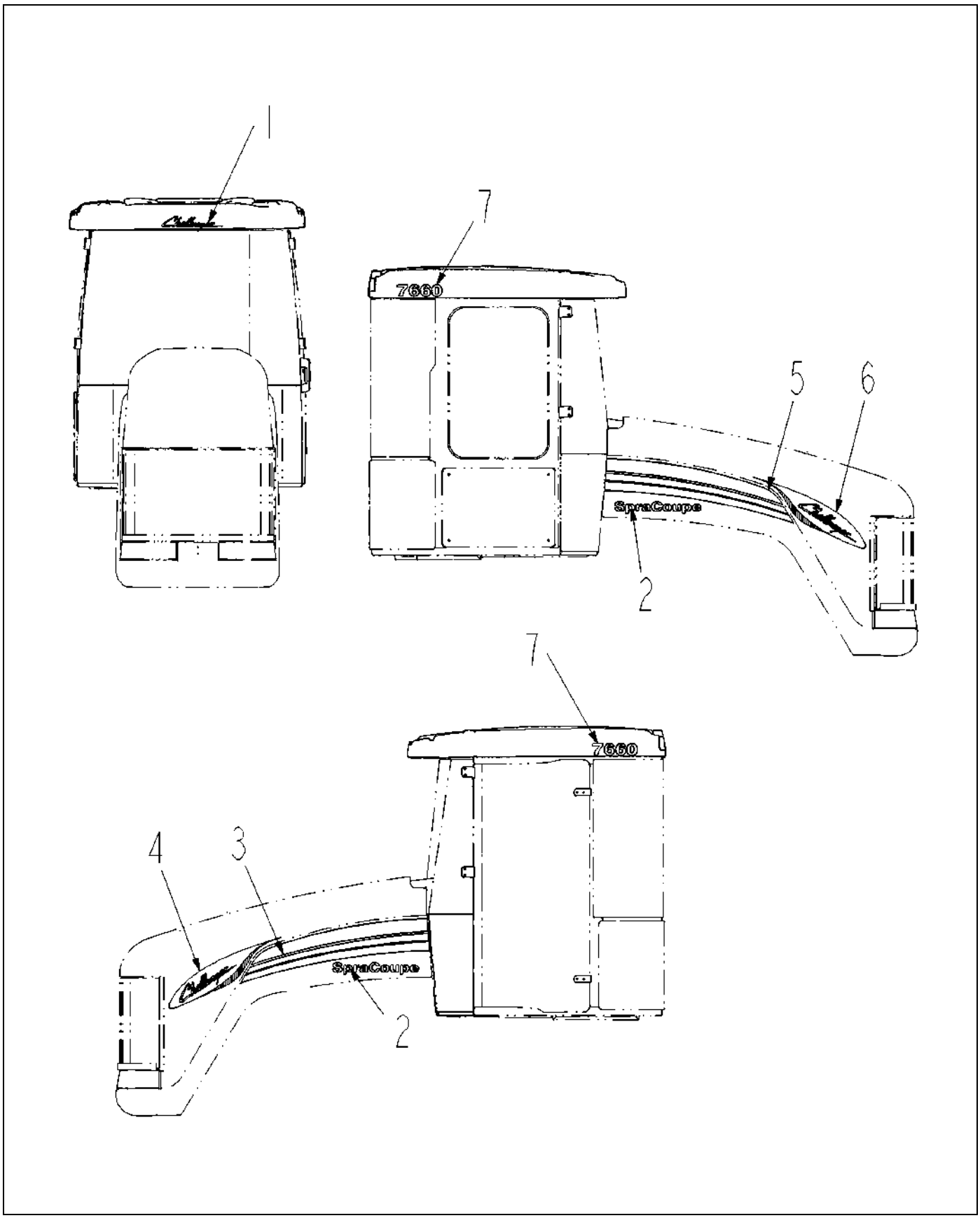

523245D1-01-R860-.TIF

Copyright © 2008 AGCO Corporation

DECAL INSTALL-7660, 2009

ITEM	PART #	QTY	DESCRIPTION	COMMENTS
1	500749D1	1	FILM-CHALLENGER	
2	504038D1	2	DECAL-SPRA COUPE, CHAL	
3	504166D1	1	DECAL-HOOD,REAR,LH,7000,CHAL	
4	504167D1	1	DECAL-HOOD,FRONT,LH,7000,CHAL	
5	504168D1	1	DECAL-HOOD,REAR,RH,7000,CHAL	
6	504169D1	1	DECAL-HOOD,FRONT,RH,7000,CHAL	
7	517255D1	2	DECAL-7660	

Copyright © 2008 AGCO Corporation

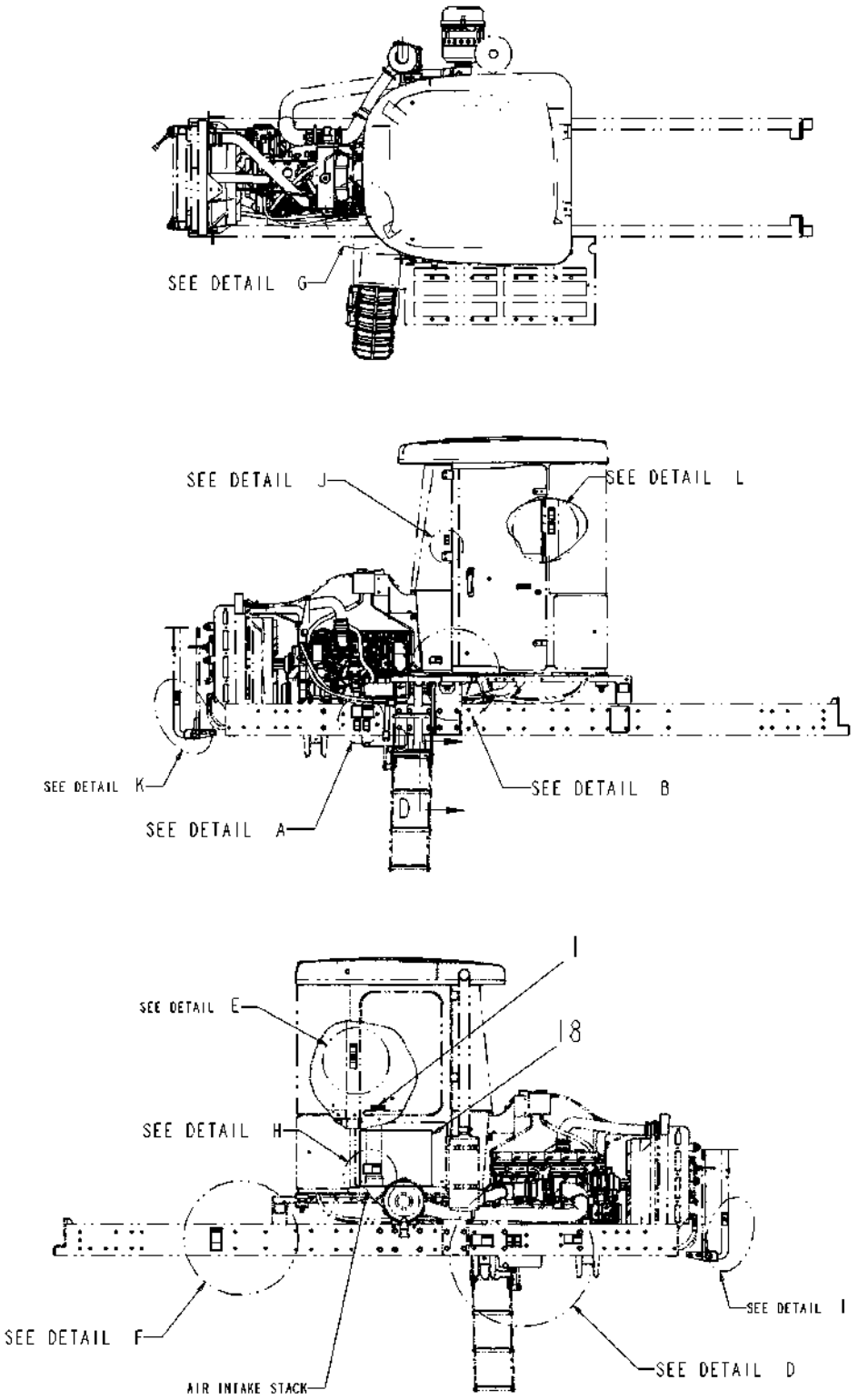

523240D1-03-T562-01.TIF

Copyright © 2008 AGCO Corporation

DECAL INSTALL-SC7XXX,NA,STD HVAC

ITEM	PART #	QTY	DESCRIPTION	COMMENTS
1	501272D1	1	FILM-ATERNATE EXIT	
18	528432D1	1	DECAL-FUSE PANEL,7X60	

Copyright © 2008 AGCO Corporation

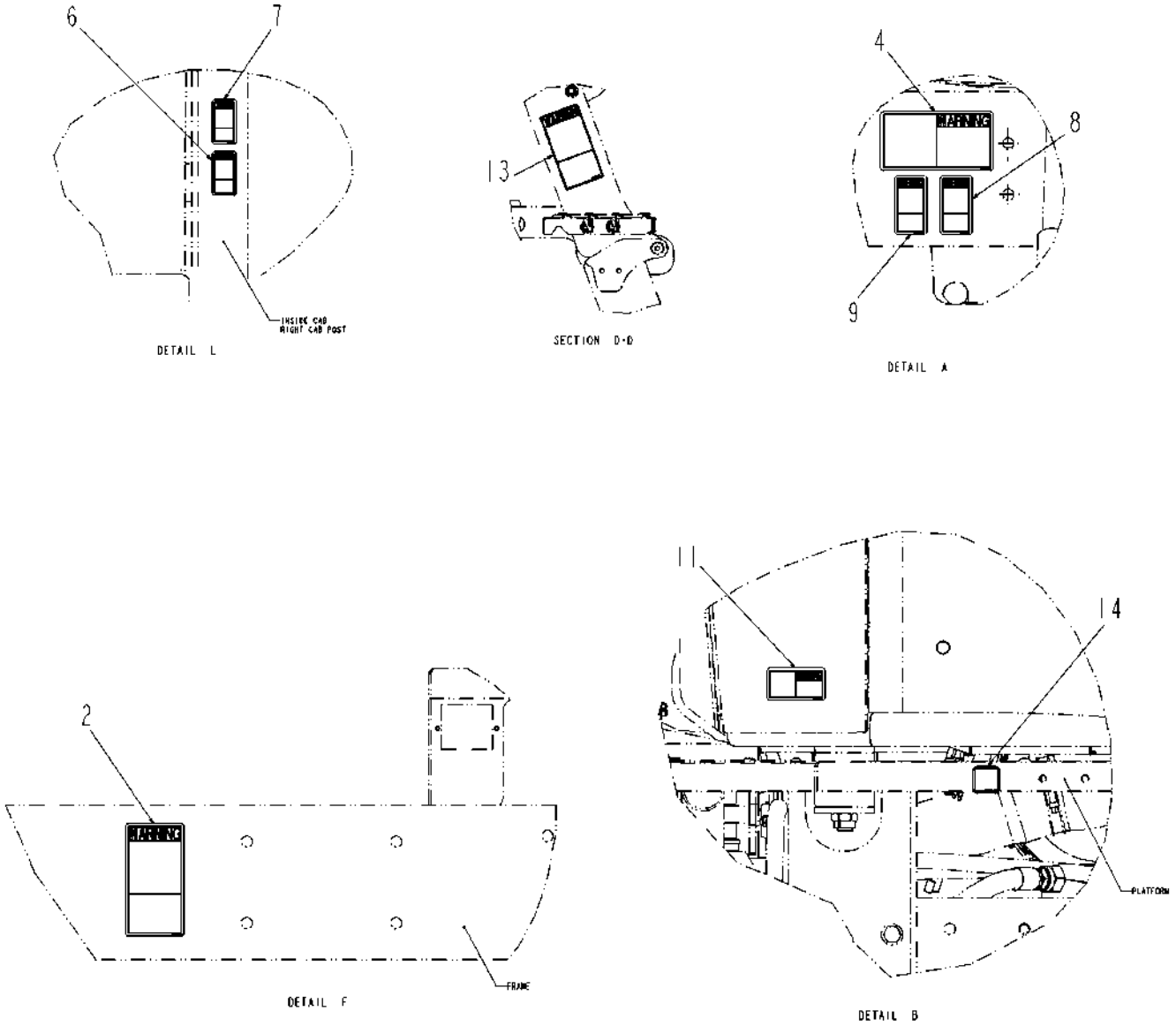

523240D1-03-T562-02.TIF

Copyright © 2008 AGCO Corporation

ITEM	PART #	QTY	DESCRIPTION	COMMENTS
2	511089D1	1	WARNING - RADAR HAZARD (NA)	
4	511127D1	2	WARNING - BURN HAZARD (NA)	
6	511199D1	1	WARNING - WEAR SEATBELT	
7	511201D1	1	DANGER - ELECTROCUTION	
8	511205D1	2	WARNING - TURN OFF ENGINE	
9	511207D1	2	WARNING - TURN OFF ENGINE	
11	511412D1	1	CRUSH HAZARD (NA)	
13	519608D1	1	DECAL-PINCH (NA)	
14	520100D1	1	DECAL-DIESEL FUEL	

Copyright © 2008 AGCO Corporation

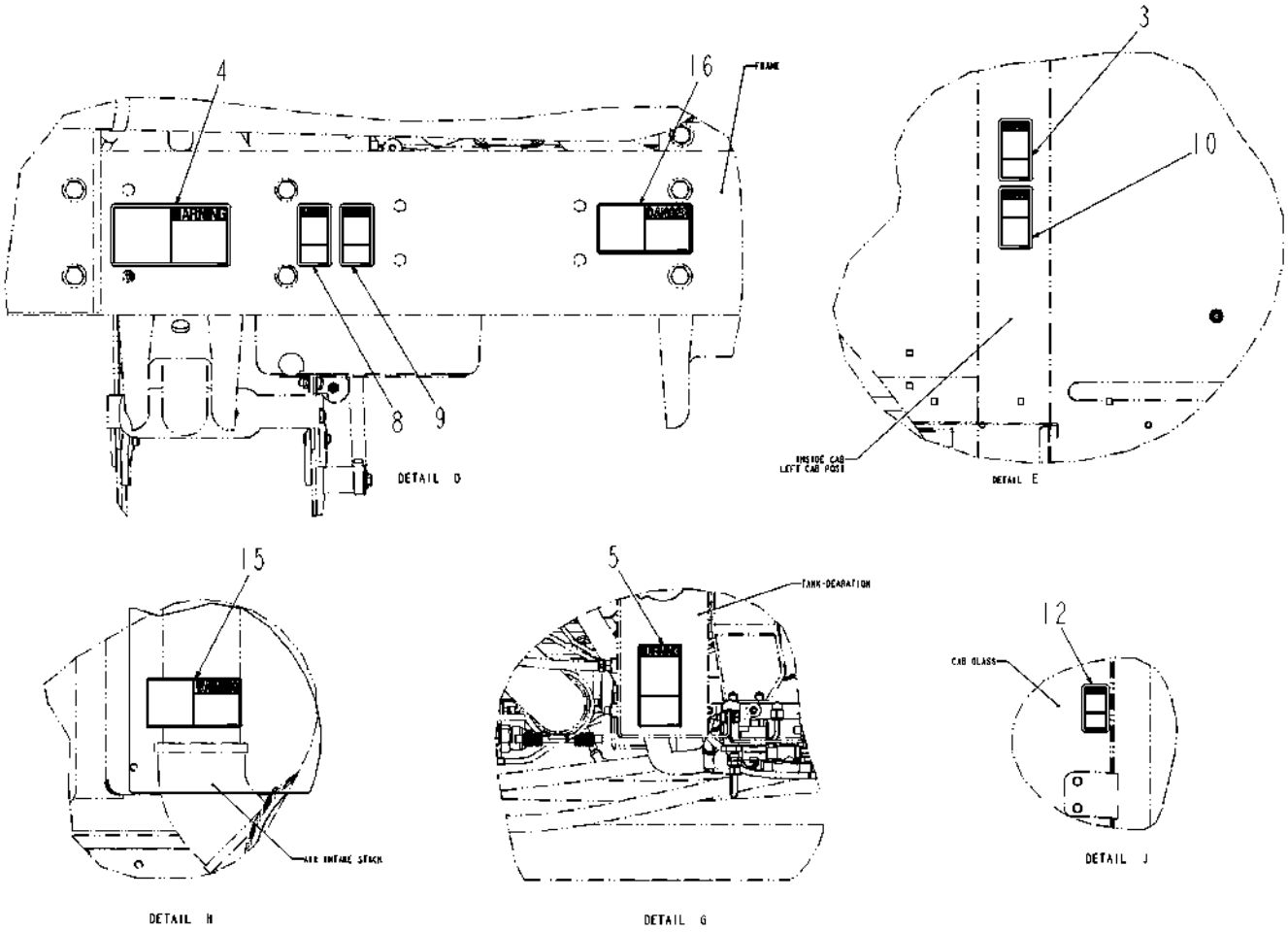

523240D1-03-T562-03.TIF

Copyright © 2008 AGCO Corporation

DECAL INSTALL-SC7XXX,NA,STD HVAC

ITEM	PART #	QTY	DESCRIPTION	COMMENTS
3	511107D1	1	WARNING - READ MANUAL	
4	511127D1	2	WARNING - BURN HAZARD (NA)	
5	511133D1	1	DECAL-PRESSURIZED/ HOT FLUID	
8	511205D1	2	WARNING - TURN OFF ENGINE	
9	511207D1	2	WARNING - TURN OFF ENGINE	
10	511209D1	1	WARNING - INHALATION	
12	511415D1	1	WARNING - FALL HAZARD (NA)	
15	523250D1	1	DECAL-ETHER (NA)	
16	523252D1	1	DECAL-STARTER BYPASS (NA)	

Copyright © 2008 AGCO Corporation

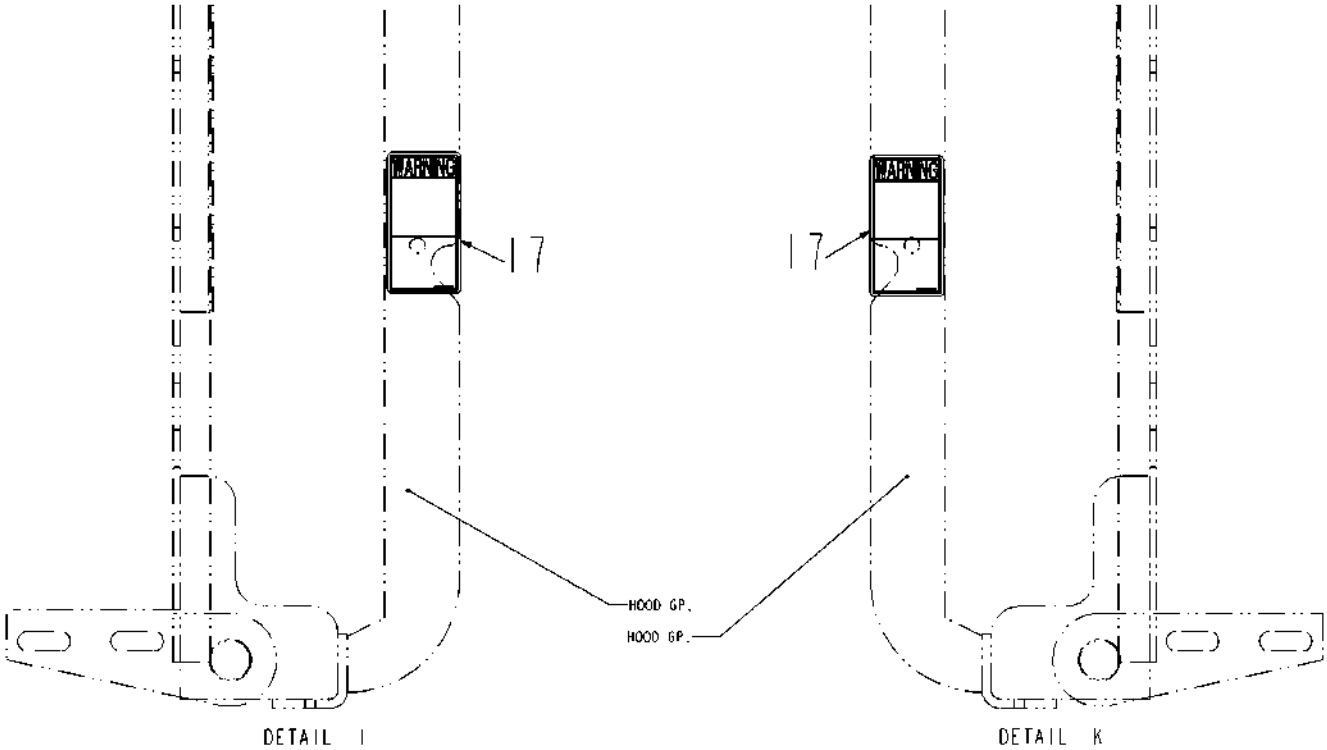

523240D1-03-T562-04.TIF

Copyright © 2008 AGCO Corporation

ITEM	PART #	QTY	DESCRIPTION	COMMENTS
17	524806D1	2	DECAL-EXPLOSION HAZARD(NA)	

Copyright © 2008 AGCO Corporation

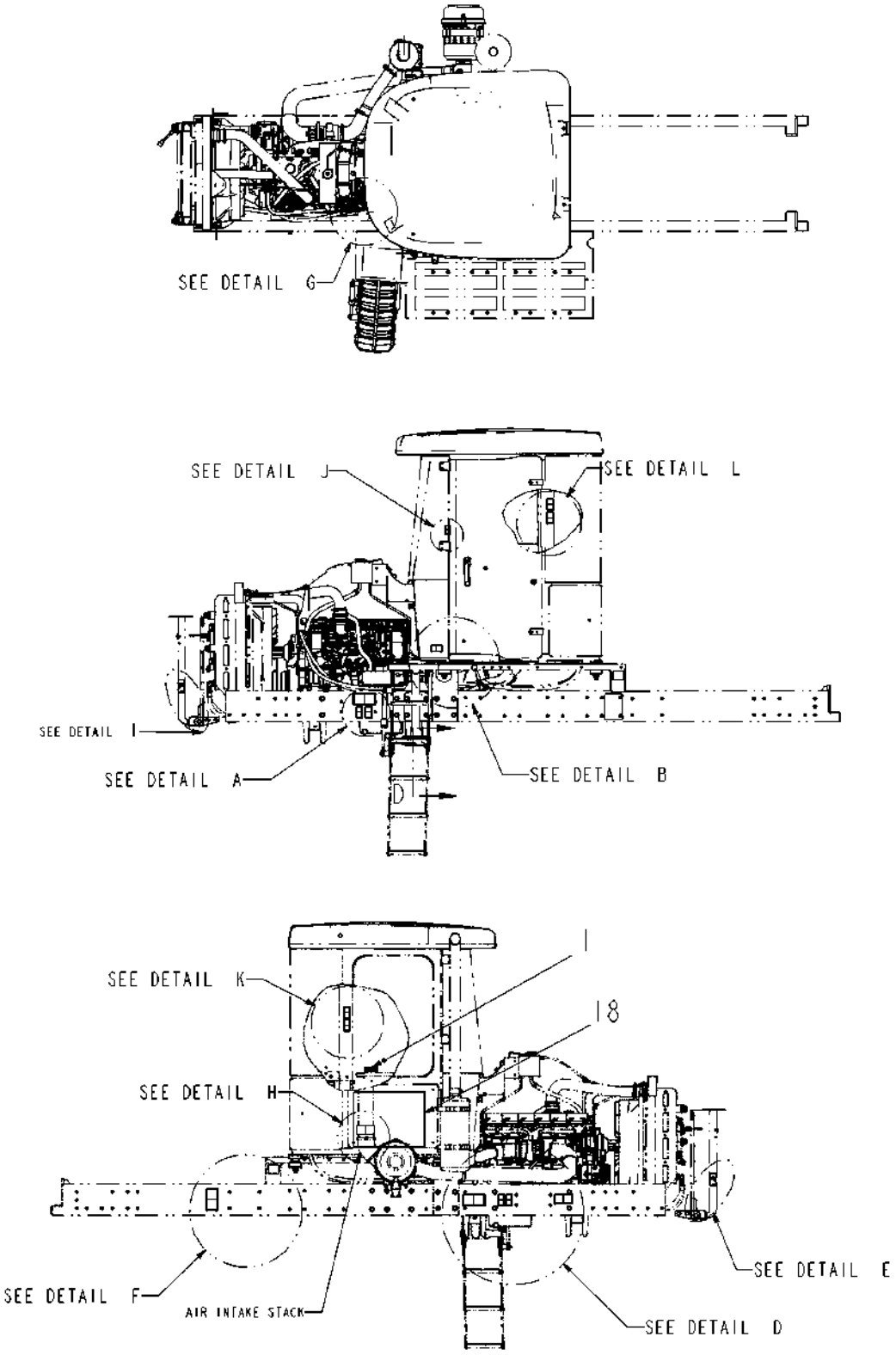

523241D1-03-T562-01.TIF

Copyright © 2008 AGCO Corporation

DECAL INSTALL-SC7XXX,INT,STD HVA

ITEM	PART #	QTY	DESCRIPTION	COMMENTS
1	501272D1	1	FILM-ATERNATE EXIT	
18	528432D1	1	DECAL-FUSE PANEL,7X60	

Copyright © 2008 AGCO Corporation

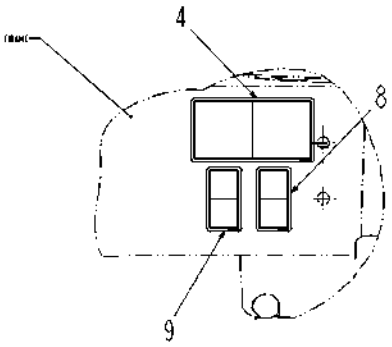

DETAIL A

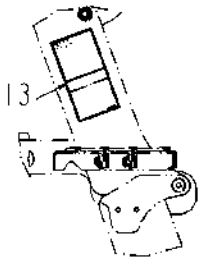

SECTION D-D

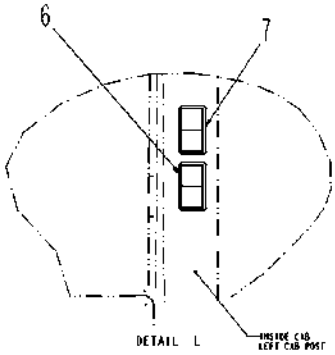

DETAIL L

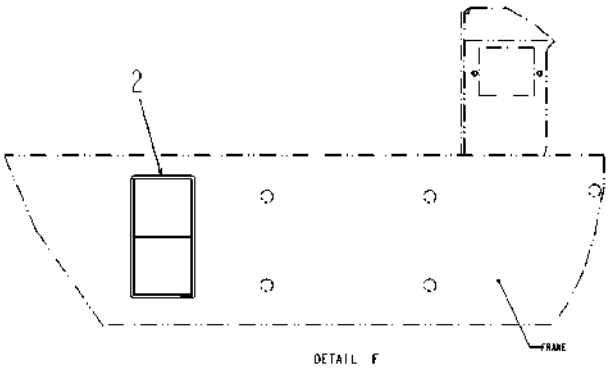

DETAIL F

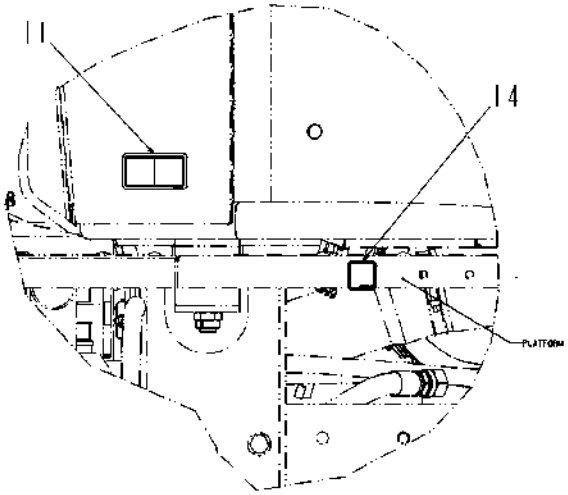

DETAIL B

523241D1-03-T562-02.TIF

Copyright © 2008 AGCO Corporation

ITEM	PART #	QTY	DESCRIPTION	COMMENTS
2	511090D1	1	WARNING - RADAR HAZARD (INT)	
4	511128D1	2	WARNING - BURN HAZARD (INT)	
6	511200D1	1	WARNING - WEAR SEATBELT	
7	511202D1	1	DANGER - ELECTROCUTION	
8	511206D1	2	WARNING - TURN OFF ENGINE	
9	511208D1	2	WARNING - TURN OFF ENGINE	
11	511413D1	1	CRUSH HAZARD (INT)	
13	519609D1	1	DECAL-PINCH (INT)	
14	520100D1	1	DECAL-DIESEL FUEL	

Copyright © 2008 AGCO Corporation

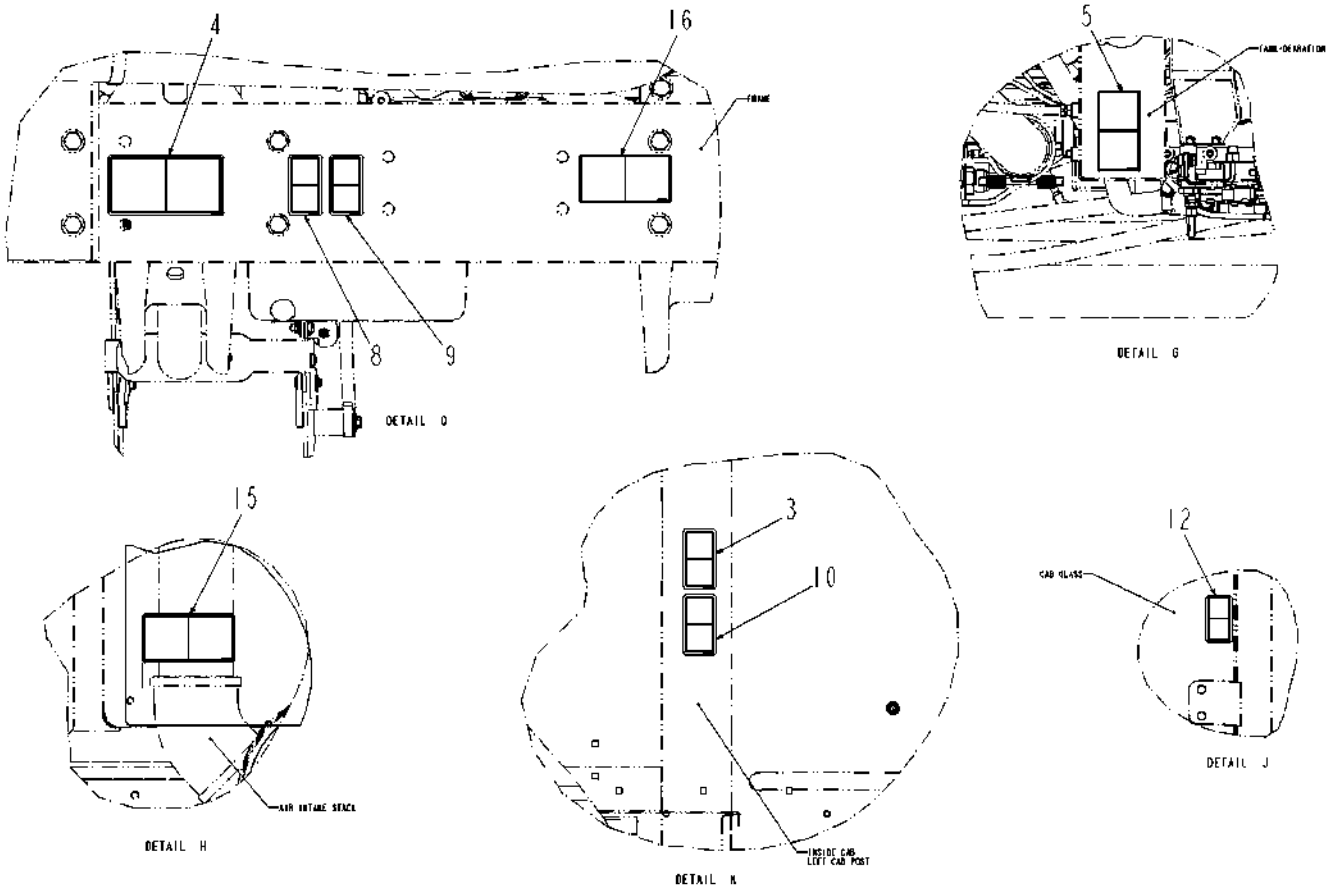

523241D1-03-T562-03.TIF

Copyright © 2008 AGCO Corporation

DECAL INSTALL-SC7XXX,INT,STD HVA

ITEM	PART #	QTY	DESCRIPTION	COMMENTS
3	511108D1	1	WARNING - READ MANUAL	
4	511128D1	2	WARNING - BURN HAZARD (INT)	
5	511134D1	1	DECAL-PRESSURIZED/ HOT FLUID	
8	511206D1	2	WARNING - TURN OFF ENGINE	
9	511208D1	2	WARNING - TURN OFF ENGINE	
10	511210D1	1	WARNING - INHALATION	
12	511416D1	1	WARNING - FALL HAZARD (INT)	
15	523251D1	1	DECAL-ETHER (INT)	
16	523253D1	1	DECAL-STARTER BYPASS (INT)	

Copyright © 2008 AGCO Corporation

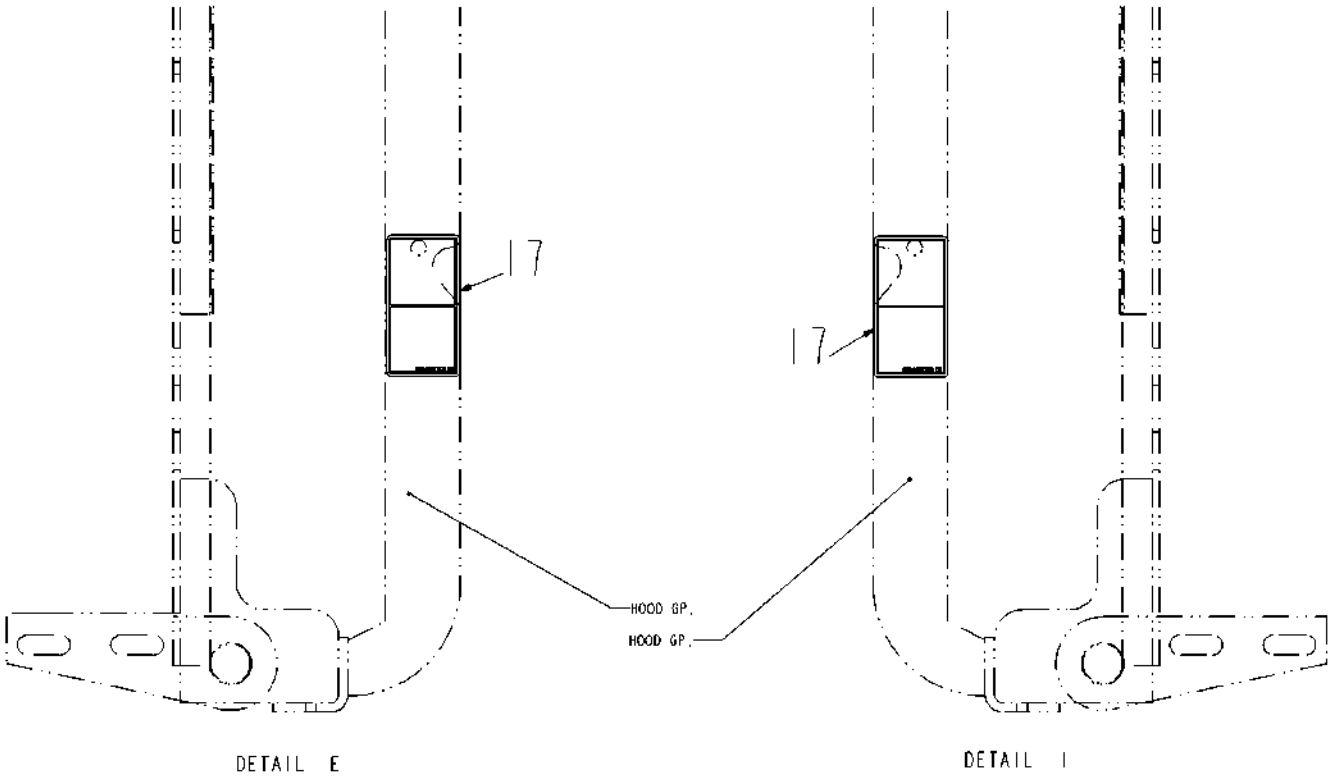

523241D1-03-T562-04.TIF

Copyright © 2008 AGCO Corporation

ITEM	PART #	QTY	DESCRIPTION	COMMENTS
17	524807D1	2	DECAL-EXPLOSION HAZARD(INT)	

Copyright © 2008 AGCO Corporation

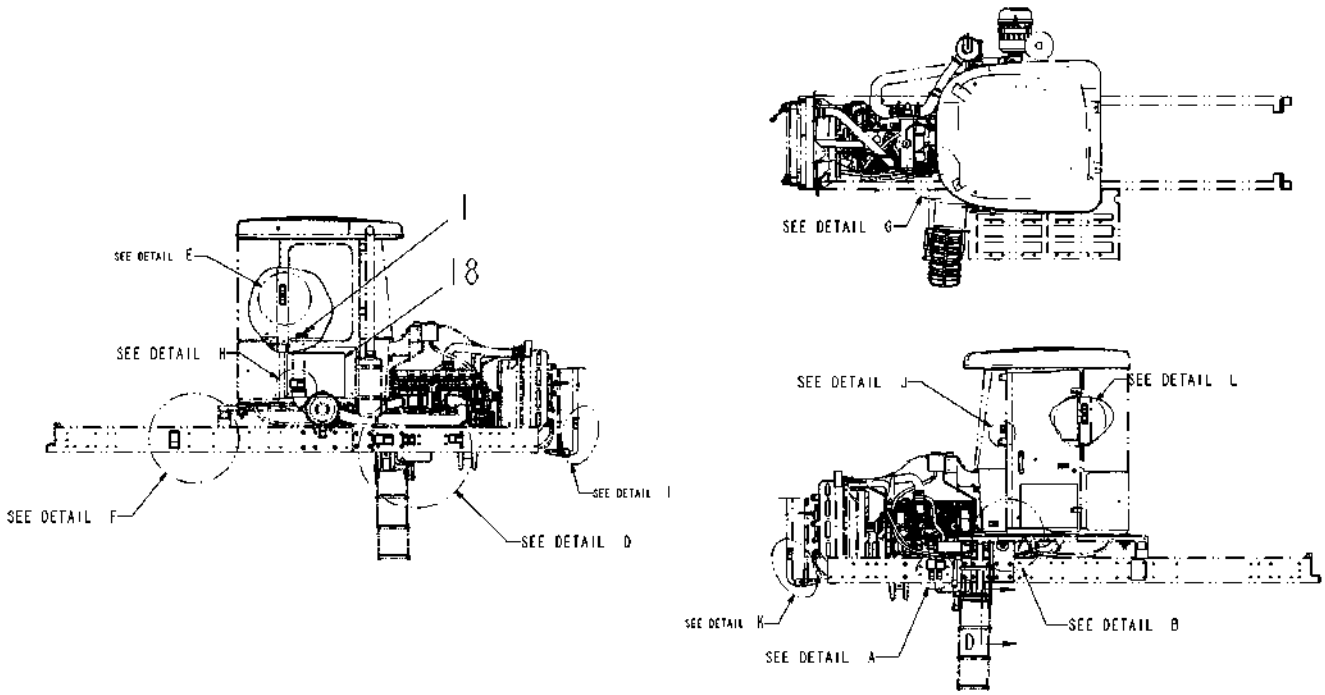

523246D1-03-T562-01.TIF

Copyright © 2008 AGCO Corporation

DECAL INSTALL-SC7XXX,NA,ATC HVAC

ITEM	PART #	QTY	DESCRIPTION	COMMENTS
1	501272D1	1	FILM-ATERNATE EXIT	
18	528431D1	1	DECAL-FUSE PANEL,7X60,ATC	

Copyright © 2008 AGCO Corporation

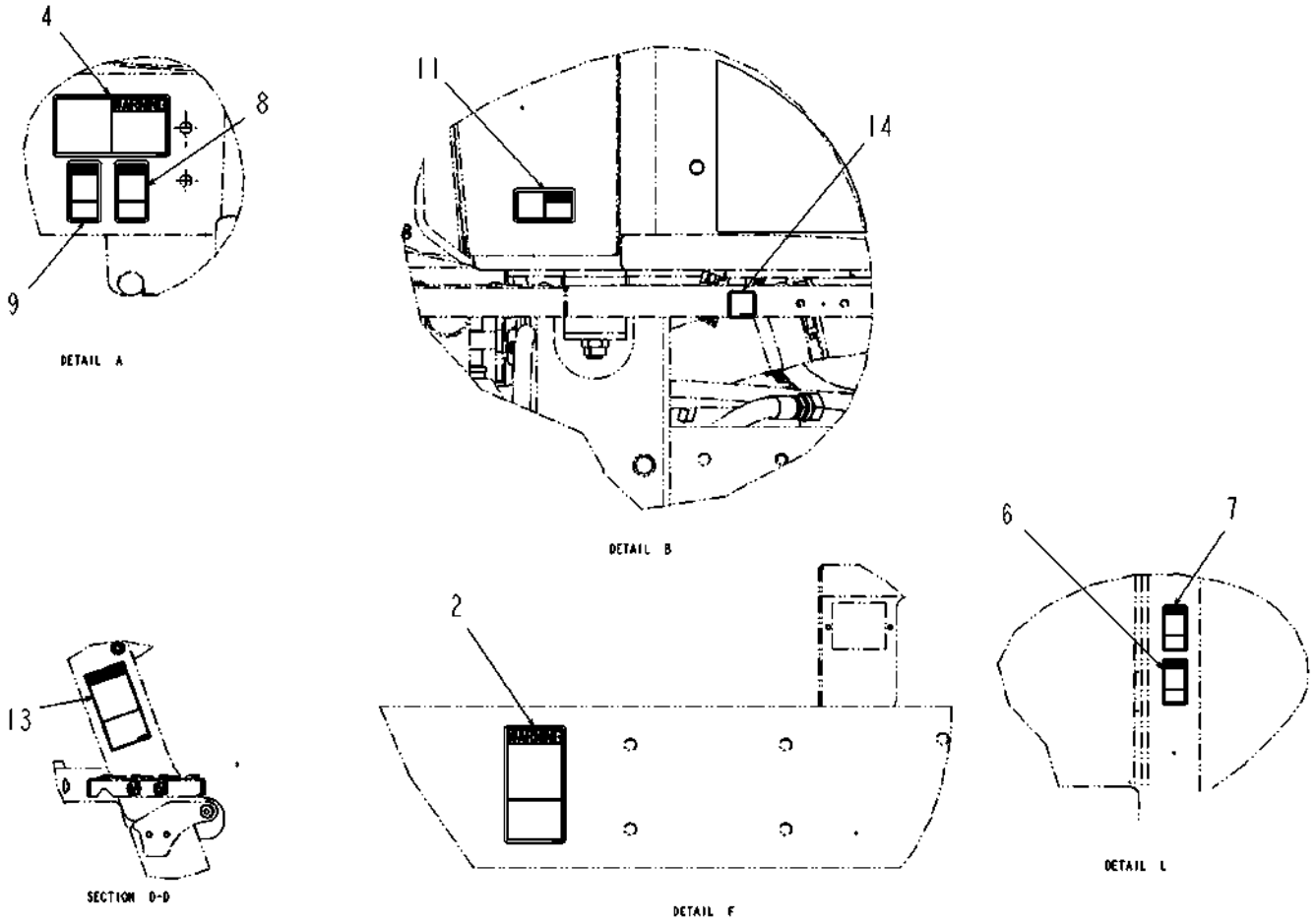

523246D1-03-T562-02.TIF

Copyright © 2008 AGCO Corporation

ITEM	PART #	QTY	DESCRIPTION	COMMENTS
2	511089D1	1	WARNING - RADAR HAZARD (NA)	
4	511127D1	2	WARNING - BURN HAZARD (NA)	
6	511199D1	1	WARNING - WEAR SEATBELT	
7	511201D1	1	DANGER - ELECTROCUTION	
8	511205D1	2	WARNING - TURN OFF ENGINE	
9	511207D1	2	WARNING - TURN OFF ENGINE	
11	511412D1	1	CRUSH HAZARD (NA)	
13	519608D1	1	DECAL-PINCH (NA)	
14	520100D1	1	DECAL-DIESEL FUEL	

Copyright © 2008 AGCO Corporation

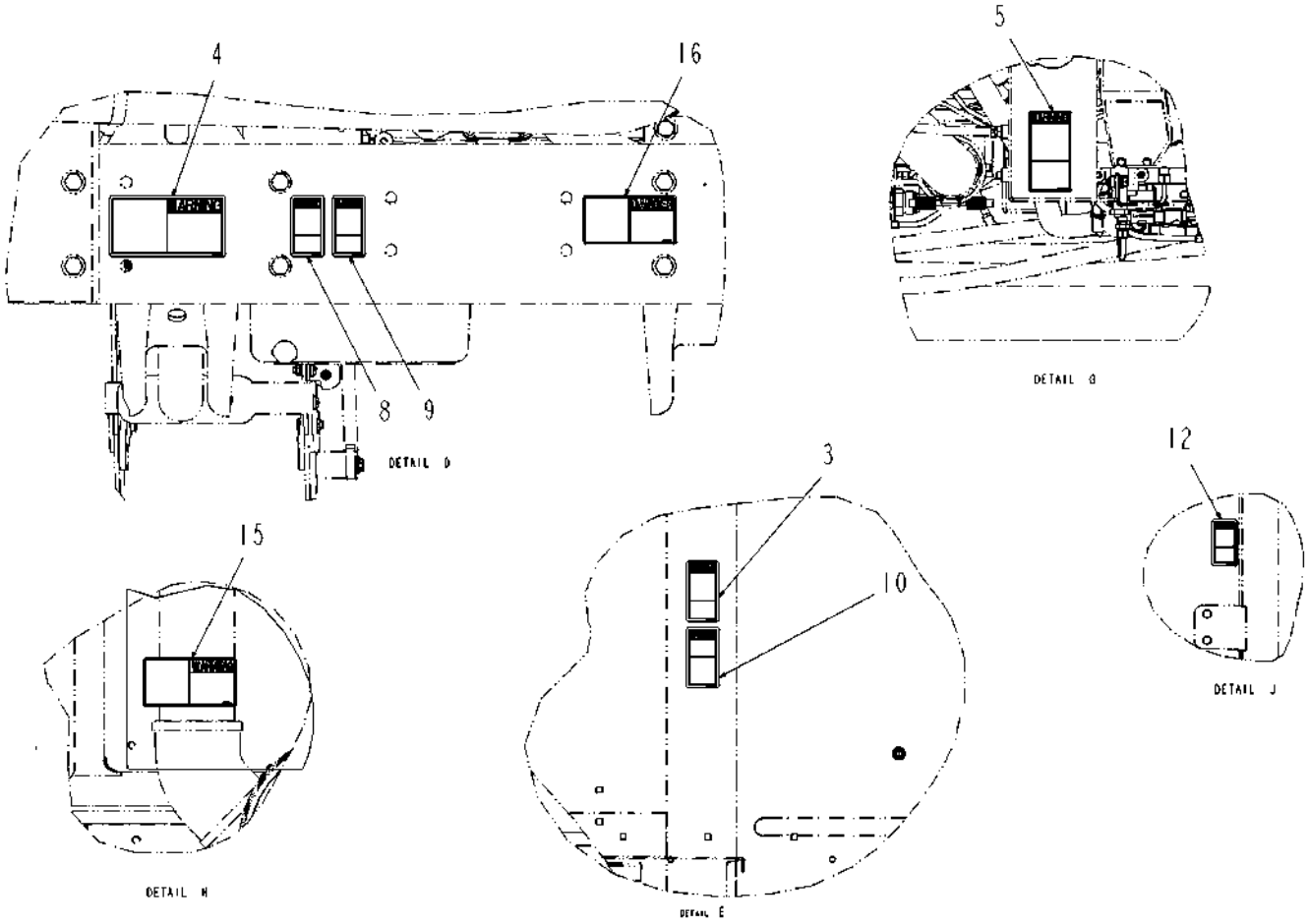

523246D1-03-T562-03.TIF

Copyright © 2008 AGCO Corporation

ITEM	PART #	QTY	DESCRIPTION	COMMENTS
3	511107D1	1	WARNING - READ MANUAL	
4	511127D1	2	WARNING - BURN HAZARD (NA)	
5	511133D1	1	DECAL-PRESSURIZED/ HOT FLUID	
8	511205D1	2	WARNING - TURN OFF ENGINE	
9	511207D1	2	WARNING - TURN OFF ENGINE	
10	511209D1	1	WARNING - INHALATION	
12	511415D1	1	WARNING - FALL HAZARD (NA)	
15	523250D1	1	DECAL-ETHER (NA)	
16	523252D1	1	DECAL-STARTER BYPASS (NA)	

Copyright © 2008 AGCO Corporation

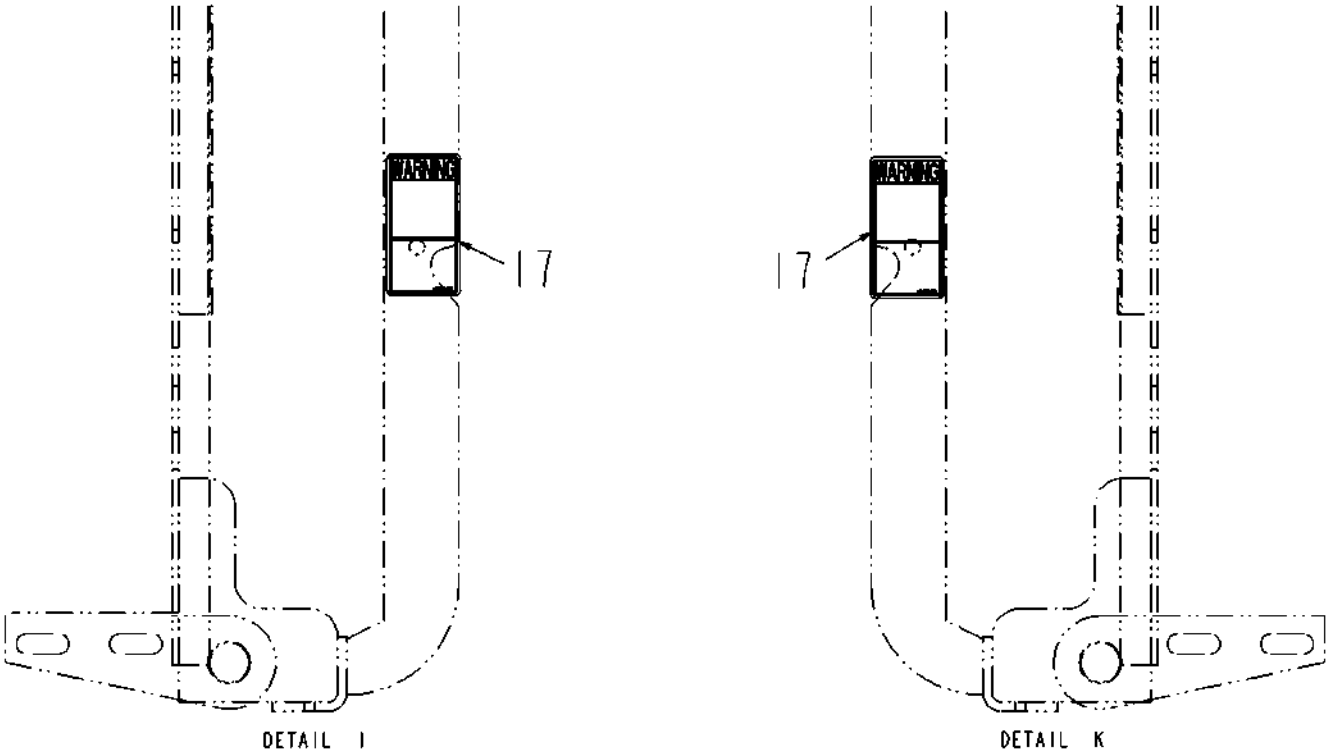

523246D1-03-T562-04.TIF

Copyright © 2008 AGCO Corporation

ITEM	PART #	QTY	DESCRIPTION	COMMENTS
17	524806D1	2	DECAL-EXPLOSION HAZARD(NA)	

Copyright © 2008 AGCO Corporation

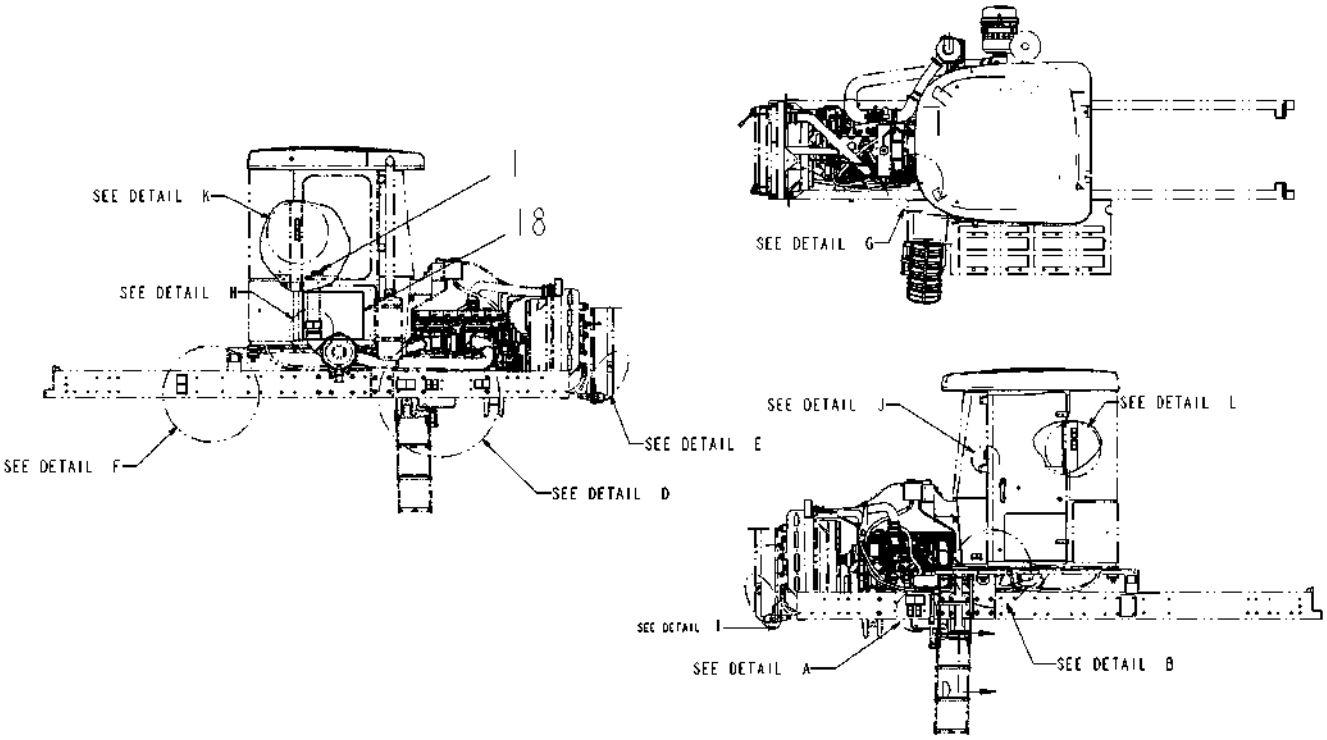

523247D1-03-T562-01.TIF

Copyright © 2008 AGCO Corporation

DECAL INSTALL-SC7XXX,INT,ATC HVA

ITEM	PART #	QTY	DESCRIPTION	COMMENTS
1	501272D1	1	FILM-ATERNATE EXIT	
18	528431D1	1	DECAL-FUSE PANEL,7X60,ATC	

Copyright © 2008 AGCO Corporation

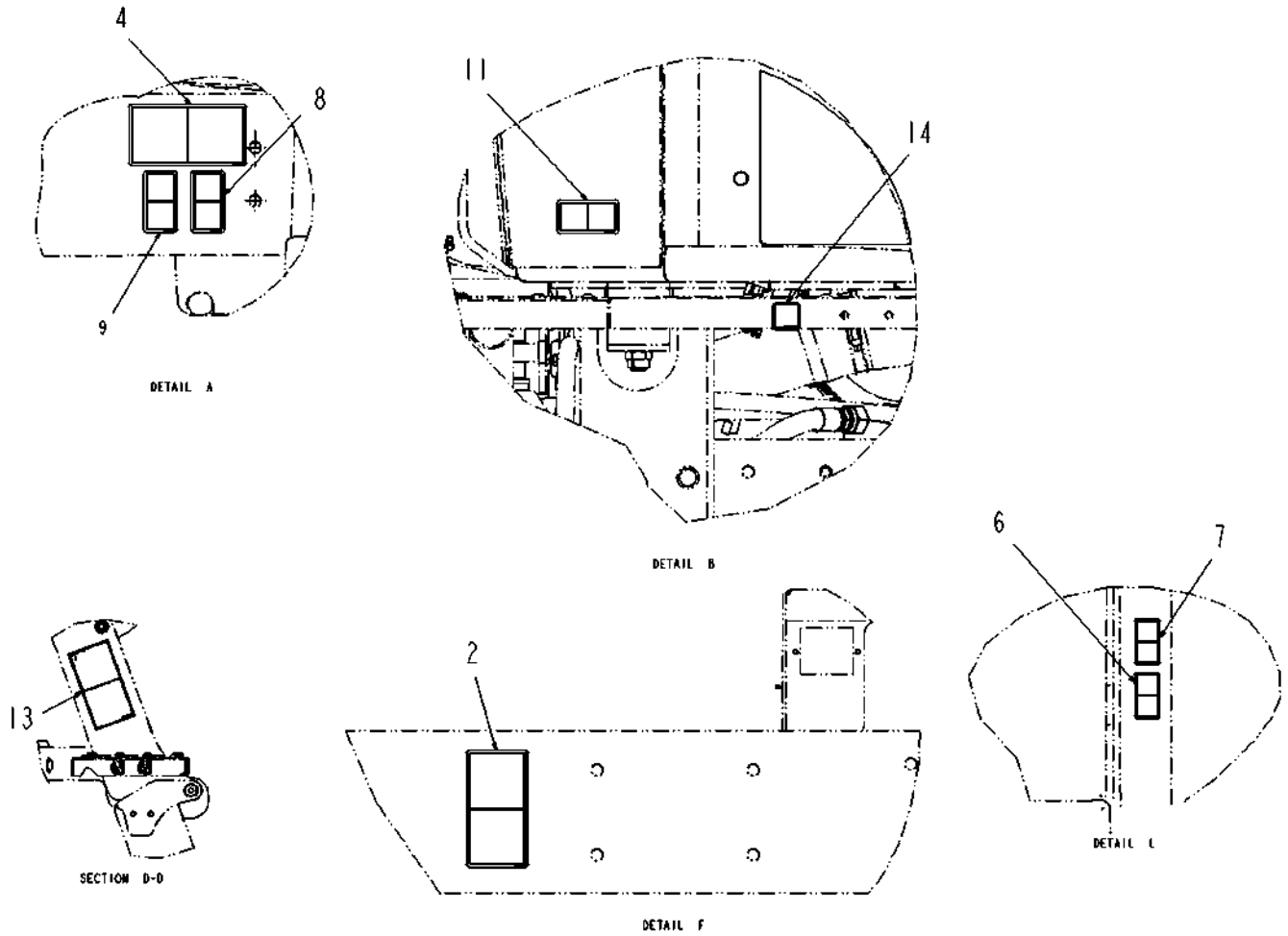

523247D1-03-T562-02.TIF

Copyright © 2008 AGCO Corporation

ITEM	PART #	QTY	DESCRIPTION	COMMENTS
2	511090D1	1	WARNING - RADAR HAZARD (INT)	
4	511128D1	2	WARNING - BURN HAZARD (INT)	
6	511200D1	1	WARNING - WEAR SEATBELT	
7	511202D1	1	DANGER - ELECTROCUTION	
8	511206D1	2	WARNING - TURN OFF ENGINE	
9	511208D1	2	WARNING - TURN OFF ENGINE	
11	511413D1	1	CRUSH HAZARD (INT)	
13	519609D1	1	DECAL-PINCH (INT)	
14	520100D1	1	DECAL-DIESEL FUEL	

Copyright © 2008 AGCO Corporation

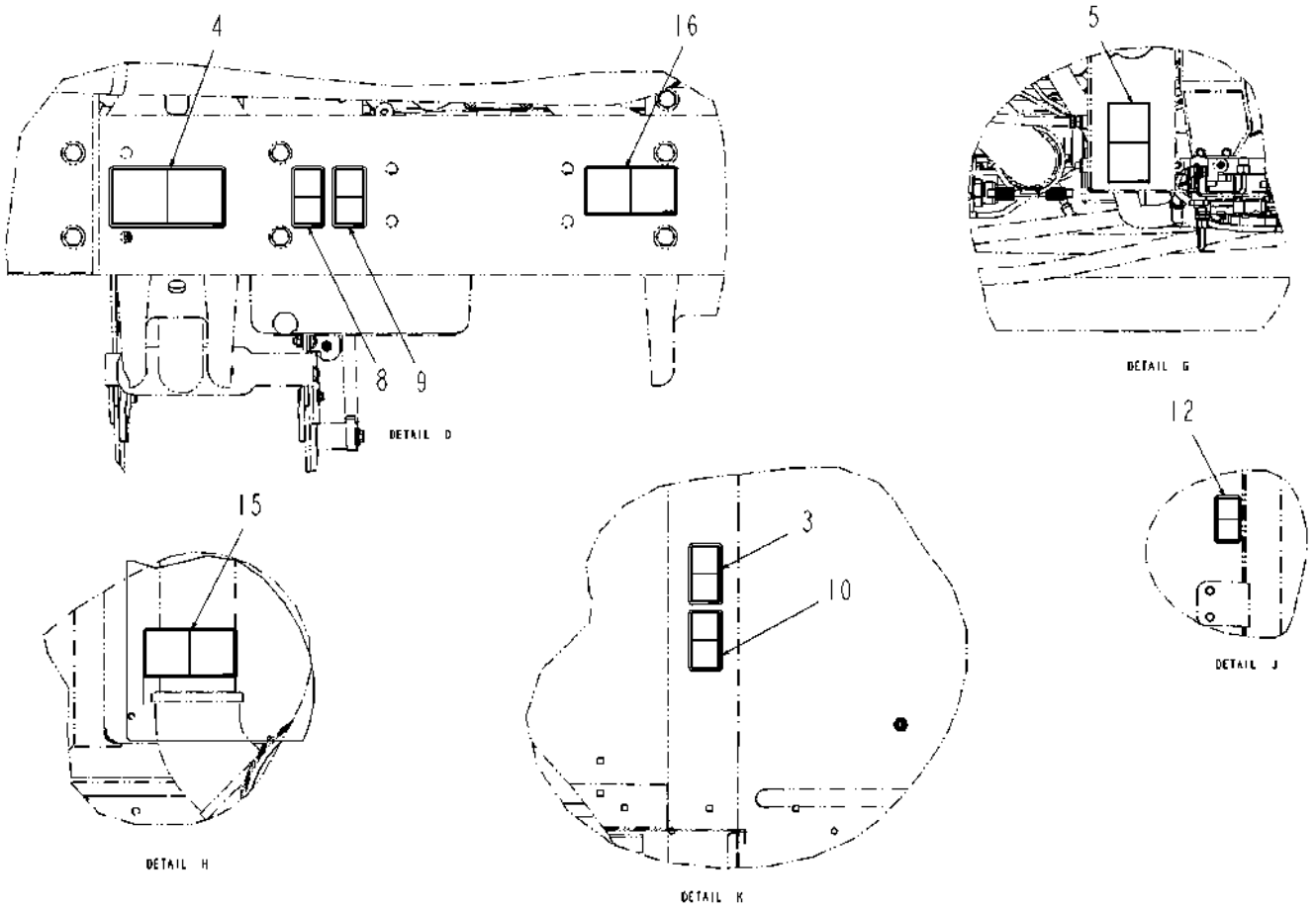

523247D1-03-T562-03.TIF

Copyright © 2008 AGCO Corporation

ITEM	PART #	QTY	DESCRIPTION	COMMENTS
3	511108D1	1	WARNING - READ MANUAL	
4	511128D1	2	WARNING - BURN HAZARD (INT)	
5	511134D1	1	DECAL-PRESSURIZED/ HOT FLUID	
8	511206D1	2	WARNING - TURN OFF ENGINE	
9	511208D1	2	WARNING - TURN OFF ENGINE	
10	511210D1	1	WARNING - INHALATION	
12	511416D1	1	WARNING - FALL HAZARD (INT)	
15	523251D1	1	DECAL-ETHER (INT)	
16	523253D1	1	DECAL-STARTER BYPASS (INT)	

Copyright © 2008 AGCO Corporation

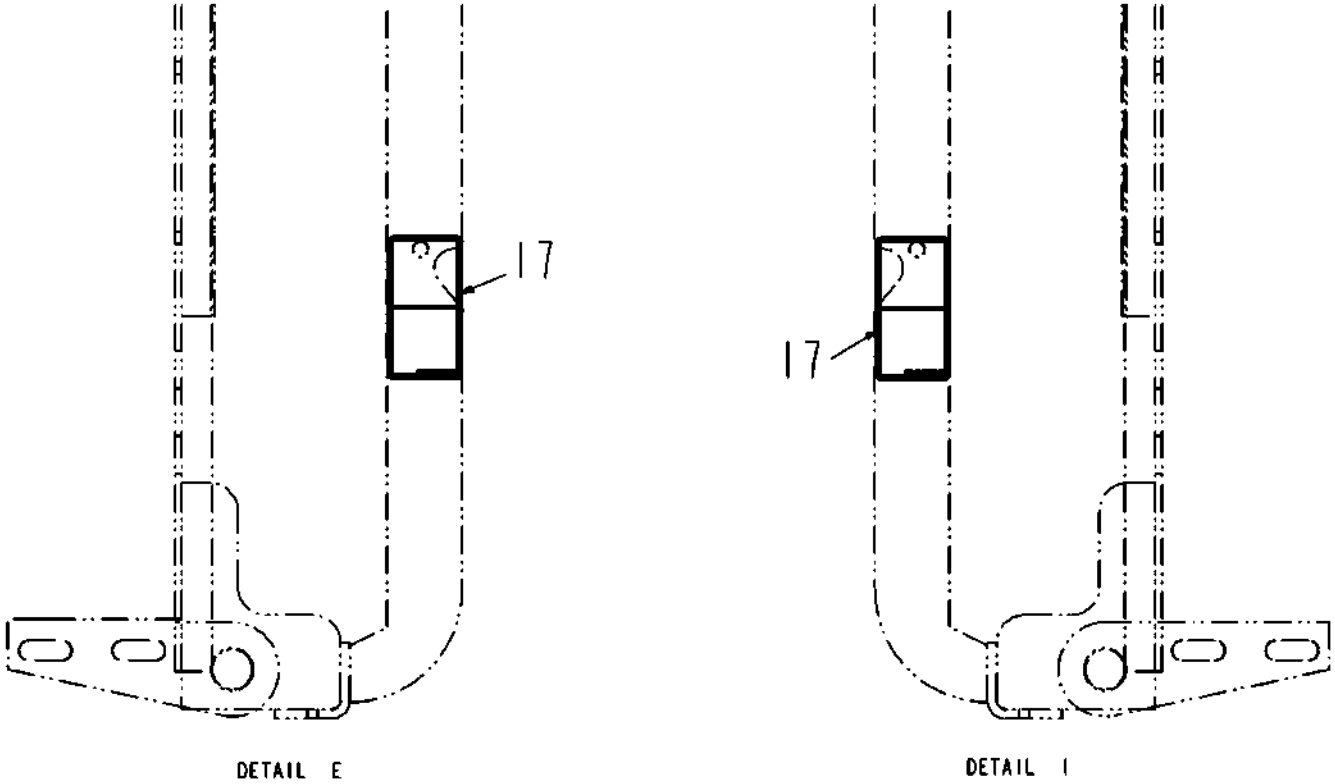

523247D1-03-T562-04.TIF

Copyright © 2008 AGCO Corporation

DECAL INSTALL-SC7XXX,INT,ATC HVA

ITEM	PART #	QTY	DESCRIPTION	COMMENTS
17	524807D1	2	DECAL-EXPLOSION HAZARD(INT)	

Copyright © 2008 AGCO Corporation

KIT-ENVISIO PLUS,RAVEN 13-1
KIT-SENSOR,TILT 13-2
CONSOLE INSTALL-RAVEN 4000 13-3

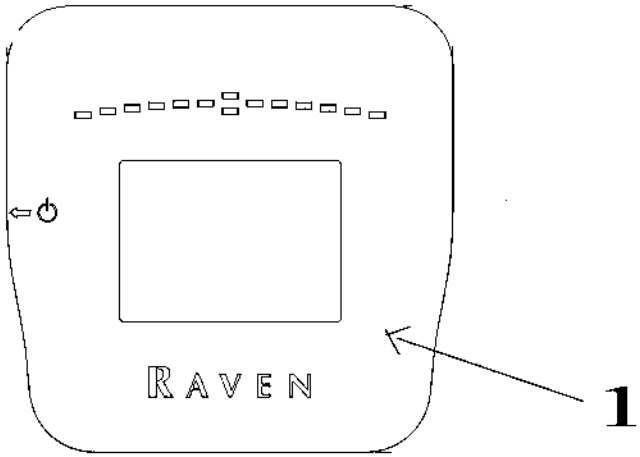

514592D1-01-N828-.TIF

Copyright © 2008 AGCO Corporation

KIT-ENVISIO PLUS,RAVEN

ITEM	PART #	QTY	DESCRIPTION	COMMENTS
REF	514596D1	1	CABLE-CAN,6 FT ,W/TEE	
REF	514823D1	1	MANUAL-ENVISIO	
REF	514594D1	1	CABLE-CONSOLE,ENVISIO	
REF	AG058428	1	CABLE PC INTERFACE 210 M/S	
REF	523064D1	1	CABLE-ENVISIO TO LIGHTBAR	
1	514593D1	1	CONSOLE-ENVIZIO PLUS	

Copyright © 2008 AGCO Corporation

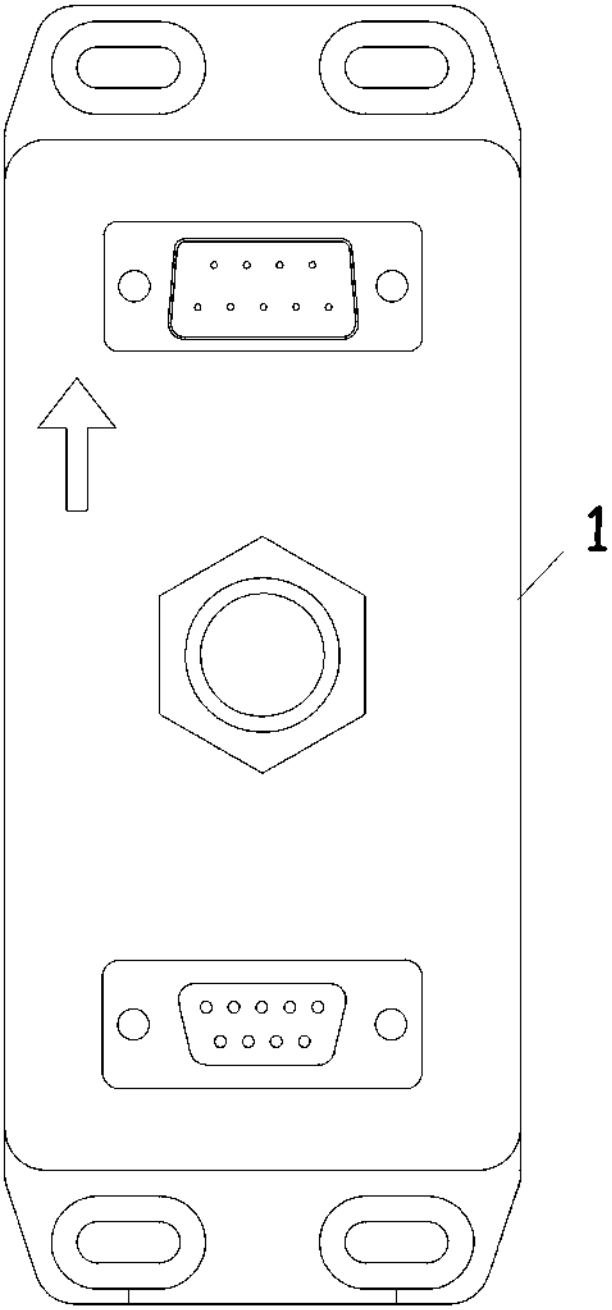

517803D1-01-N828-.TIF

Copyright © 2008 AGCO Corporation

KIT-SENSOR,TILT

ITEM	PART #	QTY	DESCRIPTION	COMMENTS
REF	523007D1	-	MANUAL-TILT SENSOR,TM-1	
REF	523008D1	-	CABLE-INTERFACE,TILT SENSOR	
1	517804D1	-	SENSOR-TILT	

Copyright © 2008 AGCO Corporation

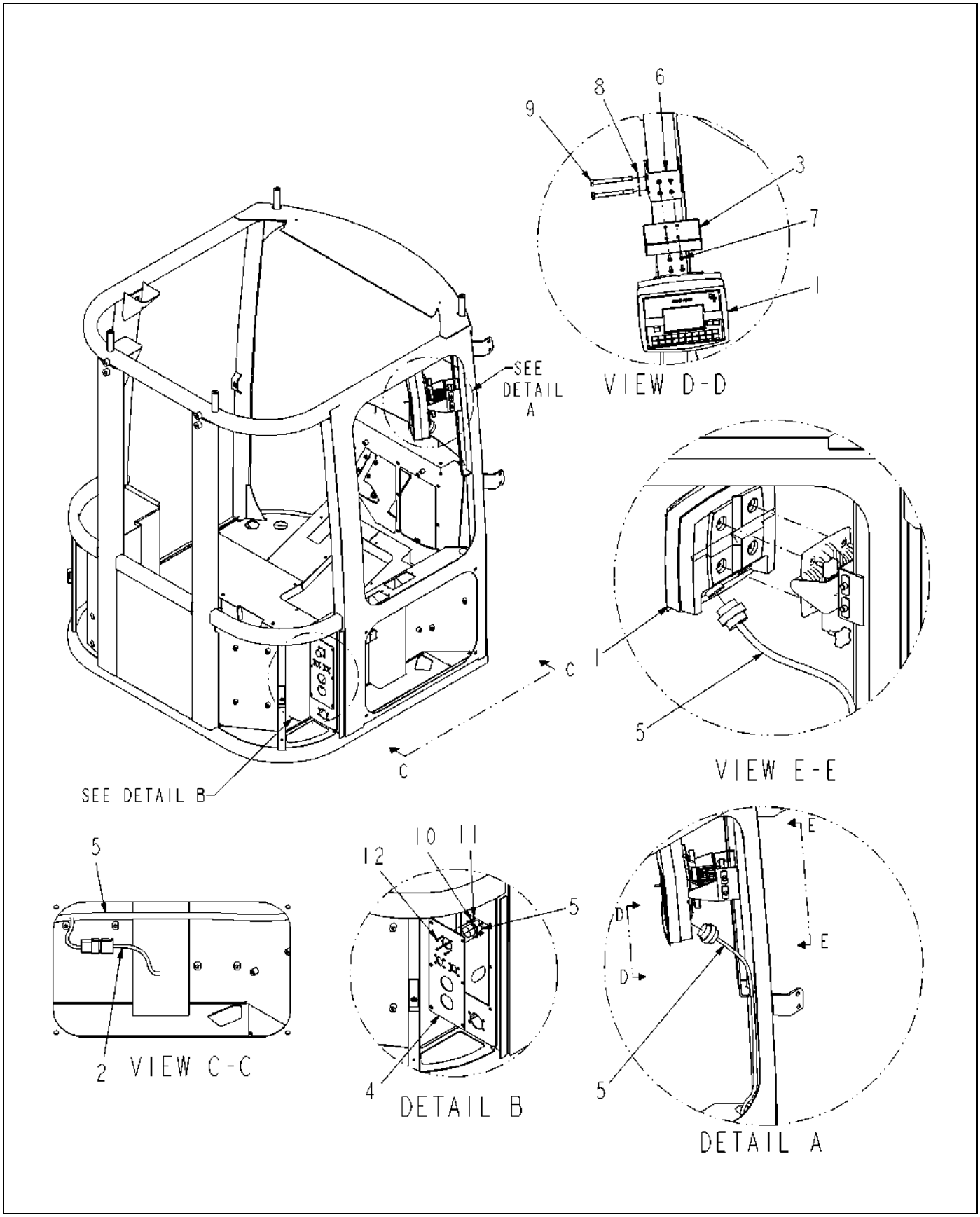

127649-03-R516-.TIF

Copyright © 2008 AGCO Corporation

CONSOLE INSTALL-RAVEN 4000

ITEM	PART #	QTY	DESCRIPTION	COMMENTS
1	518447D1	1	CONSOLE-RAVEN 5000	
2	WR126886	-	HARNESS-ADAPTER	
3	AG127137	1	BRKT WLDMT-CONSOLE MOUNT	
4	WR127138	-	PLATE-BULKHEAD	
5	AG127341	1	HARNESS-PWR,RVN 4000	
6	AG326925	1	CLAMP WLDMT-MTG,CTRL/MONITOR	
7	AG523508	4	SCR-M5-0.8X16,CL10.9,BLK,BHHS	
8	AG551007	2	WASHER 0.37 FL ZN REG TYPE-B	
9	AG562364	2	BOLT M10-1.5X100MM G8.8 ZN HHD	
10	AG563174	4	WASHER #4 FL SS NAR TYPE-B	
11	AG563175	4	NUT #4-40NC HEX SS REG NY	
12	AG710181	4	SCREW #4-40 X .50LG PAN HD SS	

Copyright © 2008 AGCO Corporation

OPT-GPS,PHOENIX 300,SC7000 14-1
OPT-GPS,PHOENIX 300,SC7000 14-2
OPT-GPS,PHOENIX 200,SC7000 14-3
OPT-GPS,PHOENIX 200,SC7000 14-4
OPT-GPS,RPR 100S,SC7000 14-5
OPT-GPS,RPR 100S,SC7000 14-6
CONTROLLER INSTALL-VIPER PRO,SC 14-7

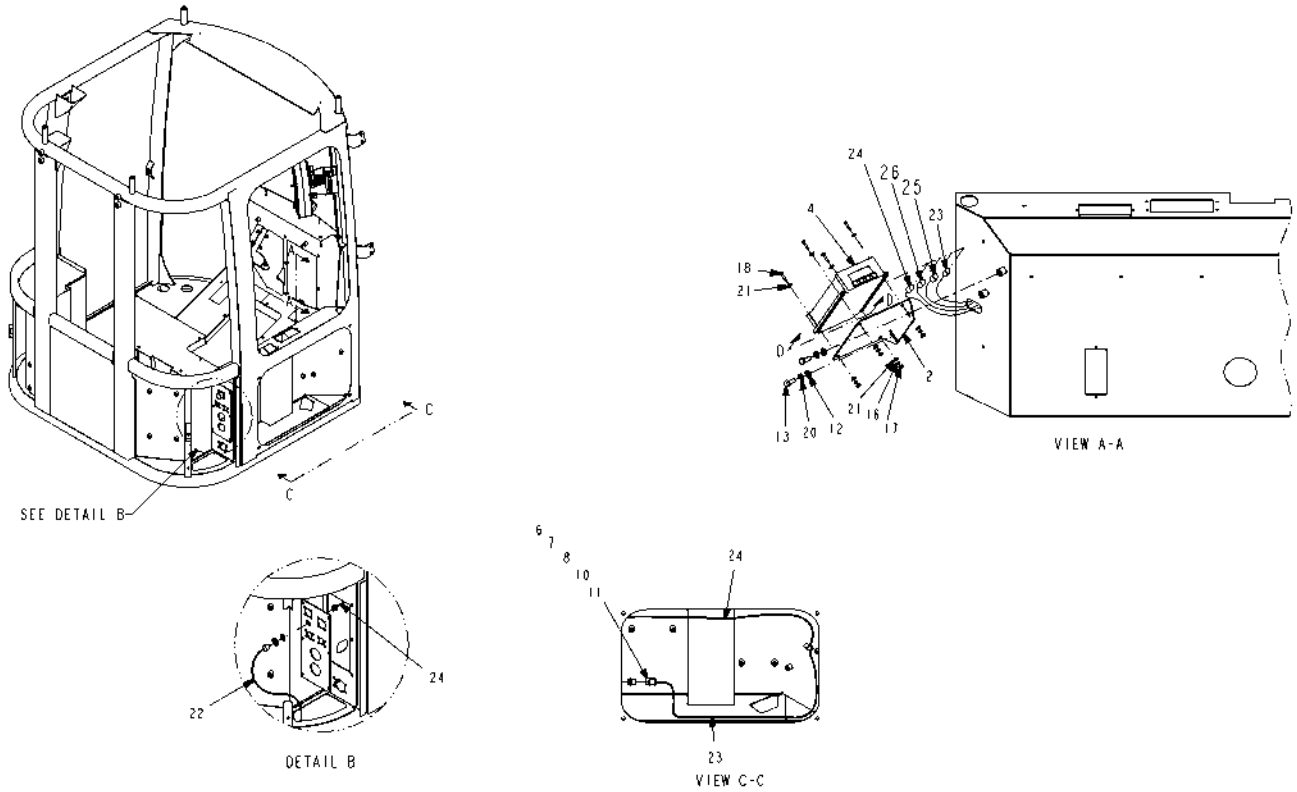

515147D1-03-N828-01.TIF

Copyright © 2008 AGCO Corporation

OPT-GPS,PHOENIX 300,SC7000

ITEM	PART #	QTY	DESCRIPTION	COMMENTS
1	AG120615	1	DISC-MTG,ANTENNA,GPS	
2	WR129240	1	BRKT-MTG,RCVR,GPS	
3	514824D1	1	KIT-GPS,PHOENIX 300	
4	514825D1	-	RECEIVER-GPS,PHOENIX 300	
6	AG515764	2	SEAL CABLE GREEN REEL 18-16 GA	
7	AG515766	1	CAVITY PLUG	
8	AG517618	1	CONNECTOR MA 3 WAY 280 SEALED	
10	AG519288	2	TERM METRI-PACK M280/20-16 GA	
11	AG520270	1	LOCK-METRIPACK,280/3 WAY	
12	AG520880	2	WASHER-FL,M8,ZN,REG	
13	WR522279	2	BOLT-M8-1.25X20,CL10.9,ZN,HHD	
16	AG550914	4	WASHER #8 LK ZN REG	
17	AG550922	4	NUT #8-32NC HEX ZN REG	
18	AG550930	4	SCREW 8-32 X.75 MA ZN SL RD HD	
20	AG561679	2	WASHER LOCK M8 ZN	
21	AG562196	8	WASHER #8 FL ZN SAE TYPE-A	
22	AG610620	-	CABLE-ANTENNA,15FT (523335)	
23	AG610624	-	CABLE-POWER,RCVR (523353)	
24	WR129373	1	CABLE-ANTENNA,CAB	
25	AG058428	-	CABLE PC INTERFACE 210 M/S	
26	AG123946	-	CABLE-DATA,7 FT	

Copyright © 2008 AGCO Corporation

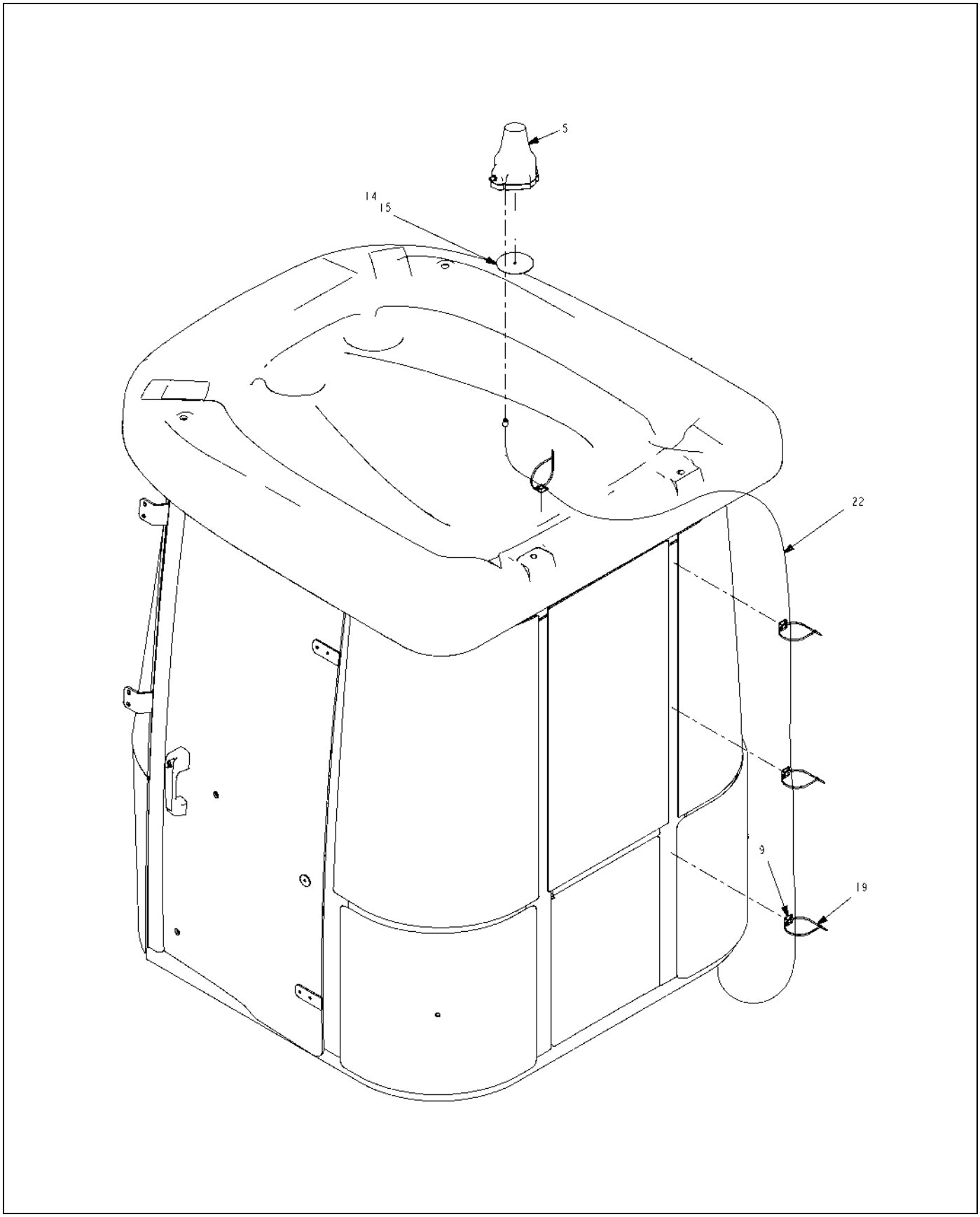

515147D1-03-N828-02.TIF

Copyright © 2008 AGCO Corporation

ITEM	PART #	QTY	DESCRIPTION	COMMENTS
5	514826D1	-	ANTENNA-GPS,PHOENIX 300	
9	AG517942	AR	MOUNT WIRE TIE ADHESIVE B 4WAY	
14	AG523200	AR	3M 94 1/2 PT TAPE PRIMER	
15	AG523201	-	TAPE-ADHESIVE,4.00,HIGH BOND [BULK: 0.330 FT]	
19	AG553557	AR	TIE CABLE 7.37 .06-1.37 BLACK	
22	AG610620	-	CABLE-ANTENNA,15FT (523335)	

Copyright © 2008 AGCO Corporation

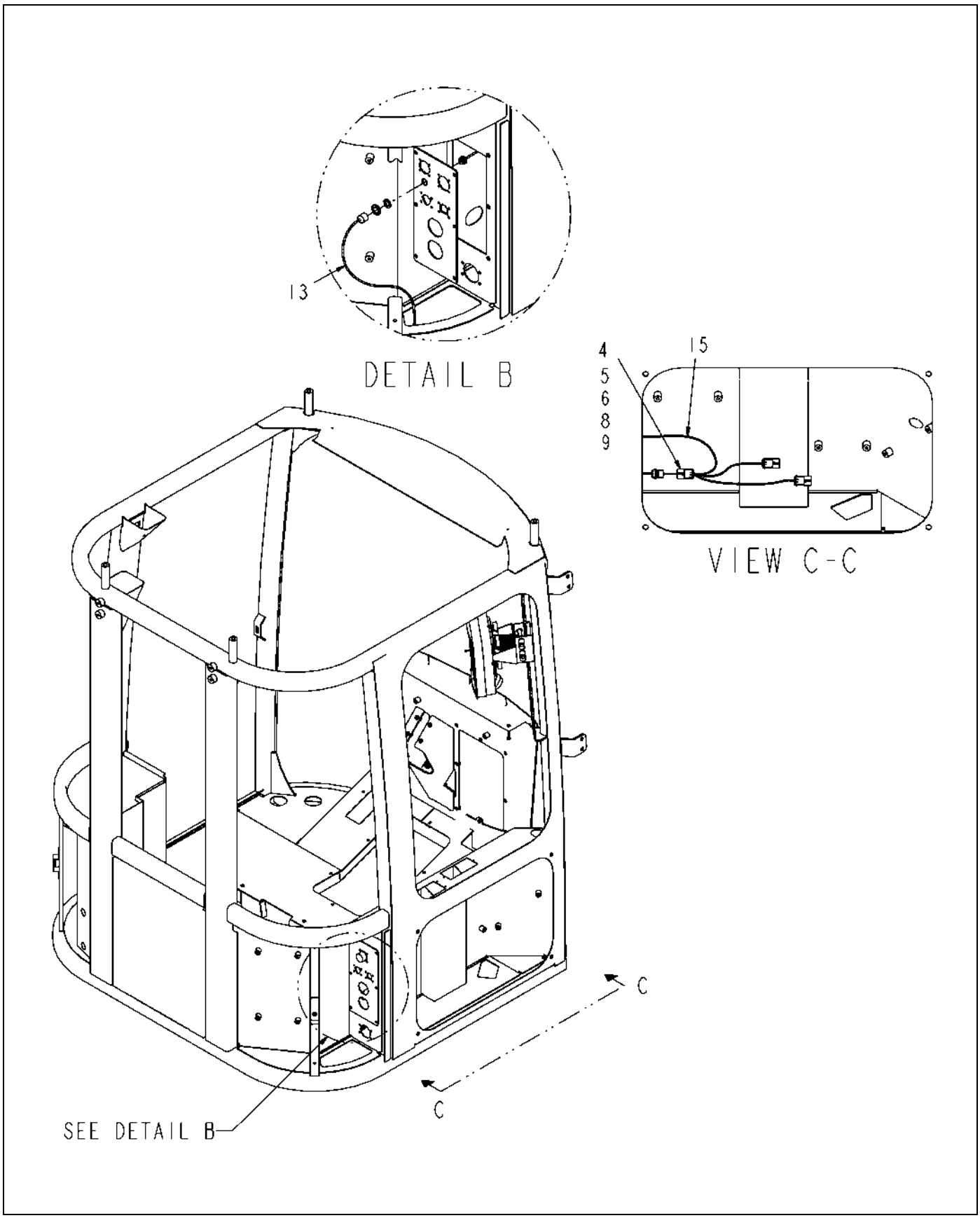

516413D1-01-R107-01.TIF

Copyright © 2008 AGCO Corporation

OPT-GPS,PHOENIX 200,SC7000

ITEM	PART #	QTY	DESCRIPTION	COMMENTS
2	516993D1	1	KIT-GPS,PHOENIX 200	
4	AG515764	2	SEAL CABLE GREEN REEL 18-16 GA	
5	AG515766	1	CAVITY PLUG	
6	AG517618	1	CONNECTOR MA 3 WAY 280 SEALED	
8	AG519288	2	TERM METRI-PACK M280/20-16 GA	
9	AG520270	1	LOCK-METRIPACK,280/3 WAY	
13	AG610620	-	CABLE-ANTENNA,15FT (523335)	
14	514831D1	-	MANUAL-GPS,PHOENIX 200	
15	516949D1	-	CABLE-GPS,INTERIOR,PHOENIX 200	
16	516950D1	-	CABLE-GPS,EXTERIOR,PHOENIX 200	

Copyright © 2008 AGCO Corporation

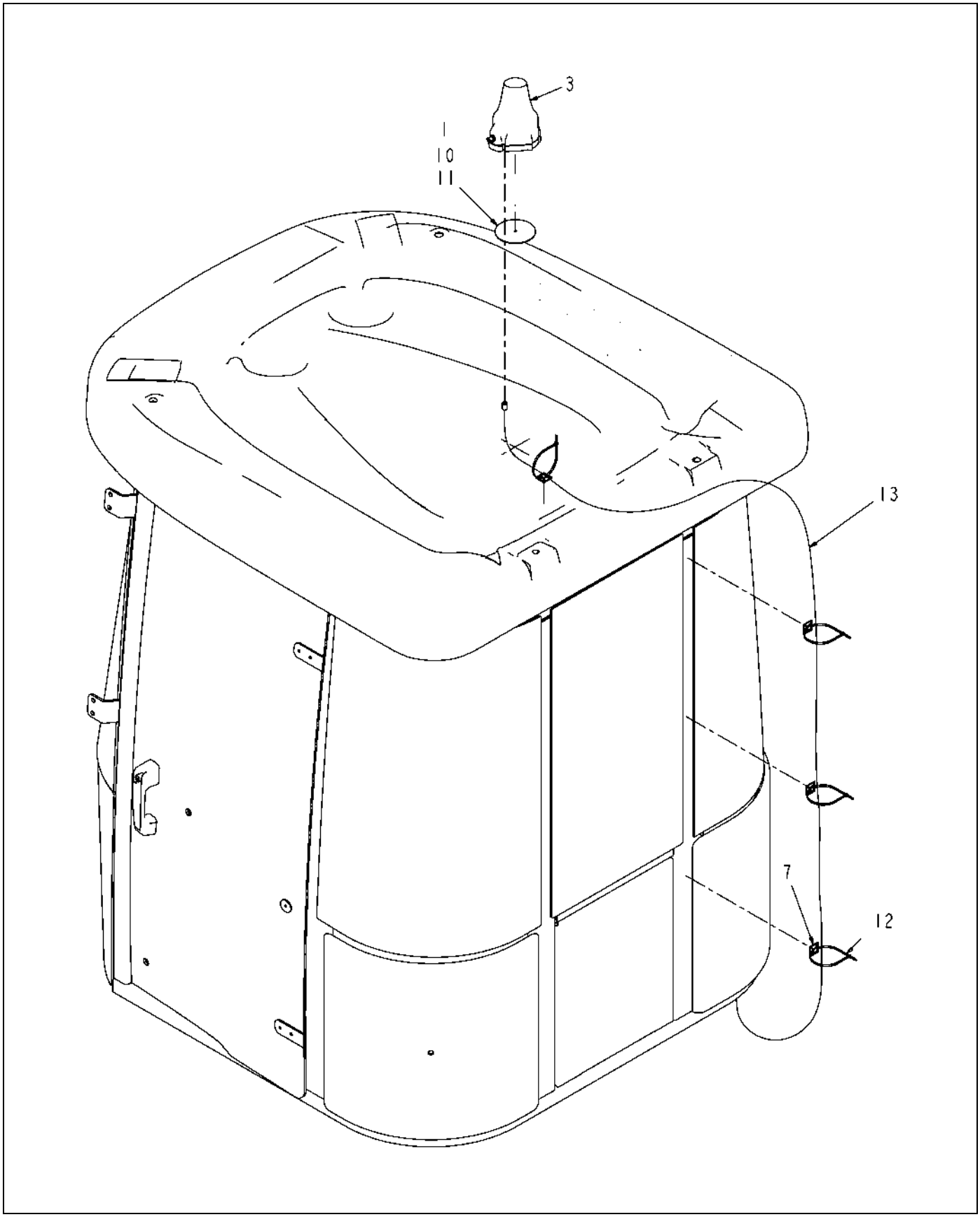

516413D1-01-R107-02.TIF

Copyright © 2008 AGCO Corporation

OPT-GPS,PHOENIX 200,SC7000

ITEM	PART #	QTY	DESCRIPTION	COMMENTS
1	AG120615	1	DISC-MTG,ANTENNA,GPS	
3	514829D1	-	ANTENNA-GPS,PHOENIX 200	
7	AG517942	AR	MOUNT WIRE TIE ADHESIVE B 4WAY	
10	AG523200	AR	3M 94 1/2 PT TAPE PRIMER	
11	AG523201	-	TAPE-ADHESIVE,4.00,HIGH BOND [BULK: 0.330 FT]	
12	AG553557	AR	TIE CABLE 7.37 .06-1.37 BLACK	
13	AG610620	-	CABLE-ANTENNA,15FT (523335)	

Copyright © 2008 AGCO Corporation

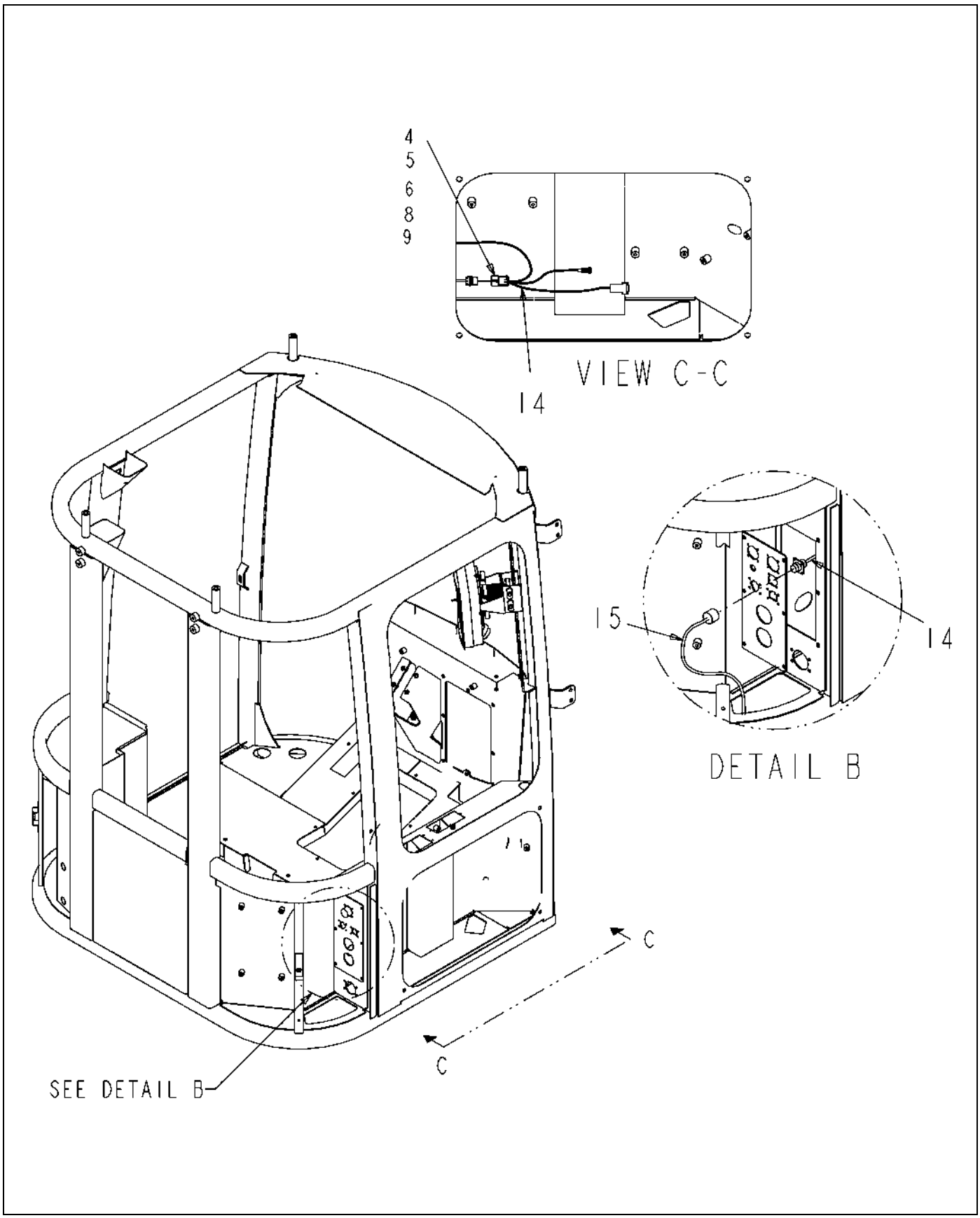

516947D1-01-R107-01.TIF

Copyright © 2008 AGCO Corporation

OPT-GPS,RPR 100S,SC7000

ITEM	PART #	QTY	DESCRIPTION	COMMENTS
2	517400D1	1	KIT-GPS,RPR 100S,SC7000	
4	AG515764	2	SEAL CABLE GREEN REEL 18-16 GA	
5	AG515766	1	CAVITY PLUG	
6	AG517618	1	CONNECTOR MA 3 WAY 280 SEALED	
8	AG519288	2	TERM METRI-PACK M280/20-16 GA	
9	AG520270	1	LOCK-METRIPACK,280/3 WAY	
13	514835D1	-	MANUAL-GPS,RPR 100S	
14	517401D1	-	CABLE-GPS,INTERIOR,RPR 100S	
15	517402D1	-	CABLE-GPS,EXTERIOR,RPR 100S	

Copyright © 2008 AGCO Corporation

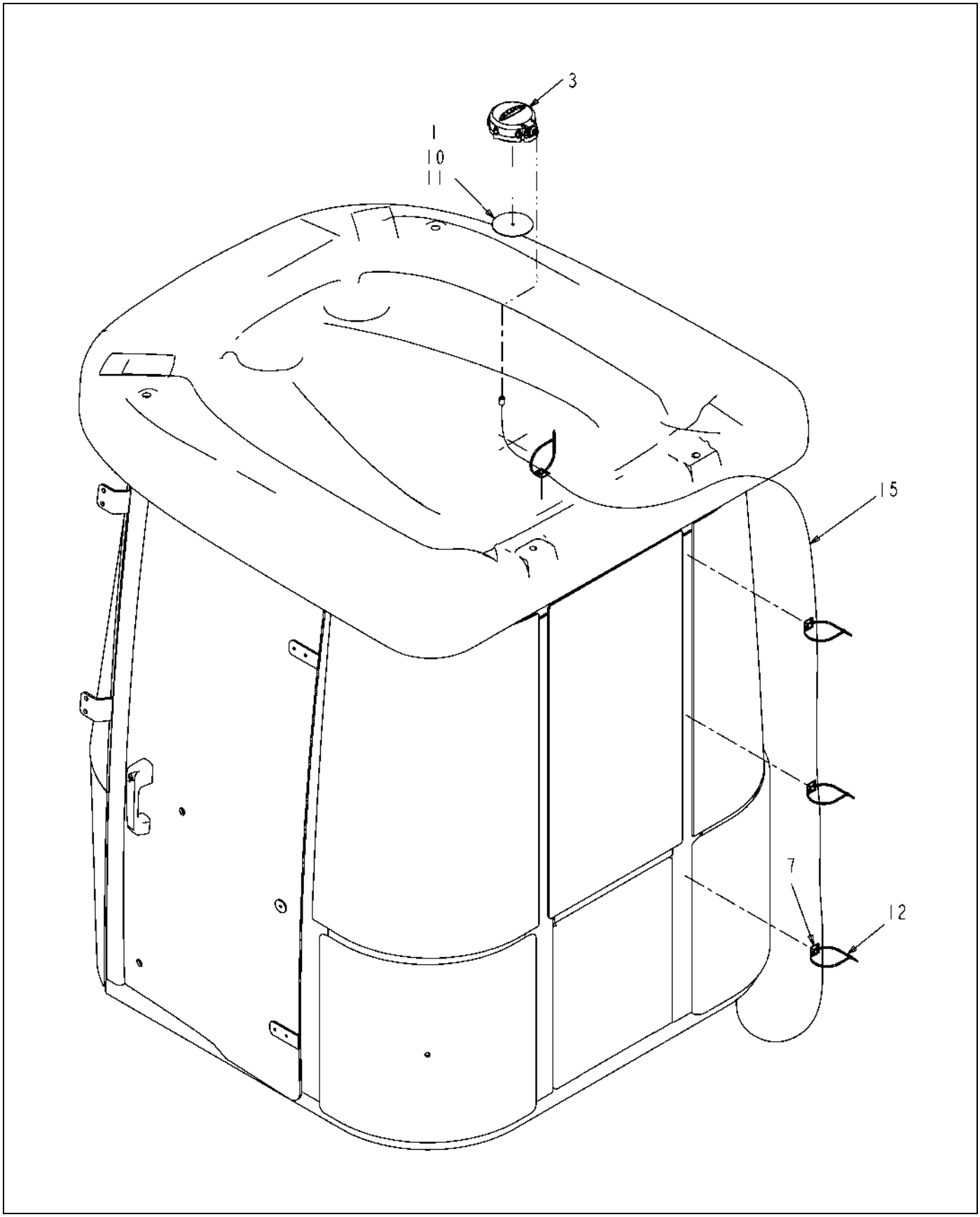

516947D1-01-R107-02.TIF

Copyright © 2008 AGCO Corporation

OPT-GPS,RPR 100S,SC7000

ITEM	PART #	QTY	DESCRIPTION	COMMENTS
1	AG120615	1	DISC-MTG,ANTENNA,GPS	
3	514833D1	-	ANTENNA-GPS,RPR 100S	
7	AG517942	AR	MOUNT WIRE TIE ADHESIVE B 4WAY	
10	AG523200	AR	3M 94 1/2 PT TAPE PRIMER	
11	AG523201	-	TAPE-ADHESIVE,4.00,HIGH BOND [BULK: 0.330 FT]	
12	AG553557	AR	TIE CABLE 7.37 .06-1.37 BLACK	
15	517402D1	-	CABLE-GPS,EXTERIOR,RPR 100S	

Copyright © 2008 AGCO Corporation

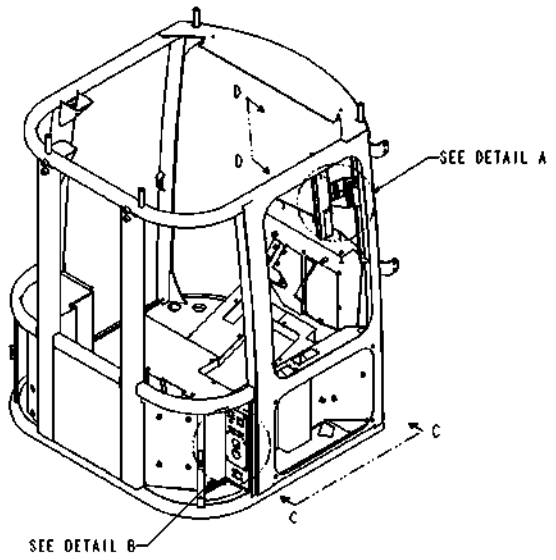

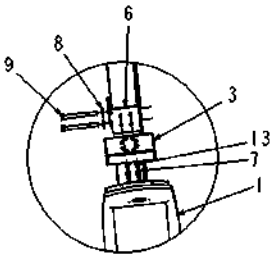

VIEW D-D

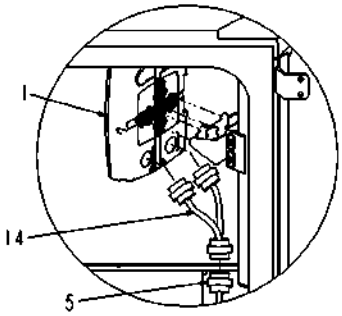

DETAIL A

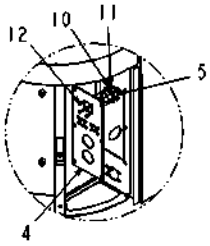

DETAIL B

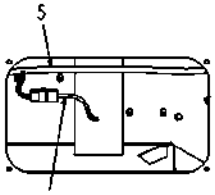

VIEW C-C

522519D1-01-R712-.TIF

Copyright © 2008 AGCO Corporation

ITEM	PART #	QTY	DESCRIPTION	COMMENTS
1	522496D1	1	KIT-CONSOLE,VIPER PRO	
2	WR134739	-	HARNESS-ADAPTER,7X50	
3	AG127137	1	BRKT WLDMT-CONSOLE MOUNT	
4	WR127138	-	PLATE-BULKHEAD	
5	AG127341	1	HARNESS-PWR,RVN 4000	
6	AG326925	1	CLAMP WLDMT-MTG,CTRL/MONITOR	
7	AG523508	4	SCR-M5-0.8X16,CL10.9,BLK,BHHS	
8	AG551007	2	WASHER 0.37 FL ZN REG TYPE-B	
9	AG562364	2	BOLT M10-1.5X100MM G8.8 ZN HHD	
10	AG563174	4	WASHER #4 FL SS NAR TYPE-B	
11	AG563175	4	NUT #4-40NC HEX SS REG NY	
12	AG710181	4	SCREW #4-40 X .50LG PAN HD SS	
13	AG522247	4	WASHER-LK,M5,SS,REG	
14	522498D1	-	CABLE-CONSOLE,VIPER PRO	

Copyright © 2008 AGCO Corporation

OPT-ENVISIO,SC7000	15-1
F/A-CROP SHIELDS,COUPE	15-2
F/A-CROP SHIELDS,COUPE	15-3
F/A-CROP SHIELDS,COUPE	15-4
OPT-KEY,OVERSEAS	15-5
OPT-500 HR FWA FILTER KIT	15-6
BELLYPAN-INSTALL,FRONT,7000	15-7
BELLYPAN-INSTALL,MIDDLE,7000	15-8
BELLYPAN-INSTAL,REAR,7000	15-9
BELLYPAN-INSTALL,TANK SHIELDS	15-10
BELTING INSTAL-BELLYPAN	15-11
F/A-CROP SHIELDS,COUPE	15-12
F/A-CROP SHIELDS,COUPE	15-13
F/A-CROP SHIELDS,COUPE	15-14
F/A-50 HR FILTER KIT	15-15
F/A-500 HR FILTER KIT	15-16
F/A-FENDER,7460,REAR,HYD	15-17
COVER-I/O ASM FIELD INSTALL	15-18

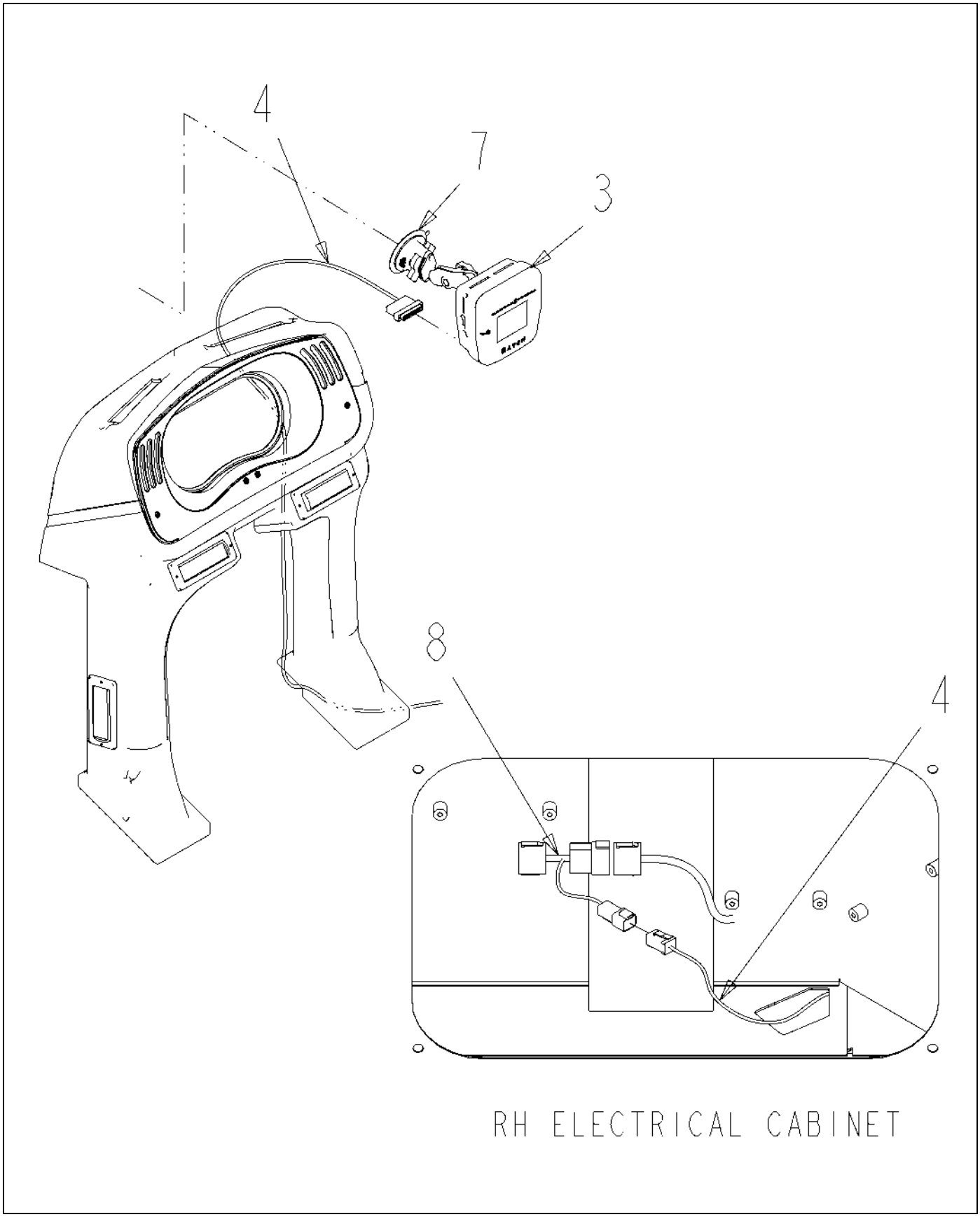

514597D1-01-N828-.TIF

Copyright © 2008 AGCO Corporation

OPT-ENVISIO,SC7000

ITEM	PART #	QTY	DESCRIPTION	COMMENTS
1	AG058428	-	CABLE PC INTERFACE 210 M/S	
2	514592D1	1	KIT-ENVISIO PLUS,RAVEN	SEE PAGE 13-1
3	514593D1	-	CONSOLE-ENVIZIO PLUS	
4	514594D1	-	CABLE-CONSOLE,ENVISIO	
5	514596D1	-	CABLE-CAN,6 FT ,W/TEE	
6	514823D1	-	MANUAL-ENVISIO	
7	517898D1	1	MOUNT-SUCTION CUP,RAM	
8	518015D1	1	HARNESS-ADAPT,PWR,ENVISIO,SC	

Copyright © 2008 AGCO Corporation

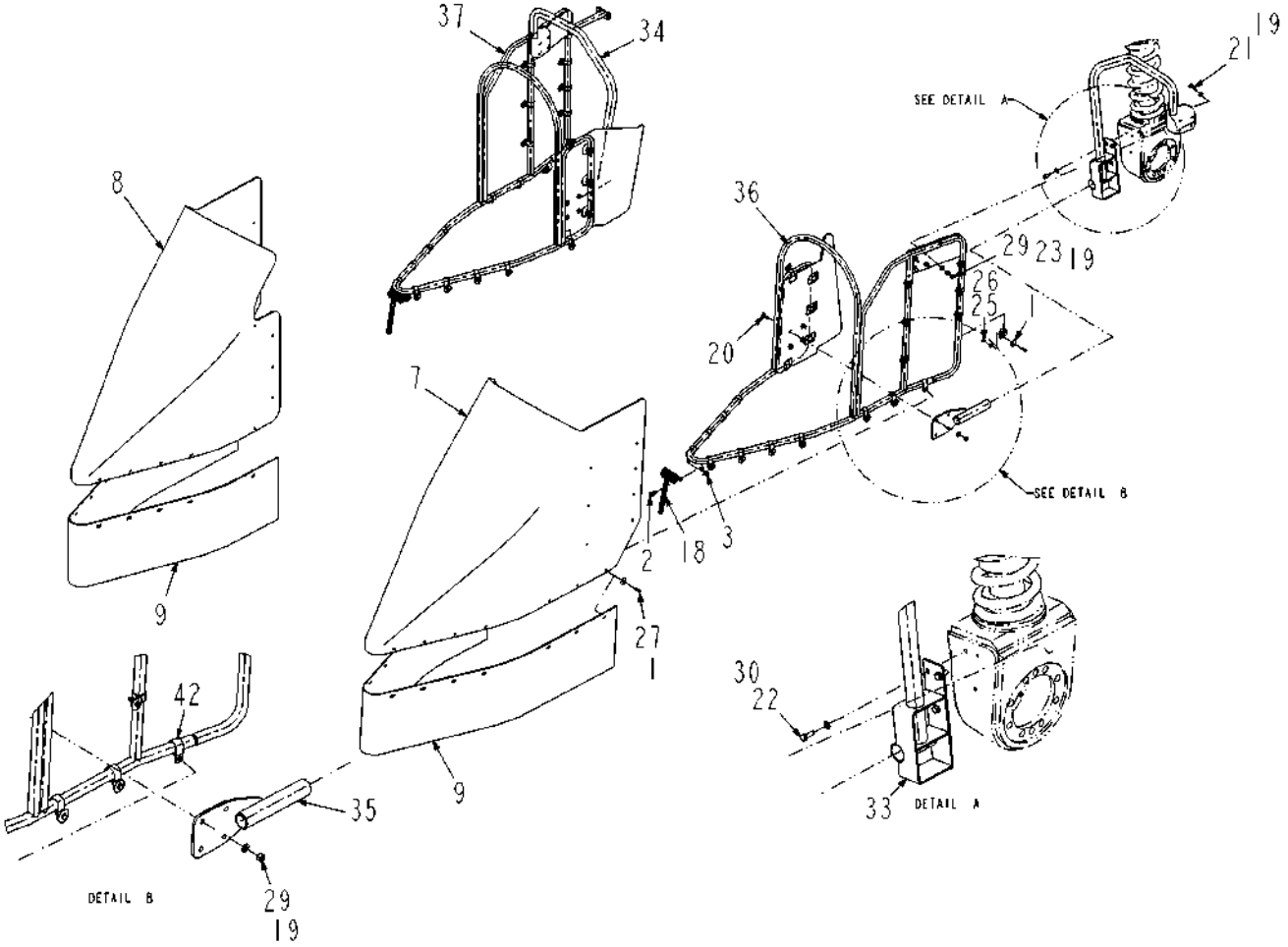

520036D1-02-R616-01.TIF

Copyright © 2008 AGCO Corporation

F/A-CROP SHIELDS,COUPE

ITEM	PART #	QTY	DESCRIPTION	COMMENTS
1	WR10436	90	WASHER-FENDER, 1/4 ID	
2	WR55215	8	SCREW-HEX FLG,M10X1.5X25 CL8.8	
3	WR55272	8	NUT-LOCK,M10 X 1.5,PREV	
7	WR133938	1	SHIELD-CROP,POLY,FRONT,LH	
8	WR133941	1	SHIELD-CROP,POLY,FRONT,RH	
9	WR133942	2	APRON-CROP SHIELD,FRONT	
18	WR134447	4	SPRING-APRON	
19	AG514559	56	WASHER 0.37 FL ZN SAE TYP-A G8	
20	AG520602	20	BOLT-.38-16X1.00,G5,S,FLG,HHD	
21	AG522905	24	BOLT .37-16NCX 1.50 G5 ZN FTD	
22	AG550175	12	BOLT 0.37-16NCX 1.00 G5 ZN HHD	
23	AG550191	12	WASHER 0.37 LK ZN REG	
25	AG550612	104	NUT 0.25-20NC HEX ZN REG	
26	AG550671	122	WASHER 0.25 FL ZN SAE TYPE-A	
27	AG550698	94	BOLT 0.25-20NCX 1.00 G5 ZN HHD	
29	AG550825	34	NUT 0.37-16NC HEX ZN REG	
30	AG550981	6	WASHER 0.37 FL ZN NAR TYPE-B	
33	511375D1	1	WLDMT-SHIELD,MOUNT,LH	
34	511872D1	1	WLDMT-SHIELD,MOUNT,RH	
35	514951D1	2	WLDMT-BOTTOM,MOUNT,SLIDE	
36	515938D1	1	WLDMT-SHIELD FRAME,LH	
37	516407D1	1	WLDMT-SHIELD FRAME,RH	
40	519228D1	1	PKG-CROP SHIELDS,COUPE	
41	523660D1	1	INSTR-CROP SHIELD,COUPE	
42	WR55665	84	CLAMP-COATED 1.0 ID X .62W	

Copyright © 2008 AGCO Corporation

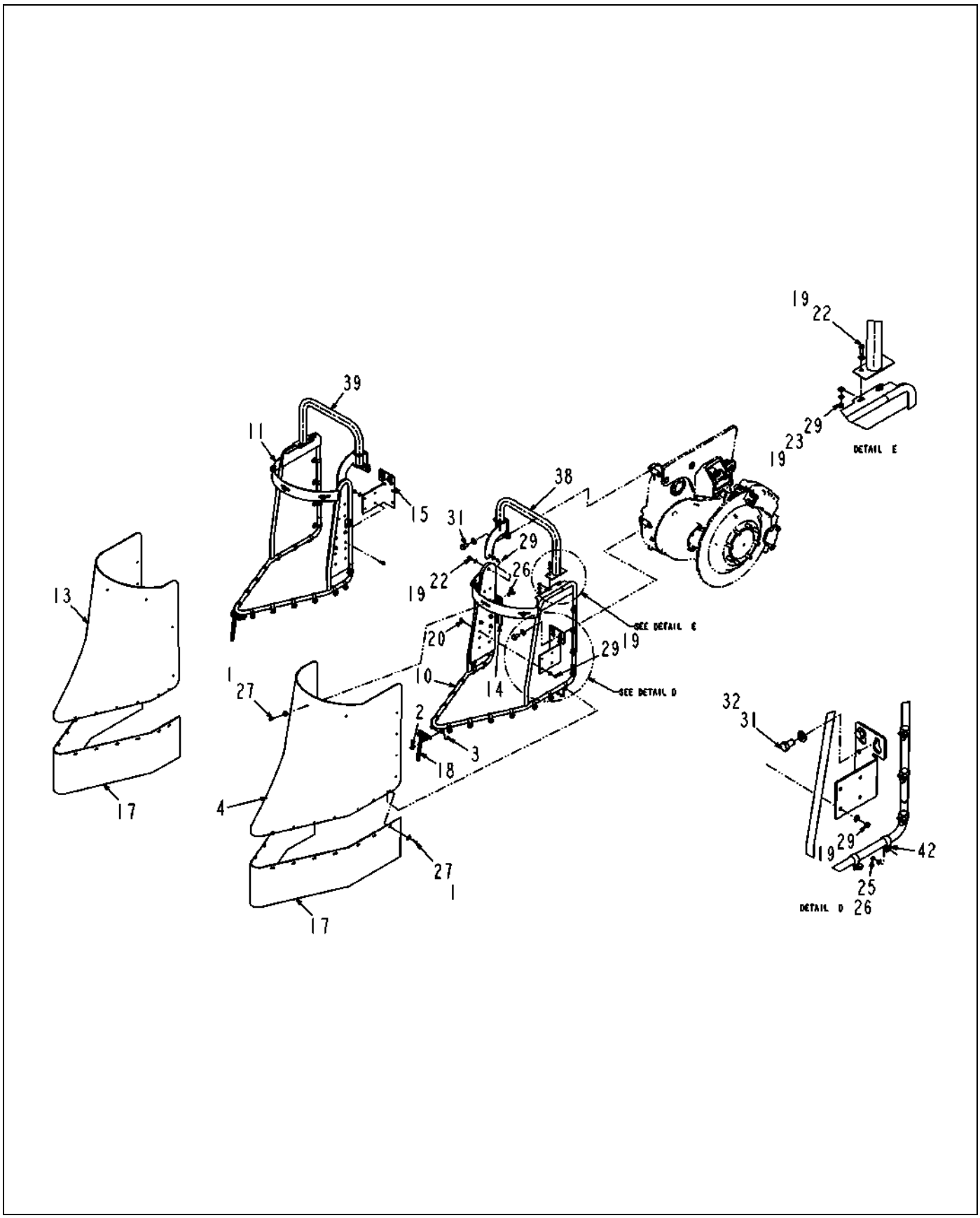

520036D1-02-R616-02.TIF

Copyright © 2008 AGCO Corporation

F/A-CROP SHIELDS,COUPE

ITEM	PART #	QTY	DESCRIPTION	COMMENTS
1	WR10436	90	WASHER-FENDER, 1/4 ID	
2	WR55215	8	SCREW-HEX FLG,M10X1.5X25 CL8.8	
3	WR55272	8	NUT-LOCK,M10 X 1.5,PREV	
4	WR133927	1	SHIELD-CROP,POLY,REAR,LH	
10	WR134247	1	FRAME WLDMT-CROP SHLD,REAR,LH	
11	WR134258	1	FRAME WLDMT-CROP SHLD,REAR,RH	
13	WR134439	1	SHIELD-CROP,POLY,REAR,RH	
14	WR134440	1	WLDMT-BRKT,MTG,CROP SHIELD,LH	
15	WR134441	1	WLDMT-BRKT,MTG,CROP SHIELD,RH	
17	WR134445	2	APRON-CROP SHIELD,REAR	
18	WR134447	4	SPRING-APRON	
19	AG514559	56	WASHER 0.37 FL ZN SAE TYP-A G8	
20	AG520602	20	BOLT-.38-16X1.00,G5,S,FLG,HHD	
22	AG550175	12	BOLT 0.37-16NCX 1.00 G5 ZN HHD	
23	AG550191	12	WASHER 0.37 LK ZN REG	
25	AG550612	104	NUT 0.25-20NC HEX ZN REG	
26	AG550671	122	WASHER 0.25 FL ZN SAE TYPE-A	
27	AG550698	94	BOLT 0.25-20NCX 1.00 G5 ZN HHD	
29	AG550825	34	NUT 0.37-16NC HEX ZN REG	
31	AG560073	8	BOLT 0.75-10NCX 1.25 G5 ZN HHD	
32	AG604203	8	WASHER 0.75 FL ZN SAE TYP-A G8	
38	518805D1	1	WLDMT-SUPPORT,REAR SHIELD,LH	
39	518806D1	1	WLDMT-SUPPORT,REAR SHIELD,RH	
42	WR55665	84	CLAMP-COATED 1.0 ID X .62W	

Copyright © 2008 AGCO Corporation

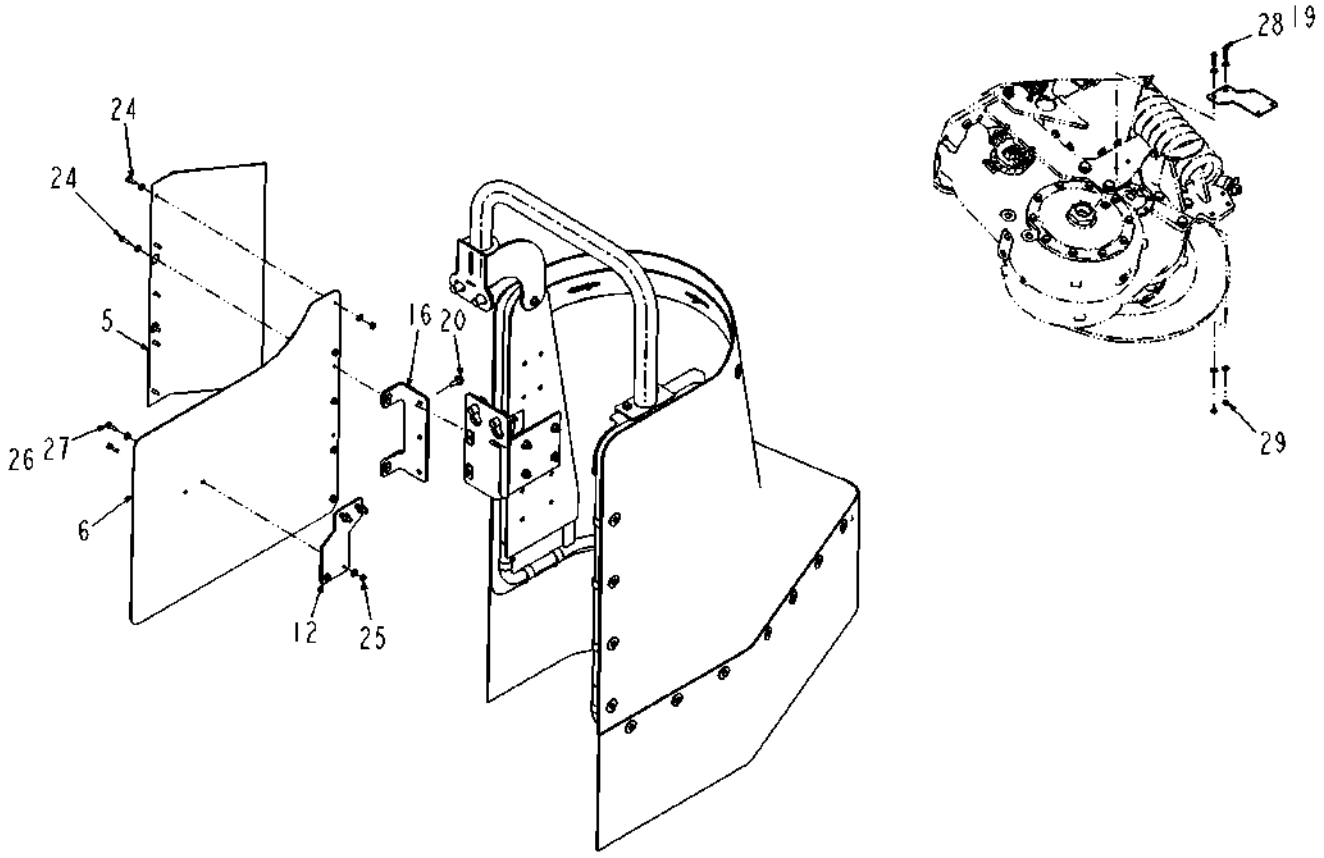

520036D1-02-R616-03.TIF

Copyright © 2008 AGCO Corporation

ITEM	PART #	QTY	DESCRIPTION	COMMENTS
5	WR133936	2	SHIELD-CROP,INNER	
6	WR133937	2	SHIELD-CROP,INNER,REAR	
12	WR134264	2	BRKT-CROP SHIELD,INNER	
16	WR134444	2	WLDMT-BRKT,CROP SHIELD,INNER	
19	AG514559	56	WASHER 0.37 FL ZN SAE TYP-A G8	
20	AG520602	20	BOLT-.38-16X1.00,G5,S,FLG,HHD	
24	AG550485	14	BOLT 0.25-20NCX 0.75 G5 ZN HHD	
25	AG550612	104	NUT 0.25-20NC HEX ZN REG	
26	AG550671	122	WASHER 0.25 FL ZN SAE TYPE-A	
27	AG550698	94	BOLT 0.25-20NCX 1.00 G5 ZN HHD	
28	AG550779	12	BOLT 0.37-16NCX 1.50 G5 ZN HHD	
29	AG550825	34	NUT 0.37-16NC HEX ZN REG	

Copyright © 2008 AGCO Corporation

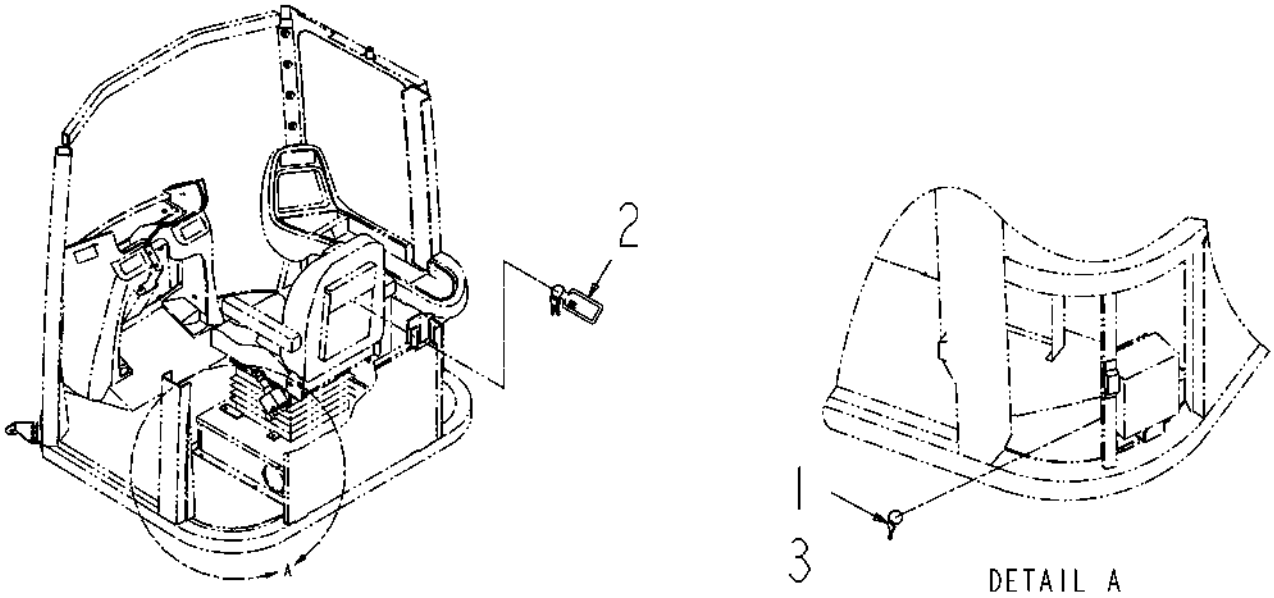

128635-A-L952-.TIF

Copyright © 2008 AGCO Corporation

OPT-KEY,OVERSEAS

ITEM	PART #	QTY	DESCRIPTION	COMMENTS
1	AG120354	1	KEY RWK	
2	WR129807	1	KEYCHAIN-LEATHER,SC	
3	AG559024	AR	TIE CABLE 15.0 .06-4.00 BLACK	

Copyright © 2008 AGCO Corporation

Please refer to the Bill Of Material on the opposite page for related Installations, Assemblies, or Parts

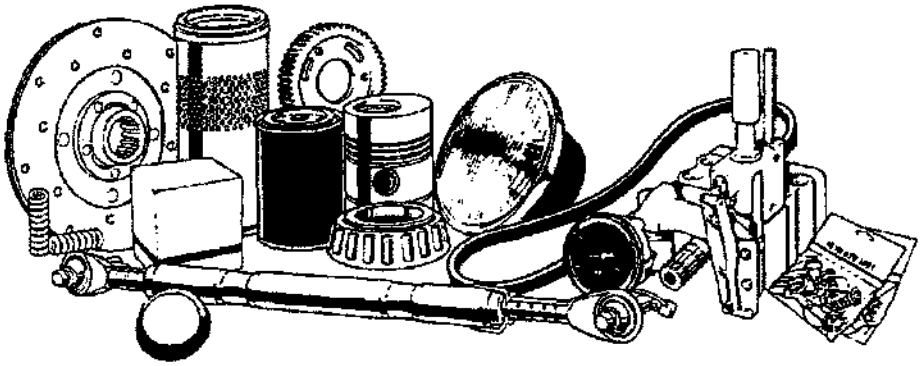

132403.TIF

Copyright © 2008 AGCO Corporation

OPT-500 HR FWA FILTER KIT

ITEM	PART #	QTY	DESCRIPTION	COMMENTS
1	WR125335	2	ELEMENT-HYD,NO-BYPASS	
2	AG715586	2	ELEMENT FILTER	

Copyright © 2008 AGCO Corporation

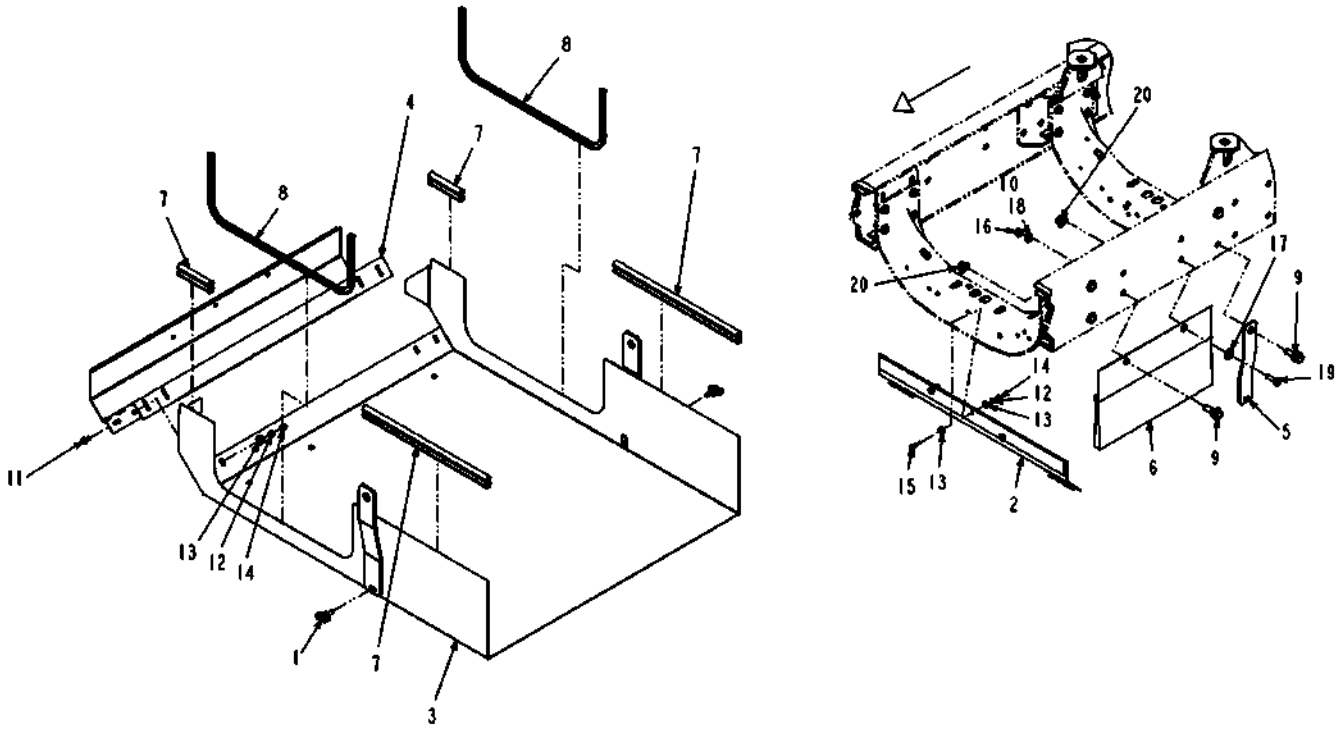

135710-05-R554-.TIF

Copyright © 2008 AGCO Corporation

BELLYPAN-INSTALL,FRONT,7000

ITEM	PART #	QTY	DESCRIPTION	COMMENTS
1	AG133274	2	SCREW-THUMB,.31-18NCX.75 ZY	
2	WR135687	1	WLDMT-SHIELD,BELLY PAN,FRONT	
3	WR135688	1	WLDMT-BELLY PAN,FRONT	
4	AG135697	1	PLATE-WELD,FRONT PAN	
5	WR135705	2	PLATE-MNT,BELLY PAN,FRONT,SIDE	
6	WR135706	2	SEAL-BRUSH&HOLDER,10.0 X 19.5	
7	6513152	-	SEAL [BULK: 3.334 FT]	
8	6620417	-	RUBBER-STRIP [BULK: 5 FT]	
9	AG517556	2	BOLT 0.62-18 X 1.75 G8 HX FLG	
10	AG518989	AR	SEALANT NONCORROSIVE 10.3 OZ	
11	AG550485	4	BOLT 0.25-20NCX 0.75 G5 ZN HHD	
12	AG550493	7	WASHER 0.25 LK ZN REG	
13	AG550507	10	WASHER 0.25 FL ZN REG TYPE-B	
14	AG550612	7	NUT 0.25-20NC HEX ZN REG	
15	AG558788	3	BOLT 0.25-20NCX 1.25 G5 ZN HHD	
16	AG562045	-	NUT 0.50-13NC HEX SS REG	
17	AG562046	-	WASHER 0.50 FL SS REG TYPE-B	
18	AG562053	-	WASHER 0.50 LK SS REG	
19	AG562117	1	BOLT 0.50-13NCX 1.50 S.S. HHD	
20	AG609313	6	NUT HX FLG 0.62-18NF	

Copyright © 2008 AGCO Corporation

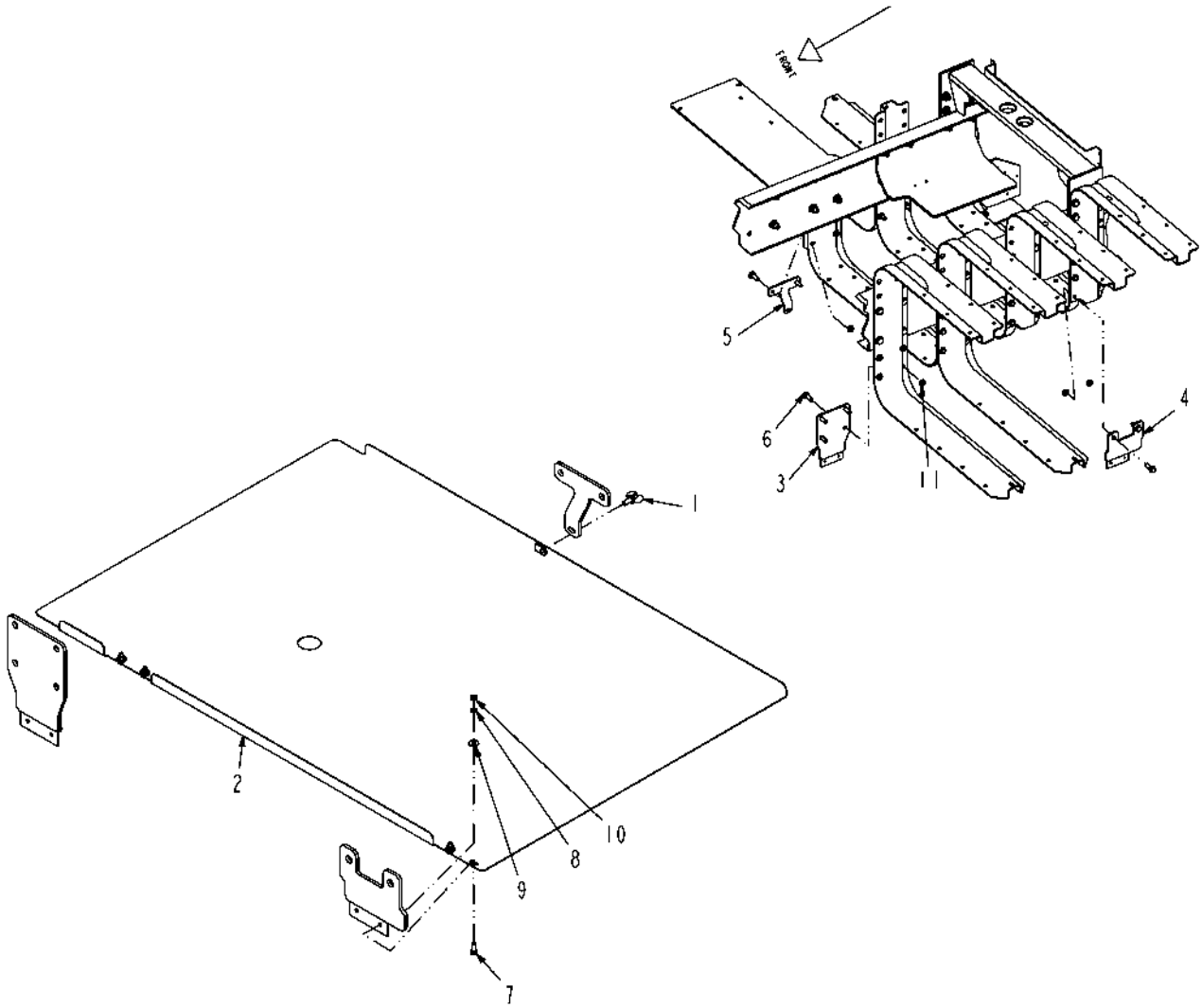

135711-01-M516.TIF

Copyright © 2008 AGCO Corporation

BELLYPAN-INSTALL,MIDDLE,7000

ITEM	PART #	QTY	DESCRIPTION	COMMENTS
1	AG133274	1	SCREW-THUMB,.31-18NCX.75 ZY	
2	WR135689	1	WLDMT-BELLY PAN,MID	
3	WR135691	1	WLDMT-BRKT,MOUNT,MID,FNT	
4	WR135692	1	WLDMT-BRKT,MOUNT,MID,REAR	
5	AG135704	1	PLATE-MNT,BELLY PAN,RH,MID	
6	AG514771	4	BOLT 0.50-20 X 1.50 G8 HX FLG	
7	AG550485	4	BOLT 0.25-20NCX 0.75 G5 ZN HHD	
8	AG550493	4	WASHER 0.25 LK ZN REG	
9	AG550507	4	WASHER 0.25 FL ZN REG TYPE-B	
10	AG550612	4	NUT 0.25-20NC HEX ZN REG	
11	AG606489	4	NUT HX FLG 0.50-20NF	

Copyright © 2008 AGCO Corporation

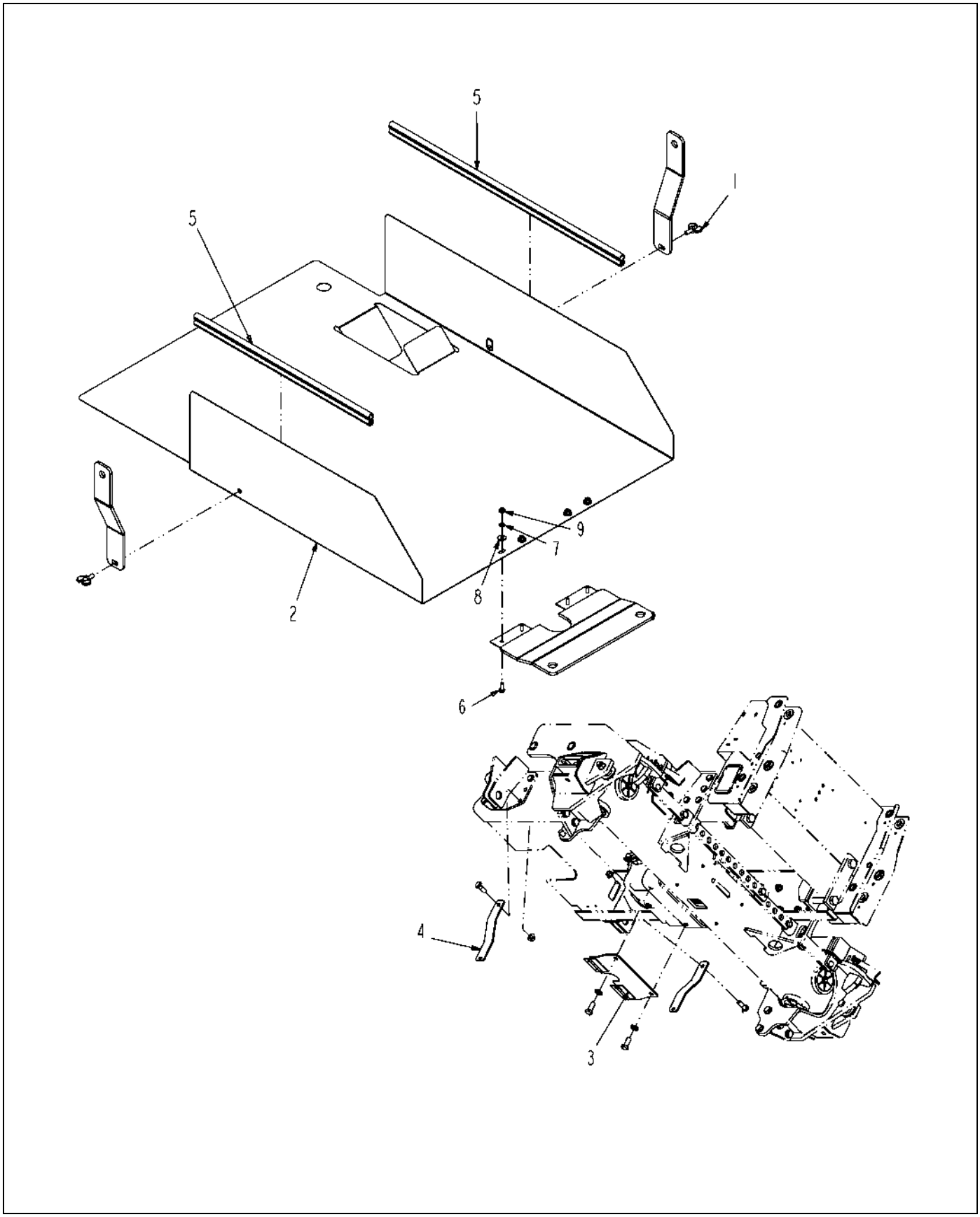

135712-01-M516.TIF

Copyright © 2008 AGCO Corporation

BELLYPAN-INSTAL,REAR,7000

ITEM	PART #	QTY	DESCRIPTION	COMMENTS
1	AG133274	2	SCREW-THUMB,.31-18NCX.75 ZY	
2	WR135690	1	WLDMT-BELLY PAN,REAR	
3	WR135693	1	WLDMT-BRKT,MOUNT,REAR	
4	WR135703	2	PLATE-MNT,BELLY PAN,REAR,SIDE	
5	6513152	-	SEAL [BULK: 4.250 FT]	
6	AG550485	4	BOLT 0.25-20NCX 0.75 G5 ZN HHD	
7	AG550493	7	WASHER 0.25 LK ZN REG	
8	AG550507	10	WASHER 0.25 FL ZN REG TYPE-B	
9	AG550612	7	NUT 0.25-20NC HEX ZN REG	

Copyright © 2008 AGCO Corporation

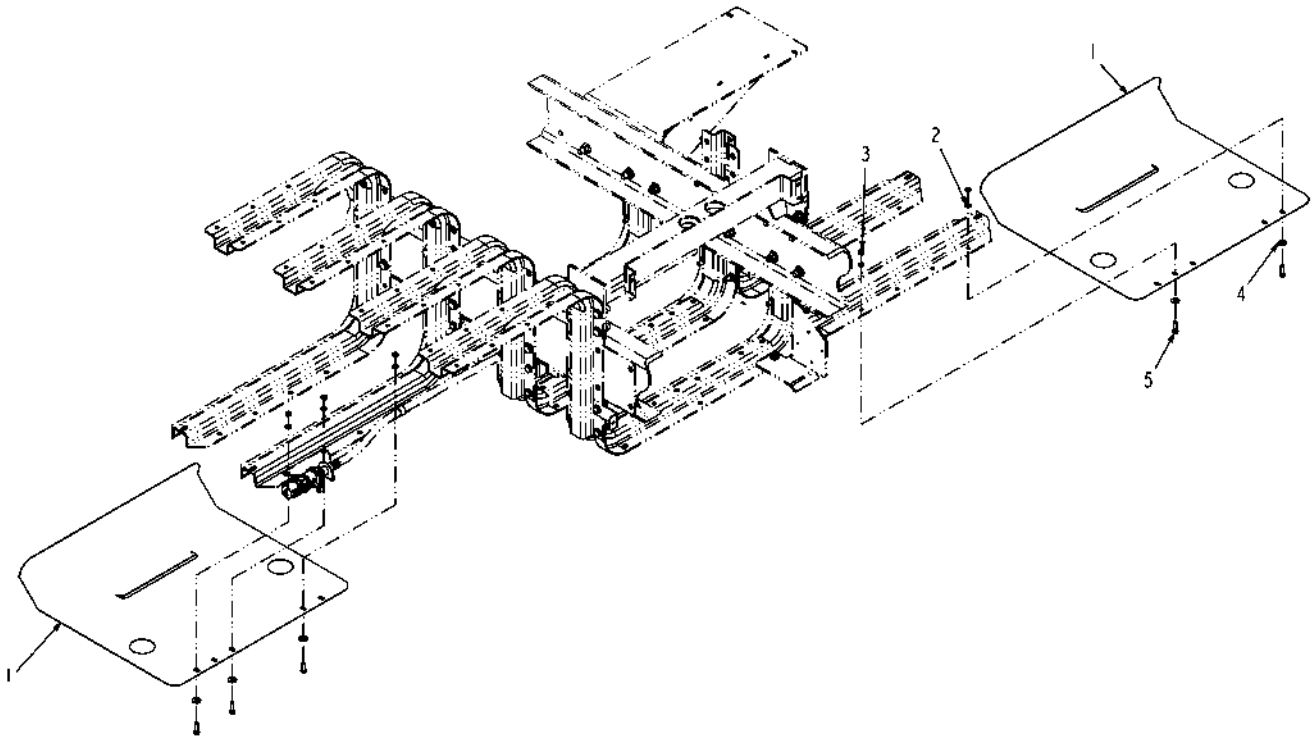

135713-01-M516.TIF

Copyright © 2008 AGCO Corporation

BELLYPAN-INSTALL,TANK SHIELDS

ITEM	PART #	QTY	DESCRIPTION	COMMENTS
1	WR135709	2	PLATE-BELLY PAN,TANK SHIELD	
2	AG562050	2	WASHER 0.37 LK SS REG	
3	AG562065	2	NUT 0.37-16NC HEX SS REG	
4	AG562073	2	WASHER 0.37 FL SS R/B 523061	
5	AG604167	2	BOLT 0.37-16NCX 1.25 S.S. HHD	

Copyright © 2008 AGCO Corporation

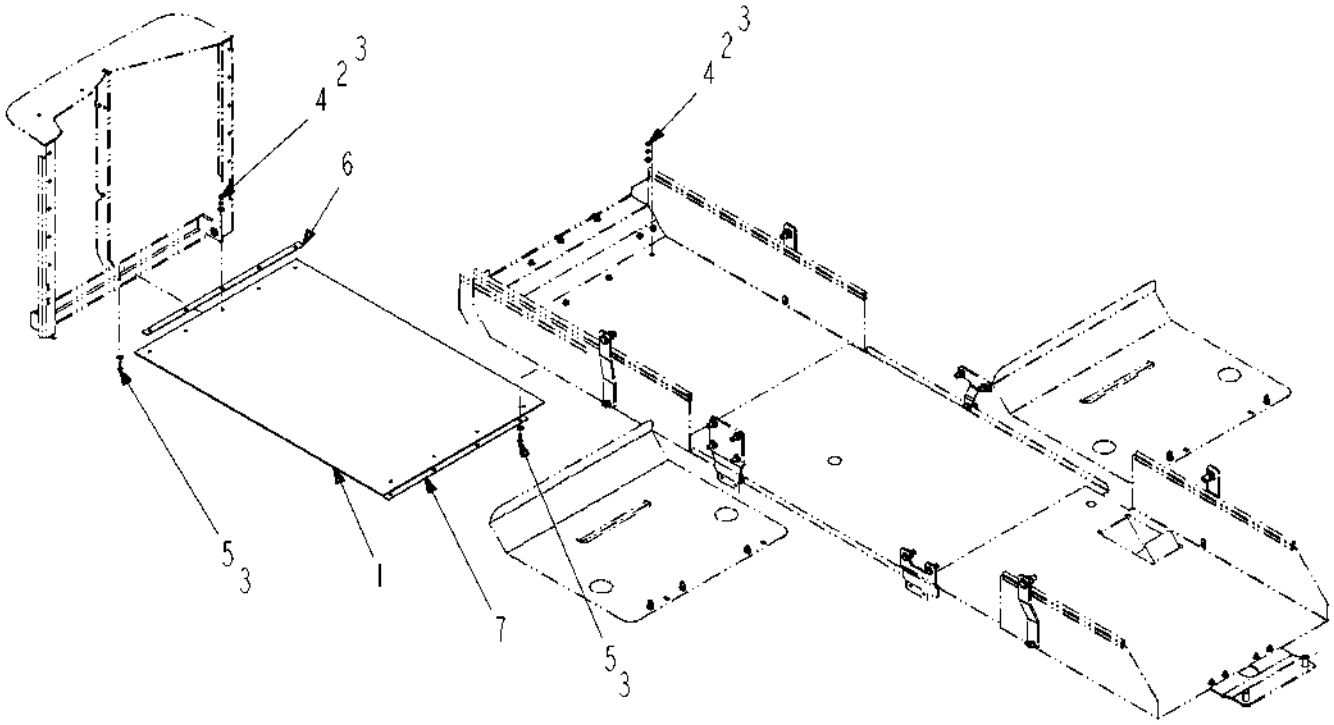

136377-05-R751-.TIF

Copyright © 2008 AGCO Corporation

BELTING INSTAL-BELLYPAN

ITEM	PART #	QTY	DESCRIPTION	COMMENTS
1	WR136369	1	BELTING-RUBBER,AXLE TRANSITION	
2	AG550493	9	WASHER 0.25 LK ZN REG	
3	AG550507	18	WASHER 0.25 FL ZN REG TYPE-B	
4	AG550612	9	NUT 0.25-20NC HEX ZN REG	
5	AG550698	9	BOLT 0.25-20NCX 1.00 G5 ZN HHD	
6	511889D1	1	PLATE-REINFORCE,RUBBER	
7	522211D1	1	PLATE-REINFORCE.RUBBER,REAR	

Copyright © 2008 AGCO Corporation

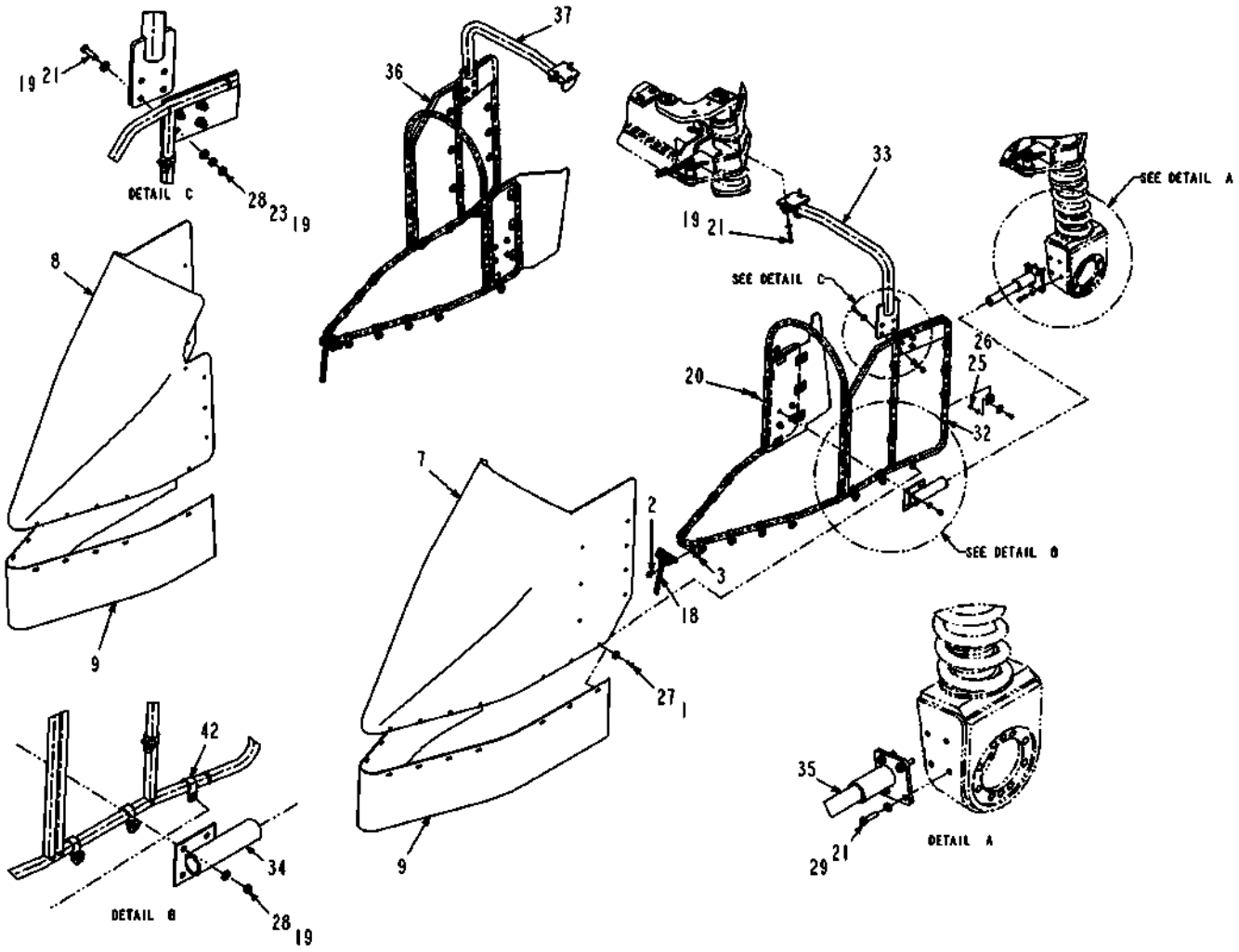

518830D1-02-R616-01.TIF

Copyright © 2008 AGCO Corporation

F/A-CROP SHIELDS,COUPE

ITEM	PART #	QTY	DESCRIPTION	COMMENTS
1	WR10436	90	WASHER-FENDER, 1/4 ID	
2	WR55215	8	SCREW-HEX FLG,M10X1.5X25 CL8.8	
3	WR55272	8	NUT-LOCK,M10 X 1.5,PREV	
6	WR133937	2	SHIELD-CROP,INNER,REAR	
7	WR133938	1	SHIELD-CROP,POLY,FRONT,LH	
8	WR133941	1	SHIELD-CROP,POLY,FRONT,RH	
9	WR133942	2	APRON-CROP SHIELD,FRONT	
18	WR134447	4	SPRING-APRON	
19	AG514559	56	WASHER 0.37 FL ZN SAE TYP-A G8	
20	AG520602	20	BOLT-.38-16X1.00,G5,S,FLG,HHD	
21	AG522905	24	BOLT .37-16NCX 1.50 G5 ZN FTD	
23	AG550191	12	WASHER 0.37 LK ZN REG	
25	AG550612	104	NUT 0.25-20NC HEX ZN REG	
27	AG550698	94	BOLT 0.25-20NCX 1.00 G5 ZN HHD	
28	AG550825	34	NUT 0.37-16NC HEX ZN REG	
29	AG550981	8	WASHER 0.37 FL ZN NAR TYPE-B	
32	515938D1	1	WLDMT-SHIELD FRAME,LH	
33	515947D1	1	WLDMT-FRAME,SUPPORT,LH	
34	516009D1	2	WLDMT-SHIELD MNT,RECEIVING	
35	516011D1	2	WLDMT-WHEEL LEG,MOUNTING	
36	516407D1	1	WLDMT-SHIELD FRAME,RH	
37	518678D1	1	WLDMT-FRAME,SUPPORT,RH	
40	519227D1	1	INSTR-CROP SHIELDS,COUPE	
41	519228D1	1	PKG-CROP SHIELDS,COUPE	
42	WR55665	82	CLAMP-COATED 1.0 ID X .62W	

Copyright © 2008 AGCO Corporation

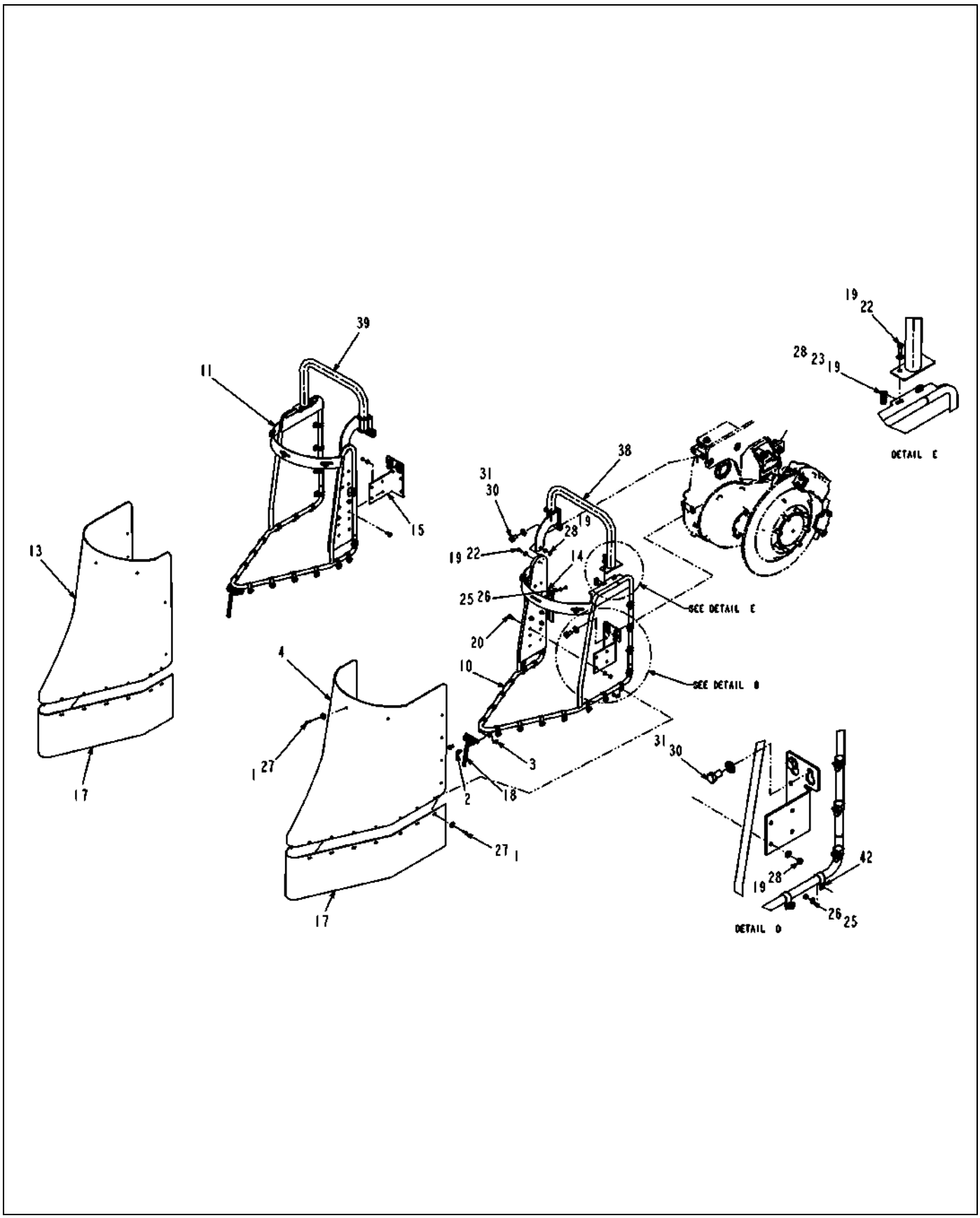

518830D1-02-R616-02.TIF

Copyright © 2008 AGCO Corporation

F/A-CROP SHIELDS,COUPE

ITEM	PART #	QTY	DESCRIPTION	COMMENTS
1	WR10436	90	WASHER-FENDER, 1/4 ID	
2	WR55215	8	SCREW-HEX FLG,M10X1.5X25 CL8.8	
3	WR55272	8	NUT-LOCK,M10 X 1.5,PREV	
4	WR133927	1	SHIELD-CROP,POLY,REAR,LH	
10	WR134247	1	FRAME WLDMT-CROP SHLD,REAR,LH	
11	WR134258	1	FRAME WLDMT-CROP SHLD,REAR,RH	
13	WR134439	1	SHIELD-CROP,POLY,REAR,RH	
14	WR134440	1	WLDMT-BRKT,MTG,CROP SHIELD,LH	
15	WR134441	1	WLDMT-BRKT,MTG,CROP SHIELD,RH	
17	WR134445	2	APRON-CROP SHIELD,REAR	
18	WR134447	4	SPRING-APRON	
19	AG514559	56	WASHER 0.37 FL ZN SAE TYP-A G8	
20	AG520602	20	BOLT-.38-16X1.00,G5,S,FLG,HHD	
22	AG550175	6	BOLT 0.37-16NCX 1.00 G5 ZN HHD	
23	AG550191	12	WASHER 0.37 LK ZN REG	
25	AG550612	104	NUT 0.25-20NC HEX ZN REG	
26	AG550671	122	WASHER 0.25 FL ZN SAE TYPE-A	
27	AG550698	94	BOLT 0.25-20NCX 1.00 G5 ZN HHD	
28	AG550825	34	NUT 0.37-16NC HEX ZN REG	
30	AG560073	8	BOLT 0.75-10NCX 1.25 G5 ZN HHD	
31	AG604203	8	WASHER 0.75 FL ZN SAE TYP-A G8	
38	518805D1	1	WLDMT-SUPPORT,REAR SHIELD,LH	
39	518806D1	1	WLDMT-SUPPORT,REAR SHIELD,RH	
42	WR55665	82	CLAMP-COATED 1.0 ID X .62W	

Copyright © 2008 AGCO Corporation

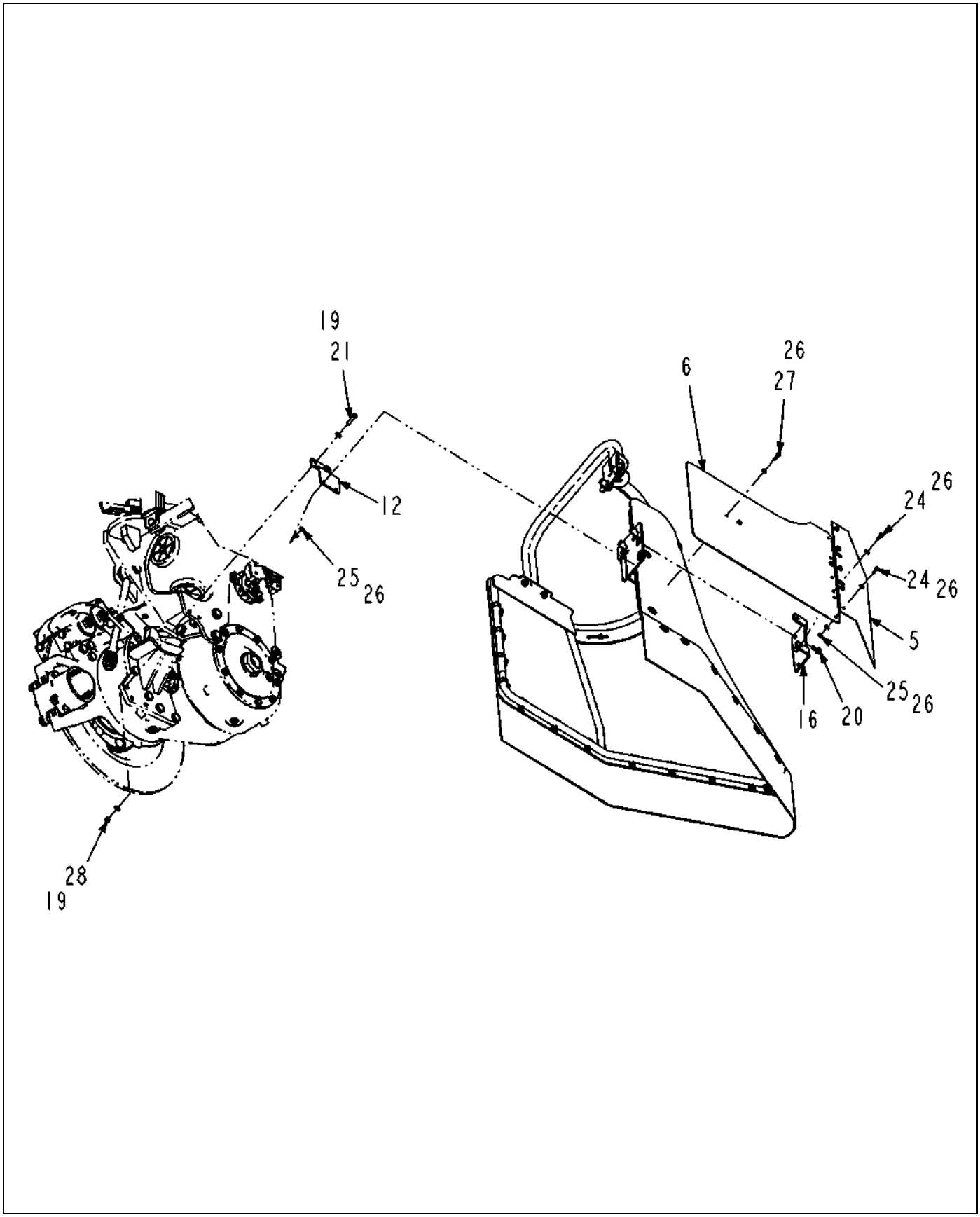

518830D1-02-R616-03.TIF

Copyright © 2008 AGCO Corporation

F/A-CROP SHIELDS,COUPE

ITEM	PART #	QTY	DESCRIPTION	COMMENTS
5	WR133936	2	SHIELD-CROP,INNER	
6	WR133937	2	SHIELD-CROP,INNER,REAR	
12	WR134264	2	BRKT-CROP SHIELD,INNER	
16	WR134444	2	WLDMT-BRKT,CROP SHIELD,INNER	
19	AG514559	56	WASHER 0.37 FL ZN SAE TYP-A G8	
20	AG520602	20	BOLT-.38-16X1.00,G5,S,FLG,HHD	
21	AG522905	24	BOLT .37-16NCX 1.50 G5 ZN FTD	
24	AG550485	14	BOLT 0.25-20NCX 0.75 G5 ZN HHD	
25	AG550612	104	NUT 0.25-20NC HEX ZN REG	
26	AG550671	122	WASHER 0.25 FL ZN SAE TYPE-A	
27	AG550698	94	BOLT 0.25-20NCX 1.00 G5 ZN HHD	
28	AG550825	34	NUT 0.37-16NC HEX ZN REG	

Copyright © 2008 AGCO Corporation

Please refer to the Bill Of Material on the opposite page for related Installations, Assemblies, or Parts

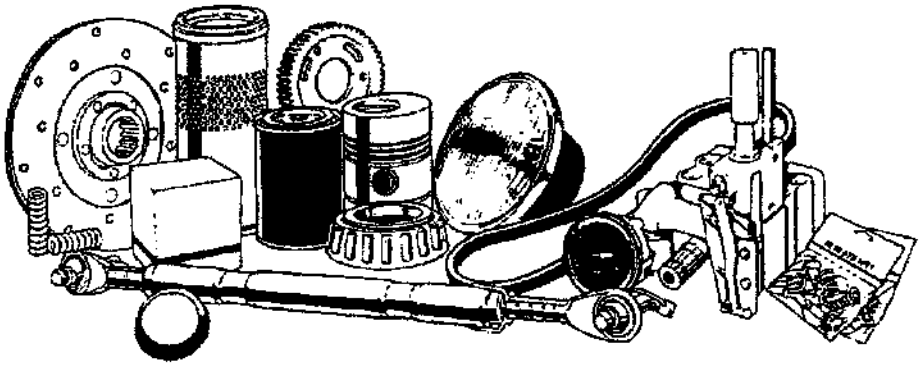

520033D1.tif

Copyright © 2008 AGCO Corporation

F/A-50 HR FILTER KIT

ITEM	PART #	QTY	DESCRIPTION	COMMENTS
1	521059D1	1	FILTER-FUEL,PRIMARY	
2	119-4740	1	FILTER, OIL	
3	AG715586	1	ELEMENT FILTER	
4	521058D1	2	FILTER-OIL,ENGINE	
5	521057D1	1	ELEMENT-FWS	

Copyright © 2008 AGCO Corporation

Please refer to the Bill Of Material on the opposite page for related Installations, Assemblies, or Parts

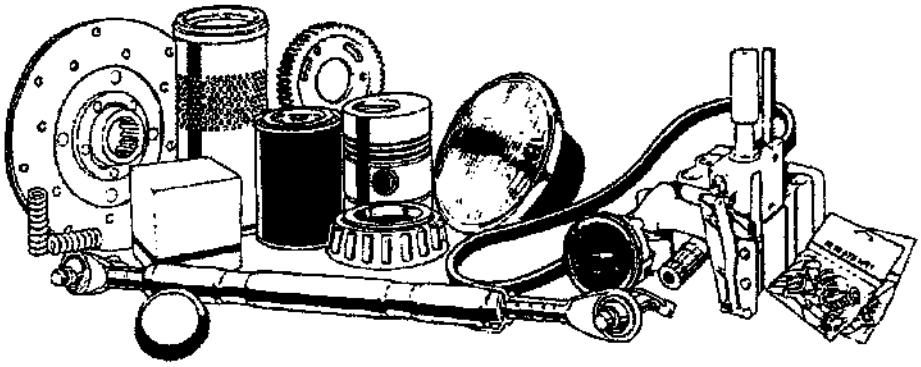

520034D1.tif

Copyright © 2008 AGCO Corporation

F/A-500 HR FILTER KIT

ITEM	PART #	QTY	DESCRIPTION	COMMENTS
1	AG121778	1	FILTER BREATHER,HYD. TANK	
2	523084D1	1	FILTER-AIR PRIMARY	
3	523085D1	1	FILTER-AIR SECONDARY	
4	521059D1	2	FILTER-FUEL,PRIMARY	
5	119-4740	1	FILTER, OIL	
6	AG523347	1	FILTER-AIR,NEW CAB,RECIRC	
7	AG523348	1	FILTER-AIR,NEW CAB,VAPOR/DUST	
8	AG715586	1	ELEMENT FILTER	
9	521058D1	4	FILTER-OIL,ENGINE	
10	521057D1	2	ELEMENT-FWS	

Copyright © 2008 AGCO Corporation

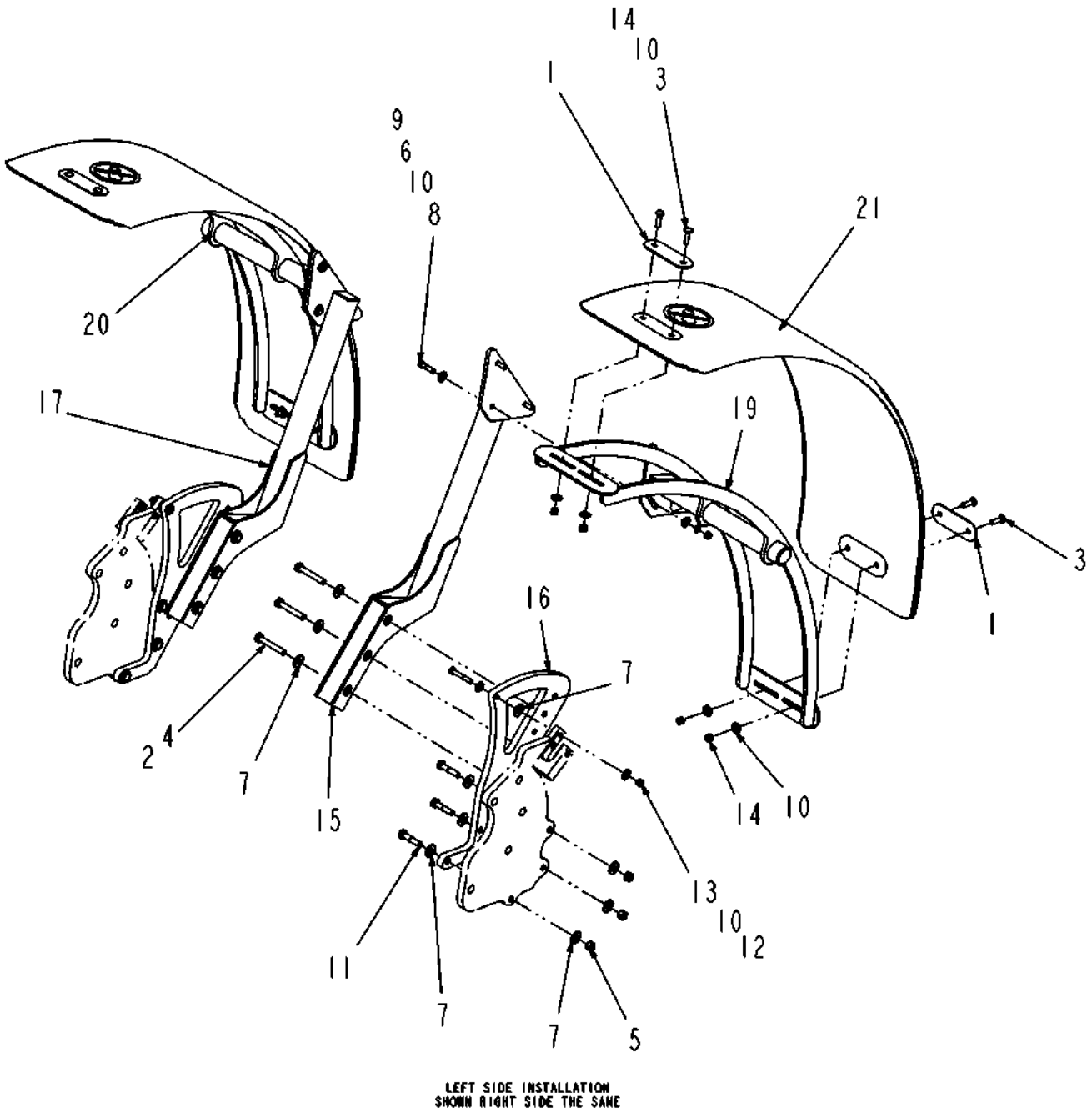

524365D1-02-T105-.TIF

Copyright © 2008 AGCO Corporation

F/A-FENDER,7460,REAR,HYD

ITEM	PART #	QTY	DESCRIPTION	COMMENTS
1	AG236763	4	PLATE-MOUNTING,FENDER	
2	AG512885	AR	LOCTITE ADHESIVE SEALANT BLUE	
3	AG520944	6	BOLT-.38-16X1.5,G5,BLK,CRG	
4	AG524262	6	BOLT-.50-20X4.00,G8,ZN,HHD	
5	AG550124	6	NUT 0.50-13NC HEX ZN REG	
6	AG550191	6	WASHER 0.37 LK ZN REG	
7	AG550353	20	WASHER 0.50 FL ZN REG TYPE-B	
8	AG550779	6	BOLT 0.37-16NCX 1.50 G5 ZN HHD	
9	AG550825	6	NUT 0.37-16NC HEX ZN REG	
10	AG551007	24	WASHER 0.37 FL ZN REG TYPE-B	
11	AG551244	6	BOLT.50-13NCX 2.25G5 ZN HHD	
12	AG556203	2	BOLT 0.37-16NCX 2.50 G8 ZN HHD	
13	AG557676	2	NUT 0.37-16NC HEX ZN C-LK	
14	AG601411	8	NUT 0.37-16NC HEX ZN REG NY	
15	512058D1	1	WLDMT-MNT,FENDER,LH	
16	512061D1	2	PLATE-REAR,FENDER MOUNT	
17	512063D1	1	WLDMT-MNT,FENDER,RH	
18	519212D1	1	PKG-REAR,FENDER,COUPE	
19	522259D1	1	WLDMT-FENDER,SUPPORT,REAR	
20	522260D1	1	WLDMT-FENDER,SUPPORT,REAR	
21	524194D1	2	FENDER-AGCO,POLY	
22	524372D1	1	INSTR-REAR,FENDER,7460,HYD	

Copyright © 2008 AGCO Corporation

Please refer to the Bill Of Material on the opposite page for related Installations, Assemblies, or Parts

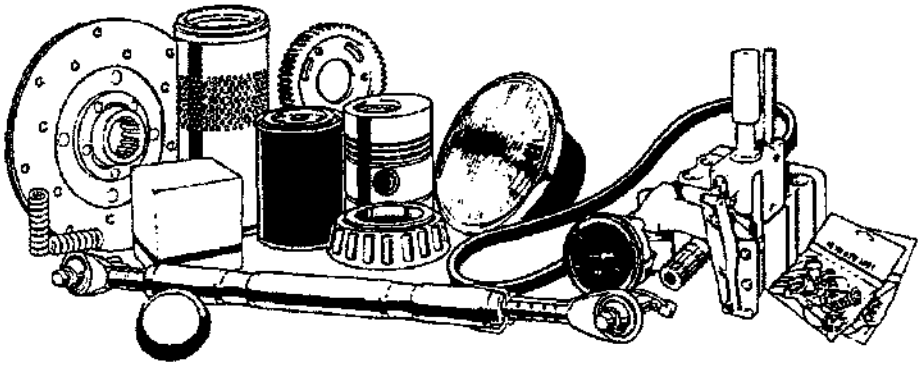

520538D1.tif

Copyright © 2008 AGCO Corporation

COVER-I/O ASM FIELD INSTALL

ITEM	PART #	QTY	DESCRIPTION	COMMENTS
1	516006D1	1	MODULE ASM-I/O,CAN	
2	520539D1	1	INSTRUCTIONS	
3	520596D1	1	PACKAGING	

Copyright © 2008 AGCO Corporation

NUMERIC INDEX

104-3288	2-3
106-9861	2-1
117-2911	2-6
119-4740	15-15
119-4740	15-16
119-4740	2-2
120-9762	2-1
121-0694	2-3
121-0885	2-4
121-2059	2-3
121-2060	2-3
121-2061	2-3
121-2500	2-3
121-4036	2-1
121-7385	2-1
121-7396	2-1
121-7398	2-3
121-7399	2-3
121-7400	2-3
121-7401	2-3
121-7402	2-3
122-1877	2-3
122-1879	2-3
122-1886	2-2
122-1886	2-3
130-0013	2-5
130-0912	2-6
136-5598	9-21
136-5598	9-7
1387380	2-2
147-0202	2-2
147-0202	2-3
147-0202	2-4
147-0203	2-3
147-0205	2-4
147-0209	2-1
147-0211	2-2
147-0215	2-3
147-0216	2-3
147-0218	2-1
147-0224	2-3
147-0226	2-1
147-0228	2-3
147-0232	2-2
147-0234	2-1
147-0236	2-1
147-0238	2-3
147-0239	2-2
147-0242	2-4
147-0258	2-4
147-0259	2-3
147-0260	2-4
147-0262	2-1
147-0266	2-1
150-7732	2-2
157-2088	2-4
178-9566	2-4
180-2825	7-36
180-2825	7-37
184-1112	2-1
184-1704	7-36
184-1704	7-37
189-5746	2-1
197-4519	7-15
197-4520	7-15
197-4521	7-15
197-4525	7-15
197-4526	7-15
197-4527	7-15
197-4529	7-15
197-4530	7-17
197-4531	7-17
197-4532	7-17
197-4533	7-17
197-4534	7-17
197-4537	7-17
197-4538	7-17
197-4544	7-15
197-4544	7-17
197-4546	7-15
197-4547	7-17
197-4548	7-17
197-4550	7-15
202-0040	2-6
203-8025	2-2
208-8240	2-1
216-2267	2-1
237-5185	2-2
238-1968	2-1
238-7562	2-1
238-7567	2-3
274-4553	2-2
274-4553	2-3
274-4557	2-2
274-4557	2-3
274-4557	2-4
274-4559	2-7
274-4559	2-8
274-4560	2-4
274-4560	2-7
274-4575	2-1
274-4577	2-2
274-4581	2-1
281-218	2-2
3808561M2	12-2
3J-1907	2-2
3J-9196	2-5
400053X1	1-9
400059X1	11-29
400059X1	11-35
400059X1	1-2
400059X1	4-21
400060X1	1-6
400127X1	1-6
400152X1	6-108
400152X1	6-112
400152X1	6-116
400152X1	6-60
400152X1	6-62
400152X1	6-76
400167X1	7-14
400167X1	7-18
400191X1	1-2
400221X1	7-27
400231X1	8-63
400241X1	11-29
400241X1	11-35
400287X1	1-2
400318X1	2-1
400339X1	1-2
400339X1	1-9
400340X1	1-6
400340X1	1-8
400341X1	1-2
400341X1	1-8
400341X1	1-9
400381X1	8-63
400599X1	1-6
400599X1	1-8
400611X1	2-1
400667X1	6-72
401074X1	4-52
401075X1	4-52
401076X1	4-52
401253X1	6-9
401468X1	5-1
401481X1	4-43
401481X1	4-44
401481X1	4-48
401481X1	4-49
401559X1	9-11
401559X1	9-13
401582X1	6-7
401619X1	2-9
401658X1	7-62
401704X1	4-25
401704X1	4-30
401704X1	4-34
401704X1	4-39
401704X1	4-58
401704X1	4-62
4274275M91	10-10
4F-7391	2-1
4F-7952	2-1
4F-7952	2-2
500749D1	12-10
500749D1	12-5
500749D1	12-6
500749D1	12-7
500749D1	12-8
500749D1	12-9
501272D1	12-11
501272D1	12-15
501272D1	12-19
501272D1	12-23
501899D1	7-15
501902D1	7-15

NUMERIC INDEX

501903D1 7-17
501906D1 7-17
501907D2 7-17
501911D1 7-15
501917D1 7-17
501918D1 7-17
501919D1 7-17
501920D1 7-17
501922D1 7-17
502269D1 7-56
502925D1 7-15
502928D1 7-15
502929D1 7-15
503036D2 7-14
503052D1 12-5
503052D1 12-7
503079D2 7-18
503365D1 7-68
503480D1 4-23
503480D1 4-32
503483D1 4-24
503484D1 4-24
503491D1 4-24
503491D1 4-33
503492D1 4-25
503492D1 4-34
503528D1 6-32
503554D1 6-32
503558D1 6-8
504038D1 12-10
504038D1 12-4
504038D1 12-9
504041D1 7-11
504166D1 12-10
504166D1 12-4
504166D1 12-9
504167D1 12-10
504167D1 12-4
504167D1 12-9
504168D1 12-10
504168D1 12-4
504168D1 12-9
504169D1 12-10
504169D1 12-4
504169D1 12-9
505081D1 9-4
505081D1 9-8
505082D1 9-19
505561D1 8-59
505565D1 2-1
505565D1 2-10
505565D1 8-10
505565D1 8-15
505565D1 8-20
505565D1 8-5
505671D1 8-63
505696D1 7-27
505696D1 7-28
505802D1 8-63
506596D1 7-24
506596D1 7-25
506596D1 7-26
506596D1 7-30
507123D1 7-2
507124D1 7-6
507125D1 7-85
507125D1 7-87
507125D1 7-95
507158D1 7-57
507159D1 7-57
507160D1 7-57
507634D1 10-3
507634D1 10-4
507951D1 8-29
507952D1 8-27
507952D1 8-33
507952D1 8-38
507952D1 8-42
507952D1 8-52
507952D1 8-53
507953D1 8-53
507955D1 8-34
508099D1 7-23
508100D1 7-23
508101D1 7-23
508102D1 7-23
508103D1 7-23
508104D1 7-23
508105D1 7-23
508106D1 7-23
508107D1 7-23
508108D1 7-23
508109D1 10-10
508110D1 10-10
508111D1 10-10
508112D1 7-23
508113D1 7-23
508116D1 7-21
508130D1 7-85
508130D1 7-87
508130D1 7-95
508170D1 8-24
508170D1 8-35
508170D1 8-73
508171D1 8-30
508171D1 8-39
508171D1 8-79
508229D1 7-15
508230D1 7-15
508231D1 7-15
508231D1 7-19
508234D1 7-15
508234D1 7-19
508235D1 7-15
508239D1 7-19
508256D1 7-19
508257D1 7-19
508258D1 7-19
508259D1 7-19
508260D1 7-19
508261D1 7-19
508262D1 7-19
508263D1 7-19
508264D1 7-19
508265D1 7-20
508266D1 7-20
508267D1 7-20
508268D1 7-20
508269D1 7-20
508270D1 7-20
508271D1 7-20
508272D1 7-20
508273D1 7-20
508274D1 7-20
508275D1 7-20
508467D1 4-43
508467D1 4-44
508467D1 4-48
508467D1 4-49
508479D1 4-42
508703D1 7-68
508718D1 8-63
509054D1 10-3
509054D1 10-4
509111D1 8-43
509111D1 8-44
509111D1 8-45
509630D1 7-24
509631D1 7-25
509632D1 7-26
509637D1 7-29
509644D1 9-10
509644D1 9-6
509945D1 6-7
511089D1 12-12
511089D1 12-20
511090D1 12-16
511090D1 12-24
511107D1 12-13
511107D1 12-21
511108D1 12-17
511108D1 12-25
511127D1 12-12
511127D1 12-13
511127D1 12-20
511127D1 12-21
511128D1 12-16
511128D1 12-17
511128D1 12-24
511128D1 12-25
511133D1 12-13
511133D1 12-21
511134D1 12-17
511134D1 12-25
511199D1 12-12
511199D1 12-20
511200D1 12-16

NUMERIC INDEX

511200D1 12-24
511201D1 12-12
511201D1 12-20
511202D1 12-16
511202D1 12-24
511205D1 12-12
511205D1 12-13
511205D1 12-20
511205D1 12-21
511206D1 12-16
511206D1 12-17
511206D1 12-24
511206D1 12-25
511207D1 12-12
511207D1 12-13
511207D1 12-20
511207D1 12-21
511208D1 12-16
511208D1 12-17
511208D1 12-24
511208D1 12-25
511209D1 12-13
511209D1 12-21
511210D1 12-17
511210D1 12-25
511364D1 4-45
511364D1 4-50
511375D1 15-2
511412D1 12-12
511412D1 12-20
511413D1 12-16
511413D1 12-24
511415D1 12-13
511415D1 12-21
511416D1 12-17
511416D1 12-25
511486D1 10-1
511487D1 7-7
511555D1 4-29
511560D1 4-29
511769D1 4-30
511769D1 4-34
511770D1 4-30
511770D1 4-34
511798D1 7-27
511813D1 1-6
511872D1 15-2
511889D1 15-11
511890D1 11-14
511890D1 11-15
511890D1 11-5
511890D1 11-6
511920D1 11-8
511920D1 11-9
511983D1 7-13
511984D1 7-11
512002D1 6-50
512058D1 10-2
512058D1 15-17
512061D1 10-2
512061D1 15-17
512063D1 10-2
512063D1 15-17
512328D1 11-11
512328D1 11-12
512328D1 11-2
512328D1 11-3
512336D1 4-58
512336D1 4-62
512337D1 4-30
512337D1 4-39
512339D1 4-47
512357D1 4-33
512670D1 8-10
512670D1 8-12
512670D1 8-13
512670D1 8-15
512670D1 8-17
512670D1 8-18
512670D1 8-5
512670D1 8-7
512670D1 8-8
512671D1 8-11
512671D1 8-12
512671D1 8-14
512671D1 8-16
512671D1 8-17
512671D1 8-19
512671D1 8-21
512671D1 8-22
512671D1 8-4
512671D1 8-56
512671D1 8-59
512671D1 8-6
512671D1 8-60
512671D1 8-7
512671D1 8-9
512672D1 8-20
512672D1 8-22
512672D1 8-23
512906D1 7-5
513016D1 8-24
513016D1 8-30
513016D1 8-35
513016D1 8-39
513016D1 8-73
513016D1 8-79
513025D1 1-1
513029D1 1-9
513030D1 1-1
513031D1 1-9
513032D1 1-9
513033D1 1-2
513038D1 1-8
513041D1 1-6
513042D1 1-6
513044D1 8-10
513044D1 8-11
513044D1 8-12
513044D1 8-13
513044D1 8-4
513044D1 8-5
513044D1 8-6
513044D1 8-7
513044D1 8-8
513044D1 8-9
513045D1 1-7
513046D1 1-9
513048D1 1-4
513049D1 1-5
513113D1 1-7
513114D1 1-6
513121D1 1-1
513122D1 1-2
513124D1 1-2
513125D1 1-4
513214D1 7-27
513763D1 8-48
513764D1 8-11
513764D1 8-16
513764D1 8-21
513764D1 8-47
513764D1 8-6
513765D1 8-31
513765D1 8-32
513765D1 8-33
513765D1 8-40
513765D1 8-41
513765D1 8-42
513766D1 8-24
513766D1 8-35
513766D1 8-73
513772D1 8-14
513772D1 8-19
513772D1 8-4
513772D1 8-9
513775D1 8-25
513775D1 8-26
513775D1 8-27
513775D1 8-36
513775D1 8-37
513775D1 8-38
513779D1 5-1
513800D1 1-1
513918D1 6-56
513965D1 7-36
513965D1 7-37
513994D1 7-11
513995D1 7-11
513996D1 7-11
513996D1 7-88
514090D1 3-4
514090D1 3-5
514096D1 3-4
514096D1 3-5
514101D1 4-42
514101D1 4-47

NUMERIC INDEX

514345D1 6-51
514345D1 6-53
514384D1 7-29
514387D1 7-15
514592D1 15-1
514593D1 13-1
514593D1 15-1
514594D1 13-1
514594D1 15-1
514596D1 13-1
514596D1 15-1
514600D1 7-83
514613D1 11-26
514613D1 11-30
514614D1 11-26
514614D1 11-30
514616D1 11-27
514616D1 11-31
514617D1 11-27
514617D1 11-31
514618D1 11-28
514618D1 11-32
514619D1 11-28
514619D1 11-32
514620D1 7-81
514620D1 8-3
514647D1 11-1
514647D1 11-17
514648D1 11-1
514648D1 11-17
514649D1 11-2
514649D1 11-3
514651D1 11-18
514651D1 11-4
514652D1 11-18
514652D1 11-4
514653D1 11-5
514653D1 11-6
514801D1 11-29
514801D1 11-35
514802D1 11-29
514802D1 11-35
514823D1 13-1
514823D1 15-1
514824D1 14-1
514825D1 14-1
514826D1 14-2
514829D1 14-4
514831D1 14-3
514833D1 14-6
514835D1 14-5
514906D1 7-24
514906D1 7-25
514906D1 7-26
514934D1 4-43
514937D1 4-43
514937D1 4-48
514943D1 4-44
514948D1 4-44
514948D1 4-49
514951D1 15-2
514978D1 11-37
514979D1 11-37
515004D1 11-16
515004D1 11-7
515005D1 11-16
515005D1 11-7
515006D1 11-8
515006D1 11-9
515008D1 11-10
515008D1 11-19
515009D1 11-10
515009D1 11-19
515010D1 11-11
515010D1 11-12
515012D1 11-13
515012D1 11-20
515013D1 11-13
515013D1 11-20
515014D1 11-14
515014D1 11-15
515017D1 11-36
515018D1 11-36
515091D1 1-9
515093D1 7-71
515094D1 7-71
515100D1 8-24
515100D1 8-30
515100D1 8-35
515100D1 8-39
515100D1 8-73
515100D1 8-79
515148D1 7-71
515149D1 7-68
515151D1 4-41
515151D1 4-46
515156D1 4-43
515156D1 4-44
515156D1 4-48
515156D1 4-49
515157D1 6-3
515167D1 4-42
515167D1 4-47
515194D1 4-48
515195D1 4-49
515232D1 4-33
515233D1 4-33
515282D1 6-23
515282D1 6-26
515282D1 6-74
515283D1 6-3
515352D1 7-3
515468D1 9-1
515468D1 9-15
515469D1 9-16
515469D1 9-2
515520D1 8-1
515520D1 8-70
515521D1 8-1
515523D1 8-25
515523D1 8-26
515523D1 8-31
515523D1 8-32
515523D1 8-36
515523D1 8-37
515523D1 8-40
515523D1 8-41
515757D1 1-1
515758D1 1-1
515767D1 2-9
515768D1 5-1
515778D1 8-30
515778D1 8-39
515778D1 8-79
515779D1 8-48
515780D1 8-48
515782D1 1-4
515784D1 8-68
515812D1 6-52
515894D1 9-3
515938D1 15-12
515938D1 15-2
515947D1 15-12
516006D1 15-18
516006D1 8-45
516006D1 8-51
516009D1 15-12
516011D1 15-12
516407D1 15-12
516407D1 15-2
516443D1 11-33
516443D1 11-34
516446D1 11-33
516446D1 11-34
516474D1 7-2
516474D1 8-1
516585D1 6-1
516586D1 6-1
516588D1 8-3
516596D1 7-82
516693D1 7-37
516694D1 7-36
516698D1 7-27
516949D1 14-3
516950D1 14-3
516993D1 14-3
517063D1 6-89
517112D1 3-4
517254D1 12-5
517254D1 12-6
517254D1 12-9
517255D1 12-10
517255D1 12-7
517255D1 12-8
517400D1 14-5
517401D1 14-5
517402D1 14-5

NUMERIC INDEX

517402D1 14-6
517403D1 8-24
517403D1 8-25
517403D1 8-30
517403D1 8-31
517403D1 8-35
517403D1 8-36
517403D1 8-39
517403D1 8-40
517403D1 8-73
517403D1 8-74
517403D1 8-79
517403D1 8-80
517470D1 11-33
517470D1 11-34
517527D1 2-9
517537D1 1-1
517803D1 8-54
517804D1 13-2
517804D1 8-54
517805D1 8-55
517815D1 9-17
517816D1 9-18
517817D1 9-17
517849D1 9-6
517850D1 9-6
517851D1 9-4
517852D1 9-4
517855D1 9-15
517856D1 9-15
517857D1 9-16
517858D1 9-16
517863D1 9-1
517863D1 9-2
517863D1 9-3
517898D1 15-1
517948D1 9-10
517948D1 9-6
517949D1 9-4
517949D1 9-8
517950D1 3-4
517950D1 8-15
517950D1 8-5
517950D1 8-9
517960D1 8-54
518015D1 15-1
518305D1 6-23
518305D1 6-26
518354D1 6-80
518355D1 6-80
518356D1 6-80
518356D1 6-81
518357D1 6-80
518357D1 6-81
518359D1 6-80
518392D1 6-60
518393D1 6-115
518393D1 6-118
518397D1 6-62
518398D1 6-111
518398D1 6-114
518400D1 6-110
518400D1 6-114
518400D1 6-118
518401D1 6-6
518405D1 4-38
518406D1 4-38
518447D1 13-3
518488D1 1-8
518498D1 4-29
518498D1 4-38
518531D1 6-116
518531D1 6-60
518532D1 6-60
518533D1 6-112
518533D1 6-116
518533D1 6-60
518533D1 6-62
518534D1 6-112
518534D1 6-116
518534D1 6-60
518534D1 6-62
518535D1 6-113
518535D1 6-117
518535D1 6-61
518535D1 6-63
518536D1 6-113
518536D1 6-117
518536D1 6-61
518536D1 6-63
518557D1 1-8
518678D1 15-12
518805D1 15-13
518805D1 15-3
518806D1 15-13
518806D1 15-3
518950D1 6-64
518950D1 6-69
518952D1 6-69
518953D1 6-69
518954D1 6-69
518957D1 6-67
518957D1 6-70
519005D1 6-17
519210D1 10-4
519210D1 11-34
519212D1 10-8
519212D1 11-35
519212D1 15-17
519227D1 15-12
519228D1 15-12
519228D1 15-2
519244D1 1-7
519275D1 9-11
519462D1 4-57
519463D1 4-57
519489D1 4-62
519491D1 4-57
519491D1 4-61
519493D1 4-57
519608D1 12-12
519608D1 12-20
519609D1 12-16
519609D1 12-24
520008D1 4-62
520039D1 6-7
520050D1 7-87
520052D1 7-85
520052D1 7-95
520100D1 12-12
520100D1 12-16
520100D1 12-20
520100D1 12-24
520179D1 7-31
520180D1 7-32
520181D1 7-33
520182D1 7-34
520184D1 7-36
520184D1 7-37
520186D1 4-61
520187D1 4-61
520272D1 4-21
520273D1 4-21
520274D1 4-20
520283D1 7-67
520284D1 4-20
520330D1 8-45
520465D1 3-3
520467D1 3-3
520469D1 3-1
520470D1 3-1
520471D1 3-1
520482D1 6-78
520493D1 6-78
520539D1 15-18
520587D1 6-78
520587D1 6-79
520596D1 15-18
520663D1 7-11
520782D1 6-36
520782D1 6-37
520784D1 6-33
520794D1 11-40
520794D1 11-41
520816D1 6-78
520819D1 6-80
520822D1 6-107
520822D1 6-110
520823D1 6-76
520827D1 6-72
520838D1 6-55
520847D1 6-8
520887D1 6-78
520888D1 6-78
520891D1 6-80
520892D1 6-80
521057D1 1-3

NUMERIC INDEX

521057D1 15-15
521057D1 15-16
521058D1 1-3
521058D1 15-15
521058D1 15-16
521059D1 1-3
521059D1 15-15
521059D1 15-16
521145D1 6-73
521146D1 6-73
521151D1 6-73
521152D1 6-73
521153D1 6-72
521154D1 6-72
521155D1 6-72
521184D1 6-82
521184D1 6-83
521189D1 9-13
521190D1 9-13
521457D1 6-34
521457D1 6-39
521457D1 6-42
521457D1 6-55
521458D1 6-34
521458D1 6-39
521458D1 6-42
521458D1 6-55
521617D1 6-112
521617D1 6-116
521617D1 6-60
521617D1 6-62
521617D1 6-86
521942D1 1-9
522061D1 10-3
522061D1 10-4
522061D1 11-33
522061D1 11-34
522211D1 15-11
522259D1 10-2
522259D1 10-7
522259D1 10-8
522259D1 11-29
522259D1 11-35
522259D1 15-17
522260D1 10-2
522260D1 10-7
522260D1 10-8
522260D1 11-29
522260D1 11-35
522260D1 15-17
522326D1 7-53
522329D1 1-6
522330D1 1-6
522331D1 1-6
522332D1 1-6
522333D1 1-6
522335D1 1-6
522418D1 1-8
522419D1 1-8
522421D1 6-33
522421D1 6-38
522421D1 6-41
522496D1 14-7
522498D1 14-7
522562D1 6-8
522589D1 1-3
522871D1 4-17
523007D1 13-2
523008D1 13-2
523010D1 5-1
523011D1 5-1
523064D1 13-1
523084D1 15-16
523085D1 15-16
523114D1 7-61
523116D1 7-63
523121D1 7-67
523124D1 7-67
523125D1 7-62
523126D1 7-64
523126D1 7-66
523127D1 7-62
523129D1 7-64
523129D1 7-66
523174D1 1-9
523250D1 12-13
523250D1 12-21
523251D1 12-17
523251D1 12-25
523252D1 12-13
523252D1 12-21
523253D1 12-17
523253D1 12-25
523260D1 10-3
523260D1 10-4
523261D1 10-3
523261D1 10-4
523387D1 10-9
523605D1 7-72
523605D1 7-73
523614D1 7-72
523614D1 7-73
523615D1 7-72
523615D1 7-73
523617D1 7-68
523657D1 7-68
523660D1 15-2
523736D1 7-75
523737D1 7-84
523738D1 7-86
523739D1 7-94
523745D1 7-88
523759D1 7-85
523760D1 7-76
523761D1 7-77
523761D1 7-92
523762D1 7-78
523763D1 7-77
523764D1 7-79
523764D1 7-93
523765D1 7-85
523765D1 7-87
523765D1 7-95
523766D1 7-88
523767D1 7-85
523858D1 7-85
523921D1 6-37
523922D1 6-36
523923D1 6-37
523923D1 6-38
523924D1 6-36
523924D1 6-41
523946D1 6-39
523947D1 6-39
523951D1 7-81
523955D1 7-87
523955D1 7-95
523956D1 7-91
523957D1 7-92
523970D1 7-85
523970D1 7-87
523970D1 7-95
523972D1 7-87
523975D1 8-70
523977D1 8-14
523977D1 8-15
523977D1 8-16
523977D1 8-17
523977D1 8-18
523985D1 7-85
523986D1 7-95
523994D1 7-77
523994D1 7-92
524025D1 6-112
524053D1 6-107
524053D1 6-110
524054D1 6-107
524054D1 6-108
524054D1 6-110
524055D1 6-111
524055D1 6-114
524056D1 6-111
524056D1 6-112
524056D1 6-114
524057D1 6-115
524057D1 6-118
524058D1 6-115
524058D1 6-116
524058D1 6-118
524059D1 6-108
524060D1 6-116
524066D1 7-90
524067D1 7-90
524068D1 7-90
524069D1 7-90
524072D1 8-71
524072D1 8-72

NUMERIC INDEX

524072D1 8-76
524072D1 8-82
524073D1 8-72
524194D1 10-2
524194D1 10-7
524194D1 10-8
524194D1 11-29
524194D1 11-35
524194D1 15-17
524195D1 10-3
524195D1 10-4
524195D1 11-33
524195D1 11-34
524286D1 7-62
524287D1 7-64
524287D1 7-66
524289D1 7-62
524290D1 7-64
524290D1 7-66
524291D1 7-62
524292D1 7-62
524298D1 7-64
524298D1 7-65
524298D1 7-66
524299D1 7-64
524299D1 7-65
524299D1 7-66
524300D1 7-64
524300D1 7-65
524300D1 7-66
524370D1 10-4
524371D1 10-8
524372D1 15-17
524373D1 11-34
524374D1 11-35
524387D1 8-69
524388D1 8-69
524389D1 8-68
524390D1 8-67
524390D1 8-68
524550D1 7-17
524551D1 7-17
524552D1 7-17
524553D1 7-17
524600D1 7-72
524600D1 7-73
524601D1 7-72
524601D1 7-73
524602D1 4-38
524603D1 4-24
524622D1 8-19
524622D1 8-20
524622D1 8-21
524622D1 8-22
524622D1 8-23
524623D1 8-80
524623D1 8-81
524623D1 8-82
524624D1 8-74
524624D1 8-75
524624D1 8-76
524625D1 8-74
524625D1 8-75
524625D1 8-80
524625D1 8-81
524649D1 7-15
524801D1 7-62
524802D1 7-65
524802D1 7-66
524806D1 12-14
524806D1 12-22
524807D1 12-18
524807D1 12-26
525056D1 6-33
525056D1 6-38
525056D1 6-41
525081D1 7-1
525082D1 7-2
525203D1 8-11
525203D1 8-4
525203D1 8-57
525210D1 7-8
525211D1 7-10
525213D1 7-53
525214D1 7-53
525384D1 7-85
525384D1 7-87
525384D1 7-95
525514D1 8-57
525861D1 7-30
525874D1 4-43
525874D1 4-48
525875D1 4-44
525875D1 4-49
527134D1 8-28
527287D1 7-79
528004D1 11-38
528004D1 11-39
528005D1 11-38
528005D1 11-39
528006D1 11-40
528006D1 11-41
528431D1 12-19
528431D1 12-23
528431D1 12-6
528431D1 12-8
528432D1 12-11
528432D1 12-15
5P-6718 2-1
6513152 15-7
6513152 15-9
6577822 1-9
6577822 5-1
6578209 6-31
6579858 8-59
6617524 7-11
6620417 15-7
6627054 7-11
6630367 6-47
6630367 6-7
6630367 6-9
6661516 7-11
6662881 6-87
6800419 7-11
6A-5591 2-2
6T-9163 2-3
6T-9164 2-3
6T-9165 2-3
6T-9166 2-1
6T-9166 2-3
6T-9196 2-3
6T-9196 2-4
6T-9202 2-1
6V-3822 2-2
6V-5215 2-1
6V-5215 2-2
6V-5842 2-1
6V-8500 2-4
6Y-1192 2-3
6Y-1896 2-1
71323841 7-17
72571170 7-69
74253787 4-54
7M-8485 2-1
7T-2646 2-3
7T-2651 2-1
7T-3195 2-1
7T-3251 2-1
7T-3253 2-2
7T-6655 2-3
7X-4741 2-1
8E-5707 2-3
8L-2786 2-1
8T-0643 2-1
8T-1580 2-4
9P-9150 2-1
9S-9334 2-1
9U-8875 2-3
9U-8875 2-4
9U-8886 2-3
9W-5460 2-1
AG000748 8-54
AG010350 8-47
AG010359 6-34
AG010359 8-12
AG010359 8-17
AG010359 8-22
AG010359 8-7
AG027274 11-22
AG027274 3-4
AG027274 7-7
AG027274 9-17
AG028995 9-10
AG028995 9-4
AG028995 9-6
AG028995 9-8
AG029293 8-24

NUMERIC INDEX

AG029293 8-30
AG029293 8-32
AG029293 8-35
AG029293 8-39
AG029293 8-46
AG029293 8-73
AG029293 8-79
AG029293 9-10
AG029293 9-5
AG029293 9-6
AG029293 9-9
AG055178 5-3
AG056442 6-57
AG058428 13-1
AG058428 14-1
AG058428 15-1
AG060814 7-46
AG060921 8-64
AG100676 1-8
AG109445 10-9
AG109445 1-8
AG109742 5-2
AG109754 5-2
AG109902 4-25
AG109902 4-30
AG109902 4-34
AG109902 4-39
AG109902 4-58
AG109902 4-62
AG109948 4-24
AG109948 4-29
AG109948 4-33
AG109948 4-38
AG109948 4-57
AG109948 4-61
AG114698 6-66
AG114698 6-71
AG114698 6-85
AG114698 6-86
AG115052 4-54
AG115054 4-54
AG115096 6-66
AG120283 10-9
AG120354 15-5
AG120615 14-1
AG120615 14-4
AG120615 14-6
AG121110 7-43
AG121198 8-46
AG121483 6-87
AG121484 6-10
AG121484 6-87
AG121485 6-87
AG121490 6-10
AG121490 6-13
AG121551 1-9
AG121587 6-15
AG121587 6-22
AG121748 8-24
AG121748 8-30
AG121749 8-24
AG121749 8-30
AG121749 8-35
AG121749 8-39
AG121749 8-73
AG121749 8-79
AG121750 8-24
AG121750 8-30
AG121750 8-35
AG121750 8-39
AG121750 8-73
AG121750 8-79
AG121750 9-10
AG121750 9-5
AG121750 9-6
AG121750 9-9
AG121751 8-12
AG121751 8-17
AG121751 8-22
AG121751 8-7
AG121768 6-45
AG121768 6-49
AG121778 15-16
AG121778 6-45
AG121778 6-49
AG121806 6-45
AG121806 6-49
AG121826 4-22
AG121826 4-27
AG121826 4-31
AG121826 4-36
AG121826 4-55
AG121826 4-59
AG121841 1-9
AG121883 8-44
AG121922 8-64
AG121924 8-64
AG121925 8-64
AG121926 8-64
AG121929 8-64
AG122058 1-1
AG122207 6-9
AG122569 1-6
AG122807 6-16
AG122986 5-1
AG122986 8-10
AG122986 8-15
AG122986 8-20
AG122986 8-5
AG123758 8-4
AG123758 8-9
AG123761 8-47
AG123817 10-9
AG123910 7-7
AG123946 14-1
AG124041 6-7
AG124431 8-2
AG124431 8-61
AG124432 7-3
AG124432 7-79
AG124432 7-93
AG124432 8-2
AG124437 7-3
AG124437 7-79
AG124437 7-93
AG124437 8-2
AG124451 8-24
AG124451 8-30
AG124451 8-35
AG124451 8-39
AG124451 8-73
AG124451 8-79
AG124452 8-24
AG124452 8-30
AG124452 8-35
AG124452 8-39
AG124452 8-73
AG124452 8-79
AG125817 1-9
AG125889 7-70
AG125890 7-70
AG126272 7-48
AG126418 7-7
AG126910 8-44
AG126910 8-60
AG127131 7-3
AG127131 7-79
AG127131 7-93
AG127137 13-3
AG127137 14-7
AG127152 4-29
AG127152 4-33
AG127321 8-12
AG127321 8-17
AG127321 8-22
AG127321 8-7
AG127341 13-3
AG127341 14-7
AG127687 7-87
AG127687 7-95
AG128276 9-10
AG128276 9-4
AG128276 9-6
AG128276 9-8
AG128285 8-46
AG128285 8-49
AG128285 8-50
AG128285 8-51
AG128727 8-43
AG129182 7-87
AG129182 7-95
AG129238 7-85
AG129238 7-87
AG129238 7-95
AG129242 8-35
AG129242 8-39
AG129242 8-73

NUMERIC INDEX

AG129242 8-79
AG129560 7-69
AG129570 8-66
AG130137 3-1
AG130506 7-52
AG130512 7-45
AG130720 7-38
AG131482 7-10
AG131482 7-9
AG131483 7-10
AG131483 7-9
AG131503 7-27
AG131731 8-64
AG131732 8-64
AG131733 8-64
AG131734 8-64
AG131735 8-64
AG131737 8-64
AG131738 8-64
AG131739 8-64
AG131743 8-64
AG131744 8-64
AG131745 8-64
AG131746 8-64
AG131747 8-64
AG131748 8-64
AG131763 2-9
AG131763 8-12
AG131763 8-14
AG131763 8-19
AG131763 8-4
AG131776 8-64
AG131873 4-2
AG131873 4-4
AG131979 4-15
AG132143 7-55
AG132360 6-82
AG132361 6-82
AG132362 6-82
AG132366 6-109
AG132366 6-77
AG132367 6-109
AG132367 6-77
AG132379 6-108
AG132379 6-76
AG132380 6-108
AG132380 6-76
AG132381 6-108
AG132381 6-76
AG132383 6-76
AG132498 7-69
AG132671 7-9
AG132723 4-16
AG132723 4-2
AG132723 4-4
AG132901 4-15
AG133274 15-7
AG133274 15-8
AG133274 15-9
AG133566 9-22
AG133727 6-21
AG133891 7-70
AG134073 7-10
AG134073 7-9
AG134156 7-62
AG134156 8-55
AG134415 7-2
AG134415 7-6
AG134415 7-77
AG134415 7-78
AG134415 7-92
AG134911 7-8
AG135697 15-7
AG135704 15-8
AG136436 2-9
AG136436 8-14
AG136436 8-19
AG136436 8-4
AG136436 8-9
AG136437 2-1
AG137722 7-35
AG137735 7-35
AG137792 7-17
AG137799 7-17
AG137812 7-17
AG139107 6-104
AG139295 7-39
AG139296 7-39
AG139297 7-39
AG139298 7-39
AG139312 7-45
AG139316 7-46
AG139317 7-46
AG139318 7-46
AG139365 6-99
AG203866 6-112
AG203866 6-62
AG220648 6-64
AG220648 6-65
AG220648 6-67
AG220648 6-68
AG220648 6-83
AG220648 6-84
AG223413 8-47
AG223415 8-47
AG229245 6-35
AG229245 6-40
AG229245 6-43
AG231952 6-66
AG231952 6-71
AG231952 6-85
AG232490 8-48
AG233052 4-23
AG233052 4-28
AG233052 4-32
AG233052 4-37
AG233052 4-42
AG233052 4-47
AG233052 4-56
AG233052 4-60
AG235004 12-2
AG235212 1-8
AG235277 6-33
AG235277 6-42
AG235880 6-34
AG235880 6-39
AG235880 6-42
AG236575 7-31
AG236575 7-32
AG236575 7-33
AG236575 7-34
AG236575 7-75
AG236575 7-84
AG236575 7-86
AG236575 7-94
AG236753 5-1
AG236763 10-2
AG236763 10-3
AG236763 10-4
AG236763 10-7
AG236763 10-8
AG236763 11-29
AG236763 11-33
AG236763 11-34
AG236763 11-35
AG236763 15-17
AG237062 6-35
AG237062 6-40
AG237062 6-43
AG237562 12-3
AG237820 7-7
AG237961 6-66
AG237961 6-71
AG237961 6-85
AG238315 6-66
AG238315 6-71
AG238315 6-85
AG238366 12-2
AG238783 12-5
AG238783 12-6
AG238783 12-7
AG238783 12-8
AG239436 12-5
AG239436 12-6
AG239436 12-7
AG239436 12-8
AG240932 6-64
AG240932 6-65
AG240932 6-67
AG240932 6-68
AG240932 6-83
AG240932 6-84
AG260517 6-34
AG260517 6-39
AG260517 6-42
AG260905 10-10
AG261591 10-1

NUMERIC INDEX

AG261592 10-1
AG262883 3-1
AG262948 11-1
AG262948 11-10
AG262948 11-13
AG262948 11-16
AG262948 11-17
AG262948 11-18
AG262948 11-19
AG262948 11-20
AG262948 11-26
AG262948 11-27
AG262948 11-28
AG262948 11-30
AG262948 11-31
AG262948 11-32
AG262948 11-36
AG262948 11-37
AG262948 11-38
AG262948 11-39
AG262948 11-4
AG262948 11-7
AG262948 12-1
AG263013 12-3
AG263132 6-112
AG263132 6-116
AG263132 6-60
AG263132 6-62
AG263132 6-66
AG263132 6-86
AG263371 6-59
AG263372 6-59
AG263373 6-58
AG263375 6-58
AG326925 13-3
AG326925 14-7
AG326925 7-27
AG326925 7-70
AG327247 3-4
AG327819 4-52
AG327819 4-53
AG327879 4-51
AG328690 6-56
AG330209 7-56
AG330209 7-57
AG330218 7-57
AG330219 7-57
AG330220 7-56
AG330221 7-56
AG330424 7-59
AG330425 7-59
AG330426 7-59
AG330427 7-12
AG330428 7-12
AG330507 7-44
AG330526 4-7
AG330527 4-7
AG330529 6-58
AG330576 7-56
AG330578 7-35
AG330668 4-2
AG330668 4-4
AG330738 7-36
AG330738 7-37
AG330739 7-55
AG330739 7-56
AG330740 7-57
AG330741 7-55
AG330742 7-55
AG330743 7-57
AG330744 7-56
AG330747 7-55
AG330747 7-57
AG330748 7-56
AG330748 7-57
AG330749 7-56
AG330749 7-57
AG330750 7-56
AG330751 7-56
AG330752 7-56
AG330753 7-56
AG330754 7-56
AG330756 7-56
AG330757 7-56
AG330759 7-56
AG330762 7-55
AG330764 7-56
AG330766 7-56
AG330767 7-56
AG330796 6-19
AG330813 7-35
AG330815 7-35
AG330816 7-35
AG330817 7-35
AG330818 7-35
AG330819 7-35
AG330820 7-35
AG330821 7-35
AG331436 8-64
AG331462 4-40
AG331463 4-40
AG331464 4-40
AG331620 8-65
AG331695 9-20
AG332161 7-56
AG332161 7-60
AG332162 7-56
AG332162 7-60
AG332233 4-54
AG332529 6-19
AG332714 9-22
AG332771 7-48
AG333302 4-54
AG333405 7-16
AG334010 7-44
AG334011 7-44
AG407964 4-52
AG420779 9-12
AG420779 9-14
AG420939 9-11
AG420939 9-13
AG420940 9-11
AG420940 9-13
AG421135 10-9
AG421135 8-10
AG421135 8-15
AG421135 8-20
AG421135 8-5
AG421136 10-9
AG421136 8-10
AG421136 8-15
AG421136 8-20
AG421136 8-5
AG425412 5-2
AG425755 8-65
AG510734 8-48
AG510939 5-1
AG510947 5-1
AG511021 6-57
AG511099 4-22
AG511099 4-27
AG511099 4-31
AG511099 4-36
AG511099 4-43
AG511099 4-44
AG511099 4-48
AG511099 4-49
AG511099 4-55
AG511099 4-59
AG511757 3-3
AG512346 5-2
AG512346 6-44
AG512346 6-48
AG512885 10-11
AG512885 10-2
AG512885 10-3
AG512885 10-4
AG512885 10-7
AG512885 10-8
AG512885 10-9
AG512885 1-1
AG512885 11-29
AG512885 11-33
AG512885 11-34
AG512885 11-35
AG512885 1-2
AG512885 15-17
AG512885 1-6
AG512885 1-7
AG512885 1-8
AG512885 1-9
AG512885 2-9
AG512885 4-21
AG512885 4-23
AG512885 4-28
AG512885 4-31
AG512885 4-37

NUMERIC INDEX

AG512885 4-42
AG512885 4-43
AG512885 4-44
AG512885 4-47
AG512885 4-48
AG512885 4-49
AG512885 4-52
AG512885 4-55
AG512885 4-59
AG512885 6-50
AG512885 6-57
AG513385 1-8
AG513423 1-8
AG513654 10-10
AG513916 1-8
AG513916 1-9
AG513916 5-1
AG513916 5-2
AG513916 6-45
AG513916 6-49
AG513916 6-57
AG514554 1-9
AG514554 3-4
AG514554 3-5
AG514554 9-11
AG514554 9-13
AG514559 10-3
AG514559 10-4
AG514559 11-33
AG514559 11-34
AG514559 15-12
AG514559 15-13
AG514559 15-14
AG514559 15-2
AG514559 15-3
AG514559 15-4
AG514559 3-1
AG514559 4-23
AG514559 4-28
AG514559 4-32
AG514559 4-37
AG514559 4-42
AG514559 4-47
AG514559 4-56
AG514559 4-60
AG514771 15-8
AG514771 4-51
AG514771 4-52
AG514771 4-53
AG514777 6-8
AG515121 3-4
AG515121 3-5
AG515121 6-17
AG515121 8-12
AG515121 8-17
AG515121 8-22
AG515121 8-45
AG515121 8-46
AG515121 8-47
AG515121 8-48
AG515121 8-7
AG515122 8-12
AG515122 8-17
AG515122 8-22
AG515122 8-45
AG515122 8-46
AG515122 8-47
AG515122 8-48
AG515122 8-51
AG515122 8-53
AG515122 8-58
AG515122 8-7
AG515122 8-72
AG515123 7-53
AG515123 8-12
AG515123 8-17
AG515123 8-22
AG515123 8-45
AG515123 8-46
AG515123 8-47
AG515123 8-48
AG515123 8-58
AG515123 8-7
AG515140 6-66
AG515140 6-71
AG515140 6-85
AG515180 1-1
AG515180 1-2
AG515180 2-9
AG515180 6-50
AG515180 6-57
AG515203 9-12
AG515203 9-14
AG515263 8-48
AG515352 4-14
AG515352 4-24
AG515352 4-29
AG515352 4-33
AG515352 4-38
AG515352 4-45
AG515352 4-50
AG515352 4-57
AG515352 4-58
AG515352 4-61
AG515352 4-62
AG515352 6-23
AG515352 6-26
AG515352 6-51
AG515352 6-53
AG515352 6-6
AG515352 6-74
AG515361 3-3
AG515373 8-58
AG515457 7-2
AG515457 7-6
AG515457 7-77
AG515457 7-78
AG515457 7-92
AG515669 8-30
AG515669 8-39
AG515669 8-79
AG515697 8-1
AG515697 8-25
AG515697 8-31
AG515697 8-36
AG515697 8-40
AG515697 8-70
AG515697 8-74
AG515697 8-80
AG515698 8-1
AG515698 8-25
AG515698 8-31
AG515698 8-36
AG515698 8-40
AG515698 8-70
AG515698 8-74
AG515698 8-80
AG515764 14-1
AG515764 14-3
AG515764 14-5
AG515764 7-62
AG515764 8-55
AG515766 14-1
AG515766 14-3
AG515766 14-5
AG515766 7-62
AG515766 8-55
AG515981 8-47
AG515983 1-9
AG516060 8-47
AG516064 4-22
AG516064 4-27
AG516064 4-31
AG516064 4-36
AG516064 4-42
AG516064 4-47
AG516064 4-55
AG516064 4-59
AG516176 7-31
AG516176 7-32
AG516176 7-33
AG516176 7-34
AG516176 7-75
AG516176 7-84
AG516176 7-86
AG516176 7-94
AG516403 6-44
AG516403 6-48
AG516482 1-7
AG516517 6-66
AG516580 7-13
AG516864 8-24
AG516864 8-35
AG516864 8-73
AG517097 6-66
AG517097 6-71
AG517097 6-85

NUMERIC INDEX

AG517156 8-26
AG517156 8-32
AG517156 8-37
AG517156 8-41
AG517156 8-75
AG517156 8-81
AG517157 8-26
AG517157 8-32
AG517157 8-37
AG517157 8-41
AG517157 8-54
AG517157 8-75
AG517157 8-81
AG517158 8-24
AG517158 8-26
AG517158 8-32
AG517158 8-35
AG517158 8-37
AG517158 8-41
AG517158 8-54
AG517158 8-75
AG517158 8-81
AG517159 8-54
AG517469 6-34
AG517469 6-39
AG517469 6-42
AG517471 6-39
AG517471 6-42
AG517556 15-7
AG517556 3-3
AG517556 4-22
AG517556 4-27
AG517556 4-31
AG517556 4-32
AG517556 4-36
AG517556 4-51
AG517556 4-52
AG517556 4-53
AG517556 4-55
AG517556 4-59
AG517618 14-1
AG517618 14-3
AG517618 14-5
AG517618 7-62
AG517618 8-55
AG517724 8-51
AG517766 11-11
AG517766 11-12
AG517766 11-14
AG517766 11-15
AG517766 11-2
AG517766 11-3
AG517766 11-40
AG517766 11-41
AG517766 11-5
AG517766 11-6
AG517766 11-8
AG517766 11-9
AG517802 6-49
AG517845 1-8
AG517845 1-9
AG517942 14-2
AG517942 14-4
AG517942 14-6
AG517942 8-52
AG517942 8-63
AG517942 8-71
AG518038 9-12
AG518038 9-14
AG518304 6-56
AG518357 6-50
AG518357 6-57
AG518361 4-51
AG518421 6-57
AG518505 4-24
AG518505 4-29
AG518505 4-33
AG518505 4-38
AG518505 4-43
AG518505 4-44
AG518505 4-48
AG518505 4-49
AG518505 4-57
AG518505 4-61
AG518511 4-24
AG518511 4-29
AG518511 4-33
AG518511 4-38
AG518511 4-43
AG518511 4-44
AG518511 4-48
AG518511 4-49
AG518511 4-57
AG518511 4-61
AG518524 7-54
AG518989 15-7
AG518989 7-5
AG518989 8-14
AG518989 8-19
AG518989 8-4
AG518989 8-58
AG518989 8-60
AG518989 8-63
AG518989 8-9
AG519113 4-25
AG519113 4-30
AG519113 4-34
AG519113 4-39
AG519113 4-58
AG519113 4-60
AG519113 4-62
AG519113 6-32
AG519123 6-23
AG519123 6-24
AG519123 6-26
AG519123 6-27
AG519123 6-31
AG519123 6-45
AG519123 6-49
AG519123 6-74
AG519123 6-75
AG519184 4-23
AG519184 4-28
AG519184 4-32
AG519184 4-37
AG519184 4-42
AG519184 4-47
AG519184 4-56
AG519184 4-60
AG519203 3-3
AG519210 9-14
AG519211 9-12
AG519278 7-53
AG519288 14-1
AG519288 14-3
AG519288 14-5
AG519288 7-62
AG519288 8-55
AG519527 6-64
AG519527 6-67
AG519527 6-83
AG519570 6-45
AG519570 6-49
AG519741 1-9
AG519742 10-9
AG519766 6-31
AG519802 10-5
AG519802 10-6
AG519802 3-1
AG519861 6-108
AG519861 6-112
AG519861 6-116
AG519861 6-60
AG519861 6-62
AG519861 6-76
AG519862 6-108
AG519862 6-112
AG519862 6-116
AG519862 6-60
AG519862 6-62
AG519862 6-76
AG520052 8-24
AG520052 8-30
AG520052 8-35
AG520052 8-39
AG520052 8-73
AG520052 8-79
AG520092 8-24
AG520092 8-30
AG520092 8-35
AG520092 8-39
AG520092 8-73
AG520092 8-79
AG520093 8-24
AG520093 8-30
AG520093 8-35
AG520093 8-39

NUMERIC INDEX

AG520093 8-47
AG520093 8-73
AG520093 8-79
AG520209 1-9
AG520270 14-1
AG520270 14-3
AG520270 14-5
AG520270 7-62
AG520270 8-55
AG520285 6-20
AG520285 6-23
AG520285 6-24
AG520285 6-31
AG520285 6-9
AG520318 8-26
AG520318 8-32
AG520318 8-37
AG520318 8-41
AG520318 8-75
AG520318 8-81
AG520327 7-11
AG520602 15-12
AG520602 15-13
AG520602 15-14
AG520602 15-2
AG520602 15-3
AG520602 15-4
AG520614 3-4
AG520614 3-5
AG520614 6-66
AG520614 9-11
AG520614 9-13
AG520617 6-45
AG520617 6-49
AG520627 6-17
AG520628 10-11
AG520628 6-17
AG520640 7-31
AG520640 7-32
AG520640 7-33
AG520640 7-34
AG520640 7-75
AG520640 7-84
AG520640 7-86
AG520640 7-94
AG520691 4-20
AG520746 8-26
AG520746 8-37
AG520746 8-75
AG520772 8-57
AG520859 8-45
AG520862 7-3
AG520862 7-79
AG520862 7-93
AG520879 10-9
AG520879 7-27
AG520879 7-8
AG520879 8-24
AG520879 8-30
AG520879 8-35
AG520879 8-39
AG520879 8-73
AG520879 8-79
AG520880 14-1
AG520880 2-9
AG520880 7-74
AG520885 6-34
AG520885 6-35
AG520885 6-38
AG520885 6-39
AG520885 6-40
AG520885 6-42
AG520885 6-43
AG520905 10-9
AG520910 8-47
AG520911 7-6
AG520911 7-78
AG520929 3-1
AG520944 10-2
AG520944 10-3
AG520944 10-4
AG520944 10-7
AG520944 10-8
AG520944 11-29
AG520944 11-33
AG520944 11-34
AG520944 11-35
AG520944 15-17
AG520967 7-11
AG520967 7-88
AG520989 10-12
AG520989 10-13
AG521009 3-4
AG521009 3-5
AG521048 8-49
AG521048 8-50
AG521048 8-51
AG521283 10-9
AG521342 3-1
AG521359 8-11
AG521359 8-16
AG521359 8-21
AG521359 8-56
AG521359 8-6
AG521557 10-11
AG521557 10-9
AG521558 10-11
AG521558 10-9
AG521587 6-66
AG521587 6-71
AG521587 6-85
AG521657 10-11
AG521657 10-9
AG521690 11-24
AG521690 11-25
AG521728 8-10
AG521728 8-11
AG521728 8-15
AG521728 8-16
AG521728 8-20
AG521728 8-21
AG521728 8-5
AG521728 8-53
AG521728 8-56
AG521728 8-6
AG521728 8-72
AG521730 7-8
AG521792 7-21
AG521797 1-2
AG521891 9-11
AG521891 9-13
AG521943 10-9
AG521944 10-9
AG522058 6-6
AG522183 5-1
AG522193 1-2
AG522220 2-10
AG522220 2-11
AG522231 7-2
AG522231 7-77
AG522231 7-92
AG522242 8-10
AG522242 8-15
AG522242 8-20
AG522242 8-5
AG522247 14-7
AG522247 2-10
AG522247 2-11
AG522307 6-46
AG522378 1-6
AG522410 8-49
AG522410 8-50
AG522410 8-52
AG522410 8-71
AG522453 5-1
AG522562 10-5
AG522562 10-6
AG522562 10-9
AG522562 1-9
AG522562 3-1
AG522562 3-2
AG522562 3-3
AG522562 5-1
AG522562 8-12
AG522562 8-17
AG522562 8-22
AG522562 8-7
AG522562 9-11
AG522562 9-13
AG522571 3-2
AG522710 1-2
AG522710 7-31
AG522710 7-32
AG522710 7-33
AG522710 7-34
AG522710 7-75
AG522710 7-84

NUMERIC INDEX

AG522710 7-86
AG522710 7-94
AG522715 8-63
AG522717 8-63
AG522719 1-2
AG522723 4-43
AG522723 4-44
AG522723 4-48
AG522723 4-49
AG522753 8-63
AG522877 4-18
AG522905 15-12
AG522905 15-14
AG522905 15-2
AG522905 4-57
AG522905 4-61
AG522907 9-17
AG522989 1-2
AG523074 7-81
AG523074 8-3
AG523111 11-25
AG523200 10-1
AG523200 14-2
AG523200 14-4
AG523200 14-6
AG523201 10-1
AG523201 14-2
AG523201 14-4
AG523201 14-6
AG523227 7-64
AG523347 15-16
AG523347 7-36
AG523347 7-37
AG523348 15-16
AG523348 7-36
AG523348 7-37
AG523348 7-48
AG523464 7-69
AG523508 13-3
AG523508 14-7
AG523508 2-10
AG523508 2-11
AG523508 7-2
AG523508 7-70
AG523508 7-77
AG523508 7-92
AG523533 6-35
AG523533 6-40
AG523533 6-43
AG523544 6-32
AG523581 8-47
AG523785 7-81
AG523785 8-3
AG523786 7-81
AG523786 8-3
AG523787 7-81
AG523787 8-3
AG523814 3-4
AG523871 6-32
AG523871 6-45
AG523871 6-49
AG523877 10-9
AG523910 6-8
AG523919 5-1
AG523964 6-7
AG524244 7-80
AG524262 10-2
AG524262 15-17
AG550108 11-21
AG550124 10-2
AG550124 10-7
AG550124 10-8
AG550124 15-17
AG550124 1-7
AG550124 1-8
AG550124 6-17
AG550132 10-7
AG550132 10-8
AG550132 1-9
AG550132 4-14
AG550132 6-51
AG550132 6-53
AG550167 11-21
AG550175 10-3
AG550175 10-4
AG550175 10-9
AG550175 11-33
AG550175 11-34
AG550175 1-4
AG550175 1-5
AG550175 15-13
AG550175 15-2
AG550175 15-3
AG550175 1-7
AG550175 4-53
AG550175 6-34
AG550175 6-35
AG550175 6-39
AG550175 6-40
AG550175 6-42
AG550175 6-43
AG550175 6-86
AG550175 7-7
AG550183 10-10
AG550183 10-11
AG550183 10-9
AG550183 6-17
AG550183 7-11
AG550183 7-19
AG550183 7-88
AG550191 10-2
AG550191 10-7
AG550191 10-8
AG550191 11-21
AG550191 15-12
AG550191 15-13
AG550191 15-17
AG550191 15-2
AG550191 15-3
AG550191 7-7
AG550191 7-70
AG550205 1-8
AG550205 6-17
AG550205 6-30
AG550205 6-8
AG550205 7-6
AG550205 7-78
AG550213 6-17
AG550213 6-8
AG550213 7-19
AG550213 8-47
AG550256 6-17
AG550256 7-1
AG550256 7-76
AG550256 7-91
AG550264 1-8
AG550264 6-17
AG550264 6-8
AG550280 4-23
AG550280 4-28
AG550280 4-32
AG550280 4-37
AG550280 4-42
AG550280 4-47
AG550280 4-56
AG550280 4-60
AG550337 7-11
AG550353 10-2
AG550353 10-7
AG550353 10-8
AG550353 15-17
AG550353 1-8
AG550353 4-14
AG550353 5-2
AG550353 6-17
AG550353 6-51
AG550353 6-53
AG550353 7-1
AG550353 7-76
AG550353 7-91
AG550485 10-1
AG550485 10-10
AG550485 15-14
AG550485 15-4
AG550485 15-7
AG550485 15-8
AG550485 15-9
AG550485 6-17
AG550493 10-10
AG550493 15-11
AG550493 15-7
AG550493 15-8
AG550493 15-9
AG550493 6-17
AG550493 8-45
AG550493 9-18
AG550507 10-10

NUMERIC INDEX

AG550507 15-11
AG550507 15-7
AG550507 15-8
AG550507 15-9
AG550507 7-22
AG550507 8-45
AG550507 8-59
AG550515 11-33
AG550515 11-34
AG550515 4-24
AG550515 4-29
AG550515 4-33
AG550515 4-38
AG550515 5-1
AG550515 6-71
AG550515 6-85
AG550515 6-86
AG550515 7-7
AG550566 10-9
AG550612 10-10
AG550612 15-11
AG550612 15-12
AG550612 15-13
AG550612 15-14
AG550612 15-2
AG550612 15-3
AG550612 15-4
AG550612 15-7
AG550612 15-8
AG550612 15-9
AG550612 8-45
AG550671 15-13
AG550671 15-14
AG550671 15-2
AG550671 15-3
AG550671 15-4
AG550671 6-108
AG550671 6-112
AG550671 6-116
AG550671 6-60
AG550671 6-62
AG550671 6-72
AG550671 6-76
AG550671 6-78
AG550671 6-80
AG550671 7-8
AG550698 15-11
AG550698 15-12
AG550698 15-13
AG550698 15-14
AG550698 15-2
AG550698 15-3
AG550698 15-4
AG550698 6-72
AG550698 6-78
AG550698 6-80
AG550698 7-11
AG550698 8-59
AG550779 10-2
AG550779 10-7
AG550779 10-8
AG550779 15-17
AG550779 15-4
AG550817 1-8
AG550825 10-2
AG550825 10-7
AG550825 10-8
AG550825 1-1
AG550825 1-4
AG550825 1-5
AG550825 15-12
AG550825 15-13
AG550825 15-14
AG550825 15-17
AG550825 15-2
AG550825 15-3
AG550825 15-4
AG550825 4-53
AG550825 7-19
AG550825 7-7
AG550892 10-9
AG550914 14-1
AG550914 7-62
AG550914 7-72
AG550914 7-73
AG550914 7-74
AG550914 8-25
AG550914 8-31
AG550914 8-36
AG550914 8-40
AG550914 8-74
AG550914 8-80
AG550914 9-18
AG550922 14-1
AG550922 7-62
AG550922 7-72
AG550922 7-73
AG550922 7-74
AG550922 8-25
AG550922 8-31
AG550922 8-36
AG550922 8-40
AG550922 8-74
AG550922 8-80
AG550922 9-18
AG550930 14-1
AG550930 7-74
AG550949 10-9
AG550957 7-62
AG550981 15-12
AG550981 15-2
AG550981 4-24
AG550981 4-29
AG550981 4-33
AG550981 4-38
AG550981 4-57
AG550981 4-61
AG550981 6-112
AG550981 6-116
AG550981 6-34
AG550981 6-35
AG550981 6-39
AG550981 6-40
AG550981 6-42
AG550981 6-43
AG550981 6-60
AG550981 6-62
AG550981 6-86
AG550981 7-7
AG551007 10-2
AG551007 10-7
AG551007 10-8
AG551007 11-29
AG551007 11-35
AG551007 13-3
AG551007 14-7
AG551007 15-17
AG551007 3-1
AG551007 4-53
AG551007 6-71
AG551007 6-85
AG551007 6-86
AG551007 7-27
AG551015 10-10
AG551015 10-11
AG551015 10-9
AG551015 7-11
AG551015 7-6
AG551015 7-7
AG551015 7-78
AG551015 7-88
AG551112 6-32
AG551139 6-28
AG551139 6-32
AG551139 6-69
AG551139 6-70
AG551139 6-82
AG551139 6-9
AG551244 10-2
AG551244 15-17
AG551244 1-7
AG551244 3-5
AG551252 10-9
AG551252 6-17
AG551252 6-30
AG551252 6-8
AG551252 7-6
AG551252 7-78
AG551317 7-6
AG551317 7-78
AG551406 10-9
AG551503 6-112
AG551503 6-116
AG551503 6-60
AG551503 6-62
AG551856 6-23
AG551856 6-26

NUMERIC INDEX

AG551856 6-74
AG552127 10-7
AG552127 10-8
AG552186 1-8
AG552186 6-15
AG552186 6-22
AG552240 10-3
AG552240 10-4
AG552240 11-33
AG552240 11-34
AG552240 6-66
AG552275 10-9
AG553115 1-9
AG553174 5-1
AG553182 7-6
AG553182 7-78
AG553441 1-8
AG553514 6-69
AG553514 6-70
AG553514 6-82
AG553530 6-46
AG553557 10-11
AG553557 14-2
AG553557 14-4
AG553557 14-6
AG553557 6-108
AG553557 6-112
AG553557 6-116
AG553557 6-60
AG553557 6-62
AG553557 6-76
AG553557 8-14
AG553557 8-19
AG553557 8-24
AG553557 8-30
AG553557 8-35
AG553557 8-39
AG553557 8-4
AG553557 8-52
AG553557 8-62
AG553557 8-63
AG553557 8-71
AG553557 8-73
AG553557 8-79
AG553557 8-9
AG553662 1-1
AG553670 7-2
AG553670 7-77
AG553670 7-92
AG553670 8-24
AG553670 8-35
AG553670 8-73
AG553867 1-8
AG553891 6-45
AG553956 10-11
AG554022 4-14
AG554022 6-51
AG554022 6-53
AG554510 1-8
AG554510 6-45
AG554537 4-24
AG554537 4-38
AG554537 4-61
AG554855 10-10
AG554898 8-17
AG554898 8-22
AG554898 8-7
AG554898 8-9
AG555126 6-66
AG555126 6-71
AG555126 6-85
AG556103 10-9
AG556149 4-25
AG556149 4-30
AG556149 4-34
AG556149 4-39
AG556149 4-58
AG556149 4-62
AG556203 10-2
AG556203 15-17
AG556300 3-1
AG556475 6-57
AG557315 6-45
AG557315 6-49
AG557676 10-2
AG557676 10-7
AG557676 10-8
AG557676 15-17
AG557676 3-1
AG557676 4-24
AG557676 4-29
AG557676 4-33
AG557676 4-38
AG557676 4-57
AG557676 4-61
AG557838 6-23
AG557838 6-26
AG557838 6-74
AG558214 7-11
AG558648 1-8
AG558788 15-7
AG558877 6-9
AG559024 15-5
AG559083 4-23
AG559083 4-28
AG559083 4-32
AG559083 4-37
AG559083 4-43
AG559083 4-44
AG559083 4-48
AG559083 4-49
AG559083 4-56
AG559083 4-60
AG559105 10-9
AG559873 1-8
AG559873 1-9
AG559911 10-9
AG559938 4-25
AG559938 4-30
AG559938 4-34
AG559938 4-39
AG559938 4-58
AG559938 4-62
AG560073 15-13
AG560073 15-3
AG560227 8-25
AG560227 8-31
AG560227 8-36
AG560227 8-40
AG560227 8-74
AG560227 8-80
AG560227 9-18
AG560278 7-65
AG560693 4-14
AG560693 6-20
AG560693 6-3
AG560693 6-51
AG560693 6-53
AG560693 6-9
AG560693 7-5
AG560693 7-89
AG560899 6-49
AG560900 6-18
AG561025 1-8
AG561025 1-9
AG561025 5-1
AG561044 6-64
AG561044 6-67
AG561044 6-83
AG561058 10-7
AG561058 10-8
AG561119 2-9
AG561119 4-25
AG561119 4-30
AG561119 4-34
AG561119 4-39
AG561119 4-58
AG561119 4-62
AG561124 11-33
AG561124 11-34
AG561187 7-19
AG561215 1-8
AG561229 1-8
AG561234 7-72
AG561234 7-73
AG561237 6-109
AG561237 6-113
AG561237 6-117
AG561237 6-61
AG561237 6-63
AG561237 6-77
AG561246 6-17
AG561255 7-4
AG561288 6-28
AG561288 6-47
AG561296 6-28
AG561296 6-45

NUMERIC INDEX

AG561296 6-49
AG561317 2-9
AG561360 6-69
AG561360 6-70
AG561360 6-82
AG561384 6-44
AG561384 6-48
AG561384 8-58
AG561391 7-13
AG561391 7-5
AG561391 7-89
AG561419 11-21
AG561454 2-9
AG561489 8-10
AG561489 8-15
AG561489 8-20
AG561489 8-5
AG561549 6-45
AG561549 6-49
AG561593 4-24
AG561593 4-29
AG561593 4-33
AG561593 4-38
AG561593 4-57
AG561593 4-61
AG561629 6-31
AG561629 7-64
AG561645 6-34
AG561665 3-4
AG561665 9-11
AG561665 9-13
AG561677 3-1
AG561677 4-25
AG561677 4-30
AG561677 4-34
AG561677 4-39
AG561677 4-58
AG561677 4-62
AG561677 6-18
AG561677 6-28
AG561679 14-1
AG561679 1-6
AG561679 1-8
AG561679 1-9
AG561679 7-4
AG561679 7-74
AG561679 8-25
AG561679 8-31
AG561679 8-36
AG561679 8-40
AG561679 8-47
AG561679 8-74
AG561679 8-80
AG561679 9-10
AG561679 9-4
AG561679 9-6
AG561679 9-8
AG561683 1-5
AG561699 7-31
AG561699 7-32
AG561699 7-33
AG561699 7-34
AG561699 7-75
AG561699 7-84
AG561699 7-86
AG561699 7-94
AG561744 4-14
AG561744 6-20
AG561744 6-32
AG561744 6-47
AG561744 6-51
AG561744 6-53
AG561793 8-17
AG561793 8-22
AG561794 6-22
AG561797 6-20
AG561867 5-1
AG561879 6-49
AG561905 9-18
AG561941 4-21
AG561941 6-55
AG561941 7-65
AG561952 3-4
AG561952 3-5
AG561952 8-46
AG561952 8-51
AG561952 8-58
AG562013 3-1
AG562045 15-7
AG562045 6-8
AG562045 7-64
AG562045 8-58
AG562046 15-7
AG562046 6-8
AG562046 7-64
AG562046 8-58
AG562047 8-46
AG562047 8-51
AG562048 3-1
AG562048 9-11
AG562048 9-13
AG562049 7-64
AG562050 1-4
AG562050 1-5
AG562050 15-10
AG562050 8-22
AG562050 8-24
AG562050 8-26
AG562050 8-30
AG562050 8-32
AG562050 8-35
AG562050 8-37
AG562050 8-39
AG562050 8-41
AG562050 8-47
AG562050 8-73
AG562050 8-75
AG562050 8-79
AG562050 8-81
AG562051 6-8
AG562051 7-64
AG562051 8-58
AG562053 15-7
AG562053 7-64
AG562053 8-58
AG562054 7-53
AG562054 8-12
AG562054 8-17
AG562054 8-22
AG562054 8-48
AG562054 8-7
AG562061 8-24
AG562061 8-30
AG562061 8-35
AG562061 8-39
AG562061 8-47
AG562061 8-73
AG562061 8-79
AG562064 8-17
AG562064 8-19
AG562064 8-47
AG562064 8-58
AG562064 8-7
AG562064 8-9
AG562065 15-10
AG562065 8-24
AG562065 8-26
AG562065 8-30
AG562065 8-32
AG562065 8-35
AG562065 8-37
AG562065 8-39
AG562065 8-41
AG562065 8-47
AG562065 8-73
AG562065 8-75
AG562065 8-79
AG562065 8-81
AG562067 8-12
AG562067 8-17
AG562067 8-22
AG562067 8-7
AG562068 8-45
AG562072 1-9
AG562073 1-4
AG562073 1-5
AG562073 15-10
AG562073 1-6
AG562073 6-66
AG562073 6-71
AG562073 6-85
AG562074 1-8
AG562074 6-44
AG562074 6-48
AG562074 8-58
AG562081 8-24
AG562081 8-30

NUMERIC INDEX

AG562081 8-35
AG562081 8-39
AG562081 8-47
AG562081 8-73
AG562081 8-79
AG562082 11-22
AG562082 3-4
AG562082 7-7
AG562082 9-17
AG562086 7-7
AG562090 8-58
AG562115 6-8
AG562115 7-64
AG562115 8-58
AG562117 15-7
AG562120 1-6
AG562120 3-1
AG562123 1-6
AG562127 9-17
AG562148 8-45
AG562159 6-66
AG562159 6-71
AG562159 6-85
AG562196 14-1
AG562196 7-62
AG562196 7-72
AG562196 7-73
AG562196 7-74
AG562199 7-72
AG562199 7-73
AG562214 6-8
AG562237 6-108
AG562237 6-112
AG562237 6-116
AG562237 6-60
AG562237 6-62
AG562237 6-76
AG562238 8-24
AG562238 8-30
AG562238 8-35
AG562238 8-39
AG562238 8-73
AG562238 8-79
AG562270 6-17
AG562271 11-29
AG562271 11-35
AG562271 1-2
AG562271 1-5
AG562272 6-17
AG562272 6-56
AG562285 7-6
AG562285 7-78
AG562327 7-11
AG562327 8-24
AG562327 8-30
AG562327 8-35
AG562327 8-39
AG562327 8-73
AG562327 8-79
AG562330 10-11
AG562346 6-69
AG562346 6-70
AG562346 6-82
AG562354 6-20
AG562354 6-23
AG562354 6-24
AG562354 6-26
AG562354 6-27
AG562354 6-74
AG562354 6-75
AG562364 13-3
AG562364 14-7
AG562364 7-27
AG562364 7-70
AG562401 6-20
AG562401 6-31
AG562401 6-32
AG562401 7-5
AG562463 1-6
AG562496 6-69
AG562496 6-70
AG562639 10-9
AG562639 2-10
AG562639 2-11
AG562639 7-8
AG562639 8-24
AG562639 8-30
AG562639 8-35
AG562639 8-39
AG562639 8-73
AG562639 8-79
AG562688 4-29
AG562688 4-33
AG562789 2-9
AG562790 6-17
AG562790 7-71
AG562792 2-10
AG562792 2-11
AG562792 7-27
AG562792 8-11
AG562792 8-16
AG562792 8-21
AG562792 8-24
AG562792 8-30
AG562792 8-35
AG562792 8-39
AG562792 8-56
AG562792 8-6
AG562792 8-73
AG562792 8-79
AG562797 11-29
AG562797 11-35
AG562817 2-9
AG562821 8-12
AG562821 8-56
AG562821 8-7
AG562925 8-24
AG562925 8-30
AG562925 8-35
AG562925 8-39
AG562925 8-73
AG562925 8-79
AG562928 8-24
AG562928 8-30
AG562928 8-35
AG562928 8-39
AG562928 8-73
AG562928 8-79
AG562929 8-24
AG562929 8-30
AG562929 8-35
AG562929 8-39
AG562929 8-73
AG562929 8-79
AG562930 8-24
AG562930 8-30
AG562930 8-35
AG562930 8-39
AG562930 8-73
AG562930 8-79
AG562931 8-24
AG562931 8-30
AG562931 8-35
AG562931 8-39
AG562931 8-73
AG562931 8-79
AG562933 8-24
AG562933 8-30
AG562933 8-35
AG562933 8-39
AG562933 8-73
AG562933 8-79
AG562945 7-11
AG563094 11-22
AG563094 8-24
AG563094 8-30
AG563094 8-35
AG563094 8-39
AG563094 8-47
AG563094 8-73
AG563094 8-79
AG563104 4-23
AG563104 4-28
AG563104 4-32
AG563104 4-37
AG563104 4-42
AG563104 4-47
AG563104 4-56
AG563104 4-60
AG563174 13-3
AG563174 14-7
AG563174 7-27
AG563175 13-3
AG563175 14-7
AG563175 7-27
AG563176 8-12
AG563176 8-17

NUMERIC INDEX

AG563176 8-22
AG563176 8-7
AG600008 10-10
AG600016 7-7
AG600024 10-10
AG601152 10-9
AG601152 4-25
AG601152 4-30
AG601152 4-34
AG601152 4-39
AG601152 4-58
AG601152 4-62
AG601152 5-2
AG601225 10-10
AG601284 1-8
AG601411 10-2
AG601411 10-3
AG601411 10-4
AG601411 10-7
AG601411 10-8
AG601411 1-1
AG601411 11-29
AG601411 11-33
AG601411 11-34
AG601411 11-35
AG601411 15-17
AG601411 1-7
AG601411 3-1
AG601411 6-112
AG601411 6-116
AG601411 6-60
AG601411 6-62
AG601411 6-66
AG601411 6-71
AG601411 6-85
AG601411 6-86
AG601888 10-10
AG601888 10-11
AG601888 10-9
AG601888 3-1
AG601888 7-6
AG601888 7-78
AG601888 8-12
AG601888 8-17
AG601888 8-22
AG601888 8-7
AG602132 6-23
AG602132 6-26
AG602132 6-74
AG602639 6-54
AG603864 4-18
AG603864 4-24
AG603864 4-29
AG603864 4-33
AG603864 4-38
AG603864 4-57
AG603864 4-61
AG604167 15-10
AG604167 1-9
AG604184 6-50
AG604203 11-33
AG604203 11-34
AG604203 15-13
AG604203 15-3
AG604203 4-24
AG604203 4-25
AG604203 4-29
AG604203 4-30
AG604203 4-33
AG604203 4-34
AG604203 4-38
AG604203 4-39
AG604203 4-43
AG604203 4-44
AG604203 4-48
AG604203 4-49
AG604203 4-58
AG604203 4-61
AG604203 4-62
AG604216 10-9
AG604216 6-17
AG604216 6-72
AG604216 6-78
AG604216 6-80
AG605371 7-11
AG606258 1-2
AG606258 7-31
AG606258 7-32
AG606258 7-33
AG606258 7-34
AG606258 7-75
AG606258 7-84
AG606258 7-86
AG606258 7-94
AG606489 15-8
AG606489 4-51
AG606489 4-52
AG606489 4-53
AG607237 7-54
AG608535 8-58
AG608580 8-58
AG609084 10-5
AG609084 10-6
AG609084 3-3
AG609311 4-22
AG609311 4-27
AG609311 4-31
AG609311 4-36
AG609311 4-41
AG609311 4-46
AG609311 4-51
AG609311 4-52
AG609311 4-53
AG609311 4-55
AG609311 4-59
AG609312 4-51
AG609312 4-52
AG609312 4-53
AG609312 6-8
AG609312 7-53
AG609313 15-7
AG609313 3-3
AG609313 4-22
AG609313 4-27
AG609313 4-31
AG609313 4-36
AG609313 4-41
AG609313 4-46
AG609313 4-51
AG609313 4-52
AG609313 4-53
AG609313 4-55
AG609313 4-59
AG609313 6-8
AG609313 7-53
AG609314 4-41
AG609314 4-46
AG609419 1-2
AG609465 6-87
AG609486 9-12
AG609486 9-14
AG610620 14-1
AG610620 14-2
AG610620 14-3
AG610620 14-4
AG610624 14-1
AG610643 3-4
AG610643 3-5
AG610760 7-83
AG610761 7-83
AG610762 7-83
AG610763 7-83
AG610765 7-82
AG610766 7-82
AG610767 7-82
AG610774 7-82
AG610775 7-82
AG610787 9-17
AG610787 9-18
AG610892 7-83
AG704467 7-6
AG704467 7-78
AG704540 7-53
AG705830 4-16
AG705830 4-2
AG705830 4-4
AG705968 4-6
AG707658 4-16
AG707658 4-3
AG707658 4-5
AG709257 6-46
AG710181 13-3
AG710181 14-7
AG710181 7-27
AG711567 1-2
AG712150 6-87
AG713166 6-101

NUMERIC INDEX

AG713398 10-10
AG713398 10-9
AG713398 7-8
AG713495 6-58
AG713497 6-59
AG713517 6-59
AG713524 6-58
AG713525 6-59
AG713528 6-58
AG713670 6-102
AG713670 6-105
AG713670 6-106
AG713825 4-3
AG713825 4-5
AG713834 4-3
AG713834 4-5
AG714101 6-17
AG714101 6-56
AG714365 6-103
AG714389 6-103
AG714471 4-17
AG714471 4-3
AG714471 4-5
AG714472 4-17
AG714472 4-3
AG714472 4-5
AG715207 6-87
AG715330 6-58
AG715586 15-15
AG715586 15-16
AG715586 15-6
AG715586 6-15
AG715586 6-22
AG716811 6-87
AG717101 6-58
AG717340 6-32
AG717340 6-45
AG717340 6-49
AG717883 7-50
AG718279 7-48
AG718280 7-48
AG718288 7-42
AG718289 7-42
AG718290 7-42
AG718296 7-45
AG718297 7-45
AG718303 7-48
AG718319 7-43
AG718320 7-43
AG718322 7-43
AG718328 7-43
AG718329 7-43
AG718348 7-52
AG718367 7-39
AG718368 7-39
AG718403 7-52
AG718455 7-42
AG718787 7-56
AG718787 7-57
AG718788 7-56
AG718789 7-56
AG718798 7-56
AG718801 7-56
AG718805 7-56
AG718806 7-56
AG719075 7-47
AG719303 7-56
AG719617 8-77
AG719617 8-78
AG719984 7-44
AG719992 7-46
AG720158 4-54
AG721040 7-44
AG721301 7-12
AG721357 7-44
AG721714 7-47
AG721717 7-47
AG721719 7-47
AG721720 7-47
AG721721 7-47
AG721722 7-47
AG721723 7-47
AG722182 7-47
AG722408 7-12
AG722409 7-12
AG722838 7-44
AG722951 4-35
AG723374 7-42
AG723805 7-43
AG725237 7-44
AG725549 7-47
AG726285 6-58
AG726286 6-58
AG726290 6-58
AG726354 6-59
AG726854 6-87
AG726892 4-2
AG726892 4-4
AG726981 8-64
AG726982 8-64
AG727094 7-56
AG727095 7-58
AG727096 7-56
AG727097 7-56
AG727285 6-19
CH100-4336 6-39
CH100-4336 6-42
CH100-4336 6-86
CH3B-4501 7-62
CH4K-8864 1-8
CH5C-8312 7-62
CH5V-1496 7-36
CH5V-1496 7-37
CH6V-5839 7-14
CH6V-5839 7-18
CH7K-1181 9-3
CH8T-0328 7-62
CH8T-6703 1-9
NS 4-35
NS 6-99
NS 7-19
NS 7-35
NS 7-50
WR10185 4-24
WR10185 4-29
WR10185 4-33
WR10185 4-38
WR10185 4-57
WR10185 4-58
WR10185 4-61
WR10436 15-12
WR10436 15-13
WR10436 15-2
WR10436 15-3
WR11494 4-23
WR11494 4-28
WR11494 4-32
WR11494 4-37
WR11494 4-42
WR11494 4-47
WR11494 4-56
WR11494 4-60
WR11494 8-59
WR11528 7-1
WR11528 7-76
WR11528 7-91
WR122643 6-31
WR122664 6-32
WR122909 4-25
WR122909 4-39
WR122909 4-55
WR122915 4-25
WR122915 4-39
WR123065 4-25
WR123065 4-30
WR123065 4-34
WR123065 4-39
WR123065 4-58
WR123067 4-24
WR123067 4-29
WR123067 4-33
WR123067 4-38
WR123067 4-57
WR123067 4-61
WR123745 6-28
WR123746 4-21
WR123748 6-47
WR123749 6-20
WR123752 2-9
WR124021 4-58
WR124043 4-25
WR124043 4-39
WR124130 11-23
WR124131 11-23
WR124143 4-52
WR124252 4-51
WR124255 4-51

NUMERIC INDEX

WR124256 4-51
WR124290 4-53
WR124291 4-52
WR124293 4-52
WR124315 1-9
WR124316 4-52
WR124381 1-9
WR124548 4-51
WR124551 4-51
WR124555 6-44
WR124555 6-48
WR124852 6-78
WR124931 6-4
WR124932 6-2
WR124932 6-25
WR124932 6-5
WR124994 4-52
WR125158 1-7
WR125161 1-7
WR125194 4-53
WR125195 4-52
WR125256 1-2
WR125282 6-45
WR125282 6-49
WR125334 6-46
WR125335 15-6
WR125335 6-46
WR125336 6-46
WR125398 4-42
WR125398 4-43
WR125398 4-44
WR125398 4-48
WR125398 4-49
WR125503 4-29
WR125524 12-3
WR125526 4-24
WR125526 4-29
WR125526 4-33
WR125526 4-38
WR125526 4-45
WR125526 4-50
WR125526 4-57
WR125526 4-61
WR125577 4-23
WR125577 4-28
WR125577 4-32
WR125577 4-37
WR125577 4-42
WR125577 4-47
WR125577 4-56
WR125577 4-60
WR125580 4-23
WR125580 4-28
WR125580 4-32
WR125580 4-37
WR125580 4-42
WR125580 4-47
WR125580 4-56
WR125580 4-60
WR125598 4-45
WR125598 4-50
WR125609 4-24
WR125609 4-29
WR125609 4-33
WR125609 4-38
WR125609 4-45
WR125609 4-50
WR125609 4-57
WR125609 4-61
WR125758 4-24
WR125758 4-29
WR125758 4-33
WR125758 4-38
WR125758 4-57
WR125758 4-61
WR125776 6-17
WR125880 1-7
WR125983 8-2
WR126006 4-53
WR126011 6-44
WR126011 6-48
WR126139 3-1
WR126297 10-9
WR126298 10-11
WR126298 10-9
WR126321 8-56
WR126351 6-50
WR126480 3-1
WR126599 7-11
WR126604 7-11
WR126678 4-24
WR126678 4-29
WR126678 4-33
WR126678 4-38
WR126678 4-57
WR126678 4-61
WR126679 4-24
WR126679 4-29
WR126679 4-33
WR126679 4-38
WR126679 4-57
WR126679 4-61
WR126694 6-17
WR126829 7-53
WR126885 4-52
WR126886 13-3
WR126888 7-45
WR126888 8-63
WR126889 8-45
WR126891 8-10
WR126891 8-15
WR126891 8-20
WR126891 8-5
WR126892 7-11
WR126892 7-88
WR126905 8-24
WR126905 8-30
WR126905 8-35
WR126905 8-39
WR126905 8-73
WR126905 8-79
WR126906 8-24
WR126906 8-30
WR126906 8-35
WR126906 8-39
WR126906 8-73
WR126906 8-79
WR126909 2-10
WR126909 2-11
WR126918 8-56
WR126920 8-57
WR126925 7-3
WR126925 7-79
WR126925 7-93
WR126927 8-43
WR126927 8-45
WR127015 4-14
WR127015 6-51
WR127015 6-53
WR127119 8-2
WR127121 7-2
WR127121 7-77
WR127121 7-92
WR127121 8-1
WR127121 8-70
WR127138 13-3
WR127138 14-7
WR127138 7-27
WR127139 7-8
WR127157 4-53
WR127201 10-5
WR127201 10-6
WR127665 4-52
WR127688 7-36
WR127688 7-37
WR127811 10-9
WR127841 10-9
WR127883 10-9
WR127944 1-1
WR127993 2-1
WR127993 2-11
WR128007 4-56
WR128007 4-60
WR128019 7-21
WR128020 7-6
WR128020 7-78
WR128021 7-6
WR128021 7-78
WR128022 7-6
WR128022 7-78
WR128024 7-1
WR128024 7-6
WR128024 7-76
WR128024 7-78
WR128024 7-91
WR128025 7-2
WR128025 7-77

NUMERIC INDEX

WR128025 7-92
WR128026 7-6
WR128026 7-78
WR128027 7-1
WR128027 7-76
WR128027 7-91
WR128030 7-6
WR128030 7-78
WR128031 7-6
WR128031 7-78
WR128032 7-6
WR128032 7-78
WR128037 7-6
WR128037 7-78
WR128251 8-60
WR128273 8-57
WR128273 8-58
WR128278 10-9
WR128281 5-2
WR128307 4-25
WR128307 4-30
WR128307 4-34
WR128307 4-39
WR128307 4-58
WR128307 4-62
WR128309 4-18
WR128326 4-25
WR128326 4-30
WR128326 4-34
WR128326 4-39
WR128326 4-58
WR128326 4-62
WR128328 11-21
WR128329 11-22
WR128330 11-22
WR128331 11-21
WR128334 6-74
WR128335 4-23
WR128335 4-28
WR128335 4-32
WR128335 4-37
WR128335 4-42
WR128335 4-47
WR128335 4-56
WR128335 4-60
WR128359 4-57
WR128359 4-58
WR128359 4-61
WR128359 4-62
WR128403 1-9
WR128405 6-87
WR128453 1-7
WR128461 3-1
WR128467 6-17
WR128473 5-1
WR128477 6-8
WR128478 6-9
WR128478 8-44
WR128640 3-1
WR128648 1-5
WR128650 10-9
WR128654 10-11
WR128654 10-9
WR128659 4-58
WR128661 4-14
WR128671 6-45
WR128673 6-17
WR128674 6-17
WR128678 6-109
WR128678 6-113
WR128678 6-117
WR128678 6-61
WR128678 6-63
WR128678 6-77
WR128680 10-9
WR128683 6-44
WR128753 6-22
WR128754 6-45
WR128754 6-49
WR128756 6-50
WR128759 6-64
WR128759 6-65
WR128759 6-67
WR128759 6-68
WR128759 6-83
WR128759 6-84
WR128760 6-64
WR128760 6-65
WR128760 6-67
WR128760 6-68
WR128760 6-83
WR128760 6-84
WR128762 6-70
WR128764 6-70
WR128767 6-69
WR128767 6-70
WR128767 6-82
WR128769 6-47
WR128770 6-47
WR128788 8-47
WR128874 6-30
WR128875 6-36
WR128875 6-37
WR128877 6-47
WR128878 6-47
WR128879 6-47
WR128887 6-17
WR128892 6-17
WR128893 6-17
WR128895 6-33
WR128895 6-38
WR128895 6-41
WR128904 6-64
WR128904 6-65
WR128904 6-67
WR128904 6-68
WR128904 6-83
WR128904 6-84
WR128910 6-48
WR128911 6-44
WR128911 6-48
WR128912 6-44
WR128912 6-48
WR128913 6-44
WR128913 6-48
WR128914 6-44
WR128914 6-48
WR129082 8-60
WR129148 6-44
WR129148 6-48
WR129172 12-5
WR129172 12-6
WR129172 12-7
WR129172 12-8
WR129175 4-21
WR129176 4-21
WR129181 7-4
WR129191 7-22
WR129209 6-78
WR129209 6-79
WR129213 6-34
WR129213 6-39
WR129213 6-42
WR129215 6-64
WR129215 6-65
WR129215 6-67
WR129215 6-68
WR129215 6-83
WR129215 6-84
WR129217 6-33
WR129217 6-38
WR129217 6-41
WR129218 6-33
WR129218 6-38
WR129218 6-41
WR129219 6-33
WR129219 6-38
WR129219 6-41
WR129221 6-33
WR129221 6-38
WR129221 6-41
WR129222 6-64
WR129222 6-65
WR129222 6-67
WR129222 6-68
WR129222 6-83
WR129222 6-84
WR129223 6-64
WR129223 6-65
WR129223 6-67
WR129223 6-68
WR129223 6-83
WR129223 6-84
WR129227 6-34
WR129227 6-39
WR129227 6-42
WR129228 6-64

NUMERIC INDEX

WR129228 6-65
WR129228 6-67
WR129228 6-68
WR129228 6-83
WR129228 6-84
WR129229 6-64
WR129229 6-65
WR129229 6-67
WR129229 6-68
WR129229 6-83
WR129229 6-84
WR129232 6-34
WR129232 6-42
WR129233 6-64
WR129233 6-65
WR129233 6-67
WR129233 6-68
WR129233 6-83
WR129233 6-84
WR129234 6-64
WR129234 6-65
WR129234 6-67
WR129234 6-68
WR129234 6-83
WR129234 6-84
WR129240 14-1
WR129240 7-74
WR129282 6-64
WR129282 6-65
WR129282 6-67
WR129282 6-68
WR129282 6-83
WR129282 6-84
WR129305 8-16
WR129305 8-21
WR129305 8-58
WR129339 9-18
WR129373 14-1
WR129375 6-8
WR129397 6-3
WR129400 1-2
WR129404 6-8
WR129405 1-1
WR129406 6-34
WR129406 6-39
WR129406 6-42
WR129407 6-62
WR129425 4-52
WR129426 4-52
WR129476 8-46
WR129477 8-46
WR129586 1-8
WR129588 1-8
WR129592 2-9
WR129633 7-53
WR129637 1-6
WR129646 4-29
WR129646 4-38
WR129646 4-57
WR129646 4-61
WR129662 4-28
WR129662 4-37
WR129685 4-29
WR129685 4-38
WR129685 4-57
WR129685 4-61
WR129686 4-24
WR129686 4-29
WR129686 4-33
WR129686 4-38
WR129686 4-57
WR129686 4-61
WR129725 4-1
WR129726 4-1
WR129727 4-1
WR129759 1-6
WR129759 4-21
WR129807 15-5
WR129807 7-3
WR129807 7-79
WR129807 7-93
WR129814 4-25
WR129814 4-30
WR129814 4-34
WR129814 4-39
WR129814 4-43
WR129814 4-44
WR129814 4-48
WR129814 4-49
WR129814 4-58
WR129814 4-62
WR129929 1-8
WR129997 6-108
WR129997 6-112
WR129997 6-116
WR129997 6-60
WR129997 6-62
WR129997 6-76
WR129998 6-108
WR129998 6-112
WR129998 6-116
WR129998 6-60
WR129998 6-62
WR129998 6-76
WR130507 7-52
WR130508 7-52
WR130514 7-42
WR130515 7-48
WR130525 7-36
WR130525 7-37
WR130525 7-38
WR130550 7-38
WR130585 7-6
WR130585 7-78
WR130593 7-42
WR130629 7-44
WR130635 7-52
WR130659 7-43
WR130673 7-52
WR130674 7-46
WR130675 7-46
WR130680 7-44
WR130690 7-46
WR130700 7-39
WR130701 7-39
WR130702 7-39
WR130703 7-39
WR130704 7-39
WR130704 7-40
WR130705 7-52
WR130707 7-52
WR130708 7-45
WR130709 7-41
WR130710 7-52
WR130711 7-45
WR130712 7-42
WR130713 7-38
WR130714 7-38
WR130715 7-38
WR130718 7-38
WR130719 7-45
WR130721 7-52
WR130722 7-39
WR130722 7-40
WR130723 7-39
WR130723 7-40
WR130724 7-52
WR130726 7-49
WR130727 7-42
WR130728 7-44
WR130729 7-42
WR130730 7-45
WR130732 7-48
WR130733 7-43
WR130734 7-52
WR130735 7-52
WR130736 7-52
WR130737 7-48
WR130738 7-44
WR130738 7-48
WR130738 7-50
WR130739 7-45
WR130740 7-49
WR130741 7-49
WR130742 7-49
WR130745 7-47
WR130745 7-50
WR130746 7-45
WR130747 7-44
WR130747 7-45
WR130747 7-49
WR130747 7-52
WR130749 7-49
WR130751 7-49
WR130752 7-49
WR131495 4-35
WR131499 4-19

NUMERIC INDEX

WR131499	4-26
WR131499	4-35
WR131499	4-40
WR131646	6-2
WR131646	6-5
WR131647	6-2
WR131647	6-5
WR131648	6-2
WR131648	6-5
WR131653	6-54
WR131654	6-54
WR131655	6-54
WR131663	6-54
WR131664	6-54
WR131667	6-54
WR131668	6-10
WR131669	6-10
WR131670	6-10
WR131671	6-10
WR131672	6-10
WR131673	6-10
WR131674	6-10
WR131675	6-11
WR131676	6-10
WR131676	6-12
WR131677	6-10
WR131677	6-14
WR131720	6-90
WR131721	6-90
WR131722	6-90
WR131723	6-90
WR131724	6-90
WR131725	6-90
WR131726	6-90
WR131726	6-92
WR131727	6-90
WR131727	6-93
WR131728	6-90
WR131728	6-91
WR131829	6-58
WR131829	6-59
WR131830	4-2
WR131830	4-4
WR131831	4-2
WR131831	4-4
WR131832	4-2
WR131832	4-4
WR131833	4-2
WR131833	4-4
WR131834	4-2
WR131834	4-4
WR131835	4-16
WR131835	4-2
WR131835	4-4
WR131836	4-16
WR131836	4-2
WR131836	4-4
WR131837	4-16
WR131837	4-17
WR131837	4-2
WR131837	4-4
WR131838	4-16
WR131838	4-2
WR131838	4-4
WR131839	4-16
WR131839	4-2
WR131839	4-4
WR131840	4-16
WR131840	4-2
WR131840	4-4
WR131841	4-16
WR131841	4-17
WR131841	4-2
WR131841	4-4
WR131842	4-2
WR131842	4-4
WR131843	4-2
WR131843	4-4
WR131844	4-2
WR131844	4-4
WR131845	4-2
WR131845	4-4
WR131846	4-2
WR131846	4-4
WR131847	4-2
WR131847	4-4
WR131848	4-2
WR131848	4-4
WR131850	4-2
WR131850	4-4
WR131852	4-16
WR131852	4-2
WR131852	4-4
WR131853	4-2
WR131853	4-4
WR131854	4-2
WR131854	4-4
WR131855	4-2
WR131855	4-4
WR131856	4-2
WR131856	4-4
WR131857	4-2
WR131857	4-4
WR131858	4-2
WR131858	4-4
WR131859	4-2
WR131859	4-4
WR131860	4-2
WR131860	4-4
WR131861	4-2
WR131861	4-4
WR131862	4-2
WR131862	4-4
WR131863	4-2
WR131863	4-4
WR131864	4-2
WR131864	4-4
WR131865	4-2
WR131865	4-4
WR131866	4-2
WR131866	4-4
WR131867	4-2
WR131867	4-4
WR131868	4-2
WR131868	4-4
WR131869	4-2
WR131869	4-4
WR131870	4-2
WR131870	4-4
WR131871	4-2
WR131871	4-4
WR131872	4-2
WR131872	4-4
WR131874	4-2
WR131874	4-4
WR131876	4-3
WR131876	4-5
WR131877	4-3
WR131877	4-5
WR131878	4-3
WR131878	4-5
WR131879	4-3
WR131879	4-5
WR131880	4-3
WR131880	4-5
WR131881	4-3
WR131881	4-5
WR131882	4-3
WR131882	4-5
WR131883	4-3
WR131883	4-5
WR131884	4-3
WR131884	4-5
WR131885	4-3
WR131885	4-5
WR131886	4-3
WR131886	4-5
WR131887	4-3
WR131887	4-5
WR131888	4-3
WR131888	4-5
WR131889	4-3
WR131889	4-5
WR131890	4-2
WR131890	4-4
WR131891	4-3
WR131891	4-5
WR131892	4-3
WR131892	4-5
WR131893	4-3
WR131893	4-5
WR131895	4-3
WR131895	4-5
WR131897	4-3
WR131897	4-5
WR131898	4-3
WR131898	4-5

NUMERIC INDEX

WR131899	4-3
WR131899	4-5
WR131900	4-3
WR131900	4-5
WR131901	4-3
WR131901	4-5
WR131902	4-3
WR131902	4-5
WR131903	4-3
WR131903	4-5
WR131904	4-3
WR131904	4-5
WR131905	4-3
WR131905	4-5
WR131906	4-3
WR131906	4-5
WR131907	4-3
WR131907	4-5
WR131908	4-3
WR131908	4-5
WR131909	4-3
WR131909	4-5
WR131910	4-3
WR131910	4-5
WR131911	4-3
WR131911	4-5
WR131912	4-3
WR131912	4-5
WR131913	4-2
WR131913	4-4
WR131914	4-2
WR131914	4-4
WR131915	4-3
WR131915	4-5
WR131916	4-17
WR131917	4-17
WR131918	4-17
WR131919	4-17
WR131920	4-17
WR131921	4-17
WR131922	4-17
WR131923	4-17
WR131924	4-17
WR131926	4-17
WR131927	4-17
WR131928	4-17
WR131929	4-17
WR131930	4-17
WR131932	4-17
WR131933	4-17
WR131934	4-17
WR131935	4-17
WR131936	4-17
WR131937	4-17
WR131938	4-17
WR131939	4-17
WR131940	4-17
WR131941	4-17
WR131942	4-16
WR131943	4-16
WR131944	4-16
WR131945	4-16
WR131946	4-16
WR131947	4-6
WR131948	4-6
WR131949	4-6
WR131950	4-6
WR131951	4-6
WR131952	4-13
WR131952	4-8
WR131953	4-13
WR131953	4-8
WR131954	4-13
WR131954	4-8
WR131955	4-8
WR131956	4-12
WR131956	4-8
WR131957	4-10
WR131957	4-8
WR131958	4-8
WR131958	4-9
WR131959	4-10
WR131959	4-8
WR131960	4-10
WR131960	4-8
WR131961	4-12
WR131961	4-8
WR131962	4-12
WR131962	4-8
WR131963	4-12
WR131963	4-8
WR131964	4-12
WR131964	4-8
WR131965	4-10
WR131965	4-8
WR131966	4-10
WR131966	4-8
WR131967	4-10
WR131967	4-8
WR131968	4-13
WR131968	4-8
WR131969	4-8
WR131970	4-11
WR131970	4-8
WR131971	4-11
WR131971	4-8
WR131972	4-8
WR131973	4-8
WR131974	4-8
WR131975	4-8
WR131976	4-8
WR131977	4-17
WR131980	4-2
WR131980	4-4
WR131981	4-2
WR131981	4-4
WR131982	6-58
WR131983	6-58
WR131984	6-58
WR131985	6-58
WR131986	6-58
WR131987	6-58
WR131988	6-58
WR131989	6-58
WR131990	6-58
WR131991	6-58
WR131992	6-58
WR131994	6-58
WR131995	6-58
WR131996	6-58
WR131997	6-58
WR131998	6-58
WR131999	6-58
WR132000	6-58
WR132001	6-58
WR132002	6-58
WR132003	6-58
WR132004	6-58
WR132005	6-58
WR132006	6-58
WR132008	6-58
WR132009	6-58
WR132010	6-58
WR132011	6-58
WR132012	6-58
WR132013	6-58
WR132014	6-58
WR132015	6-59
WR132018	6-59
WR132019	6-59
WR132020	6-59
WR132021	6-59
WR132022	6-59
WR132038	6-59
WR132040	6-59
WR132041	6-59
WR132042	6-59
WR132044	6-58
WR132160	6-19
WR132176	8-12
WR132176	8-17
WR132176	8-22
WR132176	8-7
WR132177	8-12
WR132177	8-17
WR132177	8-22
WR132177	8-7
WR132179	8-51
WR132180	8-51
WR132214	4-43
WR132214	4-44
WR132214	4-48
WR132214	4-49
WR132224	4-43
WR132224	4-44
WR132224	4-48
WR132224	4-49

NUMERIC INDEX

WR132227	9-11
WR132227	9-13
WR132231	9-11
WR132231	9-13
WR132236	3-1
WR132246	8-49
WR132246	8-50
WR132424	7-5
WR132902	4-17
WR132988	2-3
WR133007	6-58
WR133082	6-1
WR133195	4-56
WR133195	4-60
WR133568	6-21
WR133791	7-52
WR133792	7-52
WR133793	7-41
WR133793	7-52
WR133794	7-52
WR133795	7-49
WR133795	7-52
WR133796	7-52
WR133797	7-41
WR133797	7-52
WR133798	7-52
WR133906	11-24
WR133927	15-13
WR133927	15-3
WR133936	15-14
WR133936	15-4
WR133937	15-12
WR133937	15-14
WR133937	15-4
WR133938	15-12
WR133938	15-2
WR133941	15-12
WR133941	15-2
WR133942	15-12
WR133942	15-2
WR133976	8-56
WR133976	8-57
WR133976	8-58
WR133977	8-57
WR133978	8-24
WR133978	8-26
WR133978	8-30
WR133978	8-32
WR133978	8-35
WR133978	8-37
WR133978	8-39
WR133978	8-41
WR133978	8-73
WR133978	8-75
WR133978	8-79
WR133978	8-81
WR133979	8-24
WR133979	8-26
WR133979	8-30
WR133979	8-32
WR133979	8-35
WR133979	8-37
WR133979	8-39
WR133979	8-41
WR133979	8-73
WR133979	8-75
WR133979	8-79
WR133979	8-81
WR134200	4-43
WR134200	4-44
WR134200	4-48
WR134200	4-49
WR134201	4-43
WR134201	4-44
WR134202	4-24
WR134202	4-29
WR134202	4-33
WR134202	4-38
WR134202	4-43
WR134202	4-44
WR134202	4-48
WR134202	4-49
WR134202	4-57
WR134202	4-61
WR134203	4-43
WR134203	4-44
WR134247	15-13
WR134247	15-3
WR134258	15-13
WR134258	15-3
WR134264	15-14
WR134264	15-4
WR134358	6-32
WR134369	8-56
WR134369	8-57
WR134369	8-58
WR134370	8-56
WR134370	8-57
WR134370	8-58
WR134414	1-2
WR134416	6-108
WR134416	6-109
WR134416	6-113
WR134416	6-117
WR134416	6-61
WR134416	6-63
WR134416	6-77
WR134439	15-13
WR134439	15-3
WR134440	15-13
WR134440	15-3
WR134441	15-13
WR134441	15-3
WR134444	15-14
WR134444	15-4
WR134445	15-13
WR134445	15-3
WR134447	15-12
WR134447	15-13
WR134447	15-2
WR134447	15-3
WR134529	4-18
WR134739	14-7
WR134754	8-25
WR134754	8-31
WR134754	8-36
WR134754	8-40
WR134754	8-74
WR134754	8-80
WR134869	6-70
WR135374	10-5
WR135376	10-6
WR135437	8-62
WR135687	15-7
WR135688	15-7
WR135689	15-8
WR135690	15-9
WR135691	15-8
WR135692	15-8
WR135693	15-9
WR135703	15-9
WR135705	15-7
WR135706	15-7
WR135709	15-10
WR135714	4-23
WR135714	4-27
WR135714	4-32
WR135714	4-36
WR135714	4-55
WR135714	4-59
WR135931	10-7
WR135931	10-8
WR135932	10-7
WR135932	10-8
WR135933	10-7
WR135933	10-8
WR136148	6-18
WR136369	15-11
WR136438	2-1
WR136700	6-57
WR136831	3-4
WR136831	3-5
WR136832	3-4
WR136832	3-5
WR137370	6-1
WR137609	2-1
WR137610	2-1
WR137611	2-1
WR137613	2-1
WR137614	2-1
WR137618	2-1
WR137619	2-1
WR137629	2-2
WR137631	2-2
WR137634	2-2
WR137634	2-3
WR137634	2-4

NUMERIC INDEX

WR137635 2-2
WR137635 2-3
WR137635 2-4
WR137636 2-2
WR137636 2-3
WR137637 2-3
WR137639 2-3
WR137640 2-3
WR137643 2-3
WR137644 2-3
WR137645 2-3
WR137646 2-3
WR137646 2-4
WR137647 2-3
WR137647 2-4
WR137650 2-3
WR137651 2-4
WR137652 2-4
WR137653 2-4
WR137654 2-4
WR137655 2-4
WR137656 2-4
WR137659 2-4
WR137660 2-4
WR137661 2-4
WR137662 2-4
WR137663 2-4
WR137665 2-4
WR137666 2-4
WR137667 2-4
WR137670 2-4
WR137676 2-4
WR137678 2-3
WR138066 6-29
WR139110 6-94
WR139110 6-99
WR139111 6-94
WR139112 6-94
WR139113 6-94
WR139114 6-94
WR139115 6-95
WR139274 7-36
WR139274 7-37
WR139275 7-36
WR139275 7-37
WR139276 7-36
WR139276 7-37
WR139277 7-36
WR139277 7-37
WR139278 7-36
WR139278 7-37
WR139279 7-36
WR139280 7-36
WR139280 7-37
WR139281 7-36
WR139281 7-37
WR139282 7-36
WR139282 7-37
WR139283 7-36
WR139283 7-37
WR139284 7-36
WR139284 7-37
WR139285 7-36
WR139285 7-37
WR139286 7-38
WR139287 7-38
WR139288 7-38
WR139288 7-47
WR139289 7-38
WR139290 7-38
WR139291 7-39
WR139292 7-39
WR139293 7-40
WR139294 7-40
WR139299 7-36
WR139299 7-37
WR139300 7-51
WR139301 7-41
WR139302 7-42
WR139303 7-42
WR139303 7-49
WR139304 7-42
WR139304 7-43
WR139304 7-45
WR139304 7-46
WR139304 7-48
WR139304 7-50
WR139305 7-43
WR139306 7-44
WR139307 7-44
WR139308 7-44
WR139309 7-44
WR139310 7-44
WR139311 7-44
WR139313 7-51
WR139314 7-46
WR139319 7-46
WR139320 7-46
WR139321 7-46
WR139322 7-47
WR139324 7-47
WR139325 7-47
WR139326 7-47
WR139327 7-47
WR139329 7-48
WR139330 7-51
WR139331 7-43
WR139332 7-50
WR139333 7-50
WR139334 7-50
WR139335 7-50
WR139336 7-50
WR139337 7-50
WR139338 7-50
WR139339 7-51
WR139340 7-51
WR139341 7-51
WR139342 6-95
WR139343 6-94
WR139344 6-95
WR139345 6-95
WR139346 6-95
WR139347 6-95
WR139348 6-94
WR139349 6-96
WR139350 6-96
WR139351 6-96
WR139352 6-97
WR139353 6-97
WR139353 6-99
WR139354 6-97
WR139355 6-96
WR139355 6-99
WR139356 6-98
WR139357 6-98
WR139358 6-98
WR139359 6-98
WR139360 6-98
WR139361 6-98
WR139366 6-96
WR139380 6-100
WR139381 6-1
WR139382 6-1
WR139384 7-12
WR139385 7-12
WR139386 7-12
WR139387 7-12
WR139389 7-12
WR139390 7-12
WR139391 7-12
WR139392 7-12
WR139393 7-12
WR139394 7-12
WR139395 7-12
WR139397 7-12
WR139407 4-7
WR139408 4-7
WR139414 4-7
WR139416 4-7
WR139417 4-7
WR139418 4-7
WR139419 4-7
WR139515 7-46
WR17335 7-4
WR19092 1-9
WR232770 6-71
WR25752 2-9
WR25752 8-47
WR26528 6-87
WR27671 6-88
WR28659 1-6
WR29674 7-21
WR31555 10-11
WR31675 6-10
WR32723 6-7
WR32723 6-9
WR33284 12-3

NUMERIC INDEX

WR33994 6-50
WR34265 4-18
WR34612 7-22
WR35020 8-64
WR36453 12-5
WR36453 12-6
WR36453 12-7
WR36453 12-8
WR37159 12-2
WR37164 12-2
WR38199 12-2
WR38762 6-87
WR38768 6-90
WR38841 12-5
WR38841 12-6
WR38841 12-7
WR38841 12-8
WR41013 4-21
WR41777 6-47
WR41777 6-9
WR41967 6-87
WR425679 7-12
WR425857 7-12
WR425858 7-12
WR425871 6-58
WR425872 6-58
WR425873 6-58
WR425874 6-58
WR50838 11-29
WR50838 11-35
WR50851 7-2
WR50851 7-77
WR50851 7-92
WR50955 12-2
WR51770 4-57
WR522279 14-1
WR522279 7-7
WR522279 7-74
WR522279 8-25
WR522279 8-31
WR522279 8-36
WR522279 8-40
WR522279 8-74
WR522279 8-80
WR55026 8-48
WR55035 7-19
WR55036 7-19
WR55062 1-8
WR55063 7-71
WR55064 7-71
WR55075 7-70
WR55158 11-29
WR55158 11-35
WR55159 11-29
WR55159 11-35
WR55215 15-12
WR55215 15-13
WR55215 15-2
WR55215 15-3
WR55215 7-88
WR55247 6-112
WR55247 6-116
WR55247 6-60
WR55247 6-62
WR55248 6-72
WR55248 6-78
WR55248 6-80
WR55261 1-1
WR55272 15-12
WR55272 15-13
WR55272 15-2
WR55272 15-3
WR55330 10-7
WR55330 10-8
WR55412 8-48
WR55665 15-12
WR55665 15-13
WR55665 15-2
WR55665 15-3
WR55840 1-8
WR55974 4-24
WR55974 4-29
WR55974 4-33
WR55974 4-38
WR606610 6-2
WR606610 6-5
WR70899 2-7
WR70899 2-8

AGCO Corporation
4205 River Green Parkway
Duluth, GA 30096-2568

©AGCO Corporation, 2008
Printed in U.S.A.