ROW CROP SYSTEM

PARTS CATALOG

AG-CHEM

874 / 1074 / 1274 / 1286C / SS / SSc ROGATOR LIQUID SYSTEM (EFF S/N ..Txx1001)

514904D1 A

August 2007

How to use this Parts Book

Parts Ordering Guide:

1. Give the Serial Number of your Chassis or System when ordering.
2. Use the part number and description when ordering parts.
3. Give the Assembly Title if needed.
4. Give the P/N number and date for the Parts Book if needed.

Parts List Abbreviations

NSS	Not Sold Separately
AR	As Required, usually for a lubricant or adhesive
REF	Reference - Part called out on a different page.
NS	Not shown in illustration
R/B	Replaced by another number
ASM	assembly page

Notice:

Every effort has been made to ensure the accuracy of the information in this book. However, because of design changes that can occur since this book was published, it is possible that some illustrations and part numbers can be different than on your machine. The technical information in this book was correct at the time this book was approved for publication.

FUEL TANK AND TOOL BOX INSTL

ITEM	PART #	QTY	DESCRIPTION	COMMENTS
1	AG109742	4	MATTING-RUBBER,2.00X44.50X.12	
2	AG109754	4	MATTING-RUBBER,2.00X46.00X.12	
3	AG120558	1	TUBE WLDMT-FUEL LINE	
4	AG122229	1	BRKT,STIFFNER,HAT SECTION	
5	AG122302	1	BRKT-AUX BAT POST	
6	AG125208	1	SHIELD-EXHAUST	
7	AG125210	4	STRAP WLDMT-FUEL TANK	
8	AG126403	4	BOLT-.31-18X2.75 G5 CRG ZN/Y	
9	AG130111	1	PLATE,MTG-FUEL TUBE	
10	AG130414	4	TUBE-RD,.75ODX.12WALL X 2.00LG	
11	AG262729	2	PLATE-SLOT SEALING	
12	AG325049	1	CABINET ASM-TOOL BOX,LH	SEE PAGE 4-2
13	AG325050	1	CABINET ASM-TOOL BOX,RH	SEE PAGE 4-3
14	AG504815	1	TANK-FUEL,65GL,POLY,RH	[A]
15	AG504816	1	TANK-FUEL,65GL,POLY,LH	[B]
16	AG510939	-	HOSE HYD 0.37 BULK 250PSI WP [BULK: 5 FT]	
17	AG512346	-	3M 1300 YELLOW ADHESIVE (GAL) [BULK: 0.001 GL]	
18	AG512885	AR	LOCTITE ADHESIVE SEALANT BLUE	
19	AG518292	2	BOLT-U .31-18X2.00X 2.69 RD SS	
20	AG519556	1	SENDING UNIT FUEL LEVEL	
21	AG522183	-	HOSE-FUEL,2.00 ID [BULK: 2.5 FT]	
22	AG522439	8	BOLT-.38-16X1.5,G5,ZN,CRG	
23	AG522453	2	VENT-FUEL,90D,.50MNPTX.38HOSEB	
24	AG523919	8	CLAMP-HIGH TORQUE,3.00	
25	AG550124	2	NUT 0.50-13NC HEX ZN REG	
26	AG550205	4	WASHER LK 0.31 ZN REG	
27	AG550213	4	NUT 0.31-18NC HEX ZN REG	
28	AG550256	2	BOLT.50-13NCX1.25 G5 ZN HHD	
29	AG550264	2	WASHER 0.50 LK ZN REG	
30	AG550353	10	WASHER 0.50 FL ZN REG TYPE-B	
31	AG551007	8	WASHER FL 0.37 ZN REG TYPE-B	
32	AG551015	4	WASHER 0.31 FL ZN REG TYPE-B	
33	AG551201	1	ADAP STR .37MNPT X .37MJIC (N)	
34	AG552461	1	ADAP STR 0.50MNPT X 0.50MJIC	
35	AG561025	2	CLAMP HOSE .218 TO .625 U5S	
36	AG561867	2	PLUG PIPE 0.25-18 EXT HEX HD	
37	AG601152	8	NUT 0.50-13NC HEX ZN REG NY	
38	AG601411	8	NUT 0.37-16NC HEX ZN REG LK NY	
39	AG601888	4	NUT 0.31-18NC HEX ZN REG NY	
	FOOTNOTE [A]		FOR REPLACEMENT CAP USE AG055178	
	FOOTNOTE [B]		FOR REPLACEMENT CAP USE AG055178	

Assembly Title, refer to Table of Contents

Assembly Reference, see referenced page

Footnote Reference, see notes below.

Footnote Reference

Footnote description

Assembly Page #, refer to Table of Contents

Part Book Section, refer to Table of Contents

Part Book Title, refer to Part Book Cover

Copyright © 2003 AGCO Corporation

1 - 3 | 9 (CHECK LETTER) | 14 - 17

MACHINE SEQUENCE NUMBER:
SEQUENCE NUMBER WILL START OVER AT THE BEGINNING OF EACH MODEL YEAR. THE FIRST MACHINE OF EACH MODEL YEAR WILL BE SEQUENCED 1001.

4 | 5 - 8 | 10 | 11 | 12 | 13

1 - 3	
WORLD MANUFACTURER CODE:	
AGC	AGCO

4	
BRAND CODE:	
A	AG-CHEM
C	CHALLENGER
L	LORAL
S	SPRA-COUPE
W	WILLMAR

5 - 8	
MODEL NUMBER:	
0874	AG-CHEM
1074	
1070	
1274	
6103	
1206	
6203	
8203	
8204	
8244	
9203	
9103	
9203	
3104	
3244	
9055	
9556	
6300	LORAL
6400	

5 - 8	
MODEL NUMBER:	
5150	WILLMAR
5200	
5500	
5600	
5800	
1600	
1655	
2455	
0107	
4550	
8500	
3450	CHALLENGER
3650	
4450	
4455	
4460	
4650	
4655	
4660	
7450	
7650	
7655	
7460	
7660	
0410	
0610	
0735	
0745	
0755	
0765	
0835	
0845	
0855	
0865	
0875	
0945	
0955	
0965	
0975	
2244	SPRA-COUPE
3244	

10	
LOCATION BUILT CODE:	
N	JACKSON
Q	GRUBBENVORST

11	
MODEL YEAR CODE:	
P	2005
R	2006
S	2007
T	2008
U	2009
Y	2010
W	2011
X	2012

12		
OPTION CODE:		
0	NO CODE	AG-CHEM, LORAL (WILLMAR)
B	BOLT-ON HOPPER	
7	NARROW AXLE	SPRA-COUPE & CHALLENGER SPRAYER
8	WIDE AXLE	
I	EXTRA WIDE AXLE	
E	ESP	
P	POLY TANK	AG-CHEM (65/75C ONLY)
S	STAINLESS TANK	
N	NEW LEADER	
A	745	CHALLENGER TRACTOR
B	755	
C	765	
G	835	
H	845	
J	855	
K	865	
L	875	
R	945	
S	955	
T	965	
U	975	

13		
OPTION CODE:		
0	NO CODE	AG-CHEM, LORAL, WILLMAR
A	AUTOMATIC XSHN	SPRA-COUPE & CHALLENGER SPRAYER
M	MANUAL XSHN	
P	POWERSHIFT XSHN	
S	ESP	
G	800 GALLON	AG-CHEM (65/75C ONLY)
I	1000 GALLON	
L	NEW LEADER	
A	EAME AG	CHALLENGER TRACTOR
B	EAME SCRAPER	
C	R.O.S. AG NARROW (MT700 ONLY)	
D	R.O.S. AG WIDE (MT700 ONLY)	
E	R.O.S. AG ULTRA-WIDE (MT700 ONLY)	
F	R.O.S. SCRAPER (MT800 & MT900)	
G	R.O.S. AG (MT800 & MT900)	

TANK AND SADDLE GROUP	1
PRODUCT PUMP AND PRESSURE PLUMBING GROUP	2
BOOM GROUP	3
BOOM PLUMBING GROUP	4
HYDRAULIC GROUP	5
ELECTRICAL GROUP	6
AIR SYSTEM GROUP	7
FOAM MARKER GROUP	8
DECAL GROUP	9
PRESSURE WASHER AND HEAD RINSE GROUP	10
OPTION GROUP	11

TANKANDSADDLE ASM-800GL POLY,WHT	1-1
TANKANDSADDLE ASM-860L SS	1-2
TANKANDSADDLE ASM-860L SS	1-3
TANKANDSADDLE ASM-1080L SS	1-4
TANKANDSADDLE ASM-1080L SS	1-5
TANKANDSADDLE ASM-1240L SS	1-6
TANKANDSADDLE ASM-1240L SS	1-7
FTG ASM-TANK,800GL POLY	1-8
TANK ASM-3.00 SUMP,800GL POLY	1-9
ASM 10" LID	1-10
COVER-HINGED	1-11
OPT-SUMP VALVE,3.00, MANUAL	1-12
VALVE 3.00 BFLY W/10P LEVER	1-13
TANK-REWORK	1-14
SADDLE ASM-800GL POLY	1-15
VALVE ASM-3.00 ELEC,EH4,3 SEC	1-16
TANK ASM-40GL W/O AG	1-17
VENT ASM-TANK	1-18
TANK-ASM-20GL W/O AG	1-19
RELOAD INSTL-2.00,LIQ SYS	1-20
VLV BALL 2.00 POLY FF	1-21
RELOAD INSTL-3.00,LIQ SYS	1-22
TANK ASM-1240GL	1-23
SADDLE ASM-1240GL	1-24
SIGHT GAUGE ASM-FRT,1240GL	1-25
SIGHT GAUGE ASM-REAR,1240GL	1-26
TANK ASM-860GL	1-27
SADDLE ASM-860GL	1-28
SIGHT GAUGE ASM-FRT,860GL	1-29
SIGHT GAUGE ASM-REAR,860GL	1-30
TANK ASM-1080GL	1-31
SADDLE ASM-1080GL	1-32
SIGHT GAUGE ASM-FRT,1080GL	1-33
SIGHT GAUGE ASM-REAR,1080GL	1-34
SUPPORT ASM-TANK,PLASTIC	1-35
TIEDOWN INSTL-LIQ SYS,ROGATOR	1-36

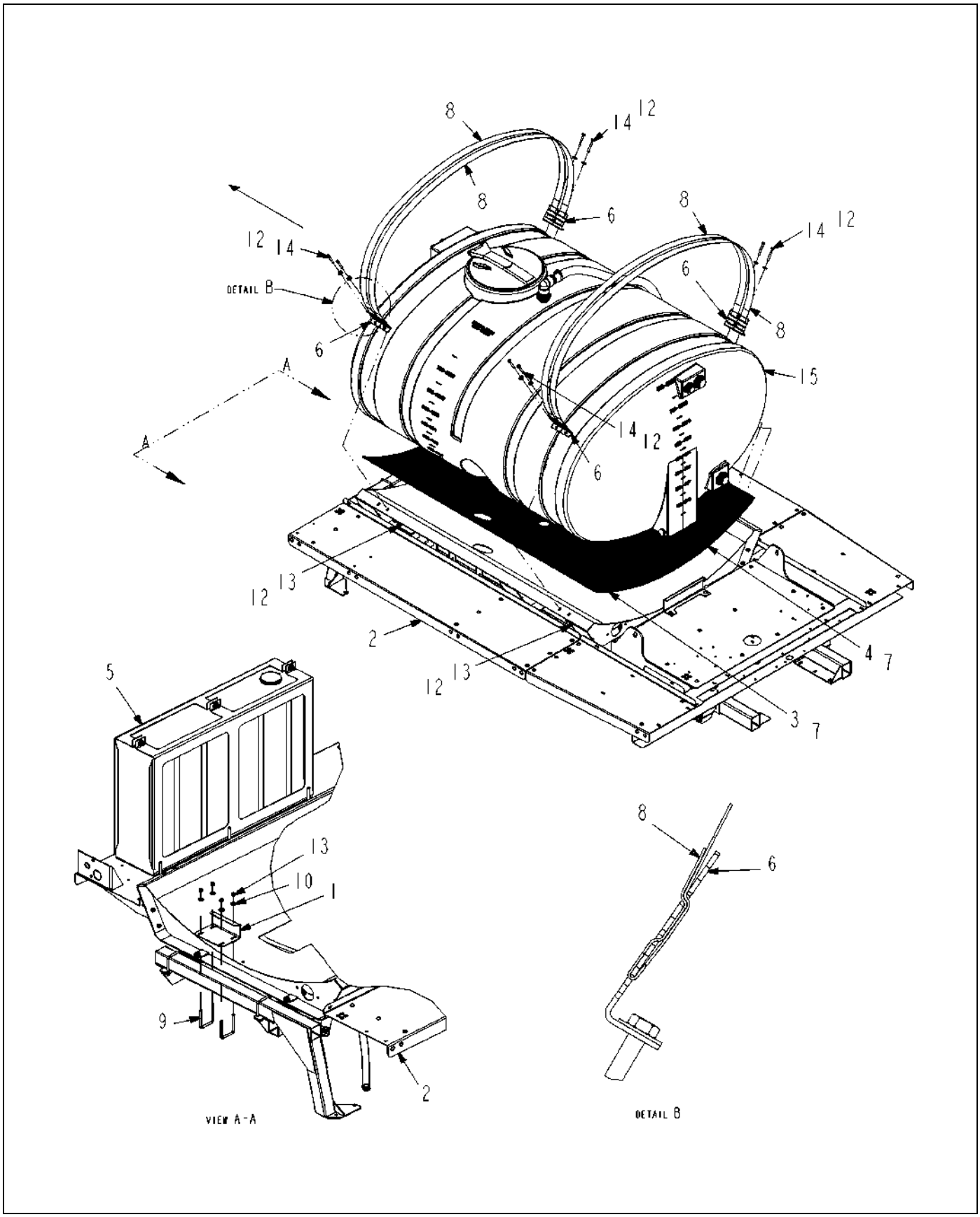

520750D1-01-R506-.TIF

Copyright © 2007 AGCO Corporation

TANKANDSADDLE ASM-800GL POLY,WHT

ITEM	PART #	QTY	DESCRIPTION	COMMENTS
1	AG121042	1	PLATE-STOP,TANK,PRODUCT	
2	AG135332	1	SADDLE ASM-800GL POLY	SEE PAGE 1-15
3	AG135379	1	MATTING-RUBBER,TK SPRT,800,LH	
4	AG135380	1	MATTING-RUBBER,TK SPRT,800,RH	
5	AG135906	1	TANK INSTL-RINSE,RH SIDE,55GL	SEE PAGE 10-3
6	AG216360	8	HOLDDOWN POLY STRAP	
7	AG512346	AR	3M 1300 YELLOW ADHESIVE (GAL)	
8	AG516089	-	STRAP TANK WEBBING 2.00 POLY [BULK: 42 FT]	
9	AG523935	2	BOLT-U,.38-16X3.12X4.00,GRS,ZP	
10	AG551007	4	WASHER 0.37 FL ZN REG TYPE-B	
11	AG553557	AR	TIE CABLE 7.37 .06-1.37 BLACK	
12	AG562073	16	WASHER 0.37 FL SS REG TYPE-B	
13	AG601411	12	NUT 0.37-16NC HEX ZN REG NY	
14	AG710367	8	BOLT 0.37NCX 3.00 G5 ZN FT HHD	
15	520754D1	1	FTG ASM-TANK,800GL POLY	

Copyright © 2007 AGCO Corporation

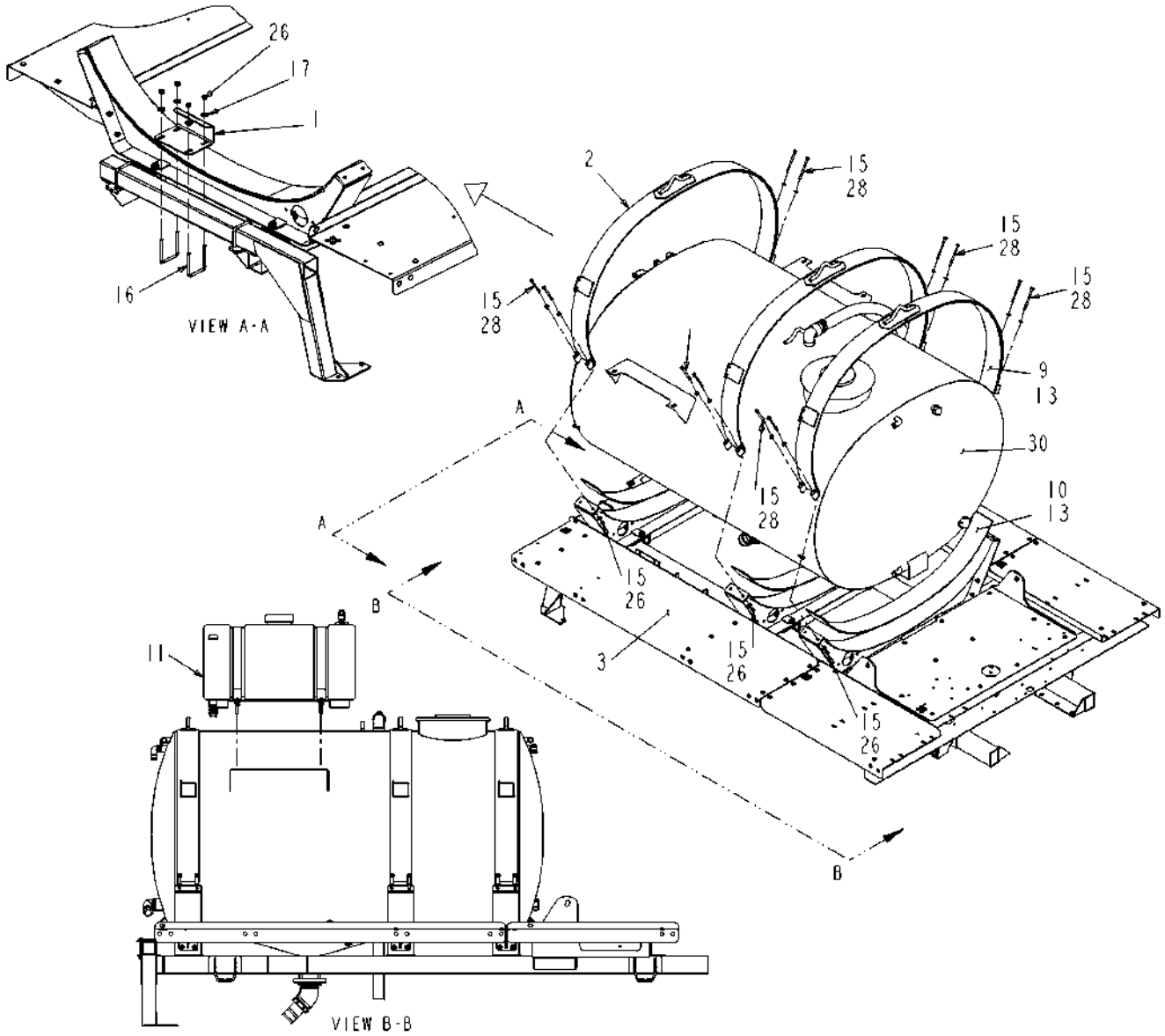

520751D1-01-R506-01.TIF

Copyright © 2007 AGCO Corporation

TANKANDSADDLE ASM-860L SS

ITEM	PART #	QTY	DESCRIPTION	COMMENTS
1	AG121042	1	PLATE-STOP,TANK,PRODUCT	
2	AG127824	3	STRAP WLDMT-TANK,860GL	
3	AG127834	1	SADDLE ASM-860GL	SEE PAGE 1-28
9	AG262426	3	MATTING-RUBBER,TANK STRAP	
10	AG262427	3	MATTING-RUBBER,SADDLE SUPPORT	
11	AG424494	1	TANK INSTL-RINSE,TOP	SEE PAGE 10-5
13	AG512346	AR	3M 1300 YELLOW ADHESIVE (GAL)	
15	AG514559	24	WASHER 0.37 FL ZN SAE TYP-A G8	
16	AG523935	2	BOLT-U,.38-16X3.12X4.00,GRS,ZP	
17	AG551007	4	WASHER 0.37 FL ZN REG TYPE-B	
18	AG553557	AR	TIE CABLE 7.37 .06-1.37 BLACK	
26	AG601411	16	NUT 0.37-16NC HEX ZN REG NY	
28	AG606683	12	BOLT 0.37-16NCX 5.00 G8 ZN HHD	
30	520755D1	1	TANK ASM-860GL SS	

Copyright © 2007 AGCO Corporation

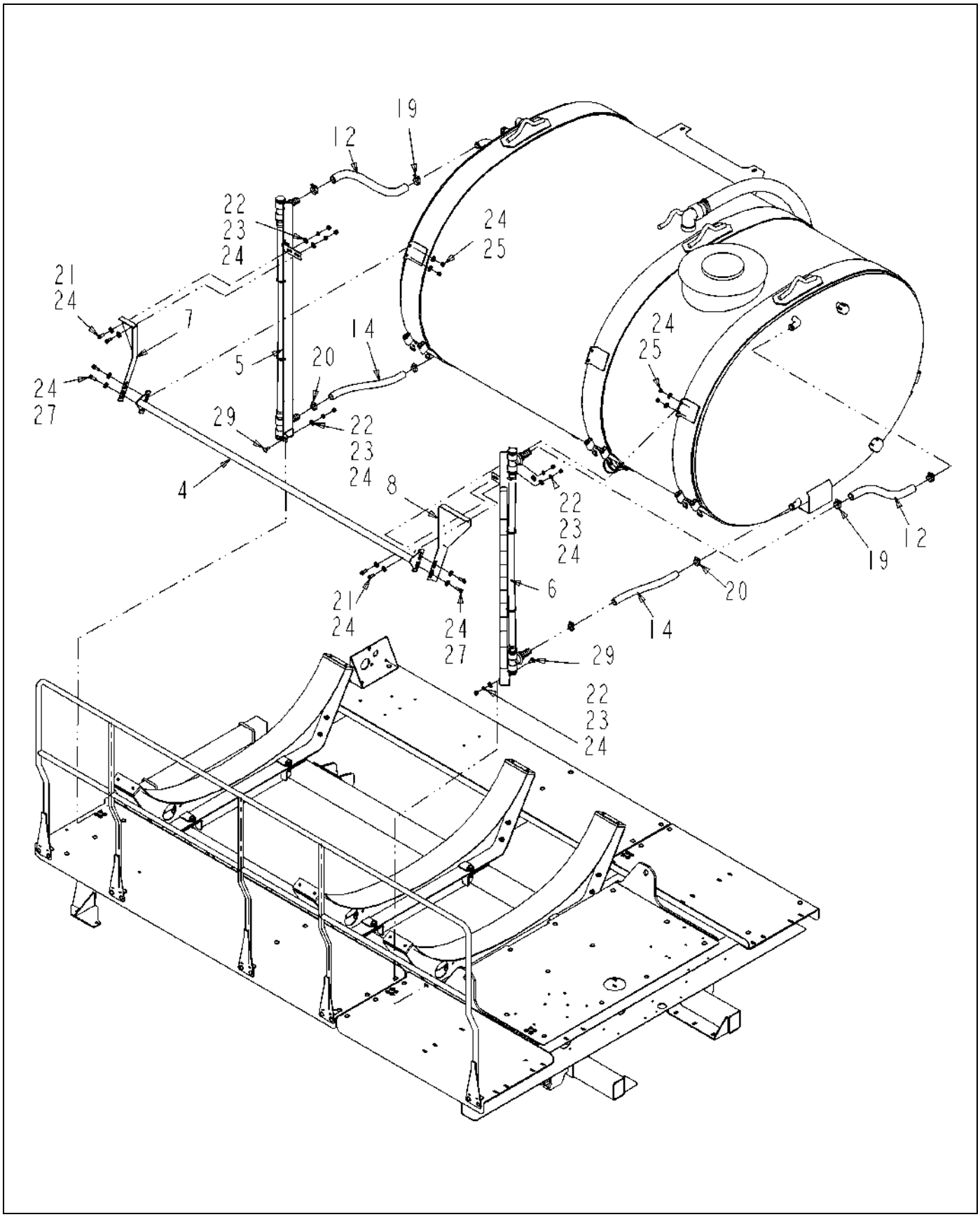

520751D1-01-R506-02.TIF

Copyright © 2007 AGCO Corporation

ITEM	PART #	QTY	DESCRIPTION	COMMENTS
4	AG127882	1	RETAINER WLDMT-HOSE,TANK	
5	AG128490	1	SIGHT GAUGE ASM-FRT,860GL	SEE PAGE 1-29
6	AG128491	1	SIGHT GAUGE ASM-REAR,860GL	SEE PAGE 1-30
7	AG128492	1	BRKT-MTG,FRT,SIGHT GAUGE,860	
8	AG128493	1	BRKT-MTG,REAR,SIGHT GAUGE,860	
12	AG511528	-	HOSE 1.00 2BRD EPDM [BULK: 3.500 FT]	
14	AG513679	-	HOSE-1.00 EVA,TRANSLUCENT [BULK: 3.250 FT]	
19	AG561213	4	CLAMP 0.81-1.50 HOSE 16HS	
20	AG561229	4	CLAMP 0.68-1.25 HOSE 12HS	
21	AG562048	4	BOLT 0.37-16NCX 1.00 S.S. HHD	
22	AG562050	6	WASHER 0.37 LK SS REG	
23	AG562065	6	NUT 0.37-16NC HEX SS REG	
24	AG562073	18	WASHER 0.37 FL SS REG TYPE-B	
25	AG562123	4	NUT 0.37-16NC HEX SS C-LK	
27	AG604167	4	BOLT 0.37-16NCX 1.25 S.S. HHD	
29	AG609084	2	BOLT 0.37-16NCX 1.00 SS CRG	

Copyright © 2007 AGCO Corporation

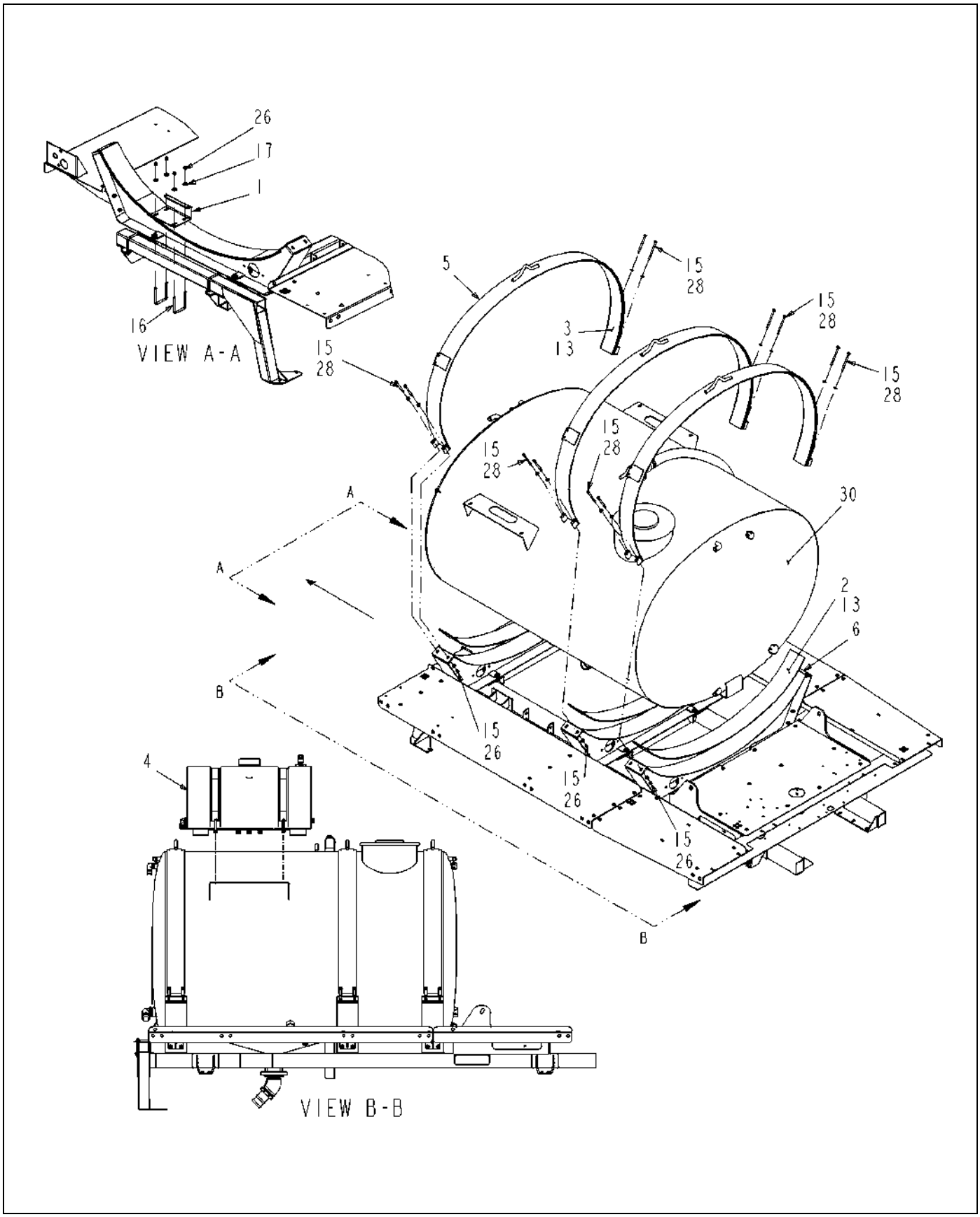

520752D1-01-R506-01.TIF

Copyright © 2007 AGCO Corporation

TANKANDSADDLE ASM-1080L SS

ITEM	PART #	QTY	DESCRIPTION	COMMENTS
1	AG121042	1	PLATE-STOP,TANK,PRODUCT	
2	AG121462	3	MATTING-RUBBER,TK SPRT,1080GL	
3	AG121463	3	MATTING-RUBBER,TK STRAP,1080GL	
4	AG121862	1	TANK INSTL-RINSE,TOP,1080GL	SEE PAGE 10-7
5	AG127823	3	STRAP WLDMT-TANK,1080GL	
6	AG127833	1	SADDLE ASM-1080GL	SEE PAGE 1-32
13	AG512346	AR	3M 1300 YELLOW ADHESIVE (GAL)	
15	AG514559	24	WASHER 0.37 FL ZN SAE TYP-A G8	
16	AG523935	2	BOLT-U,.38-16X3.12X4.00,GRS,ZP	
17	AG551007	4	WASHER 0.37 FL ZN REG TYPE-B	
18	AG553557	AR	TIE CABLE 7.37 .06-1.37 BLACK	
26	AG601411	16	NUT 0.37-16NC HEX ZN REG NY	
28	AG606683	12	BOLT 0.37-16NCX 5.00 G8 ZN HHD	
30	520756D1	1	TANK ASM-1080GL SS	

Copyright © 2007 AGCO Corporation

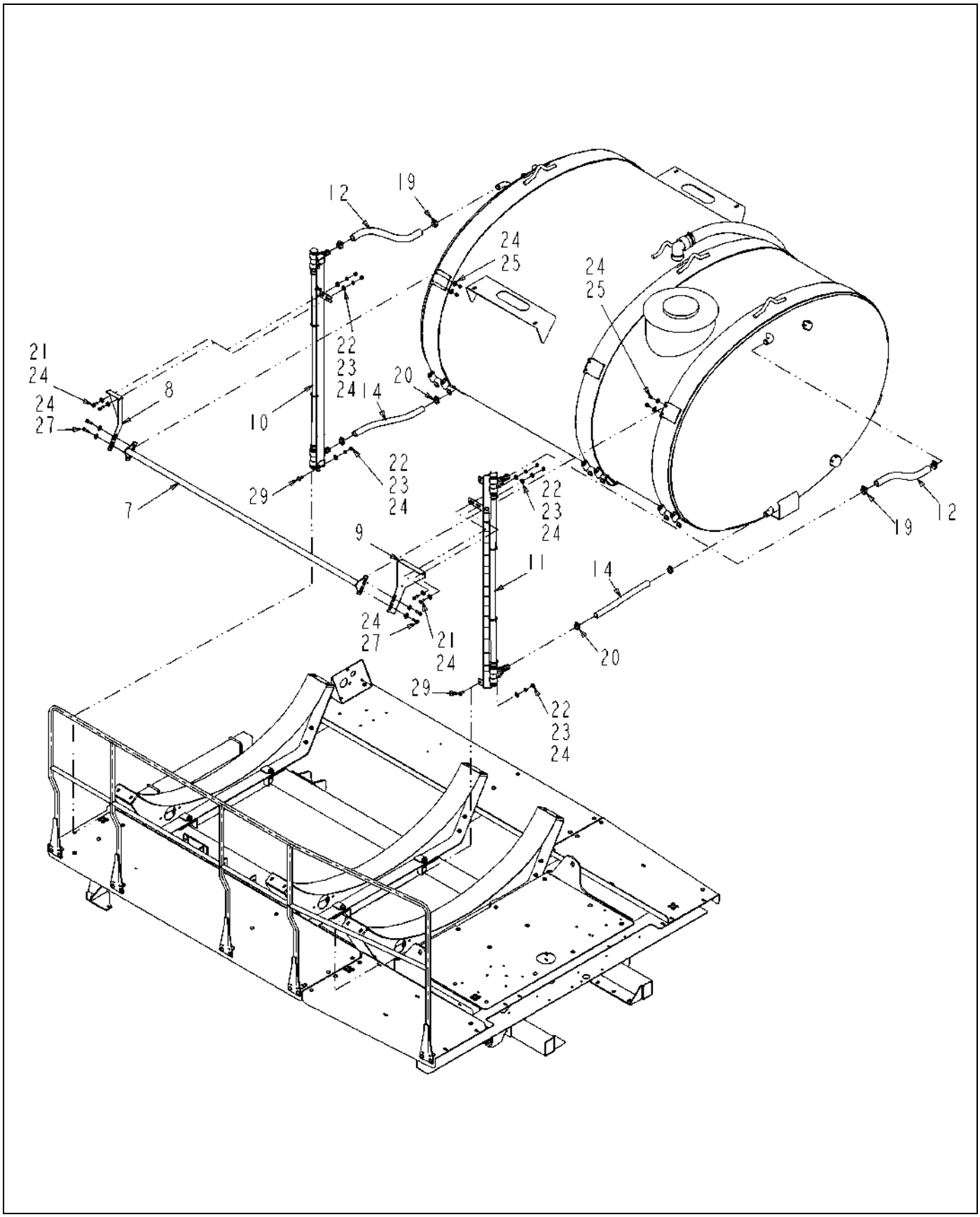

520752D1-01-R506-02.TIF

Copyright © 2007 AGCO Corporation

ITEM	PART #	QTY	DESCRIPTION	COMMENTS
7	AG127882	1	RETAINER WLDMT-HOSE,TANK	
8	AG128265	1	BRKT-MTG,FRT,SIGHT GAUGE,1040	
9	AG128266	1	BRKT-MTG,REAR,SIGHTGAUGE,1080	
10	AG128269	1	SIGHT GAUGE ASM-FRT,1080GL	SEE PAGE 1-33
11	AG128270	1	SIGHT GAUGE ASM-REAR,1080GL	SEE PAGE 1-34
12	AG511528	-	HOSE 1.00 2BRD EPDM [BULK: 3.500 FT]	
14	AG513679	-	HOSE-1.00 EVA,TRANSLUCENT [BULK: 3.250 FT]	
19	AG561213	4	CLAMP 0.81-1.50 HOSE 16HS	
20	AG561229	4	CLAMP 0.68-1.25 HOSE 12HS	
21	AG562048	4	BOLT 0.37-16NCX 1.00 S.S. HHD	
22	AG562050	6	WASHER 0.37 LK SS REG	
23	AG562065	6	NUT 0.37-16NC HEX SS REG	
24	AG562073	18	WASHER 0.37 FL SS REG TYPE-B	
25	AG562123	4	NUT 0.37-16NC HEX SS C-LK	
27	AG604167	4	BOLT 0.37-16NCX 1.25 S.S. HHD	
29	AG609084	2	BOLT 0.37-16NCX 1.00 SS CRG	

Copyright © 2007 AGCO Corporation

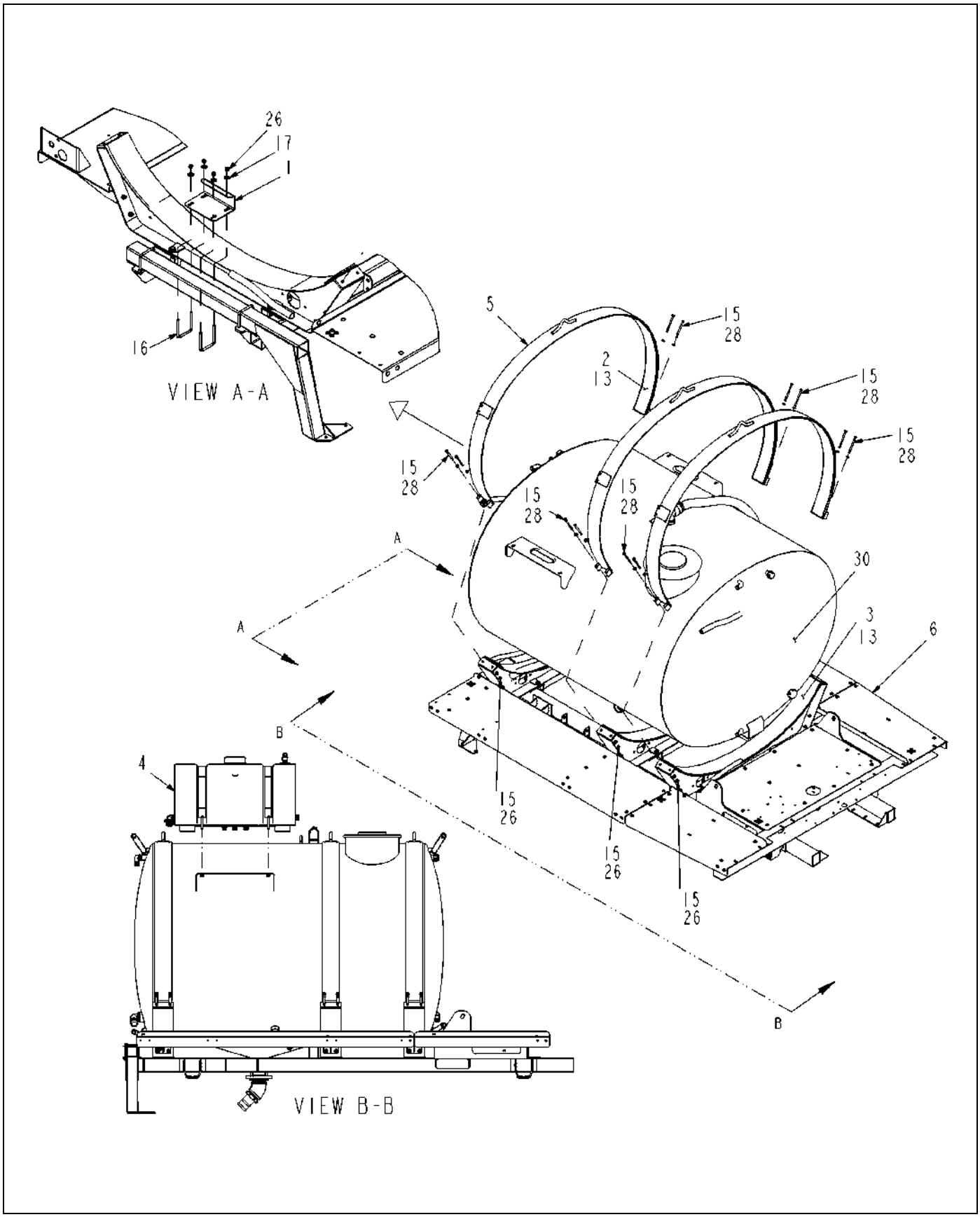

520753D1-01-R506-01.TIF

Copyright © 2007 AGCO Corporation

TANKANDSADDLE ASM-1240L SS

ITEM	PART #	QTY	DESCRIPTION	COMMENTS
1	AG121042	1	PLATE-STOP,TANK,PRODUCT	
2	AG121461	3	MATTING-RUBBER,TK STRAP,1240GL	
3	AG121462	3	MATTING-RUBBER,TK SPRT,1080GL	
4	AG122202	1	TANK INSTL-RINSE,TOP,1240GL	SEE PAGE 10-2
5	AG127822	3	STRAP WLDMT-TANK,1240GL	
6	AG127832	1	SADDLE ASM-1240GL	SEE PAGE 1-24
13	AG512346	AR	3M 1300 YELLOW ADHESIVE (GAL)	
15	AG514559	24	WASHER 0.37 FL ZN SAE TYP-A G8	
16	AG523935	2	BOLT-U,.38-16X3.12X4.00,GRS,ZP	
17	AG551007	4	WASHER 0.37 FL ZN REG TYPE-B	
18	AG553557	AR	TIE CABLE 7.37 .06-1.37 BLACK	
26	AG601411	16	NUT 0.37-16NC HEX ZN REG NY	
28	AG606683	12	BOLT 0.37-16NCX 5.00 G8 ZN HHD	
30	520756D1	1	TANK ASM-1080GL SS	

Copyright © 2007 AGCO Corporation

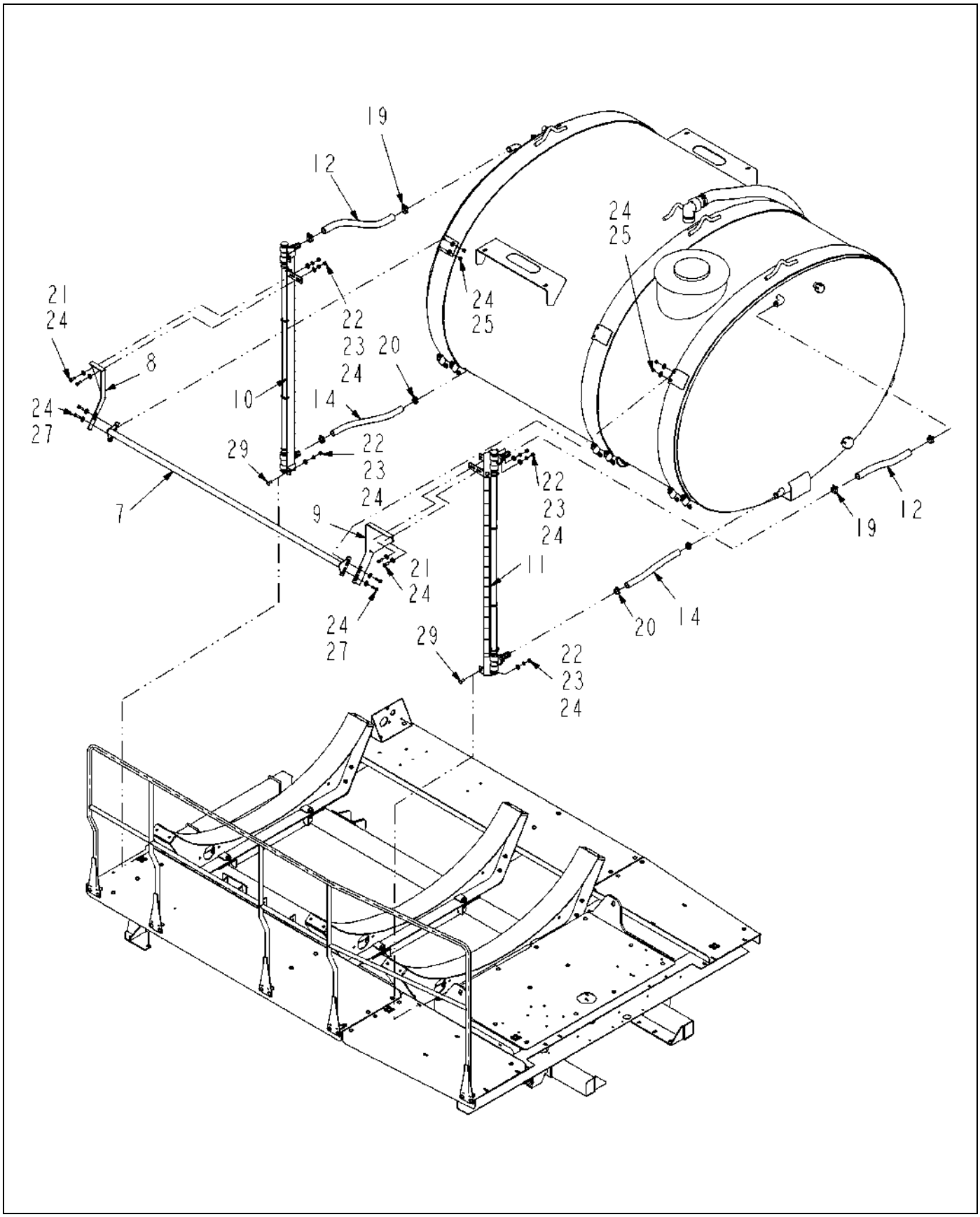

520753D1-01-R506-02.TIF

Copyright © 2007 AGCO Corporation

ITEM	PART #	QTY	DESCRIPTION	COMMENTS
7	AG127882	1	RETAINER WLDMT-HOSE,TANK	
8	AG128108	1	BRKT-MTG,FRT,SIGHT GAUGE,1240	
9	AG128109	1	BRKT-MTG,REAR,SIGHT GAUGE,1240	
10	AG128110	1	SIGHT GAUGE ASM-FRT,1240GL	SEE PAGE 1-25
11	AG128111	1	SIGHT GAUGE ASM-REAR,1240GL	SEE PAGE 1-26
12	AG511528	-	HOSE 1.00 2BRD EPDM [BULK: 3.334 FT]	
14	AG513679	-	HOSE-1.00 EVA,TRANSLUCENT [BULK: 3.250 FT]	
19	AG561213	4	CLAMP 0.81-1.50 HOSE 16HS	
20	AG561229	4	CLAMP 0.68-1.25 HOSE 12HS	
21	AG562048	4	BOLT 0.37-16NCX 1.00 S.S. HHD	
22	AG562050	6	WASHER 0.37 LK SS REG	
23	AG562065	6	NUT 0.37-16NC HEX SS REG	
24	AG562073	18	WASHER 0.37 FL SS REG TYPE-B	
25	AG562123	4	NUT 0.37-16NC HEX SS C-LK	
27	AG604167	4	BOLT 0.37-16NCX 1.25 S.S. HHD	
29	AG609084	2	BOLT 0.37-16NCX 1.00 SS CRG	

Copyright © 2007 AGCO Corporation

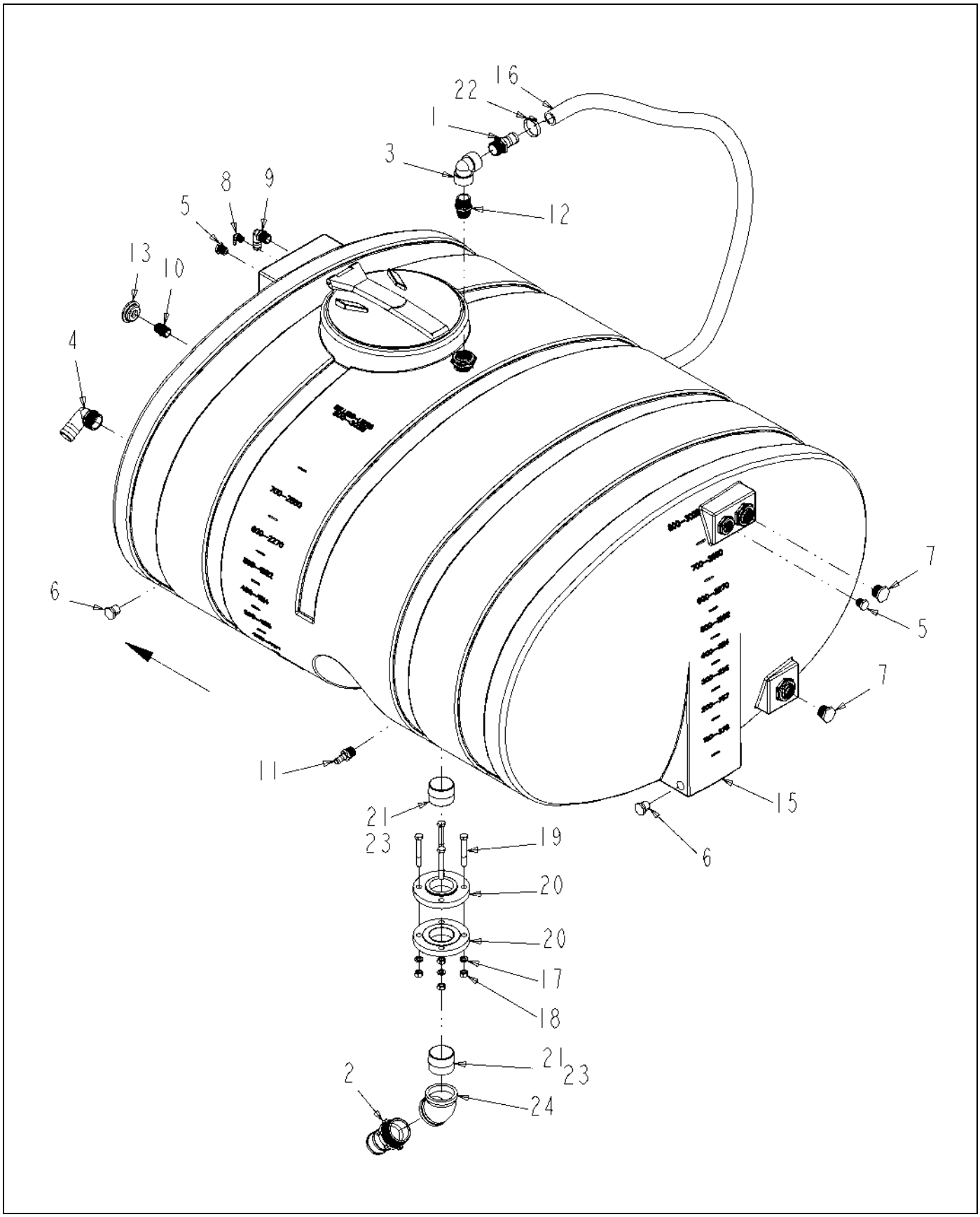

135330-05-R340-.TIF

Copyright © 2007 AGCO Corporation

FTG ASM-TANK,800GL POLY

ITEM	PART #	QTY	DESCRIPTION	COMMENTS
1	AG000766	1	BARB-HOSE,1.50MNTTX1.50BARB,PP	
2	AG000768	1	BARB-HOSE,3.00MNPTX3.00BARB,PP	
3	AG050275	1	ELBOW-PIPE,1.50FNPT,90D,PP	
4	AG050692	1	ELBOW 90D 2.00NPTX2.00 BARB PP	
5	AG051134	2	PLUG-PIPE,HEX,0.75NPT,PP	
6	AG051135	2	PLUG-PIPE,HEX,1.00NPT,PP	
7	AG051136	2	PLUG-PIPE,HEX,1.25NPT,PP	
8	AG051138	1	ELBOW 90D 0.50NPTX0.38BARB PP	
9	AG051145	1	ELBOW 90D 1.00NPTX1.00 BARB PP	
10	AG051153	1	NIPPLE-PIPE,1.00NPTXCLS,PP	
11	AG051182	1	BARB-HOSE,1.00MNPTX0.75BARB,PP	
12	AG051438	1	NIPPLE POLY RED 1.50 X 1.25	
13	AG059580	1	PLUG 2.00FLANGEX1.00FJNPT	
14	AG129187	AR	PIPE SEALANT-FLEX BLACK	
15	AG135312	1	TANK ASM-3.00 SUMP,800GL POLY	SEE PAGE 1-9
16	AG513466	-	HOSE-1.50,LIQ PROD.SUC & DIS [BULK: 10.334 FT]	
17	AG550450	4	WASHER 0.62 LK ZN REG	
18	AG550477	4	NUT 0.62-11NC HEX ZN REG	
19	AG552046	4	BOLT 0.62-11NCX 4.50 G5 ZN HHD	
20	AG553026	2	FLANGE COMP 3.0NPTX7.5 4H	
21	AG560931	2	NIPPLE 3.00NPTX 2.62CLS 304SS	
22	AG561233	1	CLAMP-HOSE,1.81X2.75,36HS	
23	AG711522	AR	SEALANT PIPE""BLACKJACK""RS #21	
24	AG711986	1	ELBOW 45D 3.00 IN 304SS	

Copyright © 2007 AGCO Corporation

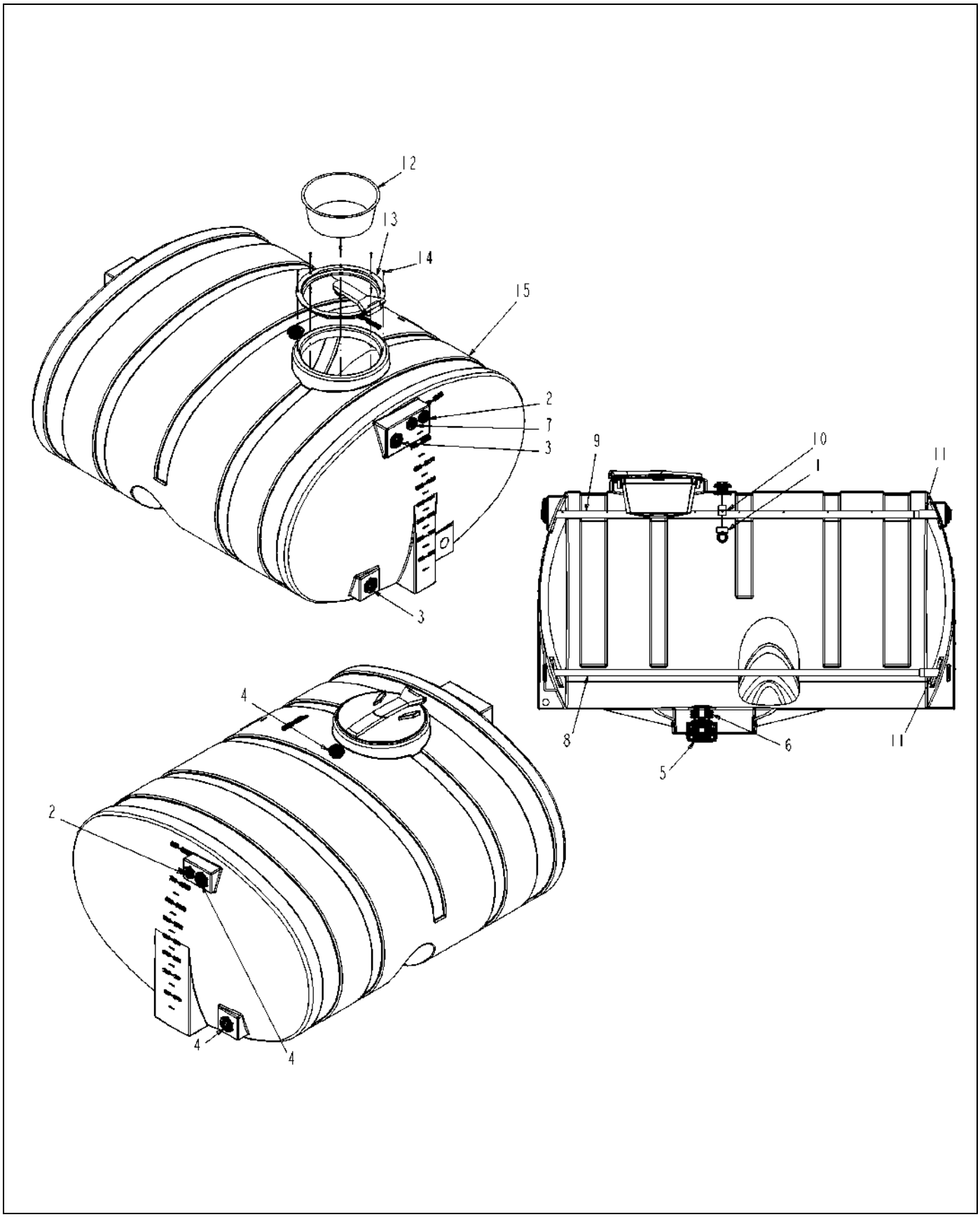

135312-02-R340-.TIF

Copyright © 2007 AGCO Corporation

TANK ASM-3.00 SUMP,800GL POLY

ITEM	PART #	QTY	DESCRIPTION	COMMENTS
1	AG051162	1	TEE,PIPE,1.25FNPT,PP	
2	AG054738	2	TANK FITTING 0.75 POLY	
3	AG054739	2	TANK FITTING 1.00 POLY	
4	AG054740	3	TANK FITTING 1.25 POLY	
5	AG055672	1	FITTING-BD, TANK, 3IN	
6	AG059545	1	VENT CAP/ANTI VORTEX 3.00W/SCR	
7	AG060231	1	FLANGE,.50 POLY TANK	
8	AG233132	1	SPARGER TUBE WLDMT 800 POLY	
9	AG233134	1	TANK RINSE WLDMT 800 POLY	[A]
10	AG263209	1	NIPPLE RWK-PIPE,1.25NPT	
11	AG563151	2	NIPPLE 1.25NPTX 6.00 304SS	
12	6670277	1	SCREEN-TANK,SPRAY	
13	6672457	1	COVER-HINGED	SEE PAGE 1-11
14	6804681	8	SCREW-STAINLESS	
15	507684D1	1	TANK-3.00 SUMP,800GL POLY,WHT	
	FOOTNOTE [A]		DRESSER FITTING - AG051710, DRESSER FITTING GASKET - AG705442	

Copyright © 2007 AGCO Corporation

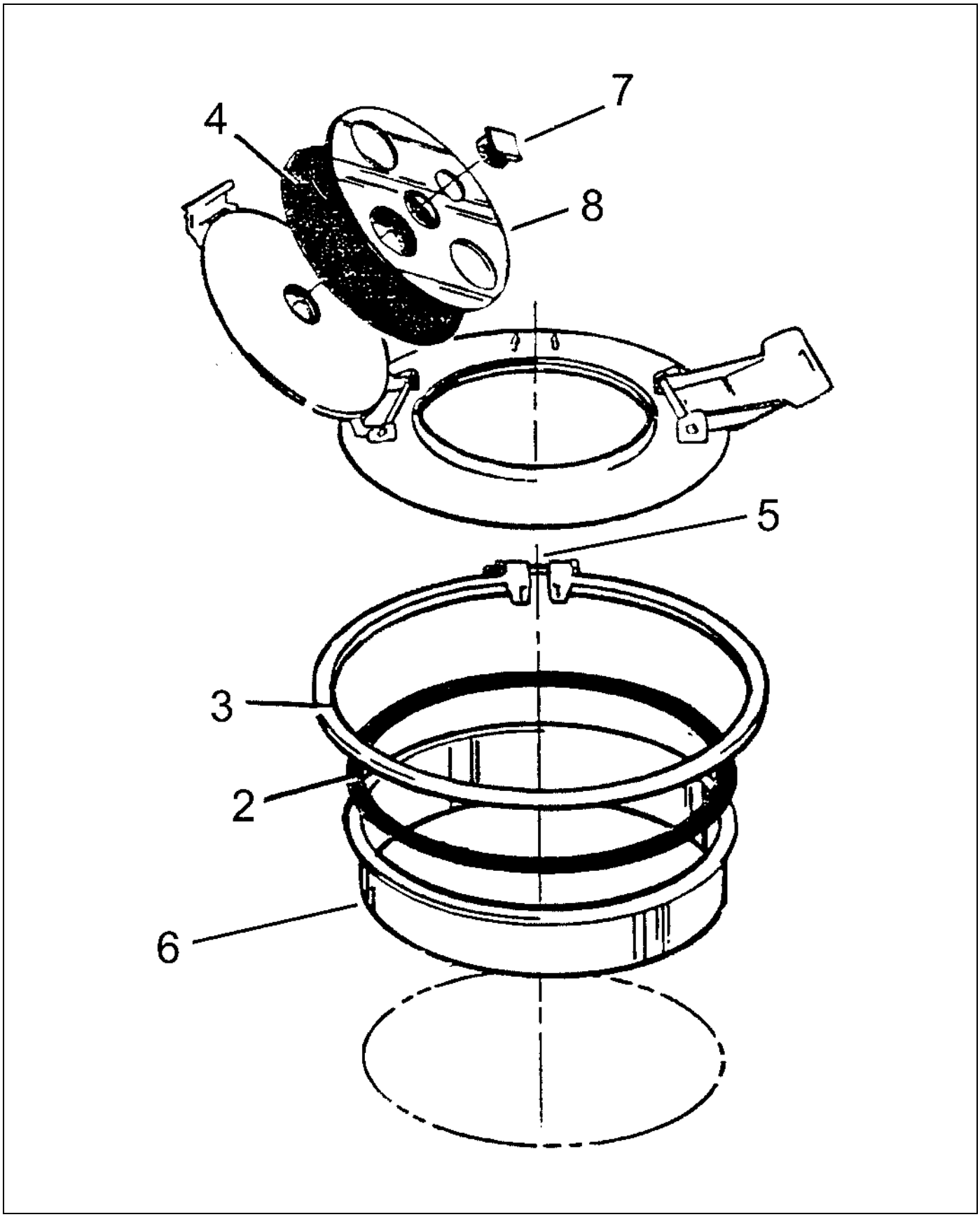

703082.tif

Copyright © 2007 AGCO Corporation

ASM 10" LID

ITEM	PART #	QTY	DESCRIPTION	COMMENTS
REF	AG709046	1	COVER FILL	
2	AG703081	1	GASKET BUNA (USED ON 703036	[A]
3	AG703084	1	RING CLAMPING 16 IN PLAIN STEEL	[B]
4	AG002309	1	KIT GASKET 10 IN	
5	AG850263	1	BOLT 3/8X5 IN FULL THREAD T.P.	
6	AG703083	1	NECK FILL WELL 54042 (703036)	[C]
7	AG007505	1	NUT S.S. TANK LID PLUG VENT	
8	AG844769	1	PLATE BOTTOM 026513	
	FOOTNOTE [A]		ROGATOR SS TANK GASKET-UNDER RING ALSO REF. PARTS BULLETIN 00103	
	FOOTNOTE [B]		ALSO REF PARTS BULLETIN 00103.	
	FOOTNOTE [C]		ALSO REF PARTS BULLETIN 00103.	

Copyright © 2007 AGCO Corporation

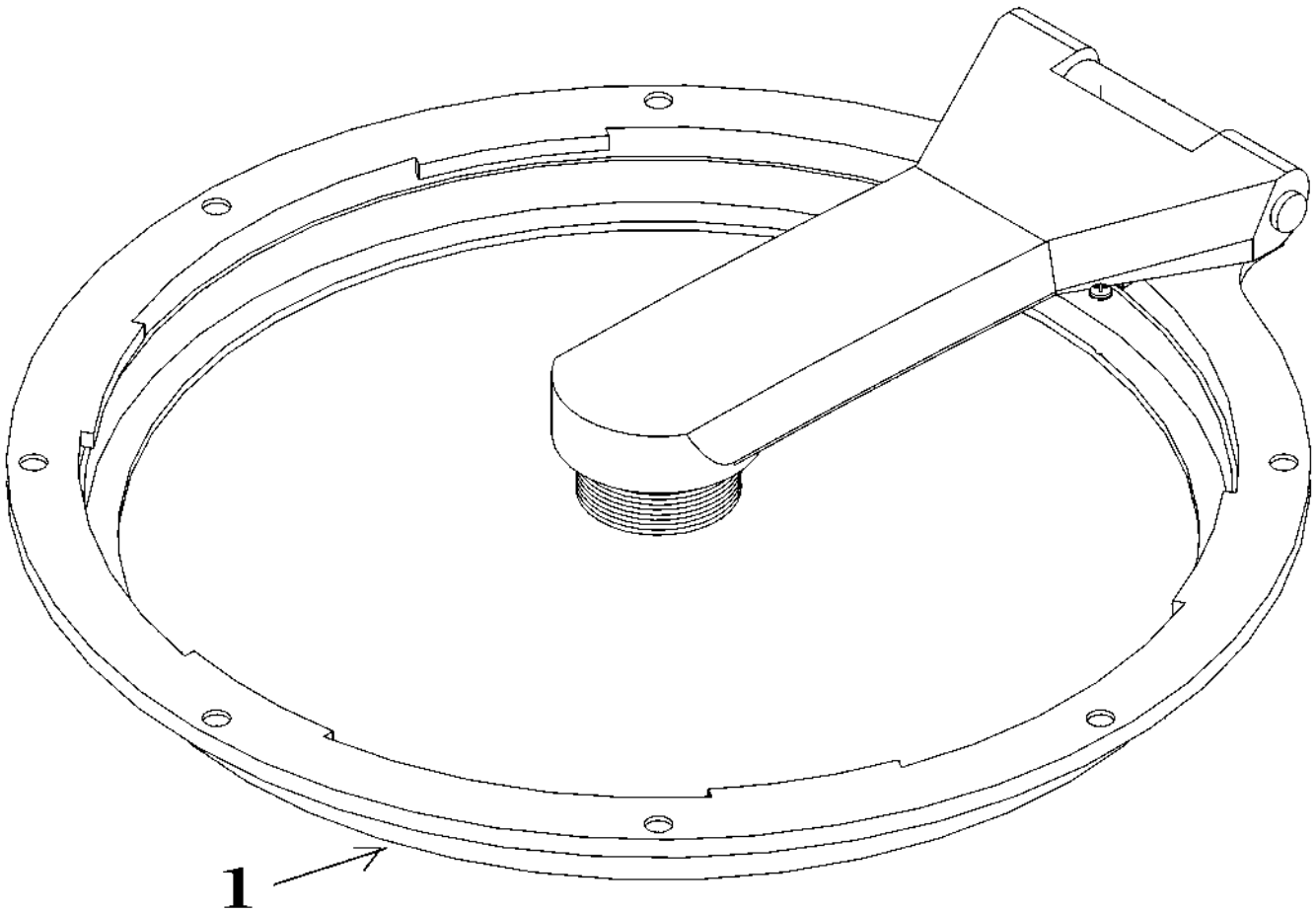

6672457.TIF

Copyright © 2007 AGCO Corporation

COVER-HINGED

ITEM	PART #	QTY	DESCRIPTION	COMMENTS
REF	WR55622	1	0 RING-ARM SEAL,400 GAL	
1	WR55589	1	GASKET-LID,400 GALLON	

Copyright © 2007 AGCO Corporation

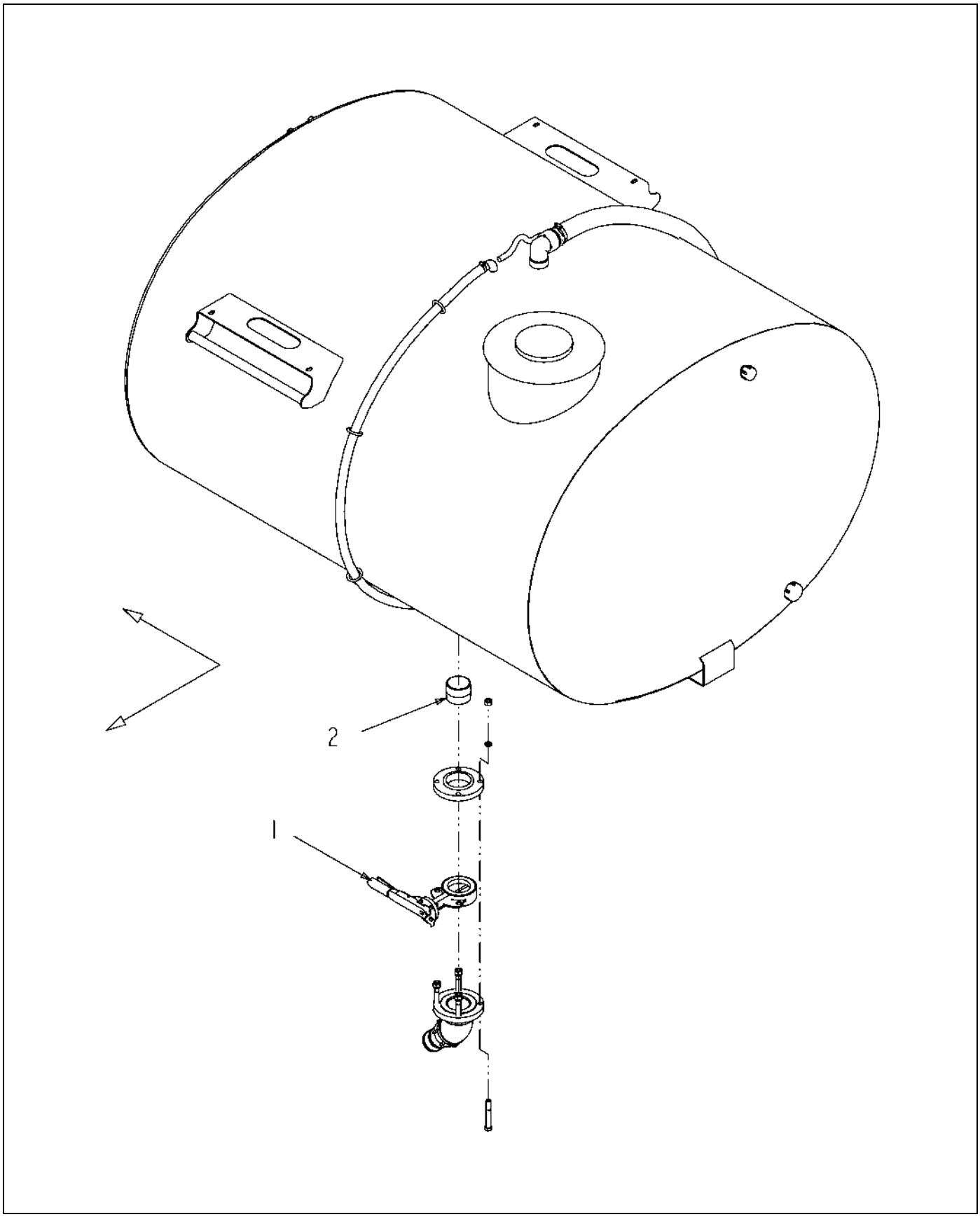

123651-02-N312-.TIF

Copyright © 2007 AGCO Corporation

ITEM	PART #	QTY	DESCRIPTION	COMMENTS
1	AG520095	1	VALVE 3.00 BFLY W/10P LEVER	SEE PAGE 1-13
2	AG711522	AR	SEALANT PIPE""BLACKJACK""RS #21	

Copyright © 2007 AGCO Corporation

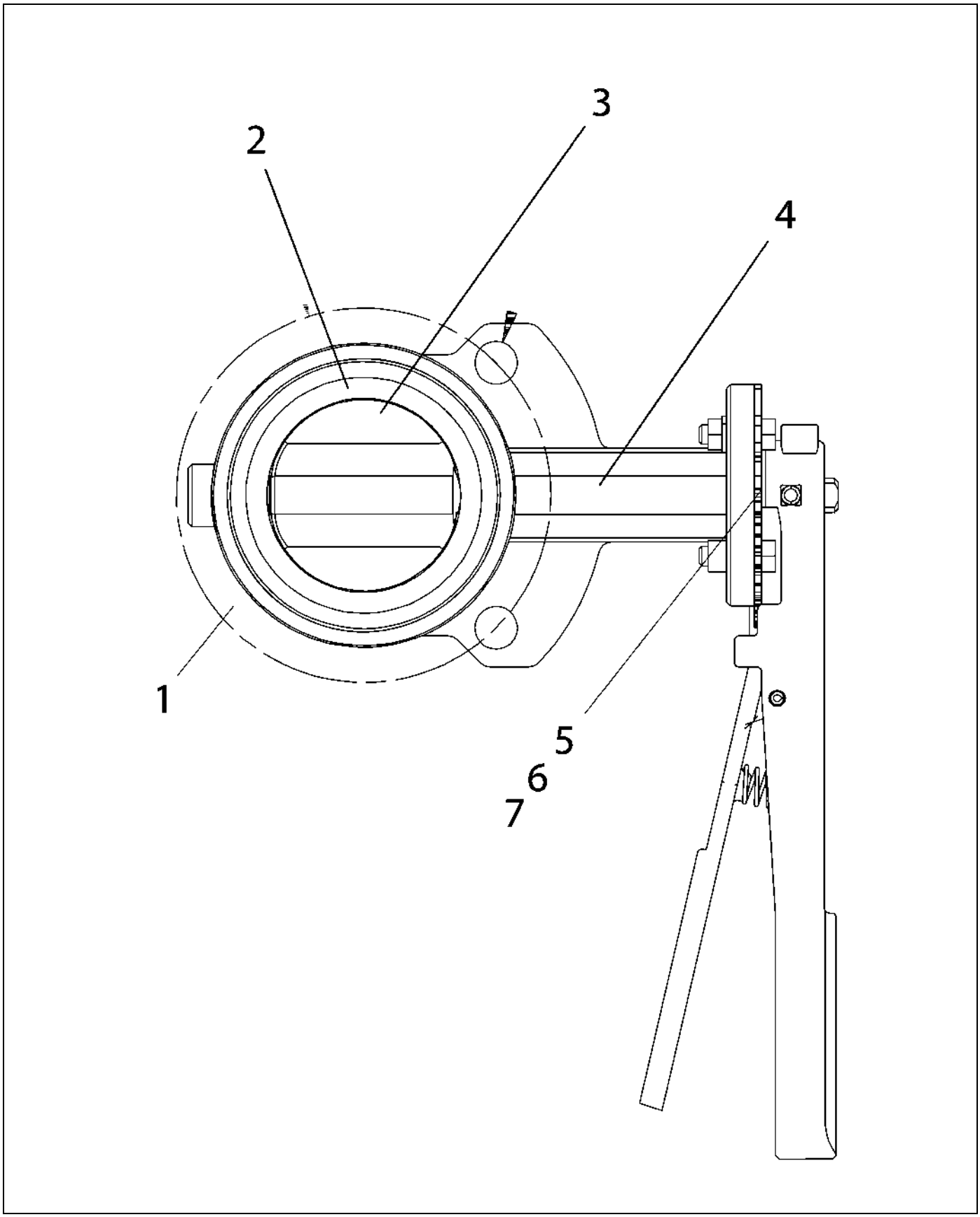

520095-E.TIF

Copyright © 2007 AGCO Corporation

VALVE 3.00 BFLY W/10P LEVER

ITEM	PART #	QTY	DESCRIPTION	COMMENTS
REF	AG723074	1	REPAIR KIT-VITON 3 IN 520095	
REF	AG717132	1	KIT-REPAIR,VALVE 3.00	
REF	AG610181	1	HANDLE-VALVE,2.0/3.0 1O POS	
1	AG520377	1	VALVE-BTFL,3.00	SEE PAGE 2-8
2	AG716188	1	SEAT- 3.00 EPDM	
2	AG727089	1	SEAT/VALVE 3 IN VITON	
3	AG131015	1	DISC, VALVE	
4	AG131014	1	STEM, VALVE	
5	AG727083	1	SEAL/STEM-2 IN SS VALV	
6	AG727085	1	BUSHING/VALVE 3 IN SS	
7	AG716190	1	KIT RETAINER 2.00 & 3.00 IN	

Copyright © 2007 AGCO Corporation

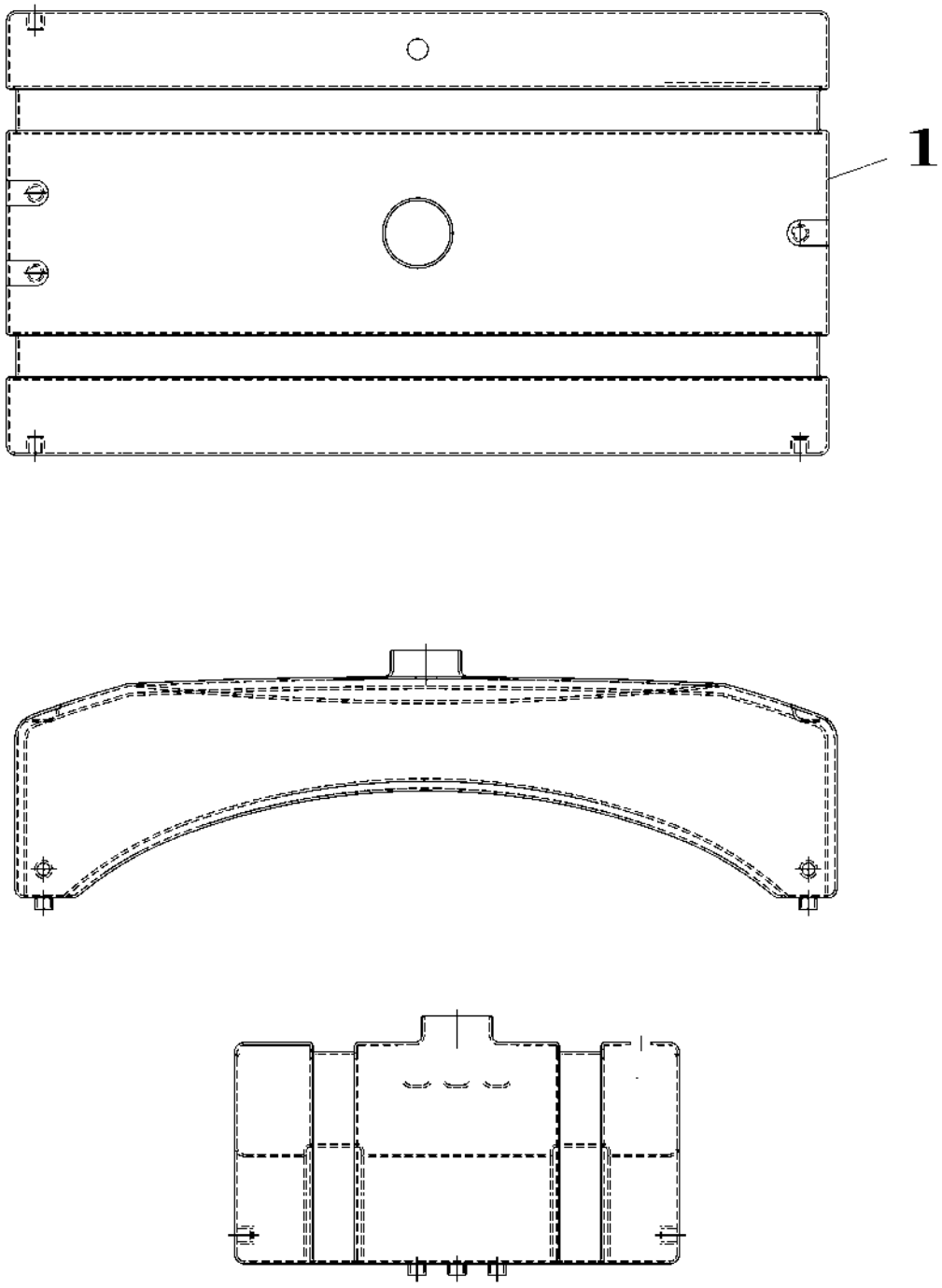

328859-A.TIF

Copyright © 2007 AGCO Corporation

ITEM	PART #	QTY	DESCRIPTION	COMMENTS
1	AG422602	1	TANK-100GL,POLY,TOP	[A]
	FOOTNOTE [A]		AG711024 - THREADED LID	

Copyright © 2007 AGCO Corporation

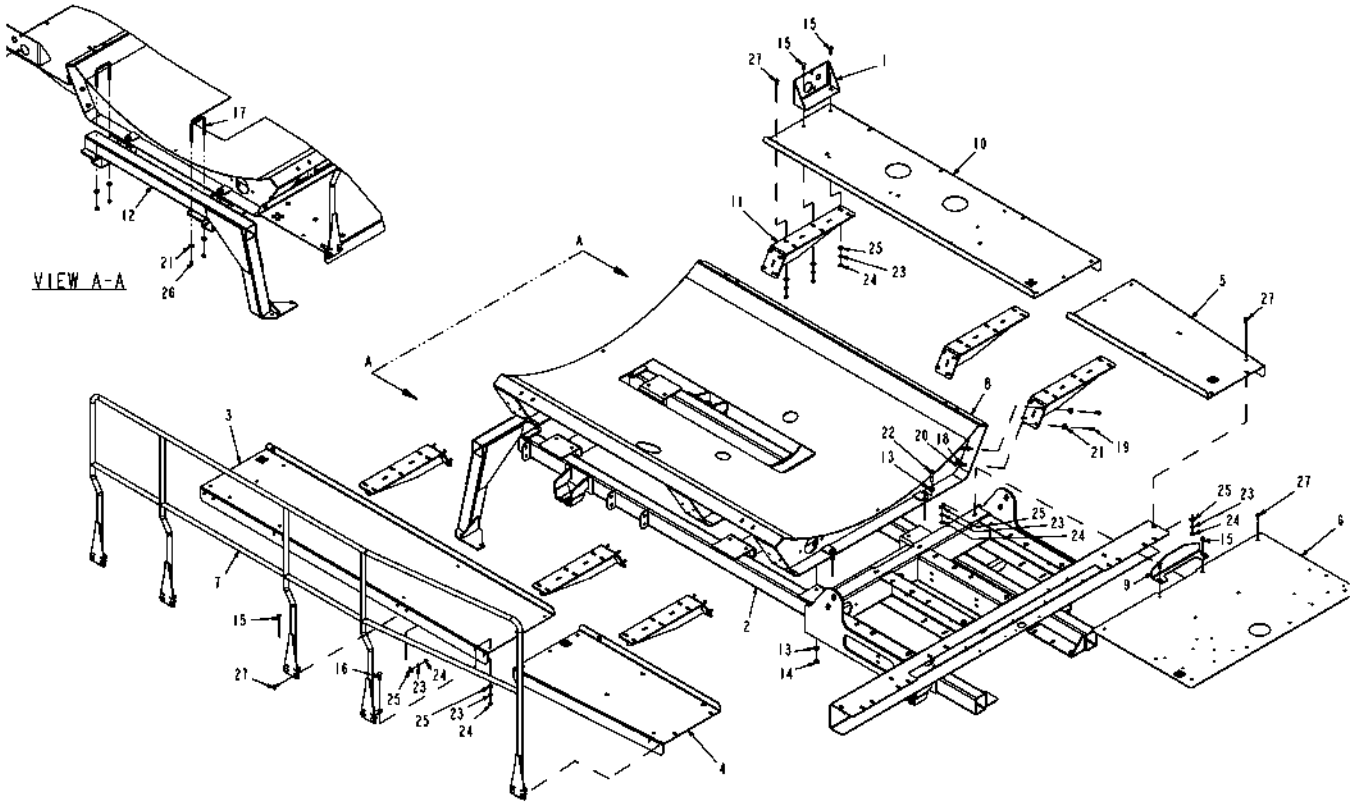

135332-01-M887.TIF

Copyright © 2007 AGCO Corporation

SADDLE ASM-800GL POLY

ITEM	PART #	QTY	DESCRIPTION	COMMENTS
1	AG122038	1	BRKT-MTG,PWM VALVE,LIQ SYS	
2	AG123805	1	SADDLE WLDMT-LONG TIEDOWN PAT	
3	AG127825	1	CATWALK-LH,FRONT	
4	AG127827	1	CATWALK-LH,REAR,1080/1240	
5	AG127828	1	CATWALK-RH,REAR,1080/1240	
6	AG127831	1	PLATE-CATWALK,CENTER	
7	AG128011	1	HNDRL WLDMT-LIQ SYS,1080/1240	
8	AG135333	1	SUPPORT WLDMT-TANK,800GL POLY	
9	AG135432	1	PLATE-STOP,REAR,TANK,POLY	
10	AG136100	1	CATWALK-W/RINSE TANK,FRONT,RH	
11	AG262418	6	GUSSET WLDMT-CATWALK SUPPORT	
12	AG424387	1	SUPPORT WLDMT-PUMP	
13	AG514554	24	WASHER 0.50 FL ZN SAE TYP-A G8	
14	AG520614	12	NUT-.50-13,G8,ZN,HH,C-LK	
15	AG522571	6	BOLT 0.37-16NCX 1.25 304SS CRG	
16	AG522572	1	BOLT-.38-16X1.50,SS,CRG	
17	AG523935	2	BOLT-U,.38-16X3.12X4.00,GRS,ZP	
18	AG550191	24	WASHER 0.37 LK ZN REG	
19	AG550515	24	BOLT 0.37-16NCX 1.25 G5 ZN HHD	
20	AG550825	24	NUT 0.37-16NC HEX ZN REG	
21	AG551007	28	WASHER 0.37 FL ZN REG TYPE-B	
22	AG561665	12	BOLT 0.50-13NCX 2.00 G8 ZN HHD	
23	AG562050	50	WASHER 0.37 LK SS REG	
24	AG562065	50	NUT 0.37-16NC HEX SS REG	
25	AG562073	50	WASHER 0.37 FL SS REG TYPE-B	
26	AG601411	4	NUT 0.37-16NC HEX ZN REG NY	
27	AG609084	43	BOLT 0.37-16NCX 1.00 SS CRG	

Copyright © 2007 AGCO Corporation

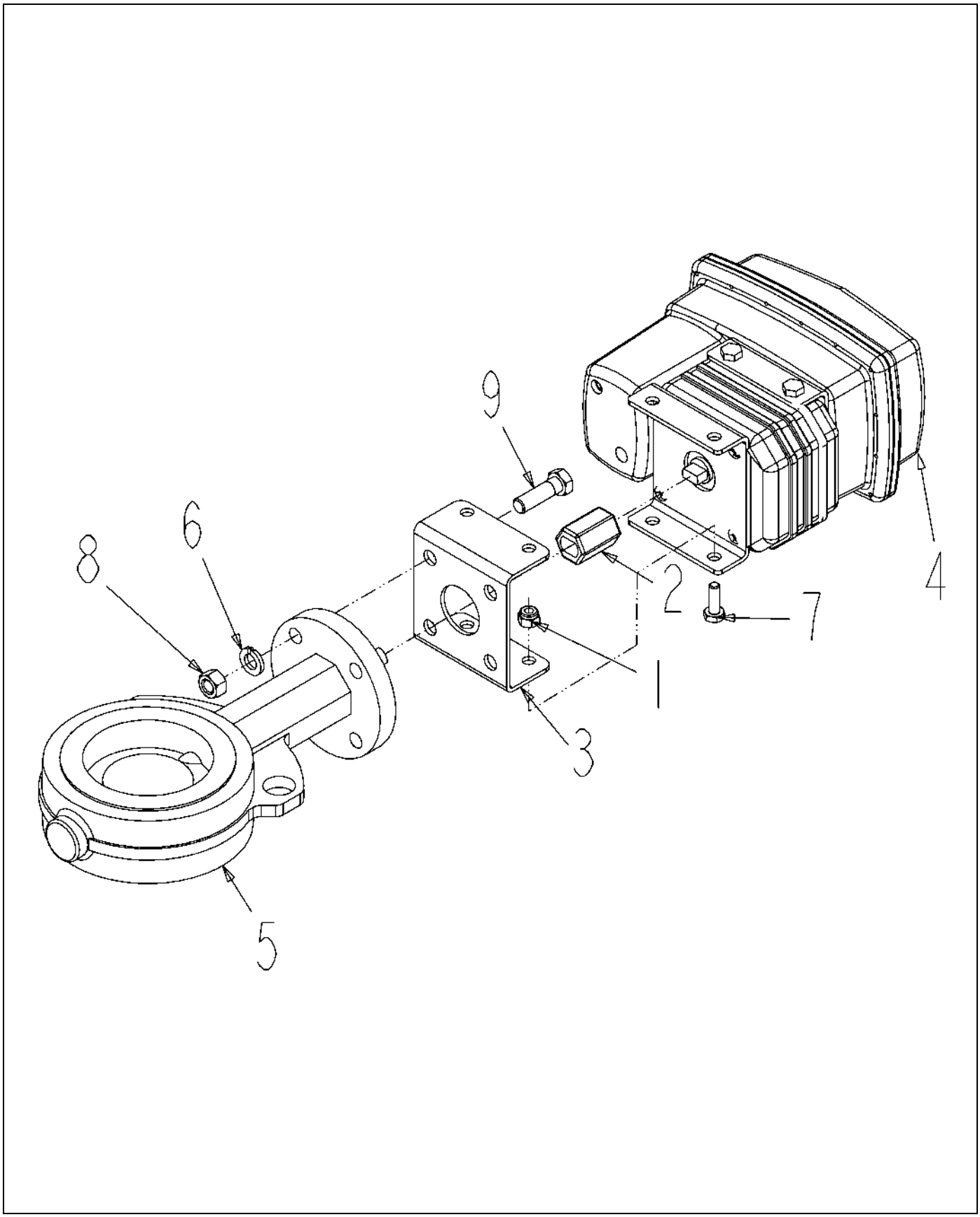

123760-02-N815-.TIF

Copyright © 2007 AGCO Corporation

VALVE ASM-3.00 ELEC,EH4,3 SEC

ITEM	PART #	QTY	DESCRIPTION	COMMENTS
1	AG027275	3	NUT 0.25-20NC HEX SS REG NY	
2	AG123647	1	COUPLER-EH4 ACTR/3.00 BTFL	
3	AG123648	1	BRACKET-EH4 ACTR/3.00 BTFL	
4	AG123649	1	ACTUATOR-EH4,W/4 PIN DEUTSCH	[A]
5	AG520377	1	VALVE-BTFL,3.00	SEE PAGE 2-8
6	AG562050	4	WASHER 0.37 LK SS REG	
7	AG562054	3	BOLT 0.25-20NCX 0.75 SS HHD	
8	AG562065	4	NUT 0.37-16NC HEX SS REG	
9	AG604167	4	BOLT 0.37-16NCX 1.25 S.S. HHD	
	FOOTNOTE [A]		CIRCUIT BOARD IS AG061259.	

Copyright © 2007 AGCO Corporation

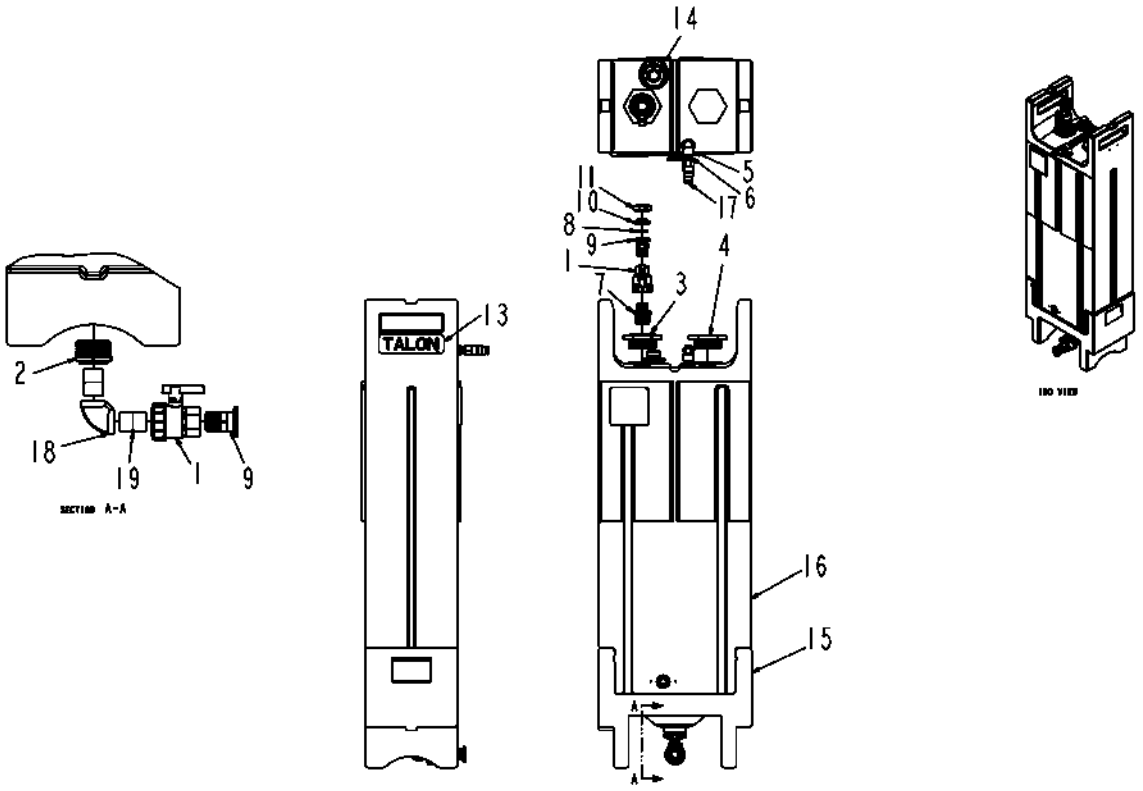

123895-B.TIF

Copyright © 2007 AGCO Corporation

TANK ASM-40GL W/O AG

ITEM	PART #	QTY	DESCRIPTION	COMMENTS
1	AG050206	2	VALVE 1.00 NPT BALL UNION POLY	SEE PAGE 2-23
2	AG050259	1	BSHG-RDCR,HEX,2.00X1.00NPT,PP	
3	AG050680	1	BSHG-RDCR,HEX,3.00X1.50NPT,PP	
4	AG050683	1	PLUG-PIPE,HEX,3.00NPT,PP	
5	AG051125	1	ELBOW-PIPE,0.50FNPT,90D,PP	
6	AG051149	2	NIPPLE-PIPE,0.50NPTXCLS,PP	
7	AG053079	1	REDUCER NIPPLE 1.50 X 1.00	
8	AG056275	1	GASKET 1.00 EPDM MANIFOLD	
9	AG056277	2	CONNECTOR 1.00 MANIFOLD MATHD	
10	AG056278	1	PLUG 1.00 MANIFOLD	
11	AG056778	1	CLAMP 1.00	
12	AG129187	AR	PIPE SEALANT-FLEX BLACK	
13	AG237653	1	DECAL-TALON	
14	AG260019	1	VENT ASM-TANK	SEE PAGE 1-18
15	AG501330	1	BASE TANK PLASTIC	
16	AG501336	1	TANK CHEMICAL 40 GAL PLASTIC	[A]
17	AG520345	1	NIPPLE END-.50 NPT,DRY BREAK	
18	AG562304	1	ELBOW 90D 1.00X1.00 S.S. 304	
19	AG710516	2	NIPPLE 1.00NPTX 1.50CLS 304SS	
	FOOTNOTE [A]		BASE- AG501330 VALVE-DISCONNECT,DRY 1.0 FEM-AG520633	

Copyright © 2007 AGCO Corporation

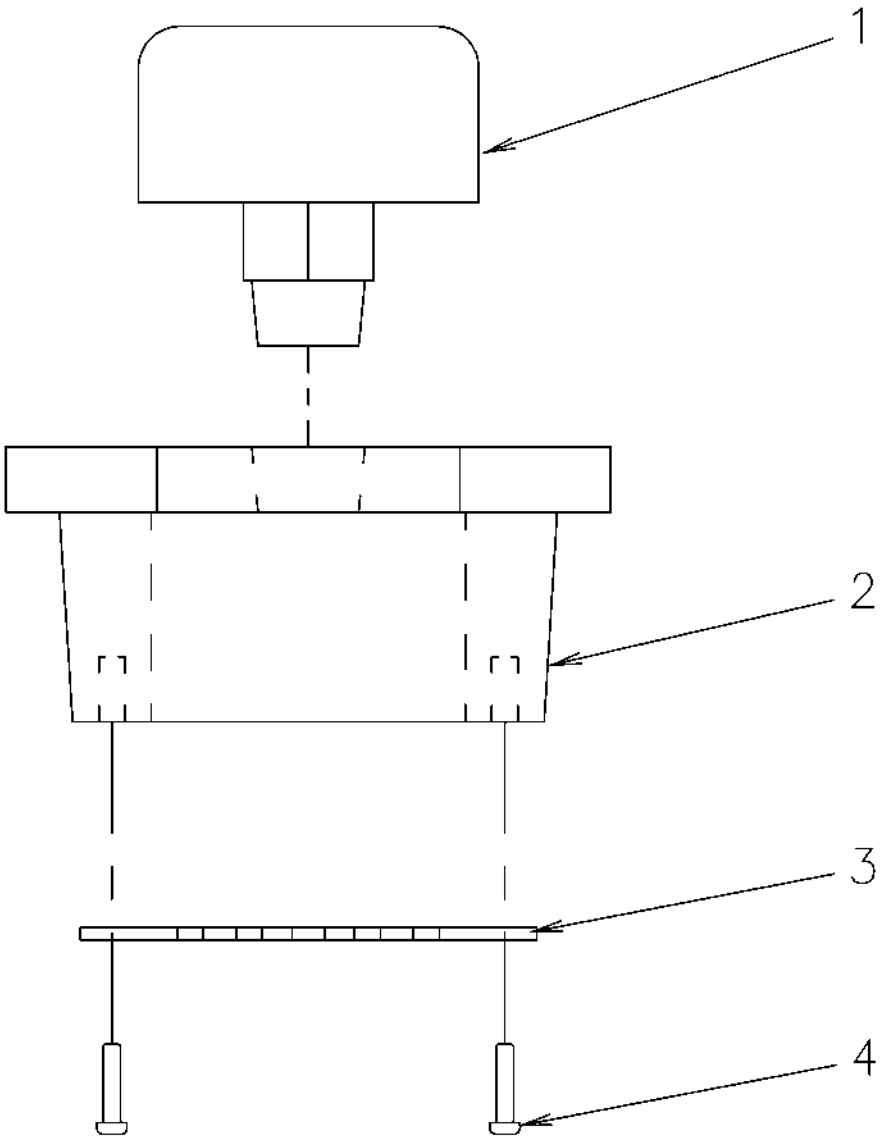

260019-A.TIF

Copyright © 2007 AGCO Corporation

VENT ASM-TANK

ITEM	PART #	QTY	DESCRIPTION	COMMENTS
REF	AG129187	AR	PIPE SEALANT-FLEX BLACK	
1	AG516181	1	BREATHER RESERVOIR	
2	AG260022	1	PLUG RWK-PIPE,2.00NPT	
3	AG260021	1	BAFFEL-VENT,TANK	
4	AG714085	2	SCREW 8-32X.375 TAP PAN HD	
	FOOTNOTE		TECH BULLETIN 9889.	
	FOOTNOTE		VENT ONLY = [516181]	

Copyright © 2007 AGCO Corporation

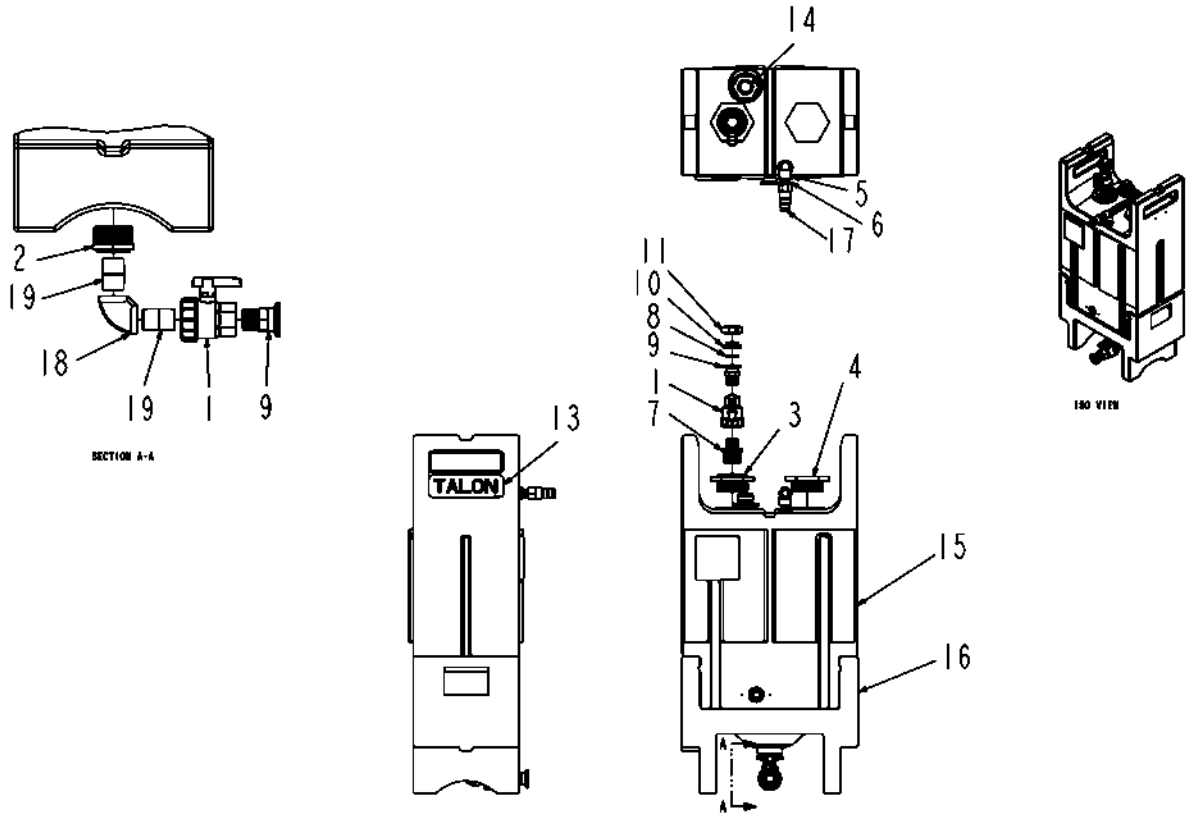

126103-B.TIF

Copyright © 2007 AGCO Corporation

TANK-ASM-20GL W/O AG

ITEM	PART #	QTY	DESCRIPTION	COMMENTS
1	AG050206	2	VALVE 1.00 NPT BALL UNION POLY	SEE PAGE 2-23
2	AG050259	1	BSHG-RDCR,HEX,2.00X1.00NPT,PP	
3	AG050680	1	BSHG-RDCR,HEX,3.00X1.50NPT,PP	
4	AG050683	1	PLUG-PIPE,HEX,3.00NPT,PP	
5	AG051125	1	ELBOW-PIPE,0.50FNPT,90D,PP	
6	AG051149	2	NIPPLE-PIPE,0.50NPTXCLS,PP	
7	AG053079	1	REDUCER NIPPLE 1.50 X 1.00	
8	AG056275	1	GASKET 1.00 EPDM MANIFOLD	
9	AG056277	2	CONNECTOR 1.00 MANIFOLD MATHD	
10	AG056278	1	PLUG 1.00 MANIFOLD	
11	AG056778	1	CLAMP 1.00	
12	AG129187	AR	PIPE SEALANT-FLEX BLACK	
13	AG237653	1	DECAL-TALON	
14	AG260019	1	VENT ASM-TANK	SEE PAGE 1-18
15	AG501329	1	TANK CHEMICAL 20 GAL PLASTIC	
16	AG501330	1	BASE TANK PLASTIC	
17	AG520345	1	NIPPLE END-.50 NPT,DRY BREAK	
18	AG562304	1	ELBOW 90D 1.00X1.00 S.S. 304	
19	AG710516	2	NIPPLE 1.00NPTX 1.50CLS 304SS	

Copyright © 2007 AGCO Corporation

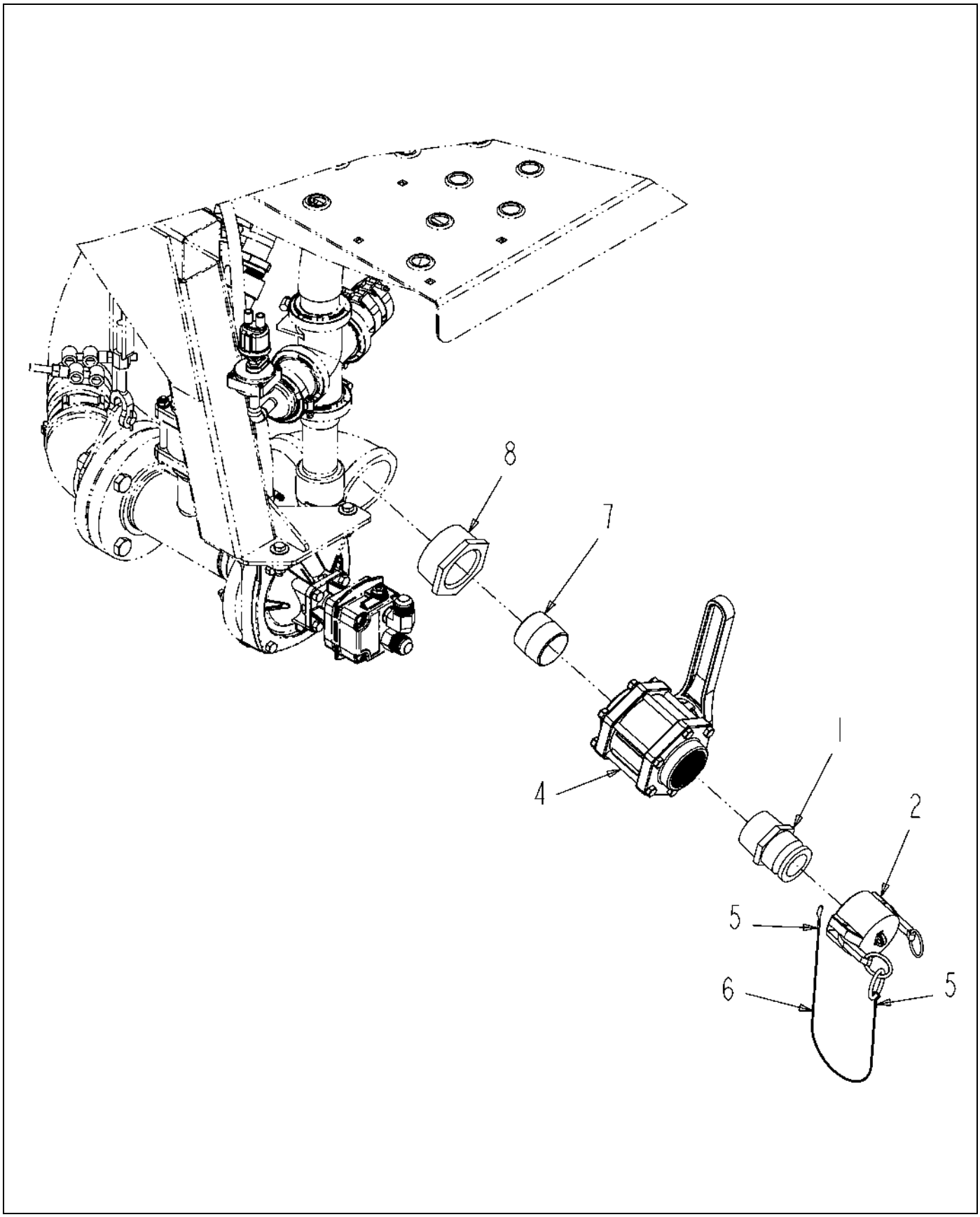

131012-A.TIF

Copyright © 2007 AGCO Corporation

RELOAD INSTL-2.00,LIQ SYS

ITEM	PART #	QTY	DESCRIPTION	COMMENTS
1	AG000823	1	ADAP 2.00 POLY	
2	AG000829	1	CAP-LEVER,QC,2.00 PP	
3	AG129187	AR	PIPE SEALANT-FLEX BLACK	
4	AG513859	1	VLV BALL 2.00 POLY FF	SEE PAGE 1-21
5	AG515981	2	COMPRESSION SLEEVE	
6	AG516060	-	CABLE NYLON COATED [BULK: 2 FT]	
7	AG552305	1	NIPPLE 2.00NPTX 2.00CLS WR ST	
8	AG554766	1	BUSHG 3.00X 2.00NPT HX REDG ML	

Copyright © 2007 AGCO Corporation

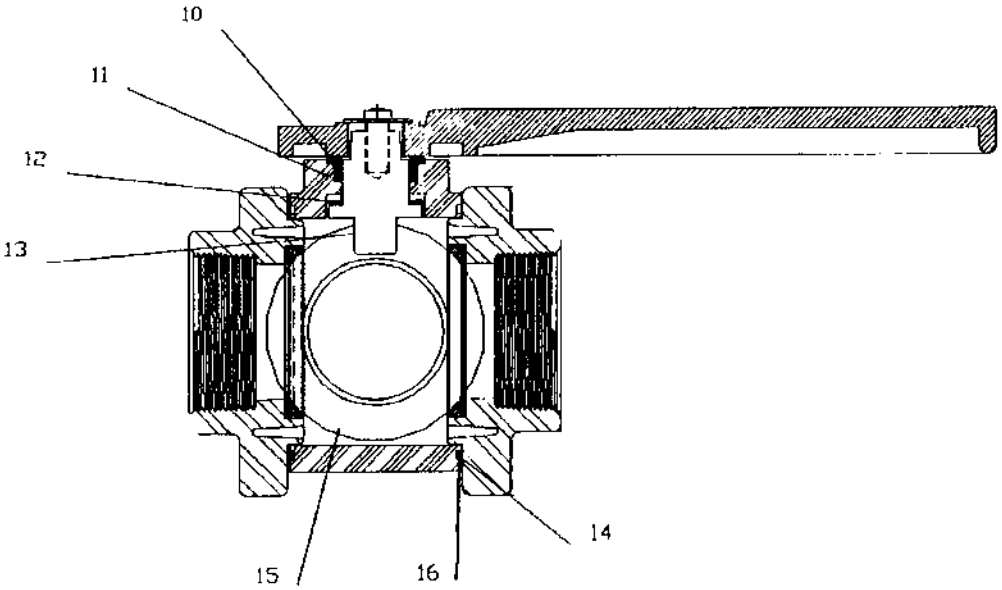

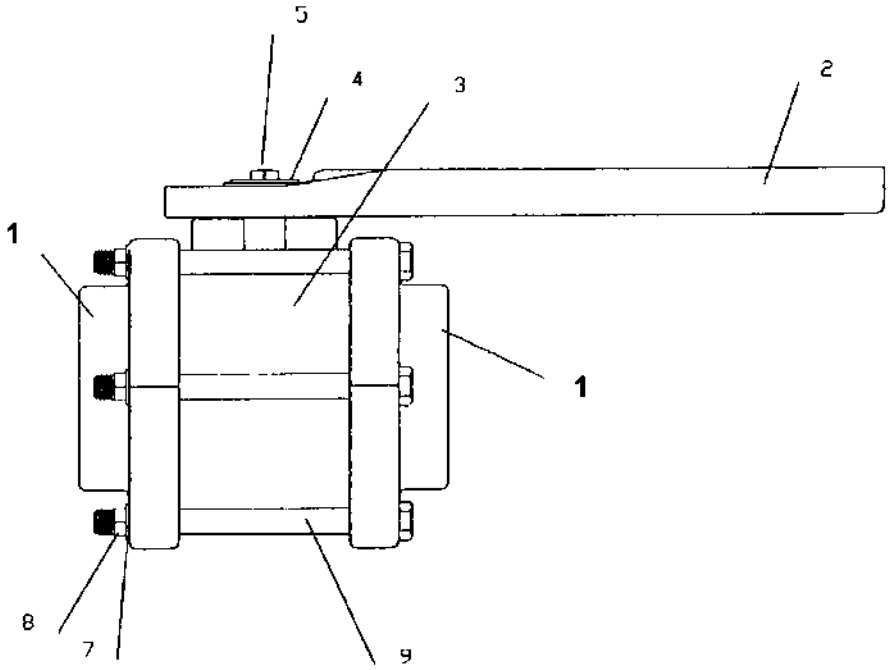

513859.TIF

Copyright © 2007 AGCO Corporation

VLV BALL 2.00 POLY FF

ITEM	PART #	QTY	DESCRIPTION	COMMENTS
1	AG006582	1	END PLATE 2.00 FP	
2	AG000796	1	HANDLE 2&3	
3	AG007578	1	BODY	
7	AG054234	6	BODY LOCKWASHER 3/8	
8	AG054235	6	BODY NUT 3/8-16SS	
9	AG053860	6	BOLT SS BODY 0.37X4.50	
10	AG000801	1	BUSHING UPPER OR LOWER STEM	
11	AG000803	1	O-RING VITON	
12	AG054488	1	THRUST WASHER 3 IN	
14	AG006581	2	BALL SEAT	
15	AG000794	1	VALVE BALL 2.00	
16	AG006578	2	VALVE BODY O-RING VITON	

Copyright © 2007 AGCO Corporation

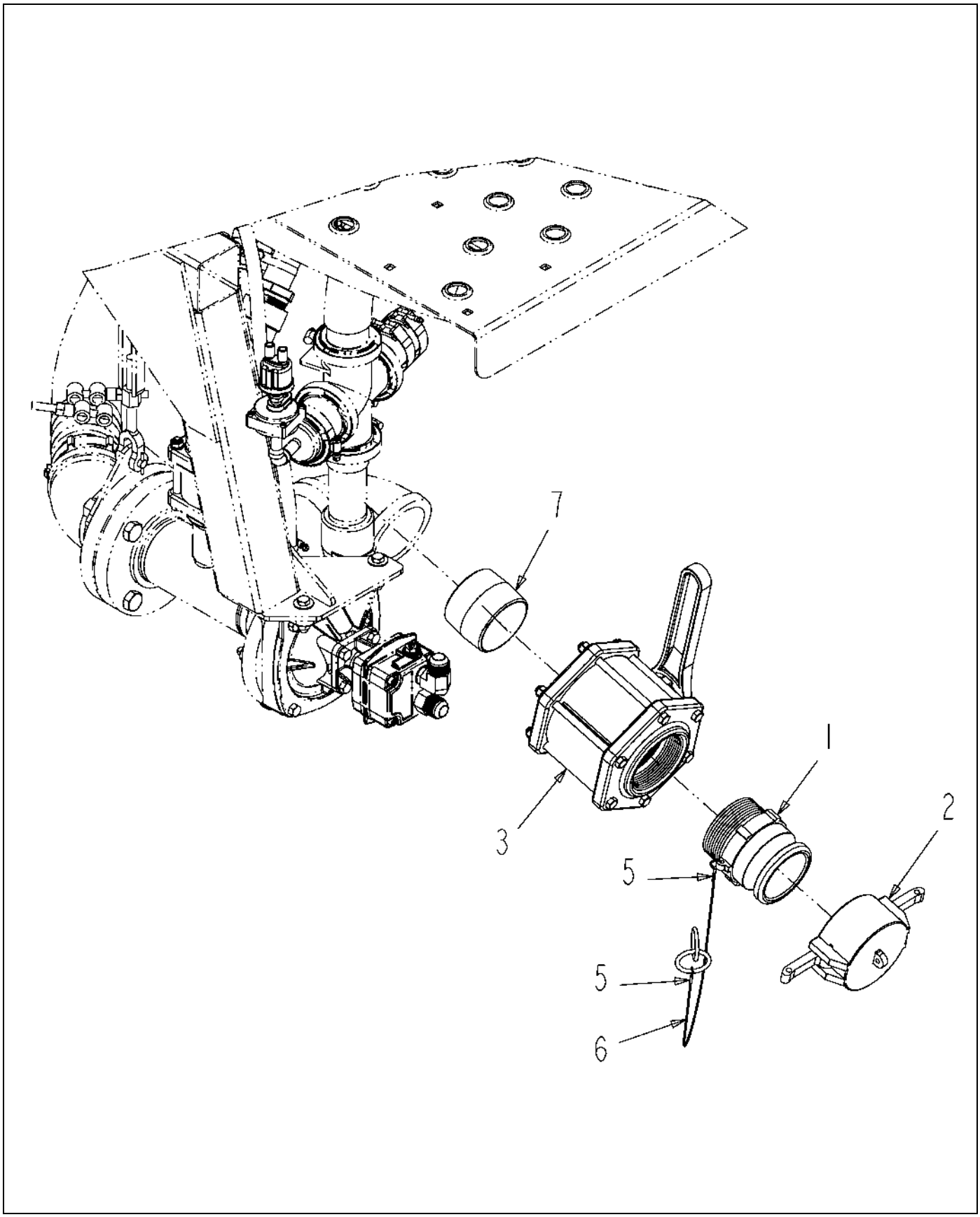

131013-A.TIF

Copyright © 2007 AGCO Corporation

RELOAD INSTL-3.00,LIQ SYS

ITEM	PART #	QTY	DESCRIPTION	COMMENTS
1	AG000824	1	ADAP 3.00 POLY	
2	AG000830	1	CAP-LEVER,QC,3.00 PP	
3	AG005492	1	VLV BALL 3.00 POLY FF	SEE PAGE 2-24
4	AG129187	AR	PIPE SEALANT-FLEX BLACK	
5	AG515981	2	COMPRESSION SLEEVE	
6	AG516060	-	CABLE NYLON COATED [BULK: 2 FT]	
7	AG552550	1	NIPPLE 3.00NPTX 2.62CLS WR ST	

Copyright © 2007 AGCO Corporation

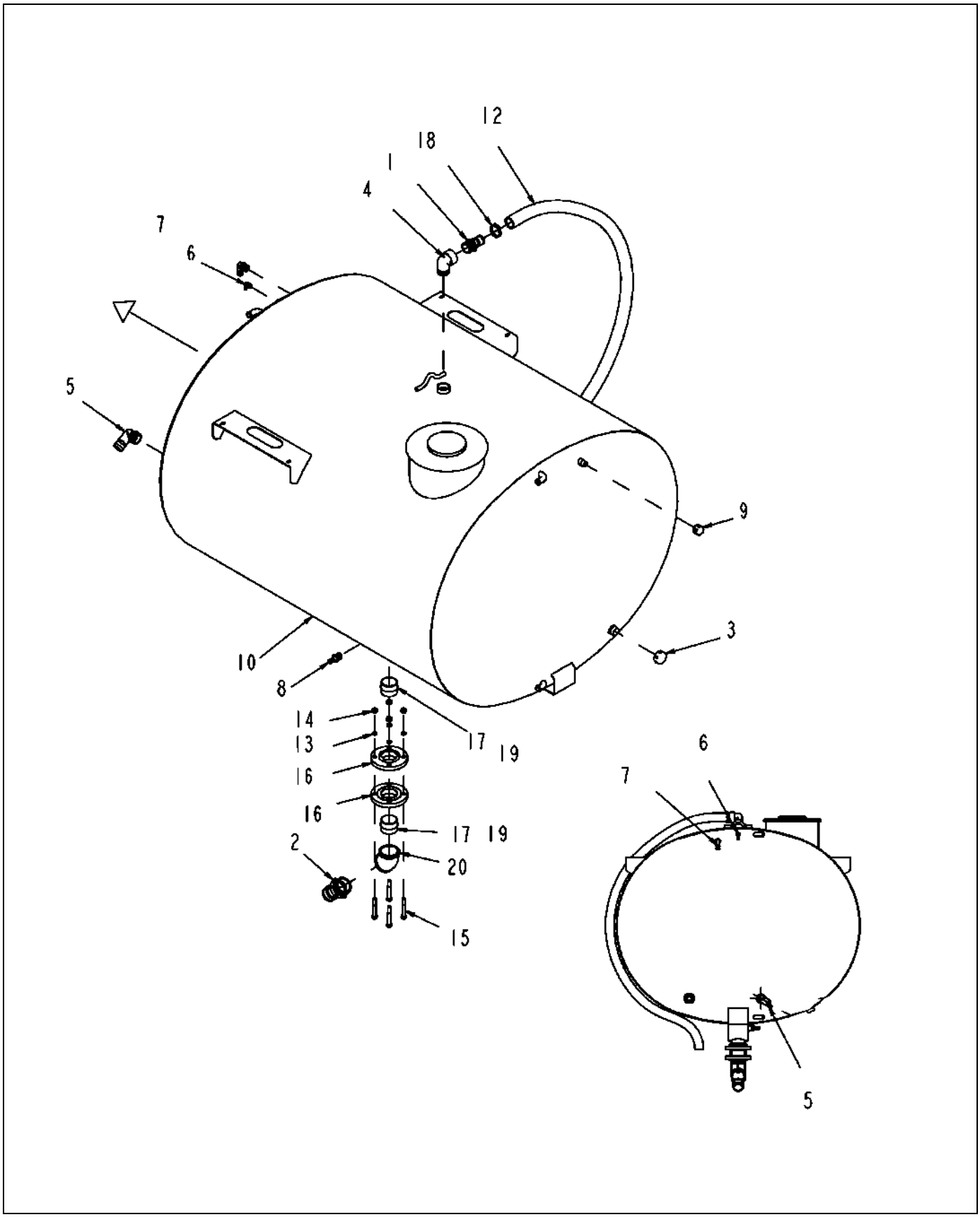

127819-04-N312-.TIF

Copyright © 2007 AGCO Corporation

TANK ASM-1240GL

ITEM	PART #	QTY	DESCRIPTION	COMMENTS
1	AG000767	1	BARB-HOSE,2.00MNPTX2.00BARB,PP	
2	AG000768	1	BARB-HOSE,3.00MNPTX3.00BARB,PP	
3	AG050269	1	CAP-PIPE,1.50NPT PP	
4	AG050689	1	ELBOW-PIPE,2.00STREET,90D,PP	
5	AG050692	1	ELBOW 90D 2.00NPTX2.00 BARB PP	
6	AG051138	1	ELBOW 90D 0.50NPTX0.38BARB PP	
7	AG051145	1	ELBOW 90D 1.00NPTX1.00 BARB PP	
8	AG051182	1	BARB-HOSE,1.00MNPTX0.75BARB,PP	
9	AG051536	1	CAP-PIPE,1.00NPT PP	
10	AG127816	1	TANK-1240GL,SS	
11	AG129187	AR	PIPE SEALANT-FLEX BLACK	
12	AG511722	-	HOSE-2.00,WIRE BRAID,EPDM [BULK: 10.334 FT]	
13	AG550450	4	WASHER 0.62 LK ZN REG	
14	AG550477	4	NUT 0.62-11NC HEX ZN REG	
15	AG552046	4	BOLT 0.62-11NCX 4.50 G5 ZN HHD	
16	AG553026	2	FLANGE COMP 3.0NPTX7.5 4H	
17	AG560931	2	NIPPLE 3.00NPTX 2.62CLS 304SS	
18	AG561233	1	CLAMP-HOSE,1.81X2.75,36HS	
19	AG711522	AR	SEALANT PIPE""BLACKJACK""RS #21	
20	AG711986	1	ELBOW 45D 3.00 IN 304SS	

Copyright © 2007 AGCO Corporation

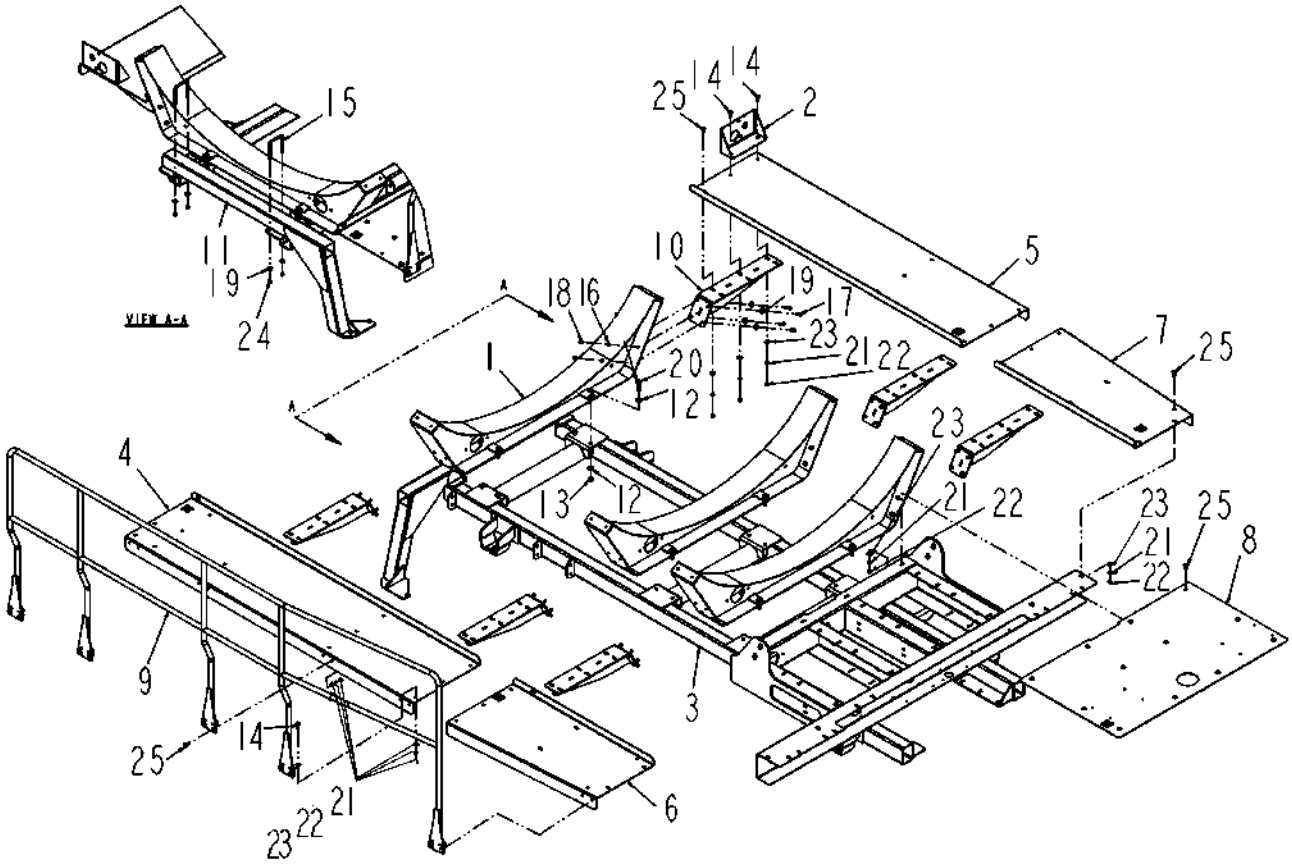

127832-A.tif

Copyright © 2007 AGCO Corporation

SADDLE ASM-1240GL

ITEM	PART #	QTY	DESCRIPTION	COMMENTS
1	AG121093	3	SUPPORT WLDMT-TANK,1240GL	
2	AG122038	1	BRKT-MTG,PWM VALVE,LIQ SYS	
3	AG123805	1	SADDLE WLDMT-LONG TIEDOWN PAT	
4	AG127825	1	CATWALK-LH,FRONT	
5	AG127826	1	CATWALK-RH,FRONT	
6	AG127827	1	CATWALK-LH,REAR,1080/1240	
7	AG127828	1	CATWALK-RH,REAR,1080/1240	
8	AG127831	1	PLATE-CATWALK,CENTER	
9	AG128011	1	HNDRL WLDMT-LIQ SYS,1080/1240	
10	AG262418	6	GUSSET WLDMT-CATWALK SUPPORT	
11	AG424387	1	SUPPORT WLDMT-PUMP	
12	AG514554	24	WASHER 0.50 FL ZN SAE TYP-A G8	
13	AG520614	12	NUT-.50-13,G8,ZN,HH,C-LK	
14	AG522571	5	BOLT 0.37-16NCX 1.25 304SS CRG	
15	AG523935	2	BOLT-U,.38-16X3.12X4.00,GRS,ZP	
16	AG550191	24	WASHER 0.37 LK ZN REG	
17	AG550515	24	BOLT 0.37-16NCX 1.25 G5 ZN HHD	
18	AG550825	24	NUT 0.37-16NC HEX ZN REG	
19	AG551007	28	WASHER 0.37 FL ZN REG TYPE-B	
20	AG561665	12	BOLT 0.50-13NCX 2.00 G8 ZN HHD	
21	AG562050	50	WASHER 0.37 LK SS REG	
22	AG562065	50	NUT 0.37-16NC HEX SS REG	
23	AG562073	50	WASHER 0.37 FL SS REG TYPE-B	
24	AG601411	4	NUT 0.37-16NC HEX ZN REG NY	
25	AG609084	45	BOLT 0.37-16NCX 1.00 SS CRG	

Copyright © 2007 AGCO Corporation

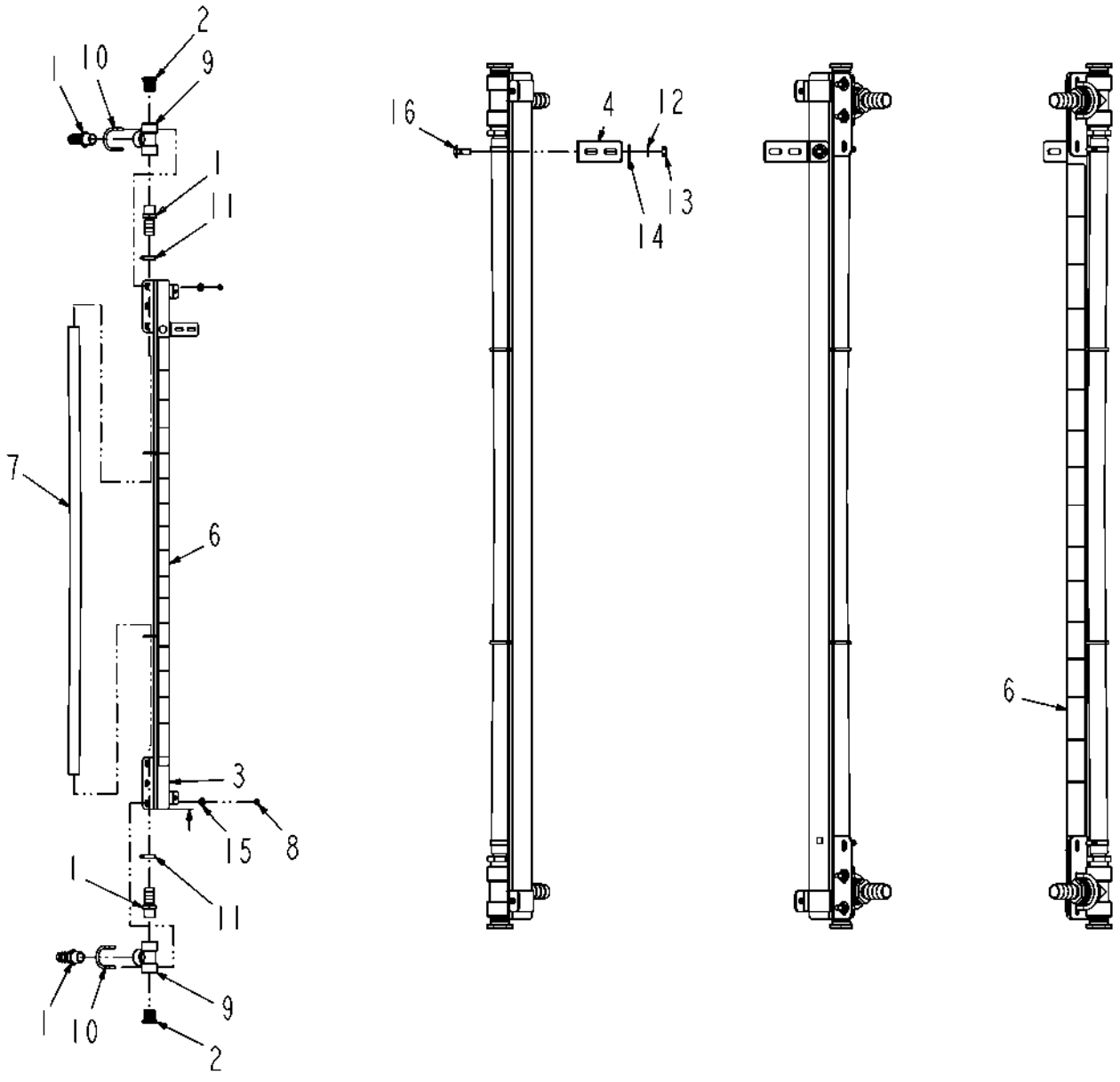

128110-05-M586-.TIF

Copyright © 2007 AGCO Corporation

SIGHT GAUGE ASM-FRT,1240GL

ITEM	PART #	QTY	DESCRIPTION	COMMENTS
1	AG051059	4	BARB-HOSE,1.00MNPTX1.00BARB,PP	
2	AG051135	2	PLUG-PIPE,HEX,1.00NPT,PP	
3	AG128103	1	SIGHT GAUGE WLDMT-1240GL	
4	AG128264	1	BRKT-MTG,HORZ,SIGHT GAUGE,RC	
5	AG129187	AR	PIPE SEALANT-FLEX BLACK	
6	AG134024	2	DECAL-1240 GL	
7	AG513679	-	HOSE-1.00 EVA,TRANSLUCENT [BULK: 4.292 FT]	
8	AG516403	4	NUT 0.31-18NC HEX SS REG NY	
9	AG516405	2	TEE,PIPE,1.00FNPT,PP	
10	AG518292	2	BOLT-U .31-18X2.00X 2.69 RD SS	
11	AG561229	2	CLAMP 0.68-1.25 HOSE 12HS	
12	AG562050	1	WASHER 0.37 LK SS REG	
13	AG562065	1	NUT 0.37-16NC HEX SS REG	
14	AG562073	1	WASHER 0.37 FL SS REG TYPE-B	
15	AG562074	4	WASHER 0.31 FL SS REG TYPE-B	
16	AG609084	1	BOLT 0.37-16NCX 1.00 SS CRG	

Copyright © 2007 AGCO Corporation

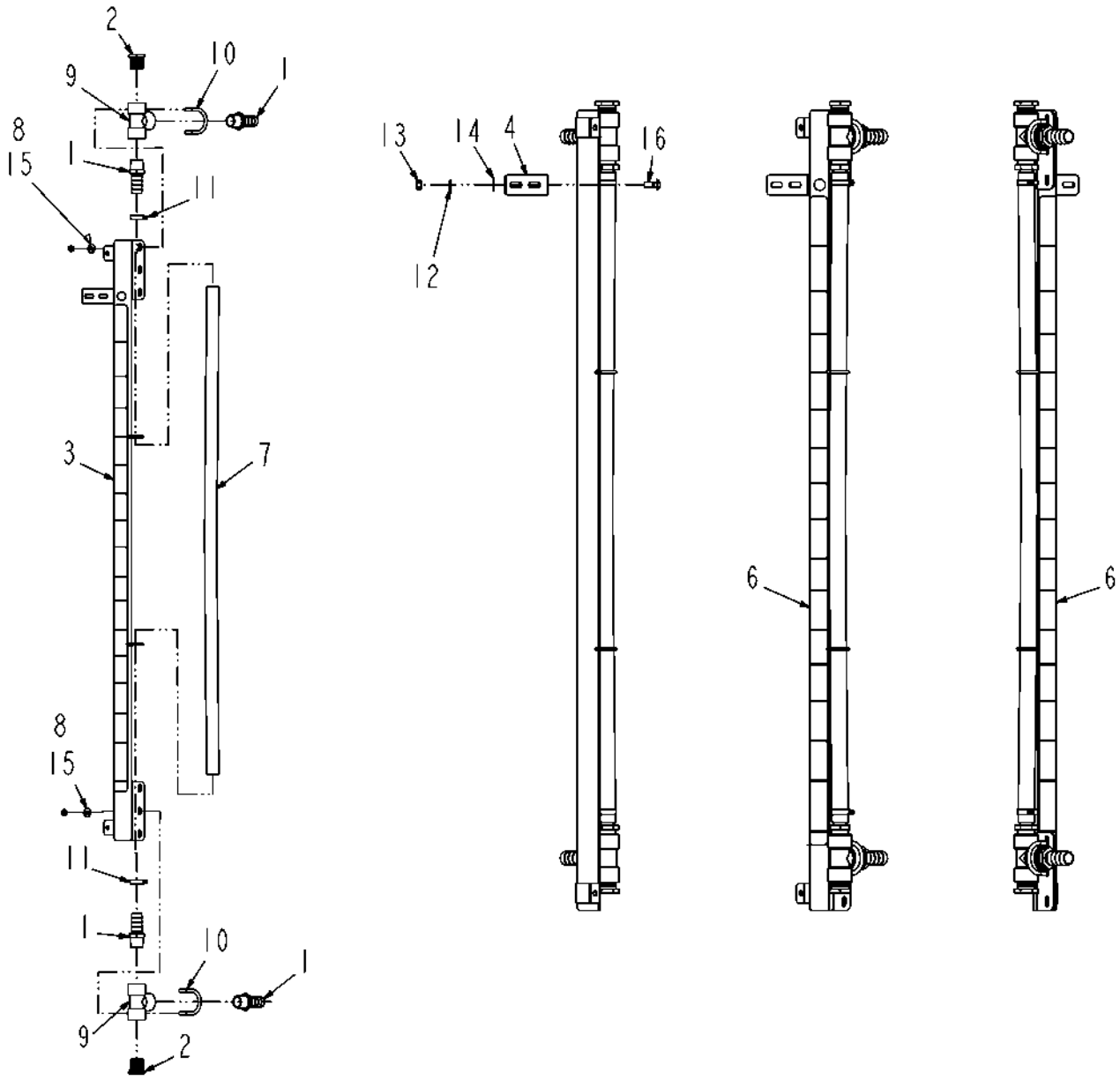

128111-05-M586-.TIF

Copyright © 2007 AGCO Corporation

SIGHT GAUGE ASM-REAR,1240GL

ITEM	PART #	QTY	DESCRIPTION	COMMENTS
1	AG051059	4	BARB-HOSE,1.00MNPTX1.00BARB,PP	
2	AG051135	2	PLUG-PIPE,HEX,1.00NPT,PP	
3	AG128103	1	SIGHT GAUGE WLDMT-1240GL	
4	AG128264	1	BRKT-MTG,HORZ,SIGHT GAUGE,RC	
5	AG129187	AR	PIPE SEALANT-FLEX BLACK	
6	AG134024	2	DECAL-1240 GL	
7	AG513679	-	HOSE-1.00 EVA,TRANSLUCENT [BULK: 4.125 FT]	
8	AG516403	4	NUT 0.31-18NC HEX SS REG NY	
9	AG516405	2	TEE,PIPE,1.00FNPT,PP	
10	AG518292	2	BOLT-U .31-18X2.00X 2.69 RD SS	
11	AG561229	2	CLAMP 0.68-1.25 HOSE 12HS	
12	AG562050	1	WASHER 0.37 LK SS REG	
13	AG562065	1	NUT 0.37-16NC HEX SS REG	
14	AG562073	1	WASHER 0.37 FL SS REG TYPE-B	
15	AG562074	4	WASHER 0.31 FL SS REG TYPE-B	
16	AG609084	1	BOLT 0.37-16NCX 1.00 SS CRG	

Copyright © 2007 AGCO Corporation

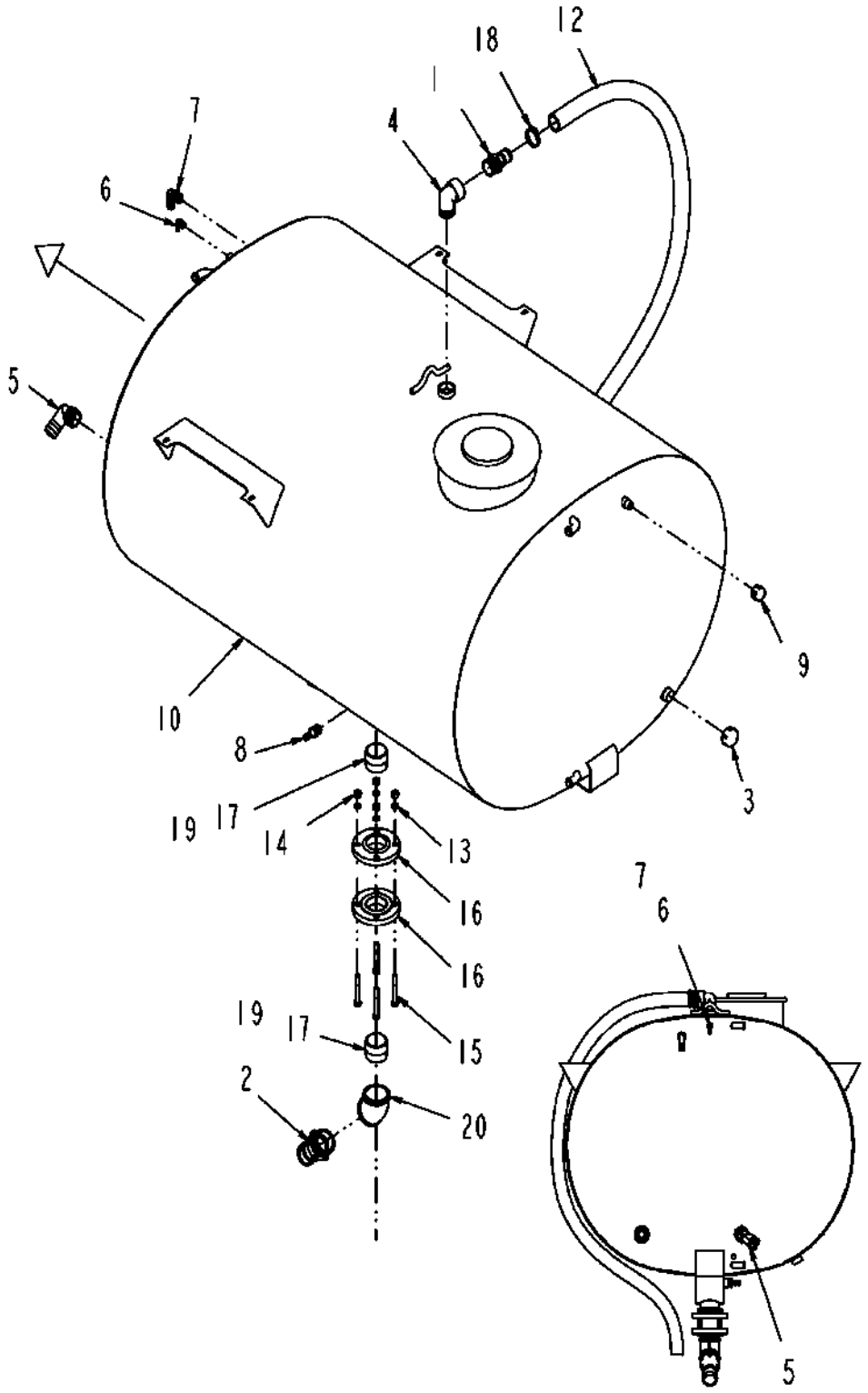

127821-04-N312-.tif

Copyright © 2007 AGCO Corporation

TANK ASM-860GL

ITEM	PART #	QTY	DESCRIPTION	COMMENTS
1	AG000767	1	BARB-HOSE,2.00MNPTX2.00BARB,PP	
2	AG000768	1	BARB-HOSE,3.00MNPTX3.00BARB,PP	
3	AG050269	1	CAP-PIPE,1.50NPT PP	
4	AG050689	1	ELBOW-PIPE,2.00STREET,90D,PP	
5	AG050692	1	ELBOW 90D 2.00NPTX2.00 BARB PP	
6	AG051138	1	ELBOW 90D 0.50NPTX0.38BARB PP	
7	AG051145	1	ELBOW 90D 1.00NPTX1.00 BARB PP	
8	AG051182	1	BARB-HOSE,1.00MNPTX0.75BARB,PP	
9	AG051536	1	CAP-PIPE,1.00NPT PP	
10	AG127818	1	TANK-860GL,SS	
11	AG129187	AR	PIPE SEALANT-FLEX BLACK	
12	AG511722	-	HOSE-2.00,WIRE BRAID,EPDM [BULK: 9.334 FT]	
13	AG550450	4	WASHER 0.62 LK ZN REG	
14	AG550477	4	NUT 0.62-11NC HEX ZN REG	
15	AG552046	4	BOLT 0.62-11NCX 4.50 G5 ZN HHD	
16	AG553026	2	FLANGE COMP 3.0NPTX7.5 4H	
17	AG560931	2	NIPPLE 3.00NPTX 2.62CLS 304SS	
18	AG561233	1	CLAMP-HOSE,1.81X2.75,36HS	
19	AG711522	AR	SEALANT PIPE""BLACKJACK""RS #21	
20	AG711986	1	ELBOW 45D 3.00 IN 304SS	

Copyright © 2007 AGCO Corporation

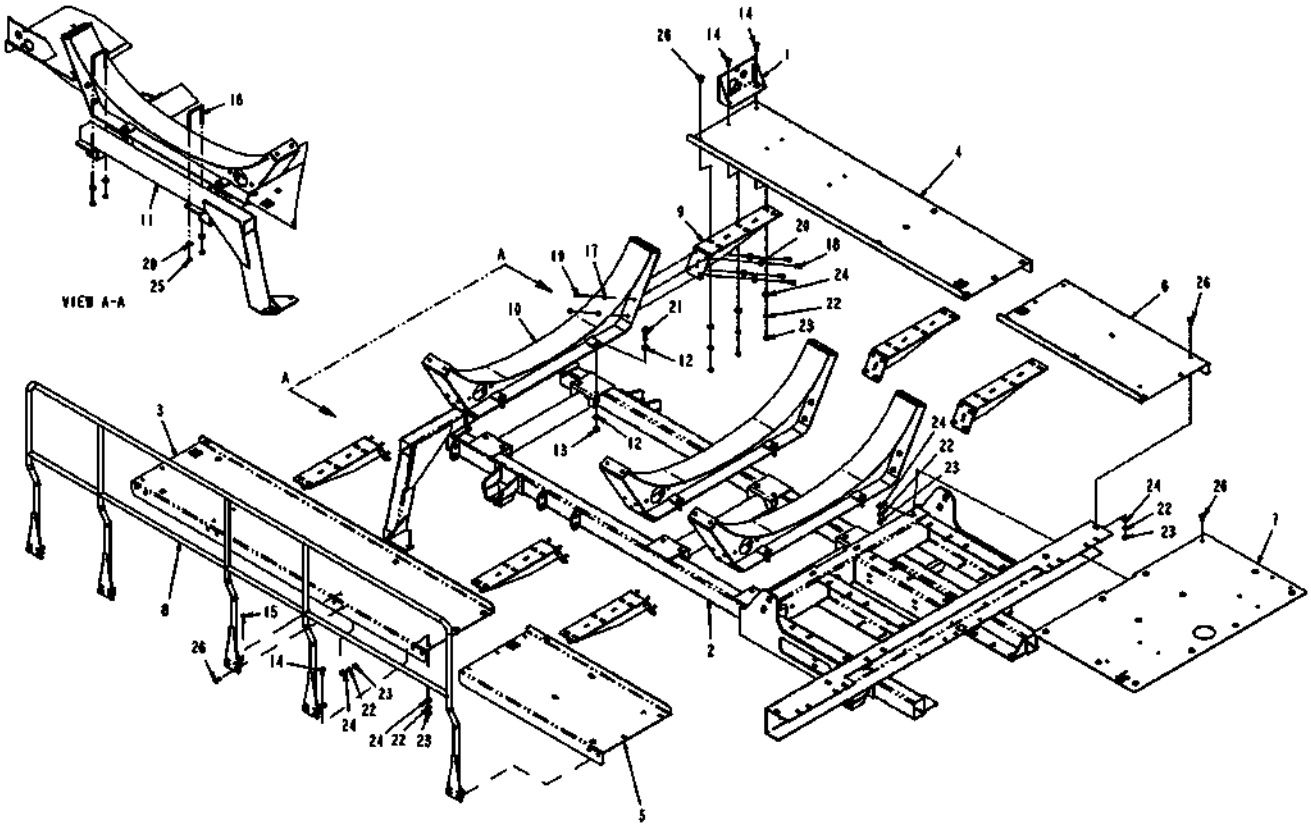

127834-02-M422-.TIF

Copyright © 2007 AGCO Corporation

SADDLE ASM-860GL

ITEM	PART #	QTY	DESCRIPTION	COMMENTS
1	AG122038	1	BRKT-MTG,PWM VALVE,LIQ SYS	
2	AG123805	1	SADDLE WLDMT-LONG TIEDOWN PAT	
3	AG127825	1	CATWALK-LH,FRONT	
4	AG127826	1	CATWALK-RH,FRONT	
5	AG127829	1	CATWALK-LG,REAR,860	
6	AG127830	1	CATWALK-RH,REAR,860	
7	AG127831	1	PLATE-CATWALK,CENTER	
8	AG134004	1	HNDRL WLDMT-LIQ SYS,860GL	
9	AG262418	6	GUSSET WLDMT-CATWALK SUPPORT	
10	AG424381	3	SUPPORT WLDMT-TANK	
11	AG424387	1	SUPPORT WLDMT-PUMP	
12	AG514554	24	WASHER 0.50 FL ZN SAE TYP-A G8	
13	AG520614	12	NUT-.50-13,G8,ZN,HH,C-LK	
14	AG522571	4	BOLT 0.37-16NCX 1.25 304SS CRG	
15	AG522572	1	BOLT-.38-16X1.50,SS,CRG	
16	AG523935	2	BOLT-U,.38-16X3.12X4.00,GRS,ZP	
17	AG550191	24	WASHER 0.37 LK ZN REG	
18	AG550515	24	BOLT 0.37-16NCX 1.25 G5 ZN HHD	
19	AG550825	24	NUT 0.37-16NC HEX ZN REG	
20	AG551007	28	WASHER 0.37 FL ZN REG TYPE-B	
21	AG561665	12	BOLT 0.50-13NCX 2.00 G8 ZN HHD	
22	AG562050	50	WASHER 0.37 LK SS REG	
23	AG562065	50	NUT 0.37-16NC HEX SS REG	
24	AG562073	50	WASHER 0.37 FL SS REG TYPE-B	
25	AG601411	4	NUT 0.37-16NC HEX ZN REG NY	
26	AG609084	45	BOLT 0.37-16NCX 1.00 SS CRG	

Copyright © 2007 AGCO Corporation

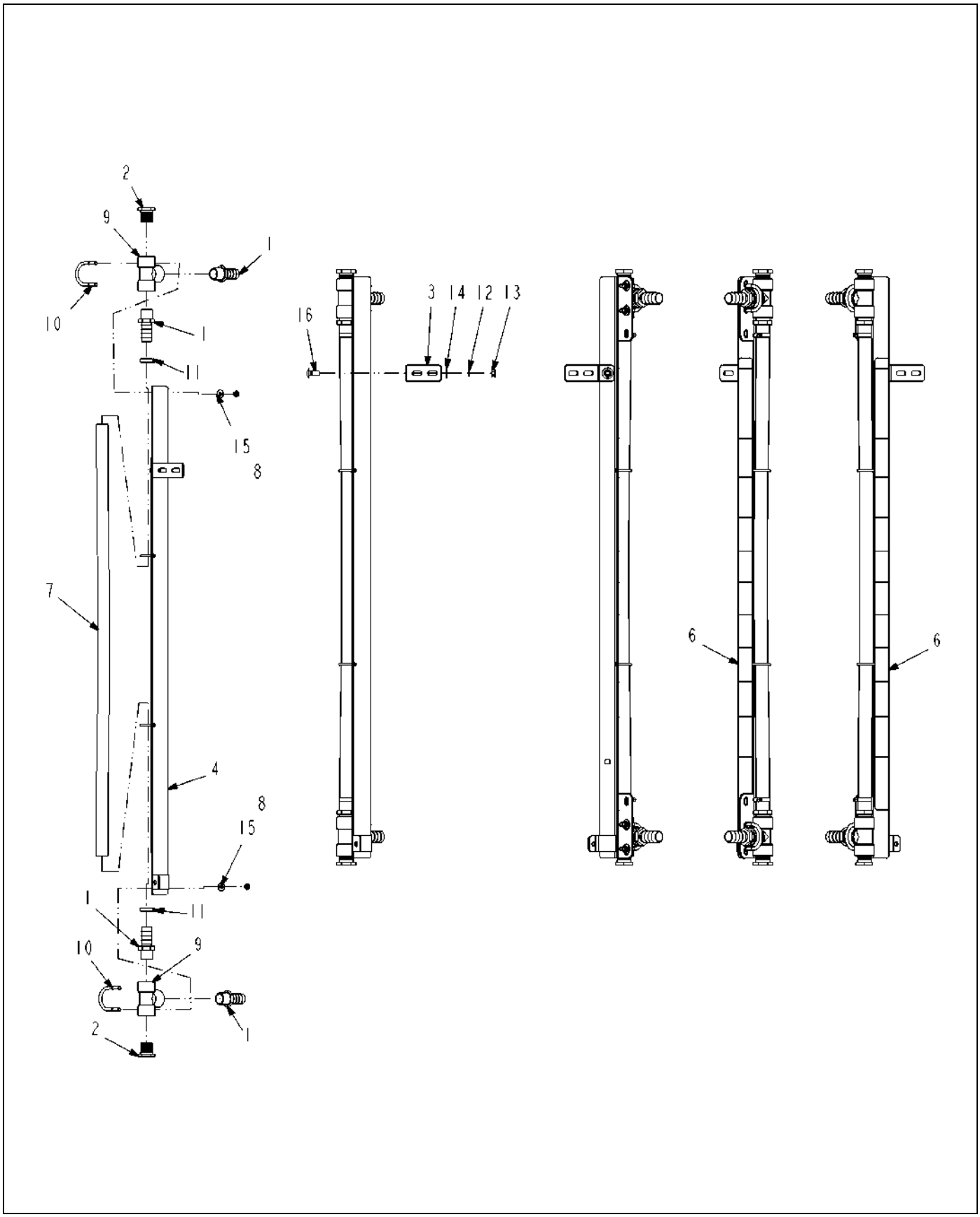

128490-03-M422-.TIF

Copyright © 2007 AGCO Corporation

SIGHT GAUGE ASM-FRT,860GL

ITEM	PART #	QTY	DESCRIPTION	COMMENTS
1	AG051059	4	BARB-HOSE,1.00MNPTX1.00BARB,PP	
2	AG051135	2	PLUG-PIPE,HEX,1.00NPT,PP	
3	AG128264	1	BRKT-MTG,HORZ,SIGHT GAUGE,RC	
4	AG128495	1	SIGHT GAUGE WLDMT,FRT,860GL	
5	AG129187	AR	PIPE SEALANT-FLEX BLACK	
6	AG134026	2	DECAL-865 GL	
7	AG513679	-	HOSE-1.00 EVA,TRANSLUCENT [BULK: 3.834 FT]	
8	AG516403	4	NUT 0.31-18NC HEX SS REG NY	
9	AG516405	2	TEE,PIPE,1.00FNPT,PP	
10	AG518292	2	BOLT-U .31-18X2.00X 2.69 RD SS	
11	AG561229	2	CLAMP 0.68-1.25 HOSE 12HS	
12	AG562050	1	WASHER 0.37 LK SS REG	
13	AG562065	1	NUT 0.37-16NC HEX SS REG	
14	AG562073	1	WASHER 0.37 FL SS REG TYPE-B	
15	AG562074	4	WASHER 0.31 FL SS REG TYPE-B	
16	AG609084	1	BOLT 0.37-16NCX 1.00 SS CRG	

Copyright © 2007 AGCO Corporation

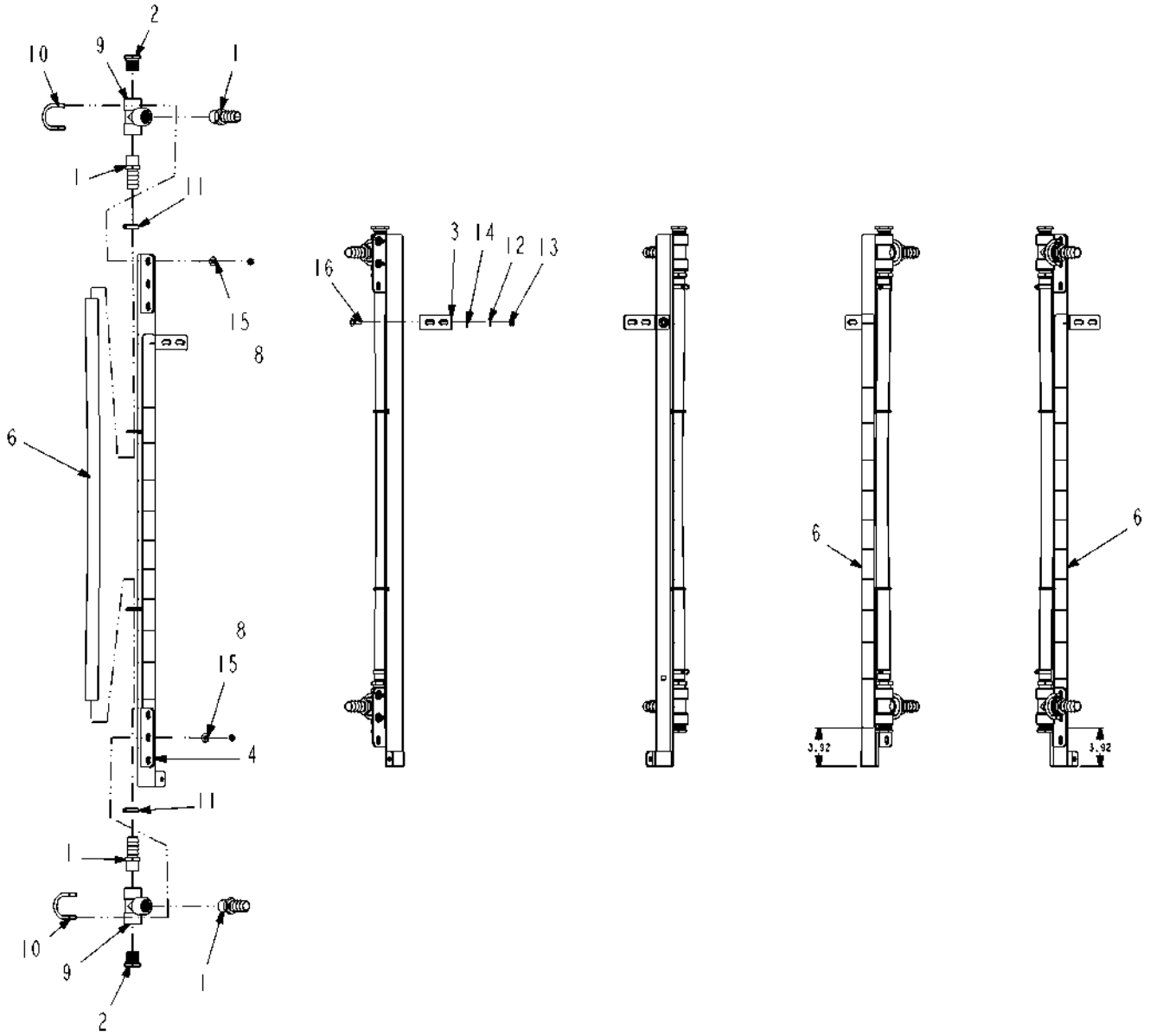

128491-04-M452-.TIF

Copyright © 2007 AGCO Corporation

SIGHT GAUGE ASM-REAR,860GL

ITEM	PART #	QTY	DESCRIPTION	COMMENTS
1	AG051059	4	BARB-HOSE,1.00MNPTX1.00BARB,PP	
2	AG051135	2	PLUG-PIPE,HEX,1.00NPT,PP	
3	AG128264	1	BRKT-MTG,HORZ,SIGHT GAUGE,RC	
4	AG128510	1	SIGHT GAUGE WLDMT,REAR,860GL	
5	AG129187	AR	PIPE SEALANT-FLEX BLACK	
6	AG134026	2	DECAL-865 GL	
7	AG513679	-	HOSE-1.00 EVA,TRANSLUCENT [BULK: 3.417 FT]	
8	AG516403	4	NUT 0.31-18NC HEX SS REG NY	
9	AG516405	2	TEE,PIPE,1.00FNPT,PP	
10	AG518292	2	BOLT-U .31-18X2.00X 2.69 RD SS	
11	AG561229	2	CLAMP 0.68-1.25 HOSE 12HS	
12	AG562050	1	WASHER 0.37 LK SS REG	
13	AG562065	1	NUT 0.37-16NC HEX SS REG	
14	AG562073	1	WASHER 0.37 FL SS REG TYPE-B	
15	AG562074	4	WASHER 0.31 FL SS REG TYPE-B	
16	AG609084	1	BOLT 0.37-16NCX 1.00 SS CRG	

Copyright © 2007 AGCO Corporation

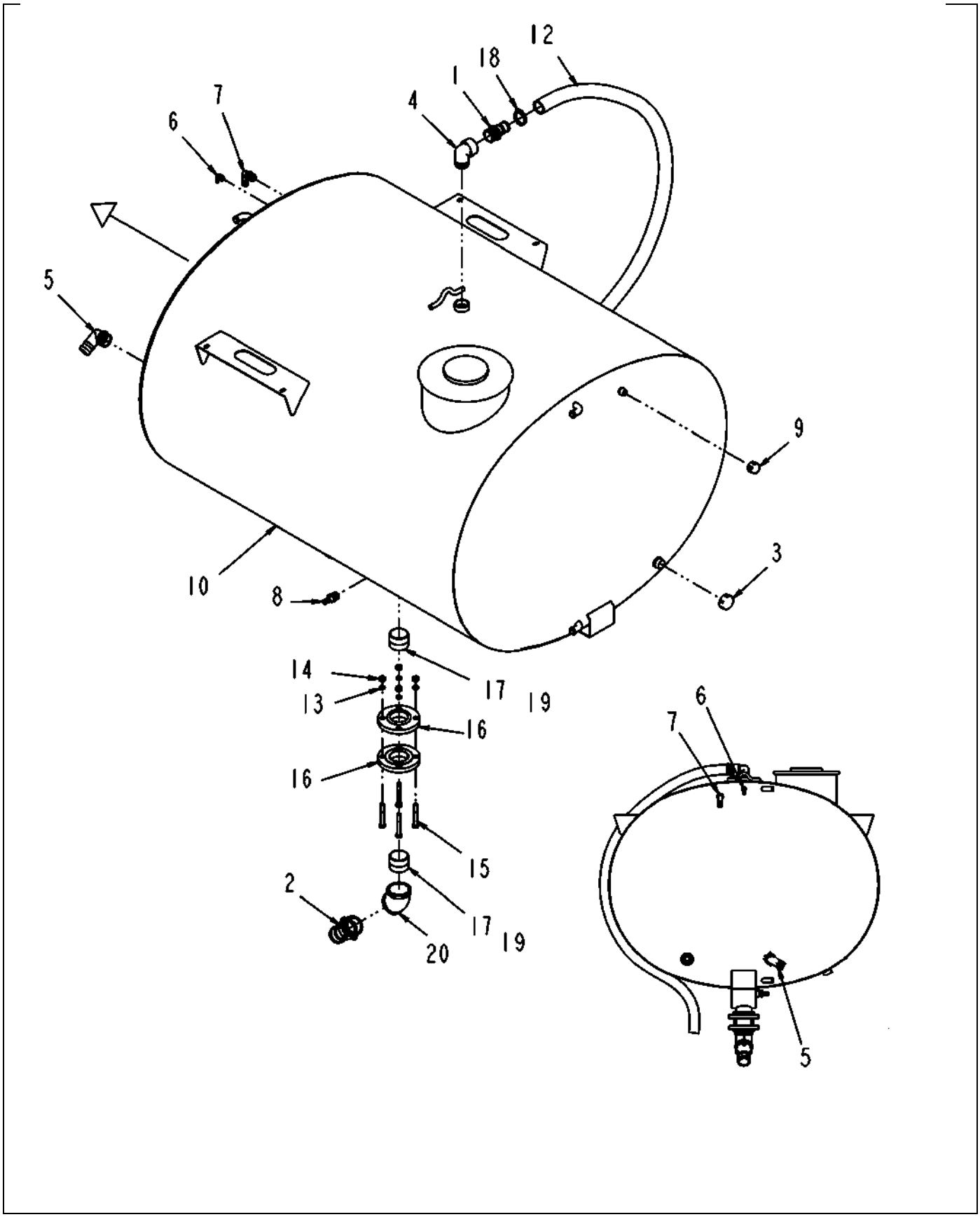

127820-04-N312-.TIF

Copyright © 2007 AGCO Corporation

ITEM	PART #	QTY	DESCRIPTION	COMMENTS
1	AG000767	1	BARB-HOSE,2.00MNPTX2.00BARB,PP	
2	AG000768	1	BARB-HOSE,3.00MNPTX3.00BARB,PP	
3	AG050269	1	CAP-PIPE,1.50NPT PP	
4	AG050689	1	ELBOW-PIPE,2.00STREET,90D,PP	
5	AG050692	1	ELBOW 90D 2.00NPTX2.00 BARB PP	
6	AG051138	1	ELBOW 90D 0.50NPTX0.38BARB PP	
7	AG051145	1	ELBOW 90D 1.00NPTX1.00 BARB PP	
8	AG051182	1	BARB-HOSE,1.00MNPTX0.75BARB,PP	
9	AG051536	1	CAP-PIPE,1.00NPT PP	
10	AG127817	1	TANK-1080GL,SS	
11	AG129187	AR	PIPE SEALANT-FLEX BLACK	
12	AG511722	-	HOSE-2.00,WIRE BRAID,EPDM [BULK: 9.750 FT]	
13	AG550450	4	WASHER 0.62 LK ZN REG	
14	AG550477	4	NUT 0.62-11NC HEX ZN REG	
15	AG552046	4	BOLT 0.62-11NCX 4.50 G5 ZN HHD	
16	AG553026	2	FLANGE COMP 3.0NPTX7.5 4H	
17	AG560931	2	NIPPLE 3.00NPTX 2.62CLS 304SS	
18	AG561233	1	CLAMP-HOSE,1.81X2.75,36HS	
19	AG711522	AR	SEALANT PIPE""BLACKJACK""RS #21	
20	AG711986	1	ELBOW 45D 3.00 IN 304SS	

Copyright © 2007 AGCO Corporation

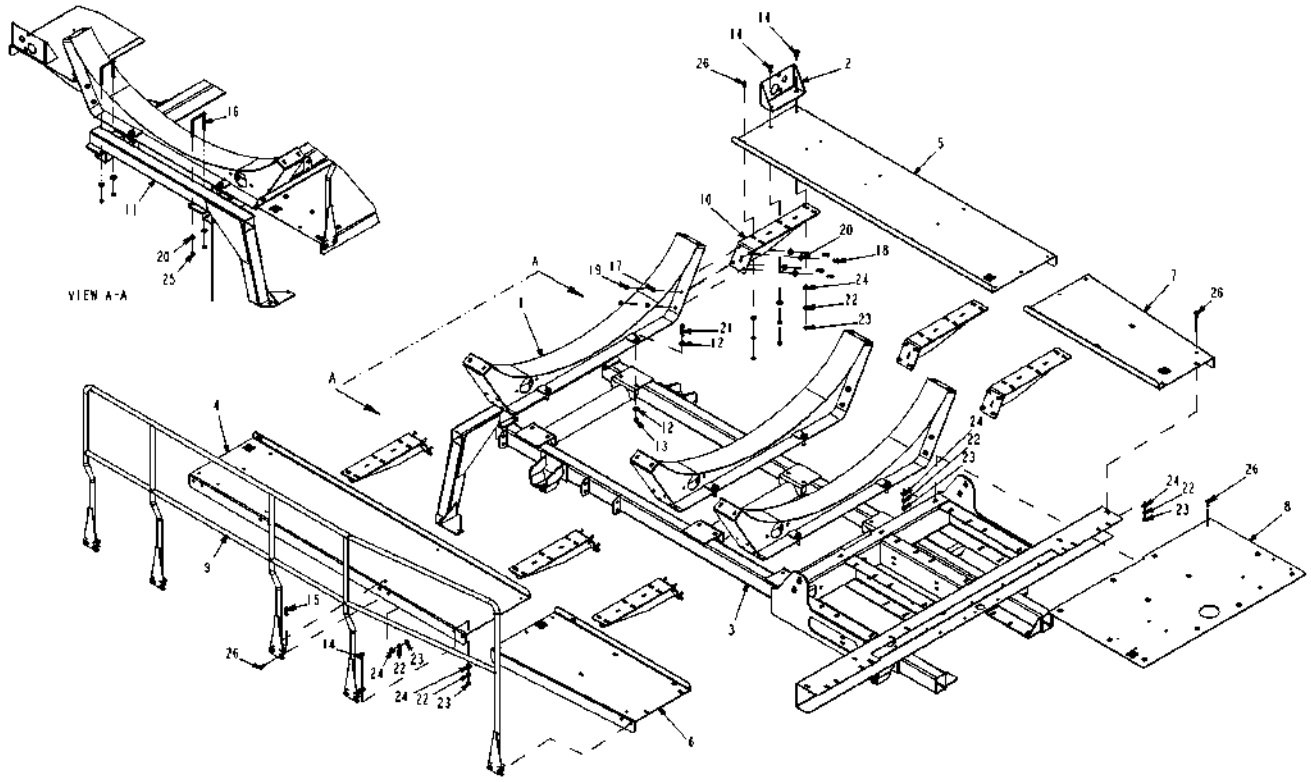

127833-02-M422-.TIF

Copyright © 2007 AGCO Corporation

SADDLE ASM-1080GL

ITEM	PART #	QTY	DESCRIPTION	COMMENTS
1	AG121525	3	SUPPORT WLDMT-TANK,1080GL	
2	AG122038	1	BRKT-MTG,PWM VALVE,LIQ SYS	
3	AG123805	1	SADDLE WLDMT-LONG TIEDOWN PAT	
4	AG127825	1	CATWALK-LH,FRONT	
5	AG127826	1	CATWALK-RH,FRONT	
6	AG127827	1	CATWALK-LH,REAR,1080/1240	
7	AG127828	1	CATWALK-RH,REAR,1080/1240	
8	AG127831	1	PLATE-CATWALK,CENTER	
9	AG128011	1	HNDRL WLDMT-LIQ SYS,1080/1240	
10	AG262418	6	GUSSET WLDMT-CATWALK SUPPORT	
11	AG424387	1	SUPPORT WLDMT-PUMP	
12	AG514554	24	WASHER 0.50 FL ZN SAE TYP-A G8	
13	AG520614	12	NUT-.50-13,G8,ZN,HH,C-LK	
14	AG522571	4	BOLT 0.37-16NCX 1.25 304SS CRG	
15	AG522572	1	BOLT-.38-16X1.50,SS,CRG	
16	AG523935	2	BOLT-U,.38-16X3.12X4.00,GRS,ZP	
17	AG550191	24	WASHER 0.37 LK ZN REG	
18	AG550515	24	BOLT 0.37-16NCX 1.25 G5 ZN HHD	
19	AG550825	24	NUT 0.37-16NC HEX ZN REG	
20	AG551007	28	WASHER 0.37 FL ZN REG TYPE-B	
21	AG561665	12	BOLT 0.50-13NCX 2.00 G8 ZN HHD	
22	AG562050	50	WASHER 0.37 LK SS REG	
23	AG562065	50	NUT 0.37-16NC HEX SS REG	
24	AG562073	50	WASHER 0.37 FL SS REG TYPE-B	
25	AG601411	4	NUT 0.37-16NC HEX ZN REG NY	
26	AG609084	45	BOLT 0.37-16NCX 1.00 SS CRG	

Copyright © 2007 AGCO Corporation

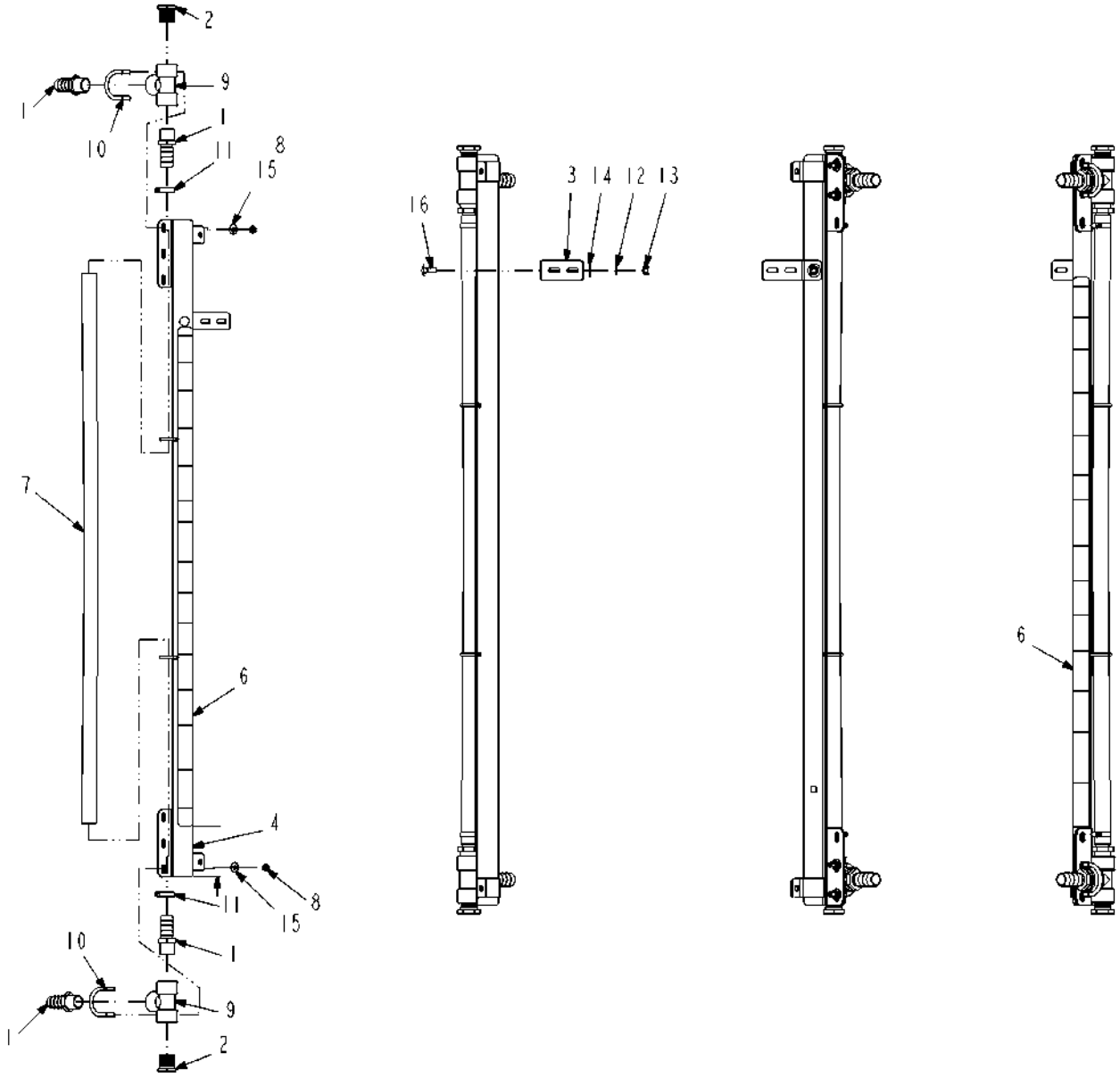

128269-03-M422-.TIF

Copyright © 2007 AGCO Corporation

SIGHT GAUGE ASM-FRT,1080GL

ITEM	PART #	QTY	DESCRIPTION	COMMENTS
1	AG051059	4	BARB-HOSE,1.00MNPTX1.00BARB,PP	
2	AG051135	2	PLUG-PIPE,HEX,1.00NPT,PP	
3	AG128264	1	BRKT-MTG,HORZ,SIGHT GAUGE,RC	
4	AG128268	1	SIGHT GAUGE WLDMT-1080GL	
5	AG129187	AR	PIPE SEALANT-FLEX BLACK	
6	AG134025	2	DECAL-1080 GL	
7	AG513679	-	HOSE-1.00 EVA,TRANSLUCENT [BULK: 4.084 FT]	
8	AG516403	4	NUT 0.31-18NC HEX SS REG NY	
9	AG516405	2	TEE,PIPE,1.00FNPT,PP	
10	AG518292	2	BOLT-U .31-18X2.00X 2.69 RD SS	
11	AG561229	2	CLAMP 0.68-1.25 HOSE 12HS	
12	AG562050	1	WASHER 0.37 LK SS REG	
13	AG562065	1	NUT 0.37-16NC HEX SS REG	
14	AG562073	1	WASHER 0.37 FL SS REG TYPE-B	
15	AG562074	4	WASHER 0.31 FL SS REG TYPE-B	
16	AG609084	1	BOLT 0.37-16NCX 1.00 SS CRG	

Copyright © 2007 AGCO Corporation

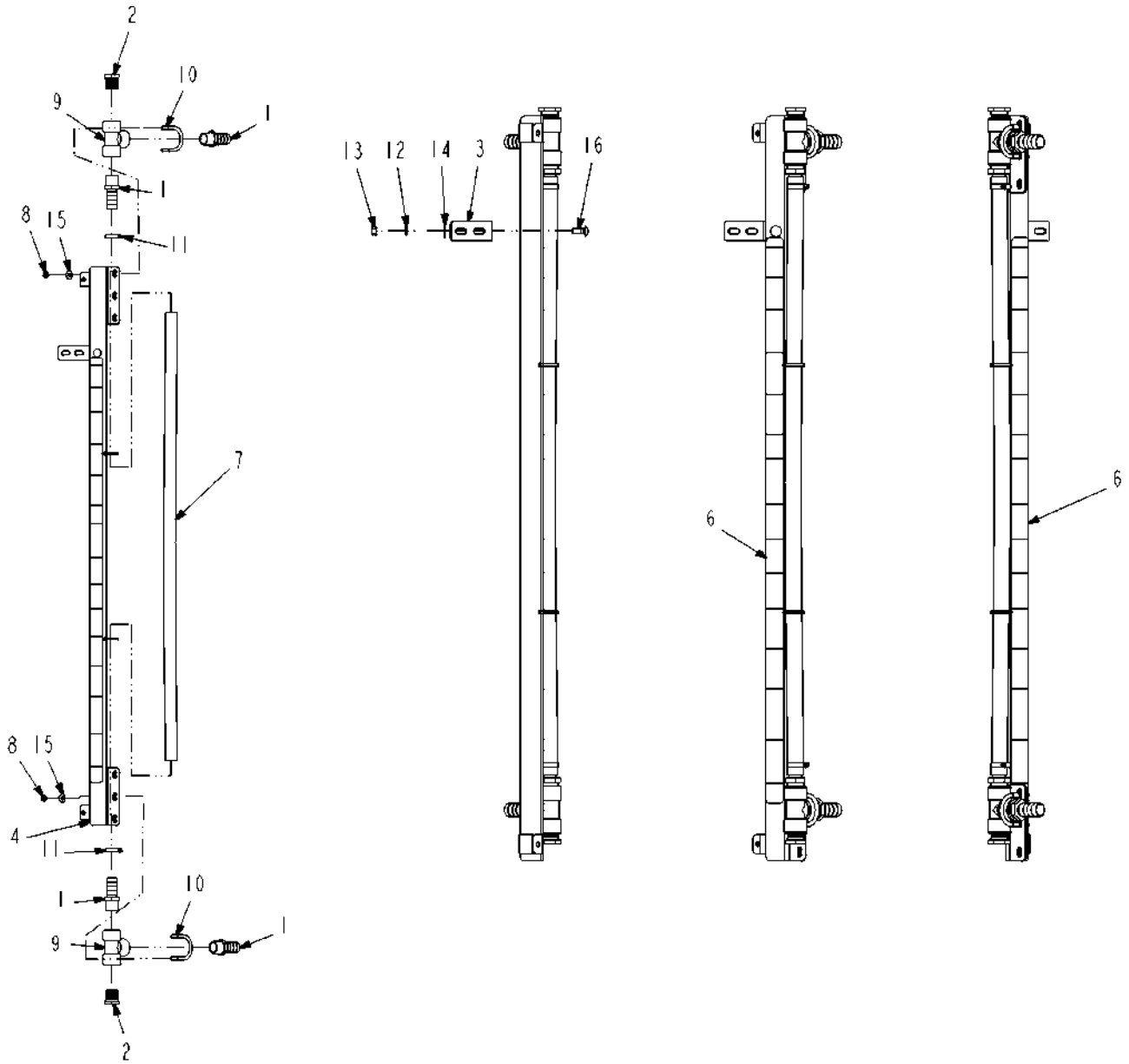

128270-04-M452-.TIF

Copyright © 2007 AGCO Corporation

SIGHT GAUGE ASM-REAR,1080GL

ITEM	PART #	QTY	DESCRIPTION	COMMENTS
1	AG051059	4	BARB-HOSE,1.00MNPTX1.00BARB,PP	
2	AG051135	2	PLUG-PIPE,HEX,1.00NPT,PP	
3	AG128264	1	BRKT-MTG,HORZ,SIGHT GAUGE,RC	
4	AG128268	1	SIGHT GAUGE WLDMT-1080GL	
5	AG129187	AR	PIPE SEALANT-FLEX BLACK	
6	AG134025	2	DECAL-1080 GL	
7	AG513679	-	HOSE-1.00 EVA,TRANSLUCENT [BULK: 3.917 FT]	
8	AG516403	4	NUT 0.31-18NC HEX SS REG NY	
9	AG516405	2	TEE,PIPE,1.00FNPT,PP	
10	AG518292	2	BOLT-U .31-18X2.00X 2.69 RD SS	
11	AG561229	2	CLAMP 0.68-1.25 HOSE 12HS	
12	AG562050	1	WASHER 0.37 LK SS REG	
13	AG562065	1	NUT 0.37-16NC HEX SS REG	
14	AG562073	1	WASHER 0.37 FL SS REG TYPE-B	
15	AG562074	4	WASHER 0.31 FL SS REG TYPE-B	
16	AG609084	1	BOLT 0.37-16NCX 1.00 SS CRG	

Copyright © 2007 AGCO Corporation

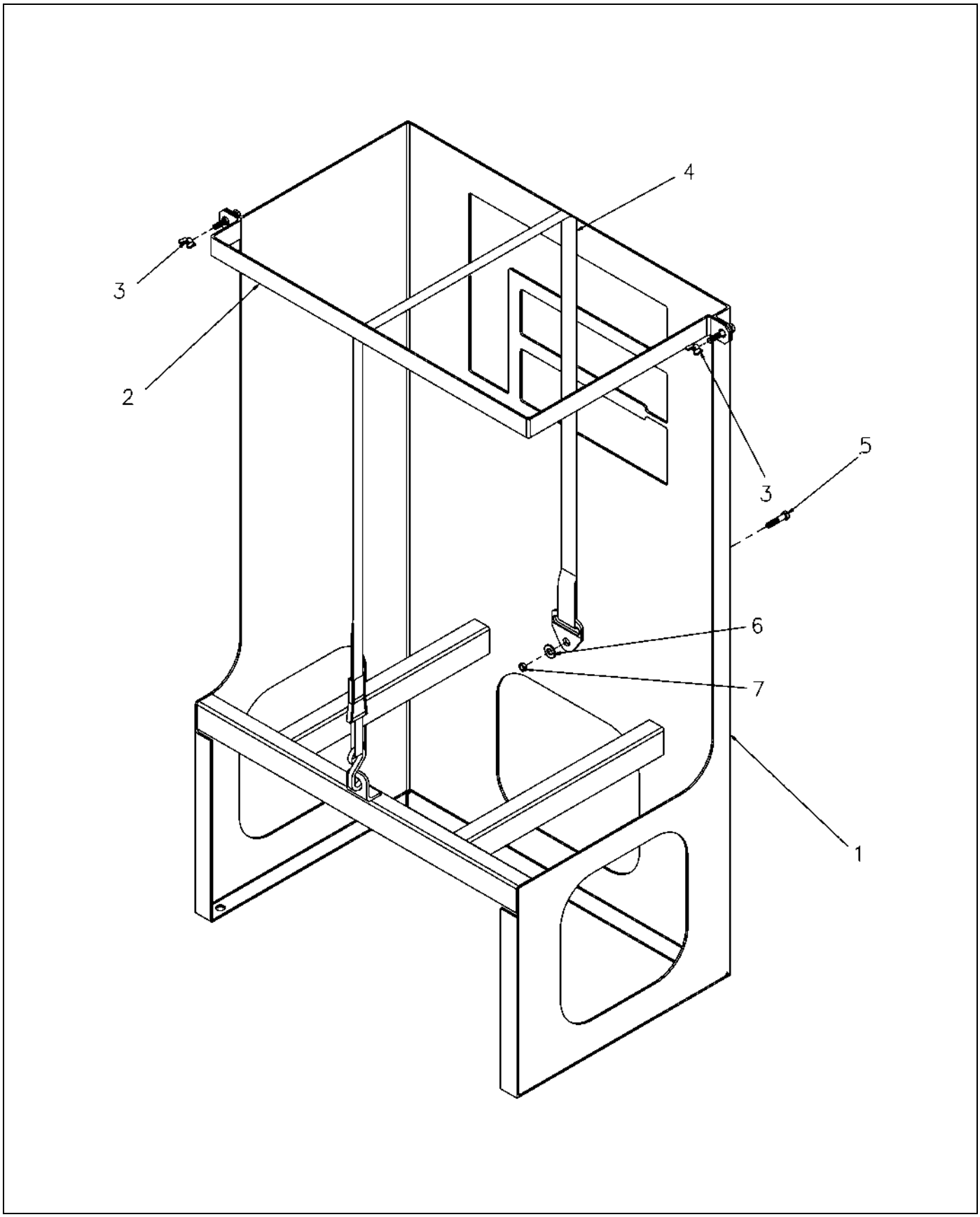

502347-A.TIF

Copyright © 2007 AGCO Corporation

SUPPORT ASM-TANK,PLASTIC

ITEM	PART #	QTY	DESCRIPTION	COMMENTS
1	AG502342	1	SUPPORT WLDMT-TANK,PLASTIC	
2	AG324064	1	STRAP-TANK	
3	AG562385	2	NUT-.31-18,WING,SS,TYPE A,LT	
4	AG521412	1	STRAP-TIE DOWN,TANK,102.00 LG	
5	AG562120	1	BOLT 0.37-16NCX 0.75 S.S. HHD	
6	AG562073	1	WASHER 0.37 FL SS REG TYPE-B	
7	AG562123	1	NUT 0.37-16NC HEX SS C-LK	

Copyright © 2007 AGCO Corporation

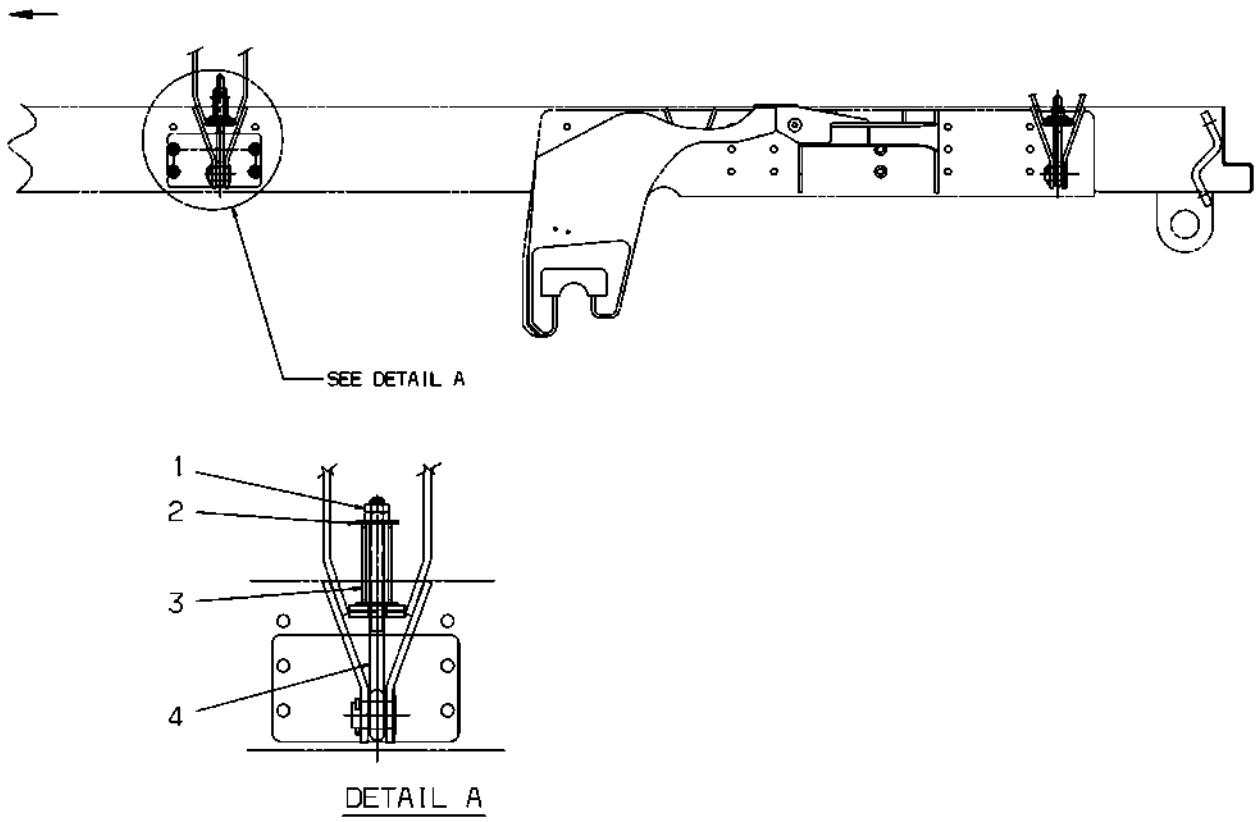

425277-A.TIF

Copyright © 2007 AGCO Corporation

TIEDOWN INSTL-LIQ SYS,ROGATOR

ITEM	PART #	QTY	DESCRIPTION	COMMENTS
1	AG515210	4	NUT 0.75-10NC HEX GALV JAM OSZ	
2	AG561262	4	WASHER 0.87 FL ZN REG TYPE-B	
3	AG523417	2	SPRING-COMP,1.75DX.283WDX5.00L	
4	AG216853	2	BOLT EYE .75-10NC-2AX12	

Copyright © 2007 AGCO Corporation

MANF ASM-BOOM,W/BALL VLV,STD	2-1
MANIFOLD ASM-Y,1.00FP FLG,ELEC	2-2
MANF ASM-BOOM,W/BALL VLV,HV	2-3
SYS INSTL-PLMB,120X7,ELEC VLV	2-4
SYS INSTL-PLMB,1.50,100X5,RTRY	2-5
MANF INSTL-BM,HV Y,W/BALL VLV	2-6
MANF ASM-BM,HV Y,W/BALL VLV	2-7
VALVE-BTFL,3.00	2-8
FLWMTR INSTL-3.00,41 PPG	2-9
FLWMTR ASM-3.00 41PPG	2-10
FLMTR ASM-3.00,41 PULSE/GL,CI	2-11
FLOWMETER INSTL-1.50,RFM60P	2-12
FLWMTR ASM-RFM60P,2.00FP FLG	2-13
KIT ASM-LOW RATE,2.00FP FLG	2-14
VALVE-2IN,FULL PORT	2-15
VALVE ASM-REGULATING, PRESSURE	2-16
PUMP-CNTFGL,2.00X1.50,9306CHM5	2-17
VALVE-ELEC,REG,2.0FLGX1.0FNPT	2-18
EDUCTOR ASM-CHEMICAL,PE	2-19
SYS INSTL-BOOM CLEANOUT	2-20
VALVE-BALL,2.00FP FLG,ELEC	2-21
SYS INSTL-W/O BOOM CLEANOUT	2-22
VALVE 1.00 NPT BALL UNION POLY	2-23
VLV BALL 3.00 POLY FF	2-24
TEE ASM-MANG,220X100,RLF VALVE	2-25
VALVE ASM-CHECK,2.00 FP FLG	2-26
FLOWMETER INSTL-2.00,8/10/12X4	2-27
FLOWMETER-2.00,140PPG,12V	2-28
VALVE-BALL,1.50NPT,T HANDLE	2-29
EDUCTOR ASM-CHEMICAL,SS	2-30
VALVE-2.0 FLG,T HANDLE,PP	2-31
FLWMTR-2.00SP FLG,RFM60P,12V	2-32
VALVE-2.0FLGX1.25NPT,T HANDLE	2-33

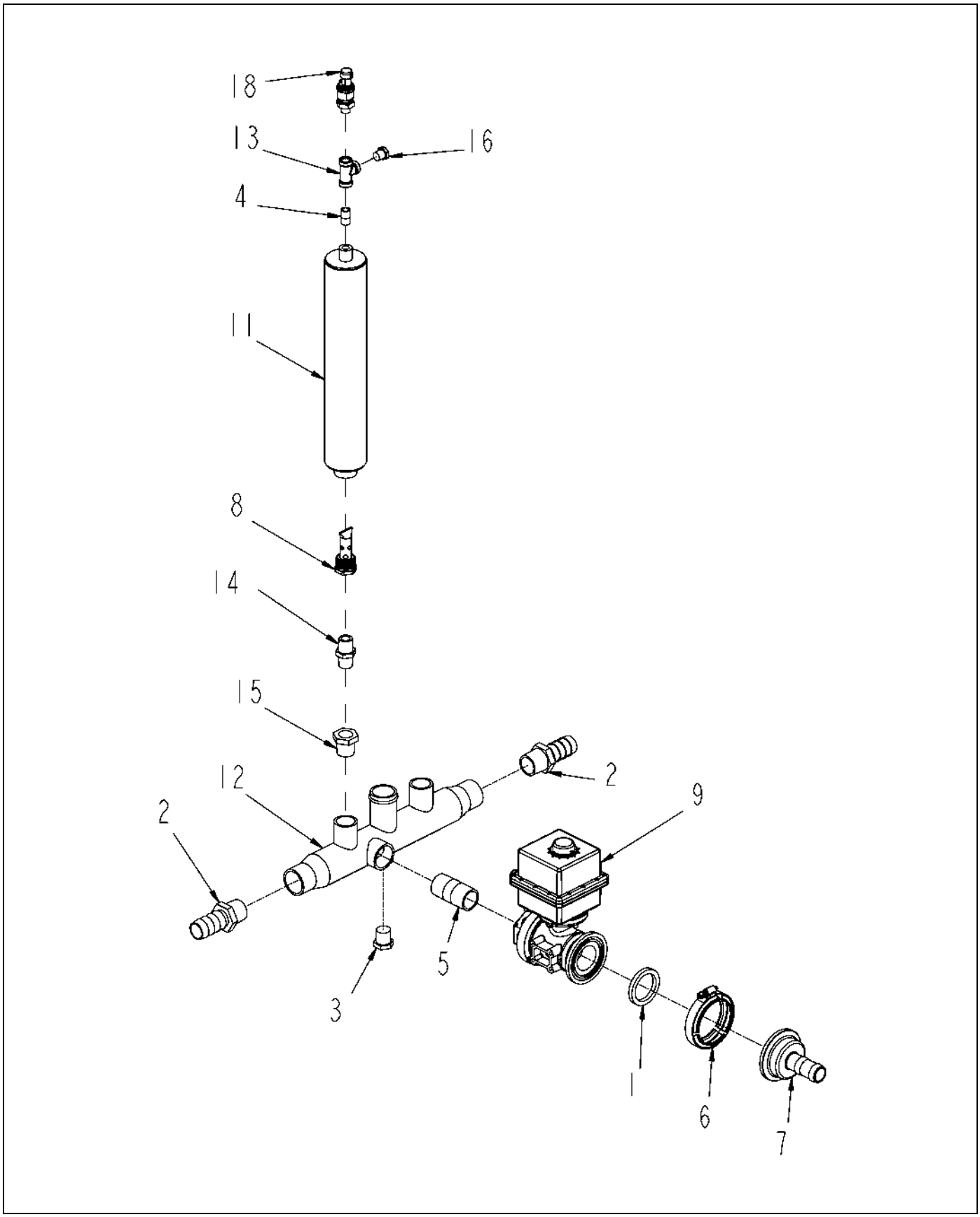

424522-05-R094-.TIF

Copyright © 2007 AGCO Corporation

MANF ASM-BOOM,W/BALL VLV,STD

ITEM	PART #	QTY	DESCRIPTION	COMMENTS
1	AG000772	1	GASKET 1.50 EPDM	
2	AG051059	2	BARB-HOSE,1.00MNPTX1.00BARB,PP	
3	AG051133	1	PLUG-PIPE,HEX,0.50NPT,PP	
4	AG051740	1	NIPPLE 0.25NPTX 0.87CLS 304SS	
5	AG051904	1	NIPPLE 1.00NPTX 2.50 304SS	
6	AG056785	1	CLAMP 2.00 FLANGE	
7	AG057593	1	CONNECTOR 2.00X1.00HOSE	
8	AG106152	1	WLDMT TUBE DIFFUSER	
9	AG121883	1	VALVE-BALL,1.00FP FLGXNPT,ELEC	SEE PAGE 4-3
10	AG129187	AR	PIPE SEALANT-FLEX BLACK	
11	AG311914	1	WLDMT ACCUMULATOR	
12	AG407963	1	MANIFOLD WLDMT	
13	AG517855	1	TEE 0.25 NPT FEMALE SS	
14	AG553492	1	NIPPLE .50NPT X 1.12CLS WR ST	
15	AG556424	1	BUSHG 0.75X 0.50NPT HX REDG PL	
16	AG710638	1	PLUG-PIPE,HEX,0.25NPT,304SS	
17	AG711522	AR	SEALANT PIPE""BLACKJACK""RS #21	
18	517405D1	1	TRANSDUCER-PRES,150 PSI, (MV)	

Copyright © 2007 AGCO Corporation

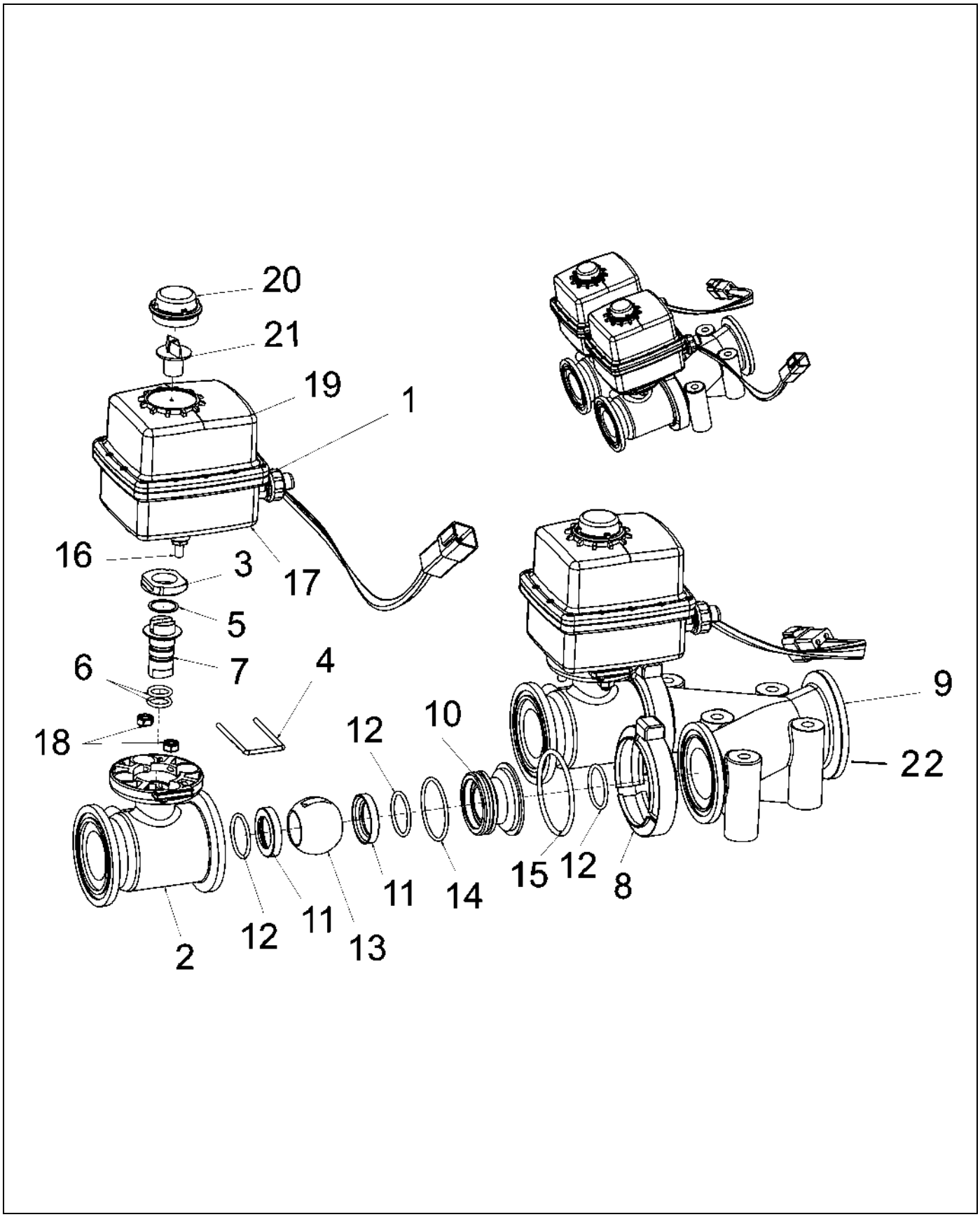

121882-A.TIF

Copyright © 2007 AGCO Corporation

MANIFOLD ASM-Y,1.00FP FLG,ELEC

ITEM	PART #	QTY	DESCRIPTION	COMMENTS
REF	AG131748	-	MOTOR, GEAR ASM	
REF	AG131739	-	BOARD, CIRCUIT W/CABLE	
1	AG121929	2	ACTUATOR-000-60-M-9	SEE PAGE 6-3
2	AG121924	2	BODY-VALVE,FLG OUTLET,1.00,2W	
3	AG131731	2	RETAINER, STEM	
4	AG726981	2	PIN / HAIR	
5	AG131732	2	WASHER, THRUST	
6	AG131734	4	O-RING, STEM	
7	AG131733	2	STEM, SS	
8	AG121922	2	CLAMP-V BAND,QX4	
9	AG121930	1	MANIFOLD-Y,2.00FPX2.00SP	
10	AG131738	2	FLANGE	
11	AG131736	4	SEAT, PTFE	
12	AG131735	6	O-RING, SEAT	
13	AG726982	2	BALL / 2-WAY	
14	AG131737	2	O-RING	
15	WR35020	2	ORING-SEAL,VALVE,QC3	
16	AG131747	4	STUD, MOUNTING	
17	AG131746	2	CASE, BOTTOM	
18	AG121926	4	NUT-KEP"S,.50-20NC	
19	AG131745	2	DOME, LID	
20	AG131743	2	DOME, CLEAR	
21	AG131744	2	FLAG	
22	AG000773	1	GASKET 2.00 EPDM	

Copyright © 2007 AGCO Corporation

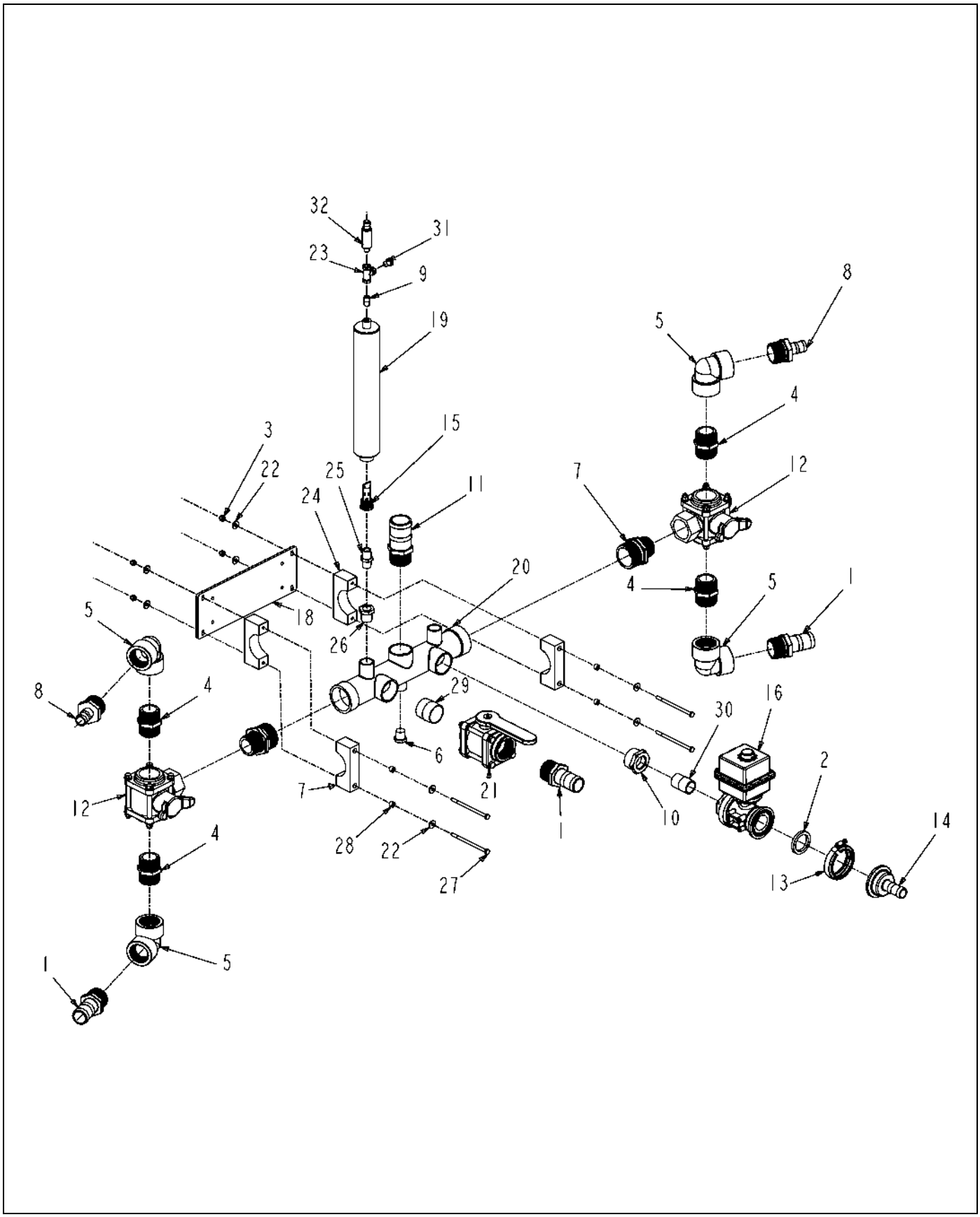

424524-05-R100-.TIF

Copyright © 2007 AGCO Corporation

MANF ASM-BOOM,W/BALL VLV,HV

ITEM	PART #	QTY	DESCRIPTION	COMMENTS
1	AG000766	3	BARB-HOSE,1.50MNTTX1.50BARB,PP	
2	AG000772	1	GASKET 1.50 EPDM	
3	AG027275	4	NUT 0.25-20NC HEX SS REG NY	
4	AG050253	4	NIPPLE-PIPE,1.50NPTXCLS,PP	
5	AG050275	4	ELBOW-PIPE,1.50FNPT,90D,PP	
6	AG051133	1	PLUG-PIPE,HEX,0.50NPT,PP	
7	AG051439	2	NIPPLE REDUCING 2.00X1.50 P	
8	AG051533	2	BARB-HOSE,1.50MNPTX1.00BARB,PP	
9	AG051740	1	NIPPLE 0.25NPTX 0.87CLS 304SS	
10	AG051894	1	BUSHING 1.50X1.00 304SS	
11	AG052456	1	BARB-HOSE,1.50MNPTX2.00BARB,PP	
12	AG053044	2	VALVE 3-WAY 1.50 SIDELOAD	
13	AG056785	1	CLAMP 2.00 FLANGE	
14	AG057593	1	CONNECTOR 2.00X1.00HOSE	
15	AG106152	1	WLDMT TUBE DIFFUSER	
16	AG121883	1	VALVE-BALL,1.00FP FLGXNPT,ELEC	SEE PAGE 4-3
17	AG129187	AR	PIPE SEALANT-FLEX BLACK	
18	AG260508	1	PLATE-MTG,MANIFOLD,HV	
19	AG311914	1	WLDMT ACCUMULATOR	
20	AG326175	1	MANIFOLD WLDMT-HV BOOM CTR,THD	
21	AG513722	1	VLV BALL 1.50 POLY FF	
22	AG515121	8	WASHER 0.25 FL SS REG TYPE-B	
23	AG517855	1	TEE 0.25 NPT FEMALE SS	
24	AG518340	2	CLAMP 2.50 BLACK POLY (RTG)	
25	AG553492	1	NIPPLE .50NPT X 1.12CLS WR ST	
26	AG556424	1	BUSHG 0.75X 0.50NPT HX REDG PL	
27	AG563069	4	BOLT 0.25-20NCX 4.50 SS HHD	
28	AG609777	4	INSERT STAUFF SPACER	
29	AG710515	1	NIPPLE 1.50NPTX 1.75CLS 304SS	
30	AG710516	1	NIPPLE 1.00NPTX 1.50CLS 304SS	
31	AG710638	1	PLUG-PIPE,HEX,0.25NPT,304SS	
32	517405D1	1	TRANSDUCER-PRES,150 PSI, (MV)	

Copyright © 2007 AGCO Corporation

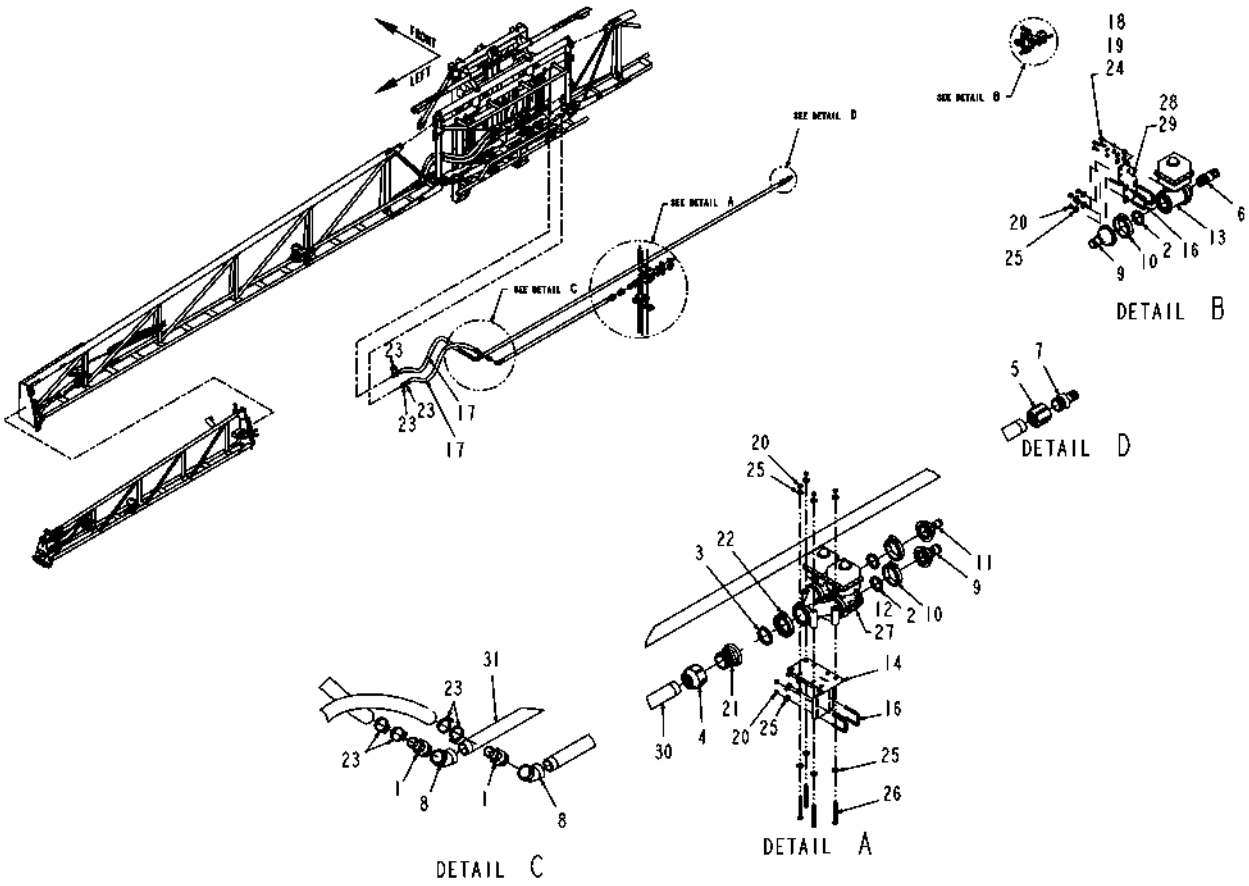

506451D1-01-M790-.tif

Copyright © 2007 AGCO Corporation

ITEM	PART #	QTY	DESCRIPTION	COMMENTS
1	AG000766	4	BARB-HOSE,1.50MNTTX1.50BARB,PP	
2	AG000772	6	GASKET 1.50 EPDM	
3	AG000773	2	GASKET 2.00 EPDM	
4	AG050266	2	COUPLG RED 1.50X 2.00NPT POLYP	
5	AG050271	2	COUPLING-PIPE,1.50NPT,PP	
6	AG051183	2	BARB-HOSE,1.00MNPTX1.25BARB,PP	
7	AG051534	2	BARB-HOSE,1.50MNPTX1.25BARB,PP	
8	AG051888	4	ELBOW 45D 1.50 304SS	
9	AG056289	4	CONNECTOR 2.00FLGX1.25HOSE	
10	AG056785	6	CLAMP 2.00 FLANGE	
11	AG057593	2	CONNECTOR 2.00X1.00HOSE	
12	AG121882	2	MANIFOLD ASM-Y,1.00FP FLG,ELEC	SEE PAGE 2-2
13	AG121883	2	VALVE-BALL,1.00FP FLGXNPT,ELEC	SEE PAGE 4-3
14	AG122147	2	BRKT WLDMT-MTG,Y MANF,BM PLMB	
15	AG129187	AR	PIPE SEALANT-FLEX BLACK	
16	AG231204	8	BOLT-U .31-18X1.88X2.63	
17	AG512230	-	HOSE 1.50 2BRD EPDM [BULK: 21.500 FT]	
18	AG515121	8	WASHER 0.25 FL SS REG TYPE-B	
19	AG515122	8	WASHER 0.25 LK SS REG	
20	AG516403	24	NUT 0.31-18NC HEX SS REG NY	
21	AG522893	2	CONNECTOR-2.00FLGX2.00NPT	
22	AG522895	2	CLAMP-WORM SCREW,2.00,SS	
23	AG561231	16	CLAMP 1.06-2.00 HOSE 24HS	
24	AG562054	8	BOLT 0.25-20NCX 0.75 SS HHD	
25	AG562074	32	WASHER 0.31 FL SS REG TYPE-B	
26	AG708300	8	BOLT 0.31-18NCX 3.50 SS HHD	
27	505271D1	1	HARNESS INSTL-BSO VLV,7 SECT	SEE PAGE 6-5
28	506452D1	1	BRKT-MTG,KZ VLV,RH	
29	506453D1	1	BRKT-MTG,KZ VLV,LH	
30	506454D1	2	TUBE-SECTION FEED,1.50,85.00	
31	506455D1	2	TUBE-SECTION FEED,1.50,240.00	

Copyright © 2007 AGCO Corporation

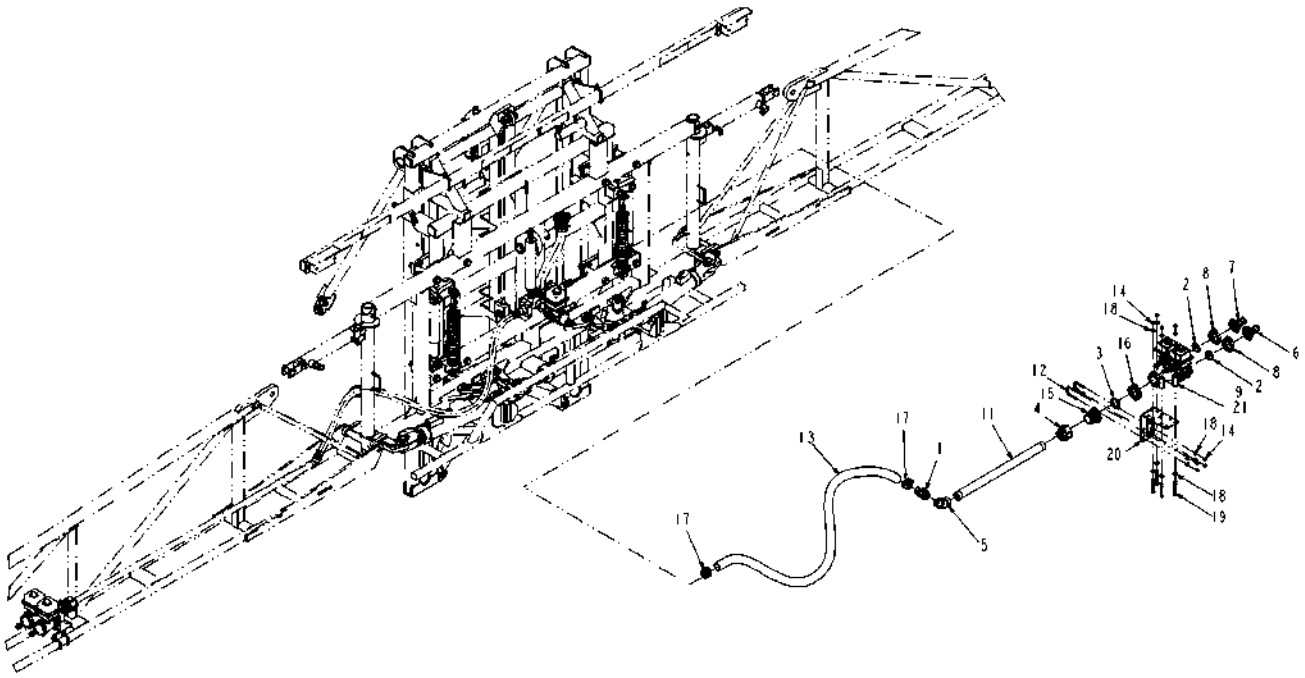

511498D1-02-R506-.TIF

Copyright © 2007 AGCO Corporation

SYS INSTL-PLMB,1.50,100X5,RTRY

ITEM	PART #	QTY	DESCRIPTION	COMMENTS
1	AG000766	2	BARB-HOSE,1.50MNTTX1.50BARB,PP	
2	AG000772	4	GASKET 1.50 EPDM	
3	AG000773	2	GASKET 2.00 EPDM	
4	AG050266	2	COUPLG RED 1.50X 2.00NPT POLYP	
5	AG051888	2	ELBOW 45D 1.50 304SS	
6	AG056289	2	CONNECTOR 2.00FLGX1.25HOSE	
7	AG056291	2	CONNECTOR 2.00FLGX1.50HOSE	
8	AG056785	4	CLAMP 2.00 FLANGE	
9	AG121882	2	MANIFOLD ASM-Y,1.00FP FLG,ELEC	SEE PAGE 2-2
10	AG129187	AR	PIPE SEALANT-FLEX BLACK	
11	AG135097	2	TUBE-SECTION FEED,1.50,77.00	
12	AG231204	4	BOLT-U .31-18X1.88X2.63	
13	AG512230	-	HOSE 1.50 2BRD EPDM [BULK: 12.500 FT]	
14	AG516403	16	NUT 0.31-18NC HEX SS REG NY	
15	AG522893	2	CONNECTOR-2.00FLGX2.00NPT	
16	AG522895	2	CLAMP-WORM SCREW,2.00,SS	
17	AG561231	8	CLAMP 1.06-2.00 HOSE 24HS	
18	AG562074	24	WASHER 0.31 FL SS REG TYPE-B	
19	AG708300	8	BOLT 0.31-18NCX 3.50 SS HHD	
20	509725D1	2	BRKT WLDMT-MTG,Y MANF,BM PLMB	
21	520583D1	1	HARN INSTL-ELEC BM SECT,90/100	

Copyright © 2007 AGCO Corporation

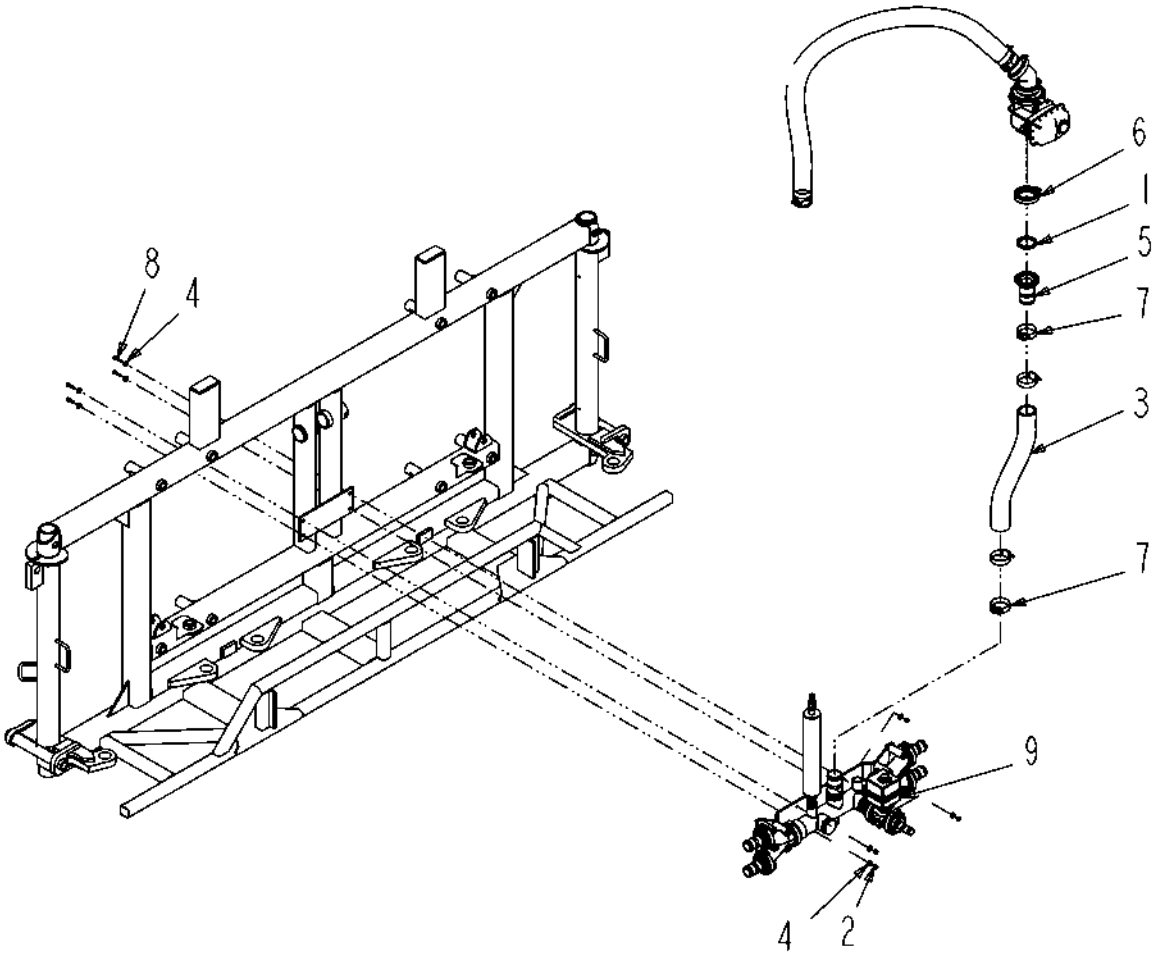

506844D1-01-M790-.TIF

Copyright © 2007 AGCO Corporation

MANF INSTL-BM,HV Y,W/BALL VLV

ITEM	PART #	QTY	DESCRIPTION	COMMENTS
1	AG000773	1	GASKET 2.00 EPDM	
2	AG027275	4	NUT 0.25-20NC HEX SS REG NY	
3	AG511722	-	HOSE-2.00,WIRE BRAID,EPDM [BULK: 1.667 FT]	
4	AG515121	8	WASHER 0.25 FL SS REG TYPE-B	
5	AG522894	1	CONN-2.00 FLG X2.00 HOSE BARB	
6	AG522895	1	CLAMP-WORM SCREW,2.00,SS	
7	AG561630	4	CLAMP 2.28-2.59HOSE VOSS-250SS	
8	AG562064	4	BOLT 0.25-20NCX 1.00 SS HHD	
9	506845D1	1	MANF ASM-BM,HV Y,W/BALL VLV	SEE PAGE 2-7

Copyright © 2007 AGCO Corporation

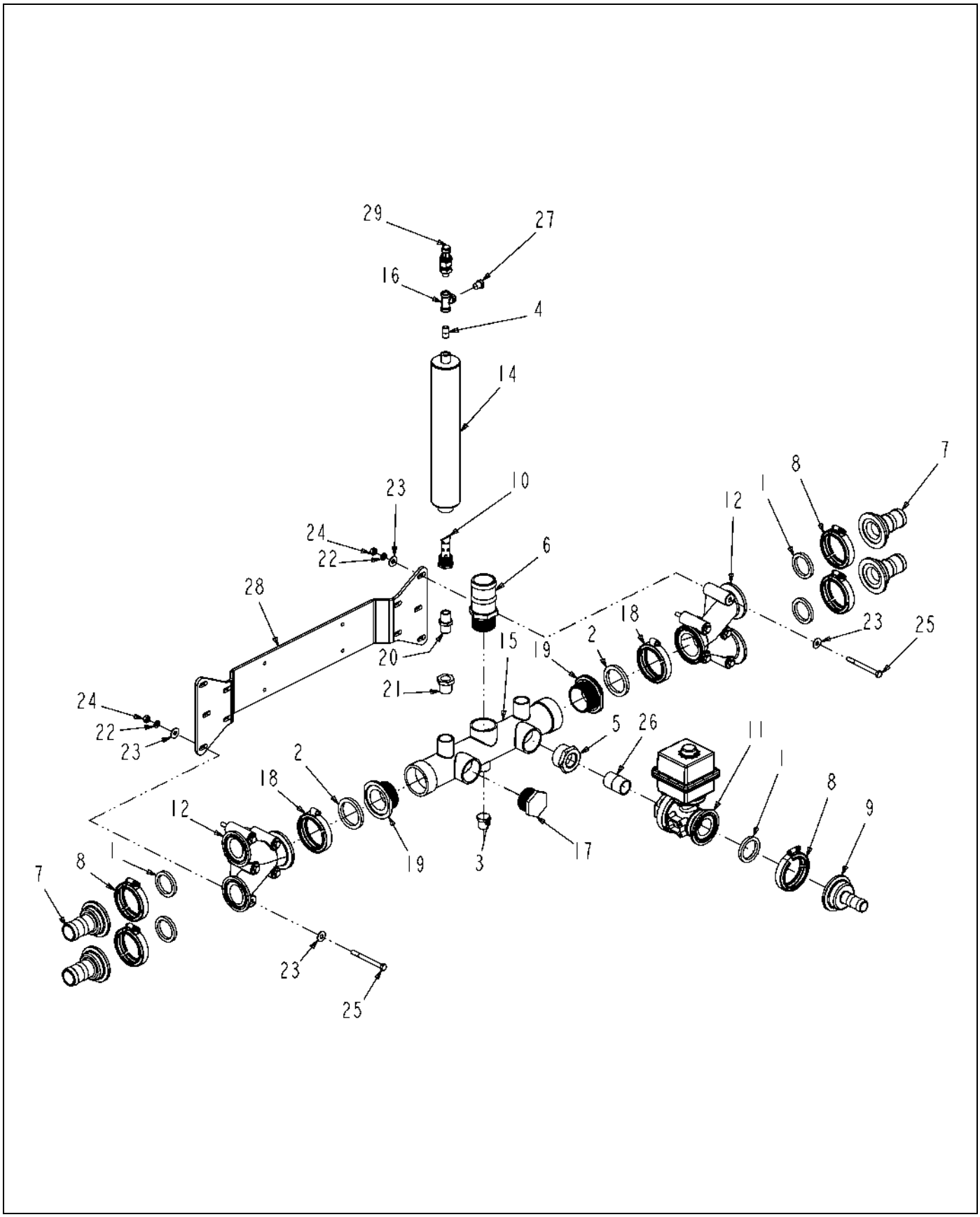

506845D1-03-R100-.TIF

Copyright © 2007 AGCO Corporation

MANF ASM-BM,HV Y,W/BALL VLV

ITEM	PART #	QTY	DESCRIPTION	COMMENTS
1	AG000772	5	GASKET 1.50 EPDM	
2	AG000773	2	GASKET 2.00 EPDM	
3	AG051133	1	PLUG-PIPE,HEX,0.50NPT,PP	
4	AG051740	1	NIPPLE 0.25NPTX 0.87CLS 304SS	
5	AG051894	1	BUSHING 1.50X1.00 304SS	
6	AG052456	1	BARB-HOSE,1.50MNPTX2.00BARB,PP	
7	AG056291	4	CONNECTOR 2.00FLGX1.50HOSE	
8	AG056785	5	CLAMP 2.00 FLANGE	
9	AG057593	1	CONNECTOR 2.00X1.00HOSE	
10	AG106152	1	WLDMT TUBE DIFFUSER	
11	AG121883	1	VALVE-BALL,1.00FP FLGXNPT,ELEC	SEE PAGE 4-3
12	AG121930	2	MANIFOLD-Y,2.00FPX2.00SP	
13	AG129187	AR	PIPE SEALANT-FLEX BLACK	
14	AG311914	1	WLDMT ACCUMULATOR	
15	AG326175	1	MANIFOLD WLDMT-HV BOOM CTR,THD	
16	AG517855	1	TEE 0.25 NPT FEMALE SS	
17	AG522149	1	PLUG-PIPE,HEX,1.50NPT,PP	
18	AG522895	2	CLAMP-WORM SCREW,2.00,SS	
19	AG523524	2	ADPTR-2.0FLG,FPX2.0MPT,316SS	
20	AG553492	1	NIPPLE .50NPT X 1.12CLS WR ST	
21	AG556424	1	BUSHG 0.75X 0.50NPT HX REDG PL	
22	AG562051	10	WASHER 0.31 LK SS REG	
23	AG562074	20	WASHER 0.31 FL SS REG TYPE-B	
24	AG562090	10	NUT 0.31-18NC HEX SS REG	
25	AG563070	10	BOLT 0.31-18NCX 3.50 SS HHD	
26	AG710516	1	NIPPLE 1.00NPTX 1.50CLS 304SS	
27	AG710638	1	PLUG-PIPE,HEX,0.25NPT,304SS	
28	506846D1	1	BRKT-MTG,MANF,BM,HV Y	
29	517405D1	1	TRANSDUCER-PRES,150 PSI, (MV)	

Copyright © 2007 AGCO Corporation

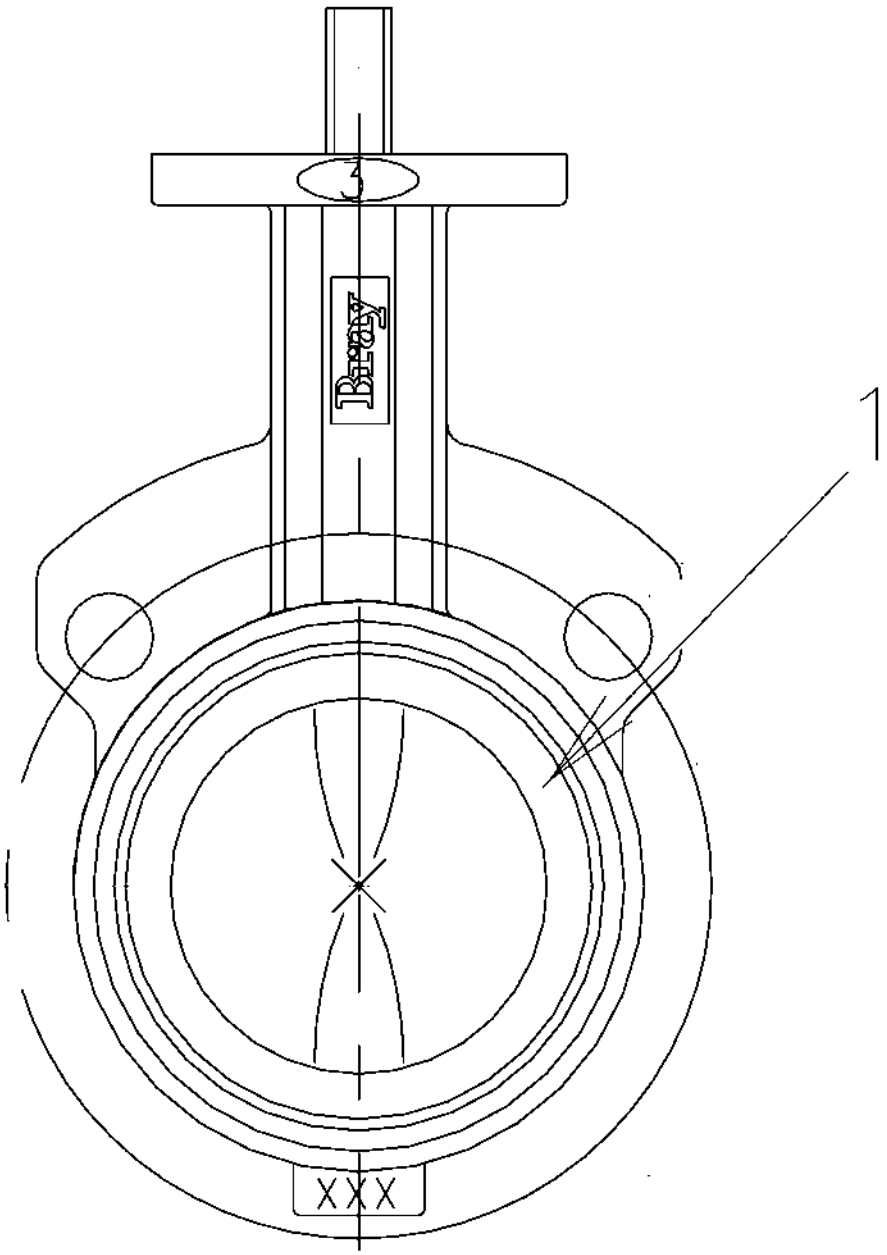

520377-C.TIF

Copyright © 2007 AGCO Corporation

VALVE-BTFL,3.00

ITEM	PART #	QTY	DESCRIPTION	COMMENTS
1	AG717132	-	KIT-REPAIR,VALVE 3.00	

Copyright © 2007 AGCO Corporation

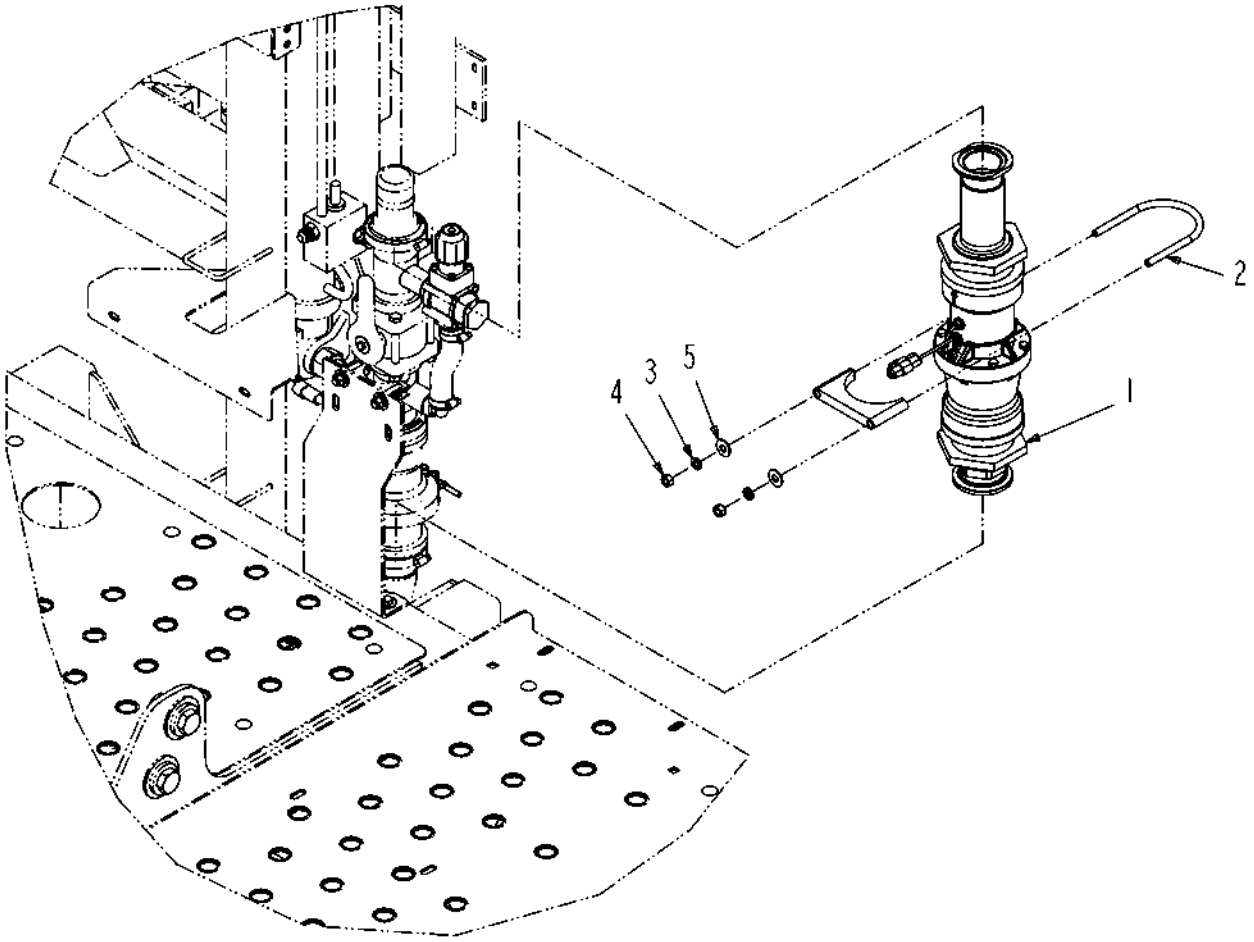

131086-A.TIF

Copyright © 2007 AGCO Corporation

FLWMTR INSTL-3.00,41 PPG

ITEM	PART #	QTY	DESCRIPTION	COMMENTS
1	WR122648	1	FLWMTR ASM-3.00 41PPG	SEE PAGE 2-10
2	AG516611	1	CLAMP MUFFLER 3.50	
3	AG550191	2	WASHER 0.37 LK ZN REG	
4	AG550825	2	NUT 0.37-16NC HEX ZN REG	
5	AG551007	2	WASHER 0.37 FL ZN REG TYPE-B	

Copyright © 2007 AGCO Corporation

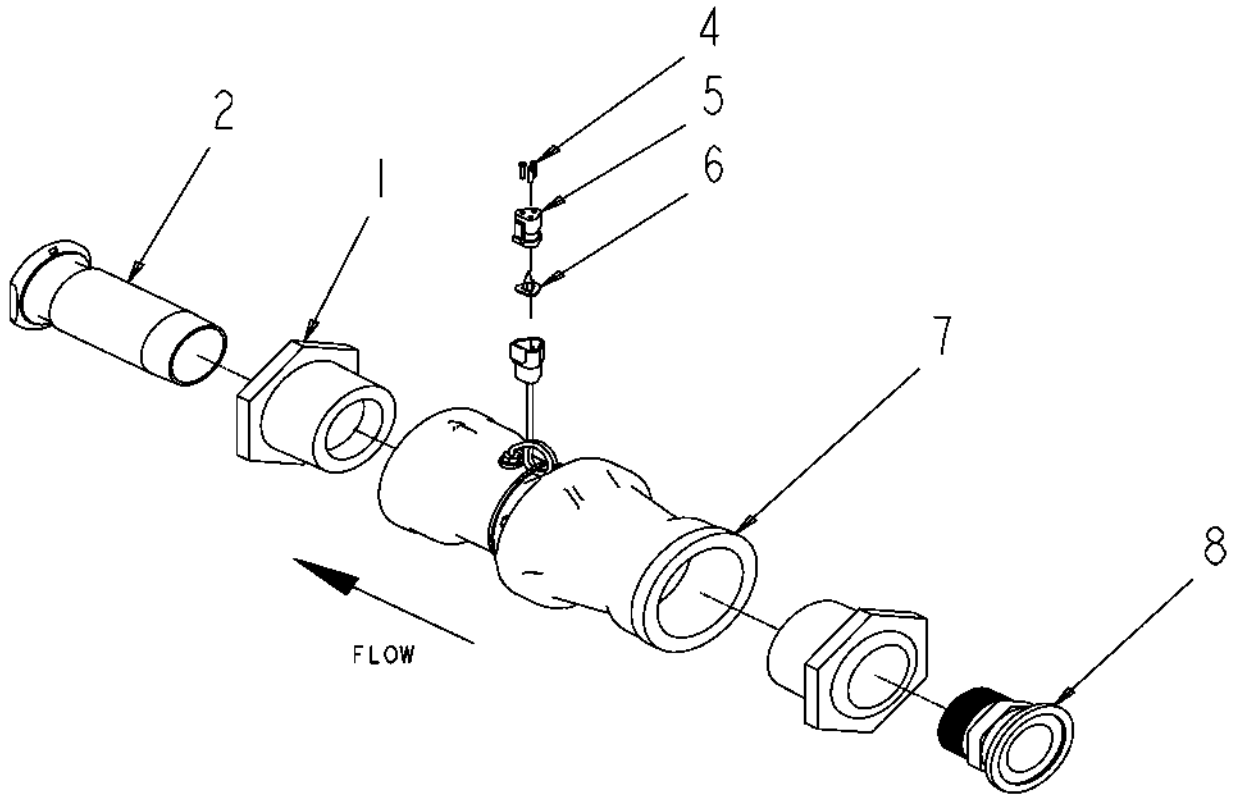

122648-C-L679.TIF

Copyright © 2007 AGCO Corporation

FLWMTR ASM-3.00 41PPG

ITEM	PART #	QTY	DESCRIPTION	COMMENTS
1	AG050681	2	BSHG-RDCR,HEX,3.00X2.00NPT,PP	
2	AG122651	1	NIPPLE WLDMT-2.00NPTX2.00FLG	
3	AG129187	AR	PIPE SEALANT-FLEX BLACK	
4	AG515669	3	PLUG-SEAL,SIZE 16 CONTACT	
5	AG521021	1	CONN-PLUG,3WAY,18-14GA	
6	AG521023	1	LOCK-PLUG,3WAY,18-14GA	
7	AG522563	1	FLMTR ASM-3.00,41 PULSE/GL,CI	SEE PAGE 2-11
8	AG522893	1	CONNECTOR-2.00FLGX2.00NPT	

Copyright © 2007 AGCO Corporation

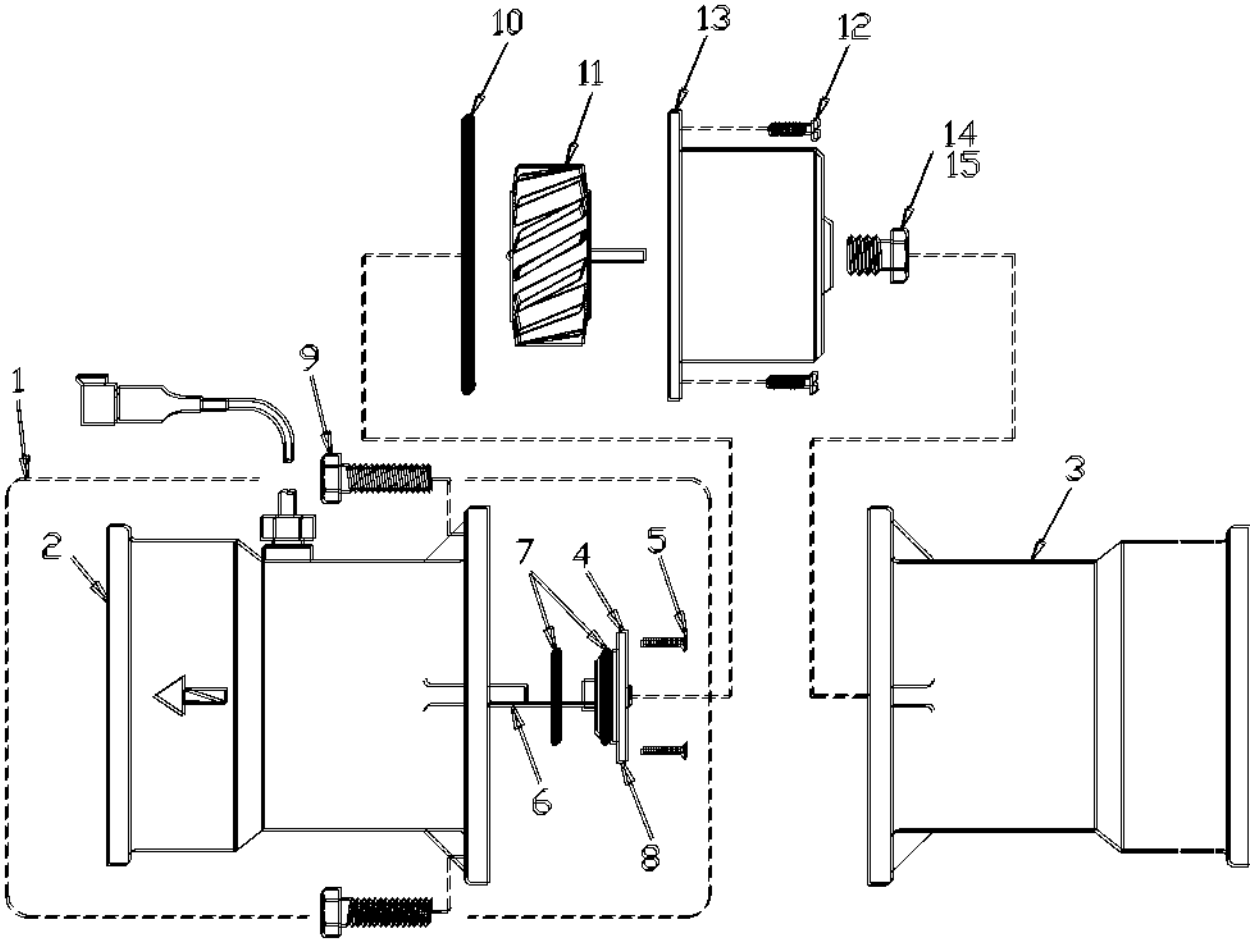

522563.TIF

Copyright © 2007 AGCO Corporation

FLMTR ASM-3.00,41 PULSE/GL,CI

ITEM	PART #	QTY	DESCRIPTION	COMMENTS
1	AG060083	1	SENSOR HSG ASM	
2	AG060084	1	SENSOR HSG	
3	AG711934	1	HUB HOUSING	
4	AG724793	1	END BEARING/PC ASM	
5	AG711226	1	SCREW #2-56 X .31LG FLAT HD SS	
6	AG724790	1	PC ASM	
7	AG708715	1	O RING VITON	
8	AG050394	1	END PLATE	
9	AG710655	1	BOLT HHD .25-20X1 IN SS R/B562064	
10	AG709343	1	O RING VITON RFM200	
11	AG722818	1	TURBINE RFM 200	
12	AG711903	1	SCREW #4-40 X .37LG PAN HD SCS	
13	AG722819	1	TURBINE HUB/BEARING ASM	
14	AG709344	1	STUD W/BEARING	
15	AG714996	1	THREAD SEAL	

Copyright © 2007 AGCO Corporation

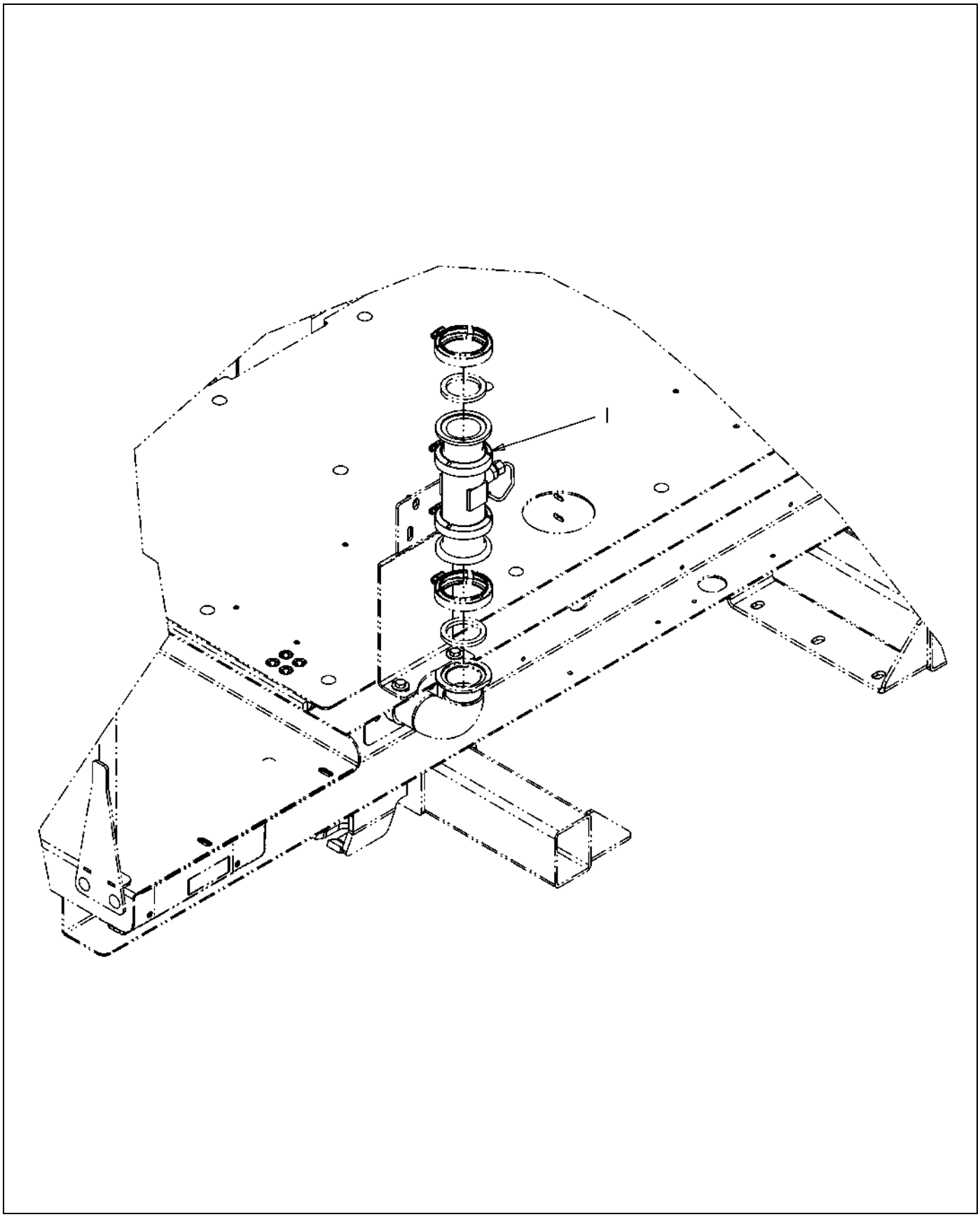

135910-01-M399-.TIF

Copyright © 2007 AGCO Corporation

FLOWMETER INSTL-1.50,RFM60P

ITEM	PART #	QTY	DESCRIPTION	COMMENTS
1	AG135911	1	FLWMTR ASM-RFM60P,2.00FP FLG	SEE PAGE 2-13

Copyright © 2007 AGCO Corporation

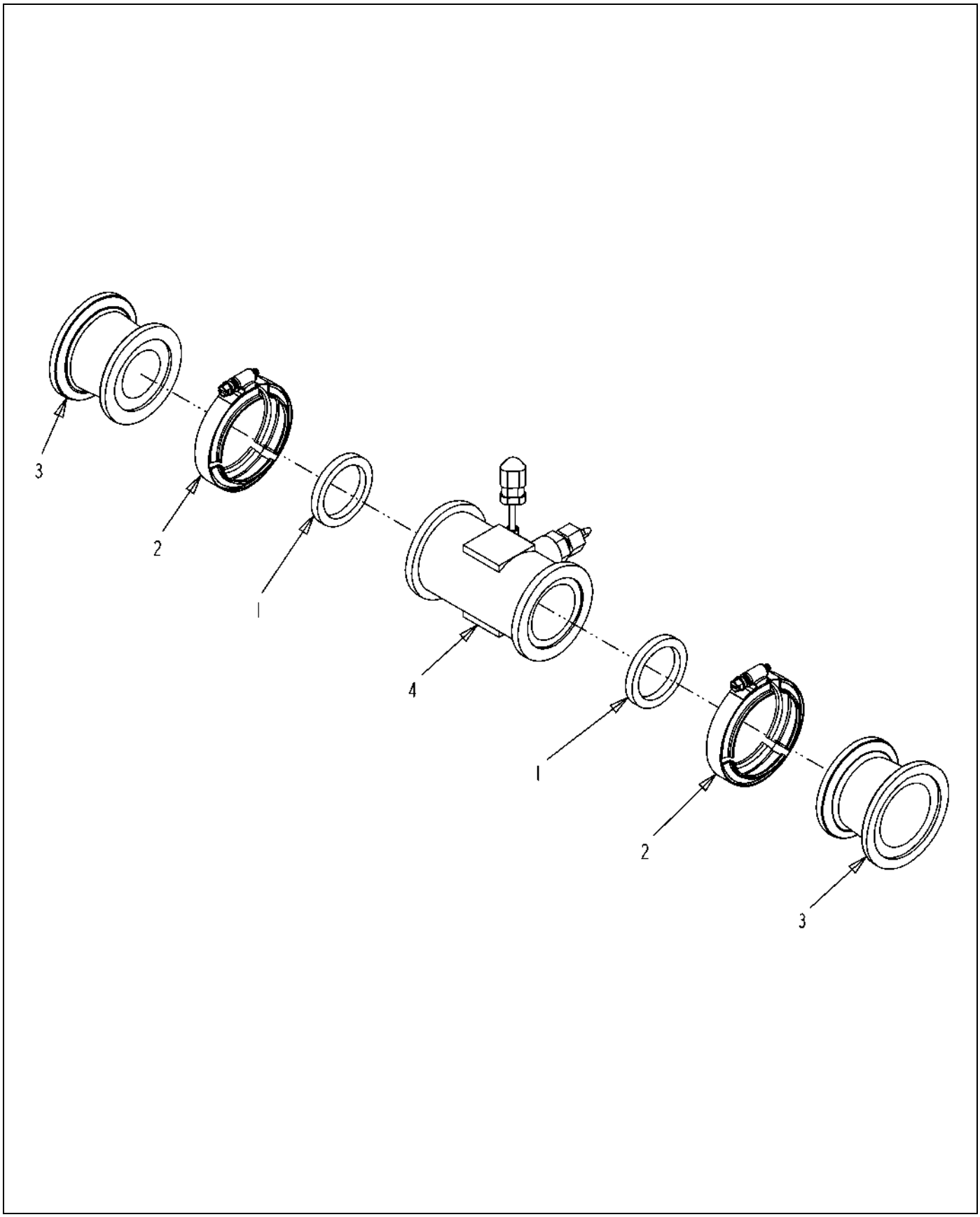

135911-01-M399-.TIF

Copyright © 2007 AGCO Corporation

FLWMTR ASM-RFM60P,2.00FP FLG

ITEM	PART #	QTY	DESCRIPTION	COMMENTS
1	AG000772	2	GASKET 1.50 EPDM	
2	AG056785	2	CLAMP 2.00 FLANGE	
3	AG057575	2	COUPLING,FLANGE 2.00FPX2.00	
4	AG128771	1	FLWMTR-2.00SP FLG,RFM60P,12V	SEE PAGE 2-32

Copyright © 2007 AGCO Corporation

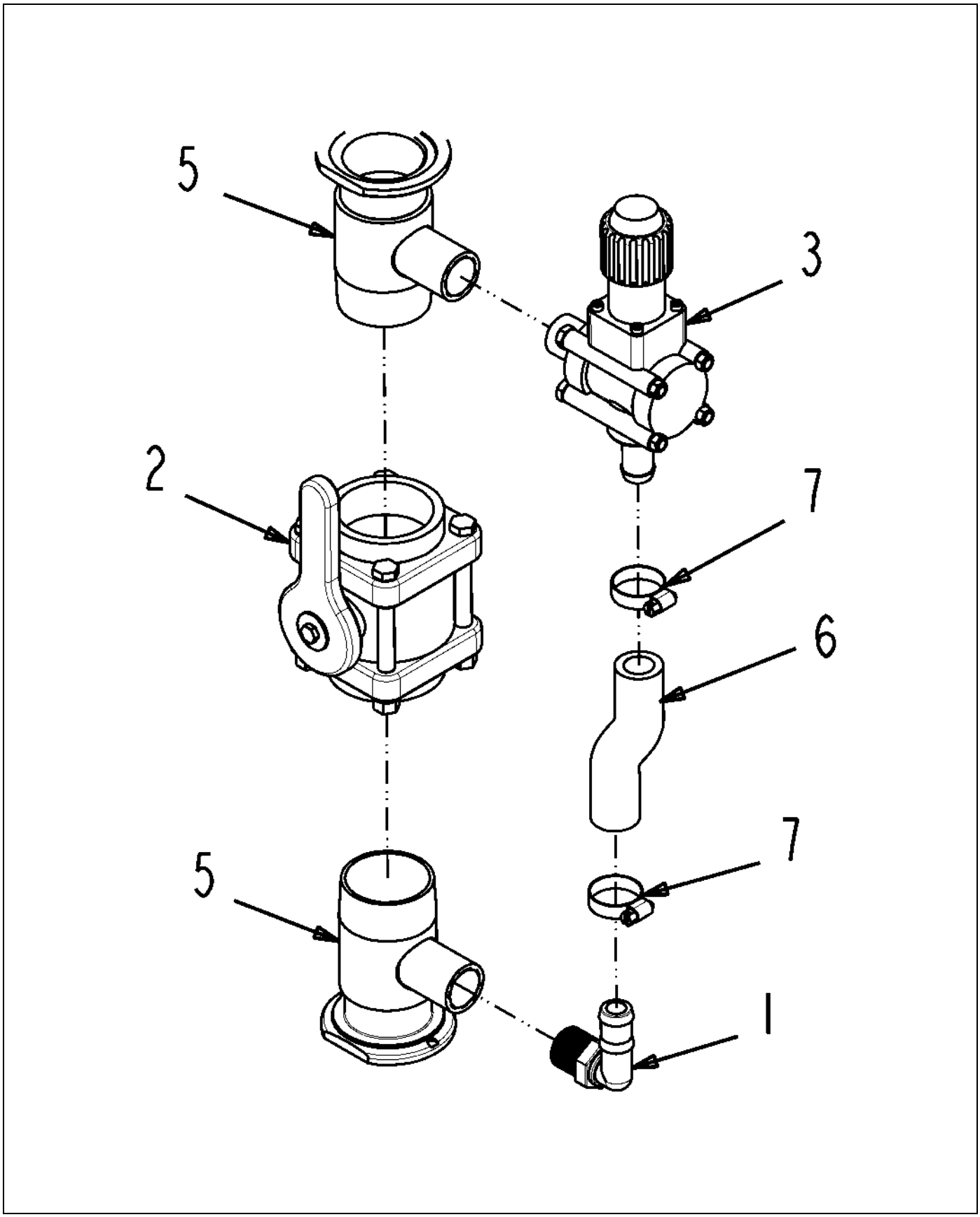

135913-01-M399.TIF

Copyright © 2007 AGCO Corporation

KIT ASM-LOW RATE,2.00FP FLG

ITEM	PART #	QTY	DESCRIPTION	COMMENTS
1	AG051142	1	ELBOW 90D 0.75NPTX0.75 BARB PP	
2	AG056146	1	VALVE-2IN,FULL PORT	SEE PAGE 2-15
3	AG123068	1	VALVE ASM-REGULATING, PRESSURE	SEE PAGE 2-16
4	AG129187	-	PIPE SEALANT-FLEX BLACK	
5	AG262382	2	TEE-PRESS RELIEF,FLOWMETER	
6	AG513385	-	HOSE,MED.PRESS 0.75 2BRD EPDM [BULK: 0.625 FT]	
7	AG561229	2	CLAMP 0.68-1.25 HOSE 12HS	

Copyright © 2007 AGCO Corporation

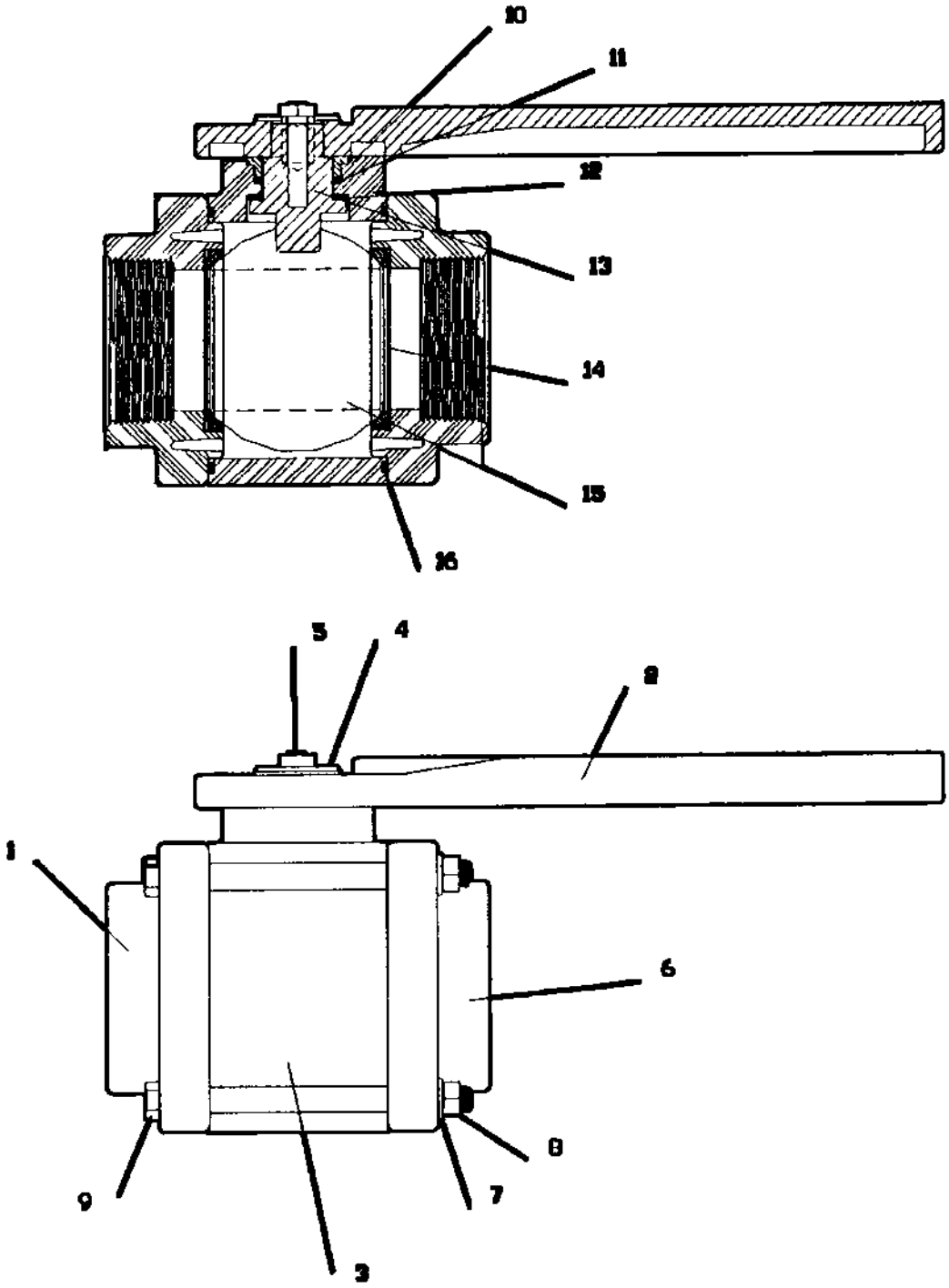

056146.TIF

Copyright © 2007 AGCO Corporation

VALVE-2IN,FULL PORT

ITEM	PART #	QTY	DESCRIPTION	COMMENTS
1	AG051822	1	NOZZLE 1/8WFF 5.5 FLAT SPRAY	
2	AG000796	1	HANDLE 2&3	
3	AG007578	1	BODY	
5	AG059011	1	BOLT-.32X1 UNSLOTTED HHD	
6	AG054822	1	PLATE- END 2.00 FULL PORT 3WAY	
7	AG054234	4	BODY LOCKWASHER 3/8	
8	AG054235	4	BODY NUT 3/8-16SS	
9	AG053860	4	BOLT SS BODY 0.37X4.50	
10	AG000801	1	BUSHING UPPER OR LOWER STEM	
11	AG000803	1	O-RING VITON	
12	AG054488	3	THRUST WASHER 3 IN	
13	AG000795	1	STEM V25151	
14	AG006581	2	BALL SEAT	
15	AG000794	1	VALVE BALL 2.00	
16	AG006578	2	VALVE BODY O-RING VITON	

Copyright © 2007 AGCO Corporation

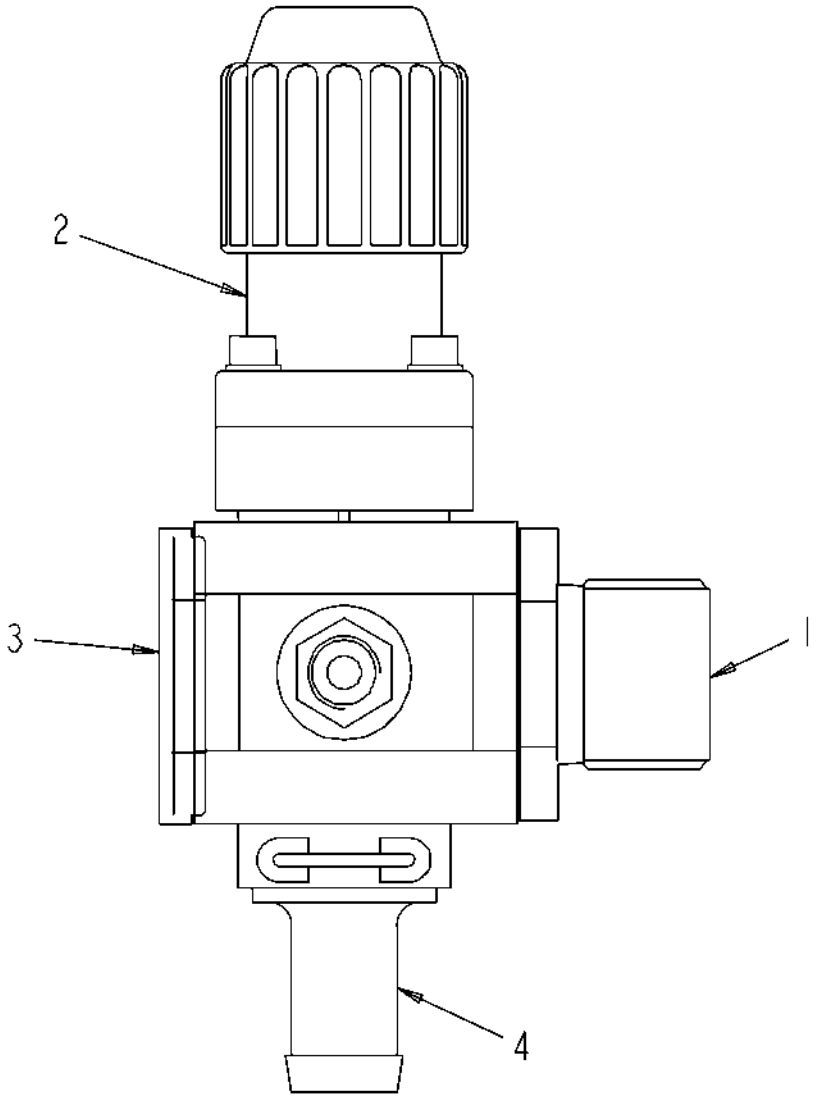

123068-B.TIF

Copyright © 2007 AGCO Corporation

VALVE ASM-REGULATING, PRESSURE

ITEM	PART #	QTY	DESCRIPTION	COMMENTS
1	AG123071	-	ADAPTER-INLET,MALE	
2	AG520386	-	VALVE-RELIEF	
3	AG123070	-	ADAPTER-CLOSED	
4	AG123072	-	HOSE BARB 3/4 IN	
5	AG123073	-	ORING VITON	

Copyright © 2007 AGCO Corporation

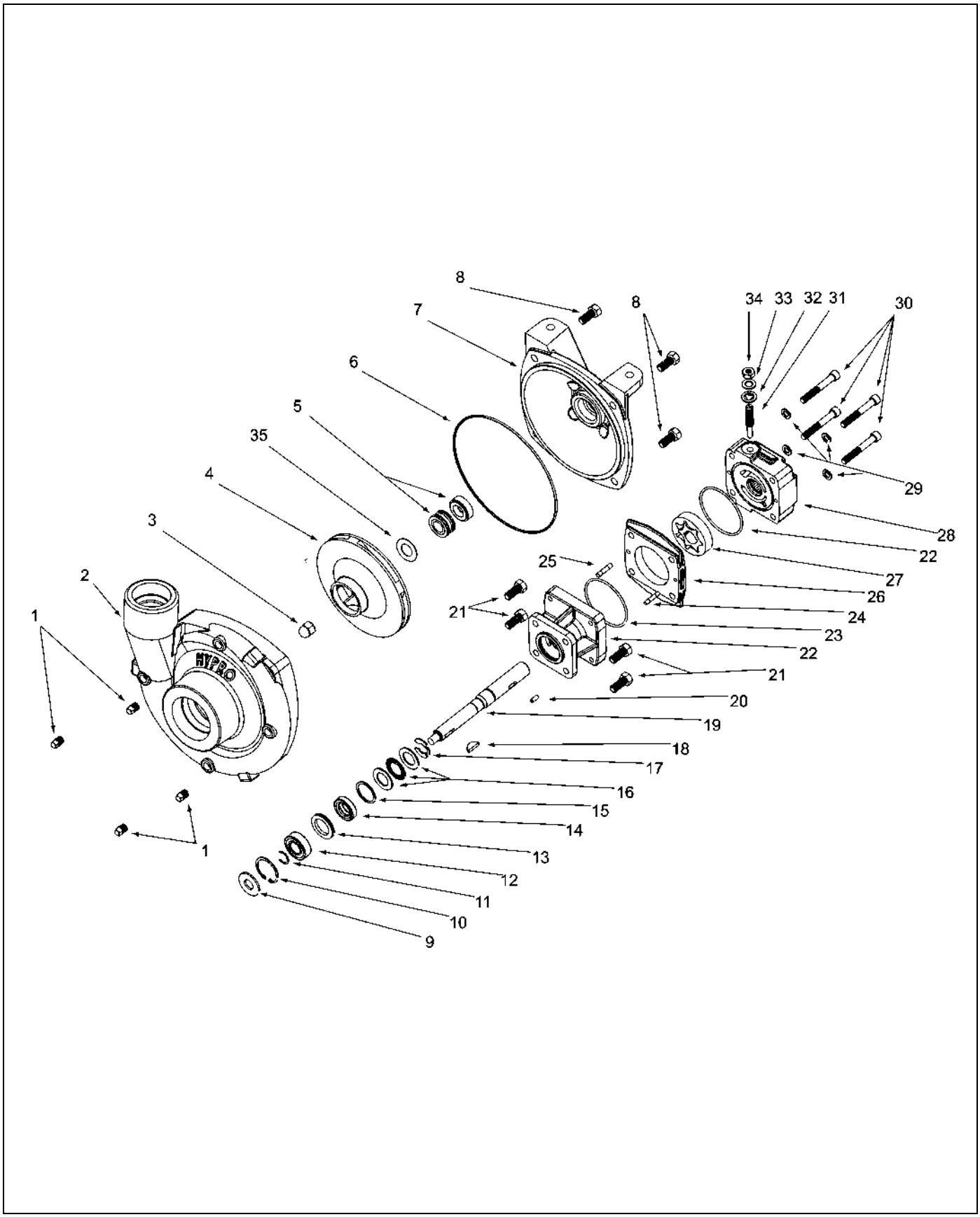

128977.TIF

Copyright © 2007 AGCO Corporation

ITEM	PART #	QTY	DESCRIPTION	COMMENTS
1	AG006504	4	PIPE PLUG CASING	
2	AG131486	1	CASING, PUMP	
3	AG005168	1	NUT IMPELLER 2253-2	
4	AG131494	1	IMPELLER	
5	AG000482	1	SEAL VITON	
6	AG000338	1	O-RING	
7	AG131487	1	FLANGE,MOUNTING	
8	AG006500	4	SCREW HEX HD FLANGE TO CASING	
9	AG000313	1	O-RING WASHER	
10	AG000349	1	RING BEARING	
11	AG000346	1	RING BEARING	
12	AG006990	1	BEARING BALL	
13	AG006992	1	SLEEVE	
14	AG005536	1	SEAL ONLY	
15	AG006991	1	SLEEVE	
16	AG007170	1	BEARING ASM	
17	AG006993	1	SNAP RING	
18	AG005687	1	KEY WOODRUFF	
19	AG006995	1	SHAFT HM1	
20	AG006997	1	PIN ROLL	
21	AG007657	4	CAPSCREW	
22	AG056226	1	BODY,MOTOR	[A]
23	AG006175	2	O RING	
24	AG007002	1	DOWEL PIN HM1	
25	AG007004	1	PIN DOWEL HM1	
26	AG058979	1	HOUSING,GEROTOR HM5	
27	AG055073	1	GEROTOR HM5 MODEL	
28	AG058978	1	END PLATE,MOTOR WITH BEARING	
29	AG007009	4	WASHER	
30	AG007010	4	CAPSCREW SOCKET HEAD HM2	
31	AG006947	1	SCREW BYPASS ADJ	
32	AG007006	1	GASKET	
33	AG007007	1	WASHER	
34	AG007008	1	LOCKNUT	
35	AG052854	1	GASKET VITON	
	FOOTNOTE [A]		REPLACES AG006998 ALUM. BODY. AG056226 IS CAST IRON	
	FOOTNOTE [A]		AG050655-NEEDLE BEARING	

Copyright © 2007 AGCO Corporation

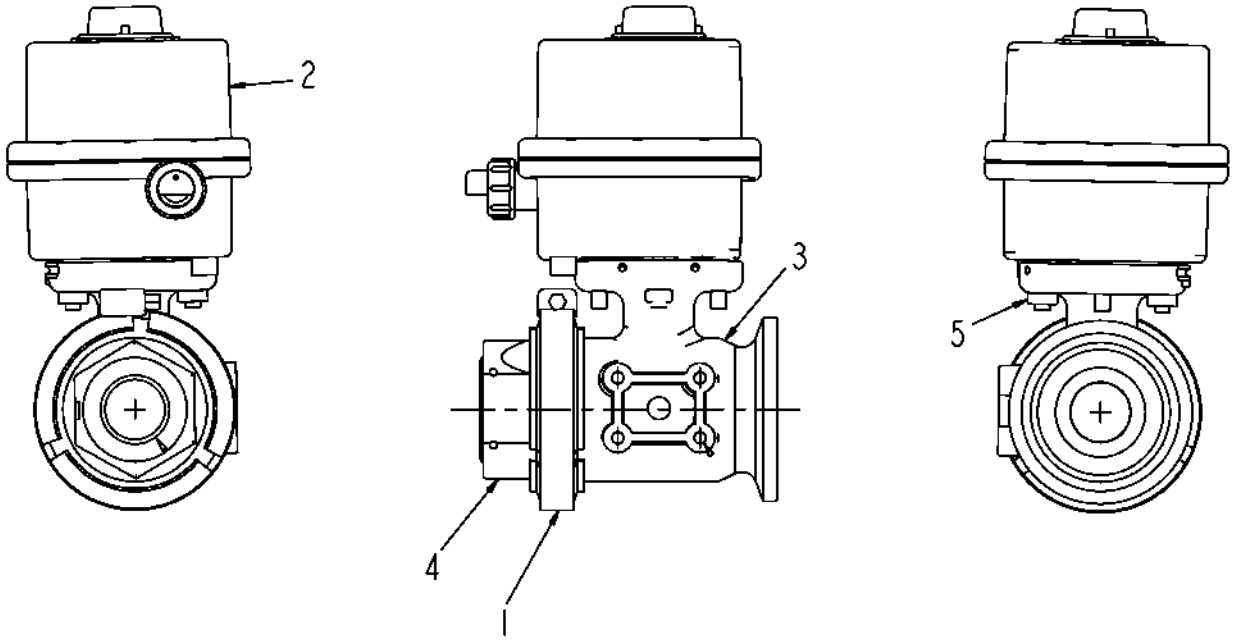

523925-02-N312-.TIF

Copyright © 2007 AGCO Corporation

VALVE-ELEC,REG,2.0FLGX1.0FNPT

ITEM	PART #	QTY	DESCRIPTION	COMMENTS
REF	AG060921	1	KIT/REPAIR,KZ VALVE 121924	
REF	AG726982	1	BALL / 2-WAY	
REF	AG726981	1	PIN / HAIR	
1	AG121922	-	CLAMP-V BAND,QX4	
2	AG121923	-	ACTUATOR-000-41-Q-9	
3	AG121924	-	BODY-VALVE,FLG OUTLET,1.00,2W	
4	AG121925	-	CAP-END,1.00 FNPT	
5	AG121926	-	NUT-KEP"S,.50-20NC	
	FOOTNOTE		NEW VOLTAGE REGULATOR ADDED TO ACTUATOR. USED IN S/N 114543,114548,114550,114552	
	FOOTNOTE		AND NUMBER 114891 AND ABOVE.	

Copyright © 2007 AGCO Corporation

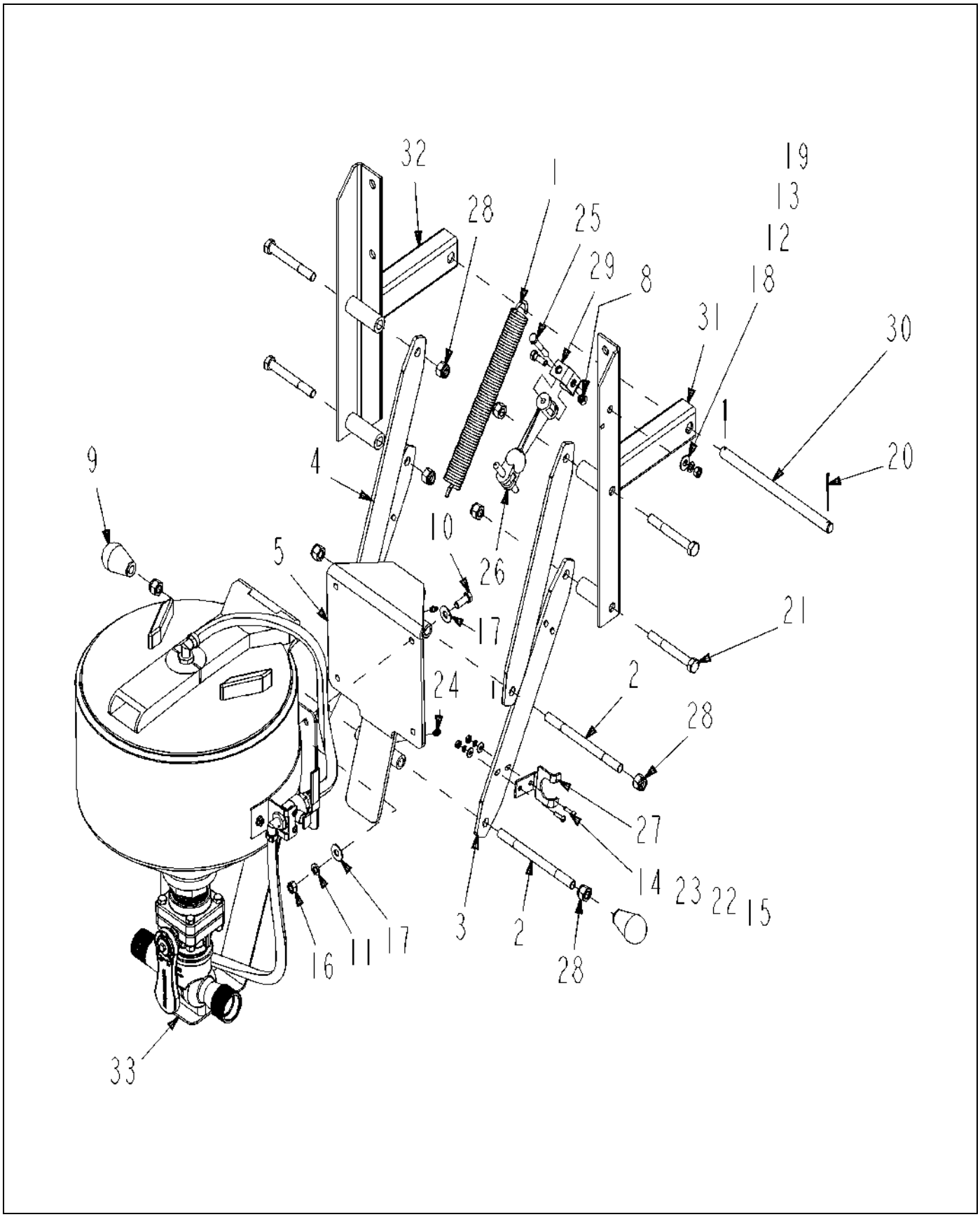

124281-08-R529-.TIF

Copyright © 2007 AGCO Corporation

EDUCTOR ASM-CHEMICAL,PE

ITEM	PART #	QTY	DESCRIPTION	COMMENTS
1	WR12030	1	SPRING-EXTENSION	
2	AG108316	2	ROD, PIVOT INDUCTOR	
3	AG124282	2	PLATE-ARM, LOWER	
4	AG124283	2	PLATE-ARM, UPPER	
5	AG124285	1	MTG WLDMT-POLY EDUCTOR	
6	AG511099	AR	GREASE-MULTI PURPOSE LITH.	
7	AG512885	AR	LOCTITE ADHESIVE SEALANT BLUE	
8	AG516403	1	NUT 0.31-18NC HEX SS REG NY	
9	AG517536	2	KNOB, THREADED	
10	AG550175	4	BOLT 0.37-16NCX 1.00 G5 ZN HHD	
11	AG550191	4	WASHER 0.37 LK ZN REG	
12	AG550205	1	WASHER 0.31 LK ZN REG	
13	AG550213	1	NUT 0.31-18NC HEX ZN REG	
14	AG550620	2	SCREW 10-24X.75 MA RHD SL ZN	
15	AG550647	2	NUT #10-24NC HEX ZN REG	
16	AG550825	4	NUT 0.37-16NC HEX ZN REG	
17	AG551007	8	WASHER 0.37 FL ZN REG TYPE-B	
18	AG551015	1	WASHER 0.31 FL ZN REG TYPE-B	
19	AG551252	1	BOLT 0.31-18NCX 1.00 G5 ZN HHD	
20	AG552321	2	PIN COTTER 0.09X1.00 ZN (D)	
21	AG552410	4	BOLT 0.50-13NCX 4.00 G5 ZN HHD	
22	AG553182	2	WASHER #10 LK ZN REG	
23	AG553670	2	WASHER #10 FL ZN REG TYPE-B	
24	AG561892	2	FITTING LUBE STR 0.25UNF	
25	AG562080	1	BOLT 0.31-18NCX 2.00 SS HHD	
26	AG600008	1	HOOK RUBBER 510327 (P)	
27	AG600016	1	BRACKET HOOD 510327 (P)	
28	AG601152	8	NUT 0.50-13NC HEX ZN REG NY	
29	AG601764	1	ANCHOR BRKT HOOD HOOK HUNT	
30	516475D1	1	PIN MOUNT SPRING EDUCTOR	
31	516480D1	1	MTG WLDMT-EDUCTOR,RH	
32	516481D1	1	MTG WLDMT-EDUCTOR,LH	
33	520952D1	1	EDUCTOR-CHEM,CLEANLOAD II,PE	

Copyright © 2007 AGCO Corporation

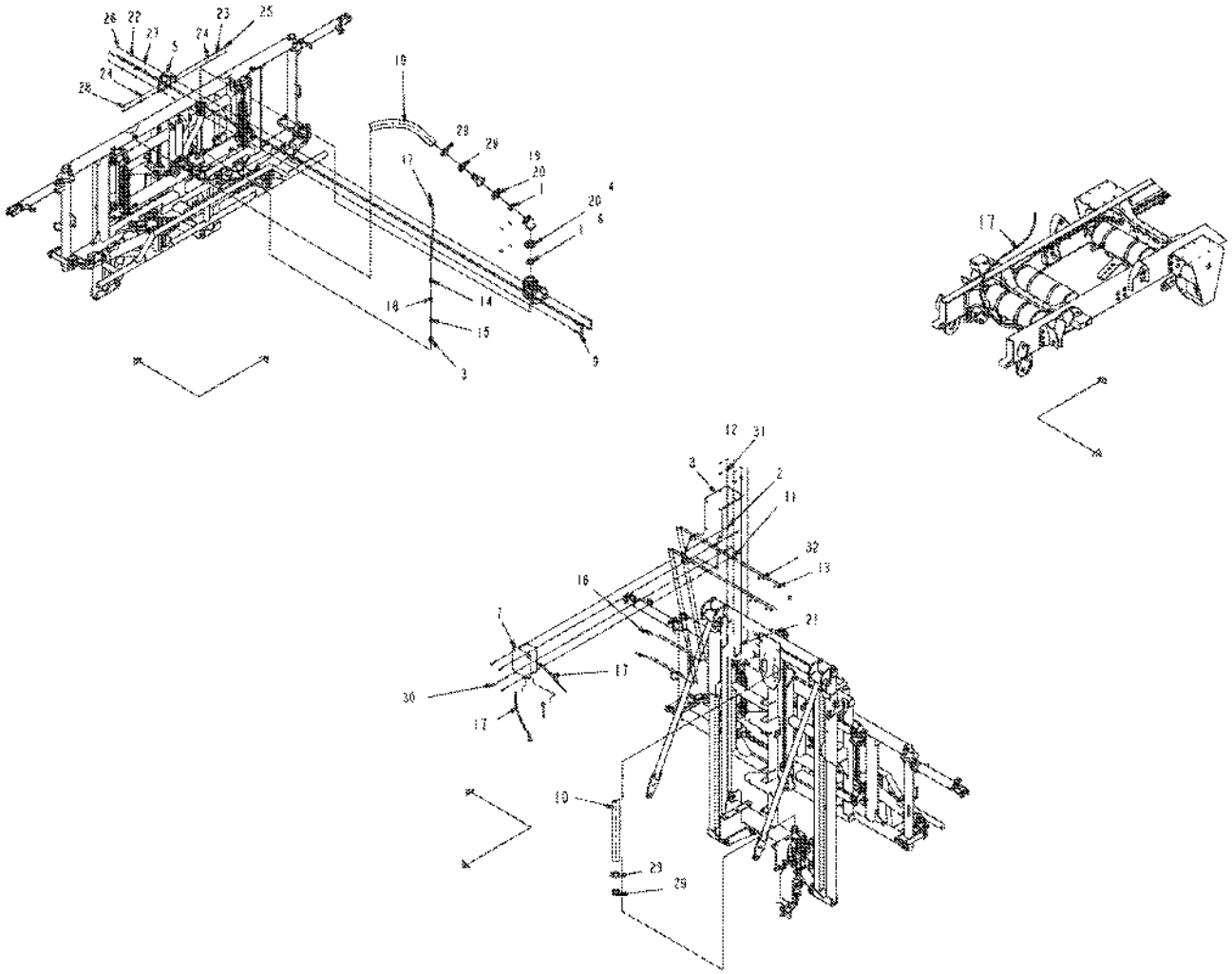

121950-03-R128-.TIF

Copyright © 2007 AGCO Corporation

ITEM	PART #	QTY	DESCRIPTION	COMMENTS
1	AG000773	2	GASKET 2.00 EPDM	
2	AG027275	4	NUT 0.25-20NC HEX SS REG NY	
3	AG051573	1	BSHG-RDCR,HEX,0.75X0.25NPT,PP	
4	AG059565	1	ELBOW 2.00FP FLANGE 45D	
5	AG121951	1	BRKT WLDMT-MTG,2.00 VALVE	
6	AG121956	1	VALVE-BALL,2.00FP FLG,ELEC	SEE PAGE 2-21
7	AG122562	1	BOX ASM-AIR,BOOM CLEAN OUT	SEE PAGE 7-8
8	AG122611	1	BRKT-MTG,AIR BOX, BCO/HV	
9	AG230314	2	U-BOLT 3.00 X 4.0 SQ	
10	AG511722	-	HOSE-2.00,WIRE BRAID,EPDM [BULK: 73 FT]	
11	AG515121	8	WASHER 0.25 FL SS REG TYPE-B	
12	AG515140	4	NUT 0.37-16NC HEX SS HVY NY	
13	AG516403	4	NUT 0.31-18NC HEX SS REG NY	
14	AG516481	1	CONNECTOR M 0.38X0.25NPT AUTLK	
15	AG517999	1	VALVE CHECK 0.25NPTF 3000PSI	
16	AG518292	2	BOLT-U .31-18X2.00X 2.69 RD SS	
17	AG518847	-	TUBING H.D.P.E. 3/8 IN [BULK: 21 FT]	
18	AG519336	1	COUPLING PIPE 0.25 NPT 304SS	
19	AG522894	1	CONN-2.00 FLG X2.00 HOSE BARB	
20	AG522895	2	CLAMP-WORM SCREW,2.00,SS	
21	AG524292	2	BOLT-U,.38-16,2.56X3.50,SQ,SS	
22	AG550191	4	WASHER 0.37 LK ZN REG	
23	AG550493	2	WASHER 0.25 LK ZN REG	
24	AG550507	4	WASHER 0.25 FL ZN REG TYPE-B	
25	AG550612	2	NUT 0.25-20NC HEX ZN REG	
26	AG550825	4	NUT 0.37-16NC HEX ZN REG	
27	AG551007	4	WASHER 0.37 FL ZN REG TYPE-B	
28	AG561246	2	BOLT 0.25-20NCX 3.25 G5 ZN HHD	
29	AG561630	4	CLAMP 2.28-2.59HOSE VOSS-250SS	
30	AG562064	4	BOLT 0.25-20NCX 1.00 SS HHD	
31	AG562073	4	WASHER 0.37 FL SS REG TYPE-B	
32	AG562074	4	WASHER 0.31 FL SS REG TYPE-B	

Copyright © 2007 AGCO Corporation

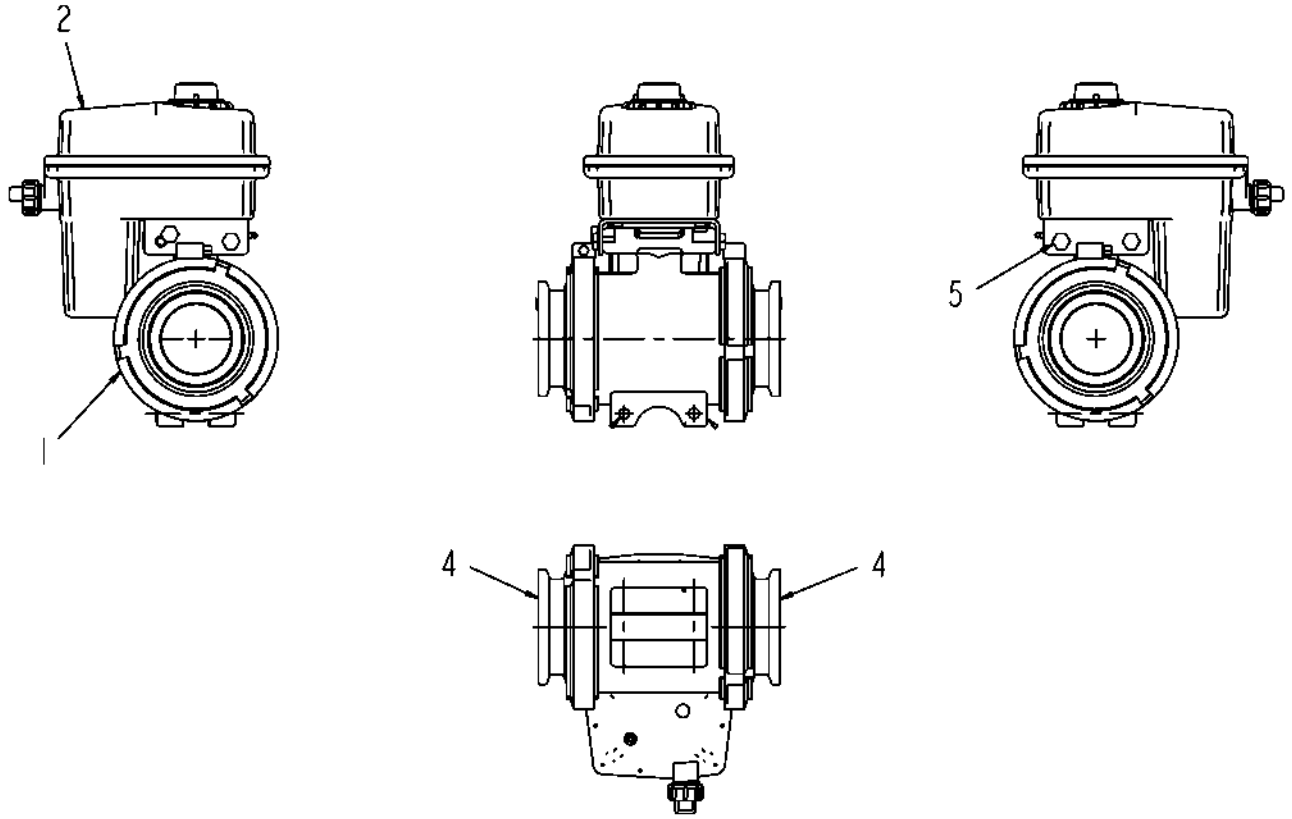

121956-A.tif

Copyright © 2007 AGCO Corporation

VALVE-BALL,2.00FP FLG,ELEC

ITEM	PART #	QTY	DESCRIPTION	COMMENTS
1	AG057764	-	CLAMP 3 IN MANIFOLD	
2	AG121959	-	ACTUATOR-000-60-Y-9	[A]
3	AG121960	-	KIT-REPAIR,ORING/SEATS,VLV,2.0	
4	AG121961	-	CAP-END,2.00FP FLG	
5	AG121962	-	BOLT-MTG,ACTUATOR/VALVE,EH2	
	FOOTNOTE [A]		CIRCUIT BOARD IS AG061258	
	FOOTNOTE		VALVE ONLY IS [727468]	

Copyright © 2007 AGCO Corporation

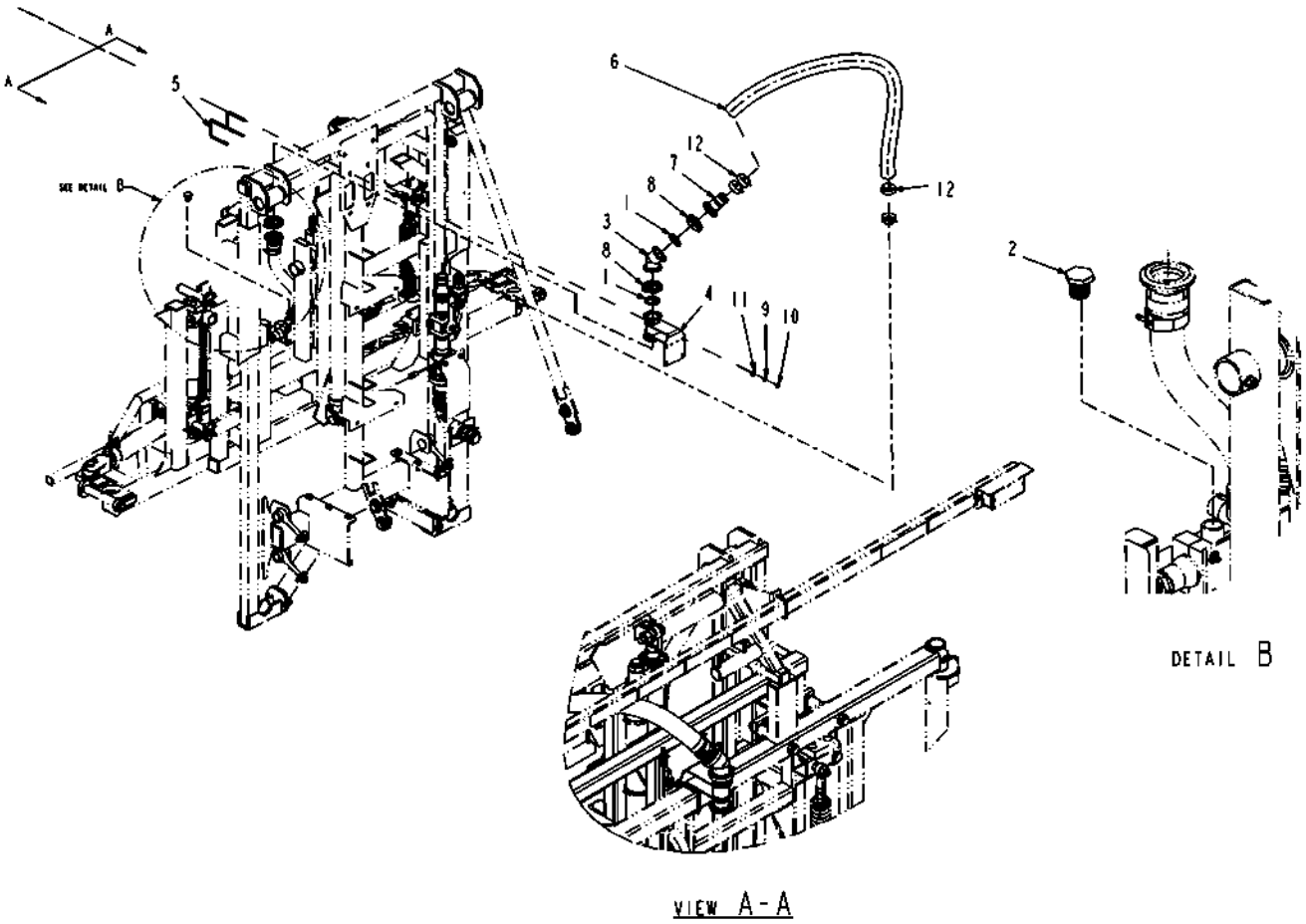

122016-05-M915.TIF

Copyright © 2007 AGCO Corporation

ITEM	PART #	QTY	DESCRIPTION	COMMENTS
1	AG000773	2	GASKET 2.00 EPDM	
2	AG051134	1	PLUG-PIPE,HEX,0.75NPT,PP	
3	AG059565	1	ELBOW 2.00FP FLANGE 45D	
4	AG131680	1	BRKT WLDMT-MTG,2.00X2.00 FLG	SEE PAGE 4-54
5	AG230314	2	U-BOLT 3.00 X 4.0 SQ	
6	AG511722	-	HOSE-2.00,WIRE BRAID,EPDM [BULK: 5.250 FT]	
7	AG522894	1	CONN-2.00 FLG X2.00 HOSE BARB	
8	AG522895	2	CLAMP-WORM SCREW,2.00,SS	
9	AG550191	4	WASHER 0.37 LK ZN REG	
10	AG550825	4	NUT 0.37-16NC HEX ZN REG	
11	AG551007	4	WASHER 0.37 FL ZN REG TYPE-B	
12	AG561630	4	CLAMP 2.28-2.59HOSE VOSS-250SS	

Copyright © 2007 AGCO Corporation

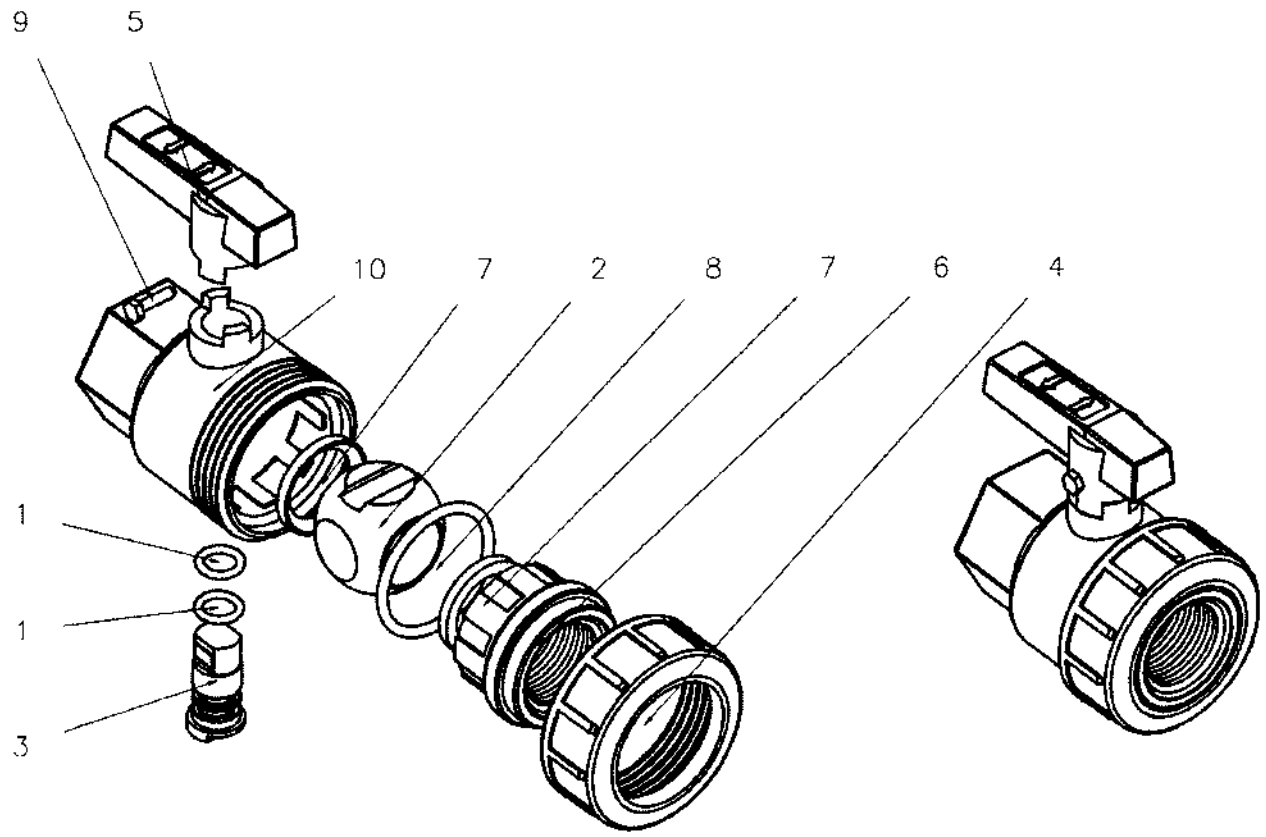

050206-A.TIF

Copyright © 2007 AGCO Corporation

VALVE 1.00 NPT BALL UNION POLY

ITEM	PART #	QTY	DESCRIPTION	COMMENTS
1	AG050524	2	O RING UNION STEM 1.00 (EPDM)	
2	AG050526	1	BALL VALVE 1.00 UNION	
3	AG050522	1	STEM 1.00 UNION	
4	AG050521	1	CAP 1.00 IN UNION END	
5	AG050523	1	HANDLE 1.00 UNION	
6	AG050527	1	END PLATE 1.00 UNION	
7	AG050528	2	SEAL 1.00 UNION VALVE	
8	AG050474	1	O RING	
9	NS	-	NON-SERVICEABLE PART	
10	AG050525	1	BODY 1.00 UNION VALVE	

Copyright © 2007 AGCO Corporation

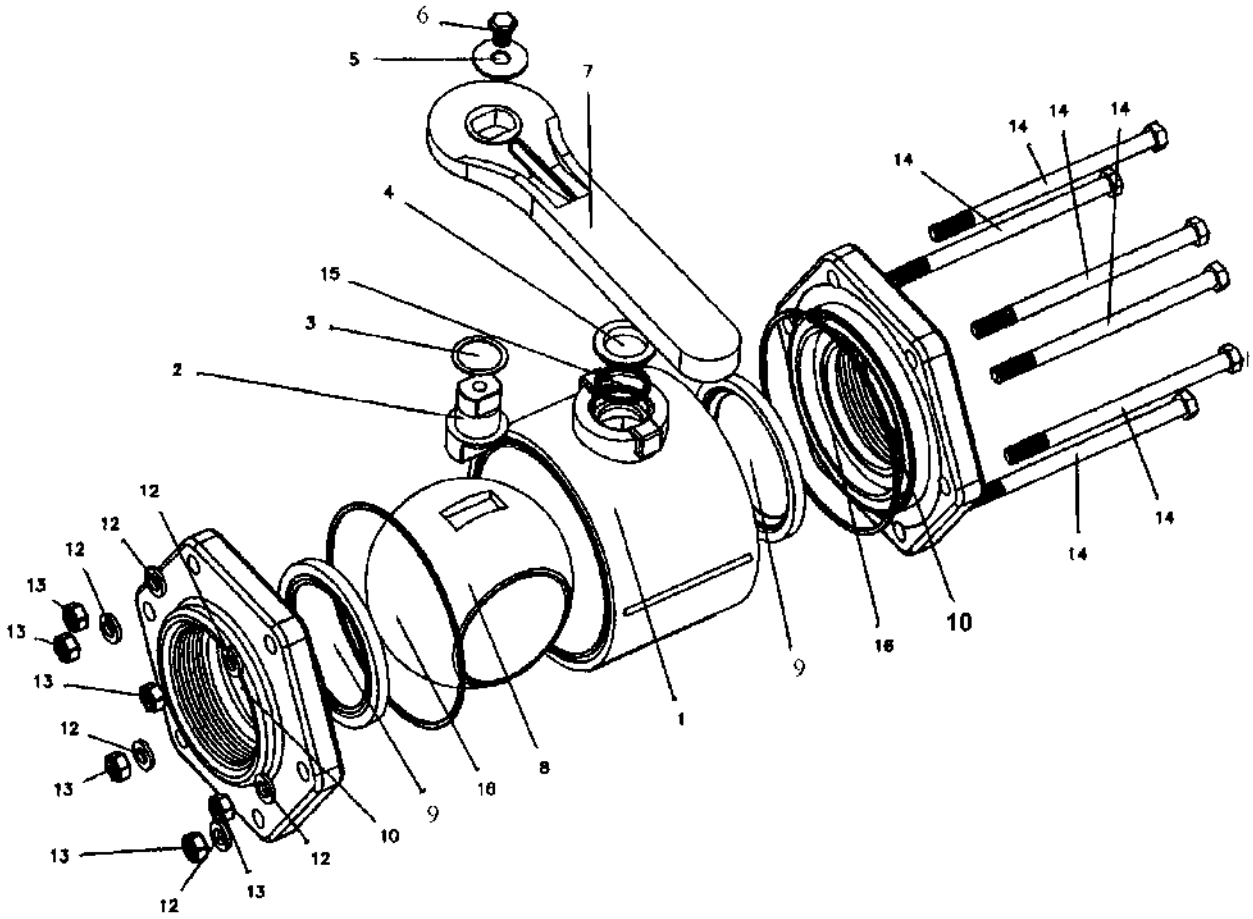

005492.tif

Copyright © 2007 AGCO Corporation

VLV BALL 3.00 POLY FF

ITEM	PART #	QTY	DESCRIPTION	COMMENTS
1	AG007566	1	BODY 3.00 FF VALVE	
2	AG000795	1	STEM V25151	
3	AG054488	1	THRUST WASHER 3 IN	
4	AG000801	1	BUSHING UPPER OR LOWER STEM	
5	AG330729	1	WASHER	
6	AG332403	1	BOLT/HANDLE 3/8 X 1/2 SS	
7	AG000796	1	HANDLE 2&3	
8	AG007568	1	BALL 3.00 FF VALVE	
9	AG005662	2	SEAT 3 IN	
10	AG007558	1	END PLATE	
12	AG054234	6	BODY LOCKWASHER 3/8	
13	AG054235	6	BODY NUT 3/8-16SS	
14	AG057341	6	BOLT-BODY .38X65-3.00FP	
15	AG000803	1	O-RING VITON	
16	AG007474	2	BODY O RING 3 IN VALVE	

Copyright © 2007 AGCO Corporation

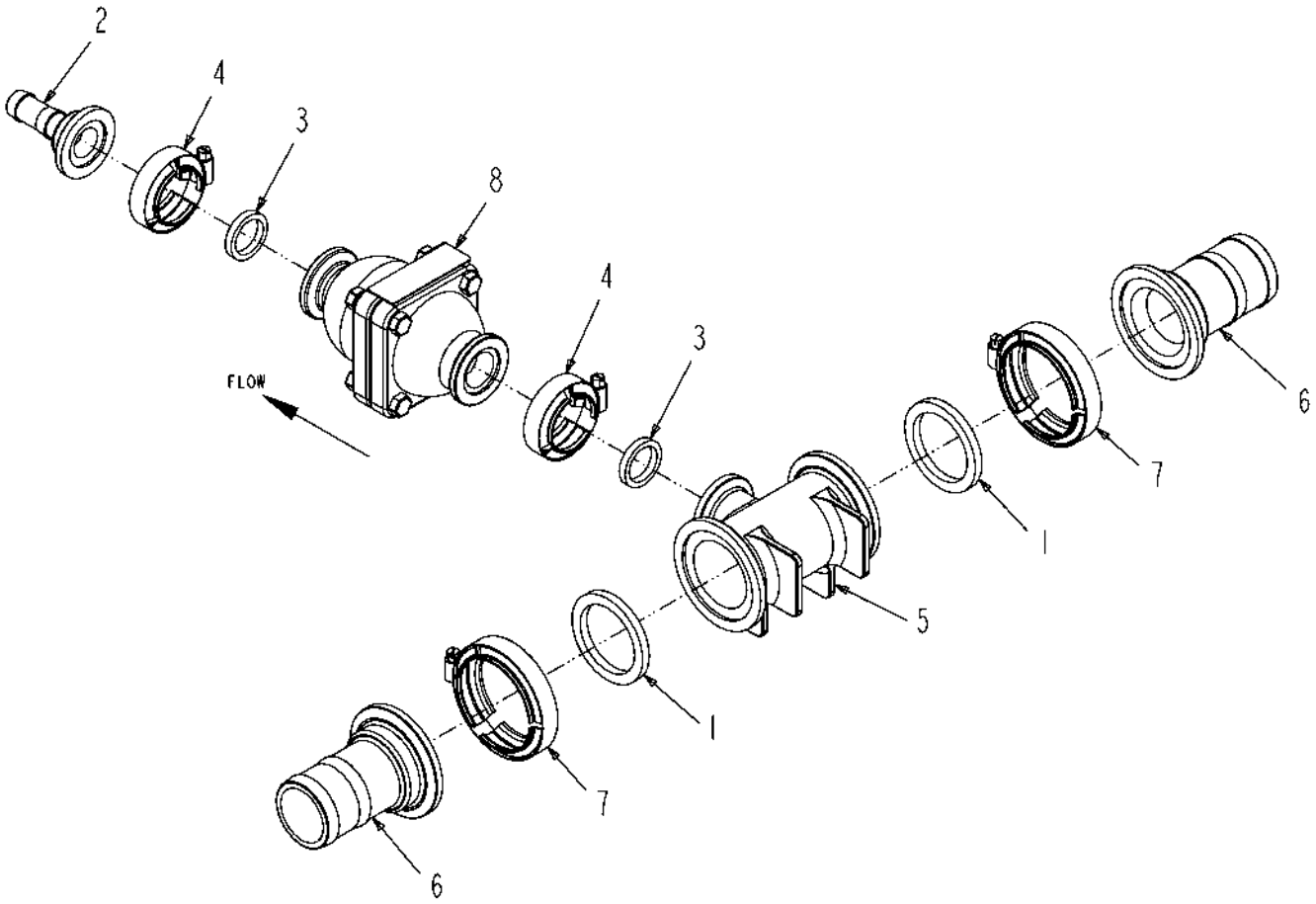

134343-A.TIF

Copyright © 2007 AGCO Corporation

TEE ASM-MANG,220X100,RLF VALVE

ITEM	PART #	QTY	DESCRIPTION	COMMENTS
1	AG000773	2	GASKET 2.00 EPDM	
2	AG056270	1	CONNECTOR-1.00FLANGE X.75BARB	
3	AG056275	2	GASKET 1.00 EPDM MANIFOLD	
4	AG056778	2	CLAMP 1.00	
5	AG134357	1	TEE-220FLG X 100FLF X 220FLG	
6	AG522894	2	CONN-2.00 FLG X2.00 HOSE BARB	
7	AG522895	2	CLAMP-WORM SCREW,2.00,SS	
8	AG727427	1	VALVE-RLF,PRESS,150PSI,1FLX1FL	

Copyright © 2007 AGCO Corporation

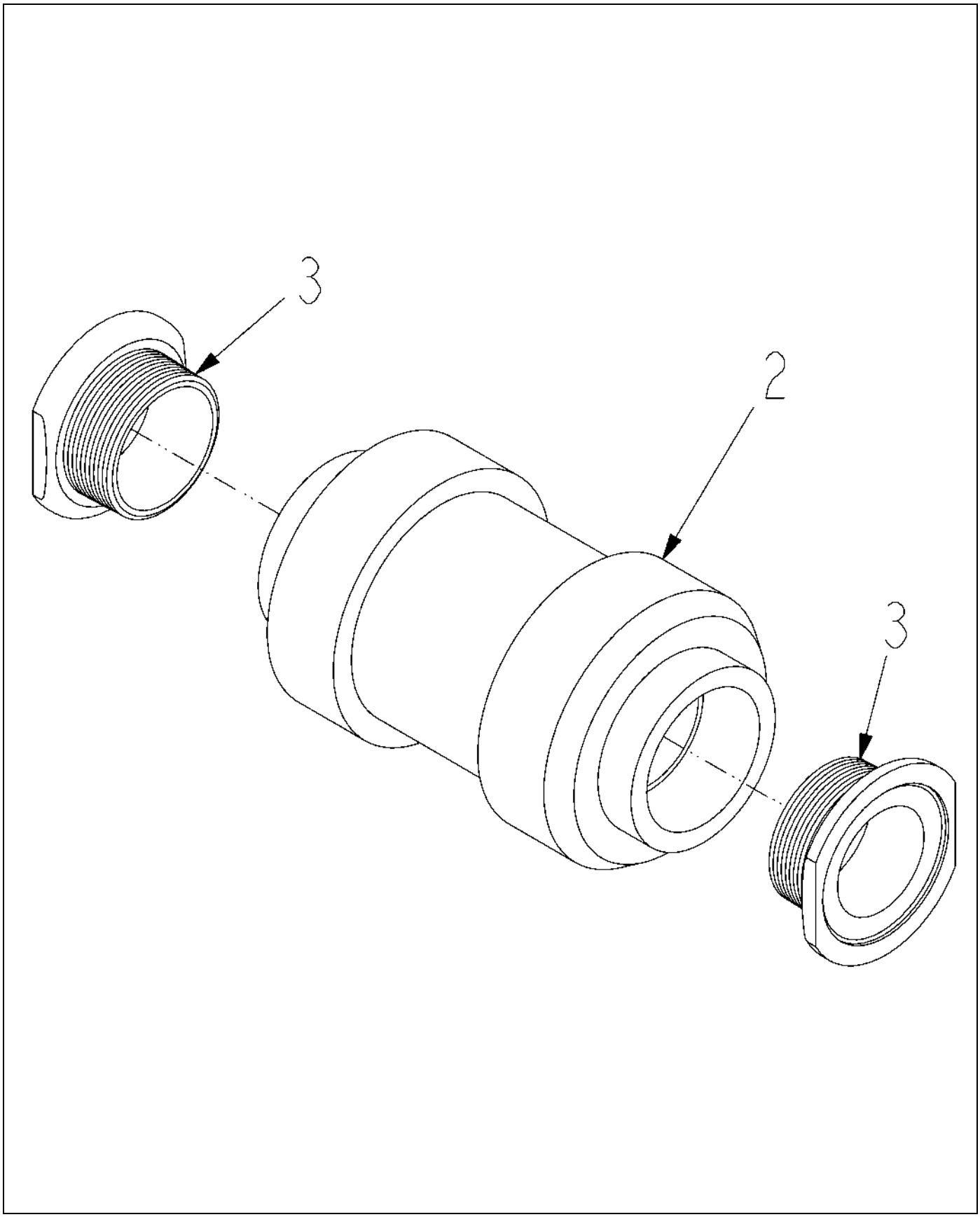

123996-B.TIF

Copyright © 2007 AGCO Corporation

VALVE ASM-CHECK,2.00 FP FLG

ITEM	PART #	QTY	DESCRIPTION	COMMENTS
1	AG129187	AR	PIPE SEALANT-FLEX BLACK	
2	AG522699	1	VALVE-CHECK,2.00NPT,150PSI	
3	AG523524	2	ADPTR-2.0FLG,FPX2.0MPT,316SS	

Copyright © 2007 AGCO Corporation

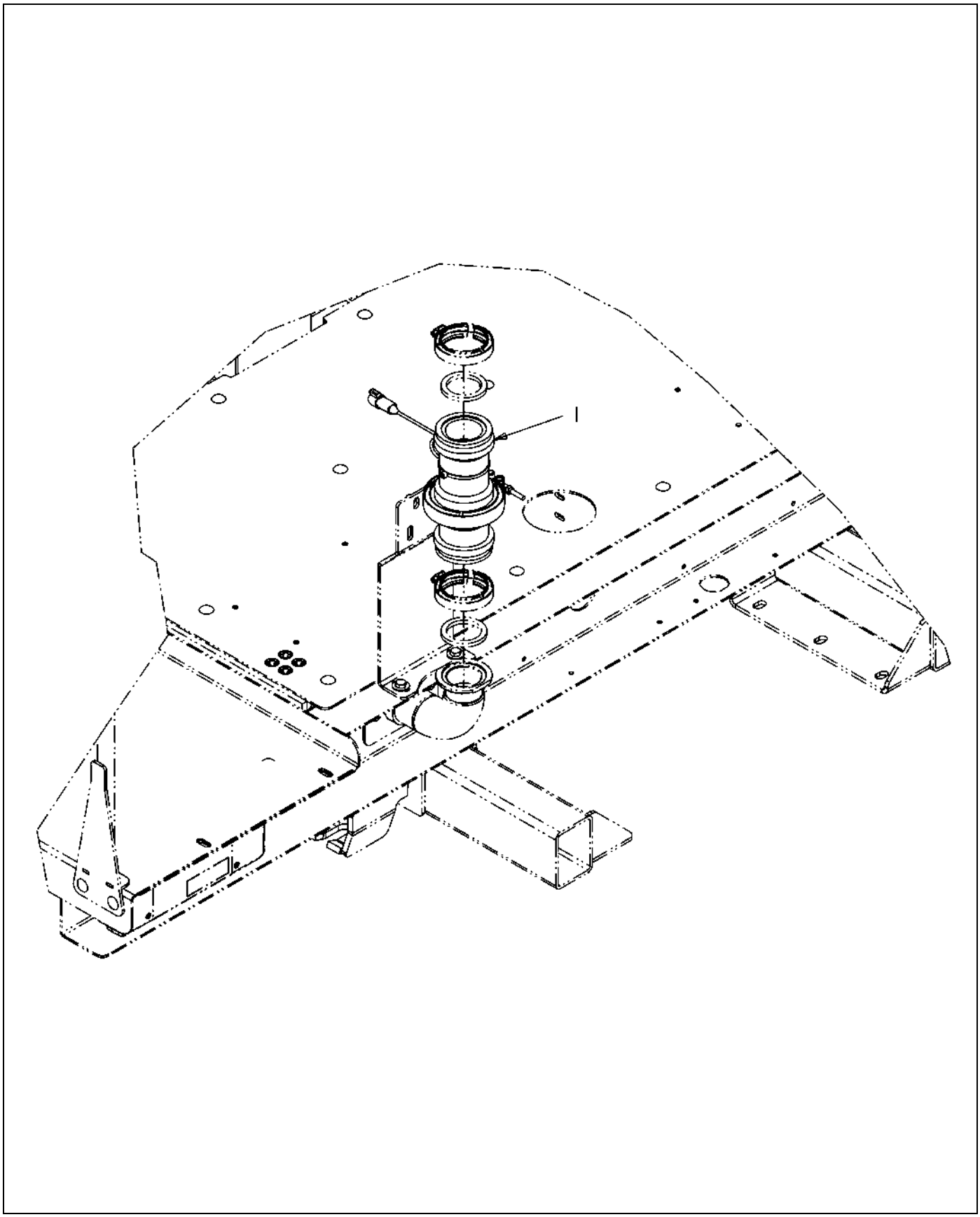

135909-01-M399-.TIF

Copyright © 2007 AGCO Corporation

ITEM	PART #	QTY	DESCRIPTION	COMMENTS
1	AG523166	1	FLOWMETER-2.00,140PPG,12V	SEE PAGE 2-28

Copyright © 2007 AGCO Corporation

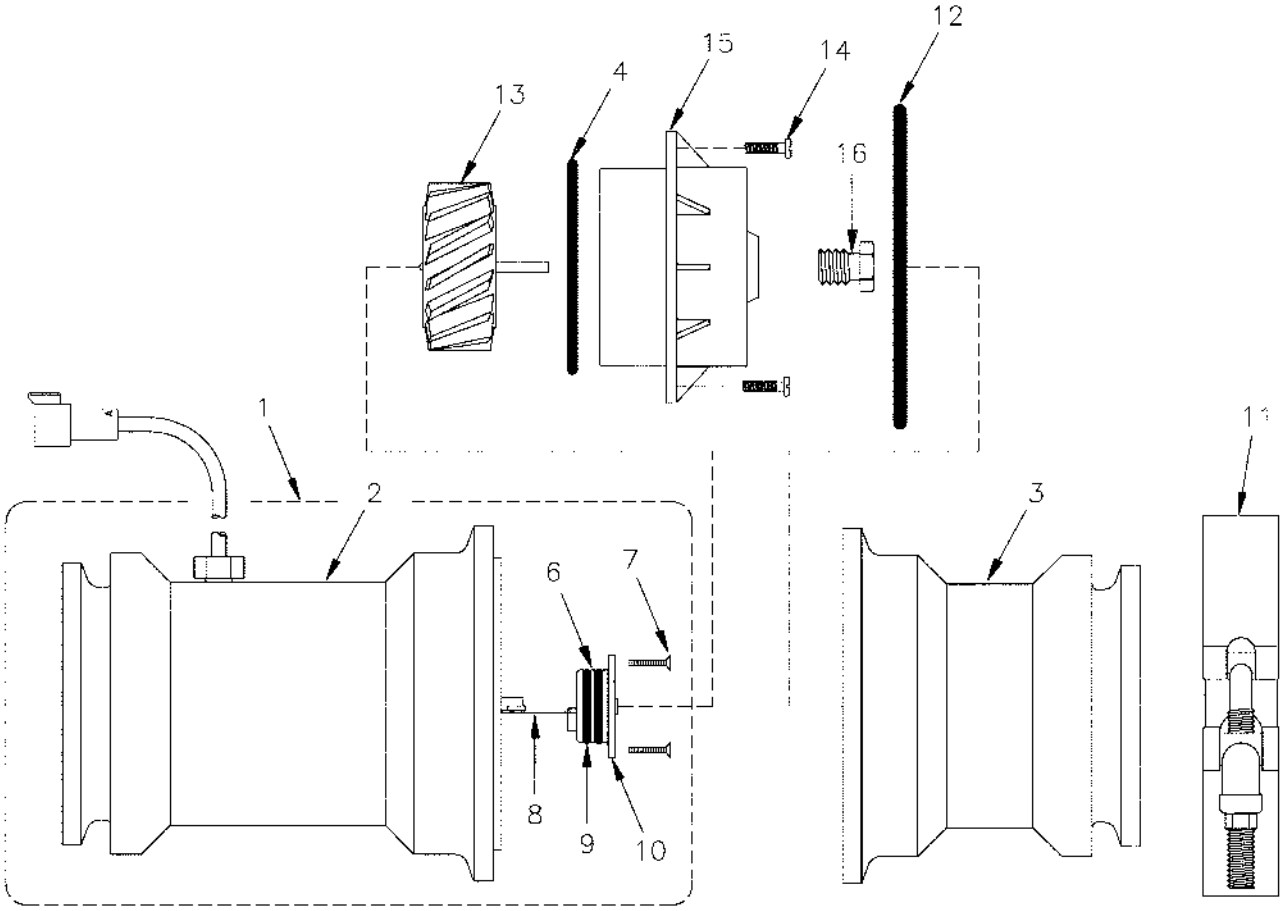

523166.TIF

Copyright © 2007 AGCO Corporation

FLOWMETER-2.00,140PPG,12V

ITEM	PART #	QTY	DESCRIPTION	COMMENTS
1	AG060085	1	OUTLET HSG ASM	
2	AG059106	1	OUTLET HOUSING	
3	AG714982	1	HUB HOUSING	
4	AG714998	1	O RING VITON	
6	AG060056	1	NUT-JAM,LH 523481	
7	AG714986	1	SCREW 2-56X0.50 FLAT HD SS	
8	AG724790	1	PC ASM	
9	AG714988	1	O RING VITON	
10	AG714989	1	END BEARING ASM	
11	AG714990	1	RETAINER CLAMP	
12	AG714991	1	O RING VITON	
13	AG714992	1	TURBINE RFM100	
14	AG714993	1	SCREW 6-20X0.50 PAN HD SS	
15	AG714994	1	TURBINE HUB/BRG ASM	
16	AG714995	1	TURBINE STUD ASM	

Copyright © 2007 AGCO Corporation

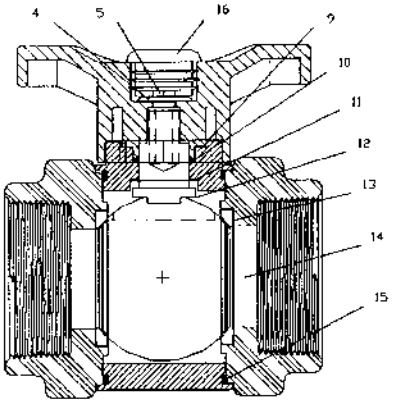

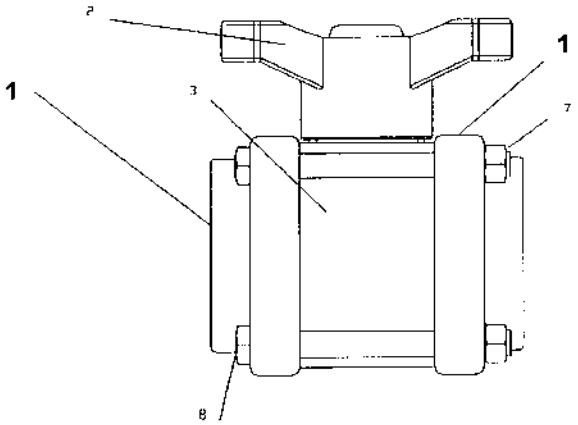

524024.TIF

Copyright © 2007 AGCO Corporation

VALVE-BALL,1.50NPT,T HANDLE

ITEM	PART #	QTY	DESCRIPTION	COMMENTS
1	AG006577	1	END PLATE 1.50	
2	AG055120	1	HANDLE-T,3WAY VALVE	
3	AG007489	1	BODY 1.50 IN	
4	AG056115	1	WASHER-HANDLE	
5	AG056114	1	BOLT-HANDLE,1/4X1/2	
7	AG054235	4	BODY NUT 3/8-16SS	
8	AG054233	4	BODY BOLT 3/8-16X4	
9	AG000789	1	BUSHING UPPER STEM	
10	AG000793	1	O-RING VITON	
11	AG000790	1	BUSHING LOWER STEM V20160	
12	AG000780	1	STEM	
13	AG006573	2	BALL SEAT	
15	AG007470	2	BODY O RING 1.25 1.50&2.00VLV	
16	AG059020	1	CAP-HANDLE	

Copyright © 2007 AGCO Corporation

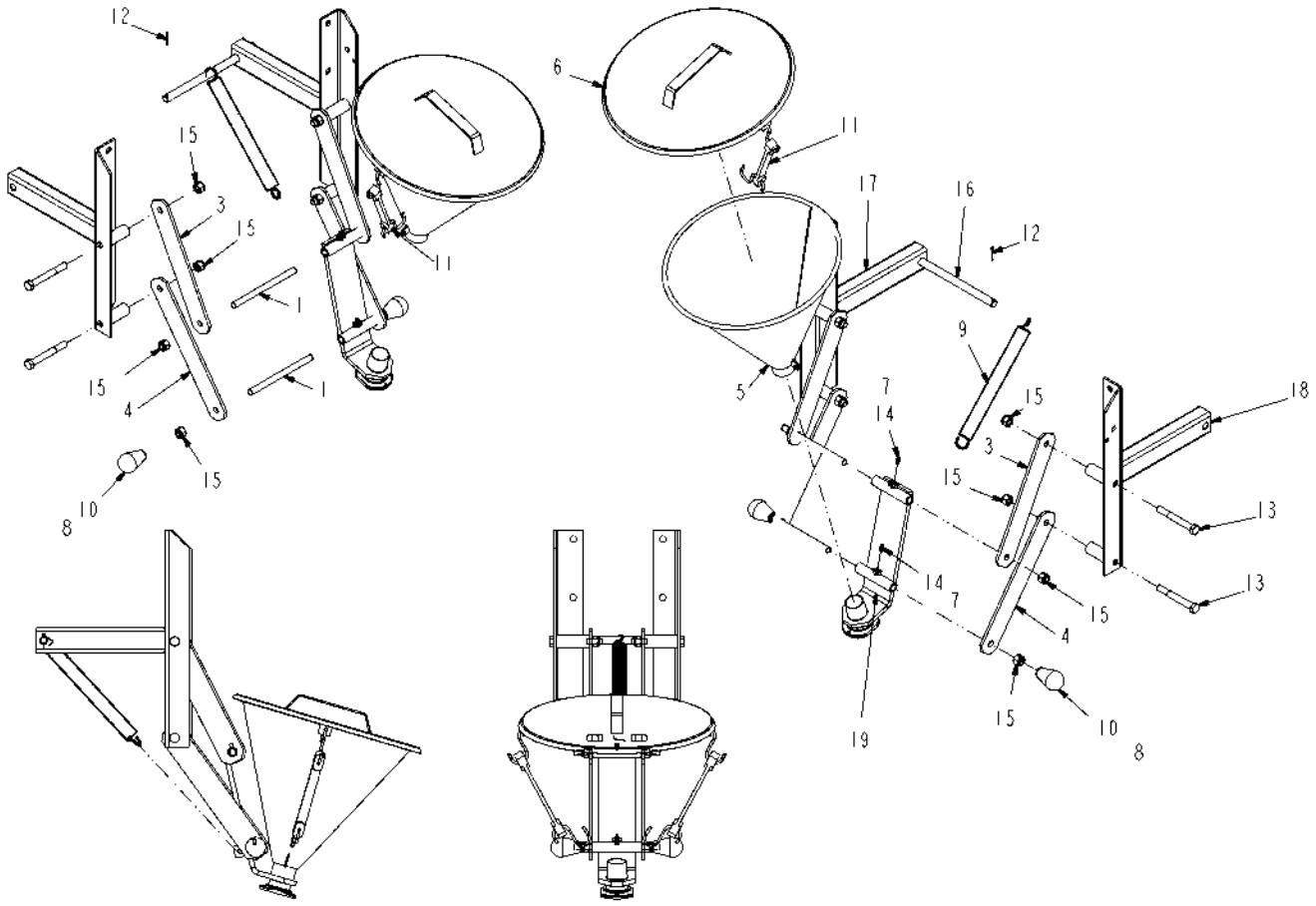

328960-05-R276-.TIF

Copyright © 2007 AGCO Corporation

EDUCTOR ASM-CHEMICAL,SS

ITEM	PART #	QTY	DESCRIPTION	COMMENTS
1	AG108316	2	ROD, PIVOT INDUCTOR	
2	AG129187	AR	PIPE SEALANT-FLEX BLACK	
3	228098D	2	PLATE,ARM UPPER	
4	228099D	2	PLATE,ARM LOWER	
5	AG309261	1	FUNNEL WLDT EDUCTOR	
6	309263D	1	COVER WLDMT EDUCTOR	
7	AG511099	AR	GREASE-MULTI PURPOSE LITH.	
8	AG512885	AR	LOCTITE ADHESIVE SEALANT BLUE	
9	515995D	1	SPRING EXTENSION 1.12OD X12.00	
10	AG517536	2	KNOB, THREADED	
11	AG517994	2	STRAP 8 INCH TIE DOWN	
12	AG552321	2	PIN COTTER 0.09X1.00 ZN (D)	
13	AG552410	4	BOLT 0.50-13NCX 4.00 G5 ZN HHD	
14	AG561892	2	FITTING LUBE STR 0.25UNF	
15	AG601152	8	NUT 0.50-13NC HEX ZN REG NY	
16	516475D1	1	PIN MOUNT SPRING EDUCTOR	
17	516476D1	1	MOUNT WELDMENT EDUCTOR LH	
18	516477D1	1	MOUNT WLDT EDUCTOR RH	
19	519134D1	1	PLATE-MOUNT WELDMENT	

Copyright © 2007 AGCO Corporation

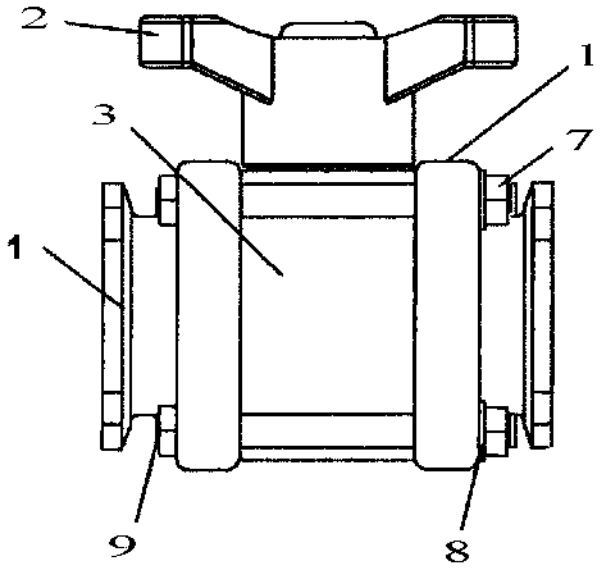

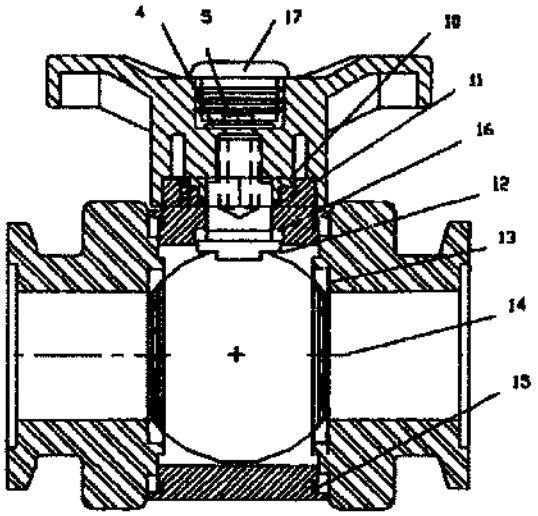

523923.TIF

Copyright © 2007 AGCO Corporation

VALVE-2.0 FLG,T HANDLE,PP

ITEM	PART #	QTY	DESCRIPTION	COMMENTS
1	AG727654	1	PLATE/END	
2	AG055120	1	HANDLE-T,3WAY VALVE	
3	AG007489	1	BODY 1.50 IN	
7	AG054235	4	BODY NUT 3/8-16SS	
8	AG054234	4	BODY LOCKWASHER 3/8	
9	AG054233	4	BODY BOLT 3/8-16X4	
10	AG000789	1	BUSHING UPPER STEM	
11	AG000793	1	O-RING VITON	
12	AG000780	1	STEM	
13	AG006573	2	BALL SEAT	
14	AG007580	1	BALL	
15	AG007470	2	BODY O RING 1.25 1.50&2.00VLV	
16	AG000790	1	BUSHING LOWER STEM V20160	
17	AG059020	1	CAP-HANDLE	

Copyright © 2007 AGCO Corporation

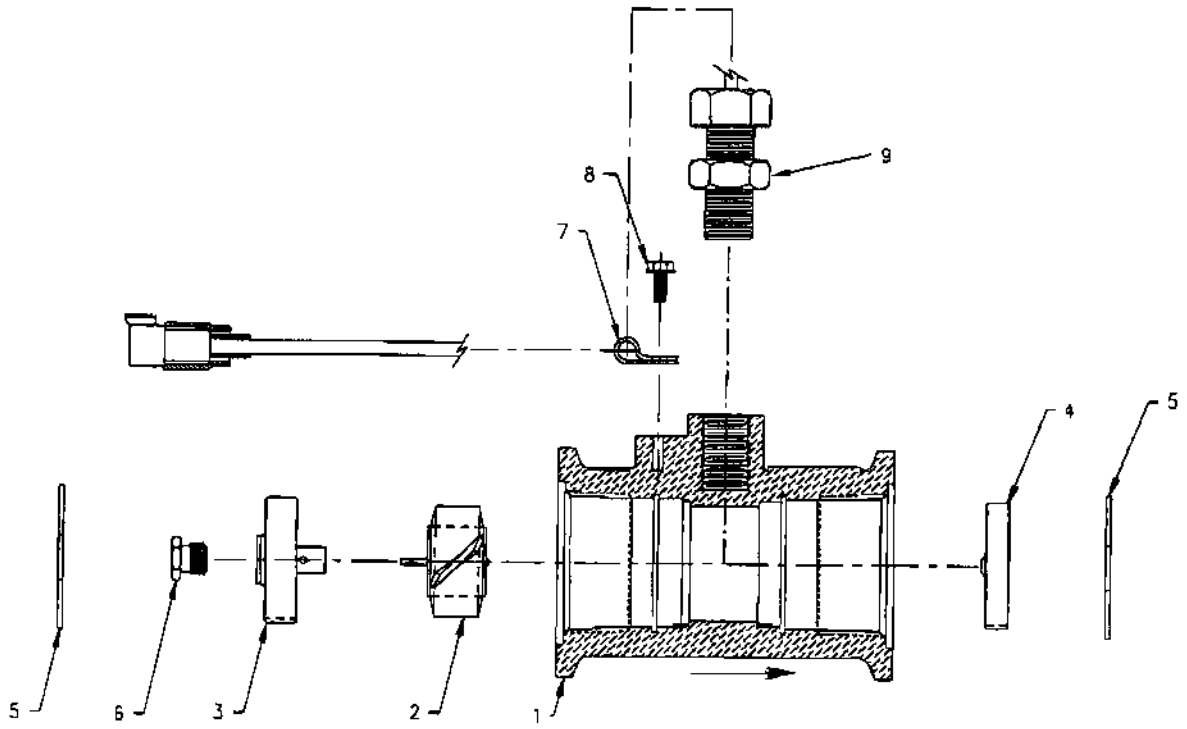

128771.TIF

Copyright © 2007 AGCO Corporation

FLWMTR-2.00SP FLG,RFM60P,12V

ITEM	PART #	QTY	DESCRIPTION	COMMENTS
1	AG132375	1	BODY, RFM60P	
2	AG723606	1	ROTOR/MAGNET ASSEMBLY	
3	AG722268	1	HUB/BEARING ASM	
4	AG724335	1	HUB ASM RFM60	
5	AG722270	1	RING-RETAINING INTERNAL	
6	AG709339	1	TURBINE STUD W/BRG	
7	AG132376	1	CLAMP, CABLE	
8	AG132377	1	SCREW	
9	AG132378	1	SENSOR	

Copyright © 2007 AGCO Corporation

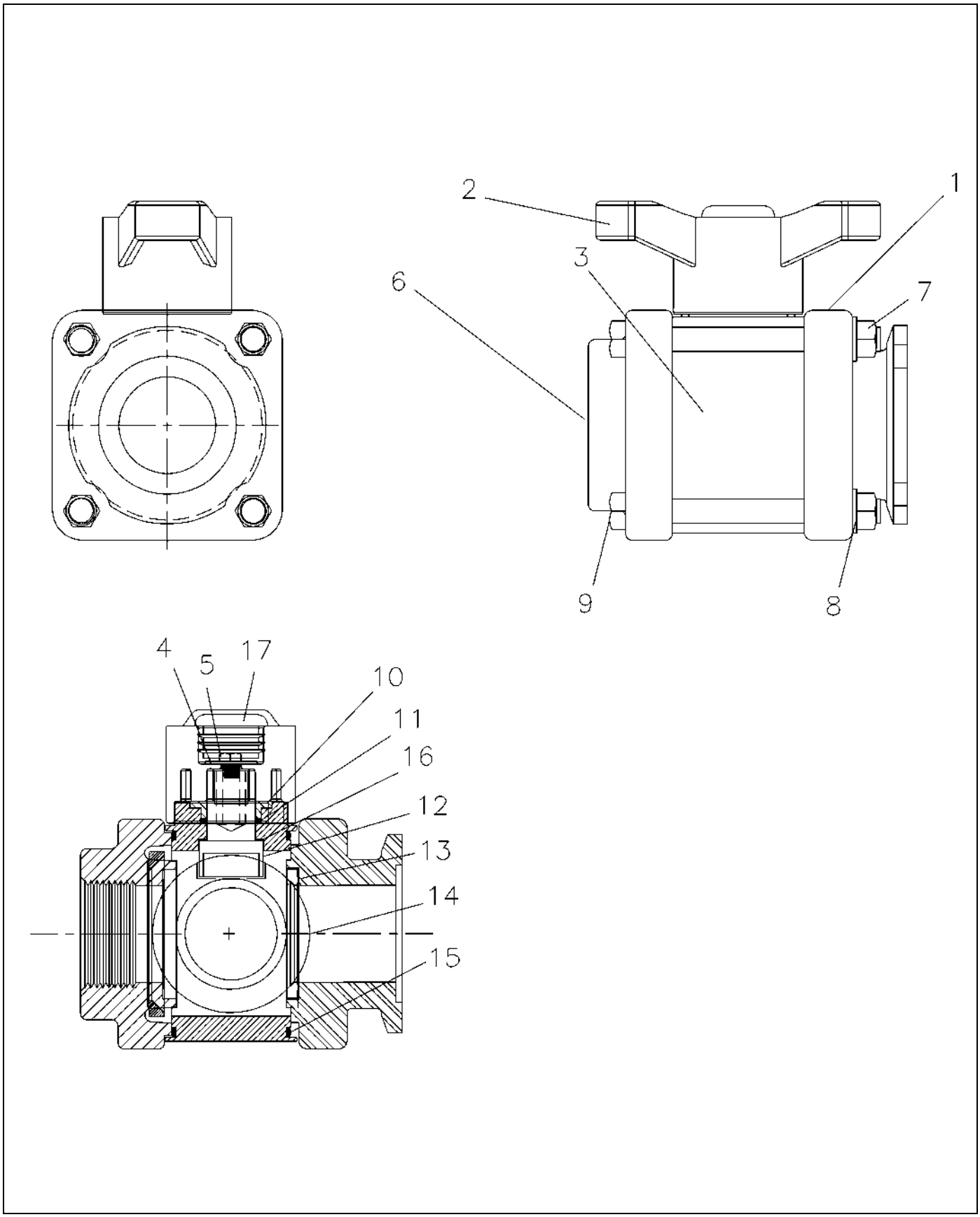

524015.TIF

Copyright © 2007 AGCO Corporation

VALVE-2.0FLGX1.25NPT,T HANDLE

ITEM	PART #	QTY	DESCRIPTION	COMMENTS
1	AG727654	1	PLATE/END	
2	AG055120	1	HANDLE-T,3WAY VALVE	
3	AG007489	1	BODY 1.50 IN	
4	AG056115	1	WASHER-HANDLE	
5	AG056114	1	BOLT-HANDLE,1/4X1/2	
6	AG007579	1	END PLATE	
7	AG054235	4	BODY NUT 3/8-16SS	
8	AG054234	4	BODY LOCKWASHER 3/8	
9	AG054233	4	BODY BOLT 3/8-16X4	
10	AG000789	1	BUSHING UPPER STEM	
11	AG000793	1	O-RING VITON	
12	AG000780	1	STEM	
13	AG006573	2	BALL SEAT	
14	AG007580	1	BALL	
15	AG007470	2	BODY O RING 1.25 1.50&2.00VLV	
16	AG000790	1	BUSHING LOWER STEM V20160	
17	AG059020	1	CAP-HANDLE	

Copyright © 2007 AGCO Corporation

BOOM ASM-80FT,LH	3-1
BOOM ASM-80FT,RH	3-2
BOOM ASM-90FT,RH	3-3
BOOM ASM-90FT,RH	3-4
BOOM ASM-90FT,RH	3-5
BOOM ASM-90FT,RH	3-6
BOOM ASM-90FT,LH	3-7
BOOM ASM-90FT,LH	3-8
BOOM ASM-90FT,LH	3-9
BOOM ASM-90FT,LH	3-10
BOOM ASM-100FT,RH	3-11
BOOM ASM-100FT,RH	3-12
BOOM ASM-100FT,RH	3-13
BOOM ASM-100FT,RH	3-14
BOOM ASM-100FT,LH	3-15
BOOM ASM-100FT,LH	3-16
BOOM ASM-100FT,LH	3-17
BOOM ASM-100FT,LH	3-18
BOOM ASM-120FT,RH	3-19
BOOM ASM-120FT,RH	3-20
BOOM ASM-120FT,RH	3-21
BOOM ASM-120FT,RH	3-22
BOOM ASM-120FT,LH	3-23
BOOM ASM-120FT,LH	3-24
BOOM ASM-120FT,LH	3-25
BOOM ASM-120FT,LH	3-26
BOOM TREE INSTL-CTR,80/90/100	3-27
BOOM TREE ASM-CTR,80/90/100FT	3-28
BOOM ASM-CTR,80/90/100FT	3-29
BOOM ASM-CTR,80/90/100FT	3-30
TREE ASM-BOOM,CTR,2.50 SLIDE	3-31
BOOM TREE ASM-CTR,120FT	3-32
TREE ASM-BOOM,CENTER,3.00 SL	3-33
BOOM ASM-CENTER,120	3-34
BOOM ASM-CENTER,120	3-35
TREE INSTL-BOOM,CTR,5.00 SL	3-36
BOOM TREE ASM-CTR,5.00 SL	3-37
BOOM TREE ASM-CTR,5.00 SL	3-38
BOOM ASM-CTR SECT,HD,120	3-39
BOOM ASM-CTR SECT,HD,120	3-40
TREE ASM-BOOM,CENTER,5.00 SL	3-41
TIP ASM-FOLD BACK,BM,120FT,RH	3-42
TIP ASM-FOLD BACK,BM,120FT,RH	3-43
TIP ASM-FOLD BACK,BM,120FT,LH	3-44
TIP ASM-FOLD BACK,BM,120FT,LH	3-45
CAM ASM-BREAKAWAY,120FT	3-46
CAM ASM-BOOM BRKWAY	3-47
BOOM TREE ASM-SUB,5.00 SLIDE	3-48
TIP ASM-FOLD BACK,BM,120FT,LH	3-49
TIP ASM-FOLD BACK,BM,120FT,LH	3-50
TIP ASM-FOLD BACK,BM,120FT,RH	3-51

TIP ASM-FOLD BACK,BM,120FT,RH	3-52
PLATE ASM-HD,WEAR PAD	3-53
HOOK INSTL-BOOM,LIQ SYS,1254C	3-54
LINKAGE ASM-CYL,HYD,INNER/MID	3-55
REST INSTL-FLD BACK,90/100,RH	3-56
REST INSTL-FLD BACK,90/100,LH	3-57
CHAIN WLDMT-PVT PLATE,22 LINK	3-58
CHAIN WLDMT-PVT PLATE,5 LINK	3-59
REST INSTL-BM,FLD BACK,120,LH	3-60
REST INSTL-BM,FLD BACK,120,RH	3-61
RETAINER INSTL-BM,4.00 TUBE	3-62
BUMPER INSTL-FOLD BACK,120,LH	3-63
BUMPER INSTL-FOLD BACK,120,RH	3-64
BOOMREST INSTL-120" BM,8/10X4	3-65
BOOMREST INSTL-120" BM,SS/12X4	3-66

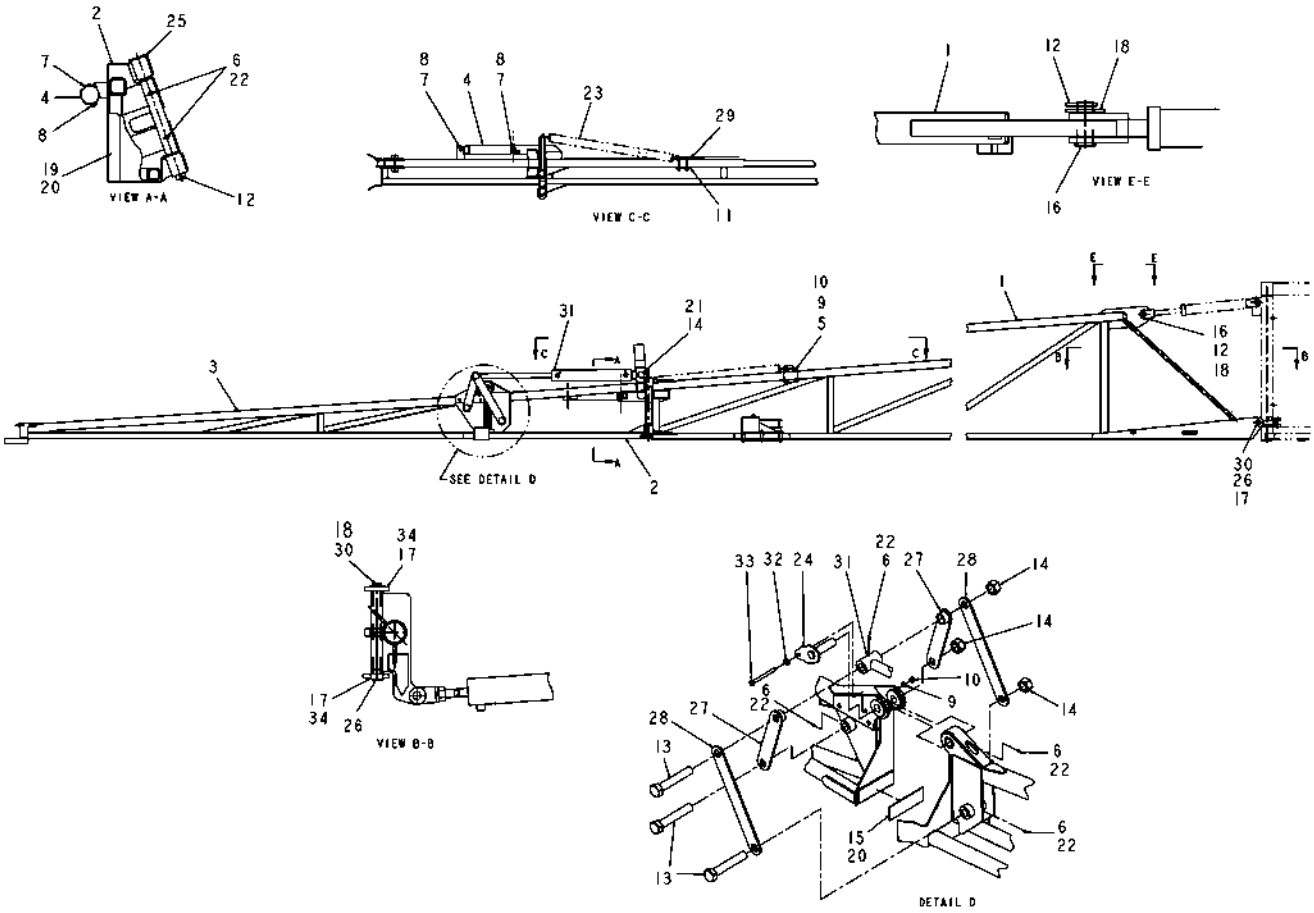

512789D1-01-N562-.TIF

Copyright © 2007 AGCO Corporation

BOOM ASM-80FT,LH

ITEM	PART #	QTY	DESCRIPTION	COMMENTS
1	AG504007	1	BOOM WLDMT-INNER,80FT,LH	
2	AG503511	1	BOOM WLDMT-MIDDLE,LH,80FT	
3	AG503469	1	TIP WLDMT-BOOM,LH,80FT	
4	AG515274	1	SHOCK ABSORBER W/BOOT	[A]
5	AG561072	4	BOLT 0.37-16NCX 3.00 G5 ZN HHD	
6	AG561892	6	FITTING LUBE STR 0.25UNF	
7	AG551392	2	BOLT 0.50-13NCX 2.75 G5 ZN HHD	
8	AG601152	2	NUT 0.50-13NC HEX ZN REG NY	
9	AG550191	5	WASHER 0.37 LK ZN REG	
10	AG550825	5	NUT 0.37-16NC HEX ZN REG	
11	AG228237	1	PLATE CLAMP	
12	AG515352	1	PIN COTTER 0.18X2.00 SS	
13	AG561667	3	BOLT 1.00- 8NCX 7.00 G5 ZN HHD	
14	AG604185	4	NUT 1.00-08NC HEX ZN HVY NY	
15	AG260590	1	PAD-RUBBER,BM TIP,.12THK	
16	AG602132	-	PIN CLEVIS 1.00X2.62 ZN	[B]
17	AG523653	2	BUSHING-1.00 ID X 1.25 OD	
18	AG551856	2	WASHER 1.00 FL ZN SAE TYPE-A	
19	AG233057	1	MATTING PAD	
20	AG512346	AR	3M 1300 YELLOW ADHESIVE (GAL)	
21	AG010220	1	BOLT 1.00- 8NCX 4.00 G5 PL HHD	
22	AG511099	AR	GREASE-MULTI PURPOSE LITH.	
23	AG517793	1	SPRING EXTENSION 2 IN ODX 25.75	
24	AG260631	1	PIN WLDMT-PIVOT,BOOM TIP	
25	AG229828	1	PIN WLDMT PIVOT HD	
26	AG308378	1	WLDMT BOOM PIN	
27	AG260592	2	BAR WLDMT-LINK,SHORT	
28	AG229905	2	BAR LINK LONG	
29	AG228236	1	PLATE MOUNT SPRING	
30	AG516106	1	PIN LYNCH 0.31X1.68	
31	512791D1	1	CYLINDER ASM-BOOM TIP FOLD	SEE PAGE 5-44
32	AG550981	1	WASHER 0.37 FL ZN NAR TYPE-B	
33	AG561698	1	BOLT 0.37-16NCX 4.25 G5 ZN HHD	
34	AG522980	AR	LOCTITE-603,GREEN	
	FOOTNOTE [A]		AG609376 - BOOT ONLY	
	FOOTNOTE [B]		GREASABLE PIN IS 519637	

Copyright © 2007 AGCO Corporation

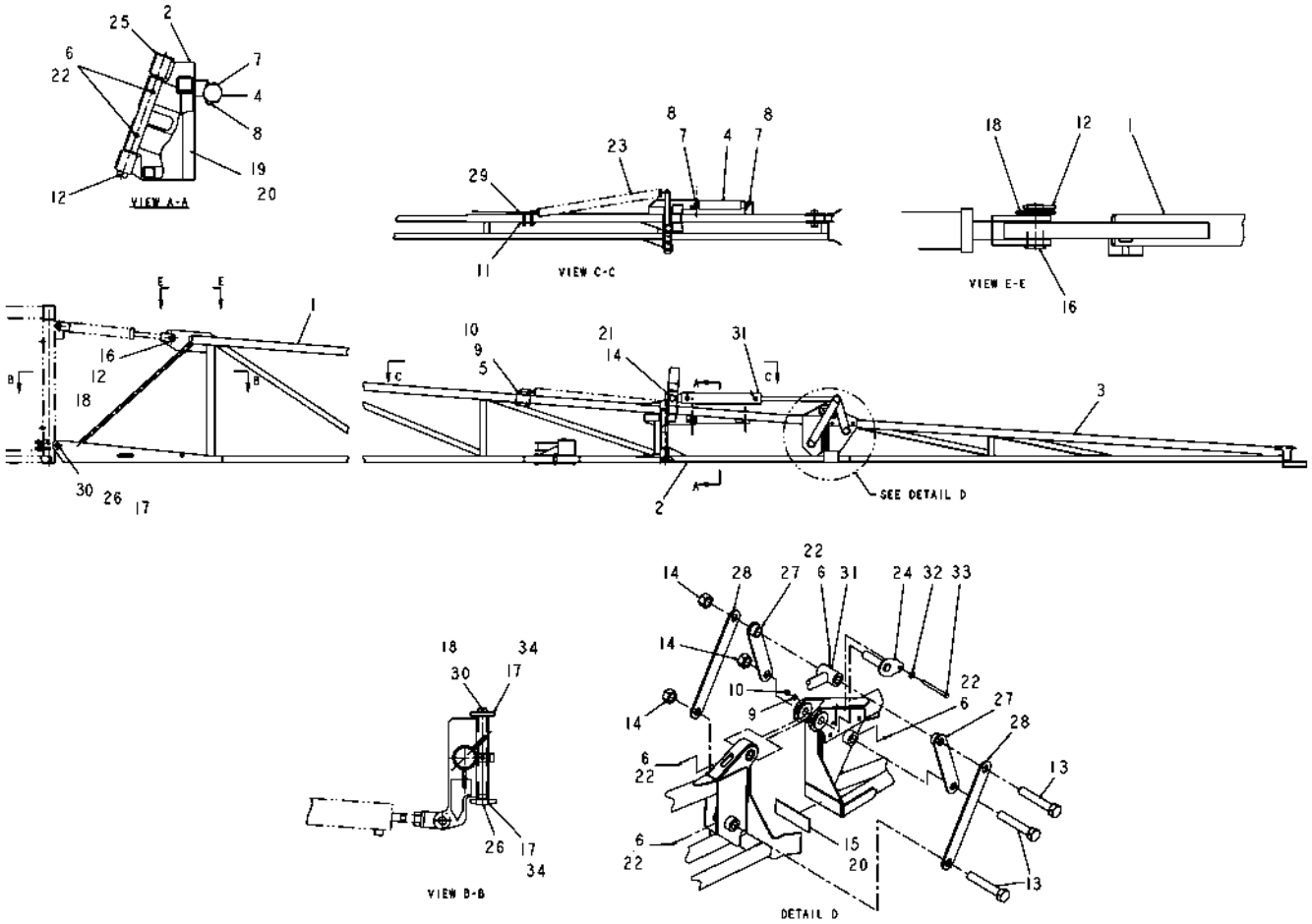

512790D1-01-N562-.TIF

Copyright © 2007 AGCO Corporation

BOOM ASM-80FT,RH

ITEM	PART #	QTY	DESCRIPTION	COMMENTS
1	AG504006	1	BOOM WLDMT-INNER,80FT,RH	
2	AG503510	1	BOOM WLDMT-MIDDLE,RH,80FT	
3	AG503468	1	TIP WLDMT-BOOM,RH,80FT	
4	AG515274	1	SHOCK ABSORBER W/BOOT	[A]
5	AG561072	4	BOLT 0.37-16NCX 3.00 G5 ZN HHD	
6	AG561892	6	FITTING LUBE STR 0.25UNF	
7	AG551392	2	BOLT 0.50-13NCX 2.75 G5 ZN HHD	
8	AG601152	2	NUT 0.50-13NC HEX ZN REG NY	
9	AG550191	5	WASHER 0.37 LK ZN REG	
10	AG550825	5	NUT 0.37-16NC HEX ZN REG	
11	AG228237	1	PLATE CLAMP	
12	AG515352	1	PIN COTTER 0.18X2.00 SS	
13	AG561667	3	BOLT 1.00- 8NCX 7.00 G5 ZN HHD	
14	AG604185	4	NUT 1.00-08NC HEX ZN HVY NY	
15	AG260590	1	PAD-RUBBER,BM TIP,.12THK	
16	AG602132	-	PIN CLEVIS 1.00X2.62 ZN	[B]
17	AG523653	2	BUSHING-1.00 ID X 1.25 OD	
18	AG551856	2	WASHER 1.00 FL ZN SAE TYPE-A	
19	AG233057	1	MATTING PAD	
20	AG512346	AR	3M 1300 YELLOW ADHESIVE (GAL)	
21	AG010220	1	BOLT 1.00- 8NCX 4.00 G5 PL HHD	
22	AG511099	AR	GREASE-MULTI PURPOSE LITH.	
23	AG517793	1	SPRING EXTENSION 2 IN ODX 25.75	
24	AG260631	1	PIN WLDMT-PIVOT,BOOM TIP	
25	AG229828	1	PIN WLDMT PIVOT HD	
26	AG308378	1	WLDMT BOOM PIN	
27	AG260592	2	BAR WLDMT-LINK,SHORT	
28	AG229905	2	BAR LINK LONG	
29	AG228236	1	PLATE MOUNT SPRING	
30	AG516106	1	PIN LYNCH 0.31X1.68	
31	512791D1	1	CYLINDER ASM-BOOM TIP FOLD	SEE PAGE 5-44
32	AG550981	1	WASHER 0.37 FL ZN NAR TYPE-B	
33	AG561698	1	BOLT 0.37-16NCX 4.25 G5 ZN HHD	
34	AG522980	AR	LOCTITE-603,GREEN	
	FOOTNOTE [A]		AG609376 - BOOT ONLY	
	FOOTNOTE [B]		GREASABLE PIN IS 519637	

Copyright © 2007 AGCO Corporation

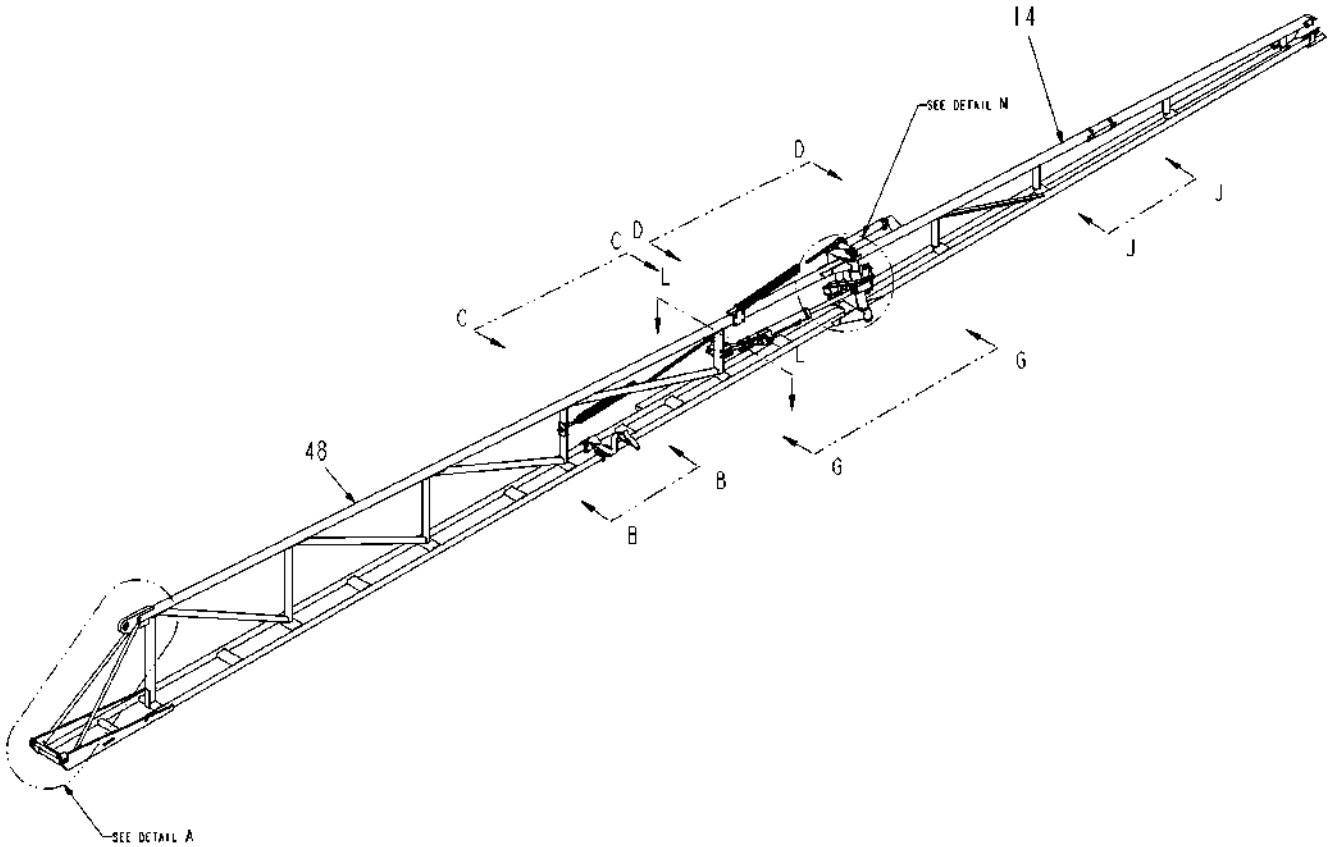

518864D1-01-R267-01.TIF

Copyright © 2007 AGCO Corporation

BOOM ASM-90FT,RH

ITEM	PART #	QTY	DESCRIPTION	COMMENTS
14	AG504542	1	BOOM WLDMT-BRKAWY,RH,90FT	
48	518860D1	1	BOOM WLDMT-INNER,90/100FT,RH	

Copyright © 2007 AGCO Corporation

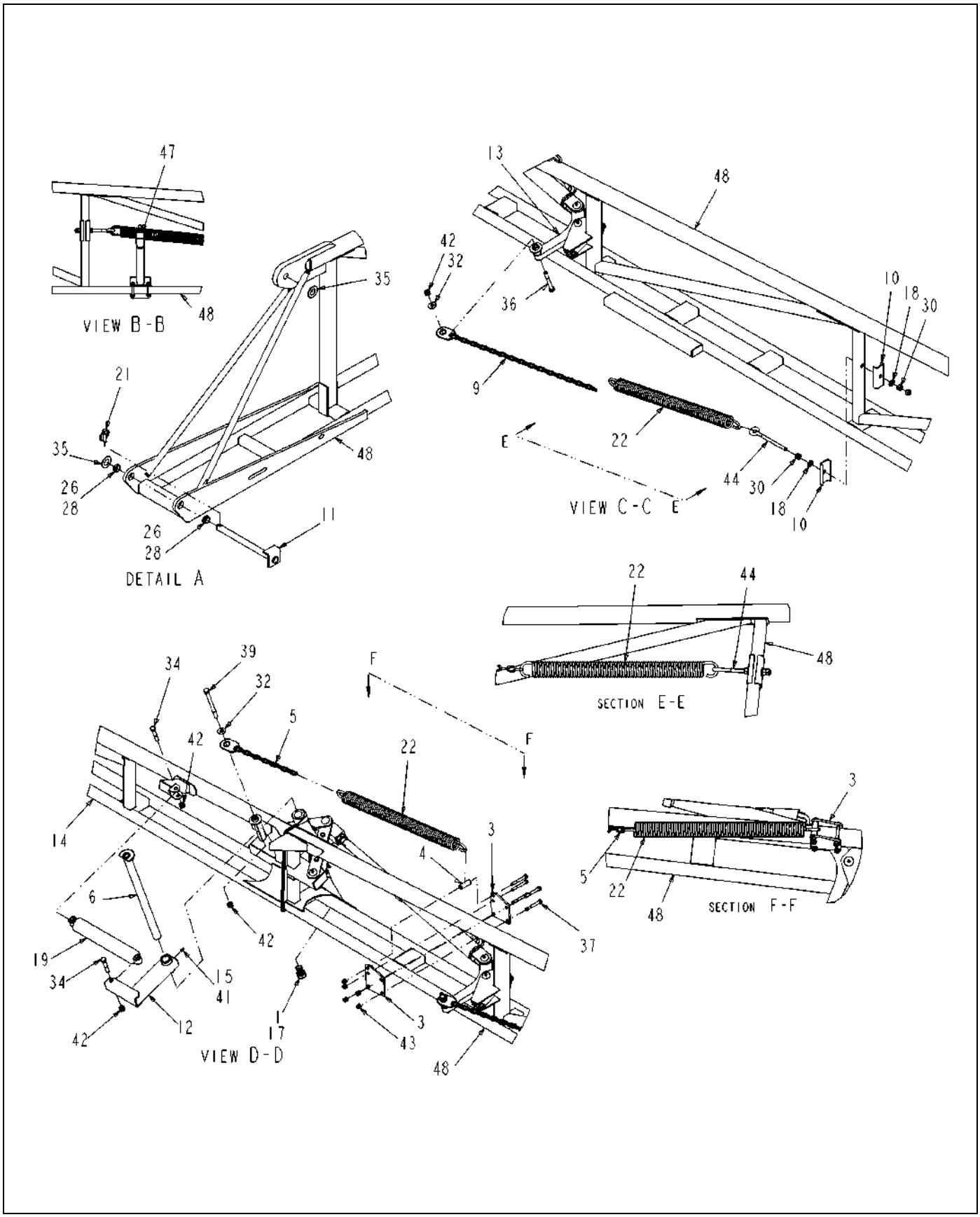

518864D1-01-R267-02.TIF

Copyright © 2007 AGCO Corporation

ITEM	PART #	QTY	DESCRIPTION	COMMENTS
1	AG126884	1	BOLT-.88-9 X 1.50,G5,HHCS,Z/Y	
3	AG230237	2	PLATE MOUNT SPRING	
4	AG230238	1	TUBE SPACER	
5	AG230263	1	CHAIN BREAKAWAY WLDMT	
6	AG232241	1	PIN WELDMENT PIVOT	
9	AG262785	1	CHAIN WLDMT-PIVOT PLATE	
10	AG263053	2	PLATE-DBLR,BOOM	
11	AG308378	1	WLDMT BOOM PIN	
12	AG309923	1	MOUNT SHOCK WLDMT	
13	AG309966	1	PLATE PIVOT WLDMT RH	
14	AG504542	1	BOOM WLDMT-BRKAWY,RH,90FT	
15	AG511099	AR	GREASE-MULTI PURPOSE LITH.	
17	AG512885	AR	LOCTITE ADHESIVE SEALANT BLUE	
18	AG514554	15	WASHER 0.50 FL ZN SAE TYP-A G8	
19	AG515274	1	SHOCK ABSORBER W/BOOT	[A]
21	AG516106	1	PIN LYNCH 0.31X1.68	
22	AG517793	2	SPRING EXTENSION 2 IN ODX 25.75	
26	AG522980	AR	LOCTITE-603,GREEN	
28	AG523653	2	BUSHING-1.00 ID X 1.25 OD	
30	AG550124	6	NUT 0.50-13NC HEX ZN REG	
32	AG550353	2	WASHER 0.50 FL ZN REG TYPE-B	
34	AG551392	2	BOLT 0.50-13NCX 2.75 G5 ZN HHD	
35	AG551856	10	WASHER 1.00 FL ZN SAE TYPE-A	
36	AG552410	1	BOLT 0.50-13NCX 4.00 G5 ZN HHD	
37	AG561072	5	BOLT 0.37-16NCX 3.00 G5 ZN HHD	
39	AG561203	1	BOLT 0.50-13NCX 6.50 G5 ZN HHD	
41	AG561892	7	FITTING LUBE STR 0.25UNF	
42	AG601152	4	NUT 0.50-13NC HEX ZN REG NY	
43	AG601411	5	NUT 0.37-16NC HEX ZN REG NY	
44	6626401	1	BOLT-EYE	
47	513272D1	1	REST INSTL-FLD BACK,90/100,RH	SEE PAGE 3-56
48	518860D1	1	BOOM WLDMT-INNER,90/100FT,RH	
	FOOTNOTE [A]		AG609376 - BOOT ONLY	

Copyright © 2007 AGCO Corporation

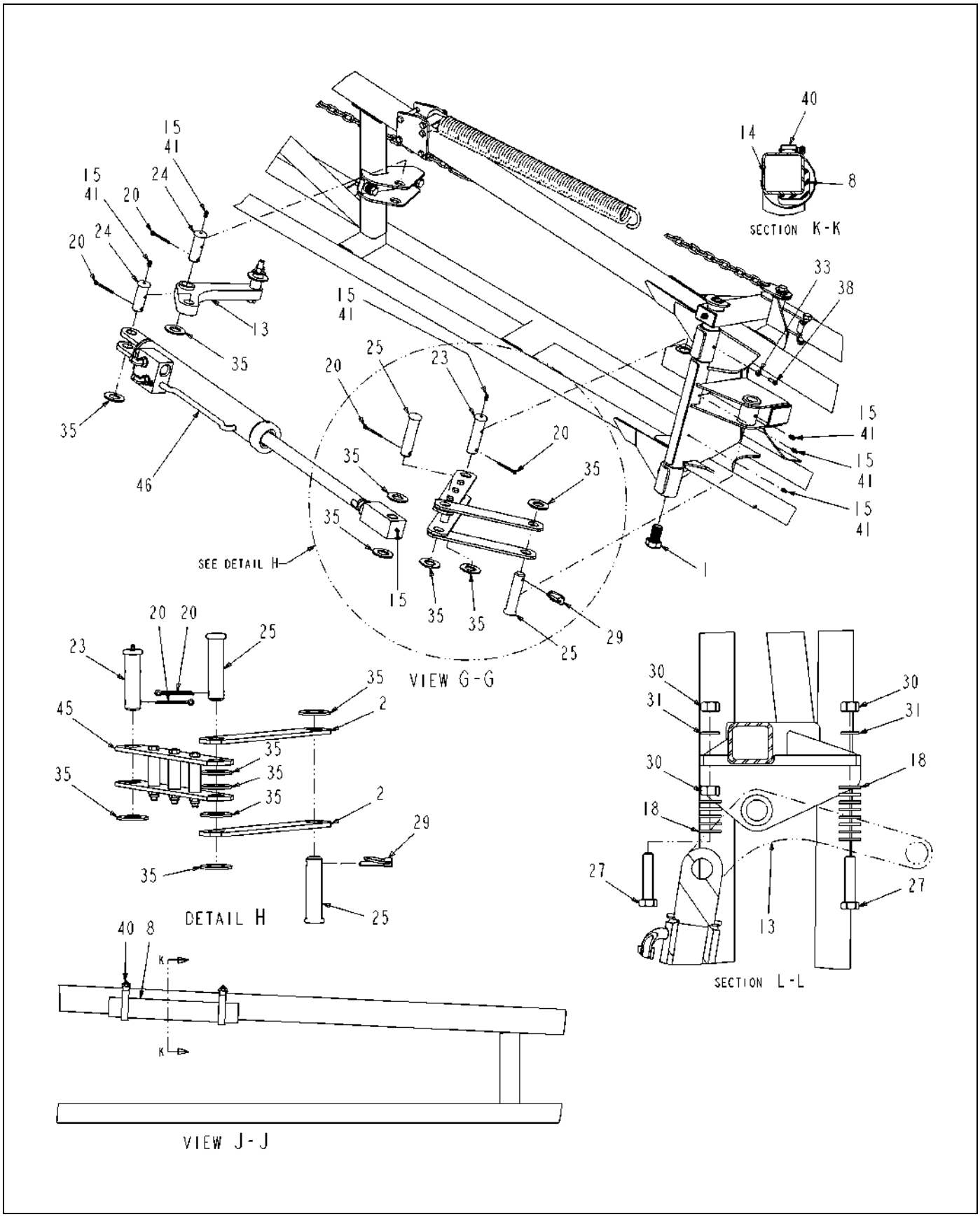

518864D1-01-R267-03.TIF

Copyright © 2007 AGCO Corporation

BOOM ASM-90FT,RH

ITEM	PART #	QTY	DESCRIPTION	COMMENTS
1	AG126884	1	BOLT-.88-9 X 1.50,G5,HHCS,Z/Y	
2	AG230129	2	BAR LINK SHORT	
8	AG260770	1	ANGLE-WEAR,UHMW	
13	AG309966	1	PLATE PIVOT WLDMT RH	
14	AG504542	1	BOOM WLDMT-BRKAWY,RH,90FT	
15	AG511099	AR	GREASE-MULTI PURPOSE LITH.	
18	AG514554	15	WASHER 0.50 FL ZN SAE TYP-A G8	
20	AG515352	4	PIN COTTER 0.18X2.00 SS	
23	AG522056	1	PIN-CLEVIS,1.00 X 3.62	
24	AG522057	2	PIN-CLEVIS 1.00 X 2.69	
25	AG522058	2	PIN-CLEVIS 1.00 X4.00	
27	AG523563	2	BOLT-.50-13X2.25,G5,ZN,HHD,FT	
29	AG524255	1	PIN-LYNCH,.25X1.56,ZN	
30	AG550124	6	NUT 0.50-13NC HEX ZN REG	
31	AG550264	2	WASHER 0.50 LK ZN REG	
33	AG550612	1	NUT 0.25-20NC HEX ZN REG	
35	AG551856	10	WASHER 1.00 FL ZN SAE TYPE-A	
38	AG561078	1	SCREW .25-20X 0.75 SET PL CPSQ	
40	AG561233	2	CLAMP-HOSE,1.81X2.75,36HS	
41	AG561892	7	FITTING LUBE STR 0.25UNF	
45	506334D1	1	LINKAGE ASM-CYL,HYD,INNER/MID	SEE PAGE 3-55
46	512868D1	1	CYLINDER ASM-BOOM TIP FOLD	SEE PAGE 5-61

Copyright © 2007 AGCO Corporation

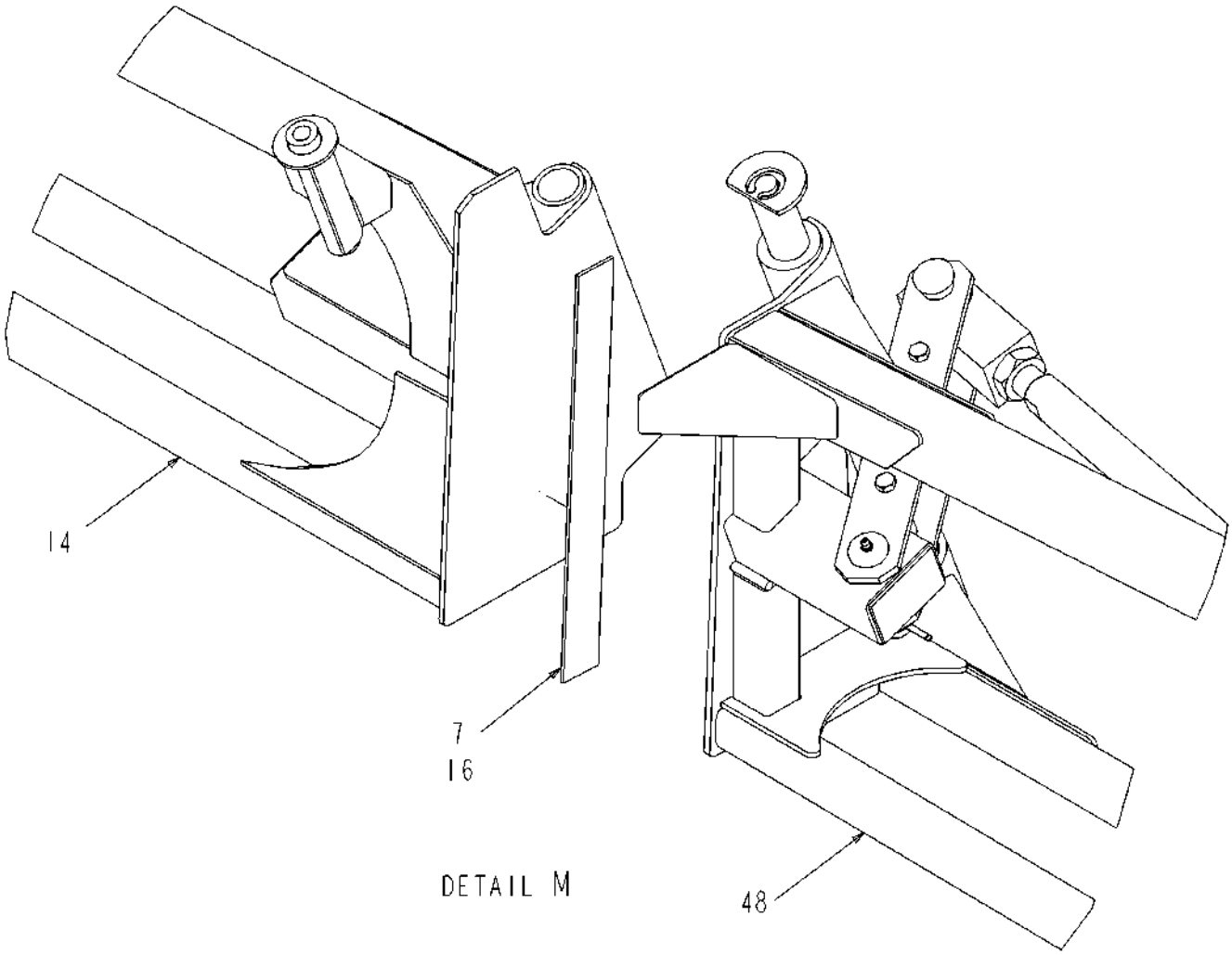

518864D1-01-R267-04.TIF

Copyright © 2007 AGCO Corporation

ITEM	PART #	QTY	DESCRIPTION	COMMENTS
7	AG233057	1	MATTING PAD	
14	AG504542	1	BOOM WLDMT-BRKAWY,RH,90FT	
16	AG512346	AR	3M 1300 YELLOW ADHESIVE (GAL)	
48	518860D1	1	BOOM WLDMT-INNER,90/100FT,RH	

Copyright © 2007 AGCO Corporation

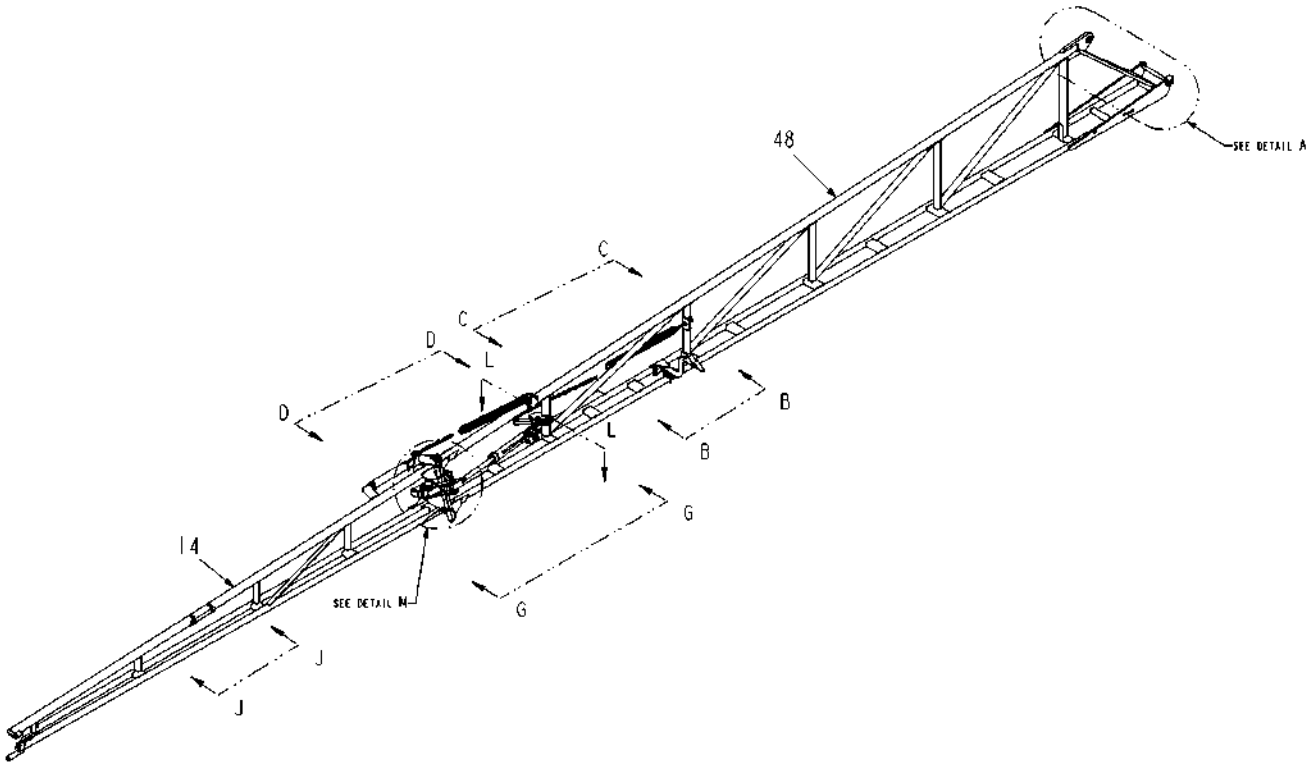

518865D1-01-R267-01.TIF

Copyright © 2007 AGCO Corporation

BOOM ASM-90FT,LH

ITEM	PART #	QTY	DESCRIPTION	COMMENTS
14	AG504543	1	BOOM WLDMT-BRKAWY,LH,90FT	
48	518861D1	1	BOOM WLDMT-INNER,90/100FT,LH	

Copyright © 2007 AGCO Corporation

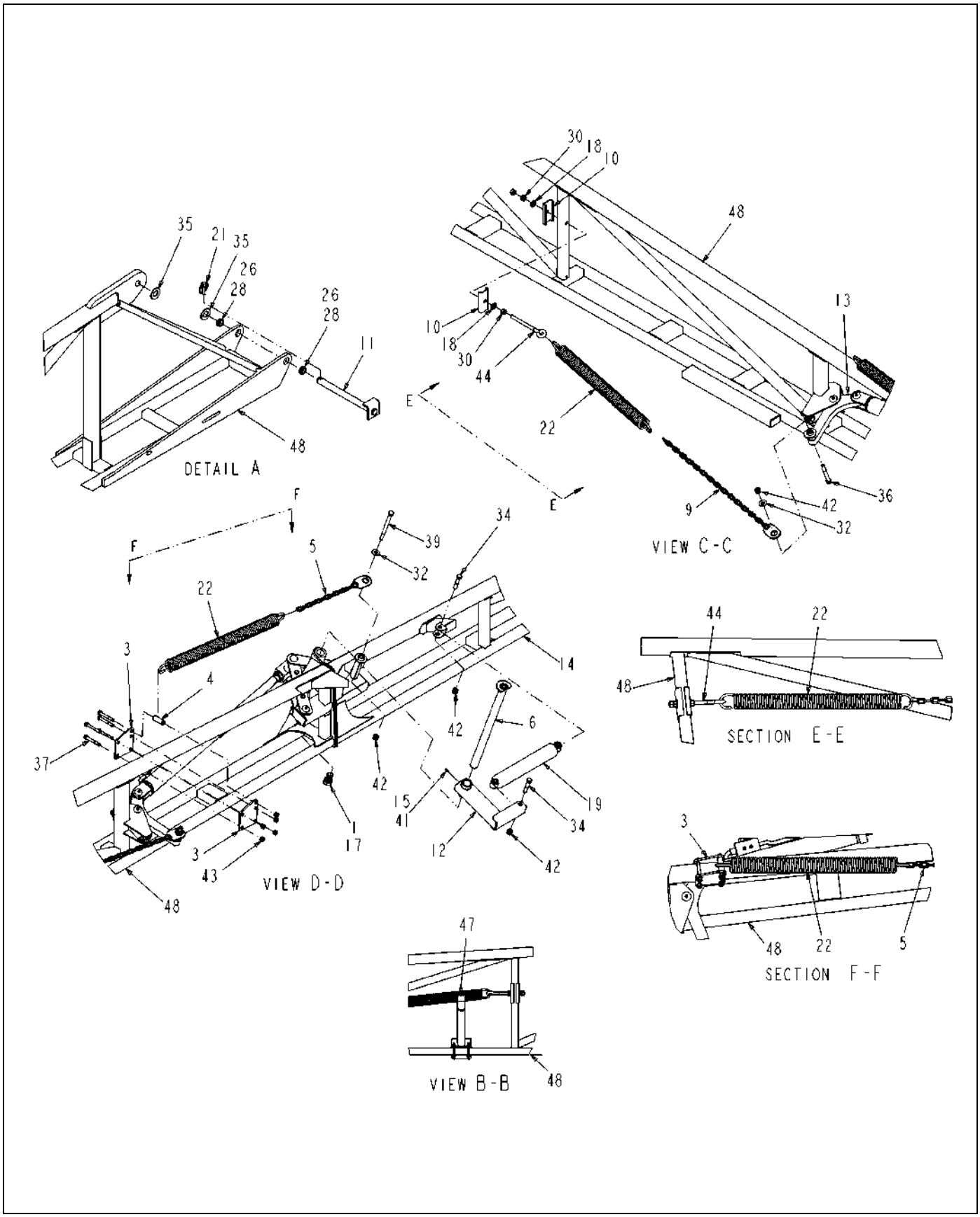

518865D1-01-R267-02.TIF

Copyright © 2007 AGCO Corporation

ITEM	PART #	QTY	DESCRIPTION	COMMENTS
1	AG126884	1	BOLT-.88-9 X 1.50,G5,HHCS,Z/Y	
3	AG230237	2	PLATE MOUNT SPRING	
4	AG230238	1	TUBE SPACER	
5	AG230263	1	CHAIN BREAKAWAY WLDMT	
6	AG232241	1	PIN WELDMENT PIVOT	
9	AG262785	1	CHAIN WLDMT-PIVOT PLATE	
10	AG263053	2	PLATE-DBLR,BOOM	
11	AG308378	1	WLDMT BOOM PIN	
12	AG309923	1	MOUNT SHOCK WLDMT	
13	AG309967	1	PLATE PIVOT WLDMT LH	
14	AG504543	1	BOOM WLDMT-BRKAWY,LH,90FT	
15	AG511099	AR	GREASE-MULTI PURPOSE LITH.	
17	AG512885	AR	LOCTITE ADHESIVE SEALANT BLUE	
18	AG514554	15	WASHER 0.50 FL ZN SAE TYP-A G8	
19	AG515274	1	SHOCK ABSORBER W/BOOT	[A]
21	AG516106	1	PIN LYNCH 0.31X1.68	
22	AG517793	2	SPRING EXTENSION 2 IN ODX 25.75	
26	AG522980	AR	LOCTITE-603,GREEN	
28	AG523653	2	BUSHING-1.00 ID X 1.25 OD	
30	AG550124	6	NUT 0.50-13NC HEX ZN REG	
32	AG550353	2	WASHER 0.50 FL ZN REG TYPE-B	
34	AG551392	2	BOLT 0.50-13NCX 2.75 G5 ZN HHD	
35	AG551856	10	WASHER 1.00 FL ZN SAE TYPE-A	
36	AG552410	1	BOLT 0.50-13NCX 4.00 G5 ZN HHD	
37	AG561072	5	BOLT 0.37-16NCX 3.00 G5 ZN HHD	
39	AG561203	1	BOLT 0.50-13NCX 6.50 G5 ZN HHD	
41	AG561892	7	FITTING LUBE STR 0.25UNF	
42	AG601152	4	NUT 0.50-13NC HEX ZN REG NY	
43	AG601411	5	NUT 0.37-16NC HEX ZN REG NY	
44	6626401	1	BOLT-EYE	
47	513273D1	1	REST INSTL-FLD BACK,90/100,LH	SEE PAGE 3-57
48	518861D1	1	BOOM WLDMT-INNER,90/100FT,LH	
	FOOTNOTE [A]		AG609376 - BOOT ONLY	

Copyright © 2007 AGCO Corporation

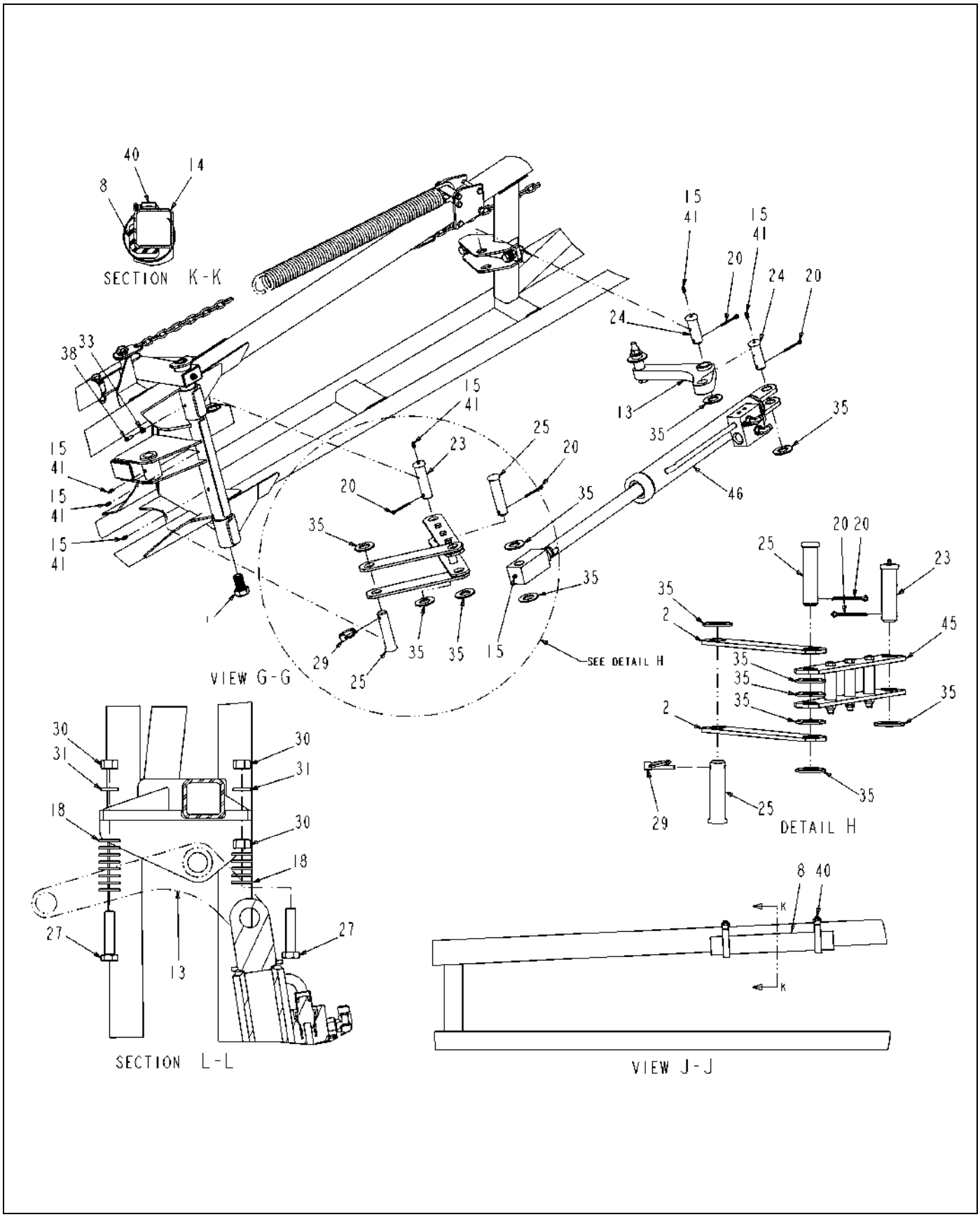

518865D1-01-R267-03.TIF

Copyright © 2007 AGCO Corporation

BOOM ASM-90FT,LH

ITEM	PART #	QTY	DESCRIPTION	COMMENTS
1	AG126884	1	BOLT-.88-9 X 1.50,G5,HHCS,Z/Y	
2	AG230129	2	BAR LINK SHORT	
8	AG260770	1	ANGLE-WEAR,UHMW	
13	AG309967	1	PLATE PIVOT WLDMT LH	
14	AG504543	1	BOOM WLDMT-BRKAWY,LH,90FT	
15	AG511099	AR	GREASE-MULTI PURPOSE LITH.	
18	AG514554	15	WASHER 0.50 FL ZN SAE TYP-A G8	
20	AG515352	4	PIN COTTER 0.18X2.00 SS	
23	AG522056	1	PIN-CLEVIS,1.00 X 3.62	
24	AG522057	2	PIN-CLEVIS 1.00 X 2.69	
25	AG522058	2	PIN-CLEVIS 1.00 X4.00	
27	AG523563	2	BOLT-.50-13X2.25,G5,ZN,HHD,FT	
29	AG524255	1	PIN-LYNCH,.25X1.56,ZN	
30	AG550124	6	NUT 0.50-13NC HEX ZN REG	
31	AG550264	2	WASHER 0.50 LK ZN REG	
33	AG550612	1	NUT 0.25-20NC HEX ZN REG	
35	AG551856	10	WASHER 1.00 FL ZN SAE TYPE-A	
38	AG561078	1	SCREW .25-20X 0.75 SET PL CPSQ	
40	AG561233	2	CLAMP-HOSE,1.81X2.75,36HS	
41	AG561892	7	FITTING LUBE STR 0.25UNF	
45	506334D1	1	LINKAGE ASM-CYL,HYD,INNER/MID	SEE PAGE 3-55
46	512868D1	1	CYLINDER ASM-BOOM TIP FOLD	SEE PAGE 5-61

Copyright © 2007 AGCO Corporation

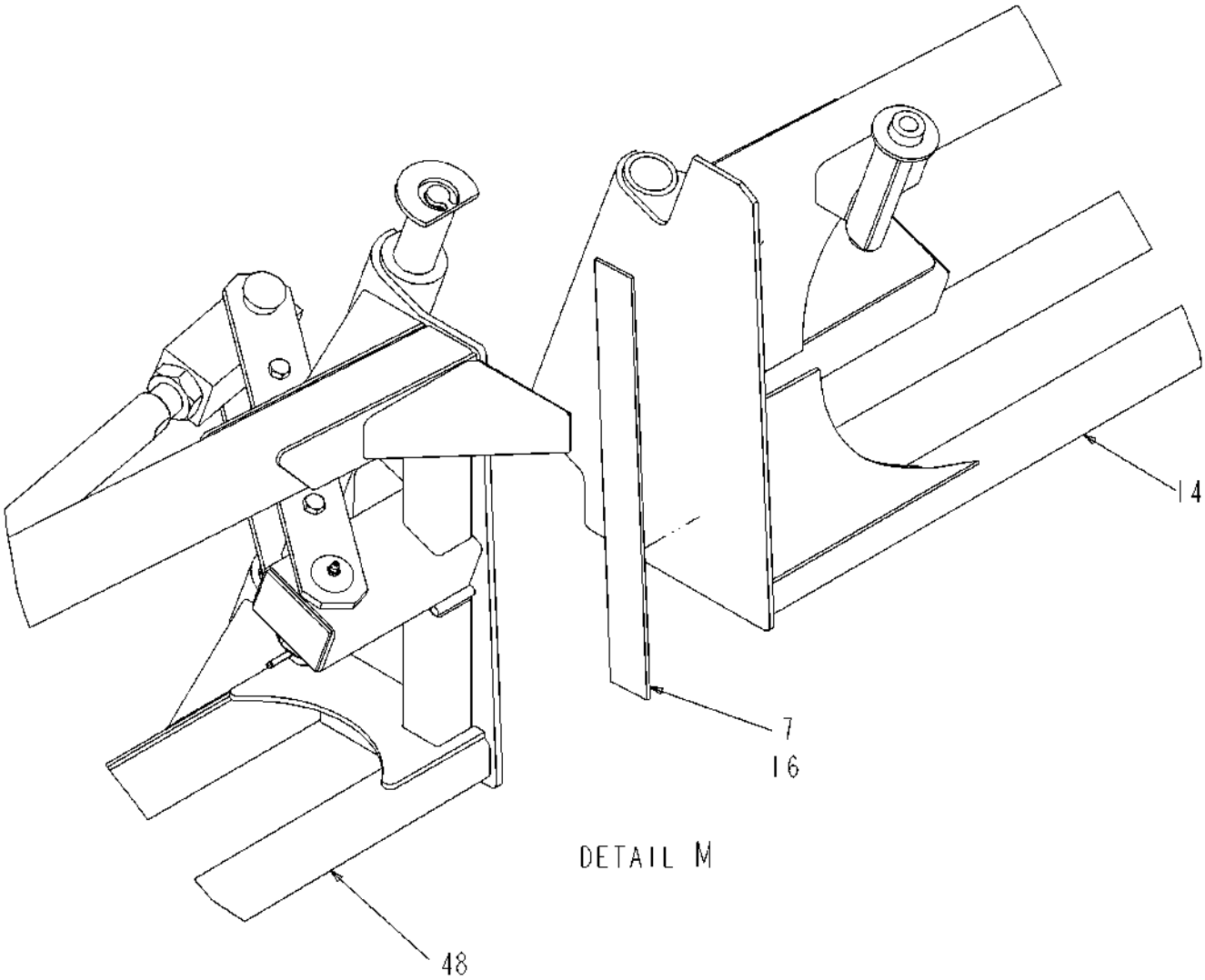

518865D1-01-R267-04.TIF

Copyright © 2007 AGCO Corporation

BOOM ASM-90FT,LH

ITEM	PART #	QTY	DESCRIPTION	COMMENTS
7	AG233057	1	MATTING PAD	
14	AG504543	1	BOOM WLDMT-BRKAWY,LH,90FT	
16	AG512346	AR	3M 1300 YELLOW ADHESIVE (GAL)	
48	518861D1	1	BOOM WLDMT-INNER,90/100FT,LH	

Copyright © 2007 AGCO Corporation

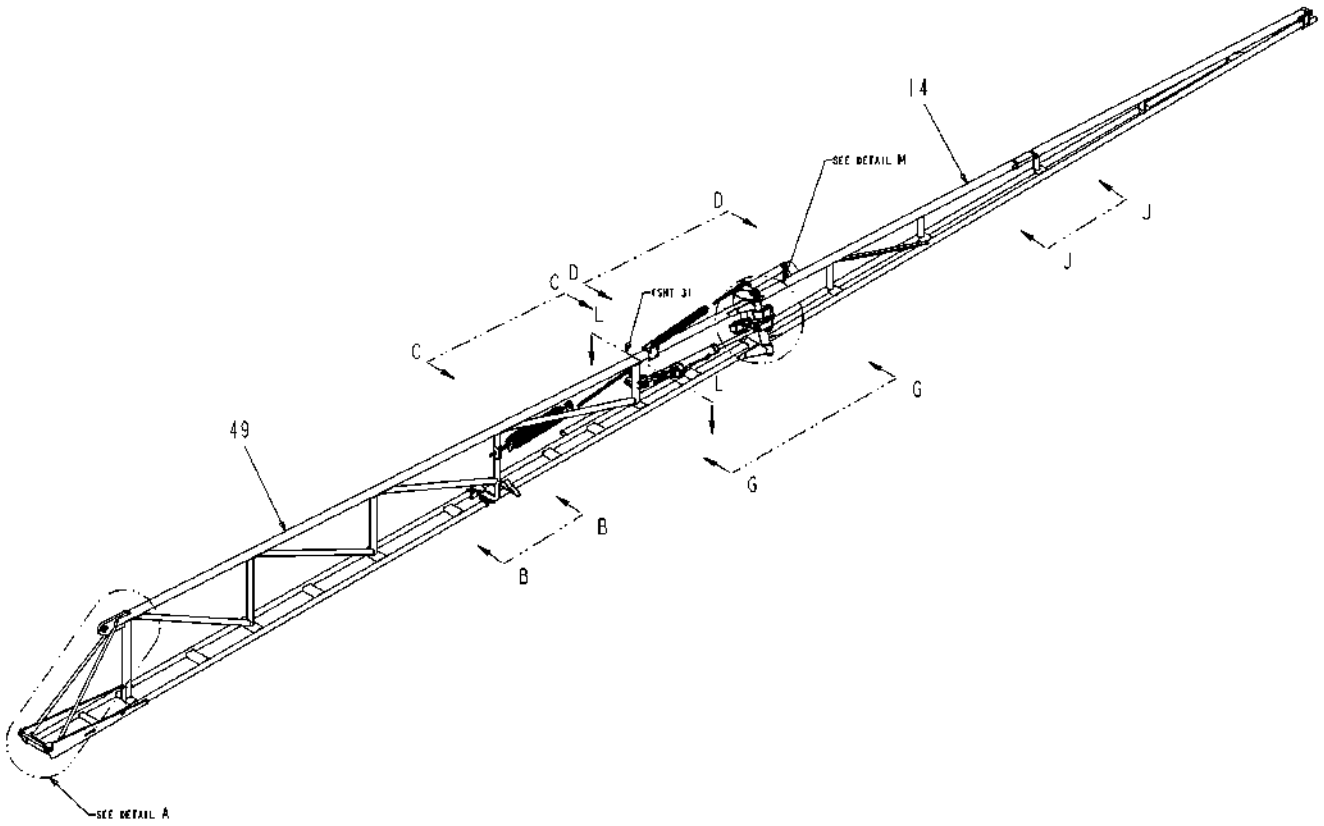

518866D1-01-R267-01.TIF

Copyright © 2007 AGCO Corporation

BOOM ASM-100FT,RH

ITEM	PART #	QTY	DESCRIPTION	COMMENTS
14	AG504510	1	BOOM WLDMT-BRKAWY,RH,100FT	
49	518860D1	1	BOOM WLDMT-INNER,90/100FT,RH	

Copyright © 2007 AGCO Corporation

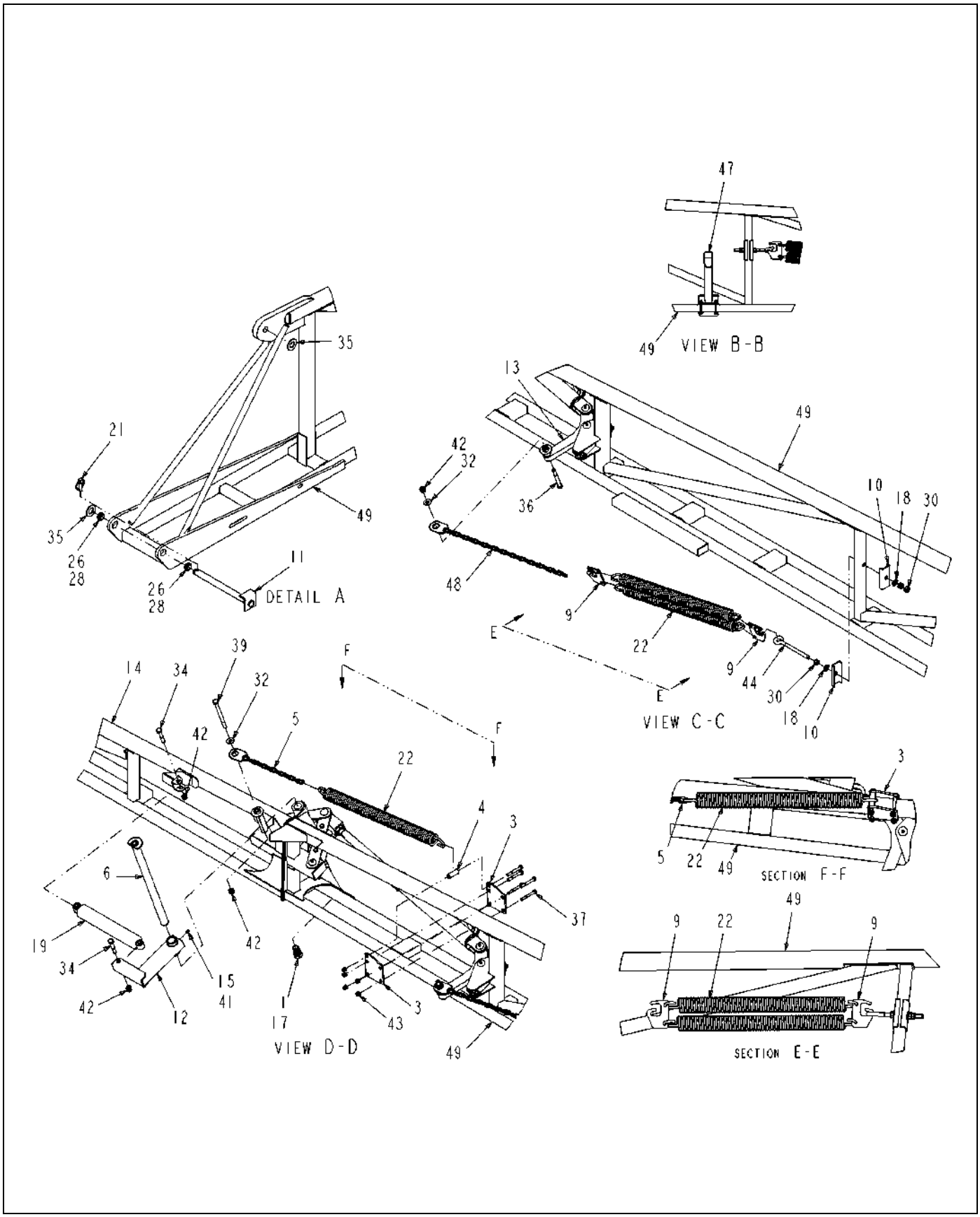

518866D1-01-R267-02.TIF

Copyright © 2007 AGCO Corporation

BOOM ASM-100FT,RH

ITEM	PART #	QTY	DESCRIPTION	COMMENTS
1	AG126884	1	BOLT-.88-9 X 1.50,G5,HHCS,Z/Y	
3	AG230237	2	PLATE MOUNT SPRING	
4	AG230238	1	TUBE SPACER	
5	AG230263	1	CHAIN BREAKAWAY WLDMT	
6	AG232241	1	PIN WELDMENT PIVOT	
9	AG263036	2	PLATE-EYEBOLT	
10	AG263053	2	PLATE-DBLR,BOOM	
11	AG308378	1	WLDMT BOOM PIN	
12	AG309923	1	MOUNT SHOCK WLDMT	
13	AG309966	1	PLATE PIVOT WLDMT RH	
14	AG504510	1	BOOM WLDMT-BRKAWY,RH,100FT	
15	AG511099	AR	GREASE-MULTI PURPOSE LITH.	
17	AG512885	AR	LOCTITE ADHESIVE SEALANT BLUE	
18	AG514554	15	WASHER 0.50 FL ZN SAE TYP-A G8	
19	AG515274	1	SHOCK ABSORBER W/BOOT	[A]
21	AG516106	1	PIN LYNCH 0.31X1.68	
22	AG517793	2	SPRING EXTENSION 2 IN ODX 25.75	
26	AG522980	AR	LOCTITE-603,GREEN	
28	AG523653	2	BUSHING-1.00 ID X 1.25 OD	
30	AG550124	6	NUT 0.50-13NC HEX ZN REG	
32	AG550353	2	WASHER 0.50 FL ZN REG TYPE-B	
34	AG551392	2	BOLT 0.50-13NCX 2.75 G5 ZN HHD	
35	AG551856	10	WASHER 1.00 FL ZN SAE TYPE-A	
36	AG552410	1	BOLT 0.50-13NCX 4.00 G5 ZN HHD	
37	AG561072	5	BOLT 0.37-16NCX 3.00 G5 ZN HHD	
39	AG561203	1	BOLT 0.50-13NCX 6.50 G5 ZN HHD	
41	AG561892	7	FITTING LUBE STR 0.25UNF	
42	AG601152	4	NUT 0.50-13NC HEX ZN REG NY	
43	AG601411	5	NUT 0.37-16NC HEX ZN REG NY	
44	6626401	1	BOLT-EYE	
47	513272D1	1	REST INSTL-FLD BACK,90/100,RH	SEE PAGE 3-56
48	515197D1	1	CHAIN WLDMT-PIVOT PLATE	
49	518860D1	1	BOOM WLDMT-INNER,90/100FT,RH	
	FOOTNOTE [A]		AG609376 - BOOT ONLY	

Copyright © 2007 AGCO Corporation

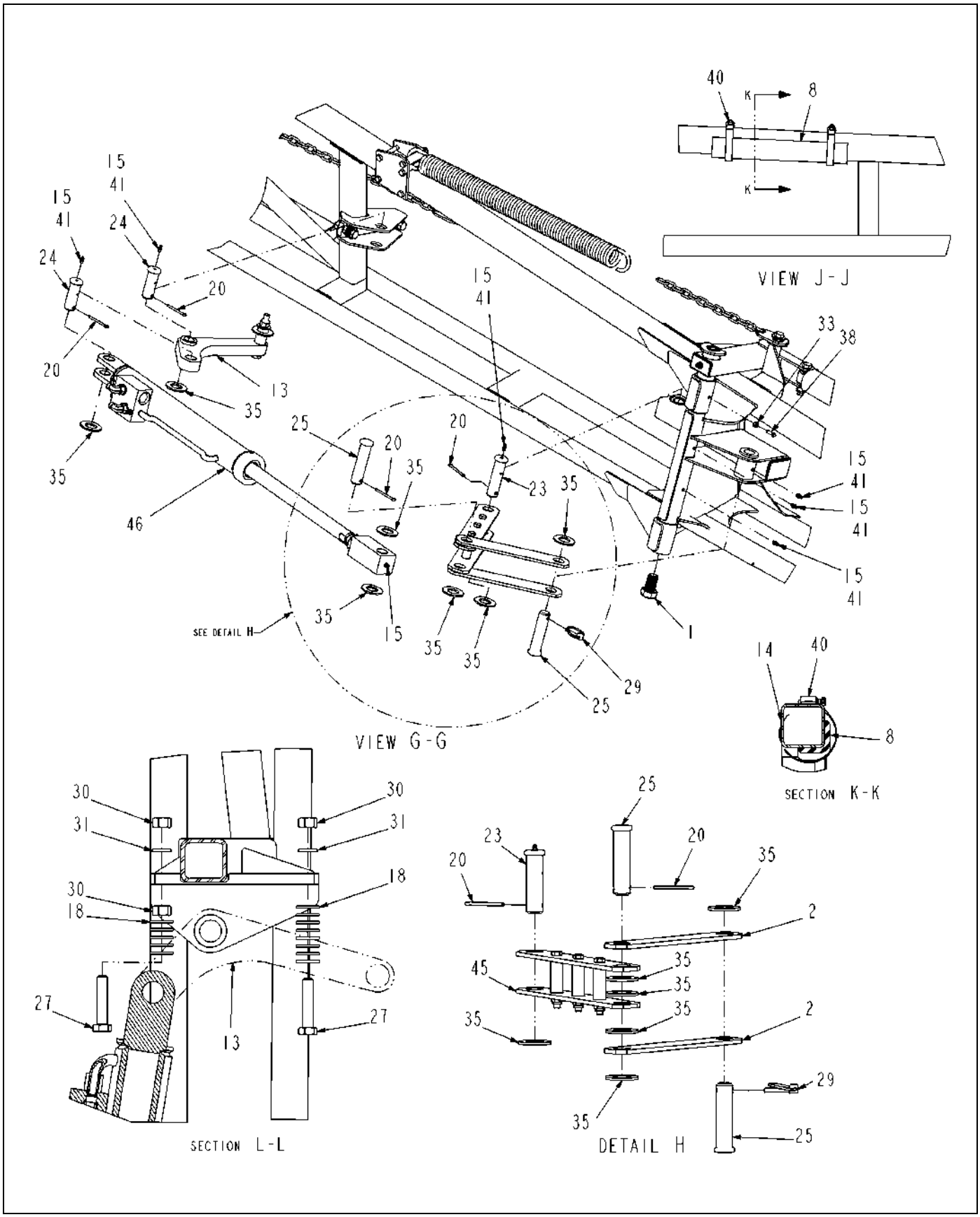

518866D1-01-R267-03.TIF

Copyright © 2007 AGCO Corporation

BOOM ASM-100FT,RH

ITEM	PART #	QTY	DESCRIPTION	COMMENTS
1	AG126884	1	BOLT-.88-9 X 1.50,G5,HHCS,Z/Y	
2	AG230129	2	BAR LINK SHORT	
8	AG260770	1	ANGLE-WEAR,UHMW	
13	AG309966	1	PLATE PIVOT WLDMT RH	
14	AG504510	1	BOOM WLDMT-BRKAWY,RH,100FT	
15	AG511099	AR	GREASE-MULTI PURPOSE LITH.	
18	AG514554	15	WASHER 0.50 FL ZN SAE TYP-A G8	
20	AG515352	4	PIN COTTER 0.18X2.00 SS	
23	AG522056	1	PIN-CLEVIS,1.00 X 3.62	
24	AG522057	2	PIN-CLEVIS 1.00 X 2.69	
25	AG522058	2	PIN-CLEVIS 1.00 X4.00	
27	AG523563	2	BOLT-.50-13X2.25,G5,ZN,HHD,FT	
29	AG524255	1	PIN-LYNCH,.25X1.56,ZN	
30	AG550124	6	NUT 0.50-13NC HEX ZN REG	
31	AG550264	2	WASHER 0.50 LK ZN REG	
33	AG550612	1	NUT 0.25-20NC HEX ZN REG	
35	AG551856	10	WASHER 1.00 FL ZN SAE TYPE-A	
38	AG561078	1	SCREW .25-20X 0.75 SET PL CPSQ	
40	AG561233	2	CLAMP-HOSE,1.81X2.75,36HS	
41	AG561892	7	FITTING LUBE STR 0.25UNF	
45	506334D1	1	LINKAGE ASM-CYL,HYD,INNER/MID	SEE PAGE 3-55
46	512868D1	1	CYLINDER ASM-BOOM TIP FOLD	SEE PAGE 5-61

Copyright © 2007 AGCO Corporation

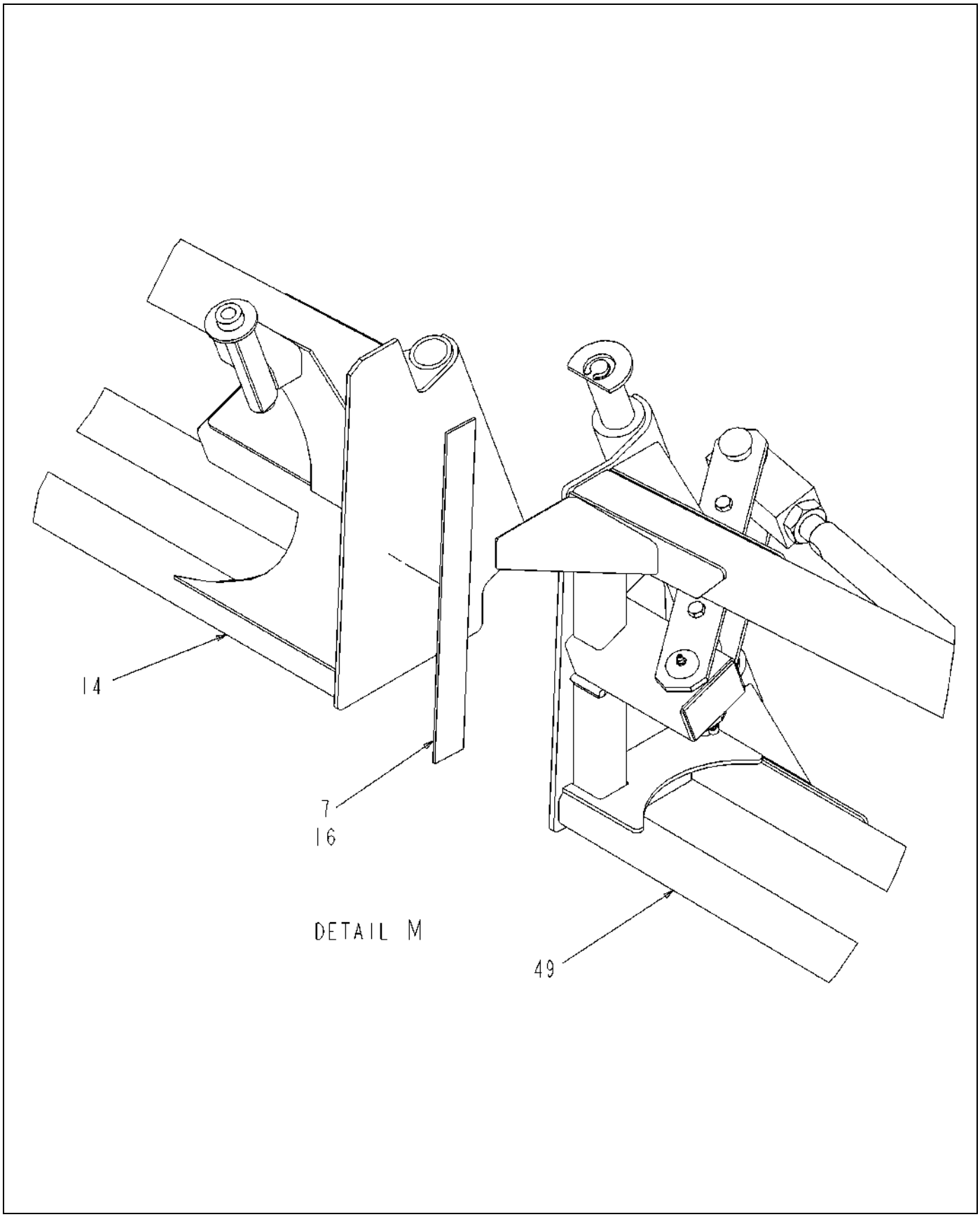

518866D1-01-R267-04.TIF

Copyright © 2007 AGCO Corporation

ITEM	PART #	QTY	DESCRIPTION	COMMENTS
7	AG233057	1	MATTING PAD	
14	AG504510	1	BOOM WLDMT-BRKAWY,RH,100FT	
16	AG512346	AR	3M 1300 YELLOW ADHESIVE (GAL)	
49	518860D1	1	BOOM WLDMT-INNER,90/100FT,RH	

Copyright © 2007 AGCO Corporation

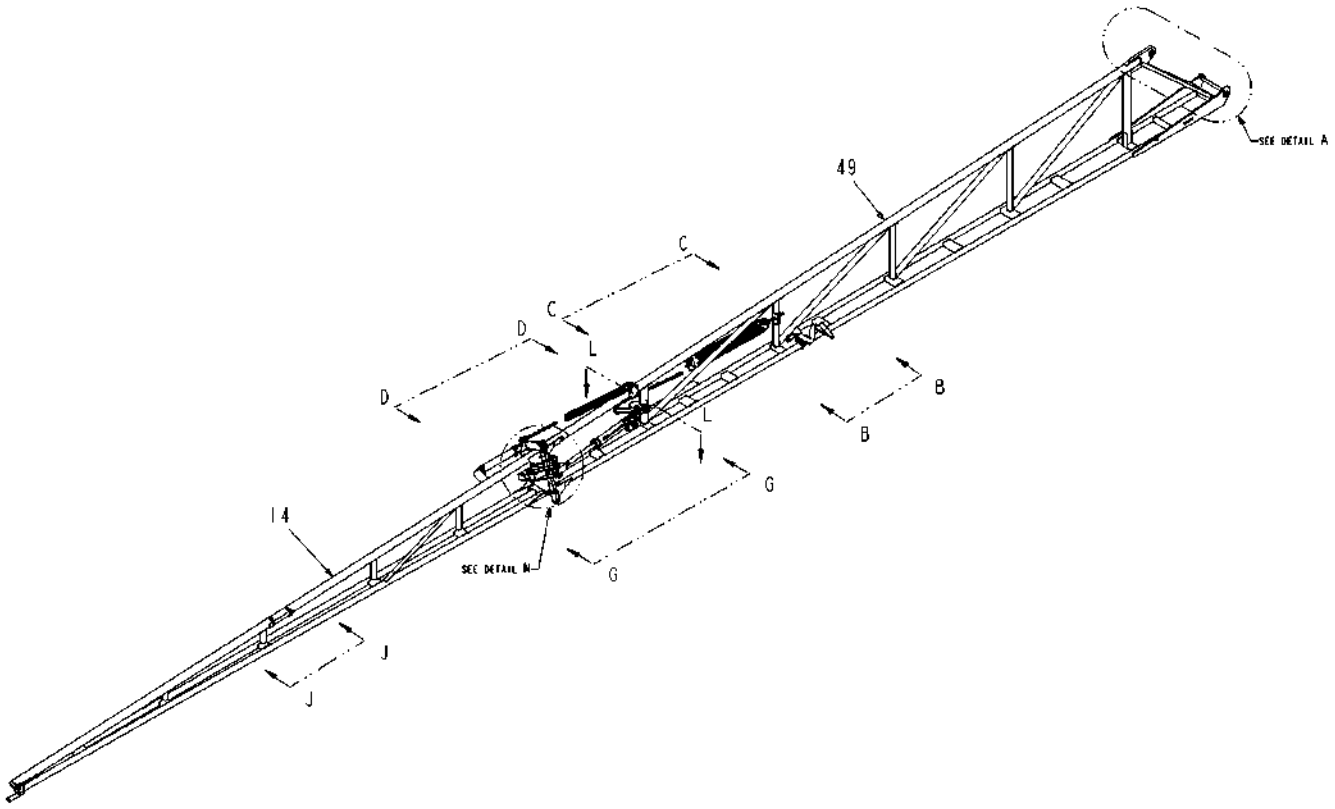

518867D1-01-R267-01.TIF

Copyright © 2007 AGCO Corporation

BOOM ASM-100FT,LH

ITEM	PART #	QTY	DESCRIPTION	COMMENTS
14	AG504509	1	BOOM WLDMT-BRKAWY,LH,100FT	
49	518861D1	1	BOOM WLDMT-INNER,90/100FT,LH	

Copyright © 2007 AGCO Corporation

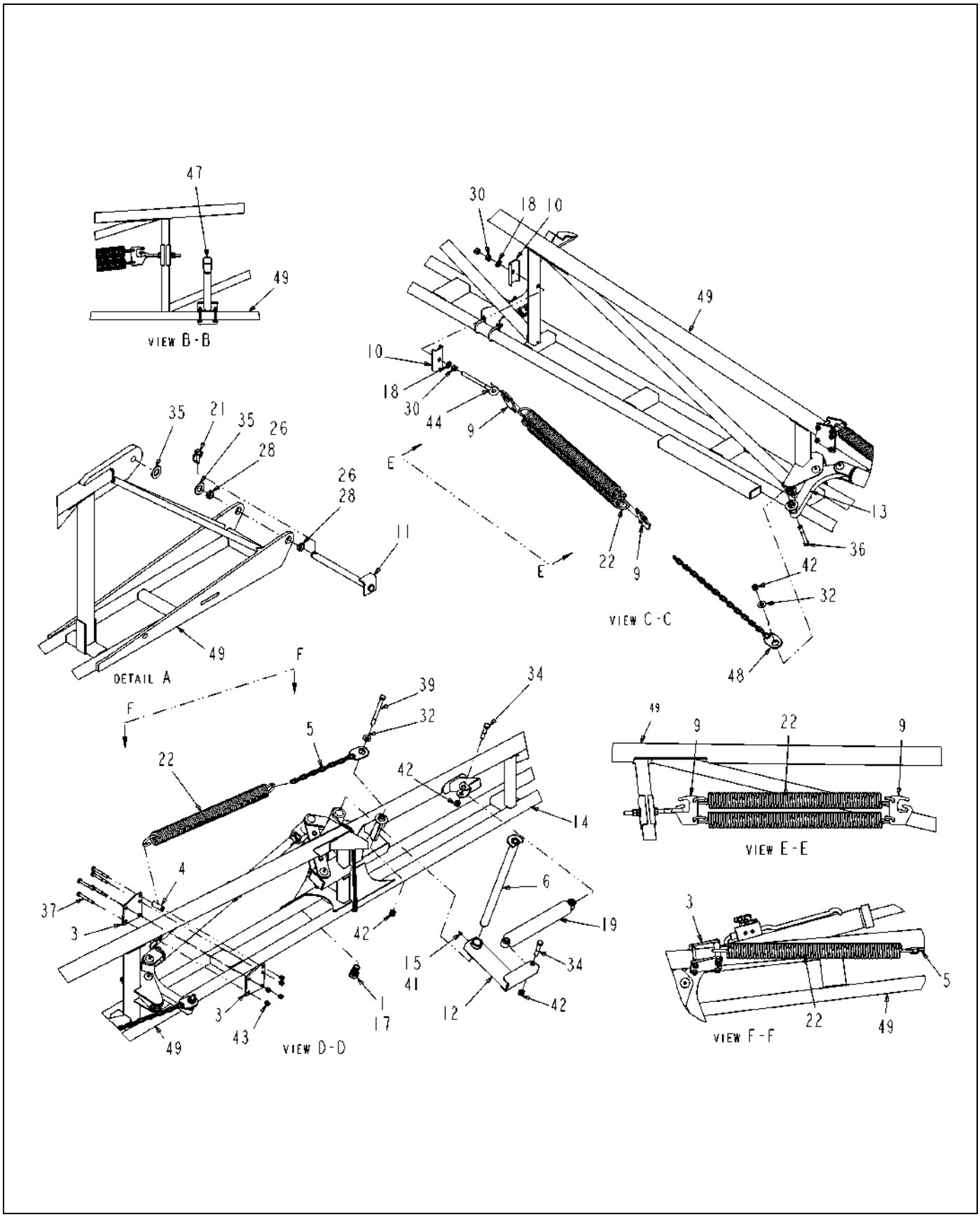

518867D1-01-R267-02.TIF

Copyright © 2007 AGCO Corporation

BOOM ASM-100FT,LH

ITEM	PART #	QTY	DESCRIPTION	COMMENTS
1	AG126884	1	BOLT-.88-9 X 1.50,G5,HHCS,Z/Y	
3	AG230237	2	PLATE MOUNT SPRING	
4	AG230238	1	TUBE SPACER	
5	AG230263	1	CHAIN BREAKAWAY WLDMT	
6	AG232241	1	PIN WELDMENT PIVOT	
9	AG263036	2	PLATE-EYEBOLT	
10	AG263053	2	PLATE-DBLR,BOOM	
11	AG308378	1	WLDMT BOOM PIN	
12	AG309923	1	MOUNT SHOCK WLDMT	
13	AG309967	1	PLATE PIVOT WLDMT LH	
14	AG504509	1	BOOM WLDMT-BRKAWY,LH,100FT	
15	AG511099	AR	GREASE-MULTI PURPOSE LITH.	
17	AG512885	AR	LOCTITE ADHESIVE SEALANT BLUE	
18	AG514554	15	WASHER 0.50 FL ZN SAE TYP-A G8	
19	AG515274	1	SHOCK ABSORBER W/BOOT	[A]
21	AG516106	1	PIN LYNCH 0.31X1.68	
22	AG517793	2	SPRING EXTENSION 2 IN ODX 25.75	
26	AG522980	AR	LOCTITE-603,GREEN	
28	AG523653	2	BUSHING-1.00 ID X 1.25 OD	
30	AG550124	6	NUT 0.50-13NC HEX ZN REG	
32	AG550353	2	WASHER 0.50 FL ZN REG TYPE-B	
34	AG551392	2	BOLT 0.50-13NCX 2.75 G5 ZN HHD	
35	AG551856	10	WASHER 1.00 FL ZN SAE TYPE-A	
36	AG552410	1	BOLT 0.50-13NCX 4.00 G5 ZN HHD	
37	AG561072	5	BOLT 0.37-16NCX 3.00 G5 ZN HHD	
39	AG561203	1	BOLT 0.50-13NCX 6.50 G5 ZN HHD	
41	AG561892	7	FITTING LUBE STR 0.25UNF	
42	AG601152	4	NUT 0.50-13NC HEX ZN REG NY	
43	AG601411	5	NUT 0.37-16NC HEX ZN REG NY	
44	6626401	1	BOLT-EYE	
47	513273D1	1	REST INSTL-FLD BACK,90/100,LH	SEE PAGE 3-57
48	515197D1	1	CHAIN WLDMT-PIVOT PLATE	
49	518861D1	1	BOOM WLDMT-INNER,90/100FT,LH	
	FOOTNOTE [A]		AG609376 - BOOT ONLY	

Copyright © 2007 AGCO Corporation

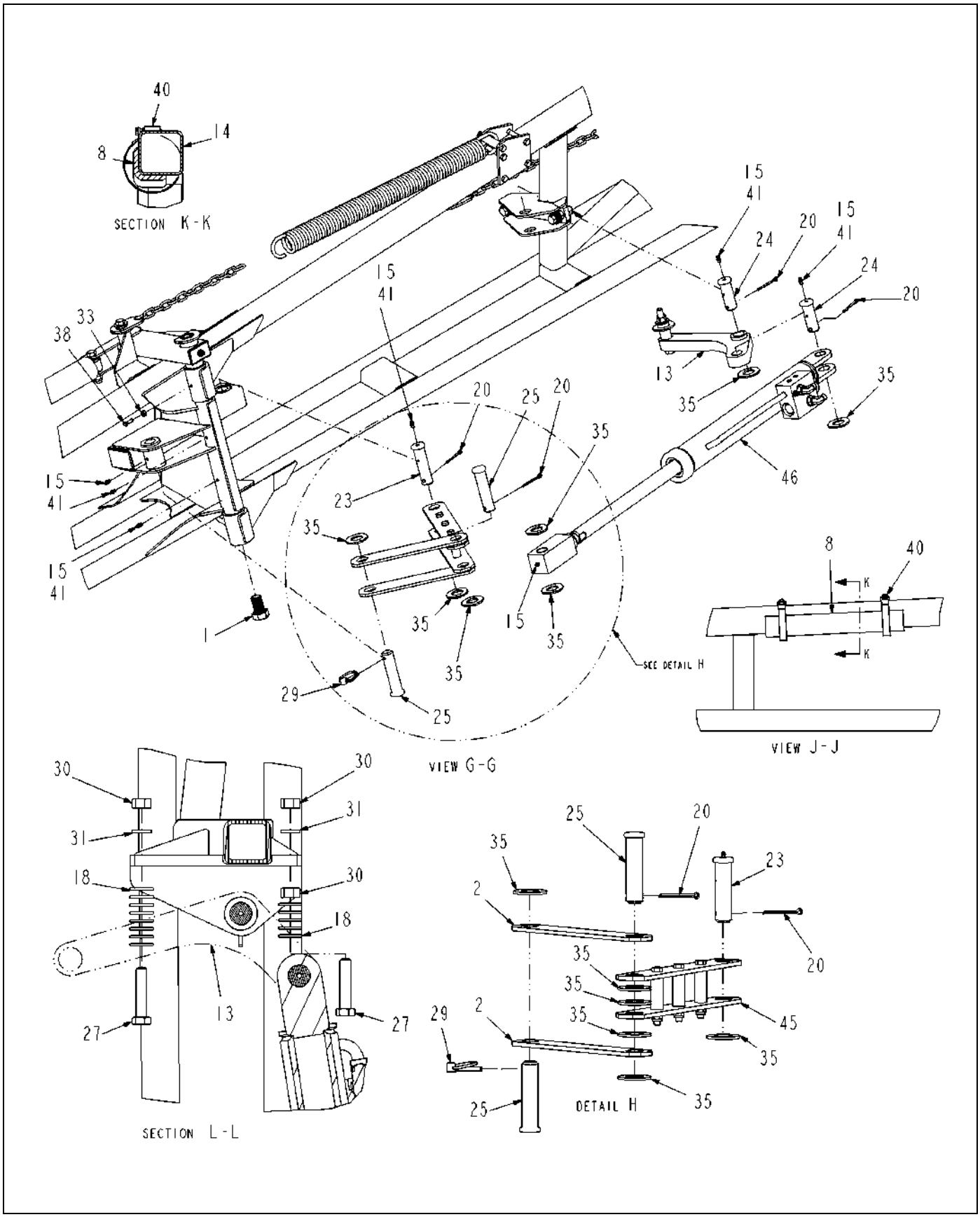

518867D1-01-R267-03.TIF

Copyright © 2007 AGCO Corporation

BOOM ASM-100FT,LH

ITEM	PART #	QTY	DESCRIPTION	COMMENTS
1	AG126884	1	BOLT-.88-9 X 1.50,G5,HHCS,Z/Y	
2	AG230129	2	BAR LINK SHORT	
8	AG260770	1	ANGLE-WEAR,UHMW	
13	AG309967	1	PLATE PIVOT WLDMT LH	
14	AG504509	1	BOOM WLDMT-BRKAWY,LH,100FT	
15	AG511099	AR	GREASE-MULTI PURPOSE LITH.	
18	AG514554	15	WASHER 0.50 FL ZN SAE TYP-A G8	
20	AG515352	4	PIN COTTER 0.18X2.00 SS	
23	AG522056	1	PIN-CLEVIS,1.00 X 3.62	
24	AG522057	2	PIN-CLEVIS 1.00 X 2.69	
25	AG522058	2	PIN-CLEVIS 1.00 X4.00	
27	AG523563	2	BOLT-.50-13X2.25,G5,ZN,HHD,FT	
29	AG524255	1	PIN-LYNCH,.25X1.56,ZN	
30	AG550124	6	NUT 0.50-13NC HEX ZN REG	
31	AG550264	2	WASHER 0.50 LK ZN REG	
33	AG550612	1	NUT 0.25-20NC HEX ZN REG	
35	AG551856	10	WASHER 1.00 FL ZN SAE TYPE-A	
38	AG561078	1	SCREW .25-20X 0.75 SET PL CPSQ	
40	AG561233	2	CLAMP-HOSE,1.81X2.75,36HS	
41	AG561892	7	FITTING LUBE STR 0.25UNF	
45	506334D1	1	LINKAGE ASM-CYL,HYD,INNER/MID	SEE PAGE 3-55
46	512868D1	1	CYLINDER ASM-BOOM TIP FOLD	SEE PAGE 5-61

Copyright © 2007 AGCO Corporation

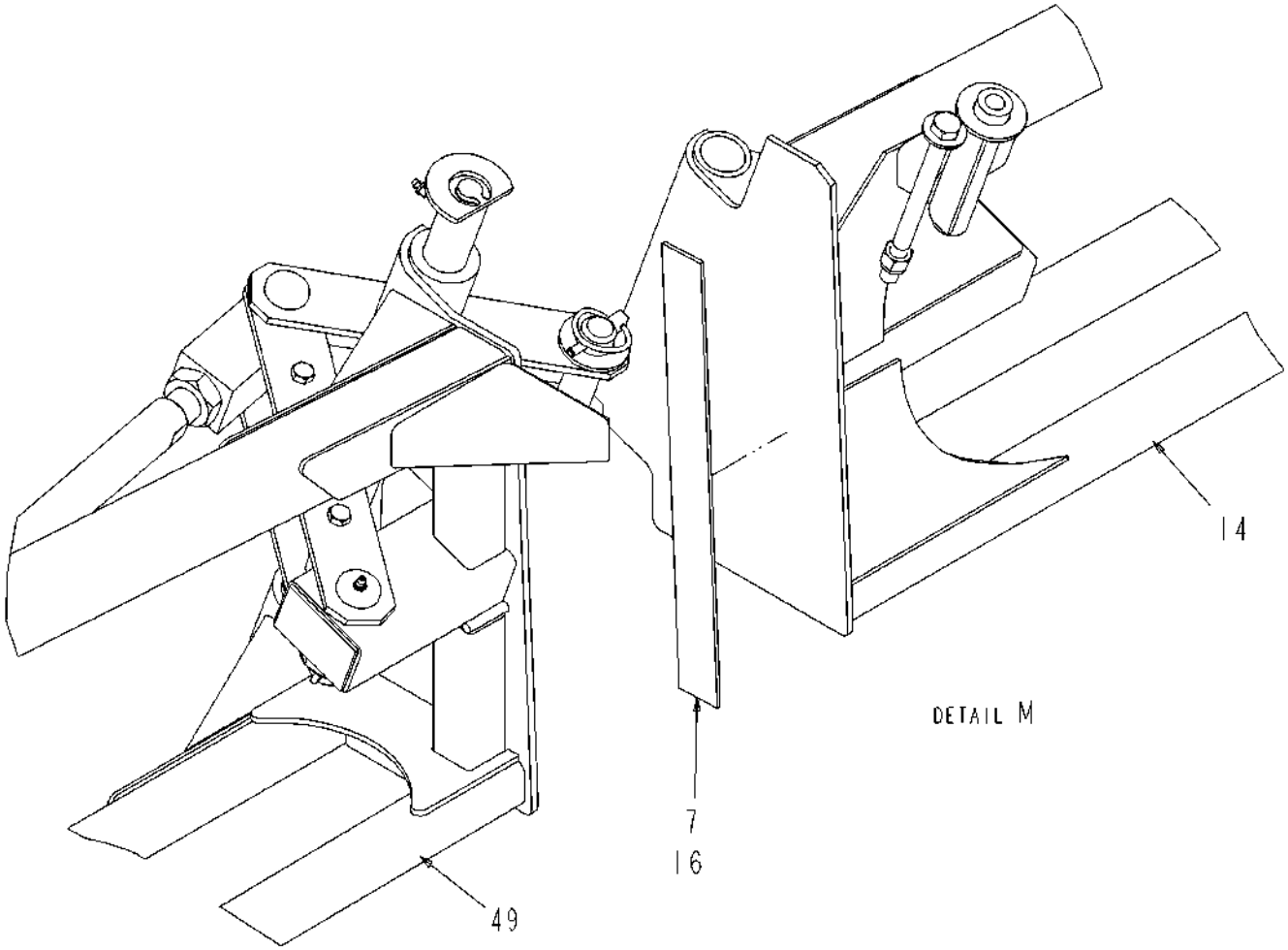

518867D1-01-R267-04.TIF

Copyright © 2007 AGCO Corporation

ITEM	PART #	QTY	DESCRIPTION	COMMENTS
7	AG233057	1	MATTING PAD	
14	AG504509	1	BOOM WLDMT-BRKAWY,LH,100FT	
16	AG512346	AR	3M 1300 YELLOW ADHESIVE (GAL)	
49	518861D1	1	BOOM WLDMT-INNER,90/100FT,LH	

Copyright © 2007 AGCO Corporation

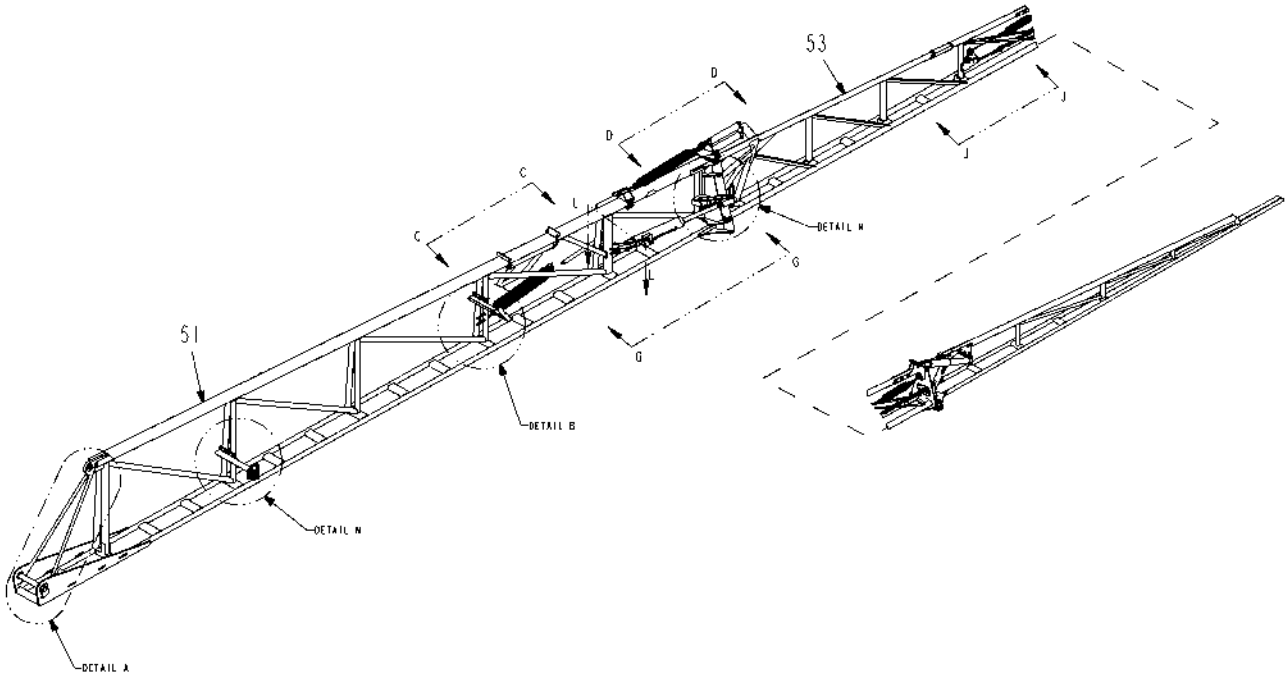

518030D1-01-R172-01.TIF

Copyright © 2007 AGCO Corporation

ITEM	PART #	QTY	DESCRIPTION	COMMENTS
51	514332D1	1	BOOM WLDMT-INNER,120,RH	
53	516622D1	1	TIP ASM-FOLD BACK,BM,120FT,RH	SEE PAGE 3-52

Copyright © 2007 AGCO Corporation

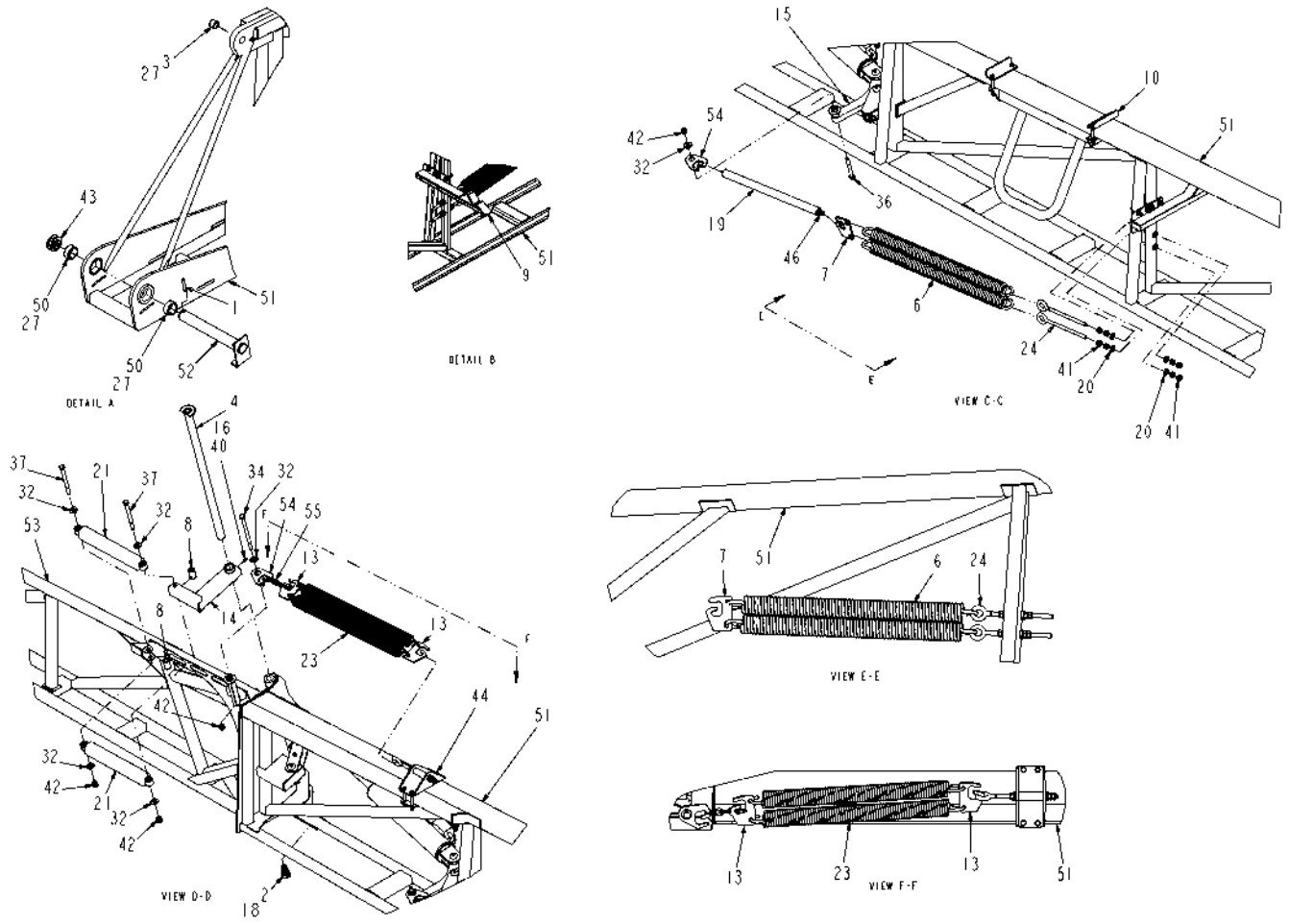

518030D1-01-R172-02.TIF

Copyright © 2007 AGCO Corporation

ITEM	PART #	QTY	DESCRIPTION	COMMENTS
1	WR10359	1	PIN-ROLL,3/8 X 2 1/2	
2	AG126884	1	BOLT-.88-9 X 1.50,G5,HHCS,Z/Y	
3	AG136947	1	BUSHING-1.00ID X 1.25OD X 1.00	
4	AG136967	1	PIN WELDMENT-PIVOT,INNER/MID	
6	AG136970	2	SPR-EXT,.39WIRE,2.25ODX67COIL	
7	AG136971	1	PLATE-EYEBOLT,DBL 2.25OD SPR	
8	AG136979	2	TUBE-SPCR,1.00ODX.563IDX1.56	
9	AG136980	1	REST INSTL-BM,FLD BACK,120,RH	SEE PAGE 3-61
10	AG136987	1	RETAINER INSTL-BM,4.00 TUBE	SEE PAGE 3-62
13	AG263036	2	PLATE-EYEBOLT	
14	AG309923	1	MOUNT SHOCK WLDMT	
15	AG309966	1	PLATE PIVOT WLDMT RH	
16	AG511099	AR	GREASE-MULTI PURPOSE LITH.	
18	AG512885	AR	LOCTITE ADHESIVE SEALANT BLUE	
19	AG513679	-	HOSE-1.00 EVA,TRANSLUCENT [BULK: 1.625 FT]	
20	AG514554	15	WASHER 0.50 FL ZN SAE TYP-A G8	
21	AG515274	2	SHOCK ABSORBER W/BOOT	[A]
23	AG517793	2	SPRING EXTENSION 2 IN ODX 25.75	
24	AG518025	2	EYEBOLT .50-13 UNC X 8.00 GALV	
27	AG522980	AR	LOCTITE-603,GREEN	
32	AG550353	6	WASHER 0.50 FL ZN REG TYPE-B	
34	AG551546	1	BOLT.50-13NCX 7.50G5 ZN HHD(D)	
36	AG552410	1	BOLT 0.50-13NCX 4.00 G5 ZN HHD	
37	AG560286	2	BOLT 0.50-13NCX 6.00 G5 ZN HHD	
40	AG561892	8	FITTING LUBE STR 0.25UNF	
41	AG562538	8	NUT 0.50-13NC HEX GALV REG OSZ	
42	AG601152	4	NUT 0.50-13NC HEX ZN REG NY	
43	401108X1	2	WASHER-HARD 45IDX63ODX3 ZNDI	
44	506322D1	1	BRKT INSTL-MTG,ADJ,SPR,UPR	SEE PAGE 4-191
46	506477D1	1	CHAIN-22 LINK,.19,SS	
50	514265D1	2	BUSHING-1.75ID X 2.25OD X 1.00	
51	514332D1	1	BOOM WLDMT-INNER,120,RH	
52	514339D1	1	PIN WLDMT-BOOM,INNER	
53	516622D1	1	TIP ASM-FOLD BACK,BM,120FT,RH	SEE PAGE 3-52
54	517156D1	2	PLATE-PVT,MTG,CHAIN	
55	517520D1	1	CHAIN-5 LINK,.19,SS	
	FOOTNOTE [A]		AG609376 - BOOT ONLY	

Copyright © 2007 AGCO Corporation

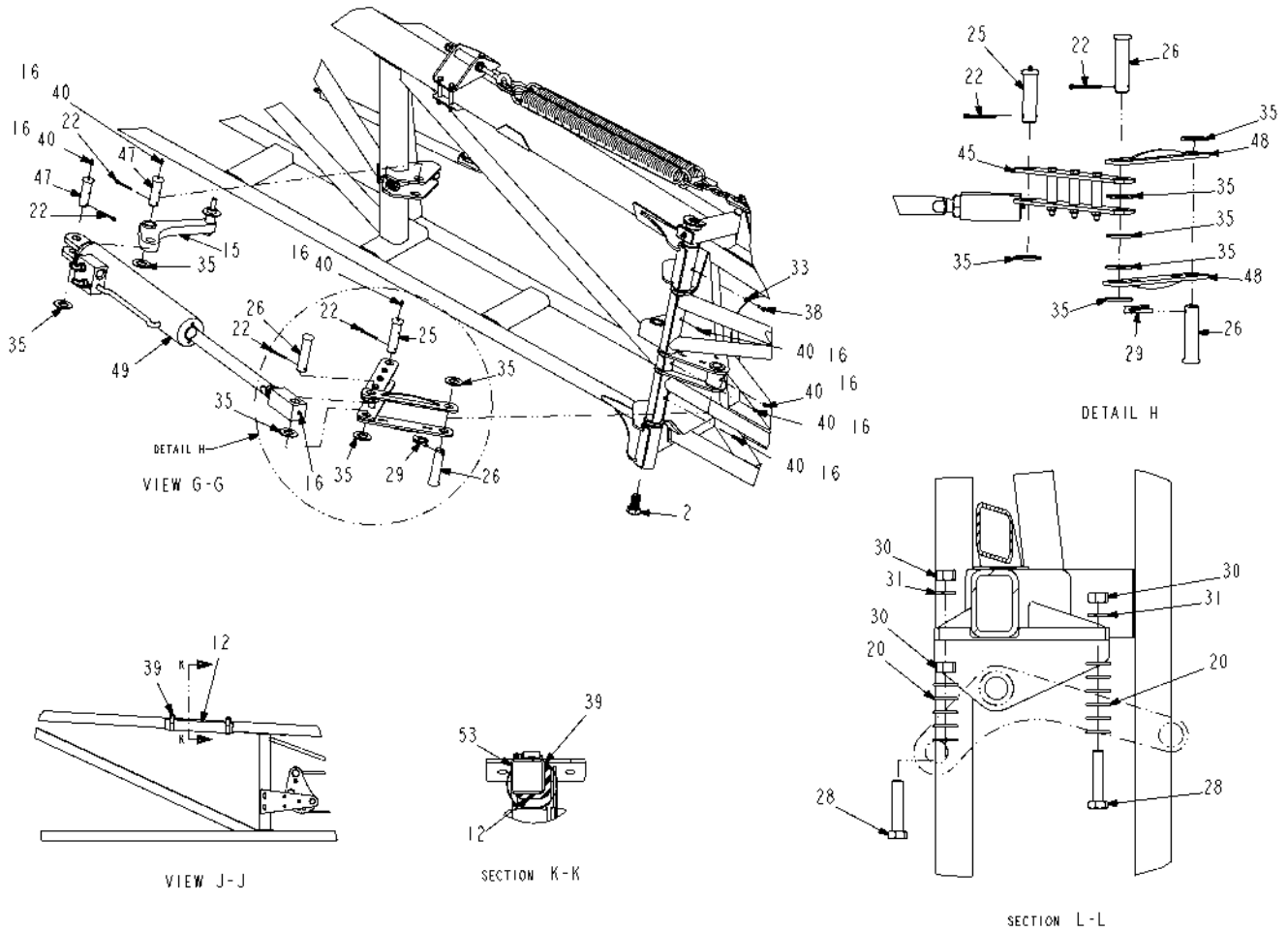

518030D1-01-R172-03.TIF

Copyright © 2007 AGCO Corporation

ITEM	PART #	QTY	DESCRIPTION	COMMENTS
2	AG126884	1	BOLT-.88-9 X 1.50,G5,HHCS,Z/Y	
12	AG260770	1	ANGLE-WEAR,UHMW	
15	AG309966	1	PLATE PIVOT WLDMT RH	
16	AG511099	AR	GREASE-MULTI PURPOSE LITH.	
20	AG514554	15	WASHER 0.50 FL ZN SAE TYP-A G8	
22	AG515352	4	PIN COTTER 0.18X2.00 SS	
25	AG522056	1	PIN-CLEVIS,1.00 X 3.62	
26	AG522058	2	PIN-CLEVIS 1.00 X4.00	
28	AG523563	2	BOLT-.50-13X2.25,G5,ZN,HHD,FT	
29	AG524255	1	PIN-LYNCH,.25X1.56,ZN	
30	AG550124	3	NUT 0.50-13NC HEX ZN REG	
31	AG550264	2	WASHER 0.50 LK ZN REG	
33	AG550612	1	NUT 0.25-20NC HEX ZN REG	
35	AG551856	8	WASHER 1.00 FL ZN SAE TYPE-A	
38	AG561078	1	SCREW .25-20X 0.75 SET PL CPSQ	
39	AG561218	2	CLAMP 1.31-2.25 HOSE 28HS	
40	AG561892	8	FITTING LUBE STR 0.25UNF	
45	506334D1	1	LINKAGE ASM-CYL,HYD,INNER/MID	SEE PAGE 3-55
47	508869D1	2	PIN-CLEVIS,1.00 X 3.00	
48	511877D1	2	BAR WLDMT-LINK,SHORT	
49	513448D1	1	CYLINDER ASM-FOLD BACK,BM,120	SEE PAGE 5-63
53	516622D1	1	TIP ASM-FOLD BACK,BM,120FT,RH	SEE PAGE 3-52

Copyright © 2007 AGCO Corporation

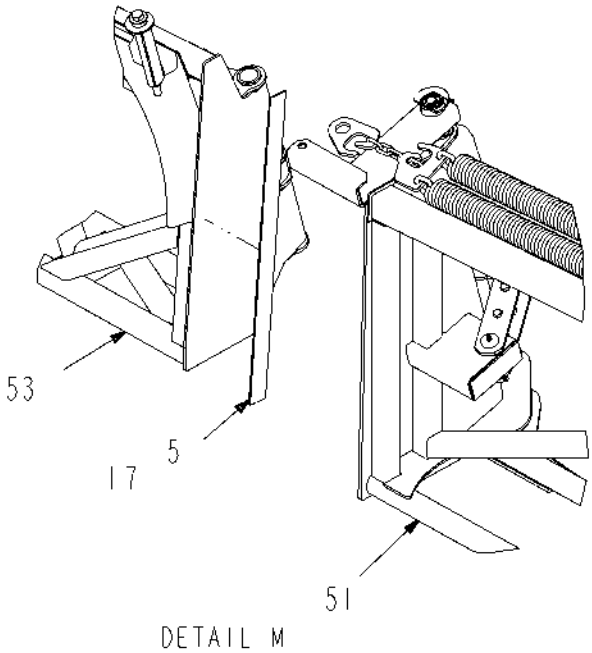

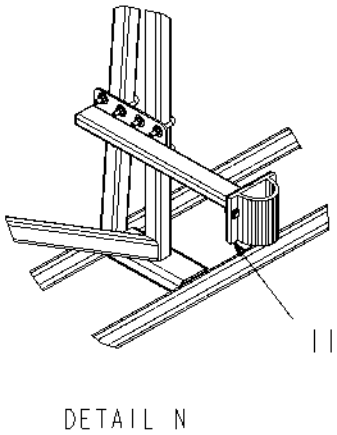

518030D1-01-R172-04.TIF

Copyright © 2007 AGCO Corporation

ITEM	PART #	QTY	DESCRIPTION	COMMENTS
5	AG136969	1	MATTING-RBR,.12X1.50X24.50	
11	AG136994	1	BUMPER INSTL-FOLD BACK,120,RH	SEE PAGE 3-64
17	AG512346	AR	3M 1300 YELLOW ADHESIVE (GAL)	
51	514332D1	1	BOOM WLDMT-INNER,120,RH	
53	516622D1	1	TIP ASM-FOLD BACK,BM,120FT,RH	SEE PAGE 3-52

Copyright © 2007 AGCO Corporation

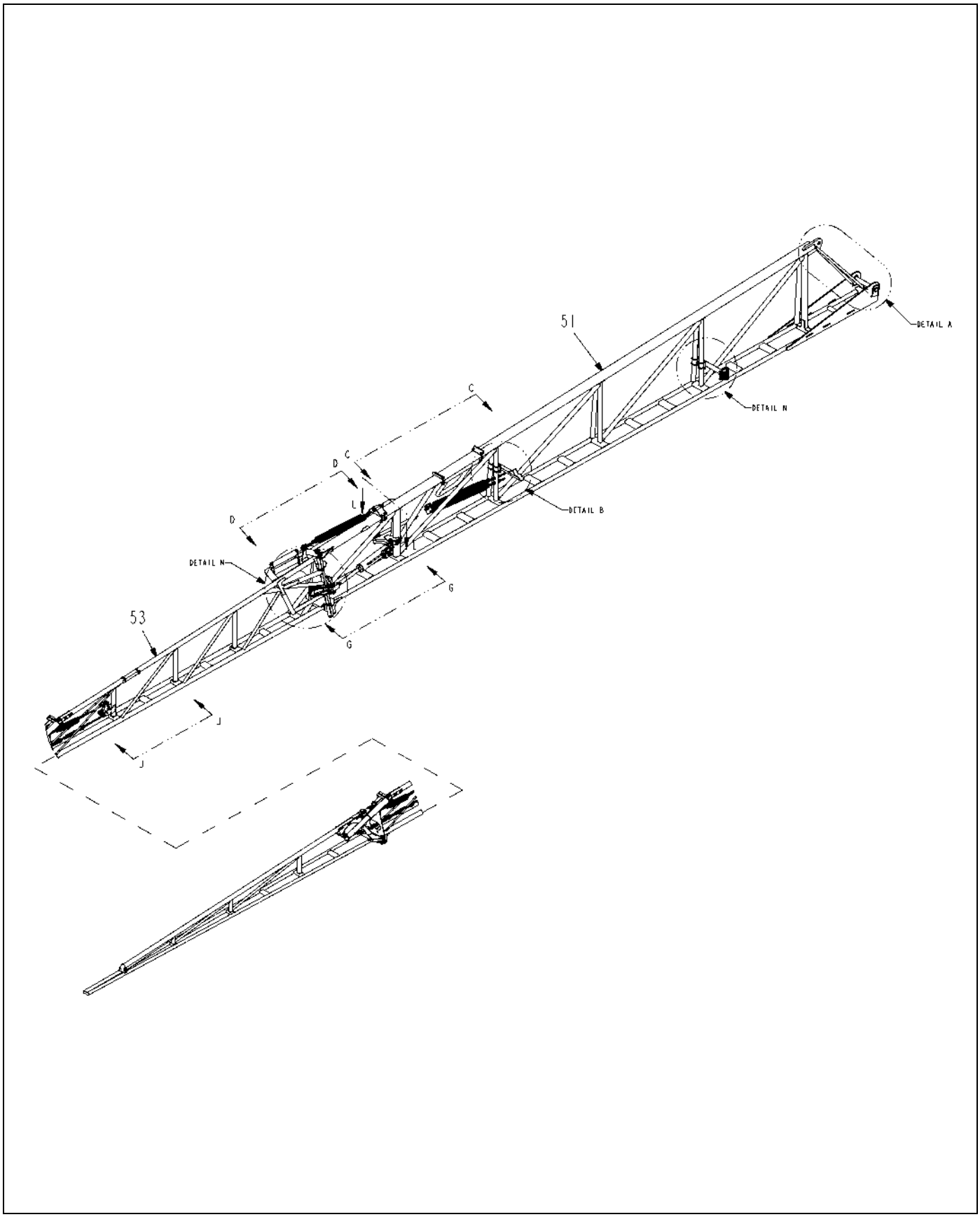

518029D1-01-R172-01.TIF

Copyright © 2007 AGCO Corporation

ITEM	PART #	QTY	DESCRIPTION	COMMENTS
51	514333D1	1	BOOM WLDMT-INNER,120,LH	
53	516623D1	1	TIP ASM-FOLD BACK,BM,120FT,LH	SEE PAGE 3-50

Copyright © 2007 AGCO Corporation

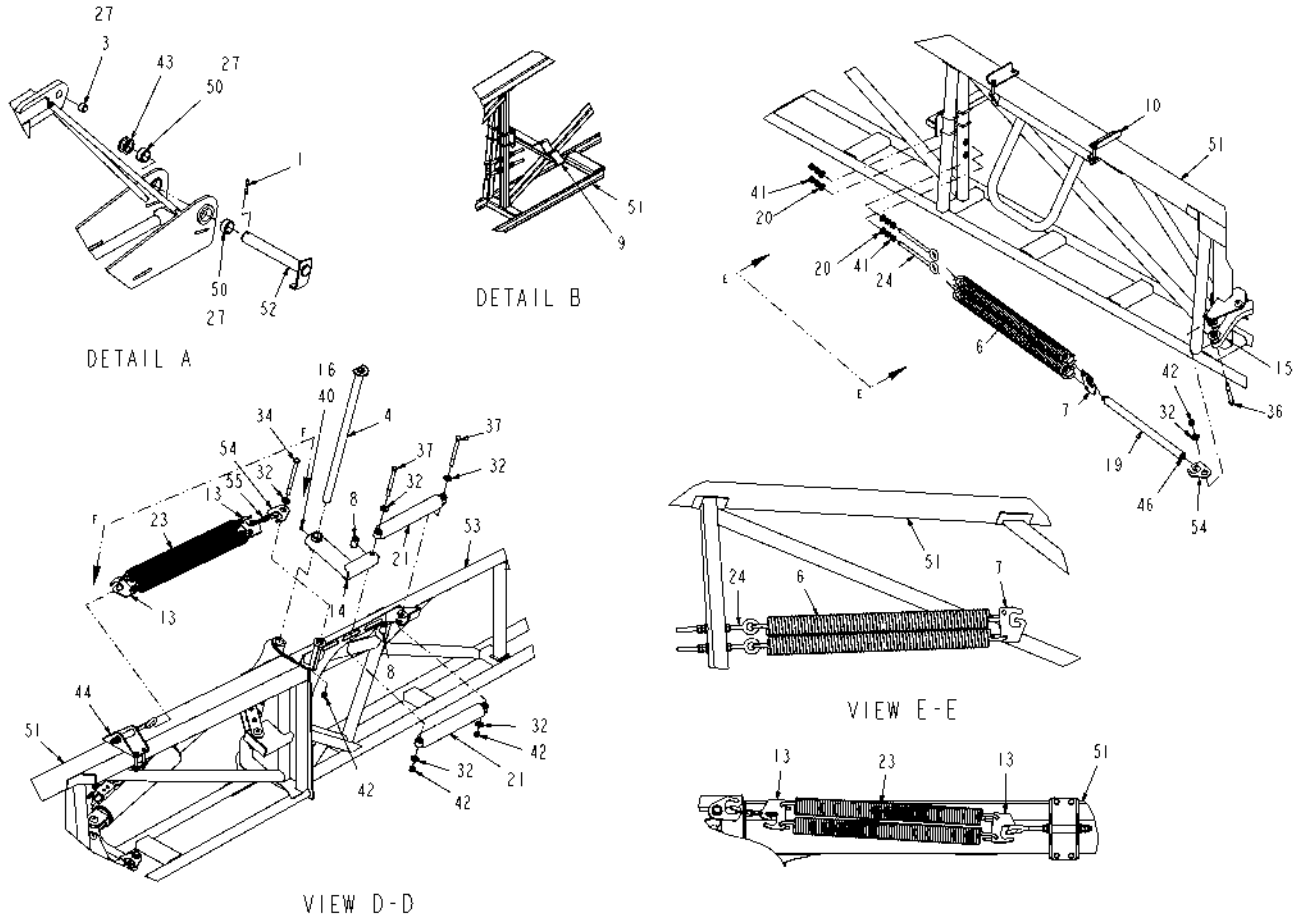

518029D1-01-R172-02.TIF

Copyright © 2007 AGCO Corporation

ITEM	PART #	QTY	DESCRIPTION	COMMENTS
1	WR10359	1	PIN-ROLL,3/8 X 2 1/2	
3	AG136947	1	BUSHING-1.00ID X 1.25OD X 1.00	
4	AG136967	1	PIN WELDMENT-PIVOT,INNER/MID	
6	AG136970	2	SPR-EXT,.39WIRE,2.25ODX67COIL	
7	AG136971	1	PLATE-EYEBOLT,DBL 2.25OD SPR	
8	AG136979	2	TUBE-SPCR,1.00ODX.563IDX1.56	
9	AG136981	1	REST INSTL-BM,FLD BACK,120,LH	SEE PAGE 3-60
10	AG136987	1	RETAINER INSTL-BM,4.00 TUBE	SEE PAGE 3-62
13	AG263036	2	PLATE-EYEBOLT	
14	AG309923	1	MOUNT SHOCK WLDMT	
15	AG309967	1	PLATE PIVOT WLDMT LH	
16	AG511099	AR	GREASE-MULTI PURPOSE LITH.	
19	AG513679	-	HOSE-1.00 EVA,TRANSLUCENT [BULK: 1.625 FT]	
20	AG514554	15	WASHER 0.50 FL ZN SAE TYP-A G8	
21	AG515274	2	SHOCK ABSORBER W/BOOT	[A]
23	AG517793	2	SPRING EXTENSION 2 IN ODX 25.75	
24	AG518025	2	EYEBOLT .50-13 UNC X 8.00 GALV	
27	AG522980	AR	LOCTITE-603,GREEN	
32	AG550353	6	WASHER 0.50 FL ZN REG TYPE-B	
34	AG551546	1	BOLT.50-13NCX 7.50G5 ZN HHD(D)	
36	AG552410	1	BOLT 0.50-13NCX 4.00 G5 ZN HHD	
37	AG560286	2	BOLT 0.50-13NCX 6.00 G5 ZN HHD	
40	AG561892	8	FITTING LUBE STR 0.25UNF	
41	AG562538	8	NUT 0.50-13NC HEX GALV REG OSZ	
42	AG601152	4	NUT 0.50-13NC HEX ZN REG NY	
43	401108X1	2	WASHER-HARD 45IDX63ODX3 ZNDI	
44	506322D1	1	BRKT INSTL-MTG,ADJ,SPR,UPR	SEE PAGE 4-191
50	514265D1	2	BUSHING-1.75ID X 2.25OD X 1.00	
51	514333D1	1	BOOM WLDMT-INNER,120,LH	
52	514339D1	1	PIN WLDMT-BOOM,INNER	
53	516623D1	1	TIP ASM-FOLD BACK,BM,120FT,LH	SEE PAGE 3-50
54	517156D1	2	PLATE-PVT,MTG,CHAIN	
55	517520D1	1	CHAIN-5 LINK,.19,SS	
	FOOTNOTE [A]		AG609376 - BOOT ONLY	

Copyright © 2007 AGCO Corporation

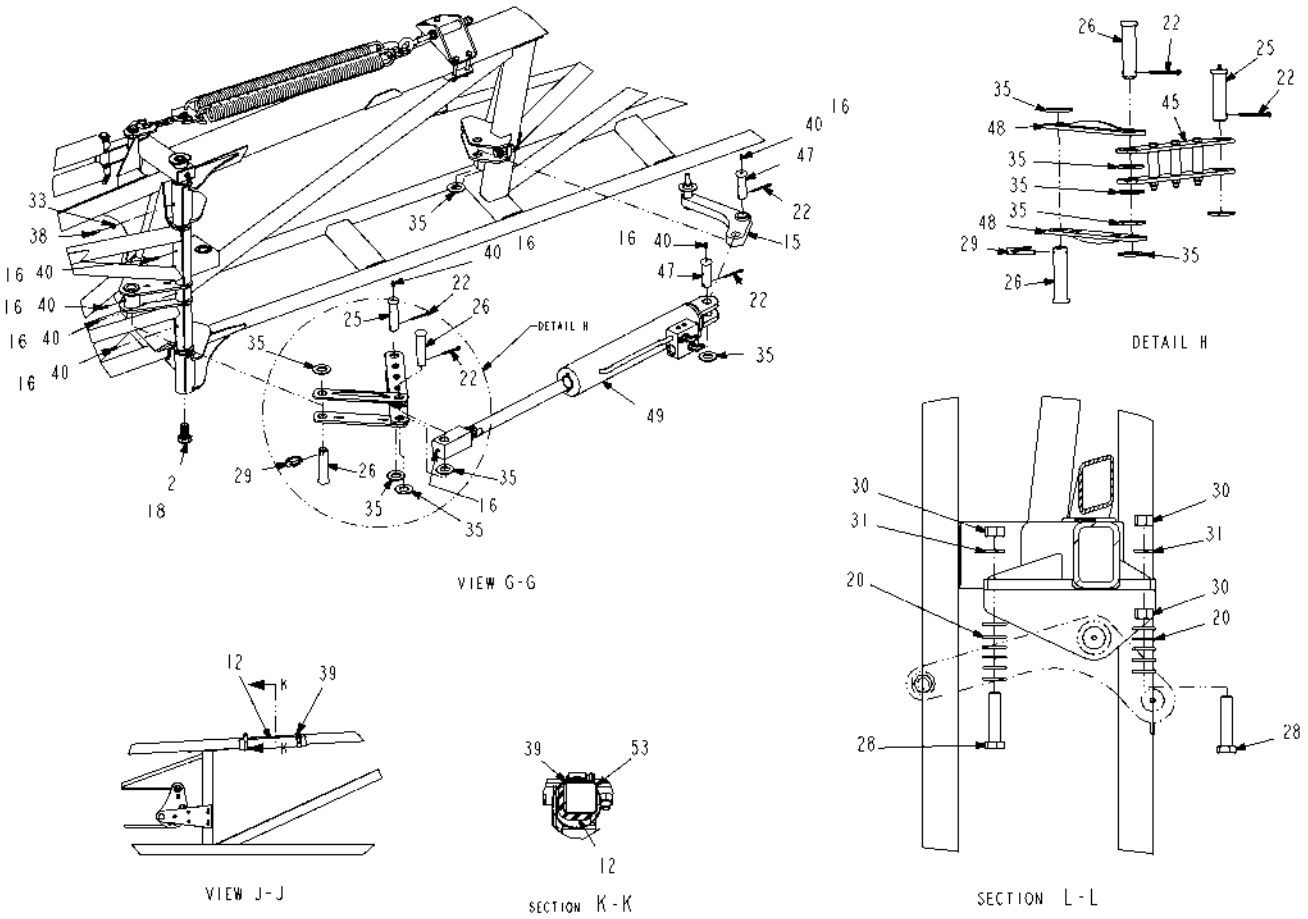

518029D1-01-R172-03.TIF

Copyright © 2007 AGCO Corporation

ITEM	PART #	QTY	DESCRIPTION	COMMENTS
2	AG126884	1	BOLT-.88-9 X 1.50,G5,HHCS,Z/Y	
12	AG260770	1	ANGLE-WEAR,UHMW	
15	AG309967	1	PLATE PIVOT WLDMT LH	
16	AG511099	AR	GREASE-MULTI PURPOSE LITH.	
18	AG512885	AR	LOCTITE ADHESIVE SEALANT BLUE	
20	AG514554	15	WASHER 0.50 FL ZN SAE TYP-A G8	
22	AG515352	4	PIN COTTER 0.18X2.00 SS	
25	AG522056	1	PIN-CLEVIS,1.00 X 3.62	
26	AG522058	2	PIN-CLEVIS 1.00 X4.00	
28	AG523563	2	BOLT-.50-13X2.25,G5,ZN,HHD,FT	
29	AG524255	1	PIN-LYNCH,.25X1.56,ZN	
30	AG550124	3	NUT 0.50-13NC HEX ZN REG	
31	AG550264	2	WASHER 0.50 LK ZN REG	
33	AG550612	1	NUT 0.25-20NC HEX ZN REG	
35	AG551856	8	WASHER 1.00 FL ZN SAE TYPE-A	
38	AG561078	1	SCREW .25-20X 0.75 SET PL CPSQ	
39	AG561218	2	CLAMP 1.31-2.25 HOSE 28HS	
40	AG561892	8	FITTING LUBE STR 0.25UNF	
45	506334D1	1	LINKAGE ASM-CYL,HYD,INNER/MID	SEE PAGE 3-55
47	508869D1	2	PIN-CLEVIS,1.00 X 3.00	
48	511877D1	2	BAR WLDMT-LINK,SHORT	
49	513448D1	1	CYLINDER ASM-FOLD BACK,BM,120	SEE PAGE 5-63
53	516623D1	1	TIP ASM-FOLD BACK,BM,120FT,LH	SEE PAGE 3-50

Copyright © 2007 AGCO Corporation

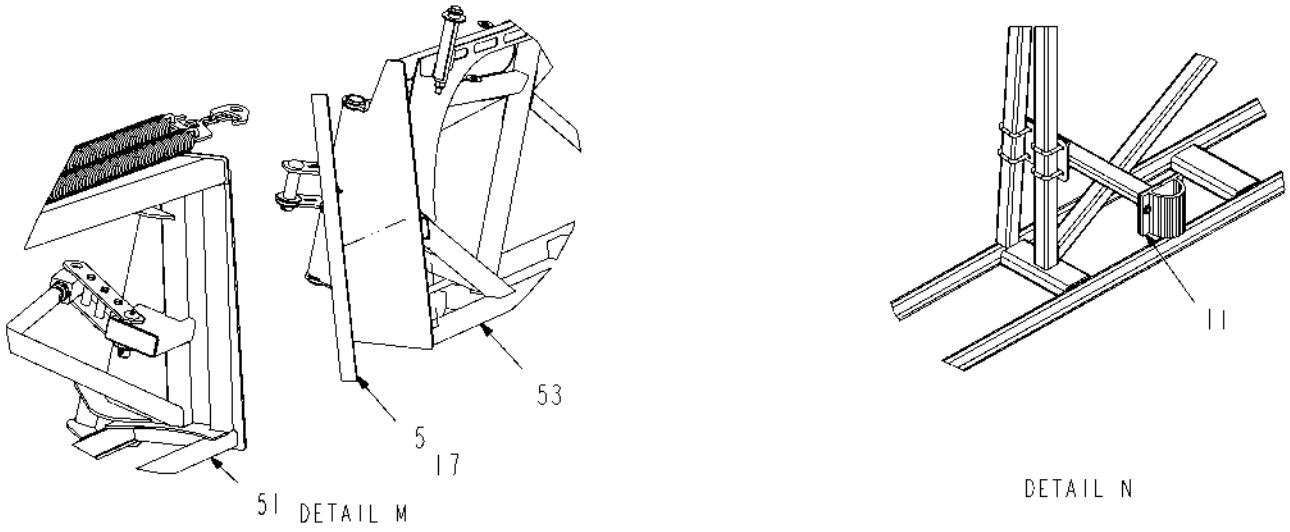

518029D1-01-R172-04.TIF

Copyright © 2007 AGCO Corporation

ITEM	PART #	QTY	DESCRIPTION	COMMENTS
5	AG136969	1	MATTING-RBR,.12X1.50X24.50	
11	AG136993	1	BUMPER INSTL-FOLD BACK,120,LH	SEE PAGE 3-63
17	AG512346	AR	3M 1300 YELLOW ADHESIVE (GAL)	
51	514333D1	1	BOOM WLDMT-INNER,120,LH	
53	516623D1	1	TIP ASM-FOLD BACK,BM,120FT,LH	SEE PAGE 3-50

Copyright © 2007 AGCO Corporation

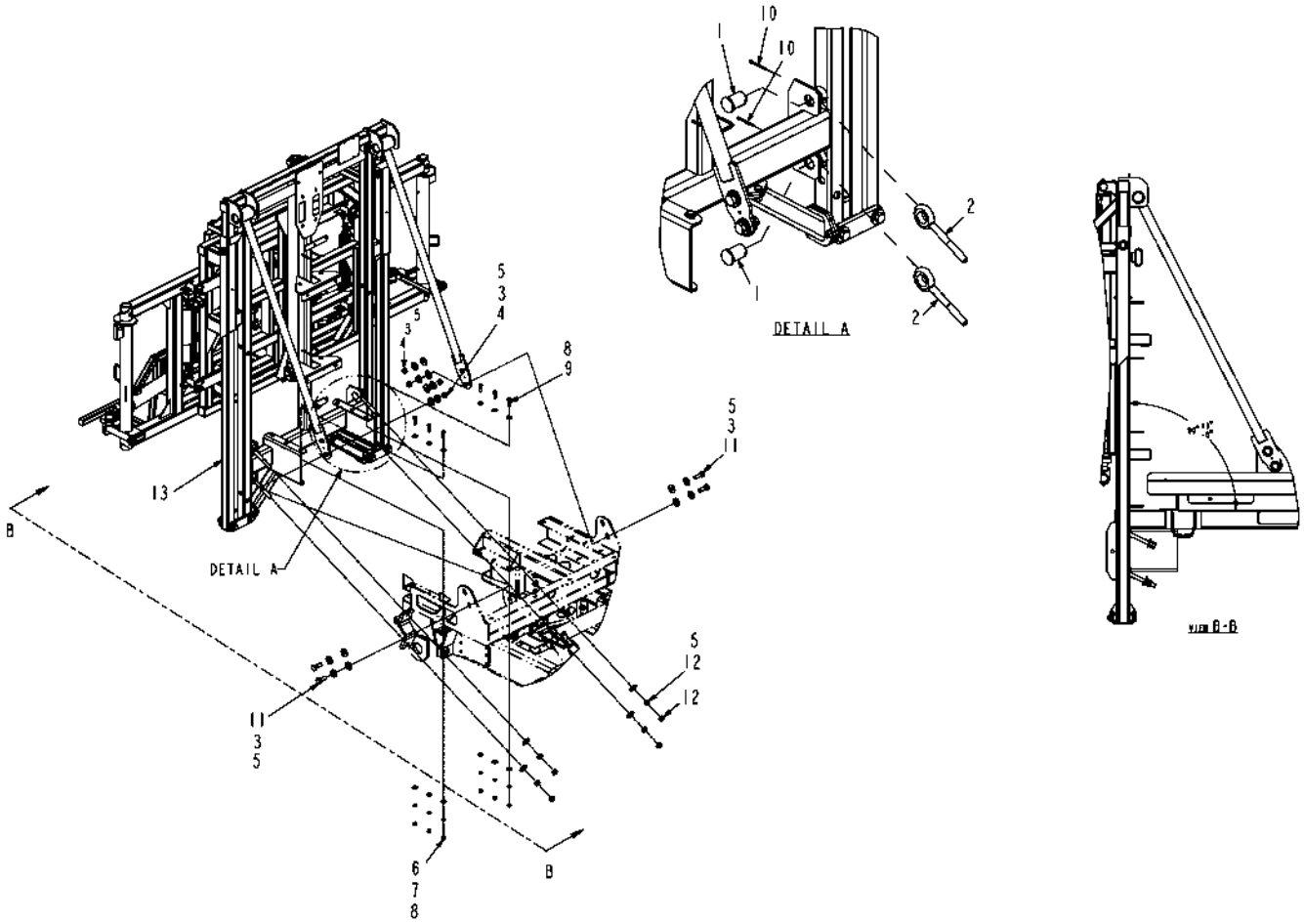

512477D1-01-N562-.TIF

Copyright © 2007 AGCO Corporation

BOOM TREE INSTL-CTR,80/90/100

ITEM	PART #	QTY	DESCRIPTION	COMMENTS
1	AG200557	4	WLDMT PIN PIVOT	
2	AG200573	4	BOLT EYE .75NCX6.0 SHK DF GALV	
3	AG521690	8	WSHR-FLT,1.88X.81X.25,BLK,HARD	
4	AG522703	4	NUT-.75-16,G8,ZN,H	
5	AG550116	12	WASHER 0.75 FL ZN REG TYPE-B	
6	AG550124	6	NUT 0.50-13NC HEX ZN REG	
7	AG550264	6	WASHER 0.50 LK ZN REG	
8	AG550353	12	WASHER 0.50 FL ZN REG TYPE-B	
9	AG553956	6	BOLT 0.50-13NCX 1.75 G5 ZN HHD	
10	AG561199	4	PIN COTTER 0.18X2.50 ZN	
11	AG561201	4	BOLT 0.75-16NFX 2.25 G8 ZN HHD	
12	AG562537	8	NUT 0.75-10NC HEX GALV REG OSZ	
13	512478D1	1	BOOM TREE ASM-CTR,80/90/100FT	SEE PAGE 3-28

Copyright © 2007 AGCO Corporation

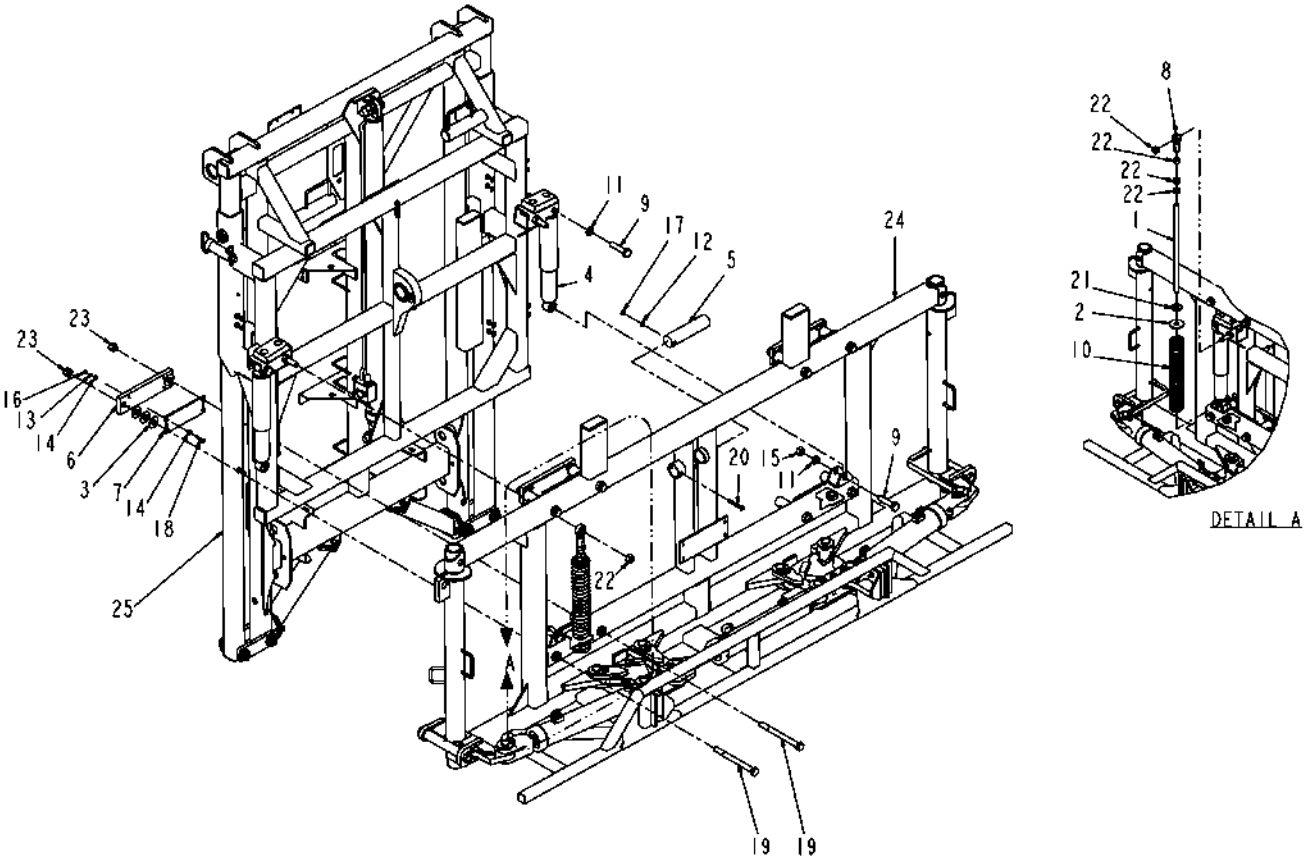

512478D1-01-N562-.TIF

Copyright © 2007 AGCO Corporation

BOOM TREE ASM-CTR,80/90/100FT

ITEM	PART #	QTY	DESCRIPTION	COMMENTS
1	AG108268	2	ROD THREADED	
2	AG108604	2	SPRING RETAINER WLDMT	
3	AG108622	24	WASHER FLAT THIN	
4	AG136741	2	SHOCK-GAS,ADJ,3 POSITION	
5	AG229652	1	SHAFT BOOM PIVOT	
6	AG229659	4	PLATE MOUNT WEAR PAD	
7	AG229661	4	PAD WEAR	
8	AG517248	2	ROD END BALL JOINT	
9	AG517993	4	BOLT 0.75-10NCX 3.25 G5 ZN HHD	
10	AG518092	2	SPRING COMPRESSION .44X16.50	
11	AG550108	4	WASHER 0.75 LK ZN REG	
12	AG550191	1	WASHER 0.37 LK ZN REG	
13	AG550493	16	WASHER 0.25 LK ZN REG	
14	AG550507	32	WASHER 0.25 FL ZN REG TYPE-B	
15	AG550590	2	NUT 0.75-10NC HEX ZN REG	
16	AG550612	16	NUT 0.25-20NC HEX ZN REG	
17	AG550825	1	NUT 0.37-16NC HEX ZN REG	
18	AG550949	16	BOLT 0.25-20NCX 1.50 G5 ZN HHD	
19	AG553646	8	BOLT 0.75-10NCX 8.50 G5 ZN HHD	
20	AG561072	1	BOLT 0.37-16NCX 3.00 G5 ZN HHD	
21	AG561156	2	WASHER 0.75 FL ZN SAE TYPE-A	
22	AG562291	8	NUT 0.75-16NF HEX ZN REG	
23	AG603864	8	NUT 0.75-10NC HEX ZN REG NY	
24	512479D1	1	BOOM ASM-CTR,80/90/100FT	SEE PAGE 3-30
25	512482D1	1	TREE ASM-BOOM,CTR,2.50 SLIDE	SEE PAGE 3-31

Copyright © 2007 AGCO Corporation

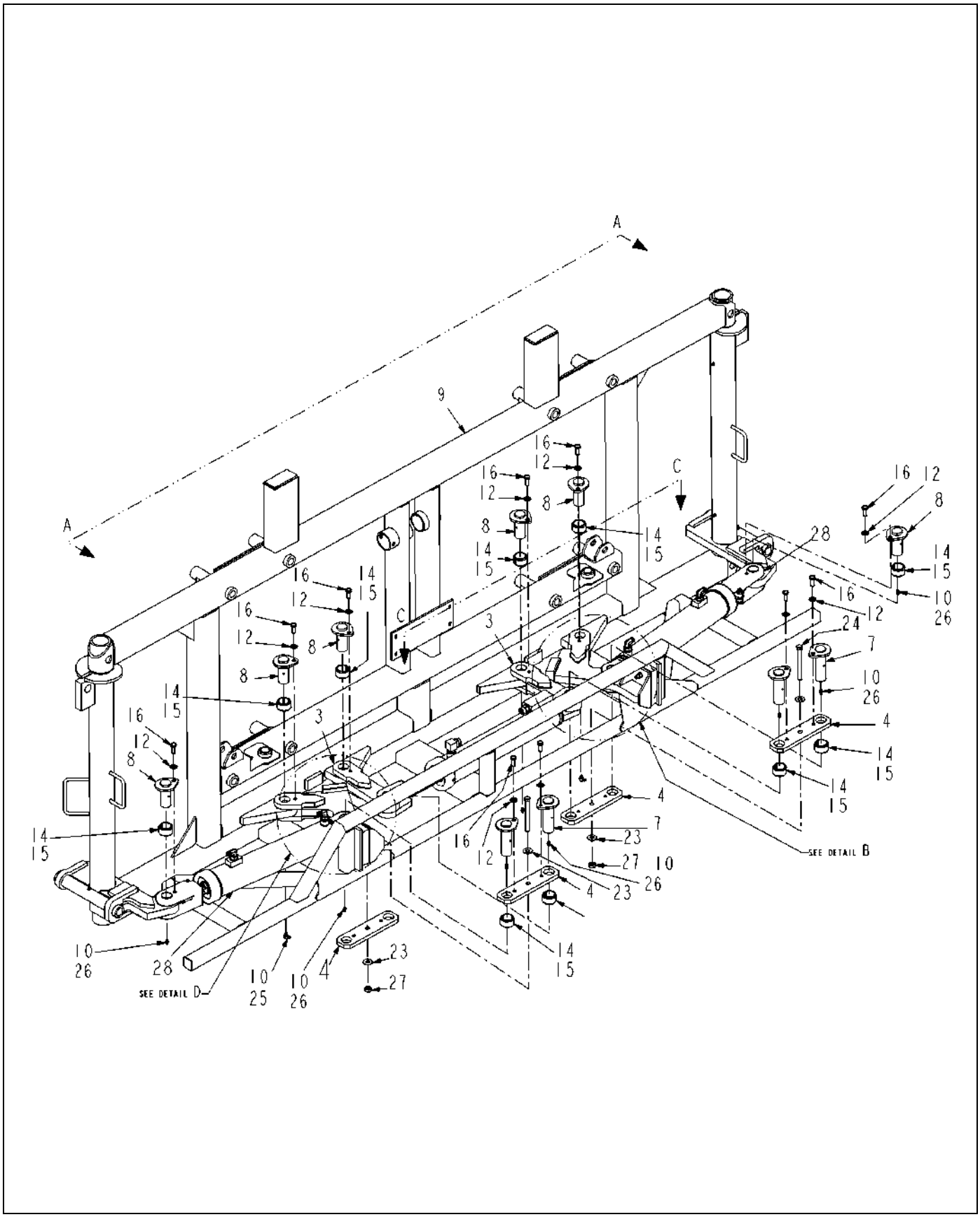

512479D1-02-R506-01.TIF

Copyright © 2007 AGCO Corporation

ITEM	PART #	QTY	DESCRIPTION	COMMENTS
3	AG261821	2	PIVOT WLDMT-LINK	
4	AG261822	4	PLATE-LINK	
7	AG328805	4	PIN WLDMT-SUPPORT,CENTER	
8	AG328806	6	PIN WLDMT-SUPPORT	
9	AG504622	1	CENTER WLDMT-BOOM	
10	AG511099	AR	GREASE-MULTI PURPOSE LITH.	
12	AG514559	10	WASHER 0.37 FL ZN SAE TYP-A G8	
14	AG522925	10	BUSHING-1.25 ID X1.625 OD	
15	AG522980	AR	LOCTITE-603,GREEN	
16	AG550175	10	BOLT 0.37-16NCX 1.00 G5 ZN HHD	
23	AG551406	4	WASHER 0.43 FL ZN REG TYPE-B	
24	AG558796	2	BOLT 0.43-14NCX 4.50 G5 ZN HHD	
25	AG561826	2	FITTING LUBE 0.25-28 NF 90D	
26	AG561892	14	FITTING LUBE STR 0.25UNF	
27	AG562193	2	NUT 0.43-14NC HEX ZN C-LK	
28	512480D1	2	CYLINDER ASM-BOOM SWING	SEE PAGE 5-1

Copyright © 2007 AGCO Corporation

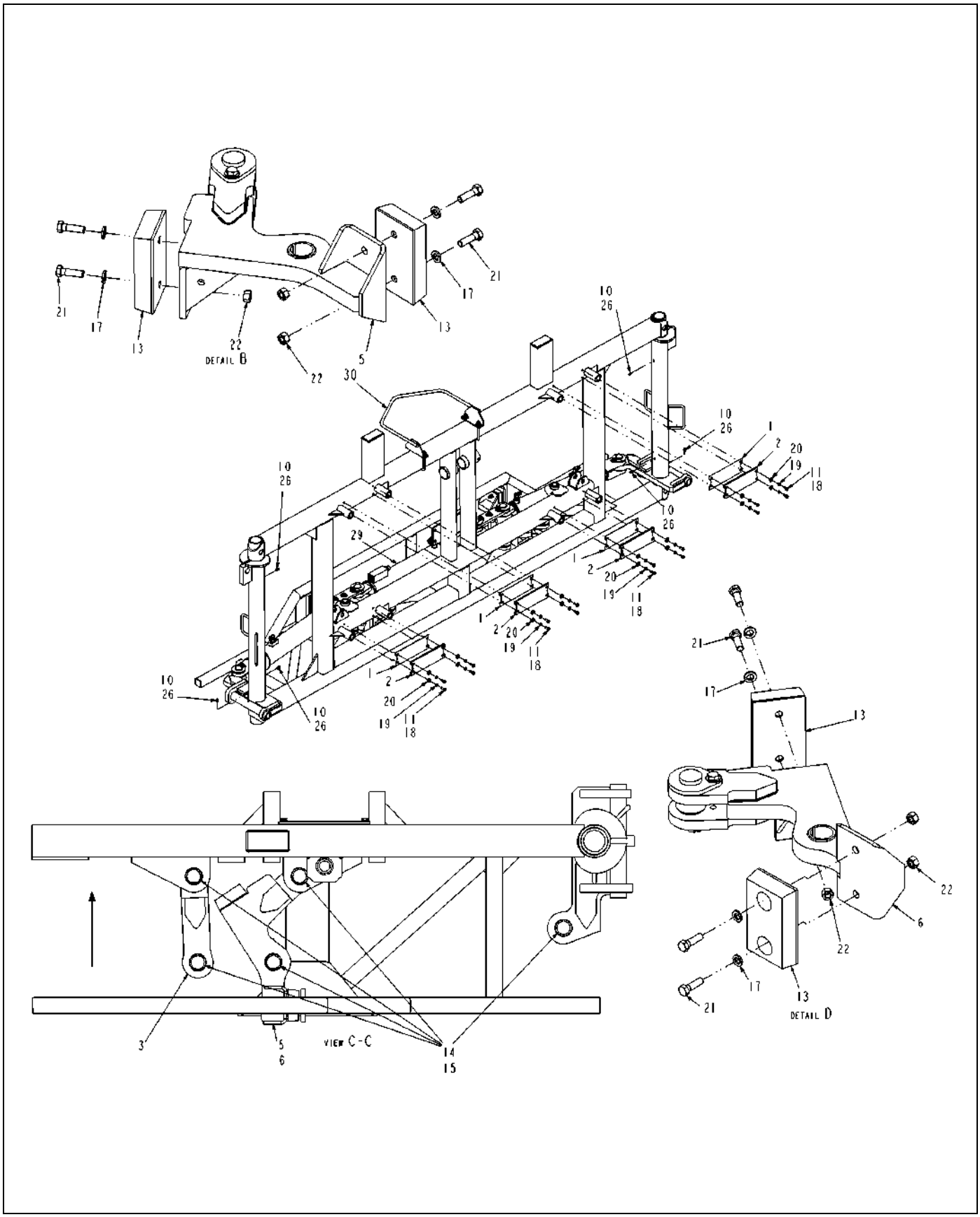

512479D1-02-R506-02.TIF

Copyright © 2007 AGCO Corporation

ITEM	PART #	QTY	DESCRIPTION	COMMENTS
1	AG229660	4	PLATE SHIM	
2	AG229661	4	PAD WEAR	
3	AG261821	2	PIVOT WLDMT-LINK	
5	AG327314	1	PIVOT WLDMT-RH	
6	AG327315	1	PIVOT WLDMT-LH	
10	AG511099	AR	GREASE-MULTI PURPOSE LITH.	
11	AG512885	AR	LOCTITE ADHESIVE SEALANT BLUE	
13	AG514814	4	BUMPER PAD	
14	AG522925	10	BUSHING-1.25 ID X1.625 OD	
15	AG522980	AR	LOCTITE-603,GREEN	
17	AG550191	8	WASHER 0.37 LK ZN REG	
18	AG550485	16	BOLT 0.25-20NCX 0.75 G5 ZN HHD	
19	AG550493	16	WASHER 0.25 LK ZN REG	
20	AG550507	16	WASHER 0.25 FL ZN REG TYPE-B	
21	AG550515	8	BOLT 0.37-16NCX 1.25 G5 ZN HHD	
22	AG550825	6	NUT 0.37-16NC HEX ZN REG	
26	AG561892	14	FITTING LUBE STR 0.25UNF	
29	512481D1	1	CYLINDER ASM-BOOM BREAKAWAY	SEE PAGE 5-4
30	512658D1	1	GUARD ASM-VALVE,MSO	

Copyright © 2007 AGCO Corporation

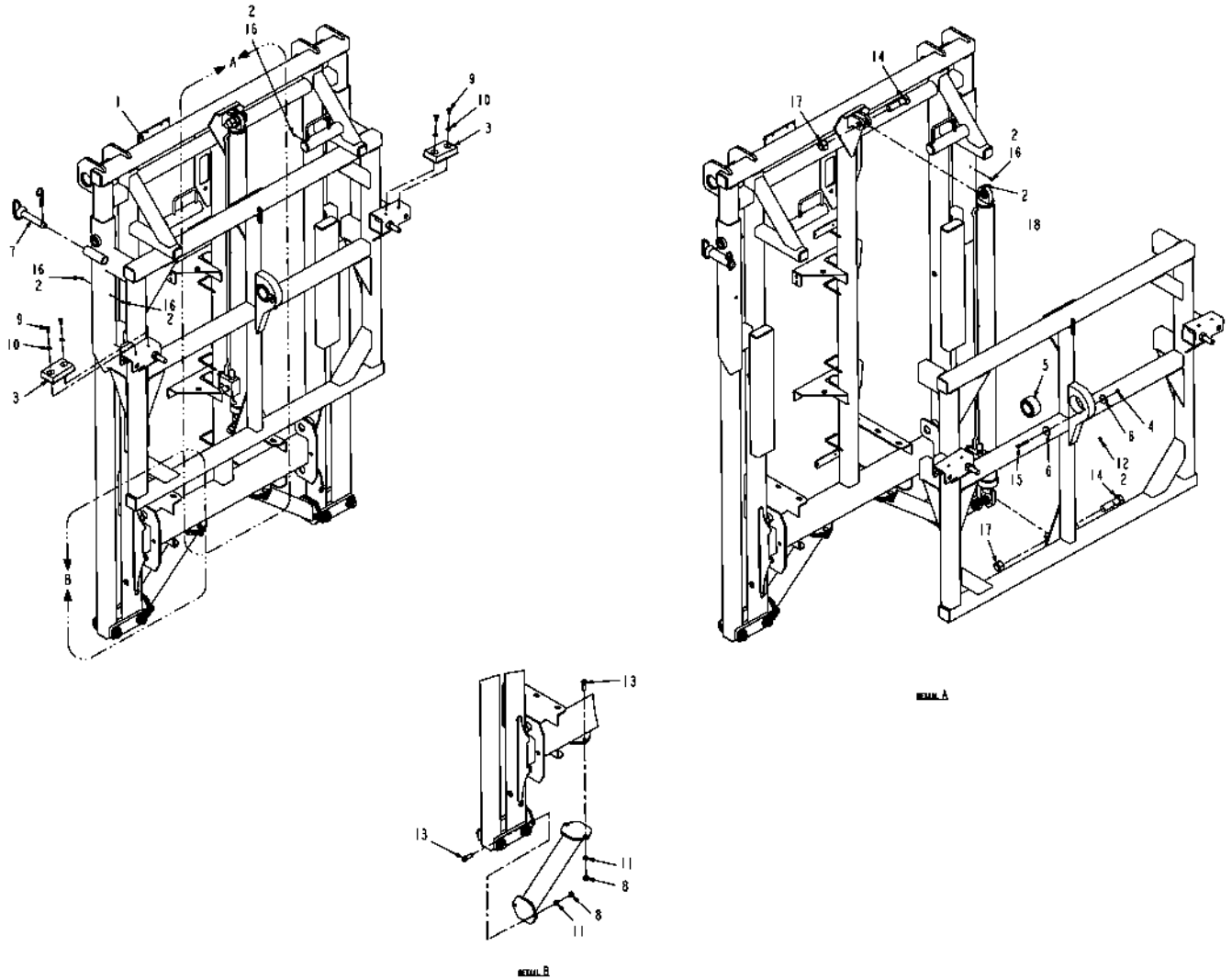

512482D1-01-N562-.TIF

Copyright © 2007 AGCO Corporation

TREE ASM-BOOM,CTR,2.50 SLIDE

ITEM	PART #	QTY	DESCRIPTION	COMMENTS
1	AG123005	1	BOOM TREE WLDMT	
2	AG511099	AR	GREASE-MULTI PURPOSE LITH.	
3	AG514814	2	BUMPER PAD	
4	AG516403	1	NUT 0.31-18NC HEX SS REG NY	
5	AG518032	1	BUSHING SELF ALIGNING RADIAL	[A]
6	AG518358	2	WASHER FENDER .31 X 1.50 OD	
7	AG524263	1	PIN-HITCH,1.00X4.50	
8	AG550124	8	NUT 0.50-13NC HEX ZN REG	
9	AG550167	4	BOLT 0.37-16NCX 0.62 G5 ZN HHD	
10	AG550191	4	WASHER 0.37 LK ZN REG	
11	AG550264	8	WASHER 0.50 LK ZN REG	
12	AG550280	1	FITTING LUB.12-27NPTFX0.68	
13	AG550817	8	BOLT 0.50-13NCX 1.50 G5 ZN HHD	
14	AG561177	2	BOLT 1.00- 8NCX 3.50 G5 ZN HHD	
15	AG561251	1	BOLT 0.31-18NCX 2.25 G5 ZN HHD	
16	AG561892	4	FITTING LUBE STR 0.25UNF	
17	AG563036	2	LOCKNUT 1.00 IN NC HES ESNA	
18	512483D1	1	CYLINDER ASM-HOIST,BOOM	SEE PAGE 5-9
	FOOTNOTE [A]		PIN THRU BEARING-AG229652, WLDMNT BEARING PRESSED INTO - AG309764	

Copyright © 2007 AGCO Corporation

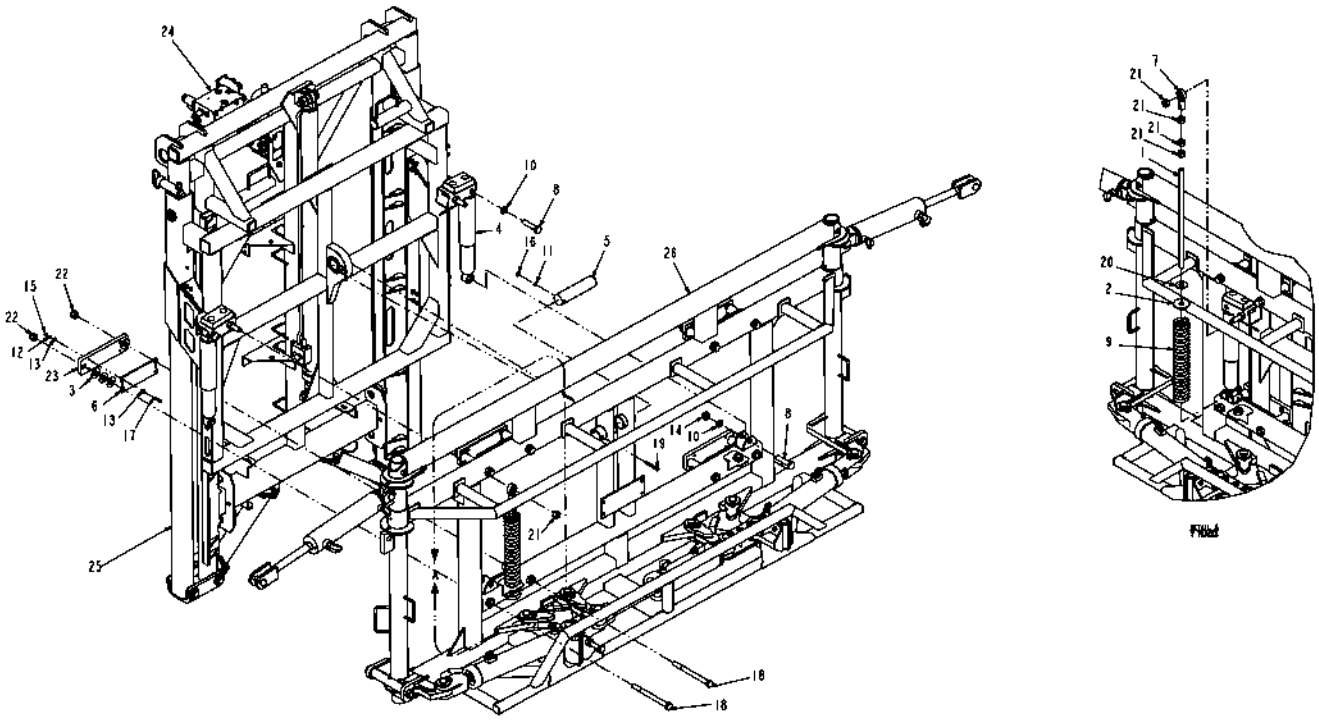

513460D1-01-N562-.TIF

Copyright © 2007 AGCO Corporation

ITEM	PART #	QTY	DESCRIPTION	COMMENTS
1	AG108268	2	ROD THREADED	
2	AG108604	2	SPRING RETAINER WLDMT	
3	AG108622	24	WASHER FLAT THIN	
4	AG136741	2	SHOCK-GAS,ADJ,3 POSITION	
5	AG229652	1	SHAFT BOOM PIVOT	
6	AG229661	4	PAD WEAR	
7	AG517248	2	ROD END BALL JOINT	
8	AG517993	4	BOLT 0.75-10NCX 3.25 G5 ZN HHD	
9	AG518092	2	SPRING COMPRESSION .44X16.50	
10	AG550108	4	WASHER 0.75 LK ZN REG	
11	AG550191	1	WASHER 0.37 LK ZN REG	
12	AG550493	16	WASHER 0.25 LK ZN REG	
13	AG550507	32	WASHER 0.25 FL ZN REG TYPE-B	
14	AG550590	2	NUT 0.75-10NC HEX ZN REG	
15	AG550612	16	NUT 0.25-20NC HEX ZN REG	
16	AG550825	1	NUT 0.37-16NC HEX ZN REG	
17	AG550949	16	BOLT 0.25-20NCX 1.50 G5 ZN HHD	
18	AG553646	8	BOLT 0.75-10NCX 8.50 G5 ZN HHD	
19	AG561072	1	BOLT 0.37-16NCX 3.00 G5 ZN HHD	
20	AG561156	2	WASHER 0.75 FL ZN SAE TYPE-A	
21	AG562291	8	NUT 0.75-16NF HEX ZN REG	
22	AG603864	8	NUT 0.75-10NC HEX ZN REG NY	
23	506593D1	4	PLATE-MTG,HEAVY,WEAR PAD	
24	512599D1	1	BLOCK INSTL-HYD,BM/AUTOBOOM,G2	SEE PAGE 5-28
25	513461D1	1	TREE ASM-BOOM,CENTER,3.00 SL	SEE PAGE 3-33
26	513462D1	1	BOOM ASM-CENTER,120	SEE PAGE 3-35
27	513463D1	1	HOSE INSTL-HYD,W/AUTOBM,BM,120	SEE PAGE 11-14

Copyright © 2007 AGCO Corporation

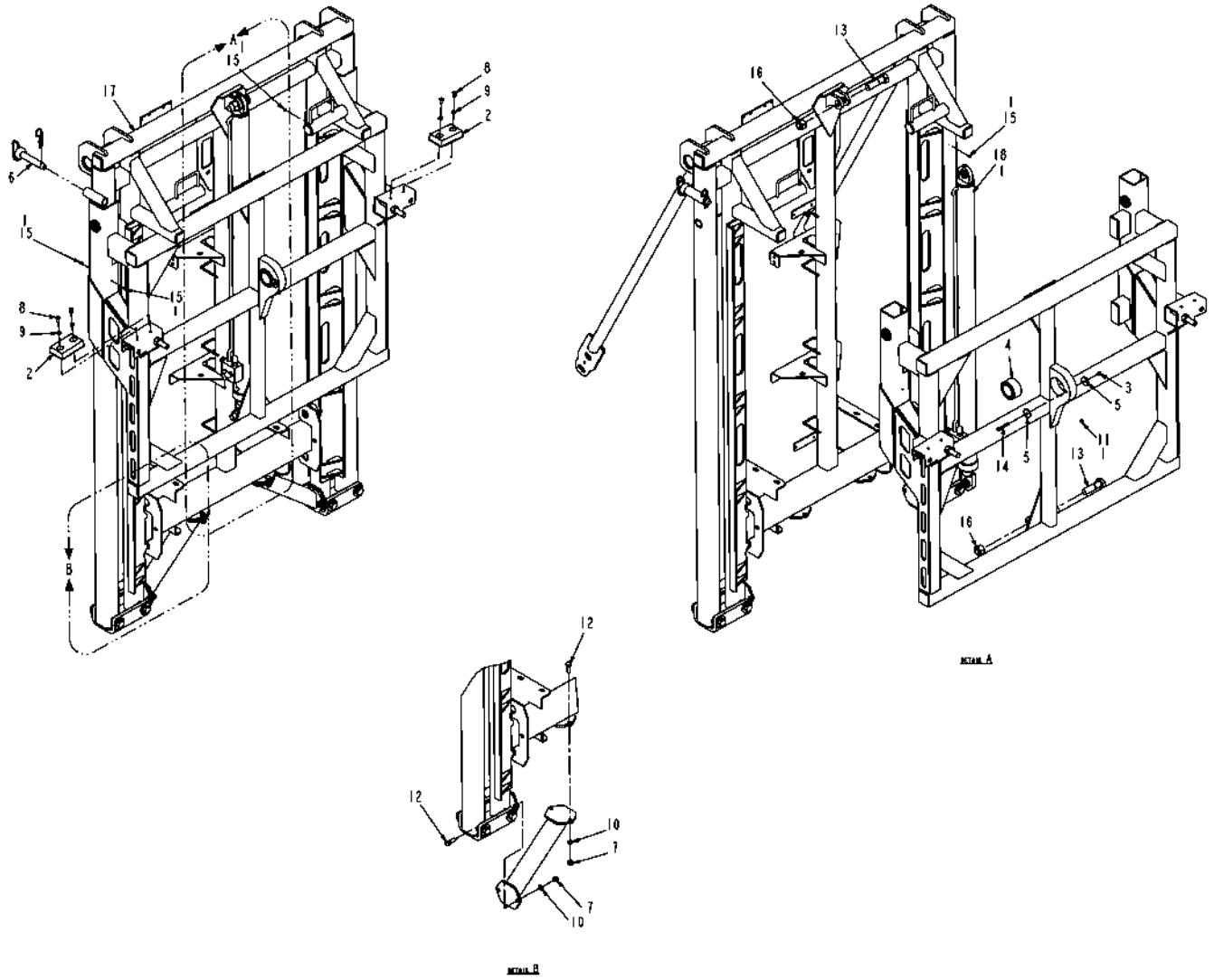

513461D1-02-N812-.TIF

Copyright © 2007 AGCO Corporation

TREE ASM-BOOM,CENTER,3.00 SL

ITEM	PART #	QTY	DESCRIPTION	COMMENTS
1	AG511099	AR	GREASE-MULTI PURPOSE LITH.	
2	AG514814	2	BUMPER PAD	
3	AG516403	1	NUT 0.31-18NC HEX SS REG NY	
4	AG518032	1	BUSHING SELF ALIGNING RADIAL	[A]
5	AG518358	2	WASHER FENDER .31 X 1.50 OD	
6	AG524263	1	PIN-HITCH,1.00X4.50	
7	AG550124	8	NUT 0.50-13NC HEX ZN REG	
8	AG550167	4	BOLT 0.37-16NCX 0.62 G5 ZN HHD	
9	AG550191	4	WASHER 0.37 LK ZN REG	
10	AG550264	8	WASHER 0.50 LK ZN REG	
11	AG550280	1	FITTING LUB.12-27NPTFX0.68	
12	AG550817	8	BOLT 0.50-13NCX 1.50 G5 ZN HHD	
13	AG561177	2	BOLT 1.00- 8NCX 3.50 G5 ZN HHD	
14	AG561251	1	BOLT 0.31-18NCX 2.25 G5 ZN HHD	
15	AG561892	4	FITTING LUBE STR 0.25UNF	
16	AG563036	2	LOCKNUT 1.00 IN NC HES ESNA	
17	506321D1	1	BOOM TREE WLDMT-3.00 SLIDE	
18	512483D1	1	CYLINDER ASM-HOIST,BOOM	SEE PAGE 5-9
	FOOTNOTE [A]		PIN THRU BEARING-AG229652, WLDMNT BEARING PRESSED INTO - AG309764	

Copyright © 2007 AGCO Corporation

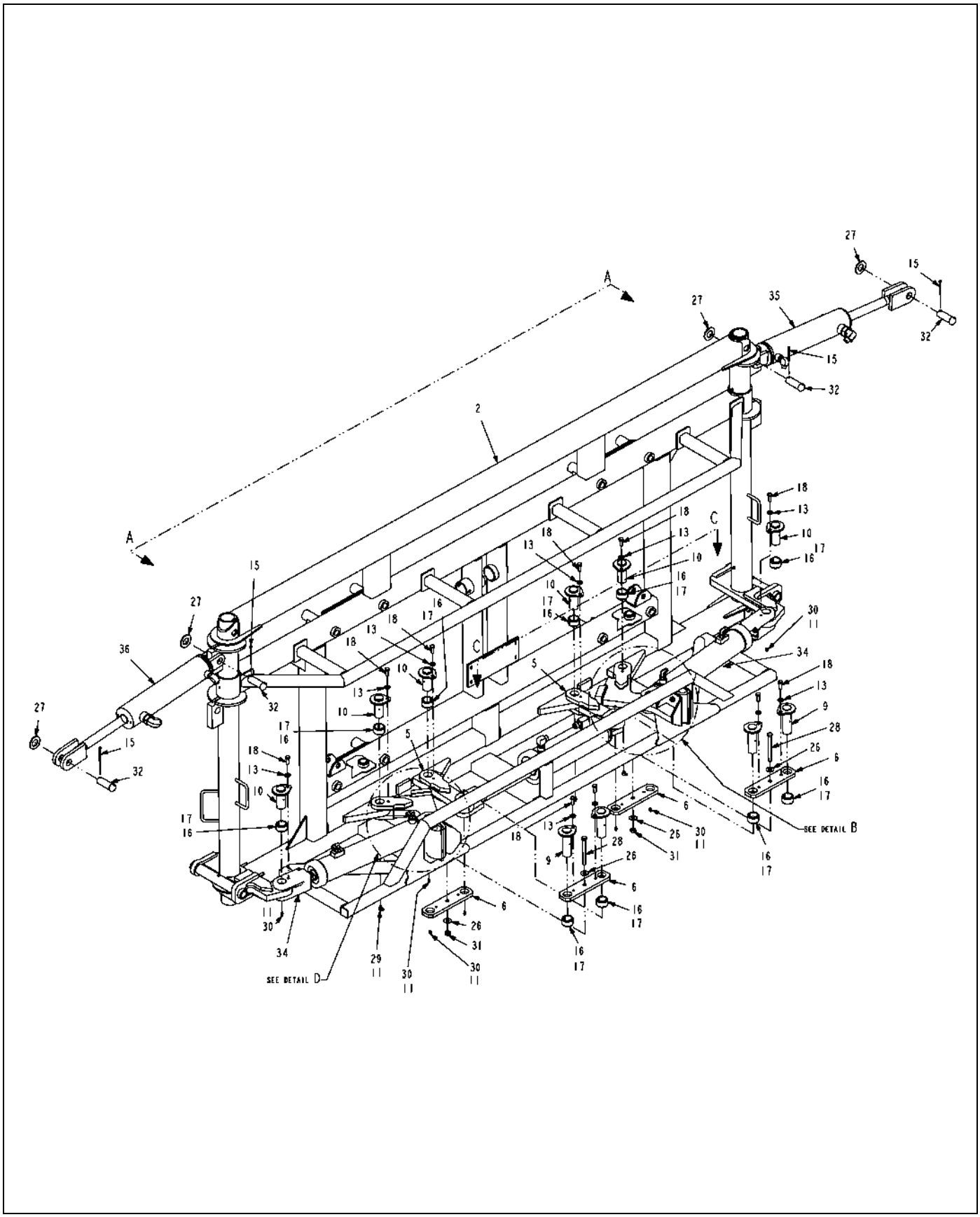

513462D1-02-N812-01.tif

Copyright © 2007 AGCO Corporation

ITEM	PART #	QTY	DESCRIPTION	COMMENTS
2	AG136949	1	CENTER WLDMT-BOOM,120	
5	AG261821	2	PIVOT WLDMT-LINK	
6	AG261822	4	PLATE-LINK	
9	AG328805	4	PIN WLDMT-SUPPORT,CENTER	
10	AG328806	6	PIN WLDMT-SUPPORT	
11	AG511099	AR	GREASE-MULTI PURPOSE LITH.	
13	AG514559	10	WASHER 0.37 FL ZN SAE TYP-A G8	
15	AG515352	4	PIN COTTER 0.18X2.00 SS	
16	AG522925	10	BUSHING-1.25 ID X1.625 OD	
17	AG522980	AR	LOCTITE-603,GREEN	
18	AG550175	10	BOLT 0.37-16NCX 1.00 G5 ZN HHD	
26	AG551406	4	WASHER 0.43 FL ZN REG TYPE-B	
27	AG551856	4	WASHER 1.00 FL ZN SAE TYPE-A	
28	AG558796	2	BOLT 0.43-14NCX 4.50 G5 ZN HHD	
29	AG561826	2	FITTING LUBE 0.25-28 NF 90D	
30	AG561892	16	FITTING LUBE STR 0.25UNF	
31	AG562193	2	NUT 0.43-14NC HEX ZN C-LK	
32	AG602132	4	PIN CLEVIS 1.00X2.62 ZN	[A]
34	512480D1	2	CYLINDER ASM-BOOM SWING	SEE PAGE 5-1
35	513464D1	1	CYLINDER ASM-TILT,BOOM,120,RH	SEE PAGE 11-8
36	513465D1	1	CYLINDER ASM-TILT,BOOM,120,LH	SEE PAGE 11-9
	FOOTNOTE [A]		GREASABLE PIN IS 519637	

Copyright © 2007 AGCO Corporation

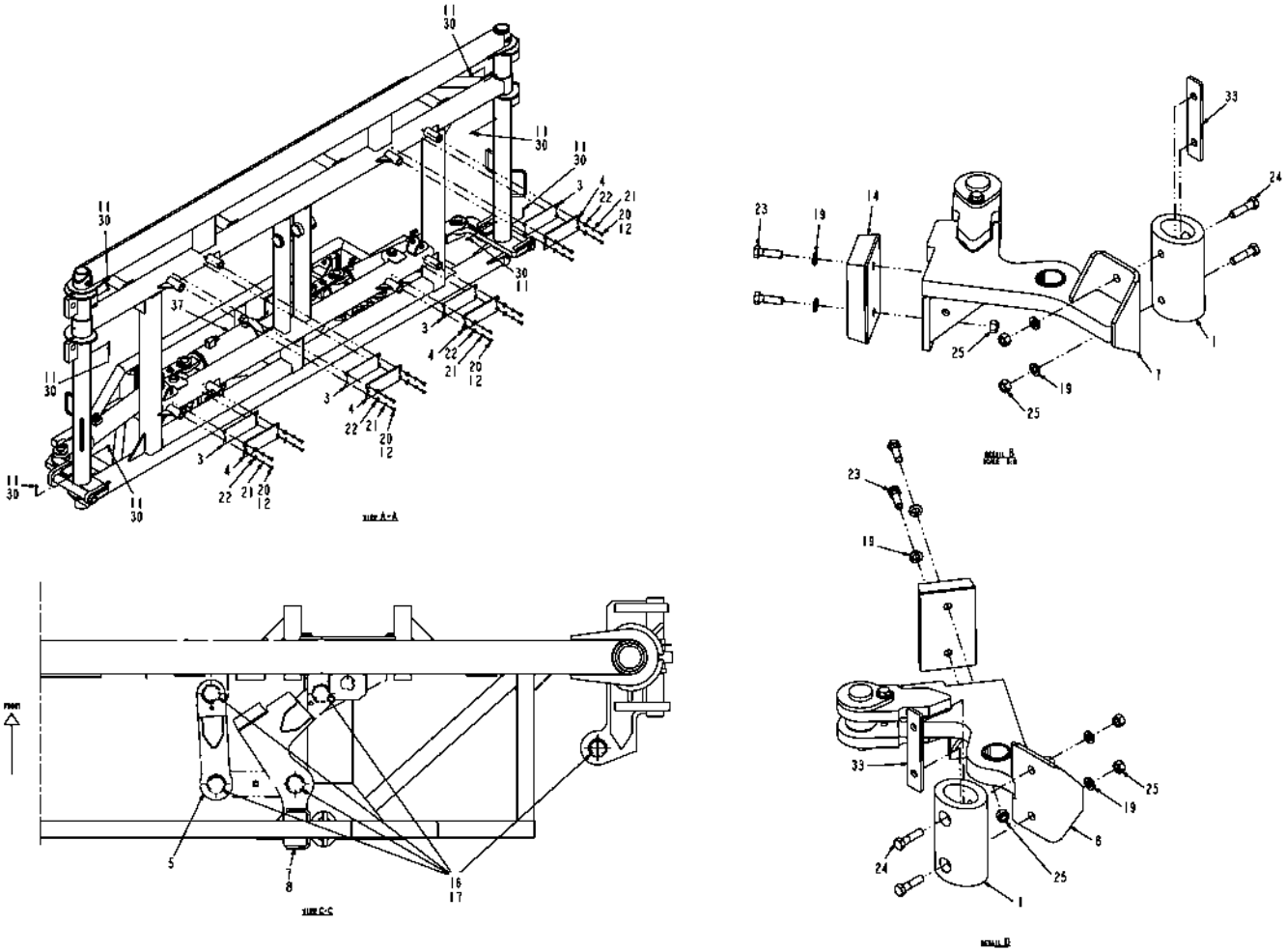

513462D1-02-N812-02.TIF

Copyright © 2007 AGCO Corporation

BOOM ASM-CENTER,120

ITEM	PART #	QTY	DESCRIPTION	COMMENTS
1	AG136946	2	PAD-BUMP,OUTER,BRKAWAY,BM,FULL	
3	AG229660	4	PLATE SHIM	
4	AG229661	4	PAD WEAR	
5	AG261821	2	PIVOT WLDMT-LINK	
7	AG327314	1	PIVOT WLDMT-RH	
8	AG327315	1	PIVOT WLDMT-LH	
11	AG511099	AR	GREASE-MULTI PURPOSE LITH.	
12	AG512885	AR	LOCTITE ADHESIVE SEALANT BLUE	
14	AG514814	2	BUMPER PAD	
16	AG522925	10	BUSHING-1.25 ID X1.625 OD	
17	AG522980	AR	LOCTITE-603,GREEN	
19	AG550191	8	WASHER 0.37 LK ZN REG	
20	AG550485	16	BOLT 0.25-20NCX 0.75 G5 ZN HHD	
21	AG550493	16	WASHER 0.25 LK ZN REG	
22	AG550507	16	WASHER 0.25 FL ZN REG TYPE-B	
23	AG550515	4	BOLT 0.37-16NCX 1.25 G5 ZN HHD	
24	AG550779	4	BOLT 0.37-16NCX 1.50 G5 ZN HHD	
25	AG550825	6	NUT 0.37-16NC HEX ZN REG	
30	AG561892	16	FITTING LUBE STR 0.25UNF	
33	506624D1	2	PLATE-SHIM,PAD,BUMPER,7 GA	
37	513466D1	1	CYLINDER ASM-4.00,BM BREAKAWAY	SEE PAGE 11-10

Copyright © 2007 AGCO Corporation

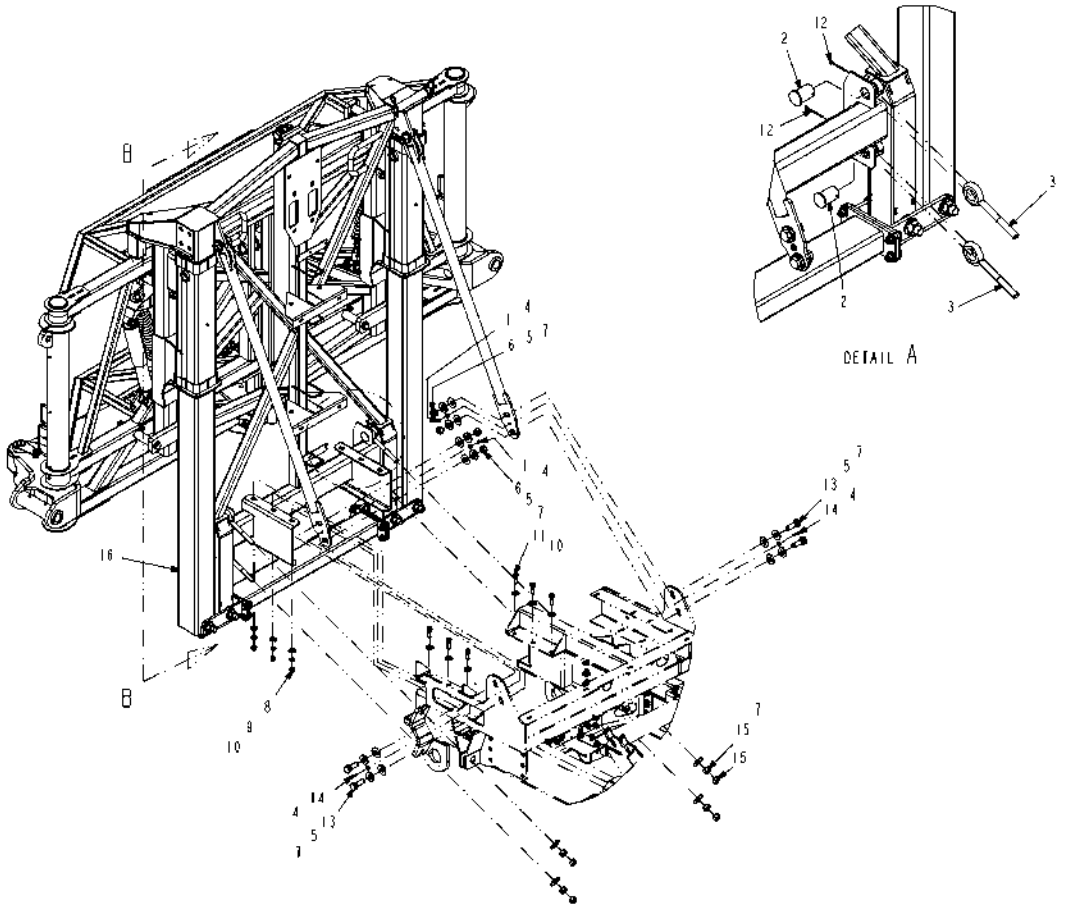

518022D1-02-R393-.TIF

Copyright © 2007 AGCO Corporation

TREE INSTL-BOOM,CTR,5.00 SL

ITEM	PART #	QTY	DESCRIPTION	COMMENTS
1	AG027275	2	NUT 0.25-20NC HEX SS REG NY	
2	AG200557	4	WLDMT PIN PIVOT	
3	AG200573	4	BOLT EYE .75NCX6.0 SHK DF GALV	
4	AG515121	4	WASHER 0.25 FL SS REG TYPE-B	
5	AG521690	8	WSHR-FLT,1.88X.81X.25,BLK,HARD	
6	AG522703	4	NUT-.75-16,G8,ZN,H	
7	AG550116	12	WASHER 0.75 FL ZN REG TYPE-B	
8	AG550124	6	NUT 0.50-13NC HEX ZN REG	
9	AG550264	6	WASHER 0.50 LK ZN REG	
10	AG550353	12	WASHER 0.50 FL ZN REG TYPE-B	
11	AG553956	6	BOLT 0.50-13NCX 1.75 G5 ZN HHD	
12	AG561199	4	PIN COTTER 0.18X2.50 ZN	
13	AG561201	4	BOLT 0.75-16NFX 2.25 G8 ZN HHD	
14	AG561952	2	BOLT 0.25-20NCX 1.25 SS HHD	
15	AG562537	8	NUT 0.75-10NC HEX GALV REG OSZ	
16	518024D1	1	BOOM TREE ASM-CTR,5.00 SL	SEE PAGE 3-38

Copyright © 2007 AGCO Corporation

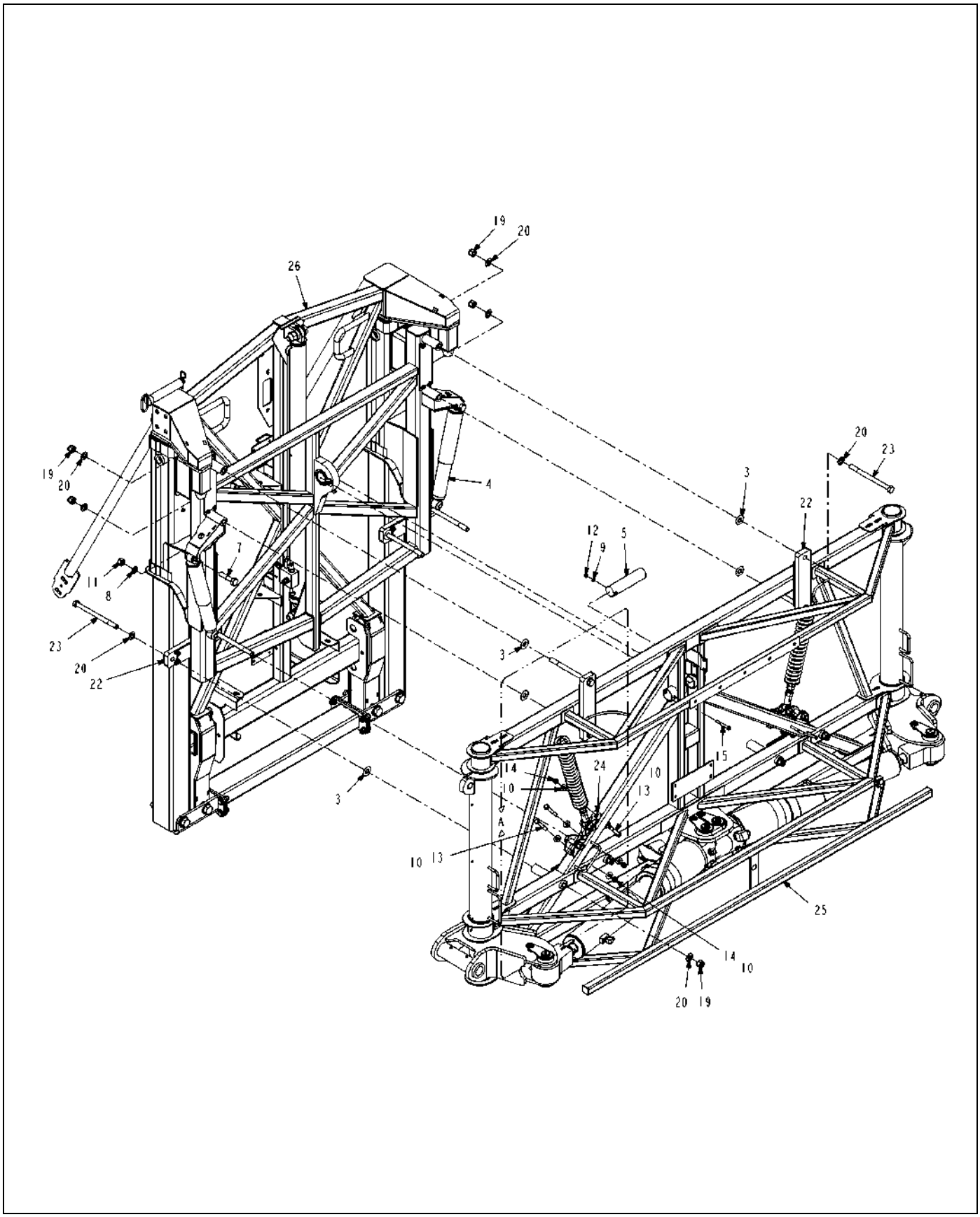

518024D1-02-R393-01.TIF

Copyright © 2007 AGCO Corporation

ITEM	PART #	QTY	DESCRIPTION	COMMENTS
3	AG108622	8	WASHER FLAT THIN	
4	AG136741	2	SHOCK-GAS,ADJ,3 POSITION	
5	AG229652	1	SHAFT BOOM PIVOT	
7	AG517993	4	BOLT 0.75-10NCX 3.25 G5 ZN HHD	
8	AG550108	4	WASHER 0.75 LK ZN REG	
9	AG550191	1	WASHER 0.37 LK ZN REG	
10	AG550353	12	WASHER 0.50 FL ZN REG TYPE-B	
11	AG550590	4	NUT 0.75-10NC HEX ZN REG	
12	AG550825	1	NUT 0.37-16NC HEX ZN REG	
13	AG556149	6	BOLT 0.50-13NCX 3.50 G5 ZN HHD	
14	AG559253	6	NUT 0.50-13NC HEX ZN C-LK	
15	AG561072	1	BOLT 0.37-16NCX 3.00 G5 ZN HHD	
19	AG603864	10	NUT 0.75-10NC HEX ZN REG NY	
20	AG604203	18	WASHER 0.75 FL ZN SAE TYP-A G8	
22	514846D1	4	PLATE ASM-HD,WEAR PAD	SEE PAGE 3-53
23	514995D1	8	BOLT 0.75-10NCX10.00 G8 ZN HHD	
24	515416D1	2	BRKT WLDMT-MTG,SHOCK/SPRING	
25	518023D1	1	BOOM ASM-CTR SECT,HD,120	SEE PAGE 3-40
26	518025D1	1	TREE ASM-BOOM,CENTER,5.00 SL	SEE PAGE 3-41

Copyright © 2007 AGCO Corporation

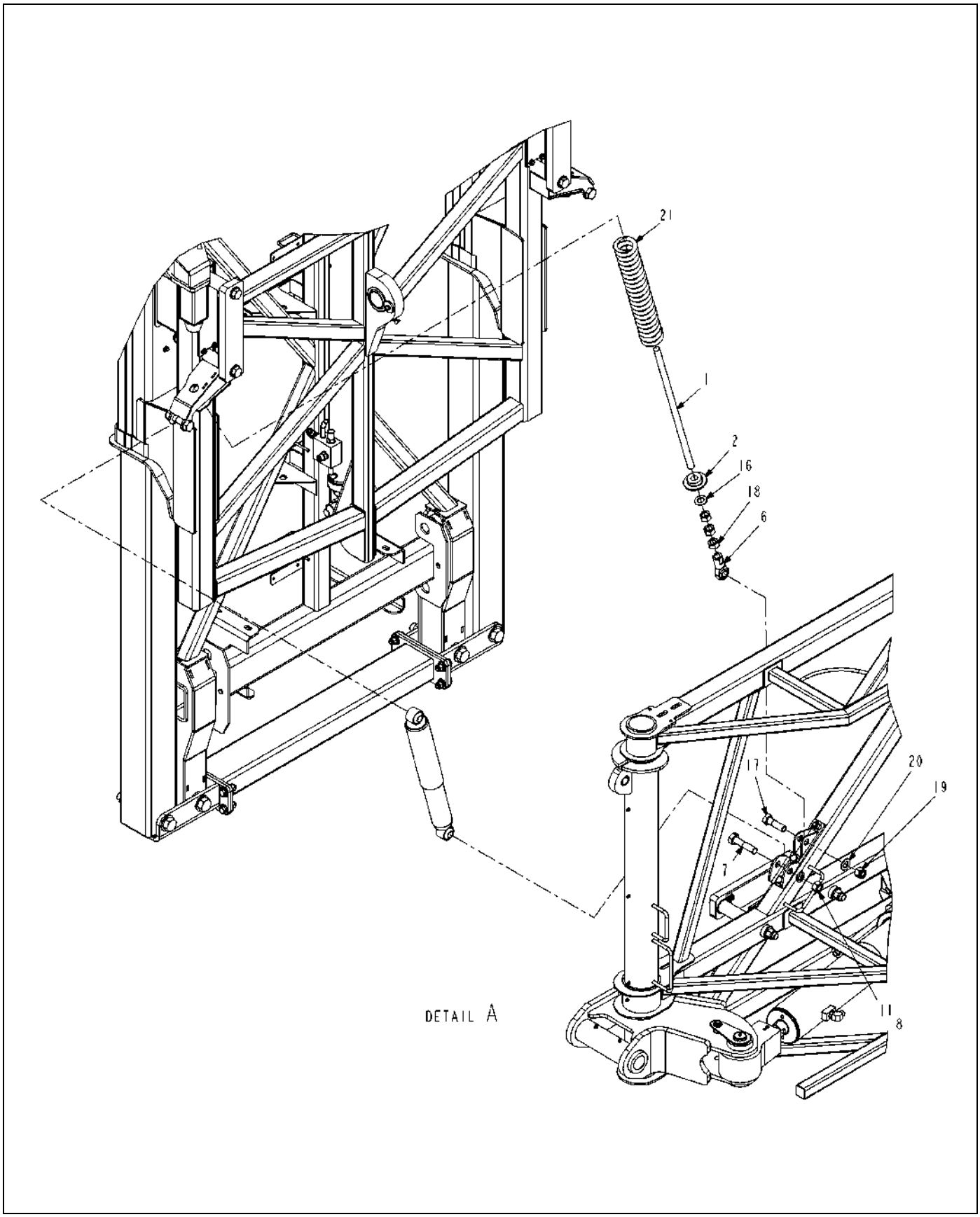

518024D1-02-R393-02.TIF

Copyright © 2007 AGCO Corporation

BOOM TREE ASM-CTR,5.00 SL

ITEM	PART #	QTY	DESCRIPTION	COMMENTS
1	AG108268	2	ROD THREADED	
2	AG108604	2	SPRING RETAINER WLDMT	
6	AG517248	2	ROD END BALL JOINT	
7	AG517993	4	BOLT 0.75-10NCX 3.25 G5 ZN HHD	
8	AG550108	4	WASHER 0.75 LK ZN REG	
11	AG550590	4	NUT 0.75-10NC HEX ZN REG	
16	AG561156	2	WASHER 0.75 FL ZN SAE TYPE-A	
17	AG562011	2	BOLT 0.75-10NCX 2.50 G5 ZN HHD	
18	AG562291	6	NUT 0.75-16NF HEX ZN REG	
19	AG603864	10	NUT 0.75-10NC HEX ZN REG NY	
20	AG604203	18	WASHER 0.75 FL ZN SAE TYP-A G8	
21	514655D1	2	SPRING-COMPRESSION,.468 WIRE	

Copyright © 2007 AGCO Corporation

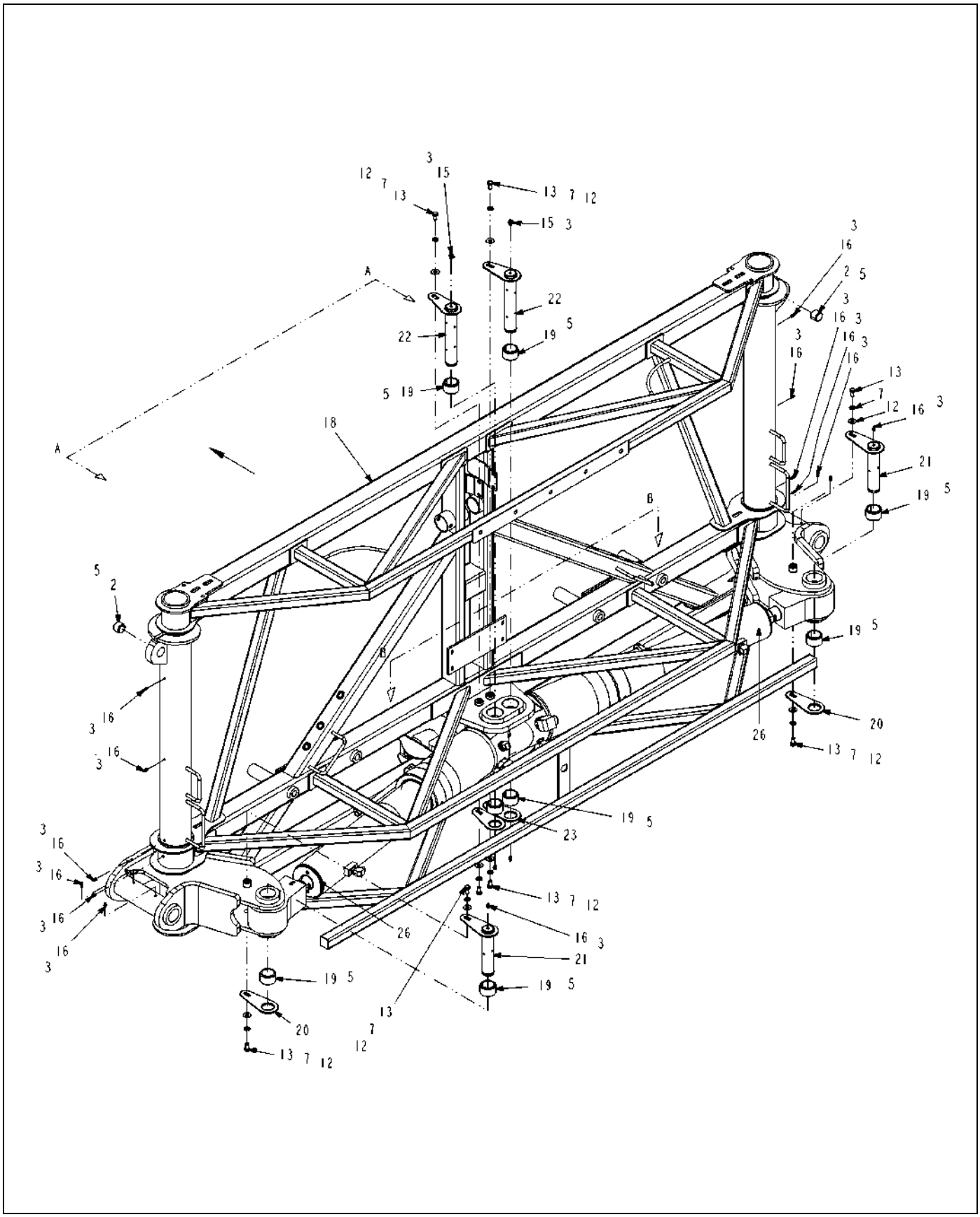

518023D1-02-R393-01.TIF

Copyright © 2007 AGCO Corporation

ITEM	PART #	QTY	DESCRIPTION	COMMENTS
2	AG136947	2	BUSHING-1.00ID X 1.25OD X 1.00	
3	AG511099	AR	GREASE-MULTI PURPOSE LITH.	
4	AG512885	AR	LOCTITE ADHESIVE SEALANT BLUE	
5	AG522980	AR	LOCTITE-603,GREEN	
7	AG550191	8	WASHER 0.37 LK ZN REG	
12	AG551007	8	WASHER 0.37 FL ZN REG TYPE-B	
13	AG551503	8	BOLT 0.37-16NCX 0.75 G5 ZN HHD	
15	AG561826	2	FITTING LUBE 0.25-28 NF 90D	
16	AG561892	16	FITTING LUBE STR 0.25UNF	
18	514258D1	1	BOOM WLDMT-CTR SECT,120	
19	514264D1	8	BUSHING-1.50ID X 2.00OD X 1.25	
20	514528D1	2	RETAINER-1.50 PIN,3.75 FLAG	
21	514531D1	2	PIN WLDMT-1.50 ODX6.38,3.75FLG	
22	514532D1	2	PIN WLDMT-1.50 ODX8.25,3.25FLG	
23	514535D1	2	RETAINER-1.50 PIN,3.25 FLAG	
26	518027D1	2	CYL ASM-HYD,SWG,BM,120	SEE PAGE 5-32

Copyright © 2007 AGCO Corporation

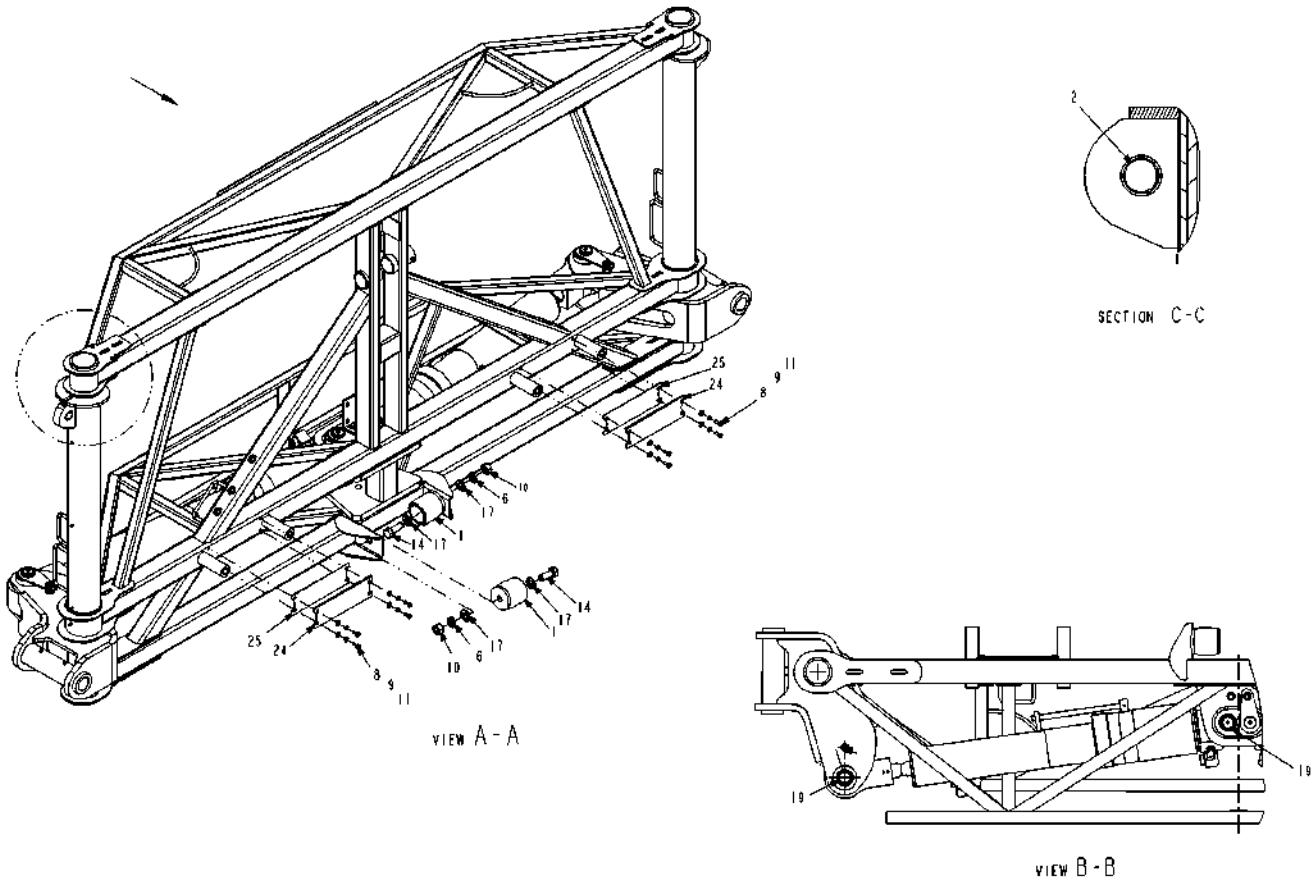

518023D1-02-R393-02.TIF

Copyright © 2007 AGCO Corporation

BOOM ASM-CTR SECT,HD,120

ITEM	PART #	QTY	DESCRIPTION	COMMENTS
1	WR123067	2	BUMPER-LIMIT,SUSPENSION	
2	AG136947	2	BUSHING-1.00ID X 1.25OD X 1.00	
6	AG550108	2	WASHER 0.75 LK ZN REG	
8	AG550485	8	BOLT 0.25-20NCX 0.75 G5 ZN HHD	
9	AG550493	8	WASHER 0.25 LK ZN REG	
10	AG550590	2	NUT 0.75-10NC HEX ZN REG	
11	AG550671	8	WASHER 0.25 FL ZN SAE TYPE-A	
14	AG554537	2	BOLT 0.75-10NCX 2.00 G5 ZN HHD	
17	AG604203	4	WASHER 0.75 FL ZN SAE TYP-A G8	
19	514264D1	8	BUSHING-1.50ID X 2.00OD X 1.25	
24	514715D1	2	PAD-WEAR,BOOM TREE	
25	514843D1	2	PLATE-SHIM,LONG	

Copyright © 2007 AGCO Corporation

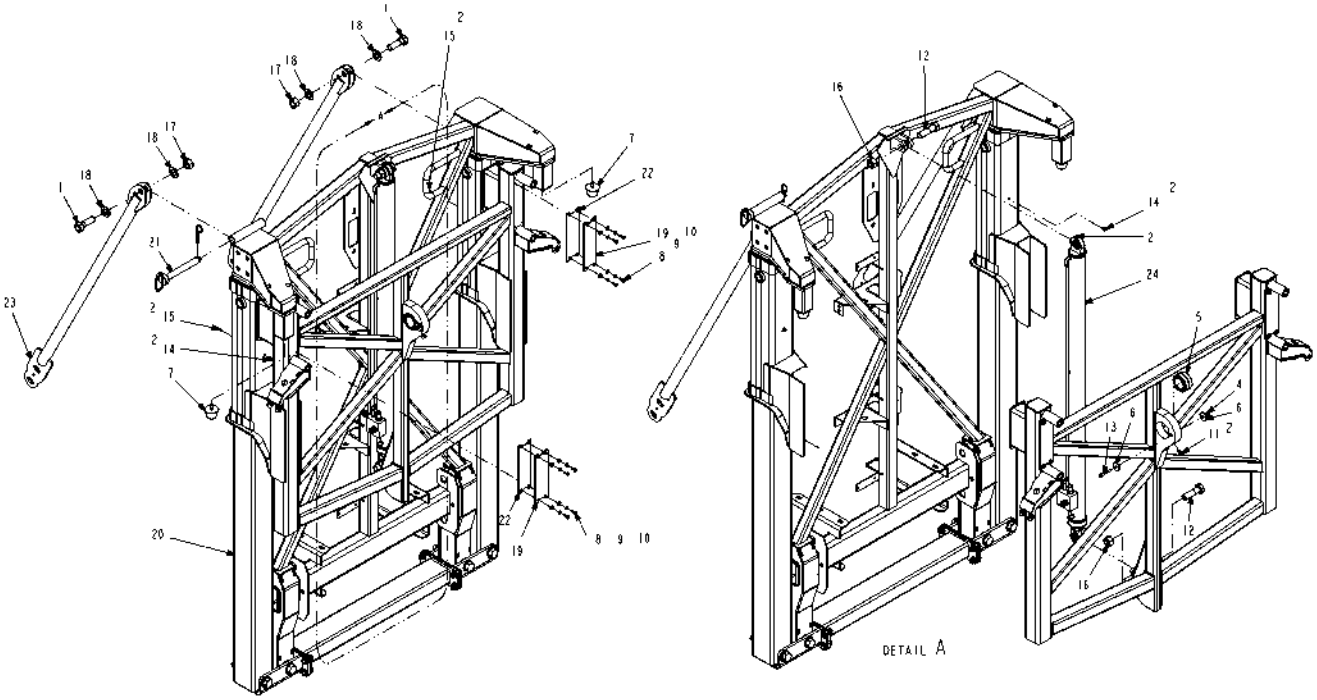

518025D1-01-R172-.TIF

Copyright © 2007 AGCO Corporation

TREE ASM-BOOM,CENTER,5.00 SL

ITEM	PART #	QTY	DESCRIPTION	COMMENTS
1	WR121865	2	BOLT 1.00- 8NCX 3.00 G8 ZN HHD	
2	AG511099	AR	GREASE-MULTI PURPOSE LITH.	
3	AG512885	AR	LOCTITE ADHESIVE SEALANT BLUE	
4	AG516403	1	NUT 0.31-18NC HEX SS REG NY	
5	AG518032	1	BUSHING SELF ALIGNING RADIAL	[A]
6	AG518358	2	WASHER FENDER .31 X 1.50 OD	
7	AG523175	2	BUMPER-RUBBER,SS	
8	AG550485	8	BOLT 0.25-20NCX 0.75 G5 ZN HHD	
9	AG550493	8	WASHER 0.25 LK ZN REG	
10	AG550671	8	WASHER 0.25 FL ZN SAE TYPE-A	
11	AG559083	1	FITTING LUB 90D 0.125 NPTF	
12	AG561177	2	BOLT 1.00- 8NCX 3.50 G5 ZN HHD	
13	AG561251	1	BOLT 0.31-18NCX 2.25 G5 ZN HHD	
14	AG561826	2	FITTING LUBE 0.25-28 NF 90D	
15	AG561892	2	FITTING LUBE STR 0.25UNF	
16	AG563036	2	LOCKNUT 1.00 IN NC HES ESNA	
17	401075X1	2	NUT-1.00-8NC,GR8,PHOS	
18	401076X1	4	WASHER-1.00,HARD,PHOS	
19	514715D1	2	PAD-WEAR,BOOM TREE	
20	514836D1	1	BOOM TREE ASM-SUB,5.00 SLIDE	SEE PAGE 3-48
21	514842D1	1	PIN-HITCH,1.00X7.50	
22	514843D1	2	PLATE-SHIM,LONG	
23	515573D1	2	SUPPORT WLDMT-PIPE,BOOM TREE	
24	518026D1	1	CYL ASM-HOIST,BM,5.00 SL	SEE PAGE 5-35
	FOOTNOTE [A]		PIN THRU BEARING-AG229652, WLDMNT BEARING PRESSED INTO - AG309764	

Copyright © 2007 AGCO Corporation

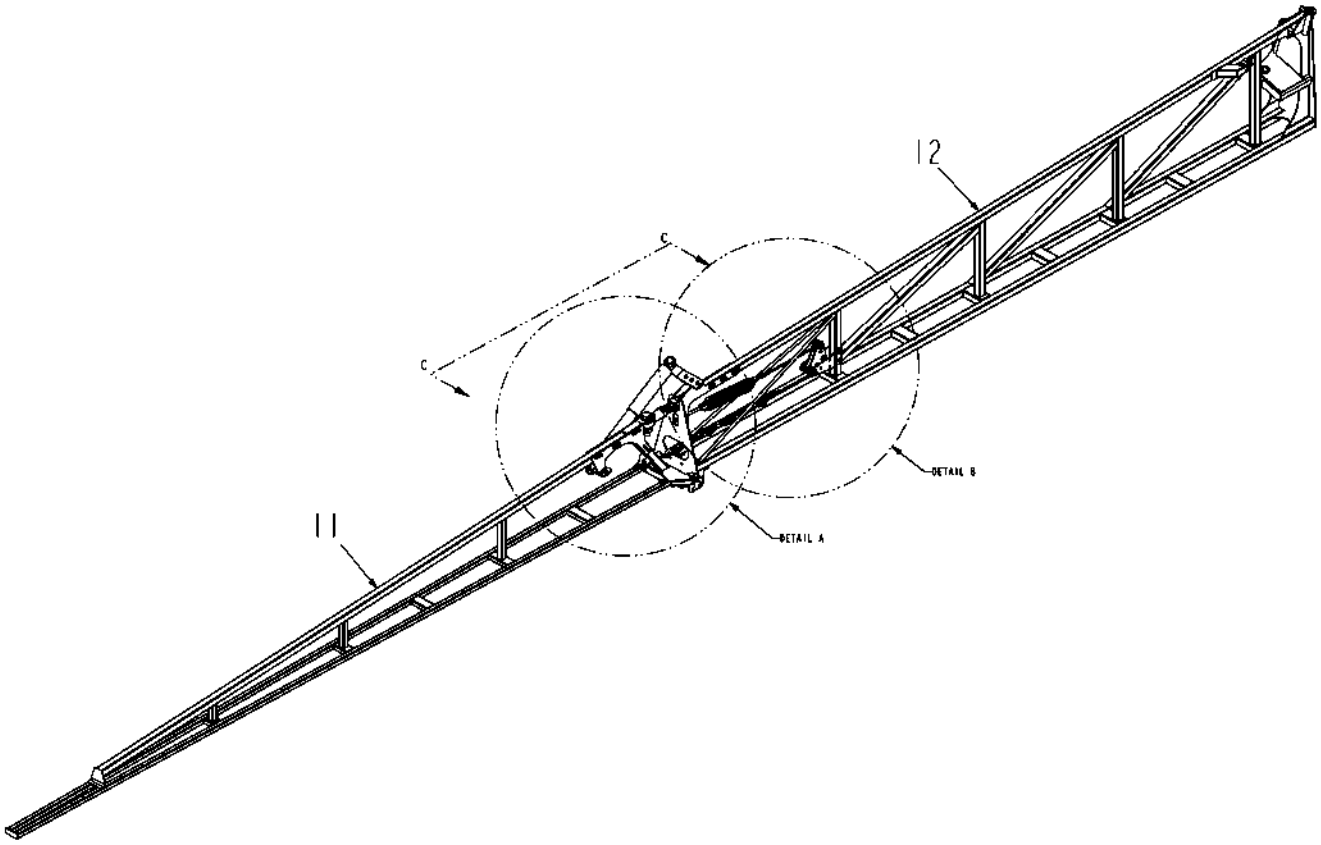

136810-03-N504-01.TIF

Copyright © 2007 AGCO Corporation

TIP ASM-FOLD BACK,BM,120FT,RH

ITEM	PART #	QTY	DESCRIPTION	COMMENTS
11	AG136788	1	BOOM WLDMT-TIP,BREAKAWAY,120	
12	AG136814	1	BOOM WLDMT-MID,120FT,RH	

Copyright © 2007 AGCO Corporation

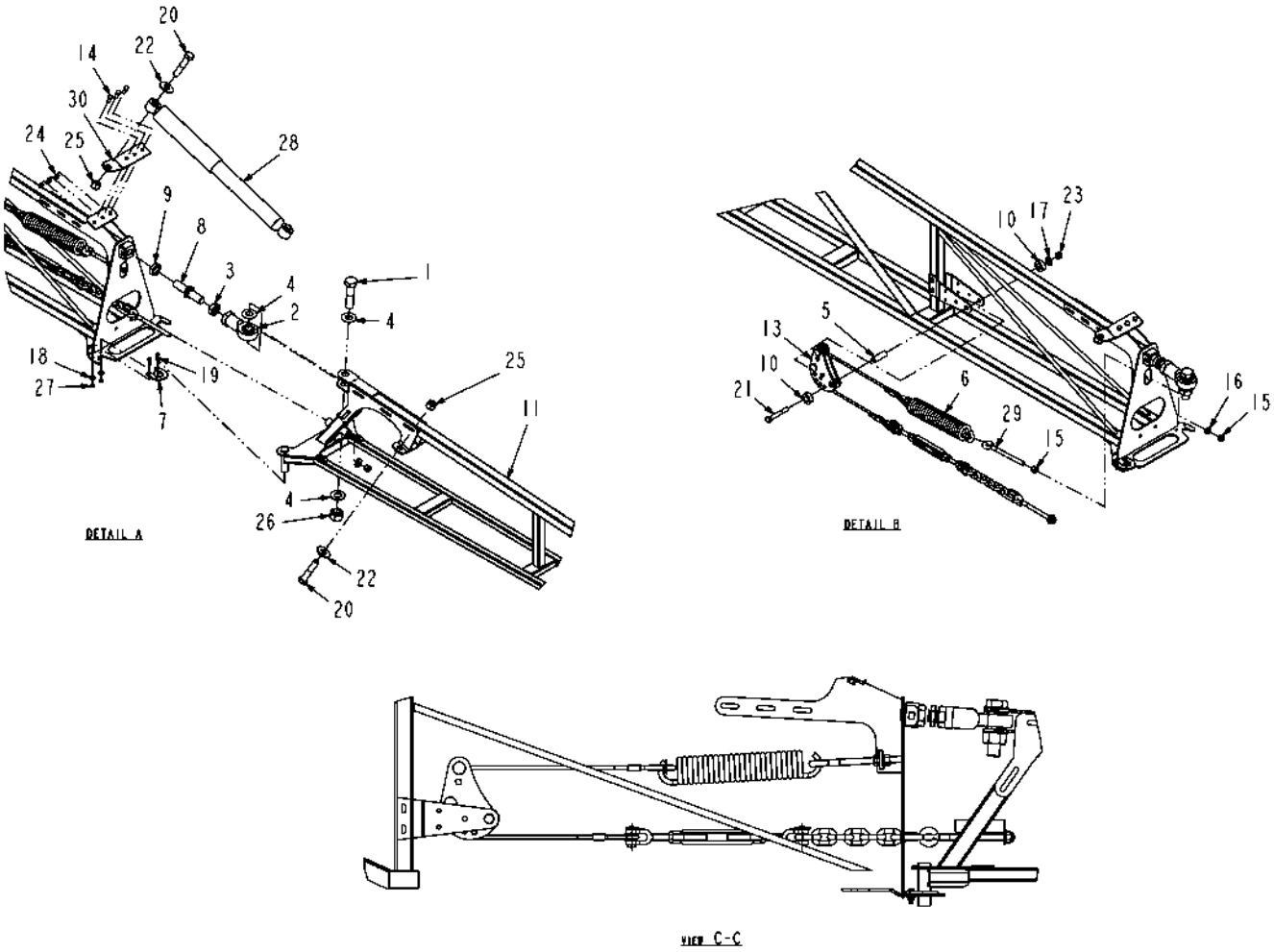

136810-03-N504-02.TIF

Copyright © 2007 AGCO Corporation

TIP ASM-FOLD BACK,BM,120FT,RH

ITEM	PART #	QTY	DESCRIPTION	COMMENTS
1	AG010220	1	BOLT 1.00- 8NCX 4.00 G5 PL HHD	
2	WR34606	1	ROD-END,1-14UNF,FEMALE	
3	WR34609	1	NUT-JAM, 1-14UNF	
4	WR55197	3	WASHER-PLAIN HRD,1 ID GRADE 8	
5	WR124539	1	BUSHING-1.5 LONGX.750DX.51D	
6	WR126491	1	SPRING-EXTENSION	
7	WR128835	1	CLAMP-BOOM PIVOT	
8	AG129192	1	BOLT-ADJUST,1-14RH,1-14LH	
9	AG129193	1	NUT-JAM,1-14 UNF,LH	
10	WR135545	2	SPACER-UHMW,1.5OD X .78ID	
11	AG136788	1	BOOM WLDMT-TIP,BREAKAWAY,120	
13	AG136818	1	CAM ASM-BREAKAWAY,120FT	SEE PAGE 3-46
14	AG518500	3	BOLT 0.37-16NCX 1.00 G8 ZN HHD	
15	AG550124	2	NUT 0.50-13NC HEX ZN REG	
16	AG550264	1	WASHER 0.50 LK ZN REG	
17	AG550353	1	WASHER 0.50 FL ZN REG TYPE-B	
18	AG550507	2	WASHER 0.25 FL ZN REG TYPE-B	
19	AG550698	2	BOLT 0.25-20NCX 1.00 G5 ZN HHD	
20	AG550787	2	BOLT 0.75-10NCX 3.50 G5 ZN HHD	
21	AG556149	1	BOLT 0.50-13NCX 3.50 G5 ZN HHD	
22	AG561156	2	WASHER 0.75 FL ZN SAE TYPE-A	
23	AG601152	1	NUT 0.50-13NC HEX ZN REG NY	
24	AG601411	3	NUT 0.37-16NC HEX ZN REG NY	
25	AG603864	2	NUT 0.75-10NC HEX ZN REG NY	
26	AG604185	1	NUT 1.00-08NC HEX ZN HVY NY	
27	AG604216	2	NUT 0.25-20NC HEX ZN REG NY	
28	6623263	1	SHOCK ABSORBER-BOOM	
29	6626401	1	BOLT-EYE	
30	503475D1	1	PLATE-SHOCK,MNT	

Copyright © 2007 AGCO Corporation

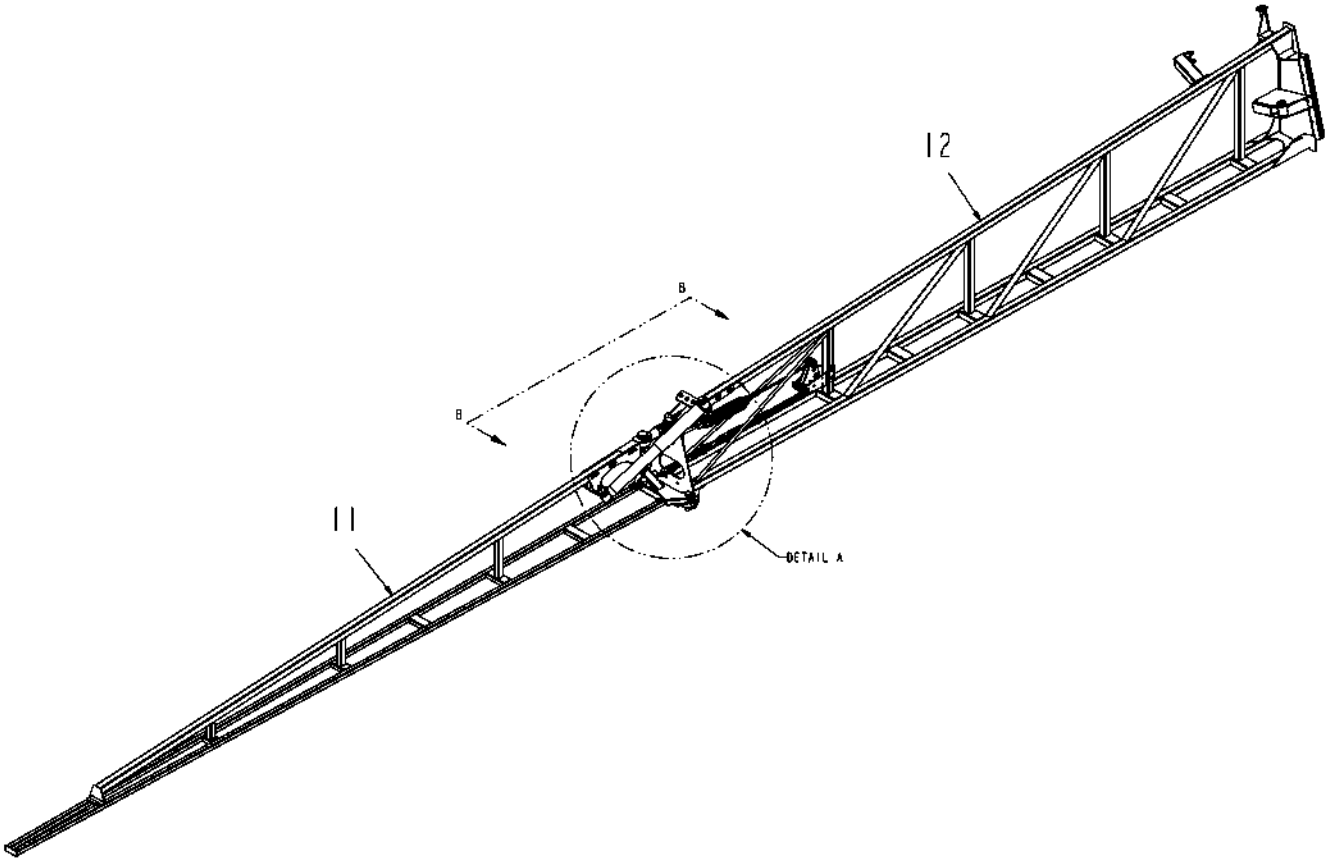

136809-02-N504-01.TIF

Copyright © 2007 AGCO Corporation

TIP ASM-FOLD BACK,BM,120FT,LH

ITEM	PART #	QTY	DESCRIPTION	COMMENTS
11	AG136788	1	BOOM WLDMT-TIP,BREAKAWAY,120	
12	AG136815	1	BOOM WLDMT-MID,120FT,LH	

Copyright © 2007 AGCO Corporation

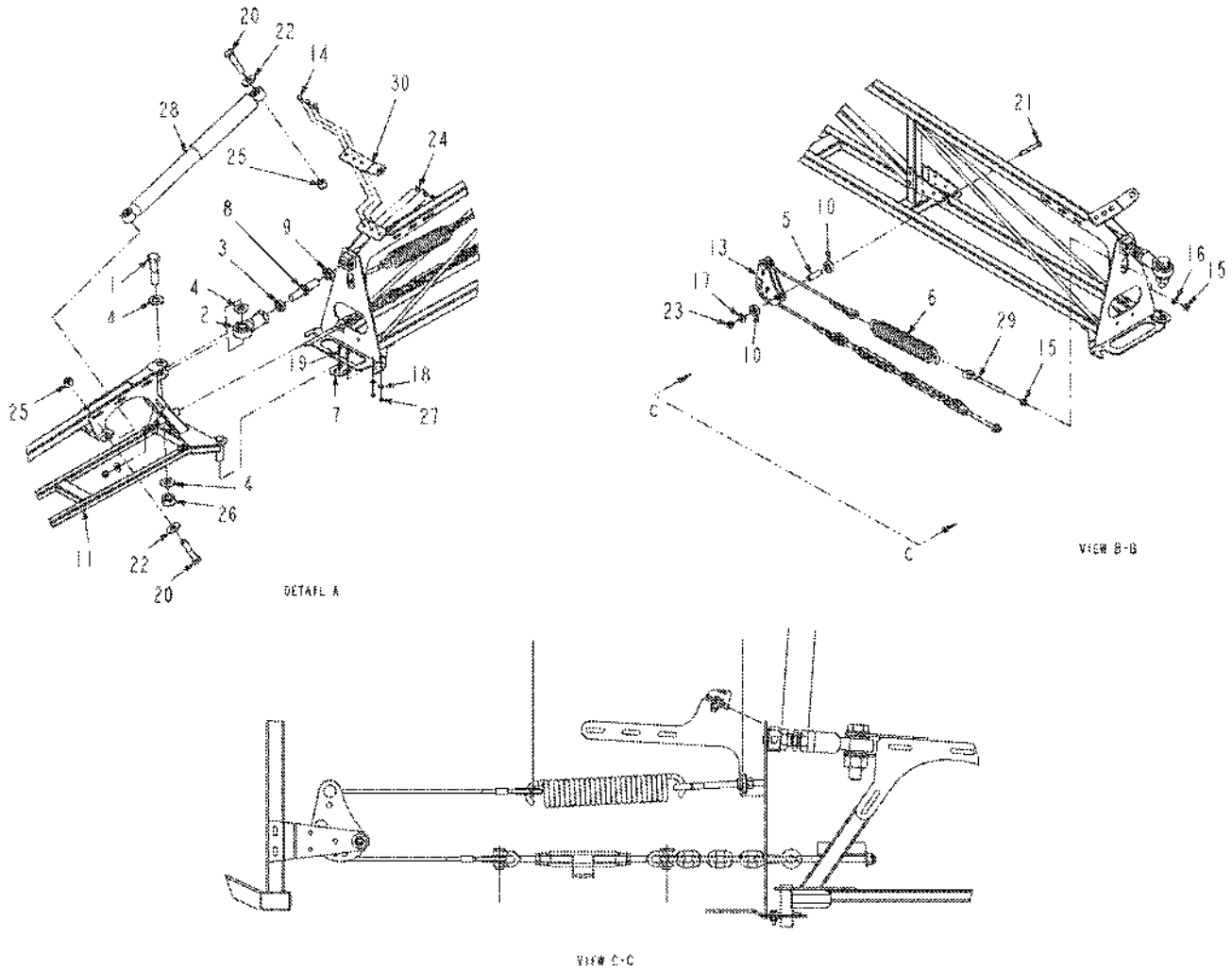

136809-02-N504-02.TIF

Copyright © 2007 AGCO Corporation

TIP ASM-FOLD BACK,BM,120FT,LH

ITEM	PART #	QTY	DESCRIPTION	COMMENTS
1	AG010220	1	BOLT 1.00- 8NCX 4.00 G5 PL HHD	
2	WR34606	1	ROD-END,1-14UNF,FEMALE	
3	WR34609	1	NUT-JAM, 1-14UNF	
4	WR55197	3	WASHER-PLAIN HRD,1 ID GRADE 8	
5	WR124539	1	BUSHING-1.5 LONGX.750DX.51D	
6	WR126491	1	SPRING-EXTENSION	
7	WR128835	1	CLAMP-BOOM PIVOT	
8	AG129192	1	BOLT-ADJUST,1-14RH,1-14LH	
9	AG129193	1	NUT-JAM,1-14 UNF,LH	
10	WR135545	2	SPACER-UHMW,1.5OD X .78ID	
11	AG136788	1	BOOM WLDMT-TIP,BREAKAWAY,120	
13	AG136818	1	CAM ASM-BREAKAWAY,120FT	SEE PAGE 3-46
14	AG518500	3	BOLT 0.37-16NCX 1.00 G8 ZN HHD	
15	AG550124	2	NUT 0.50-13NC HEX ZN REG	
16	AG550264	1	WASHER 0.50 LK ZN REG	
17	AG550353	1	WASHER 0.50 FL ZN REG TYPE-B	
18	AG550507	2	WASHER 0.25 FL ZN REG TYPE-B	
19	AG550698	2	BOLT 0.25-20NCX 1.00 G5 ZN HHD	
20	AG550787	2	BOLT 0.75-10NCX 3.50 G5 ZN HHD	
21	AG556149	1	BOLT 0.50-13NCX 3.50 G5 ZN HHD	
22	AG561156	2	WASHER 0.75 FL ZN SAE TYPE-A	
23	AG601152	1	NUT 0.50-13NC HEX ZN REG NY	
24	AG601411	3	NUT 0.37-16NC HEX ZN REG NY	
25	AG603864	2	NUT 0.75-10NC HEX ZN REG NY	
26	AG604185	1	NUT 1.00-08NC HEX ZN HVY NY	
27	AG604216	2	NUT 0.25-20NC HEX ZN REG NY	
28	6623263	1	SHOCK ABSORBER-BOOM	
29	6626401	1	BOLT-EYE	
30	503475D1	1	PLATE-SHOCK,MNT	

Copyright © 2007 AGCO Corporation

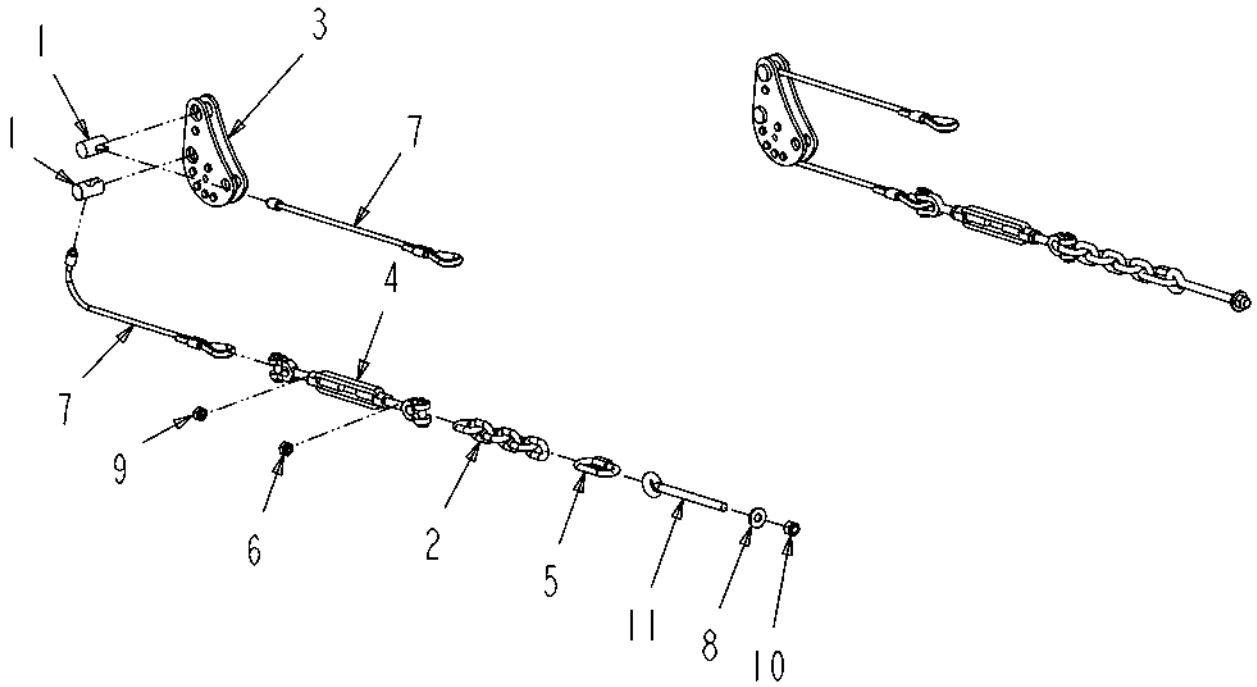

136818-01-M787-.TIF

Copyright © 2007 AGCO Corporation

CAM ASM-BREAKAWAY,120FT

ITEM	PART #	QTY	DESCRIPTION	COMMENTS
1	WR125301	2	PIN-CABLE STOP	
2	WR125310	1	CHAIN-BOOM BRKWAY	
3	AG128842	1	CAM ASM-BOOM BRKWAY	SEE PAGE 3-47
4	AG128843	1	TURNBUCKLE-JAW,JAW,.5X6	
5	WR129194	1	LINK-CONNECTOR, 3/8	
6	WR129706	1	NUT HEX 1/2-13 UNC LH JAM PL	
7	AG136819	2	ROPE-WIRE,.31X17.18,BUTTON FTG	
8	AG550353	1	WASHER 0.50 FL ZN REG TYPE-B	
9	AG561635	1	NUT 0.50-13NC HEX ZN JAM G5	
10	AG601152	1	NUT 0.50-13NC HEX ZN REG NY	
11	6626401	1	BOLT-EYE	

Copyright © 2007 AGCO Corporation

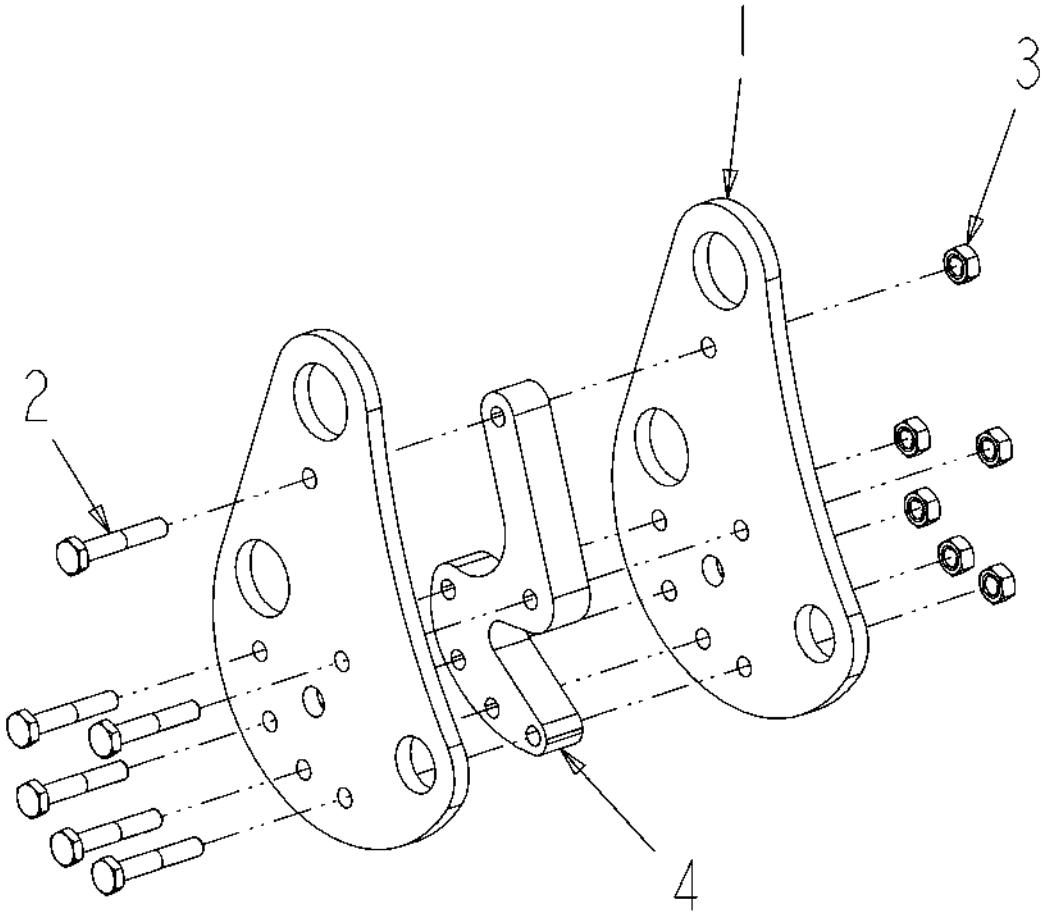

128842-03-M449-.TIF

Copyright © 2007 AGCO Corporation

CAM ASM-BOOM BRKWAY

ITEM	PART #	QTY	DESCRIPTION	COMMENTS
1	WR125305	2	PLATE-CAM WALL	
2	AG550949	6	BOLT 0.25-20NCX 1.50 G5 ZN HHD	
3	AG604216	6	NUT 0.25-20NC HEX ZN REG NY	
4	505516D1	1	SPACER-CAM,UHMW	

Copyright © 2007 AGCO Corporation

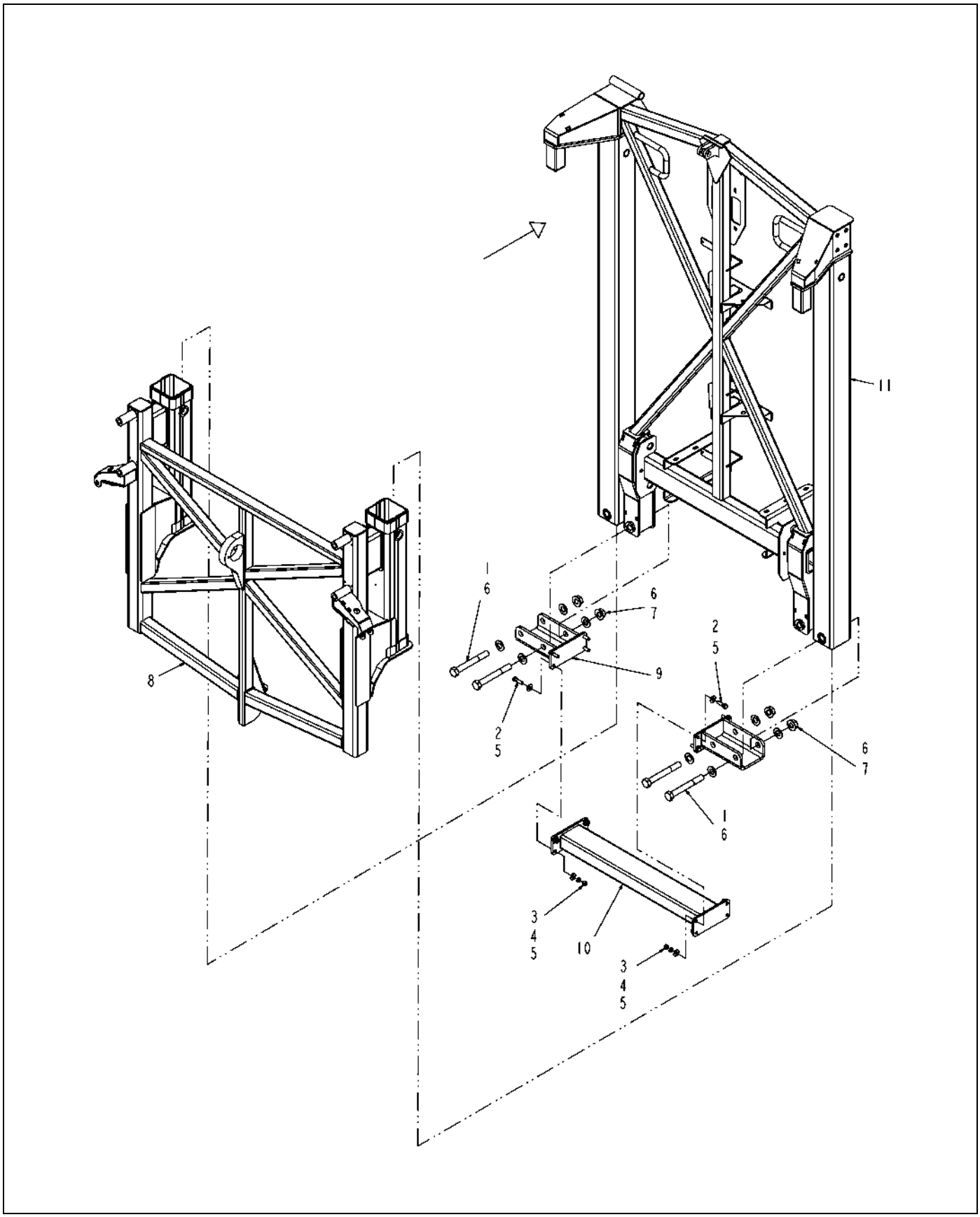

514836D1-01-N980-.TIF

Copyright © 2007 AGCO Corporation

BOOM TREE ASM-SUB,5.00 SLIDE

ITEM	PART #	QTY	DESCRIPTION	COMMENTS
1	WR121865	2	BOLT 1.00- 8NCX 3.00 G8 ZN HHD	
2	AG522603	4	BOLT 1.00- 8NCX 8.00 G8 ZN HHD	
3	AG523421	8	BOLT 0.50-13NCX1.75 G8 PHS HHD	
4	AG550124	8	NUT 0.50-13NC HEX ZN REG	
5	AG550264	8	WASHER 0.50 LK ZN REG	
6	AG550353	16	WASHER 0.50 FL ZN REG TYPE-B	
7	AG604184	8	WASHER 1.00 FL ZN SAE TYP-A G8	
8	401075X1	2	NUT-1.00-8NC,GR8,PHOS	
9	401076X1	4	WASHER-1.00,HARD,PHOS	
10	514837D1	4	NUT 1.00-8 FLG ZY W/204LOC	
11	515422D1	1	CARRIAGE WLDMT-BOOM TREE	
12	515573D1	2	SUPPORT WLDMT-PIPE,BOOM TREE	
13	515575D1	2	CLAMP WLDMT-FLANGE,BOOM TREE	
14	515578D1	1	BAR WLDMT-CROSS,BOOM TREE	
15	515600D1	1	TREE WLDMT-BOOM,SLIDE,5.00	

Copyright © 2007 AGCO Corporation

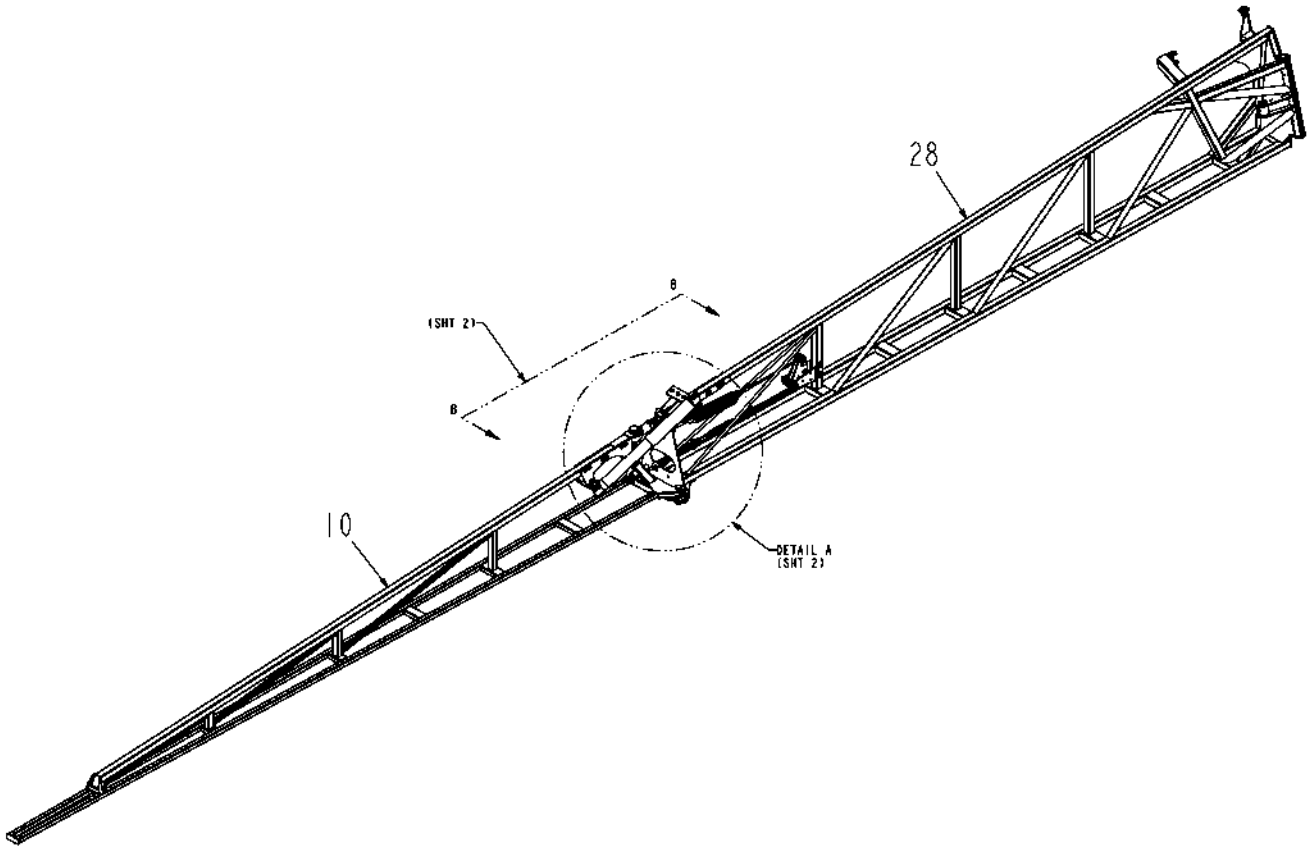

516623D1-01-N980-01.TIF

Copyright © 2007 AGCO Corporation

TIP ASM-FOLD BACK,BM,120FT,LH

ITEM	PART #	QTY	DESCRIPTION	COMMENTS
10	AG136788	1	BOOM WLDMT-TIP,BREAKAWAY,120	
28	516625D1	1	BOOM WLDMT-MID,120FT,LH	

Copyright © 2007 AGCO Corporation

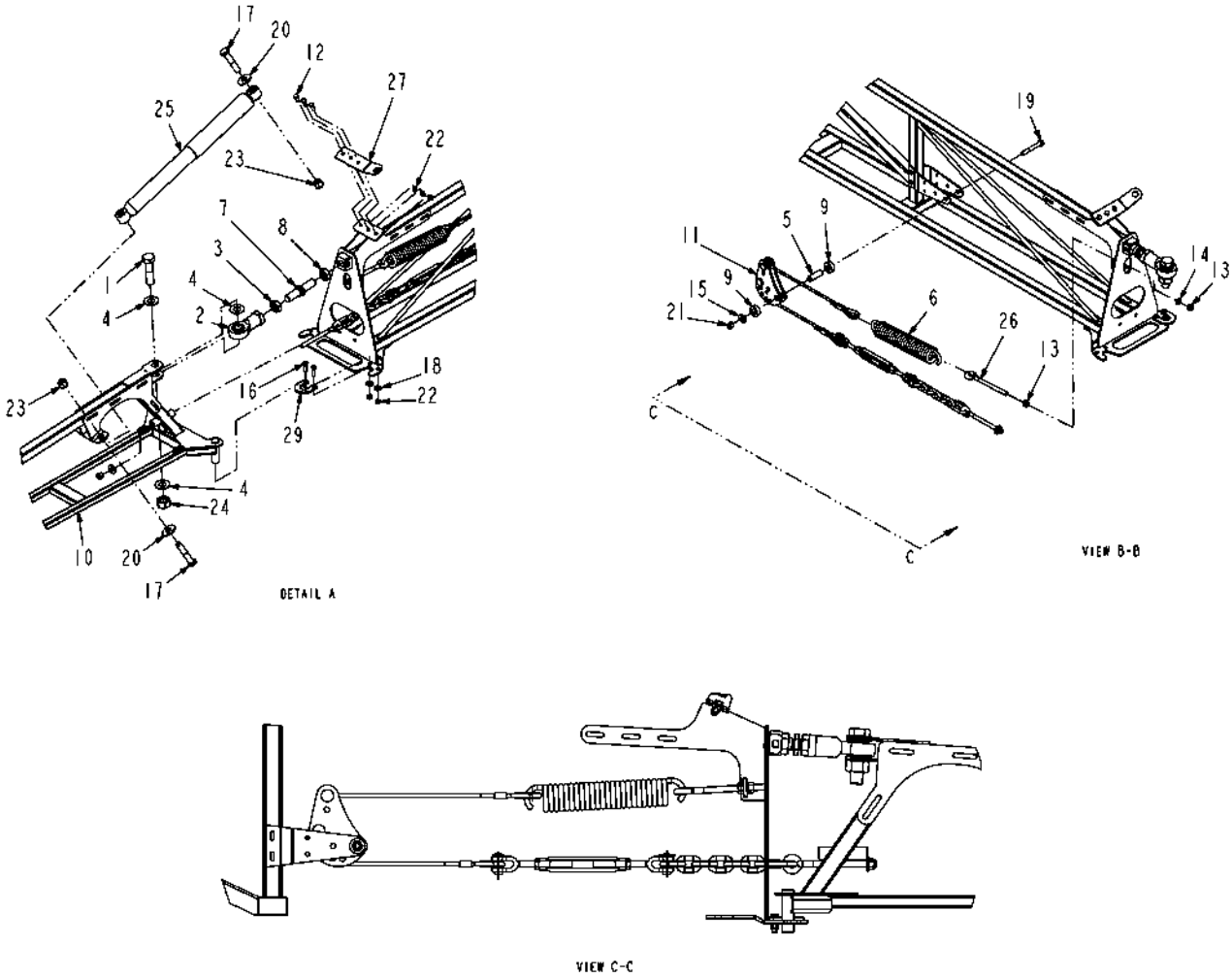

516623D1-01-N980-02.TIF

Copyright © 2007 AGCO Corporation

TIP ASM-FOLD BACK,BM,120FT,LH

ITEM	PART #	QTY	DESCRIPTION	COMMENTS
1	AG010220	1	BOLT 1.00- 8NCX 4.00 G5 PL HHD	
2	WR34606	1	ROD-END,1-14UNF,FEMALE	
3	WR34609	1	NUT-JAM, 1-14UNF	
4	WR55197	3	WASHER-PLAIN HRD,1 ID GRADE 8	
5	WR124539	1	BUSHING-1.5 LONGX.750DX.51D	
6	WR126491	1	SPRING-EXTENSION	
7	AG129192	1	BOLT-ADJUST,1-14RH,1-14LH	
8	AG129193	1	NUT-JAM,1-14 UNF,LH	
9	WR135545	2	SPACER-UHMW,1.5OD X .78ID	
10	AG136788	1	BOOM WLDMT-TIP,BREAKAWAY,120	
11	AG136818	1	CAM ASM-BREAKAWAY,120FT	SEE PAGE 3-46
12	AG518500	3	BOLT 0.37-16NCX 1.00 G8 ZN HHD	
13	AG550124	2	NUT 0.50-13NC HEX ZN REG	
14	AG550264	1	WASHER 0.50 LK ZN REG	
15	AG550353	1	WASHER 0.50 FL ZN REG TYPE-B	
16	AG550515	2	BOLT 0.37-16NCX 1.25 G5 ZN HHD	
17	AG550787	2	BOLT 0.75-10NCX 3.50 G5 ZN HHD	
18	AG551007	2	WASHER 0.37 FL ZN REG TYPE-B	
19	AG556149	1	BOLT 0.50-13NCX 3.50 G5 ZN HHD	
20	AG561156	2	WASHER 0.75 FL ZN SAE TYPE-A	
21	AG601152	1	NUT 0.50-13NC HEX ZN REG NY	
22	AG601411	5	NUT 0.37-16NC HEX ZN REG NY	
23	AG603864	2	NUT 0.75-10NC HEX ZN REG NY	
24	AG604185	1	NUT 1.00-08NC HEX ZN HVY NY	
25	6623263	1	SHOCK ABSORBER-BOOM	
26	6626401	1	BOLT-EYE	
27	503475D1	1	PLATE-SHOCK,MNT	
29	516934D1	1	PLATE-CLAMP,PVT PIN,TIP,120	

Copyright © 2007 AGCO Corporation

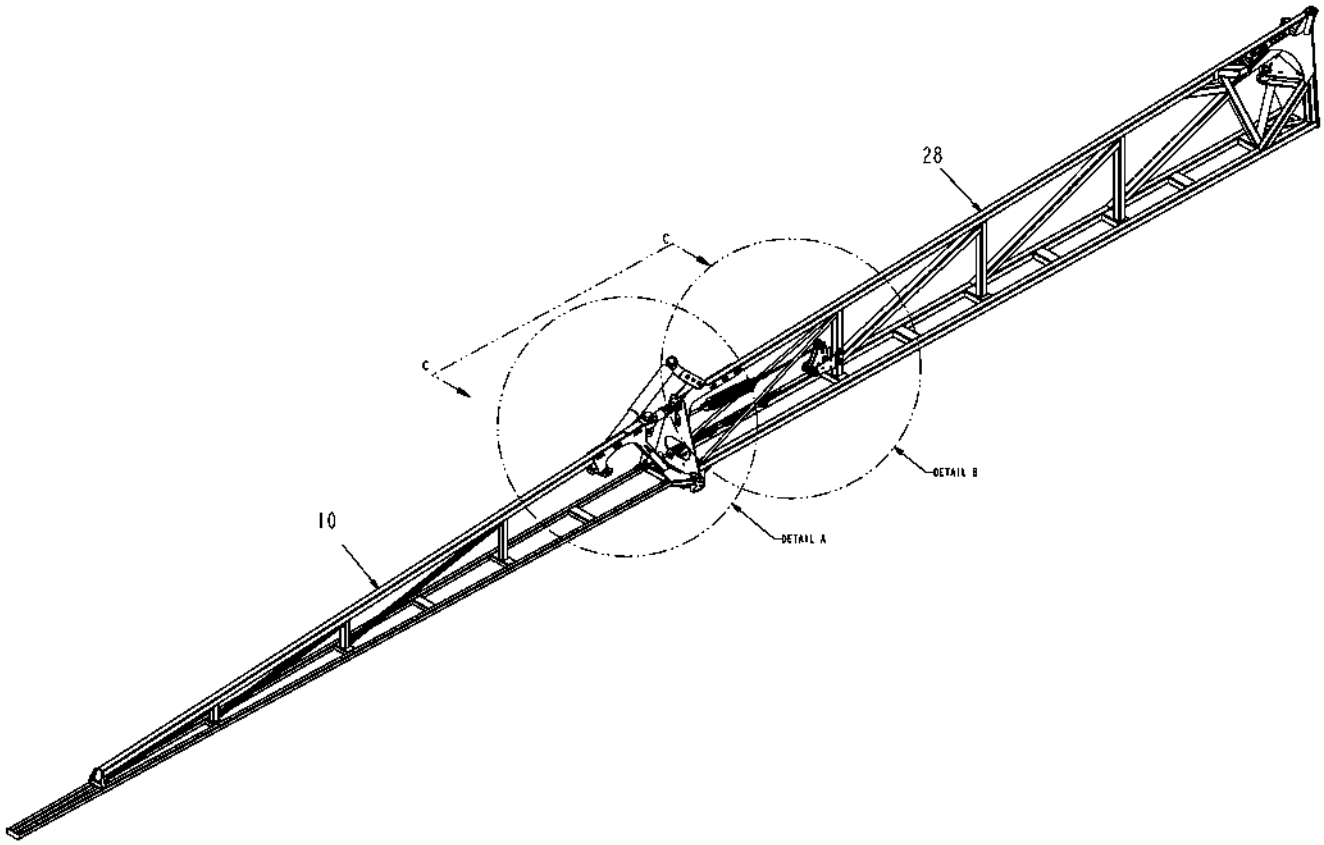

516622D1-02-R110-01.TIF

Copyright © 2007 AGCO Corporation

TIP ASM-FOLD BACK,BM,120FT,RH

ITEM	PART #	QTY	DESCRIPTION	COMMENTS
10	AG136788	1	BOOM WLDMT-TIP,BREAKAWAY,120	
28	516624D1	1	BOOM WLDMT-MID,120FT,RH	

Copyright © 2007 AGCO Corporation

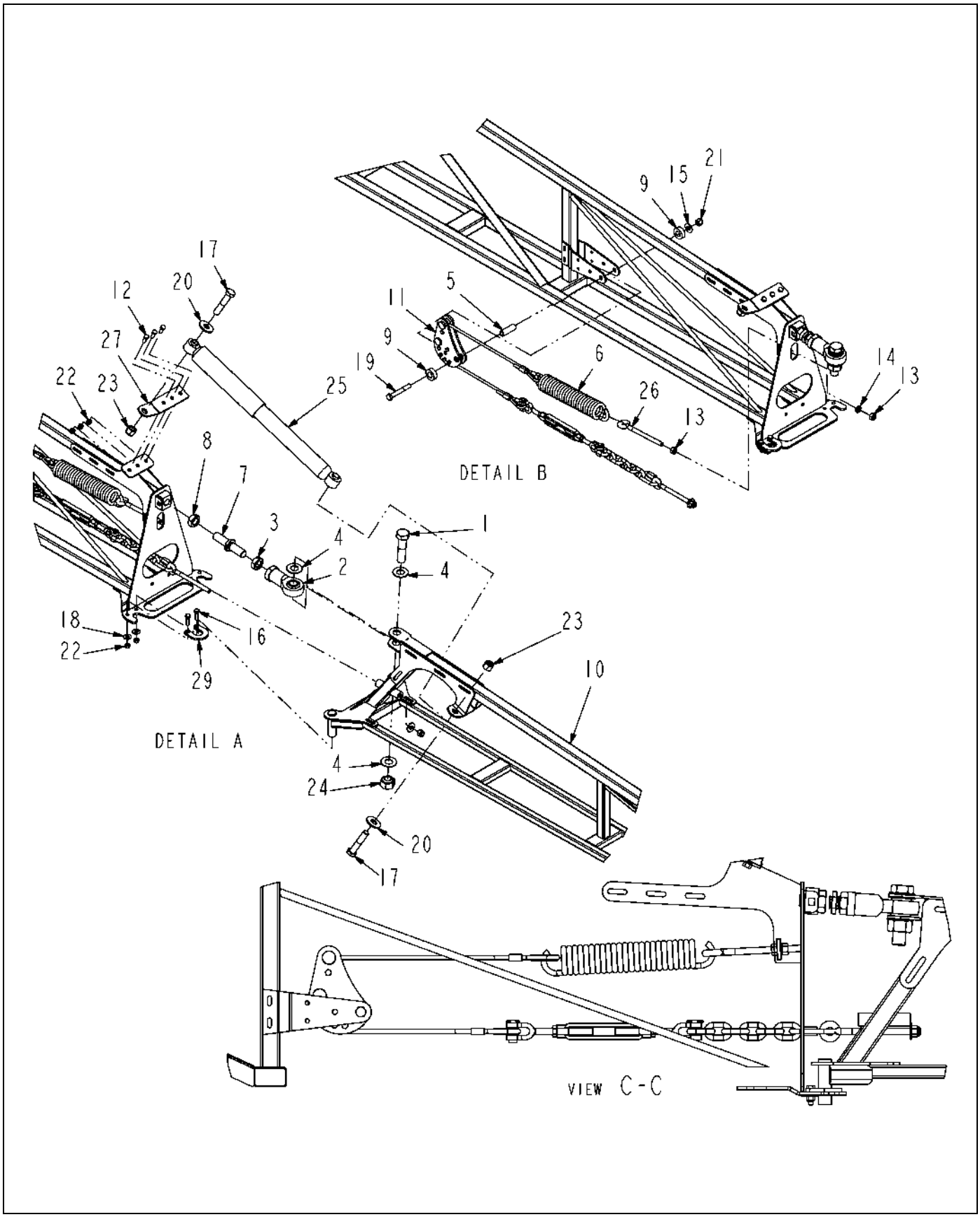

516622D1-02-R110-02.TIF

Copyright © 2007 AGCO Corporation

TIP ASM-FOLD BACK,BM,120FT,RH

ITEM	PART #	QTY	DESCRIPTION	COMMENTS
1	AG010220	1	BOLT 1.00- 8NCX 4.00 G5 PL HHD	
2	WR34606	1	ROD-END,1-14UNF,FEMALE	
3	WR34609	1	NUT-JAM, 1-14UNF	
4	WR55197	3	WASHER-PLAIN HRD,1 ID GRADE 8	
5	WR124539	1	BUSHING-1.5 LONGX.750DX.51D	
6	WR126491	1	SPRING-EXTENSION	
7	AG129192	1	BOLT-ADJUST,1-14RH,1-14LH	
8	AG129193	1	NUT-JAM,1-14 UNF,LH	
9	WR135545	2	SPACER-UHMW,1.5OD X .78ID	
10	AG136788	1	BOOM WLDMT-TIP,BREAKAWAY,120	
11	AG136818	1	CAM ASM-BREAKAWAY,120FT	SEE PAGE 3-46
12	AG518500	3	BOLT 0.37-16NCX 1.00 G8 ZN HHD	
13	AG550124	2	NUT 0.50-13NC HEX ZN REG	
14	AG550264	1	WASHER 0.50 LK ZN REG	
15	AG550353	1	WASHER 0.50 FL ZN REG TYPE-B	
16	AG550515	2	BOLT 0.37-16NCX 1.25 G5 ZN HHD	
17	AG550787	2	BOLT 0.75-10NCX 3.50 G5 ZN HHD	
18	AG551007	2	WASHER 0.37 FL ZN REG TYPE-B	
19	AG556149	1	BOLT 0.50-13NCX 3.50 G5 ZN HHD	
20	AG561156	2	WASHER 0.75 FL ZN SAE TYPE-A	
21	AG601152	1	NUT 0.50-13NC HEX ZN REG NY	
22	AG601411	5	NUT 0.37-16NC HEX ZN REG NY	
23	AG603864	2	NUT 0.75-10NC HEX ZN REG NY	
24	AG604185	1	NUT 1.00-08NC HEX ZN HVY NY	
25	6623263	1	SHOCK ABSORBER-BOOM	
26	6626401	1	BOLT-EYE	
27	503475D1	1	PLATE-SHOCK,MNT	
29	516934D1	1	PLATE-CLAMP,PVT PIN,TIP,120	

Copyright © 2007 AGCO Corporation

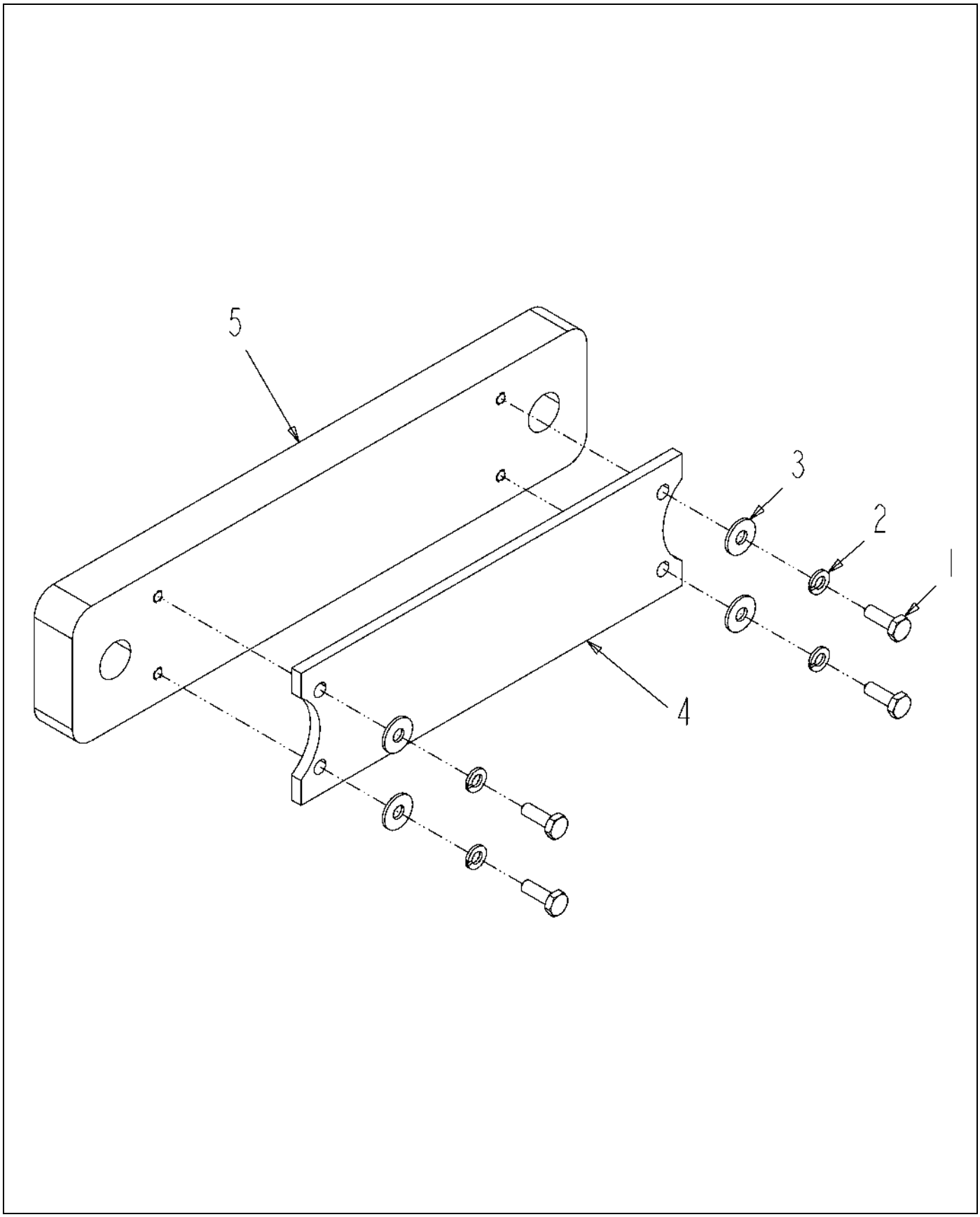

514846D1-01-N980-.TIF

Copyright © 2007 AGCO Corporation

PLATE ASM-HD,WEAR PAD

ITEM	PART #	QTY	DESCRIPTION	COMMENTS
1	AG550485	4	BOLT 0.25-20NCX 0.75 G5 ZN HHD	
2	AG550493	4	WASHER 0.25 LK ZN REG	
3	AG550507	4	WASHER 0.25 FL ZN REG TYPE-B	
4	514715D1	1	PAD-WEAR,BOOM TREE	
5	515615D1	1	PLATE-MTG,HD,WEAR PAD	

Copyright © 2007 AGCO Corporation

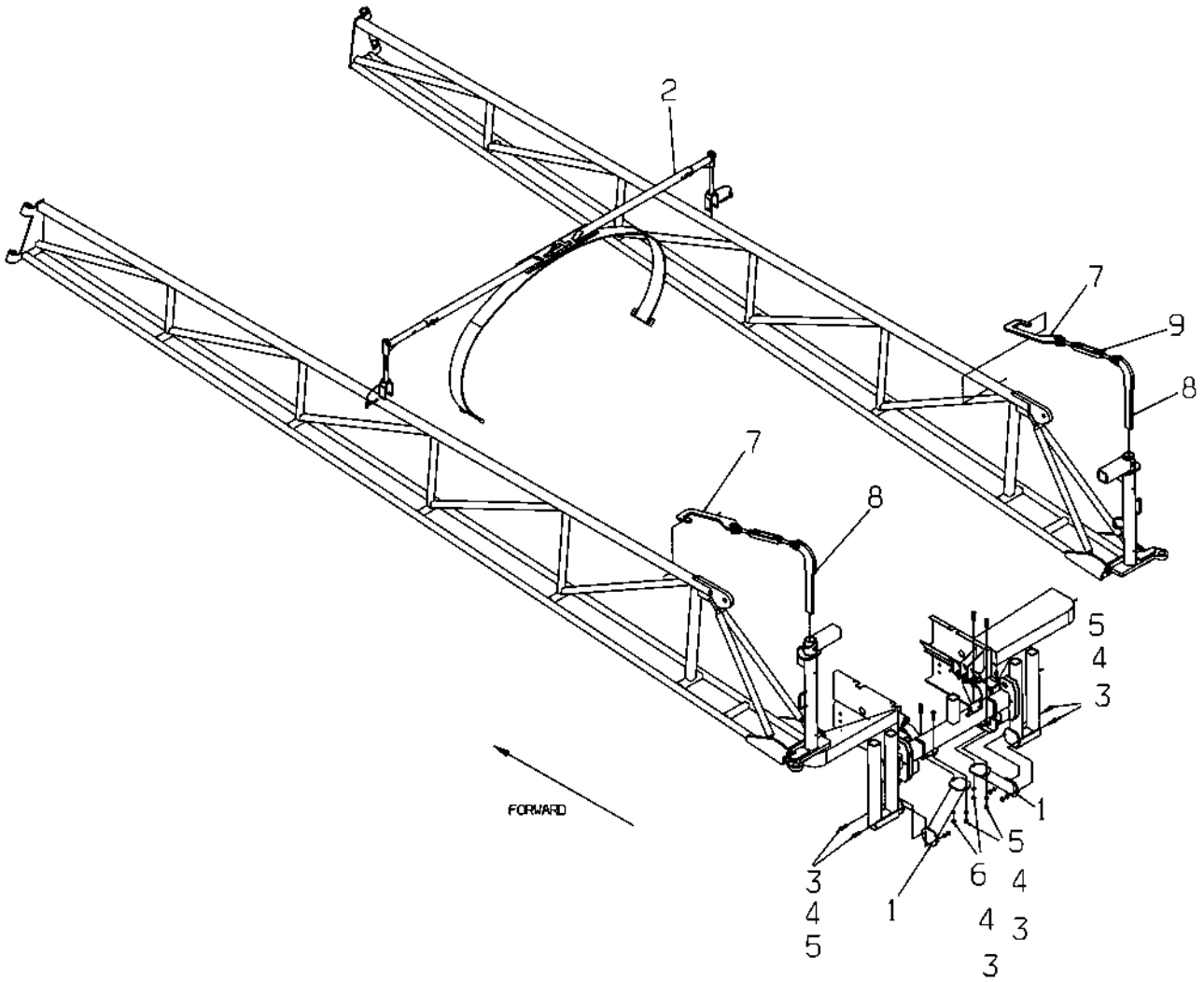

504796-A-1.TIF

Copyright © 2007 AGCO Corporation

HOOK INSTL-BOOM,LIQ SYS,1254C

ITEM	PART #	QTY	DESCRIPTION	COMMENTS
1	AG328788	-	GUSSET WLDMT-BOOM TREE	
2	AG504795	1	RETAINER ASM-BOOM,LIQ,COMBO	SEE PAGE 4-90
3	AG550124	8	NUT 0.50-13NC HEX ZN REG	
4	AG550264	8	WASHER 0.50 LK ZN REG	
5	AG550817	6	BOLT 0.50-13NCX 1.50 G5 ZN HHD	
6	AG553956	2	BOLT 0.50-13NCX 1.75 G5 ZN HHD	
7	AG263217	2	HOOK-BOOM,SUPPORT	
8	AG328772	2	BRKT-BOOM,HOOK	
9	AG514326	2	TURNBUCKLE 3/4X9 GAL JAW & JAW	

Copyright © 2007 AGCO Corporation

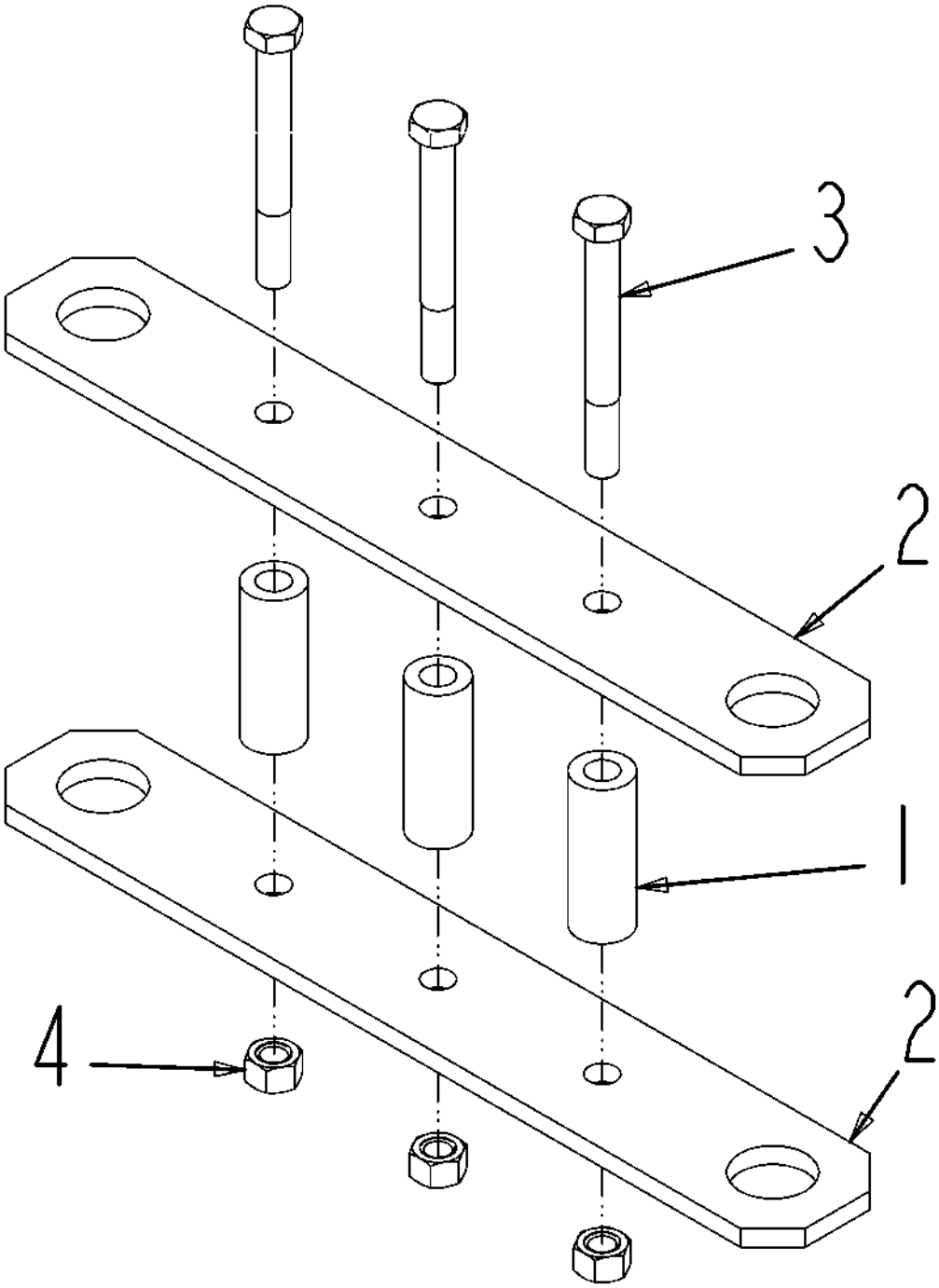

506334D1-M788.TIF

Copyright © 2007 AGCO Corporation

LINKAGE ASM-CYL,HYD,INNER/MID

ITEM	PART #	QTY	DESCRIPTION	COMMENTS
1	AG230312	3	TUBE SPACER LINK	
2	AG262985	2	LINK-LONG	
3	AG551058	3	BOLT 0.37-16NCX 3.25 G5 ZN HHD	
4	AG601411	3	NUT 0.37-16NC HEX ZN REG NY	

Copyright © 2007 AGCO Corporation

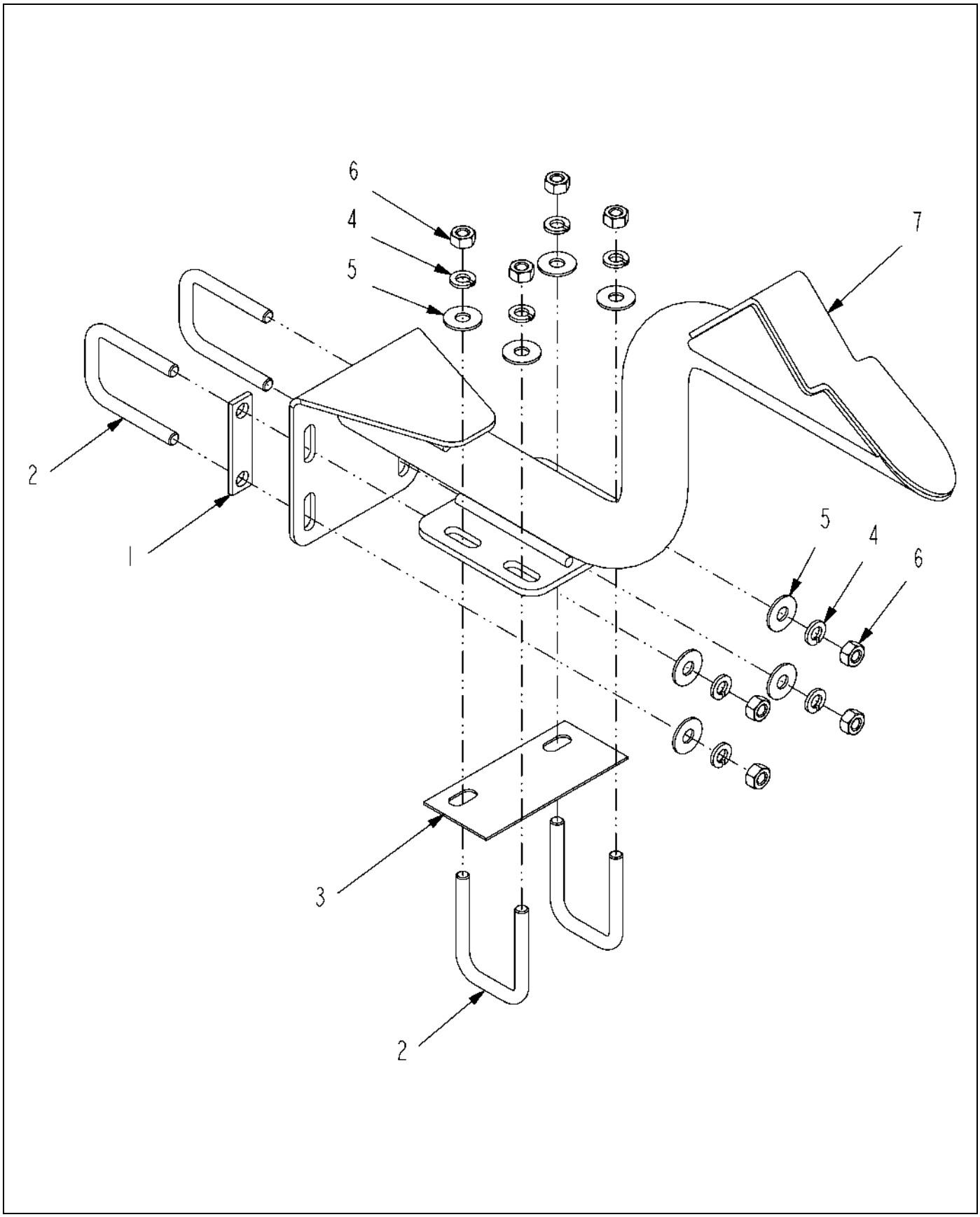

513272D1-01-N648-.TIF

Copyright © 2007 AGCO Corporation

REST INSTL-FLD BACK,90/100,RH

ITEM	PART #	QTY	DESCRIPTION	COMMENTS
1	AG108935	AR	PLATE BACKING	
2	AG231204	4	BOLT-U .31-18X1.88X2.63	
3	AG232797	AR	SHIM PLATE	
4	AG562051	8	WASHER 0.31 LK SS REG	
5	AG562074	8	WASHER 0.31 FL SS REG TYPE-B	
6	AG562090	8	NUT 0.31-18NC HEX SS REG	
7	512740D1	1	REST WLDMT-BM,FLD BACK,90/100	

Copyright © 2007 AGCO Corporation

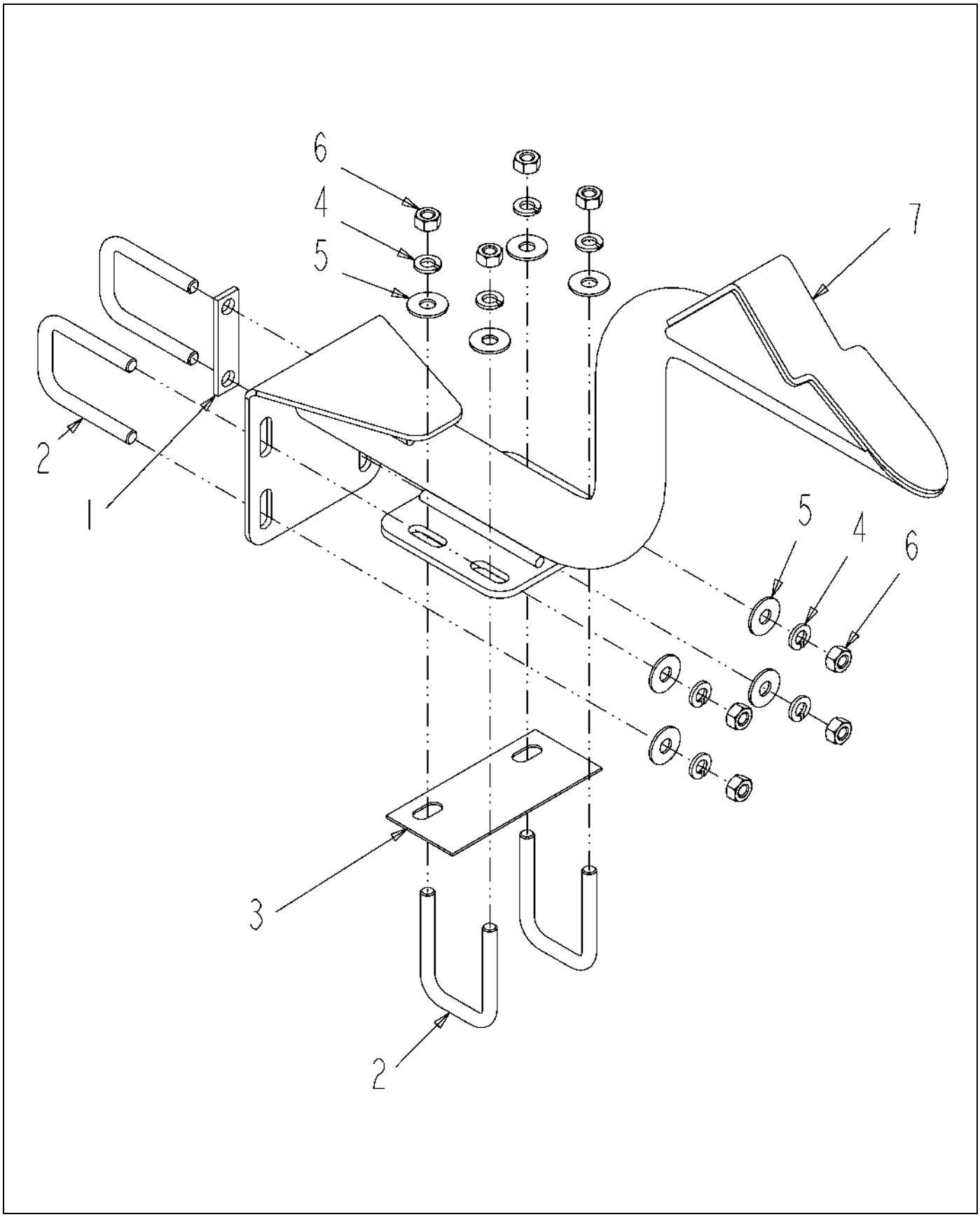

513273D1-01-N648-.TIF

Copyright © 2007 AGCO Corporation

REST INSTL-FLD BACK,90/100,LH

ITEM	PART #	QTY	DESCRIPTION	COMMENTS
1	AG108935	AR	PLATE BACKING	
2	AG231204	4	BOLT-U .31-18X1.88X2.63	
3	AG232797	AR	SHIM PLATE	
4	AG562051	8	WASHER 0.31 LK SS REG	
5	AG562074	8	WASHER 0.31 FL SS REG TYPE-B	
6	AG562090	8	NUT 0.31-18NC HEX SS REG	
7	512740D1	1	REST WLDMT-BM,FLD BACK,90/100	

Copyright © 2007 AGCO Corporation

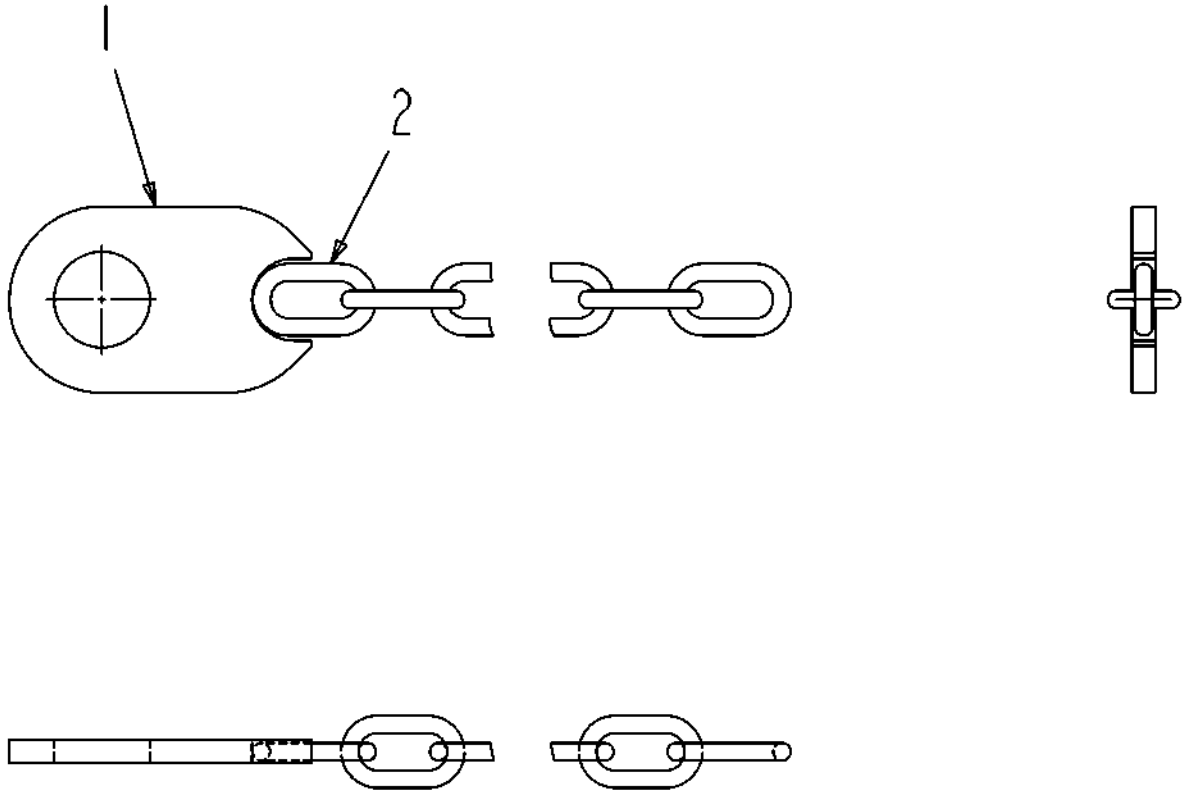

136972-01-M788-.TIF

Copyright © 2007 AGCO Corporation

CHAIN WLDMT-PVT PLATE,22 LINK

ITEM	PART #	QTY	DESCRIPTION	COMMENTS
1	AG136973	1	PLATE-PVT,MTG,CHAIN,.25	
2	506477D1	1	CHAIN-22 LINK,.19,SS	

Copyright © 2007 AGCO Corporation

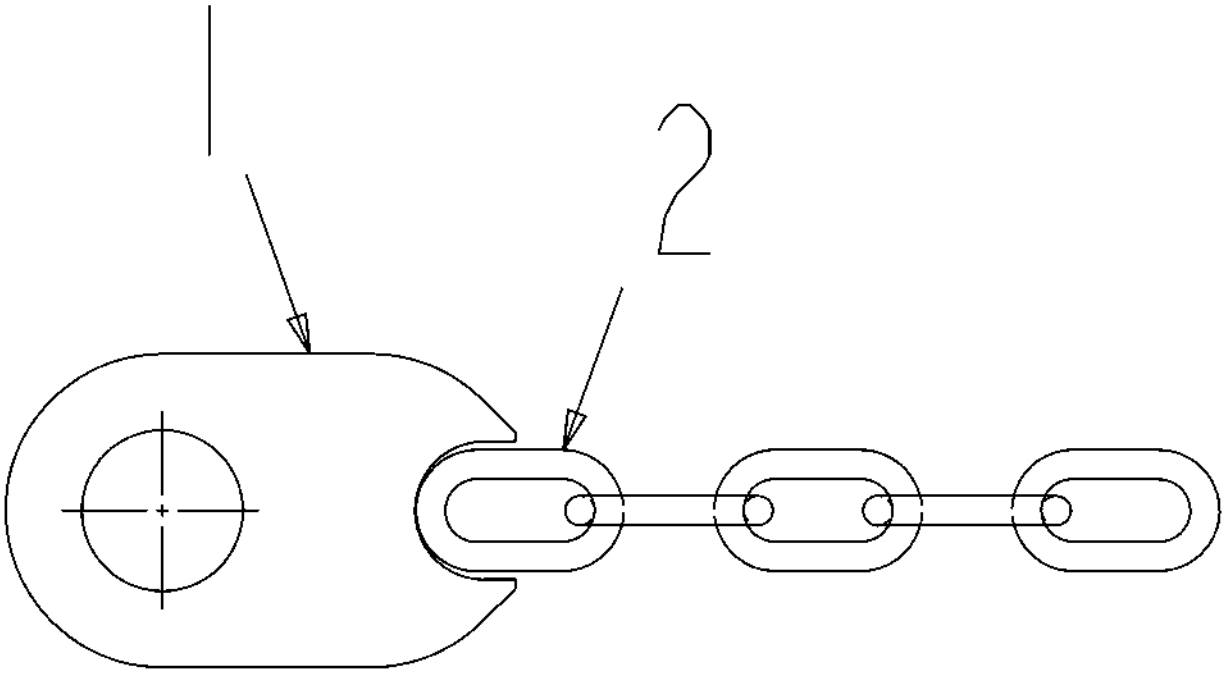

136978-01-M788.TIF

Copyright © 2007 AGCO Corporation

CHAIN WLDMT-PVT PLATE,5 LINK

ITEM	PART #	QTY	DESCRIPTION	COMMENTS
1	AG136973	1	PLATE-PVT,MTG,CHAIN,.25	
2	WR232770	1	CHAIN .19-5 LINKS	

Copyright © 2007 AGCO Corporation

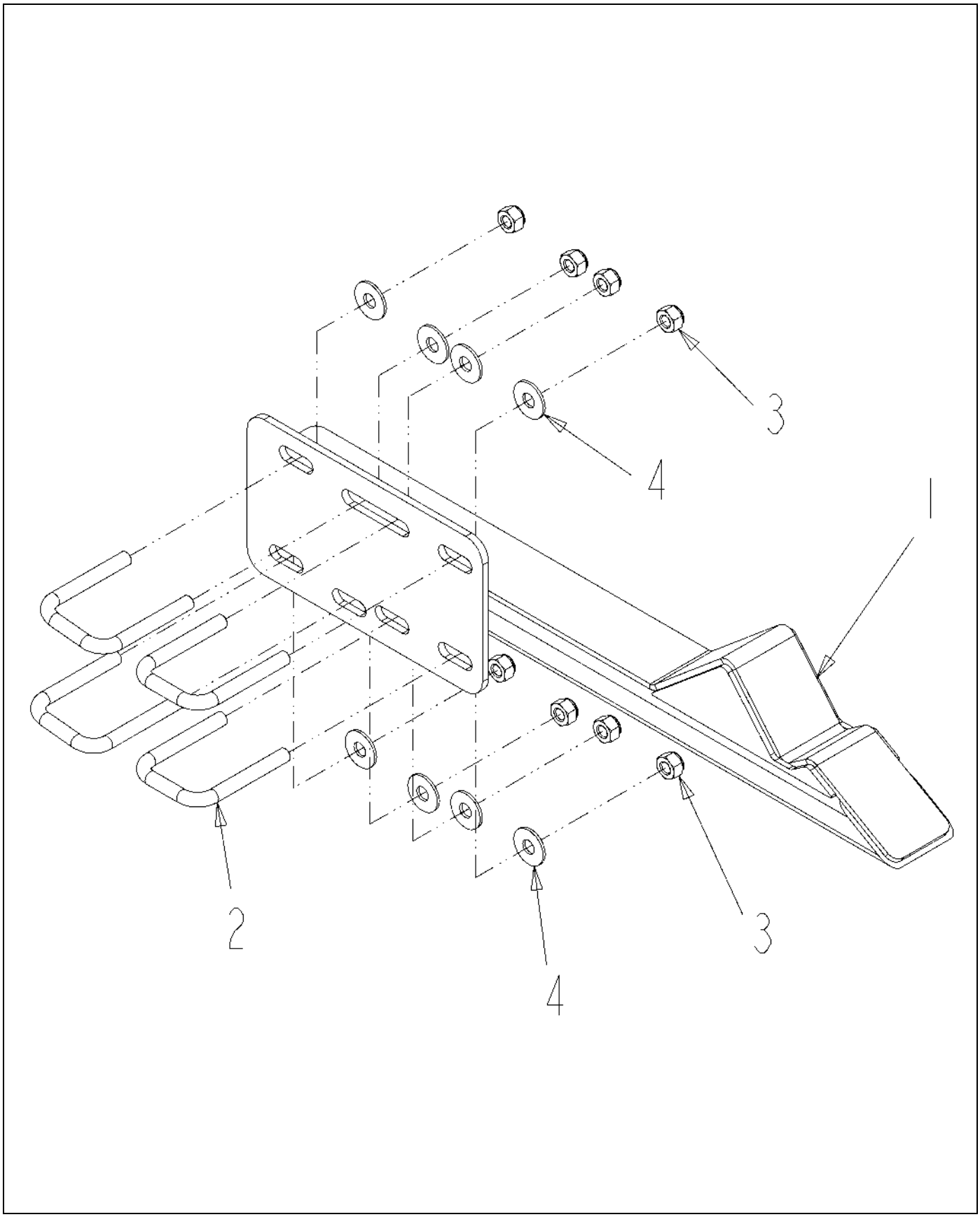

136981-03-R286-.TIF

Copyright © 2007 AGCO Corporation

REST INSTL-BM,FLD BACK,120,LH

ITEM	PART #	QTY	DESCRIPTION	COMMENTS
1	AG136983	1	REST WLDMT-BM,FLD BACK,120,LH	
2	AG231204	4	BOLT-U .31-18X1.88X2.63	
3	AG516403	8	NUT 0.31-18NC HEX SS REG NY	
4	AG562074	8	WASHER 0.31 FL SS REG TYPE-B	

Copyright © 2007 AGCO Corporation

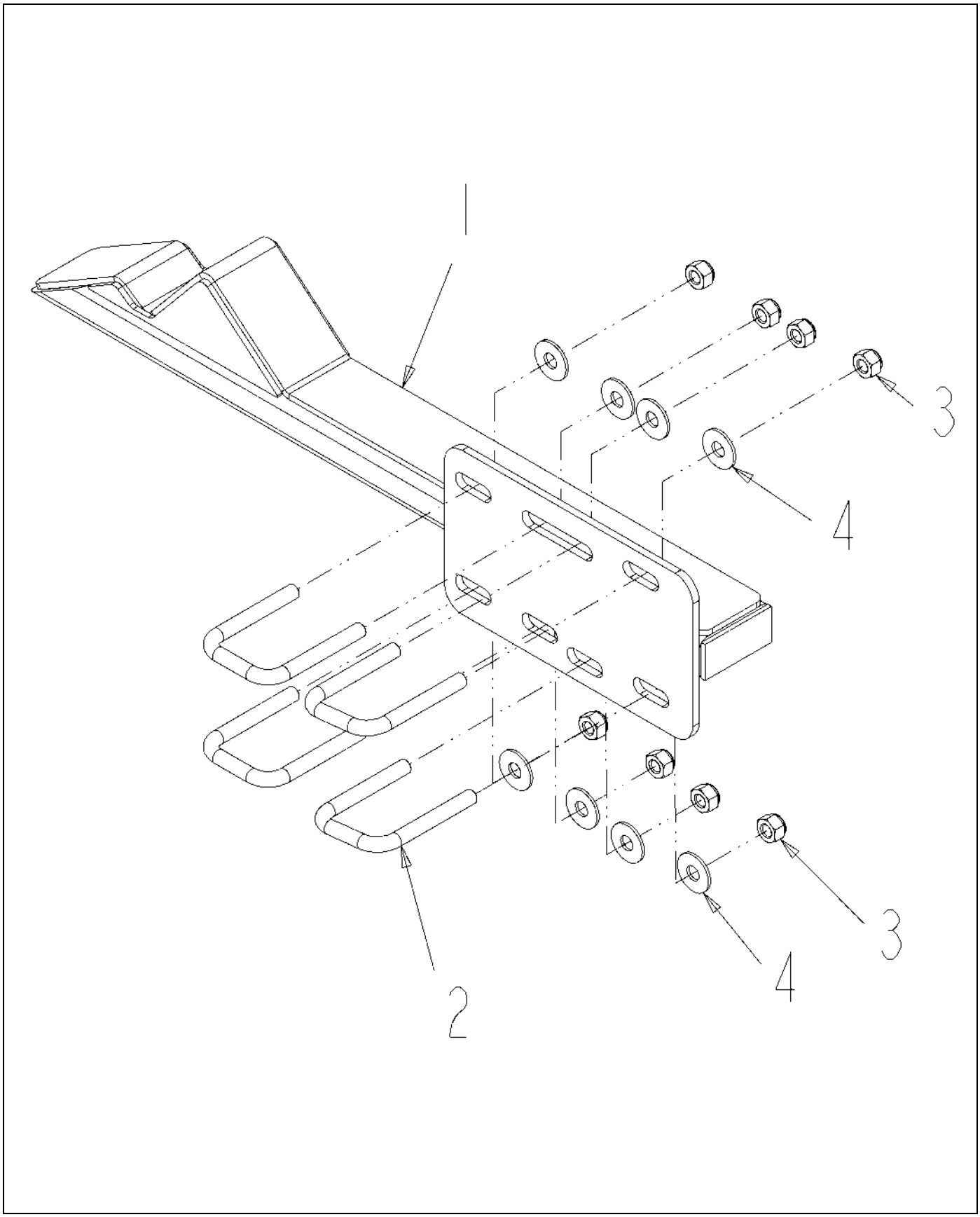

136980-03-R286-.TIF

Copyright © 2007 AGCO Corporation

REST INSTL-BM,FLD BACK,120,RH

ITEM	PART #	QTY	DESCRIPTION	COMMENTS
1	AG136982	1	REST WLDMT-BM,FLD BACK,120,RH	
2	AG231204	4	BOLT-U .31-18X1.88X2.63	
3	AG516403	8	NUT 0.31-18NC HEX SS REG NY	
4	AG562074	8	WASHER 0.31 FL SS REG TYPE-B	

Copyright © 2007 AGCO Corporation

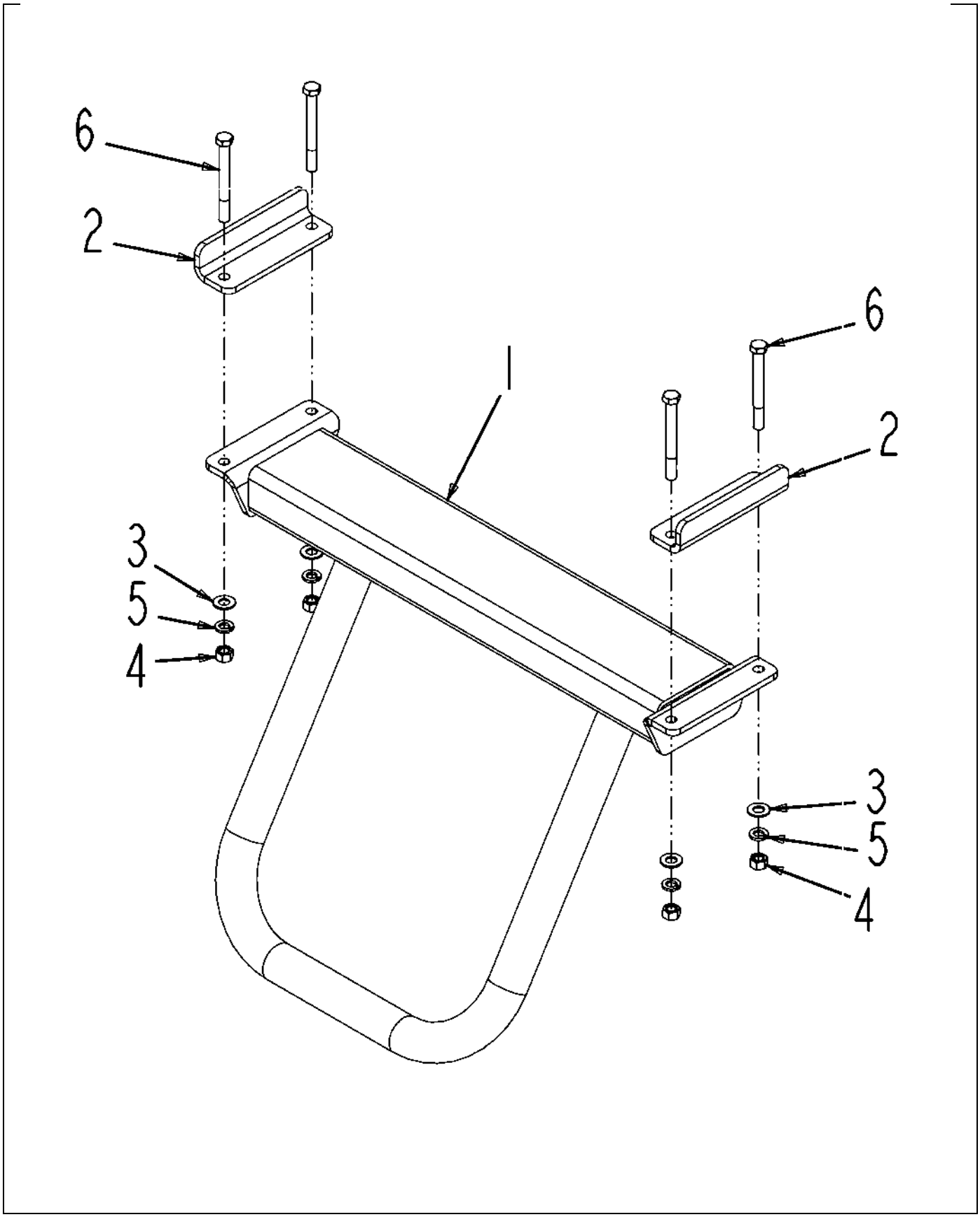

136987-01-M788.TIF

Copyright © 2007 AGCO Corporation

RETAINER INSTL-BM,4.00 TUBE

ITEM	PART #	QTY	DESCRIPTION	COMMENTS
1	AG136988	1	RETAINER WLDMT-BM,4.00 TUBE	
2	AG136992	2	PLATE-MTG,BM RTNR,4.00 TUBE	
3	AG514559	4	WASHER 0.37 FL ZN SAE TYP-A G8	
4	AG523259	4	NUT-.37-16,G8,ZN,H	
5	AG550191	4	WASHER 0.37 LK ZN REG	
6	AG560456	4	BOLT 0.37-16NCX 3.50 G8 ZN HHD	

Copyright © 2007 AGCO Corporation

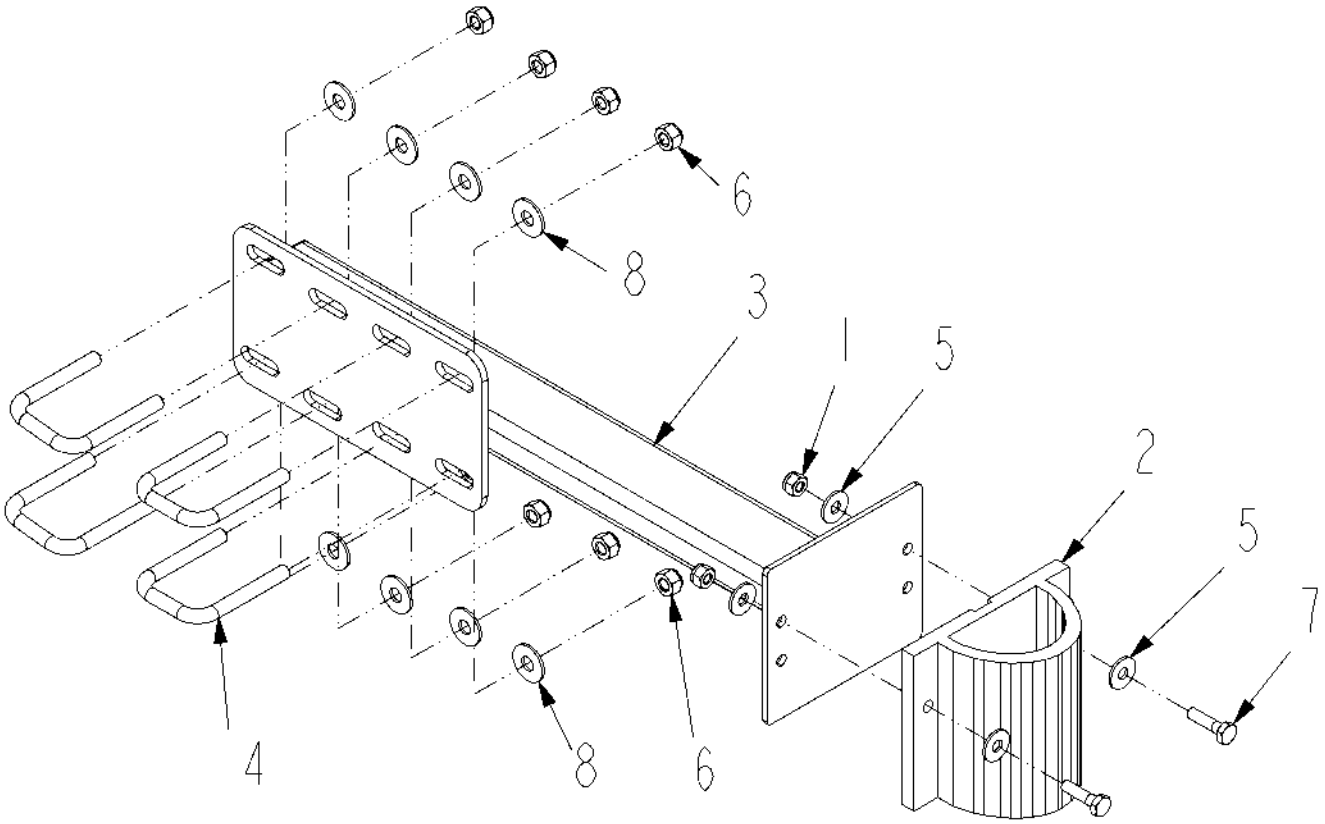

136993-03-R286-.TIF

Copyright © 2007 AGCO Corporation

BUMPER INSTL-FOLD BACK,120,LH

ITEM	PART #	QTY	DESCRIPTION	COMMENTS
1	AG027275	2	NUT 0.25-20NC HEX SS REG NY	
2	AG109953	1	BUMPER-BOOM RACK	
3	AG136995	1	BUMPER WLDMT-FOLD BACK,120,LH	
4	AG231204	4	BOLT-U .31-18X1.88X2.63	
5	AG515121	4	WASHER 0.25 FL SS REG TYPE-B	
6	AG516403	8	NUT 0.31-18NC HEX SS REG NY	
7	AG562064	2	BOLT 0.25-20NCX 1.00 SS HHD	
8	AG562074	8	WASHER 0.31 FL SS REG TYPE-B	

Copyright © 2007 AGCO Corporation

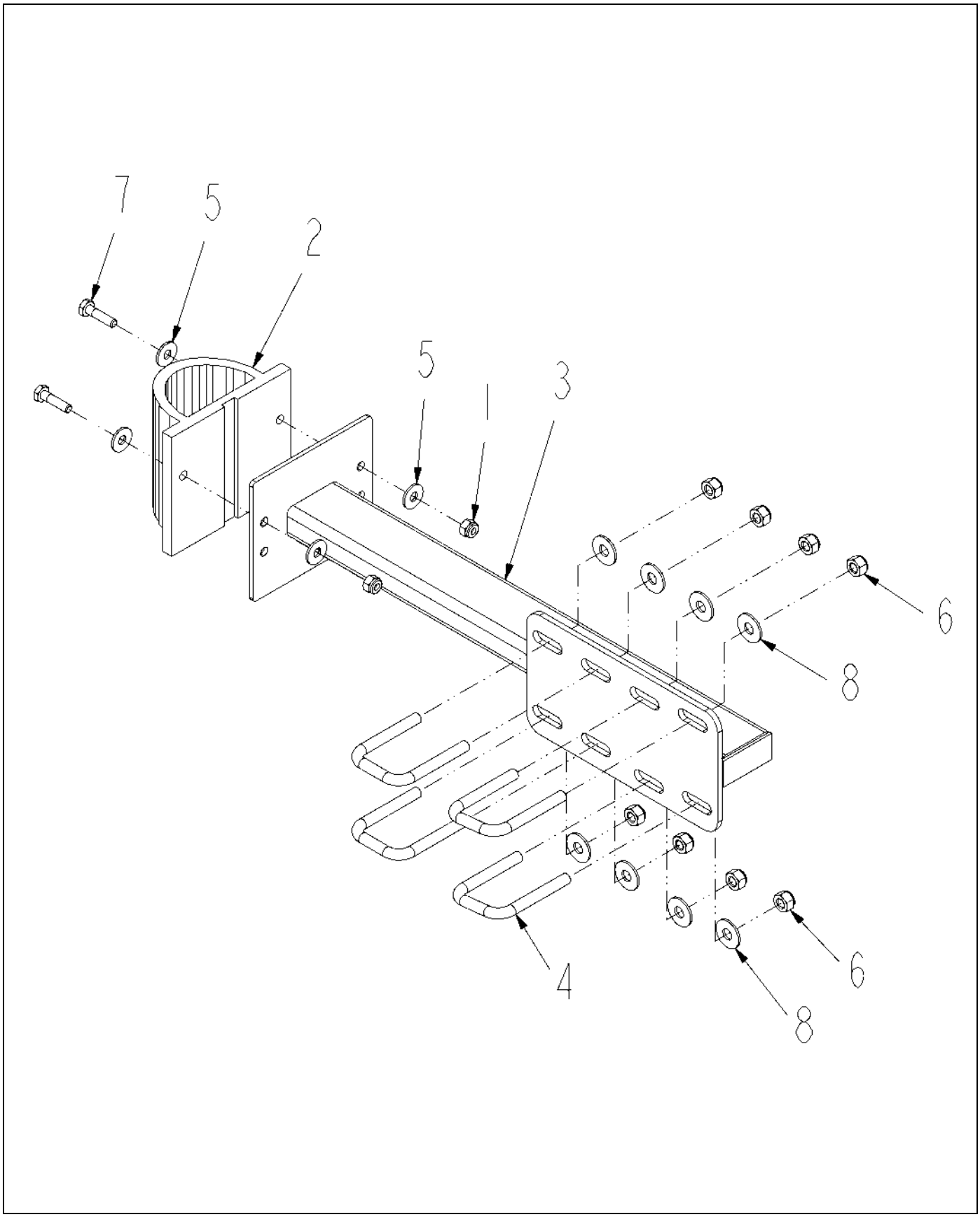

136994-03-R286-.TIF

Copyright © 2007 AGCO Corporation

BUMPER INSTL-FOLD BACK,120,RH

ITEM	PART #	QTY	DESCRIPTION	COMMENTS
1	AG027275	2	NUT 0.25-20NC HEX SS REG NY	
2	AG109953	1	BUMPER-BOOM RACK	
3	AG136996	1	BUMPER WLDMT-FOLD BACK,120,RH	
4	AG231204	4	BOLT-U .31-18X1.88X2.63	
5	AG515121	4	WASHER 0.25 FL SS REG TYPE-B	
6	AG516403	8	NUT 0.31-18NC HEX SS REG NY	
7	AG562064	2	BOLT 0.25-20NCX 1.00 SS HHD	
8	AG562074	8	WASHER 0.31 FL SS REG TYPE-B	

Copyright © 2007 AGCO Corporation

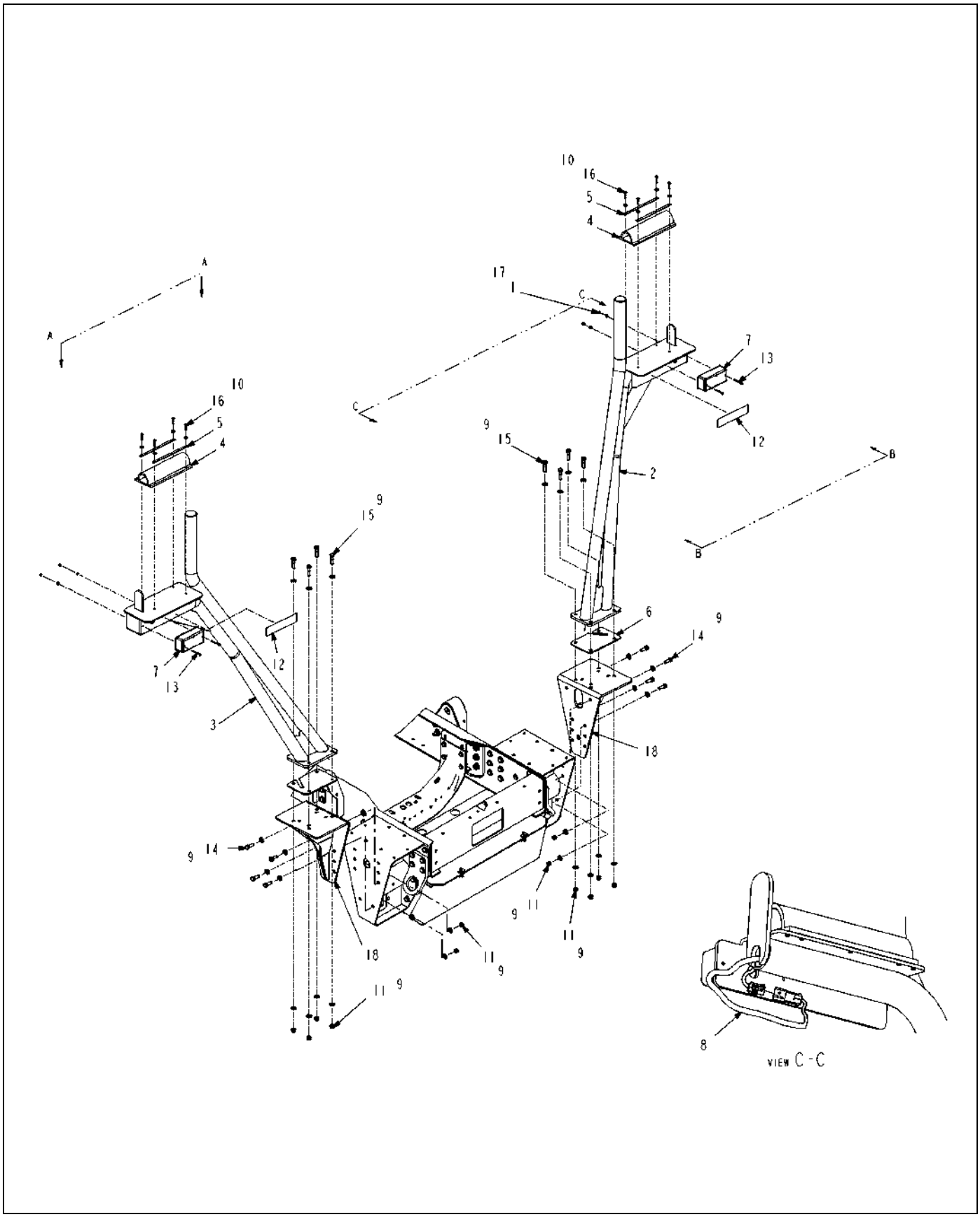

520940D1-01-R483-.TIF

Copyright © 2007 AGCO Corporation

BOOMREST INSTL-120" BM,8/10X4

ITEM	PART #	QTY	DESCRIPTION	COMMENTS
1	AG027274	4	NUT #10-24NC HEX SS REG NY	
2	AG123189	1	BOOMREST WLDMT-LH	
3	AG123190	1	BOOMREST WLDMT-RH	
4	WR136831	2	BUMPER-12.25,BOOM REST	
5	WR136832	4	STRAP-RETAINER,BUMPER	
6	AG262556	2	PLATE-SPACER,BOOMREST	
7	AG327247	2	LAMP-WARNING,AMBER	
8	AG424327	2	HARNESS-BOOM REST	
9	AG514554	32	WASHER 0.50 FL ZN SAE TYP-A G8	
10	AG515121	8	WASHER 0.25 FL SS REG TYPE-B	
11	AG520614	16	NUT-.50-13,G8,ZN,HH,C-LK	
12	AG523590	2	REFLECTOR-YELLOW,2.0X9.0	
13	AG523814	4	SCR-10-24X2.25,PPH,SS	
14	AG559237	8	BOLT 0.50-13NCX 1.50 G8 ZN HHD	
15	AG561665	8	BOLT 0.50-13NCX 2.00 G8 ZN HHD	
16	AG561952	8	BOLT 0.25-20NCX 1.25 SS HHD	
17	AG562082	4	WASHER #10 FL SS REG TYPE-B	
18	506685D1	2	BRKT WLDMT-MTG,BOOMREST,8/10X4	

Copyright © 2007 AGCO Corporation

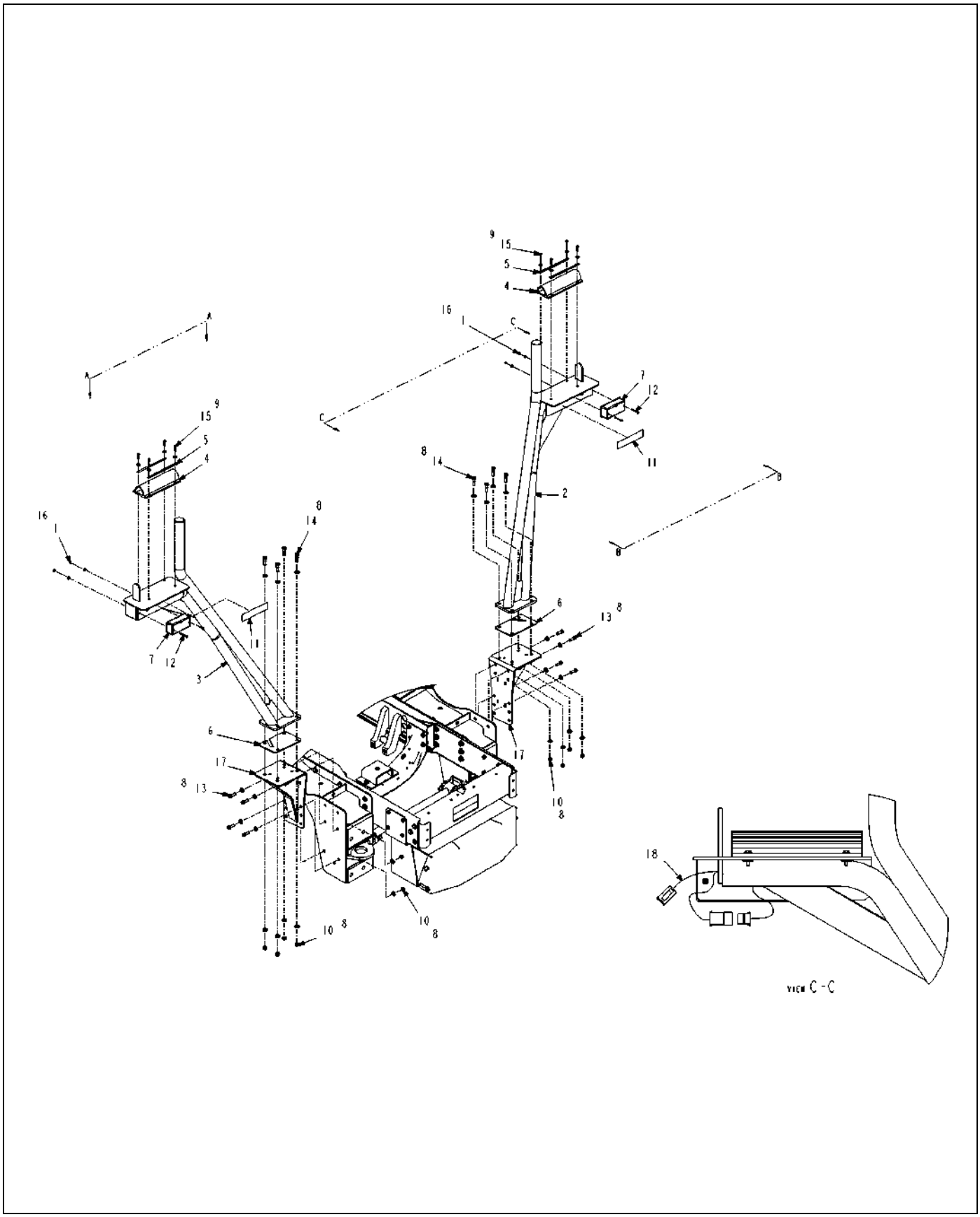

520941D1-01-R483-.TIF

Copyright © 2007 AGCO Corporation

BOOMREST INSTL-120" BM,SS/12X4

ITEM	PART #	QTY	DESCRIPTION	COMMENTS
1	AG027274	4	NUT #10-24NC HEX SS REG NY	
2	AG123189	1	BOOMREST WLDMT-LH	
3	AG123190	1	BOOMREST WLDMT-RH	
4	WR136831	2	BUMPER-12.25,BOOM REST	
5	WR136832	4	STRAP-RETAINER,BUMPER	
6	AG262556	2	PLATE-SPACER,BOOMREST	
7	AG327247	2	LAMP-WARNING,AMBER	
8	AG514554	32	WASHER 0.50 FL ZN SAE TYP-A G8	
9	AG515121	8	WASHER 0.25 FL SS REG TYPE-B	
10	AG520614	16	NUT-.50-13,G8,ZN,HH,C-LK	
11	AG523590	2	REFLECTOR-YELLOW,2.0X9.0	
12	AG523814	4	SCR-10-24X2.25,PPH,SS	
13	AG559237	8	BOLT 0.50-13NCX 1.50 G8 ZN HHD	
14	AG561665	8	BOLT 0.50-13NCX 2.00 G8 ZN HHD	
15	AG561952	8	BOLT 0.25-20NCX 1.25 SS HHD	
16	AG562082	4	WASHER #10 FL SS REG TYPE-B	
17	506686D1	2	BRKT WLDMT-MTG,BOOMREST,12X4	
18	516815D1	2	HARNESS-BOOM REST	

Copyright © 2007 AGCO Corporation

OPT-SS PLMB,80X5X10,ON,BALL	4-1
SYS INSTL-PLMB,80X5,ELEC VALVE	4-2
VALVE-BALL,1.00FP FLGXNPT,ELEC	4-3
OPT-SS PLMB,80X5X15,ON,BALL	4-4
OPT-SS PLMB,80X5X20,OFF,BALL	4-5
OPT-PP PLMB,120X7X10,ON,BALL	4-6
OPT-PP PLMB,120X7X10,ON,BALL	4-7
OPT-PP PLMB,120X7X20,OFF,BALL	4-8
OPT-PP PLMB,120X7X20,OFF,BALL	4-9
OPT-PP PLMB,90X5X10,ON,RTRY	4-10
SYS INSTL-PLMB,1.50,90X5,RTRY	4-11
OPT-PP PLMB,90X5X20,OFF,RTRY	4-12
SYS INSTL-PLMB,1.50,100X5,RTRY	4-13
OPT-PP PLMB,100X5X20,OFF,RTRY	4-14
SYS INSTL-PLMB,120X7,ELEC VLV	4-17
OPT-PP PLMB,120X7X20,OFF,RTRY	4-18
OPT-PP PLMB,120X7X20,OFF,RTRY	4-19
PIPE ASM-ENDROW,ELEC,10/20,PP	4-20
VALVE-SOL,NOZ BODY,ARAG,150PSI	4-21
PIPE ASM-ENDROW,ELEC,10/20,SS	4-22
PIPE ASM-ENDROW,ELEC,15,SS	4-23
MANF INSTL-HV,1.50,STD BM PLMB	4-24
MANF ASM-HV,1.50HB,STD BM PLMB	4-25
MANIFOLD INSTL-STD,BALL VALVE	4-26
MANIFOLD INSTL-HV,BALL VALVE	4-27
NOZ INSTL-FENCE ROW,RG,120FT	4-28
PIPE ASM-.5X10,PP,ENDROW	4-29
VALVE/BRKT ASM-MAIN,2.00 BTFL	4-30
VALVE-BTFL,2.00,SPR RTN,PNEU	4-31
ACTUATOR-VALVE,2.00,SPR RTN	4-32
MANF INSTL-BM,HV Y,W/BALL VLV	4-33
NOZ HLDR-SGL 1.00 IPS	4-34
SINGLE NOZZLE HOLDER-.75 PIPE	4-35
KIT-NOZ,SPRAY,VARITARGET,CLR,5	4-36
NOZZLE-SPRAY,VARITARGET,1.2GPM	4-37
KIT-NOZ,VARITARGET,CLR,25	4-38
HANGER ASM-HOSE	4-39
PLMB ASM-PROD,LIQ,8/10/12X4	4-40
PLMB ASM-DISTR,PRESS W/STRAIN	4-41
STRAINER-Y,2.00FP FLG,W/30MESH	4-42
PLMB ASM-PUMP/SUCTION	4-43
BOX ASM-CTRL,PLMB,PRESS MANF	4-44
VALVE 0.75 NPT BALL UNION POLY	4-45
BRKT ASM-MTG,ANG,SNSR,LH	4-46
BRKT ASM-MTG,ANG,SNSR,RH	4-47
BRKT ASM-MTG,VERT,SNSR,AUTOBM	4-48
PLMB INSTL-HV,BOOM,LH,80	4-49
PLMB INSTL-HV,BOOM,RH,80	4-50
PLMB INSTL-HV,BOOM,CENTER	4-51
VALVE QUIK-STOP1.00NPTX0.75NPT	4-52
BLKHD BR TEE ASM,-12 ORFS	4-53

BRKT WLDMT-MTG,2.00X2.00 FLG	4-54
BRKT ASM-L REV/P CLP STD U	4-55
BRKT ASM-L W/P CLP,STD UBOLT	4-56
BRKT ASM-L W/2 P CLP,STD UBOLT	4-57
BRKT ASM-L,STD UBOLT	4-58
BRKT ASM-L,PP STAUFF,LG U BOLT	4-59
BRKT ASM-L,2 STAUFF,STD U	4-60
PIPE ASM-X W/3 1.00HB,11X10,SS	4-61
PIPE ASM-90D W/1HB,10X10,SS,LH	4-62
PIPE ASM-90D W/1HB,10X10,SS,RH	4-63
PIPE ASM-T W/2 1.00HB,16X10,SS	4-64
PIPE ASM-90D W/1HB,4X10,SS,RH	4-65
PIPE ASM-90D W/1HB,4X10,SS,LH	4-66
PIPE ASM-90D W/1HB,12X10,SS,RH	4-67
PIPE ASM-90D W/1HD,12X10,SS,LH	4-68
BRKT ASM-L W/2 P CLP,LG UBOLT	4-69
PIPE ASM-X W/3 1.00HB,11X10,SS	4-70
PIPE ASM-90D W/1HB,7X15,SS,LH	4-71
PIPE ASM-90D W/1HB,7X15,SS,RH	4-72
PIPE ASM-T W/2 1HB,11X15,SS,LH	4-73
PIPE ASM-T W/2 1HB,11X15,SS,RH	4-74
PIPE ASM-90D W/1.00HB,2X15,SS	4-75
PIPE ASM-90D W/1HB,8X15,SS,RH	4-76
PIPE ASM-90D W/1HB,8X15,SS,LH	4-77
BRKT ASM-L W/REV P CLP	4-78
PIPE ASM-X W/3 1.00HB,6X20,SS	4-79
PIPE ASM-90D W/1HB,5X20,SS,LH	4-80
PIPE ASM-90D W/1HB,5X20,SS,RH	4-81
PIPE ASM-T W/2 1.00HB,8X20,SS	4-82
PIPE ASM-90D W/1.00HB,2X20,SS	4-83
PIPE ASM-90D W/1.00HB,6X20,SS	4-84
BRKT ASM-ENDROW,IPS CLP,RH	4-85
BRKT ASM-ENDROW,IPS CLP,LH	4-86
BRKT ASM-ENDROW,STAUFF,.75,LH	4-87
BRKT ASM-ENDROW,STAUFF,.75,RH	4-88
NOZZLE ASM-INJ,2 LOOP,2.00 NPT	4-89
RETAINER ASM-BOOM,LIQ,COMBO	4-90
BRKT ASM-L,PP STAUFF 1.25 P	4-91
BRKT ASM-L,PP STAUFF	4-92
BRKT ASM-STR,SH,IPS CLP	4-93
BRKT ASM-STR,LS,IPS,1.25 P CLP	4-94
BRKT ASM-L,PP STAUFF,CTR P CLP	4-95
BRKT ASM-STR,LG,IPS,P CLP	4-96
BRKT ASM-L,PP STAUFF,1.00U	4-97
BRKT ASM-STR,SH,IPS CLP,1.00U	4-98
PIPE ASM-X W/3 1.00HB,11X10,PP	4-99
BRKT ASM-STR,LG,IPS,1.62 PCLP	4-100
BRKT ASM-L,1IPS,1.50 STAUFF	4-101
BRKT ASM-L,1IPS,1.50 STAUFF,LG	4-102
BRKT ASM-STR,LG,IPS,2PCLP	4-103
BRKT ASM-STR,SH,IPS,1.25,1.00	4-104

BRKT ASM-L,1.50 STAUFF,STD U	4-105
BRKT ASM-L,1.50 STAUFF,P,LG U	4-106
BRKT ASM-STR,LG,IPS,2XP CLP	4-107
BRKT ASM-L,PP STAUFF,PCLP,1.00	4-108
BRKT ASM-L W/1.25/1.00 PCLP	4-109
BRKT ASM-STR,SH,2X 1.25 P CLP	4-110
PIPE ASM-T W/2 1.00HB,7X10,PP	4-111
PIPE ASM-90D W/1HB,5X10,PP,RH	4-112
PIPE ASM-90D W/1HB,5X10,PP,LH	4-113
PIPE ASM-90D W/1.25HB,12X10,PP	4-114
PIPE ASM-90D W/1HB,7X10,PP,RH	4-115
PIPE ASM-90D W/1HB,7X10,PP,LH	4-116
PIPE ASM-T W/1.25/1HD,9X10,PP	4-117
PIPE ASM-2T,W/4 1HB,19X10,PP	4-118
BRKT ASM-L,REV,1.00PP STAUFF	4-119
BRKT ASM-STR,SH,IPS,1.25 P CLP	4-120
BRKT ASM-STR,LG,1.25 PCLP 2IPS	4-121
BRKT ASM-L,PP STAUFF,1.25 PCLP	4-122
PIPE ASM-90D W/1.00HB,6X20,PP	4-123
PIPE ASM-X W/3 1.00HB,6X20,PP	4-124
PIPE ASM-90D W/1HB,3X20,PP,RH	4-125
PIPE ASM-90D W/1HB,3X20,PP,LH	4-126
PIPE ASM-W/2 1.00HB,77.00,PP	4-127
BRKT ASM-STR,SH,1.25 PCLP	4-128
BRKT ASM-STR,LG,IPS,2PCL,1.25	4-129
PIPE ASM-90D W/1.25HB,6X20,PP	4-130
PIPE ASM-T W/2 1.00HB,3X20,PP	4-131
PIPE ASM-90D W/1HB,3X20,PP,RH	4-132
PIPE ASM-90D W/1HB,3X20,PP,LH	4-133
PIPE ASM-T W/2 1.00HB,7X20,PP	4-134
PIPE ASM-T W/1.25/1HB,5X20,PP	4-135
OPT-NOZ,5WAY,RTRY,120X10,ON	4-136
NOZ HLDR-TPL 1.00 IPS	4-137
OPT-NOZ,5WAY,RTRY,120X20,OFF	4-138
BRKT ASM-MTG,ANG,INR,SNSR,RH	4-139
BRKT ASM-MTG,ANG,INR,SNSR,LH	4-140
PIPE ASM-T W/1.25/1HB,11X10,PP	4-141
BRKT ASM-Z,SH,1.00IPS	4-142
BRKT ASM-Z,SH,UPR IPS/PCLP	4-143
BRKT ASM-Z,LG,2IPS/PCLP	4-144
BRKT ASM-Z,LG,LWR IPS/PCLP	4-145
BRKT ASM-Z,LG,1.50 STAUFF	4-146
BRKT ASM-Z,PP STAUFF	4-147
BRKT ASM-Z,PP STAUFF,LWR PCLP	4-148
BRKT ASM-Z,SIDE MTG,1.50STAUFF	4-149
BRKT ASM-STR,SH,PCLP	4-150
BRKT ASM-L,PP STAUFF	4-151
BRKT ASM-L,PP STAUFF	4-152
BRKT ASM-T,PP STAUFF	4-153
BRKT ASM-L/STR,IPS/1.50 STAUFF	4-154
BRKT ASM-L,ENDROW,IPS,RH	4-155

BRKT ASM-L,ENDROW,IPS,LH	4-156
PIPE ASM-45D W/1.00HB,2X8,PP,E	4-157
BRKT ASM-Z,PP STAUFF,REV U	4-158
BRKT ASM-L,LG OFFSET,IPS	4-159
PIPE ASM-T W/2 1.00HB,4X10,PP	4-160
PIPE ASM-T W/2 1.25HB,8X10,PP	4-161
BRKT ASM-L,LG,STAUFF,1.25P CTR	4-162
PIPE ASM-90D W/1.25HB,7X10,RH	4-163
PIPE ASM-90D W/1.25HB,7X10,LH	4-164
PIPE ASM-90D W/1.25HB,5X10,RH	4-165
PIPE ASM-90D W/1.25HB,5X10,LH	4-166
PIPE ASM-T W/2 1.25HB,11X10,PP	4-167
BRKT ASM-L,LG,STAUFF,REV U	4-168
BRKT ASM-STR,XLG,STAUFF,LG U	4-169
BRKT ASM-STR,LG,1.00IPS,STD U	4-170
BRKT ASM-Z,LG,UPR IPS/PCLP	4-171
PIPE ASM-90D W/1.25HB,2X20,RH	4-172
PIPE ASM-90D W/1.25HB,2X20,LH	4-173
PIPE ASM-90D W/1.25HB,3X20,RH	4-174
PIPE ASM-90D W/1.25HB,3X20,LH	4-175
PIPE ASM-T W/2 1.00HB,4X20,PP	4-176
PIPE ASM-T W/2 1.00HB,6X20,PP	4-177
BRKT ASM-L,LG,IPS	4-178
PIPE ASM-T W/1.25/1HB,5X20,PP	4-179
PIPE ASM-T RED W/2 1HB,3X20,PP	4-180
PIPE ASM-T W/2 1.00HB,11X10,PP	4-181
BRKT ASM-Z,LG,IPS/2PCLP	4-182
BRKT ASM-Z,LG,IPS/1.50 PCLP	4-183
BRKT ASM-L,LG,STAUFF,CTR CLP	4-184
BRKT ASM-L,LG,STAUFF,1.50 PCLP	4-185
PIPE ASM-T W/1.5/1HB,11X10,PP	4-186
PIPE ASM-T W/ 1.5/1HB,6X20,PP	4-187
BRKT ASM-Z,LG,1.25/1.50 PCLP	4-188
PIPE ASM-T RED W/2 1HB,5X20,PP	4-189
CALIBRATION ASM-SDKCK	4-190
BRKT INSTL-MTG,ADJ,SPR,UPR	4-191
PIPE ASM-T W/1.25/1HB,9X10,PP	4-192
NOZZLE-SPRAY,VARITARGET,1.5GPM	4-193
BRKT ASM-MTG,VERT,1.50,SNSR	4-194
BRKT ASM-MTG,80,SNSR,AUTOBOOM	4-195
SYS INSTL-NO BCO,BM TREE,5.00	4-196
PIPE ASM-T W/1.25/1HB,5X20,PP	4-197
BRKT ASM-L,LG,STAUFF,CTR CLP	4-198
BRKT ASM-L,LG,IPS,LG U	4-199
OPT-PP PLMB,120X7X10,ON,RTRY	4-200
OPT-PP PLMB,120X7X10,ON,RTRY	4-201
SYS INSTL-PLMB,1.50,120X7,RTRY	4-202
PIPE ASM-90D W/1HB,7X10,PP,RH	4-203
PIPE ASM-90D W/1HB,7X10,PP,LH	4-204
PIPE ASM-T W/1.25/1HB,8X10,RH	4-205
PIPE ASM-T W/1.25/1HB,8X10,LH	4-206

PIPE ASM-T W/1.25/1HB,5X20,RH	4-207
PIPE ASM-T W/1.25/1HB,5X20,LH	4-208
BRKT ASM-L,1.50 STAUFF,PCLP	4-209
BRKT ASM-L,LG,STAUFF,PCLP,1.O	4-210
BRKT ASM-L,LG,STAUFF,REV 1.00U	4-211
BRKT ASM-STR,LG,IPS,REV 1.00U	4-212
BRKT ASM-STR,LG,IPS/PCLP,1.00U	4-213
BRKT ASM-Z,LG,2XIPS	4-214
BRKT ASM-STR,XLG,IPS,2XPCLP	4-215
PIPE ASM-T W/2 1.00HB,8X10,PP	4-216
BRKT ASM-STR,LG,IPS,1.25 PCLP	4-217
BRKT ASM-STR,XLG,IPS,PCLP	4-218
BRKT ASM-STR,XLG,IPS,1.25 PCLP	4-219
PIPE ASM-W/2 1.00HB,102.00,PP	4-220
PIPE ASM-90D W/1.00HB,7X20,PP	4-221
PIPE ASM-90D W/1HB,3X20,PP,RH	4-222
PIPE ASM-90D W/1HB,3X20,PP,LH	4-223
PIPE ASM-T W/2 1.00HB,6X20,PP	4-224
PIPE ASM-90D W/1HB,7X10,PP,RH	4-225
PIPE ASM-90D W/1HB,7X10,PP,LH	4-226
PIPE ASM-X W/3 1.00HB,6X20,PP	4-227
PIPE ASM-90D W/1.00HB,6X20,PP	4-228
BRKT ASM-L/STR,IPS/1.50 STAUFF	4-229
BRKT ASM-L,LG,STAUFF,LG UBOLT	4-230
BRKT ASM-L,LG,STAUFF,XLG OFFST	4-231
BRKT ASM-STR,LG,IPS,LG UBOLT	4-232
PIPE ASM-2T,1HB/125HB,19X10,PP	4-233
PIPE ASM-90D W/1.00HB,12X10,PP	4-234
BRKT ASM-STR,SH,1.00/1.25 PCLP	4-235
BRKT ASM-STR,SH,IPS/1.00 PCLP	4-236
SHAFT AS-PEDAL	4-237
BRKT ASM-MTG,SNSR	4-238
BRKT ASM-Z,SH,1.00IPS/1.25PCLP	4-239
PIPE ASM-X,W/2125/1HB,11X10,PP	4-240

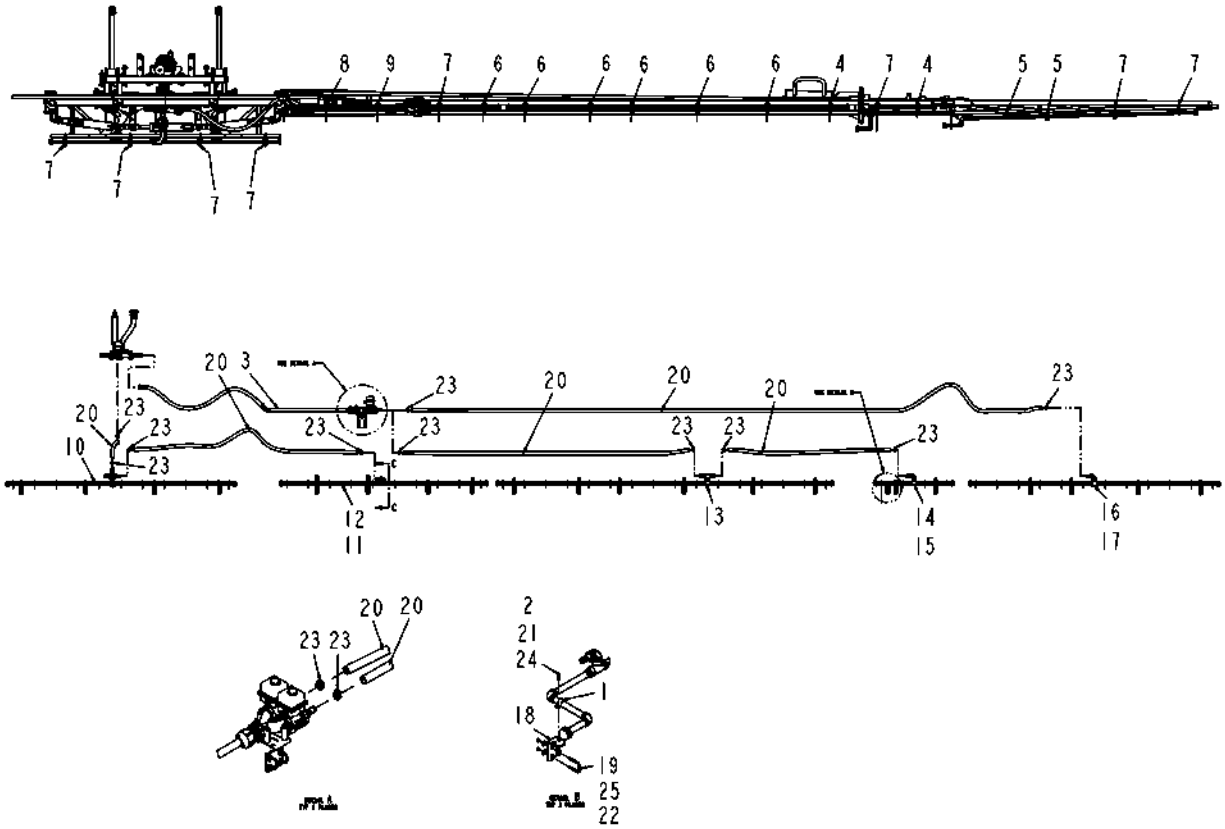

134613-A.tif

Copyright © 2007 AGCO Corporation

OPT-SS PLMB,80X5X10,ON,BALL

ITEM	PART #	QTY	DESCRIPTION	COMMENTS
1	AG010354	2	CLAMP LOOM 1.00 PER DWG (D)	
2	AG027275	2	NUT 0.25-20NC HEX SS REG NY	
3	AG122148	1	SYS INSTL-PLMB,80X5,ELEC VALVE	SEE PAGE 4-2
4	AG122328	4	BRKT ASM-L REV/P CLP STD U	SEE PAGE 4-55
5	AG122329	4	BRKT ASM-L W/P CLP,STD UBOLT	SEE PAGE 4-56
6	AG122330	12	BRKT ASM-L W/2 P CLP,STD UBOLT	SEE PAGE 4-57
7	AG122331	12	BRKT ASM-L,STD UBOLT	SEE PAGE 4-58
8	AG122512	2	BRKT ASM-L,PP STAUFF,LG U BOLT	SEE PAGE 4-59
9	AG122514	2	BRKT ASM-L,2 STAUFF,STD U	SEE PAGE 4-60
10	AG134620	1	PIPE ASM-X W/3 1.00HB,11X10,SS	SEE PAGE 4-61
11	AG134621	1	PIPE ASM-90D W/1HB,10X10,SS,LH	SEE PAGE 4-62
12	AG134622	1	PIPE ASM-90D W/1HB,10X10,SS,RH	SEE PAGE 4-63
13	AG134623	2	PIPE ASM-T W/2 1.00HB,16X10,SS	SEE PAGE 4-64
14	AG134624	1	PIPE ASM-90D W/1HB,4X10,SS,RH	SEE PAGE 4-65
15	AG134625	1	PIPE ASM-90D W/1HB,4X10,SS,LH	SEE PAGE 4-66
16	AG134626	1	PIPE ASM-90D W/1HB,12X10,SS,RH	SEE PAGE 4-67
17	AG134627	1	PIPE ASM-90D W/1HD,12X10,SS,LH	SEE PAGE 4-68
18	AG217609	2	BRACKET TUBE BREAKAWAY SUPPORT	
19	AG231204	2	BOLT-U .31-18X1.88X2.63	
20	AG511528	-	HOSE 1.00 2BRD EPDM [BULK: 106.834 FT]	
21	AG515121	2	WASHER 0.25 FL SS REG TYPE-B	
22	AG516403	4	NUT 0.31-18NC HEX SS REG NY	
23	AG561213	18	CLAMP 0.81-1.50 HOSE 16HS	
24	AG561952	2	BOLT 0.25-20NCX 1.25 SS HHD	
25	AG562074	4	WASHER 0.31 FL SS REG TYPE-B	
26	AG562496	AR	TIE CABLE 15.0 .18-4.00 BLACK	

Copyright © 2007 AGCO Corporation

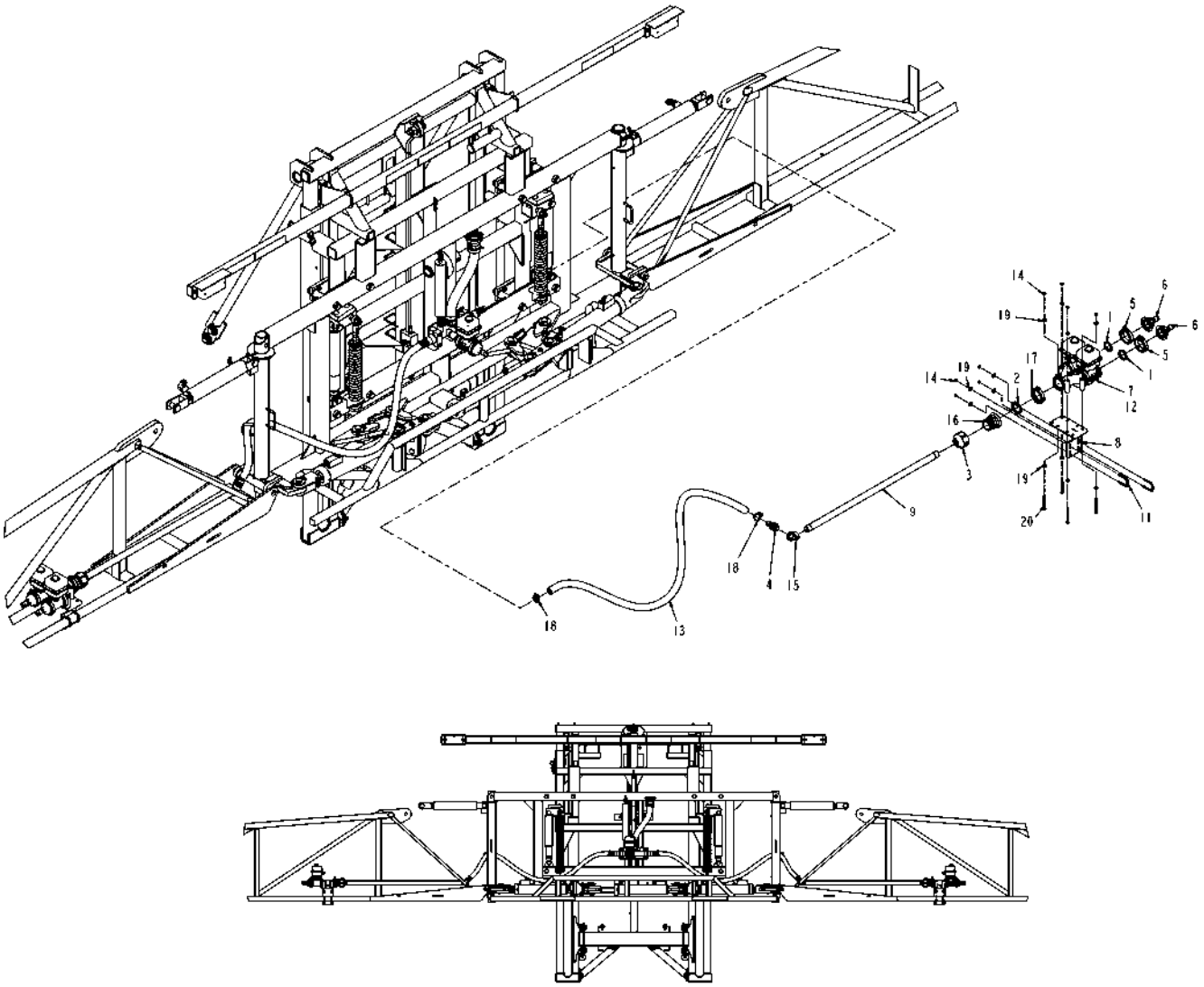

122148.tif

Copyright © 2007 AGCO Corporation

SYS INSTL-PLMB,80X5,ELEC VALVE

ITEM	PART #	QTY	DESCRIPTION	COMMENTS
1	AG000772	4	GASKET 1.50 EPDM	
2	AG000773	2	GASKET 2.00 EPDM	
3	AG050264	2	COUPLG RED 1.00X 2.00NPT POLYP	
4	AG051059	2	BARB-HOSE,1.00MNPTX1.00BARB,PP	
5	AG056785	4	CLAMP 2.00 FLANGE	
6	AG057593	4	CONNECTOR 2.00X1.00HOSE	
7	AG121882	2	MANIFOLD ASM-Y,1.00FP FLG,ELEC	SEE PAGE 2-2
8	AG122147	2	BRKT WLDMT-MTG,Y MANF,BM PLMB	
9	AG123029	2	TUBE-SECTION FEED,38.00,PP	
10	AG129187	AR	PIPE SEALANT-FLEX BLACK	
11	AG231204	4	BOLT-U .31-18X1.88X2.63	
12	WR504301	1	HARN INSTL-ELEC BM SECT VLV	SEE PAGE 6-2
13	AG511528	-	HOSE 1.00 2BRD EPDM [BULK: 12.950 FT]	
14	AG516403	8	NUT 0.31-18NC HEX SS REG NY	
15	AG519838	2	ELBOW-PIPE,1.00FNPT,45D,PP	
16	AG522893	2	CONNECTOR-2.00FLGX2.00NPT	
17	AG522895	2	CLAMP-WORM SCREW,2.00,SS	
18	AG561213	4	CLAMP 0.81-1.50 HOSE 16HS	
19	AG562074	24	WASHER 0.31 FL SS REG TYPE-B	
20	AG708300	8	BOLT 0.31-18NCX 3.50 SS HHD	

Copyright © 2007 AGCO Corporation

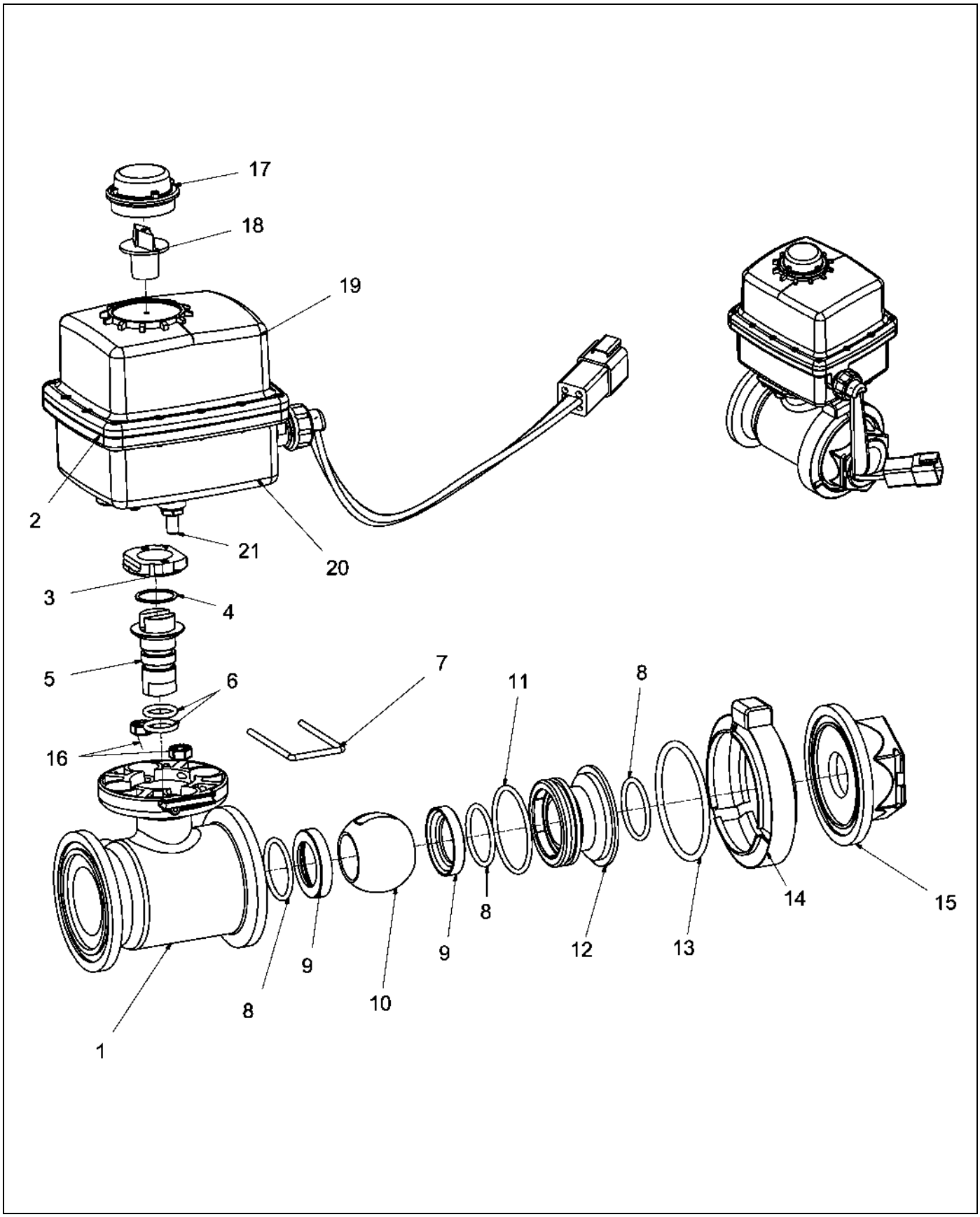

121883-A.TIF

Copyright © 2007 AGCO Corporation

VALVE-BALL,1.00FP FLGXNPT,ELEC

ITEM	PART #	QTY	DESCRIPTION	COMMENTS
REF	AG060921	1	KIT/REPAIR,KZ VALVE 121924	
REF	AG331436	-	SEAL/KIT-VITON	
REF	AG131748	-	MOTOR, GEAR ASM	
REF	AG131739	-	BOARD, CIRCUIT W/CABLE	
1	AG121924	1	BODY-VALVE,FLG OUTLET,1.00,2W	
2	AG121929	1	ACTUATOR-000-60-M-9	SEE PAGE 6-3
3	AG131731	1	RETAINER, STEM	
4	AG131732	1	WASHER, THRUST	
5	AG131733	1	STEM, SS	
6	AG131734	2	O-RING, STEM	
7	AG726981	1	PIN / HAIR	
8	AG131735	3	O-RING, SEAT	
9	AG131776	2	COLLECTOR, OIL	
10	AG726982	1	BALL / 2-WAY	
11	AG131737	1	O-RING	
12	AG131738	1	FLANGE	
13	WR35020	1	ORING-SEAL,VALVE,QC3	
14	AG121922	1	CLAMP-V BAND,QX4	
15	AG121925	1	CAP-END,1.00 FNPT	
16	AG121926	2	NUT-KEP"S,.50-20NC	
17	AG131743	1	DOME, CLEAR	
18	AG131744	1	FLAG	
19	AG131745	1	DOME, LID	
20	AG131746	2	CASE, BOTTOM	
21	AG131747	2	STUD, MOUNTING	

Copyright © 2007 AGCO Corporation

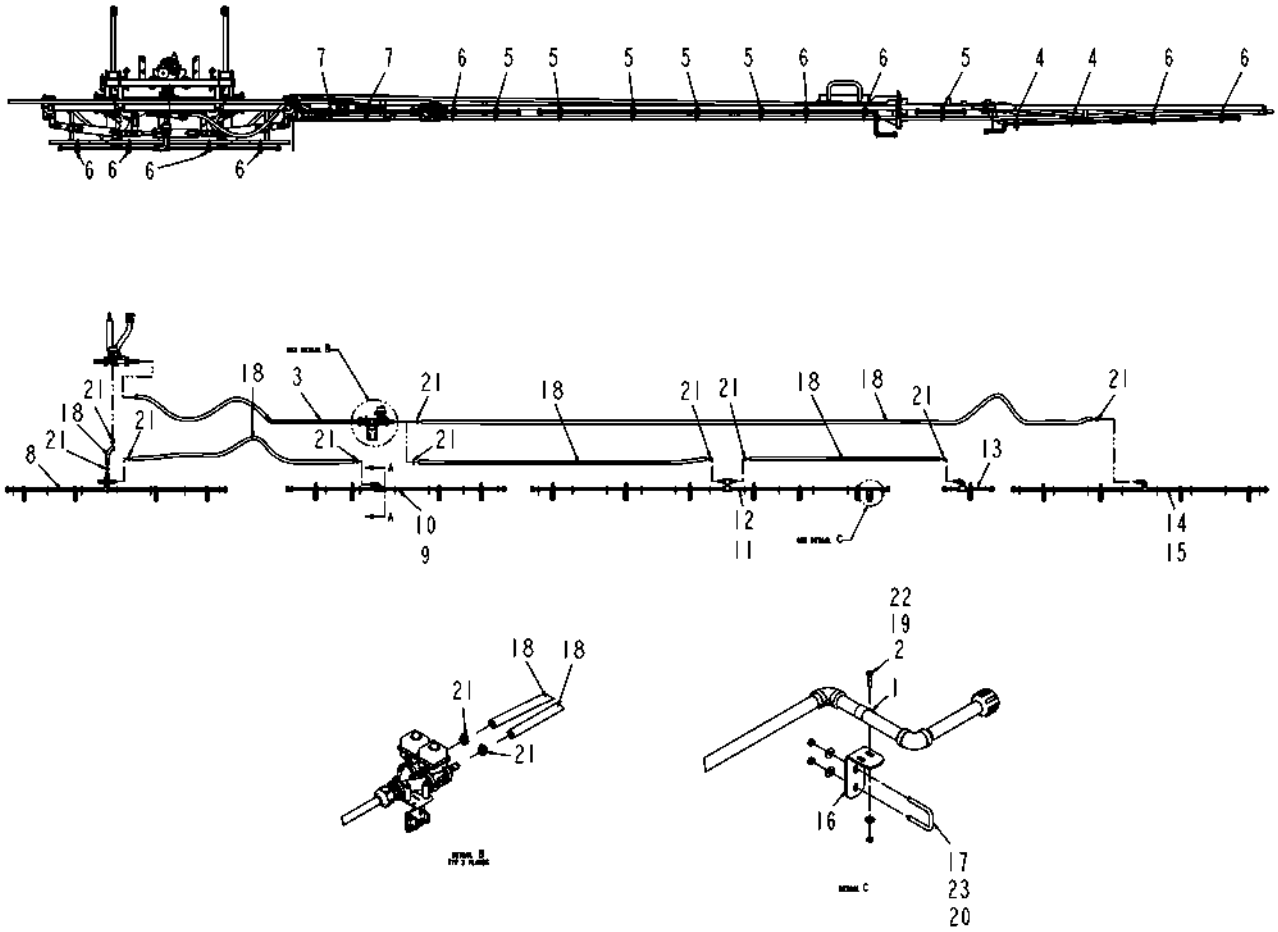

134614-A.tif

Copyright © 2007 AGCO Corporation

OPT-SS PLMB,80X5X15,ON,BALL

ITEM	PART #	QTY	DESCRIPTION	COMMENTS
1	AG010354	2	CLAMP LOOM 1.00 PER DWG (D)	
2	AG027275	2	NUT 0.25-20NC HEX SS REG NY	
3	AG122148	1	SYS INSTL-PLMB,80X5,ELEC VALVE	SEE PAGE 4-2
4	AG122329	4	BRKT ASM-L W/P CLP,STD UBOLT	SEE PAGE 4-56
5	AG122330	12	BRKT ASM-L W/2 P CLP,STD UBOLT	SEE PAGE 4-57
6	AG122331	12	BRKT ASM-L,STD UBOLT	SEE PAGE 4-58
7	AG122450	4	BRKT ASM-L W/2 P CLP,LG UBOLT	SEE PAGE 4-69
8	AG134628	1	PIPE ASM-X W/3 1.00HB,11X10,SS	SEE PAGE 4-70
9	AG134629	1	PIPE ASM-90D W/1HB,7X15,SS,LH	SEE PAGE 4-71
10	AG134630	1	PIPE ASM-90D W/1HB,7X15,SS,RH	SEE PAGE 4-72
11	AG134631	1	PIPE ASM-T W/2 1HB,11X15,SS,LH	SEE PAGE 4-73
12	AG134632	1	PIPE ASM-T W/2 1HB,11X15,SS,RH	SEE PAGE 4-74
13	AG134633	2	PIPE ASM-90D W/1.00HB,2X15,SS	SEE PAGE 4-75
14	AG134634	1	PIPE ASM-90D W/1HB,8X15,SS,RH	SEE PAGE 4-76
15	AG134635	1	PIPE ASM-90D W/1HB,8X15,SS,LH	SEE PAGE 4-77
16	AG217609	2	BRACKET TUBE BREAKAWAY SUPPORT	
17	AG231204	2	BOLT-U .31-18X1.88X2.63	
18	AG511528	-	HOSE 1.00 2BRD EPDM [BULK: 109.667 FT]	
19	AG515121	2	WASHER 0.25 FL SS REG TYPE-B	
20	AG516403	4	NUT 0.31-18NC HEX SS REG NY	
21	AG561213	16	CLAMP 0.81-1.50 HOSE 16HS	
22	AG561952	2	BOLT 0.25-20NCX 1.25 SS HHD	
23	AG562074	4	WASHER 0.31 FL SS REG TYPE-B	
24	AG562496	AR	TIE CABLE 15.0 .18-4.00 BLACK	

Copyright © 2007 AGCO Corporation

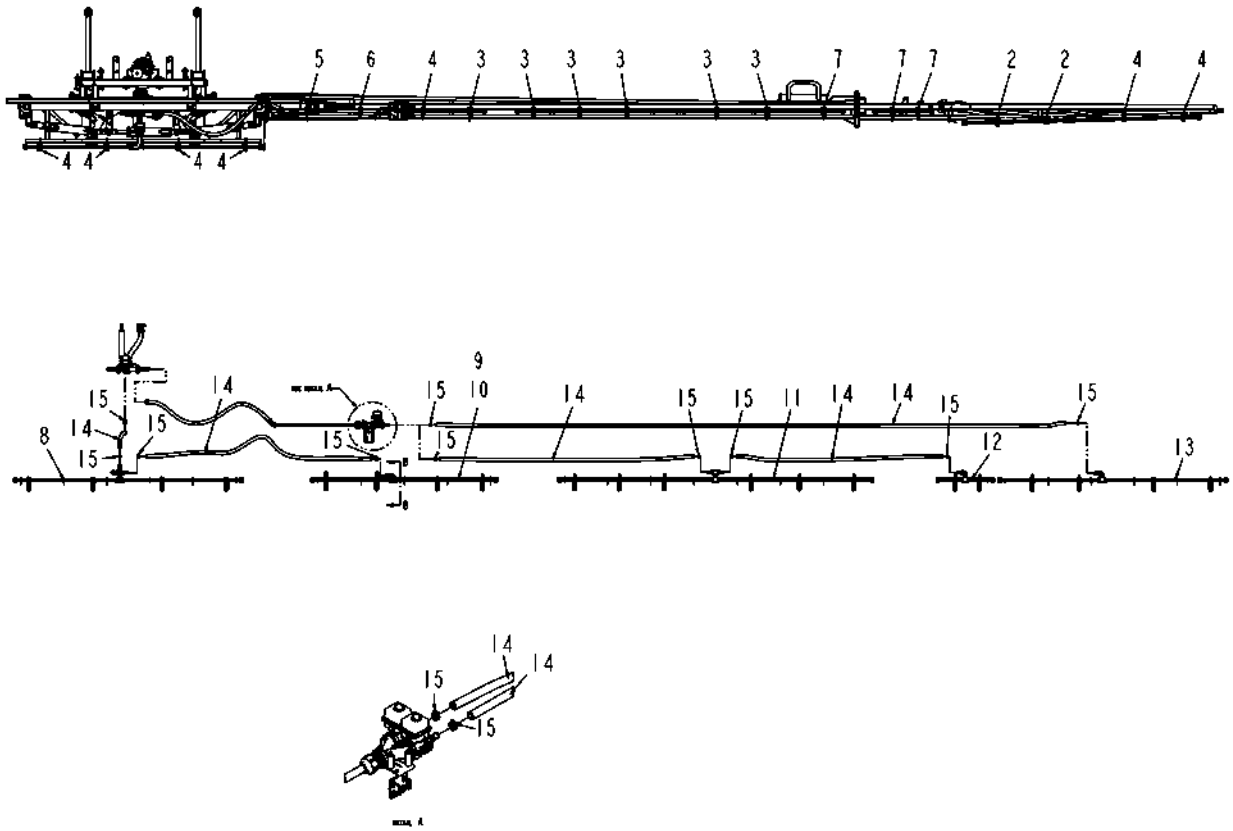

134615-A.tif

Copyright © 2007 AGCO Corporation

OPT-SS PLMB,80X5X20,OFF,BALL

ITEM	PART #	QTY	DESCRIPTION	COMMENTS
1	AG122148	1	SYS INSTL-PLMB,80X5,ELEC VALVE	SEE PAGE 4-2
2	AG122329	4	BRKT ASM-L W/P CLP,STD UBOLT	SEE PAGE 4-56
3	AG122330	12	BRKT ASM-L W/2 P CLP,STD UBOLT	SEE PAGE 4-57
4	AG122331	10	BRKT ASM-L,STD UBOLT	SEE PAGE 4-58
5	AG122512	2	BRKT ASM-L,PP STAUFF,LG U BOLT	SEE PAGE 4-59
6	AG122514	2	BRKT ASM-L,2 STAUFF,STD U	SEE PAGE 4-60
7	AG122515	6	BRKT ASM-L W/REV P CLP	SEE PAGE 4-78
8	AG134636	1	PIPE ASM-X W/3 1.00HB,6X20,SS	SEE PAGE 4-79
9	AG134637	1	PIPE ASM-90D W/1HB,5X20,SS,LH	SEE PAGE 4-80
10	AG134638	1	PIPE ASM-90D W/1HB,5X20,SS,RH	SEE PAGE 4-81
11	AG134639	2	PIPE ASM-T W/2 1.00HB,8X20,SS	SEE PAGE 4-82
12	AG134640	2	PIPE ASM-90D W/1.00HB,2X20,SS	SEE PAGE 4-83
13	AG134641	2	PIPE ASM-90D W/1.00HB,6X20,SS	SEE PAGE 4-84
14	AG511528	-	HOSE 1.00 2BRD EPDM [BULK: 104.834 FT]	
15	AG561213	18	CLAMP 0.81-1.50 HOSE 16HS	
16	AG562496	AR	TIE CABLE 15.0 .18-4.00 BLACK	

Copyright © 2007 AGCO Corporation

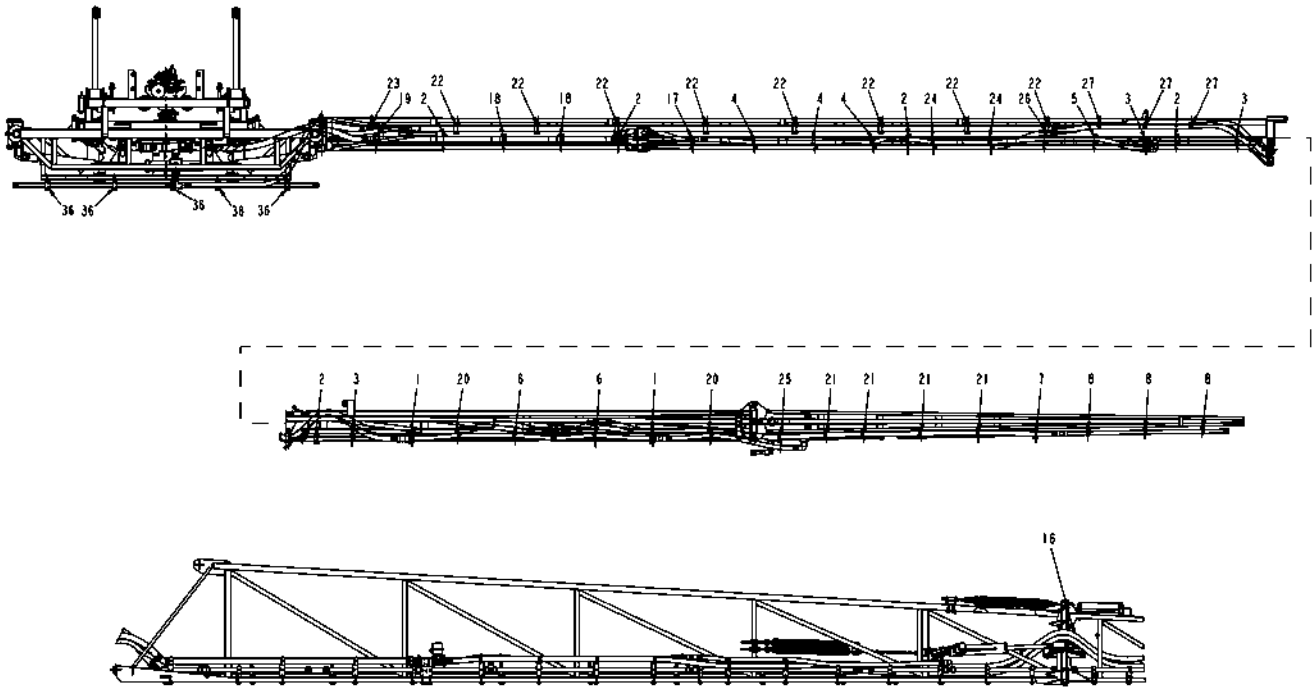

506449D1-04-N713-01.TIF

Copyright © 2007 AGCO Corporation

ITEM	PART #	QTY	DESCRIPTION	COMMENTS
1	AG122513	4	BRKT ASM-L,PP STAUFF 1.25 P	SEE PAGE 4-91
2	AG122520	10	BRKT ASM-L,PP STAUFF	SEE PAGE 4-92
3	AG122521	6	BRKT ASM-STR,SH,IPS CLP	SEE PAGE 4-93
4	AG122608	6	BRKT ASM-STR,LS,IPS,1.25 P CLP	SEE PAGE 4-94
5	AG122610	2	BRKT ASM-L,PP STAUFF,CTR P CLP	SEE PAGE 4-95
6	AG122957	4	BRKT ASM-STR,LG,IPS,P CLP	SEE PAGE 4-96
7	WR129085	2	BRKT ASM-L,PP STAUFF,1.00U	SEE PAGE 4-97
8	WR129086	6	BRKT ASM-STR,SH,IPS CLP,1.00U	SEE PAGE 4-98
14	AG562496	AR	TIE CABLE 15.0 .18-4.00 BLACK	
16	506720D1	100	SLEEVE-PROTECTIVE,NYLON,-48	
17	506721D1	2	BRKT ASM-STR,LG,IPS,1.62 PCLP	SEE PAGE 4-100
18	506722D1	4	BRKT ASM-L,1IPS,1.50 STAUFF	SEE PAGE 4-101
19	506723D1	2	BRKT ASM-L,1IPS,1.50 STAUFF,LG	SEE PAGE 4-102
20	506724D1	4	BRKT ASM-STR,LG,IPS,2PCLP	SEE PAGE 4-103
21	506725D1	8	BRKT ASM-STR,SH,IPS,1.25,1.00	SEE PAGE 4-104
22	506726D1	16	BRKT ASM-L,1.50 STAUFF,STD U	SEE PAGE 4-105
23	506727D1	2	BRKT ASM-L,1.50 STAUFF,P,LG U	SEE PAGE 4-106
24	506728D1	4	BRKT ASM-STR,LG,IPS,2XP CLP	SEE PAGE 4-107
25	506729D1	2	BRKT ASM-L,PP STAUFF,PCLP,1.00	SEE PAGE 4-108
26	506730D1	2	BRKT ASM-L W/1.25/1.00 PCLP	SEE PAGE 4-109
27	506731D1	6	BRKT ASM-STR,SH,2X 1.25 P CLP	SEE PAGE 4-110
36	508671D1	5	BRKT ASM-L,REV,1.00PP STAUFF	SEE PAGE 4-119

Copyright © 2007 AGCO Corporation

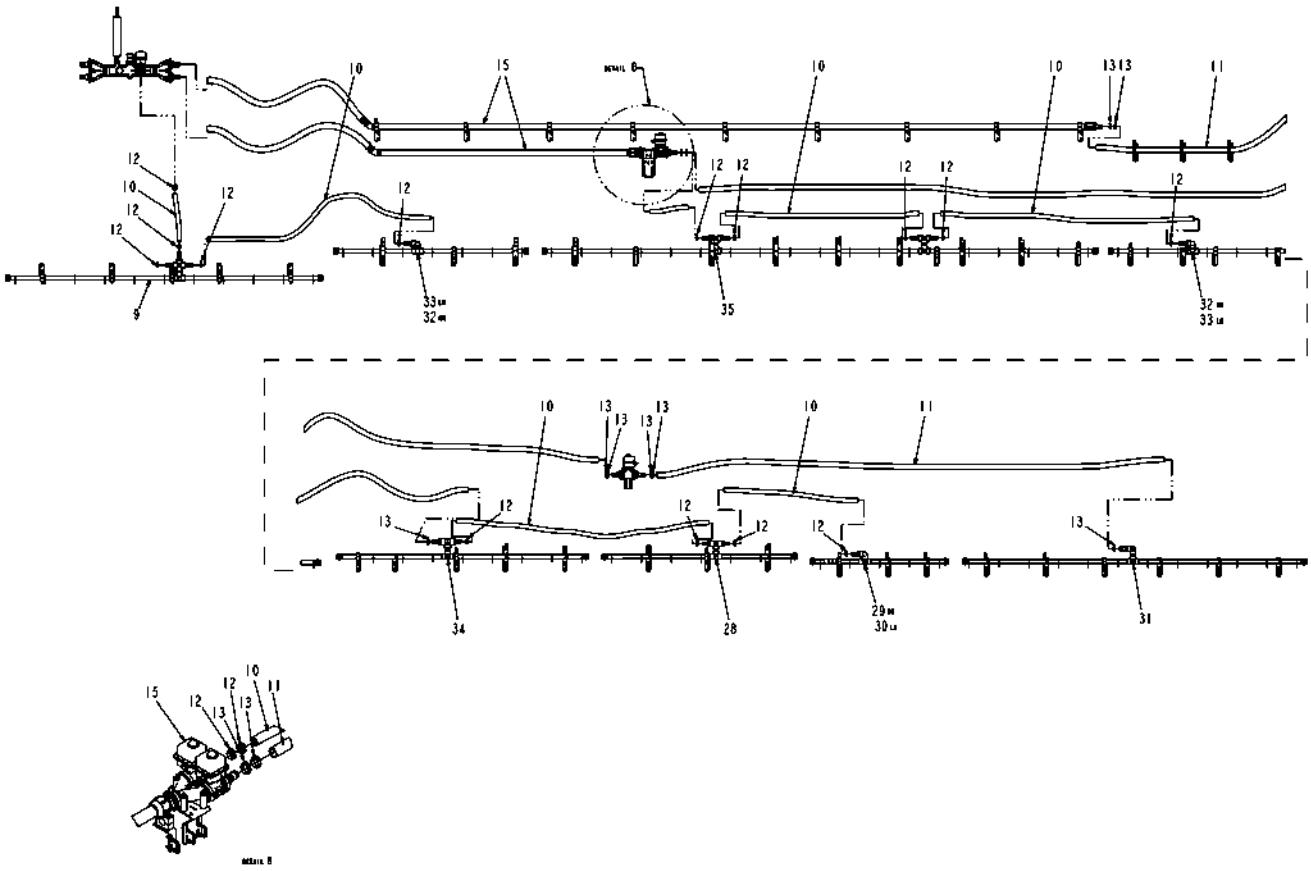

506449D1-04-N713-02.TIF

Copyright © 2007 AGCO Corporation

ITEM	PART #	QTY	DESCRIPTION	COMMENTS
9	AG134642	1	PIPE ASM-X W/3 1.00HB,11X10,PP	SEE PAGE 4-99
10	AG511528	-	HOSE 1.00 2BRD EPDM [BULK: 66.334 FT]	
11	AG513393	-	HOSE 1.25 2BRD EPDM [BULK: 102.500 FT]	
12	AG561213	28	CLAMP 0.81-1.50 HOSE 16HS	
13	AG561230	20	CLAMP 0.81-1.75 HOSE 20HS	
15	506451D1	1	SYS INSTL-PLMB,120X7,ELEC VLV	SEE PAGE 2-4
28	506734D1	2	PIPE ASM-T W/2 1.00HB,7X10,PP	SEE PAGE 4-111
29	506735D1	1	PIPE ASM-90D W/1HB,5X10,PP,RH	SEE PAGE 4-112
30	506736D1	1	PIPE ASM-90D W/1HB,5X10,PP,LH	SEE PAGE 4-113
31	506737D1	2	PIPE ASM-90D W/1.25HB,12X10,PP	SEE PAGE 4-114
32	506738D1	2	PIPE ASM-90D W/1HB,7X10,PP,RH	SEE PAGE 4-115
33	506739D1	2	PIPE ASM-90D W/1HB,7X10,PP,LH	SEE PAGE 4-116
34	506740D1	2	PIPE ASM-T W/1.25/1HD,9X10,PP	SEE PAGE 4-117
35	506741D1	2	PIPE ASM-2T,W/4 1HB,19X10,PP	SEE PAGE 4-118

Copyright © 2007 AGCO Corporation

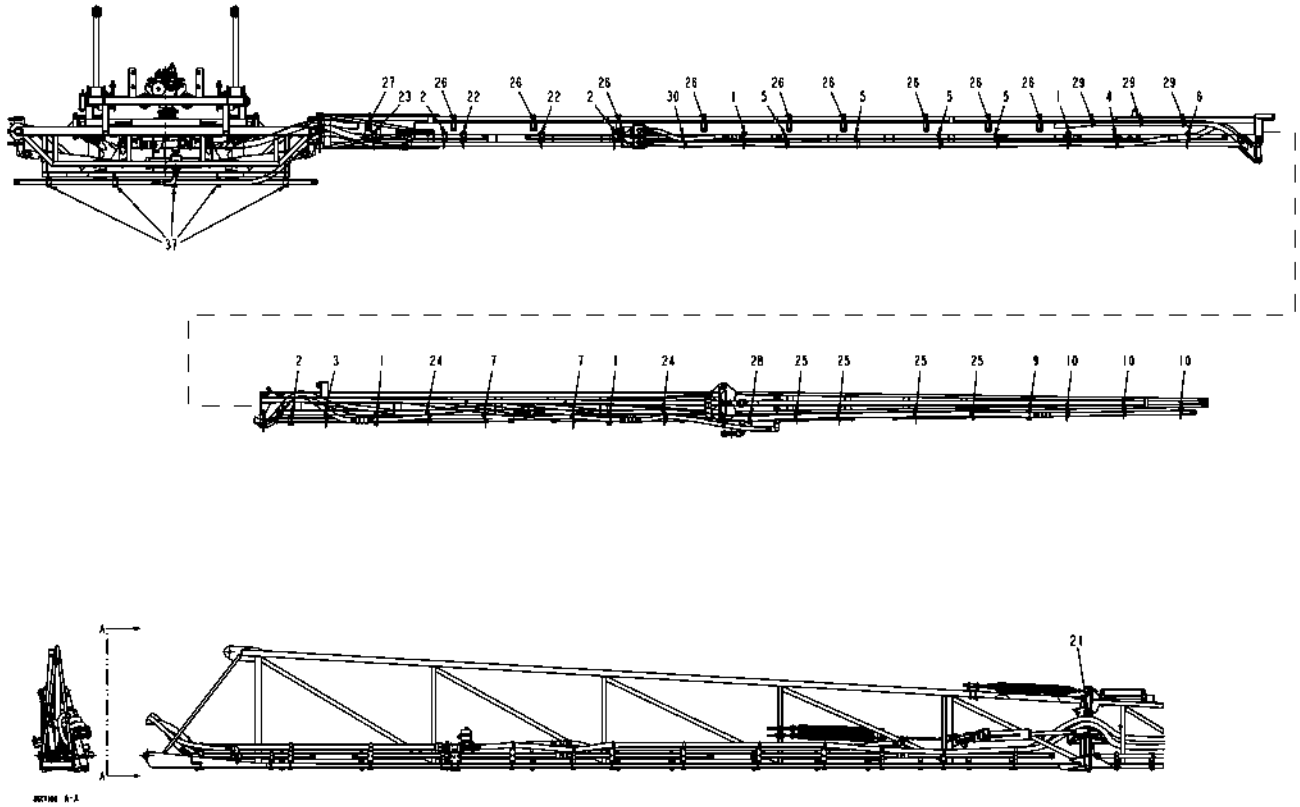

506450D1-04-R118-01.TIF

Copyright © 2007 AGCO Corporation

ITEM	PART #	QTY	DESCRIPTION	COMMENTS
1	AG122513	8	BRKT ASM-L,PP STAUFF 1.25 P	SEE PAGE 4-91
2	AG122520	6	BRKT ASM-L,PP STAUFF	SEE PAGE 4-92
3	AG122521	2	BRKT ASM-STR,SH,IPS CLP	SEE PAGE 4-93
4	AG122606	2	BRKT ASM-STR,SH,IPS,1.25 P CLP	SEE PAGE 4-120
5	AG122607	8	BRKT ASM-STR,LG,1.25 PCLP 2IPS	SEE PAGE 4-121
6	AG122609	2	BRKT ASM-L,PP STAUFF,1.25 PCLP	SEE PAGE 4-122
7	AG122957	4	BRKT ASM-STR,LG,IPS,P CLP	SEE PAGE 4-96
9	WR129085	2	BRKT ASM-L,PP STAUFF,1.00U	SEE PAGE 4-97
10	WR129086	6	BRKT ASM-STR,SH,IPS CLP,1.00U	SEE PAGE 4-98
19	AG562496	AR	TIE CABLE 15.0 .18-4.00 BLACK	
21	506720D1	100	SLEEVE-PROTECTIVE,NYLON,-48	
22	506722D1	4	BRKT ASM-L,1IPS,1.50 STAUFF	SEE PAGE 4-101
23	506723D1	2	BRKT ASM-L,1IPS,1.50 STAUFF,LG	SEE PAGE 4-102
24	506724D1	4	BRKT ASM-STR,LG,IPS,2PCLP	SEE PAGE 4-103
25	506725D1	8	BRKT ASM-STR,SH,IPS,1.25,1.00	SEE PAGE 4-104
26	506726D1	18	BRKT ASM-L,1.50 STAUFF,STD U	SEE PAGE 4-105
27	506727D1	2	BRKT ASM-L,1.50 STAUFF,P,LG U	SEE PAGE 4-106
28	506729D1	2	BRKT ASM-L,PP STAUFF,PCLP,1.00	SEE PAGE 4-108
29	506732D1	6	BRKT ASM-STR,SH,1.25 PCLP	SEE PAGE 4-128
30	506733D1	2	BRKT ASM-STR,LG,IPS,2PCL,1.25	SEE PAGE 4-129

Copyright © 2007 AGCO Corporation

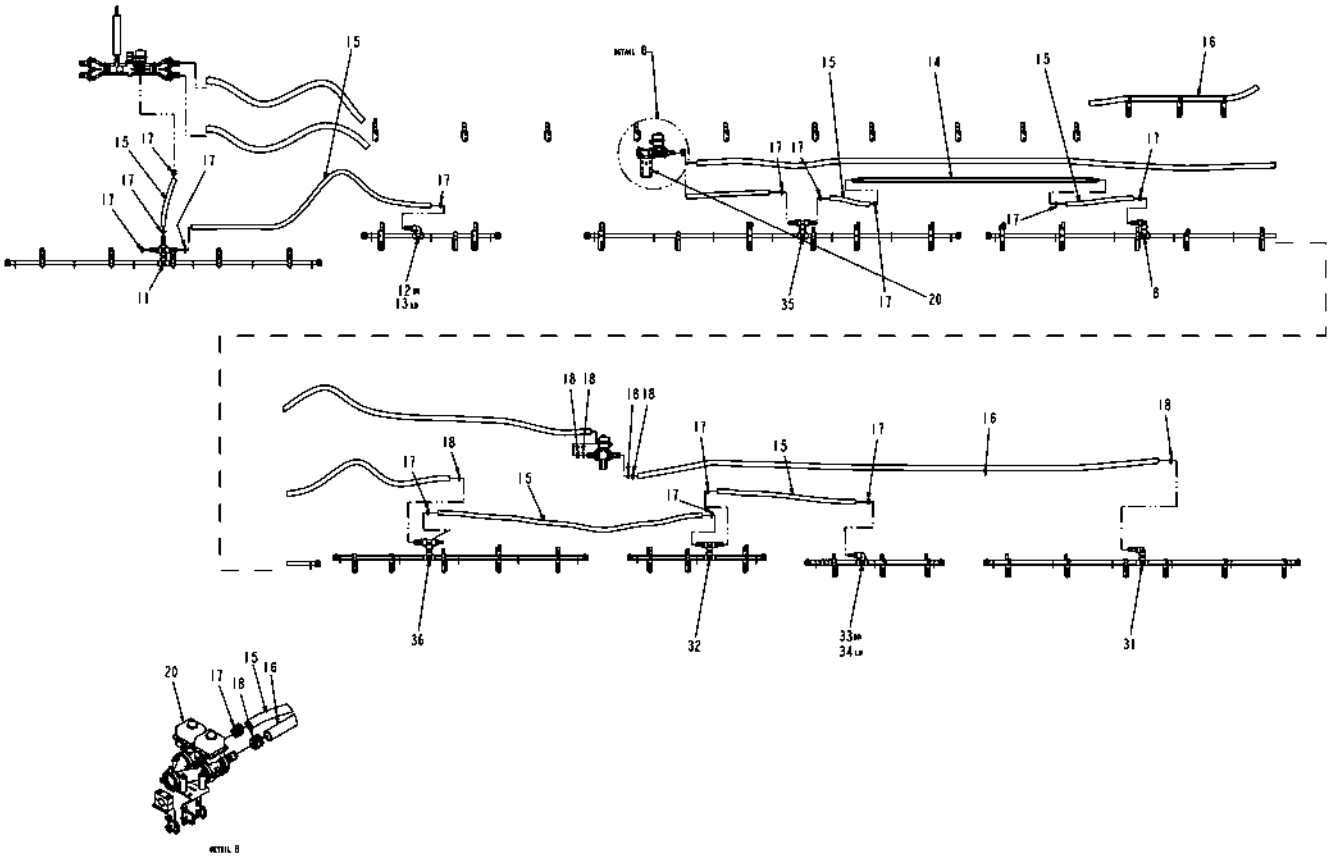

506450D1-04-R118-02.TIF

Copyright © 2007 AGCO Corporation

ITEM	PART #	QTY	DESCRIPTION	COMMENTS
8	WR127095	2	PIPE ASM-90D W/1.00HB,6X20,PP	SEE PAGE 4-123
11	AG134651	1	PIPE ASM-X W/3 1.00HB,6X20,PP	SEE PAGE 4-124
12	AG134652	1	PIPE ASM-90D W/1HB,3X20,PP,RH	SEE PAGE 4-125
13	AG134653	1	PIPE ASM-90D W/1HB,3X20,PP,LH	SEE PAGE 4-126
14	AG134667	2	PIPE ASM-W/2 1.00HB,77.00,PP	SEE PAGE 4-127
15	AG511528	-	HOSE 1.00 2BRD EPDM [BULK: 51.250 FT]	
16	AG513393	-	HOSE 1.25 2BRD EPDM [BULK: 103.334 FT]	
17	AG561213	28	CLAMP 0.81-1.50 HOSE 16HS	
18	AG561230	20	CLAMP 0.81-1.75 HOSE 20HS	
20	506451D1	1	SYS INSTL-PLMB,120X7,ELEC VLV	SEE PAGE 2-4
31	506742D1	2	PIPE ASM-90D W/1.25HB,6X20,PP	SEE PAGE 4-130
32	506743D1	2	PIPE ASM-T W/2 1.00HB,3X20,PP	SEE PAGE 4-131
33	508671D1	5	BRKT ASM-L,REV,1.00PP STAUFF	SEE PAGE 4-119
33	506744D1	1	PIPE ASM-90D W/1HB,3X20,PP,RH	SEE PAGE 4-132
34	506745D1	1	PIPE ASM-90D W/1HB,3X20,PP,LH	SEE PAGE 4-133
35	506746D1	2	PIPE ASM-T W/2 1.00HB,7X20,PP	SEE PAGE 4-134
36	506747D1	2	PIPE ASM-T W/1.25/1HB,5X20,PP	SEE PAGE 4-135

Copyright © 2007 AGCO Corporation

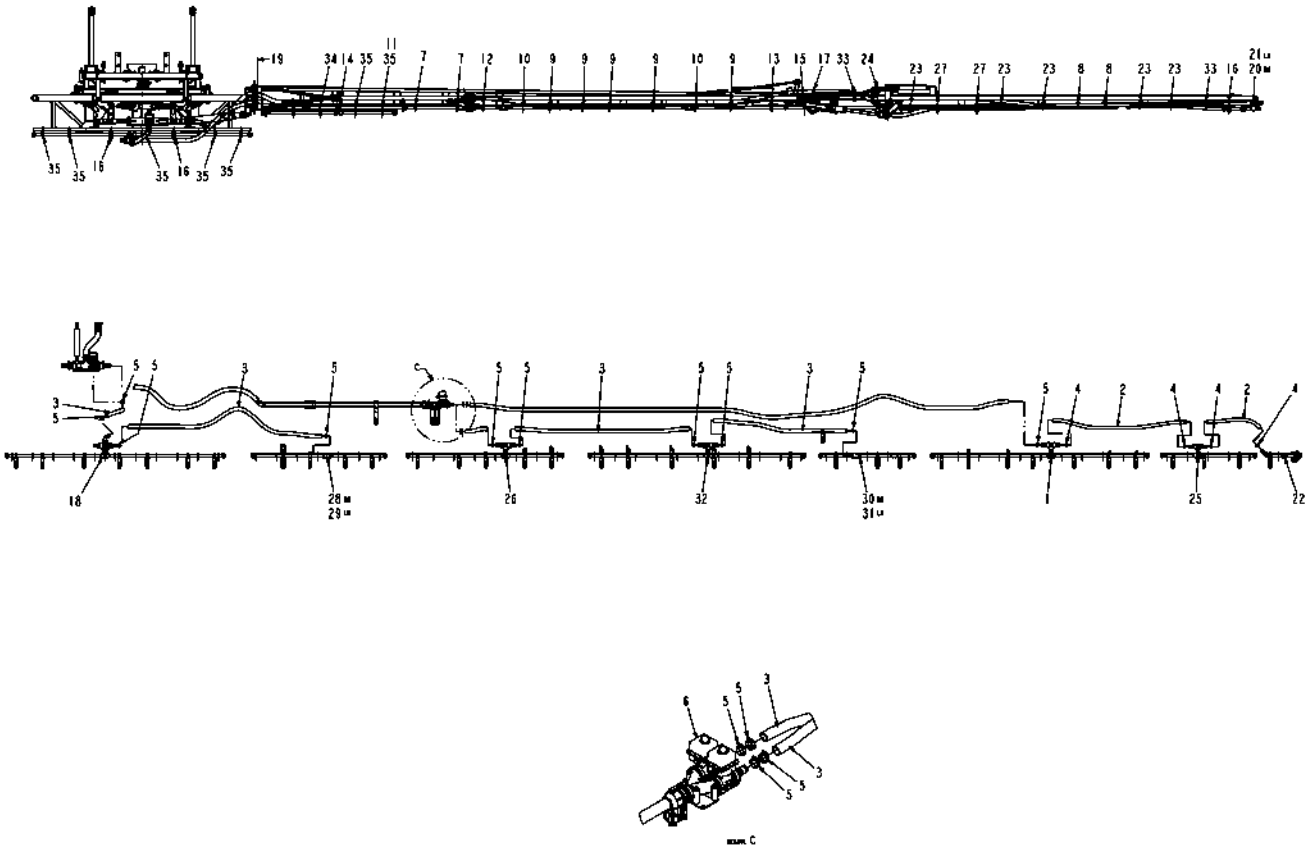

509898D1-01-N649-.TIF

Copyright © 2007 AGCO Corporation

OPT-PP PLMB,90X5X10,ON,RTRY

ITEM	PART #	QTY	DESCRIPTION	COMMENTS
1	AG134657	2	PIPE ASM-T W/1.25/1HB,11X10,PP	SEE PAGE 4-141
2	AG511528	-	HOSE 1.00 2BRD EPDM [BULK: 15.500 FT]	
3	AG513393	-	HOSE 1.25 2BRD EPDM [BULK: 88.917 FT]	
4	AG561213	8	CLAMP 0.81-1.50 HOSE 16HS	
5	AG561230	26	CLAMP 0.81-1.75 HOSE 20HS	
6	509724D1	1	SYS INSTL-PLMB,1.50,90X5,RTRY	SEE PAGE 4-11
7	509887D1	4	BRKT ASM-Z,SH,1.00IPS	SEE PAGE 4-142
8	509888D1	4	BRKT ASM-STR,LG,1.00IPS,PCLP	SEE PAGE 4-143
9	509889D1	10	BRKT ASM-Z,LG,2IPS/PCLP	SEE PAGE 4-144
10	509890D1	4	BRKT ASM-Z,LG,LWR IPS/PCLP	SEE PAGE 4-145
11	509892D1	2	BRKT ASM-Z,LG,1.50 STAUFF	SEE PAGE 4-146
12	509893D1	2	BRKT ASM-Z,PP STAUFF	SEE PAGE 4-147
13	509894D1	2	BRKT ASM-Z,PP STAUFF,LWR PCLP	SEE PAGE 4-148
14	509896D1	2	BRKT ASM-Z,SIDE MTG,1.50STAUFF	SEE PAGE 4-149
15	509953D1	2	BRKT ASM-STR,SH,PCLP	SEE PAGE 4-150
16	509955D1	4	BRKT ASM-L,LG,PP STAUFF	SEE PAGE 4-151
17	509956D1	2	BRKT ASM-L,LG,STAUFF,LWR PCLP	SEE PAGE 4-152
18	509957D1	1	PIPE ASM-X W/3 1.25HB,11X10,PP	SEE PAGE 4-153
19	509959D1	2	BRKT ASM-L/STR,IPS/1.50 STAUFF	SEE PAGE 4-154
20	509960D1	1	BRKT ASM-L,ENDROW,IPS,RH	SEE PAGE 4-155
21	509961D1	1	BRKT ASM-L,ENDROW,IPS,LH	SEE PAGE 4-156
22	509999D1	2	PIPE ASM-45D W/1HB,2X8,PP,ER	SEE PAGE 4-157
23	511153D1	10	BRKT ASM-STR,LG,1.00IPS,REV U	SEE PAGE 4-158
24	511435D1	2	BRKT ASM-L,LG OFFSET,IPS	SEE PAGE 4-159
25	511436D1	2	PIPE ASM-T W/2 1.00HB,4X10,PP	SEE PAGE 4-160
26	511437D1	2	PIPE ASM-T W/2 1.25HB,8X10,PP	SEE PAGE 4-161
27	511438D1	4	BRKT ASM-L,LG,STAUFF,1.25P CTR	SEE PAGE 4-162
28	511439D1	1	PIPE ASM-90D W/1.25HB,7X10,RH	SEE PAGE 4-163
29	511440D1	1	PIPE ASM-90D W/1.25HB,7X10,LH	SEE PAGE 4-164
30	511441D1	1	PIPE ASM-90D W/1.25HB,5X10,RH	SEE PAGE 4-165
31	511442D1	1	PIPE ASM-90D W/1.25HB,5X10,LH	SEE PAGE 4-166
32	511493D1	2	PIPE ASM-T W/2 1.25HB,11X10,PP	SEE PAGE 4-167
33	511497D1	4	BRKT ASM-L,LG,STAUFF,REV U	SEE PAGE 4-168
34	511689D1	2	BRKT ASM-STR,XLG,STAUFF,LG U	SEE PAGE 4-169
35	511765D1	9	BRKT ASM-STR,LG,1.00IPS,STD U	SEE PAGE 4-170

Copyright © 2007 AGCO Corporation

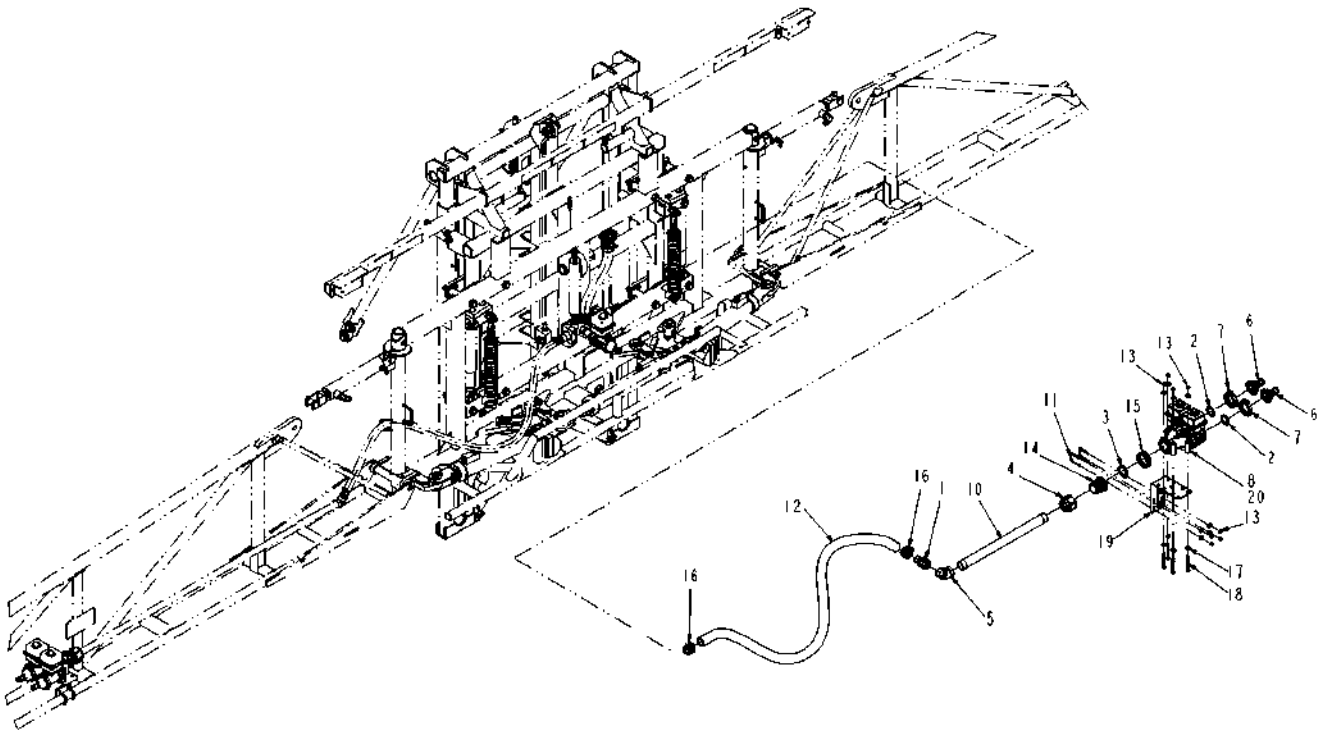

509724D1-02-R506-.TIF

Copyright © 2007 AGCO Corporation

SYS INSTL-PLMB,1.50,90X5,RTRY

ITEM	PART #	QTY	DESCRIPTION	COMMENTS
1	AG000766	2	BARB-HOSE,1.50MNTTX1.50BARB,PP	
2	AG000772	4	GASKET 1.50 EPDM	
3	AG000773	2	GASKET 2.00 EPDM	
4	AG050266	2	COUPLG RED 1.50X 2.00NPT POLYP	
5	AG051888	2	ELBOW 45D 1.50 304SS	
6	AG056289	4	CONNECTOR 2.00FLGX1.25HOSE	
7	AG056785	4	CLAMP 2.00 FLANGE	
8	AG121882	2	MANIFOLD ASM-Y,1.00FP FLG,ELEC	SEE PAGE 2-2
9	AG129187	AR	PIPE SEALANT-FLEX BLACK	
10	AG135097	2	TUBE-SECTION FEED,1.50,77.00	
11	AG231204	4	BOLT-U .31-18X1.88X2.63	
12	AG512230	-	HOSE 1.50 2BRD EPDM [BULK: 12.500 FT]	
13	AG516403	16	NUT 0.31-18NC HEX SS REG NY	
14	AG522893	2	CONNECTOR-2.00FLGX2.00NPT	
15	AG522895	2	CLAMP-WORM SCREW,2.00,SS	
16	AG561231	8	CLAMP 1.06-2.00 HOSE 24HS	
17	AG562074	24	WASHER 0.31 FL SS REG TYPE-B	
18	AG708300	8	BOLT 0.31-18NCX 3.50 SS HHD	
19	509725D1	2	BRKT WLDMT-MTG,Y MANF,BM PLMB	
20	520583D1	1	HARN INSTL-ELEC BM SECT,90/100	

Copyright © 2007 AGCO Corporation

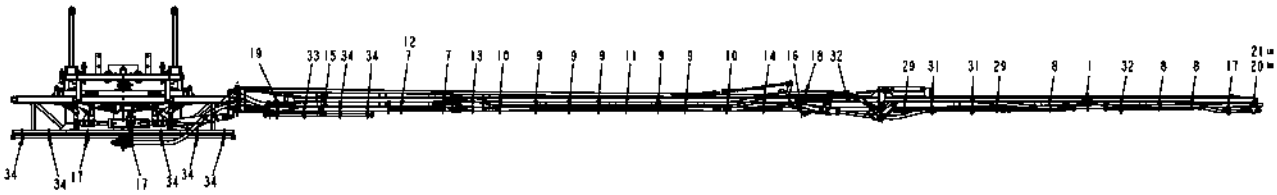

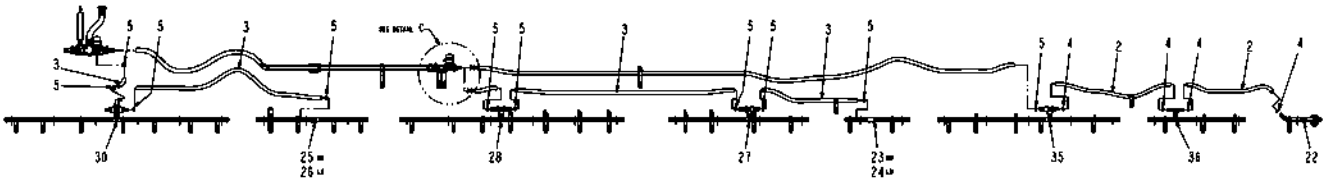

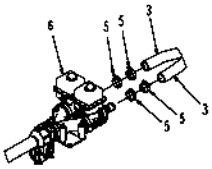

509899D1-01-N649-.TIF

Copyright © 2007 AGCO Corporation

ITEM	PART #	QTY	DESCRIPTION	COMMENTS
1	AG122521	2	BRKT ASM-STR,SH,IPS CLP	SEE PAGE 4-93
2	AG511528	-	HOSE 1.00 2BRD EPDM [BULK: 16.834 FT]	
3	AG513393	-	HOSE 1.25 2BRD EPDM [BULK: 88 FT]	
4	AG561213	8	CLAMP 0.81-1.50 HOSE 16HS	
5	AG561230	26	CLAMP 0.81-1.75 HOSE 20HS	
6	509724D1	1	SYS INSTL-PLMB,1.50,90X5,RTRY	SEE PAGE 4-11
7	509887D1	4	BRKT ASM-Z,SH,1.00IPS	SEE PAGE 4-142
8	509888D1	6	BRKT ASM-STR,LG,1.00IPS,PCLP	SEE PAGE 4-143
9	509889D1	10	BRKT ASM-Z,LG,2IPS/PCLP	SEE PAGE 4-144
10	509890D1	4	BRKT ASM-Z,LG,LWR IPS/PCLP	SEE PAGE 4-145
11	509891D1	2	BRKT ASM-Z,LG,2X1.25 PCLP	SEE PAGE 4-171
12	509892D1	2	BRKT ASM-Z,LG,1.50 STAUFF	SEE PAGE 4-146
13	509893D1	2	BRKT ASM-Z,PP STAUFF	SEE PAGE 4-147
14	509894D1	2	BRKT ASM-Z,PP STAUFF,LWR PCLP	SEE PAGE 4-148
15	509896D1	2	BRKT ASM-Z,SIDE MTG,1.50STAUFF	SEE PAGE 4-149
16	509953D1	2	BRKT ASM-STR,SH,PCLP	SEE PAGE 4-150
17	509955D1	4	BRKT ASM-L,LG,PP STAUFF	SEE PAGE 4-151
18	509956D1	2	BRKT ASM-L,LG,STAUFF,LWR PCLP	SEE PAGE 4-152
19	509959D1	2	BRKT ASM-L/STR,IPS/1.50 STAUFF	SEE PAGE 4-154
20	509960D1	1	BRKT ASM-L,ENDROW,IPS,RH	SEE PAGE 4-155
21	509961D1	1	BRKT ASM-L,ENDROW,IPS,LH	SEE PAGE 4-156
22	509999D1	2	PIPE ASM-45D W/1HB,2X8,PP,ER	SEE PAGE 4-157
23	511036D1	1	PIPE ASM-90D W/1.25HB,2X20,RH	SEE PAGE 4-172
24	511037D1	1	PIPE ASM-90D W/1.25HB,2X20,LH	SEE PAGE 4-173
25	511038D1	1	PIPE ASM-90D W/1.25HB,3X20,RH	SEE PAGE 4-174
26	511039D1	1	PIPE ASM-90D W/1.25HB,3X20,LH	SEE PAGE 4-175
27	511040D1	2	PIPE ASM-T W/2 1.25HB,4X20,PP	SEE PAGE 4-176
28	511041D1	2	PIPE ASM-T W/2 1.25HB,6X20,PP	SEE PAGE 4-177
29	511153D1	4	BRKT ASM-STR,LG,1.00IPS,REV U	SEE PAGE 4-158
30	511154D1	1	PIPE ASM-X W3 1.25HB,6X20,PP	SEE PAGE 4-178
31	511438D1	4	BRKT ASM-L,LG,STAUFF,1.25P CTR	SEE PAGE 4-162
32	511497D1	4	BRKT ASM-L,LG,STAUFF,REV U	SEE PAGE 4-168
33	511689D1	2	BRKT ASM-STR,XLG,STAUFF,LG U	SEE PAGE 4-169
34	511765D1	9	BRKT ASM-STR,LG,1.00IPS,STD U	SEE PAGE 4-170
35	513816D1	2	PIPE ASM-T W/1.25/1HB,5X20,PP	SEE PAGE 4-179
36	513817D1	2	PIPE ASM-T RED W/2 1HB,3X20,PP	SEE PAGE 4-180

Copyright © 2007 AGCO Corporation

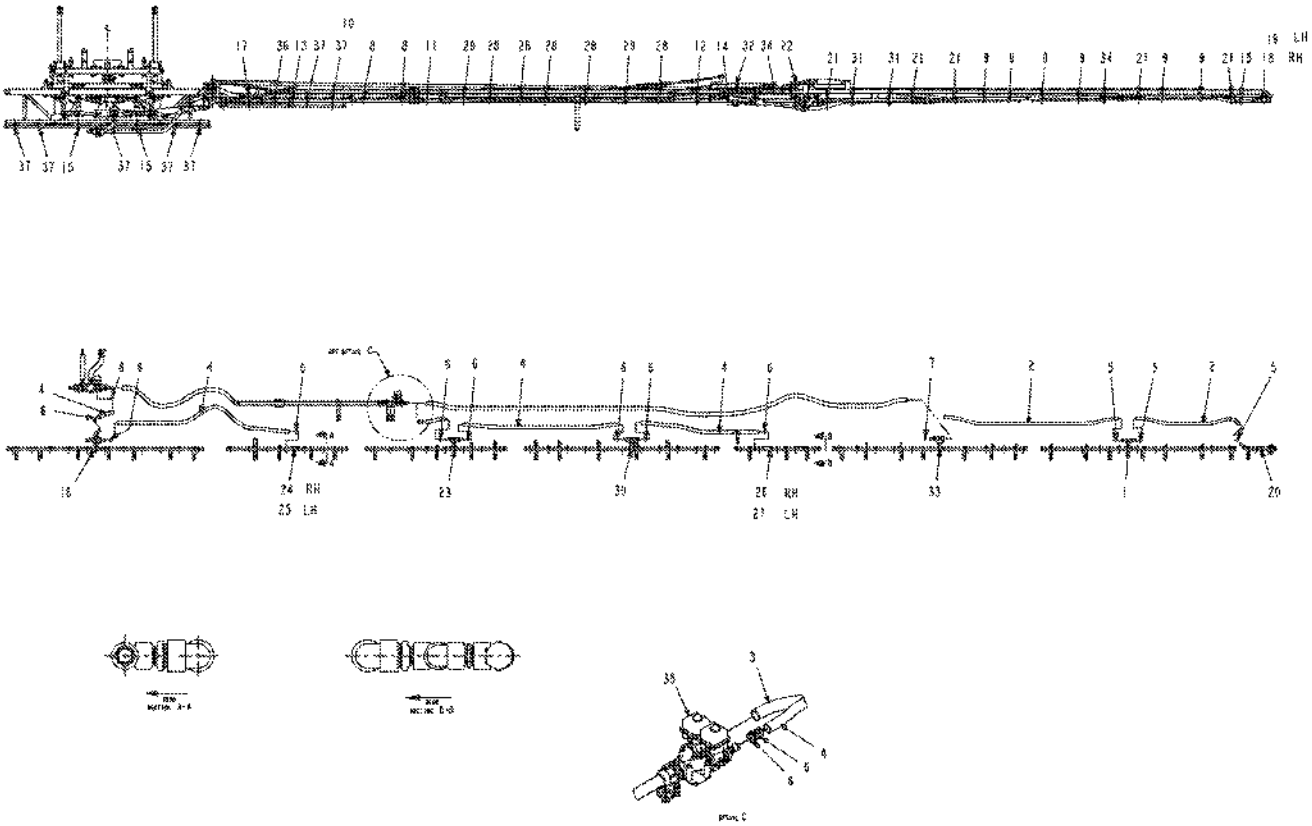

509900D1-02-N854-.TIF

Copyright © 2007 AGCO Corporation

ITEM	PART #	QTY	DESCRIPTION	COMMENTS
1	AG134649	2	PIPE ASM-T W/2 1.00HB,11X10,PP	SEE PAGE 4-181
2	AG511528	-	HOSE 1.00 2BRD EPDM [BULK: 25.667 FT]	
3	AG512230	-	HOSE 1.50 2BRD EPDM [BULK: 44.167 FT]	
4	AG513393	-	HOSE 1.25 2BRD EPDM [BULK: 44.750 FT]	
5	AG561213	8	CLAMP 0.81-1.50 HOSE 16HS	
6	AG561230	20	CLAMP 0.81-1.75 HOSE 20HS	
8	509887D1	4	BRKT ASM-Z,SH,1.00IPS	SEE PAGE 4-142
9	509888D1	12	BRKT ASM-STR,LG,1.00IPS,PCLP	SEE PAGE 4-143
10	509892D1	2	BRKT ASM-Z,LG,1.50 STAUFF	SEE PAGE 4-146
11	509893D1	2	BRKT ASM-Z,PP STAUFF	SEE PAGE 4-147
12	509894D1	2	BRKT ASM-Z,PP STAUFF,LWR PCLP	SEE PAGE 4-148
13	509896D1	2	BRKT ASM-Z,SIDE MTG,1.50STAUFF	SEE PAGE 4-149
14	509953D1	2	BRKT ASM-STR,SH,PCLP	SEE PAGE 4-150
15	509955D1	4	BRKT ASM-L,LG,PP STAUFF	SEE PAGE 4-151
16	509957D1	1	PIPE ASM-X W/3 1.25HB,11X10,PP	SEE PAGE 4-153
17	509959D1	2	BRKT ASM-L/STR,IPS/1.50 STAUFF	SEE PAGE 4-154
18	509960D1	1	BRKT ASM-L,ENDROW,IPS,RH	SEE PAGE 4-155
19	509961D1	1	BRKT ASM-L,ENDROW,IPS,LH	SEE PAGE 4-156
20	509999D1	2	PIPE ASM-45D W/1HB,2X8,PP,ER	SEE PAGE 4-157
21	511153D1	10	BRKT ASM-STR,LG,1.00IPS,REV U	SEE PAGE 4-158
22	511435D1	2	BRKT ASM-L,LG OFFSET,IPS	SEE PAGE 4-159
23	511437D1	2	PIPE ASM-T W/2 1.25HB,8X10,PP	SEE PAGE 4-161
24	511439D1	1	PIPE ASM-90D W/1.25HB,7X10,RH	SEE PAGE 4-163
25	511440D1	1	PIPE ASM-90D W/1.25HB,7X10,LH	SEE PAGE 4-164
26	511441D1	1	PIPE ASM-90D W/1.25HB,5X10,RH	SEE PAGE 4-165
27	511442D1	1	PIPE ASM-90D W/1.25HB,5X10,LH	SEE PAGE 4-166
28	511490D1	10	BRKT ASM-Z,LG,IPS/2PCLP	SEE PAGE 4-182
29	511491D1	4	BRKT ASM-Z,LG,IPS/1.50 PCLP	SEE PAGE 4-183
30	511493D1	2	PIPE ASM-T W/2 1.25HB,11X10,PP	SEE PAGE 4-167
31	511494D1	4	BRKT ASM-L,LG,STAUFF,CTR CLP	SEE PAGE 4-184
32	511495D1	2	BRKT ASM-L,LG,STAUFF,1.50 PCLP	SEE PAGE 4-185
33	511496D1	2	PIPE ASM-T W/1.5/1HB,11X10,PP	SEE PAGE 4-186
34	511497D1	4	BRKT ASM-L,LG,STAUFF,REV U	SEE PAGE 4-168
35	511498D1	1	SYS INSTL-PLMB,1.50,100X5,RTRY	SEE PAGE 2-5
36	511689D1	2	BRKT ASM-STR,XLG,STAUFF,LG U	SEE PAGE 4-169
37	511765D1	9	BRKT ASM-STR,LG,1.00IPS,STD U	SEE PAGE 4-170

Copyright © 2007 AGCO Corporation

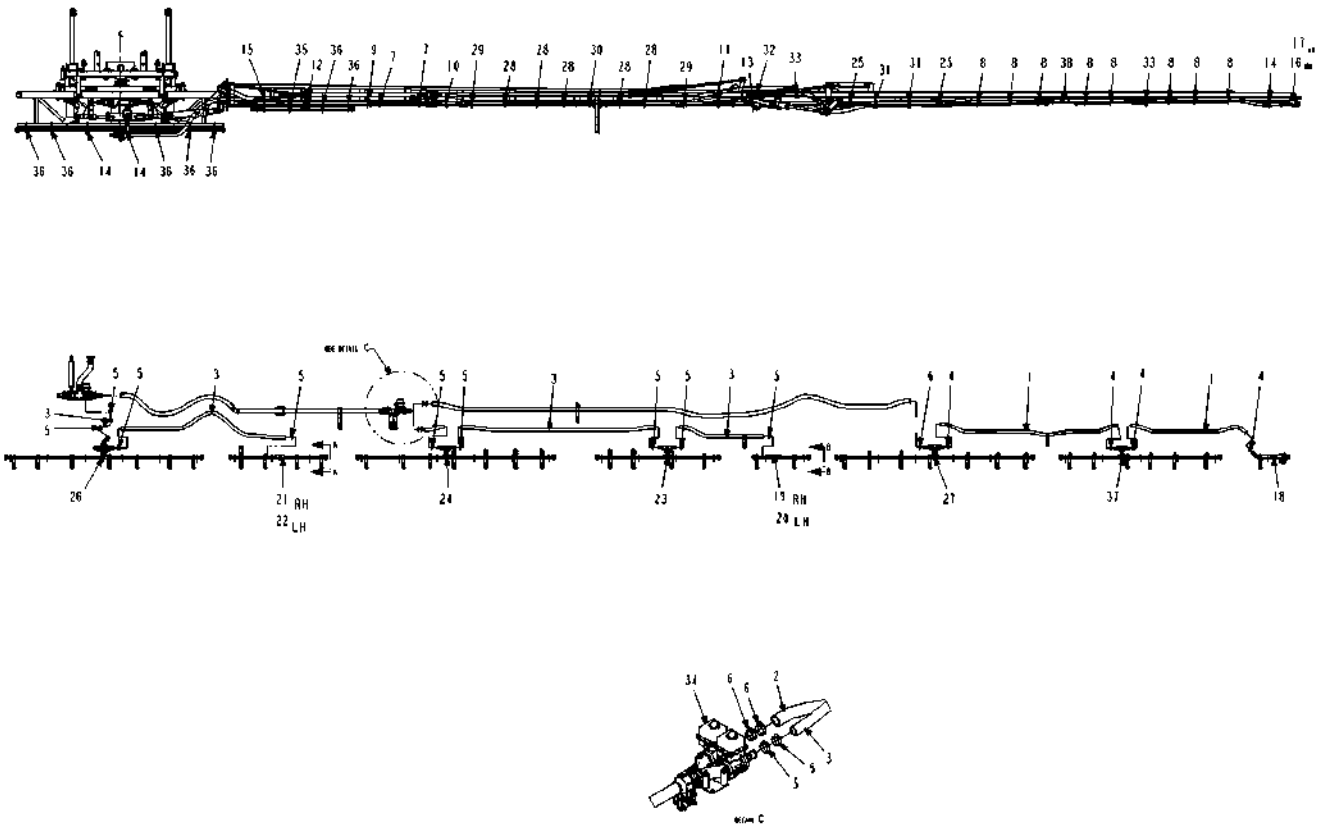

509901D1-02-R506-.TIF

Copyright © 2007 AGCO Corporation

ITEM	PART #	QTY	DESCRIPTION	COMMENTS
1	AG511528	-	HOSE 1.00 2BRD EPDM [BULK: 26.500 FT]	
2	AG512230	-	HOSE 1.50 2BRD EPDM [BULK: 43.500 FT]	
3	AG513393	-	HOSE 1.25 2BRD EPDM [BULK: 41.077 FT]	
4	AG561213	8	CLAMP 0.81-1.50 HOSE 16HS	
5	AG561230	20	CLAMP 0.81-1.75 HOSE 20HS	
6	AG561231	6	CLAMP 1.06-2.00 HOSE 24HS	
7	509887D1	4	BRKT ASM-Z,SH,1.00IPS	SEE PAGE 4-142
8	509888D1	16	BRKT ASM-STR,LG,1.00IPS,PCLP	SEE PAGE 4-143
9	509892D1	2	BRKT ASM-Z,LG,1.50 STAUFF	SEE PAGE 4-146
10	509893D1	2	BRKT ASM-Z,PP STAUFF	SEE PAGE 4-147
11	509894D1	2	BRKT ASM-Z,PP STAUFF,LWR PCLP	SEE PAGE 4-148
12	509896D1	2	BRKT ASM-Z,SIDE MTG,1.50STAUFF	SEE PAGE 4-149
13	509953D1	2	BRKT ASM-STR,SH,PCLP	SEE PAGE 4-150
14	509955D1	4	BRKT ASM-L,LG,PP STAUFF	SEE PAGE 4-151
15	509959D1	2	BRKT ASM-L/STR,IPS/1.50 STAUFF	SEE PAGE 4-154
16	509960D1	1	BRKT ASM-L,ENDROW,IPS,RH	SEE PAGE 4-155
17	509961D1	1	BRKT ASM-L,ENDROW,IPS,LH	SEE PAGE 4-156
18	509999D1	2	PIPE ASM-45D W/1HB,2X8,PP,ER	SEE PAGE 4-157
19	511036D1	1	PIPE ASM-90D W/1.25HB,2X20,RH	SEE PAGE 4-172
20	511037D1	1	PIPE ASM-90D W/1.25HB,2X20,LH	SEE PAGE 4-173
21	511038D1	1	PIPE ASM-90D W/1.25HB,3X20,RH	SEE PAGE 4-174
22	511039D1	1	PIPE ASM-90D W/1.25HB,3X20,LH	SEE PAGE 4-175
23	511040D1	2	PIPE ASM-T W/2 1.25HB,4X20,PP	SEE PAGE 4-176
24	511041D1	2	PIPE ASM-T W/2 1.25HB,6X20,PP	SEE PAGE 4-177
25	511153D1	4	BRKT ASM-STR,LG,1.00IPS,REV U	SEE PAGE 4-158
26	511154D1	1	PIPE ASM-X W3 1.25HB,6X20,PP	SEE PAGE 4-178
27	511434D1	2	PIPE ASM-T W/ 1.5/1HB,6X20,PP	SEE PAGE 4-187
28	511490D1	10	BRKT ASM-Z,LG,IPS/2PCLP	SEE PAGE 4-182
29	511491D1	4	BRKT ASM-Z,LG,IPS/1.50 PCLP	SEE PAGE 4-183
30	511492D1	2	BRKT ASM-Z,LG,1.25/1.50 PCLP	SEE PAGE 4-188
31	511494D1	4	BRKT ASM-L,LG,STAUFF,CTR CLP	SEE PAGE 4-184
32	511495D1	2	BRKT ASM-L,LG,STAUFF,1.50 PCLP	SEE PAGE 4-185
33	511497D1	4	BRKT ASM-L,LG,STAUFF,REV U	SEE PAGE 4-168
34	511498D1	1	SYS INSTL-PLMB,1.50,100X5,RTRY	SEE PAGE 2-5
35	511689D1	2	BRKT ASM-STR,XLG,STAUFF,LG U	SEE PAGE 4-169
36	511765D1	9	BRKT ASM-STR,LG,1.00IPS,STD U	SEE PAGE 4-170
37	512493D1	2	PIPE ASM-T RED W/2 1HB,5X20,PP	SEE PAGE 4-189
38	520811D1	2	BRKT ASM-STR,SH,1.00PCLP,REV U	

Copyright © 2007 AGCO Corporation

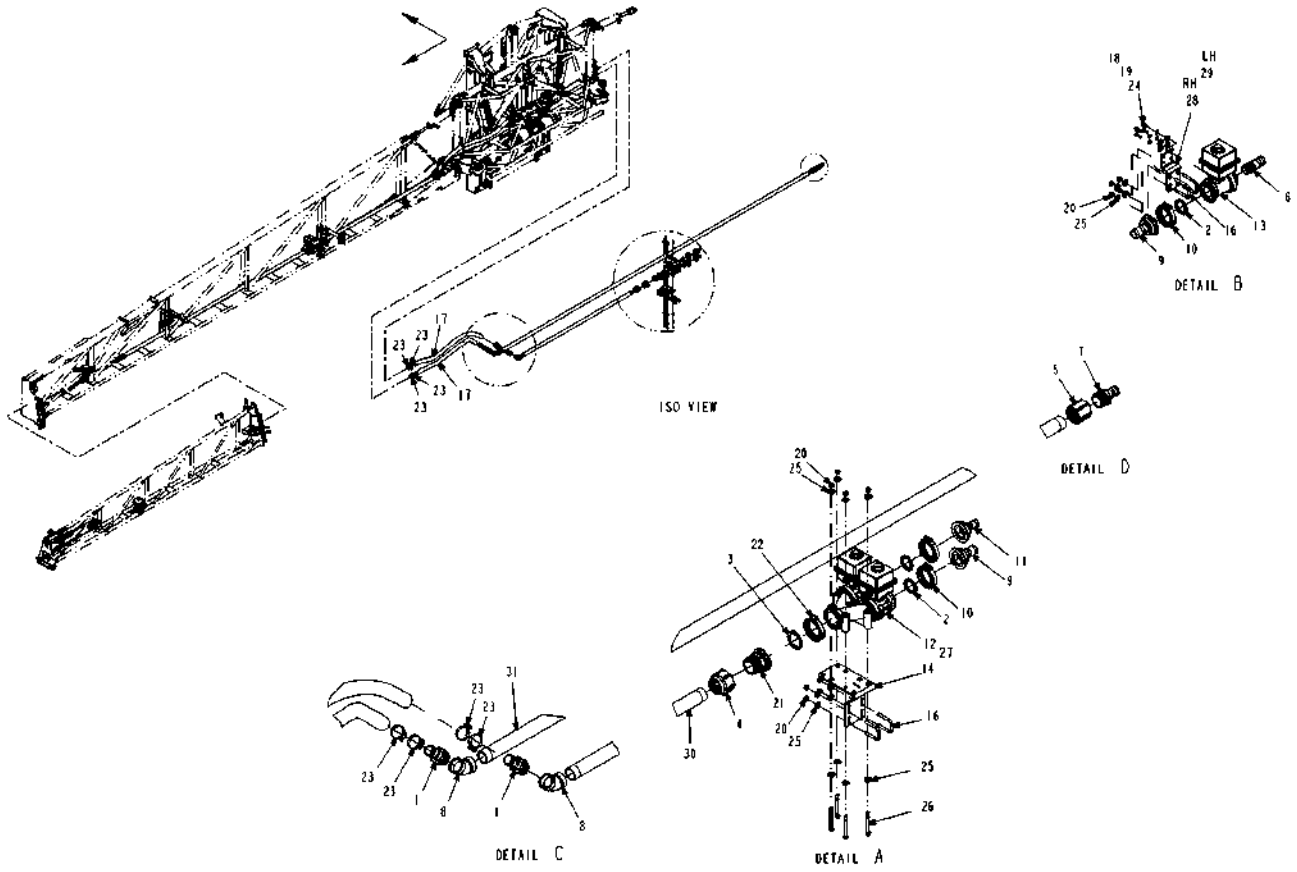

516488D1-03-R393-.TIF

Copyright © 2007 AGCO Corporation

ITEM	PART #	QTY	DESCRIPTION	COMMENTS
1	AG000766	4	BARB-HOSE,1.50MNTTX1.50BARB,PP	
2	AG000772	6	GASKET 1.50 EPDM	
3	AG000773	2	GASKET 2.00 EPDM	
4	AG050266	2	COUPLG RED 1.50X 2.00NPT POLYP	
5	AG050271	2	COUPLING-PIPE,1.50NPT,PP	
6	AG051183	2	BARB-HOSE,1.00MNPTX1.25BARB,PP	
7	AG051534	2	BARB-HOSE,1.50MNPTX1.25BARB,PP	
8	AG051888	4	ELBOW 45D 1.50 304SS	
9	AG056289	4	CONNECTOR 2.00FLGX1.25HOSE	
10	AG056785	6	CLAMP 2.00 FLANGE	
11	AG057593	2	CONNECTOR 2.00X1.00HOSE	
12	AG121882	2	MANIFOLD ASM-Y,1.00FP FLG,ELEC	SEE PAGE 2-2
13	AG121883	2	VALVE-BALL,1.00FP FLGXNPT,ELEC	SEE PAGE 4-3
14	AG122147	2	BRKT WLDMT-MTG,Y MANF,BM PLMB	
15	AG129187	AR	PIPE SEALANT-FLEX BLACK	
16	AG231204	8	BOLT-U .31-18X1.88X2.63	
17	AG512230	-	HOSE 1.50 2BRD EPDM [BULK: 20.667 FT]	
18	AG515121	8	WASHER 0.25 FL SS REG TYPE-B	
19	AG515122	8	WASHER 0.25 LK SS REG	
20	AG516403	24	NUT 0.31-18NC HEX SS REG NY	
21	AG522893	2	CONNECTOR-2.00FLGX2.00NPT	
22	AG522895	2	CLAMP-WORM SCREW,2.00,SS	
23	AG561231	16	CLAMP 1.06-2.00 HOSE 24HS	
24	AG562054	8	BOLT 0.25-20NCX 0.75 SS HHD	
25	AG562074	32	WASHER 0.31 FL SS REG TYPE-B	
26	AG708300	8	BOLT 0.31-18NCX 3.50 SS HHD	
27	505271D1	1	HARNESS INSTL-BSO VLV,7 SECT	SEE PAGE 6-5
28	506452D1	1	BRKT-MTG,KZ VLV,RH	
29	506453D1	1	BRKT-MTG,KZ VLV,LH	
30	506454D1	2	TUBE-SECTION FEED,1.50,85.00	
31	506455D1	2	TUBE-SECTION FEED,1.50,240.00	

Copyright © 2007 AGCO Corporation

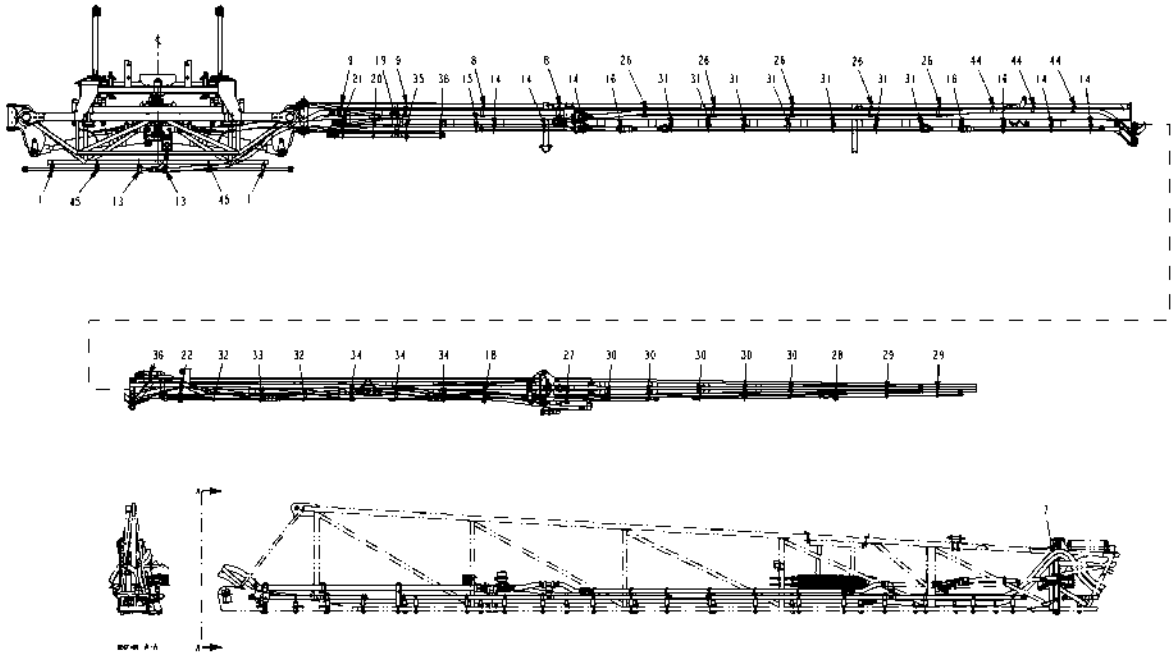

511588D1-01-R483-01.TIF

Copyright © 2007 AGCO Corporation

ITEM	PART #	QTY	DESCRIPTION	COMMENTS
1	AG122521	2	BRKT ASM-STR,SH,IPS CLP	SEE PAGE 4-93
6	AG562496	AR	TIE CABLE 15.0 .18-4.00 BLACK	
7	506720D1	100	SLEEVE-PROTECTIVE,NYLON,-48	
8	506726D1	4	BRKT ASM-L,1.50 STAUFF,STD U	SEE PAGE 4-105
9	506727D1	4	BRKT ASM-L,1.50 STAUFF,P,LG U	SEE PAGE 4-106
13	508671D1	2	BRKT ASM-L,REV,1.00PP STAUFF	SEE PAGE 4-119
14	509887D1	10	BRKT ASM-Z,SH,1.00IPS	SEE PAGE 4-142
15	509892D1	2	BRKT ASM-Z,LG,1.50 STAUFF	SEE PAGE 4-146
16	509893D1	4	BRKT ASM-Z,PP STAUFF	SEE PAGE 4-147
17	509894D1	2	BRKT ASM-Z,PP STAUFF,LWR PCLP	SEE PAGE 4-148
18	509895D1	2	BRKT ASM-L,LG,STAUFF,CTR CLP	SEE PAGE 4-198
19	509896D1	2	BRKT ASM-Z,SIDE MTG,1.50STAUFF	SEE PAGE 4-149
20	509958D1	2	BRKT ASM-L,LG,IPS,LG U	SEE PAGE 4-199
21	509959D1	2	BRKT ASM-L/STR,IPS/1.50 STAUFF	SEE PAGE 4-154
22	511497D1	2	BRKT ASM-L,LG,STAUFF,REV U	SEE PAGE 4-168
26	511601D1	10	BRKT ASM-L,1.50 STAUFF,PCLP	SEE PAGE 4-209
27	511602D1	2	BRKT ASM-L,LG,STAUFF,PCLP,1.O	SEE PAGE 4-210
28	511603D1	2	BRKT ASM-L,LG,STAUFF,REV 1.00U	SEE PAGE 4-211
29	511604D1	4	BRKT ASM-STR,LG,IPS,REV 1.00U	SEE PAGE 4-212
30	511605D1	10	BRKT ASM-STR,LG,IPS/PCLP,1.00U	SEE PAGE 4-213
31	511617D1	14	BRKT ASM-Z,LG,2XIPS	SEE PAGE 4-214
32	511624D1	4	BRKT ASM-STR,XLG,IPS,2XPCLP	SEE PAGE 4-215
33	511675D1	2	BRKT ASM-STR,LG,IPS,1.25 PCLP	SEE PAGE 4-217
34	511688D1	6	BRKT ASM-STR,XLG,IPS,PCLP	SEE PAGE 4-218
35	511689D1	2	BRKT ASM-STR,XLG,STAUFF,LG U	SEE PAGE 4-169
36	511765D1	4	BRKT ASM-STR,LG,1.00IPS,STD U	SEE PAGE 4-170
44	520626D1	6	BRKT ASM-STR,SH,1.00/1.25 PCLP	SEE PAGE 4-235
45	520634D1	2	BRKT ASM-STR,SH,IPS/1.00 PCLP	SEE PAGE 4-236

Copyright © 2007 AGCO Corporation

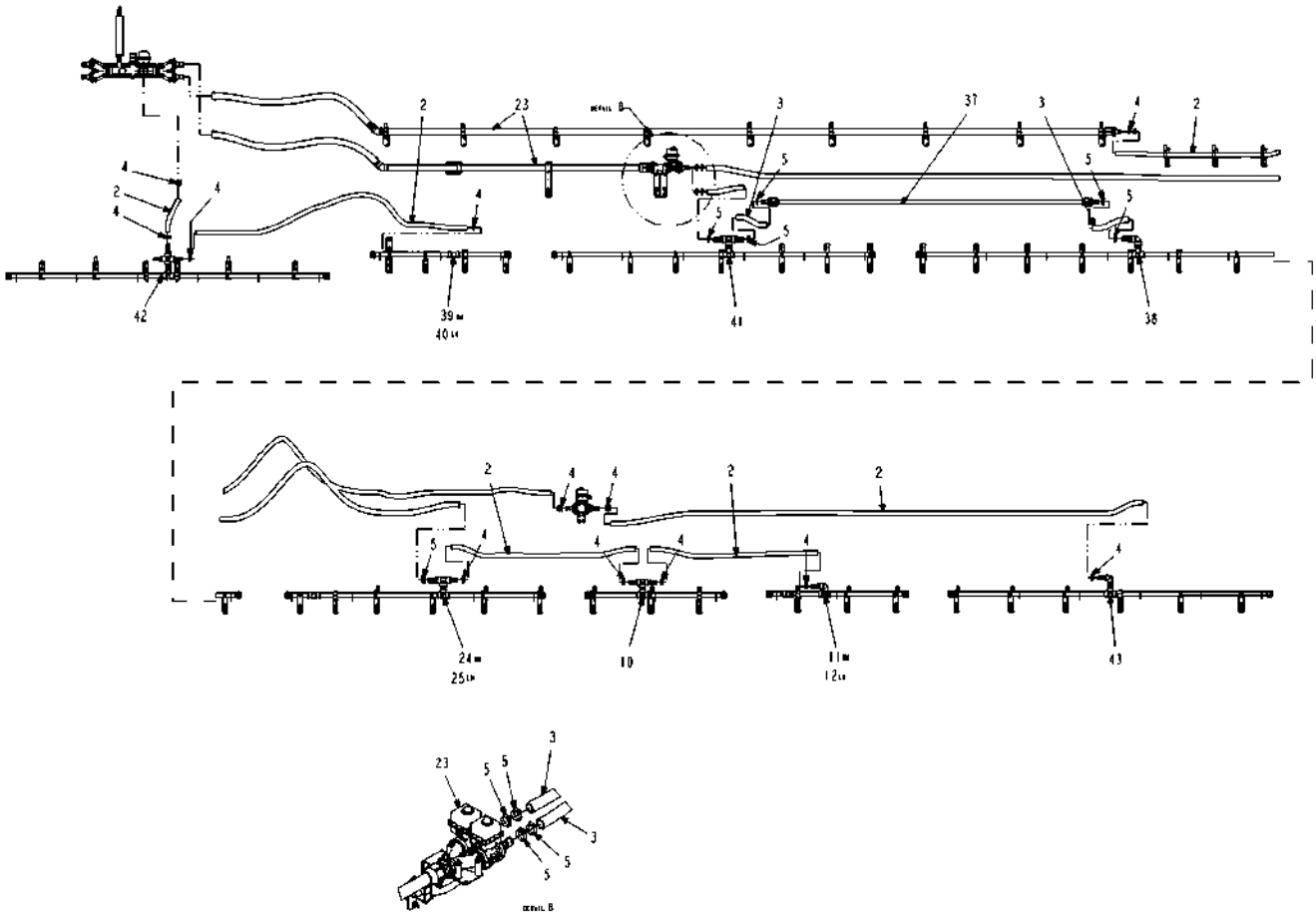

511588D1-01-R483-02.TIF

Copyright © 2007 AGCO Corporation

ITEM	PART #	QTY	DESCRIPTION	COMMENTS
2	AG511528	-	HOSE 1.00 2BRD EPDM [BULK: 99.667 FT]	
3	AG513393	-	HOSE 1.25 2BRD EPDM [BULK: 53.750 FT]	
4	AG561213	28	CLAMP 0.81-1.50 HOSE 16HS	
5	AG561230	20	CLAMP 0.81-1.75 HOSE 20HS	
10	506743D1	2	PIPE ASM-T W/2 1.00HB,3X20,PP	SEE PAGE 4-131
11	506744D1	1	PIPE ASM-90D W/1HB,3X20,PP,RH	SEE PAGE 4-132
12	506745D1	1	PIPE ASM-90D W/1HB,3X20,PP,LH	SEE PAGE 4-133
23	511589D1	1	SYS INSTL-PLMB,1.50,120X7,RTRY	SEE PAGE 4-202
24	511597D1	1	PIPE ASM-T W/1.25/1HB,5X20,RH	SEE PAGE 4-207
25	511598D1	1	PIPE ASM-T W/1.25/1HB,5X20,LH	SEE PAGE 4-208
37	511820D1	2	PIPE ASM-W/2 1.00HB,102.00,PP	SEE PAGE 4-220
38	511822D1	2	PIPE ASM-90D W/1.00HB,7X20,PP	SEE PAGE 4-221
39	512412D1	1	PIPE ASM-90D W/1HB,3X20,PP,RH	SEE PAGE 4-222
40	512413D1	1	PIPE ASM-90D W/1HB,3X20,PP,LH	SEE PAGE 4-223
41	512414D1	2	PIPE ASM-T W/2 1.00HB,6X20,PP	SEE PAGE 4-224
42	520487D1	1	PIPE ASM-X W/3 1.00HB,6X20,PP	SEE PAGE 4-227
43	520488D1	2	PIPE ASM-90D W/1.00HB,6X20,PP	SEE PAGE 4-228

Copyright © 2007 AGCO Corporation

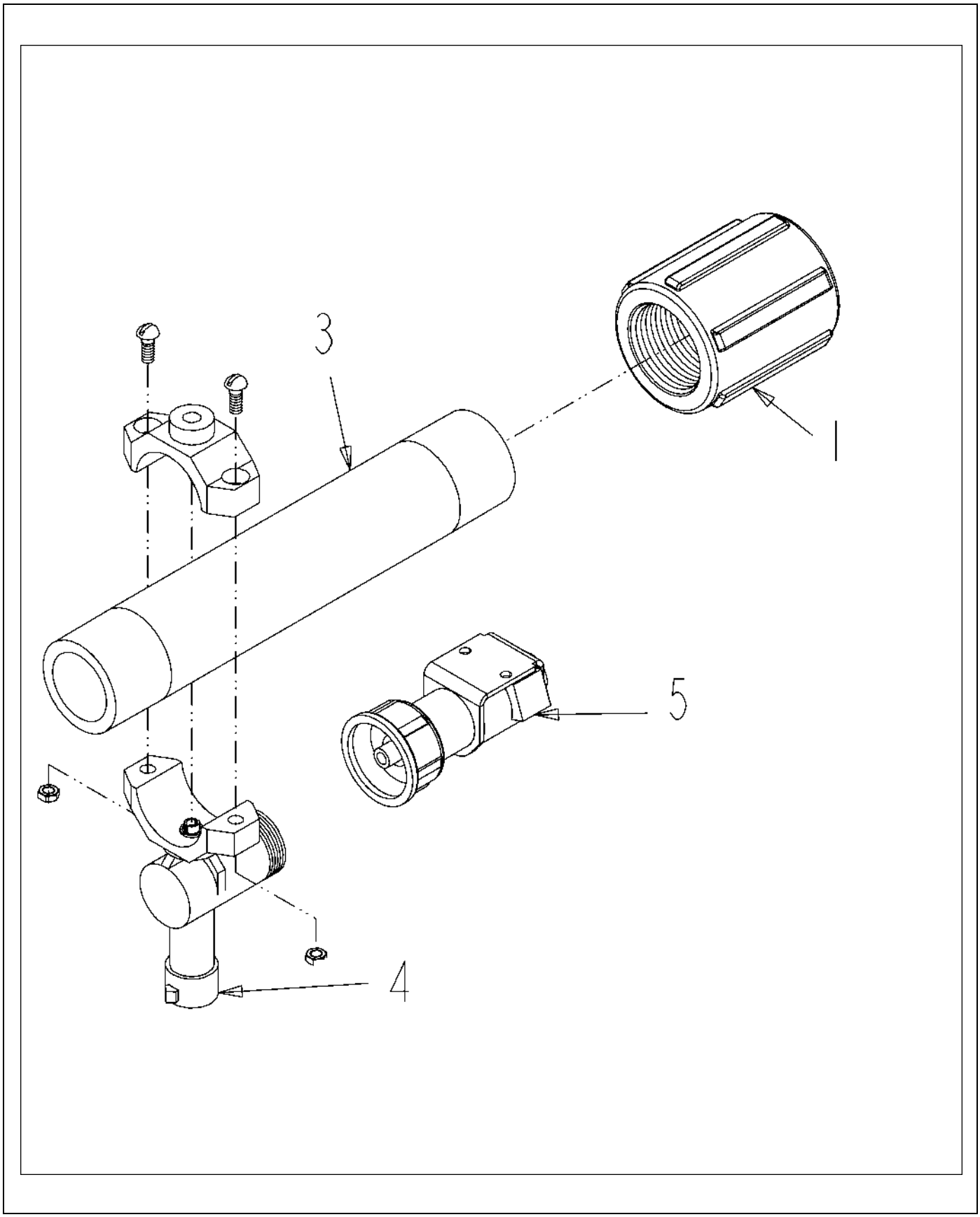

134668-02-N069-.TIF

Copyright © 2007 AGCO Corporation

PIPE ASM-ENDROW,ELEC,10/20,PP

ITEM	PART #	QTY	DESCRIPTION	COMMENTS
1	AG051131	1	COUPLING-PIPE,1.00NPT,PP	
2	AG129187	AR	PIPE SEALANT-FLEX BLACK	
3	AG134603	1	TUBE-BOOM,PP,10,7.13	
4	AG519561	1	NOZ HLDR-SGL 1.00 IPS	SEE PAGE 4-34
5	508196D1	1	VALVE-SOL,NOZ BODY,ARAG,150PSI	SEE PAGE 4-21

Copyright © 2007 AGCO Corporation

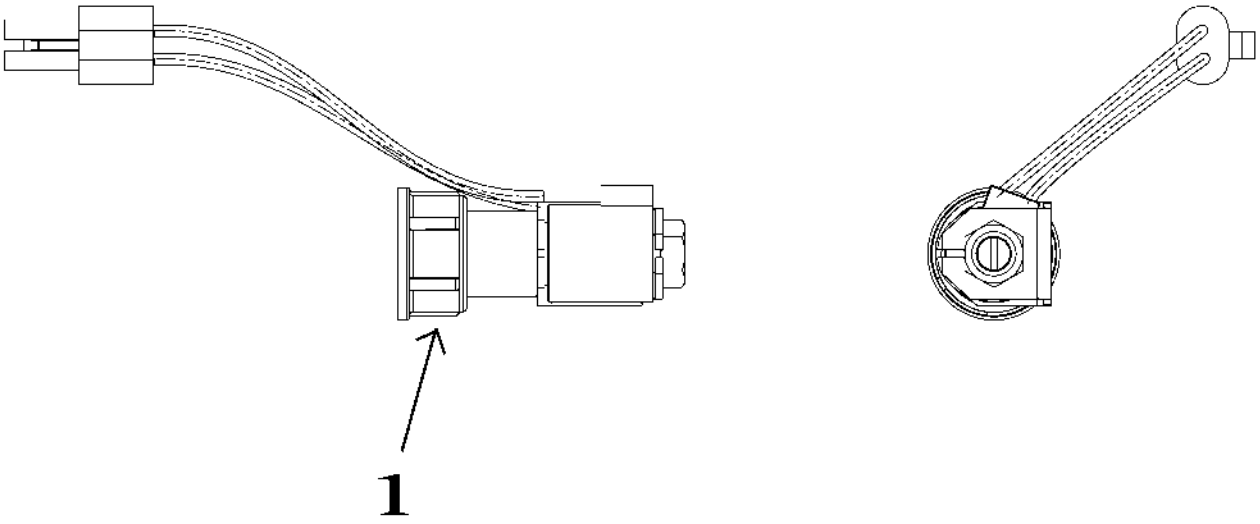

508196D1-01-N069-.TIF

Copyright © 2007 AGCO Corporation

VALVE-SOL,NOZ BODY,ARAG,150PSI

ITEM	PART #	QTY	DESCRIPTION	COMMENTS
1	508197D1	-	PARTS-SERV,NOZ VALV,(508196D1)	SEE PAGE 11-16

Copyright © 2007 AGCO Corporation

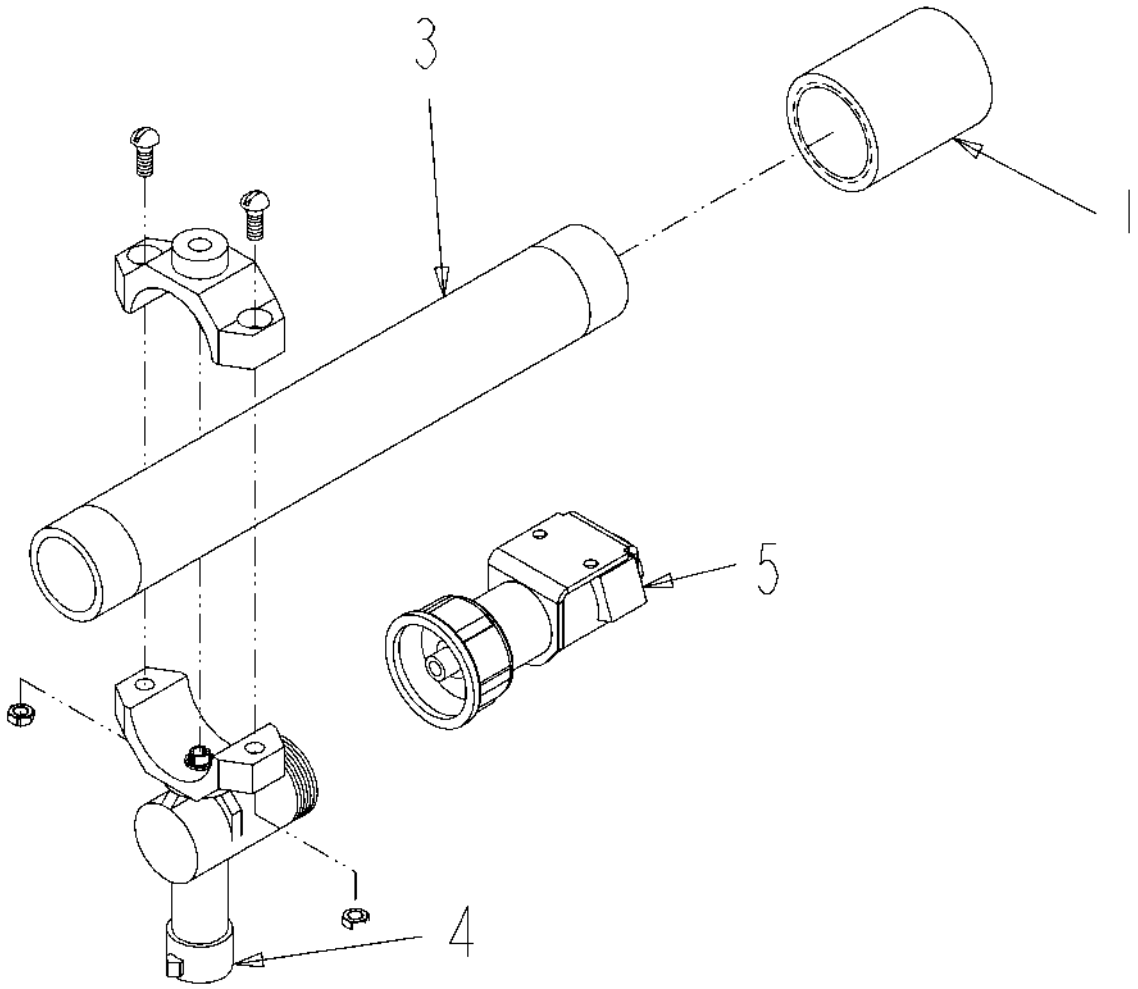

134669-02-N069-.tif

Copyright © 2007 AGCO Corporation

PIPE ASM-ENDROW,ELEC,10/20,SS

ITEM	PART #	QTY	DESCRIPTION	COMMENTS
1	AG051940	1	COUPLING 0.75 304SS	
2	AG129187	AR	PIPE SEALANT-FLEX BLACK	
3	AG134753	1	TUBE-BOOM,SS,10,7.50	
4	AG518660	1	SINGLE NOZZLE HOLDER-.75 PIPE	SEE PAGE 4-35
5	508196D1	1	VALVE-SOL,NOZ BODY,ARAG,150PSI	SEE PAGE 4-21

Copyright © 2007 AGCO Corporation

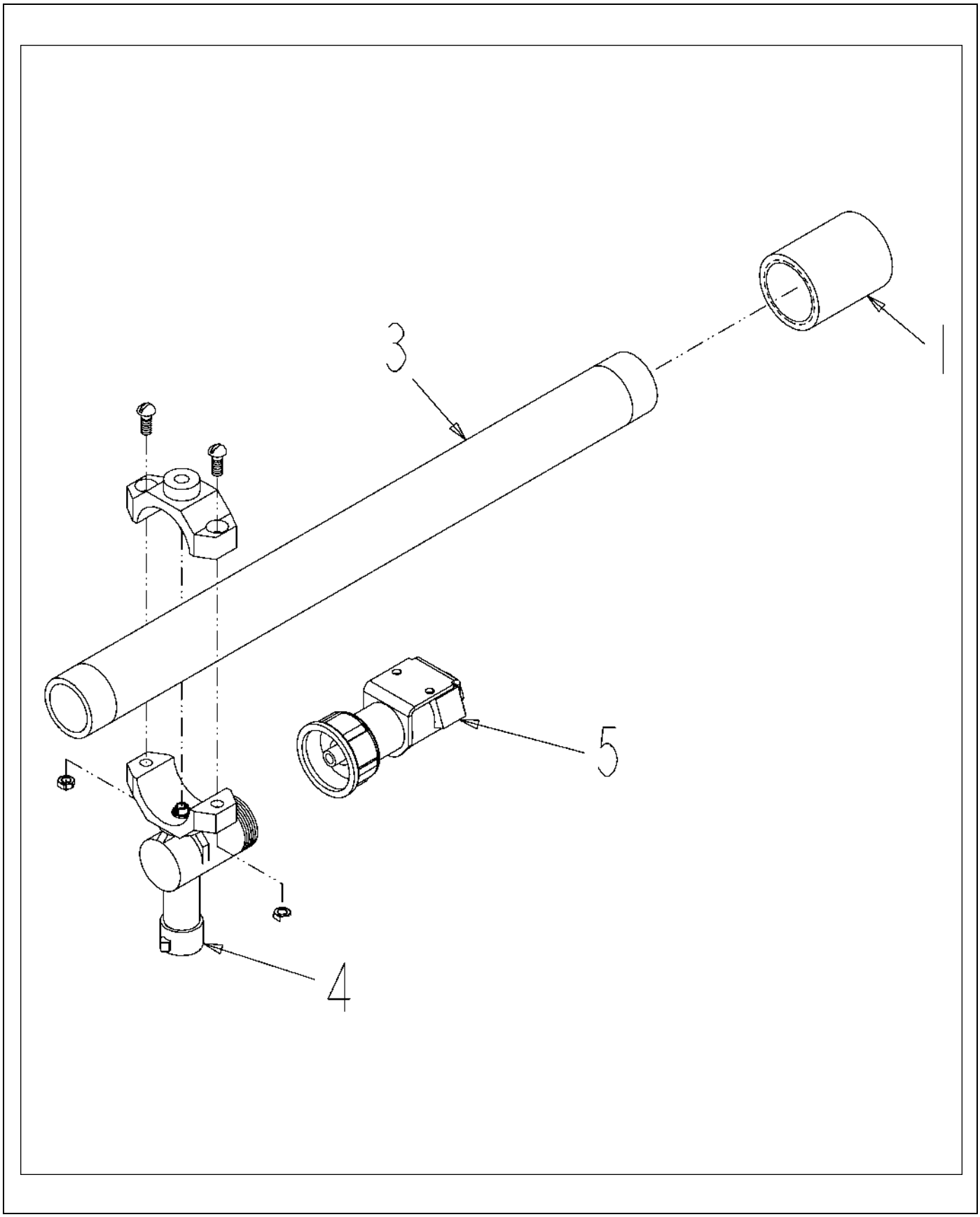

134604-02-N069.TIF

Copyright © 2007 AGCO Corporation

PIPE ASM-ENDROW,ELEC,15,SS

ITEM	PART #	QTY	DESCRIPTION	COMMENTS
1	AG051940	1	COUPLING 0.75 304SS	
2	AG129187	AR	PIPE SEALANT-FLEX BLACK	
3	AG134849	1	TUBE-BOOM,SS,10,7.50	
4	AG518660	1	SINGLE NOZZLE HOLDER-.75 PIPE	SEE PAGE 4-35
5	508196D1	1	VALVE-SOL,NOZ BODY,ARAG,150PSI	SEE PAGE 4-21

Copyright © 2007 AGCO Corporation

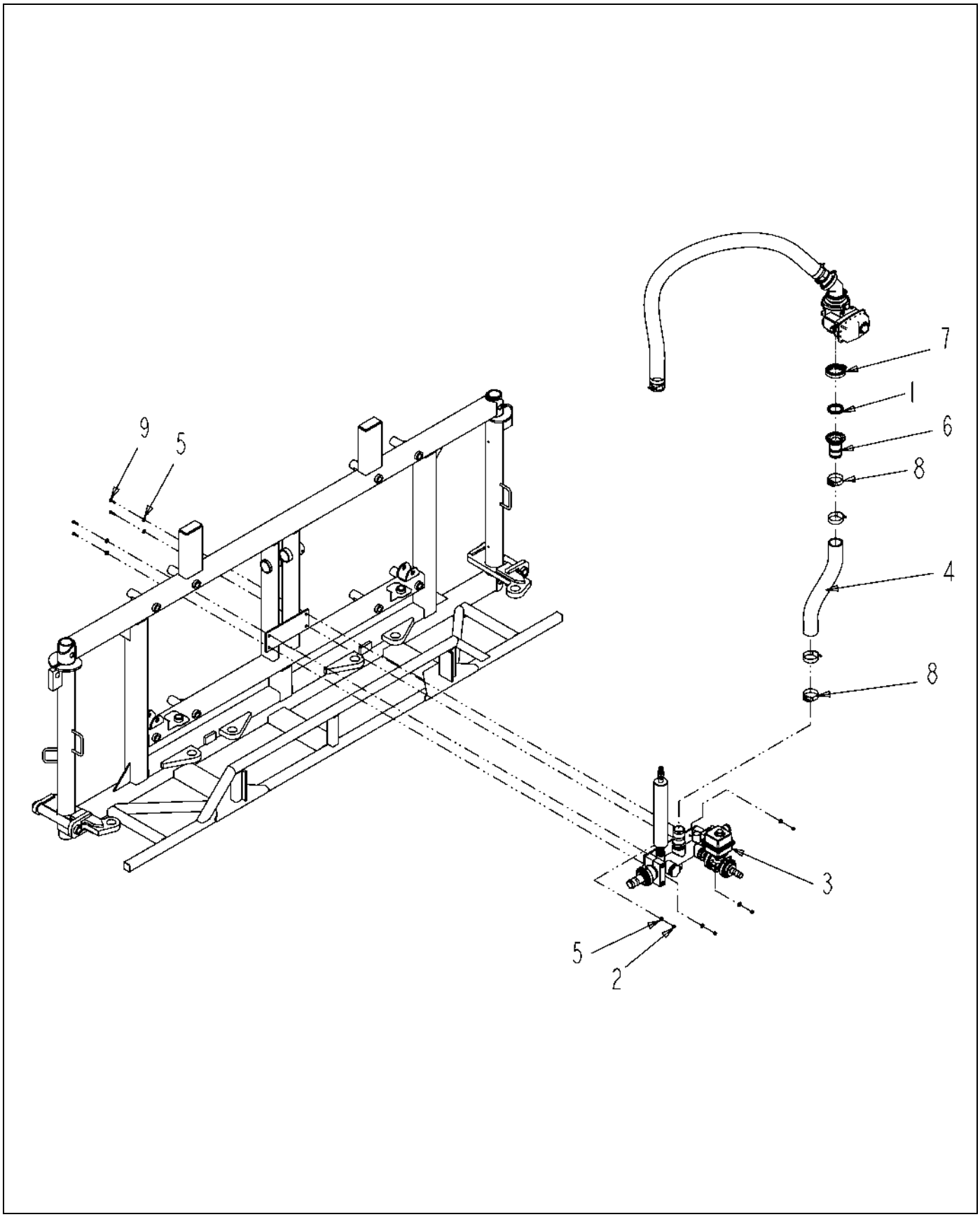

135070-01-N291-.TIF

Copyright © 2007 AGCO Corporation

MANF INSTL-HV,1.50,STD BM PLMB

ITEM	PART #	QTY	DESCRIPTION	COMMENTS
1	AG000773	1	GASKET 2.00 EPDM	
2	AG027275	4	NUT 0.25-20NC HEX SS REG NY	
3	AG135071	1	MANF ASM-HV,1.50HB,STD BM PLMB	SEE PAGE 4-25
4	AG511722	-	HOSE-2.00,WIRE BRAID,EPDM [BULK: 1.667 FT]	
5	AG515121	8	WASHER 0.25 FL SS REG TYPE-B	
6	AG522894	1	CONN-2.00 FLG X2.00 HOSE BARB	
7	AG522895	1	CLAMP-WORM SCREW,2.00,SS	
8	AG561630	4	CLAMP 2.28-2.59HOSE VOSS-250SS	
9	AG562064	4	BOLT 0.25-20NCX 1.00 SS HHD	

Copyright © 2007 AGCO Corporation

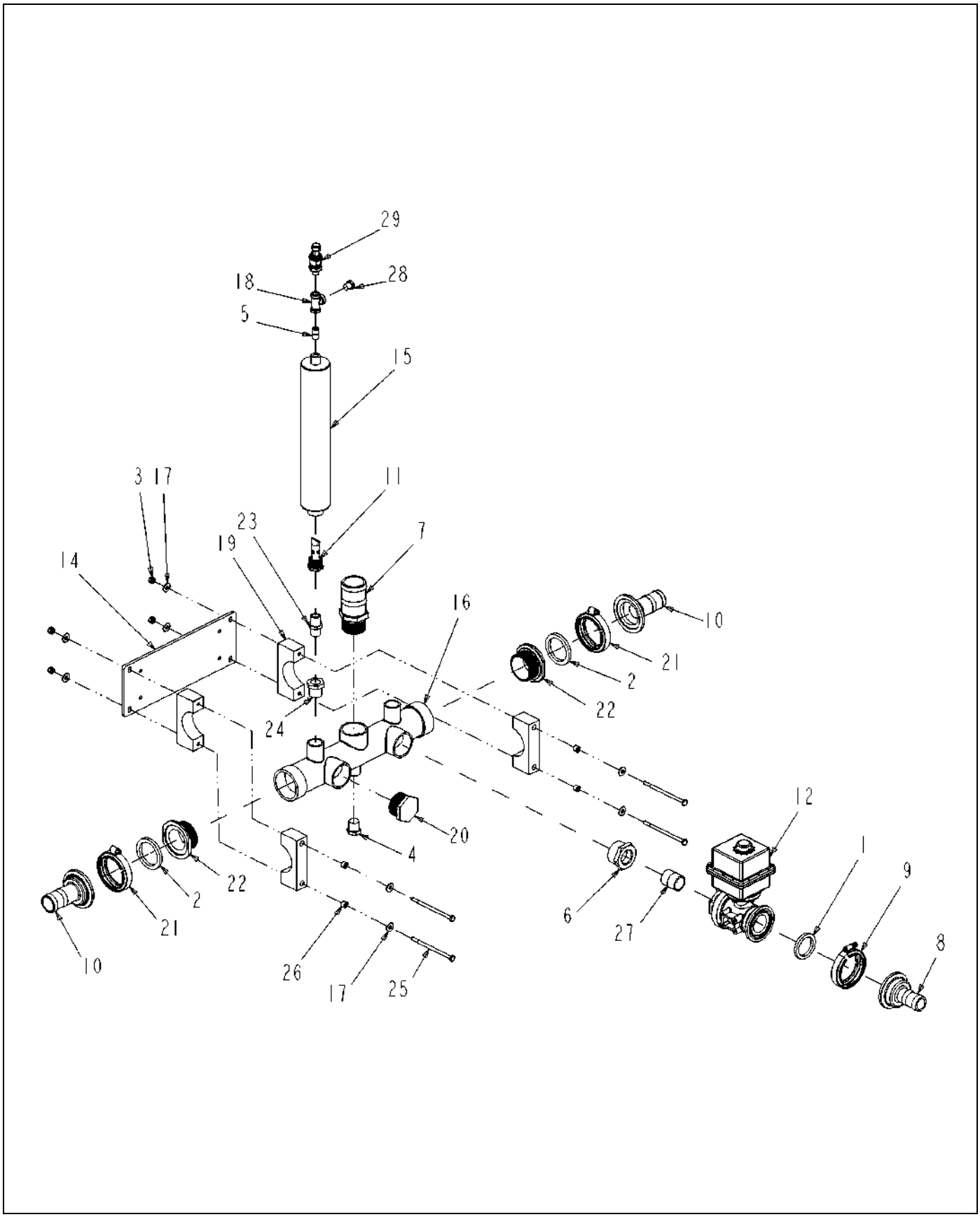

135071-04-R506-.TIF

Copyright © 2007 AGCO Corporation

MANF ASM-HV,1.50HB,STD BM PLMB

ITEM	PART #	QTY	DESCRIPTION	COMMENTS
1	AG000772	1	GASKET 1.50 EPDM	
2	AG000773	1	GASKET 2.00 EPDM	
3	AG027275	4	NUT 0.25-20NC HEX SS REG NY	
4	AG051133	1	PLUG-PIPE,HEX,0.50NPT,PP	
5	AG051740	1	NIPPLE 0.25NPTX 0.87CLS 304SS	
6	AG051894	1	BUSHING 1.50X1.00 304SS	
7	AG052456	1	BARB-HOSE,1.50MNPTX2.00BARB,PP	
8	AG056289	1	CONNECTOR 2.00FLGX1.25HOSE	
9	AG056785	1	CLAMP 2.00 FLANGE	
10	AG057594	2	CONNECTOR 2.00FPX1.50HOSE	
11	AG106152	1	WLDMT TUBE DIFFUSER	
12	AG121883	1	VALVE-BALL,1.00FP FLGXNPT,ELEC	SEE PAGE 4-3
13	AG129187	AR	PIPE SEALANT-FLEX BLACK	
14	AG260508	1	PLATE-MTG,MANIFOLD,HV	
15	AG311914	1	WLDMT ACCUMULATOR	
16	AG326175	1	MANIFOLD WLDMT-HV BOOM CTR,THD	
17	AG515121	8	WASHER 0.25 FL SS REG TYPE-B	
18	AG517855	1	TEE 0.25 NPT FEMALE SS	
19	AG518340	2	CLAMP 2.50 BLACK POLY (RTG)	
20	AG522149	1	PLUG-PIPE,HEX,1.50NPT,PP	
21	AG522895	2	CLAMP-WORM SCREW,2.00,SS	
22	AG523524	2	ADPTR-2.0FLG,FPX2.0MPT,316SS	
23	AG553492	1	NIPPLE .50NPT X 1.12CLS WR ST	
24	AG556424	1	BUSHG 0.75X 0.50NPT HX REDG PL	
25	AG563069	4	BOLT 0.25-20NCX 4.50 SS HHD	
26	AG609777	4	INSERT STAUFF SPACER	
27	AG710516	1	NIPPLE 1.00NPTX 1.50CLS 304SS	
28	AG710638	1	PLUG-PIPE,HEX,0.25NPT,304SS	
29	517405D1	1	TRANSDUCER-PRES,150 PSI, (MV)	

Copyright © 2007 AGCO Corporation

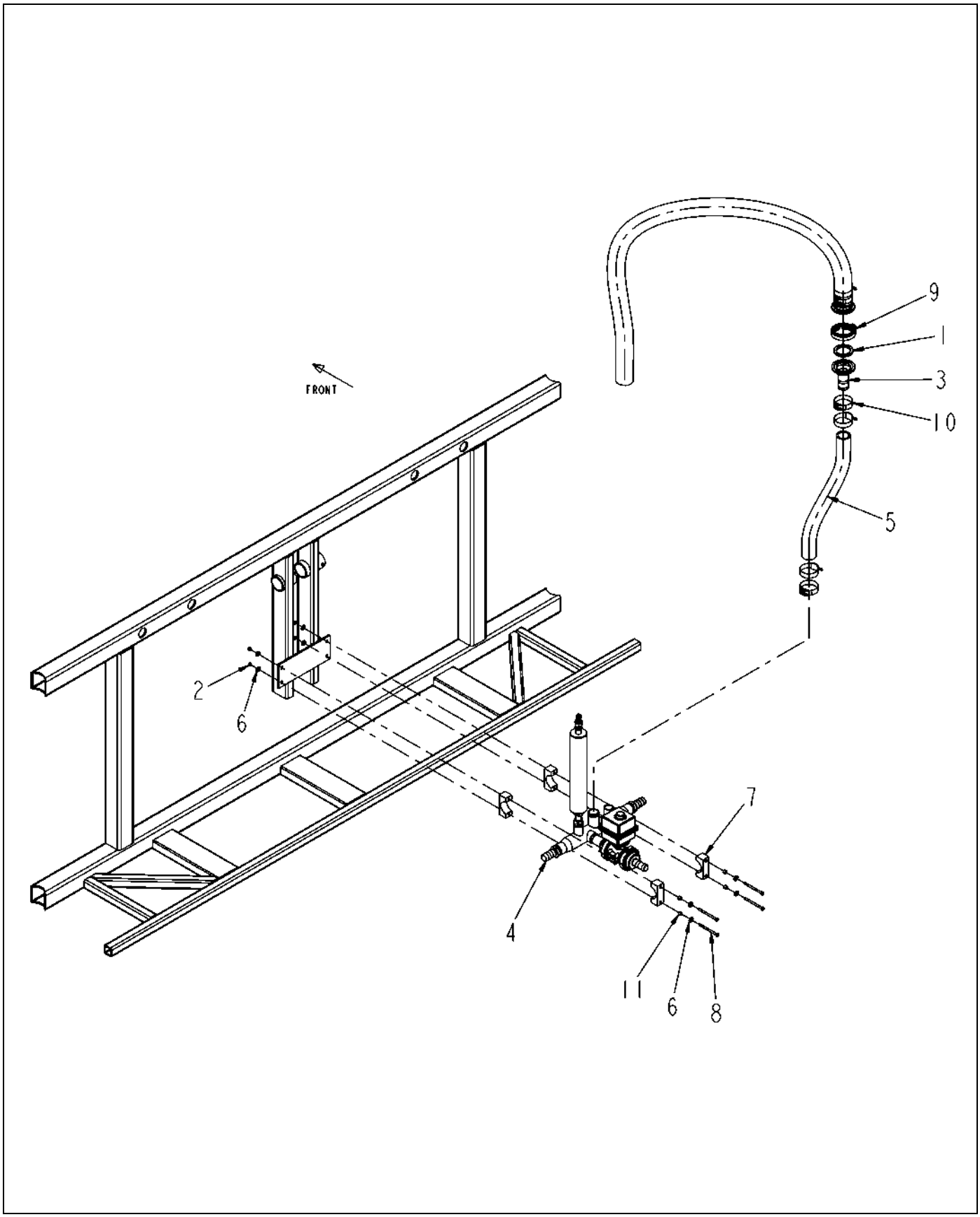

327801.TIF

Copyright © 2007 AGCO Corporation

MANIFOLD INSTL-STD,BALL VALVE

ITEM	PART #	QTY	DESCRIPTION	COMMENTS
1	AG000773	1	GASKET 2.00 EPDM	
2	AG027275	4	NUT 0.25-20NC HEX SS REG NY	
3	AG057594	1	CONNECTOR 2.00FPX1.50HOSE	
4	AG424522	1	MANF ASM-BOOM,W/BALL VLV,STD	SEE PAGE 2-1
5	AG513466	-	HOSE-1.50,LIQ PROD.SUC & DIS [BULK: 1.667 FT]	
6	AG515121	8	WASHER 0.25 FL SS REG TYPE-B	
7	AG518339	2	CLAMP 2.00 BLACK POLY (RTG)	
8	AG518507	4	BOLT 0.25-20NCX 3.50 SS HHD	
9	AG522895	1	CLAMP-WORM SCREW,2.00,SS	
10	AG561538	4	CLAMP 1.78-2.09HOSE VOSS-200SS	
11	AG609777	4	INSERT STAUFF SPACER	

Copyright © 2007 AGCO Corporation

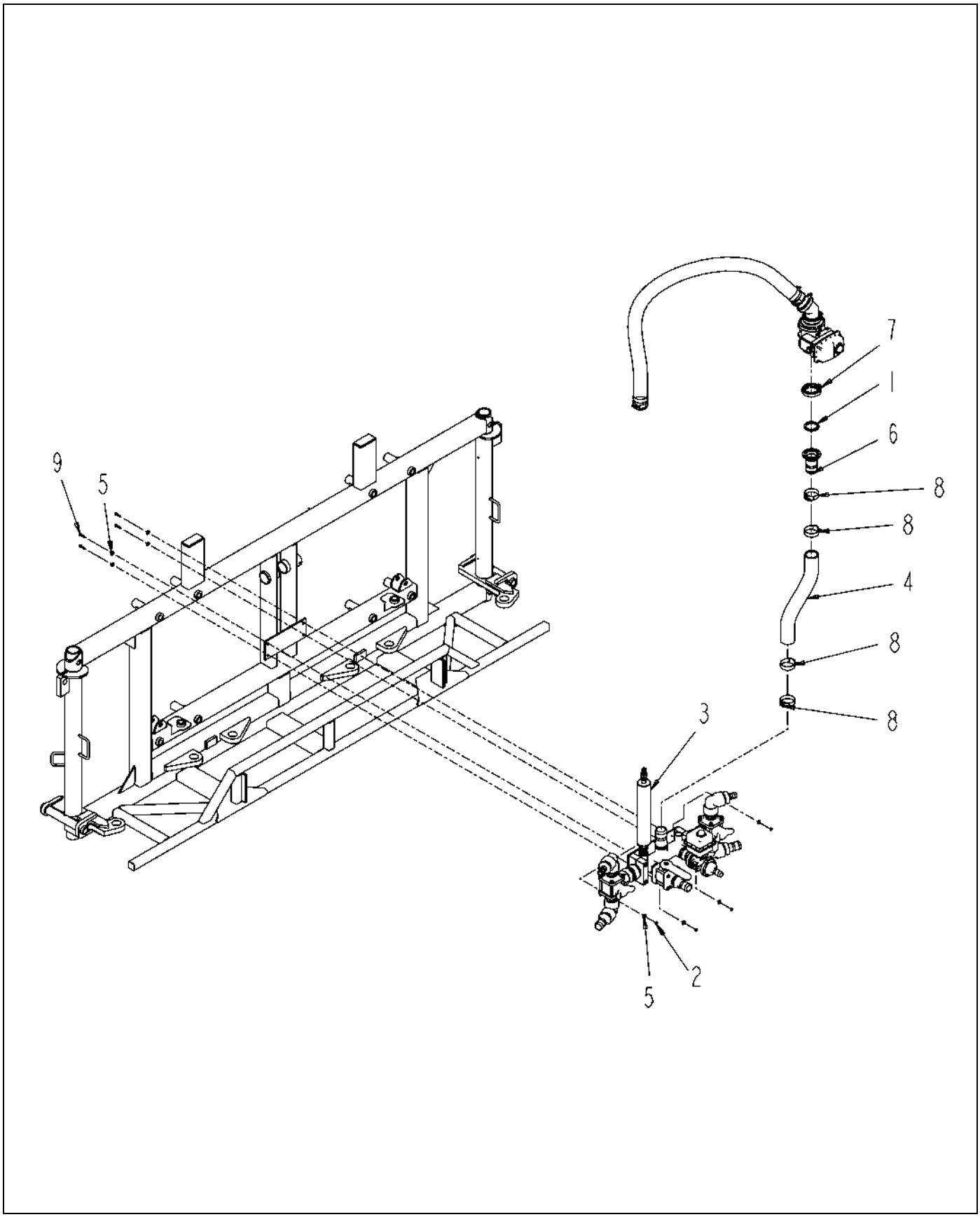

327855-A.tif

Copyright © 2007 AGCO Corporation

MANIFOLD INSTL-HV,BALL VALVE

ITEM	PART #	QTY	DESCRIPTION	COMMENTS
1	AG000773	1	GASKET 2.00 EPDM	
2	AG027275	4	NUT 0.25-20NC HEX SS REG NY	
3	AG424524	1	MANF ASM-BOOM,W/BALL VLV,HV	SEE PAGE 2-3
4	AG511722	-	HOSE-2.00,WIRE BRAID,EPDM [BULK: 1.750 FT]	
5	AG515121	8	WASHER 0.25 FL SS REG TYPE-B	
6	AG522894	1	CONN-2.00 FLG X2.00 HOSE BARB	
7	AG522895	1	CLAMP-WORM SCREW,2.00,SS	
8	AG561630	4	CLAMP 2.28-2.59HOSE VOSS-250SS	
9	AG562064	4	BOLT 0.25-20NCX 1.00 SS HHD	

Copyright © 2007 AGCO Corporation

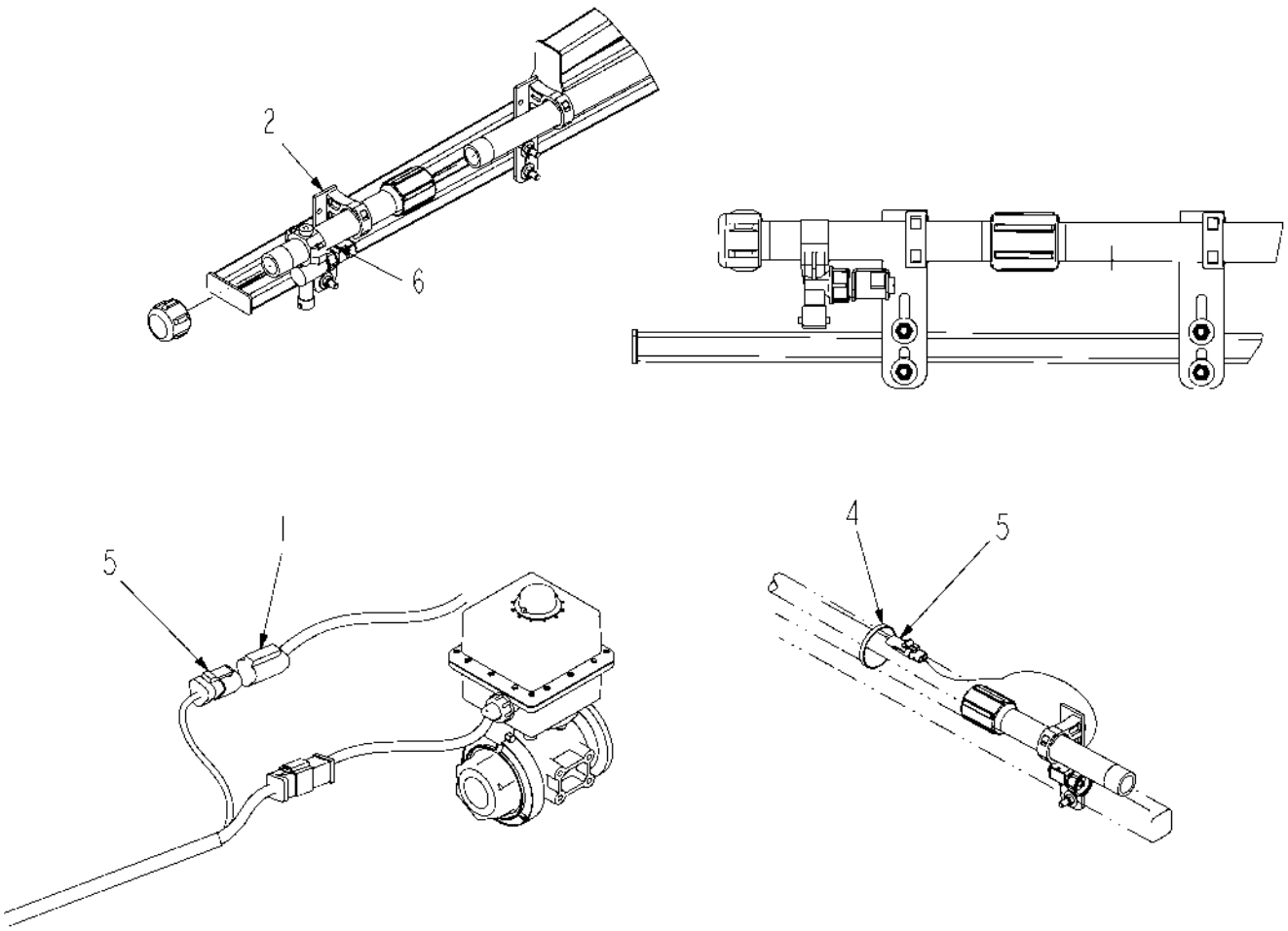

506872D1-02-N172-.TIF

Copyright © 2007 AGCO Corporation

NOZ INSTL-FENCE ROW,RG,120FT

ITEM	PART #	QTY	DESCRIPTION	COMMENTS
1	AG122657	2	HARNESS-END ROW	
2	WR129086	2	BRKT ASM-STR,SH,IPS CLP,1.00U	SEE PAGE 4-98
3	AG129187	AR	PIPE SEALANT-FLEX BLACK	
4	AG553557	AR	TIE CABLE 7.37 .06-1.37 BLACK	
5	505270D1	-	HARNESS-BSO VLV,7 SECT	
6	506873D1	2	PIPE ASM-.5X10,PP,ENDROW	SEE PAGE 4-29

Copyright © 2007 AGCO Corporation

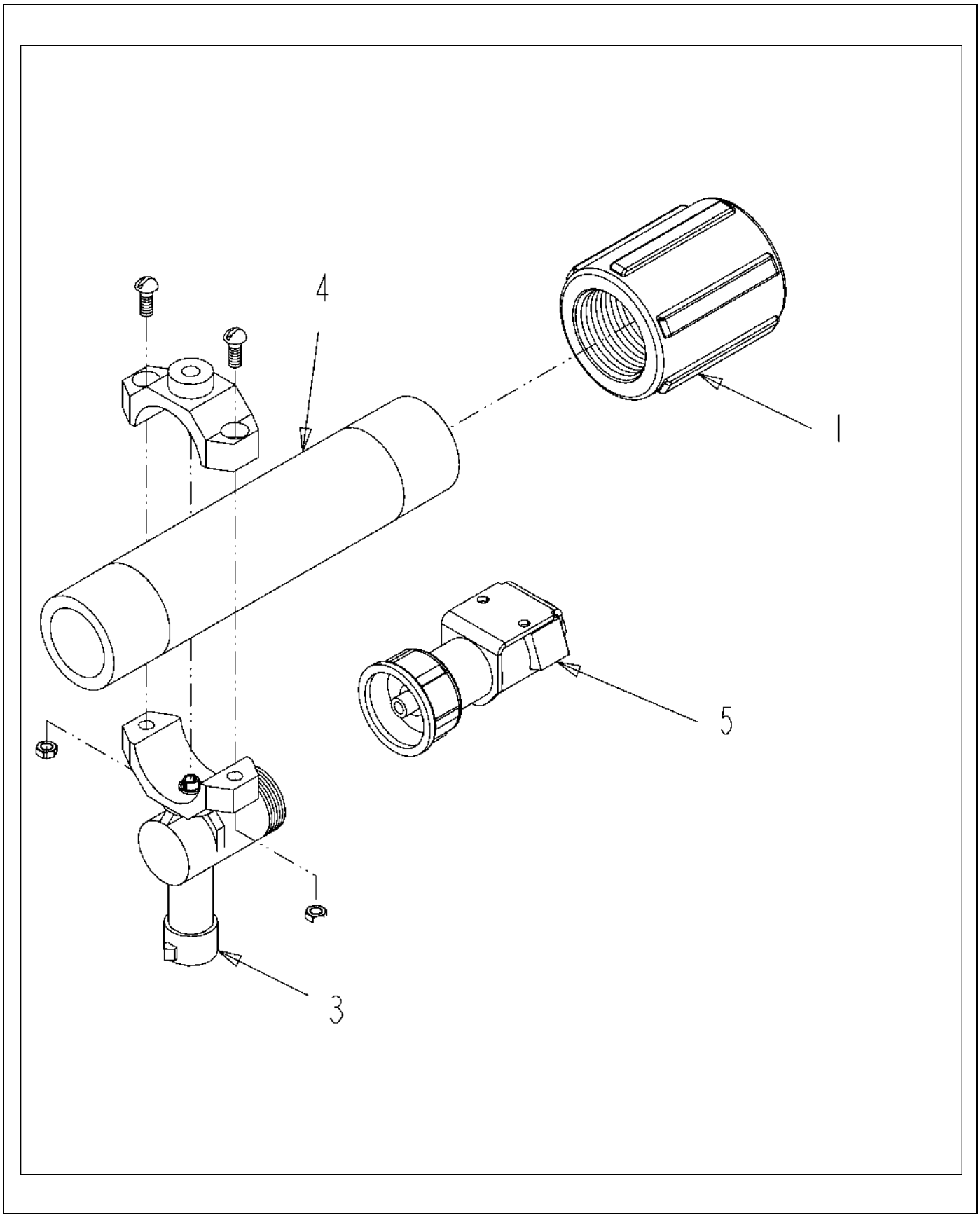

506873D1-02-N069-.TIF

Copyright © 2007 AGCO Corporation

PIPE ASM-.5X10,PP,ENDROW

ITEM	PART #	QTY	DESCRIPTION	COMMENTS
1	AG051131	1	COUPLING-PIPE,1.00NPT,PP	
2	AG129187	AR	PIPE SEALANT-FLEX BLACK	
3	AG519561	1	NOZ HLDR-SGL 1.00 IPS	SEE PAGE 4-34
4	506874D1	1	TUBE-BOOM,PP,10,6.13	
5	508196D1	1	VALVE-SOL,NOZ BODY,ARAG,150PSI	SEE PAGE 4-21

Copyright © 2007 AGCO Corporation

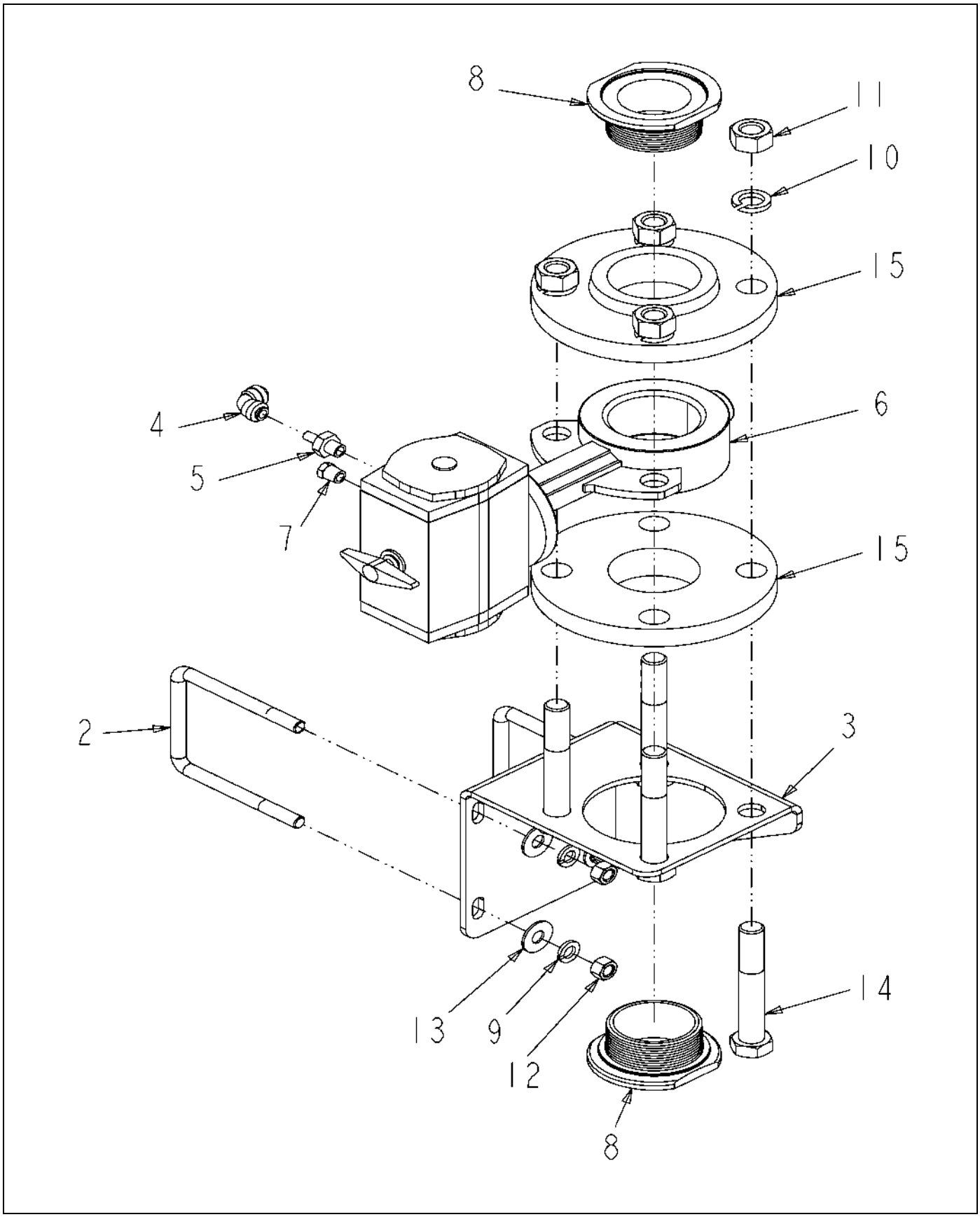

508756D1-01-N428-.TIF

Copyright © 2007 AGCO Corporation

VALVE/BRKT ASM-MAIN,2.00 BTFL

ITEM	PART #	QTY	DESCRIPTION	COMMENTS
1	AG129187	AR	PIPE SEALANT-FLEX BLACK	
2	AG230314	2	U-BOLT 3.00 X 4.0 SQ	
3	AG325615	1	BRACKET-MTG,VALVE	
4	AG516229	1	ELBOW,UNION 0.25TUBE AUTO LCK	
5	AG516231	1	STEM MALE TUBE 0.25X0.12	
6	AG520375	1	VALVE-BTFL,2.00,SPR RTN,PNEU	SEE PAGE 4-31
7	AG522616	1	VENT-BREATHER,.12 NPT	
8	AG523524	2	ADPTR-2.0FLG,FPX2.0MPT,316SS	
8	AG550191	4	WASHER 0.37 LK ZN REG	
10	AG550450	4	WASHER 0.62 LK ZN REG	
11	AG550477	4	NUT 0.62-11NC HEX ZN REG	
12	AG550825	4	NUT 0.37-16NC HEX ZN REG	
13	AG551007	4	WASHER 0.37 FL ZN REG TYPE-B	
14	AG551031	1	BOLT 0.62-11NCX 4.00 G5 ZN HHD	
15	AG554774	2	FLANGE COMP 2.0NPTX6.0 4H	[A]
	FOOTNOTE [A]		FLANGE GASKET(RUBBER) AG055171	

Copyright © 2007 AGCO Corporation

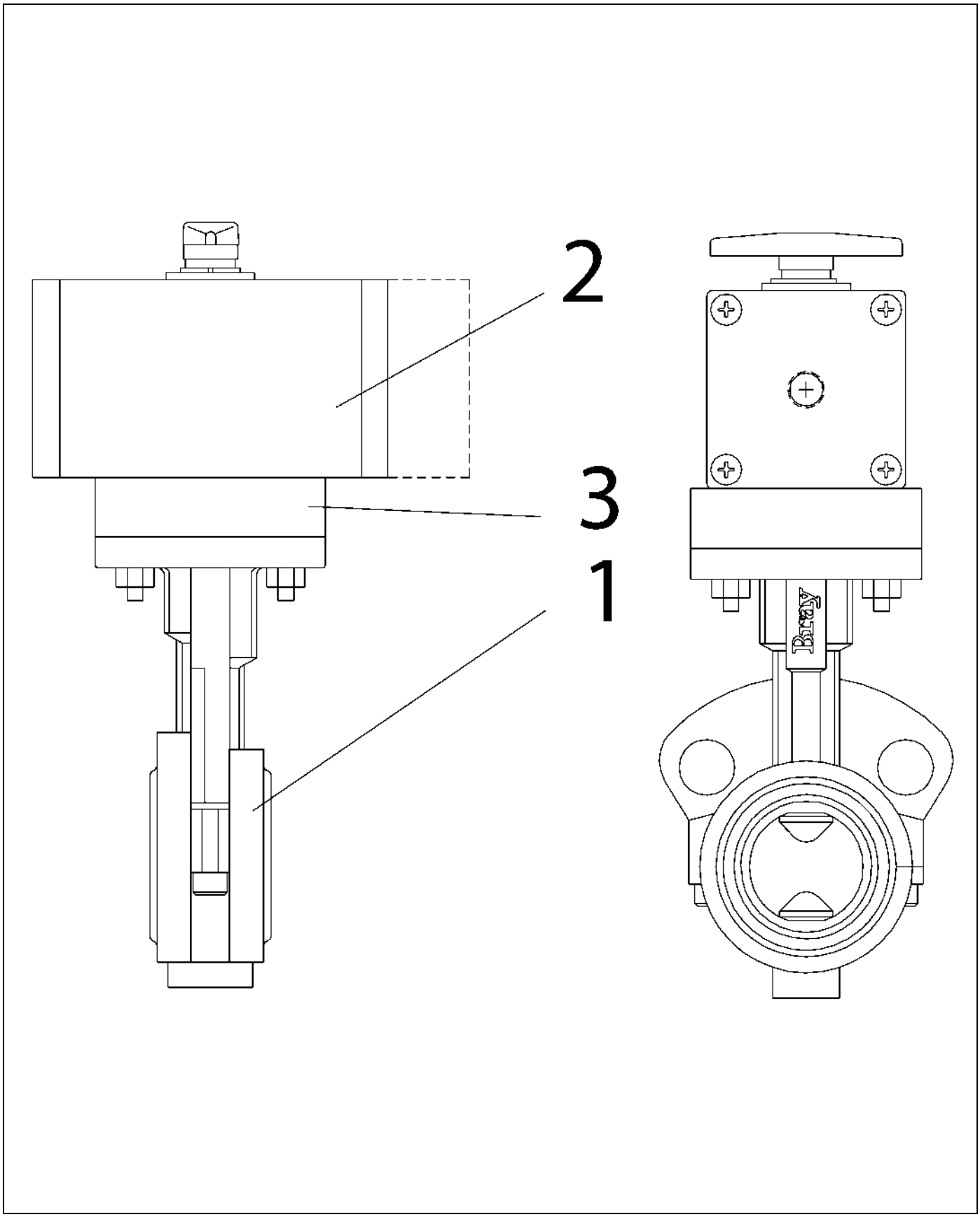

520375.TIF

Copyright © 2007 AGCO Corporation

VALVE-BTFL,2.00,SPR RTN,PNEU

ITEM	PART #	QTY	DESCRIPTION	COMMENTS
REF	AG331613	-	ACTUATOR/VALVE	
1	AG520373	1	VALVE-BTFL,2.00	SEE PAGE 10-1
2	AG610179	1	ACTUATOR-VALVE,2.00,SPR RTN	SEE PAGE 4-32
3	AG714004	1	BUSHING 518337	

Copyright © 2007 AGCO Corporation

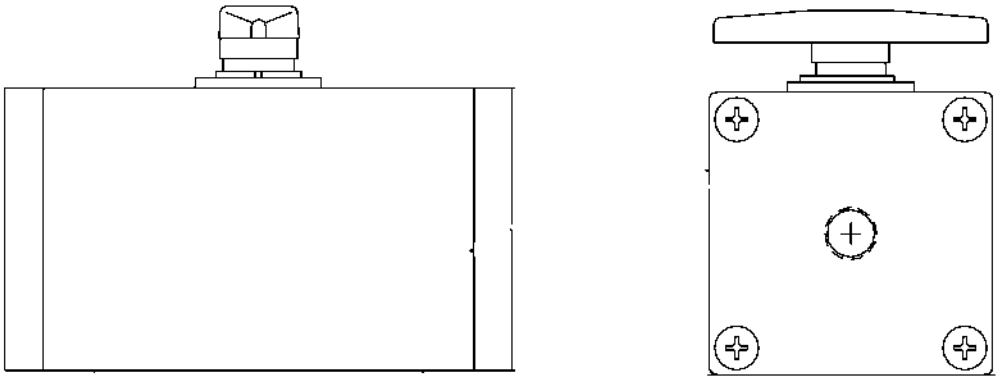

610179.tif

Copyright © 2007 AGCO Corporation

ITEM	PART #	QTY	DESCRIPTION	COMMENTS
REF			DETAIL IMAGE, PLEASE REFER TO RELATED PAGES FOR MORE INFORMATION	
REF	AG522616	4	VENT-BREATHER,.12 NPT	
REF	AG550205	4	WASHER 0.31 LK ZN REG	
REF	AG551015	4	WASHER 0.31 FL ZN REG TYPE-B	
REF	AG551252	4	BOLT 0.31-18NCX 1.00 G5 ZN HHD	
REF	AG714000	-	SEAL/BEARING REPAIR KIT	[A]
REF	AG721680	8	SPRING-AIR ACTUATOR 610179	
	FOOTNOTE [A]		R/K FOR OLD ACTUATOR W/1/8 PORTS. EPDM SEAT AG714002 BUSHING REDUCER AG715417 R/K FOR NEW ACTUATOR W/1/4 PORT AG139450	

Copyright © 2007 AGCO Corporation

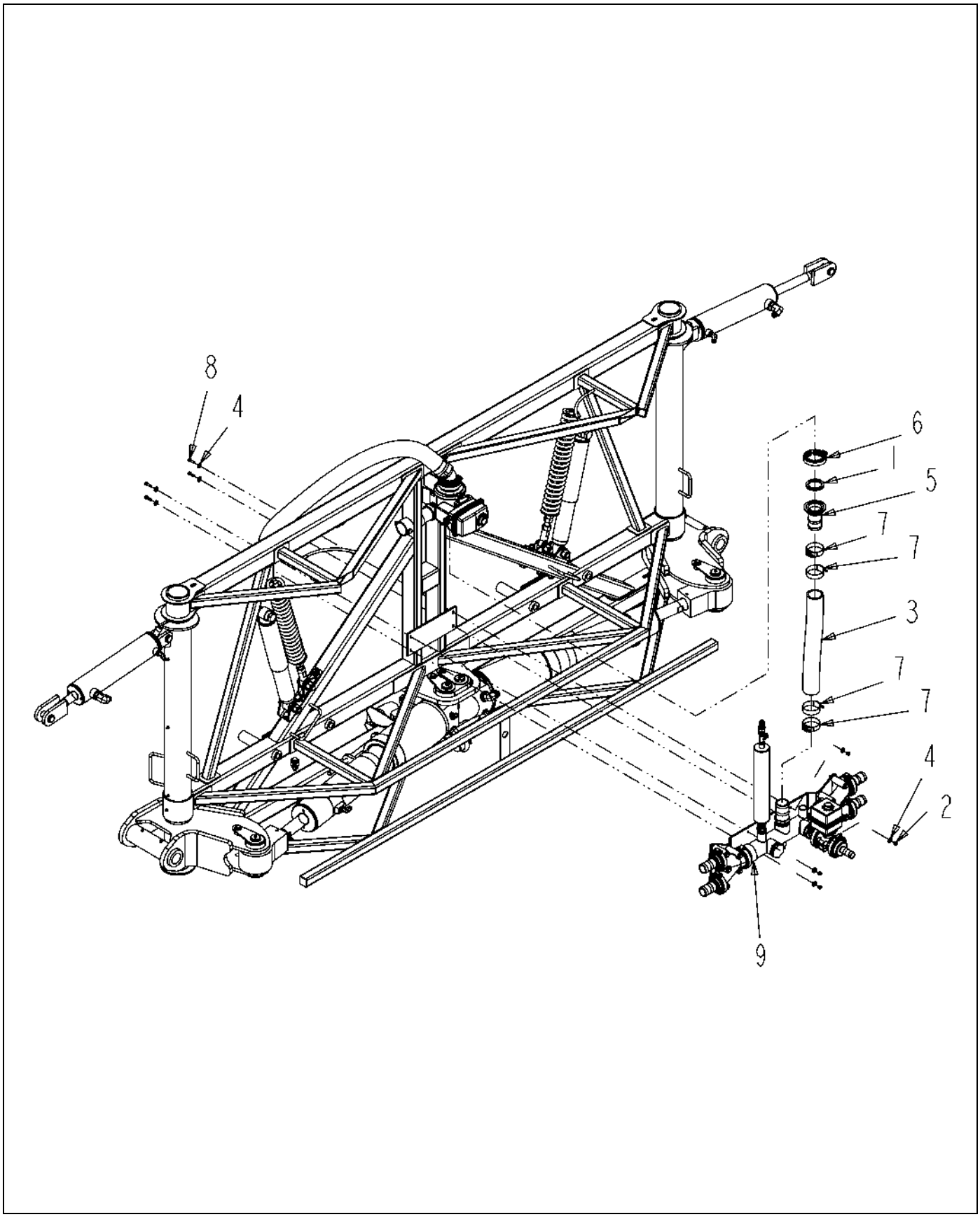

514997D1-01-N980-.TIF

Copyright © 2007 AGCO Corporation

MANF INSTL-BM,HV Y,W/BALL VLV

ITEM	PART #	QTY	DESCRIPTION	COMMENTS
1	AG000773	1	GASKET 2.00 EPDM	
2	AG027275	4	NUT 0.25-20NC HEX SS REG NY	
3	AG511722	-	HOSE-2.00,WIRE BRAID,EPDM [BULK: 1.500 FT]	
4	AG515121	8	WASHER 0.25 FL SS REG TYPE-B	
5	AG522894	1	CONN-2.00 FLG X2.00 HOSE BARB	
6	AG522895	1	CLAMP-WORM SCREW,2.00,SS	
7	AG561630	4	CLAMP 2.28-2.59HOSE VOSS-250SS	
8	AG562064	4	BOLT 0.25-20NCX 1.00 SS HHD	
9	506845D1	1	MANF ASM-BM,HV Y,W/BALL VLV	SEE PAGE 2-7

Copyright © 2007 AGCO Corporation

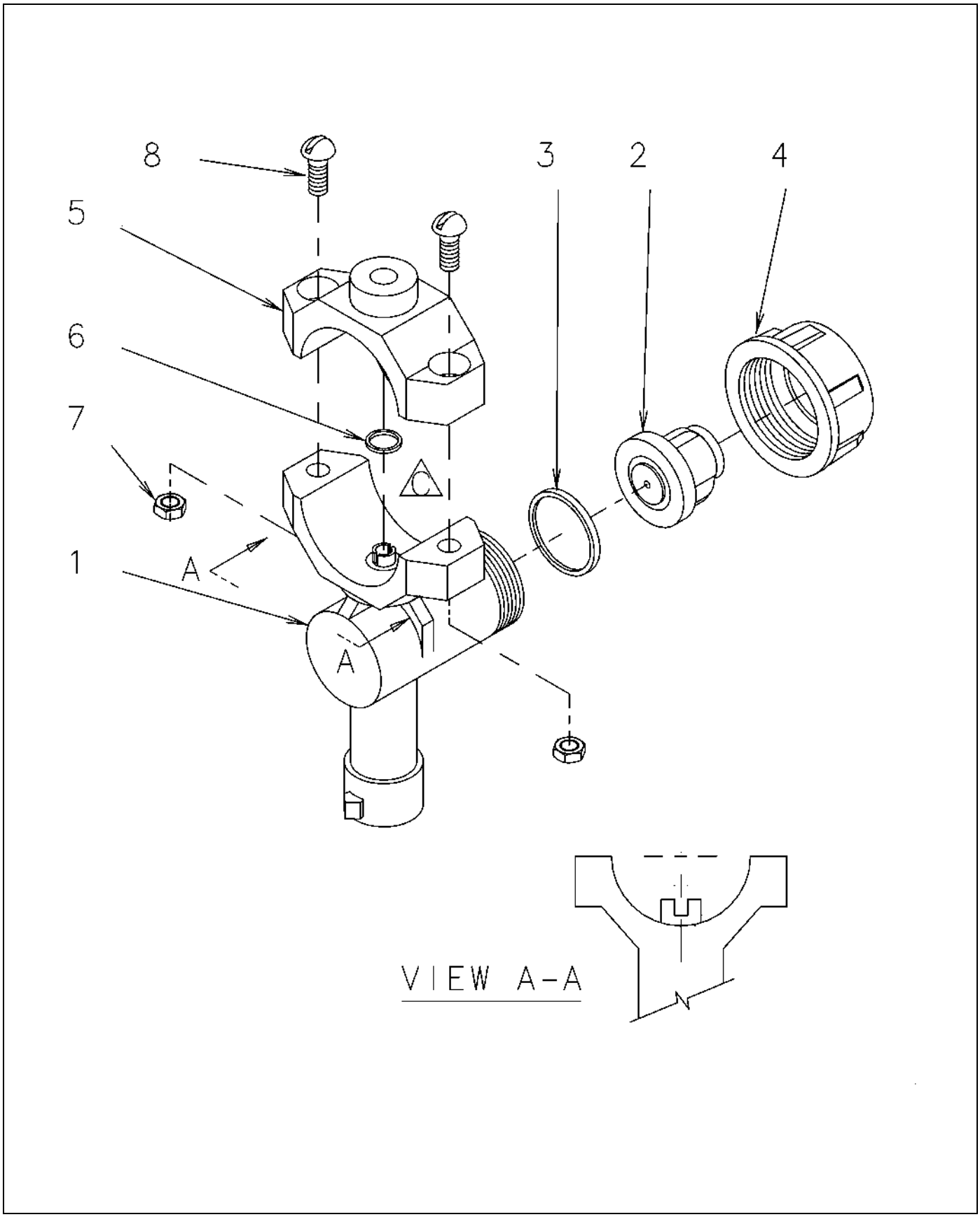

519561-C-2.TIF

Copyright © 2007 AGCO Corporation

NOZ HLDR-SGL 1.00 IPS

ITEM	PART #	QTY	DESCRIPTION	COMMENTS
1	AG609923	1	QUICK COUP SGL BODY/PIPE 1.00	
2	AG609737	1	ANTI DRIP ASM 7PSI (RED)	
3	AG609738	1	DIAPHRAGM EPDM	
3	AG053265	1	DIAPHRAGM VITON	
4	AG609739	1	END CAP	
5	AG609921	1	CLAMP 1.00 INCH	
6	AG609741	1	O RING	
7	AG563095	2	NUT 10-24 SS W/STAR WASHER	
8	AG563096	2	SCR/NUT-10-24X.75,SS,RHS	

Copyright © 2007 AGCO Corporation

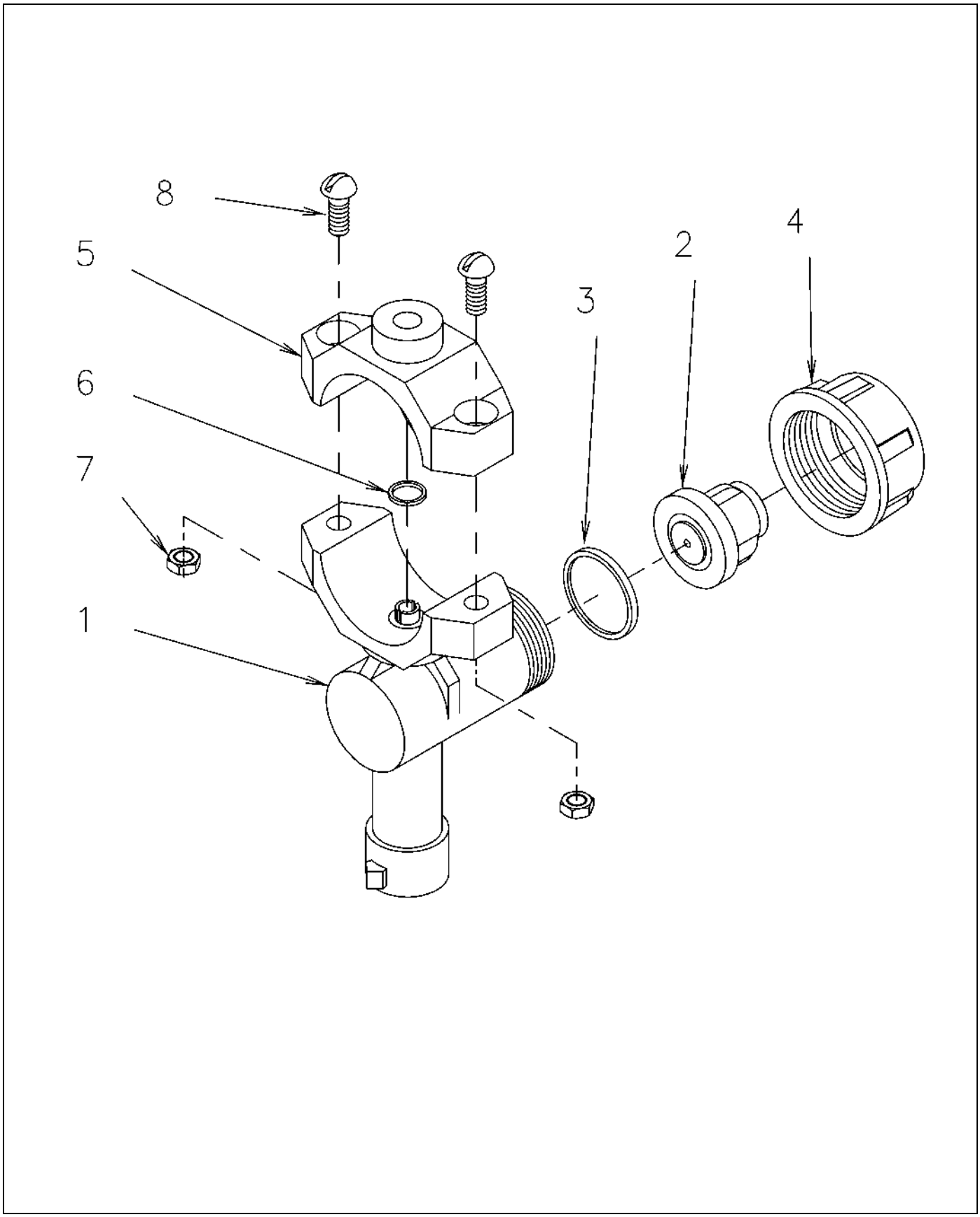

518660-E-2.TIF

Copyright © 2007 AGCO Corporation

SINGLE NOZZLE HOLDER-.75 PIPE

ITEM	PART #	QTY	DESCRIPTION	COMMENTS
1	AG609747	1	QUICK-CPLG UNIGET BODY/PIPE.75	
2	AG609737	1	ANTI DRIP ASM 7PSI (RED)	
3	AG609738	1	DIAPHRAGM EPDM	
3	AG053265	1	DIAPHRAGM VITON	
4	AG609739	1	END CAP	
5	AG609748	1	CLAMP 0.75 518660	
6	AG609741	1	O RING	
7	AG563095	2	NUT 10-24 SS W/STAR WASHER	
8	AG563096	2	SCR/NUT-10-24X.75,SS,RHS	

Copyright © 2007 AGCO Corporation

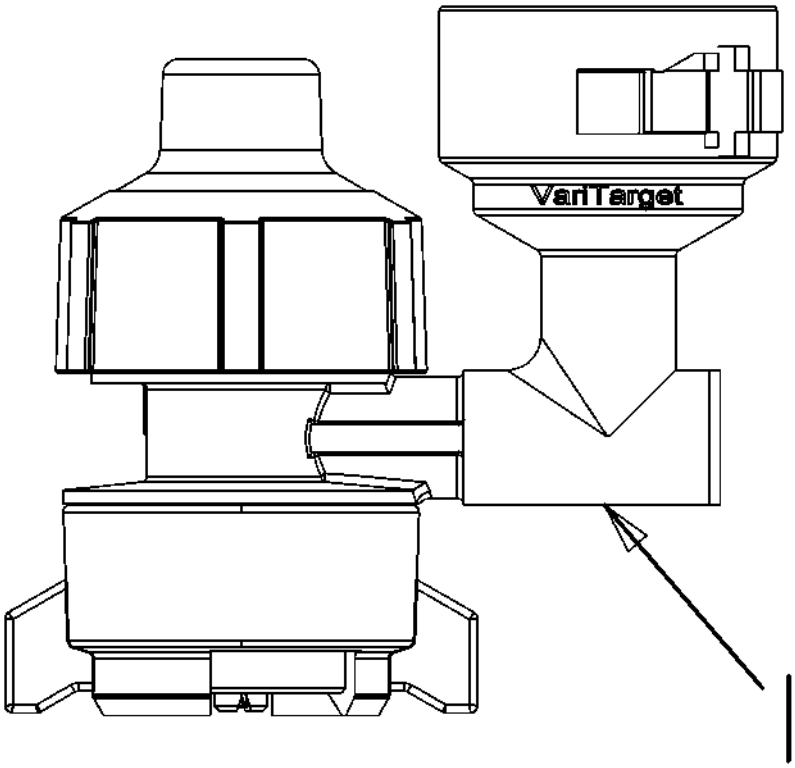

136594-01-M586.TIF

Copyright © 2007 AGCO Corporation

KIT-NOZ,SPRAY,VARITARGET,CLR,5

ITEM	PART #	QTY	DESCRIPTION	COMMENTS
1	AG426003	5	NOZZLE-SPRAY,VARITARGET,1.2GPM	SEE PAGE 4-37

Copyright © 2007 AGCO Corporation

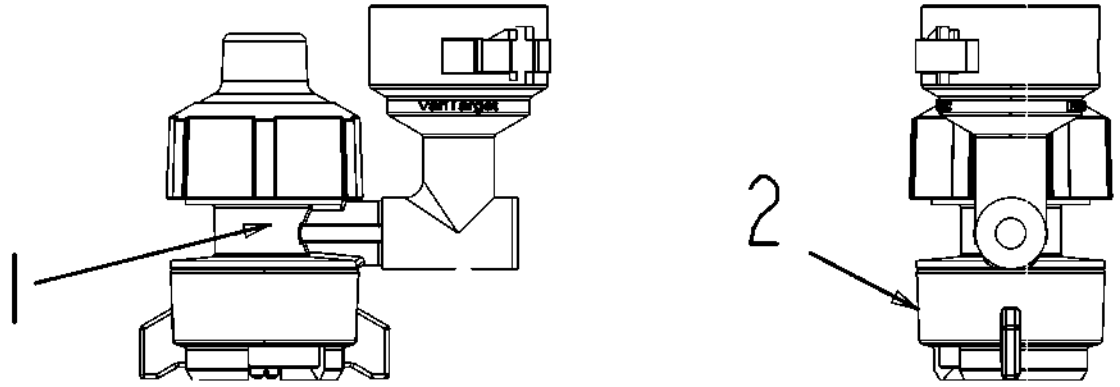

426003-01-M586.tif

Copyright © 2007 AGCO Corporation

NOZZLE-SPRAY,VARITARGET,1.2GPM

ITEM	PART #	QTY	DESCRIPTION	COMMENTS
1	AG426006	-	METERING ASM-NOZZLE,VARITARGET	
2	AG426009	-	TIP&GSKT-SPRAY,VARITARGET,CLR	

Copyright © 2007 AGCO Corporation

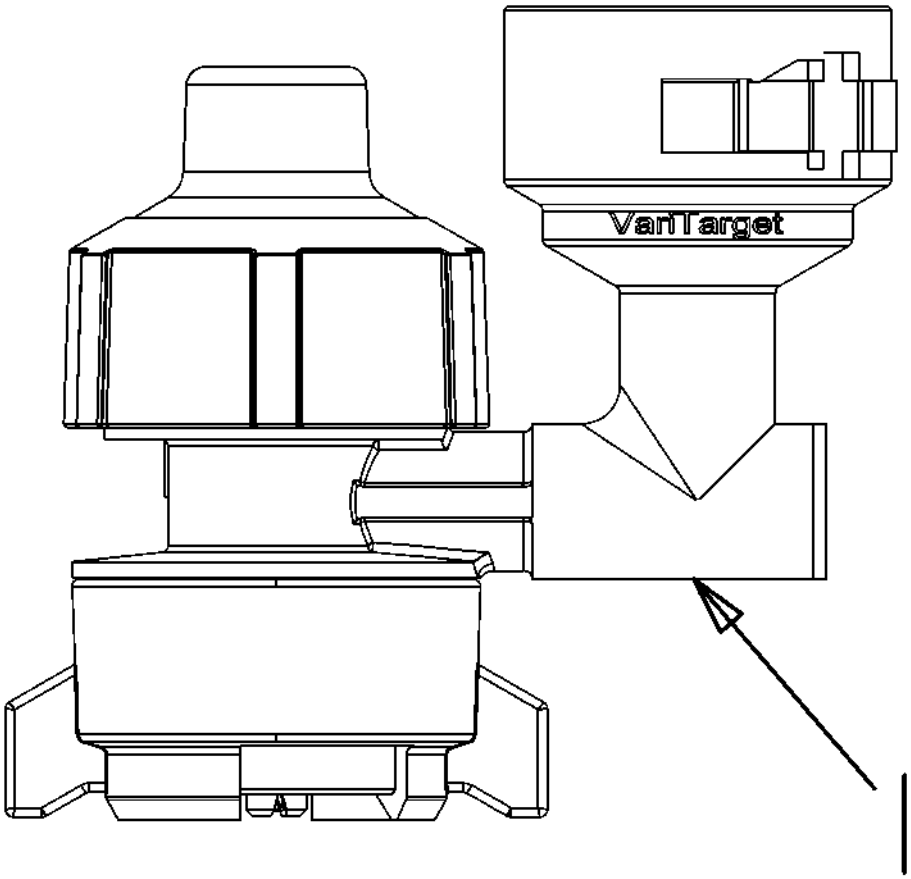

136595-01-M586.TIF

Copyright © 2007 AGCO Corporation

KIT-NOZ,VARITARGET,CLR,25

ITEM	PART #	QTY	DESCRIPTION	COMMENTS
1	AG426003	25	NOZZLE-SPRAY,VARITARGET,1.2GPM	SEE PAGE 4-37

Copyright © 2007 AGCO Corporation

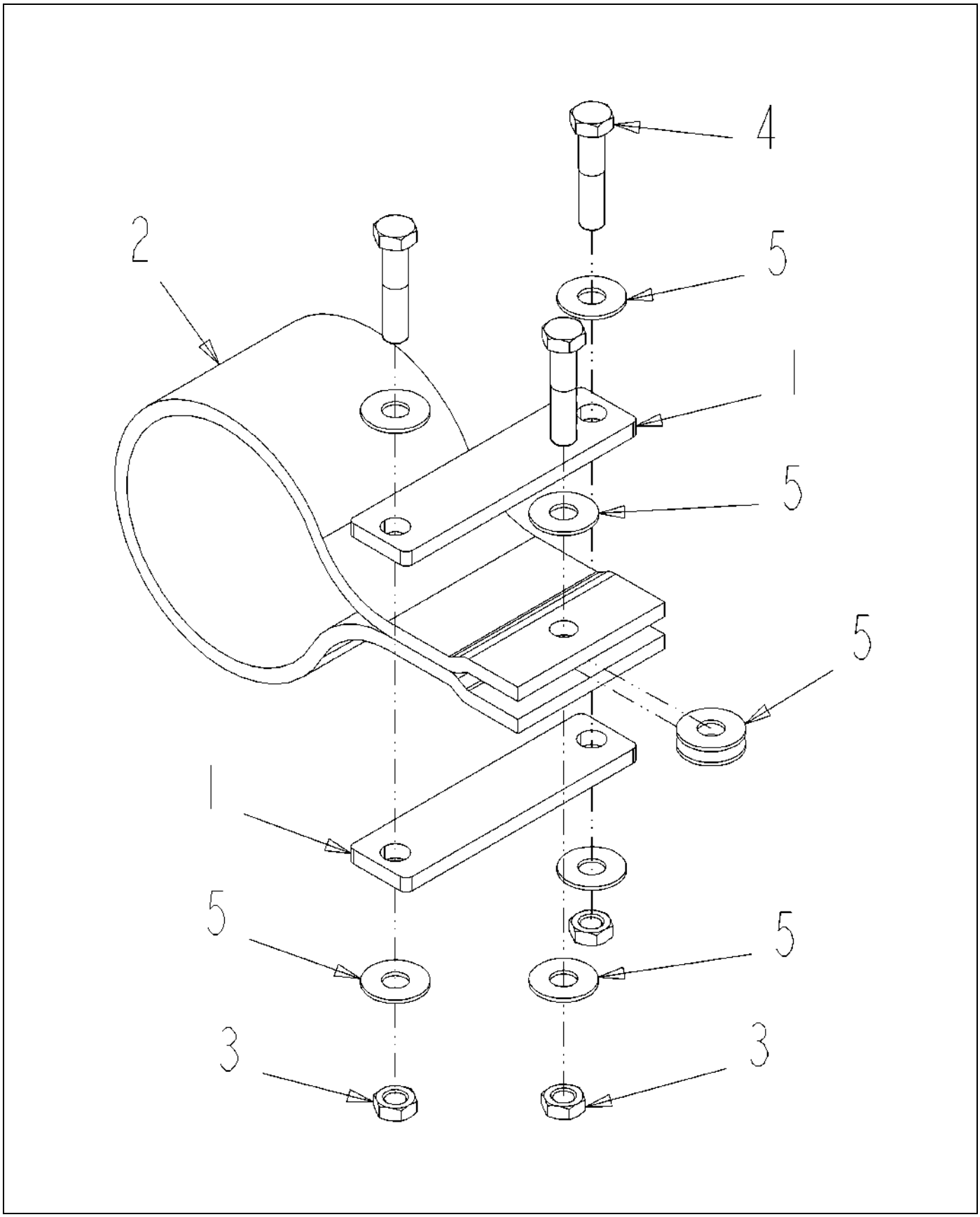

509480D1-01-N259-.TIF

Copyright © 2007 AGCO Corporation

HANGER ASM-HOSE

ITEM	PART #	QTY	DESCRIPTION	COMMENTS
1	AG237961	2	PLATE-COVER	[A]
2	AG238315	1	STRAP-HOSE HANGER	
3	AG515140	3	NUT 0.37-16NC HEX SS HVY NY	
4	AG515277	3	BOLT 0.37-16NCX 1.75 S.S. HHD	
5	AG562073	8	WASHER 0.37 FL SS REG TYPE-B	
	FOOTNOTE [A]		PLATE THAT COVER BOLTS - AG237959	

Copyright © 2007 AGCO Corporation

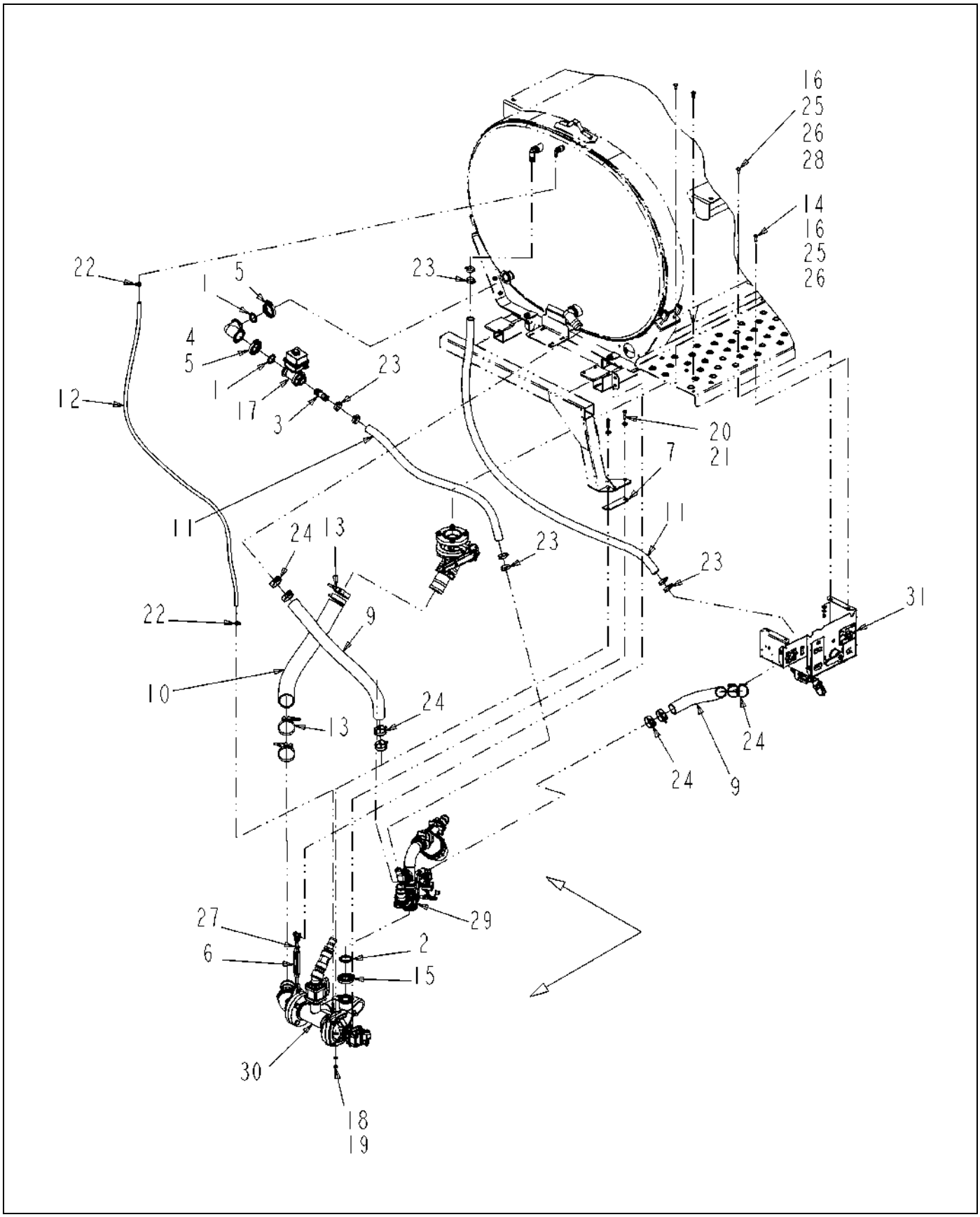

509272D1-03-R506-.TIF

Copyright © 2007 AGCO Corporation

ITEM	PART #	QTY	DESCRIPTION	COMMENTS
1	AG000772	2	GASKET 1.50 EPDM	
2	AG000773	1	GASKET 2.00 EPDM	
3	AG051183	1	BARB-HOSE,1.00MNPTX1.25BARB,PP	
4	AG056284	1	COUPLING 2.00 MANIFOLD 90D	
5	AG056785	2	CLAMP 2.00 FLANGE	
6	AG128843	1	TURNBUCKLE-JAW,JAW,.5X6	
7	AG129132	1	PLATE-SPACER,PUMP,PROD	
8	AG129187	AR	PIPE SEALANT-FLEX BLACK	
9	AG511722	-	HOSE-2.00,WIRE BRAID,EPDM [BULK: 4.917 FT]	
10	AG511730	-	HOSE 3.00 WIRE BRAID EPDM [BULK: 2.917 FT]	
11	AG513393	-	HOSE 1.25 2BRD EPDM [BULK: 12.834 FT]	
12	AG513689	-	HOSE 0.37 2BRD EPDM [BULK: 7.834 FT]	
13	AG518988	4	CLAMP 3.10-3.69 HOSE	
14	AG522571	2	BOLT 0.37-16NCX 1.25 304SS CRG	
15	AG522895	1	CLAMP-WORM SCREW,2.00,SS	
16	AG523061	4	WASHER 0.37 FL SS REG TYPE-B	
17	AG523925	1	VALVE-ELEC,REG,2.0FLGX1.0FNPT	SEE PAGE 2-18
18	AG550191	2	WASHER 0.37 LK ZN REG	
19	AG550825	2	NUT 0.37-16NC HEX ZN REG	
20	AG551007	2	WASHER 0.37 FL ZN REG TYPE-B	
21	AG558869	2	BOLT 0.37-16NCX 1.75 G5 ZN HHD	
22	AG561227	2	CLAMP 0.44-0.78 HOSE 6HS	
23	AG561230	8	CLAMP 0.81-1.75 HOSE 20HS	
24	AG561630	8	CLAMP 2.28-2.59HOSE VOSS-250SS	
25	AG562050	4	WASHER 0.37 LK SS REG	
26	AG562065	4	NUT 0.37-16NC HEX SS REG	
27	AG562538	1	NUT 0.50-13NC HEX GALV REG OSZ	
28	AG609084	2	BOLT 0.37-16NCX 1.00 SS CRG	
29	509262D1	1	PLMB ASM-DISTR,PRESS W/STRAIN	SEE PAGE 4-41
30	509263D1	1	PLMB ASM-PUMP/SUCTION	SEE PAGE 4-43
31	509264D1	1	BOX ASM-CTRL,PLMB,PRESS MANF	SEE PAGE 4-44

Copyright © 2007 AGCO Corporation

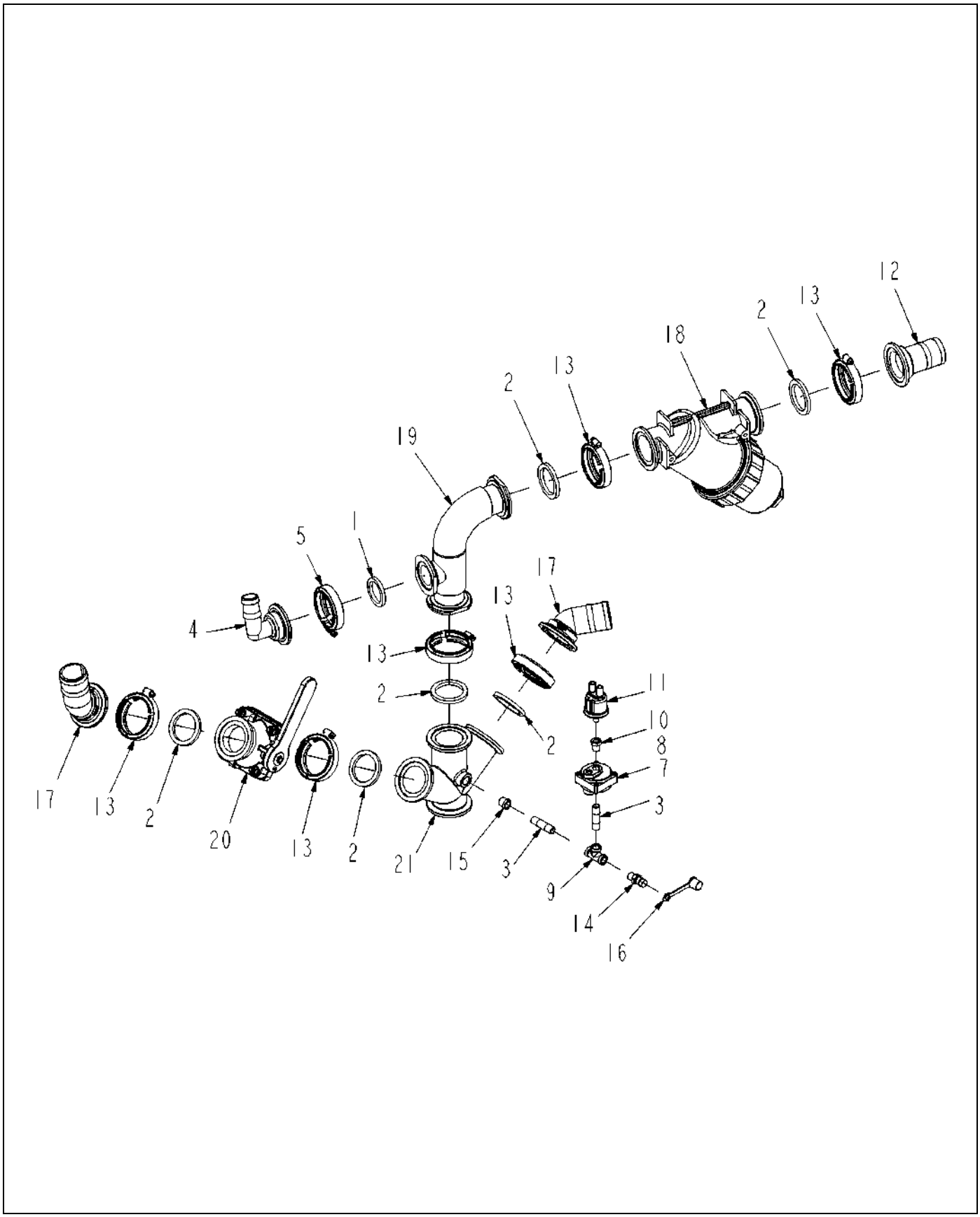

509262D1-03-R506-.TIF

Copyright © 2007 AGCO Corporation

PLMB ASM-DISTR,PRESS W/STRAIN

ITEM	PART #	QTY	DESCRIPTION	COMMENTS
1	AG000772	1	GASKET 1.50 EPDM	
2	AG000773	6	GASKET 2.00 EPDM	
3	AG055912	2	NIPPLE 0.25NPTX 2.00 304SS	
4	AG056290	1	CONNECTOR 2.00FLGX1.25HOSE 90D	
5	AG056785	1	CLAMP 2.00 FLANGE	
6	AG129187	AR	PIPE SEALANT-FLEX BLACK	
7	AG134191	AR	COOLANT-ENGINE,50/50 MIX	
8	AG515414	1	GAUGE PROTECTOR	
9	AG517855	1	TEE 0.25 NPT FEMALE SS	
10	AG518504	1	BUSHING .25MNPT X .12FNPT SS	
11	AG521017	1	SENDER-PRESSURE,0-150PSI,GRD	
12	AG522894	1	CONN-2.00 FLG X2.00 HOSE BARB	
13	AG522895	6	CLAMP-WORM SCREW,2.00,SS	
14	AG562607	1	COUPLER QK 0.25-18 MALE	
15	AG563055	1	BUSHING .38MA NPTX .25FE NPT	
16	6630367	1	CAP-DUST	
17	507731D1	2	BARB-45D,2.00FP FLGX2.00 HOSE	
18	508662D1	1	STRAINER-Y,2.00FP FLG,W/30MESH	SEE PAGE 4-42
19	509261D1	1	MANF WLDMT-PRESS,MAIN,2.00FP	
20	513021D1	1	VLV-SH,WHT,2.00FP X 2.00FP FLG	
21	519380D1	1	MANF-3WAY,2.00FP FLG W/GP,SS	

Copyright © 2007 AGCO Corporation

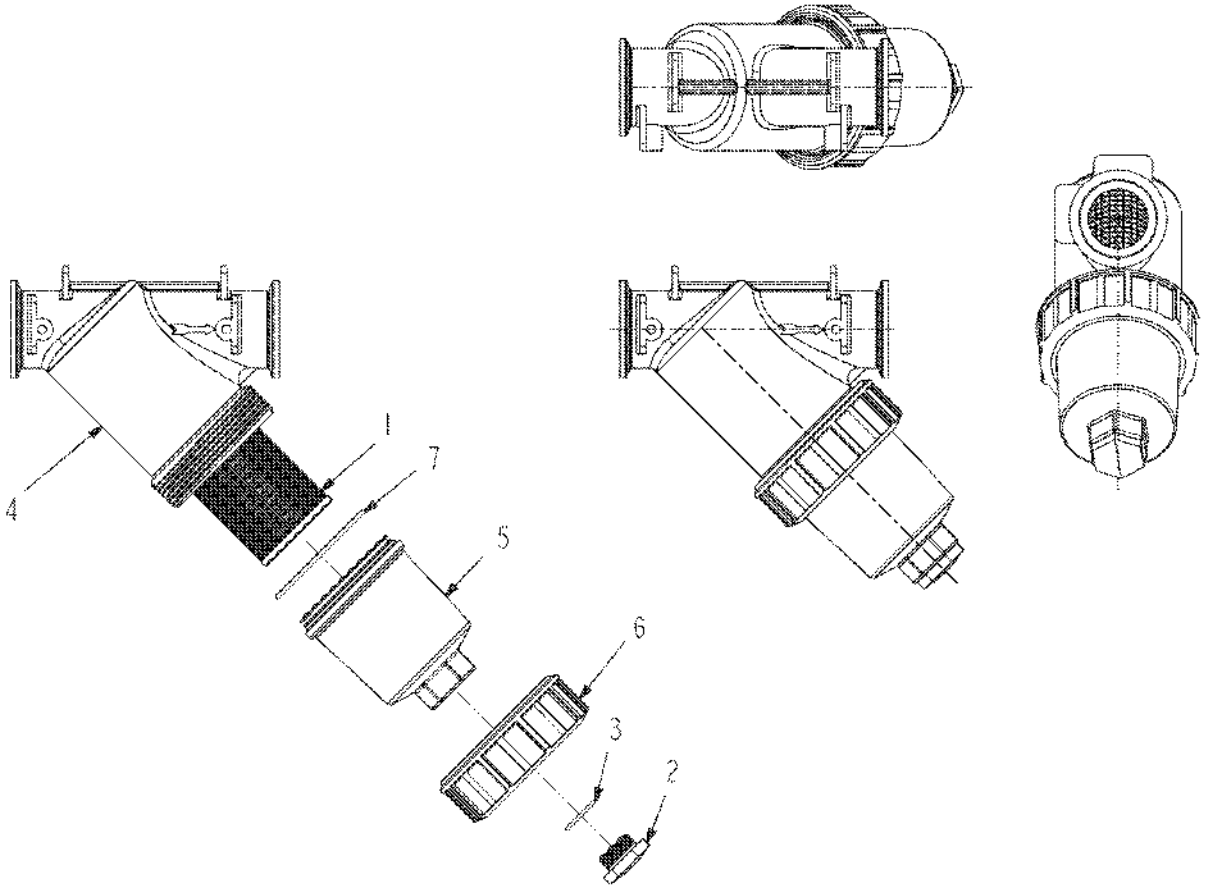

508662D1-01-N143-.TIF

Copyright © 2007 AGCO Corporation

STRAINER-Y,2.00FP FLG,W/30MESH

ITEM	PART #	QTY	DESCRIPTION	COMMENTS
1	AG052351	-	SCREEN 30 MESH	
2	AG053484	-	PLUG 1 IN	[A]
3	AG053485	-	O RING CLEAN OUT PLUG	
4	508663D1	-	BODY-STRAINER,6,2.00FP FLG	
5	508664D1	-	CAP-STRAINER,6,2.00FP FLG	
6	508665D1	-	RING-STRAINER,Y,2.00FP FLG	
7	508666D1	-	GASKET-BODY,STRAINER,Y,2.00GP	
	FOOTNOTE [A]		O-RING VITON AG054967	

Copyright © 2007 AGCO Corporation

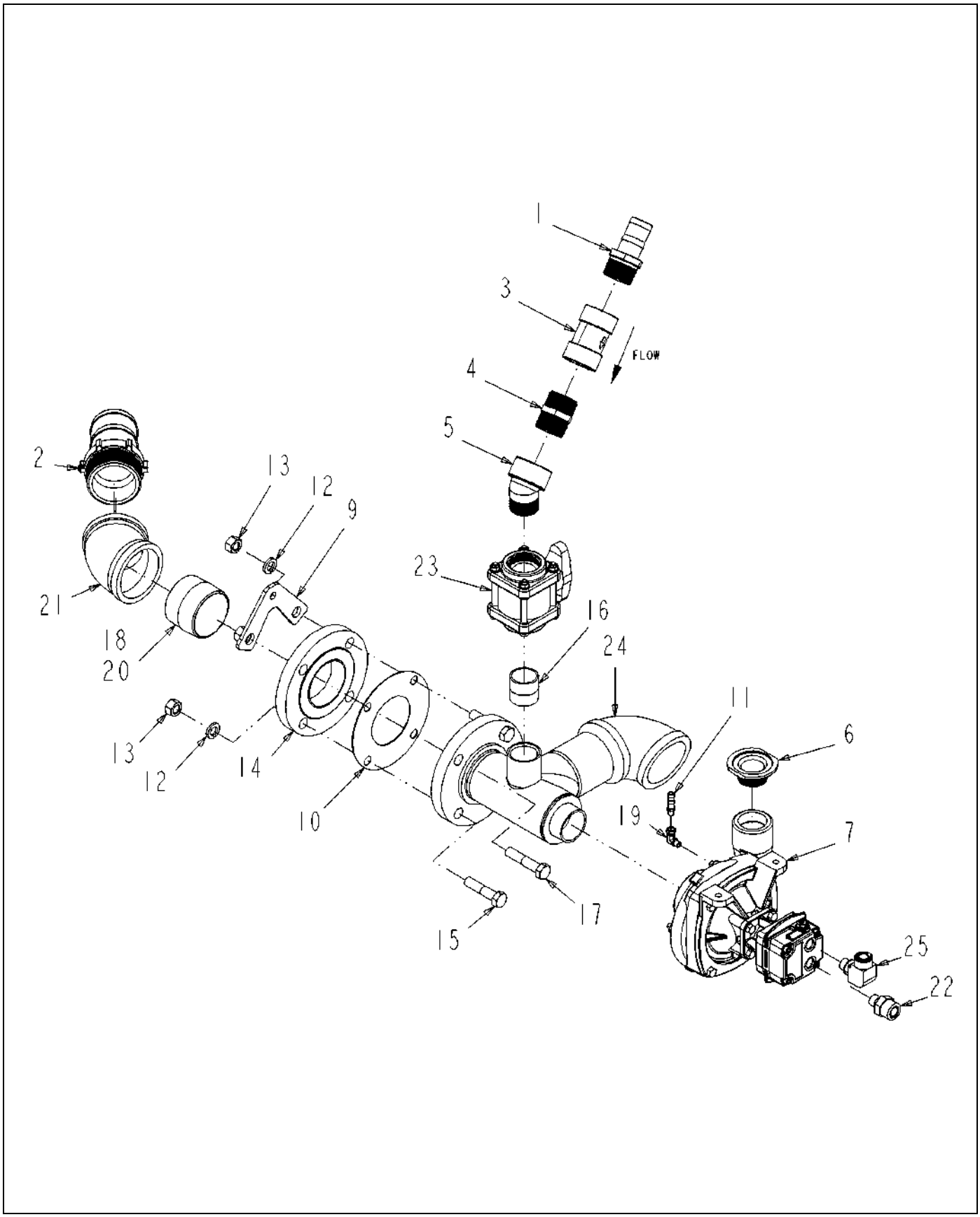

509263D1-03-R277-.TIF

Copyright © 2007 AGCO Corporation

PLMB ASM-PUMP/SUCTION

ITEM	PART #	QTY	DESCRIPTION	COMMENTS
1	AG000766	1	BARB-HOSE,1.50MNTTX1.50BARB,PP	
2	AG000768	1	BARB-HOSE,3.00MNPTX3.00BARB,PP	
3	AG006518	1	STRAINER CHECK 1.50	
4	AG050253	1	NIPPLE-PIPE,1.50NPTXCLS,PP	
5	AG052340	1	POLY ST ELBOW 45D 1.50 IN	
6	AG059570	1	ADAPTER 2.00FP FLANGEX1.50MNPT	
7	AG128977	1	PUMP-CNTFGL,2.00X1.50,9306CHM5	SEE PAGE 2-17
8	AG129187	AR	PIPE SEALANT-FLEX BLACK	
9	AG131011	1	PLATE-MTG,PLMB,SUCT,LIQ SYS	
10	AG517044	1	GASKET 3.00 IN FULL FACE NON-ASBE	
11	AG518195	1	FTG HOSE 1/8NPTX3/8HOSE POLY	
12	AG550450	4	WASHER 0.62 LK ZN REG	
13	AG550477	4	NUT 0.62-11NC HEX ZN REG	
14	AG553026	1	FLANGE COMP 3.0NPTX7.5 4H	
15	AG554758	2	BOLT 0.62-11NCX 2.75 G5 ZN HHD	
16	AG556742	1	NIPPLE 1.50NPTX 1.75CLS WR ST	
17	AG560870	2	BOLT 0.62-11NCX 3.00 G5 ZN HHD	
18	AG560931	1	NIPPLE 3.00NPTX 2.62CLS 304SS	
19	AG561212	1	ELBOW 90D 0.12MNPT X 0.12FNPT	
20	AG711522	AR	SEALANT PIPE""BLACKJACK""RS #21	
21	AG711986	1	ELBOW 45D 3.00 IN 304SS	
22	400963X1	1	CONNECTOR AS-STR -8STOR-12ORFS	
23	513020D1	1	VALVE-BALL,1.50NPT,BLU T HNDL	
24	519079D1	1	TEE WLDMT-3.00,SUCT,LIQ SYS	
25	CH148-8359	1	ELBOW AS.-90DEG 8STORX12 ORFS	

Copyright © 2007 AGCO Corporation

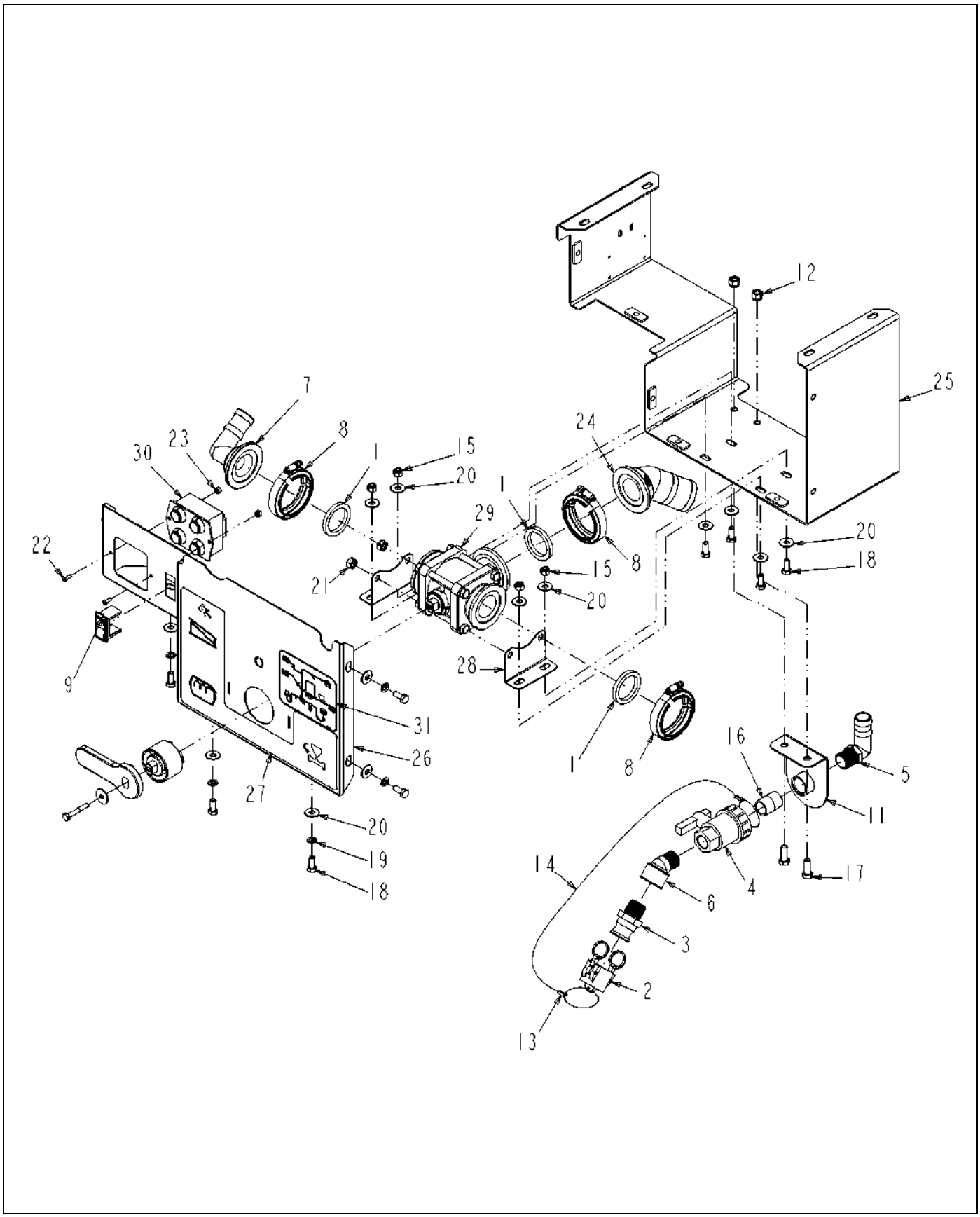

509264D1-03-R506-.TIF

Copyright © 2007 AGCO Corporation

BOX ASM-CTRL,PLMB,PRESS MANF

ITEM	PART #	QTY	DESCRIPTION	COMMENTS
1	AG000772	3	GASKET 1.50 EPDM	
2	AG006670	1	CAP-LEVER,QC,0.75 PP	
3	AG006671	1	ADAPTER 0.75NPTX0.75MALE	
4	AG050205	1	VALVE 0.75 NPT BALL UNION POLY	SEE PAGE 4-45
5	AG051143	1	ELBOW 90D 0.75NPTX1.00 BARB PP	
6	AG052343	1	ELBOW-PIPE,0.75STREET,45D,PP	
7	AG056290	1	CONNECTOR 2.00FLGX1.25HOSE 90D	
8	AG056785	3	CLAMP 2.00 FLANGE	
9	AG124437	1	PLUG-HOLE,SWITCH,CS-L	
10	AG129187	AR	PIPE SEALANT-FLEX BLACK	
11	AG262492	1	BRKT WLDMT-RINSE,FILL	
12	AG515140	2	NUT 0.37-16NC HEX SS HVY NY	
13	AG515981	2	COMPRESSION SLEEVE	
14	AG516060	-	CABLE NYLON COATED [BULK: 2 FT]	
15	AG516403	4	NUT 0.31-18NC HEX SS REG NY	
16	AG554472	1	NIPPLE .75NPT X 1.37CLS WR ST	
17	AG562048	2	BOLT 0.37-16NCX 1.00 S.S. HHD	
18	AG562049	11	BOLT 0.31-18NCX 0.75 SS HHD	
19	AG562051	7	WASHER 0.31 LK SS REG	
20	AG562074	15	WASHER 0.31 FL SS REG TYPE-B	
21	AG562123	2	NUT 0.37-16NC HEX SS C-LK	
22	AG562890	2	SCREW 8-32X.50 410SS PHPHD	
23	AG563176	2	NUT #8-32NC HEX SS REG NY	
24	508857D1	1	BARB-45D,2.00SP FLGX2.00 HOSE	
25	509265D1	1	BRKT WLDMT-MTG,CTRL,PRESS MANF	
26	509267D1	1	COVER-PANEL,CTRL,PRESS MANF	
27	509268D1	1	DECAL-PANEL,CTRL,PRESS MANF	
28	509269D1	2	BRKT-MTG,VALVE,2.00SP	
29	509270D1	1	VALVE-3WAY,BOT LOAD,2.00SP FLG	
30	509280D1	1	MODULE-CTRL,PLMB,PROD,LIQ SYS	
31	512767D1	1	DECAL-VALVE OPN SCHEM,RG	

Copyright © 2007 AGCO Corporation

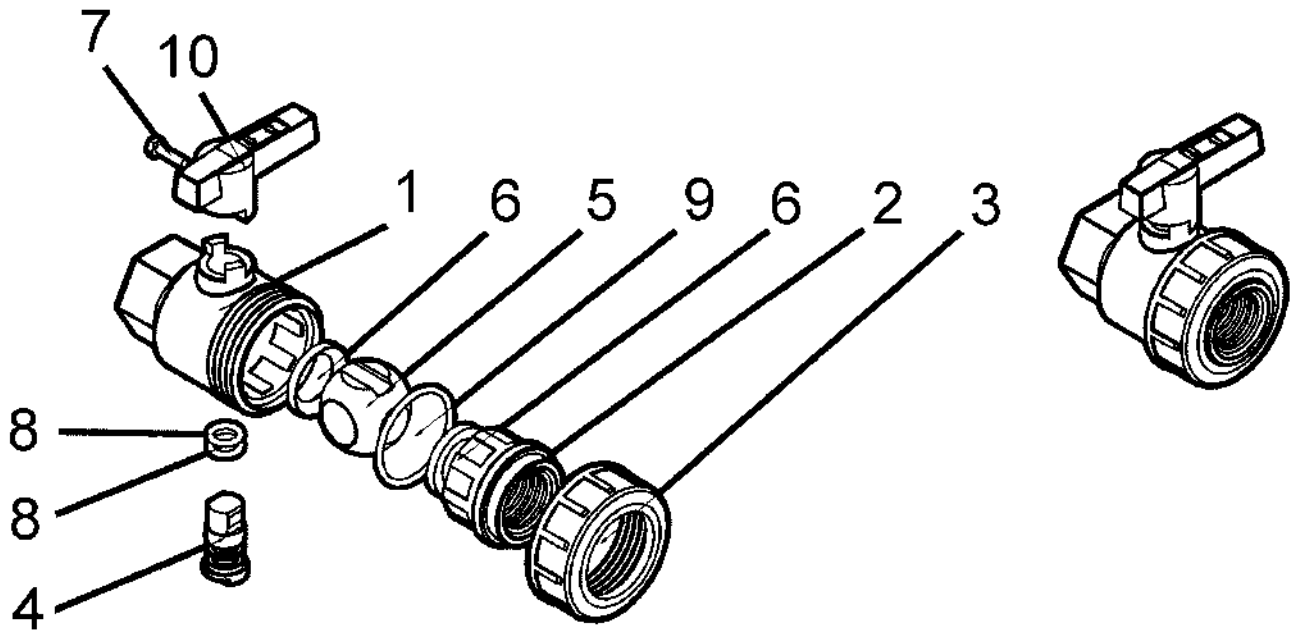

050205.TIF

Copyright © 2007 AGCO Corporation

VALVE 0.75 NPT BALL UNION POLY

ITEM	PART #	QTY	DESCRIPTION	COMMENTS
1	AG050516	1	UNION BODY 0.75	
2	AG050518	1	PLATE UNION END 0.75	
3	AG050513	1	CAP 0.75 UNION END	
4	AG050514	1	STEM 0.75 UNION	
5	AG050517	1	BALL VALVE UNION 0.75	
6	AG050519	2	SEAL 0.75 UNION VALVE	
8	AG050520	2	O RING 0.75 UNION STEM (EPDM)	
9	AG050475	1	O RING	
10	AG050515	1	HANDLE 0.75 UNION	

Copyright © 2007 AGCO Corporation

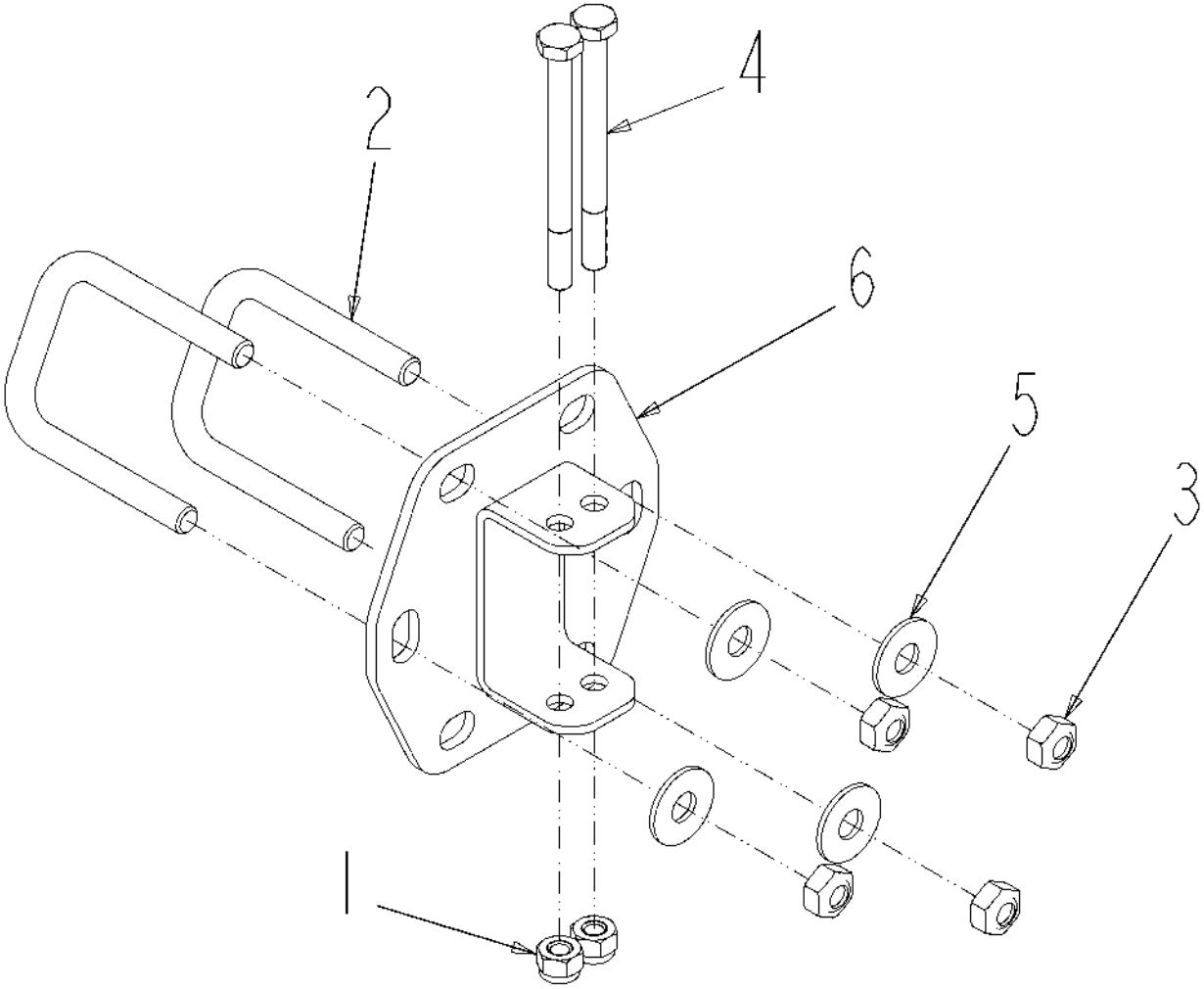

507003D1-01-M930.TIF

Copyright © 2007 AGCO Corporation

BRKT ASM-MTG,ANG,SNSR,LH

ITEM	PART #	QTY	DESCRIPTION	COMMENTS
1	AG027275	2	NUT 0.25-20NC HEX SS REG NY	
2	AG231204	2	BOLT-U .31-18X1.88X2.63	
3	AG516403	4	NUT 0.31-18NC HEX SS REG NY	
4	AG518492	2	BOLT 0.25-20NCX 3.00 SS HHD	
5	AG562074	4	WASHER 0.31 FL SS REG TYPE-B	
6	506906D1	1	BRKT WLDMT-MTG,SNSR,AUTOBOOM	

Copyright © 2007 AGCO Corporation

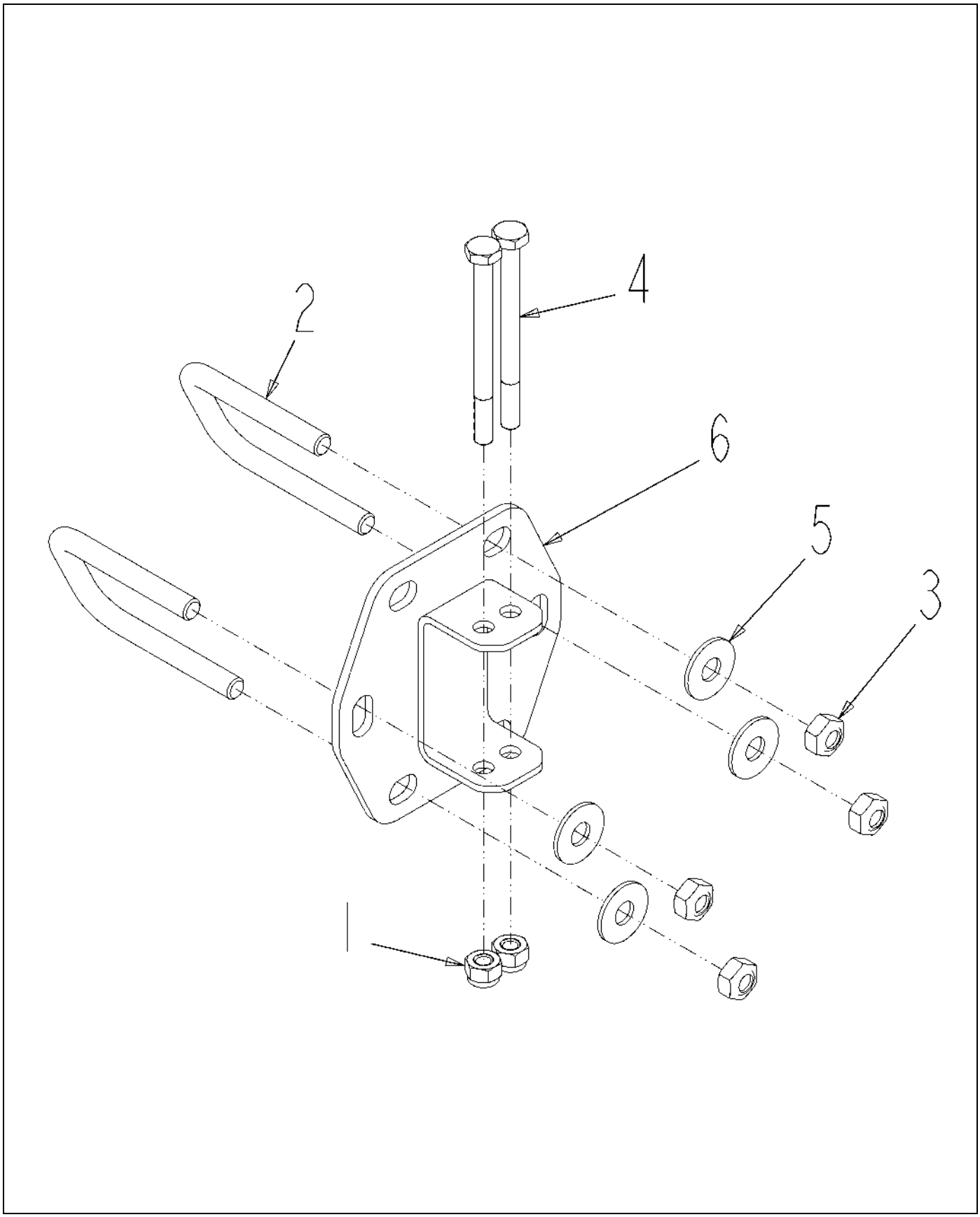

507004D1-01-M930.TIF

Copyright © 2007 AGCO Corporation

BRKT ASM-MTG,ANG,SNSR,RH

ITEM	PART #	QTY	DESCRIPTION	COMMENTS
1	AG027275	2	NUT 0.25-20NC HEX SS REG NY	
2	AG231204	2	BOLT-U .31-18X1.88X2.63	
3	AG516403	4	NUT 0.31-18NC HEX SS REG NY	
4	AG518492	2	BOLT 0.25-20NCX 3.00 SS HHD	
5	AG562074	4	WASHER 0.31 FL SS REG TYPE-B	
6	506906D1	1	BRKT WLDMT-MTG,SNSR,AUTOBOOM	

Copyright © 2007 AGCO Corporation

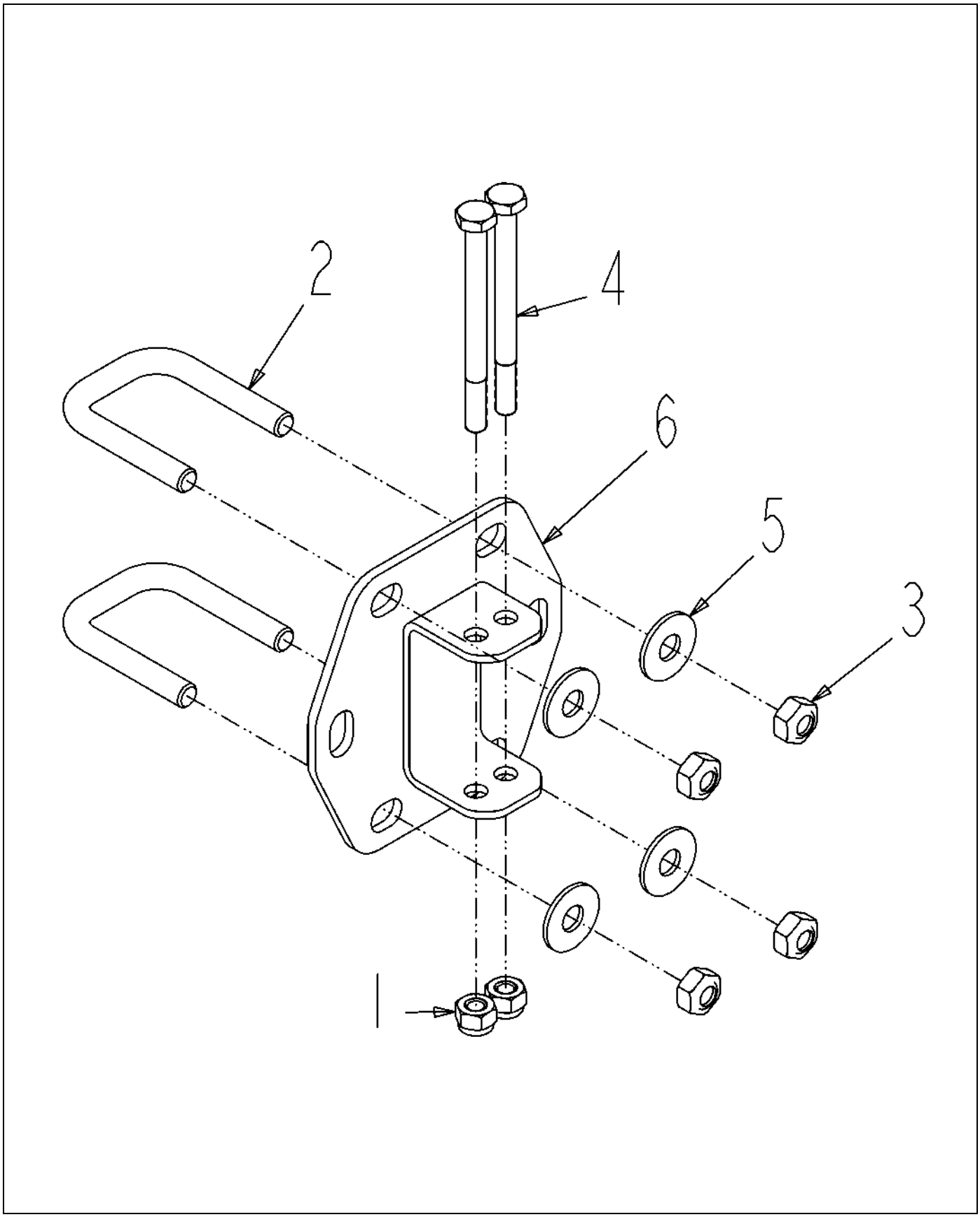

507025D1-01-M930.TIF

Copyright © 2007 AGCO Corporation

BRKT ASM-MTG,VERT,SNSR,AUTOBM

ITEM	PART #	QTY	DESCRIPTION	COMMENTS
1	AG027275	2	NUT 0.25-20NC HEX SS REG NY	
2	AG211441	2	BOLT-U .31-18X1.31X 2.00SQG5ZN	
3	AG516403	4	NUT 0.31-18NC HEX SS REG NY	
4	AG518492	2	BOLT 0.25-20NCX 3.00 SS HHD	
5	AG562074	4	WASHER 0.31 FL SS REG TYPE-B	
6	506906D1	1	BRKT WLDMT-MTG,SNSR,AUTOBOOM	

Copyright © 2007 AGCO Corporation

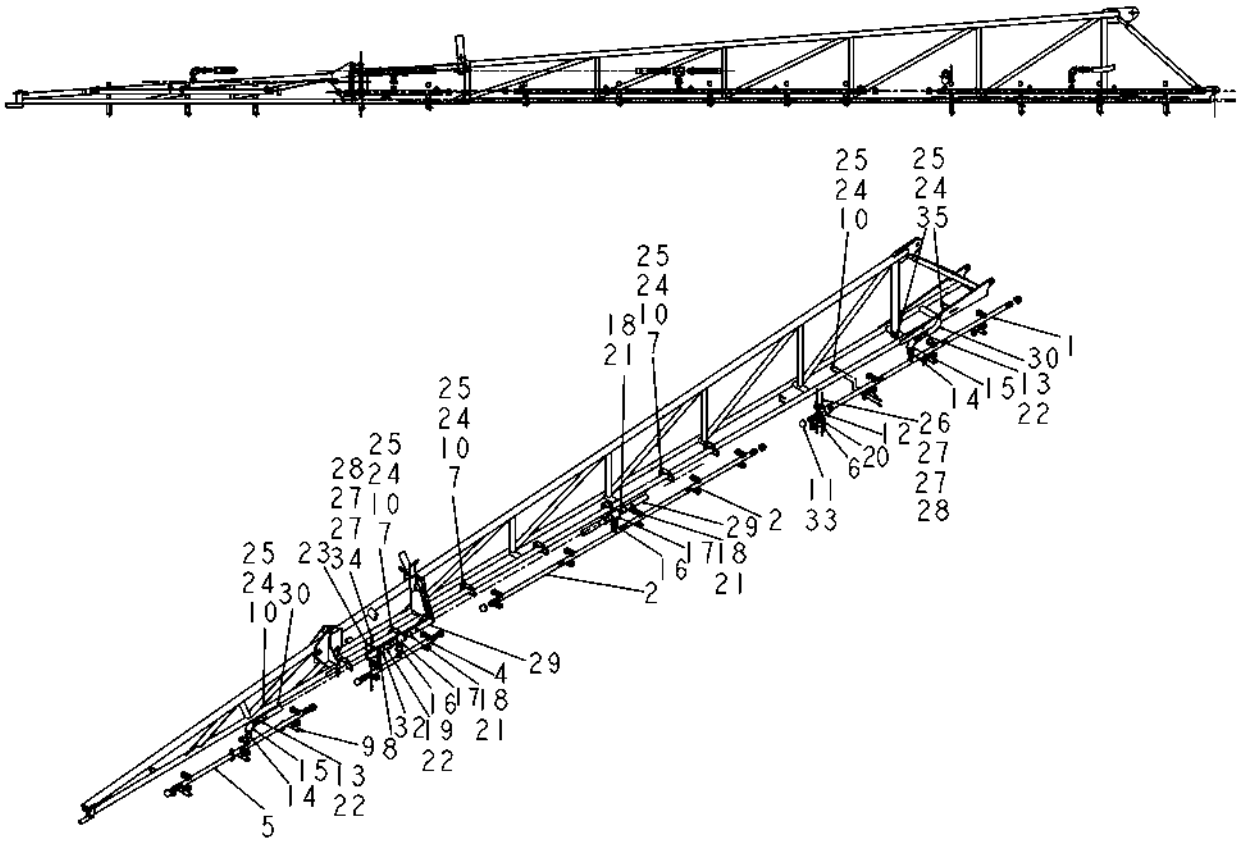

503465-E.tif

Copyright © 2007 AGCO Corporation

PLMB INSTL-HV,BOOM,LH,80

ITEM	PART #	QTY	DESCRIPTION	COMMENTS
1	AG423007	1	TUBE WLDMT-BOOM,HV,90.00	
2	AG423384	1	TUBE WLDMT-BOOM,HV,120	
4	AG260239	1	TUBE WLDMT-BOOM,HV,30.00	
5	AG260241	1	TUBE WLDMT-BOOM,HV,60.00	
6	AG260461	4	BRKT-MTG,TUBE,PLMB,BOOM	
7	AG260458	7	BRKT-MTG,TUBE,PLMB,BOOM	
8	AG326276	1	BRACKET-HOSE SUPPORT	
9	AG326187	3	BRKT-MTG,TUBE,PLMB,BOOM	
10	AG231204	12	BOLT-U .31-18X1.88X2.63	
11	AG055296	8	CAP-PIPE,1.25NPT PP	
12	AG517858	14	VALVE QUIK-STOP1.00NPTX0.75NPT	SEE PAGE 4-52
13	AG051186	2	BARB-HOSE,1.25MNPTX1.25BARB,PP	
14	AG051172	2	BSHG-RDCR,HEX,1.25X1.00NPT,PP	
15	AG051128	2	ELBOW-PIPE,1.25FNPT,90D,PP	
16	AG050257	2	BSHG-RDCR,HEX,1.50X1.00NPT,PP	
17	AG050273	2	TEE,PIPE,1.50FNPT,PP	
18	AG000766	3	BARB-HOSE,1.50MNTTX1.50BARB,PP	
19	AG051534	1	BARB-HOSE,1.50MNPTX1.25BARB,PP	
20	AG518425	14	CLAMP 1.50 BLACK POLY (RTG)	
21	AG561218	3	CLAMP 1.31-2.25 HOSE 28HS	
22	AG561230	3	CLAMP 0.81-1.75 HOSE 20HS	
23	AG561352	1	BOLT-U .38-16X3.50X 4.12RD ZN	
24	AG516403	28	NUT 0.31-18NC HEX SS REG NY	
25	AG562074	28	WASHER 0.31 FL SS REG TYPE-B	
26	AG563061	26	BOLT 0.25-20NCX 3.25 SS HHD	
27	AG515121	56	WASHER 0.25 FL SS REG TYPE-B	
28	AG027275	28	NUT 0.25-20NC HEX SS REG NY	
29	AG512230	-	HOSE 1.50 2BRD EPDM [BULK: 8.663 FT]	
30	AG513393	-	HOSE 1.25 2BRD EPDM [BULK: 7.700 FT]	
32	AG522562	4	NUT-.38-16,SS,SFLG,H	
33	AG609113	AR	SEALANT PIPE PST567 S.S. 250CC	
34	AG518507	2	BOLT 0.25-20NCX 3.50 SS HHD	
35	AG261322	2	BOLT-U .31-18X1.56X 2.97SQ,SS	

Copyright © 2007 AGCO Corporation

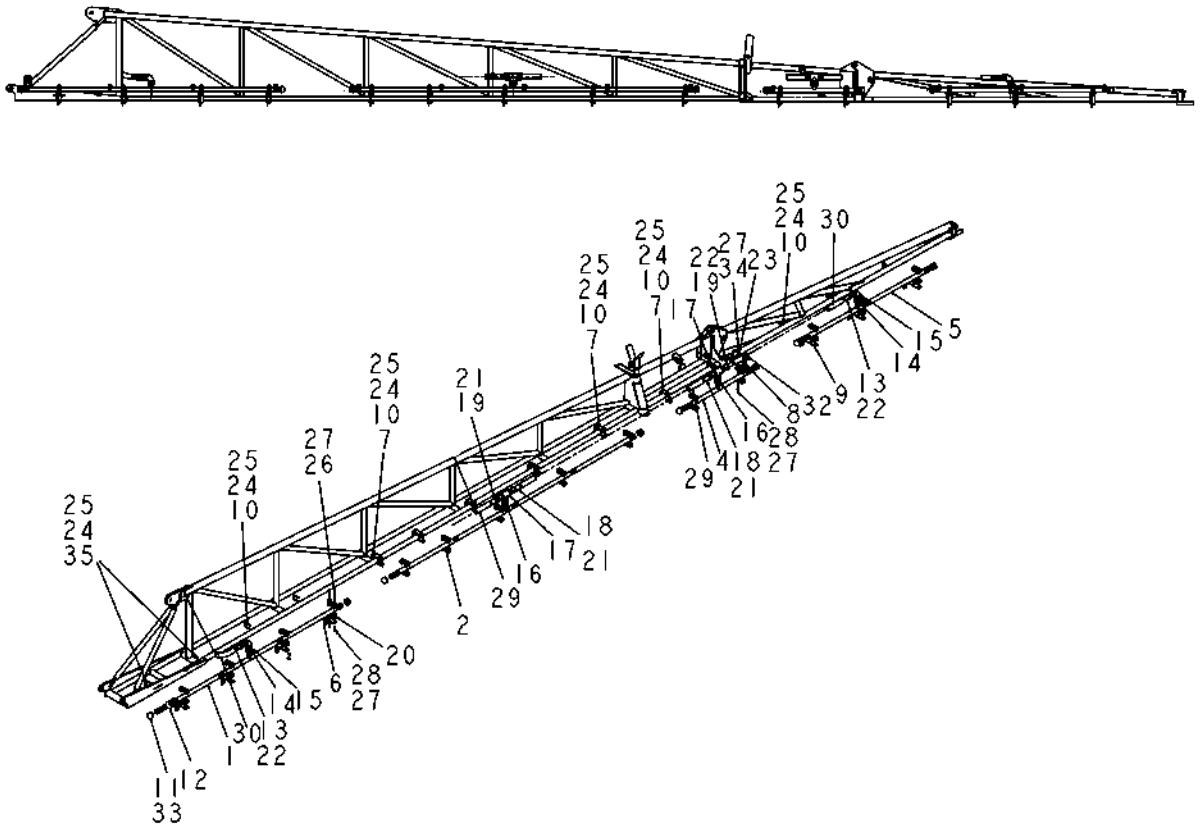

503464-E.tif

Copyright © 2007 AGCO Corporation

PLMB INSTL-HV,BOOM,RH,80

ITEM	PART #	QTY	DESCRIPTION	COMMENTS
1	AG423007	1	TUBE WLDMT-BOOM,HV,90.00	
2	AG423384	1	TUBE WLDMT-BOOM,HV,120	
4	AG260239	1	TUBE WLDMT-BOOM,HV,30.00	
5	AG260241	1	TUBE WLDMT-BOOM,HV,60.00	
6	AG260461	4	BRKT-MTG,TUBE,PLMB,BOOM	
7	AG260458	7	BRKT-MTG,TUBE,PLMB,BOOM	
8	AG326276	1	BRACKET-HOSE SUPPORT	
9	AG326187	3	BRKT-MTG,TUBE,PLMB,BOOM	
10	AG231204	12	BOLT-U .31-18X1.88X2.63	
11	AG055296	8	CAP-PIPE,1.25NPT PP	
12	AG517858	14	VALVE QUIK-STOP1.00NPTX0.75NPT	SEE PAGE 4-52
13	AG051186	2	BARB-HOSE,1.25MNPTX1.25BARB,PP	
14	AG051172	2	BSHG-RDCR,HEX,1.25X1.00NPT,PP	
15	AG051128	2	ELBOW-PIPE,1.25FNPT,90D,PP	
16	AG050257	2	BSHG-RDCR,HEX,1.50X1.00NPT,PP	
17	AG050273	2	TEE,PIPE,1.50FNPT,PP	
18	AG000766	2	BARB-HOSE,1.50MNTTX1.50BARB,PP	
19	AG051534	1	BARB-HOSE,1.50MNPTX1.25BARB,PP	
20	AG518425	14	CLAMP 1.50 BLACK POLY (RTG)	
21	AG561218	3	CLAMP 1.31-2.25 HOSE 28HS	
22	AG561230	3	CLAMP 0.81-1.75 HOSE 20HS	
23	AG561352	1	BOLT-U .38-16X3.50X 4.12RD ZN	
24	AG516403	28	NUT 0.31-18NC HEX SS REG NY	
25	AG562074	28	WASHER 0.31 FL SS REG TYPE-B	
26	AG563061	26	BOLT 0.25-20NCX 3.25 SS HHD	
27	AG515121	56	WASHER 0.25 FL SS REG TYPE-B	
28	AG027275	28	NUT 0.25-20NC HEX SS REG NY	
29	AG512230	-	HOSE 1.50 2BRD EPDM [BULK: 9.362 FT]	
30	AG513393	-	HOSE 1.25 2BRD EPDM [BULK: 6.999 FT]	
32	AG522562	4	NUT-.38-16,SS,SFLG,H	
33	AG609113	AR	SEALANT PIPE PST567 S.S. 250CC	
34	AG518507	2	BOLT 0.25-20NCX 3.50 SS HHD	
35	AG261322	2	BOLT-U .31-18X1.56X 2.97SQ,SS	

Copyright © 2007 AGCO Corporation

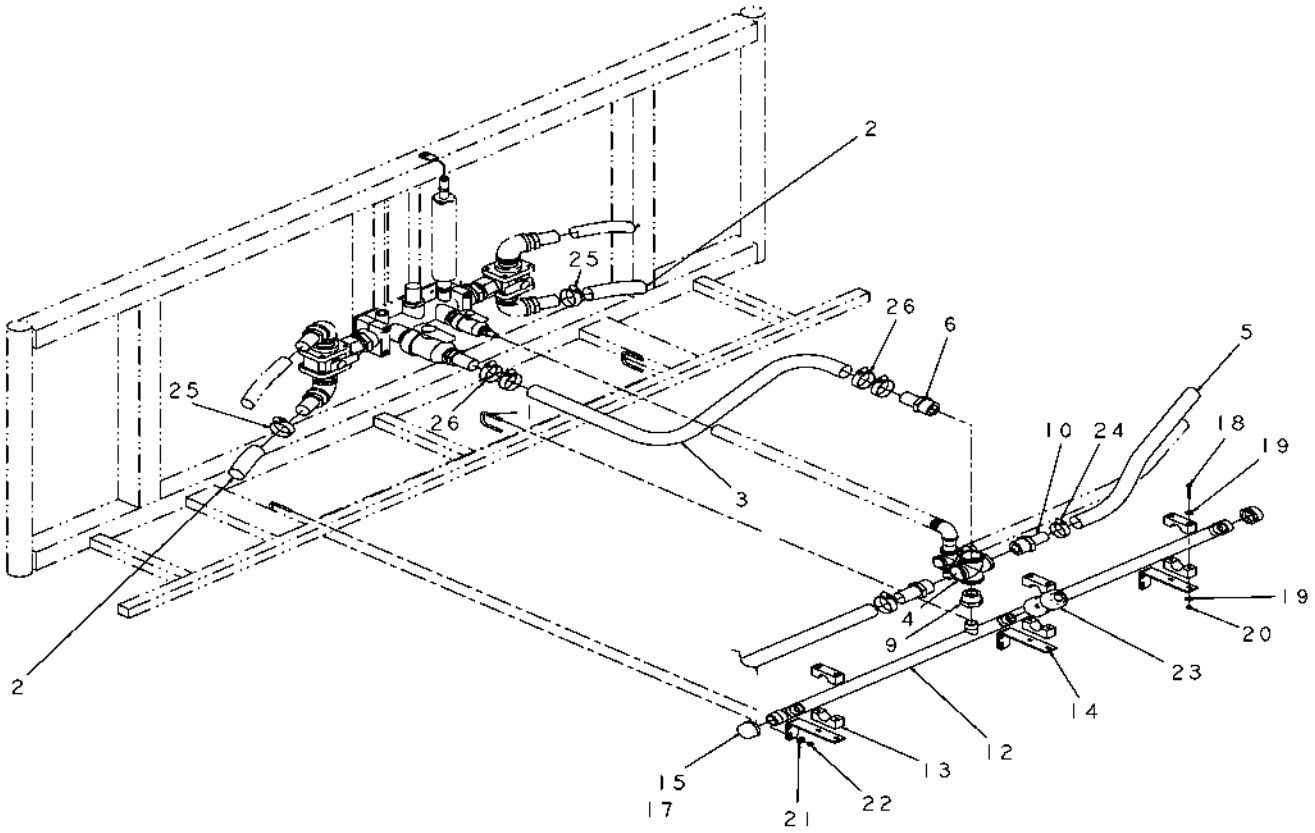

503467-07-M391-.TIF

Copyright © 2007 AGCO Corporation

PLMB INSTL-HV,BOOM,CENTER

ITEM	PART #	QTY	DESCRIPTION	COMMENTS
1	AG231204	3	BOLT-U .31-18X1.88X2.63	
2	AG512230	-	HOSE 1.50 2BRD EPDM [BULK: 42.700 FT]	
3	AG513466	-	HOSE-1.50,LIQ PROD.SUC & DIS [BULK: 15.500 FT]	
4	AG051443	1	CROSS-PIPE,1.50FNPT,PP	
5	AG513393	-	HOSE 1.25 2BRD EPDM [BULK: 20.125 FT]	
6	AG000766	1	BARB-HOSE,1.50MNTTX1.50BARB,PP	
9	AG050257	1	BSHG-RDCR,HEX,1.50X1.00NPT,PP	
10	AG051534	2	BARB-HOSE,1.50MNPTX1.25BARB,PP	
12	AG260241	1	TUBE WLDMT-BOOM,HV,60.00	
13	AG518425	3	CLAMP 1.50 BLACK POLY (RTG)	
14	AG326225	3	BRKT-MTG,TUBE,PLMB,CTR	
15	AG055296	2	CAP-PIPE,1.25NPT PP	
17	AG129187	AR	PIPE SEALANT-FLEX BLACK	
18	AG563061	6	BOLT 0.25-20NCX 3.25 SS HHD	
19	AG515121	12	WASHER 0.25 FL SS REG TYPE-B	
20	AG027275	6	NUT 0.25-20NC HEX SS REG NY	
21	AG562074	6	WASHER 0.31 FL SS REG TYPE-B	
22	AG516403	6	NUT 0.31-18NC HEX SS REG NY	
23	AG517858	3	VALVE QUIK-STOP1.00NPTX0.75NPT	SEE PAGE 4-52
24	AG561230	2	CLAMP 0.81-1.75 HOSE 20HS	
25	AG561218	2	CLAMP 1.31-2.25 HOSE 28HS	
26	AG561538	4	CLAMP 1.78-2.09HOSE VOSS-200SS	

Copyright © 2007 AGCO Corporation

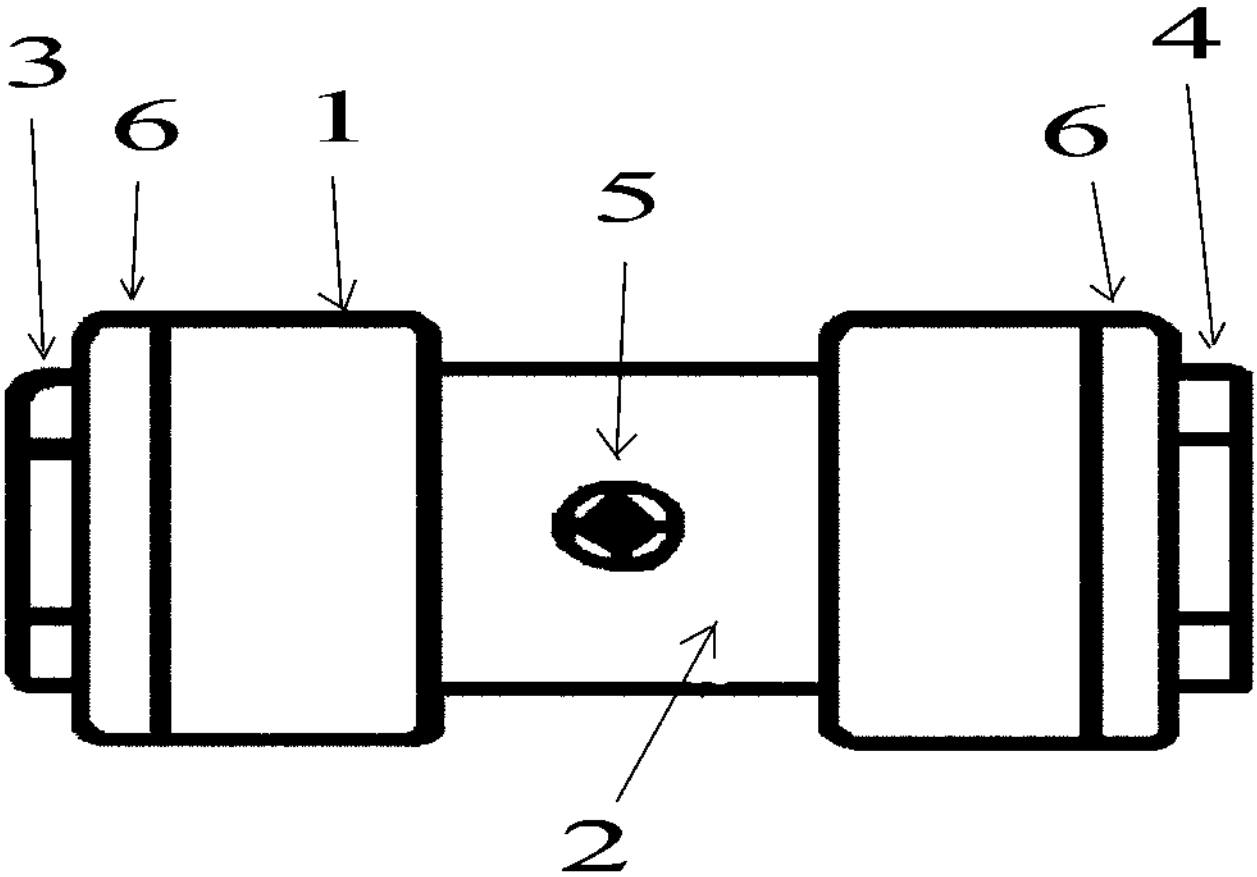

517858---.TIF

Copyright © 2007 AGCO Corporation

VALVE QUIK-STOP1.00NPTX0.75NPT

ITEM	PART #	QTY	DESCRIPTION	COMMENTS
1	AG609470	1	BODY POLY	
2	AG609471	AR	BLADDER RUBBER EPDM	[A]
3	AG609474	1	PLATE END 1.00 NPT FEMALE	
4	AG609475	1	PLATE END 0.75 NPT FEMALE	
5	AG609476	AR	PLUG PIPE 0.25 POLY	
6	AG609477	AR	O RING 0.25	
	FOOTNOTE [A]		AG713739 - TOOL, INSTALLATION	

Copyright © 2007 AGCO Corporation

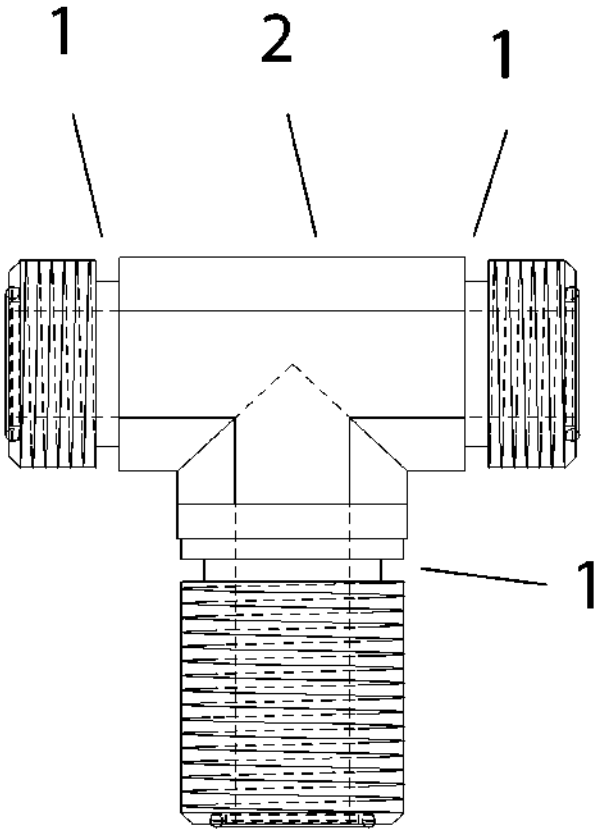

401320X1-01-R172-.TIF

Copyright © 2007 AGCO Corporation

BLKHD BR TEE ASM,-12 ORFS

ITEM	PART #	QTY	DESCRIPTION	COMMENTS
1	400366X1	3	SEAL-O-RING 22.5 ODX1.78 DIA	
2	401487X1	1	BLKHD BR TEE,-12 ORFS	

Copyright © 2007 AGCO Corporation

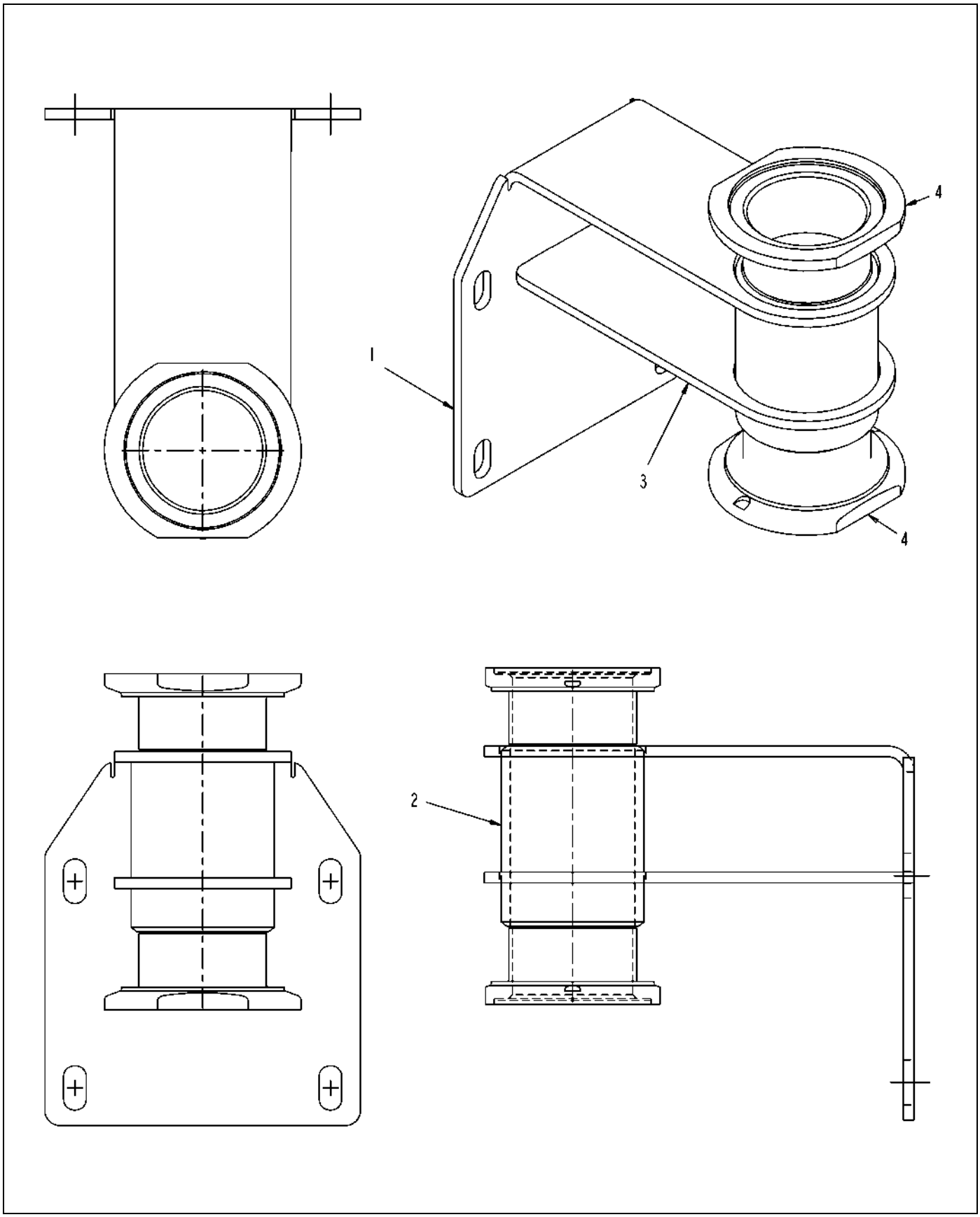

131680-A-L882-.TIF

Copyright © 2007 AGCO Corporation

BRKT WLDMT-MTG,2.00X2.00 FLG

ITEM	PART #	QTY	DESCRIPTION	COMMENTS
1	AG131681	1	BRKT-MTG,VERT,2.00FP FLG	
2	AG131682	1	NIPPLE-WELD,2.00X3.00 LG	
3	AG131683	1	BRKT-MTG,HORZ,2.00FP FLG	
4	AG523526	2	ADPTR-2.0FLG,FPXNO THD,316SS	

Copyright © 2007 AGCO Corporation

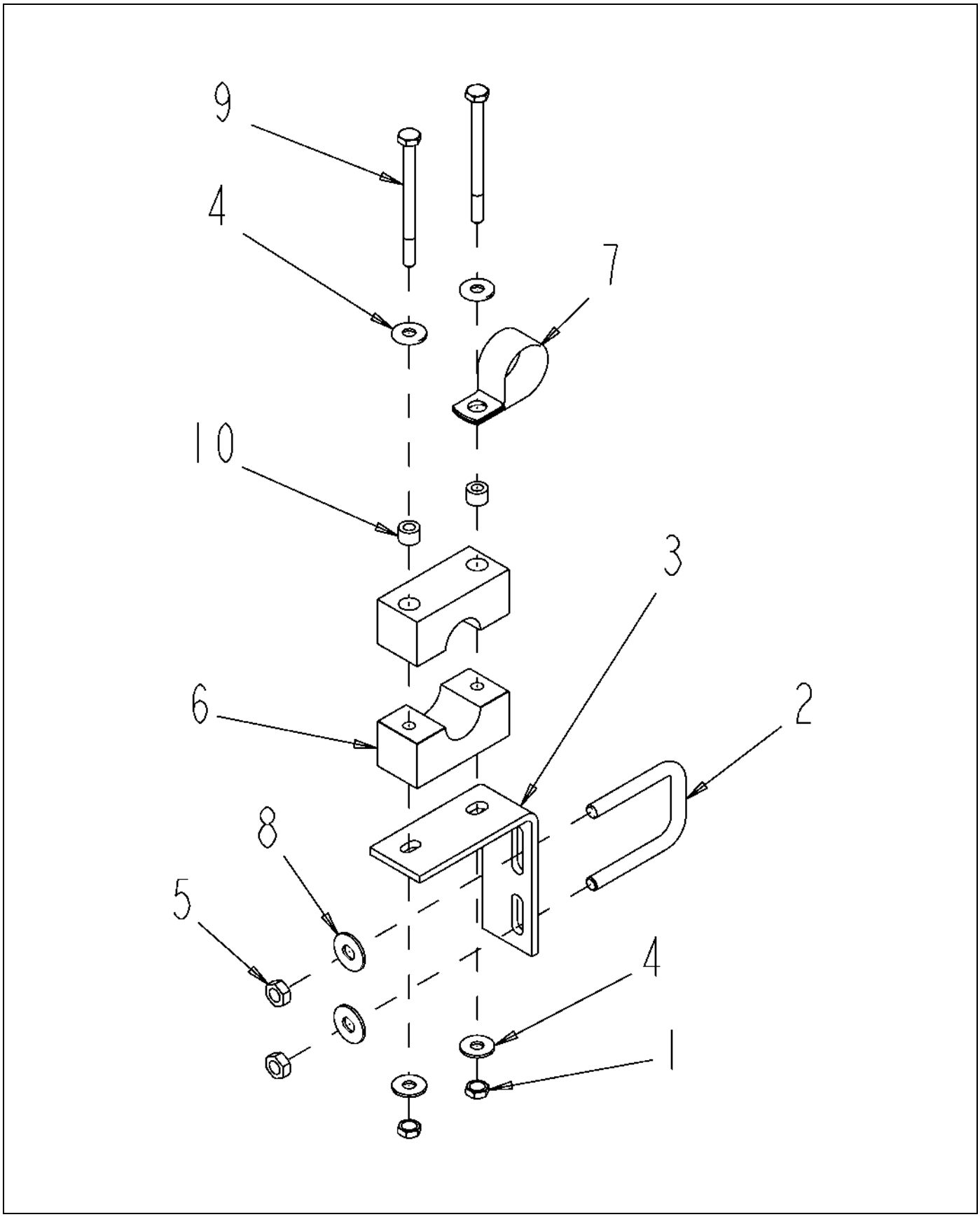

122328-C.TIF

Copyright © 2007 AGCO Corporation

BRKT ASM-L REV/P CLP STD U

ITEM	PART #	QTY	DESCRIPTION	COMMENTS
1	AG027275	2	NUT 0.25-20NC HEX SS REG NY	
2	AG231204	1	BOLT-U .31-18X1.88X2.63	
3	AG232784	1	BRACKET STAND OFF WET BOOM	
4	AG515121	4	WASHER 0.25 FL SS REG TYPE-B	
5	AG516403	2	NUT 0.31-18NC HEX SS REG NY	
6	AG518326	1	CLAMP 3/4 INCH PIPE (RTG)	
7	AG560480	1	CLAMP 1.25-COATED HOSE CO	
8	AG562074	2	WASHER 0.31 FL SS REG TYPE-B	
9	AG563061	2	BOLT 0.25-20NCX 3.25 SS HHD	
10	AG609777	2	INSERT STAUFF SPACER	

Copyright © 2007 AGCO Corporation

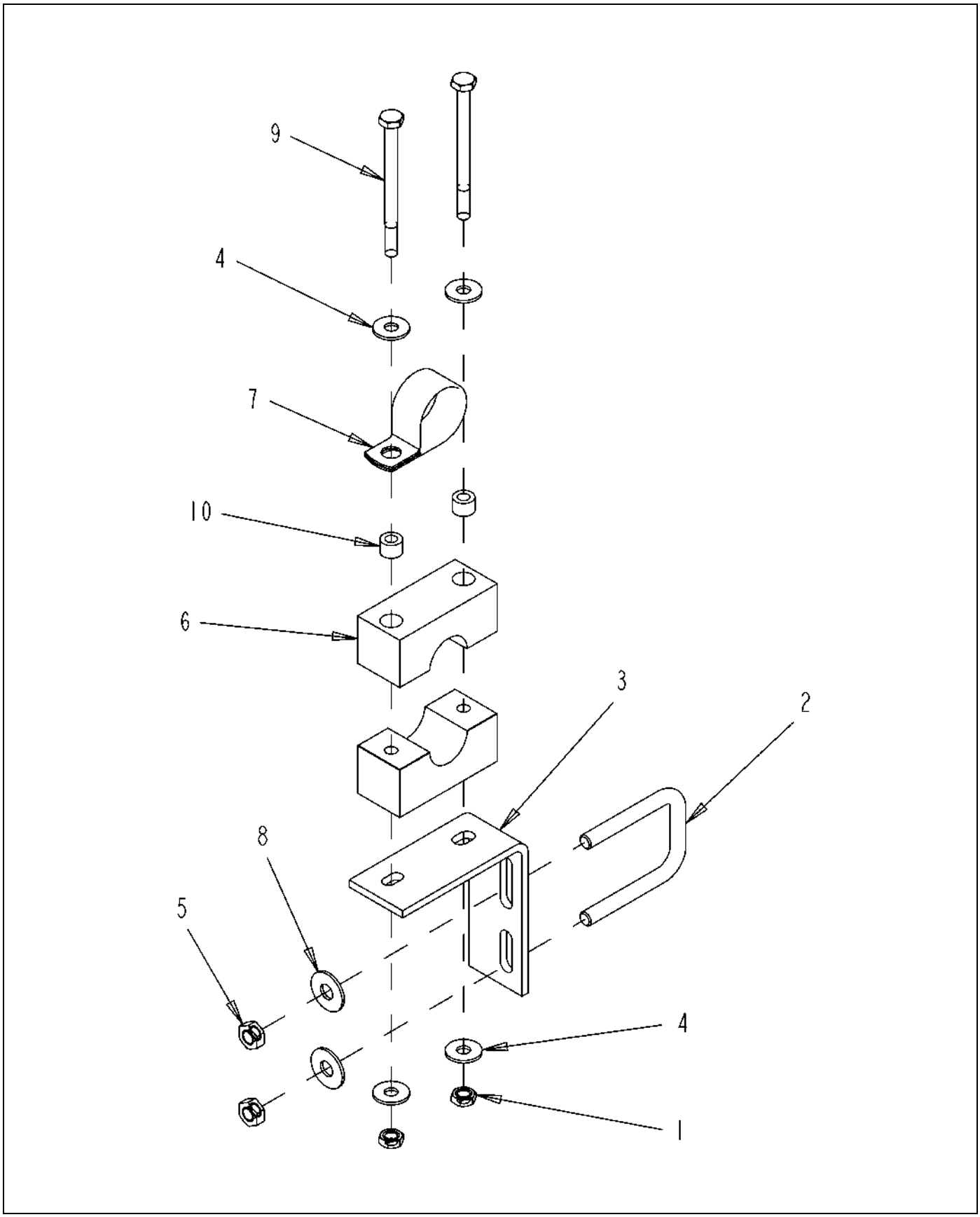

122329-B-J603-.TIF

Copyright © 2007 AGCO Corporation

BRKT ASM-L W/P CLP,STD UBOLT

ITEM	PART #	QTY	DESCRIPTION	COMMENTS
1	AG027275	2	NUT 0.25-20NC HEX SS REG NY	
2	AG231204	1	BOLT-U .31-18X1.88X2.63	
3	AG232784	1	BRACKET STAND OFF WET BOOM	
4	AG515121	4	WASHER 0.25 FL SS REG TYPE-B	
5	AG516403	2	NUT 0.31-18NC HEX SS REG NY	
6	AG518326	1	CLAMP 3/4 INCH PIPE (RTG)	
7	AG560480	1	CLAMP 1.25-COATED HOSE CO	
8	AG562074	2	WASHER 0.31 FL SS REG TYPE-B	
9	AG563061	2	BOLT 0.25-20NCX 3.25 SS HHD	
10	AG609777	2	INSERT STAUFF SPACER	

Copyright © 2007 AGCO Corporation

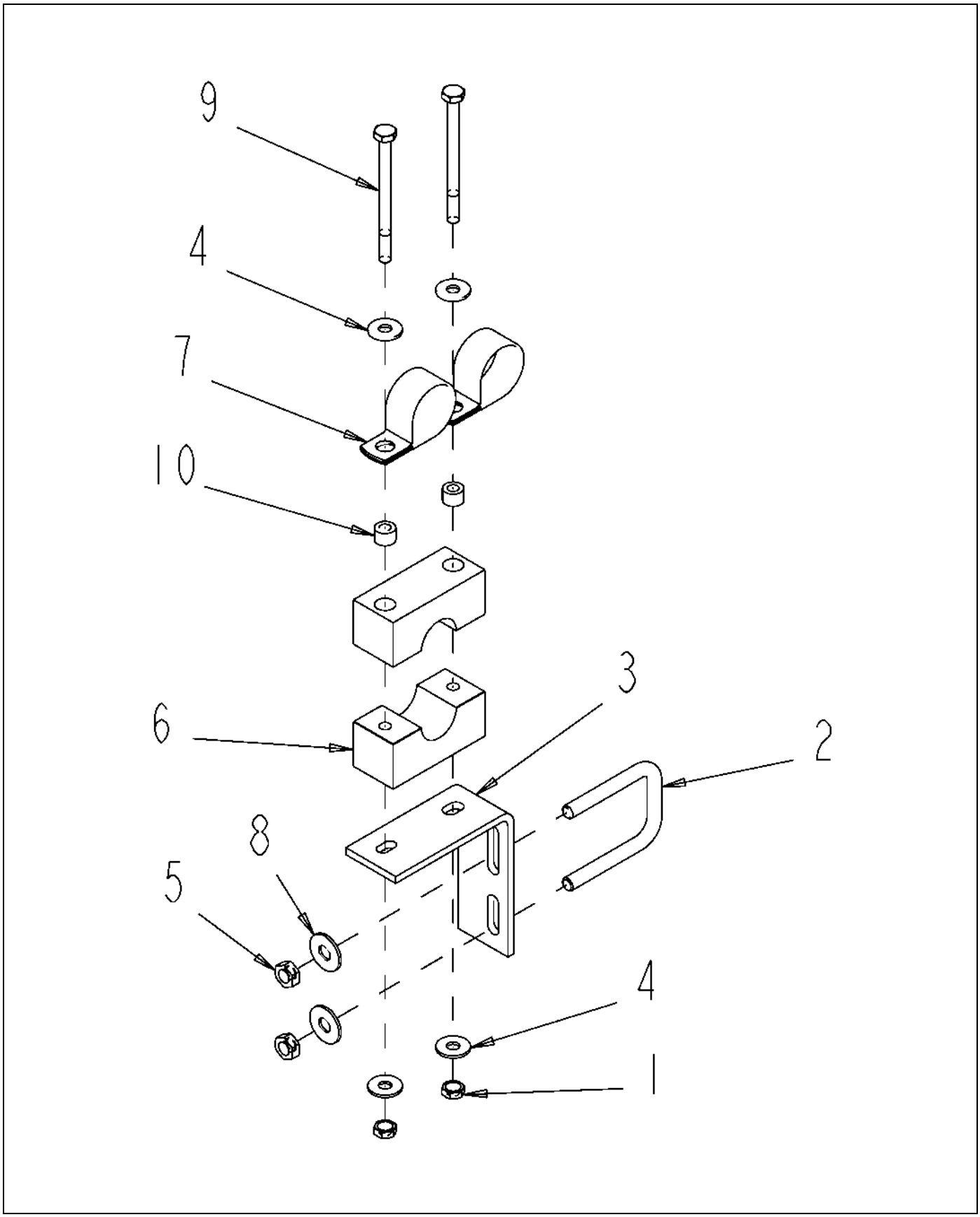

122330-B.TIF

Copyright © 2007 AGCO Corporation

BRKT ASM-L W/2 P CLP,STD UBOLT

ITEM	PART #	QTY	DESCRIPTION	COMMENTS
1	AG027275	2	NUT 0.25-20NC HEX SS REG NY	
2	AG231204	1	BOLT-U .31-18X1.88X2.63	
3	AG232784	1	BRACKET STAND OFF WET BOOM	
4	AG515121	4	WASHER 0.25 FL SS REG TYPE-B	
5	AG516403	2	NUT 0.31-18NC HEX SS REG NY	
6	AG518326	1	CLAMP 3/4 INCH PIPE (RTG)	
7	AG560480	2	CLAMP 1.25-COATED HOSE CO	
8	AG562074	2	WASHER 0.31 FL SS REG TYPE-B	
9	AG563061	2	BOLT 0.25-20NCX 3.25 SS HHD	
10	AG609777	2	INSERT STAUFF SPACER	

Copyright © 2007 AGCO Corporation

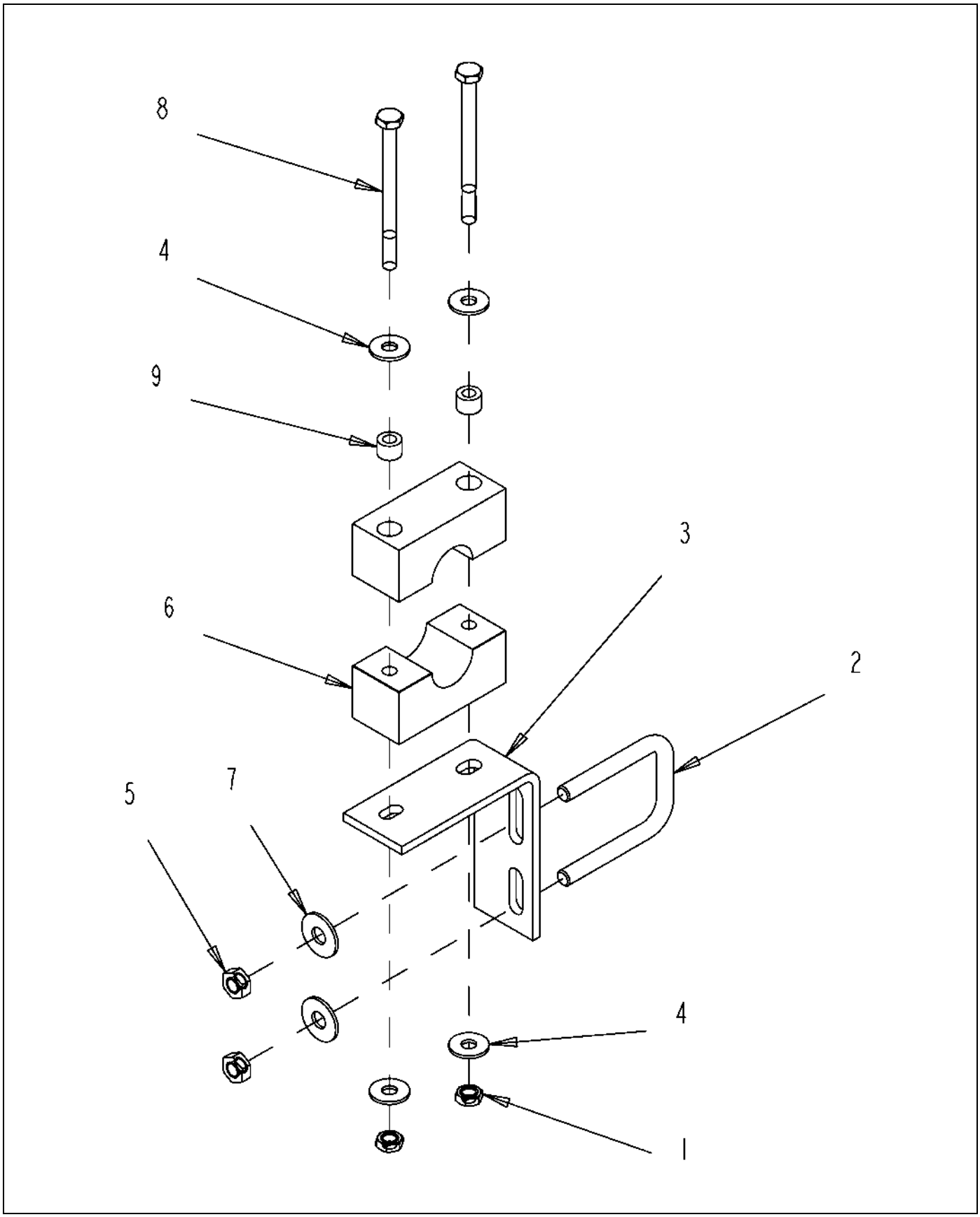

122331-B.TIF

Copyright © 2007 AGCO Corporation

BRKT ASM-L,STD UBOLT

ITEM	PART #	QTY	DESCRIPTION	COMMENTS
1	AG027275	2	NUT 0.25-20NC HEX SS REG NY	
2	AG231204	1	BOLT-U .31-18X1.88X2.63	
3	AG232784	1	BRACKET STAND OFF WET BOOM	
4	AG515121	4	WASHER 0.25 FL SS REG TYPE-B	
5	AG516403	2	NUT 0.31-18NC HEX SS REG NY	
6	AG518326	1	CLAMP 3/4 INCH PIPE (RTG)	
7	AG562074	2	WASHER 0.31 FL SS REG TYPE-B	
8	AG563061	2	BOLT 0.25-20NCX 3.25 SS HHD	
9	AG609777	2	INSERT STAUFF SPACER	

Copyright © 2007 AGCO Corporation

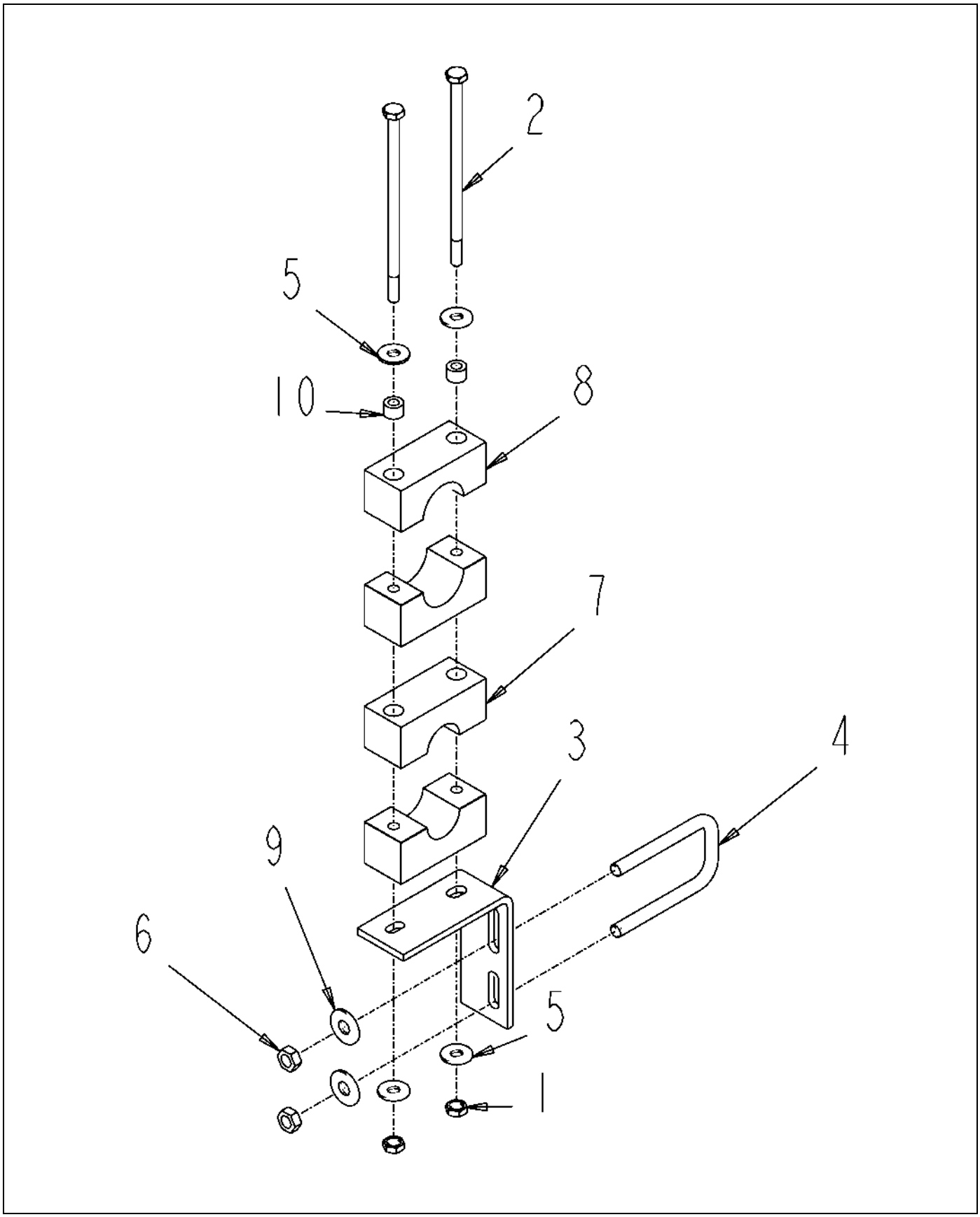

122512-B.TIF

Copyright © 2007 AGCO Corporation

BRKT ASM-L,PP STAUFF,LG U BOLT

ITEM	PART #	QTY	DESCRIPTION	COMMENTS
1	AG027275	2	NUT 0.25-20NC HEX SS REG NY	
2	AG122992	2	BOLT 0.25-20NCX 5.25 SS HHD	
3	AG232784	1	BRACKET STAND OFF WET BOOM	
4	AG261322	1	BOLT-U .31-18X1.56X 2.97SQ,SS	
5	AG515121	4	WASHER 0.25 FL SS REG TYPE-B	
6	AG516403	2	NUT 0.31-18NC HEX SS REG NY	
7	AG518326	1	CLAMP 3/4 INCH PIPE (RTG)	
8	AG519748	1	CLAMP 1.00 PIPE	[A]
9	AG562074	2	WASHER 0.31 FL SS REG TYPE-B	
10	AG609777	2	INSERT STAUFF SPACER	
	FOOTNOTE [A]		2 INSERTS AND 2 CLAMP MAKE UP 1 PART. BOLT - AG563061, WASHER - AG515121, NUT - AG027275,	

Copyright © 2007 AGCO Corporation

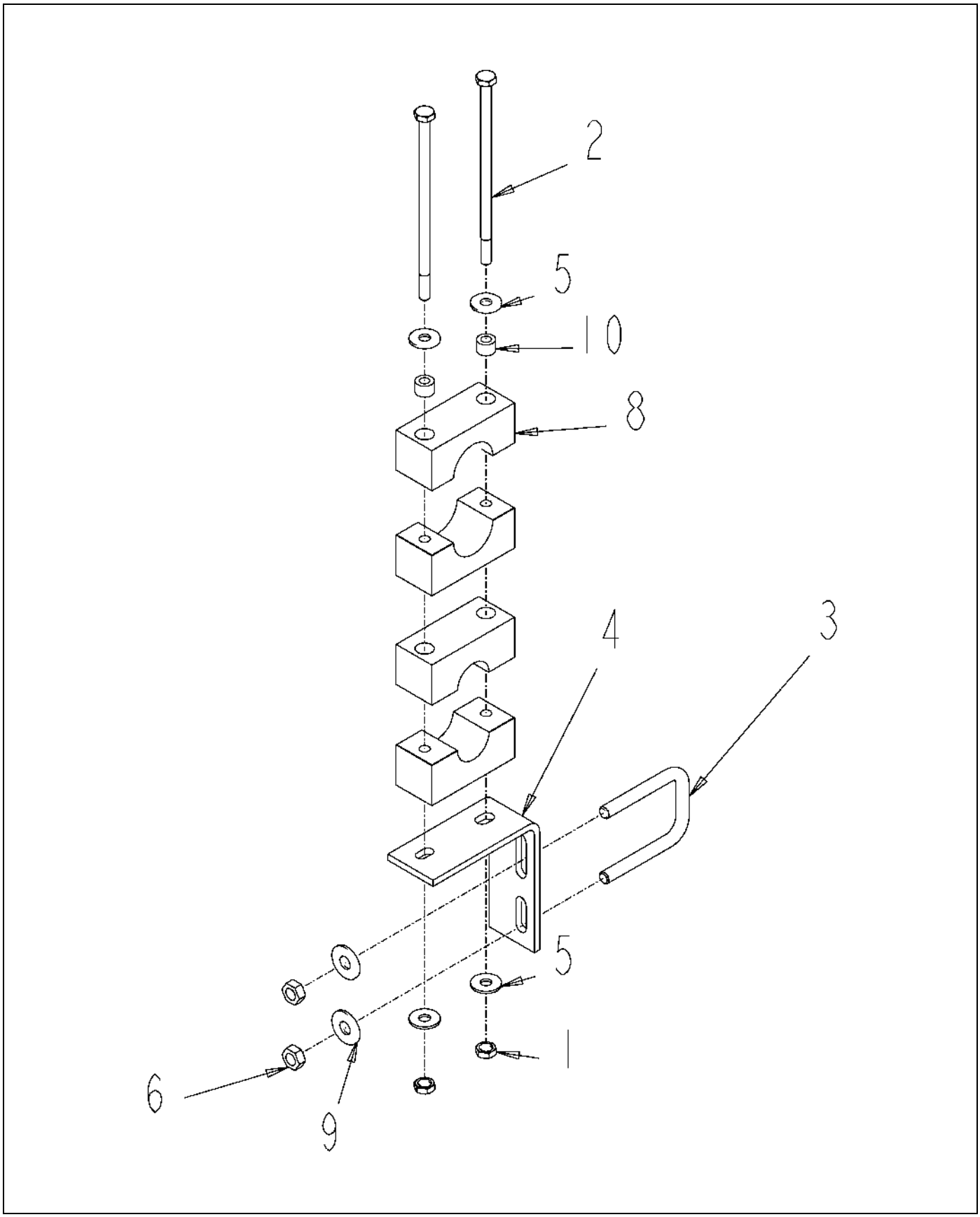

122514-B.TIF

Copyright © 2007 AGCO Corporation

BRKT ASM-L,2 STAUFF,STD U

ITEM	PART #	QTY	DESCRIPTION	COMMENTS
1	AG027275	2	NUT 0.25-20NC HEX SS REG NY	
2	AG122992	2	BOLT 0.25-20NCX 5.25 SS HHD	
3	AG231204	1	BOLT-U .31-18X1.88X2.63	
4	AG232784	1	BRACKET STAND OFF WET BOOM	
5	AG515121	4	WASHER 0.25 FL SS REG TYPE-B	
6	AG516403	2	NUT 0.31-18NC HEX SS REG NY	
8	AG519748	1	CLAMP 1.00 PIPE	[A]
9	AG562074	2	WASHER 0.31 FL SS REG TYPE-B	
10	AG609777	2	INSERT STAUFF SPACER	
	FOOTNOTE [A]		2 INSERTS AND 2 CLAMP MAKE UP 1 PART. BOLT - AG563061, WASHER - AG515121, NUT - AG027275,	

Copyright © 2007 AGCO Corporation

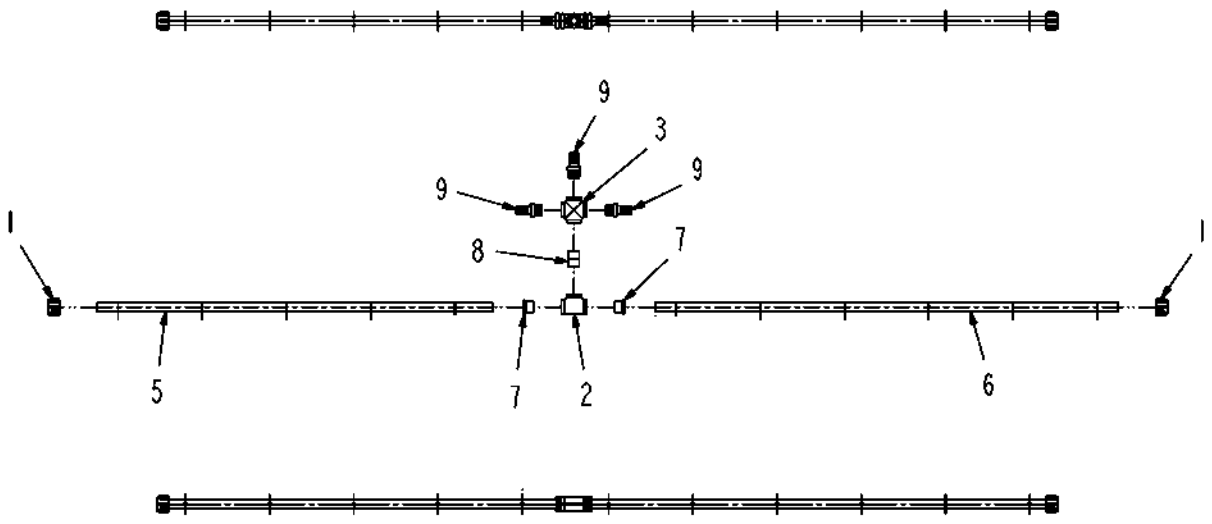

134620-A.tif

Copyright © 2007 AGCO Corporation

PIPE ASM-X W/3 1.00HB,11X10,SS

ITEM	PART #	QTY	DESCRIPTION	COMMENTS
1	AG051535	2	CAP-PIPE,0.75NPT PP	
2	AG051884	1	TEE 1.00 304SS	
3	AG051910	1	CROSS 1.00 TYPE 304SS	
4	AG129187	AR	PIPE SEALANT-FLEX BLACK	
5	AG217597	1	TUBE BOOM 10 INNER 47.00	
6	AG217598	1	TUBE BOOM REAR RIGHT 55.00 IN	
7	AG562712	2	BUSHING 1.00MNPTX0.75FNPT 304S	
8	AG710516	1	NIPPLE 1.00NPTX 1.50CLS 304SS	
9	AG845079	3	NIPPLE KING 1.00 316SS	

Copyright © 2007 AGCO Corporation

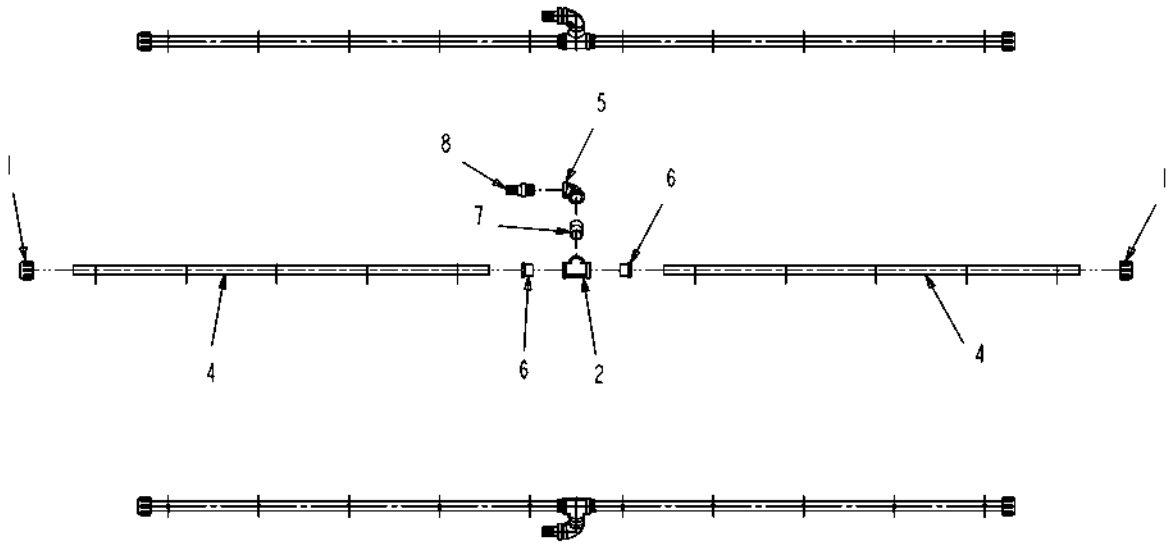

134621-A.tif

Copyright © 2007 AGCO Corporation

PIPE ASM-90D W/1HB,10X10,SS,LH

ITEM	PART #	QTY	DESCRIPTION	COMMENTS
1	AG051535	2	CAP-PIPE,0.75NPT PP	
2	AG051884	1	TEE 1.00 304SS	
3	AG129187	AR	PIPE SEALANT-FLEX BLACK	
4	AG217599	2	TUBE BOOM INNER	
5	AG562304	1	ELBOW 90D 1.00X1.00 S.S. 304	
6	AG562712	2	BUSHING 1.00MNPTX0.75FNPT 304S	
7	AG710516	1	NIPPLE 1.00NPTX 1.50CLS 304SS	
8	AG845079	1	NIPPLE KING 1.00 316SS	

Copyright © 2007 AGCO Corporation

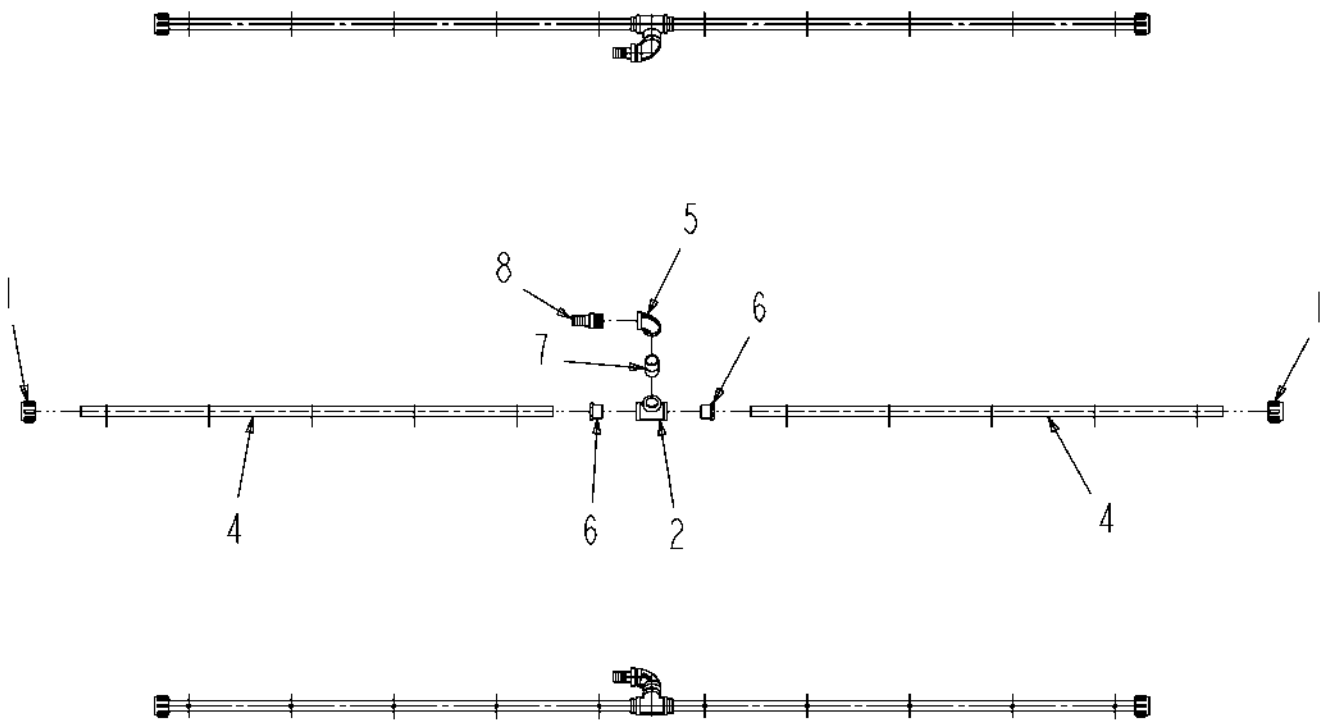

134622-A.TIF

Copyright © 2007 AGCO Corporation

PIPE ASM-90D W/1HB,10X10,SS,RH

ITEM	PART #	QTY	DESCRIPTION	COMMENTS
1	AG051535	2	CAP-PIPE,0.75NPT PP	
2	AG051884	1	TEE 1.00 304SS	
3	AG129187	AR	PIPE SEALANT-FLEX BLACK	
4	AG217599	2	TUBE BOOM INNER	
5	AG562304	1	ELBOW 90D 1.00X1.00 S.S. 304	
6	AG562712	2	BUSHING 1.00MNPTX0.75FNPT 304S	
7	AG710516	1	NIPPLE 1.00NPTX 1.50CLS 304SS	
8	AG845079	1	NIPPLE KING 1.00 316SS	

Copyright © 2007 AGCO Corporation

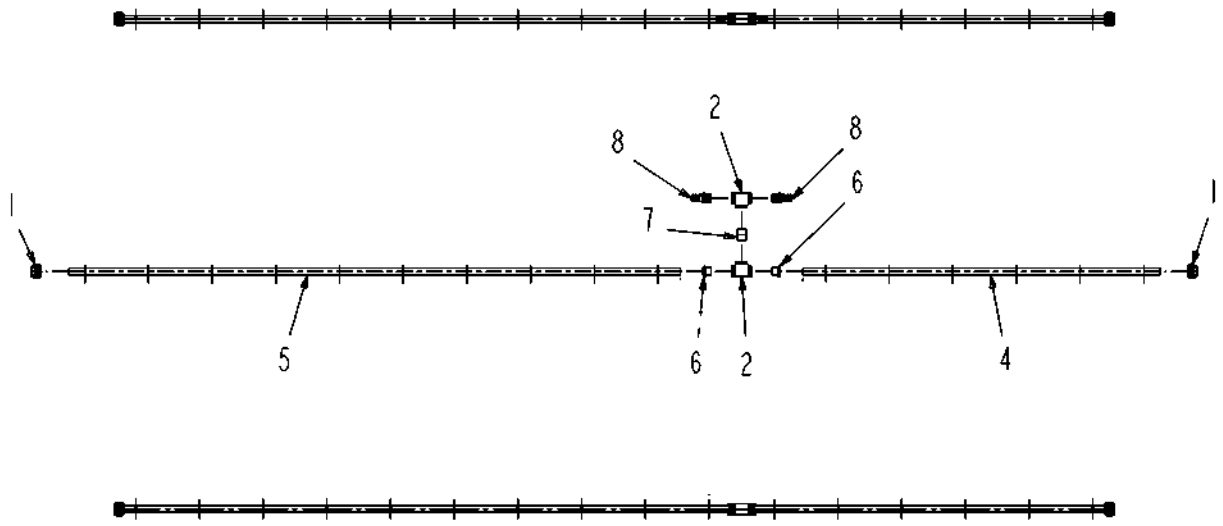

134623-A.tif

Copyright © 2007 AGCO Corporation

PIPE ASM-T W/2 1.00HB,16X10,SS

ITEM	PART #	QTY	DESCRIPTION	COMMENTS
1	AG051535	2	CAP-PIPE,0.75NPT PP	
2	AG051884	2	TEE 1.00 304SS	
3	AG129187	AR	PIPE SEALANT-FLEX BLACK	
4	AG217605	1	TUBE BOOM TIP OUTER 56.00 IN	
5	AG232940	1	TUBE BOOM MIDDLE IN 96.00	
6	AG562712	2	BUSHING 1.00MNPTX0.75FNPT 304S	
7	AG710516	1	NIPPLE 1.00NPTX 1.50CLS 304SS	
8	AG845079	2	NIPPLE KING 1.00 316SS	

Copyright © 2007 AGCO Corporation

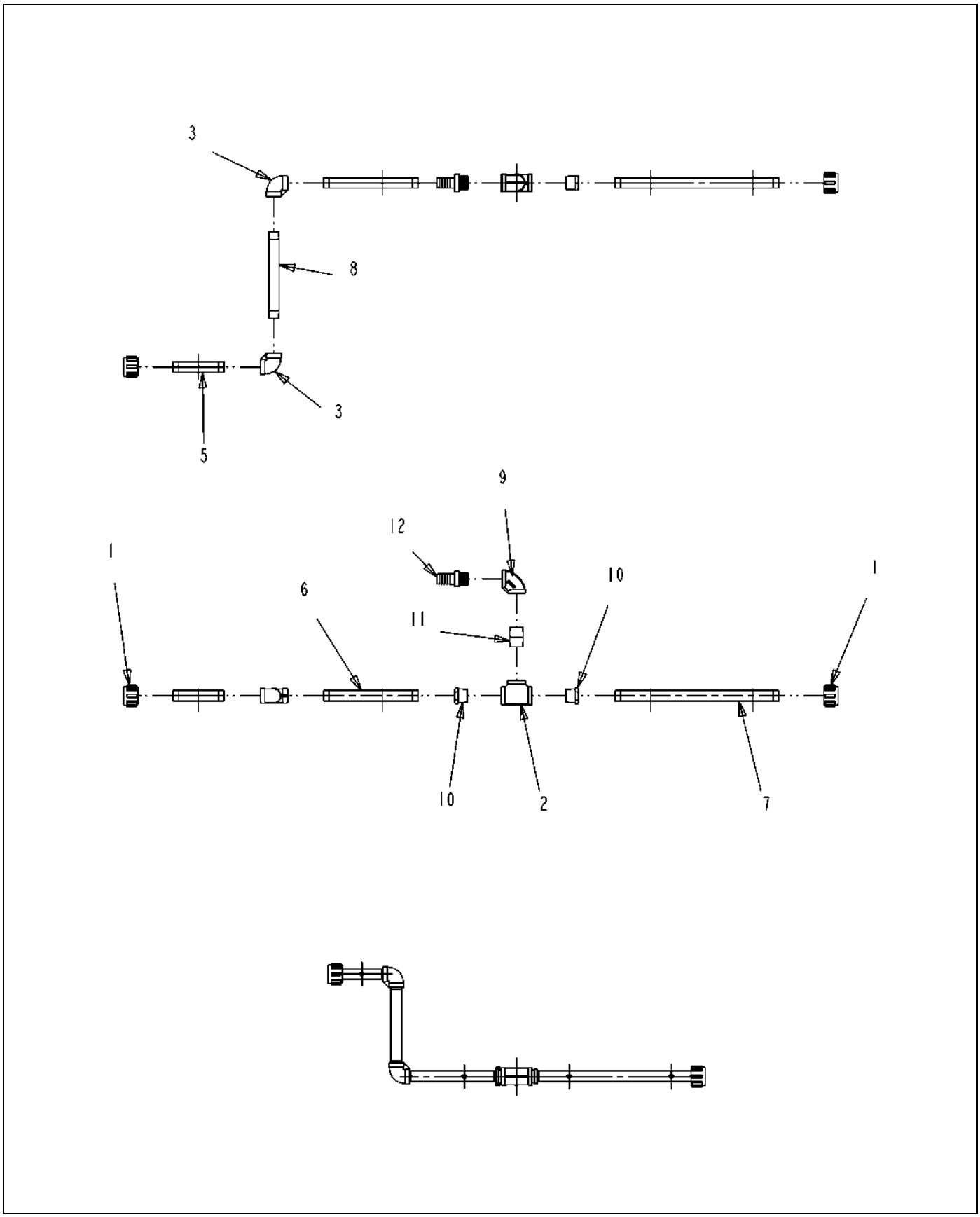

134624-A.TIF

Copyright © 2007 AGCO Corporation

PIPE ASM-90D W/1HB,4X10,SS,RH

ITEM	PART #	QTY	DESCRIPTION	COMMENTS
1	AG051535	2	CAP-PIPE,0.75NPT PP	
2	AG051884	1	TEE 1.00 304SS	
3	AG051932	2	ELBOW 90D 0.75 304SS	
4	AG129187	AR	PIPE SEALANT-FLEX BLACK	
5	AG217494	1	TUBE BREAK STUB 5.00	
6	AG517602	1	CONNECTOR MA 6 WAY 150 SEALED	
7	AG217603	1	TUBE BOOM BREAKAWAY 16.00	
8	AG217610	1	TUBE BOOM BREAKAWAY	
9	AG562304	1	ELBOW 90D 1.00X1.00 S.S. 304	
10	AG562712	2	BUSHING 1.00MNPTX0.75FNPT 304S	
11	AG710516	1	NIPPLE 1.00NPTX 1.50CLS 304SS	
12	AG845079	1	NIPPLE KING 1.00 316SS	

Copyright © 2007 AGCO Corporation

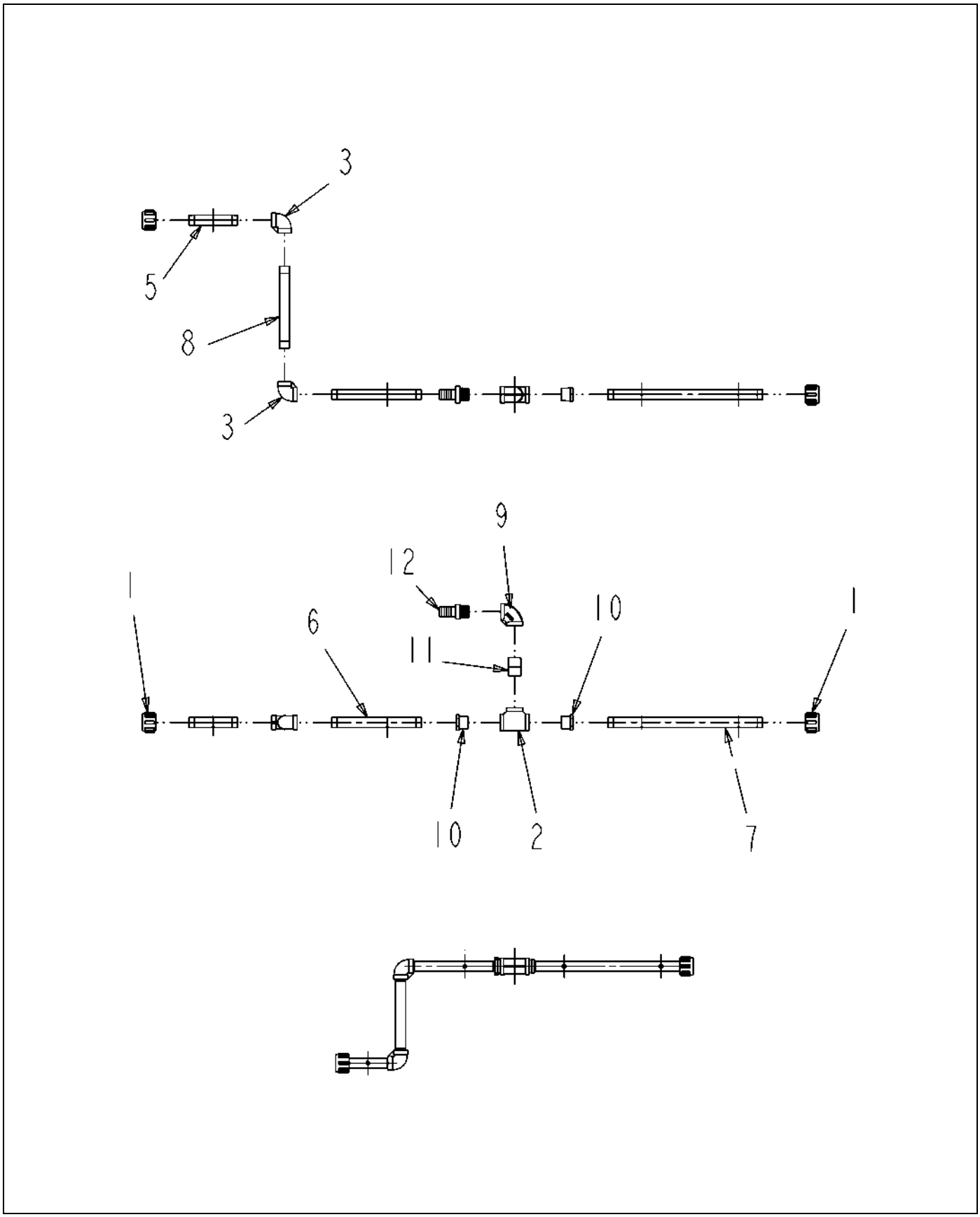

134625-A.tif

Copyright © 2007 AGCO Corporation

PIPE ASM-90D W/1HB,4X10,SS,LH

ITEM	PART #	QTY	DESCRIPTION	COMMENTS
1	AG051535	2	CAP-PIPE,0.75NPT PP	
2	AG051884	1	TEE 1.00 304SS	
3	AG051932	2	ELBOW 90D 0.75 304SS	
4	AG129187	AR	PIPE SEALANT-FLEX BLACK	
5	AG217494	1	TUBE BREAK STUB 5.00	
6	AG517602	1	CONNECTOR MA 6 WAY 150 SEALED	
7	AG217603	1	TUBE BOOM BREAKAWAY 16.00	
8	AG217610	1	TUBE BOOM BREAKAWAY	
9	AG562304	1	ELBOW 90D 1.00X1.00 S.S. 304	
10	AG562712	2	BUSHING 1.00MNPTX0.75FNPT 304S	
11	AG710516	1	NIPPLE 1.00NPTX 1.50CLS 304SS	
12	AG845079	1	NIPPLE KING 1.00 316SS	

Copyright © 2007 AGCO Corporation

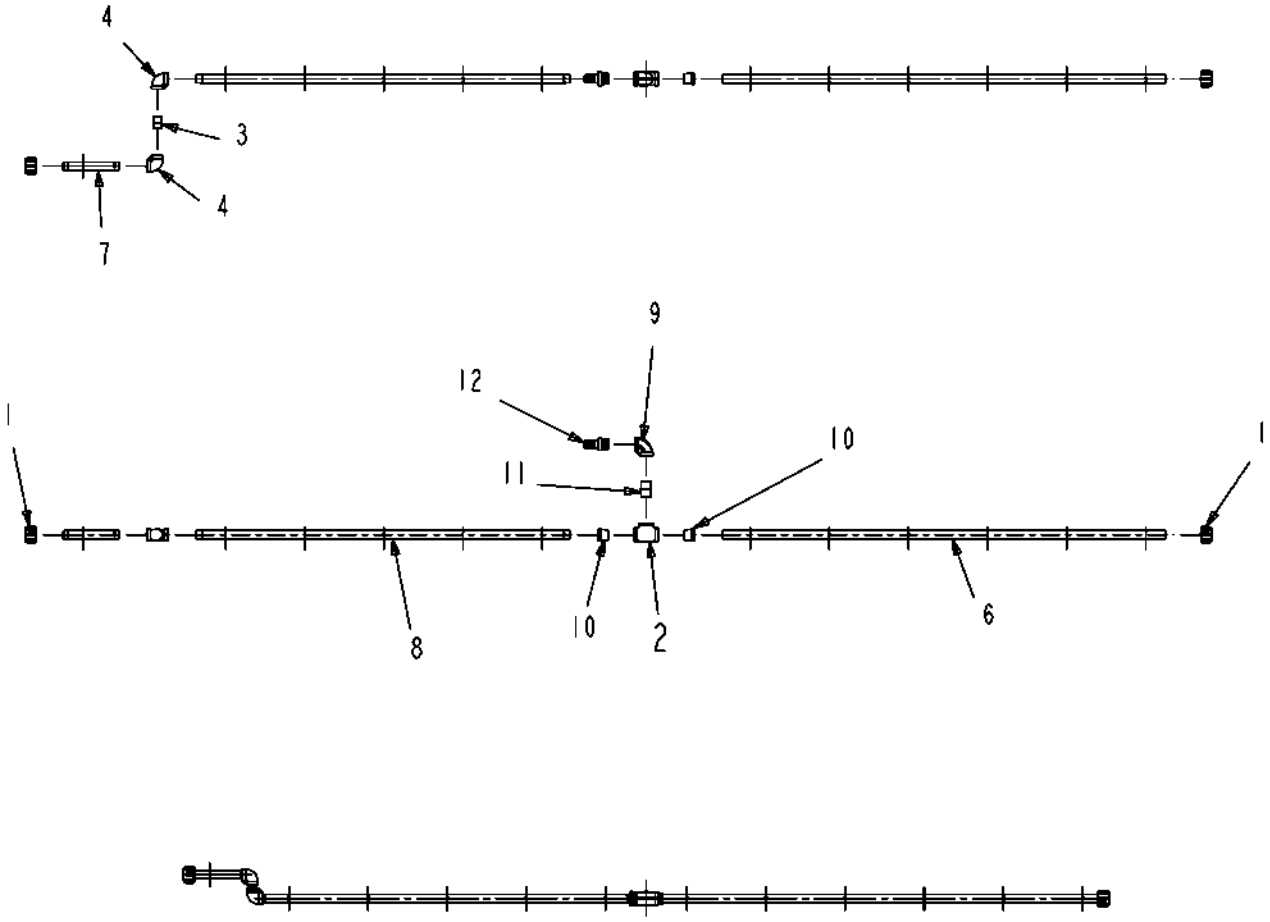

134626-A.TIF

Copyright © 2007 AGCO Corporation

PIPE ASM-90D W/1HB,12X10,SS,RH

ITEM	PART #	QTY	DESCRIPTION	COMMENTS
1	AG051535	2	CAP-PIPE,0.75NPT PP	
2	AG051884	1	TEE 1.00 304SS	
3	AG051903	1	NIPPLE 0.75NPTX 1.37CLS 304SS	
4	AG051932	2	ELBOW 90D 0.75 304SS	
5	AG129187	AR	PIPE SEALANT-FLEX BLACK	
6	AG217605	1	TUBE BOOM TIP OUTER 56.00 IN	
7	AG217611	1	TUBE BREAK STUB 7.00	
8	AG217612	1	TUBE BOOM TIP INNER 47.25	
9	AG562304	1	ELBOW 90D 1.00X1.00 S.S. 304	
10	AG562712	2	BUSHING 1.00MNPTX0.75FNPT 304S	
11	AG710516	1	NIPPLE 1.00NPTX 1.50CLS 304SS	
12	AG845079	1	NIPPLE KING 1.00 316SS	

Copyright © 2007 AGCO Corporation

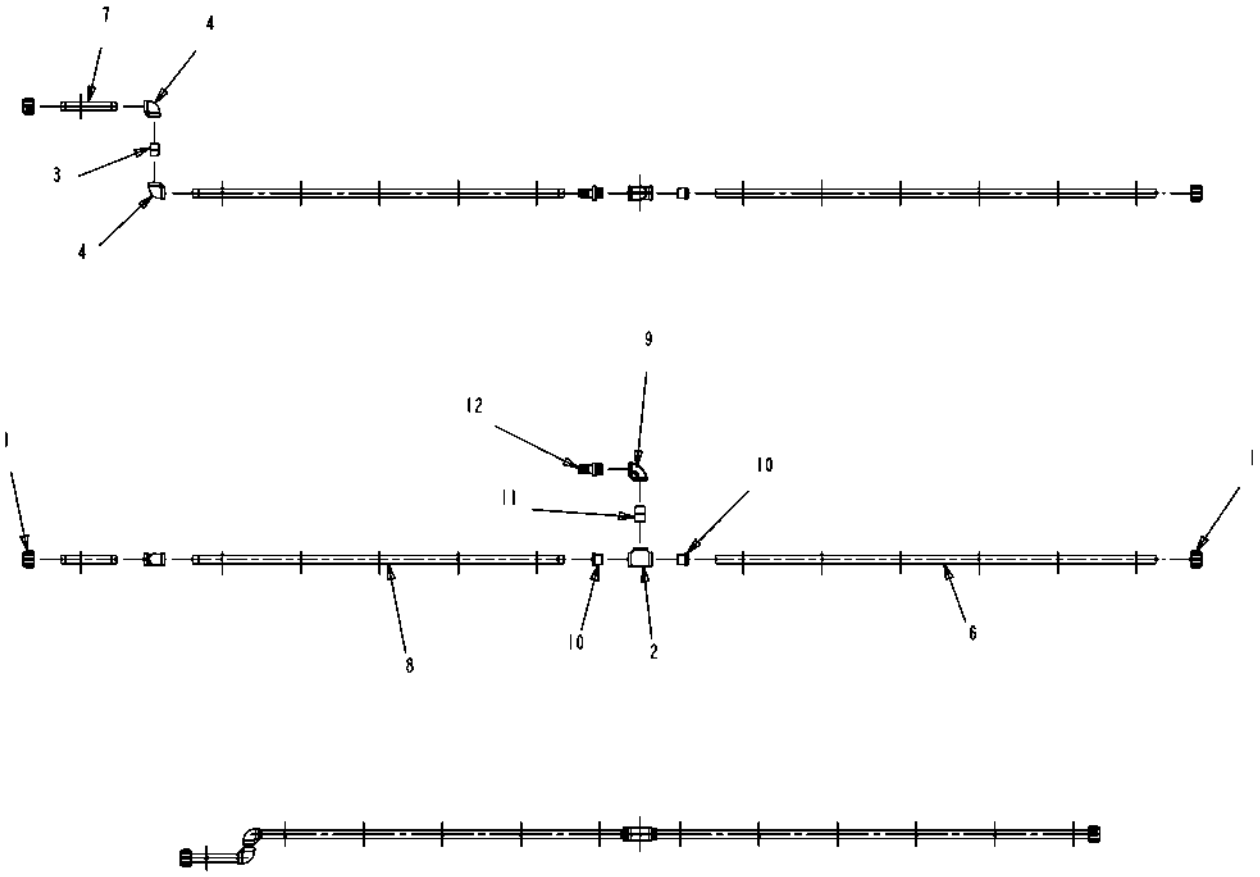

134627-A.TIF

Copyright © 2007 AGCO Corporation

PIPE ASM-90D W/1HD,12X10,SS,LH

ITEM	PART #	QTY	DESCRIPTION	COMMENTS
1	AG051535	2	CAP-PIPE,0.75NPT PP	
2	AG051884	1	TEE 1.00 304SS	
3	AG051903	1	NIPPLE 0.75NPTX 1.37CLS 304SS	
4	AG051932	2	ELBOW 90D 0.75 304SS	
5	AG129187	AR	PIPE SEALANT-FLEX BLACK	
6	AG217605	1	TUBE BOOM TIP OUTER 56.00 IN	
7	AG217611	1	TUBE BREAK STUB 7.00	
8	AG217612	1	TUBE BOOM TIP INNER 47.25	
9	AG562304	1	ELBOW 90D 1.00X1.00 S.S. 304	
10	AG562712	2	BUSHING 1.00MNPTX0.75FNPT 304S	
11	AG710516	1	NIPPLE 1.00NPTX 1.50CLS 304SS	
12	AG845079	1	NIPPLE KING 1.00 316SS	

Copyright © 2007 AGCO Corporation

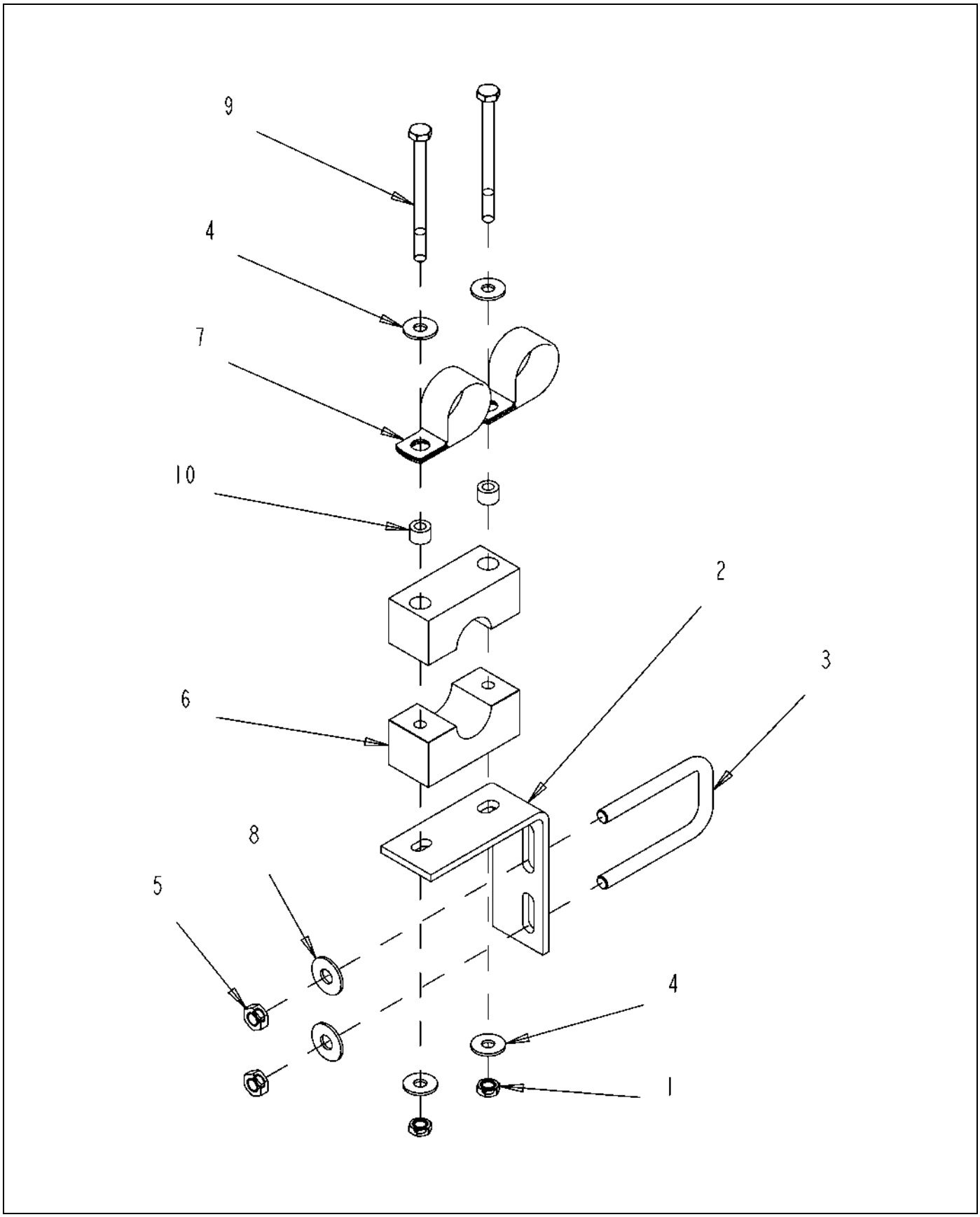

122450-B-1.TIF

Copyright © 2007 AGCO Corporation

BRKT ASM-L W/2 P CLP,LG UBOLT

ITEM	PART #	QTY	DESCRIPTION	COMMENTS
1	AG027275	2	NUT 0.25-20NC HEX SS REG NY	
2	AG232784	1	BRACKET STAND OFF WET BOOM	
3	AG261322	1	BOLT-U .31-18X1.56X 2.97SQ,SS	
4	AG515121	4	WASHER 0.25 FL SS REG TYPE-B	
5	AG516403	2	NUT 0.31-18NC HEX SS REG NY	
6	AG518326	1	CLAMP 3/4 INCH PIPE (RTG)	
7	AG560480	2	CLAMP 1.25-COATED HOSE CO	
8	AG562074	2	WASHER 0.31 FL SS REG TYPE-B	
9	AG563061	2	BOLT 0.25-20NCX 3.25 SS HHD	
10	AG609777	2	INSERT STAUFF SPACER	

Copyright © 2007 AGCO Corporation

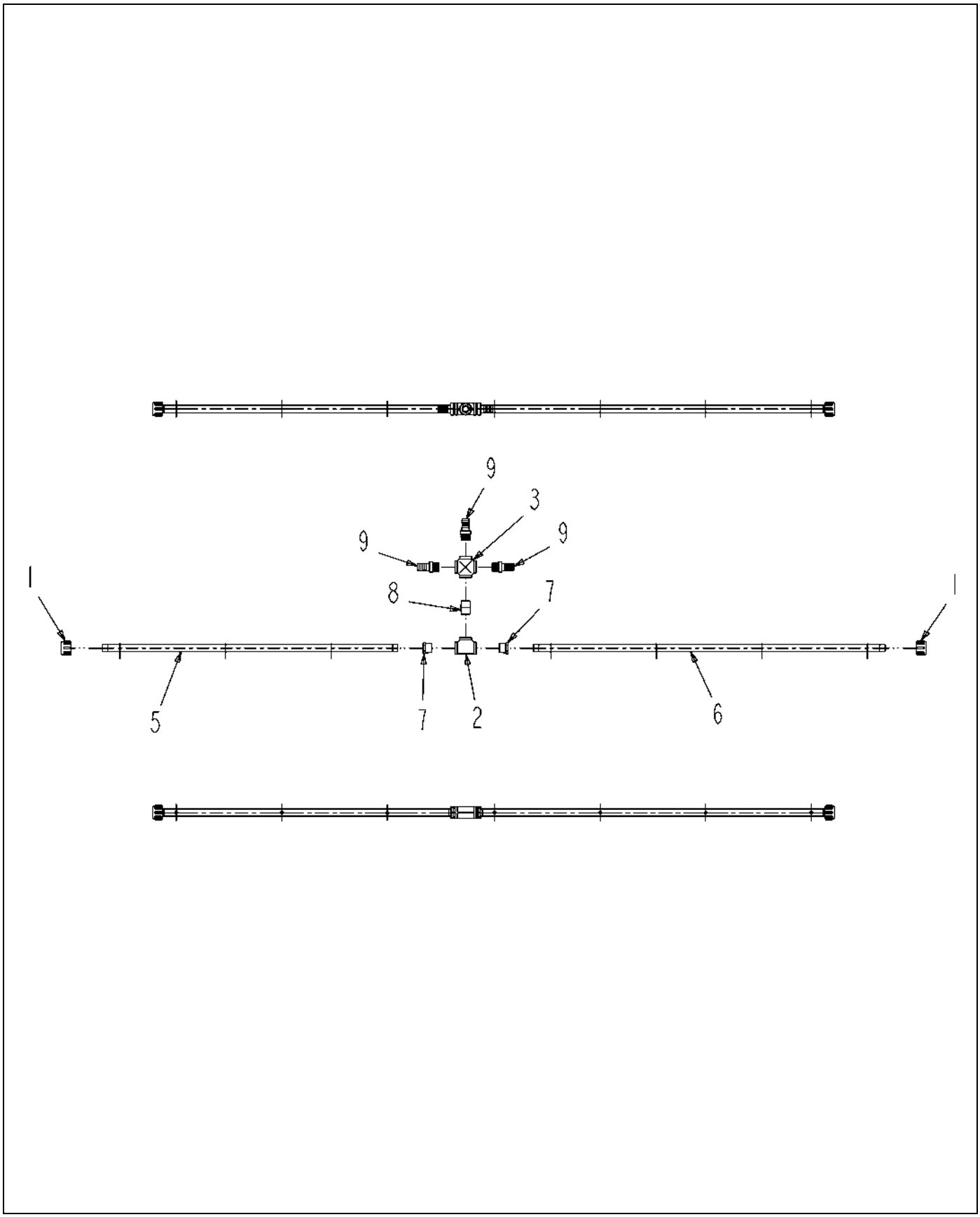

134628-A.TIF

Copyright © 2007 AGCO Corporation

PIPE ASM-X W/3 1.00HB,11X10,SS

ITEM	PART #	QTY	DESCRIPTION	COMMENTS
1	AG051535	2	CAP-PIPE,0.75NPT PP	
2	AG051884	1	TEE 1.00 304SS	
3	AG051910	1	CROSS 1.00 TYPE 304SS	
4	AG129187	AR	PIPE SEALANT-FLEX BLACK	
5	AG217645	1	TUBE BOOM 15 REAR LEFT 42.00 IN	
6	AG217646	1	TUBE BOOM 15 REAR RIGHT 50.00 IN	
7	AG562712	2	BUSHING 1.00MNPTX0.75FNPT 304S	
8	AG710516	1	NIPPLE 1.00NPTX 1.50CLS 304SS	
9	AG845079	3	NIPPLE KING 1.00 316SS	

Copyright © 2007 AGCO Corporation

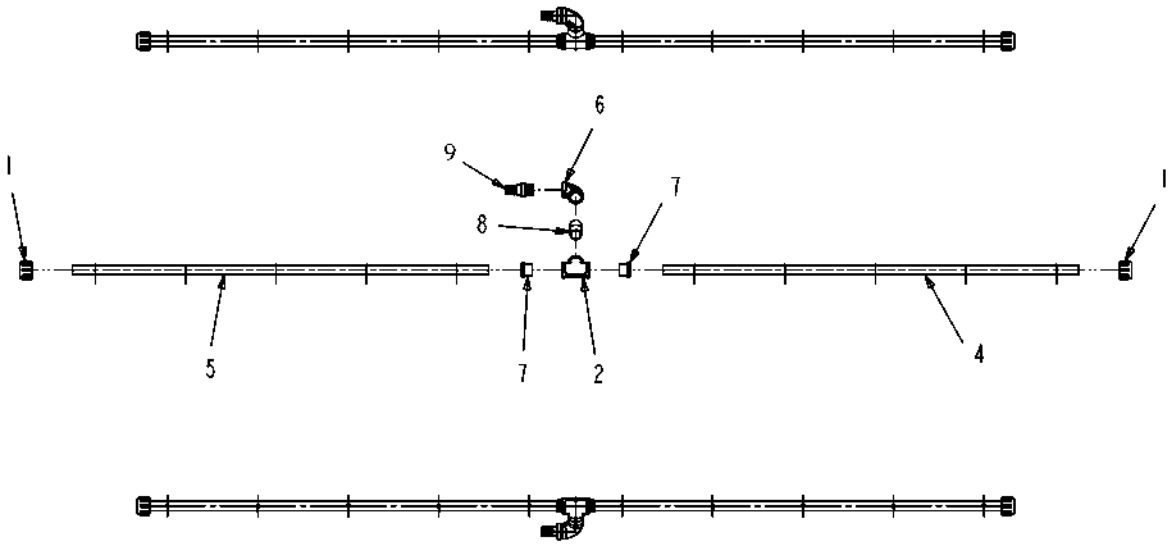

134629-A.tif

Copyright © 2007 AGCO Corporation

PIPE ASM-90D W/1HB,7X15,SS,LH

ITEM	PART #	QTY	DESCRIPTION	COMMENTS
1	AG051535	2	CAP-PIPE,0.75NPT PP	
2	AG051884	1	TEE 1.00 304SS	
3	AG129187	AR	PIPE SEALANT-FLEX BLACK	
4	AG234372	1	TUBE BOOM 15 INNER IN 53.00 IN	
5	AG238431	1	TUBE-BOOM,15,38.00,SS	
6	AG562304	1	ELBOW 90D 1.00X1.00 S.S. 304	
7	AG562712	2	BUSHING 1.00MNPTX0.75FNPT 304S	
8	AG710516	1	NIPPLE 1.00NPTX 1.50CLS 304SS	
9	AG845079	3	NIPPLE KING 1.00 316SS	

Copyright © 2007 AGCO Corporation

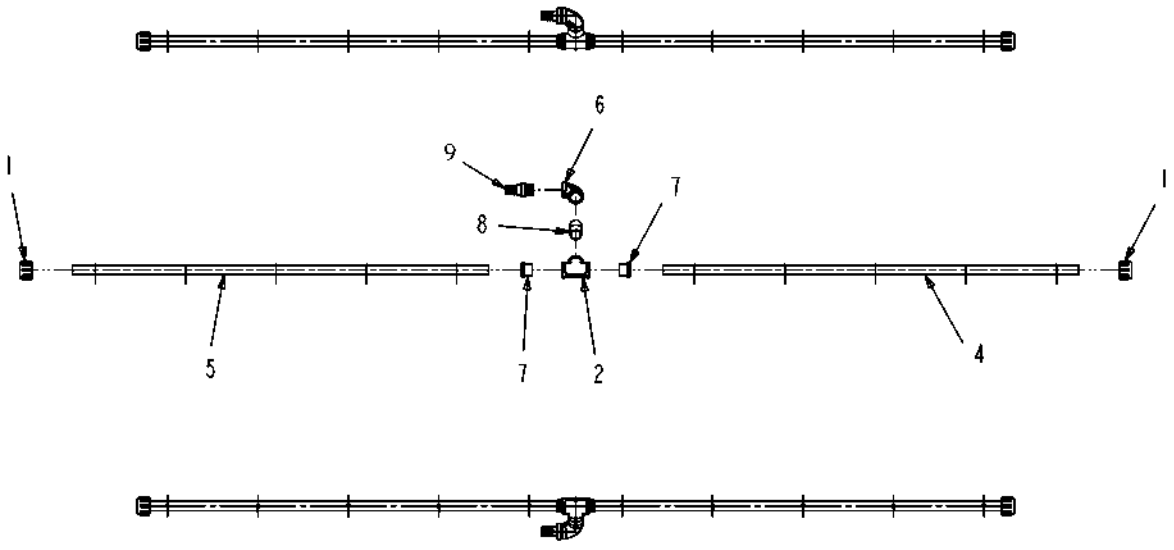

134630-A.tif

Copyright © 2007 AGCO Corporation

PIPE ASM-90D W/1HB,7X15,SS,RH

ITEM	PART #	QTY	DESCRIPTION	COMMENTS
1	AG051535	2	CAP-PIPE,0.75NPT PP	
2	AG051884	1	TEE 1.00 304SS	
3	AG129187	AR	PIPE SEALANT-FLEX BLACK	
4	AG234372	1	TUBE BOOM 15 INNER IN 53.00 IN	
5	AG238431	1	TUBE-BOOM,15,38.00,SS	
6	AG562304	1	ELBOW 90D 1.00X1.00 S.S. 304	
7	AG562712	2	BUSHING 1.00MNPTX0.75FNPT 304S	
8	AG710516	1	NIPPLE 1.00NPTX 1.50CLS 304SS	
9	AG845079	3	NIPPLE KING 1.00 316SS	

Copyright © 2007 AGCO Corporation

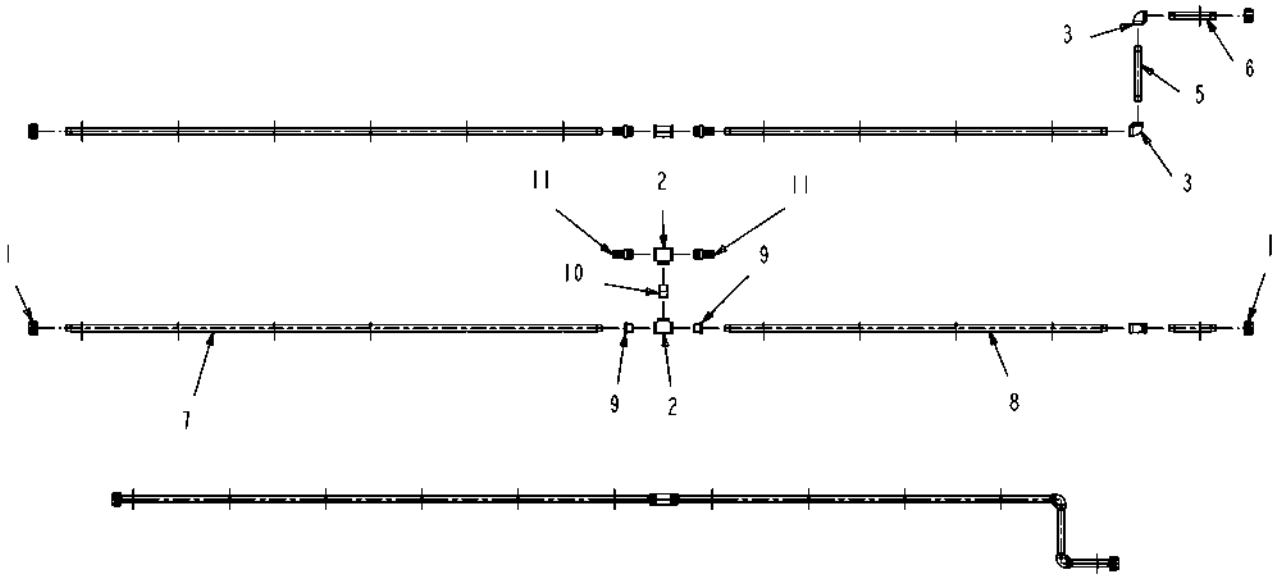

134631-A.TIF

Copyright © 2007 AGCO Corporation

PIPE ASM-T W/2 1HB,11X15,SS,LH

ITEM	PART #	QTY	DESCRIPTION	COMMENTS
1	AG051535	2	CAP-PIPE,0.75NPT PP	
2	AG051884	2	TEE 1.00 304SS	
3	AG051932	2	ELBOW 90D 0.75 304SS	
4	AG129187	AR	PIPE SEALANT-FLEX BLACK	
5	AG217610	1	TUBE BOOM BREAKAWAY	
6	AG217643	1	TUBE BOOM 15 BREAKAWAY 7.25 IN	
7	AG238498	1	TUBE-BOOM,15,83.50,SS	
8	AG238499	1	TUBE-BOOM,15,59.50,SS	
9	AG562712	2	BUSHING 1.00MNPTX0.75FNPT 304S	
10	AG710516	1	NIPPLE 1.00NPTX 1.50CLS 304SS	
11	AG845079	2	NIPPLE KING 1.00 316SS	

Copyright © 2007 AGCO Corporation

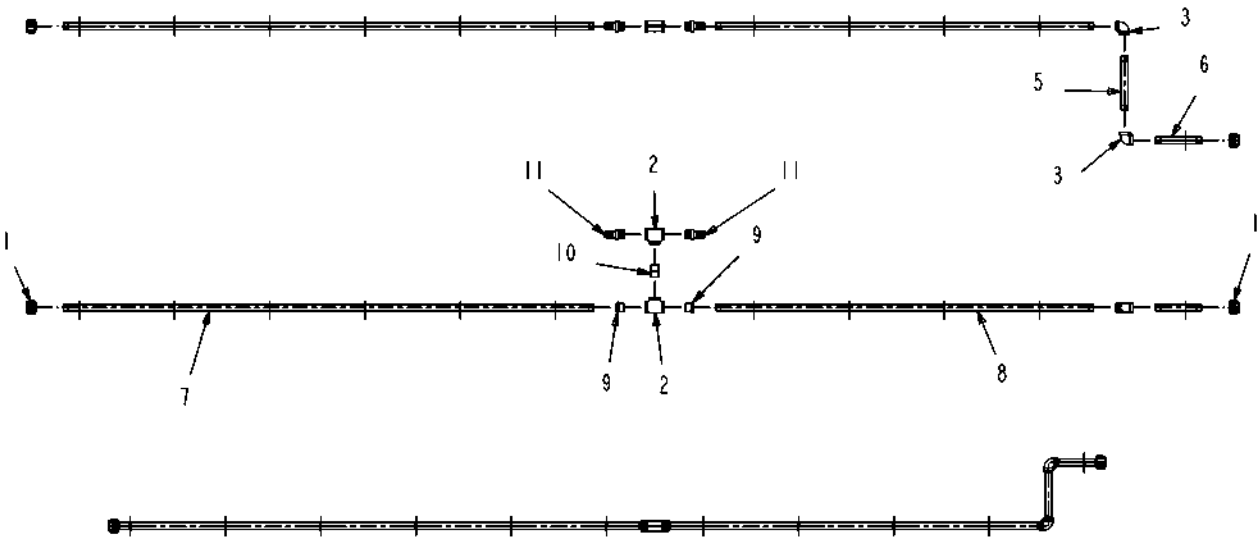

134632-A.TIF

Copyright © 2007 AGCO Corporation

PIPE ASM-T W/2 1HB,11X15,SS,RH

ITEM	PART #	QTY	DESCRIPTION	COMMENTS
1	AG051535	2	CAP-PIPE,0.75NPT PP	
2	AG051884	2	TEE 1.00 304SS	
3	AG051932	2	ELBOW 90D 0.75 304SS	
4	AG129187	AR	PIPE SEALANT-FLEX BLACK	
5	AG217610	1	TUBE BOOM BREAKAWAY	
6	AG217643	1	TUBE BOOM 15 BREAKAWAY 7.25 IN	
7	AG238498	1	TUBE-BOOM,15,83.50,SS	
8	AG238499	1	TUBE-BOOM,15,59.50,SS	
9	AG562712	2	BUSHING 1.00MNPTX0.75FNPT 304S	
10	AG710516	1	NIPPLE 1.00NPTX 1.50CLS 304SS	
11	AG845079	2	NIPPLE KING 1.00 316SS	

Copyright © 2007 AGCO Corporation

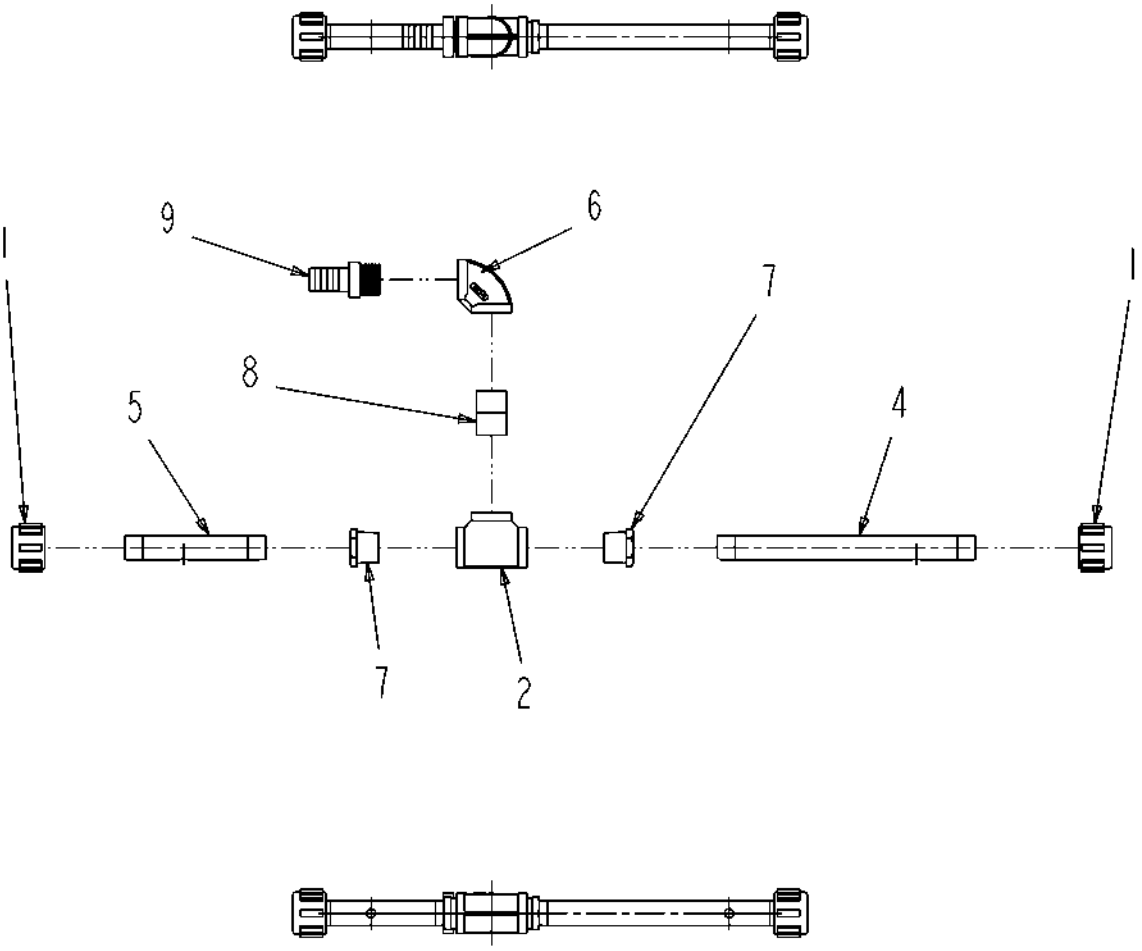

134633-A.tif

Copyright © 2007 AGCO Corporation

PIPE ASM-90D W/1.00HB,2X15,SS

ITEM	PART #	QTY	DESCRIPTION	COMMENTS
1	AG051535	2	CAP-PIPE,0.75NPT PP	
2	AG051884	1	TEE 1.00 304SS	
3	AG129187	AR	PIPE SEALANT-FLEX BLACK	
4	AG217648	1	TUBE BOOM 15 SPLIT 11.00 IN	
5	AG239792	1	TUBE-BOOM,15 SPLIT,6.00	
6	AG562304	1	ELBOW 90D 1.00X1.00 S.S. 304	
7	AG562712	2	BUSHING 1.00MNPTX0.75FNPT 304S	
8	AG710516	1	NIPPLE 1.00NPTX 1.50CLS 304SS	
9	AG845079	1	NIPPLE KING 1.00 316SS	

Copyright © 2007 AGCO Corporation

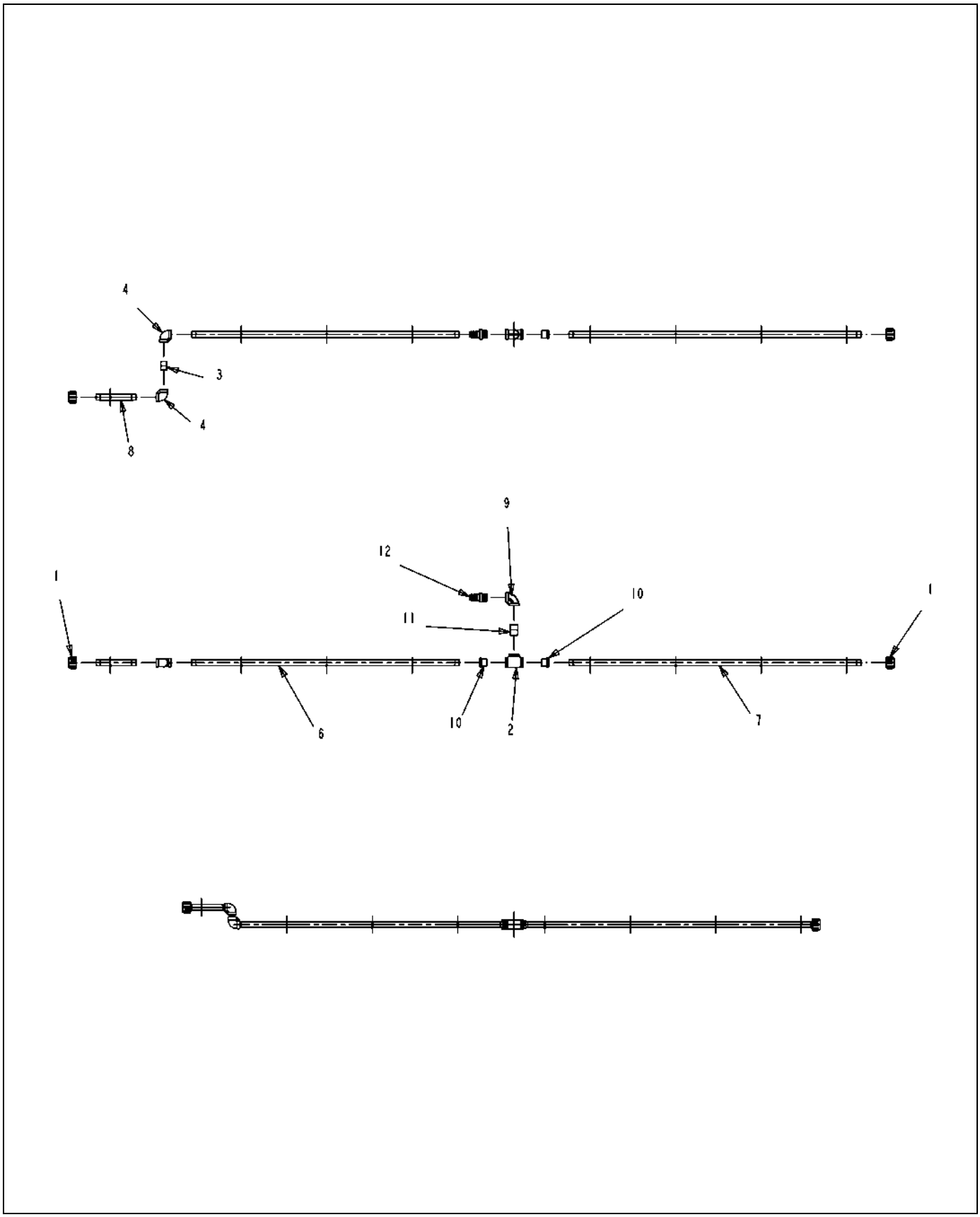

134634-A.TIF

Copyright © 2007 AGCO Corporation

PIPE ASM-90D W/1HB,8X15,SS,RH

ITEM	PART #	QTY	DESCRIPTION	COMMENTS
1	AG051535	2	CAP-PIPE,0.75NPT PP	
2	AG051884	1	TEE 1.00 304SS	
3	AG051903	1	NIPPLE 0.75NPTX 1.37CLS 304SS	
4	AG051932	2	ELBOW 90D 0.75 304SS	
5	AG129187	AR	PIPE SEALANT-FLEX BLACK	
6	AG217649	1	TUBE BOOM 15 TIP INNER 47.00 IN	
7	AG217650	1	TUBE BOOM	
8	AG217651	1	TUBE BOOM 15 TIP FOLD 7.00 IN	
9	AG562304	1	ELBOW 90D 1.00X1.00 S.S. 304	
10	AG562712	2	BUSHING 1.00MNPTX0.75FNPT 304S	
11	AG710516	1	NIPPLE 1.00NPTX 1.50CLS 304SS	
12	AG845079	1	NIPPLE KING 1.00 316SS	

Copyright © 2007 AGCO Corporation

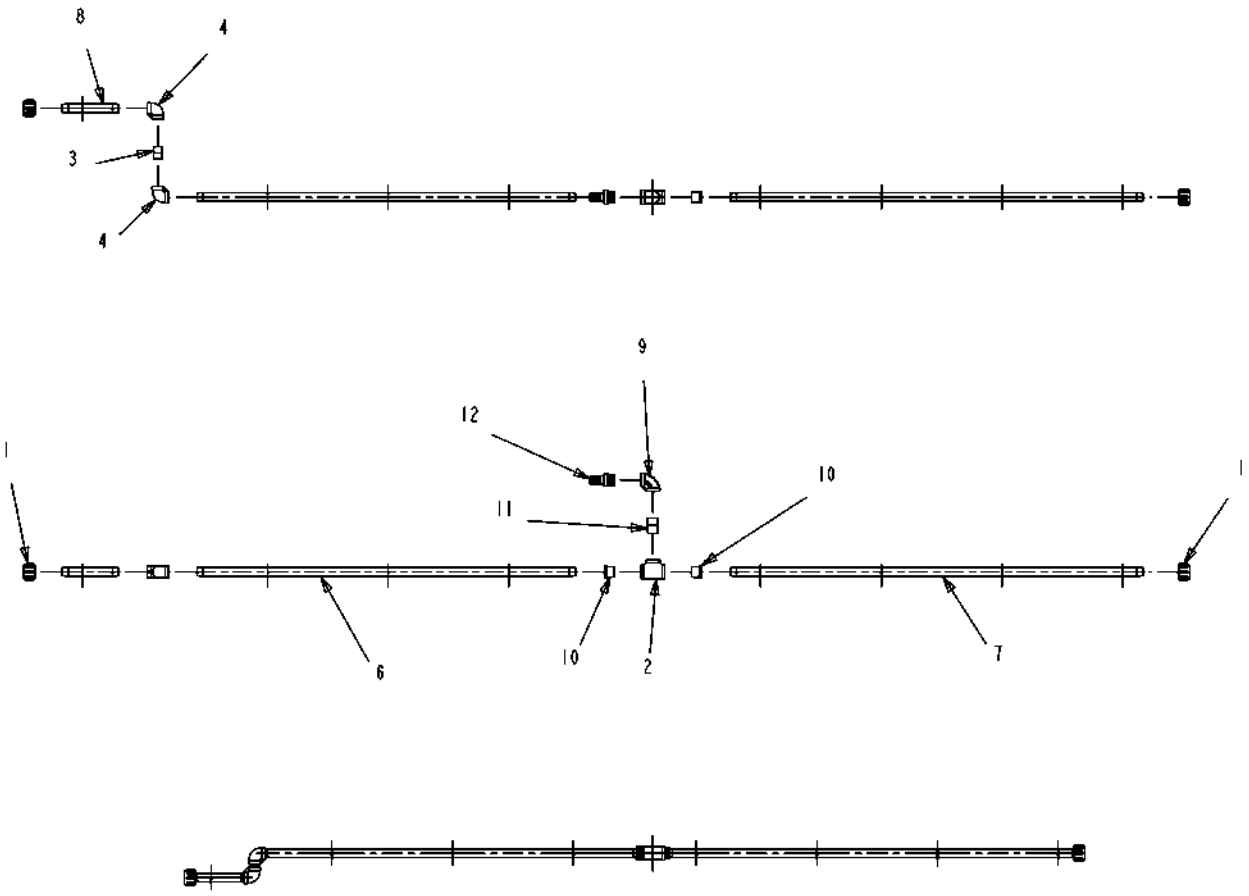

134635-A.TIF

Copyright © 2007 AGCO Corporation

PIPE ASM-90D W/1HB,8X15,SS,LH

ITEM	PART #	QTY	DESCRIPTION	COMMENTS
1	AG051535	2	CAP-PIPE,0.75NPT PP	
2	AG051884	1	TEE 1.00 304SS	
3	AG051903	1	NIPPLE 0.75NPTX 1.37CLS 304SS	
4	AG051932	2	ELBOW 90D 0.75 304SS	
5	AG129187	AR	PIPE SEALANT-FLEX BLACK	
6	AG217649	1	TUBE BOOM 15 TIP INNER 47.00 IN	
7	AG217650	1	TUBE BOOM	
8	AG217651	1	TUBE BOOM 15 TIP FOLD 7.00 IN	
9	AG562304	1	ELBOW 90D 1.00X1.00 S.S. 304	
10	AG562712	2	BUSHING 1.00MNPTX0.75FNPT 304S	
11	AG710516	1	NIPPLE 1.00NPTX 1.50CLS 304SS	
12	AG845079	1	NIPPLE KING 1.00 316SS	

Copyright © 2007 AGCO Corporation

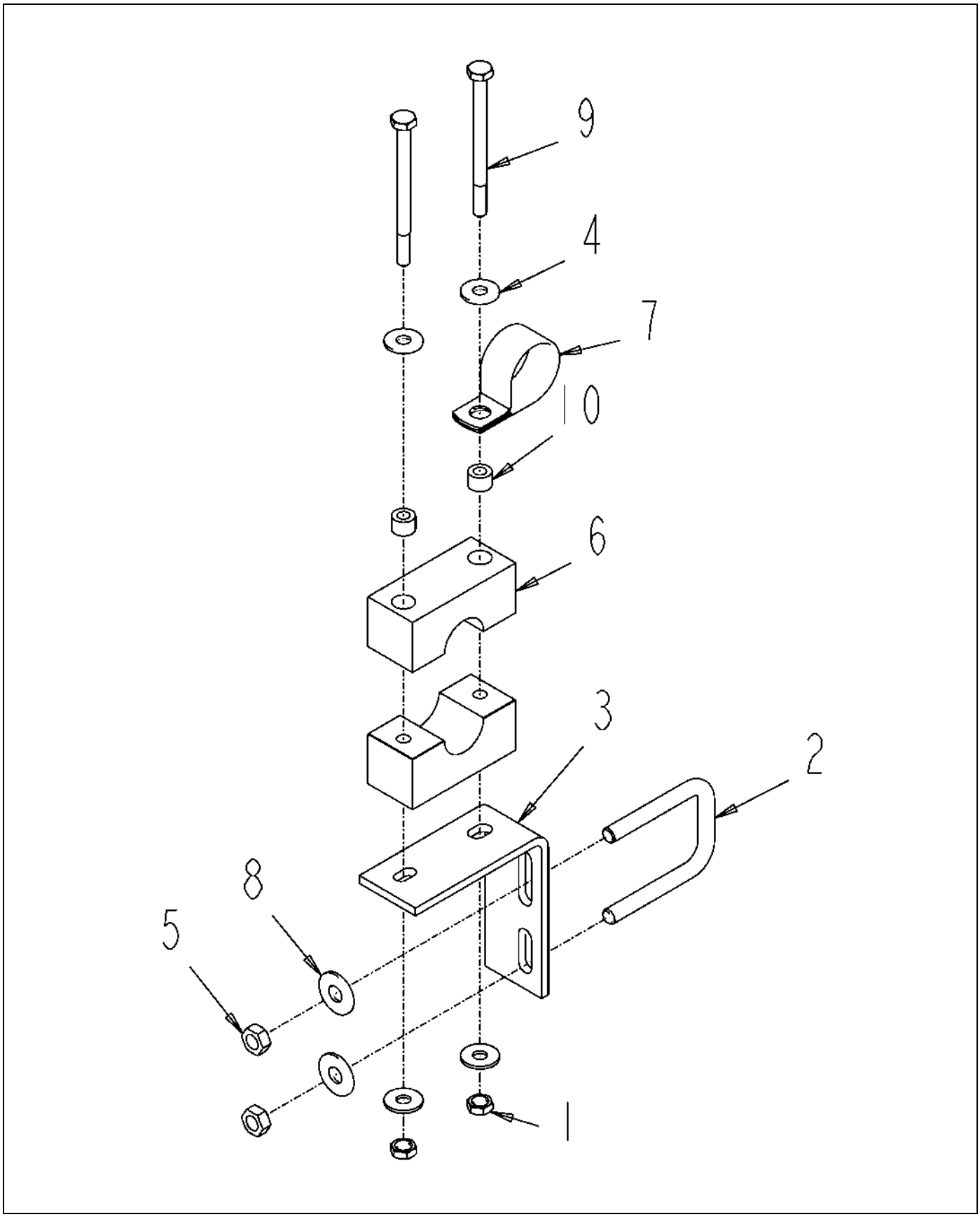

122515-B.TIF

Copyright © 2007 AGCO Corporation

BRKT ASM-L W/REV P CLP

ITEM	PART #	QTY	DESCRIPTION	COMMENTS
1	AG027275	2	NUT 0.25-20NC HEX SS REG NY	
2	AG231204	1	BOLT-U .31-18X1.88X2.63	
3	AG232784	1	BRACKET STAND OFF WET BOOM	
4	AG515121	4	WASHER 0.25 FL SS REG TYPE-B	
5	AG516403	2	NUT 0.31-18NC HEX SS REG NY	
6	AG518326	1	CLAMP 3/4 INCH PIPE (RTG)	
7	AG560480	1	CLAMP 1.25-COATED HOSE CO	
8	AG562074	2	WASHER 0.31 FL SS REG TYPE-B	
9	AG563061	2	BOLT 0.25-20NCX 3.25 SS HHD	
10	AG609777	2	INSERT STAUFF SPACER	

Copyright © 2007 AGCO Corporation

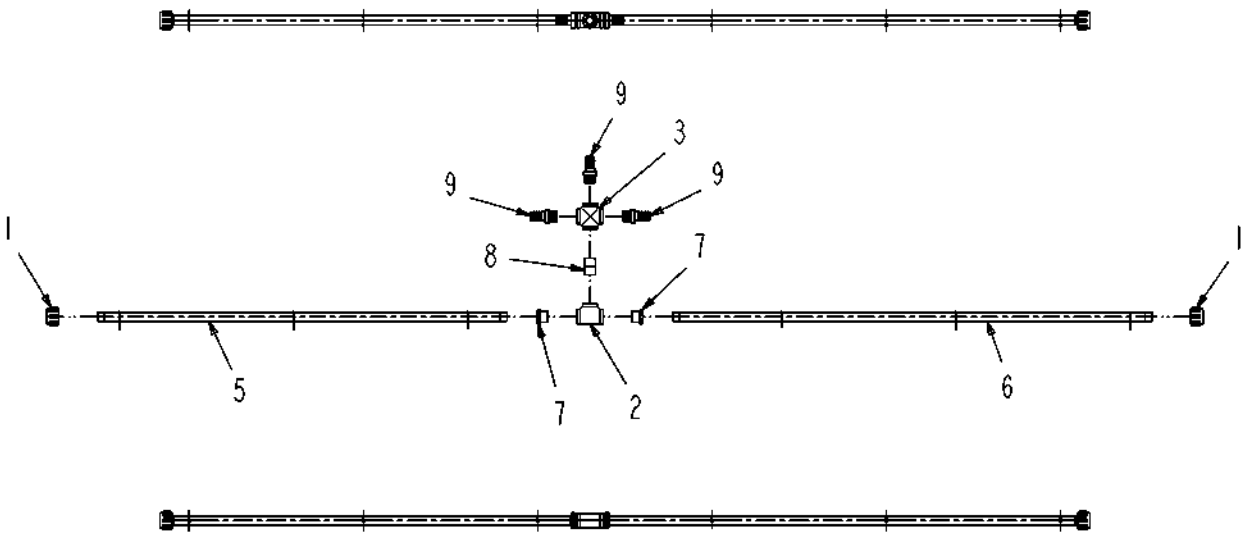

134636-A.tif

Copyright © 2007 AGCO Corporation

PIPE ASM-X W/3 1.00HB,6X20,SS

ITEM	PART #	QTY	DESCRIPTION	COMMENTS
1	AG051535	2	CAP-PIPE,0.75NPT PP	
2	AG051884	1	TEE 1.00 304SS	
3	AG051910	1	CROSS 1.00 TYPE 304SS	
4	AG129187	AR	PIPE SEALANT-FLEX BLACK	
5	AG231211	1	TUBE CENTER LEFT 47.00	
6	AG231212	1	TUBE CENTER RIGHT 55.00	
7	AG562712	2	BUSHING 1.00MNPTX0.75FNPT 304S	
8	AG710516	1	NIPPLE 1.00NPTX 1.50CLS 304SS	
9	AG845079	3	NIPPLE KING 1.00 316SS	

Copyright © 2007 AGCO Corporation

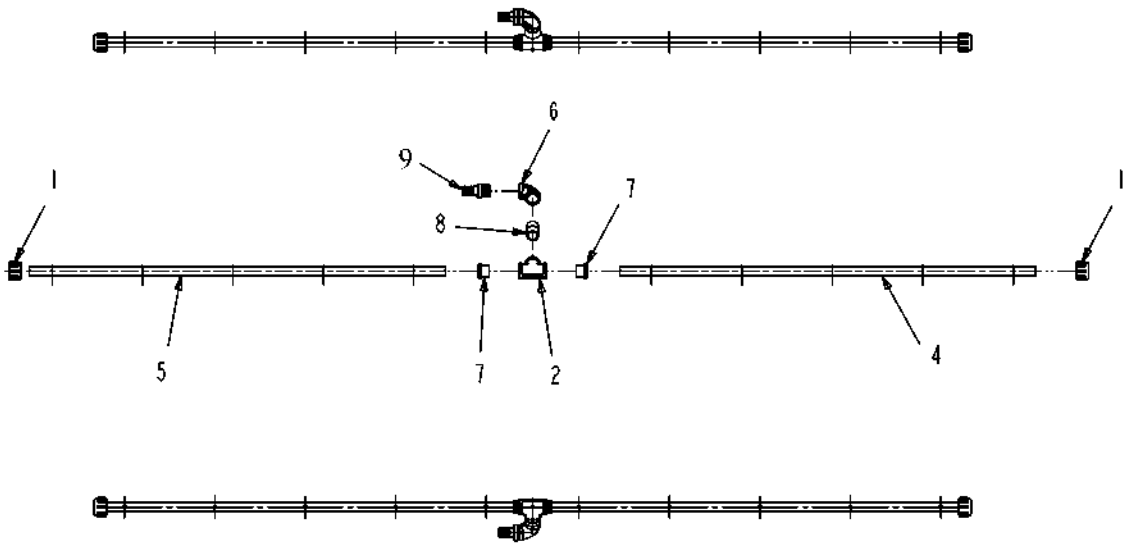

134637-A.tif

Copyright © 2007 AGCO Corporation

PIPE ASM-90D W/1HB,5X20,SS,LH

ITEM	PART #	QTY	DESCRIPTION	COMMENTS
1	AG051535	2	CAP-PIPE,0.75NPT PP	
2	AG051884	1	TEE 1.00 304SS	
3	AG129187	AR	PIPE SEALANT-FLEX BLACK	
4	AG217616	1	TUBE BOOM 20 INNER OUT 46.00	
5	AG239791	1	TUBE-BOOM,20 INNER,36.00	
6	AG562304	1	ELBOW 90D 1.00X1.00 S.S. 304	
7	AG562712	2	BUSHING 1.00MNPTX0.75FNPT 304S	
8	AG710516	1	NIPPLE 1.00NPTX 1.50CLS 304SS	
9	AG845079	3	NIPPLE KING 1.00 316SS	

Copyright © 2007 AGCO Corporation

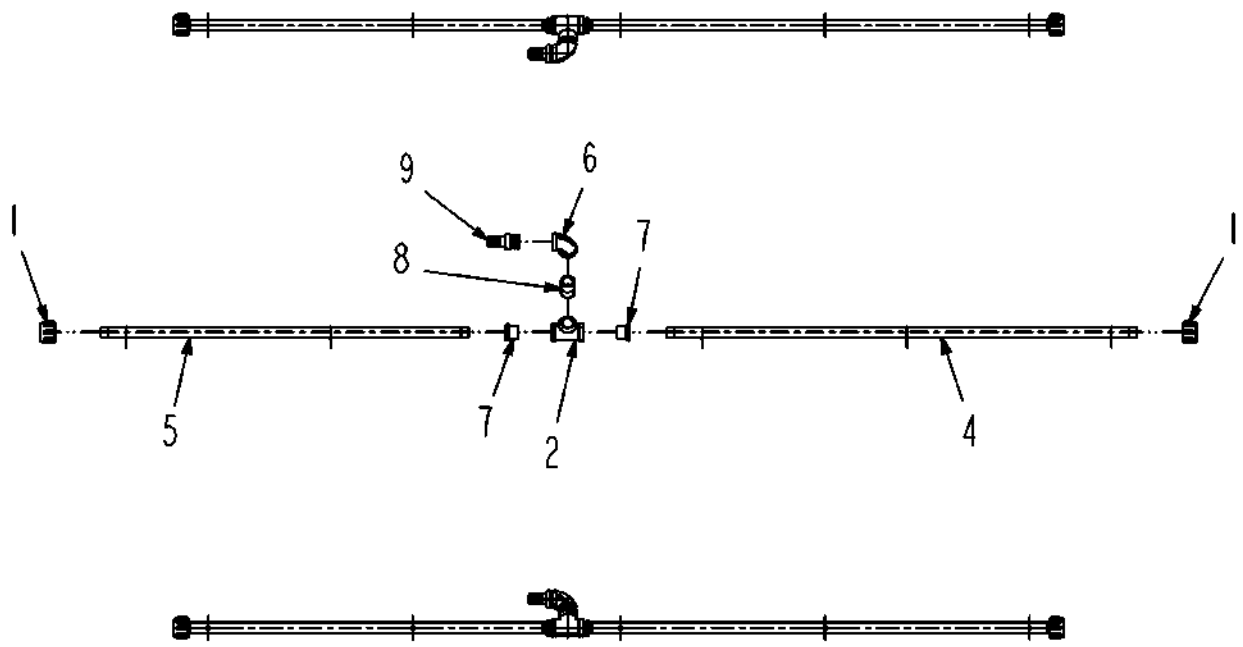

134638-A-M213-.TIF

Copyright © 2007 AGCO Corporation

PIPE ASM-90D W/1HB,5X20,SS,RH

ITEM	PART #	QTY	DESCRIPTION	COMMENTS
1	AG051535	2	CAP-PIPE,0.75NPT PP	
2	AG051884	1	TEE 1.00 304SS	
3	AG129187	AR	PIPE SEALANT-FLEX BLACK	
4	AG217616	1	TUBE BOOM 20 INNER OUT 46.00	
5	AG239791	1	TUBE-BOOM,20 INNER,36.00	
6	AG562304	1	ELBOW 90D 1.00X1.00 S.S. 304	
7	AG562712	2	BUSHING 1.00MNPTX0.75FNPT 304S	
8	AG710516	1	NIPPLE 1.00NPTX 1.50CLS 304SS	
9	AG845079	3	NIPPLE KING 1.00 316SS	

Copyright © 2007 AGCO Corporation

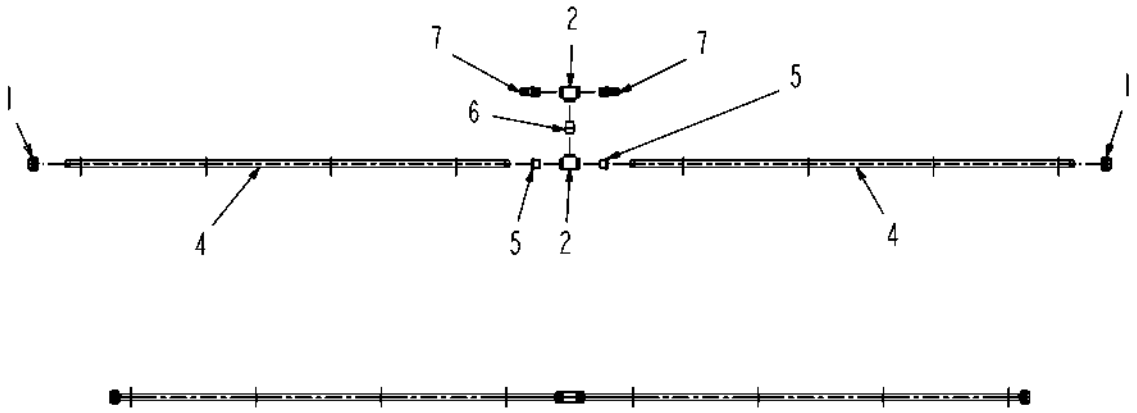

134639-A.tif

Copyright © 2007 AGCO Corporation

PIPE ASM-T W/2 1.00HB,8X20,SS

ITEM	PART #	QTY	DESCRIPTION	COMMENTS
1	AG051535	2	CAP-PIPE,0.75NPT PP	
2	AG051884	2	TEE 1.00 304SS	
3	AG129187	AR	PIPE SEALANT-FLEX BLACK	
4	AG233237	2	TUBE BOOM 20 MIDDLE IN 71.00	
5	AG562712	2	BUSHING 1.00MNPTX0.75FNPT 304S	
6	AG710516	1	NIPPLE 1.00NPTX 1.50CLS 304SS	
7	AG845079	2	NIPPLE KING 1.00 316SS	

Copyright © 2007 AGCO Corporation

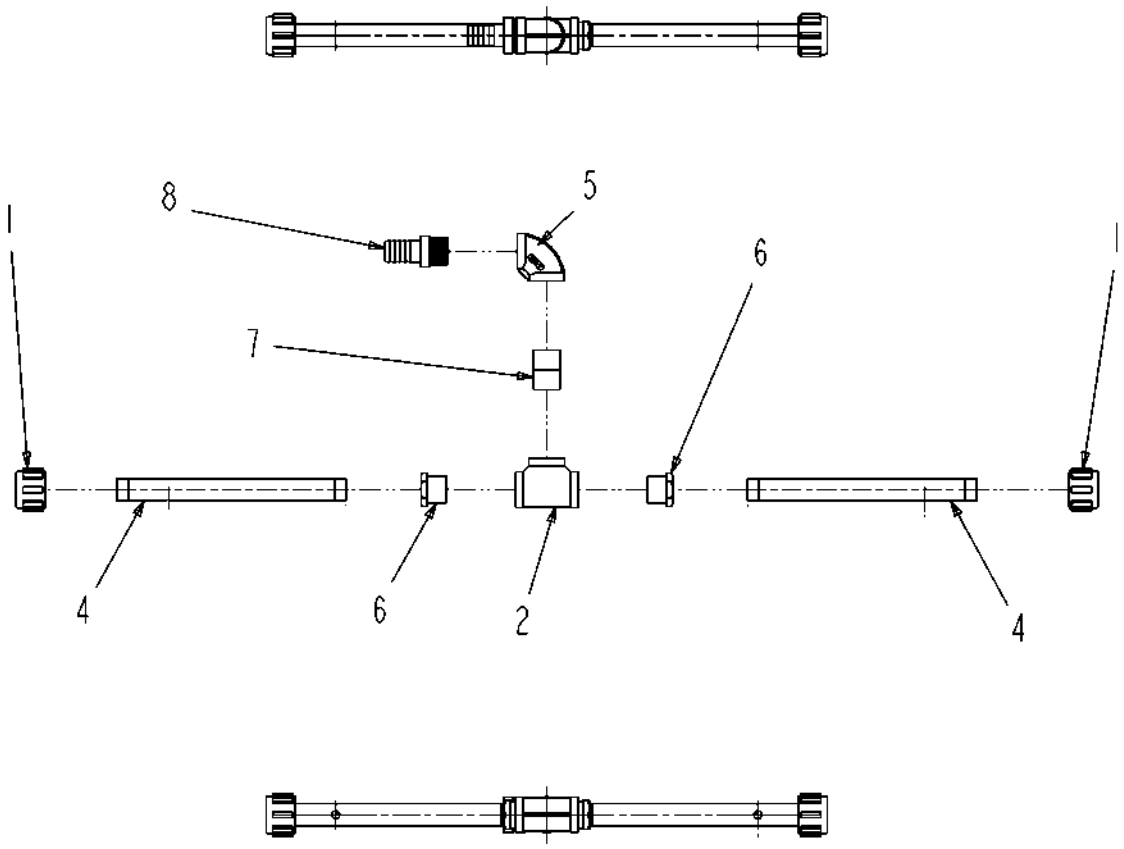

134640-A.tif

Copyright © 2007 AGCO Corporation

PIPE ASM-90D W/1.00HB,2X20,SS

ITEM	PART #	QTY	DESCRIPTION	COMMENTS
1	AG051535	2	CAP-PIPE,0.75NPT PP	
2	AG051884	1	TEE 1.00 304SS	
3	AG129187	AR	PIPE SEALANT-FLEX BLACK	
4	AG217489	2	TUBE BOOM SPLIT	
5	AG562304	1	ELBOW 90D 1.00X1.00 S.S. 304	
6	AG562712	2	BUSHING 1.00MNPTX0.75FNPT 304S	
7	AG710516	1	NIPPLE 1.00NPTX 1.50CLS 304SS	
8	AG845079	1	NIPPLE KING 1.00 316SS	

Copyright © 2007 AGCO Corporation

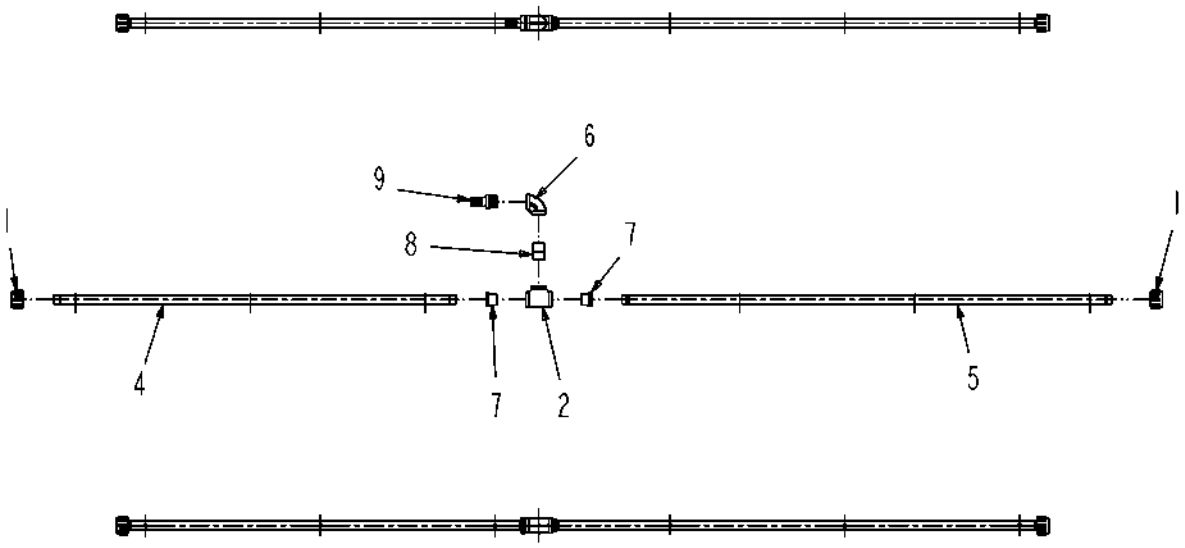

134641-A.tif

Copyright © 2007 AGCO Corporation

PIPE ASM-90D W/1.00HB,6X20,SS

ITEM	PART #	QTY	DESCRIPTION	COMMENTS
1	AG051535	2	CAP-PIPE,0.75NPT PP	
2	AG051884	1	TEE 1.00 304SS	
3	AG129187	AR	PIPE SEALANT-FLEX BLACK	
4	AG217616	1	TUBE BOOM 20 INNER OUT 46.00	
5	AG217622	1	TUBE BOOM 20 TIP OUTER 56.00	
6	AG562304	1	ELBOW 90D 1.00X1.00 S.S. 304	
7	AG562712	2	BUSHING 1.00MNPTX0.75FNPT 304S	
8	AG710516	1	NIPPLE 1.00NPTX 1.50CLS 304SS	
9	AG845079	1	NIPPLE KING 1.00 316SS	

Copyright © 2007 AGCO Corporation

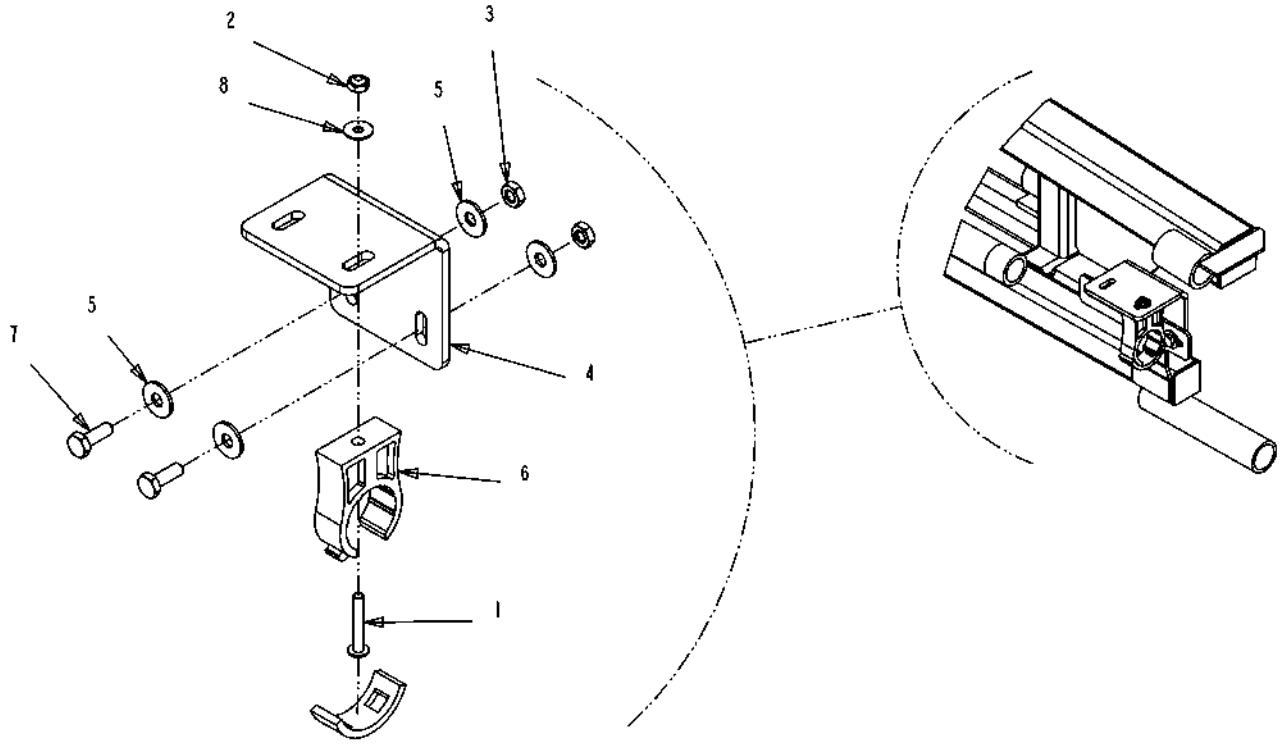

134670-A.TIF

Copyright © 2007 AGCO Corporation

BRKT ASM-ENDROW,IPS CLP,RH

ITEM	PART #	QTY	DESCRIPTION	COMMENTS
1	AG027273	1	SCREW 10-24X 1.25 PHD PHILSS(P	
2	AG027274	1	NUT #10-24NC HEX SS REG NY	
3	AG027275	2	NUT 0.25-20NC HEX SS REG NY	
4	AG134605	1	BRKT-MTG,STANDOFF,ENDROW	
5	AG515121	4	WASHER 0.25 FL SS REG TYPE-B	
6	AG519749	1	CLAMP 1.00 IPS POLY	
7	AG562054	2	BOLT 0.25-20NCX 0.75 SS HHD	
8	AG562082	1	WASHER #10 FL SS REG TYPE-B	

Copyright © 2007 AGCO Corporation

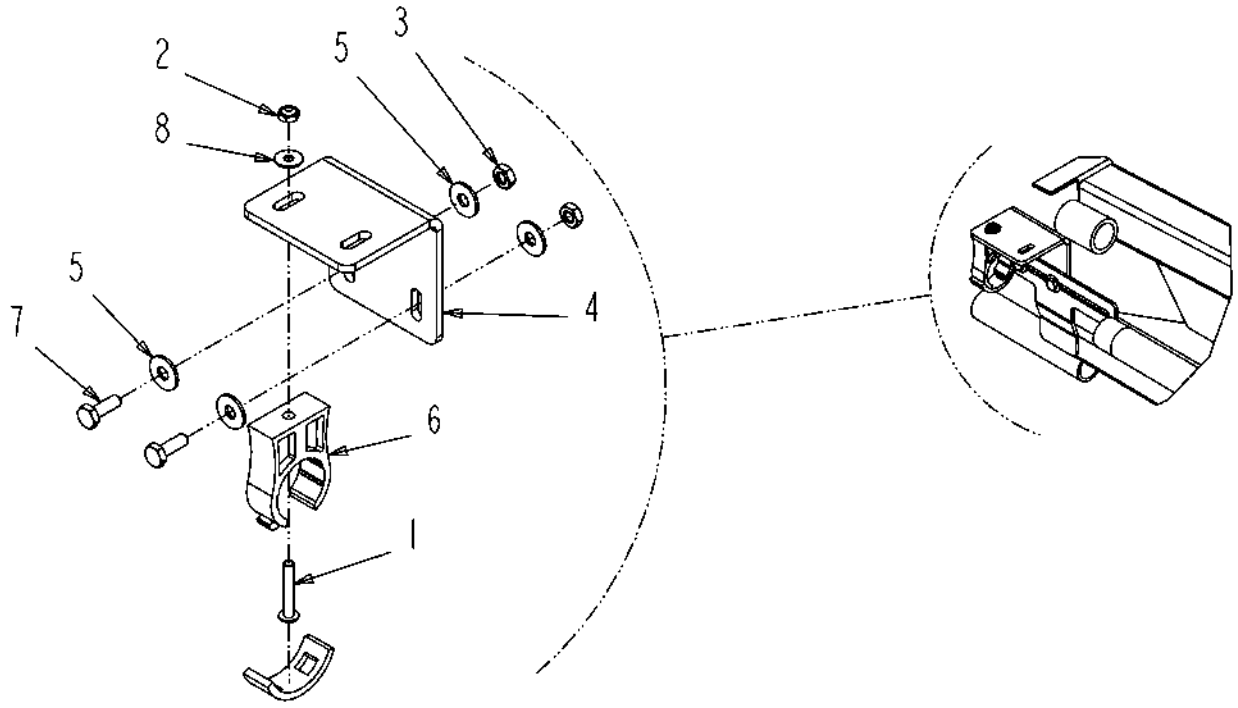

134747-A.TIF

Copyright © 2007 AGCO Corporation

BRKT ASM-ENDROW,IPS CLP,LH

ITEM	PART #	QTY	DESCRIPTION	COMMENTS
1	AG027273	1	SCREW 10-24X 1.25 PHD PHILSS(P	
2	AG027274	1	NUT #10-24NC HEX SS REG NY	
3	AG027275	2	NUT 0.25-20NC HEX SS REG NY	
4	AG134605	1	BRKT-MTG,STANDOFF,ENDROW	
5	AG515121	4	WASHER 0.25 FL SS REG TYPE-B	
6	AG519749	1	CLAMP 1.00 IPS POLY	
7	AG562054	2	BOLT 0.25-20NCX 0.75 SS HHD	
8	AG562082	1	WASHER #10 FL SS REG TYPE-B	

Copyright © 2007 AGCO Corporation

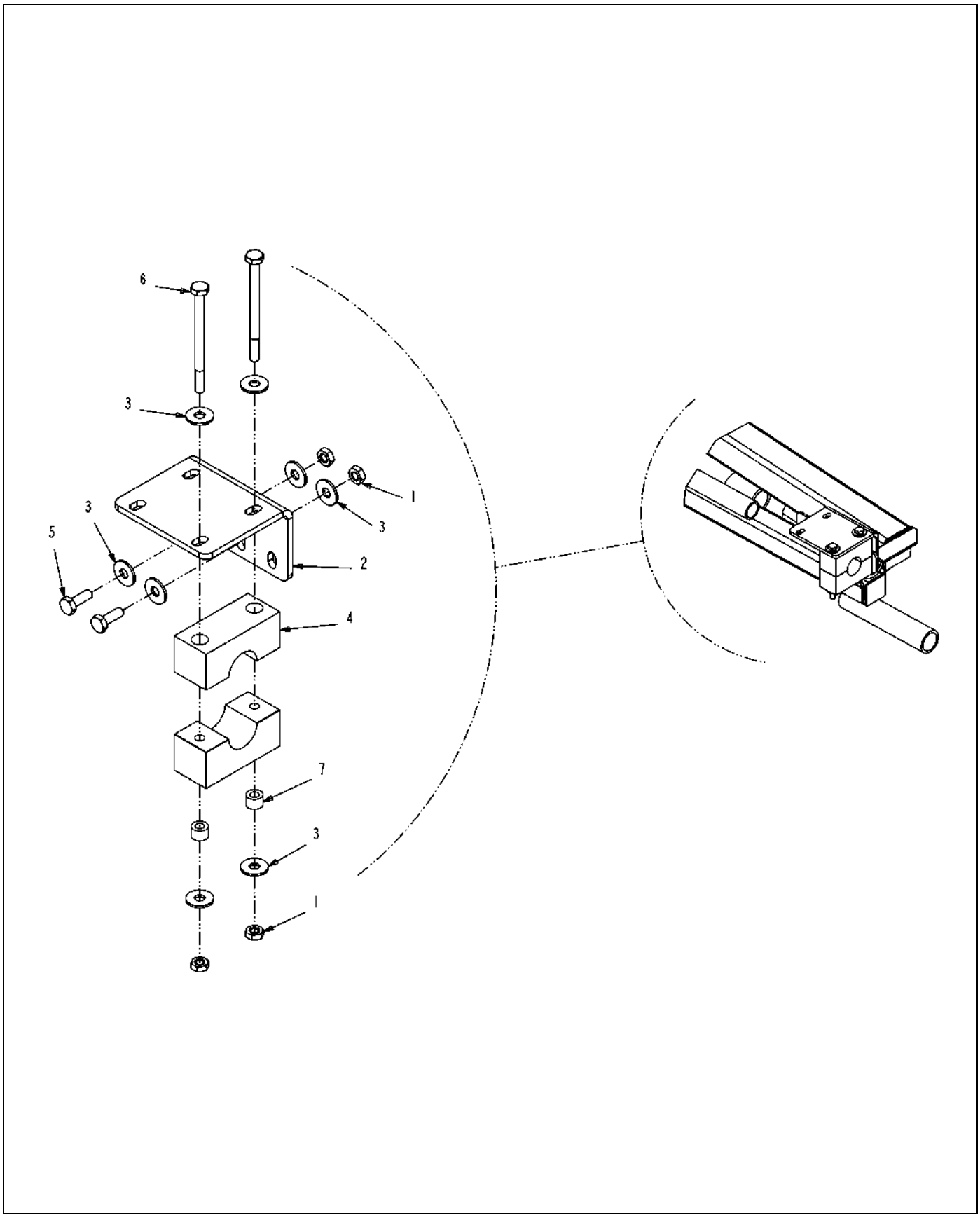

134845-A.TIF

Copyright © 2007 AGCO Corporation

BRKT ASM-ENDROW,STAUFF,.75,LH

ITEM	PART #	QTY	DESCRIPTION	COMMENTS
1	AG027275	4	NUT 0.25-20NC HEX SS REG NY	
2	AG134756	1	BRKT-MTG,STANDOFF,ER,SS,.75	
3	AG515121	8	WASHER 0.25 FL SS REG TYPE-B	
4	AG518326	1	CLAMP 3/4 INCH PIPE (RTG)	
5	AG562054	2	BOLT 0.25-20NCX 0.75 SS HHD	
6	AG563061	2	BOLT 0.25-20NCX 3.25 SS HHD	
7	AG609777	2	INSERT STAUFF SPACER	

Copyright © 2007 AGCO Corporation

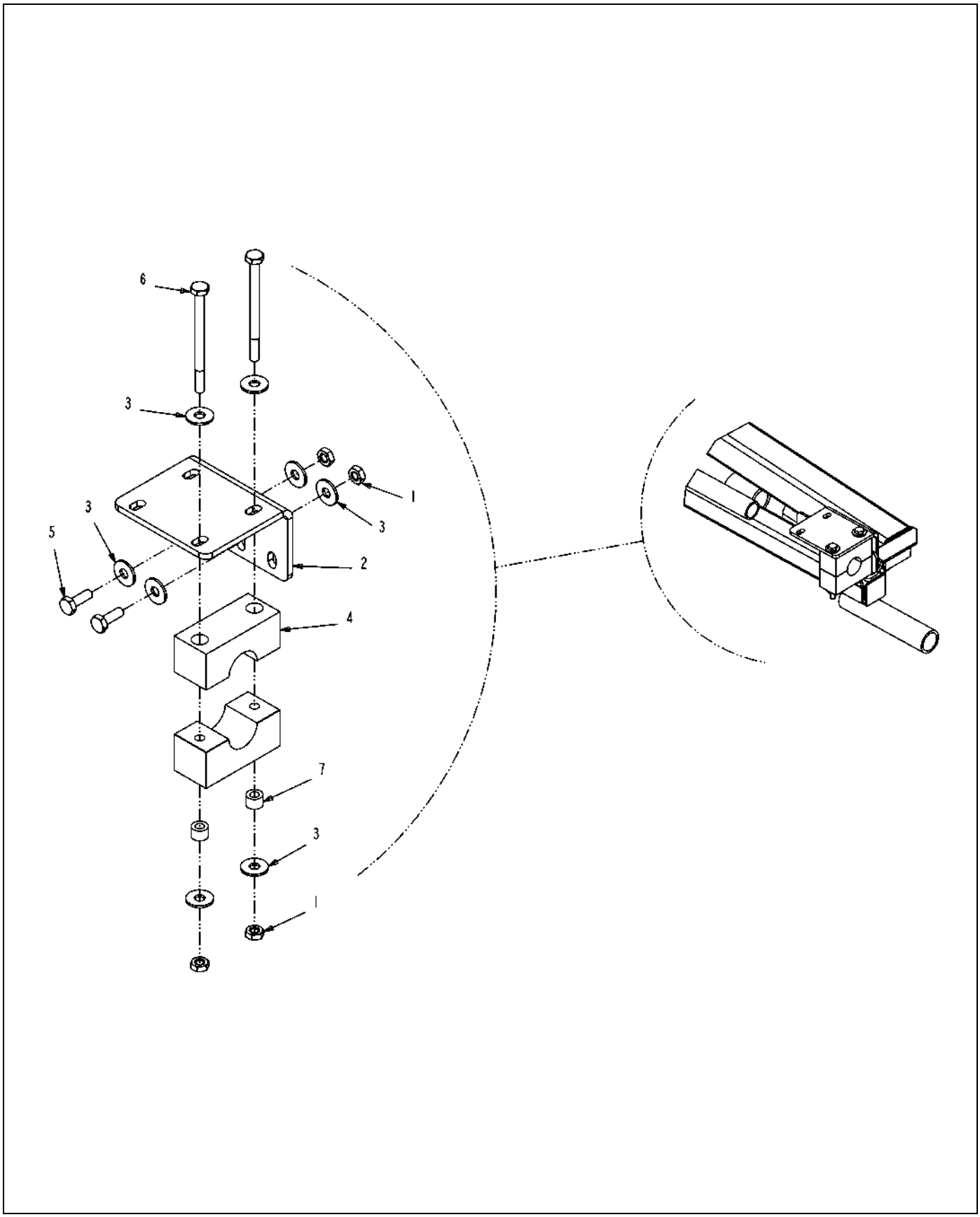

134846-A.TIF

Copyright © 2007 AGCO Corporation

BRKT ASM-ENDROW,STAUFF,.75,RH

ITEM	PART #	QTY	DESCRIPTION	COMMENTS
1	AG027275	4	NUT 0.25-20NC HEX SS REG NY	
2	AG134756	1	BRKT-MTG,STANDOFF,ER,SS,.75	
3	AG515121	8	WASHER 0.25 FL SS REG TYPE-B	
4	AG518326	1	CLAMP 3/4 INCH PIPE (RTG)	
5	AG562054	2	BOLT 0.25-20NCX 0.75 SS HHD	
6	AG563061	2	BOLT 0.25-20NCX 3.25 SS HHD	
7	AG609777	2	INSERT STAUFF SPACER	

Copyright © 2007 AGCO Corporation

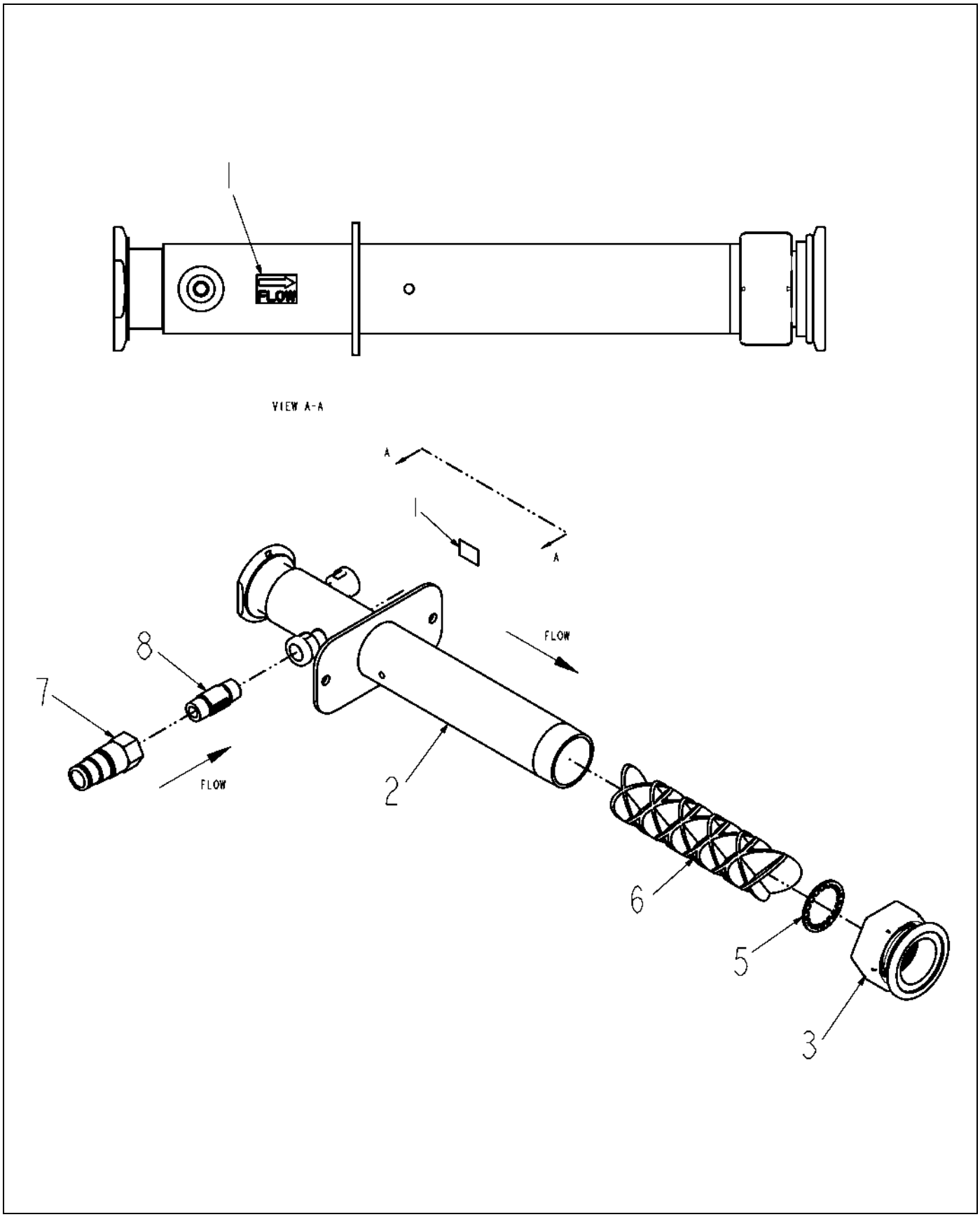

123592-B.TIF

Copyright © 2007 AGCO Corporation

NOZZLE ASM-INJ,2 LOOP,2.00 NPT

ITEM	PART #	QTY	DESCRIPTION	COMMENTS
1	AG109190	1	DECAL - FLOW	
2	AG123593	1	NOZZLE WLDMT-MXR,CHEM INJ,90D	
3	AG123944	1	ADAPTER 2.00FLGX2.00FNPT,FP,PP	
4	AG129187	AR	PIPE SEALANT-FLEX BLACK	
5	AG239692	1	SPACER-RD,STOP	
6	AG518236	1	MIXER SECTION STATA-TUBE	
7	AG520345	1	NIPPLE END-.50 NPT,DRY BREAK	
8	AG522513	1	VALVE-CHECK,.50NPT,SS	

Copyright © 2007 AGCO Corporation

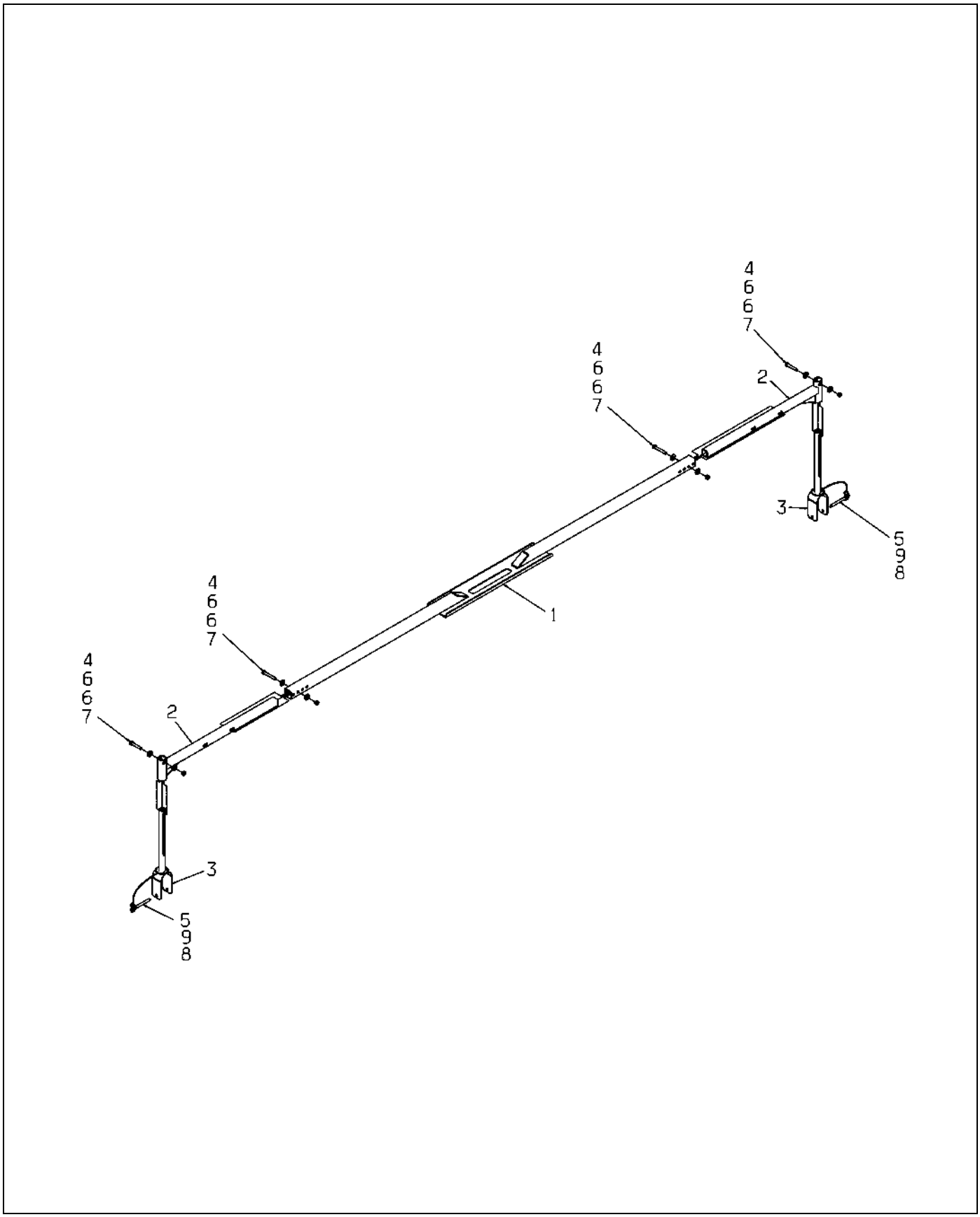

504795-A.TIF

Copyright © 2007 AGCO Corporation

RETAINER ASM-BOOM,LIQ,COMBO

ITEM	PART #	QTY	DESCRIPTION	COMMENTS
1	AG425345	1	RETAINER WLDMT-CTR,LIQ,COMBO	
2	AG425341	2	RETAINER WLDMT-HORIZ,LIQ,COMBO	
3	AG425342	2	RETAINER WLDMT-VERT,LIQ,COMBO	
4	AG552127	4	BOLT 0.37-16NCX 2.25 G5 ZN HHD	
5	AG515981	4	COMPRESSION SLEEVE	
6	AG551007	8	WASHER 0.37 FL ZN REG TYPE-B	
7	AG604138	4	NUT 0.37-16NC HEX ZN HVY NY	
8	AG516105	2	PIN-COTTERLESS HITCH .37X3.50	
9	AG516060	-	CABLE NYLON COATED [BULK: 2.100 FT]	

Copyright © 2007 AGCO Corporation

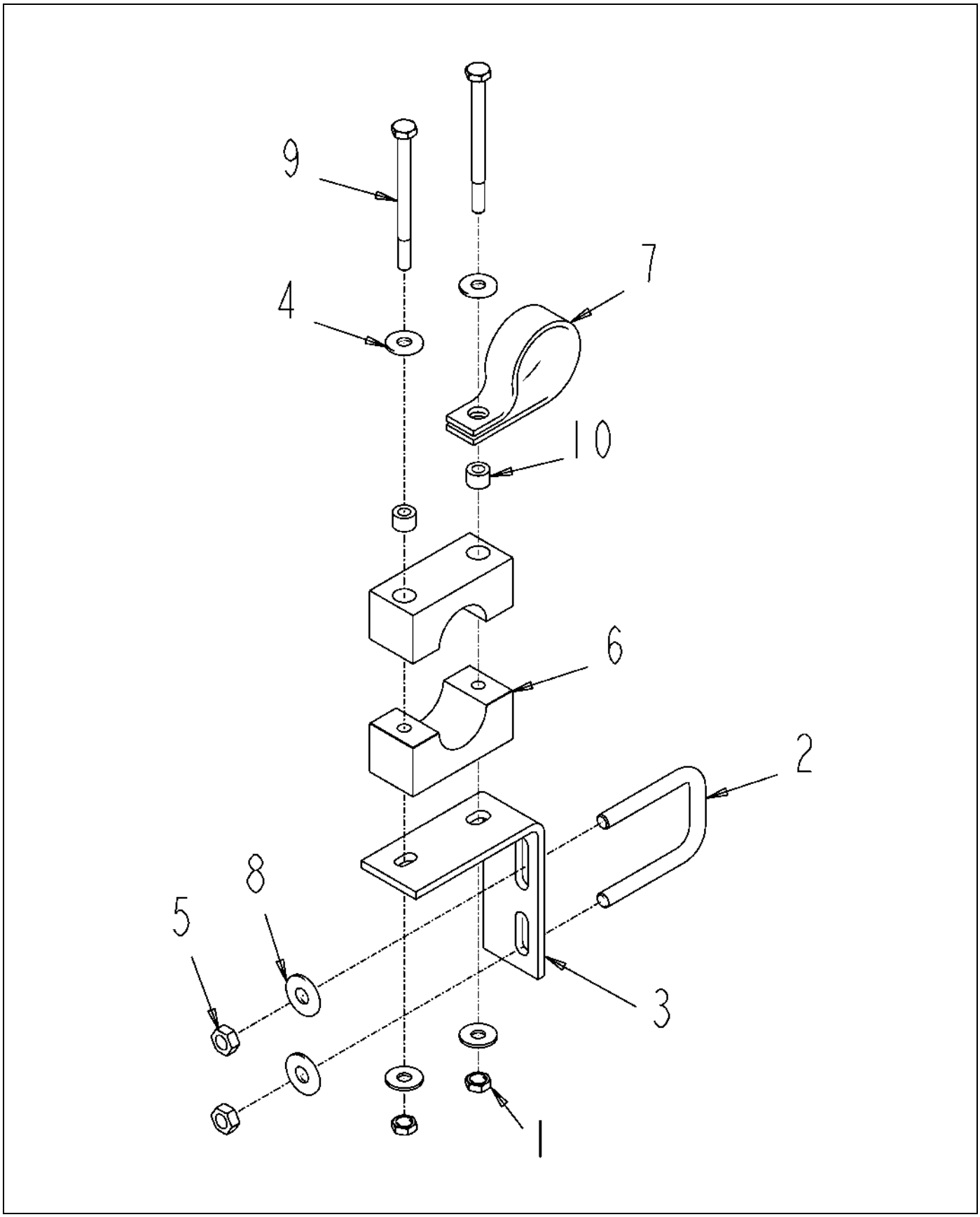

122513-B.TIF

Copyright © 2007 AGCO Corporation

BRKT ASM-L,PP STAUFF 1.25 P

ITEM	PART #	QTY	DESCRIPTION	COMMENTS
1	AG027275	2	NUT 0.25-20NC HEX SS REG NY	
2	AG231204	1	BOLT-U .31-18X1.88X2.63	
3	AG232784	1	BRACKET STAND OFF WET BOOM	
4	AG515121	4	WASHER 0.25 FL SS REG TYPE-B	
5	AG516403	2	NUT 0.31-18NC HEX SS REG NY	
6	AG519748	1	CLAMP 1.00 PIPE	[A]
7	AG523412	1	CLAMP-1.62 DIA,COATED HOSE	
8	AG562074	2	WASHER 0.31 FL SS REG TYPE-B	
9	AG563061	2	BOLT 0.25-20NCX 3.25 SS HHD	
10	AG609777	2	INSERT STAUFF SPACER	
	FOOTNOTE [A]		2 INSERTS AND 2 CLAMP MAKE UP 1 PART. BOLT - AG563061, WASHER - AG515121, NUT - AG027275,	

Copyright © 2007 AGCO Corporation

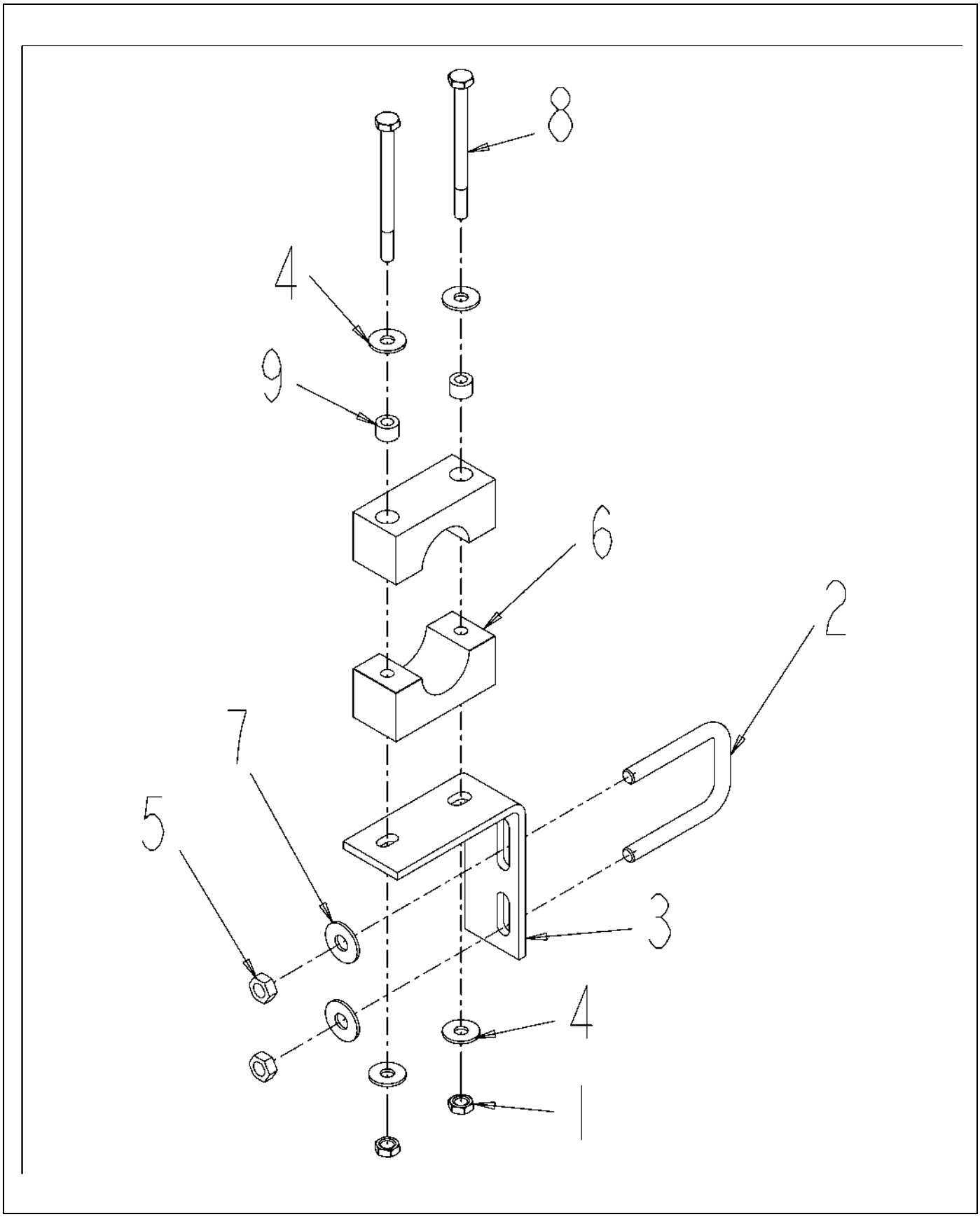

122520-A.TIF

Copyright © 2007 AGCO Corporation

BRKT ASM-L,PP STAUFF

ITEM	PART #	QTY	DESCRIPTION	COMMENTS
1	AG027275	2	NUT 0.25-20NC HEX SS REG NY	
2	AG231204	1	BOLT-U .31-18X1.88X2.63	
3	AG232784	1	BRACKET STAND OFF WET BOOM	
4	AG515121	4	WASHER 0.25 FL SS REG TYPE-B	
5	AG516403	2	NUT 0.31-18NC HEX SS REG NY	
6	AG519748	1	CLAMP 1.00 PIPE	[A]
7	AG562074	2	WASHER 0.31 FL SS REG TYPE-B	
8	AG563061	2	BOLT 0.25-20NCX 3.25 SS HHD	
9	AG609777	2	INSERT STAUFF SPACER	
	FOOTNOTE [A]		2 INSERTS AND 2 CLAMP MAKE UP 1 PART. BOLT - AG563061, WASHER - AG515121, NUT - AG027275,	

Copyright © 2007 AGCO Corporation

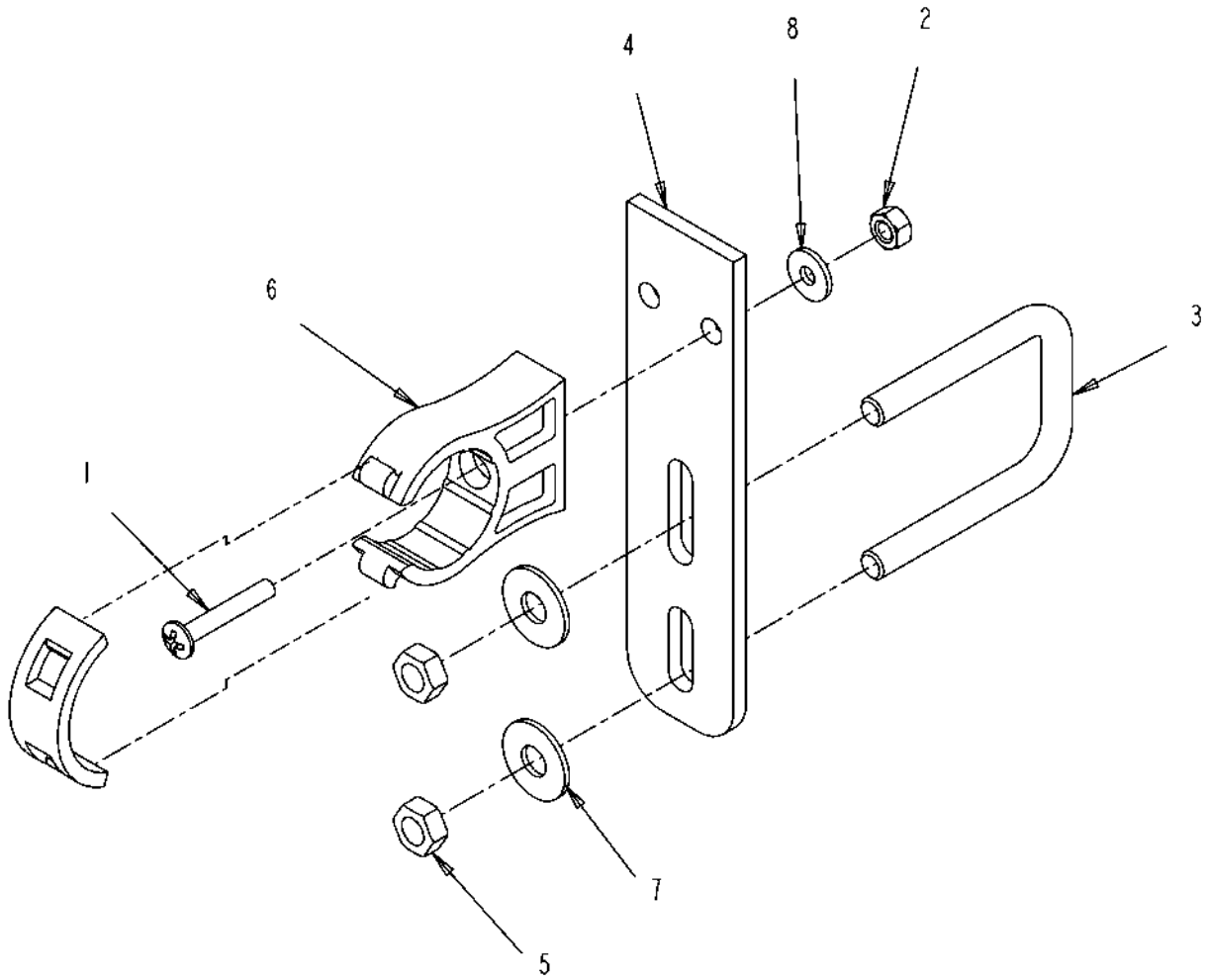

122521-A.TIF

Copyright © 2007 AGCO Corporation

BRKT ASM-STR,SH,IPS CLP

ITEM	PART #	QTY	DESCRIPTION	COMMENTS
1	AG027273	1	SCREW 10-24X 1.25 PHD PHILSS(P	
2	AG027274	1	NUT #10-24NC HEX SS REG NY	
3	AG231204	1	BOLT-U .31-18X1.88X2.63	
4	AG234373	1	BRACKET SHORT STANDOFF	
5	AG516403	2	NUT 0.31-18NC HEX SS REG NY	
6	AG519749	1	CLAMP 1.00 IPS POLY	
7	AG562074	2	WASHER 0.31 FL SS REG TYPE-B	
8	AG562082	1	WASHER #10 FL SS REG TYPE-B	

Copyright © 2007 AGCO Corporation

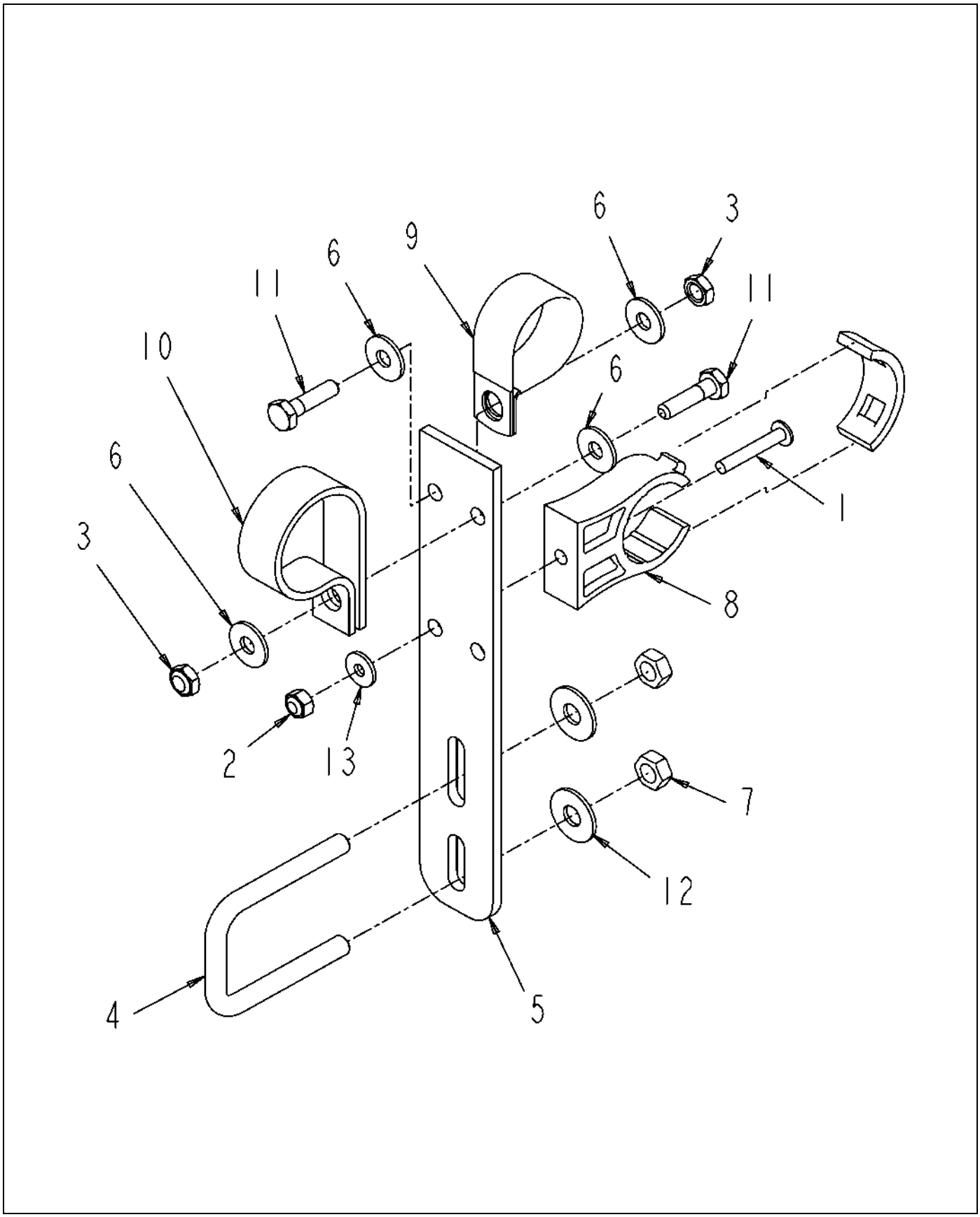

122608-B.TIF

Copyright © 2007 AGCO Corporation

BRKT ASM-STR,LS,IPS,1.25 P CLP

ITEM	PART #	QTY	DESCRIPTION	COMMENTS
1	AG027273	1	SCREW 10-24X 1.25 PHD PHILSS(P	
2	AG027274	1	NUT #10-24NC HEX SS REG NY	
3	AG027275	2	NUT 0.25-20NC HEX SS REG NY	
4	AG231204	1	BOLT-U .31-18X1.88X2.63	
5	AG234375	1	BRACKET LONG STANDOFF	
6	AG515121	4	WASHER 0.25 FL SS REG TYPE-B	
7	AG516403	2	NUT 0.31-18NC HEX SS REG NY	
8	AG519749	1	CLAMP 1.00 IPS POLY	
9	AG519751	1	CLAMP 1.38 DIA COATED HOSE	
10	AG523412	1	CLAMP-1.62 DIA,COATED HOSE	
11	AG562064	2	BOLT 0.25-20NCX 1.00 SS HHD	
12	AG562074	2	WASHER 0.31 FL SS REG TYPE-B	
13	AG562082	1	WASHER #10 FL SS REG TYPE-B	

Copyright © 2007 AGCO Corporation

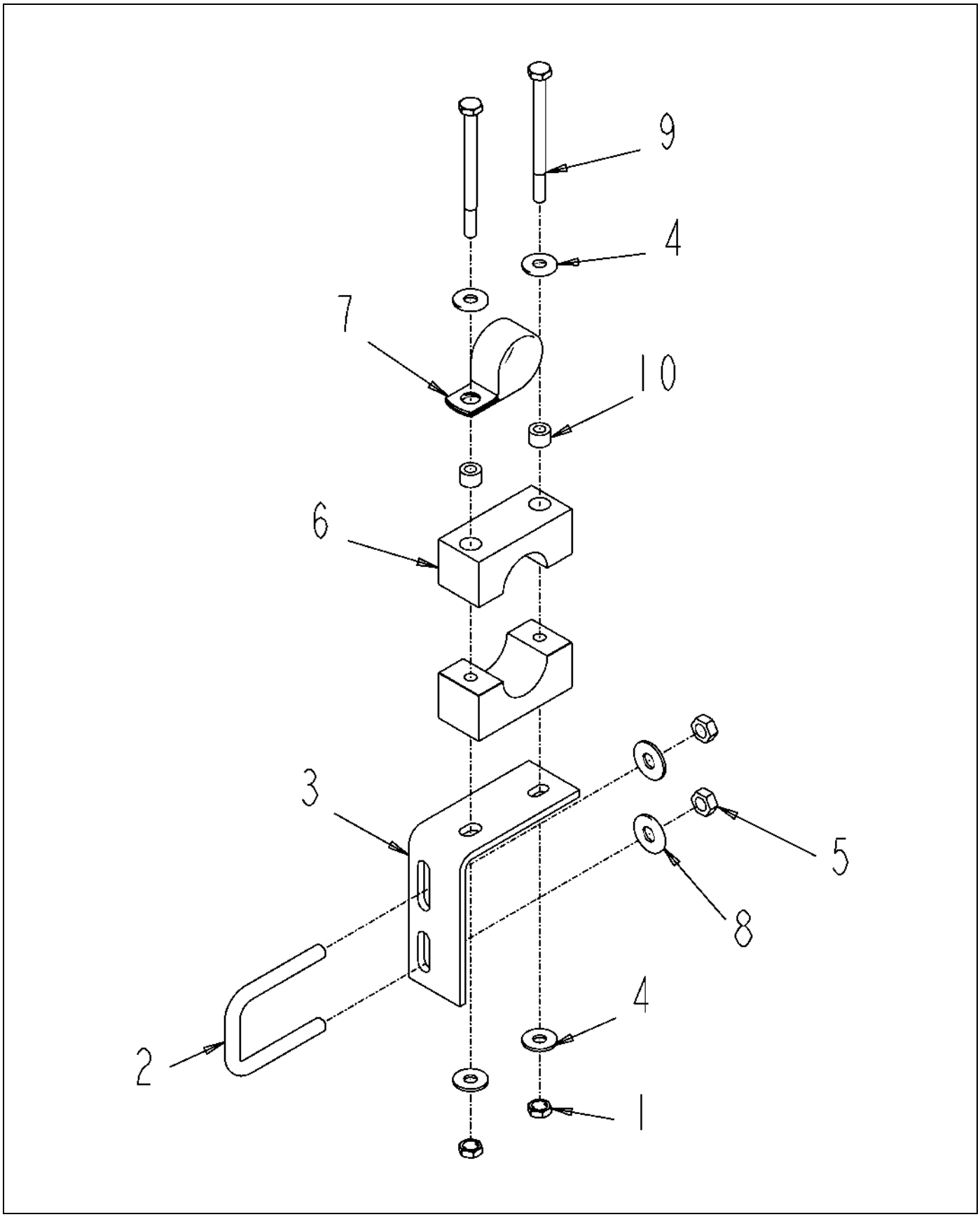

122610-C.TIF

Copyright © 2007 AGCO Corporation

BRKT ASM-L,PP STAUFF,CTR P CLP

ITEM	PART #	QTY	DESCRIPTION	COMMENTS
1	AG027275	2	NUT 0.25-20NC HEX SS REG NY	
2	AG231204	1	BOLT-U .31-18X1.88X2.63	
3	AG232784	1	BRACKET STAND OFF WET BOOM	
4	AG515121	4	WASHER 0.25 FL SS REG TYPE-B	
5	AG516403	2	NUT 0.31-18NC HEX SS REG NY	
6	AG519748	1	CLAMP 1.00 PIPE	[A]
7	AG560480	1	CLAMP 1.25-COATED HOSE CO	
8	AG562074	2	WASHER 0.31 FL SS REG TYPE-B	
9	AG563061	2	BOLT 0.25-20NCX 3.25 SS HHD	
10	AG609777	2	INSERT STAUFF SPACER	
	FOOTNOTE [A]		2 INSERTS AND 2 CLAMP MAKE UP 1 PART. BOLT - AG563061, WASHER - AG515121, NUT - AG027275,	

Copyright © 2007 AGCO Corporation

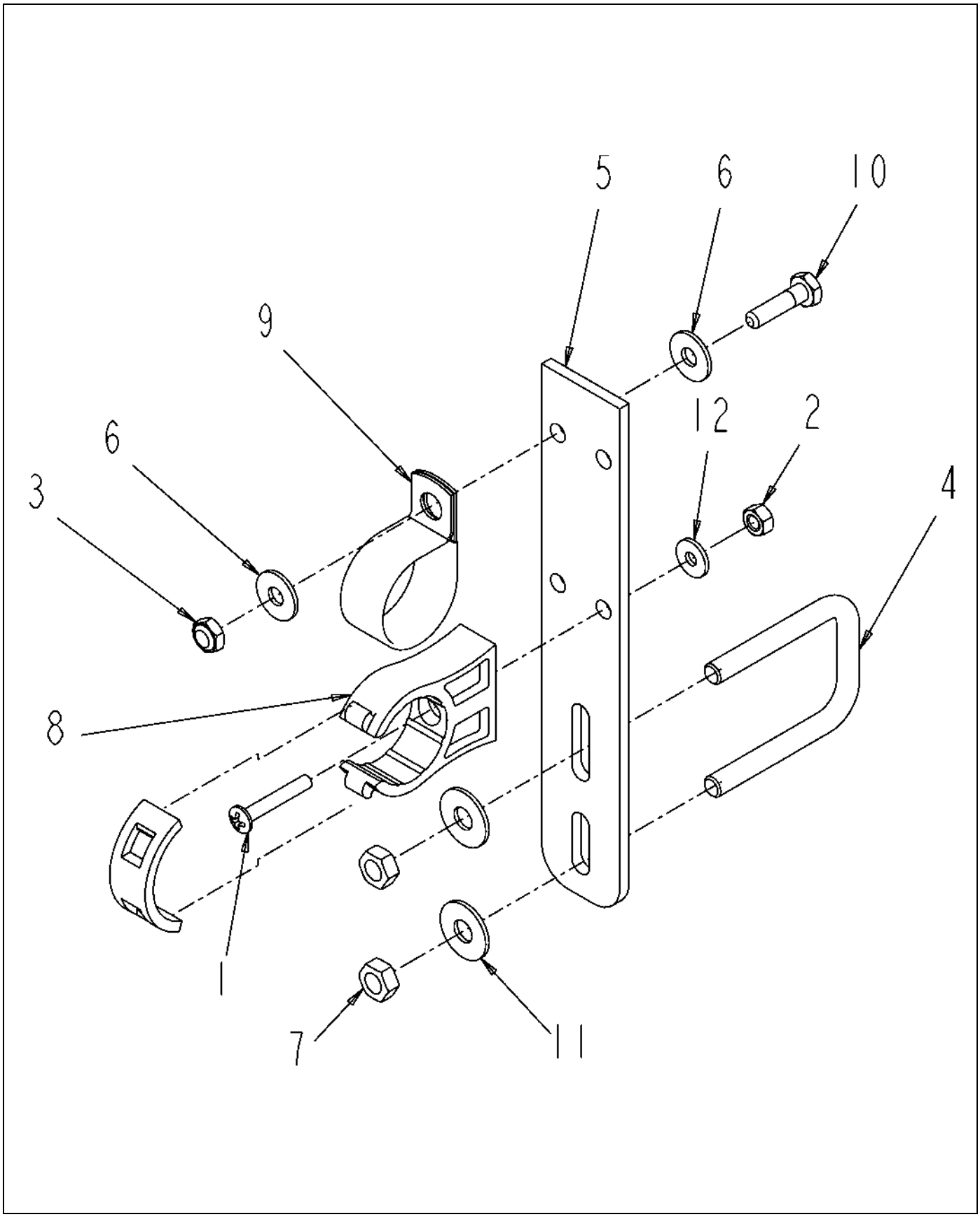

122957-A.TIF

Copyright © 2007 AGCO Corporation

BRKT ASM-STR,LG,IPS,P CLP

ITEM	PART #	QTY	DESCRIPTION	COMMENTS
1	AG027273	1	SCREW 10-24X 1.25 PHD PHILSS(P	
2	AG027274	1	NUT #10-24NC HEX SS REG NY	
3	AG027275	1	NUT 0.25-20NC HEX SS REG NY	
4	AG231204	1	BOLT-U .31-18X1.88X2.63	
5	AG234375	1	BRACKET LONG STANDOFF	
6	AG515121	2	WASHER 0.25 FL SS REG TYPE-B	
7	AG516403	2	NUT 0.31-18NC HEX SS REG NY	
8	AG519749	1	CLAMP 1.00 IPS POLY	
9	AG519751	1	CLAMP 1.38 DIA COATED HOSE	
10	AG562064	1	BOLT 0.25-20NCX 1.00 SS HHD	
11	AG562074	2	WASHER 0.31 FL SS REG TYPE-B	
12	AG562082	1	WASHER #10 FL SS REG TYPE-B	

Copyright © 2007 AGCO Corporation

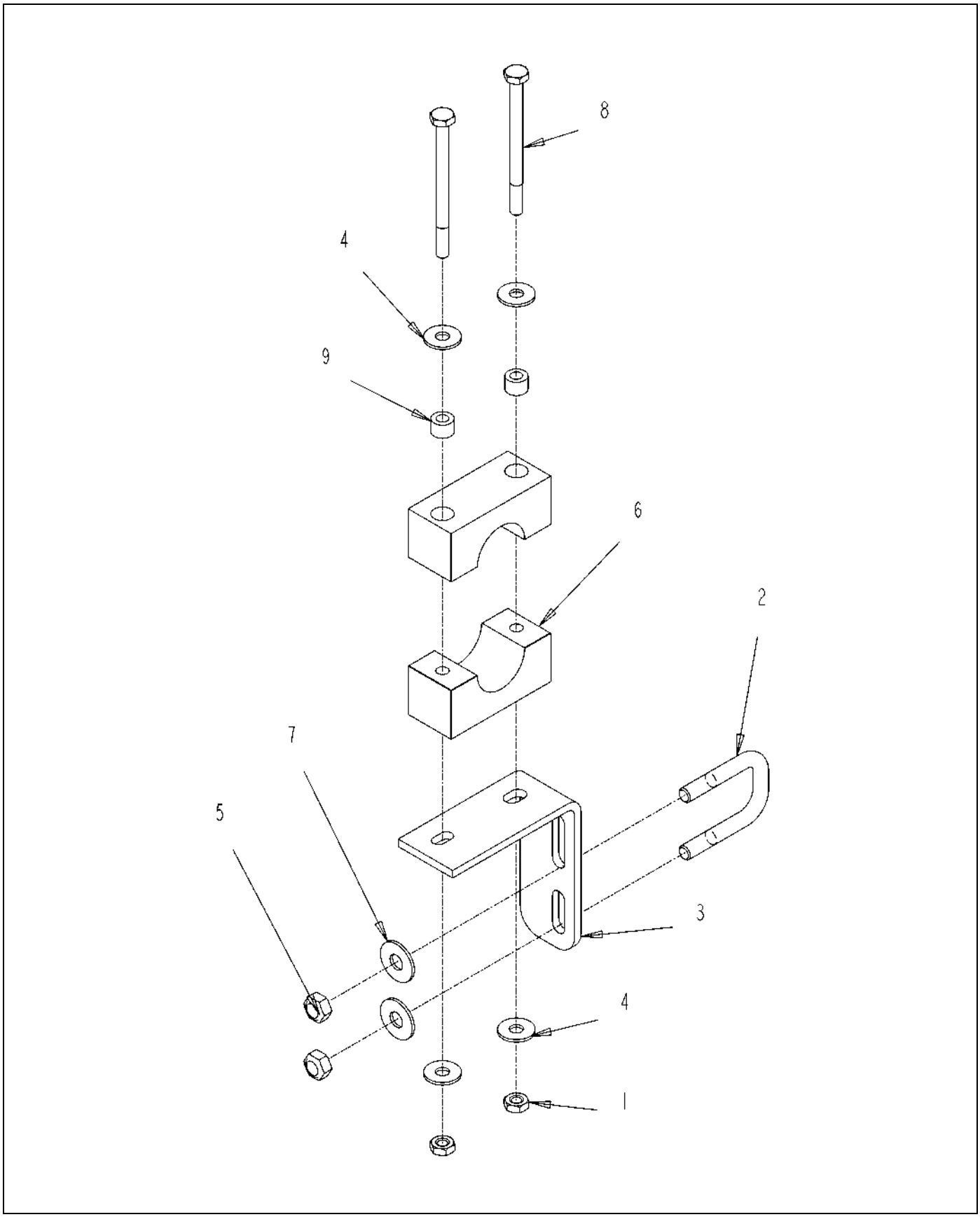

129085.TIF

Copyright © 2007 AGCO Corporation

BRKT ASM-L,PP STAUFF,1.00U

ITEM	PART #	QTY	DESCRIPTION	COMMENTS
1	AG027275	2	NUT 0.25-20NC HEX SS REG NY	
2	WR129144	1	BOLT-U,.31-18X1.06X1.97,SQ,SS	
3	AG232784	1	BRACKET STAND OFF WET BOOM	
4	AG515121	4	WASHER 0.25 FL SS REG TYPE-B	
5	AG516403	2	NUT 0.31-18NC HEX SS REG NY	
6	AG519748	1	CLAMP 1.00 PIPE	[A]
7	AG562074	2	WASHER 0.31 FL SS REG TYPE-B	
8	AG563061	2	BOLT 0.25-20NCX 3.25 SS HHD	
9	AG609777	2	INSERT STAUFF SPACER	
	FOOTNOTE [A]		2 INSERTS AND 2 CLAMP MAKE UP 1 PART. BOLT - AG563061, WASHER - AG515121, NUT - AG027275,	

Copyright © 2007 AGCO Corporation

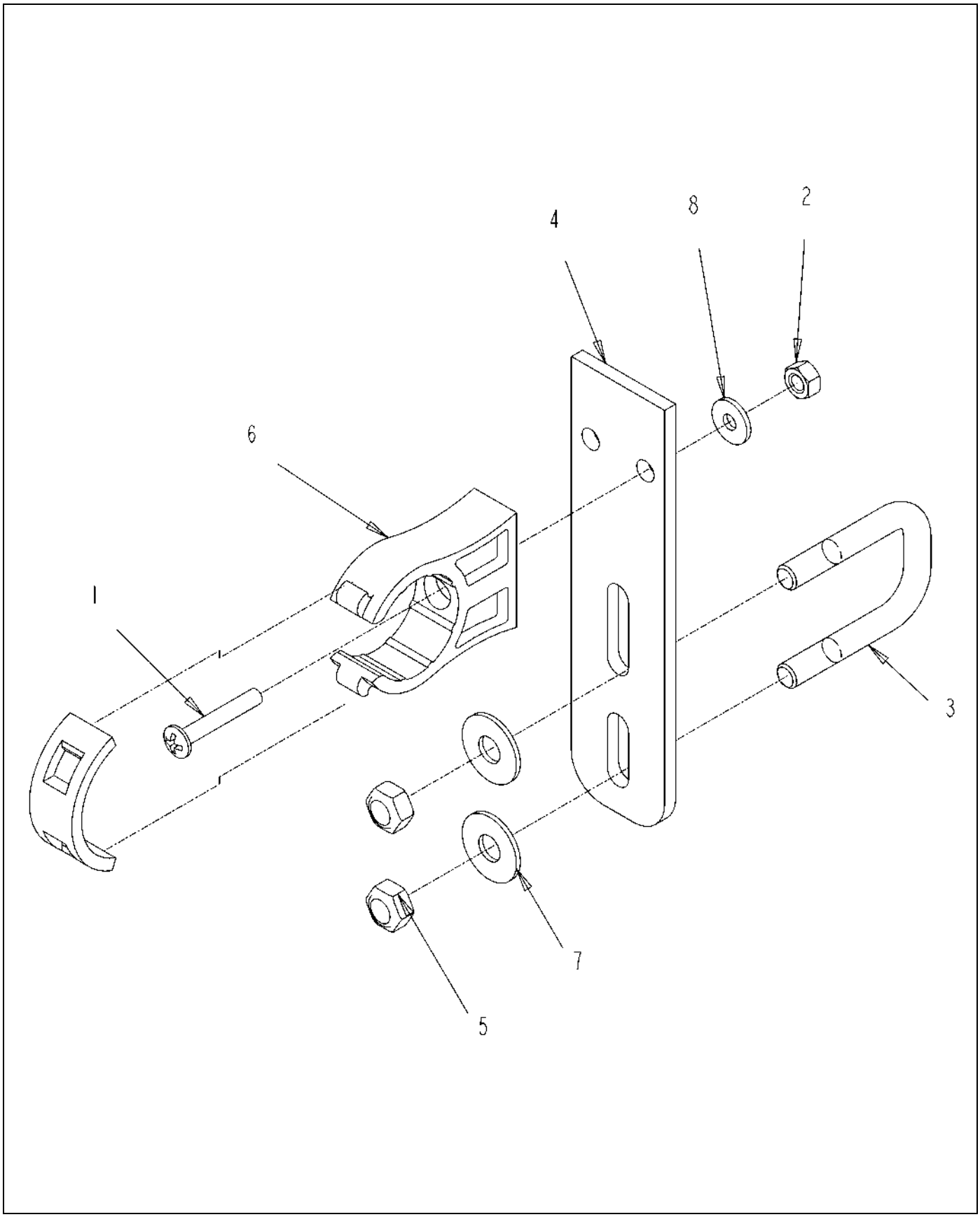

129086.TIF

Copyright © 2007 AGCO Corporation

BRKT ASM-STR,SH,IPS CLP,1.00U

ITEM	PART #	QTY	DESCRIPTION	COMMENTS
1	AG027273	1	SCREW 10-24X 1.25 PHD PHILSS(P	
2	AG027274	1	NUT #10-24NC HEX SS REG NY	
3	WR129144	1	BOLT-U,.31-18X1.06X1.97,SQ,SS	
4	AG234373	1	BRACKET SHORT STANDOFF	
5	AG516403	2	NUT 0.31-18NC HEX SS REG NY	
6	AG519749	1	CLAMP 1.00 IPS POLY	
7	AG562074	2	WASHER 0.31 FL SS REG TYPE-B	
8	AG562082	1	WASHER #10 FL SS REG TYPE-B	

Copyright © 2007 AGCO Corporation

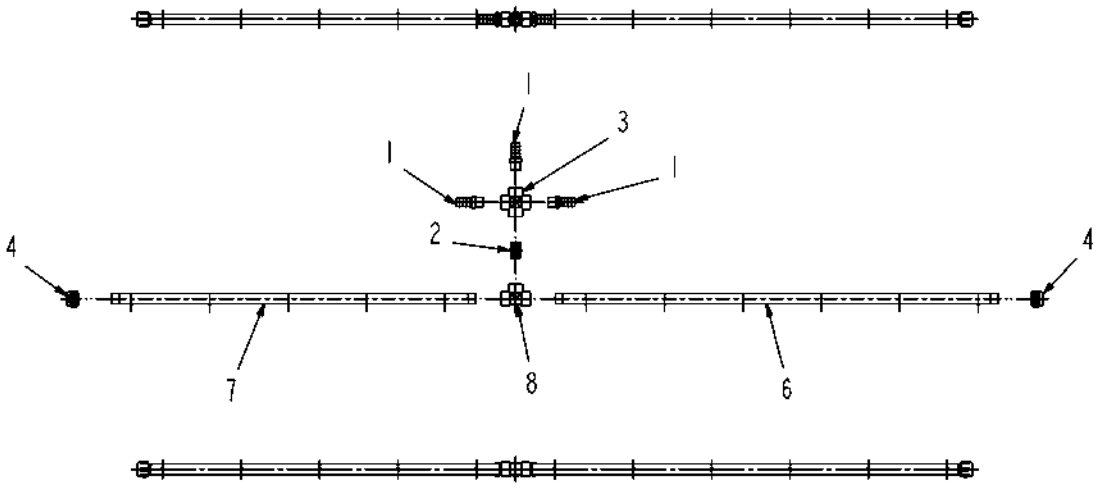

134642-A.tif

Copyright © 2007 AGCO Corporation

PIPE ASM-X W/3 1.00HB,11X10,PP

ITEM	PART #	QTY	DESCRIPTION	COMMENTS
1	AG051059	3	BARB-HOSE,1.00MNPTX1.00BARB,PP	
2	AG051153	1	NIPPLE-PIPE,1.00NPTXCLS,PP	
3	AG051442	1	CROSS-PIPE,1.00FNPT,PP	
4	AG051536	2	CAP-PIPE,1.00NPT PP	
5	AG129187	AR	PIPE SEALANT-FLEX BLACK	
6	AG239937	1	TUBE-POLY,56.44,10IN CTR	
7	AG239938	1	TUBE-POLY,46.44,10IN CTR	
8	AG516405	1	TEE,PIPE,1.00FNPT,PP	

Copyright © 2007 AGCO Corporation

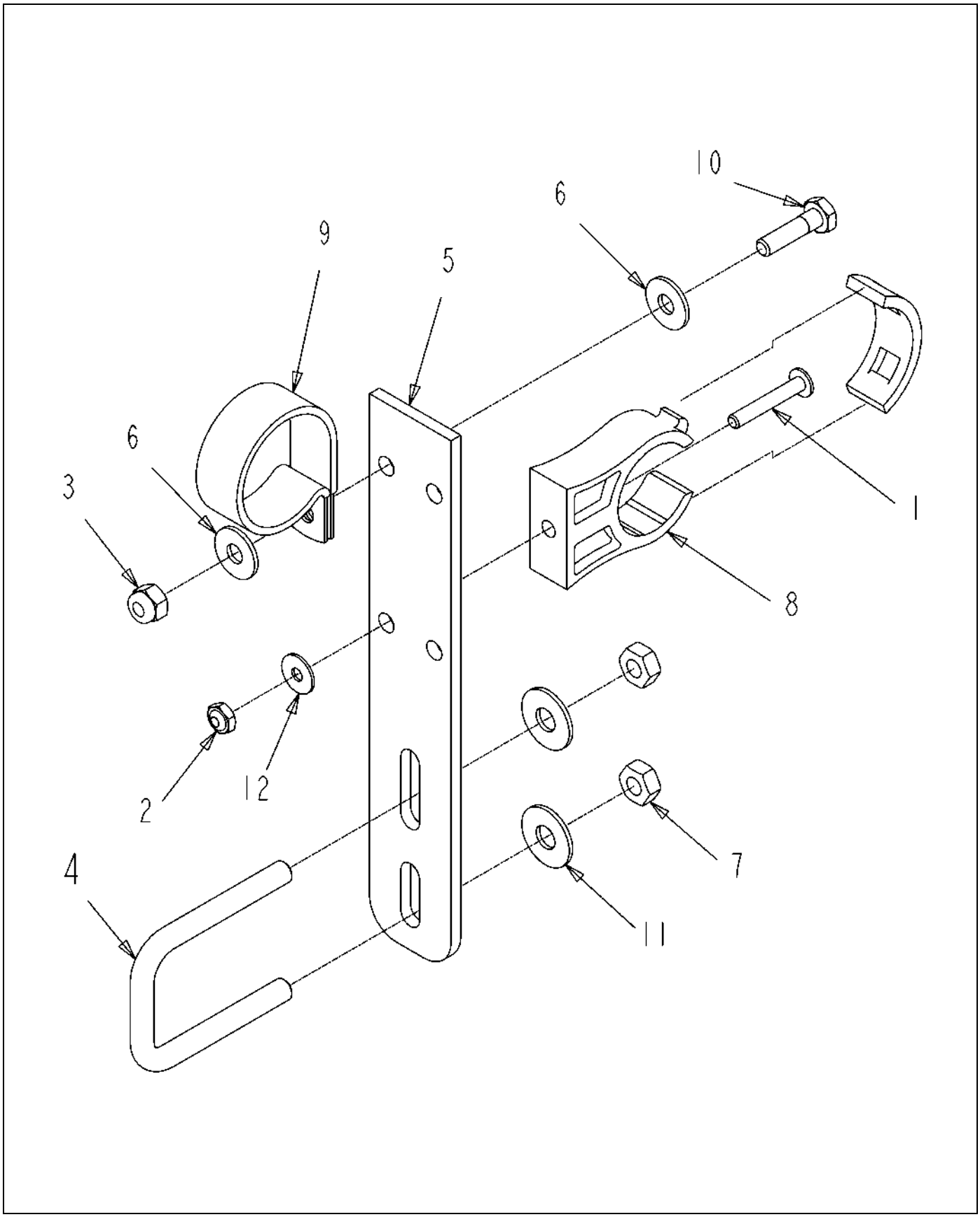

506721D1-01-M790-.TIF

Copyright © 2007 AGCO Corporation

BRKT ASM-STR,LG,IPS,1.62 PCLP

ITEM	PART #	QTY	DESCRIPTION	COMMENTS
1	AG027273	1	SCREW 10-24X 1.25 PHD PHILSS(P	
2	AG027274	1	NUT #10-24NC HEX SS REG NY	
3	AG027275	1	NUT 0.25-20NC HEX SS REG NY	
4	AG231204	1	BOLT-U .31-18X1.88X2.63	
5	AG234375	1	BRACKET LONG STANDOFF	
6	AG515121	2	WASHER 0.25 FL SS REG TYPE-B	
7	AG516403	2	NUT 0.31-18NC HEX SS REG NY	
8	AG519749	1	CLAMP 1.00 IPS POLY	
9	AG523412	1	CLAMP-1.62 DIA,COATED HOSE	
10	AG562064	1	BOLT 0.25-20NCX 1.00 SS HHD	
11	AG562074	2	WASHER 0.31 FL SS REG TYPE-B	
12	AG562082	1	WASHER #10 FL SS REG TYPE-B	

Copyright © 2007 AGCO Corporation

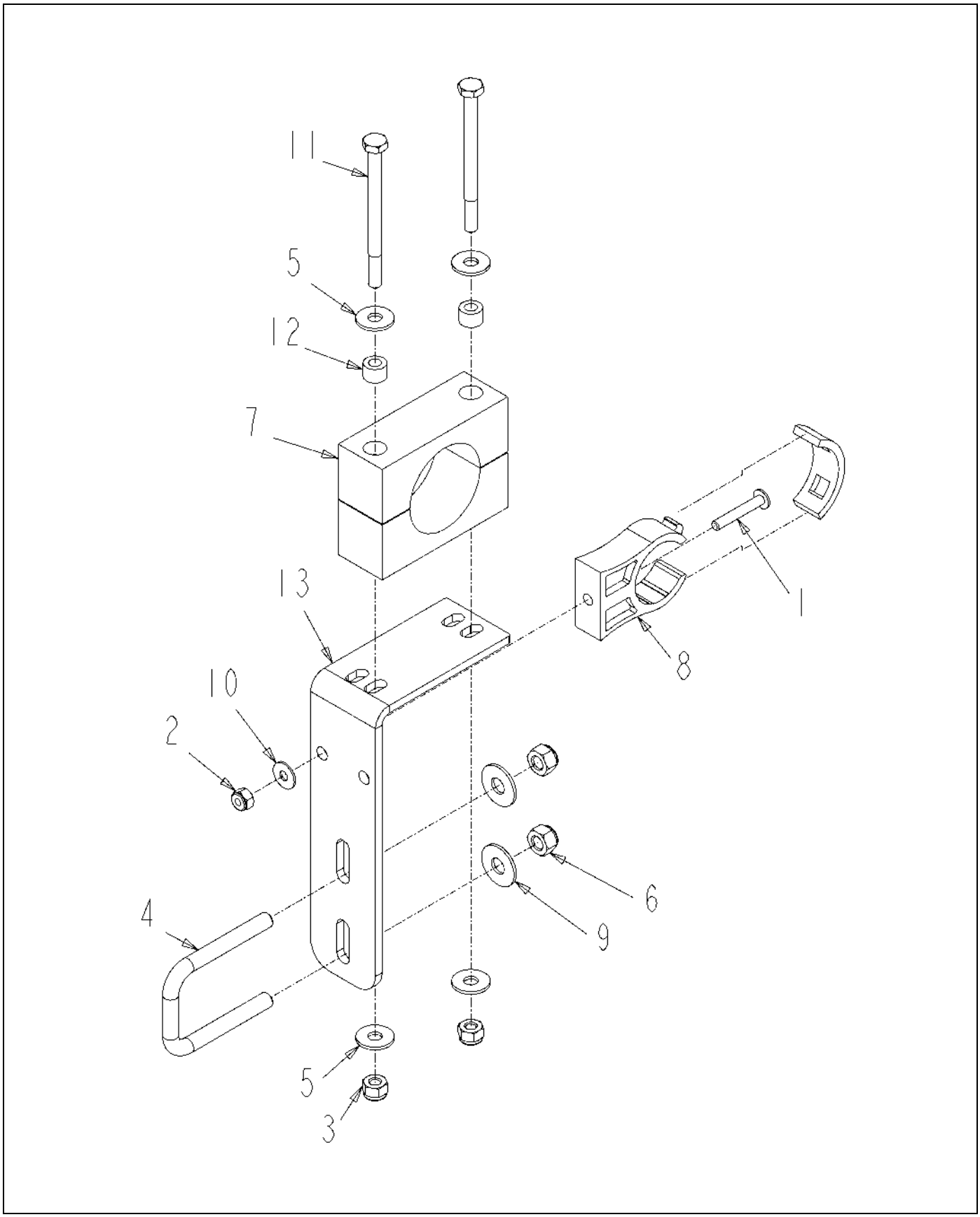

506722D1-02-R286-.TIF

Copyright © 2007 AGCO Corporation

BRKT ASM-L,1IPS,1.50 STAUFF

ITEM	PART #	QTY	DESCRIPTION	COMMENTS
1	AG027273	1	SCREW 10-24X 1.25 PHD PHILSS(P	
2	AG027274	1	NUT #10-24NC HEX SS REG NY	
3	AG027275	2	NUT 0.25-20NC HEX SS REG NY	
4	AG231204	1	BOLT-U .31-18X1.88X2.63	
5	AG515121	4	WASHER 0.25 FL SS REG TYPE-B	
6	AG516403	2	NUT 0.31-18NC HEX SS REG NY	
7	AG519180	1	CLAMP 1.50 BLACK POLY	
8	AG519749	1	CLAMP 1.00 IPS POLY	
9	AG562074	2	WASHER 0.31 FL SS REG TYPE-B	
10	AG562082	1	WASHER #10 FL SS REG TYPE-B	
11	AG563061	2	BOLT 0.25-20NCX 3.25 SS HHD	
12	AG609777	2	INSERT STAUFF SPACER	
13	506785D1	1	BRKT-MTG,CLAMP,STAUFF,1.50	

Copyright © 2007 AGCO Corporation

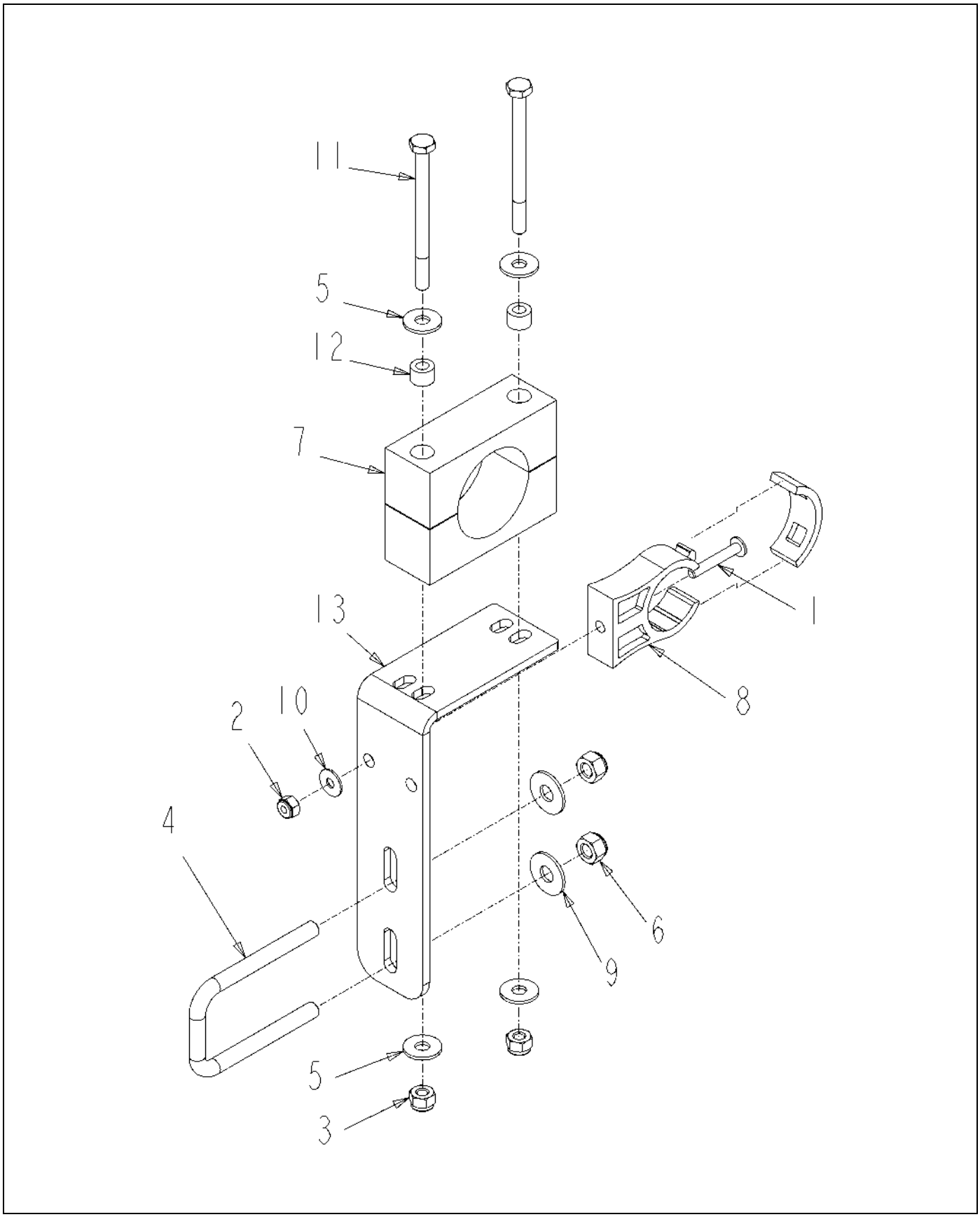

506723D1-02-R286-.TIF

Copyright © 2007 AGCO Corporation

BRKT ASM-L,1IPS,1.50 STAUFF,LG

ITEM	PART #	QTY	DESCRIPTION	COMMENTS
1	AG027273	1	SCREW 10-24X 1.25 PHD PHILSS(P	
2	AG027274	1	NUT #10-24NC HEX SS REG NY	
3	AG027275	2	NUT 0.25-20NC HEX SS REG NY	
4	AG261322	1	BOLT-U .31-18X1.56X 2.97SQ,SS	
5	AG515121	4	WASHER 0.25 FL SS REG TYPE-B	
6	AG516403	2	NUT 0.31-18NC HEX SS REG NY	
7	AG519180	1	CLAMP 1.50 BLACK POLY	
8	AG519749	1	CLAMP 1.00 IPS POLY	
9	AG562074	2	WASHER 0.31 FL SS REG TYPE-B	
10	AG562082	1	WASHER #10 FL SS REG TYPE-B	
11	AG563061	2	BOLT 0.25-20NCX 3.25 SS HHD	
12	AG609777	2	INSERT STAUFF SPACER	
13	506785D1	1	BRKT-MTG,CLAMP,STAUFF,1.50	

Copyright © 2007 AGCO Corporation

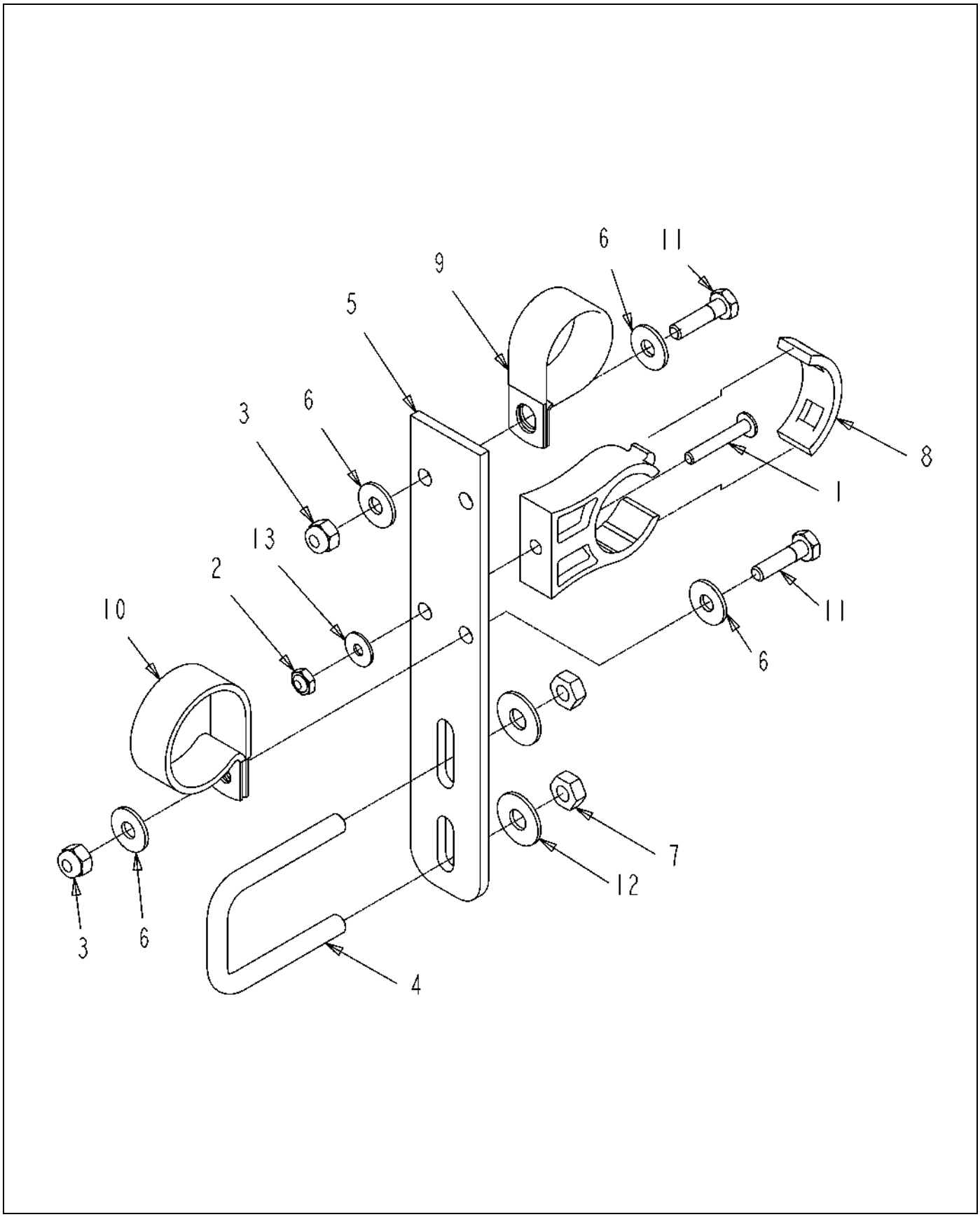

506724D1-01-M790-.TIF

Copyright © 2007 AGCO Corporation

BRKT ASM-STR,LG,IPS,2PCLP

ITEM	PART #	QTY	DESCRIPTION	COMMENTS
1	AG027273	1	SCREW 10-24X 1.25 PHD PHILSS(P	
2	AG027274	1	NUT #10-24NC HEX SS REG NY	
3	AG027275	2	NUT 0.25-20NC HEX SS REG NY	
4	AG231204	1	BOLT-U .31-18X1.88X2.63	
5	AG234375	1	BRACKET LONG STANDOFF	
6	AG515121	4	WASHER 0.25 FL SS REG TYPE-B	
7	AG516403	2	NUT 0.31-18NC HEX SS REG NY	
8	AG519749	1	CLAMP 1.00 IPS POLY	
9	AG519751	1	CLAMP 1.38 DIA COATED HOSE	
10	AG523412	1	CLAMP-1.62 DIA,COATED HOSE	
11	AG562064	2	BOLT 0.25-20NCX 1.00 SS HHD	
12	AG562074	2	WASHER 0.31 FL SS REG TYPE-B	
13	AG562082	1	WASHER #10 FL SS REG TYPE-B	

Copyright © 2007 AGCO Corporation

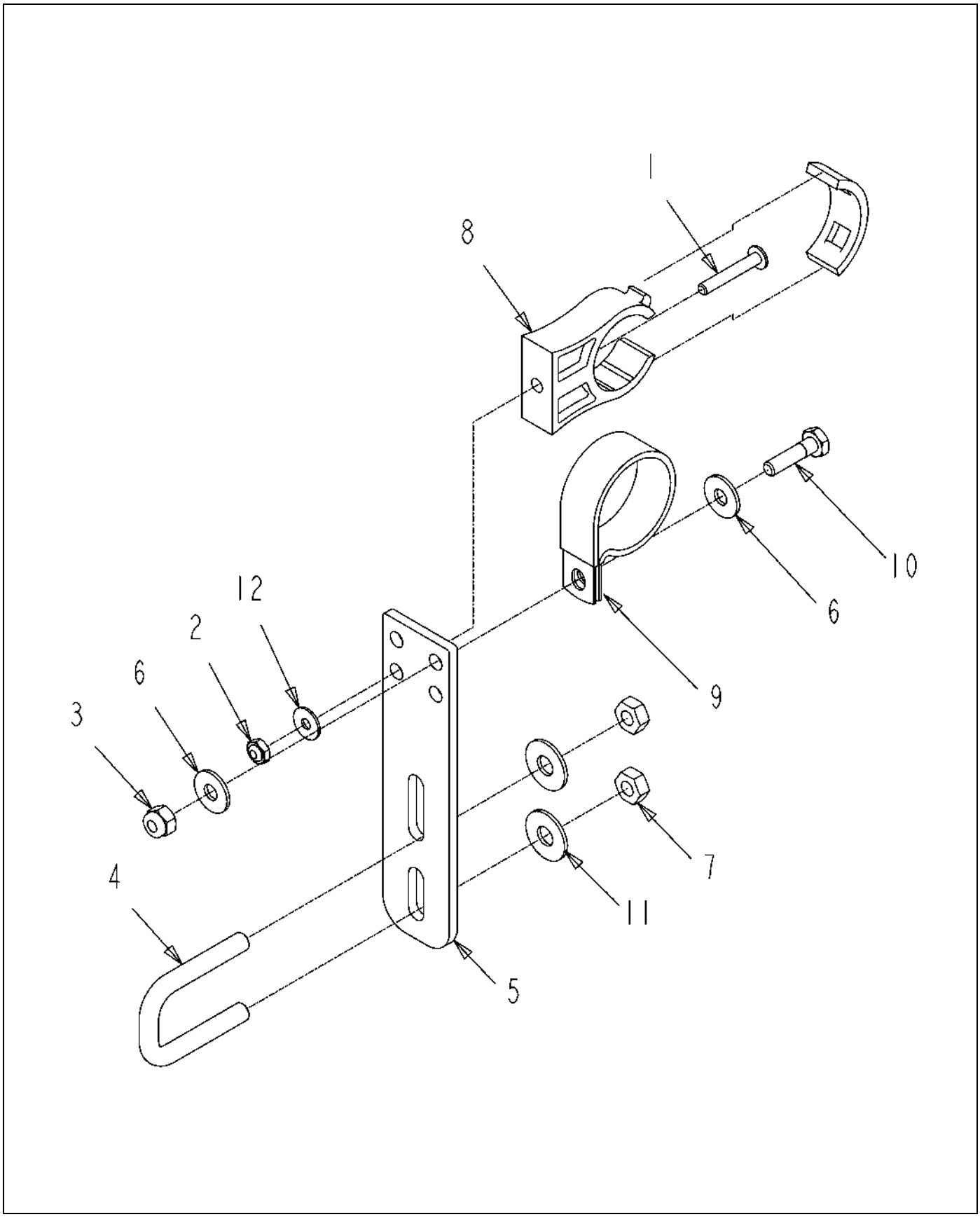

506725D1-01-M790-.TIF

Copyright © 2007 AGCO Corporation

BRKT ASM-STR,SH,IPS,1.25,1.00

ITEM	PART #	QTY	DESCRIPTION	COMMENTS
1	AG027273	1	SCREW 10-24X 1.25 PHD PHILSS(P	
2	AG027274	1	NUT #10-24NC HEX SS REG NY	
3	AG027275	1	NUT 0.25-20NC HEX SS REG NY	
4	WR129144	1	BOLT-U,.31-18X1.06X1.97,SQ,SS	
5	AG234373	1	BRACKET SHORT STANDOFF	
6	AG515121	2	WASHER 0.25 FL SS REG TYPE-B	
7	AG516403	2	NUT 0.31-18NC HEX SS REG NY	
8	AG519749	1	CLAMP 1.00 IPS POLY	
9	AG523412	1	CLAMP-1.62 DIA,COATED HOSE	
10	AG562064	1	BOLT 0.25-20NCX 1.00 SS HHD	
11	AG562074	2	WASHER 0.31 FL SS REG TYPE-B	
12	AG562082	1	WASHER #10 FL SS REG TYPE-B	

Copyright © 2007 AGCO Corporation

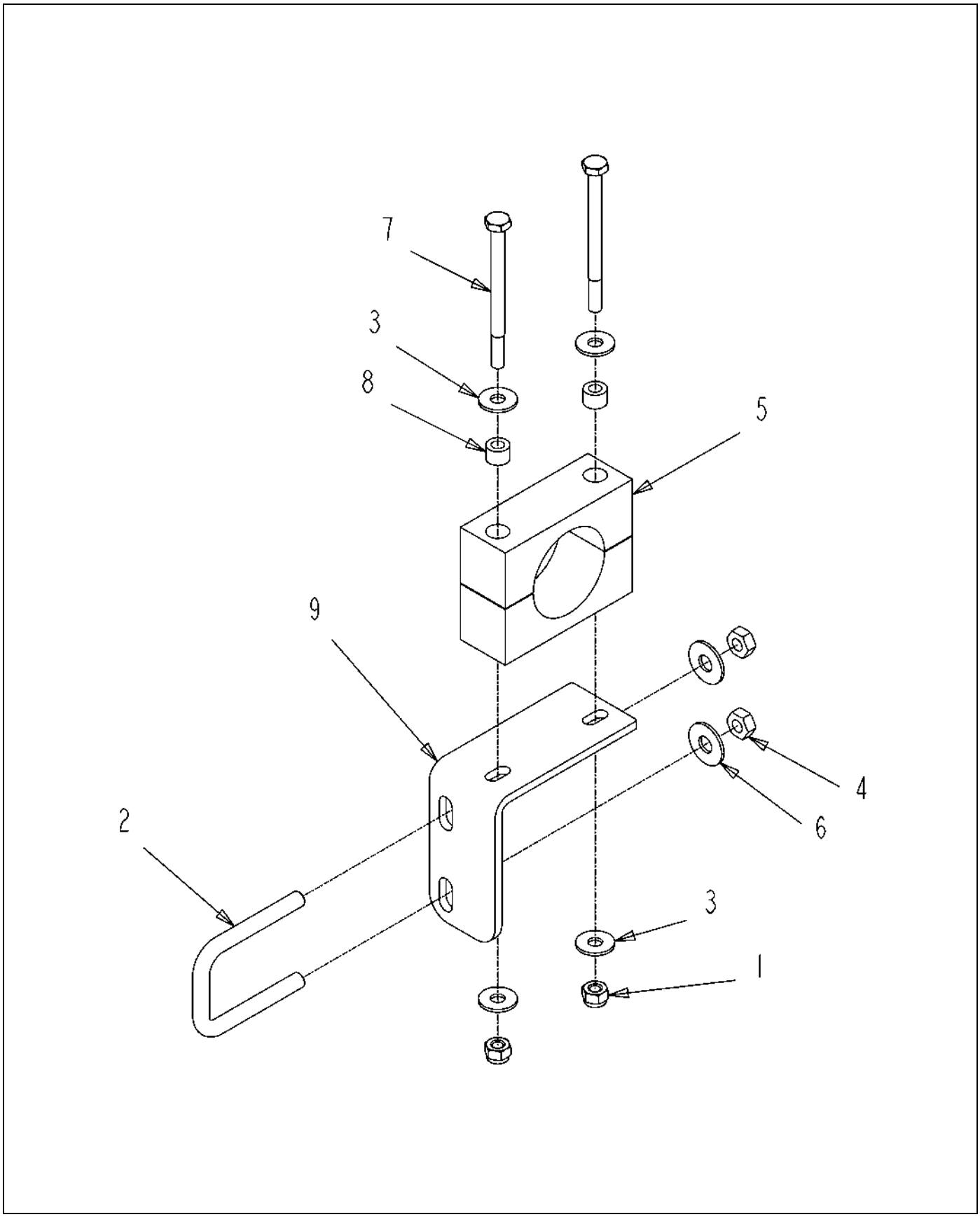

506726D1-01-M790-.TIF

Copyright © 2007 AGCO Corporation

BRKT ASM-L,1.50 STAUFF,STD U

ITEM	PART #	QTY	DESCRIPTION	COMMENTS
1	AG027275	2	NUT 0.25-20NC HEX SS REG NY	
2	AG231204	1	BOLT-U .31-18X1.88X2.63	
3	AG515121	4	WASHER 0.25 FL SS REG TYPE-B	
4	AG516403	2	NUT 0.31-18NC HEX SS REG NY	
5	AG519180	1	CLAMP 1.50 BLACK POLY	
6	AG562074	2	WASHER 0.31 FL SS REG TYPE-B	
7	AG563061	2	BOLT 0.25-20NCX 3.25 SS HHD	
8	AG609777	2	INSERT STAUFF SPACER	
9	506786D1	1	BRKT-MTG,SH,CLAMP,STAUFF,1.50	

Copyright © 2007 AGCO Corporation

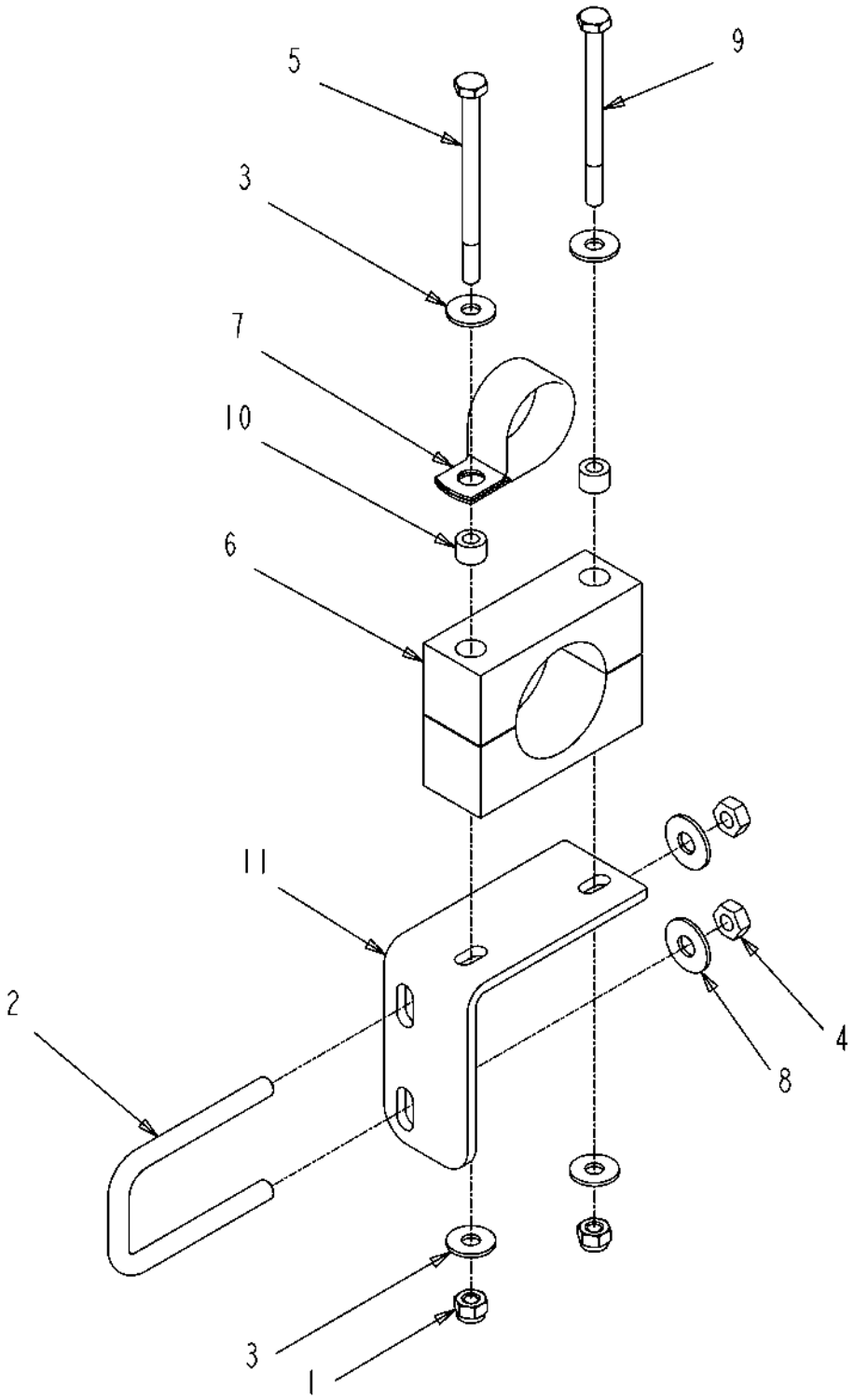

506727D1-01-M790-.TIF

Copyright © 2007 AGCO Corporation

BRKT ASM-L,1.50 STAUFF,P,LG U

ITEM	PART #	QTY	DESCRIPTION	COMMENTS
1	AG027275	2	NUT 0.25-20NC HEX SS REG NY	
2	AG261322	1	BOLT-U .31-18X1.56X 2.97SQ,SS	
3	AG515121	4	WASHER 0.25 FL SS REG TYPE-B	
4	AG516403	2	NUT 0.31-18NC HEX SS REG NY	
5	AG518507	1	BOLT 0.25-20NCX 3.50 SS HHD	
6	AG519180	1	CLAMP 1.50 BLACK POLY	
7	AG519751	1	CLAMP 1.38 DIA COATED HOSE	
8	AG562074	2	WASHER 0.31 FL SS REG TYPE-B	
9	AG563061	2	BOLT 0.25-20NCX 3.25 SS HHD	
10	AG609777	2	INSERT STAUFF SPACER	
11	506786D1	1	BRKT-MTG,SH,CLAMP,STAUFF,1.50	

Copyright © 2007 AGCO Corporation

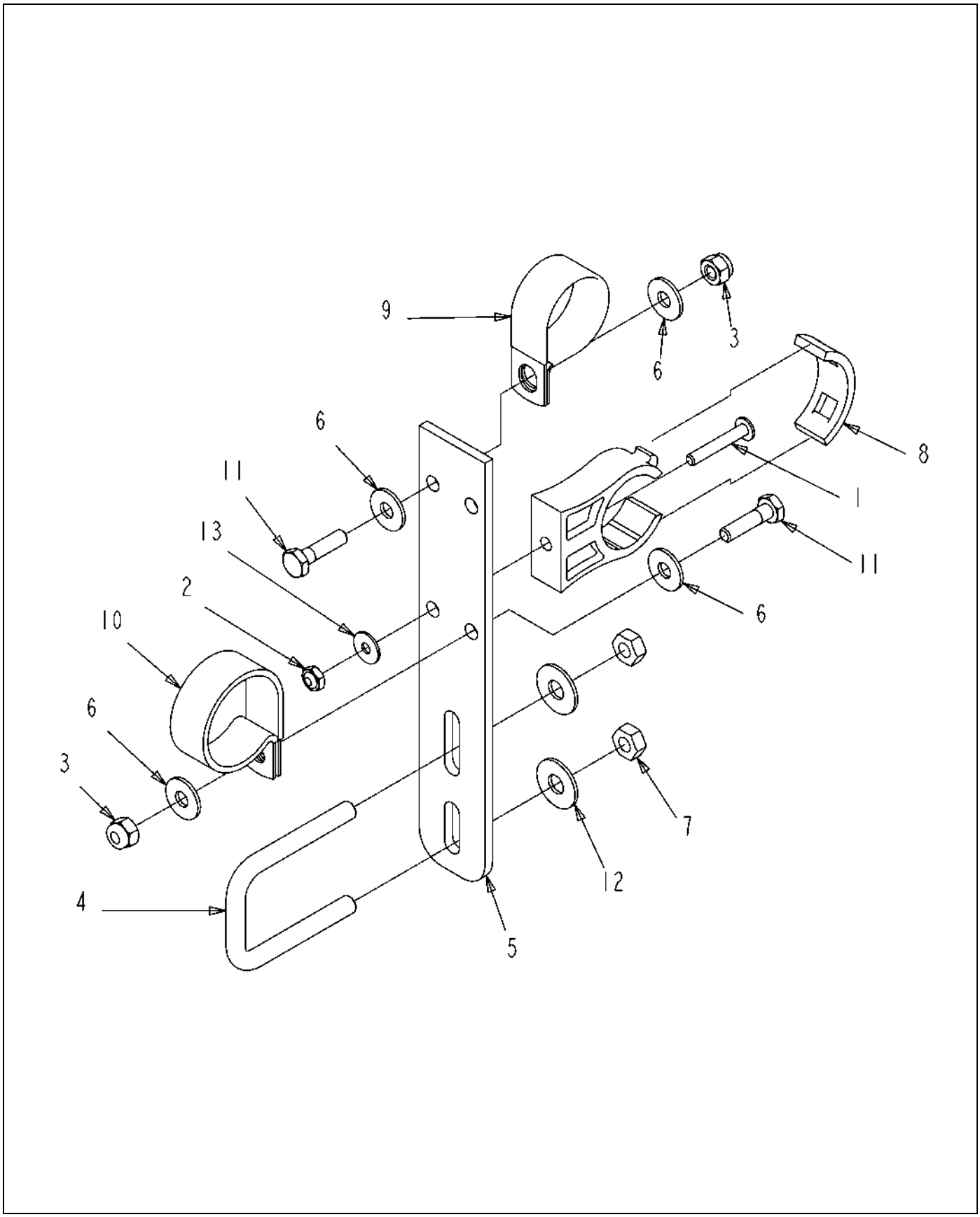

506728D1-01-M790-.TIF

Copyright © 2007 AGCO Corporation

BRKT ASM-STR,LG,IPS,2XP CLP

ITEM	PART #	QTY	DESCRIPTION	COMMENTS
1	AG027273	1	SCREW 10-24X 1.25 PHD PHILSS(P	
2	AG027274	1	NUT #10-24NC HEX SS REG NY	
3	AG027275	2	NUT 0.25-20NC HEX SS REG NY	
4	AG231204	1	BOLT-U .31-18X1.88X2.63	
5	AG234375	1	BRACKET LONG STANDOFF	
6	AG515121	4	WASHER 0.25 FL SS REG TYPE-B	
7	AG516403	2	NUT 0.31-18NC HEX SS REG NY	
8	AG519749	1	CLAMP 1.00 IPS POLY	
9	AG519751	1	CLAMP 1.38 DIA COATED HOSE	
10	AG523412	1	CLAMP-1.62 DIA,COATED HOSE	
11	AG562064	2	BOLT 0.25-20NCX 1.00 SS HHD	
12	AG562074	2	WASHER 0.31 FL SS REG TYPE-B	
13	AG562082	1	WASHER #10 FL SS REG TYPE-B	

Copyright © 2007 AGCO Corporation

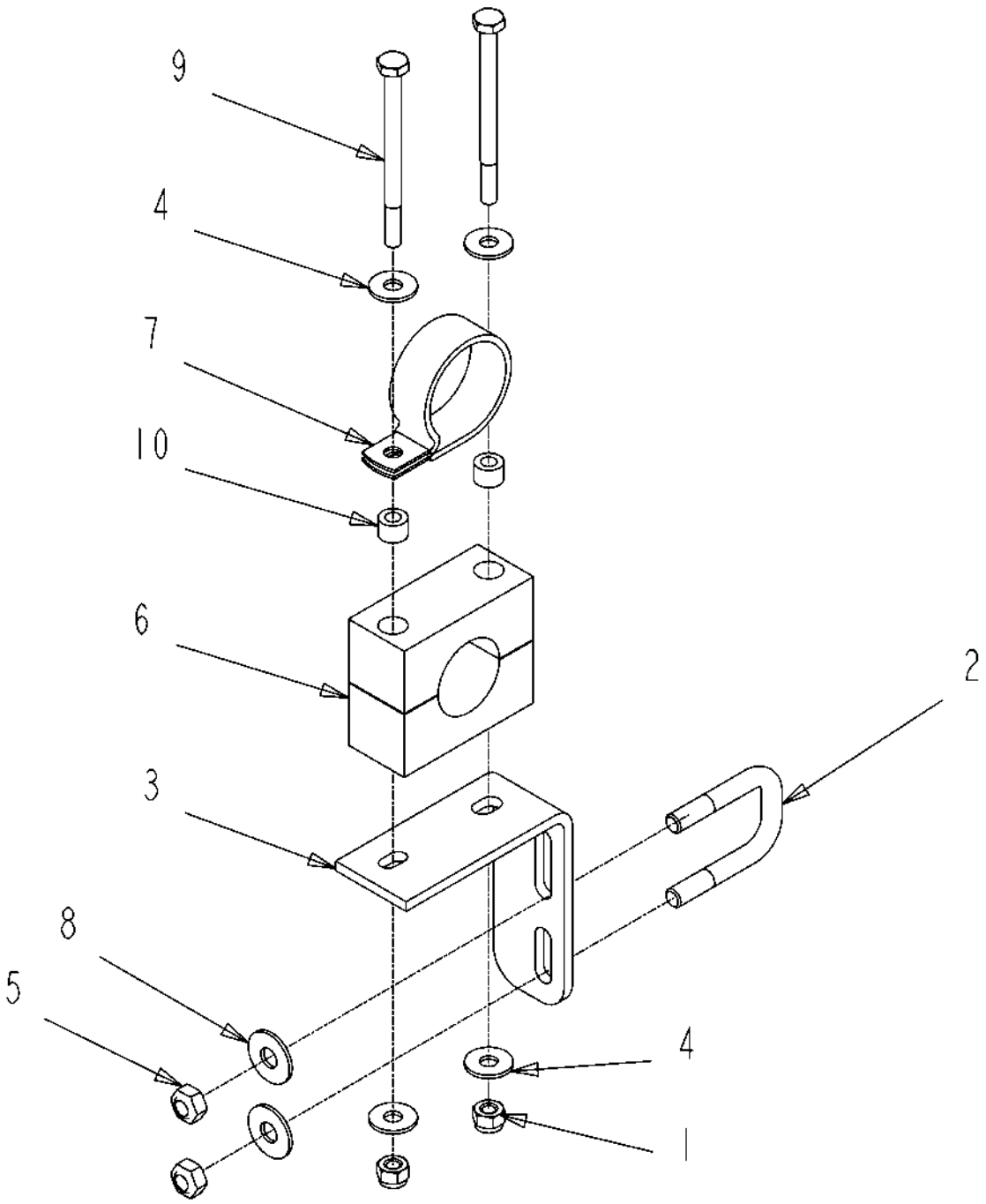

506729D1-01-M790-.TIF

Copyright © 2007 AGCO Corporation

BRKT ASM-L,PP STAUFF,PCLP,1.00

ITEM	PART #	QTY	DESCRIPTION	COMMENTS
1	AG027275	2	NUT 0.25-20NC HEX SS REG NY	
2	WR129144	1	BOLT-U,.31-18X1.06X1.97,SQ,SS	
3	AG232784	1	BRACKET STAND OFF WET BOOM	
4	AG515121	4	WASHER 0.25 FL SS REG TYPE-B	
5	AG516403	2	NUT 0.31-18NC HEX SS REG NY	
6	AG519748	1	CLAMP 1.00 PIPE	[A]
7	AG523412	1	CLAMP-1.62 DIA,COATED HOSE	
8	AG562074	2	WASHER 0.31 FL SS REG TYPE-B	
9	AG563061	2	BOLT 0.25-20NCX 3.25 SS HHD	
10	AG609777	2	INSERT STAUFF SPACER	
	FOOTNOTE [A]		2 INSERTS AND 2 CLAMP MAKE UP 1 PART. BOLT - AG563061, WASHER - AG515121, NUT - AG027275,	

Copyright © 2007 AGCO Corporation

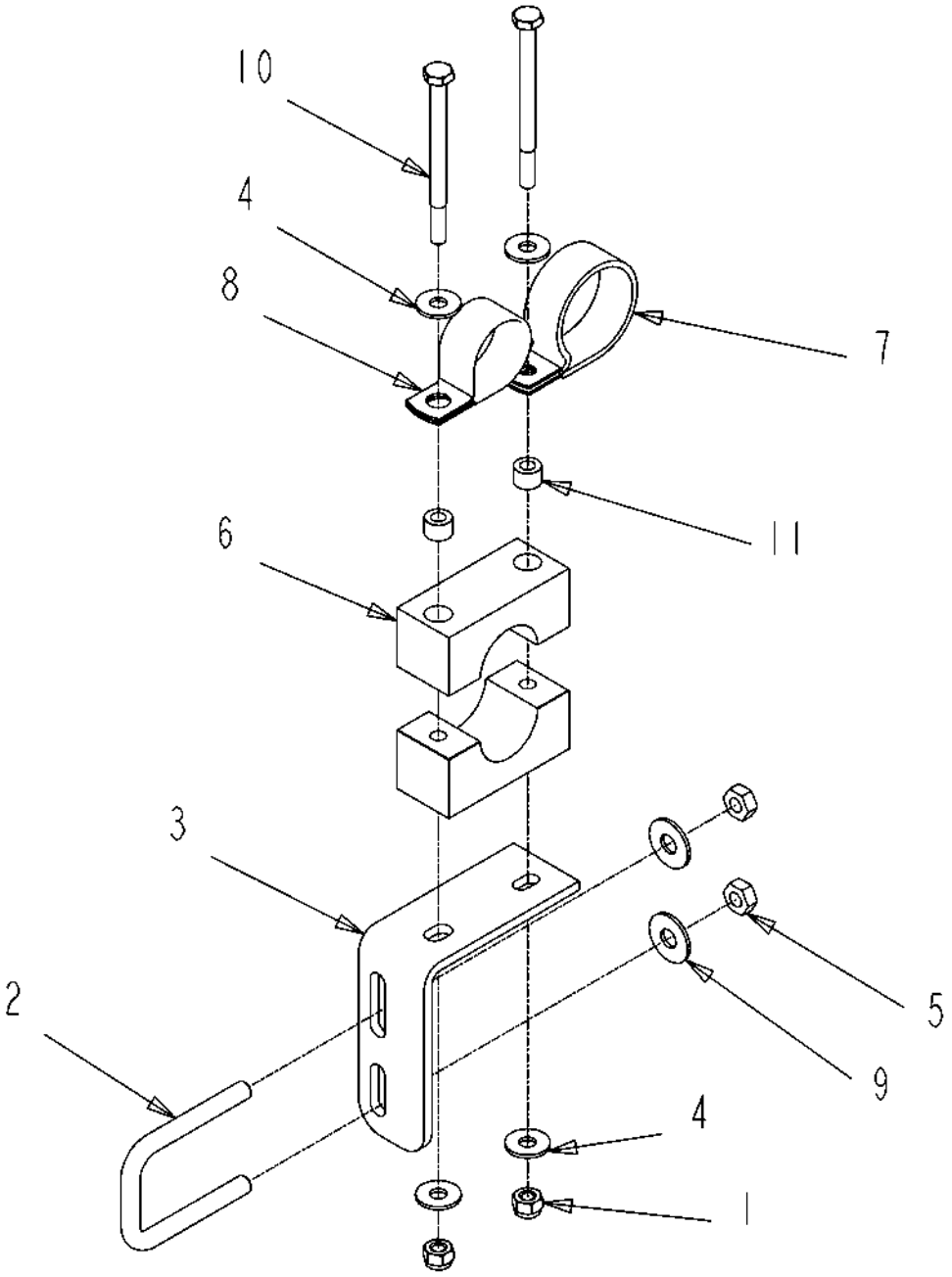

506730D1-01-M790-.TIF

Copyright © 2007 AGCO Corporation

BRKT ASM-L W/1.25/1.00 PCLP

ITEM	PART #	QTY	DESCRIPTION	COMMENTS
1	AG027275	2	NUT 0.25-20NC HEX SS REG NY	
2	AG231204	1	BOLT-U .31-18X1.88X2.63	
3	AG232784	1	BRACKET STAND OFF WET BOOM	
4	AG515121	4	WASHER 0.25 FL SS REG TYPE-B	
5	AG516403	2	NUT 0.31-18NC HEX SS REG NY	
6	AG519748	1	CLAMP 1.00 PIPE	[A]
7	AG523412	1	CLAMP-1.62 DIA,COATED HOSE	
9	AG562074	2	WASHER 0.31 FL SS REG TYPE-B	
10	AG563061	2	BOLT 0.25-20NCX 3.25 SS HHD	
11	AG609777	2	INSERT STAUFF SPACER	
	FOOTNOTE [A]		2 INSERTS AND 2 CLAMP MAKE UP 1 PART. BOLT - AG563061, WASHER - AG515121, NUT - AG027275,	

Copyright © 2007 AGCO Corporation

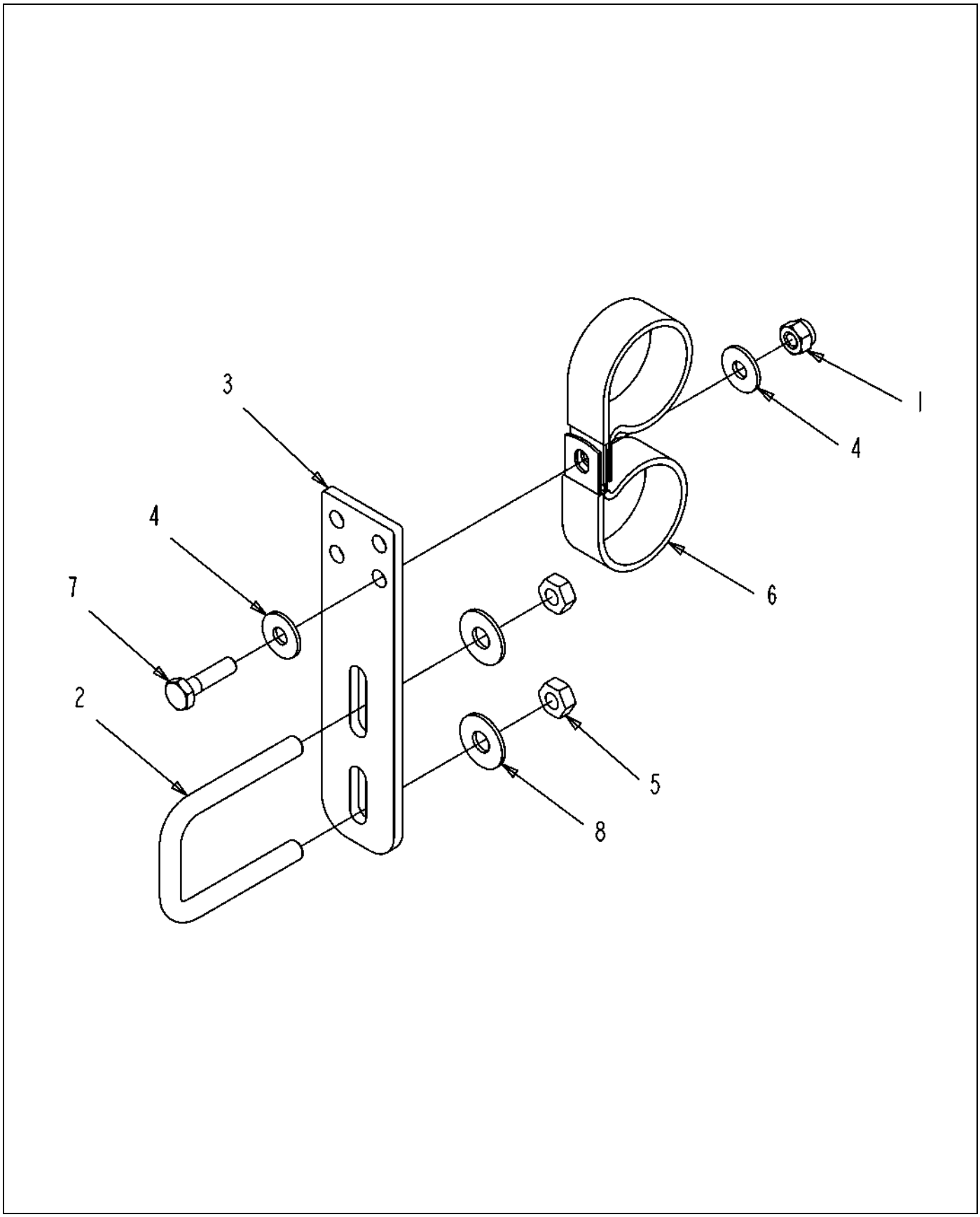

506731D1-01-M790-.TIF

Copyright © 2007 AGCO Corporation

BRKT ASM-STR,SH,2X 1.25 P CLP

ITEM	PART #	QTY	DESCRIPTION	COMMENTS
1	AG027275	1	NUT 0.25-20NC HEX SS REG NY	
2	AG231204	1	BOLT-U .31-18X1.88X2.63	
3	AG234373	1	BRACKET SHORT STANDOFF	
4	AG515121	2	WASHER 0.25 FL SS REG TYPE-B	
5	AG516403	2	NUT 0.31-18NC HEX SS REG NY	
6	AG523412	2	CLAMP-1.62 DIA,COATED HOSE	
7	AG562064	1	BOLT 0.25-20NCX 1.00 SS HHD	
8	AG562074	1	WASHER 0.31 FL SS REG TYPE-B	

Copyright © 2007 AGCO Corporation

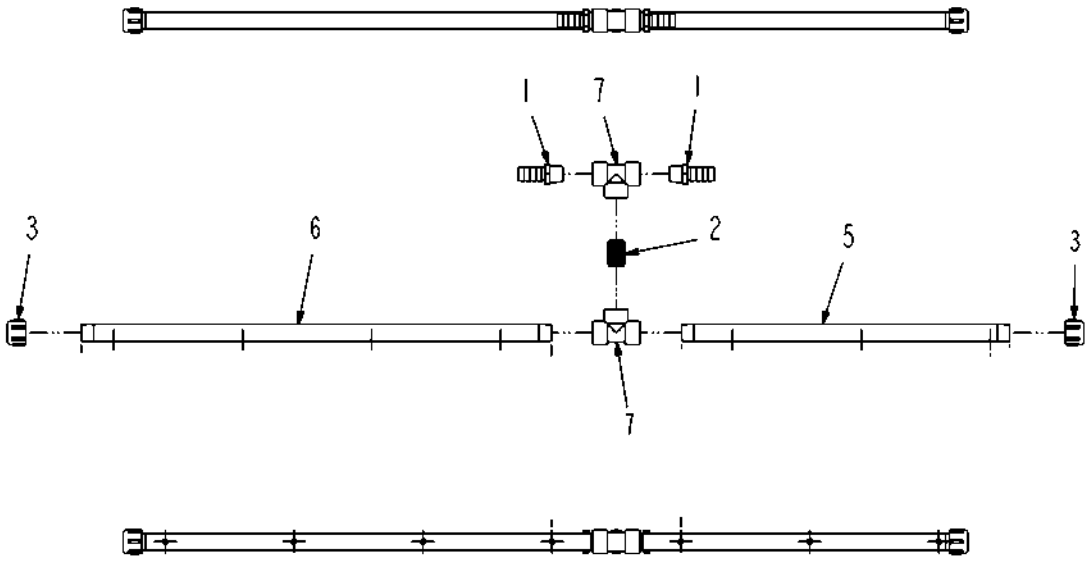

506734D1-01-M790-.tif

Copyright © 2007 AGCO Corporation

PIPE ASM-T W/2 1.00HB,7X10,PP

ITEM	PART #	QTY	DESCRIPTION	COMMENTS
1	AG051059	2	BARB-HOSE,1.00MNPTX1.00BARB,PP	
2	AG051153	1	NIPPLE-PIPE,1.00NPTXCLS,PP	
3	AG051536	2	CAP-PIPE,1.00NPT PP	
4	AG129187	AR	PIPE SEALANT-FLEX BLACK	
5	AG239929	1	TUBE-POLY,25.44,10IN CTR	
6	AG239935	1	TUBE-POLY,36.44,10IN CTR	
7	AG516405	2	TEE,PIPE,1.00FNPT,PP	

Copyright © 2007 AGCO Corporation

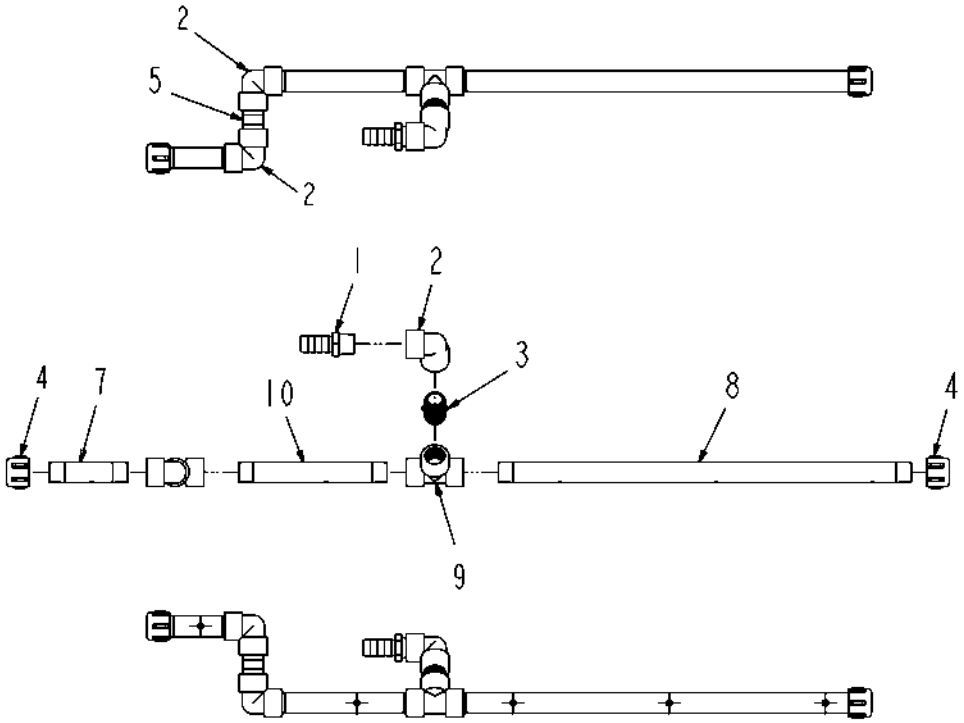

506735D1-01-M790-.tif

Copyright © 2007 AGCO Corporation

PIPE ASM-90D W/1HB,5X10,PP,RH

ITEM	PART #	QTY	DESCRIPTION	COMMENTS
1	AG051059	1	BARB-HOSE,1.00MNPTX1.00BARB,PP	
2	AG051127	3	ELBOW-PIPE,1.00FNPT,90D,PP	
3	AG051153	1	NIPPLE-PIPE,1.00NPTXCLS,PP	
4	AG051536	2	CAP-PIPE,1.00NPT PP	
5	AG051904	1	NIPPLE 1.00NPTX 2.50 304SS	
6	AG129187	AR	PIPE SEALANT-FLEX BLACK	
7	AG234787	1	TUBE-POLY 5.00 X 10.00 CTRS	
8	AG239936	1	TUBE-POLY,26.44,10IN CTR	
9	AG516405	2	TEE,PIPE,1.00FNPT,PP	
10	506796D1	1	TUBE-POLY,9.50,10IN CTR	

Copyright © 2007 AGCO Corporation

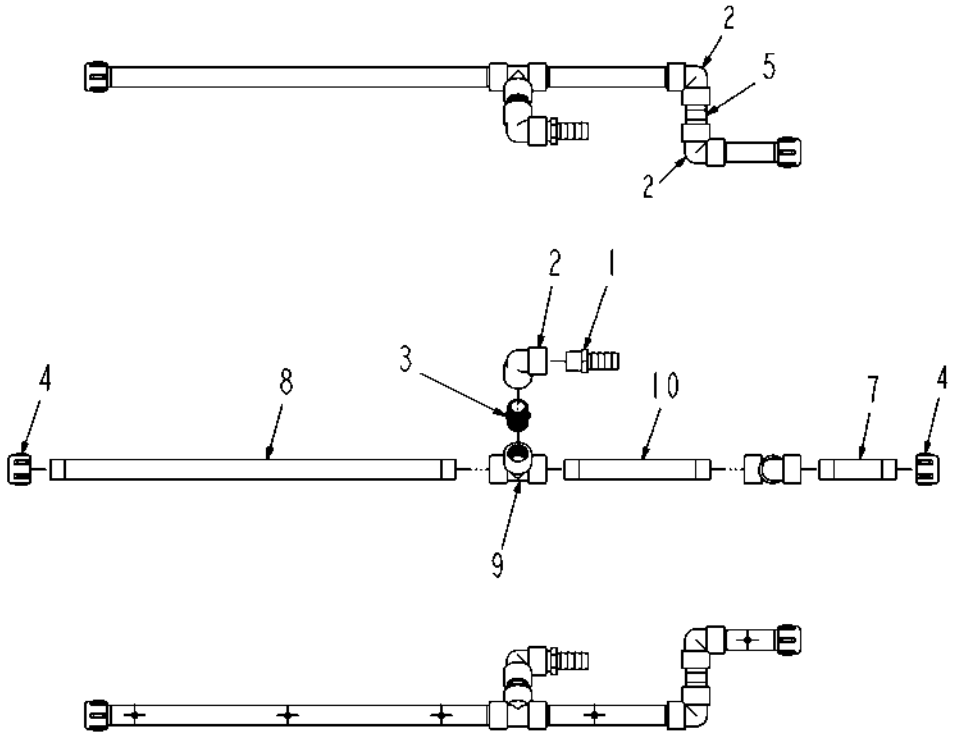

506736D1-01-M790-.TIF

Copyright © 2007 AGCO Corporation

PIPE ASM-90D W/1HB,5X10,PP,LH

ITEM	PART #	QTY	DESCRIPTION	COMMENTS
1	AG051059	1	BARB-HOSE,1.00MNPTX1.00BARB,PP	
2	AG051127	3	ELBOW-PIPE,1.00FNPT,90D,PP	
3	AG051153	1	NIPPLE-PIPE,1.00NPTXCLS,PP	
4	AG051536	2	CAP-PIPE,1.00NPT PP	
5	AG051904	1	NIPPLE 1.00NPTX 2.50 304SS	
6	AG129187	AR	PIPE SEALANT-FLEX BLACK	
7	AG234787	1	TUBE-POLY 5.00 X 10.00 CTRS	
8	AG239936	1	TUBE-POLY,26.44,10IN CTR	
9	AG516405	2	TEE,PIPE,1.00FNPT,PP	
10	506796D1	1	TUBE-POLY,9.50,10IN CTR	

Copyright © 2007 AGCO Corporation

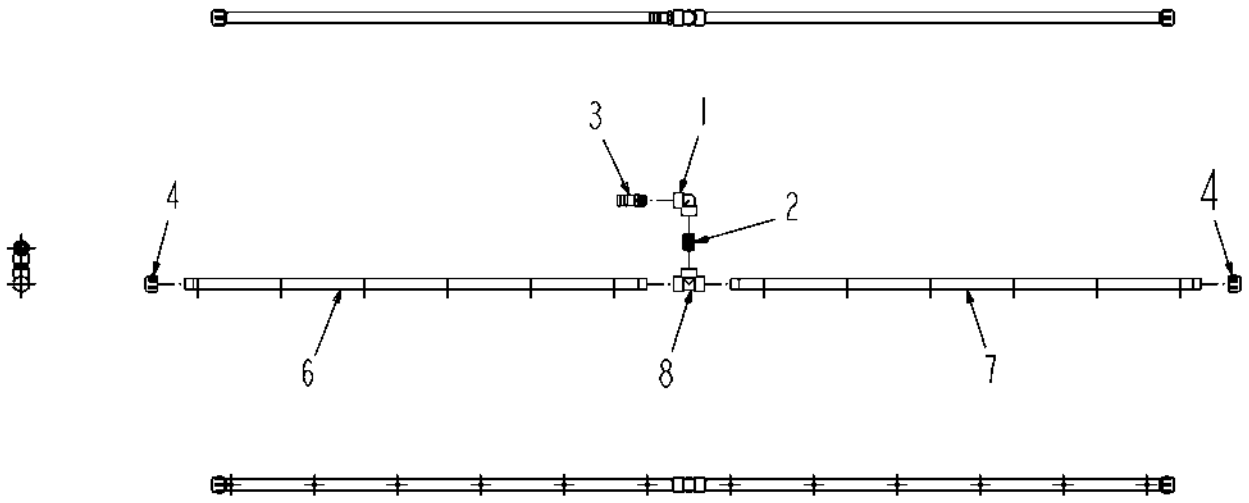

506737D1-01-M790-.TIF

Copyright © 2007 AGCO Corporation

PIPE ASM-90D W/1.25HB,12X10,PP

ITEM	PART #	QTY	DESCRIPTION	COMMENTS
1	AG051127	1	ELBOW-PIPE,1.00FNPT,90D,PP	
2	AG051153	1	NIPPLE-PIPE,1.00NPTXCLS,PP	
3	AG051183	1	BARB-HOSE,1.00MNPTX1.25BARB,PP	
4	AG051536	2	CAP-PIPE,1.00NPT PP	
5	AG129187	AR	PIPE SEALANT-FLEX BLACK	
6	AG134850	1	TUBE-PP,55.44,10IN CTR	
7	AG239937	1	TUBE-POLY,56.44,10IN CTR	
8	AG516405	1	TEE,PIPE,1.00FNPT,PP	

Copyright © 2007 AGCO Corporation

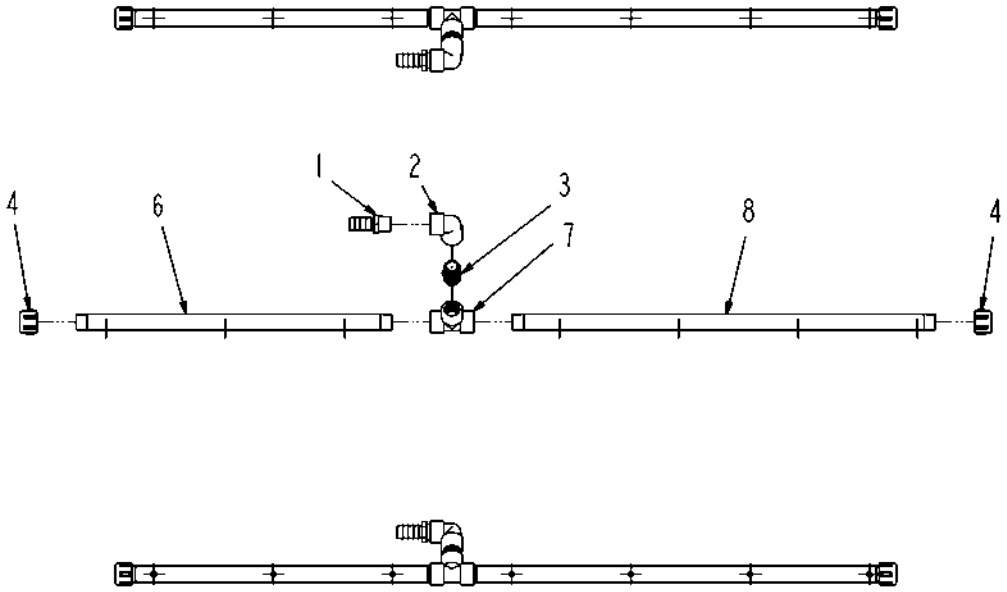

506738D1-01-M790-.tif

Copyright © 2007 AGCO Corporation

PIPE ASM-90D W/1HB,7X10,PP,RH

ITEM	PART #	QTY	DESCRIPTION	COMMENTS
1	AG051059	1	BARB-HOSE,1.00MNPTX1.00BARB,PP	
2	AG051127	1	ELBOW-PIPE,1.00FNPT,90D,PP	
3	AG051153	1	NIPPLE-PIPE,1.00NPTXCLS,PP	
4	AG051536	2	CAP-PIPE,1.00NPT PP	
5	AG129187	AR	PIPE SEALANT-FLEX BLACK	
6	AG239936	1	TUBE-POLY,26.44,10IN CTR	
7	AG516405	1	TEE,PIPE,1.00FNPT,PP	
8	506805D1	1	TUBE-POLY,35.44,10IN CTR	

Copyright © 2007 AGCO Corporation

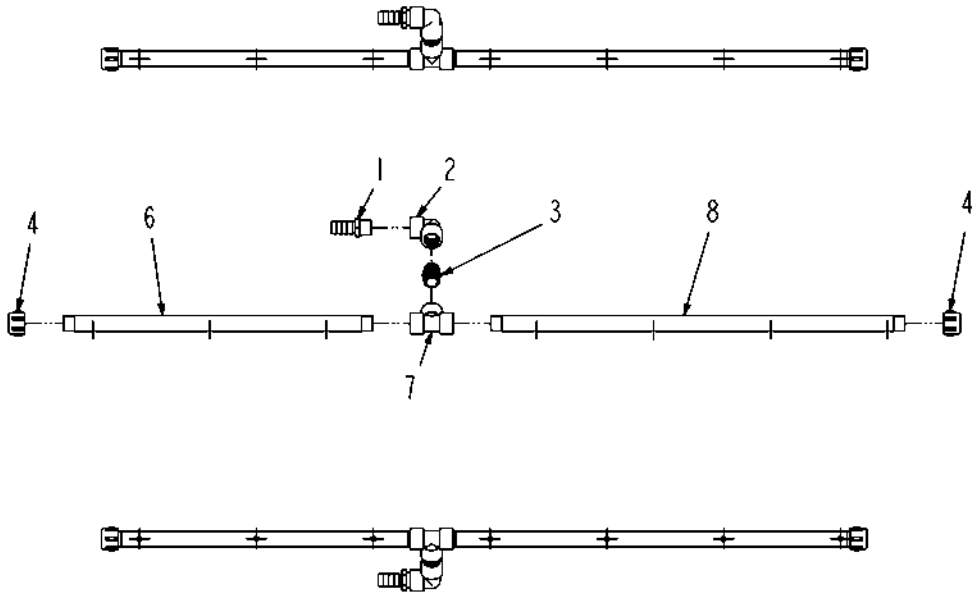

506739D1-01-M790-.tif

Copyright © 2007 AGCO Corporation

PIPE ASM-90D W/1HB,7X10,PP,LH

ITEM	PART #	QTY	DESCRIPTION	COMMENTS
1	AG051059	1	BARB-HOSE,1.00MNPTX1.00BARB,PP	
2	AG051127	1	ELBOW-PIPE,1.00FNPT,90D,PP	
3	AG051153	1	NIPPLE-PIPE,1.00NPTXCLS,PP	
4	AG051536	2	CAP-PIPE,1.00NPT PP	
5	AG129187	AR	PIPE SEALANT-FLEX BLACK	
6	AG239936	1	TUBE-POLY,26.44,10IN CTR	
7	AG516405	1	TEE,PIPE,1.00FNPT,PP	
8	506805D1	1	TUBE-POLY,35.44,10IN CTR	

Copyright © 2007 AGCO Corporation

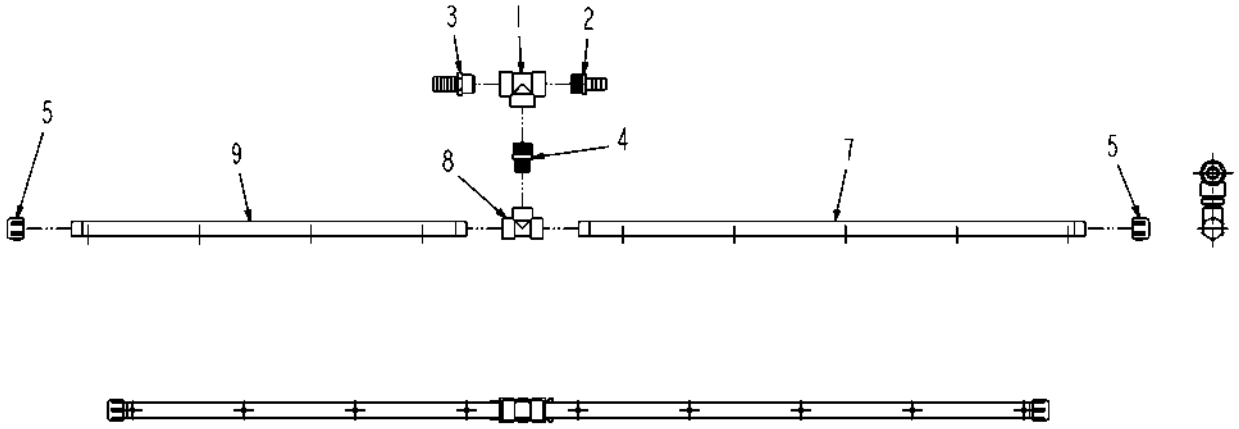

506740D1-01-M790-.TIF

Copyright © 2007 AGCO Corporation

PIPE ASM-T W/1.25/1HD,9X10,PP

ITEM	PART #	QTY	DESCRIPTION	COMMENTS
1	AG051162	1	TEE,PIPE,1.25FNPT,PP	
2	AG051185	1	BARB-HOSE,1.25MNPTX1.00BARB,PP	
3	AG051186	1	BARB-HOSE,1.25MNPTX1.25BARB,PP	
4	AG051437	1	NIPPLE RED 1.25NPTX1.00NPT PP	
5	AG051536	2	CAP-PIPE,1.00NPT PP	
6	AG129187	AR	PIPE SEALANT-FLEX BLACK	
7	AG239930	1	TUBE-POLY,45.44,10IN CTR	
8	AG516405	1	TEE,PIPE,1.00FNPT,PP	
9	506805D1	1	TUBE-POLY,35.44,10IN CTR	

Copyright © 2007 AGCO Corporation

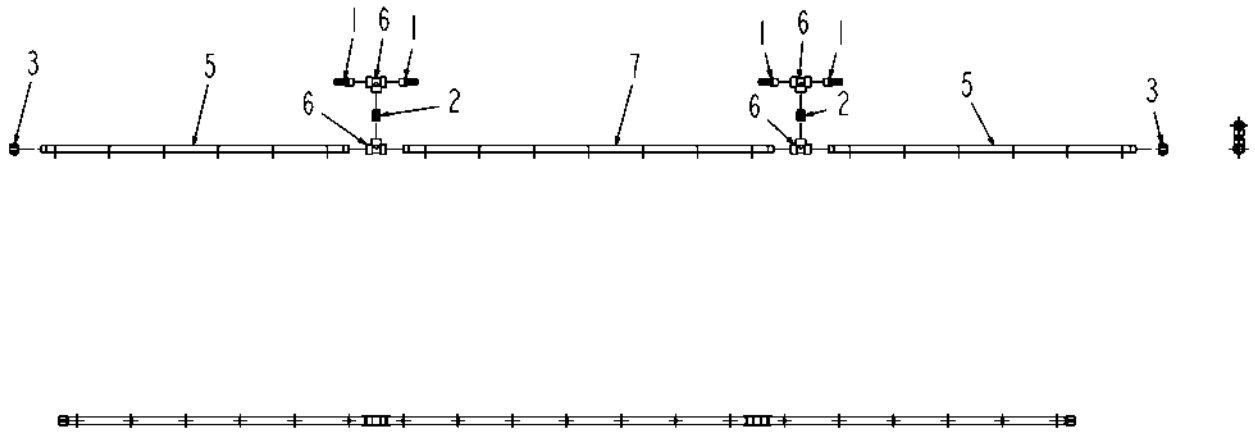

506741D1-01-M790-.TIF

Copyright © 2007 AGCO Corporation

PIPE ASM-2T,W/4 1HB,19X10,PP

ITEM	PART #	QTY	DESCRIPTION	COMMENTS
1	AG051059	4	BARB-HOSE,1.00MNPTX1.00BARB,PP	
2	AG051153	2	NIPPLE-PIPE,1.00NPTXCLS,PP	
3	AG051536	2	CAP-PIPE,1.00NPT PP	
4	AG129187	AR	PIPE SEALANT-FLEX BLACK	
5	AG239937	2	TUBE-POLY,56.44,10IN CTR	
6	AG516405	4	TEE,PIPE,1.00FNPT,PP	
7	506806D1	1	TUBE-POLY,67.88,10IN CTR	

Copyright © 2007 AGCO Corporation

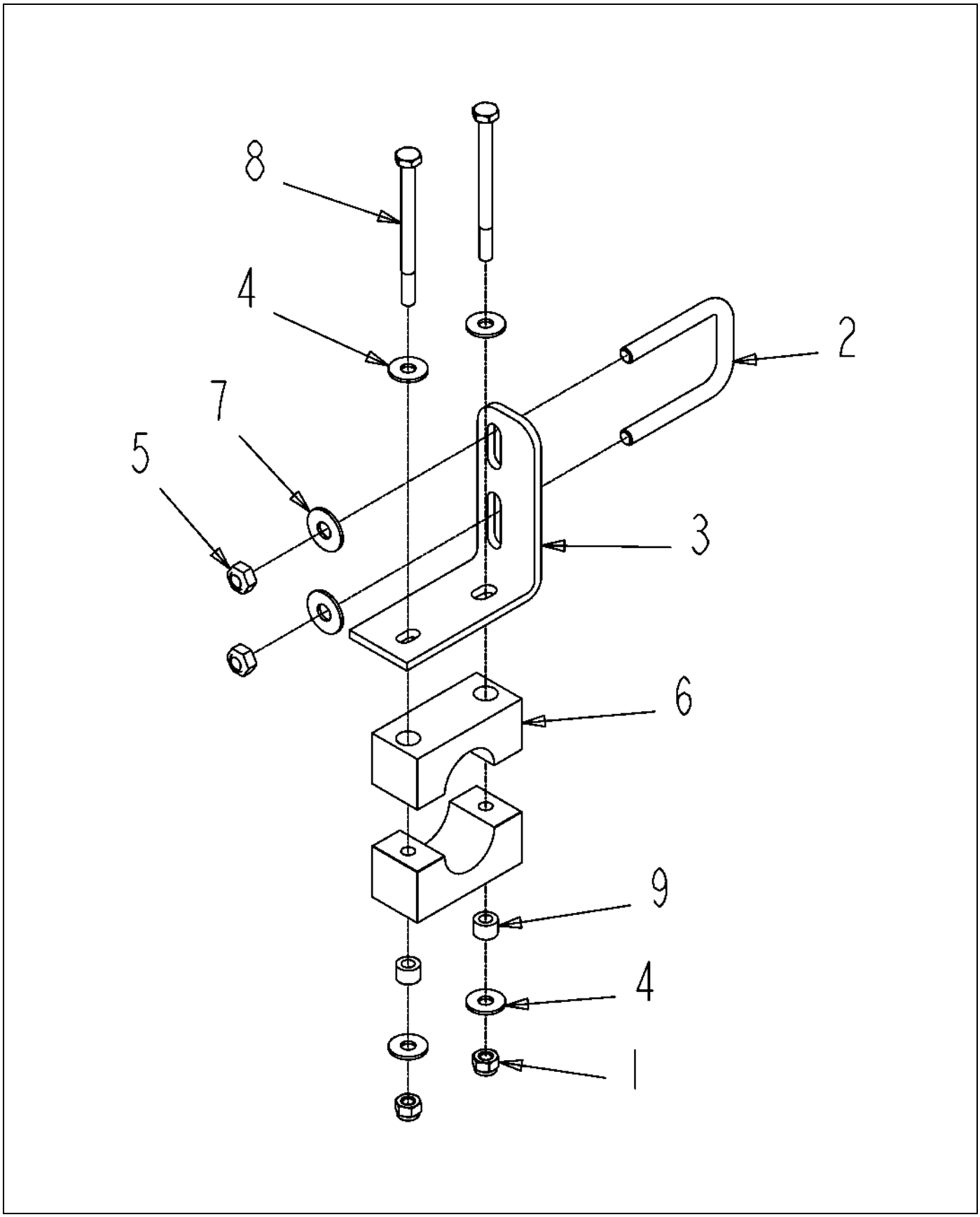

508671D1-01-N145.TIF

Copyright © 2007 AGCO Corporation

BRKT ASM-L,REV,1.00PP STAUFF

ITEM	PART #	QTY	DESCRIPTION	COMMENTS
1	AG027275	2	NUT 0.25-20NC HEX SS REG NY	
2	AG231204	1	BOLT-U .31-18X1.88X2.63	
3	AG232784	1	BRACKET STAND OFF WET BOOM	
4	AG515121	4	WASHER 0.25 FL SS REG TYPE-B	
5	AG516403	2	NUT 0.31-18NC HEX SS REG NY	
6	AG519748	1	CLAMP 1.00 PIPE	[A]
7	AG562074	2	WASHER 0.31 FL SS REG TYPE-B	
8	AG563061	2	BOLT 0.25-20NCX 3.25 SS HHD	
9	AG609777	2	INSERT STAUFF SPACER	
	FOOTNOTE [A]		2 INSERTS AND 2 CLAMP MAKE UP 1 PART. BOLT - AG563061, WASHER - AG515121, NUT - AG027275,	

Copyright © 2007 AGCO Corporation

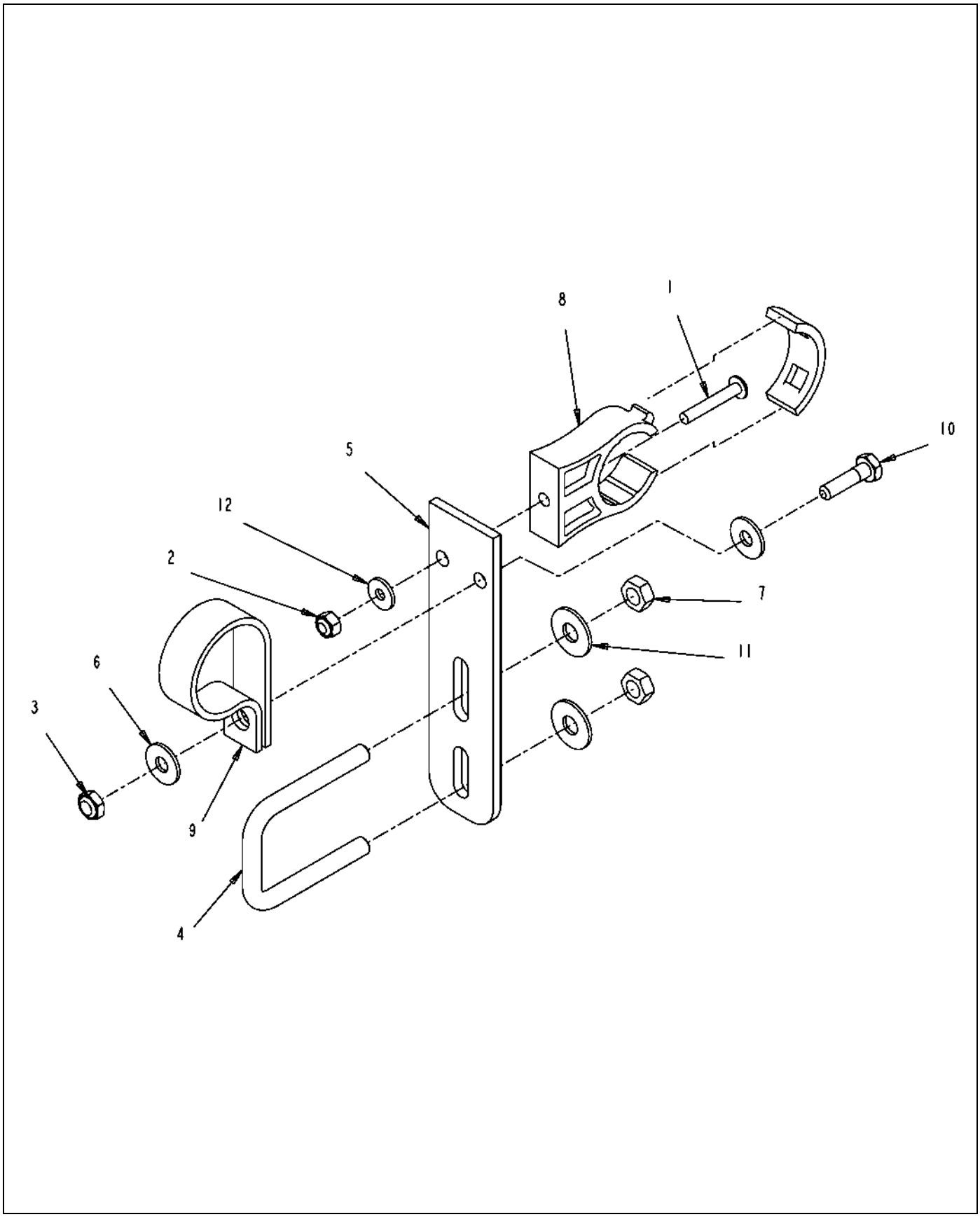

122606-A.TIF

Copyright © 2007 AGCO Corporation

BRKT ASM-STR,SH,IPS,1.25 P CLP

ITEM	PART #	QTY	DESCRIPTION	COMMENTS
1	AG027273	1	SCREW 10-24X 1.25 PHD PHILSS(P	
2	AG027274	1	NUT #10-24NC HEX SS REG NY	
3	AG027275	1	NUT 0.25-20NC HEX SS REG NY	
4	AG231204	1	BOLT-U .31-18X1.88X2.63	
5	AG234373	1	BRACKET SHORT STANDOFF	
6	AG515121	2	WASHER 0.25 FL SS REG TYPE-B	
7	AG516403	2	NUT 0.31-18NC HEX SS REG NY	
8	AG519749	1	CLAMP 1.00 IPS POLY	
9	AG523412	1	CLAMP-1.62 DIA,COATED HOSE	
10	AG562064	1	BOLT 0.25-20NCX 1.00 SS HHD	
11	AG562074	2	WASHER 0.31 FL SS REG TYPE-B	
12	AG562082	1	WASHER #10 FL SS REG TYPE-B	

Copyright © 2007 AGCO Corporation

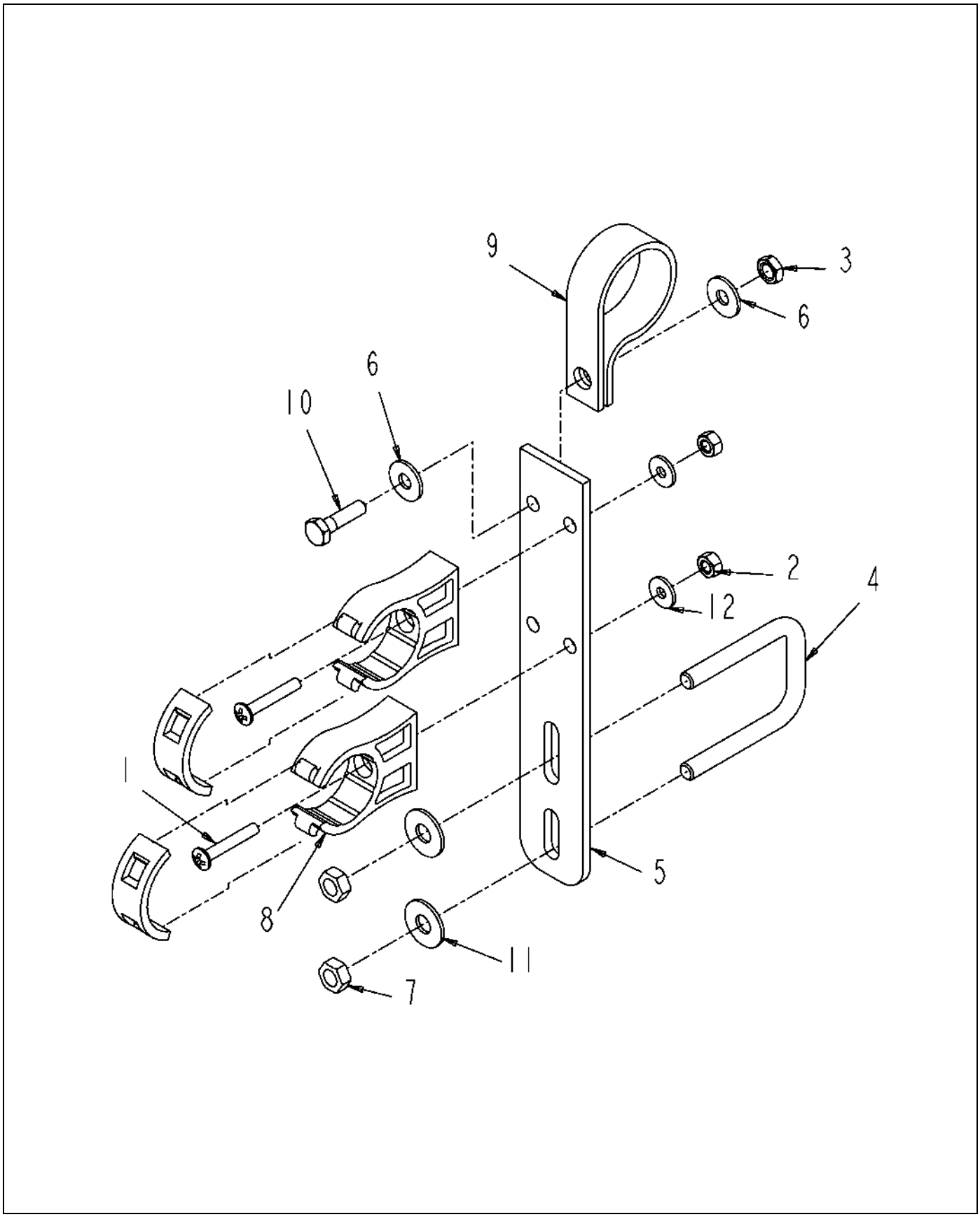

122607-B.TIF

Copyright © 2007 AGCO Corporation

BRKT ASM-STR,LG,1.25 PCLP 2IPS

ITEM	PART #	QTY	DESCRIPTION	COMMENTS
1	AG027273	2	SCREW 10-24X 1.25 PHD PHILSS(P	
2	AG027274	2	NUT #10-24NC HEX SS REG NY	
3	AG027275	1	NUT 0.25-20NC HEX SS REG NY	
4	AG231204	1	BOLT-U .31-18X1.88X2.63	
5	AG234375	1	BRACKET LONG STANDOFF	
6	AG515121	2	WASHER 0.25 FL SS REG TYPE-B	
7	AG516403	2	NUT 0.31-18NC HEX SS REG NY	
8	AG519749	2	CLAMP 1.00 IPS POLY	
9	AG523412	1	CLAMP-1.62 DIA,COATED HOSE	
10	AG562064	1	BOLT 0.25-20NCX 1.00 SS HHD	
11	AG562074	2	WASHER 0.31 FL SS REG TYPE-B	
12	AG562082	2	WASHER #10 FL SS REG TYPE-B	

Copyright © 2007 AGCO Corporation

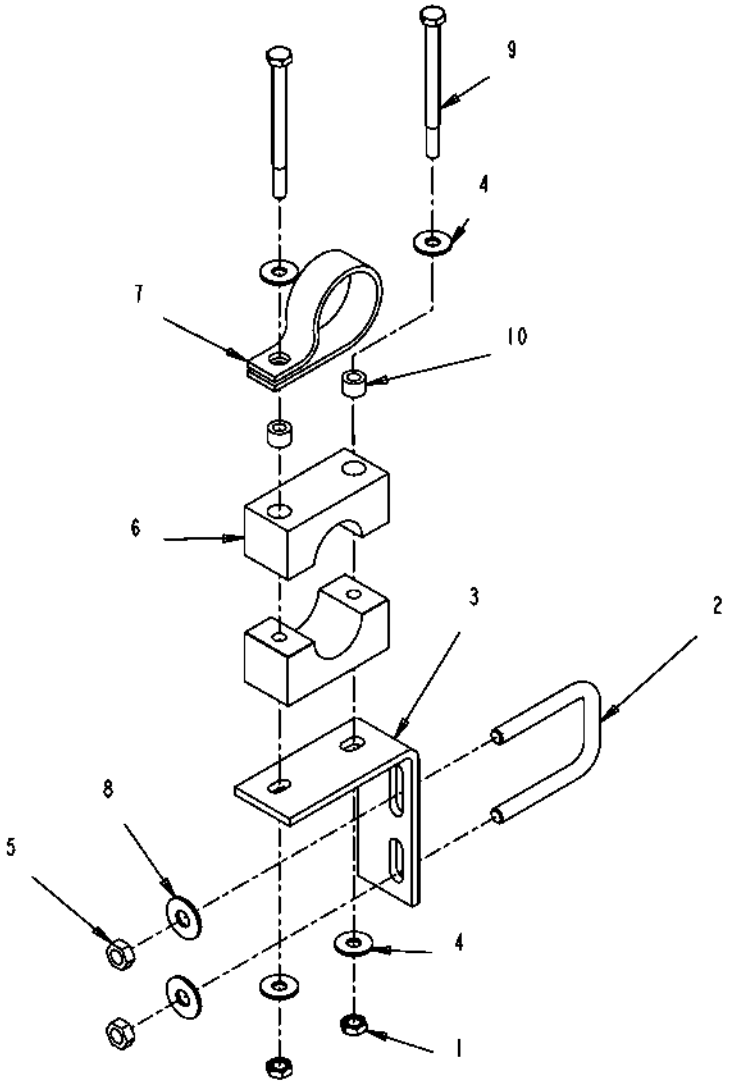

122609-B.TIF

Copyright © 2007 AGCO Corporation

BRKT ASM-L,PP STAUFF,1.25 PCLP

ITEM	PART #	QTY	DESCRIPTION	COMMENTS
1	AG027275	2	NUT 0.25-20NC HEX SS REG NY	
2	AG231204	1	BOLT-U .31-18X1.88X2.63	
3	AG232784	1	BRACKET STAND OFF WET BOOM	
4	AG515121	4	WASHER 0.25 FL SS REG TYPE-B	
5	AG516403	2	NUT 0.31-18NC HEX SS REG NY	
6	AG519748	1	CLAMP 1.00 PIPE	[A]
7	AG523412	1	CLAMP-1.62 DIA,COATED HOSE	
8	AG562074	2	WASHER 0.31 FL SS REG TYPE-B	
9	AG563061	2	BOLT 0.25-20NCX 3.25 SS HHD	
10	AG609777	2	INSERT STAUFF SPACER	
	FOOTNOTE [A]		2 INSERTS AND 2 CLAMP MAKE UP 1 PART. BOLT - AG563061, WASHER - AG515121, NUT - AG027275,	

Copyright © 2007 AGCO Corporation

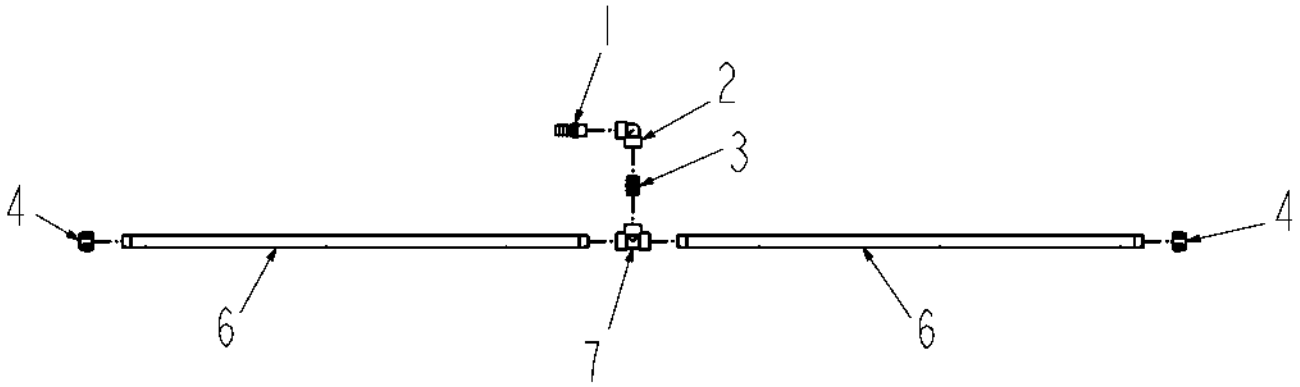

127095-B.TIF

Copyright © 2007 AGCO Corporation

PIPE ASM-90D W/1.00HB,6X20,PP

ITEM	PART #	QTY	DESCRIPTION	COMMENTS
1	AG051059	1	BARB-HOSE,1.00MNPTX1.00BARB,PP	
2	AG051127	1	ELBOW-PIPE,1.00FNPT,90D,PP	
3	AG051153	1	NIPPLE-PIPE,1.00NPTXCLS,PP	
4	AG051536	2	CAP-PIPE,1.00NPT PP	
5	AG129187	AR	PIPE SEALANT-FLEX BLACK	
6	AG239721	2	TUBE-51.50,POLY	
7	AG516405	1	TEE,PIPE,1.00FNPT,PP	

Copyright © 2007 AGCO Corporation

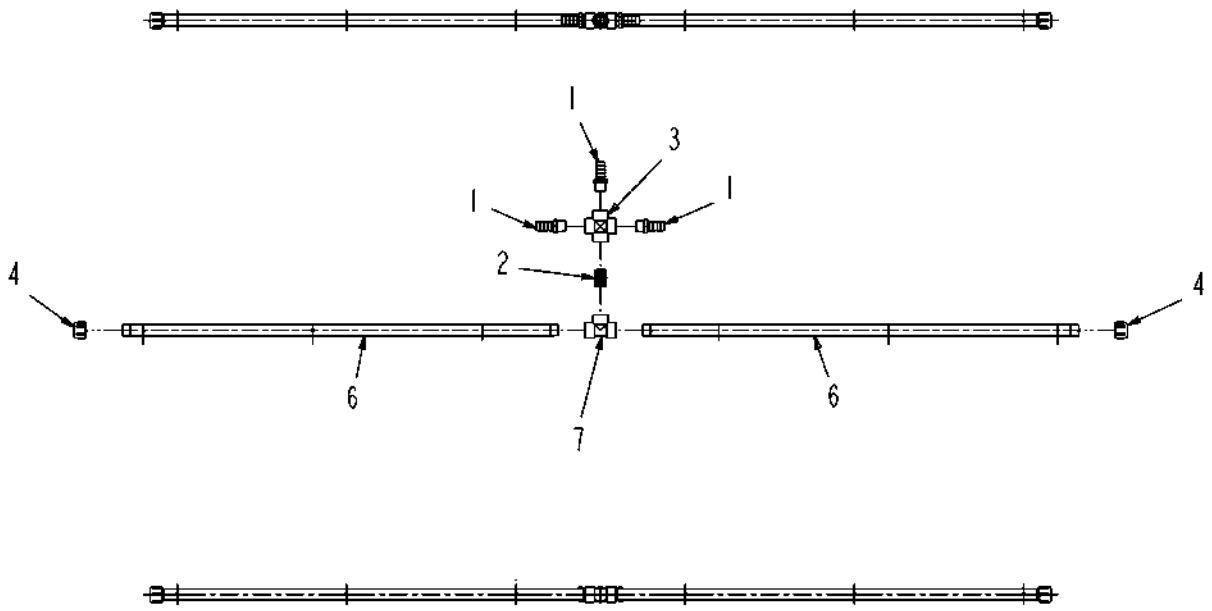

134651-A.tif

Copyright © 2007 AGCO Corporation

PIPE ASM-X W/3 1.00HB,6X20,PP

ITEM	PART #	QTY	DESCRIPTION	COMMENTS
1	AG051059	3	BARB-HOSE,1.00MNPTX1.00BARB,PP	
2	AG051153	1	NIPPLE-PIPE,1.00NPTXCLS,PP	
3	AG051442	1	CROSS-PIPE,1.00FNPT,PP	
4	AG051536	2	CAP-PIPE,1.00NPT PP	
5	AG129187	AR	PIPE SEALANT-FLEX BLACK	
6	AG239721	2	TUBE-51.50,POLY	
7	AG516405	1	TEE,PIPE,1.00FNPT,PP	

Copyright © 2007 AGCO Corporation

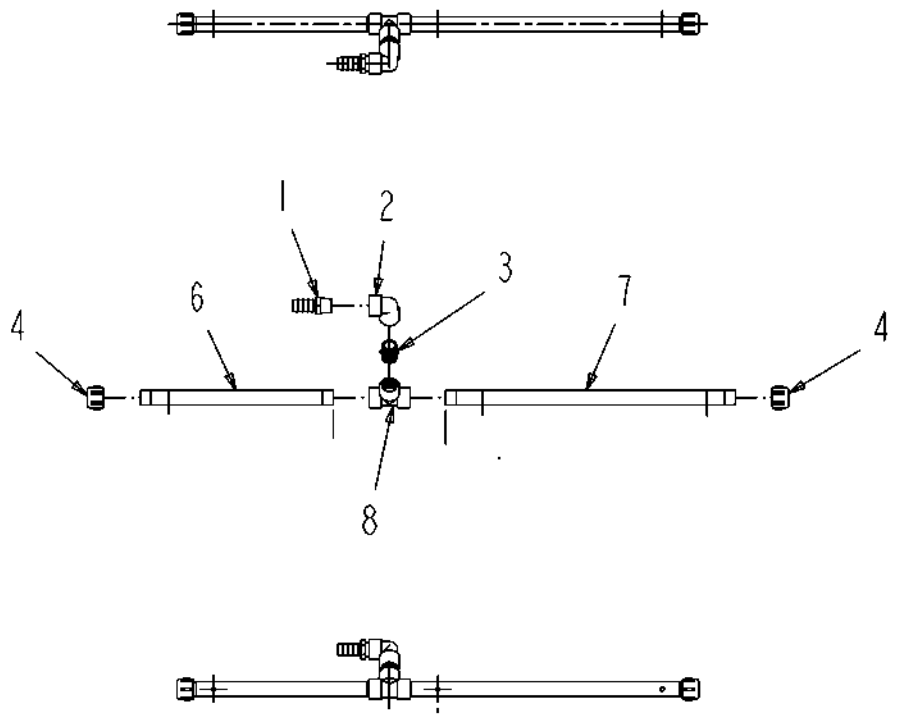

134652-A.tif

Copyright © 2007 AGCO Corporation

PIPE ASM-90D W/1HB,3X20,PP,RH

ITEM	PART #	QTY	DESCRIPTION	COMMENTS
1	AG051059	1	BARB-HOSE,1.00MNPTX1.00BARB,PP	
2	AG051127	1	ELBOW-PIPE,1.00FNPT,90D,PP	
3	AG051153	1	NIPPLE-PIPE,1.00NPTXCLS,PP	
4	AG051536	2	CAP-PIPE,1.00NPT PP	
5	AG129187	AR	PIPE SEALANT-FLEX BLACK	
6	AG239722	1	TUBE-17.19,POLY	
7	AG239723	1	TUBE-25.81,POLY	
8	AG516405	1	TEE,PIPE,1.00FNPT,PP	

Copyright © 2007 AGCO Corporation

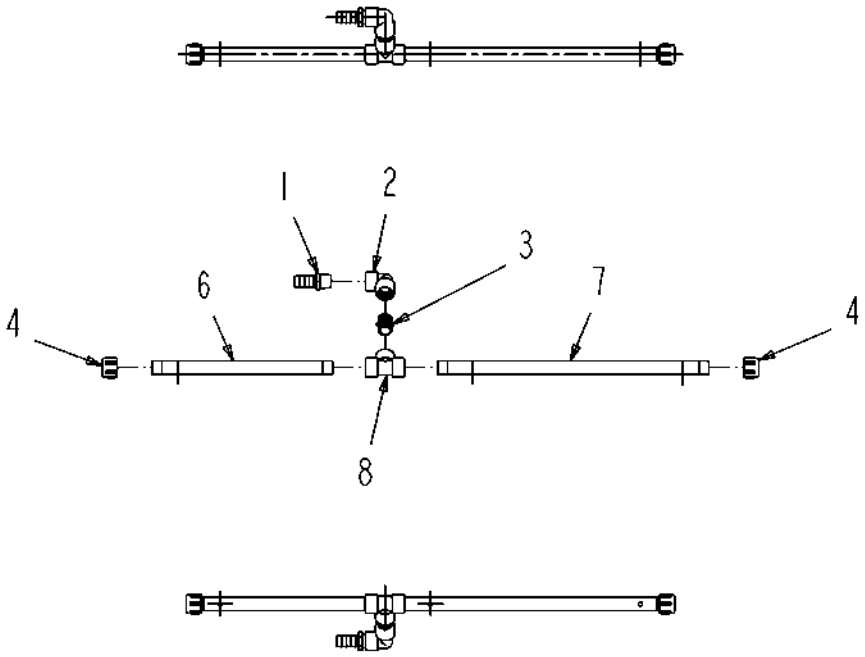

134653-A.tif

Copyright © 2007 AGCO Corporation

PIPE ASM-90D W/1HB,3X20,PP,LH

ITEM	PART #	QTY	DESCRIPTION	COMMENTS
1	AG051059	1	BARB-HOSE,1.00MNPTX1.00BARB,PP	
2	AG051127	1	ELBOW-PIPE,1.00FNPT,90D,PP	
3	AG051153	1	NIPPLE-PIPE,1.00NPTXCLS,PP	
4	AG051536	2	CAP-PIPE,1.00NPT PP	
5	AG129187	AR	PIPE SEALANT-FLEX BLACK	
6	AG239722	1	TUBE-17.19,POLY	
7	AG239723	1	TUBE-25.81,POLY	
8	AG516405	1	TEE,PIPE,1.00FNPT,PP	

Copyright © 2007 AGCO Corporation

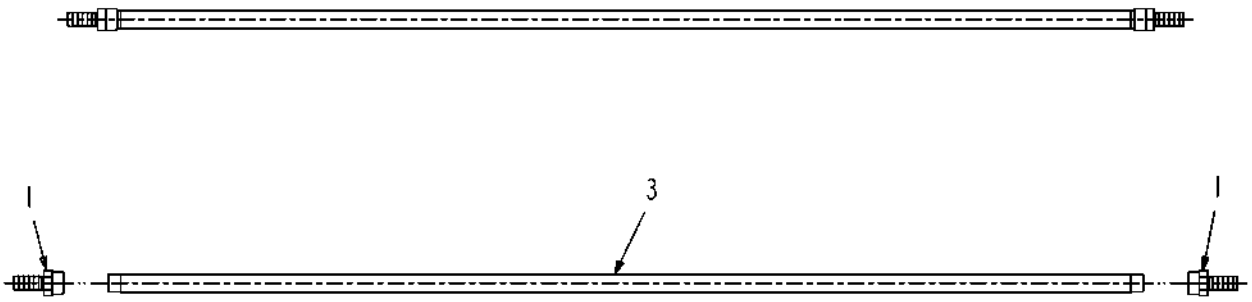

134667-A.TIF

Copyright © 2007 AGCO Corporation

PIPE ASM-W/2 1.00HB,77.00,PP

ITEM	PART #	QTY	DESCRIPTION	COMMENTS
1	AG122510	2	BARB-HOSE,1.00FNPTX1.00BARB,PP	
2	AG129187	AR	PIPE SEALANT-FLEX BLACK	
3	AG234489	1	TUBE 77.00 SECTION FEED	

Copyright © 2007 AGCO Corporation

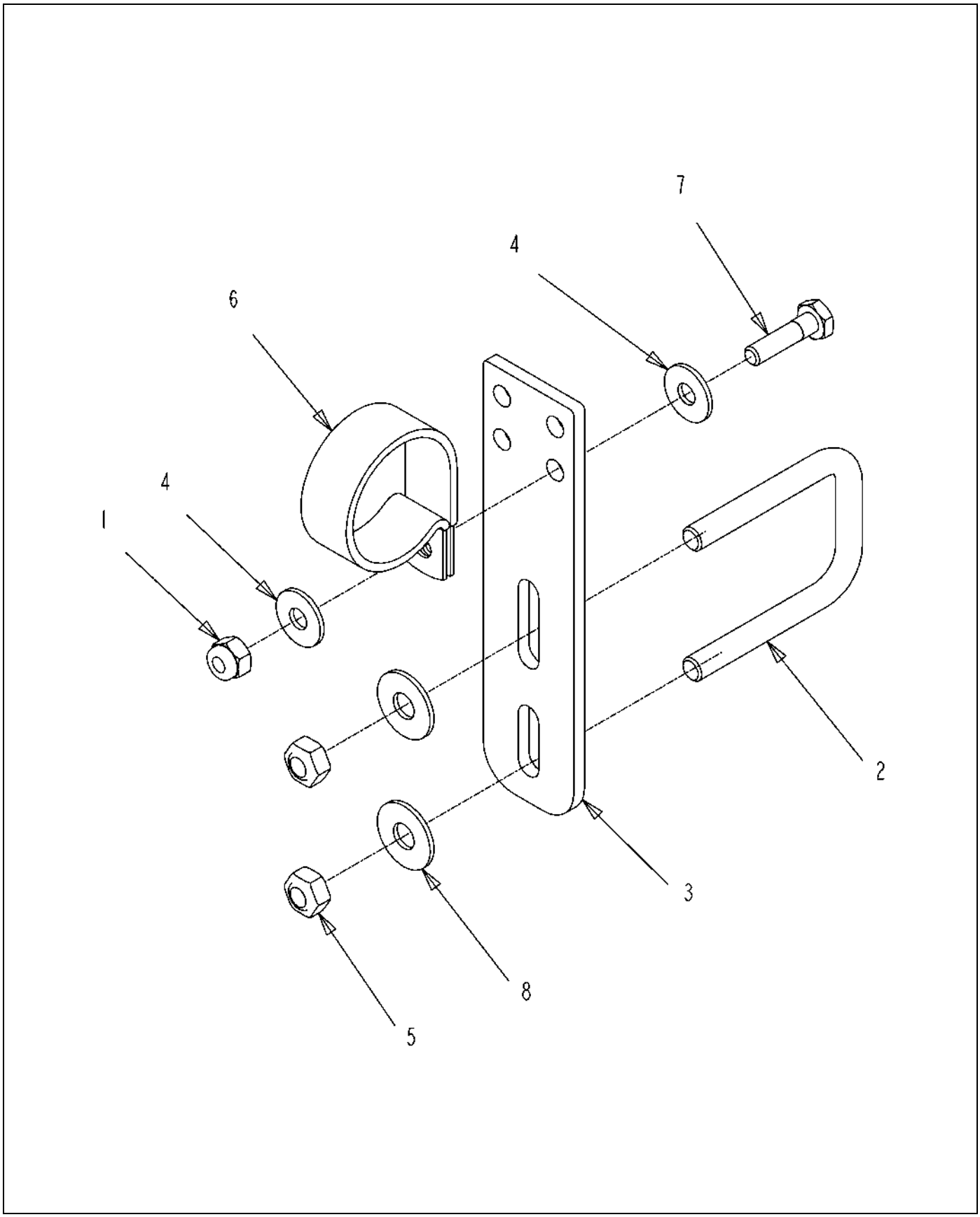

506732D1-01-M790-.TIF

Copyright © 2007 AGCO Corporation

BRKT ASM-STR,SH,1.25 PCLP

ITEM	PART #	QTY	DESCRIPTION	COMMENTS
1	AG027275	1	NUT 0.25-20NC HEX SS REG NY	
2	AG231204	1	BOLT-U .31-18X1.88X2.63	
3	AG234373	1	BRACKET SHORT STANDOFF	
4	AG515121	2	WASHER 0.25 FL SS REG TYPE-B	
5	AG516403	2	NUT 0.31-18NC HEX SS REG NY	
6	AG523412	1	CLAMP-1.62 DIA,COATED HOSE	
7	AG562064	1	BOLT 0.25-20NCX 1.00 SS HHD	
8	AG562074	2	WASHER 0.31 FL SS REG TYPE-B	

Copyright © 2007 AGCO Corporation

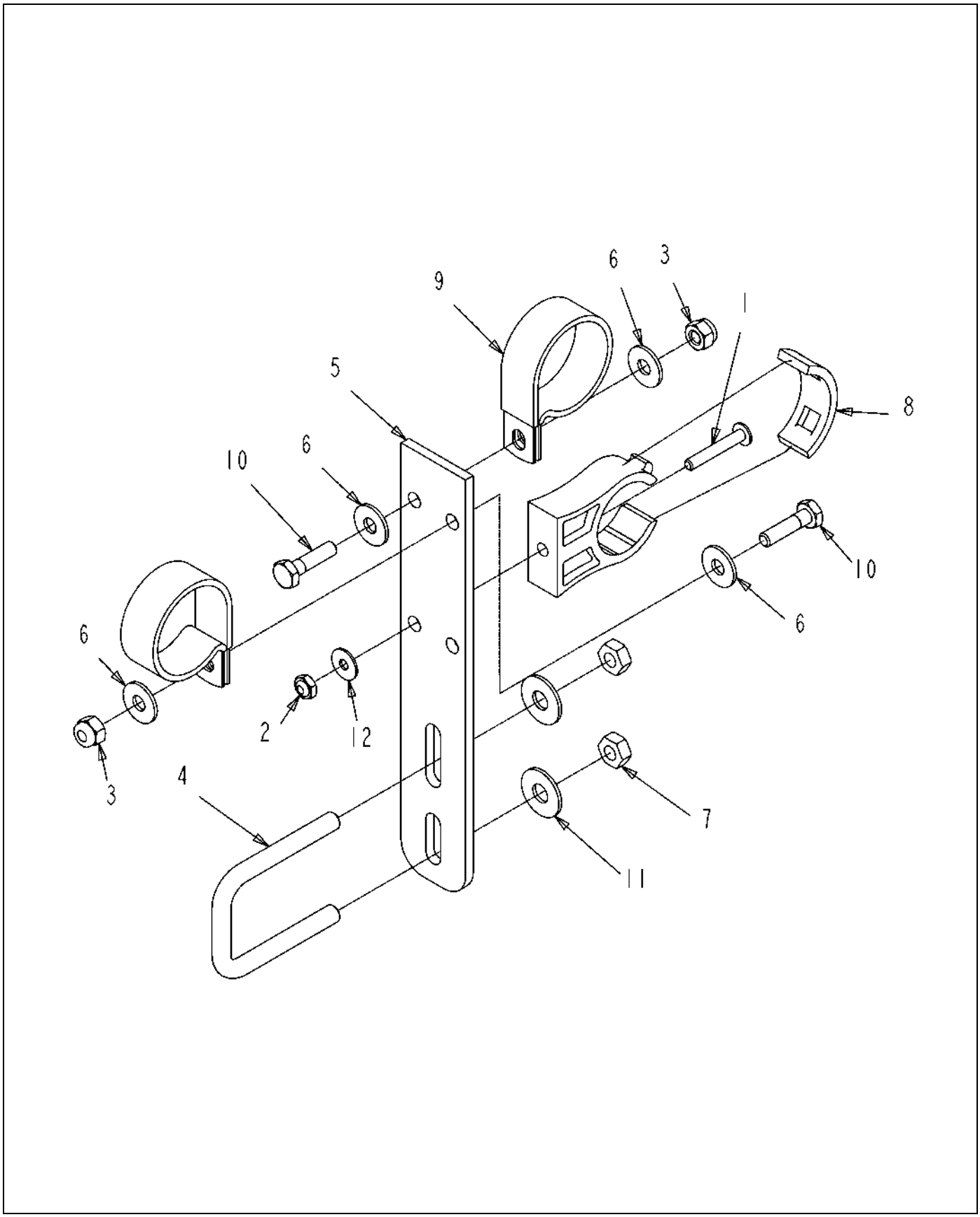

506733D1-01-M790-.TIF

Copyright © 2007 AGCO Corporation

BRKT ASM-STR,LG,IPS,2PCL,1.25

ITEM	PART #	QTY	DESCRIPTION	COMMENTS
1	AG027273	1	SCREW 10-24X 1.25 PHD PHILSS(P	
2	AG027274	1	NUT #10-24NC HEX SS REG NY	
3	AG027275	2	NUT 0.25-20NC HEX SS REG NY	
4	AG231204	1	BOLT-U .31-18X1.88X2.63	
5	AG234375	1	BRACKET LONG STANDOFF	
6	AG515121	4	WASHER 0.25 FL SS REG TYPE-B	
7	AG516403	2	NUT 0.31-18NC HEX SS REG NY	
8	AG519749	1	CLAMP 1.00 IPS POLY	
9	AG523412	2	CLAMP-1.62 DIA,COATED HOSE	
10	AG562064	2	BOLT 0.25-20NCX 1.00 SS HHD	
11	AG562074	2	WASHER 0.31 FL SS REG TYPE-B	
12	AG562082	1	WASHER #10 FL SS REG TYPE-B	

Copyright © 2007 AGCO Corporation

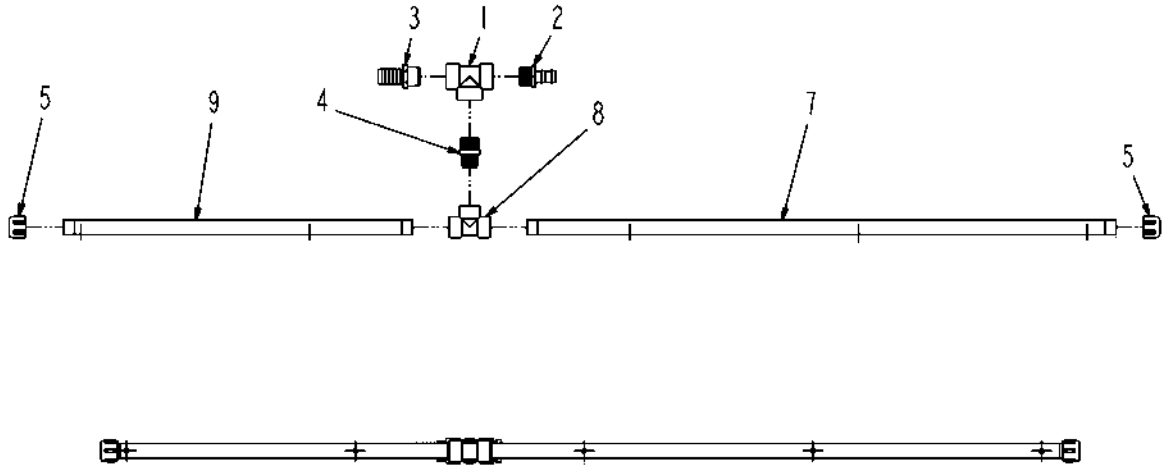

506742D1-01-M790-.tif

Copyright © 2007 AGCO Corporation

PIPE ASM-90D W/1.25HB,6X20,PP

ITEM	PART #	QTY	DESCRIPTION	COMMENTS
1	AG051127	1	ELBOW-PIPE,1.00FNPT,90D,PP	
2	AG051153	1	NIPPLE-PIPE,1.00NPTXCLS,PP	
3	AG051183	1	BARB-HOSE,1.00MNPTX1.25BARB,PP	
4	AG051536	2	CAP-PIPE,1.00NPT PP	
5	AG129187	AR	PIPE SEALANT-FLEX BLACK	
6	AG239721	2	TUBE-51.50,POLY	
7	AG516405	1	TEE,PIPE,1.00FNPT,PP	

Copyright © 2007 AGCO Corporation

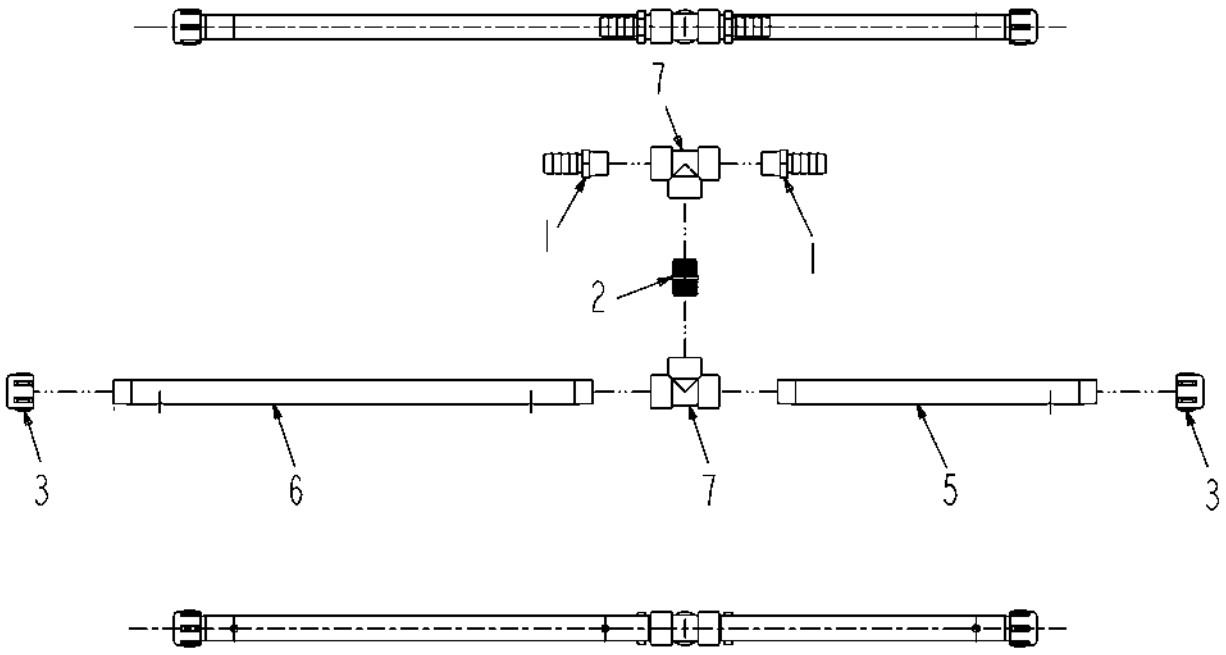

506743D1-01-M790-.tif

Copyright © 2007 AGCO Corporation

PIPE ASM-T W/2 1.00HB,3X20,PP

ITEM	PART #	QTY	DESCRIPTION	COMMENTS
1	AG051059	2	BARB-HOSE,1.00MNPTX1.00BARB,PP	
2	AG051153	1	NIPPLE-PIPE,1.00NPTXCLS,PP	
3	AG051536	2	CAP-PIPE,1.00NPT PP	
4	AG129187	AR	PIPE SEALANT-FLEX BLACK	
5	AG239722	1	TUBE-17.19,POLY	
6	AG239723	1	TUBE-25.81,POLY	
7	AG516405	2	TEE,PIPE,1.00FNPT,PP	

Copyright © 2007 AGCO Corporation

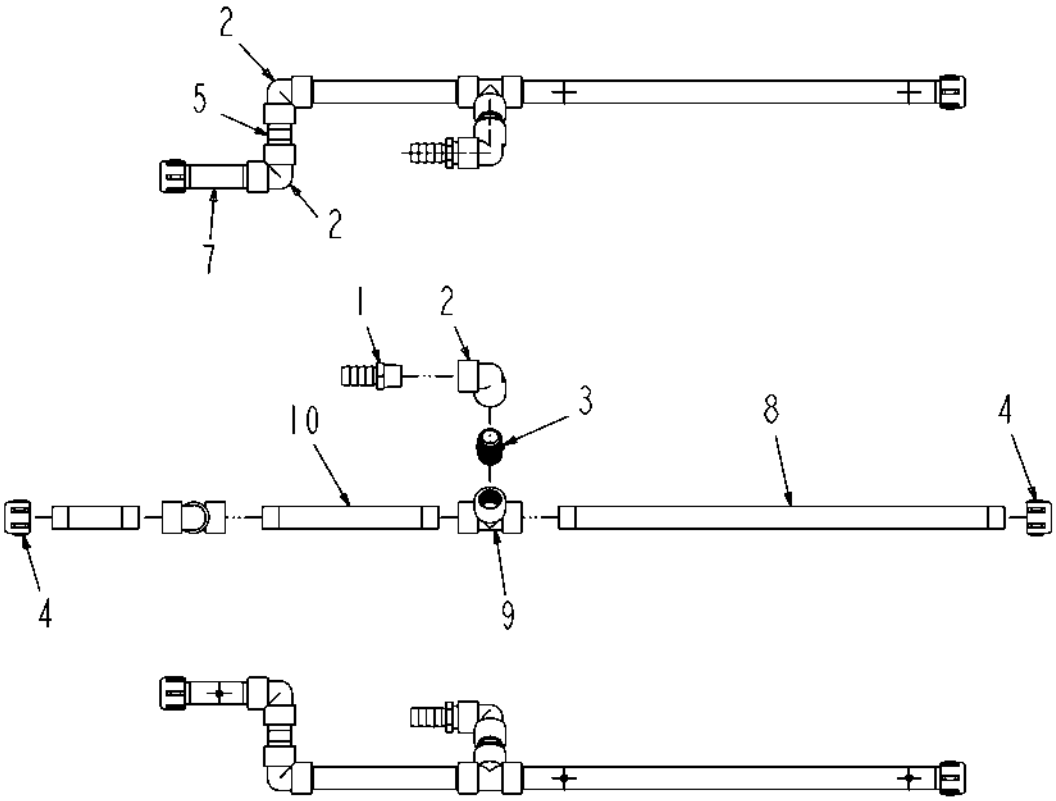

506744D1-01-M790-.TIF

Copyright © 2007 AGCO Corporation

PIPE ASM-90D W/1HB,3X20,PP,RH

ITEM	PART #	QTY	DESCRIPTION	COMMENTS
1	AG051059	1	BARB-HOSE,1.00MNPTX1.00BARB,PP	
2	AG051127	3	ELBOW-PIPE,1.00FNPT,90D,PP	
3	AG051153	1	NIPPLE-PIPE,1.00NPTXCLS,PP	
4	AG051536	2	CAP-PIPE,1.00NPT PP	
5	AG051904	1	NIPPLE 1.00NPTX 2.50 304SS	
6	AG129187	AR	PIPE SEALANT-FLEX BLACK	
7	AG234787	1	TUBE-POLY 5.00 X 10.00 CTRS	
8	AG239723	1	TUBE-25.81,POLY	
9	AG516405	1	TEE,PIPE,1.00FNPT,PP	
10	506807D1	1	TUBE-POLY,10.19,NO HOLES	

Copyright © 2007 AGCO Corporation

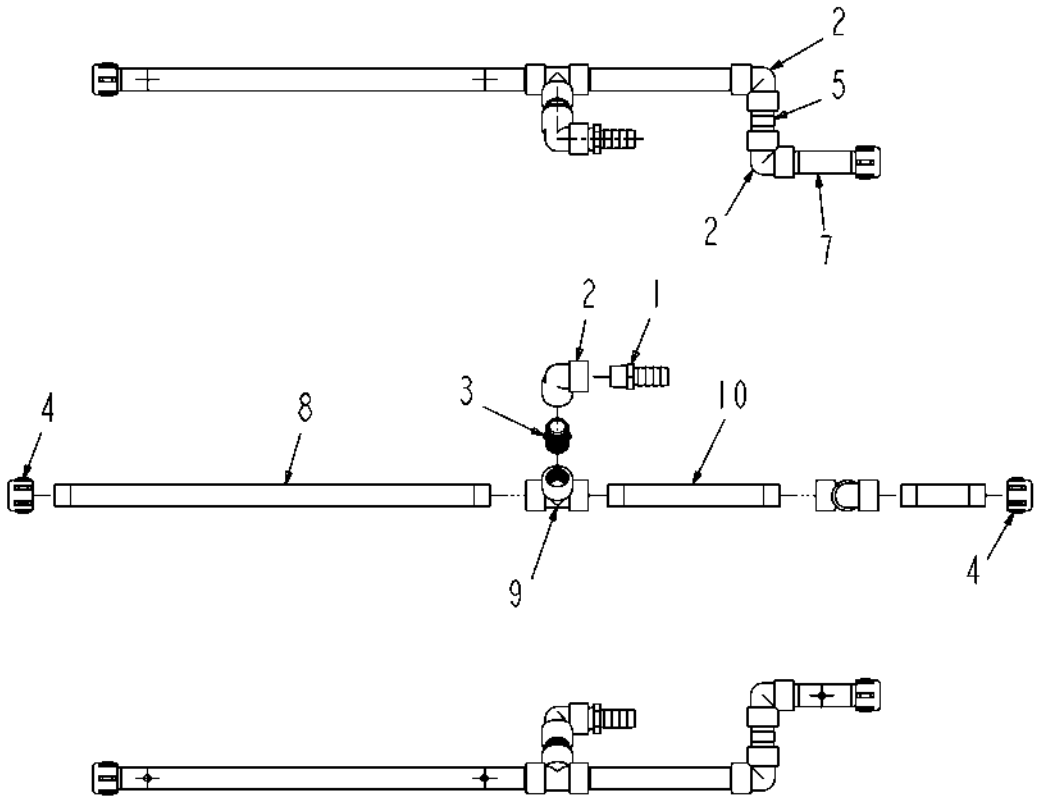

506745D1-01-M790-.TIF

Copyright © 2007 AGCO Corporation

PIPE ASM-90D W/1HB,3X20,PP,LH

ITEM	PART #	QTY	DESCRIPTION	COMMENTS
1	AG051059	1	BARB-HOSE,1.00MNPTX1.00BARB,PP	
2	AG051127	3	ELBOW-PIPE,1.00FNPT,90D,PP	
3	AG051153	1	NIPPLE-PIPE,1.00NPTXCLS,PP	
4	AG051536	2	CAP-PIPE,1.00NPT PP	
5	AG051904	1	NIPPLE 1.00NPTX 2.50 304SS	
6	AG129187	AR	PIPE SEALANT-FLEX BLACK	
7	AG234787	1	TUBE-POLY 5.00 X 10.00 CTRS	
8	AG239723	1	TUBE-25.81,POLY	
9	AG516405	1	TEE,PIPE,1.00FNPT,PP	
10	506807D1	1	TUBE-POLY,10.19,NO HOLES	

Copyright © 2007 AGCO Corporation

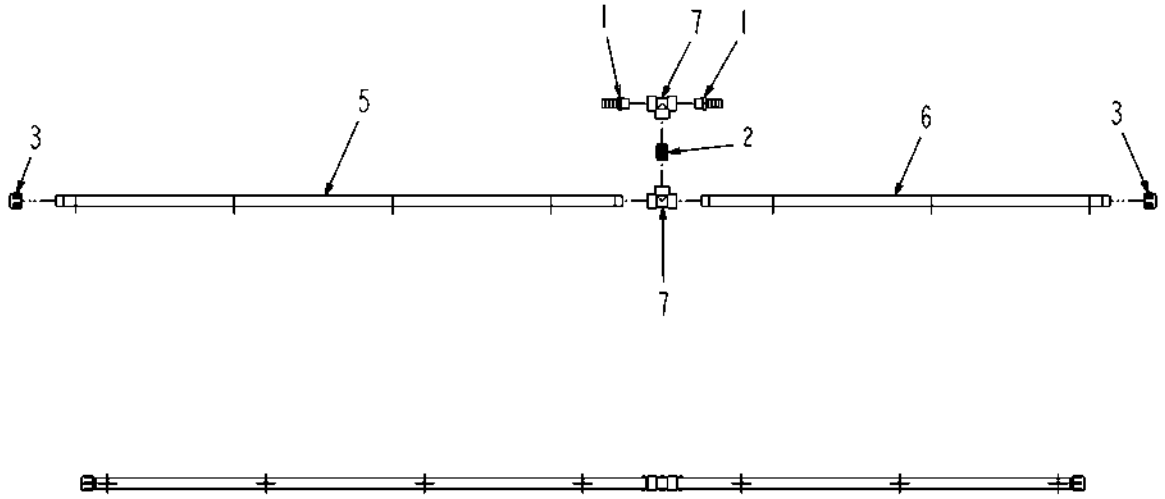

506746D1-01-M790-.tif

Copyright © 2007 AGCO Corporation

PIPE ASM-T W/2 1.00HB,7X20,PP

ITEM	PART #	QTY	DESCRIPTION	COMMENTS
1	AG051059	2	BARB-HOSE,1.00MNPTX1.00BARB,PP	
2	AG051153	1	NIPPLE-PIPE,1.00NPTXCLS,PP	
3	AG051536	2	CAP-PIPE,1.00NPT PP	
4	AG129187	AR	PIPE SEALANT-FLEX BLACK	
5	AG234462	1	TUBE 71.50 BOOM	
6	AG239721	1	TUBE-51.50,POLY	
7	AG516405	2	TEE,PIPE,1.00FNPT,PP	

Copyright © 2007 AGCO Corporation

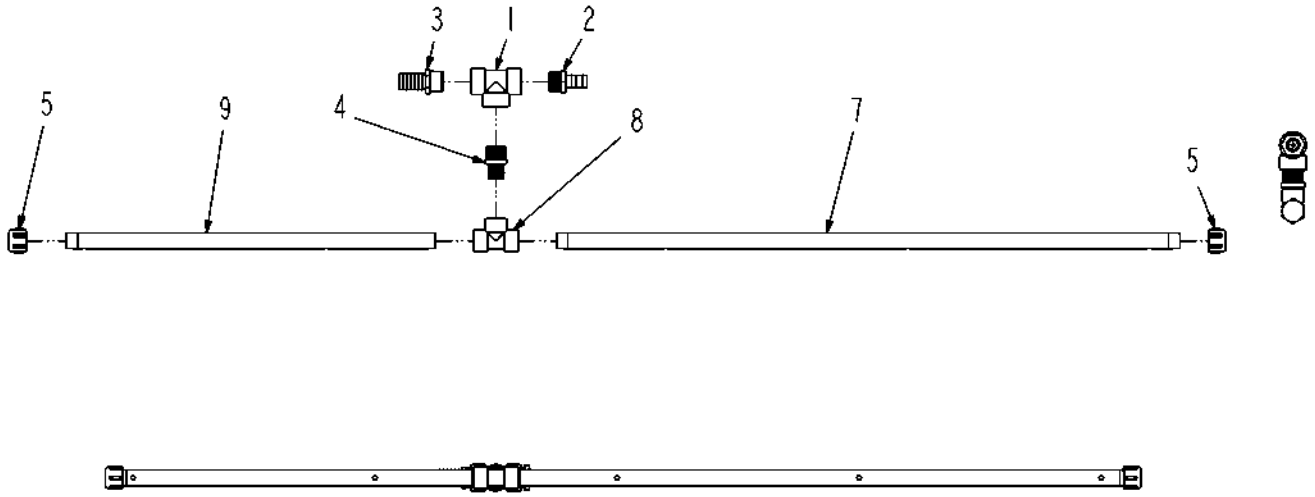

506747D1-01-M790-.TIF

Copyright © 2007 AGCO Corporation

PIPE ASM-T W/1.25/1HB,5X20,PP

ITEM	PART #	QTY	DESCRIPTION	COMMENTS
1	AG051162	1	TEE,PIPE,1.25FNPT,PP	
2	AG051185	1	BARB-HOSE,1.25MNPTX1.00BARB,PP	
3	AG051186	1	BARB-HOSE,1.25MNPTX1.25BARB,PP	
4	AG051437	1	NIPPLE RED 1.25NPTX1.00NPT PP	
5	AG051536	2	CAP-PIPE,1.00NPT PP	
6	AG129187	AR	PIPE SEALANT-FLEX BLACK	
7	AG239721	1	TUBE-51.50,POLY	
8	AG516405	1	TEE,PIPE,1.00FNPT,PP	
9	506808D1	1	TUBE-POLY,30.50,20IN CTR	

Copyright © 2007 AGCO Corporation

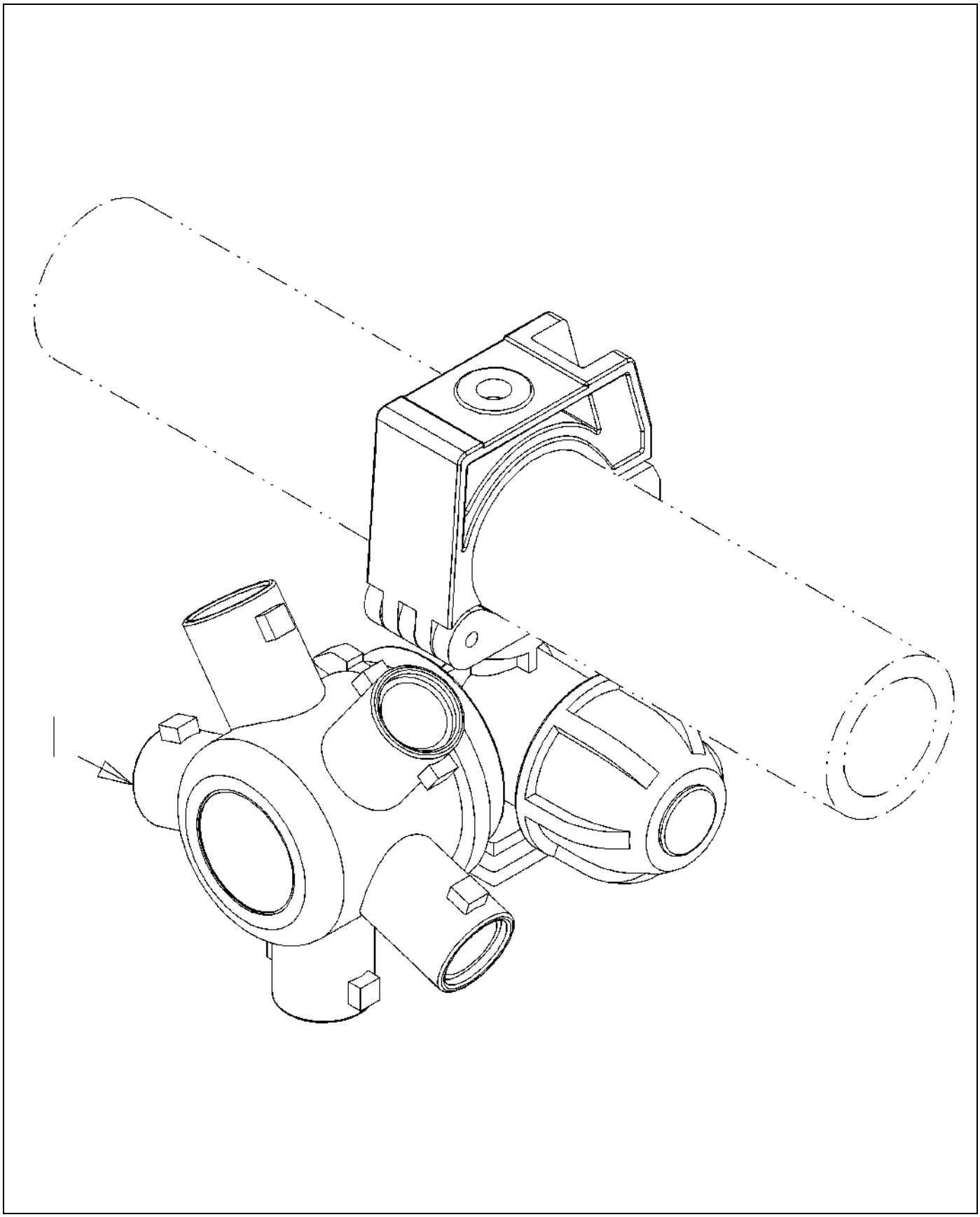

519131D1-01-R483-.TIF

Copyright © 2007 AGCO Corporation

OPT-NOZ,5WAY,RTRY,120X10,ON

ITEM	PART #	QTY	DESCRIPTION	COMMENTS
1	513297D1	143	BODY-NOZZLE,5WAY,RTRY,1.00	

Copyright © 2007 AGCO Corporation

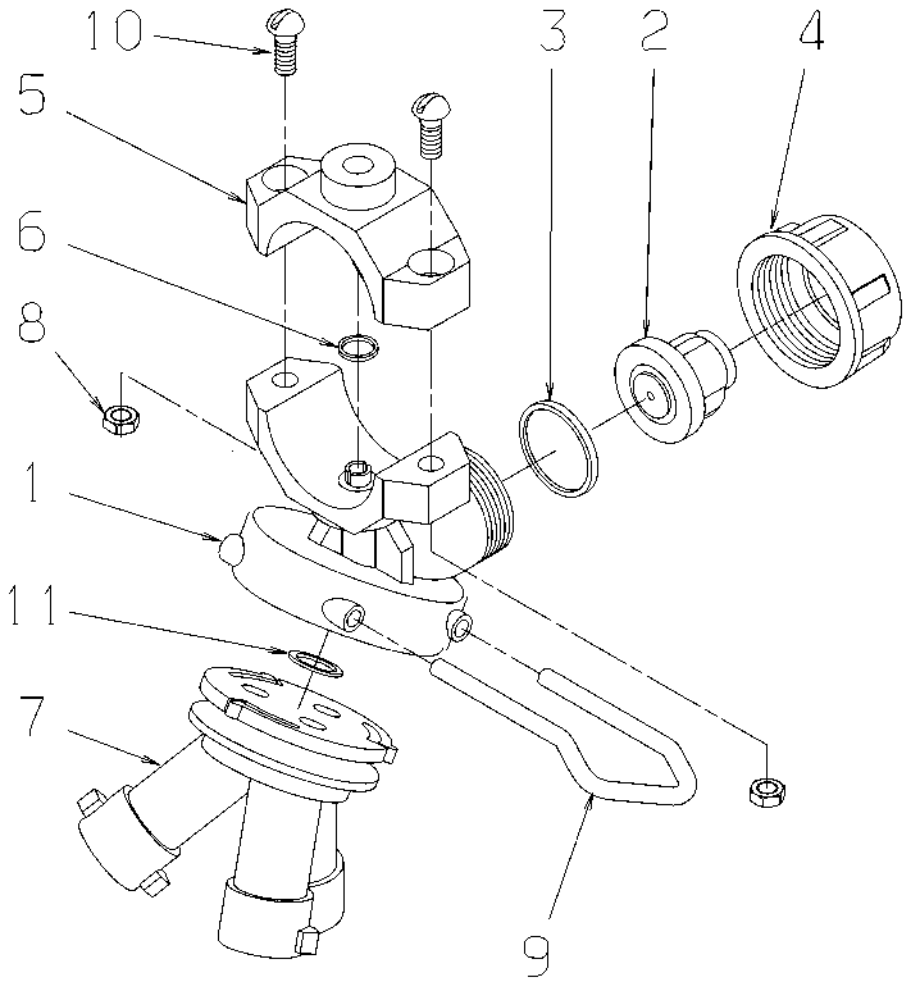

519562.TIF

Copyright © 2007 AGCO Corporation

NOZ HLDR-TPL 1.00 IPS

ITEM	PART #	QTY	DESCRIPTION	COMMENTS
1	AG609922	1	TRIPLE BODY FOR 1.00 IN PIPE	
2	AG609737	1	ANTI DRIP ASM 7PSI (RED)	
3	AG609738	1	DIAPHRAGM EPDM	
4	AG609739	1	END CAP	
5	AG609921	1	CLAMP 1.00 INCH	
6	AG609741	1	O RING	
7	AG609743	1	TRIPLE BODY	
8	AG563095	2	NUT 10-24 SS W/STAR WASHER	
9	AG609745	1	PIN	
10	AG563096	2	SCR/NUT-10-24X.75,SS,RHS	
11	AG609918	1	O RING EPDM R/B 610068	

Copyright © 2007 AGCO Corporation

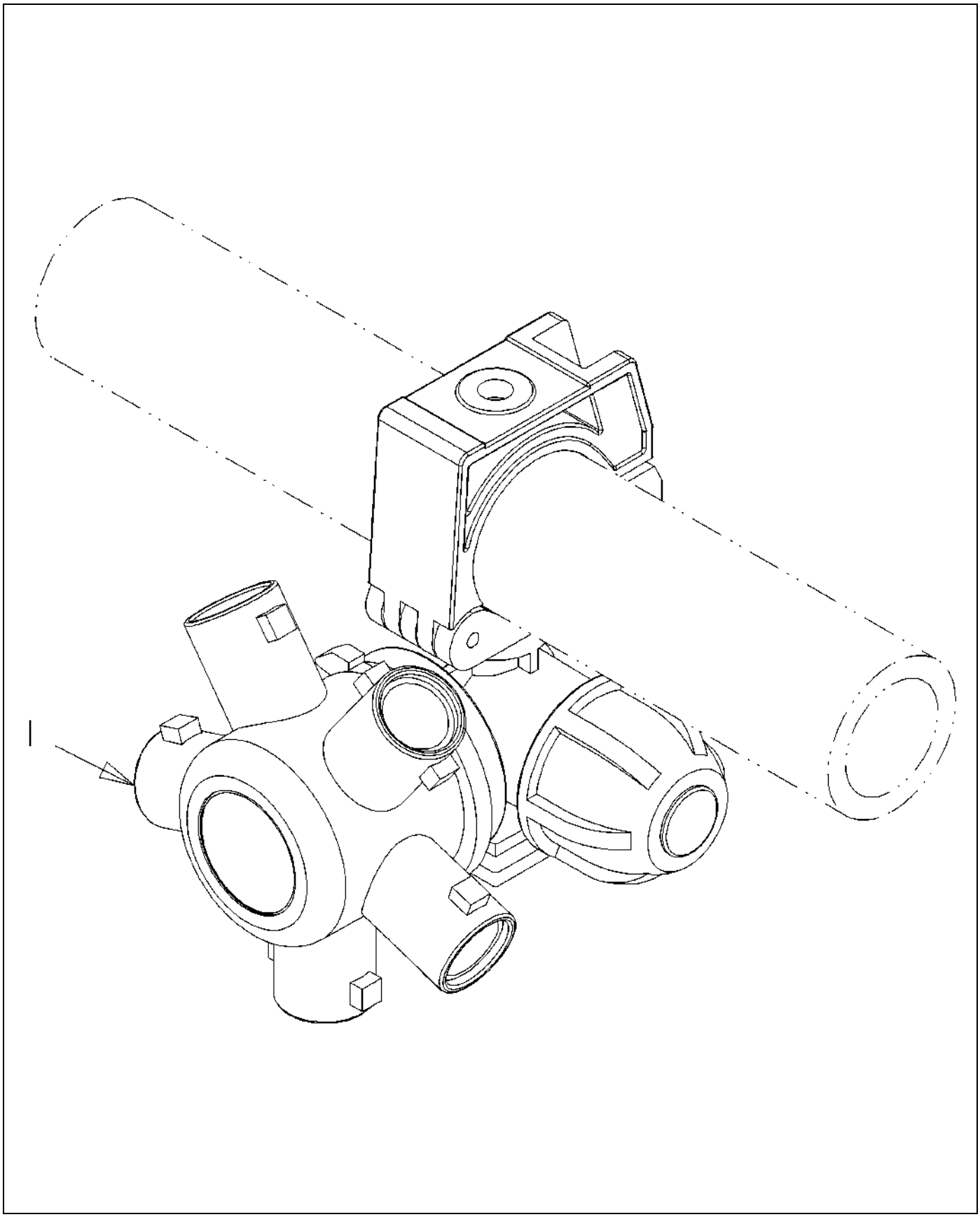

519132D1-01-R483-.TIF

Copyright © 2007 AGCO Corporation

OPT-NOZ,5WAY,RTRY,120X20,OFF

ITEM	PART #	QTY	DESCRIPTION	COMMENTS
1	513297D1	72	BODY-NOZZLE,5WAY,RTRY,1.00	

Copyright © 2007 AGCO Corporation

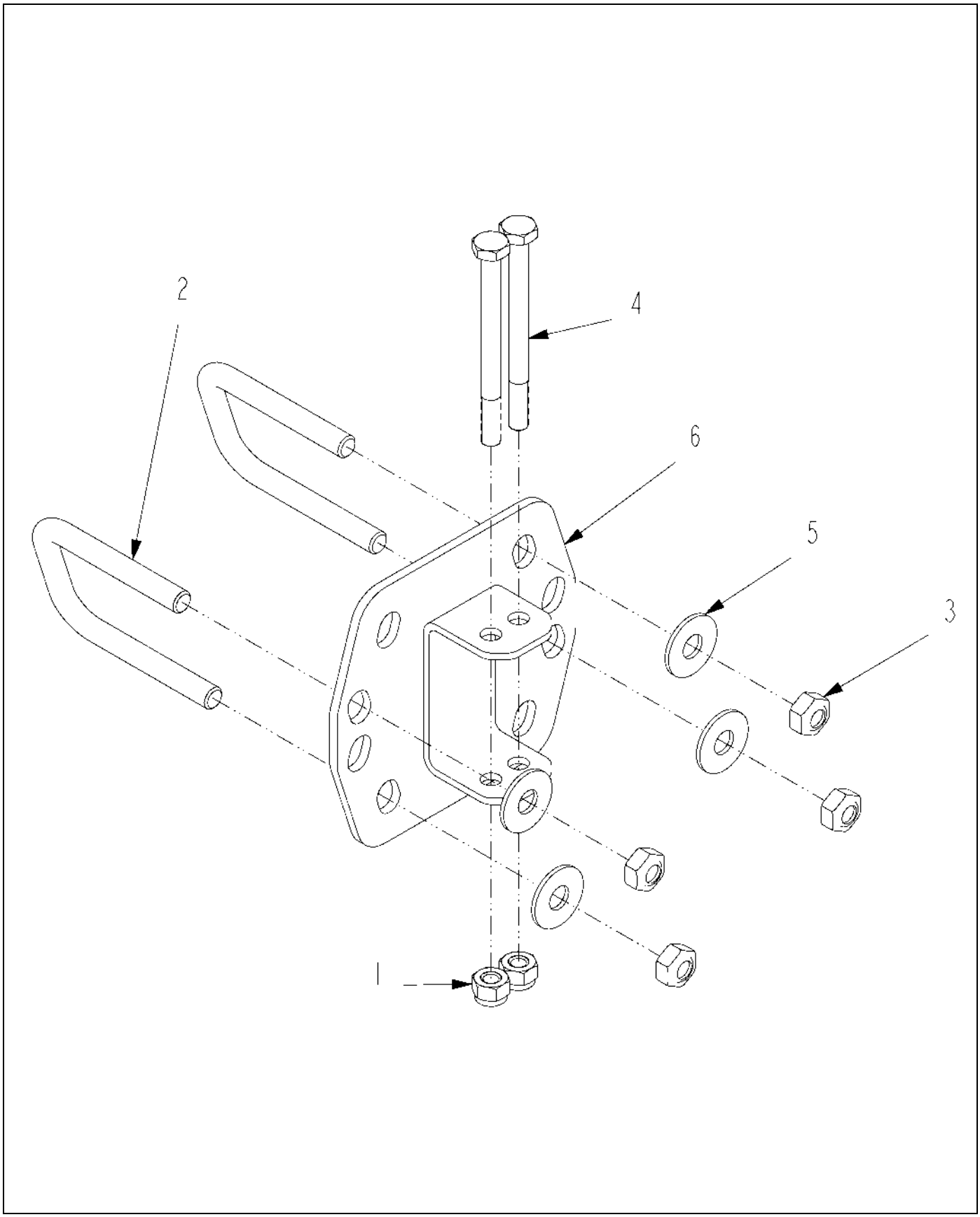

509056D1-01-N056-.TIF

Copyright © 2007 AGCO Corporation

BRKT ASM-MTG,ANG,INR,SNSR,RH

ITEM	PART #	QTY	DESCRIPTION	COMMENTS
1	AG027275	2	NUT 0.25-20NC HEX SS REG NY	
2	AG231204	2	BOLT-U .31-18X1.88X2.63	
3	AG516403	4	NUT 0.31-18NC HEX SS REG NY	
4	AG518492	2	BOLT 0.25-20NCX 3.00 SS HHD	
5	AG562074	4	WASHER 0.31 FL SS REG TYPE-B	
6	509058D1	1	BRKT WLDMT-MTG,ANG,INR,SNSR	

Copyright © 2007 AGCO Corporation

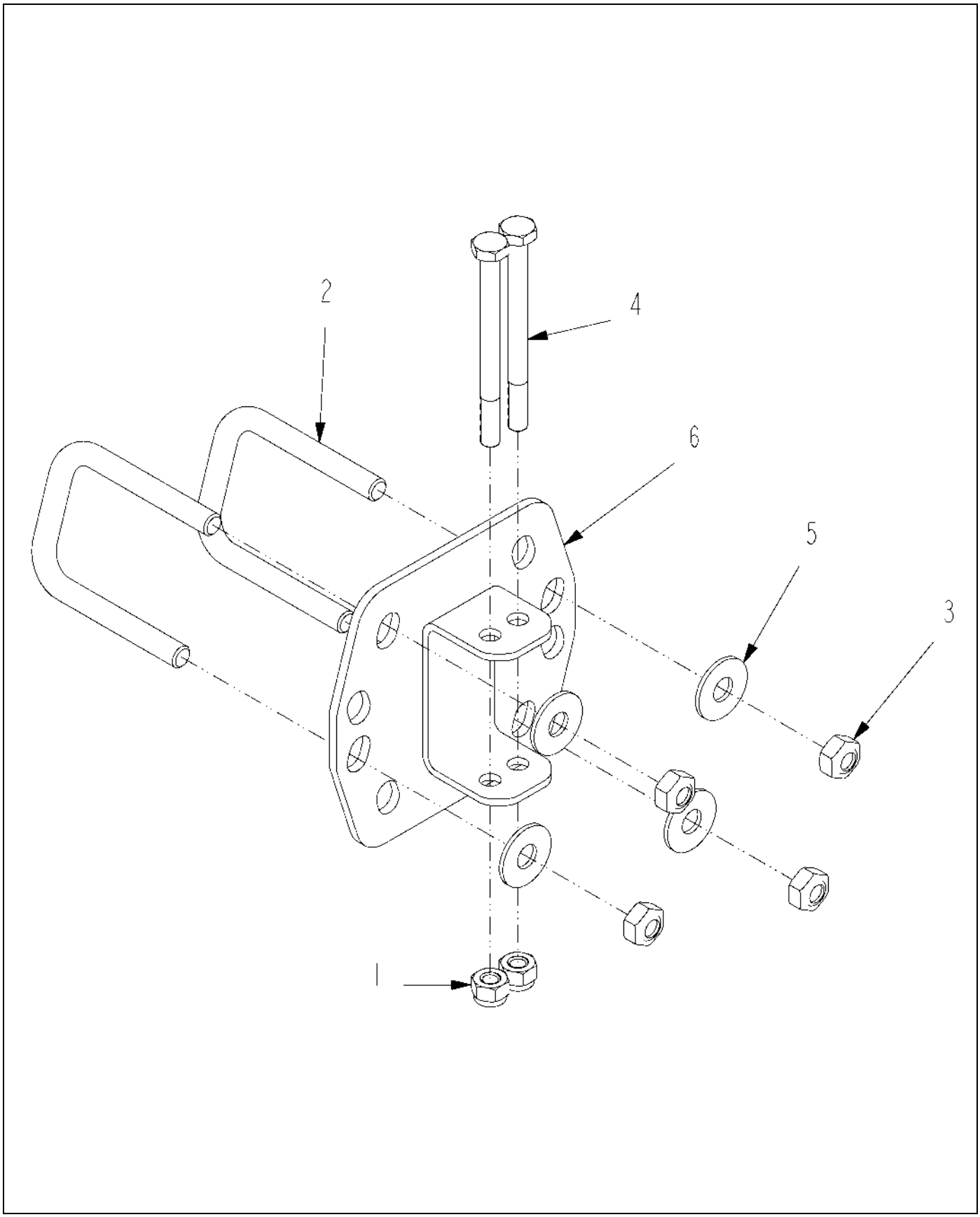

509057D1-01-N056-.TIF

Copyright © 2007 AGCO Corporation

BRKT ASM-MTG,ANG,INR,SNSR,LH

ITEM	PART #	QTY	DESCRIPTION	COMMENTS
1	AG027275	2	NUT 0.25-20NC HEX SS REG NY	
2	AG231204	2	BOLT-U .31-18X1.88X2.63	
3	AG516403	4	NUT 0.31-18NC HEX SS REG NY	
4	AG518492	2	BOLT 0.25-20NCX 3.00 SS HHD	
5	AG562074	4	WASHER 0.31 FL SS REG TYPE-B	
6	509058D1	1	BRKT WLDMT-MTG,ANG,INR,SNSR	

Copyright © 2007 AGCO Corporation

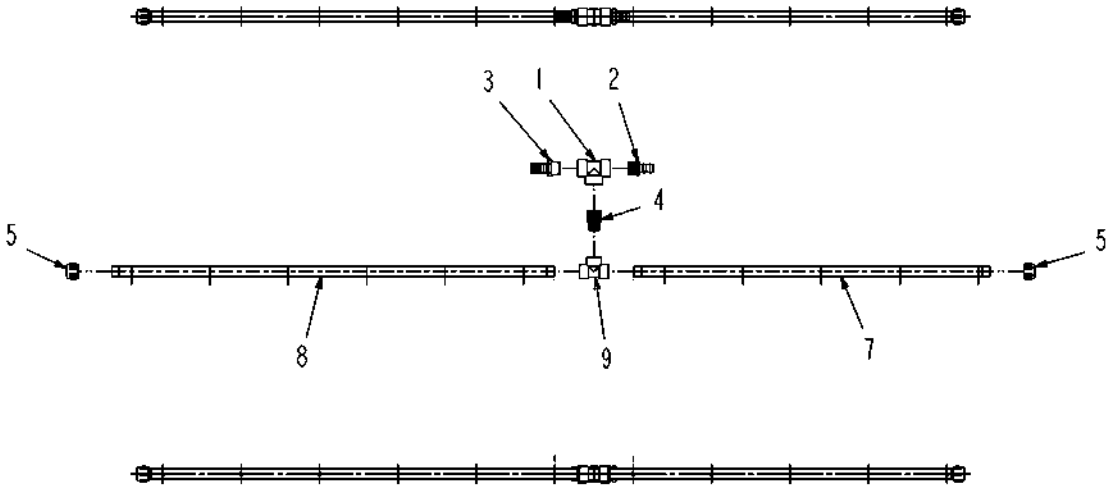

134657-A.tif

Copyright © 2007 AGCO Corporation

PIPE ASM-T W/1.25/1HB,11X10,PP

ITEM	PART #	QTY	DESCRIPTION	COMMENTS
1	AG051162	1	TEE,PIPE,1.25FNPT,PP	
2	AG051185	1	BARB-HOSE,1.25MNPTX1.00BARB,PP	
3	AG051186	1	BARB-HOSE,1.25MNPTX1.25BARB,PP	
4	AG051437	1	NIPPLE RED 1.25NPTX1.00NPT PP	
5	AG051536	2	CAP-PIPE,1.00NPT PP	
6	AG129187	AR	PIPE SEALANT-FLEX BLACK	
7	AG239930	1	TUBE-POLY,45.44,10IN CTR	
8	AG239937	1	TUBE-POLY,56.44,10IN CTR	
9	AG516405	1	TEE,PIPE,1.00FNPT,PP	

Copyright © 2007 AGCO Corporation

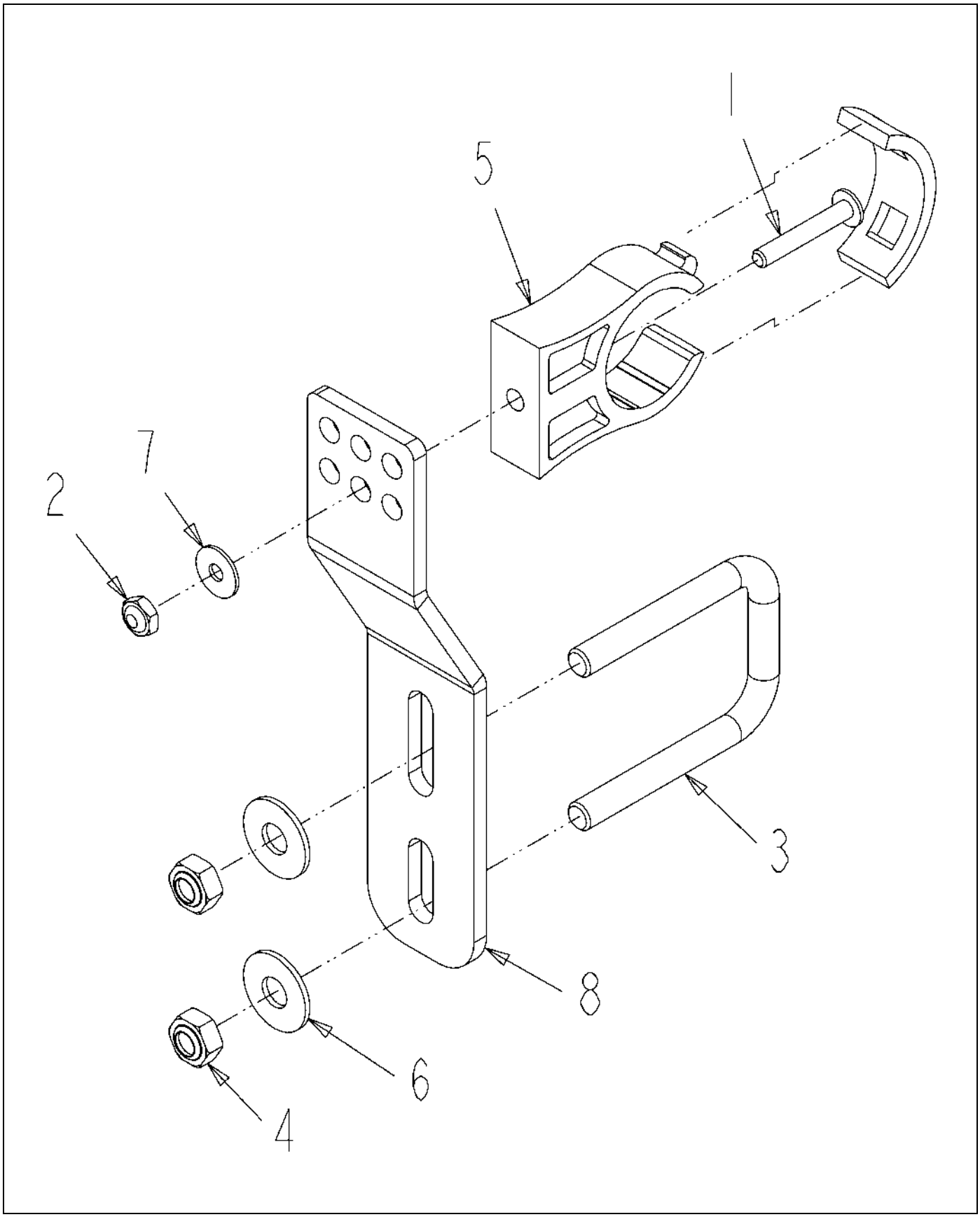

509887D1-01-N648-.TIF

Copyright © 2007 AGCO Corporation

BRKT ASM-Z,SH,1.00IPS

ITEM	PART #	QTY	DESCRIPTION	COMMENTS
1	AG027273	1	SCREW 10-24X 1.25 PHD PHILSS(P	
2	AG027274	1	NUT #10-24NC HEX SS REG NY	
3	AG231204	1	BOLT-U .31-18X1.88X2.63	
4	AG516403	2	NUT 0.31-18NC HEX SS REG NY	
5	AG519749	1	CLAMP 1.00 IPS POLY	
6	AG562074	2	WASHER 0.31 FL SS REG TYPE-B	
7	AG562082	1	WASHER #10 FL SS REG TYPE-B	
8	509881D1	1	BRKT-Z,STANDOFF,SH	

Copyright © 2007 AGCO Corporation

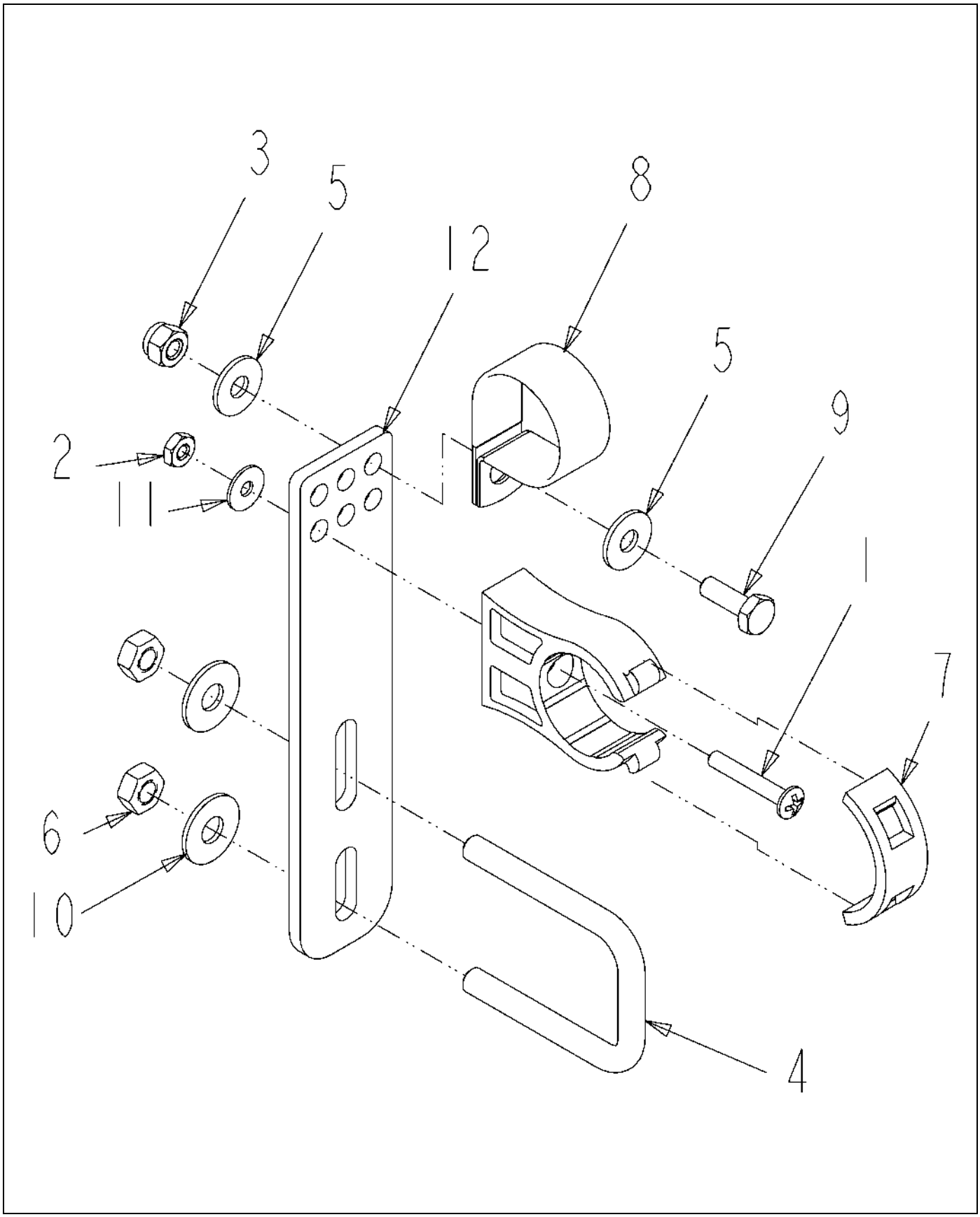

509888D1-01-N648-.TIF

Copyright © 2007 AGCO Corporation

BRKT ASM-Z,SH,UPR IPS/PCLP

ITEM	PART #	QTY	DESCRIPTION	COMMENTS
1	AG027273	1	SCREW 10-24X 1.25 PHD PHILSS(P	
2	AG027274	1	NUT #10-24NC HEX SS REG NY	
3	AG027275	1	NUT 0.25-20NC HEX SS REG NY	
4	AG231204	1	BOLT-U .31-18X1.88X2.63	
5	AG515121	2	WASHER 0.25 FL SS REG TYPE-B	
6	AG516403	2	NUT 0.31-18NC HEX SS REG NY	
7	AG519749	1	CLAMP 1.00 IPS POLY	
8	AG519751	1	CLAMP 1.38 DIA COATED HOSE	
9	AG562054	1	BOLT 0.25-20NCX 0.75 SS HHD	
10	AG562074	2	WASHER 0.31 FL SS REG TYPE-B	
11	AG562082	1	WASHER #10 FL SS REG TYPE-B	
12	511432D1	1	BRKT-STR,LG STANDOFF	

Copyright © 2007 AGCO Corporation

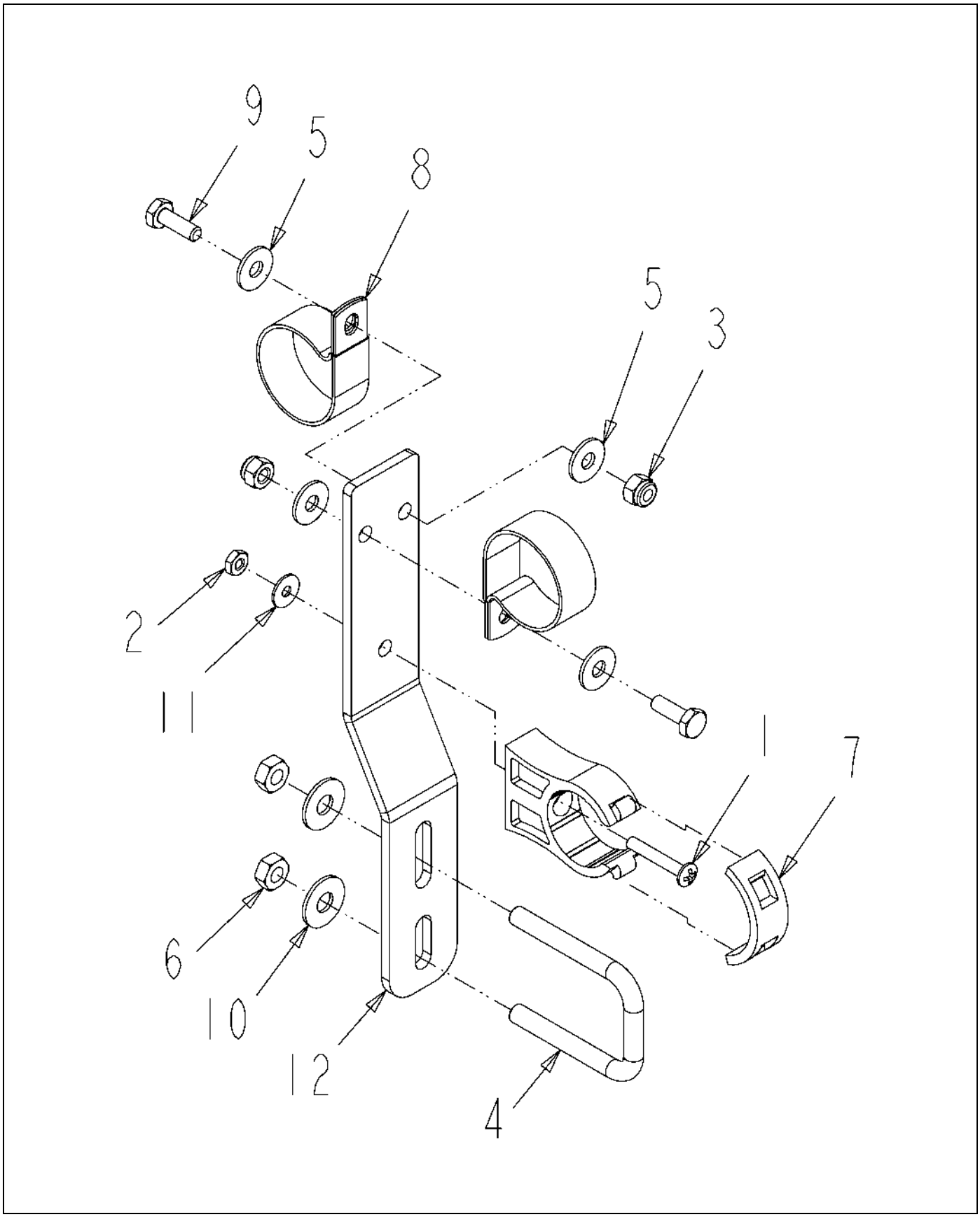

509889D1-01-N649-.TIF

Copyright © 2007 AGCO Corporation

BRKT ASM-Z,LG,2IPS/PCLP

ITEM	PART #	QTY	DESCRIPTION	COMMENTS
1	AG027273	1	SCREW 10-24X 1.25 PHD PHILSS(P	
2	AG027274	1	NUT #10-24NC HEX SS REG NY	
3	AG027275	2	NUT 0.25-20NC HEX SS REG NY	
4	AG231204	1	BOLT-U .31-18X1.88X2.63	
5	AG515121	4	WASHER 0.25 FL SS REG TYPE-B	
6	AG516403	2	NUT 0.31-18NC HEX SS REG NY	
7	AG519749	1	CLAMP 1.00 IPS POLY	
8	AG523412	2	CLAMP-1.62 DIA,COATED HOSE	
9	AG562054	2	BOLT 0.25-20NCX 0.75 SS HHD	
10	AG562074	2	WASHER 0.31 FL SS REG TYPE-B	
11	AG562082	1	WASHER #10 FL SS REG TYPE-B	
12	509882D1	1	BRKT-Z,STANDOFF,LG	

Copyright © 2007 AGCO Corporation

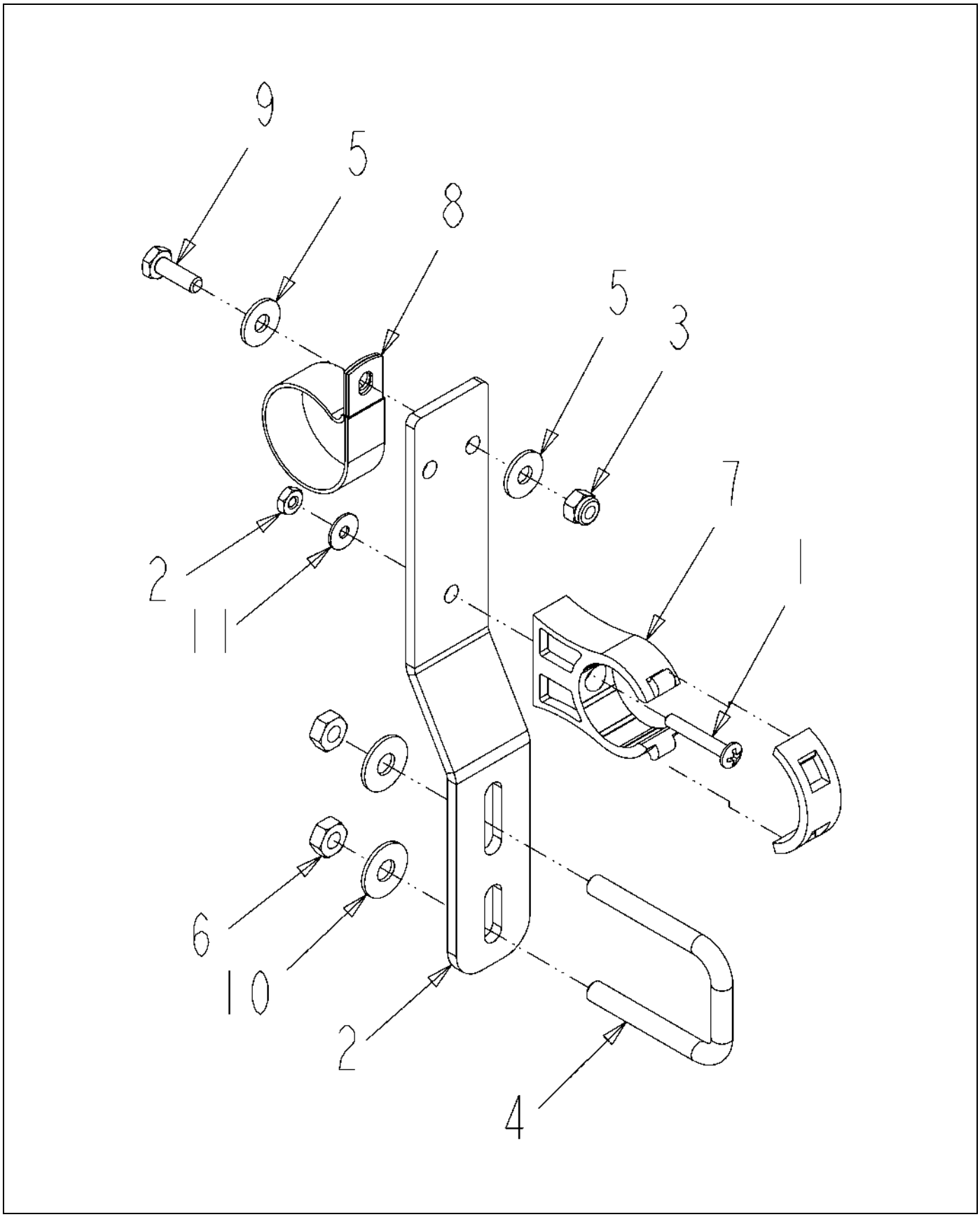

509890D1-01-N649-.TIF

Copyright © 2007 AGCO Corporation

BRKT ASM-Z,LG,LWR IPS/PCLP

ITEM	PART #	QTY	DESCRIPTION	COMMENTS
1	AG027273	1	SCREW 10-24X 1.25 PHD PHILSS(P	
2	AG027274	1	NUT #10-24NC HEX SS REG NY	
3	AG027275	1	NUT 0.25-20NC HEX SS REG NY	
4	AG231204	1	BOLT-U .31-18X1.88X2.63	
5	AG515121	2	WASHER 0.25 FL SS REG TYPE-B	
6	AG516403	2	NUT 0.31-18NC HEX SS REG NY	
7	AG519749	1	CLAMP 1.00 IPS POLY	
8	AG523412	1	CLAMP-1.62 DIA,COATED HOSE	
9	AG562054	1	BOLT 0.25-20NCX 0.75 SS HHD	
10	AG562074	2	WASHER 0.31 FL SS REG TYPE-B	
11	AG562082	1	WASHER #10 FL SS REG TYPE-B	
12	509882D1	1	BRKT-Z,STANDOFF,LG	

Copyright © 2007 AGCO Corporation

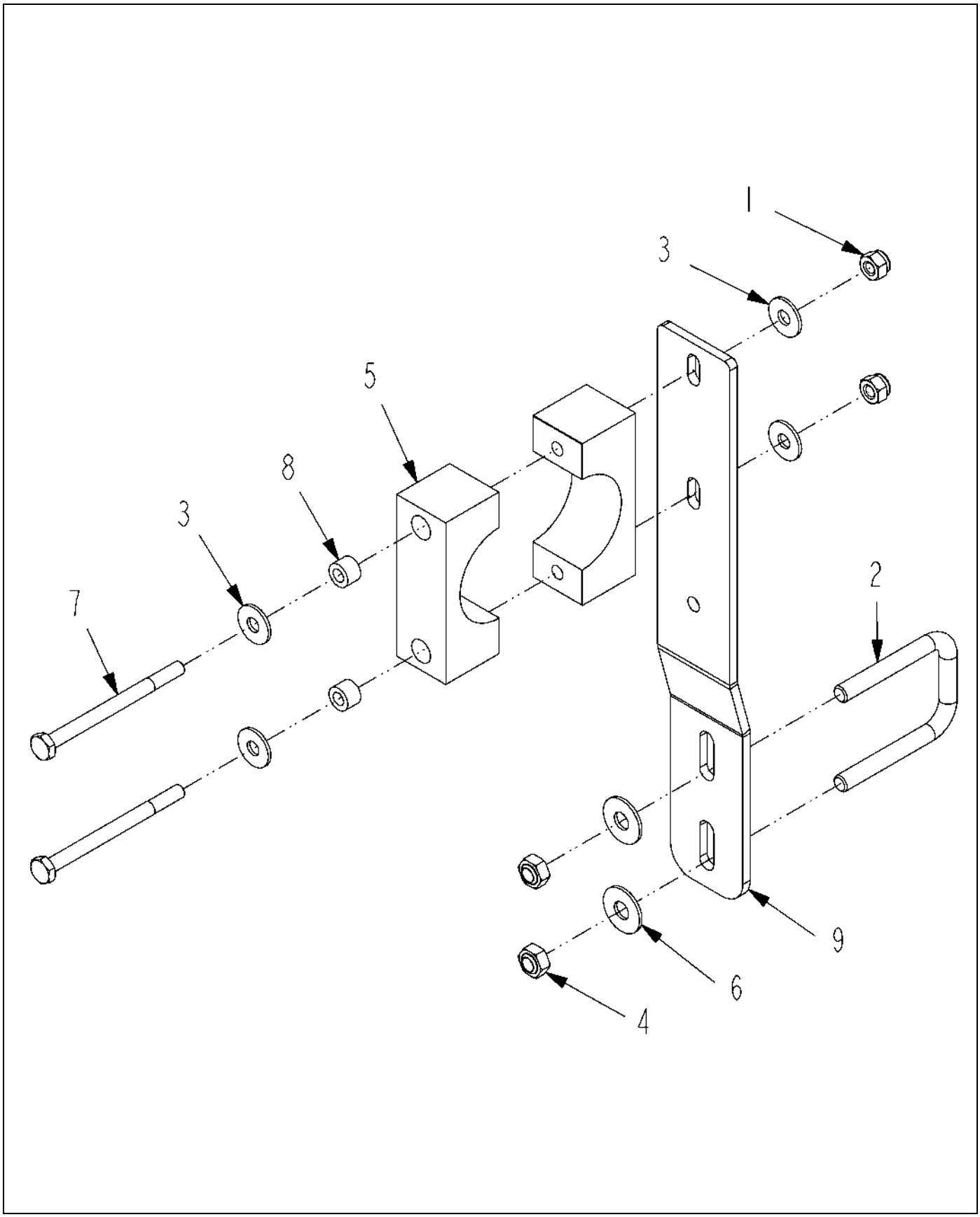

509892D1-01-N648-.TIF

Copyright © 2007 AGCO Corporation

BRKT ASM-Z,LG,1.50 STAUFF

ITEM	PART #	QTY	DESCRIPTION	COMMENTS
1	AG027275	2	NUT 0.25-20NC HEX SS REG NY	
2	AG231204	1	BOLT-U .31-18X1.88X2.63	
3	AG515121	4	WASHER 0.25 FL SS REG TYPE-B	
4	AG516403	2	NUT 0.31-18NC HEX SS REG NY	
5	AG519180	1	CLAMP 1.50 BLACK POLY	
6	AG562074	2	WASHER 0.31 FL SS REG TYPE-B	
7	AG563061	2	BOLT 0.25-20NCX 3.25 SS HHD	
8	AG609777	2	INSERT STAUFF SPACER	
9	509884D1	1	BRKT-Z,STANDOFF,LG,1.50STAUFF	

Copyright © 2007 AGCO Corporation

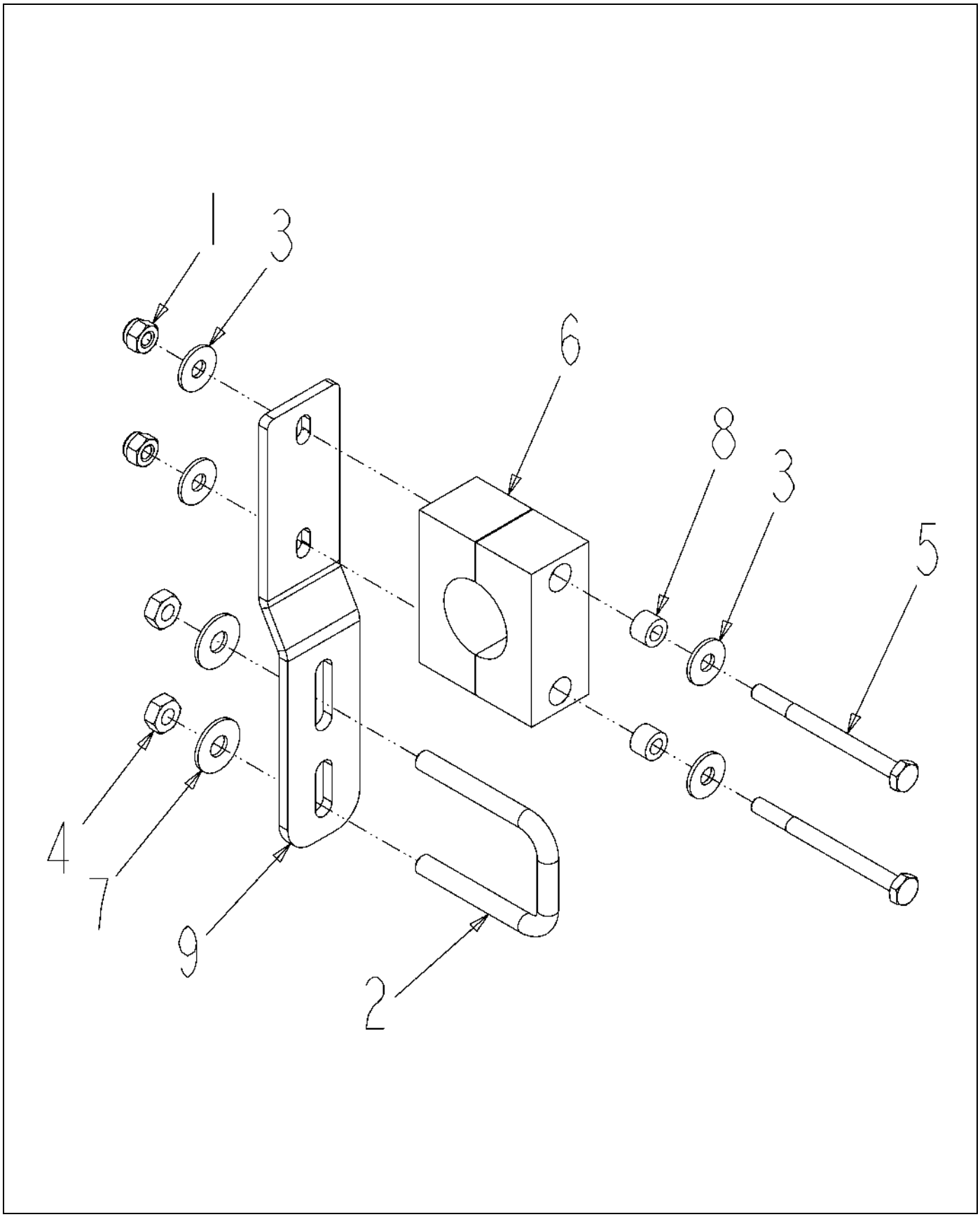

509893D1-01-N648-.TIF

Copyright © 2007 AGCO Corporation

BRKT ASM-Z,PP STAUFF

ITEM	PART #	QTY	DESCRIPTION	COMMENTS
1	AG027275	2	NUT 0.25-20NC HEX SS REG NY	
2	AG231204	1	BOLT-U .31-18X1.88X2.63	
3	AG515121	4	WASHER 0.25 FL SS REG TYPE-B	
4	AG516403	2	NUT 0.31-18NC HEX SS REG NY	
5	AG518492	2	BOLT 0.25-20NCX 3.00 SS HHD	
6	AG519748	1	CLAMP 1.00 PIPE	[A]
7	AG562074	2	WASHER 0.31 FL SS REG TYPE-B	
8	AG609777	2	INSERT STAUFF SPACER	
9	509883D1	1	BRKT-Z,STANDOFF,SH,STAUFF	
	FOOTNOTE [A]		2 INSERTS AND 2 CLAMP MAKE UP 1 PART. BOLT - AG563061, WASHER - AG515121, NUT - AG027275,	

Copyright © 2007 AGCO Corporation

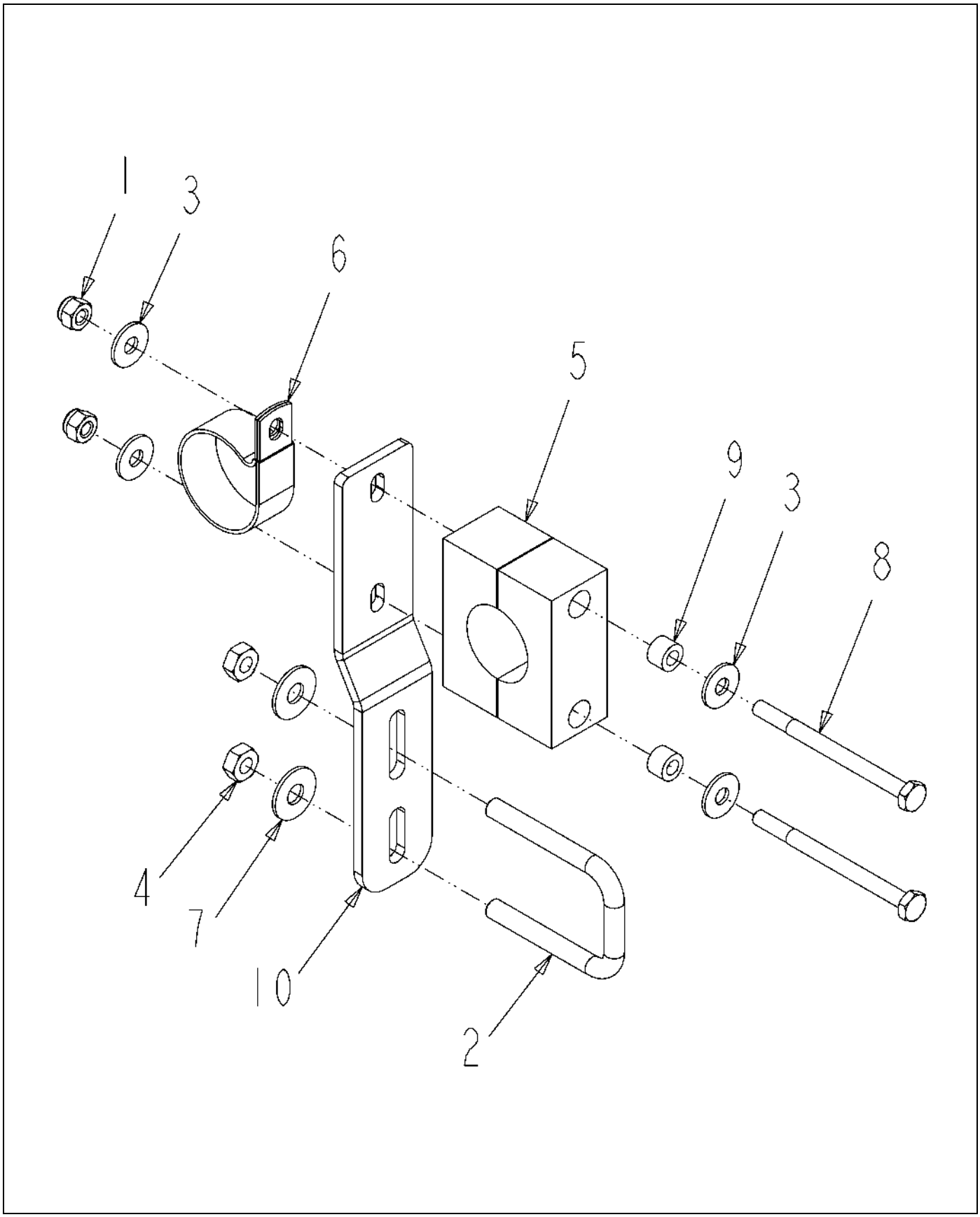

509894D1-01-N648-.TIF

Copyright © 2007 AGCO Corporation

BRKT ASM-Z,PP STAUFF,LWR PCLP

ITEM	PART #	QTY	DESCRIPTION	COMMENTS
1	AG027275	2	NUT 0.25-20NC HEX SS REG NY	
2	AG231204	1	BOLT-U .31-18X1.88X2.63	
3	AG515121	4	WASHER 0.25 FL SS REG TYPE-B	
4	AG516403	2	NUT 0.31-18NC HEX SS REG NY	
5	AG519748	1	CLAMP 1.00 PIPE	[A]
6	AG523412	1	CLAMP-1.62 DIA,COATED HOSE	
7	AG562074	2	WASHER 0.31 FL SS REG TYPE-B	
8	AG563061	2	BOLT 0.25-20NCX 3.25 SS HHD	
9	AG609777	2	INSERT STAUFF SPACER	
10	509883D1	1	BRKT-Z,STANDOFF,SH,STAUFF	
	FOOTNOTE [A]		2 INSERTS AND 2 CLAMP MAKE UP 1 PART. BOLT - AG563061, WASHER - AG515121, NUT - AG027275,	

Copyright © 2007 AGCO Corporation

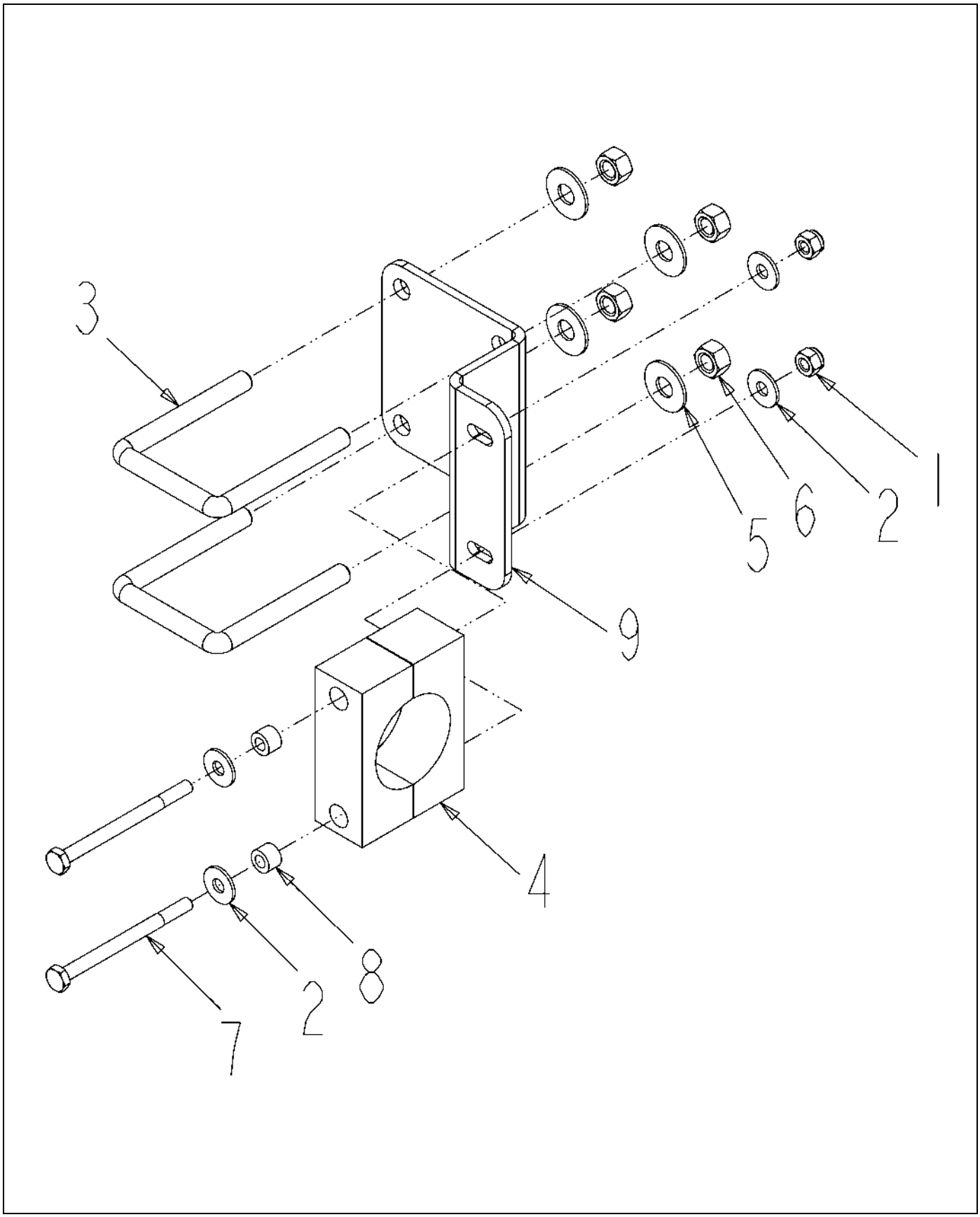

509896D1-01-N648-.TIF

Copyright © 2007 AGCO Corporation

BRKT ASM-Z,SIDE MTG,1.50STAUFF

ITEM	PART #	QTY	DESCRIPTION	COMMENTS
1	AG027275	2	NUT 0.25-20NC HEX SS REG NY	
2	AG515121	4	WASHER 0.25 FL SS REG TYPE-B	
3	AG516992	2	BOLT-U .38-16X2.12X 3.06SQ SS	
4	AG519180	1	CLAMP 1.50 BLACK POLY	
5	AG562073	4	WASHER 0.37 FL SS REG TYPE-B	
6	AG562123	4	NUT 0.37-16NC HEX SS C-LK	
7	AG563061	2	BOLT 0.25-20NCX 3.25 SS HHD	
8	AG609777	2	INSERT STAUFF SPACER	
9	509997D1	1	BRKT-MTG,SIDE,CLAMP,1.50STAUFF	

Copyright © 2007 AGCO Corporation

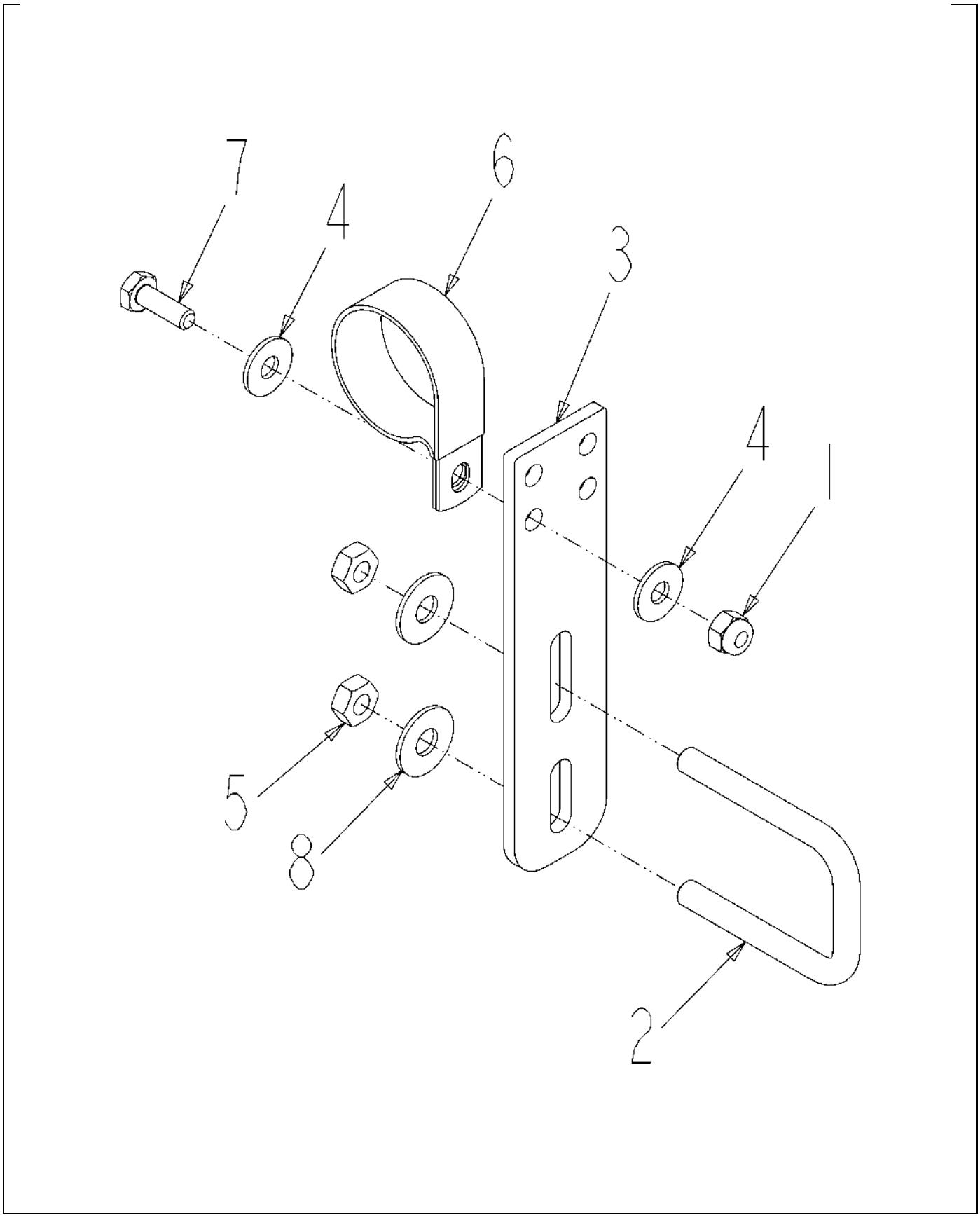

509953D1-01-N648-.TIF

Copyright © 2007 AGCO Corporation

BRKT ASM-STR,SH,PCLP

ITEM	PART #	QTY	DESCRIPTION	COMMENTS
1	AG027275	1	NUT 0.25-20NC HEX SS REG NY	
2	AG231204	1	BOLT-U .31-18X1.88X2.63	
3	AG234373	1	BRACKET SHORT STANDOFF	
4	AG515121	2	WASHER 0.25 FL SS REG TYPE-B	
5	AG516403	2	NUT 0.31-18NC HEX SS REG NY	
6	AG523412	1	CLAMP-1.62 DIA,COATED HOSE	
7	AG562054	1	BOLT 0.25-20NCX 0.75 SS HHD	
8	AG562074	2	WASHER 0.31 FL SS REG TYPE-B	

Copyright © 2007 AGCO Corporation

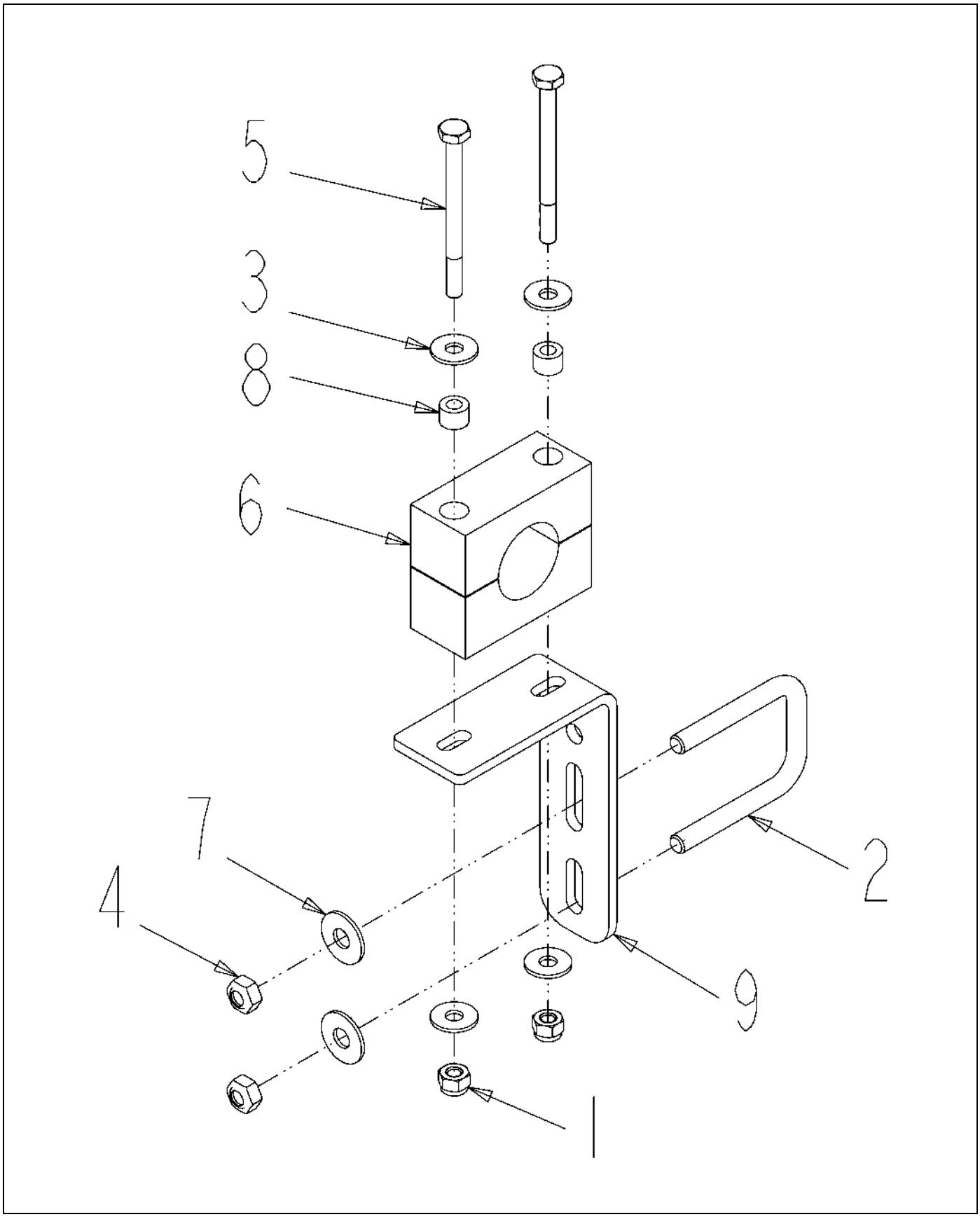

509955D1-01-N648-.TIF

Copyright © 2007 AGCO Corporation

BRKT ASM-L,PP STAUFF

ITEM	PART #	QTY	DESCRIPTION	COMMENTS
1	AG027275	2	NUT 0.25-20NC HEX SS REG NY	
2	AG231204	1	BOLT-U .31-18X1.88X2.63	
3	AG515121	4	WASHER 0.25 FL SS REG TYPE-B	
4	AG516403	2	NUT 0.31-18NC HEX SS REG NY	
5	AG518492	2	BOLT 0.25-20NCX 3.00 SS HHD	
6	AG519748	1	CLAMP 1.00 PIPE	[A]
7	AG562074	2	WASHER 0.31 FL SS REG TYPE-B	
8	AG609777	2	INSERT STAUFF SPACER	
9	509885D1	1	BRKT-L,STANDOFF,STAUFF	
	FOOTNOTE [A]		2 INSERTS AND 2 CLAMP MAKE UP 1 PART. BOLT - AG563061, WASHER - AG515121, NUT - AG027275,	

Copyright © 2007 AGCO Corporation

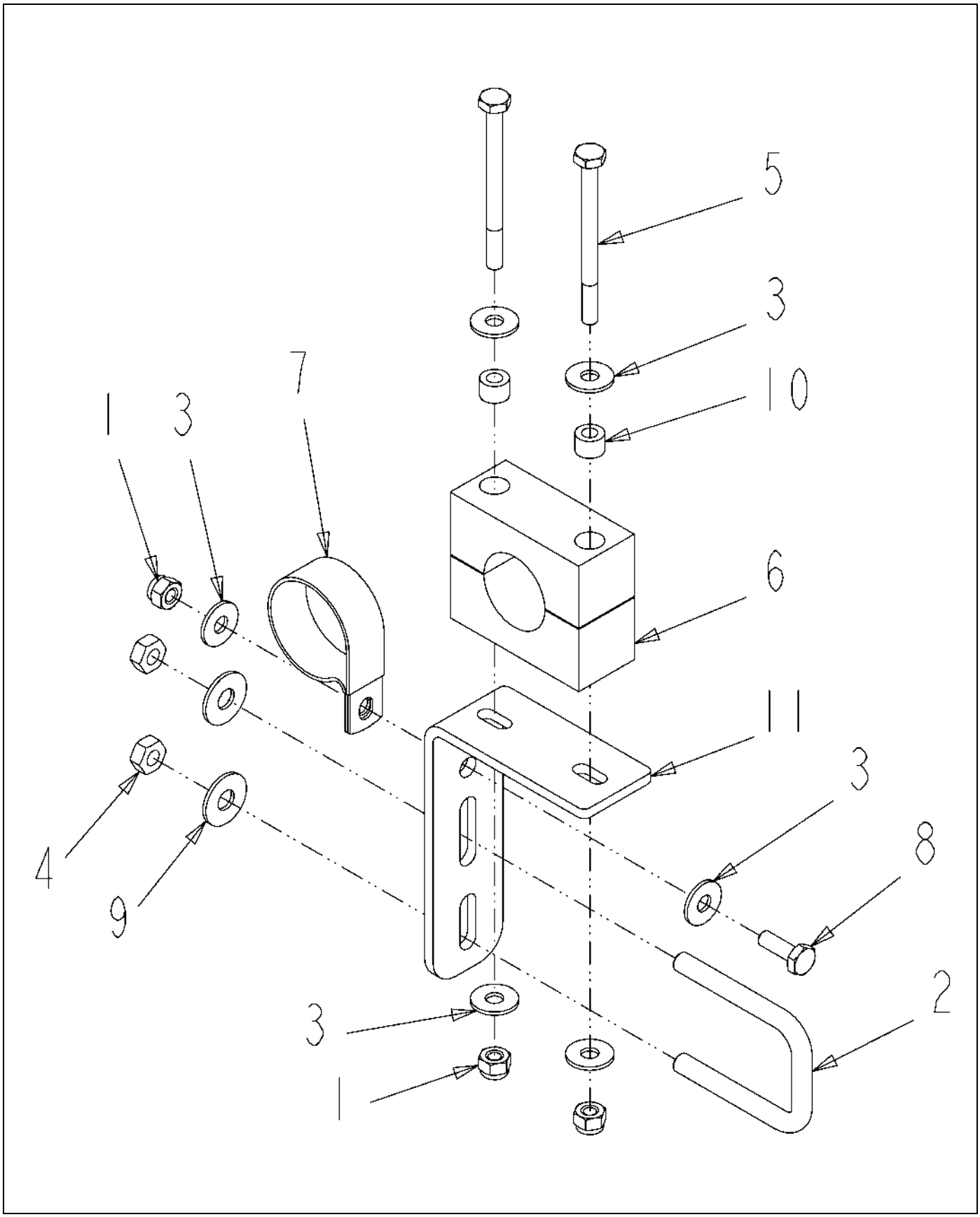

509956D1-01-N649-.TIF

Copyright © 2007 AGCO Corporation

BRKT ASM-L,PP STAUFF

ITEM	PART #	QTY	DESCRIPTION	COMMENTS
1	AG027275	3	NUT 0.25-20NC HEX SS REG NY	
2	AG231204	1	BOLT-U .31-18X1.88X2.63	
3	AG515121	6	WASHER 0.25 FL SS REG TYPE-B	
4	AG516403	2	NUT 0.31-18NC HEX SS REG NY	
5	AG518492	2	BOLT 0.25-20NCX 3.00 SS HHD	
6	AG519748	1	CLAMP 1.00 PIPE	[A]
7	AG523412	1	CLAMP-1.62 DIA,COATED HOSE	
8	AG562054	1	BOLT 0.25-20NCX 0.75 SS HHD	
9	AG562074	2	WASHER 0.31 FL SS REG TYPE-B	
10	AG609777	2	INSERT STAUFF SPACER	
11	509885D1	1	BRKT-L,STANDOFF,STAUFF	
	FOOTNOTE [A]		2 INSERTS AND 2 CLAMP MAKE UP 1 PART. BOLT - AG563061, WASHER - AG515121, NUT - AG027275,	

Copyright © 2007 AGCO Corporation

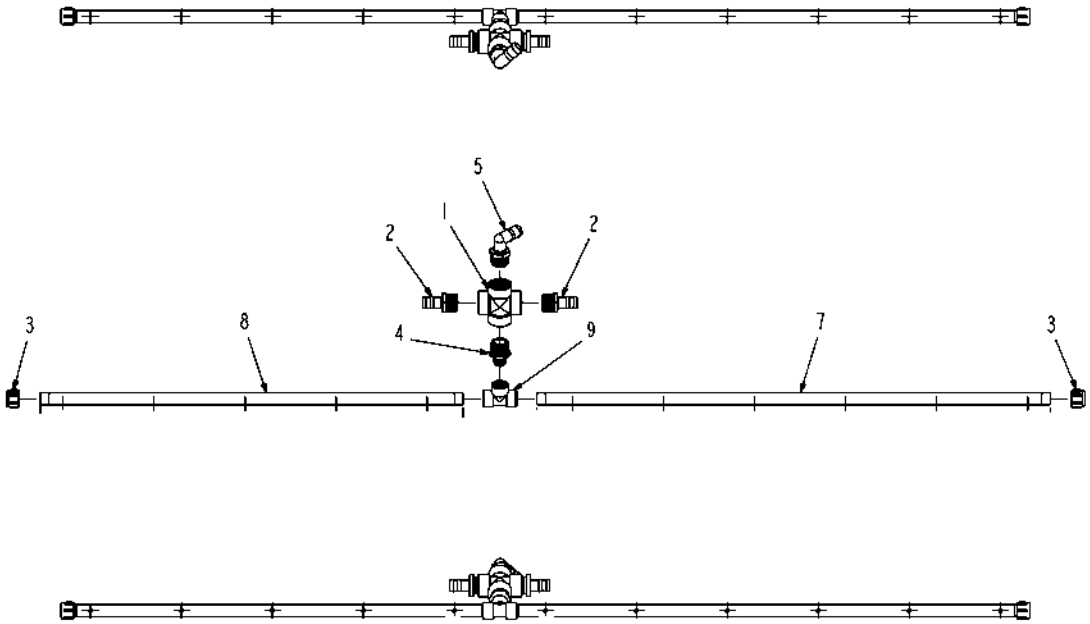

509957D1-01-N648-.tif

Copyright © 2007 AGCO Corporation

BRKT ASM-T,PP STAUFF

ITEM	PART #	QTY	DESCRIPTION	COMMENTS
1	AG051443	1	CROSS-PIPE,1.50FNPT,PP	
2	AG051534	2	BARB-HOSE,1.50MNPTX1.25BARB,PP	
3	AG051536	2	CAP-PIPE,1.00NPT PP	
4	AG053079	1	REDUCER NIPPLE 1.50 X 1.00	
5	AG055299	1	BARB-ELBOW,90D,1.50X1.25 POLY	
6	AG129187	AR	PIPE SEALANT-FLEX BLACK	
7	AG239937	1	TUBE-POLY,56.44,10IN CTR	
8	AG239938	1	TUBE-POLY,46.44,10IN CTR	
9	AG516405	1	TEE,PIPE,1.00FNPT,PP	

Copyright © 2007 AGCO Corporation

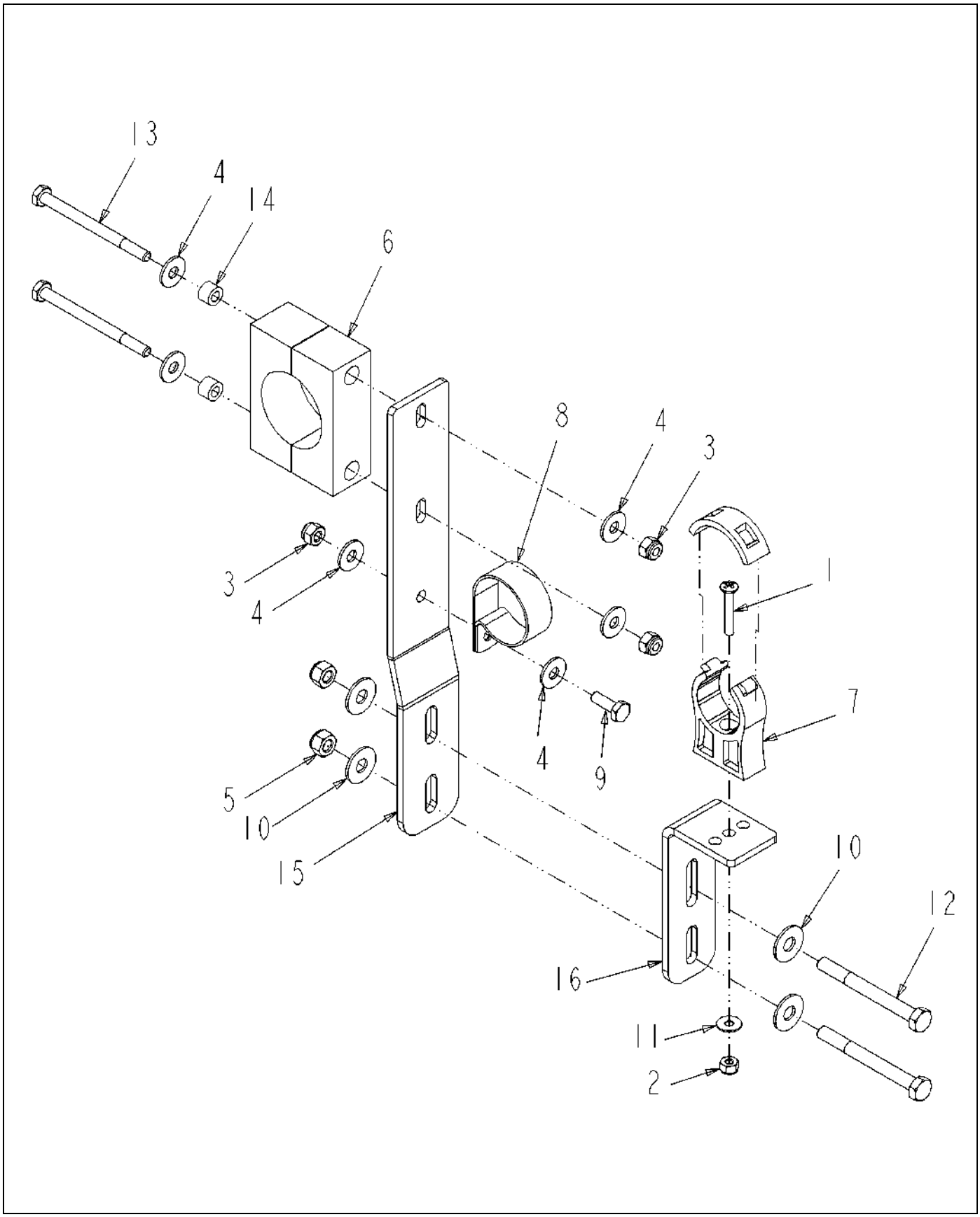

509959D1-02-R506-.TIF

Copyright © 2007 AGCO Corporation

BRKT ASM-L/STR,IPS/1.50 STAUFF

ITEM	PART #	QTY	DESCRIPTION	COMMENTS
1	AG027273	1	SCREW 10-24X 1.25 PHD PHILSS(P	
2	AG027274	1	NUT #10-24NC HEX SS REG NY	
3	AG027275	3	NUT 0.25-20NC HEX SS REG NY	
4	AG515121	6	WASHER 0.25 FL SS REG TYPE-B	
5	AG516403	2	NUT 0.31-18NC HEX SS REG NY	
6	AG519180	1	CLAMP 1.50 BLACK POLY	
7	AG519749	1	CLAMP 1.00 IPS POLY	
8	AG523412	1	CLAMP-1.62 DIA,COATED HOSE	
9	AG562054	1	BOLT 0.25-20NCX 0.75 SS HHD	
10	AG562074	4	WASHER 0.31 FL SS REG TYPE-B	
11	AG562082	1	WASHER #10 FL SS REG TYPE-B	
12	AG562105	2	BOLT 0.31-18NCX 3.00 SS HHD	
13	AG563061	2	BOLT 0.25-20NCX 3.25 SS HHD	
14	AG609777	2	INSERT STAUFF SPACER	
15	509884D1	1	BRKT-Z,STANDOFF,LG,1.50STAUFF	
16	509996D1	1	BRKT-L,LG,STANDOFF,IPS	

Copyright © 2007 AGCO Corporation

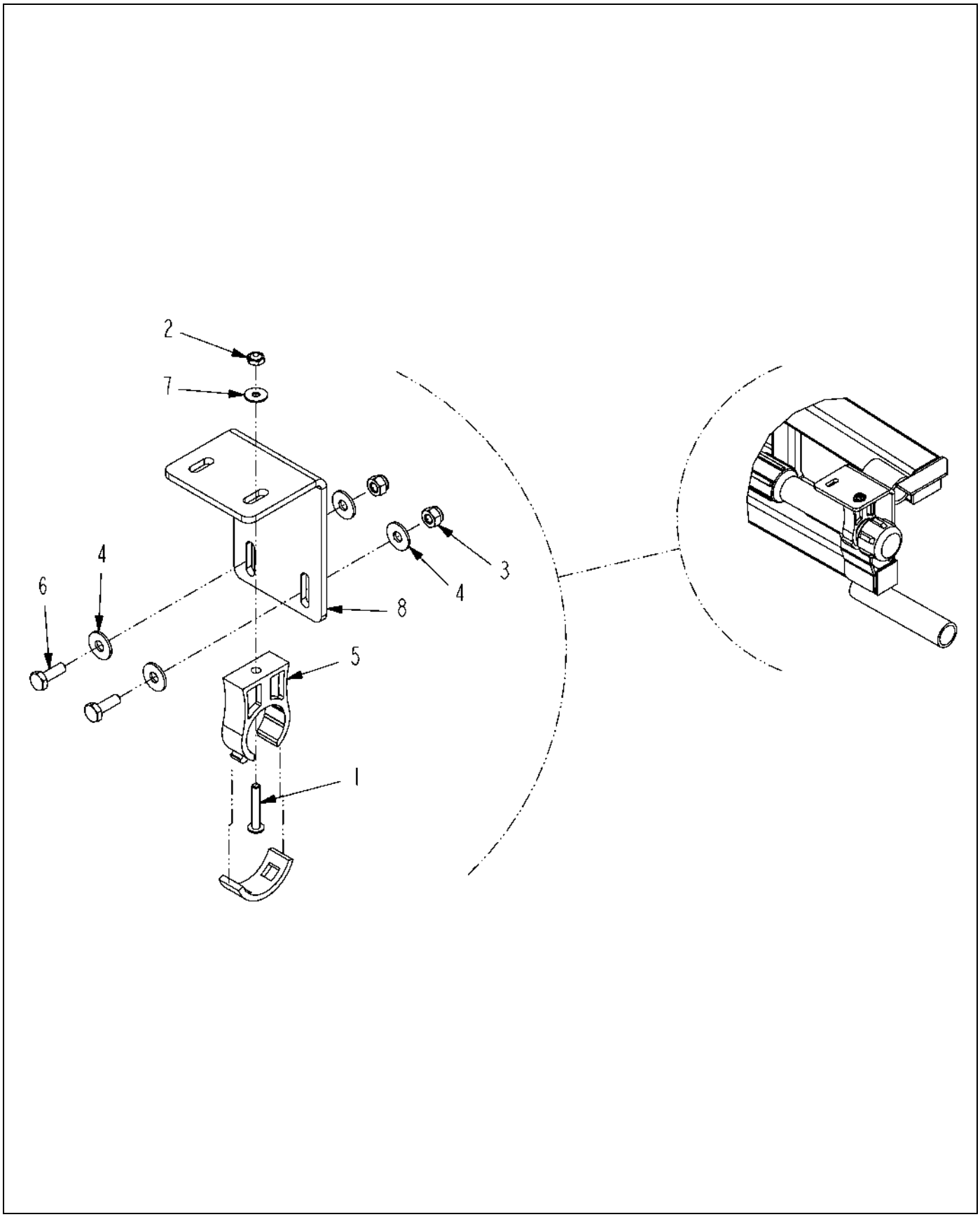

509960D1-01-N648-.TIF

Copyright © 2007 AGCO Corporation

BRKT ASM-L,ENDROW,IPS,RH

ITEM	PART #	QTY	DESCRIPTION	COMMENTS
1	AG027273	1	SCREW 10-24X 1.25 PHD PHILSS(P	
2	AG027274	1	NUT #10-24NC HEX SS REG NY	
3	AG027275	2	NUT 0.25-20NC HEX SS REG NY	
4	AG515121	4	WASHER 0.25 FL SS REG TYPE-B	
5	AG519749	1	CLAMP 1.00 IPS POLY	
6	AG562054	2	BOLT 0.25-20NCX 0.75 SS HHD	
7	AG562082	1	WASHER #10 FL SS REG TYPE-B	
8	509886D1	1	BRKT-MTG,STANDOFF,ENDROW	

Copyright © 2007 AGCO Corporation

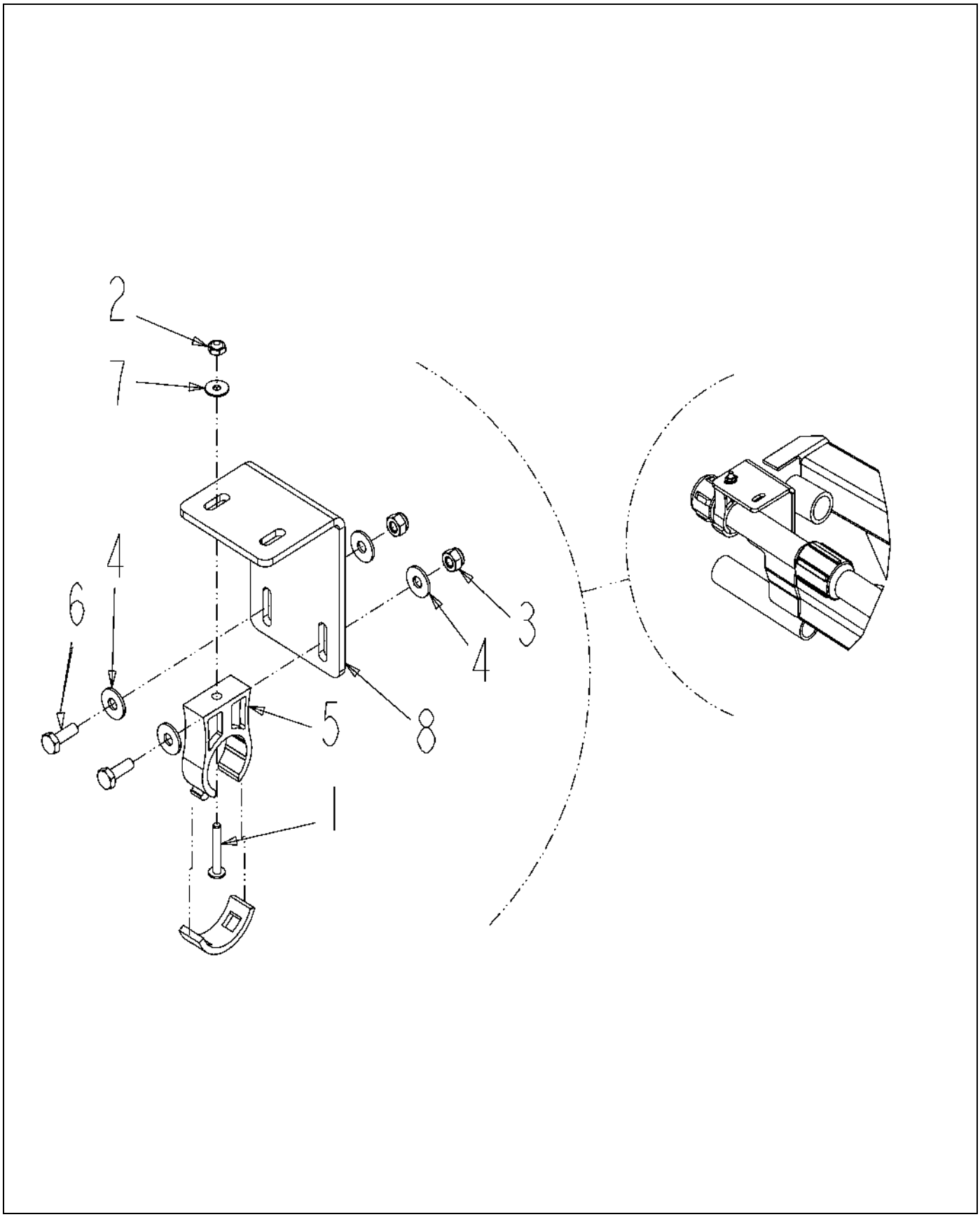

509961D1-01-N648-.TIF

Copyright © 2007 AGCO Corporation

BRKT ASM-L,ENDROW,IPS,LH

ITEM	PART #	QTY	DESCRIPTION	COMMENTS
1	AG027273	1	SCREW 10-24X 1.25 PHD PHILSS(P	
2	AG027274	1	NUT #10-24NC HEX SS REG NY	
3	AG027275	2	NUT 0.25-20NC HEX SS REG NY	
4	AG515121	4	WASHER 0.25 FL SS REG TYPE-B	
5	AG519749	1	CLAMP 1.00 IPS POLY	
6	AG562054	2	BOLT 0.25-20NCX 0.75 SS HHD	
7	AG562082	1	WASHER #10 FL SS REG TYPE-B	
8	509886D1	1	BRKT-MTG,STANDOFF,ENDROW	

Copyright © 2007 AGCO Corporation

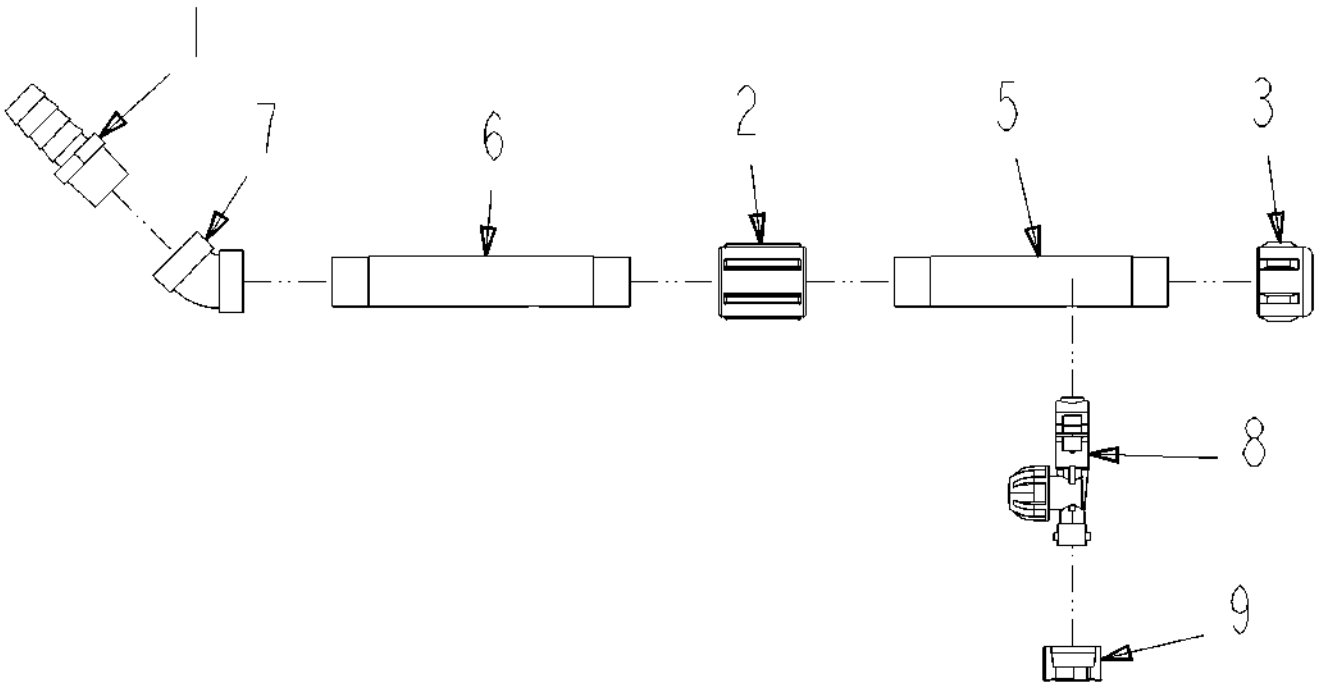

509999D1-01-N648-.TIF

Copyright © 2007 AGCO Corporation

PIPE ASM-45D W/1.00HB,2X8,PP,E

ITEM	PART #	QTY	DESCRIPTION	COMMENTS
1	AG051059	1	BARB-HOSE,1.00MNPTX1.00BARB,PP	
2	AG051131	1	COUPLING-PIPE,1.00NPT,PP	
3	AG051536	1	CAP-PIPE,1.00NPT PP	
4	AG129187	AR	PIPE SEALANT-FLEX BLACK	
5	AG134603	1	TUBE-BOOM,PP,10,7.13	
6	AG239933	1	TUBE-POLY,7.75,10IN CTR	
7	AG519838	1	ELBOW-PIPE,1.00FNPT,45D,PP	
8	511621D1	1	BODY-NOZZLE,SINGLE,1.00	
9	511622D1	1	CAP-SHUTOFF,QUICK FIT,ARAG	

Copyright © 2007 AGCO Corporation

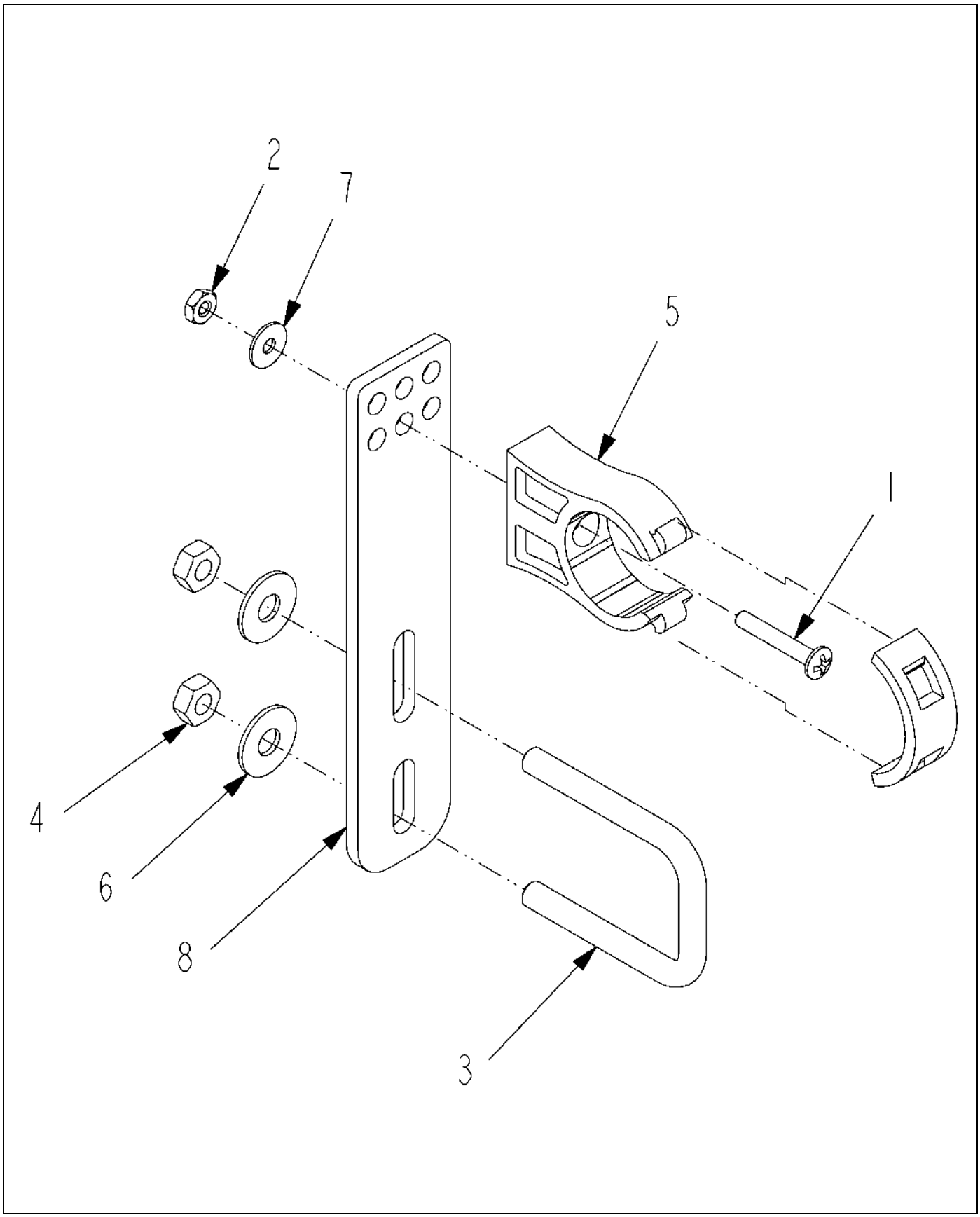

511153D1-01-N648-.TIF

Copyright © 2007 AGCO Corporation

BRKT ASM-Z,PP STAUFF,REV U

ITEM	PART #	QTY	DESCRIPTION	COMMENTS
1	AG027273	1	SCREW 10-24X 1.25 PHD PHILSS(P	
2	AG027274	1	NUT #10-24NC HEX SS REG NY	
3	AG231204	1	BOLT-U .31-18X1.88X2.63	
4	AG516403	2	NUT 0.31-18NC HEX SS REG NY	
5	AG519749	1	CLAMP 1.00 IPS POLY	
6	AG562074	2	WASHER 0.31 FL SS REG TYPE-B	
7	AG562082	1	WASHER #10 FL SS REG TYPE-B	
8	511432D1	1	BRKT-STR,LG STANDOFF	

Copyright © 2007 AGCO Corporation

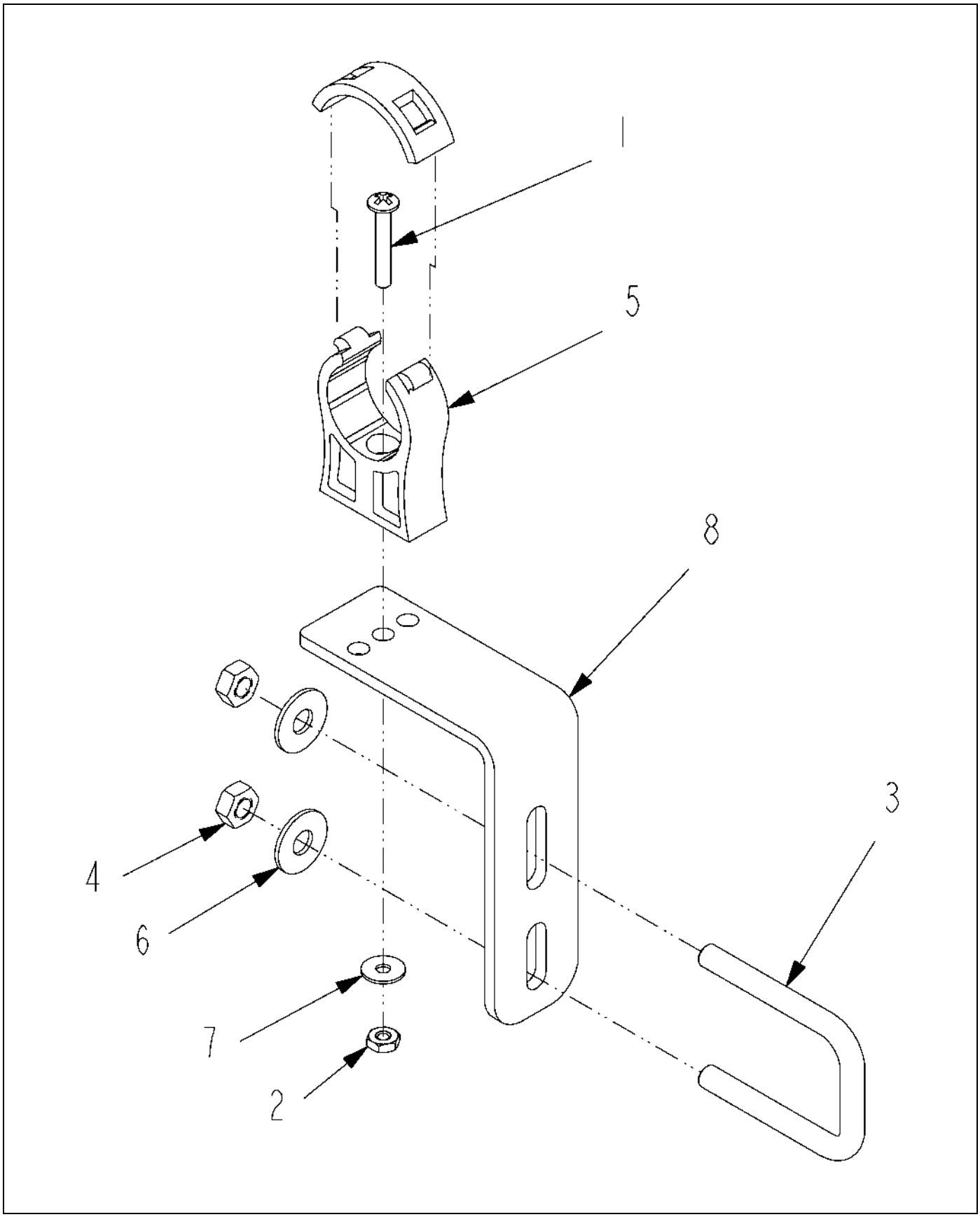

511435D1-01-N648-.TIF

Copyright © 2007 AGCO Corporation

BRKT ASM-L,LG OFFSET,IPS

ITEM	PART #	QTY	DESCRIPTION	COMMENTS
1	AG027273	1	SCREW 10-24X 1.25 PHD PHILSS(P	
2	AG027274	1	NUT #10-24NC HEX SS REG NY	
3	AG231204	1	BOLT-U .31-18X1.88X2.63	
4	AG516403	2	NUT 0.31-18NC HEX SS REG NY	
5	AG519749	1	CLAMP 1.00 IPS POLY	
6	AG562074	2	WASHER 0.31 FL SS REG TYPE-B	
7	AG562082	1	WASHER #10 FL SS REG TYPE-B	
8	511433D1	1	BRKT-L,LG OFFSET,STANDOFF,IPS	

Copyright © 2007 AGCO Corporation

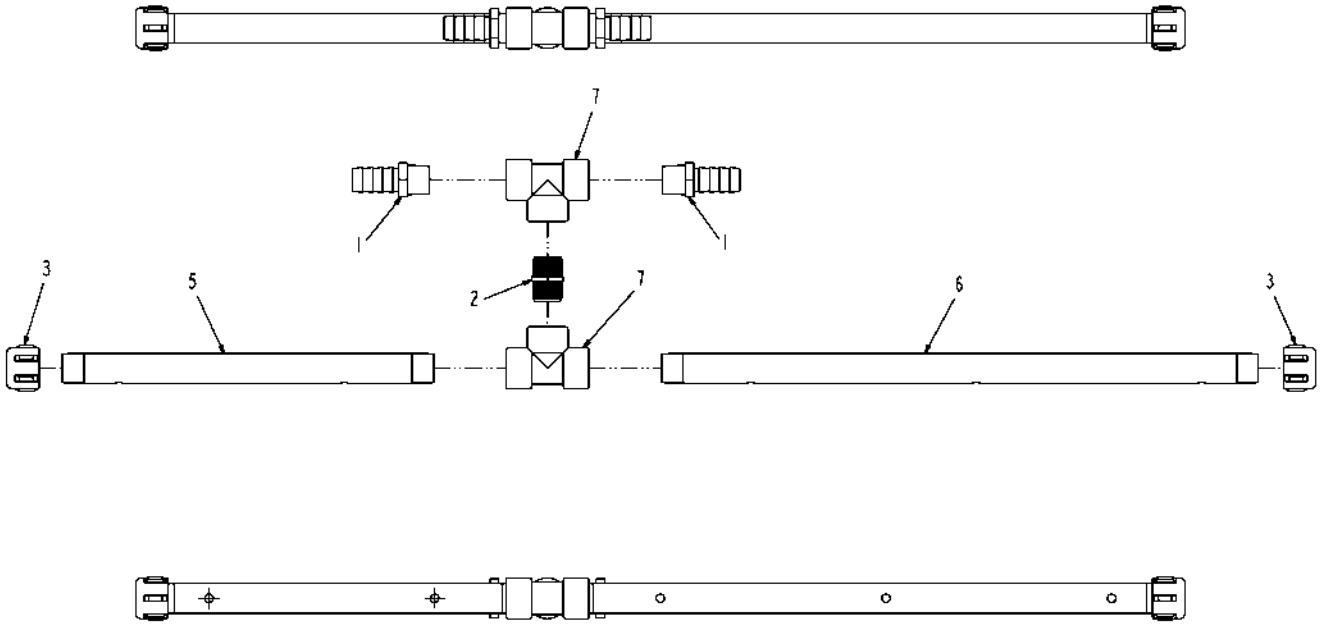

511436D1-01-N649-.TIF

Copyright © 2007 AGCO Corporation

PIPE ASM-T W/2 1.00HB,4X10,PP

ITEM	PART #	QTY	DESCRIPTION	COMMENTS
1	AG051059	2	BARB-HOSE,1.00MNPTX1.00BARB,PP	
2	AG051153	1	NIPPLE-PIPE,1.00NPTXCLS,PP	
3	AG051536	2	CAP-PIPE,1.00NPT PP	
4	AG129187	AR	PIPE SEALANT-FLEX BLACK	
5	AG239934	1	TUBE-POLY,16.44,10IN CTR	
6	AG239936	1	TUBE-POLY,26.44,10IN CTR	
7	AG516405	2	TEE,PIPE,1.00FNPT,PP	

Copyright © 2007 AGCO Corporation

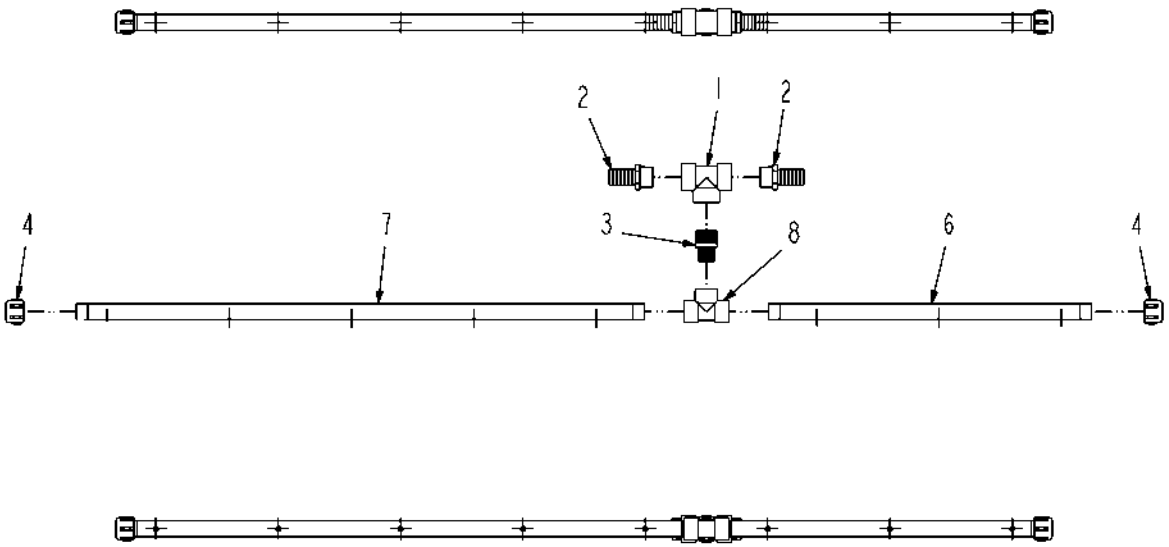

511437D1-01-N648-.tif

Copyright © 2007 AGCO Corporation

PIPE ASM-T W/2 1.25HB,8X10,PP

ITEM	PART #	QTY	DESCRIPTION	COMMENTS
1	AG051162	1	TEE,PIPE,1.25FNPT,PP	
2	AG051186	2	BARB-HOSE,1.25MNPTX1.25BARB,PP	
3	AG051437	1	NIPPLE RED 1.25NPTX1.00NPT PP	
4	AG051536	2	CAP-PIPE,1.00NPT PP	
5	AG129187	AR	PIPE SEALANT-FLEX BLACK	
6	AG239936	1	TUBE-POLY,26.44,10IN CTR	
7	AG239938	1	TUBE-POLY,46.44,10IN CTR	
8	AG516405	1	TEE,PIPE,1.00FNPT,PP	

Copyright © 2007 AGCO Corporation

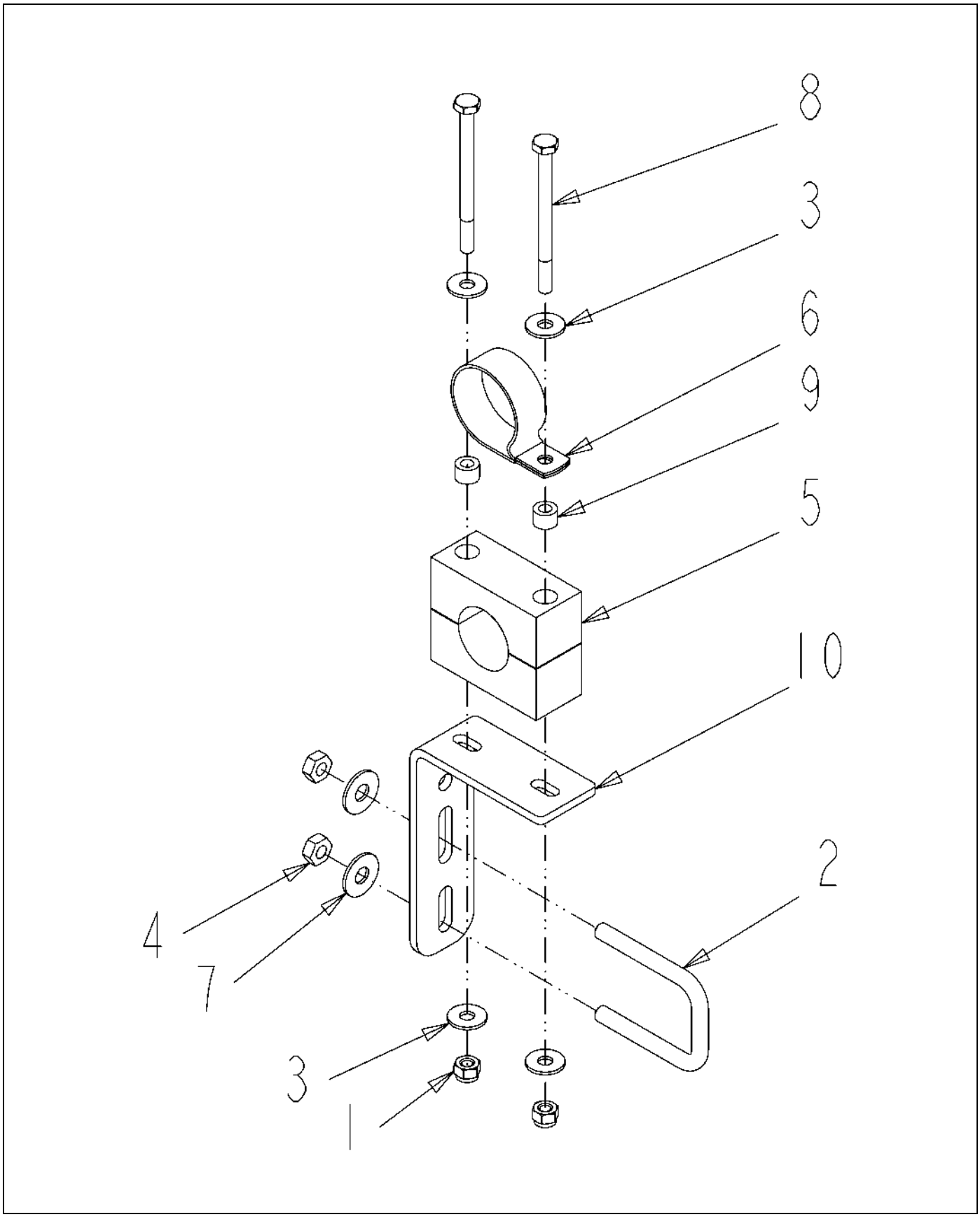

511438D1-01-N649-.TIF

Copyright © 2007 AGCO Corporation

BRKT ASM-L,LG,STAUFF,1.25P CTR

ITEM	PART #	QTY	DESCRIPTION	COMMENTS
1	AG027275	2	NUT 0.25-20NC HEX SS REG NY	
2	AG231204	1	BOLT-U .31-18X1.88X2.63	
3	AG515121	4	WASHER 0.25 FL SS REG TYPE-B	
4	AG516403	2	NUT 0.31-18NC HEX SS REG NY	
5	AG519748	1	CLAMP 1.00 PIPE	[A]
6	AG523412	1	CLAMP-1.62 DIA,COATED HOSE	
7	AG562074	2	WASHER 0.31 FL SS REG TYPE-B	
8	AG563061	2	BOLT 0.25-20NCX 3.25 SS HHD	
9	AG609777	2	INSERT STAUFF SPACER	
10	509885D1	1	BRKT-L,STANDOFF,STAUFF	
	FOOTNOTE [A]		2 INSERTS AND 2 CLAMP MAKE UP 1 PART. BOLT - AG563061, WASHER - AG515121, NUT - AG027275,	

Copyright © 2007 AGCO Corporation

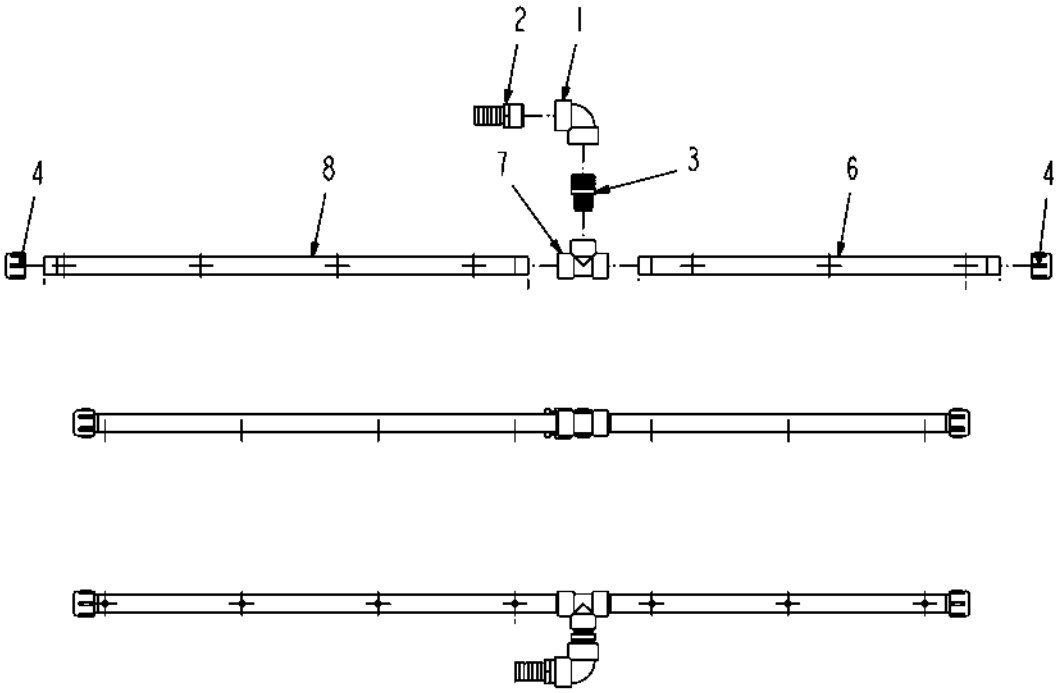

511439D1-01-N648-.tif

Copyright © 2007 AGCO Corporation

PIPE ASM-90D W/1.25HB,7X10,RH

ITEM	PART #	QTY	DESCRIPTION	COMMENTS
1	AG051128	1	ELBOW-PIPE,1.25FNPT,90D,PP	
2	AG051186	1	BARB-HOSE,1.25MNPTX1.25BARB,PP	
3	AG051437	1	NIPPLE RED 1.25NPTX1.00NPT PP	
4	AG051536	2	CAP-PIPE,1.00NPT PP	
5	AG129187	AR	PIPE SEALANT-FLEX BLACK	
6	AG239936	1	TUBE-POLY,26.44,10IN CTR	
7	AG516405	1	TEE,PIPE,1.00FNPT,PP	
8	506805D1	1	TUBE-POLY,35.44,10IN CTR	

Copyright © 2007 AGCO Corporation

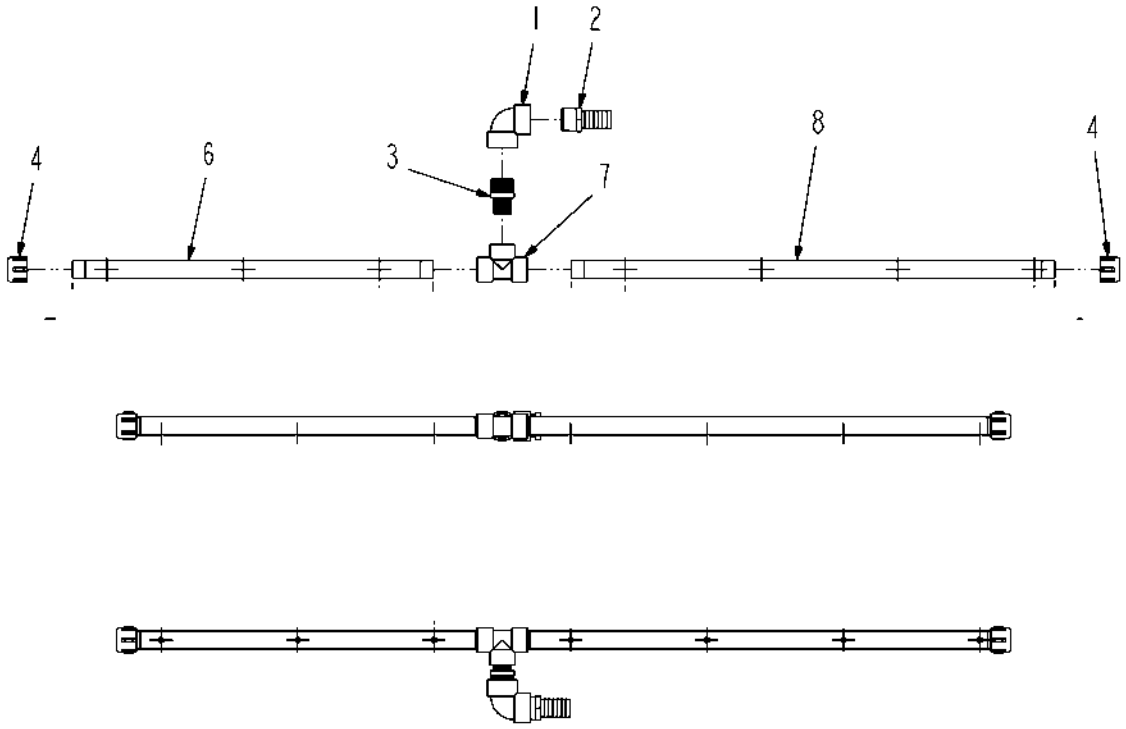

511440D1-01-N648-.tif

Copyright © 2007 AGCO Corporation

PIPE ASM-90D W/1.25HB,7X10,LH

ITEM	PART #	QTY	DESCRIPTION	COMMENTS
1	AG051128	1	ELBOW-PIPE,1.25FNPT,90D,PP	
2	AG051186	1	BARB-HOSE,1.25MNPTX1.25BARB,PP	
3	AG051437	1	NIPPLE RED 1.25NPTX1.00NPT PP	
4	AG051536	2	CAP-PIPE,1.00NPT PP	
5	AG129187	AR	PIPE SEALANT-FLEX BLACK	
6	AG239936	1	TUBE-POLY,26.44,10IN CTR	
7	AG516405	1	TEE,PIPE,1.00FNPT,PP	
8	506805D1	1	TUBE-POLY,35.44,10IN CTR	

Copyright © 2007 AGCO Corporation

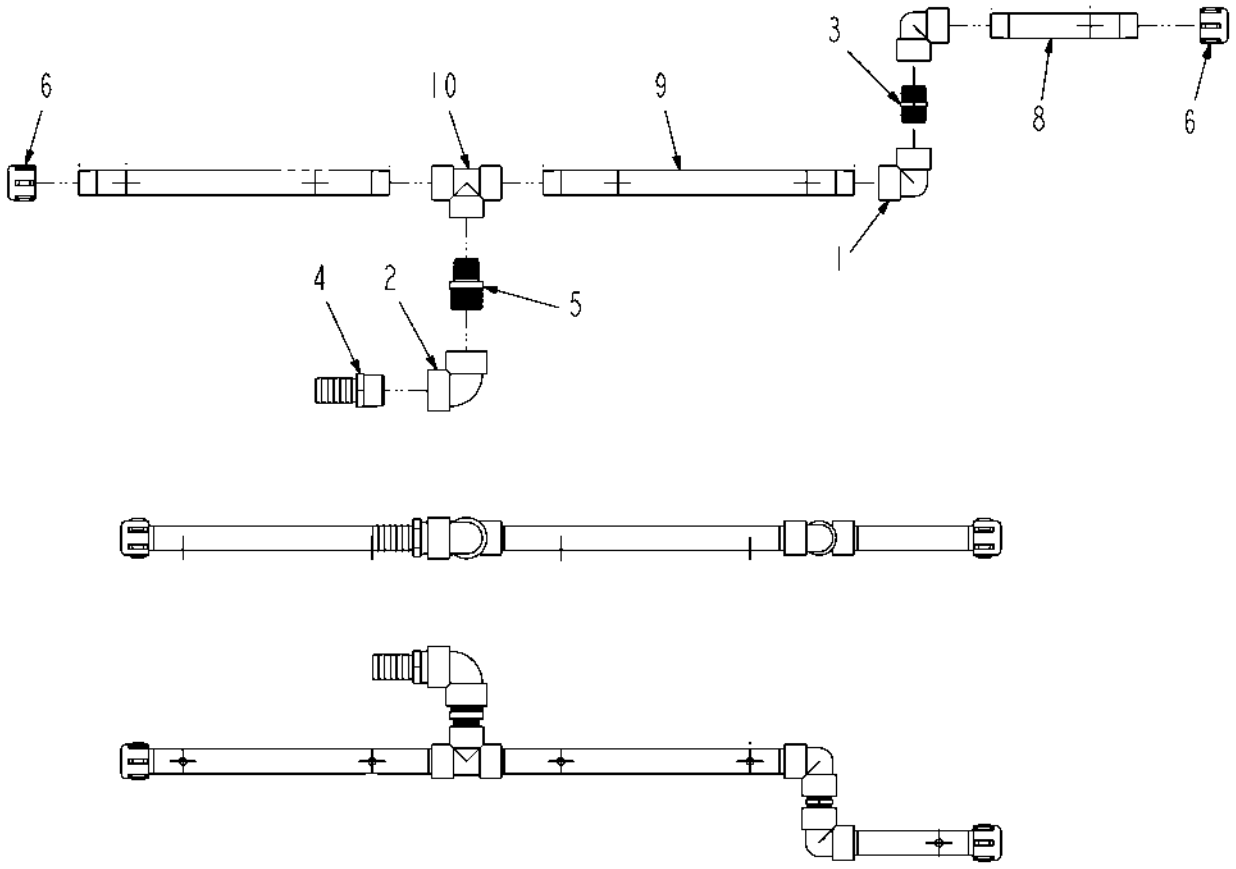

511441D1-01-N648-.tif

Copyright © 2007 AGCO Corporation

PIPE ASM-90D W/1.25HB,5X10,RH

ITEM	PART #	QTY	DESCRIPTION	COMMENTS
1	AG051127	2	ELBOW-PIPE,1.00FNPT,90D,PP	
2	AG051128	1	ELBOW-PIPE,1.25FNPT,90D,PP	
3	AG051153	1	NIPPLE-PIPE,1.00NPTXCLS,PP	
4	AG051186	1	BARB-HOSE,1.25MNPTX1.25BARB,PP	
5	AG051437	1	NIPPLE RED 1.25NPTX1.00NPT PP	
6	AG051536	2	CAP-PIPE,1.00NPT PP	
7	AG129187	AR	PIPE SEALANT-FLEX BLACK	
8	AG239933	1	TUBE-POLY,7.75,10IN CTR	
9	AG239934	2	TUBE-POLY,16.44,10IN CTR	
10	AG516405	1	TEE,PIPE,1.00FNPT,PP	

Copyright © 2007 AGCO Corporation

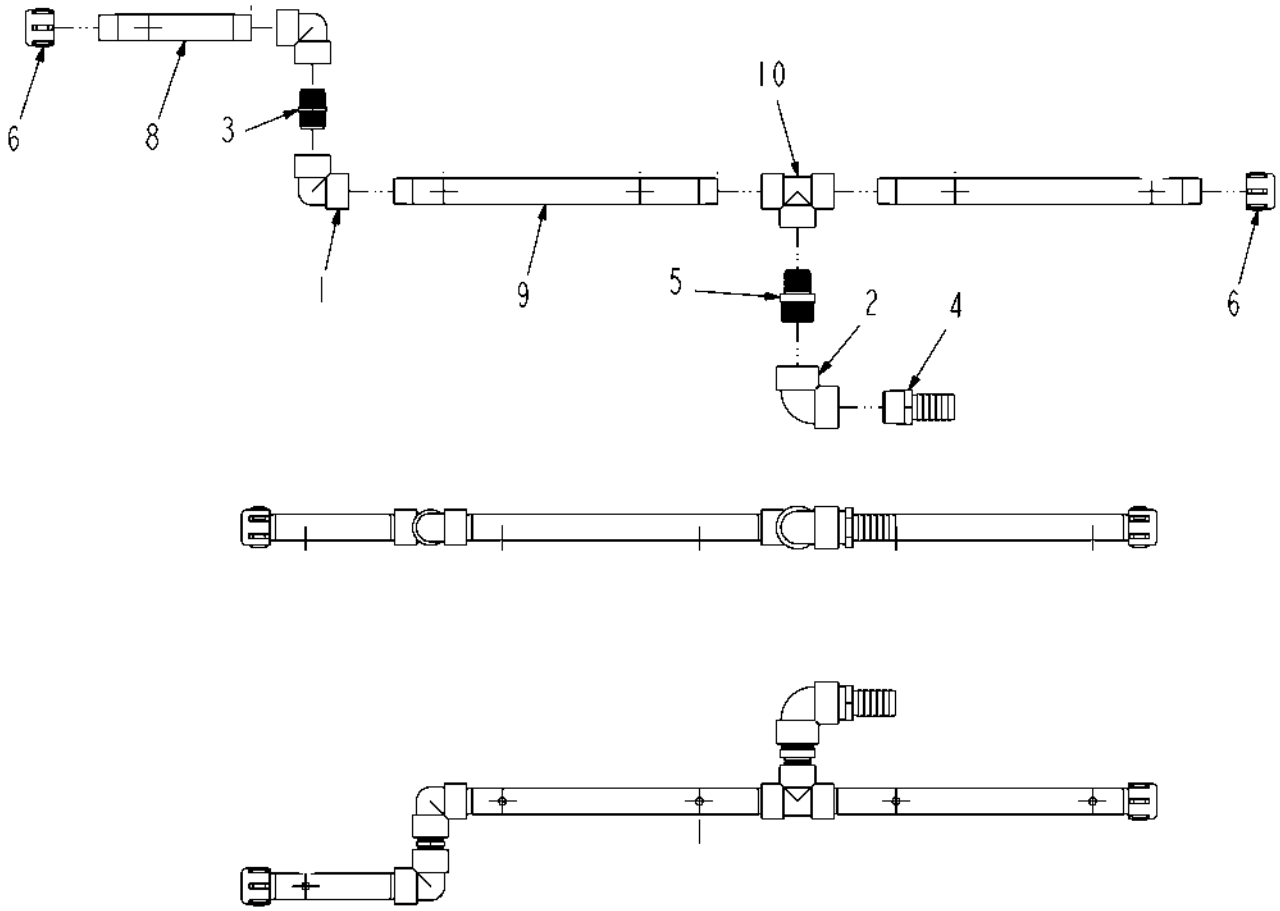

511442D1-01-N648-.tif

Copyright © 2007 AGCO Corporation

PIPE ASM-90D W/1.25HB,5X10,LH

ITEM	PART #	QTY	DESCRIPTION	COMMENTS
1	AG051127	2	ELBOW-PIPE,1.00FNPT,90D,PP	
2	AG051128	1	ELBOW-PIPE,1.25FNPT,90D,PP	
3	AG051153	1	NIPPLE-PIPE,1.00NPTXCLS,PP	
4	AG051186	1	BARB-HOSE,1.25MNPTX1.25BARB,PP	
5	AG051437	1	NIPPLE RED 1.25NPTX1.00NPT PP	
6	AG051536	2	CAP-PIPE,1.00NPT PP	
7	AG129187	AR	PIPE SEALANT-FLEX BLACK	
8	AG239933	1	TUBE-POLY,7.75,10IN CTR	
9	AG239934	2	TUBE-POLY,16.44,10IN CTR	
10	AG516405	1	TEE,PIPE,1.00FNPT,PP	

Copyright © 2007 AGCO Corporation

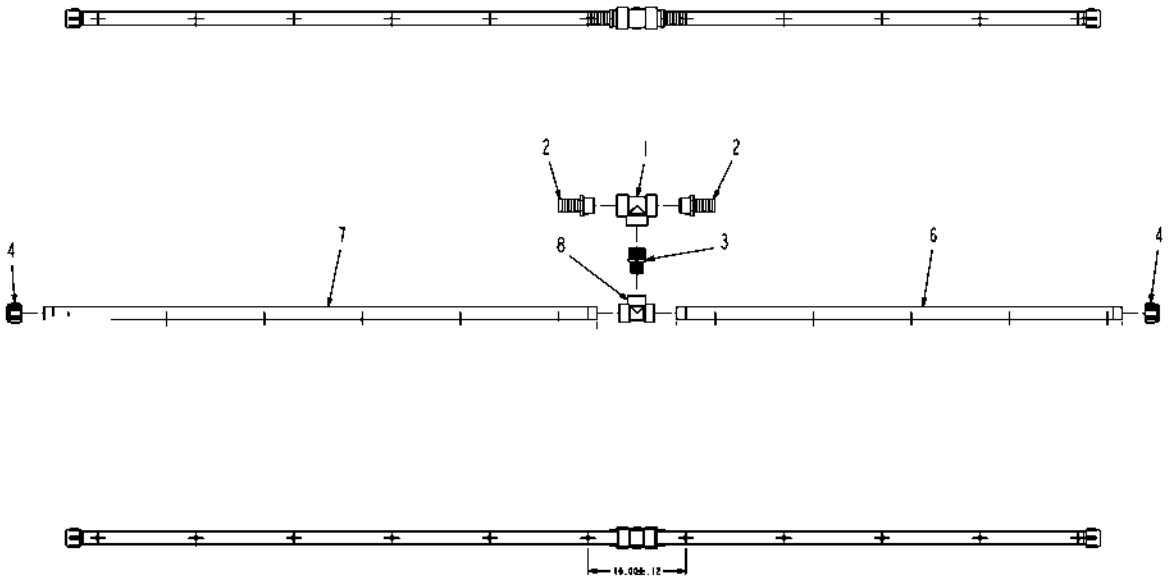

511493D1-01-N648-.tif

Copyright © 2007 AGCO Corporation

PIPE ASM-T W/2 1.25HB,11X10,PP

ITEM	PART #	QTY	DESCRIPTION	COMMENTS
1	AG051162	1	TEE,PIPE,1.25FNPT,PP	
2	AG051186	2	BARB-HOSE,1.25MNPTX1.25BARB,PP	
3	AG051437	1	NIPPLE RED 1.25NPTX1.00NPT PP	
4	AG051536	2	CAP-PIPE,1.00NPT PP	
5	AG129187	AR	PIPE SEALANT-FLEX BLACK	
6	AG239930	1	TUBE-POLY,45.44,10IN CTR	
7	AG239937	1	TUBE-POLY,56.44,10IN CTR	
8	AG516405	1	TEE,PIPE,1.00FNPT,PP	

Copyright © 2007 AGCO Corporation

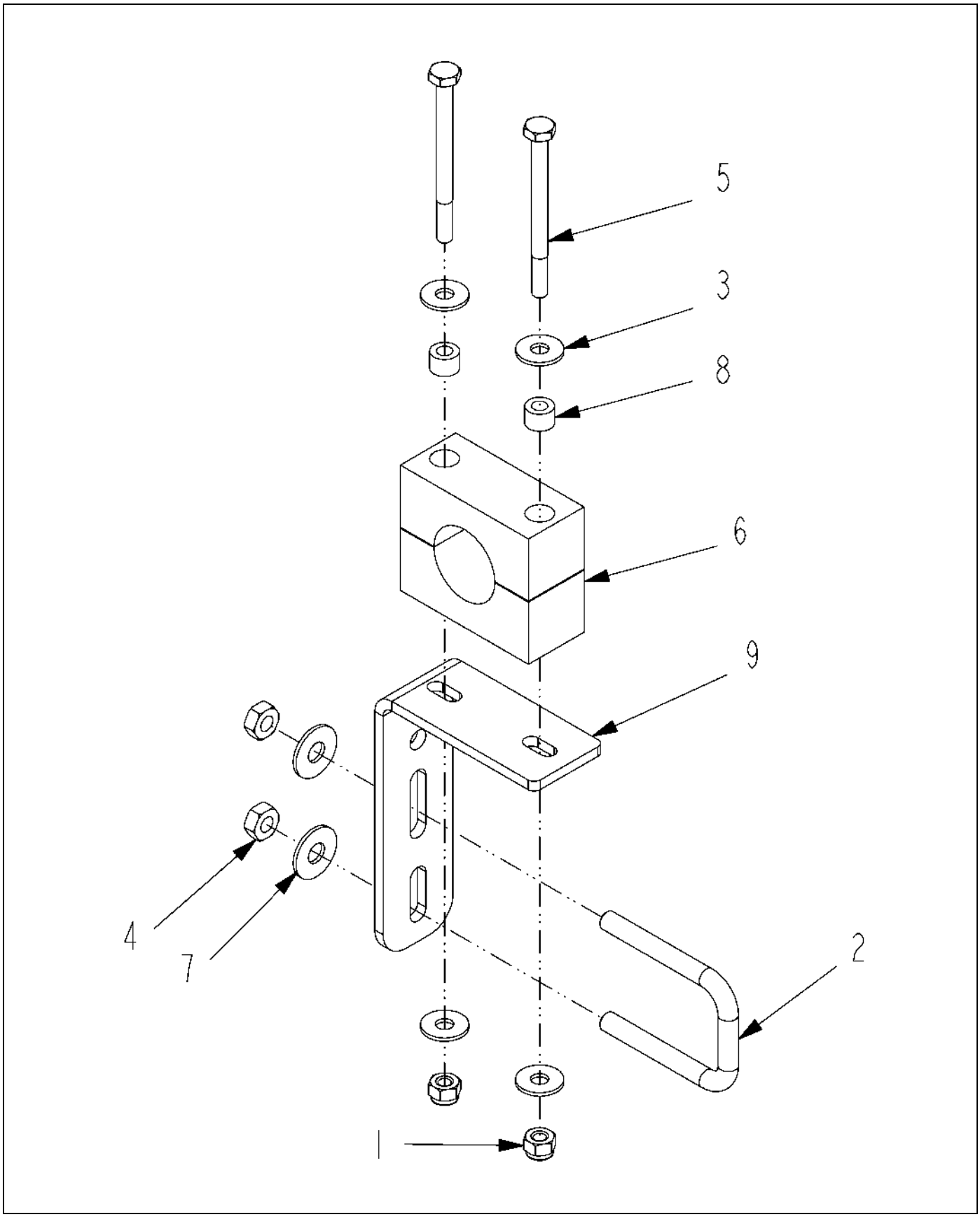

511497D1-01-N648-.TIF

Copyright © 2007 AGCO Corporation

BRKT ASM-L,LG,STAUFF,REV U

ITEM	PART #	QTY	DESCRIPTION	COMMENTS
1	AG027275	2	NUT 0.25-20NC HEX SS REG NY	
2	AG231204	1	BOLT-U .31-18X1.88X2.63	
3	AG515121	4	WASHER 0.25 FL SS REG TYPE-B	
4	AG516403	2	NUT 0.31-18NC HEX SS REG NY	
5	AG518492	2	BOLT 0.25-20NCX 3.00 SS HHD	
6	AG519748	1	CLAMP 1.00 PIPE	[A]
7	AG562074	2	WASHER 0.31 FL SS REG TYPE-B	
8	AG609777	2	INSERT STAUFF SPACER	
9	509885D1	1	BRKT-L,STANDOFF,STAUFF	
	FOOTNOTE [A]		2 INSERTS AND 2 CLAMP MAKE UP 1 PART. BOLT - AG563061, WASHER - AG515121, NUT - AG027275,	

Copyright © 2007 AGCO Corporation

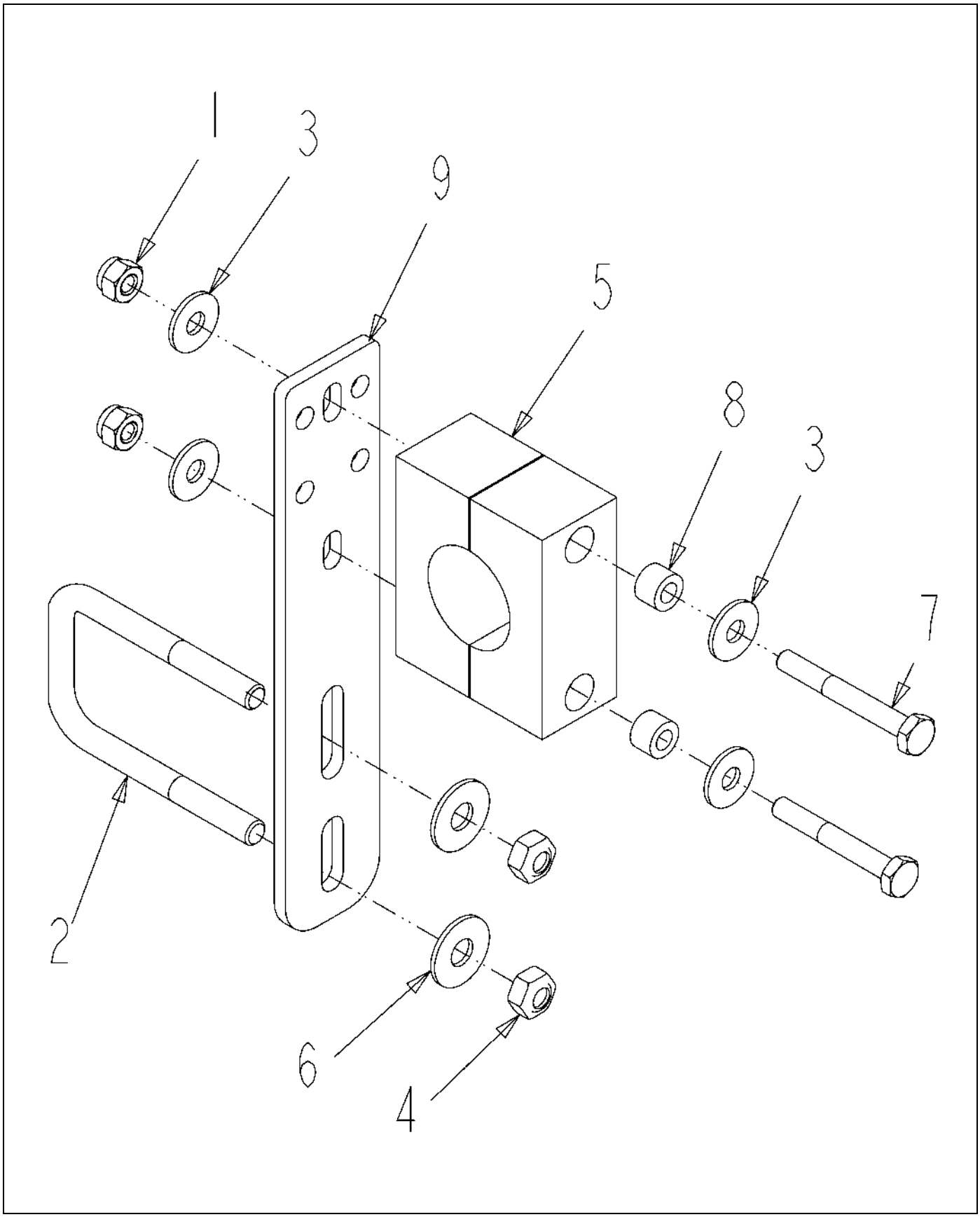

511689D1-01-N648-.TIF

Copyright © 2007 AGCO Corporation

BRKT ASM-STR,XLG,STAUFF,LG U

ITEM	PART #	QTY	DESCRIPTION	COMMENTS
1	AG027275	2	NUT 0.25-20NC HEX SS REG NY	
2	AG261322	1	BOLT-U .31-18X1.56X 2.97SQ,SS	
3	AG515121	4	WASHER 0.25 FL SS REG TYPE-B	
4	AG516403	2	NUT 0.31-18NC HEX SS REG NY	
5	AG519748	1	CLAMP 1.00 PIPE	[A]
6	AG562074	2	WASHER 0.31 FL SS REG TYPE-B	
7	AG563061	2	BOLT 0.25-20NCX 3.25 SS HHD	
8	AG609777	2	INSERT STAUFF SPACER	
9	511687D1	1	BRKT-STR,XLG,STANDOFF	
	FOOTNOTE [A]		2 INSERTS AND 2 CLAMP MAKE UP 1 PART. BOLT - AG563061, WASHER - AG515121, NUT - AG027275,	

Copyright © 2007 AGCO Corporation

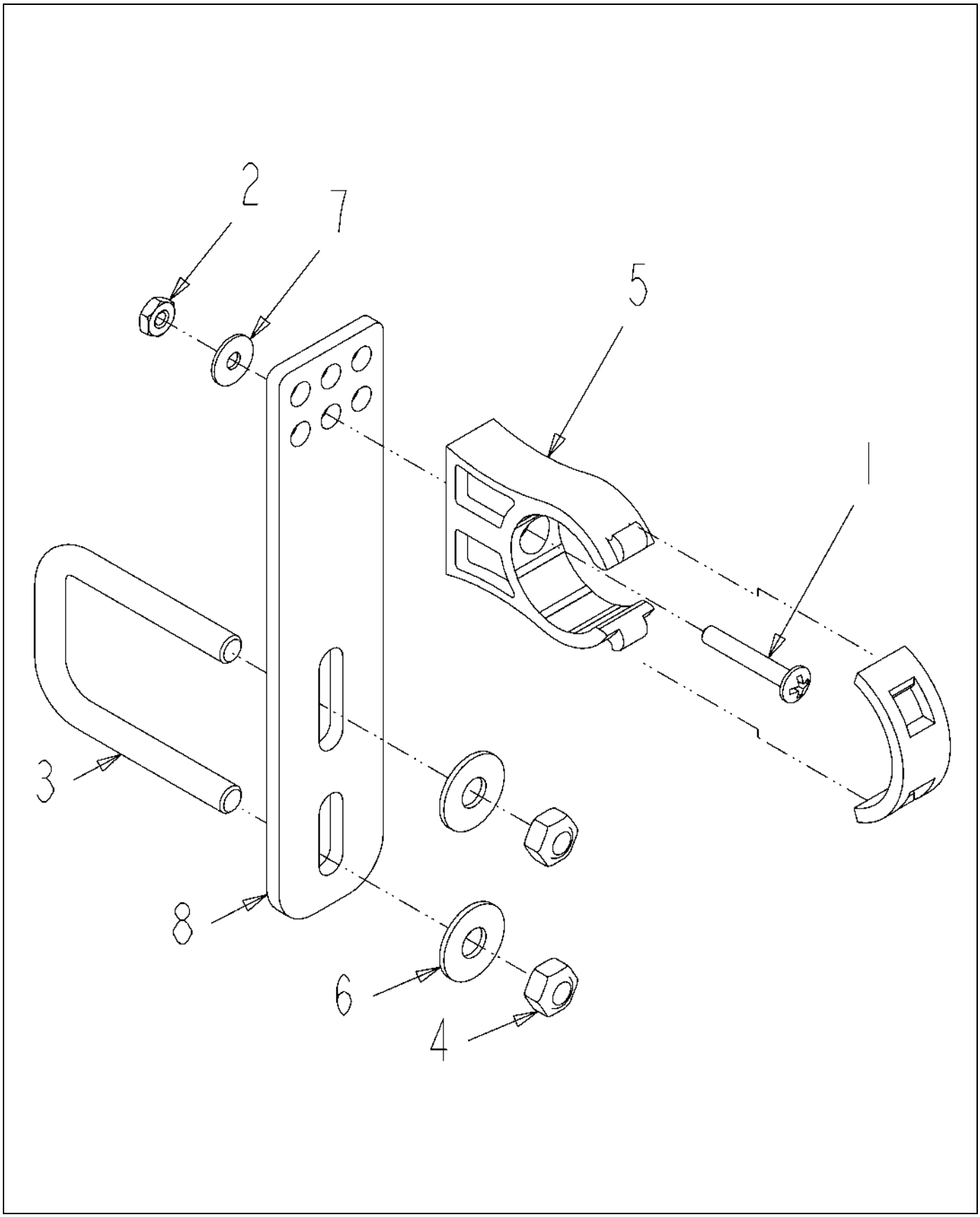

511765D1-01-N648-.TIF

Copyright © 2007 AGCO Corporation

BRKT ASM-STR,LG,1.00IPS,STD U

ITEM	PART #	QTY	DESCRIPTION	COMMENTS
1	AG027273	1	SCREW 10-24X 1.25 PHD PHILSS(P	
2	AG027274	1	NUT #10-24NC HEX SS REG NY	
3	AG231204	1	BOLT-U .31-18X1.88X2.63	
4	AG516403	2	NUT 0.31-18NC HEX SS REG NY	
5	AG519749	1	CLAMP 1.00 IPS POLY	
6	AG562074	2	WASHER 0.31 FL SS REG TYPE-B	
7	AG562082	1	WASHER #10 FL SS REG TYPE-B	
8	511432D1	1	BRKT-STR,LG STANDOFF	

Copyright © 2007 AGCO Corporation

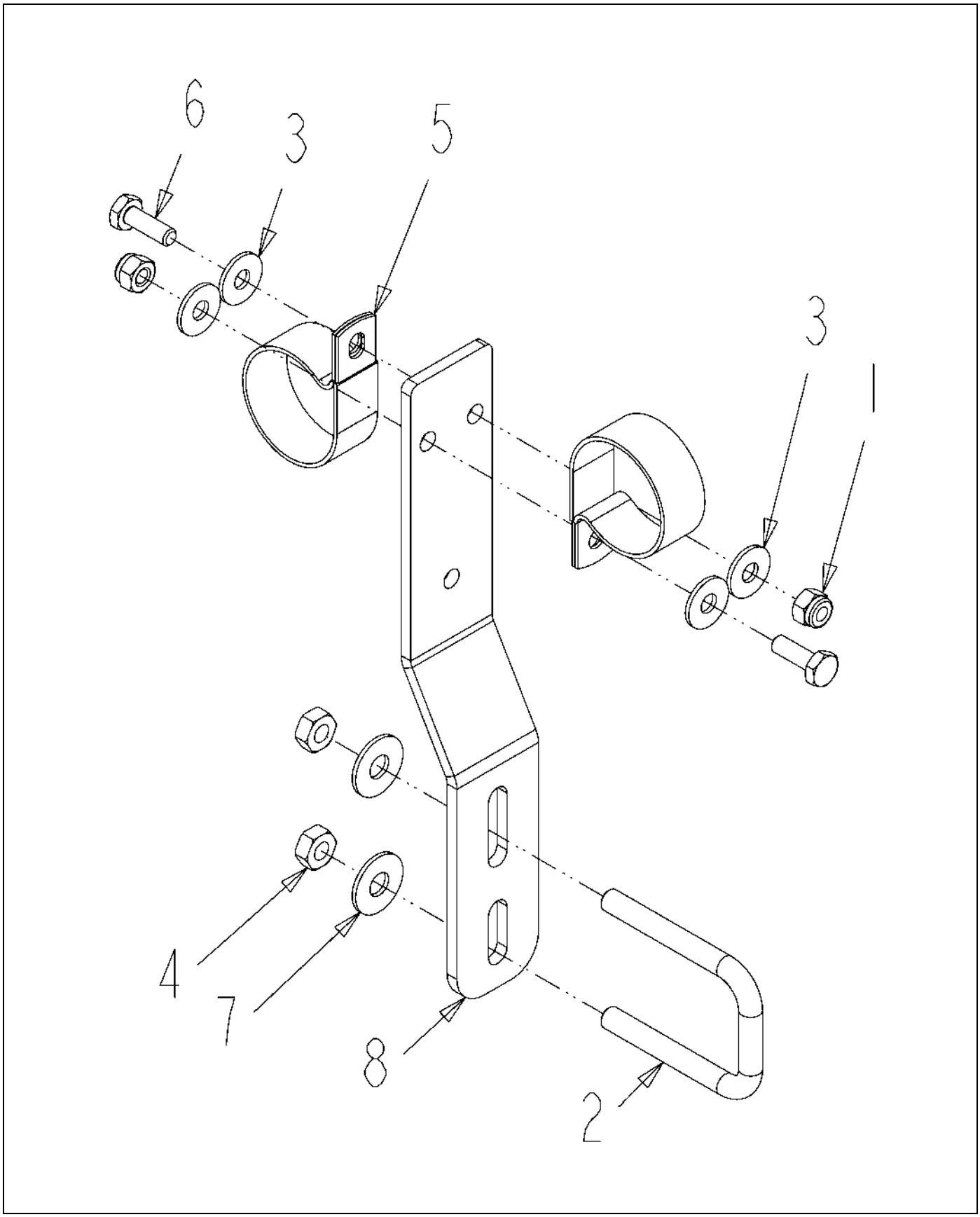

509891D1-01-N649-.TIF

Copyright © 2007 AGCO Corporation

BRKT ASM-Z,LG,UPR IPS/PCLP

ITEM	PART #	QTY	DESCRIPTION	COMMENTS
1	AG027275	2	NUT 0.25-20NC HEX SS REG NY	
2	AG231204	1	BOLT-U .31-18X1.88X2.63	
3	AG515121	4	WASHER 0.25 FL SS REG TYPE-B	
4	AG516403	2	NUT 0.31-18NC HEX SS REG NY	
5	AG523412	2	CLAMP-1.62 DIA,COATED HOSE	
6	AG562054	2	BOLT 0.25-20NCX 0.75 SS HHD	
7	AG562074	2	WASHER 0.31 FL SS REG TYPE-B	
8	509882D1	1	BRKT-Z,STANDOFF,LG	

Copyright © 2007 AGCO Corporation

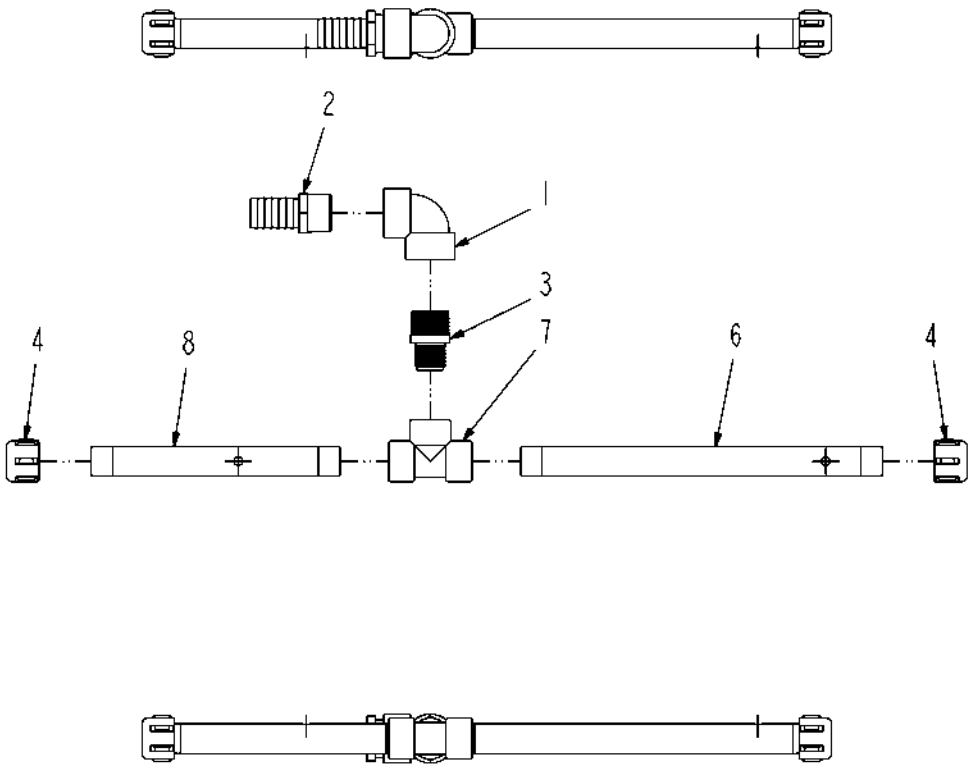

511036D1-01-N648-.tif

Copyright © 2007 AGCO Corporation

PIPE ASM-90D W/1.25HB,2X20,RH

ITEM	PART #	QTY	DESCRIPTION	COMMENTS
1	AG051128	1	ELBOW-PIPE,1.25FNPT,90D,PP	
2	AG051186	1	BARB-HOSE,1.25MNPTX1.25BARB,PP	
3	AG051437	1	NIPPLE RED 1.25NPTX1.00NPT PP	
4	AG051536	2	CAP-PIPE,1.00NPT PP	
5	AG129187	AR	PIPE SEALANT-FLEX BLACK	
6	AG239998	1	TUBE-16.00,INNER BOOM	
7	AG516405	1	TEE,PIPE,1.00FNPT,PP	
8	511043D1	1	TUBE-BOOM,20,11.00,PP	

Copyright © 2007 AGCO Corporation

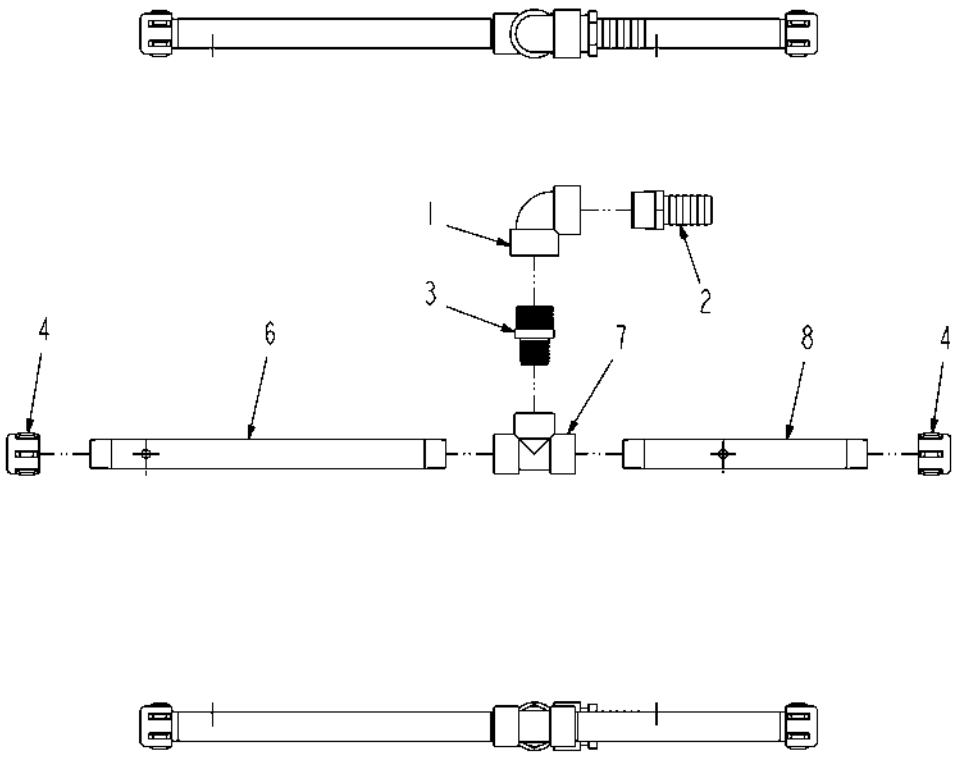

511037D1-01-N648-.tif

Copyright © 2007 AGCO Corporation

PIPE ASM-90D W/1.25HB,2X20,LH

ITEM	PART #	QTY	DESCRIPTION	COMMENTS
1	AG051128	1	ELBOW-PIPE,1.25FNPT,90D,PP	
2	AG051186	1	BARB-HOSE,1.25MNPTX1.25BARB,PP	
3	AG051437	1	NIPPLE RED 1.25NPTX1.00NPT PP	
4	AG051536	2	CAP-PIPE,1.00NPT PP	
5	AG129187	AR	PIPE SEALANT-FLEX BLACK	
6	AG239998	1	TUBE-16.00,INNER BOOM	
7	AG516405	1	TEE,PIPE,1.00FNPT,PP	
8	511043D1	1	TUBE-BOOM,20,11.00,PP	

Copyright © 2007 AGCO Corporation

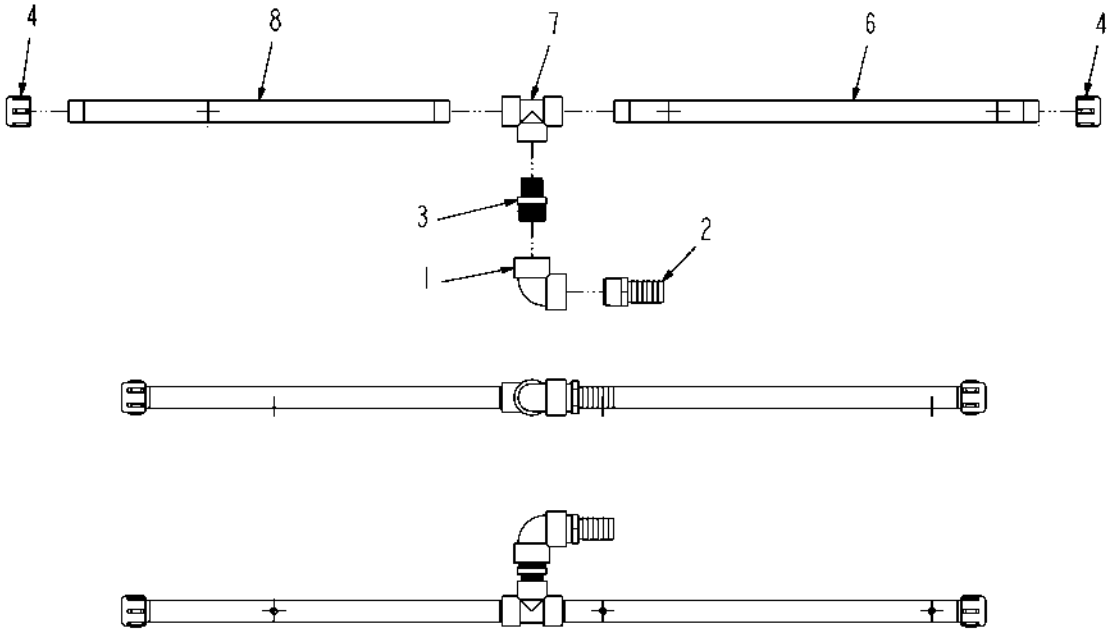

511038D1-01-N648-.tif

Copyright © 2007 AGCO Corporation

PIPE ASM-90D W/1.25HB,3X20,RH

ITEM	PART #	QTY	DESCRIPTION	COMMENTS
1	AG051128	1	ELBOW-PIPE,1.25FNPT,90D,PP	
2	AG051186	1	BARB-HOSE,1.25MNPTX1.25BARB,PP	
3	AG051437	1	NIPPLE RED 1.25NPTX1.00NPT PP	
4	AG051536	2	CAP-PIPE,1.00NPT PP	
5	AG129187	AR	PIPE SEALANT-FLEX BLACK	
6	AG239723	1	TUBE-25.81,POLY	
7	AG516405	1	TEE,PIPE,1.00FNPT,PP	
8	512555D1	1	TUBE-BOOM,20,23.19,PP	

Copyright © 2007 AGCO Corporation

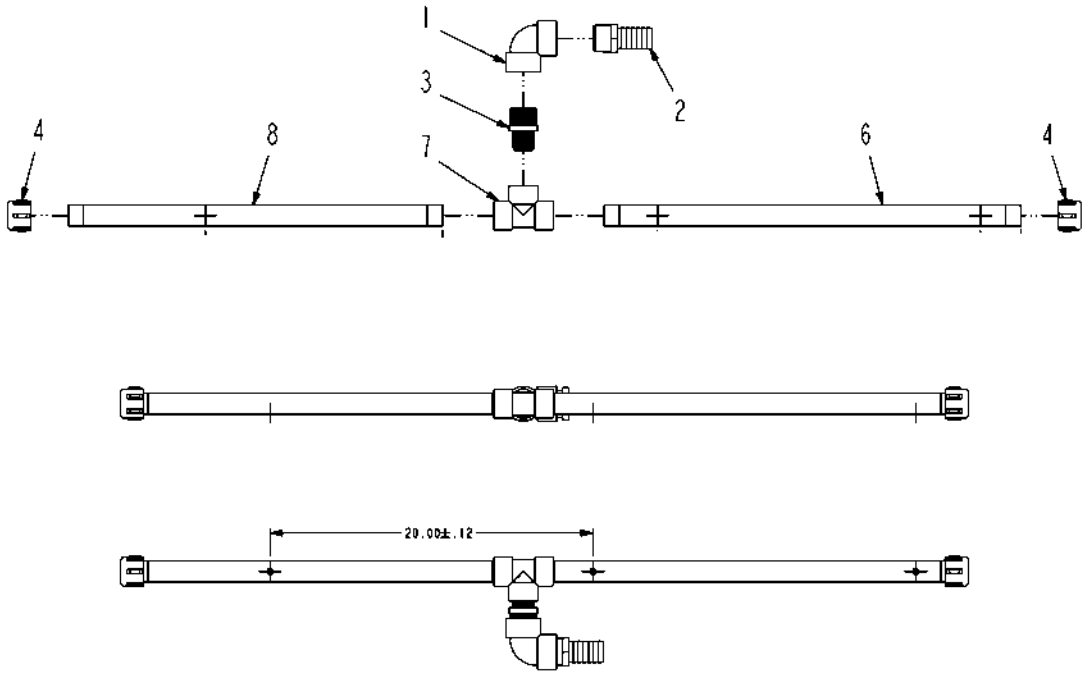

511039D1-01-N648-.tif

Copyright © 2007 AGCO Corporation

PIPE ASM-90D W/1.25HB,3X20,LH

ITEM	PART #	QTY	DESCRIPTION	COMMENTS
1	AG051128	1	ELBOW-PIPE,1.25FNPT,90D,PP	
2	AG051186	1	BARB-HOSE,1.25MNPTX1.25BARB,PP	
3	AG051437	1	NIPPLE RED 1.25NPTX1.00NPT PP	
4	AG051536	2	CAP-PIPE,1.00NPT PP	
5	AG129187	AR	PIPE SEALANT-FLEX BLACK	
6	AG239723	1	TUBE-25.81,POLY	
7	AG516405	1	TEE,PIPE,1.00FNPT,PP	
8	512555D1	1	TUBE-BOOM,20,23.19,PP	

Copyright © 2007 AGCO Corporation

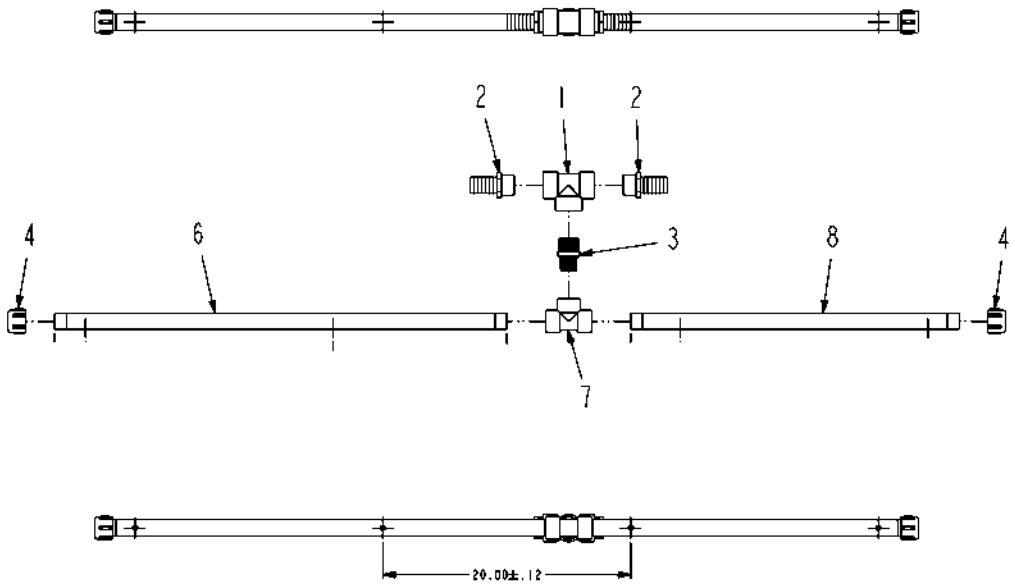

511040D1-01-N648-.tif

Copyright © 2007 AGCO Corporation

PIPE ASM-T W/2 1.00HB,4X20,PP

ITEM	PART #	QTY	DESCRIPTION	COMMENTS
1	AG051162	1	TEE,PIPE,1.25FNPT,PP	
2	AG051186	2	BARB-HOSE,1.25MNPTX1.25BARB,PP	
3	AG051437	1	NIPPLE RED 1.25NPTX1.00NPT PP	
4	AG051536	2	CAP-PIPE,1.00NPT PP	
5	AG129187	AR	PIPE SEALANT-FLEX BLACK	
6	AG239797	1	TUBE-BOOM,36.50	
7	AG516405	1	TEE,PIPE,1.00FNPT,PP	
8	511044D1	1	TUBE-BOOM,20,26,50,PP	

Copyright © 2007 AGCO Corporation

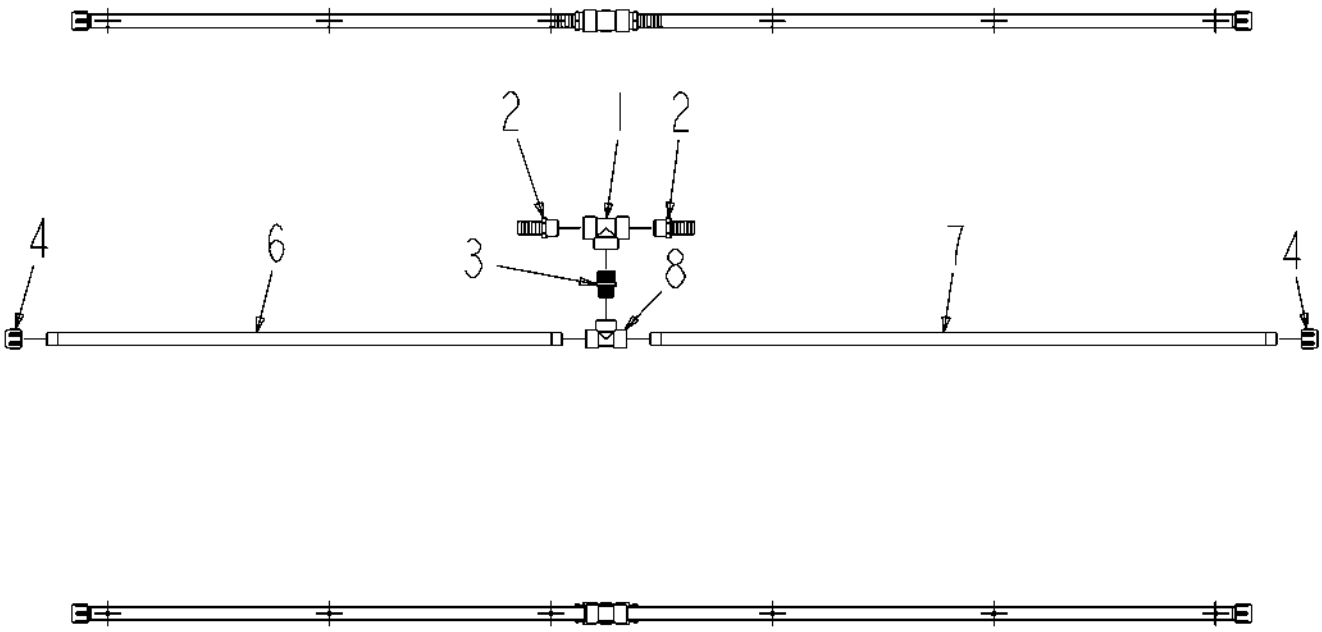

511041D1-01-N648-.TIF

Copyright © 2007 AGCO Corporation

PIPE ASM-T W/2 1.00HB,6X20,PP

ITEM	PART #	QTY	DESCRIPTION	COMMENTS
1	AG051162	1	TEE,PIPE,1.25FNPT,PP	
2	AG051186	2	BARB-HOSE,1.25MNPTX1.25BARB,PP	
3	AG051437	1	NIPPLE RED 1.25NPTX1.00NPT PP	
4	AG051536	2	CAP-PIPE,1.00NPT PP	
5	AG129187	AR	PIPE SEALANT-FLEX BLACK	
6	AG234469	1	TUBE 46.50 BOOM	
7	AG237787	1	TUBE-BOOM,20,56.50,PP	
8	AG516405	1	TEE,PIPE,1.00FNPT,PP	

Copyright © 2007 AGCO Corporation

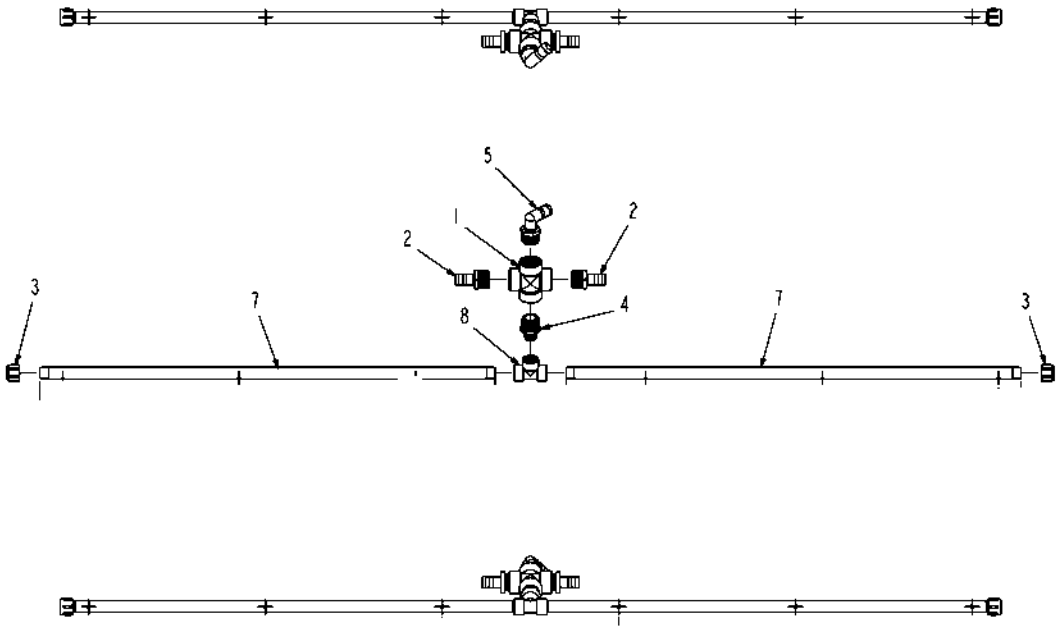

511154D1-01-N648-.tif

Copyright © 2007 AGCO Corporation

BRKT ASM-L,LG,IPS

ITEM	PART #	QTY	DESCRIPTION	COMMENTS
1	AG501443	1	GRANULAR BIN WELDMENT	
2	AG051534	2	BARB-HOSE,1.50MNPTX1.25BARB,PP	
3	AG051536	2	CAP-PIPE,1.00NPT PP	
4	AG503079	1	AXLE WLDMT-REAR	
5	AG055299	1	BARB-ELBOW,90D,1.50X1.25 POLY	
6	AG129187	AR	PIPE SEALANT-FLEX BLACK	
7	AG239721	2	TUBE-51.50,POLY	
8	AG516405	1	TEE,PIPE,1.00FNPT,PP	

Copyright © 2007 AGCO Corporation

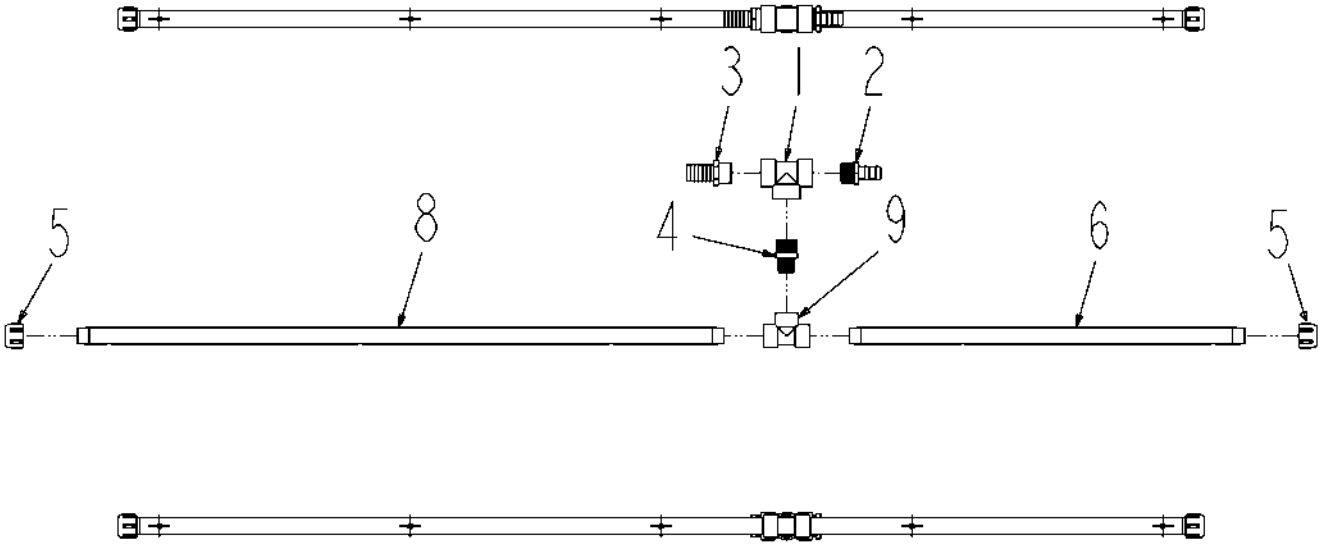

513816D1-01-N649-.TIF

Copyright © 2007 AGCO Corporation

PIPE ASM-T W/1.25/1HB,5X20,PP

ITEM	PART #	QTY	DESCRIPTION	COMMENTS
1	AG051162	1	TEE,PIPE,1.25FNPT,PP	
2	AG051185	1	BARB-HOSE,1.25MNPTX1.00BARB,PP	
3	AG051186	1	BARB-HOSE,1.25MNPTX1.25BARB,PP	
4	AG051437	1	NIPPLE RED 1.25NPTX1.00NPT PP	
5	AG051536	2	CAP-PIPE,1.00NPT PP	
6	WR127785	1	TUBE-BOOM,PP,20,31.50	
7	AG129187	AR	PIPE SEALANT-FLEX BLACK	
8	AG239721	1	TUBE-51.50,POLY	
9	AG516405	1	TEE,PIPE,1.00FNPT,PP	

Copyright © 2007 AGCO Corporation

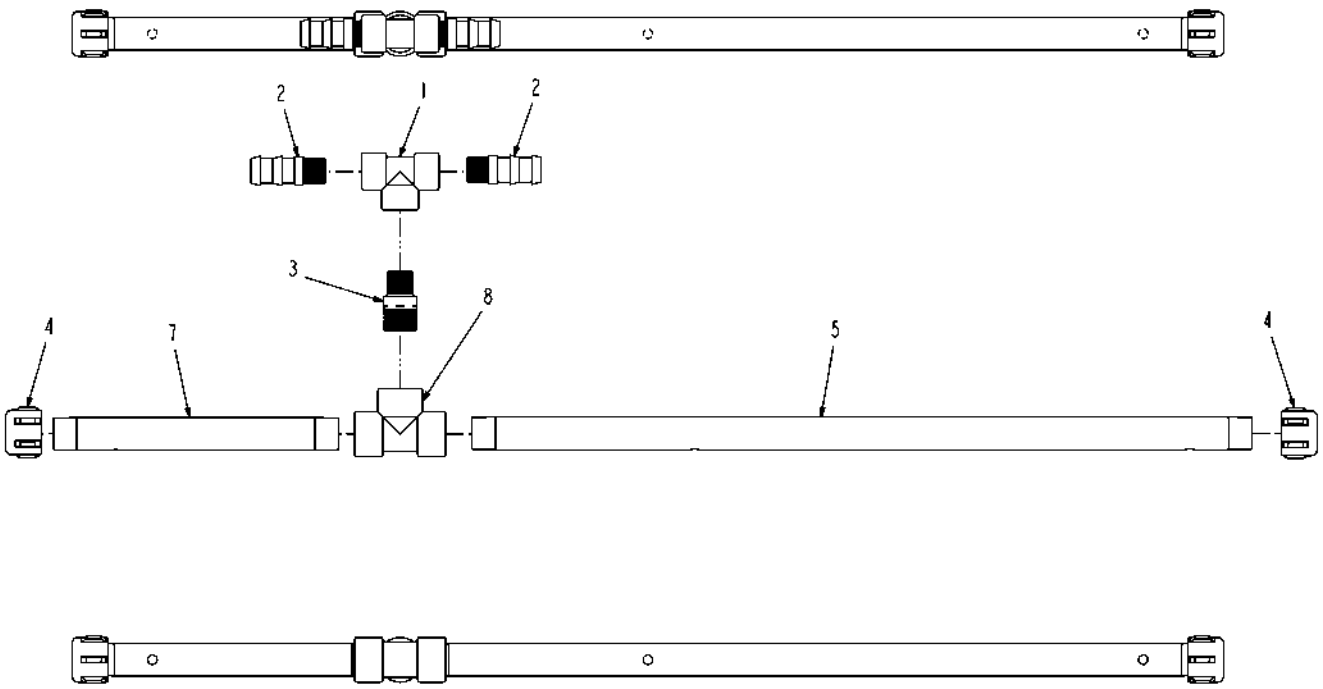

513817D1-01-N649-.TIF

Copyright © 2007 AGCO Corporation

PIPE ASM-T RED W/2 1HB,3X20,PP

ITEM	PART #	QTY	DESCRIPTION	COMMENTS
1	AG051161	1	TEE,PIPE,0.75FNPT,PP	
2	AG051181	2	BARB-HOSE,0.75MNPTX1.00BARB,PP	
3	AG051436	1	NIPPLE POLY RED 1.00 X 0.75	
4	AG051536	2	CAP-PIPE,1.00NPT PP	
5	WR127785	1	TUBE-BOOM,PP,20,31.50	
6	AG129187	AR	PIPE SEALANT-FLEX BLACK	
7	AG234467	1	TUBE 11.50 BOOM	
8	AG516405	1	TEE,PIPE,1.00FNPT,PP	

Copyright © 2007 AGCO Corporation

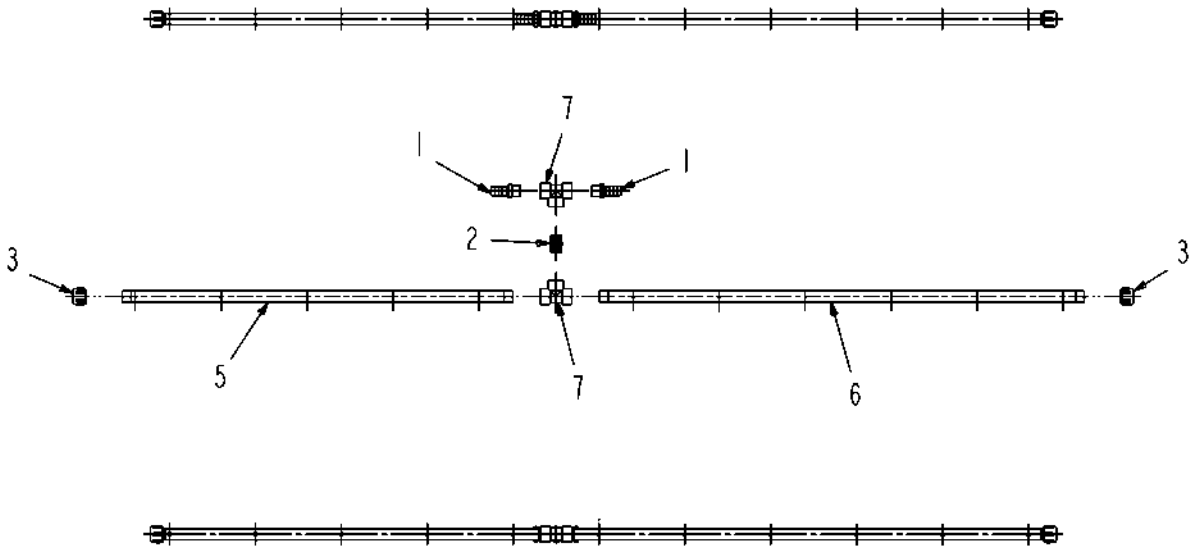

134649-A.tif

Copyright © 2007 AGCO Corporation

PIPE ASM-T W/2 1.00HB,11X10,PP

ITEM	PART #	QTY	DESCRIPTION	COMMENTS
1	AG051059	2	BARB-HOSE,1.00MNPTX1.00BARB,PP	
2	AG051153	1	NIPPLE-PIPE,1.00NPTXCLS,PP	
3	AG051536	2	CAP-PIPE,1.00NPT PP	
4	AG129187	AR	PIPE SEALANT-FLEX BLACK	
5	AG239930	1	TUBE-POLY,45.44,10IN CTR	
6	AG239937	1	TUBE-POLY,56.44,10IN CTR	
7	AG516405	2	TEE,PIPE,1.00FNPT,PP	

Copyright © 2007 AGCO Corporation

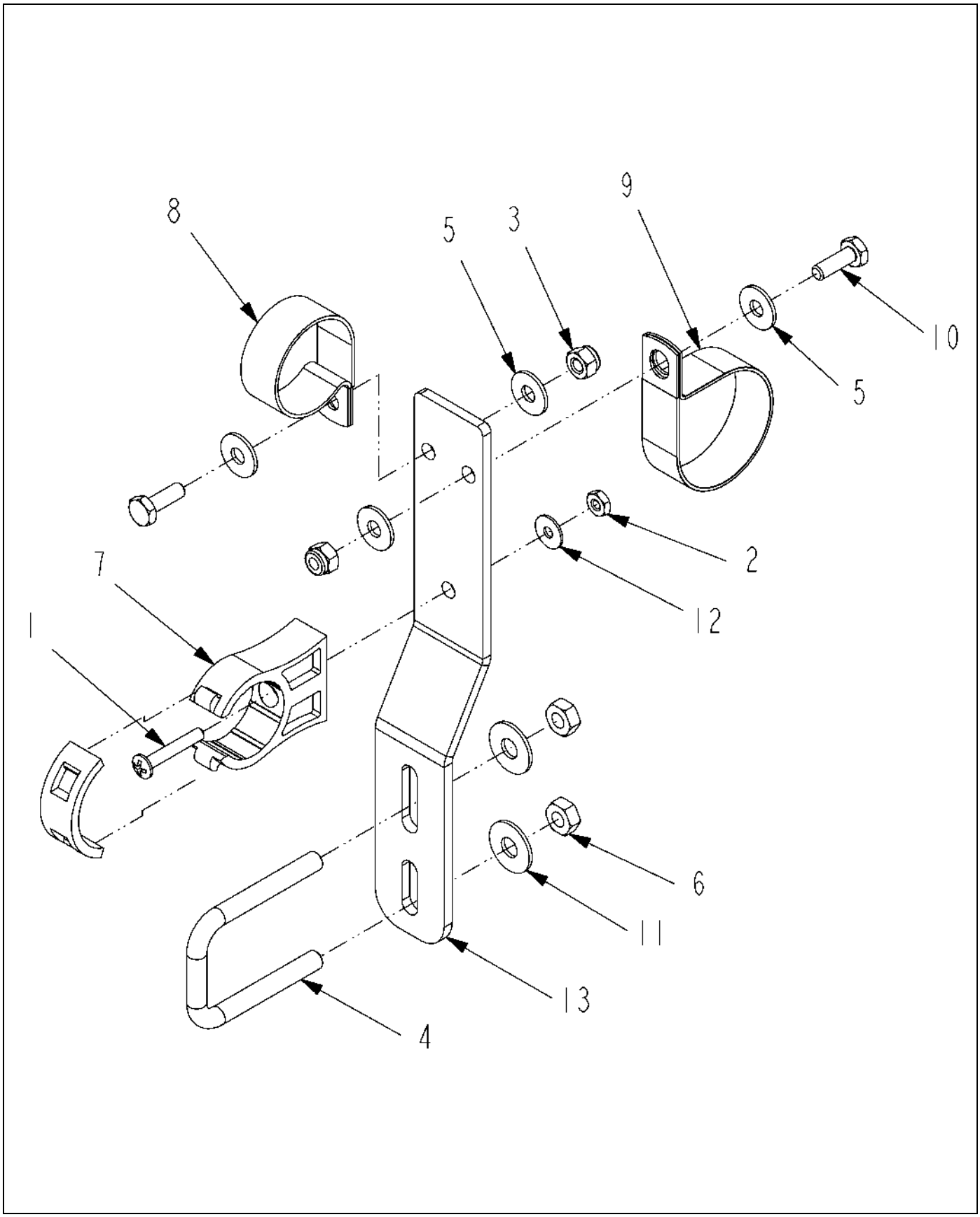

511490D1-01-N648-.TIF

Copyright © 2007 AGCO Corporation

BRKT ASM-Z,LG,IPS/2PCLP

ITEM	PART #	QTY	DESCRIPTION	COMMENTS
1	AG027273	1	SCREW 10-24X 1.25 PHD PHILSS(P	
2	AG027274	1	NUT #10-24NC HEX SS REG NY	
3	AG027275	2	NUT 0.25-20NC HEX SS REG NY	
4	AG231204	1	BOLT-U .31-18X1.88X2.63	
5	AG515121	4	WASHER 0.25 FL SS REG TYPE-B	
6	AG516403	2	NUT 0.31-18NC HEX SS REG NY	
7	AG519749	1	CLAMP 1.00 IPS POLY	
8	AG523412	1	CLAMP-1.62 DIA,COATED HOSE	
9	AG561793	1	CLAMP-HOSE,2,.75 WIDE,RUB-COAT	
10	AG562054	2	BOLT 0.25-20NCX 0.75 SS HHD	
11	AG562074	2	WASHER 0.31 FL SS REG TYPE-B	
12	AG562082	1	WASHER #10 FL SS REG TYPE-B	
13	509882D1	1	BRKT-Z,STANDOFF,LG	

Copyright © 2007 AGCO Corporation

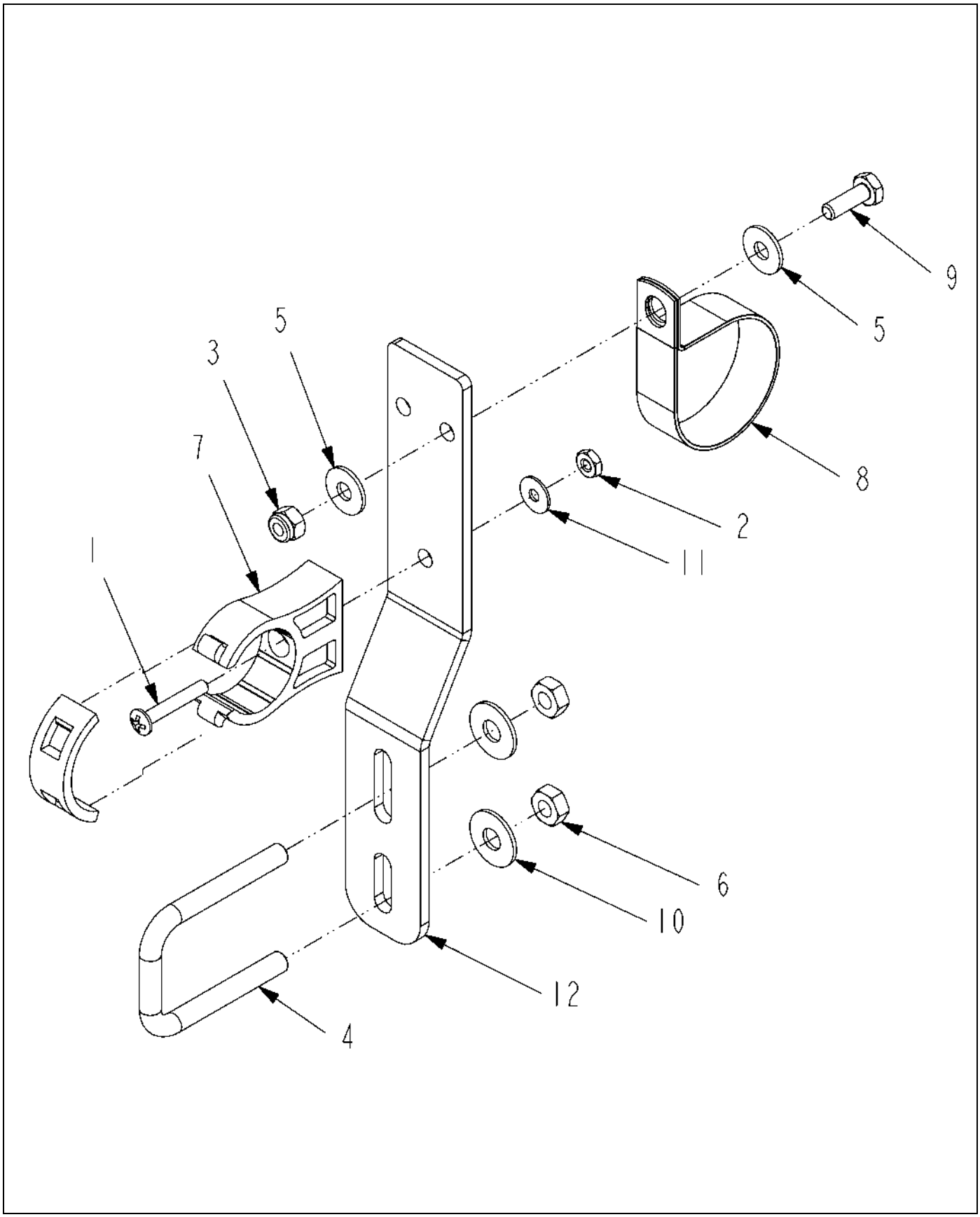

511491D1-01-N648-.TIF

Copyright © 2007 AGCO Corporation

BRKT ASM-Z,LG,IPS/1.50 PCLP

ITEM	PART #	QTY	DESCRIPTION	COMMENTS
1	AG027273	1	SCREW 10-24X 1.25 PHD PHILSS(P	
2	AG027274	1	NUT #10-24NC HEX SS REG NY	
3	AG027275	1	NUT 0.25-20NC HEX SS REG NY	
4	AG231204	1	BOLT-U .31-18X1.88X2.63	
5	AG515121	2	WASHER 0.25 FL SS REG TYPE-B	
6	AG516403	2	NUT 0.31-18NC HEX SS REG NY	
7	AG519749	1	CLAMP 1.00 IPS POLY	
8	AG561793	1	CLAMP-HOSE,2,.75 WIDE,RUB-COAT	
9	AG562054	2	BOLT 0.25-20NCX 0.75 SS HHD	
10	AG562074	2	WASHER 0.31 FL SS REG TYPE-B	
11	AG562082	1	WASHER #10 FL SS REG TYPE-B	
12	509882D1	1	BRKT-Z,STANDOFF,LG	

Copyright © 2007 AGCO Corporation

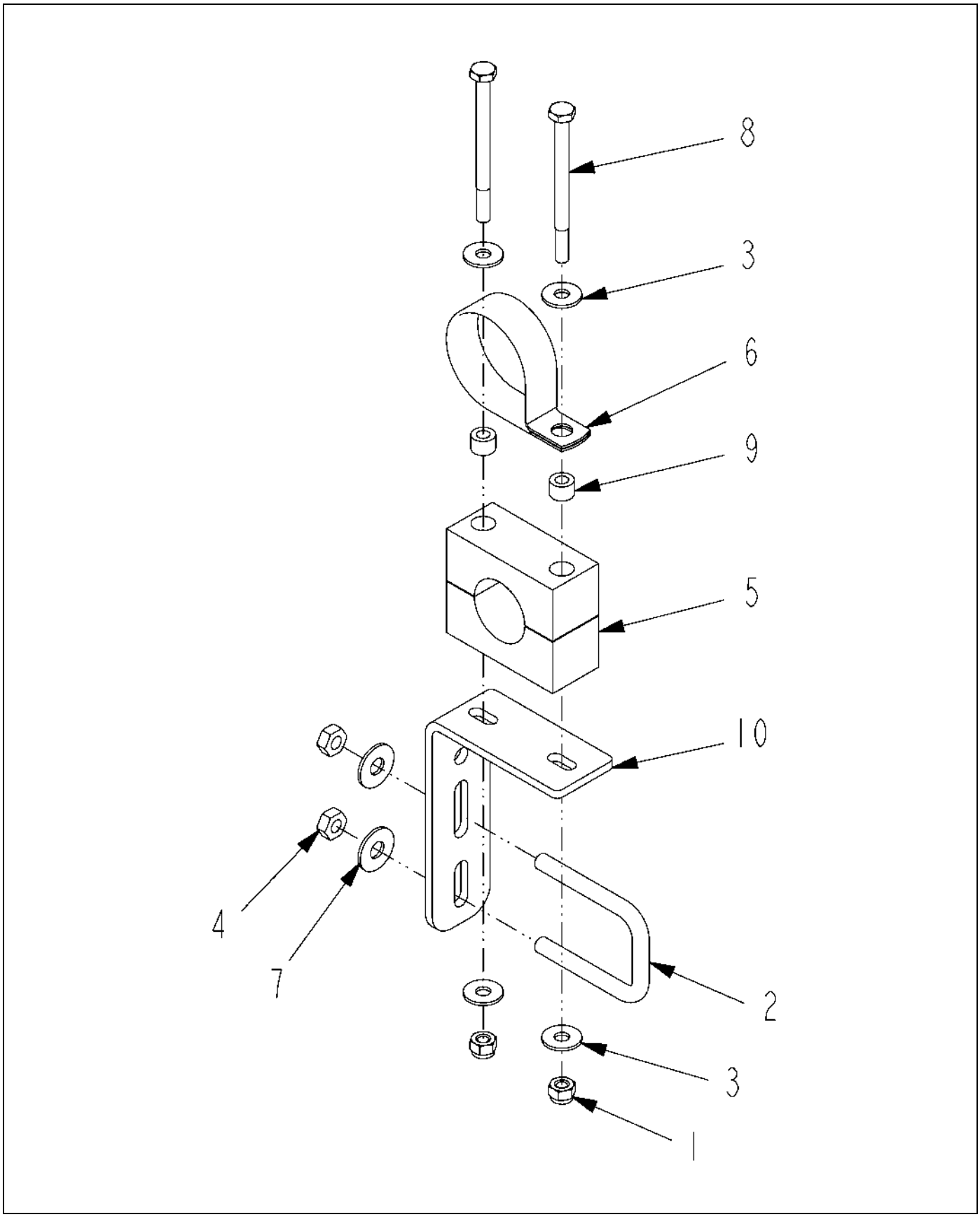

511494D1-01-N648-.TIF

Copyright © 2007 AGCO Corporation

BRKT ASM-L,LG,STAUFF,CTR CLP

ITEM	PART #	QTY	DESCRIPTION	COMMENTS
1	AG027275	2	NUT 0.25-20NC HEX SS REG NY	
2	AG231204	1	BOLT-U .31-18X1.88X2.63	
3	AG515121	4	WASHER 0.25 FL SS REG TYPE-B	
4	AG516403	2	NUT 0.31-18NC HEX SS REG NY	
5	AG519748	1	CLAMP 1.00 PIPE	[A]
6	AG561793	1	CLAMP-HOSE,2,.75 WIDE,RUB-COAT	
7	AG562074	2	WASHER 0.31 FL SS REG TYPE-B	
8	AG563061	2	BOLT 0.25-20NCX 3.25 SS HHD	
9	AG609777	2	INSERT STAUFF SPACER	
10	509885D1	1	BRKT-L,STANDOFF,STAUFF	
	FOOTNOTE [A]		2 INSERTS AND 2 CLAMP MAKE UP 1 PART. BOLT - AG563061, WASHER - AG515121, NUT - AG027275,	

Copyright © 2007 AGCO Corporation

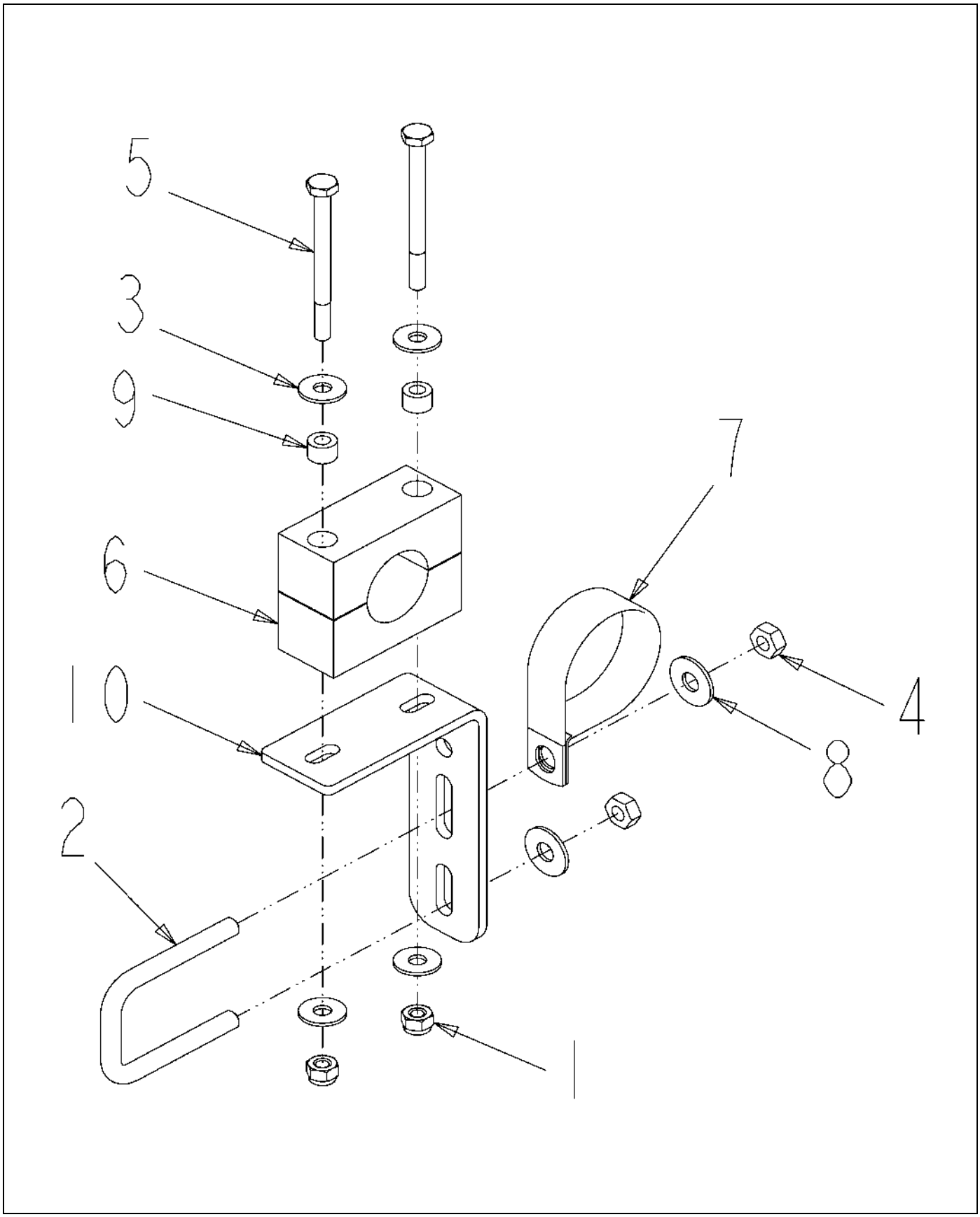

511495D1-01-N648-.TIF

Copyright © 2007 AGCO Corporation

BRKT ASM-L,LG,STAUFF,1.50 PCLP

ITEM	PART #	QTY	DESCRIPTION	COMMENTS
1	AG027275	2	NUT 0.25-20NC HEX SS REG NY	
2	AG231204	1	BOLT-U .31-18X1.88X2.63	
3	AG515121	4	WASHER 0.25 FL SS REG TYPE-B	
4	AG516403	2	NUT 0.31-18NC HEX SS REG NY	
5	AG518492	2	BOLT 0.25-20NCX 3.00 SS HHD	
6	AG519748	1	CLAMP 1.00 PIPE	[A]
7	AG561793	1	CLAMP-HOSE,2,.75 WIDE,RUB-COAT	
8	AG562074	2	WASHER 0.31 FL SS REG TYPE-B	
9	AG609777	2	INSERT STAUFF SPACER	
10	509885D1	1	BRKT-L,STANDOFF,STAUFF	
	FOOTNOTE [A]		2 INSERTS AND 2 CLAMP MAKE UP 1 PART. BOLT - AG563061, WASHER - AG515121, NUT - AG027275,	

Copyright © 2007 AGCO Corporation

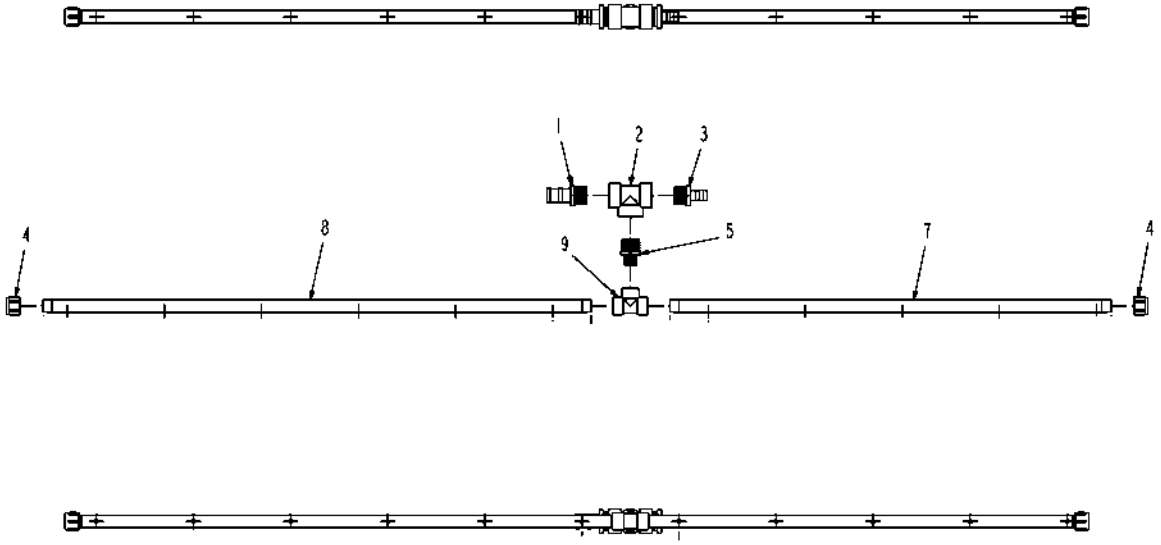

511496D1-01-N648-.tif

Copyright © 2007 AGCO Corporation

PIPE ASM-T W/1.5/1HB,11X10,PP

ITEM	PART #	QTY	DESCRIPTION	COMMENTS
1	AG000766	1	BARB-HOSE,1.50MNTTX1.50BARB,PP	
2	AG050273	1	TEE,PIPE,1.50FNPT,PP	
3	AG051533	1	BARB-HOSE,1.50MNPTX1.00BARB,PP	
4	AG051536	2	CAP-PIPE,1.00NPT PP	
5	AG053079	1	REDUCER NIPPLE 1.50 X 1.00	
6	AG129187	AR	PIPE SEALANT-FLEX BLACK	
7	AG239930	1	TUBE-POLY,45.44,10IN CTR	
8	AG239937	1	TUBE-POLY,56.44,10IN CTR	
9	AG516405	1	TEE,PIPE,1.00FNPT,PP	

Copyright © 2007 AGCO Corporation

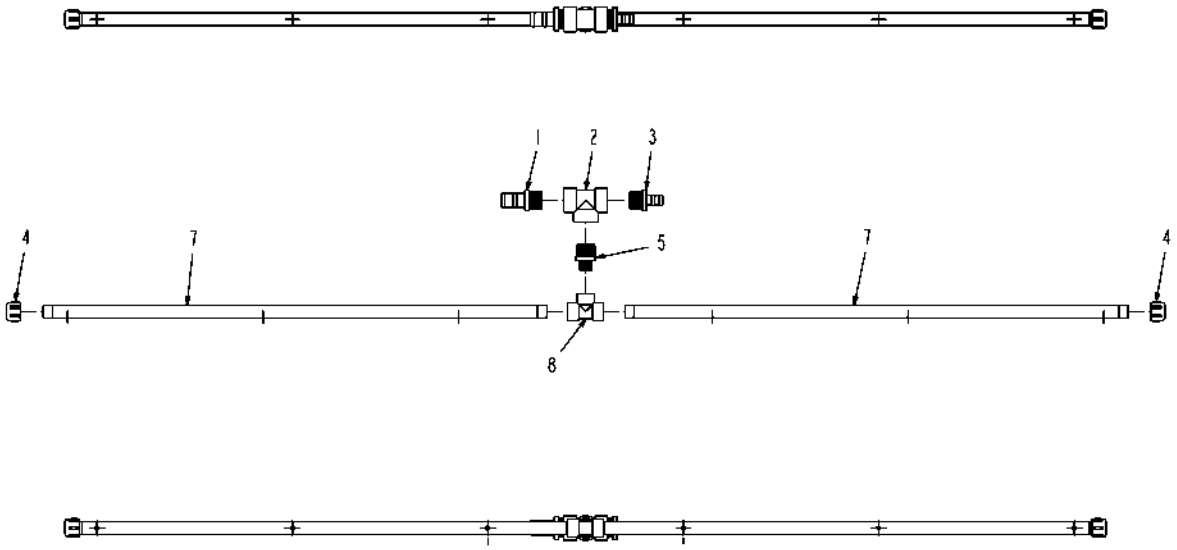

511434D1-01-N648-.tif

Copyright © 2007 AGCO Corporation

PIPE ASM-T W/ 1.5/1HB,6X20,PP

ITEM	PART #	QTY	DESCRIPTION	COMMENTS
1	AG000766	1	BARB-HOSE,1.50MNTTX1.50BARB,PP	
2	AG050273	1	TEE,PIPE,1.50FNPT,PP	
3	AG051533	1	BARB-HOSE,1.50MNPTX1.00BARB,PP	
4	AG051536	2	CAP-PIPE,1.00NPT PP	
5	AG053079	1	REDUCER NIPPLE 1.50 X 1.00	
6	AG129187	AR	PIPE SEALANT-FLEX BLACK	
7	AG239721	2	TUBE-51.50,POLY	
8	AG516405	1	TEE,PIPE,1.00FNPT,PP	

Copyright © 2007 AGCO Corporation

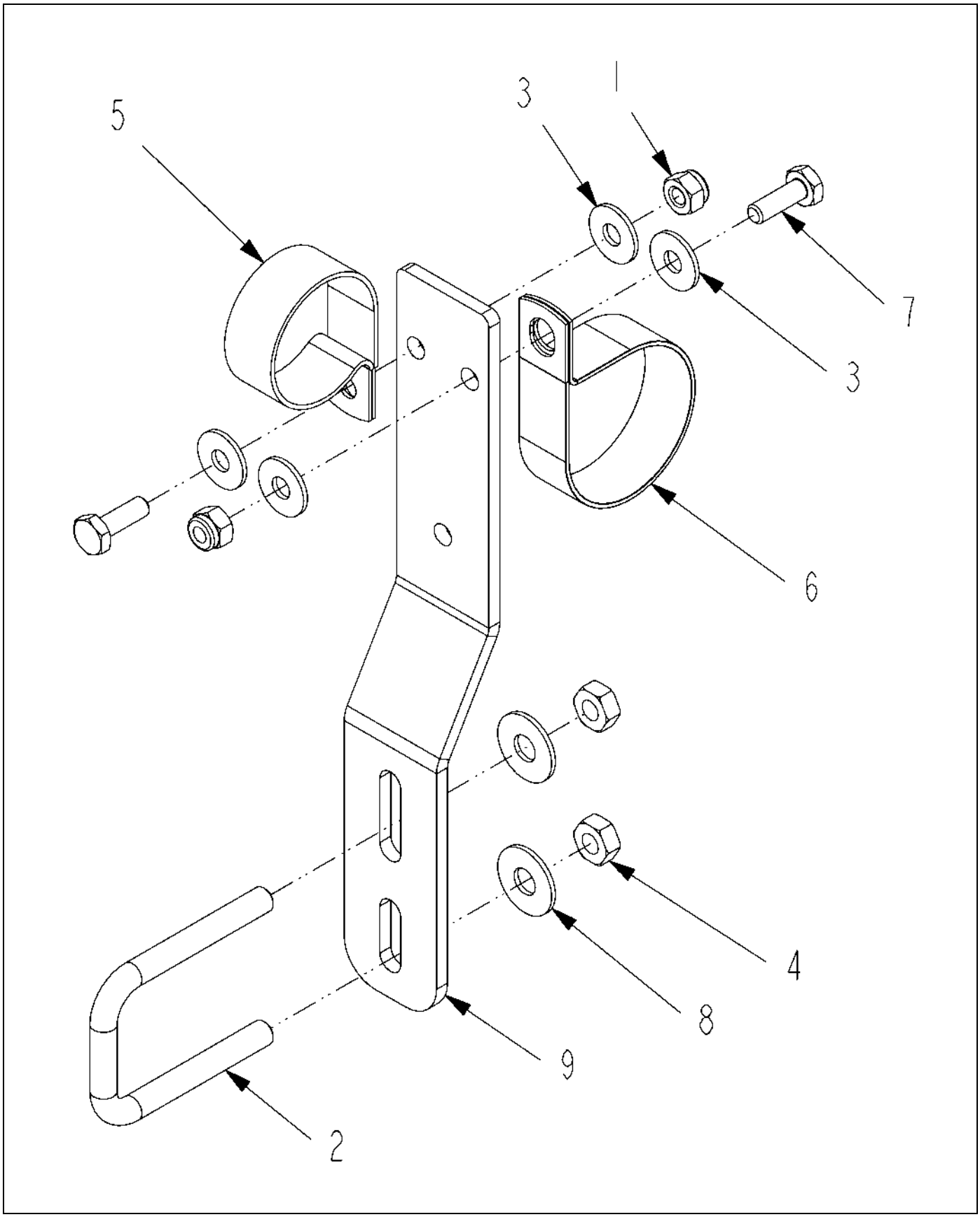

511492D1-01-N648-.TIF

Copyright © 2007 AGCO Corporation

BRKT ASM-Z,LG,1.25/1.50 PCLP

ITEM	PART #	QTY	DESCRIPTION	COMMENTS
1	AG027275	2	NUT 0.25-20NC HEX SS REG NY	
2	AG231204	1	BOLT-U .31-18X1.88X2.63	
3	AG515121	4	WASHER 0.25 FL SS REG TYPE-B	
4	AG516403	2	NUT 0.31-18NC HEX SS REG NY	
5	AG523412	1	CLAMP-1.62 DIA,COATED HOSE	
6	AG561793	1	CLAMP-HOSE,2,.75 WIDE,RUB-COAT	
7	AG562054	2	BOLT 0.25-20NCX 0.75 SS HHD	
8	AG562074	2	WASHER 0.31 FL SS REG TYPE-B	
9	509882D1	1	BRKT-Z,STANDOFF,LG	

Copyright © 2007 AGCO Corporation

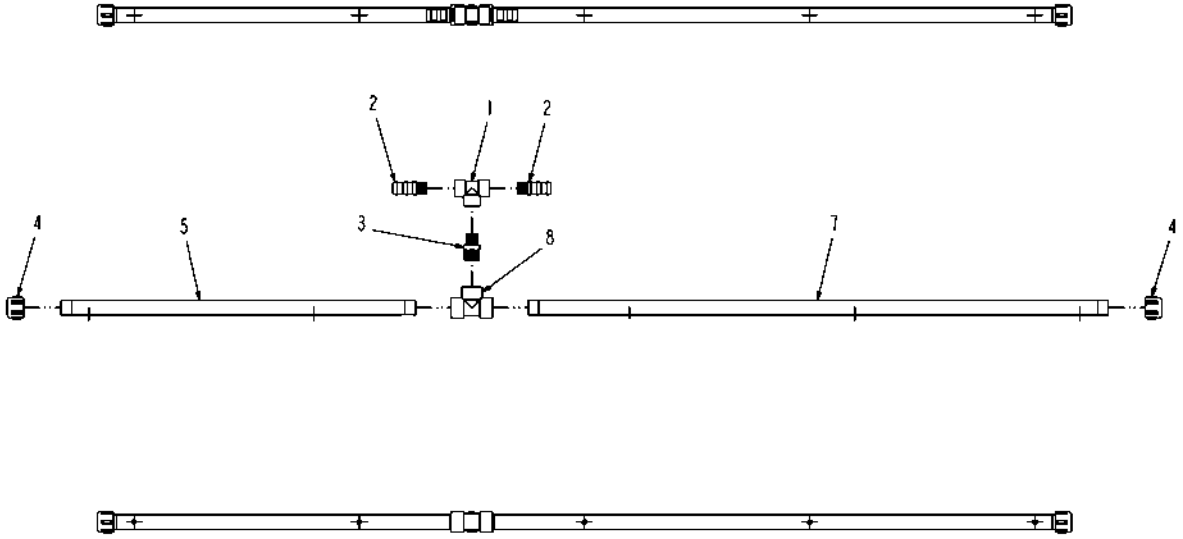

512493D1-01-N648-.tif

Copyright © 2007 AGCO Corporation

PIPE ASM-T RED W/2 1HB,5X20,PP

ITEM	PART #	QTY	DESCRIPTION	COMMENTS
1	AG051161	1	TEE,PIPE,0.75FNPT,PP	
2	AG051181	2	BARB-HOSE,0.75MNPTX1.00BARB,PP	
3	AG051436	1	NIPPLE POLY RED 1.00 X 0.75	
4	AG051536	2	CAP-PIPE,1.00NPT PP	
5	WR127785	1	TUBE-BOOM,PP,20,31.50	
6	AG129187	AR	PIPE SEALANT-FLEX BLACK	
7	AG239721	1	TUBE-51.50,POLY	
8	AG516405	1	TEE,PIPE,1.00FNPT,PP	

Copyright © 2007 AGCO Corporation

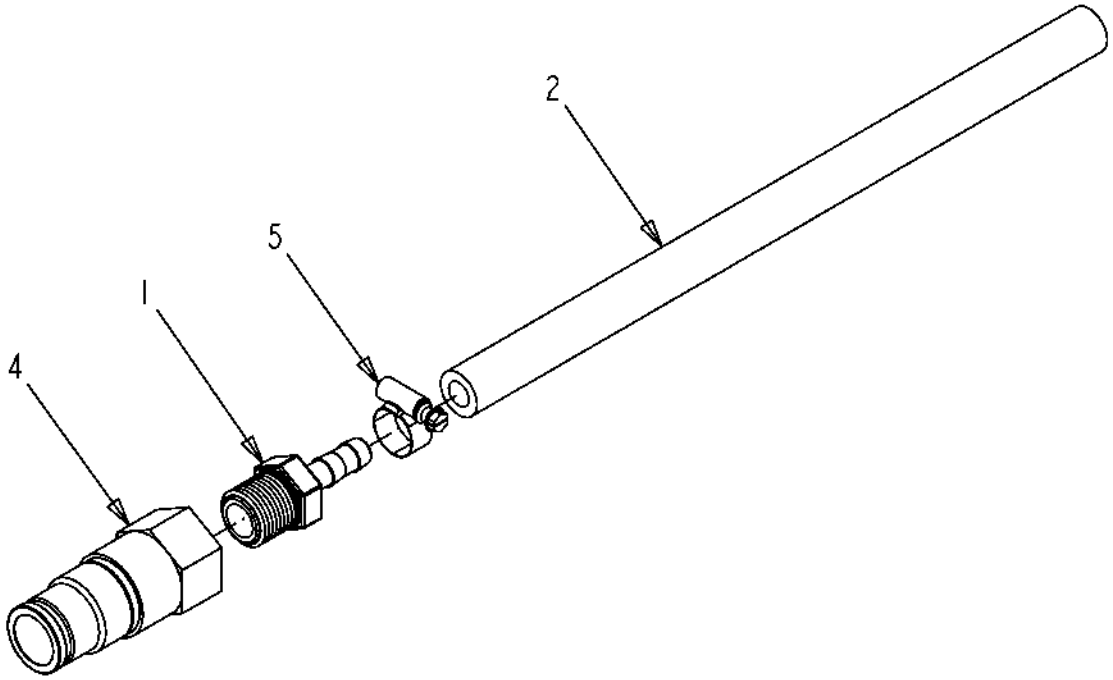

126100-B.TIF

Copyright © 2007 AGCO Corporation

ITEM	PART #	QTY	DESCRIPTION	COMMENTS
1	AG051175	1	BARB-HOSE,0.50MNPTX0.37BARB,PP	
2	AG108659	1	HOSE .38 X 12.00 EPDM	
3	AG129187	AR	PIPE SEALANT-FLEX BLACK	
4	AG520345	1	NIPPLE END-.50 NPT,DRY BREAK	
5	AG561227	1	CLAMP 0.44-0.78 HOSE 6HS	

Copyright © 2007 AGCO Corporation

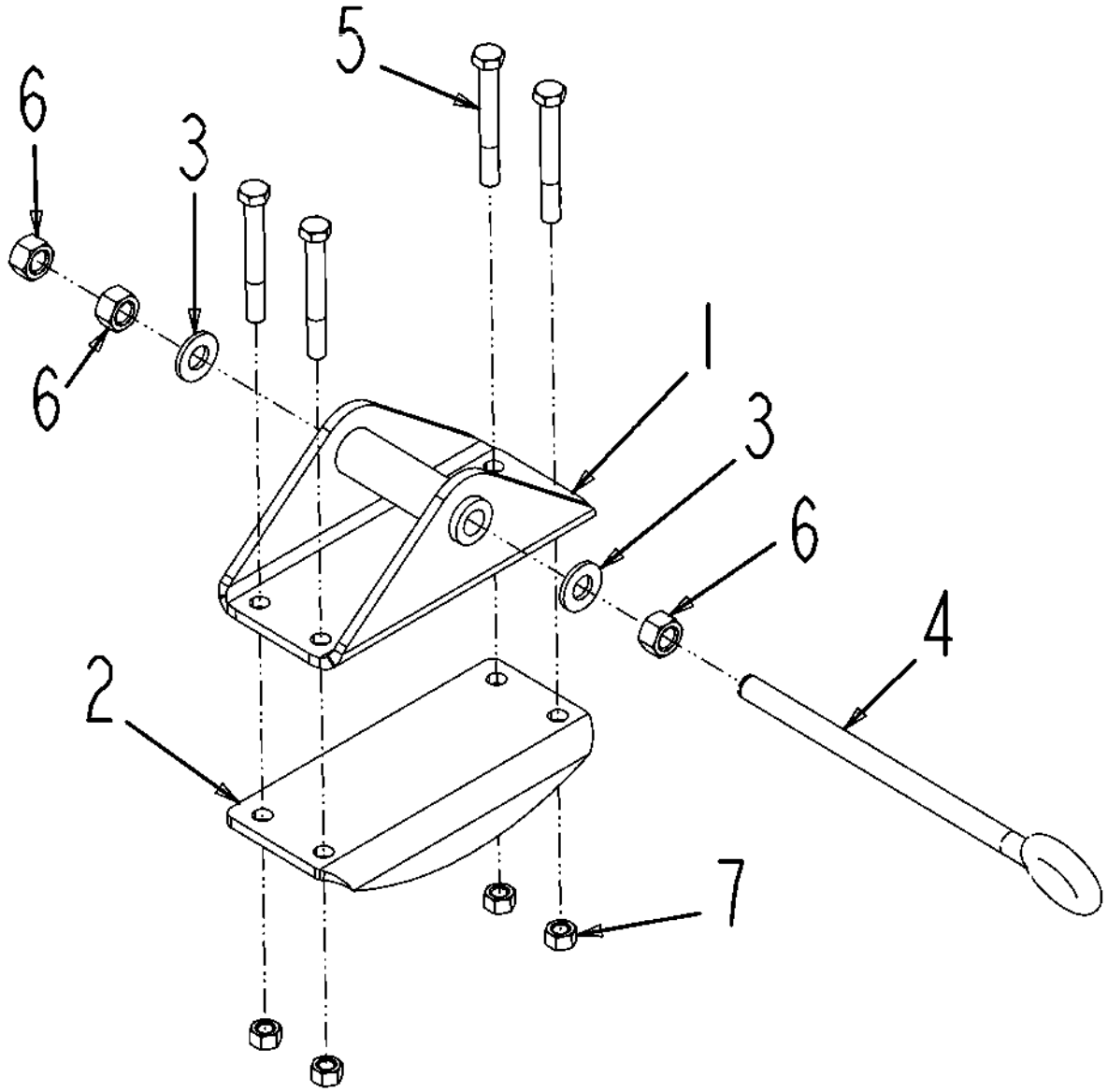

506322D1-01-M788.TIF

Copyright © 2007 AGCO Corporation

BRKT INSTL-MTG,ADJ,SPR,UPR

ITEM	PART #	QTY	DESCRIPTION	COMMENTS
1	AG136974	1	PLATE WLDMT-MTG,SPR,UPR	
2	AG136977	1	PLATE-MTG,SPR,LWR	
3	AG514554	2	WASHER 0.50 FL ZN SAE TYP-A G8	
4	AG518025	1	EYEBOLT .50-13 UNC X 8.00 GALV	
5	AG551058	4	BOLT 0.37-16NCX 3.25 G5 ZN HHD	
6	AG562538	3	NUT 0.50-13NC HEX GALV REG OSZ	
7	AG601411	4	NUT 0.37-16NC HEX ZN REG NY	

Copyright © 2007 AGCO Corporation

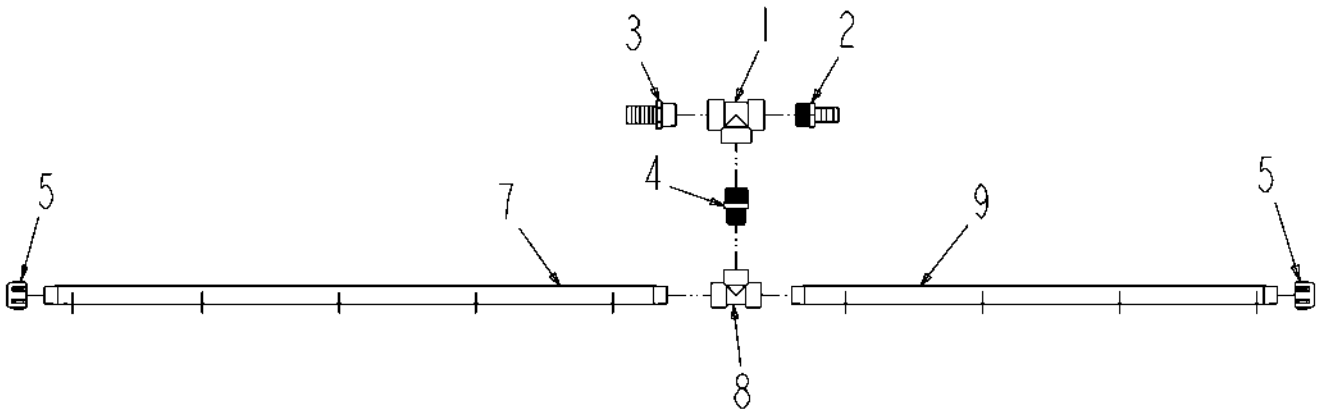

517613D1-01-R159-.TIF

Copyright © 2007 AGCO Corporation

PIPE ASM-T W/1.25/1HB,9X10,PP

ITEM	PART #	QTY	DESCRIPTION	COMMENTS
1	AG051162	1	TEE,PIPE,1.25FNPT,PP	
2	AG051185	1	BARB-HOSE,1.25MNPTX1.00BARB,PP	
3	AG051186	1	BARB-HOSE,1.25MNPTX1.25BARB,PP	
4	AG051437	1	NIPPLE RED 1.25NPTX1.00NPT PP	
5	AG051536	2	CAP-PIPE,1.00NPT PP	
6	AG129187	AR	PIPE SEALANT-FLEX BLACK	
7	AG239930	1	TUBE-POLY,45.44,10IN CTR	
8	AG516405	1	TEE,PIPE,1.00FNPT,PP	
9	506805D1	1	TUBE-POLY,35.44,10IN CTR	

Copyright © 2007 AGCO Corporation

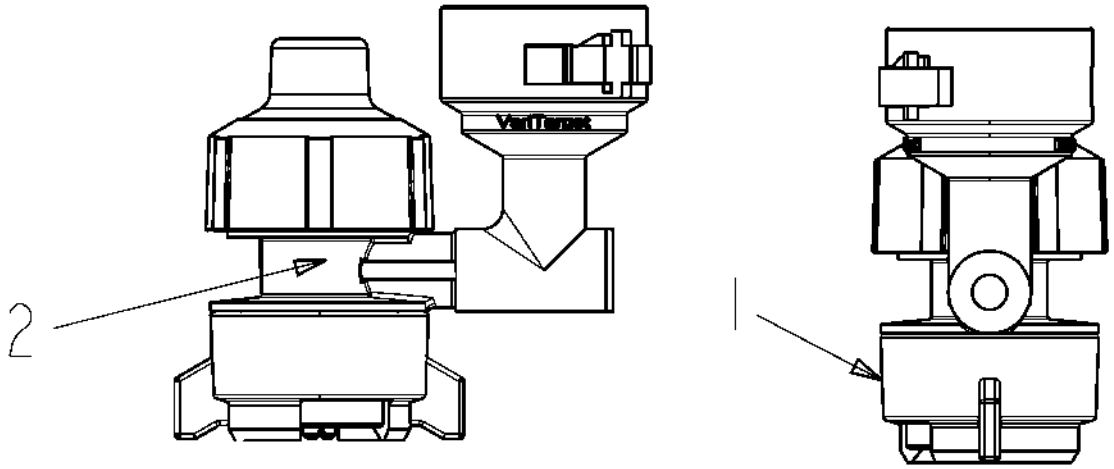

426004-A-M319.tif

Copyright © 2007 AGCO Corporation

NOZZLE-SPRAY,VARITARGET,1.5GPM

ITEM	PART #	QTY	DESCRIPTION	COMMENTS
1	AG426005	-	TIP & GASKET-SPRAY,VARITARGET	
2	AG426006	-	METERING ASM-NOZZLE,VARITARGET	

Copyright © 2007 AGCO Corporation

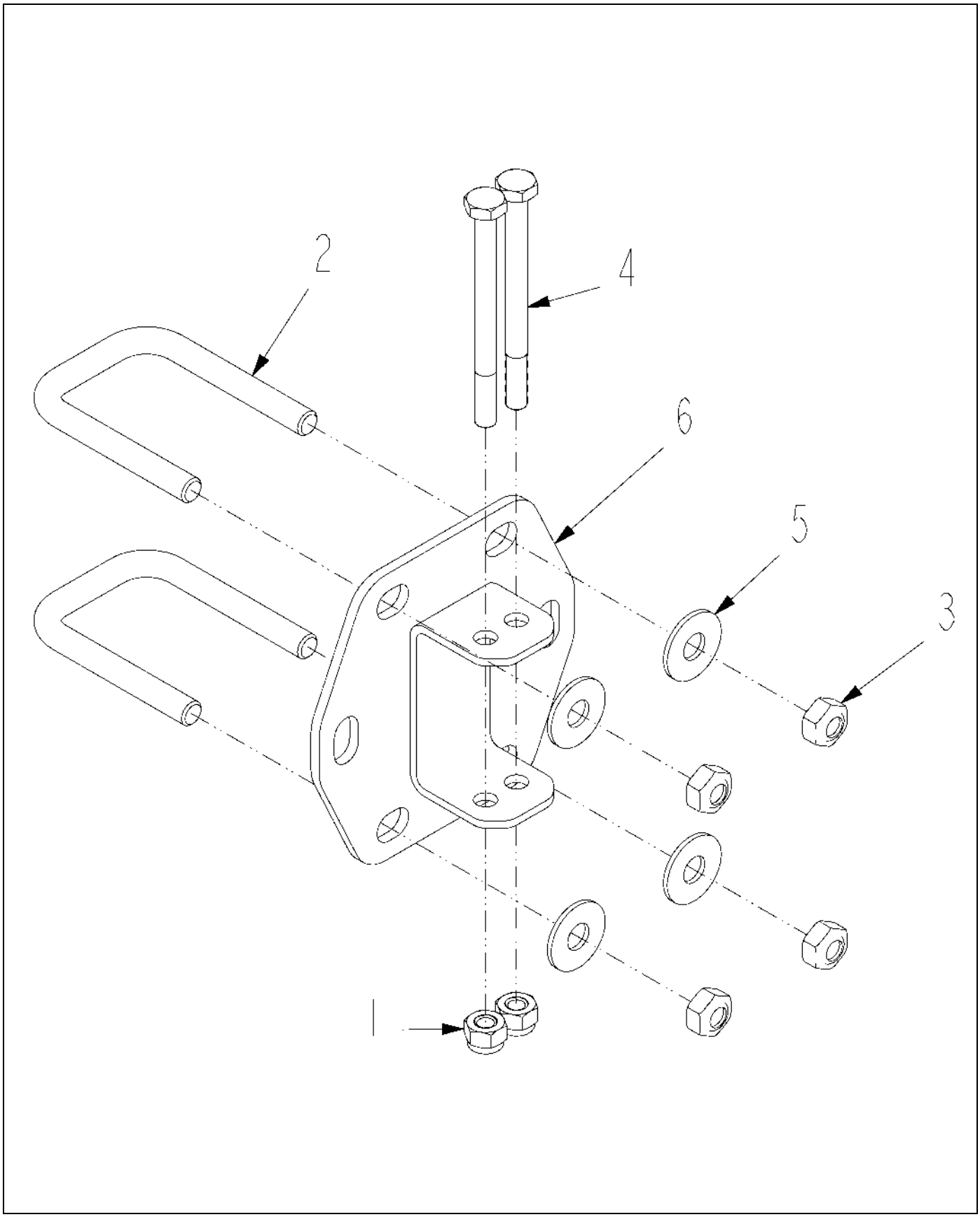

508137D1-01-N056-.TIF

Copyright © 2007 AGCO Corporation

BRKT ASM-MTG,VERT,1.50,SNSR

ITEM	PART #	QTY	DESCRIPTION	COMMENTS
1	AG027275	2	NUT 0.25-20NC HEX SS REG NY	
2	AG231204	2	BOLT-U .31-18X1.88X2.63	
3	AG516403	4	NUT 0.31-18NC HEX SS REG NY	
4	AG518492	2	BOLT 0.25-20NCX 3.00 SS HHD	
5	AG562074	4	WASHER 0.31 FL SS REG TYPE-B	
6	506906D1	1	BRKT WLDMT-MTG,SNSR,AUTOBOOM	

Copyright © 2007 AGCO Corporation

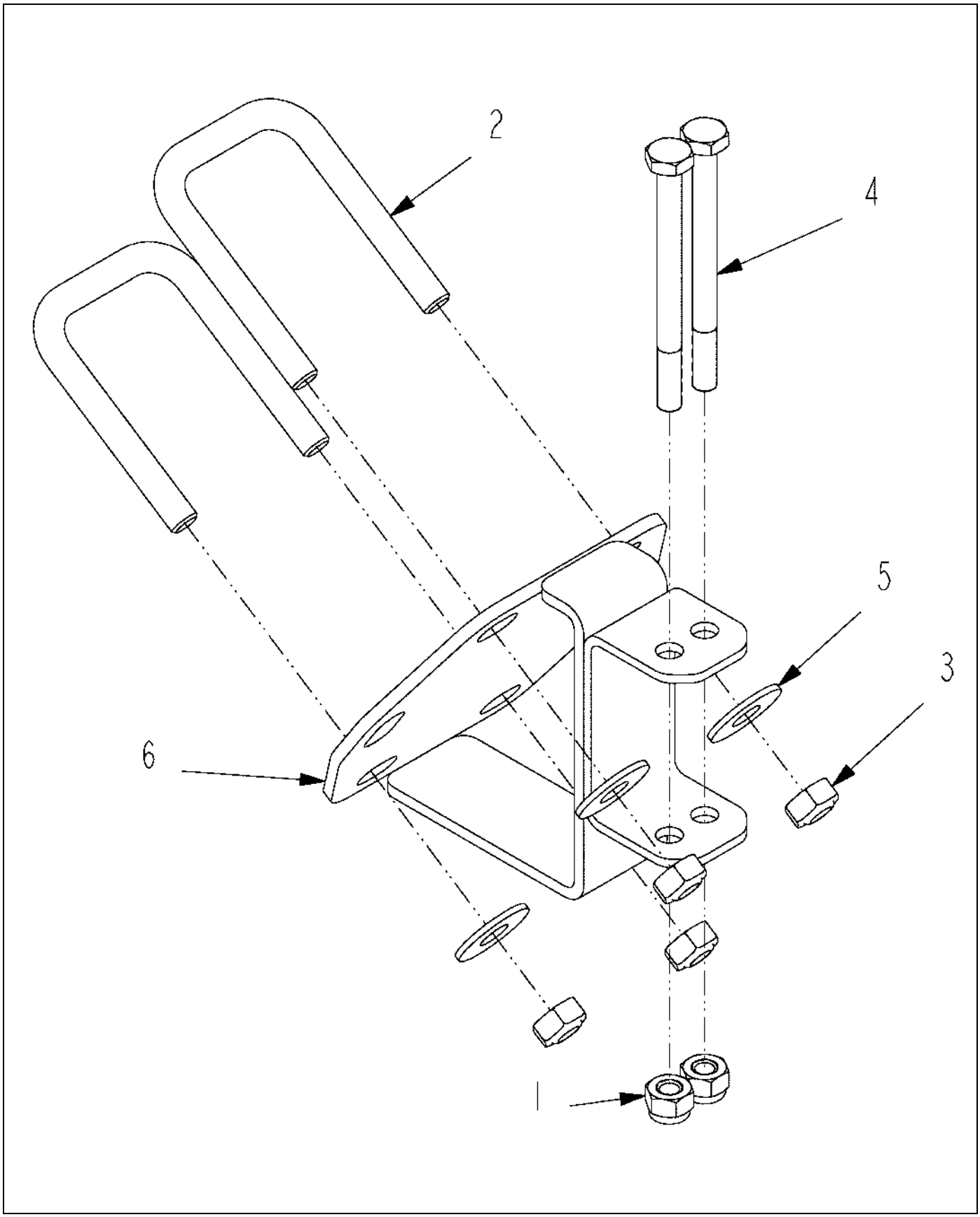

509021D1-01-N056-.TIF

Copyright © 2007 AGCO Corporation

BRKT ASM-MTG,80,SNSR,AUTOBOOM

ITEM	PART #	QTY	DESCRIPTION	COMMENTS
1	AG027275	2	NUT 0.25-20NC HEX SS REG NY	
2	AG231204	2	BOLT-U .31-18X1.88X2.63	
3	AG516403	4	NUT 0.31-18NC HEX SS REG NY	
4	AG518492	2	BOLT 0.25-20NCX 3.00 SS HHD	
5	AG562074	4	WASHER 0.31 FL SS REG TYPE-B	
6	509020D1	1	BRK WLDMT-MTG,80,SNSR,AUTOBM	

Copyright © 2007 AGCO Corporation

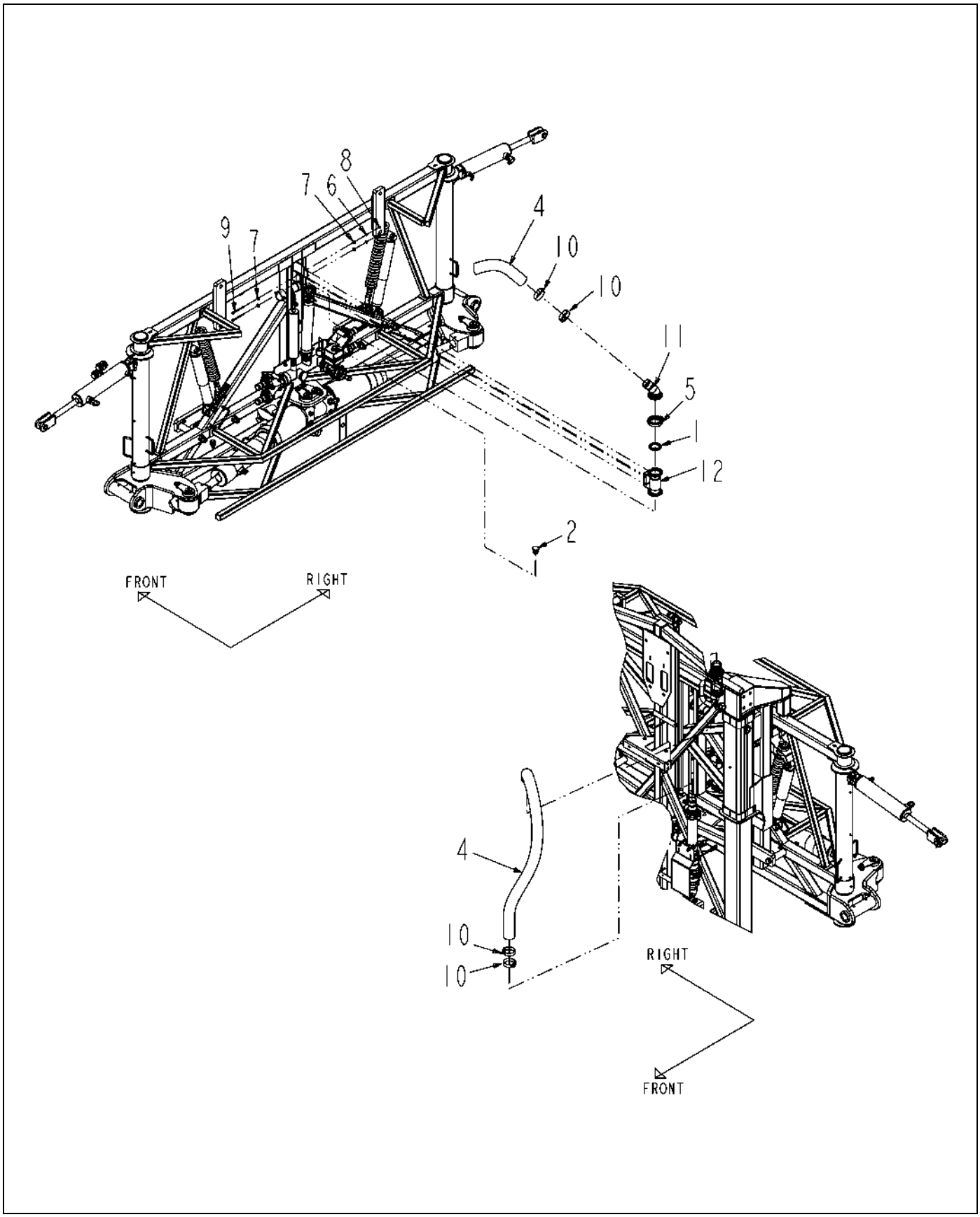

516451D1-01-N980-.TIF

Copyright © 2007 AGCO Corporation

SYS INSTL-NO BCO,BM TREE,5.00

ITEM	PART #	QTY	DESCRIPTION	COMMENTS
1	AG000773	1	GASKET 2.00 EPDM	
2	AG051134	1	PLUG-PIPE,HEX,0.75NPT,PP	
3	AG129187	AR	PIPE SEALANT-FLEX BLACK	
4	AG511722	-	HOSE-2.00,WIRE BRAID,EPDM [BULK: 6.084 FT]	
5	AG522895	1	CLAMP-WORM SCREW,2.00,SS	
6	AG550493	2	WASHER 0.25 LK ZN REG	
7	AG550507	4	WASHER 0.25 FL ZN REG TYPE-B	
8	AG550612	2	NUT 0.25-20NC HEX ZN REG	
9	AG561246	2	BOLT 0.25-20NCX 3.25 G5 ZN HHD	
10	AG561630	4	CLAMP 2.28-2.59HOSE VOSS-250SS	
11	507731D1	1	BARB-45D,2.00FP FLGX2.00 HOSE	
12	516452D1	1	FLG WLDMT-MTG,2.00FP X 2.00FP	

Copyright © 2007 AGCO Corporation

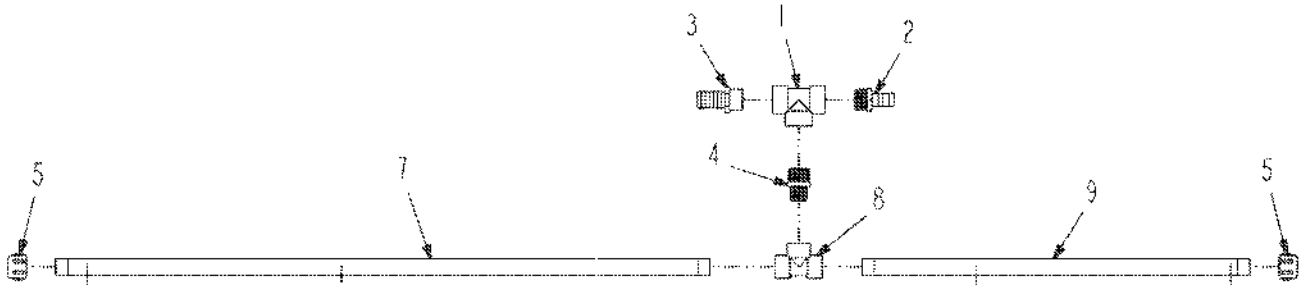

517463D1-01-R159-.TIF

Copyright © 2007 AGCO Corporation

PIPE ASM-T W/1.25/1HB,5X20,PP

ITEM	PART #	QTY	DESCRIPTION	COMMENTS
1	AG051162	1	TEE,PIPE,1.25FNPT,PP	
2	AG051185	1	BARB-HOSE,1.25MNPTX1.00BARB,PP	
3	AG051186	1	BARB-HOSE,1.25MNPTX1.25BARB,PP	
4	AG051437	1	NIPPLE RED 1.25NPTX1.00NPT PP	
5	AG051536	2	CAP-PIPE,1.00NPT PP	
6	AG129187	AR	PIPE SEALANT-FLEX BLACK	
7	AG239721	1	TUBE-51.50,POLY	
8	AG516405	1	TEE,PIPE,1.00FNPT,PP	
9	506808D1	1	TUBE-POLY,30.50,20IN CTR	

Copyright © 2007 AGCO Corporation

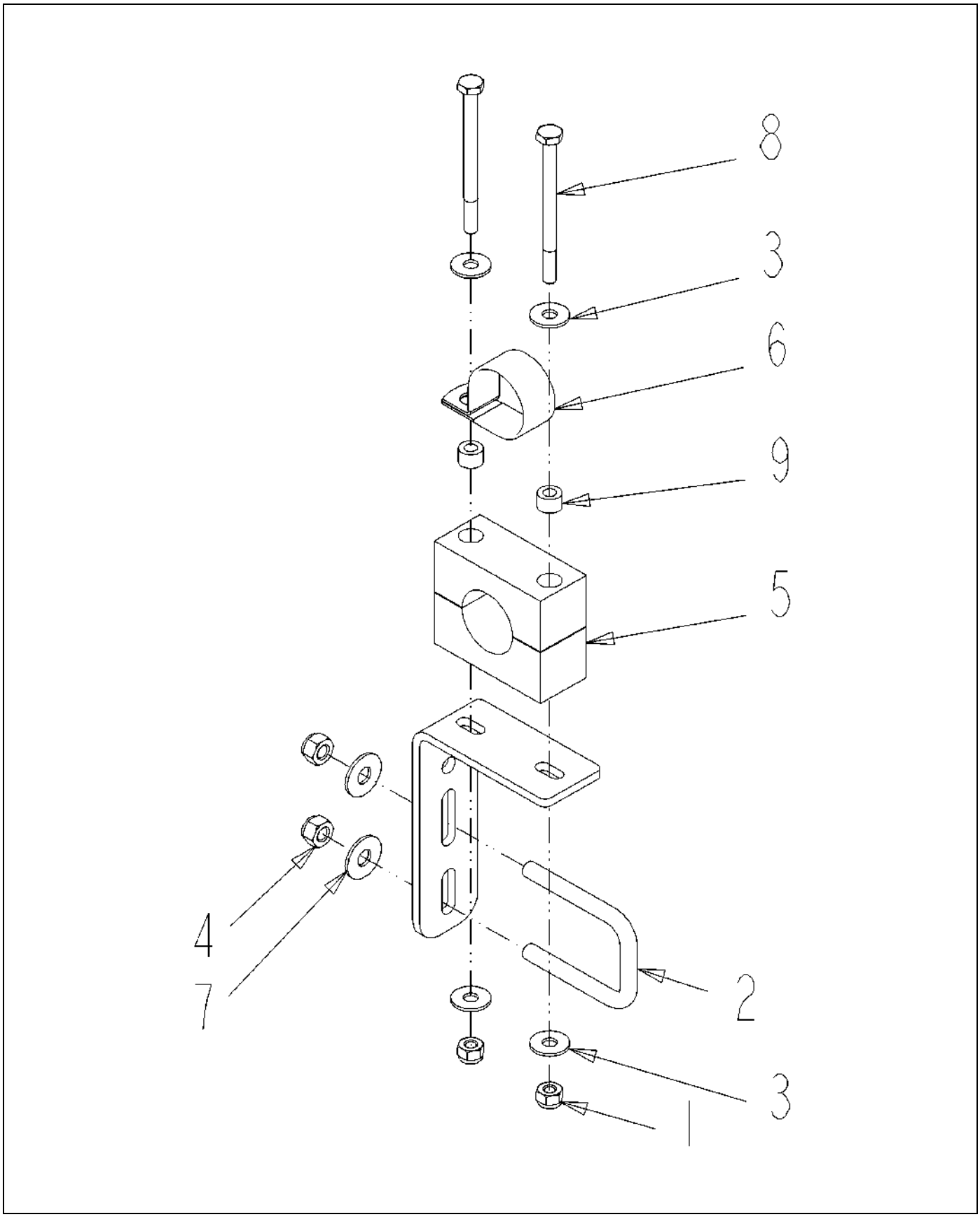

509895D1-01-R483-.TIF

Copyright © 2007 AGCO Corporation

BRKT ASM-L,LG,STAUFF,CTR CLP

ITEM	PART #	QTY	DESCRIPTION	COMMENTS
1	AG027275	2	NUT 0.25-20NC HEX SS REG NY	
2	AG231204	1	BOLT-U .31-18X1.88X2.63	
3	AG515121	4	WASHER 0.25 FL SS REG TYPE-B	
4	AG516403	2	NUT 0.31-18NC HEX SS REG NY	
5	AG519748	1	CLAMP 1.00 PIPE	[A]
6	AG519751	1	CLAMP 1.38 DIA COATED HOSE	
7	AG562074	2	WASHER 0.31 FL SS REG TYPE-B	
8	AG563061	2	BOLT 0.25-20NCX 3.25 SS HHD	
9	AG609777	2	INSERT STAUFF SPACER	
10	509885D1	1	BRKT-L,STANDOFF,STAUFF	
	FOOTNOTE [A]		2 INSERTS AND 2 CLAMP MAKE UP 1 PART. BOLT - AG563061, WASHER - AG515121, NUT - AG027275,	

Copyright © 2007 AGCO Corporation

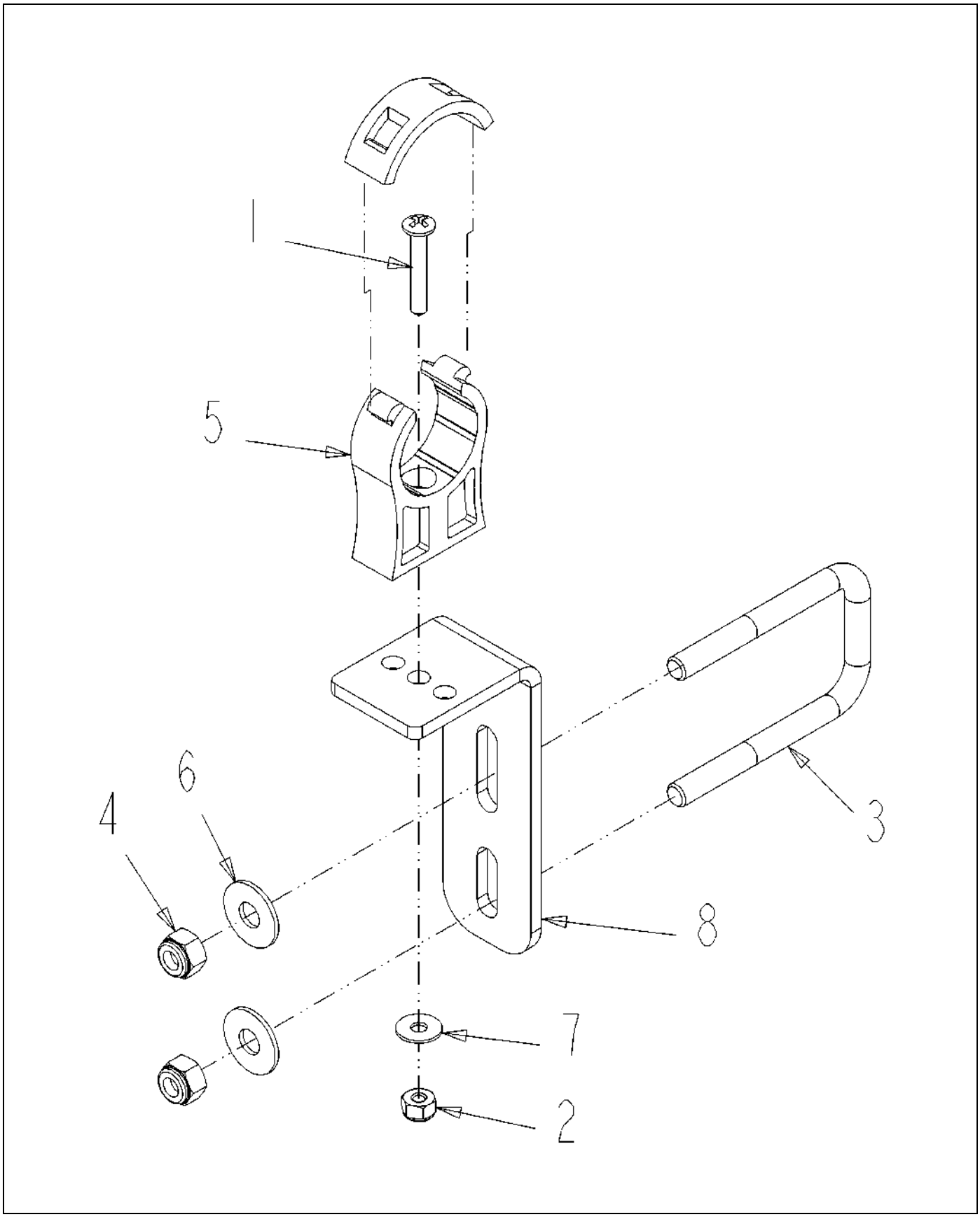

509958D1-01-R483-.TIF

Copyright © 2007 AGCO Corporation

BRKT ASM-L,LG,IPS,LG U

ITEM	PART #	QTY	DESCRIPTION	COMMENTS
1	AG027273	1	SCREW 10-24X 1.25 PHD PHILSS(P	
2	AG027274	1	NUT #10-24NC HEX SS REG NY	
4	AG261322	1	BOLT-U .31-18X1.56X 2.97SQ,SS	
4	AG516403	2	NUT 0.31-18NC HEX SS REG NY	
5	AG519749	1	CLAMP 1.00 IPS POLY	
6	AG562074	2	WASHER 0.31 FL SS REG TYPE-B	
7	AG562082	1	WASHER #10 FL SS REG TYPE-B	
8	509996D1	1	BRKT-L,LG,STANDOFF,IPS	

Copyright © 2007 AGCO Corporation

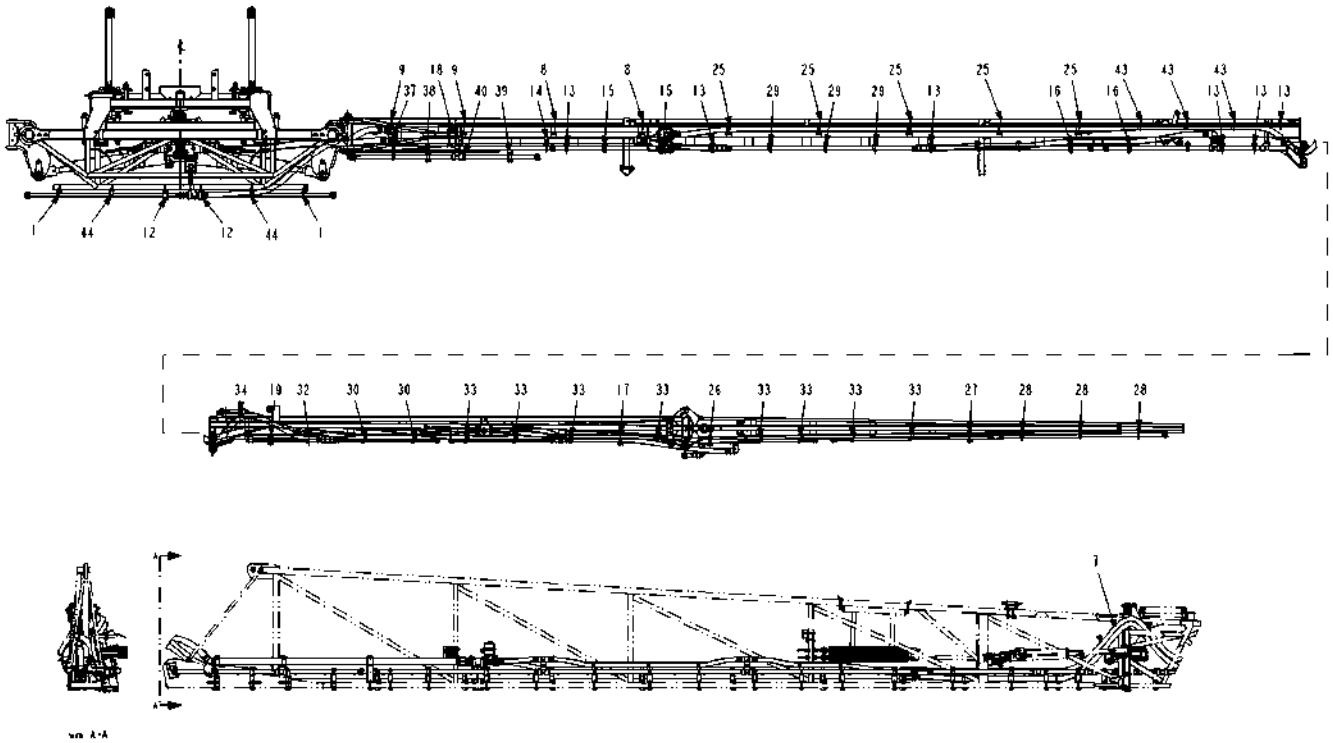

511587D1-01-R483-01.TIF

Copyright © 2007 AGCO Corporation

ITEM	PART #	QTY	DESCRIPTION	COMMENTS
1	AG122521	2	BRKT ASM-STR,SH,IPS CLP	SEE PAGE 4-93
1	AG122521	2	BRKT ASM-STR,SH,IPS CLP	SEE PAGE 4-93
6	AG562496	AR	TIE CABLE 15.0 .18-4.00 BLACK	
6	AG562496	AR	TIE CABLE 15.0 .18-4.00 BLACK	
7	506720D1	100	SLEEVE-PROTECTIVE,NYLON,-48	
7	506720D1	100	SLEEVE-PROTECTIVE,NYLON,-48	
8	506726D1	4	BRKT ASM-L,1.50 STAUFF,STD U	SEE PAGE 4-105
8	506726D1	4	BRKT ASM-L,1.50 STAUFF,STD U	SEE PAGE 4-105
9	506727D1	4	BRKT ASM-L,1.50 STAUFF,P,LG U	SEE PAGE 4-106
9	506727D1	4	BRKT ASM-L,1.50 STAUFF,P,LG U	SEE PAGE 4-106
12	508671D1	2	BRKT ASM-L,REV,1.00PP STAUFF	SEE PAGE 4-119
12	508671D1	2	BRKT ASM-L,REV,1.00PP STAUFF	SEE PAGE 4-119
13	509887D1	14	BRKT ASM-Z,SH,1.00IPS	SEE PAGE 4-142
13	509887D1	14	BRKT ASM-Z,SH,1.00IPS	SEE PAGE 4-142
14	509892D1	2	BRKT ASM-Z,LG,1.50 STAUFF	SEE PAGE 4-146
14	509892D1	2	BRKT ASM-Z,LG,1.50 STAUFF	SEE PAGE 4-146
15	509893D1	4	BRKT ASM-Z,PP STAUFF	SEE PAGE 4-147
15	509893D1	4	BRKT ASM-Z,PP STAUFF	SEE PAGE 4-147
16	509894D1	4	BRKT ASM-Z,PP STAUFF,LWR PCLP	SEE PAGE 4-148
16	509894D1	4	BRKT ASM-Z,PP STAUFF,LWR PCLP	SEE PAGE 4-148
17	509895D1	2	BRKT ASM-L,LG,STAUFF,CTR CLP	SEE PAGE 4-198
17	509895D1	2	BRKT ASM-L,LG,STAUFF,CTR CLP	SEE PAGE 4-198
18	509896D1	2	BRKT ASM-Z,SIDE MTG,1.50STAUFF	SEE PAGE 4-149
18	509896D1	2	BRKT ASM-Z,SIDE MTG,1.50STAUFF	SEE PAGE 4-149
19	511497D1	2	BRKT ASM-L,LG,STAUFF,REV U	SEE PAGE 4-168
19	511497D1	2	BRKT ASM-L,LG,STAUFF,REV U	SEE PAGE 4-168
25	511601D1	10	BRKT ASM-L,1.50 STAUFF,PCLP	SEE PAGE 4-209
25	511601D1	10	BRKT ASM-L,1.50 STAUFF,PCLP	SEE PAGE 4-209
26	511602D1	2	BRKT ASM-L,LG,STAUFF,PCLP,1.O	SEE PAGE 4-210
26	511602D1	2	BRKT ASM-L,LG,STAUFF,PCLP,1.O	SEE PAGE 4-210
27	511603D1	2	BRKT ASM-L,LG,STAUFF,REV 1.00U	SEE PAGE 4-211
27	511603D1	2	BRKT ASM-L,LG,STAUFF,REV 1.00U	SEE PAGE 4-211
28	511604D1	6	BRKT ASM-STR,LG,IPS,REV 1.00U	SEE PAGE 4-212
28	511604D1	6	BRKT ASM-STR,LG,IPS,REV 1.00U	SEE PAGE 4-212
29	511617D1	6	BRKT ASM-Z,LG,2XIPS	SEE PAGE 4-214
29	511617D1	6	BRKT ASM-Z,LG,2XIPS	SEE PAGE 4-214
30	511624D1	4	BRKT ASM-STR,XLG,IPS,2XPCLP	SEE PAGE 4-215
30	511624D1	4	BRKT ASM-STR,XLG,IPS,2XPCLP	SEE PAGE 4-215
32	511675D1	2	BRKT ASM-STR,LG,IPS,1.25 PCLP	SEE PAGE 4-217
32	511675D1	2	BRKT ASM-STR,LG,IPS,1.25 PCLP	SEE PAGE 4-217
33	511688D1	16	BRKT ASM-STR,XLG,IPS,PCLP	SEE PAGE 4-218
33	511688D1	16	BRKT ASM-STR,XLG,IPS,PCLP	SEE PAGE 4-218
34	511765D1	2	BRKT ASM-STR,LG,1.00IPS,STD U	SEE PAGE 4-170
34	511765D1	2	BRKT ASM-STR,LG,1.00IPS,STD U	SEE PAGE 4-170
37	520541D1	2	BRKT ASM-L/STR,IPS/1.50 STAUFF	SEE PAGE 4-229
37	520541D1	2	BRKT ASM-L/STR,IPS/1.50 STAUFF	SEE PAGE 4-229
38	520542D1	2	BRKT ASM-L,LG,STAUFF,LG UBOLT	SEE PAGE 4-230
38	520542D1	2	BRKT ASM-L,LG,STAUFF,LG UBOLT	SEE PAGE 4-230
39	520543D1	2	BRKT ASM-L,LG,STAUFF,XLG OFFST	SEE PAGE 4-231
39	520543D1	2	BRKT ASM-L,LG,STAUFF,XLG OFFST	SEE PAGE 4-231
40	520544D1	2	BRKT ASM-STR,LG,IPS,LG UBOLT	SEE PAGE 4-232
40	520544D1	2	BRKT ASM-STR,LG,IPS,LG UBOLT	SEE PAGE 4-232
43	520626D1	6	BRKT ASM-STR,SH,1.00/1.25 PCLP	SEE PAGE 4-235
43	520626D1	6	BRKT ASM-STR,SH,1.00/1.25 PCLP	SEE PAGE 4-235
44	520635D1	2	SHAFT AS-PEDAL	SEE PAGE 4-237
44	520635D1	2	SHAFT AS-PEDAL	SEE PAGE 4-237
45	520893D1	4	BRKT ASM-Z,SH,1.00IPS/1.25PCLP	SEE PAGE 4-239
45	520893D1	4	BRKT ASM-Z,SH,1.00IPS/1.25PCLP	SEE PAGE 4-239

Copyright © 2007 AGCO Corporation

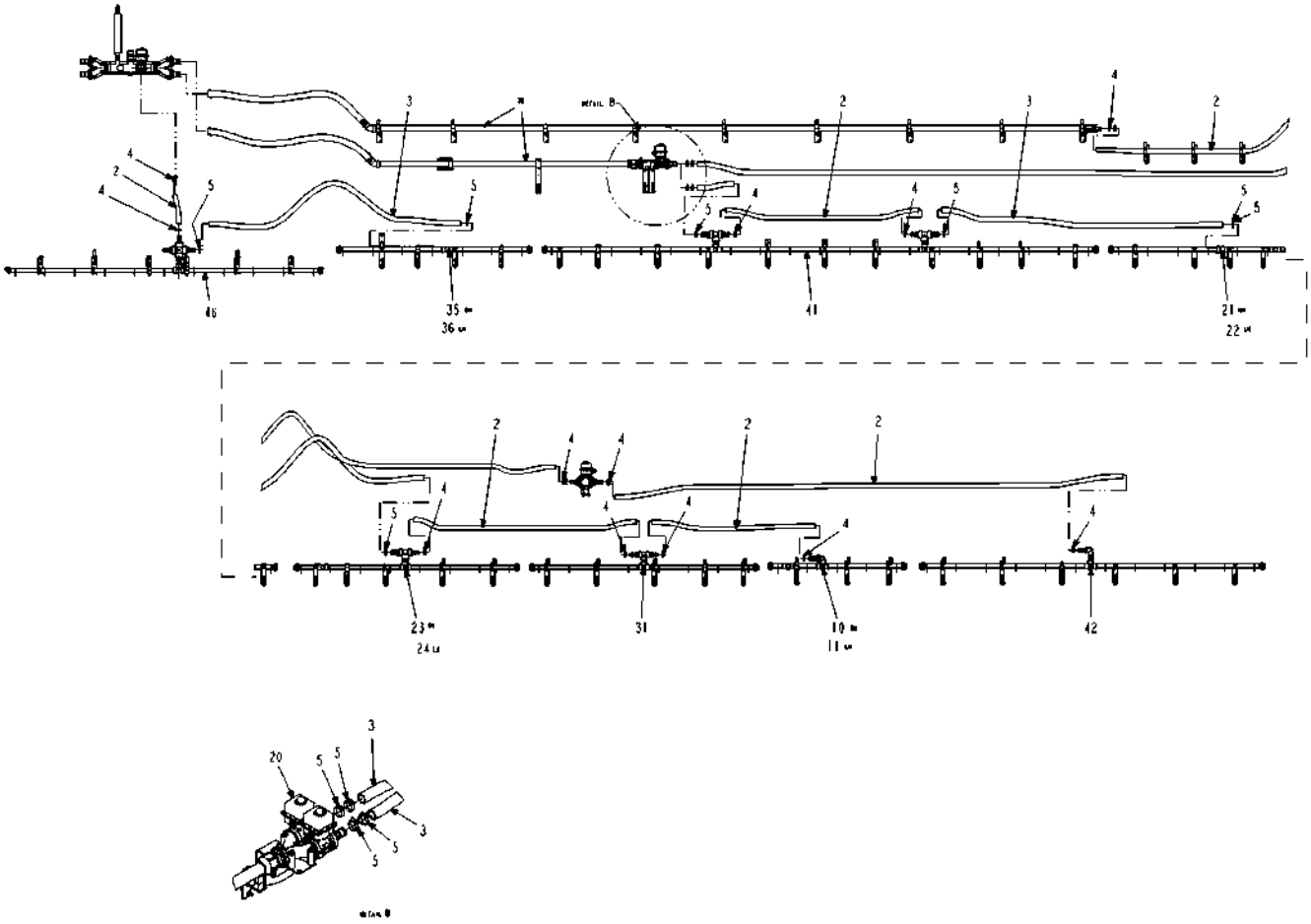

511587D1-01-R483-02.TIF

Copyright © 2007 AGCO Corporation

ITEM	PART #	QTY	DESCRIPTION	COMMENTS
2	AG511528	-	HOSE 1.00 2BRD EPDM [BULK: 93.459 FT]	
2	AG511528	-	HOSE 1.00 2BRD EPDM [BULK: 93.459 FT]	
3	AG513393	-	HOSE 1.25 2BRD EPDM [BULK: 81 FT]	
3	AG513393	-	HOSE 1.25 2BRD EPDM [BULK: 81 FT]	
4	AG561213	28	CLAMP 0.81-1.50 HOSE 16HS	
4	AG561213	28	CLAMP 0.81-1.50 HOSE 16HS	
5	AG561230	20	CLAMP 0.81-1.75 HOSE 20HS	
5	AG561230	20	CLAMP 0.81-1.75 HOSE 20HS	
10	506735D1	1	PIPE ASM-90D W/1HB,5X10,PP,RH	SEE PAGE 4-112
10	506735D1	1	PIPE ASM-90D W/1HB,5X10,PP,RH	SEE PAGE 4-112
11	506736D1	1	PIPE ASM-90D W/1HB,5X10,PP,LH	SEE PAGE 4-113
11	506736D1	1	PIPE ASM-90D W/1HB,5X10,PP,LH	SEE PAGE 4-113
20	511589D1	1	SYS INSTL-PLMB,1.50,120X7,RTRY	SEE PAGE 4-202
20	511589D1	1	SYS INSTL-PLMB,1.50,120X7,RTRY	SEE PAGE 4-202
21	511593D1	1	PIPE ASM-90D W/1HB,7X10,PP,RH	SEE PAGE 4-203
21	511593D1	1	PIPE ASM-90D W/1HB,7X10,PP,RH	SEE PAGE 4-203
22	511594D1	1	PIPE ASM-90D W/1HB,7X10,PP,LH	SEE PAGE 4-204
22	511594D1	1	PIPE ASM-90D W/1HB,7X10,PP,LH	SEE PAGE 4-204
23	511595D1	1	PIPE ASM-T W/1.25/1HB,8X10,RH	SEE PAGE 4-205
23	511595D1	1	PIPE ASM-T W/1.25/1HB,8X10,RH	SEE PAGE 4-205
24	511596D1	1	PIPE ASM-T W/1.25/1HB,8X10,LH	SEE PAGE 4-206
24	511596D1	1	PIPE ASM-T W/1.25/1HB,8X10,LH	SEE PAGE 4-206
31	511672D1	2	PIPE ASM-T W/2 1.00HB,8X10,PP	SEE PAGE 4-216
31	511672D1	2	PIPE ASM-T W/2 1.00HB,8X10,PP	SEE PAGE 4-216
35	512415D1	1	PIPE ASM-90D W/1HB,7X10,PP,RH	SEE PAGE 4-225
35	512415D1	1	PIPE ASM-90D W/1HB,7X10,PP,RH	SEE PAGE 4-225
36	512416D1	1	PIPE ASM-90D W/1HB,7X10,PP,LH	SEE PAGE 4-226
36	512416D1	1	PIPE ASM-90D W/1HB,7X10,PP,LH	SEE PAGE 4-226
41	520581D1	2	PIPE ASM-2T,1HB/125HB,19X10,PP	SEE PAGE 4-233
41	520581D1	2	PIPE ASM-2T,1HB/125HB,19X10,PP	SEE PAGE 4-233
42	520582D1	2	PIPE ASM-90D W/1.00HB,12X10,PP	SEE PAGE 4-234
42	520582D1	2	PIPE ASM-90D W/1.00HB,12X10,PP	SEE PAGE 4-234
46	520901D1	1	PIPE ASM-X,W/2125/1HB,11X10,PP	SEE PAGE 4-240
46	520901D1	1	PIPE ASM-X,W/2125/1HB,11X10,PP	SEE PAGE 4-240

Copyright © 2007 AGCO Corporation

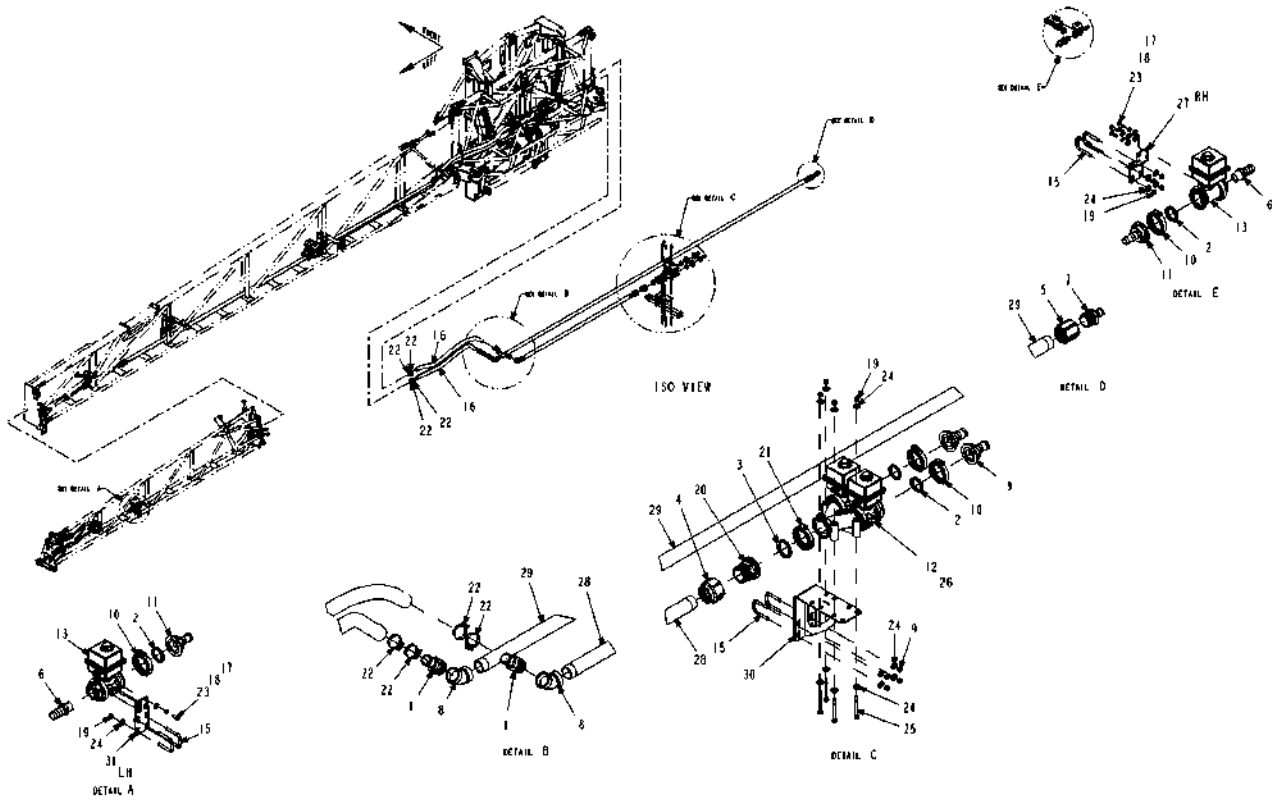

511589D1-01-R483-.TIF

Copyright © 2007 AGCO Corporation

SYS INSTL-PLMB,1.50,120X7,RTRY

ITEM	PART #	QTY	DESCRIPTION	COMMENTS
1	AG000766	4	BARB-HOSE,1.50MNTTX1.50BARB,PP	
2	AG000772	6	GASKET 1.50 EPDM	
3	AG000773	2	GASKET 2.00 EPDM	
4	AG050266	2	COUPLG RED 1.50X 2.00NPT POLYP	
5	AG050271	2	COUPLING-PIPE,1.50NPT,PP	
6	AG051059	2	BARB-HOSE,1.00MNPTX1.00BARB,PP	
7	AG051533	2	BARB-HOSE,1.50MNPTX1.00BARB,PP	
8	AG051888	4	ELBOW 45D 1.50 304SS	
9	AG056289	4	CONNECTOR 2.00FLGX1.25HOSE	
10	AG056785	6	CLAMP 2.00 FLANGE	
11	AG057593	2	CONNECTOR 2.00X1.00HOSE	
12	AG121882	2	MANIFOLD ASM-Y,1.00FP FLG,ELEC	SEE PAGE 2-2
13	AG121883	2	VALVE-BALL,1.00FP FLGXNPT,ELEC	SEE PAGE 4-3
14	AG129187	AR	PIPE SEALANT-FLEX BLACK	
15	AG231204	8	BOLT-U .31-18X1.88X2.63	
16	AG512230	-	HOSE 1.50 2BRD EPDM [BULK: 20.667 FT]	
17	AG515121	8	WASHER 0.25 FL SS REG TYPE-B	
18	AG515122	8	WASHER 0.25 LK SS REG	
19	AG516403	24	NUT 0.31-18NC HEX SS REG NY	
20	AG522893	2	CONNECTOR-2.00FLGX2.00NPT	
21	AG522895	2	CLAMP-WORM SCREW,2.00,SS	
22	AG561231	16	CLAMP 1.06-2.00 HOSE 24HS	
23	AG562054	8	BOLT 0.25-20NCX 0.75 SS HHD	
24	AG562074	32	WASHER 0.31 FL SS REG TYPE-B	
25	AG708300	8	BOLT 0.31-18NCX 3.50 SS HHD	
26	505271D1	1	HARNESS INSTL-BSO VLV,7 SECT	SEE PAGE 6-5
27	506452D1	1	BRKT-MTG,KZ VLV,RH	
28	506454D1	2	TUBE-SECTION FEED,1.50,85.00	
29	506455D1	2	TUBE-SECTION FEED,1.50,240.00	
30	511590D1	2	BRKT WLDMT-MTG,Y MANF,120 BM	
31	511763D1	1	BRKT-MTG,KZ VLV,LH	

Copyright © 2007 AGCO Corporation

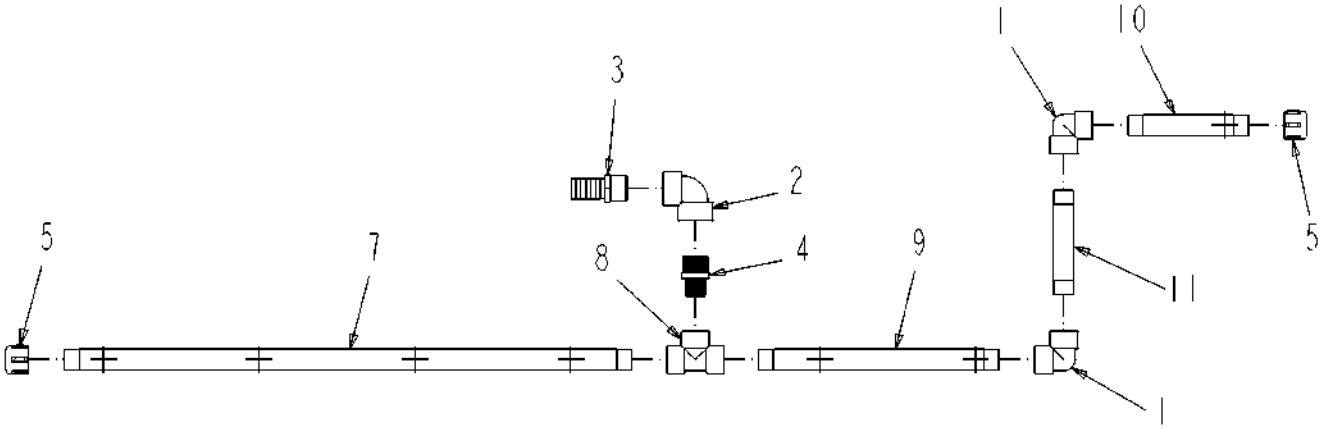

511593D1-01-R483-.TIF

Copyright © 2007 AGCO Corporation

PIPE ASM-90D W/1HB,7X10,PP,RH

ITEM	PART #	QTY	DESCRIPTION	COMMENTS
1	AG051127	2	ELBOW-PIPE,1.00FNPT,90D,PP	
2	AG051128	1	ELBOW-PIPE,1.25FNPT,90D,PP	
3	AG051186	1	BARB-HOSE,1.25MNPTX1.25BARB,PP	
4	AG051437	1	NIPPLE RED 1.25NPTX1.00NPT PP	
5	AG051536	2	CAP-PIPE,1.00NPT PP	
6	AG129187	AR	PIPE SEALANT-FLEX BLACK	
7	AG239935	1	TUBE-POLY,36.44,10IN CTR	
8	AG516405	1	TEE,PIPE,1.00FNPT,PP	
9	511643D1	1	TUBE-POLY,15.44,10IN CTR	
10	511644D1	1	TUBE-POLY, 7.69,10IN CTR	
11	511645D1	1	TUBE-POLY, 6.75,NO HOLES	

Copyright © 2007 AGCO Corporation

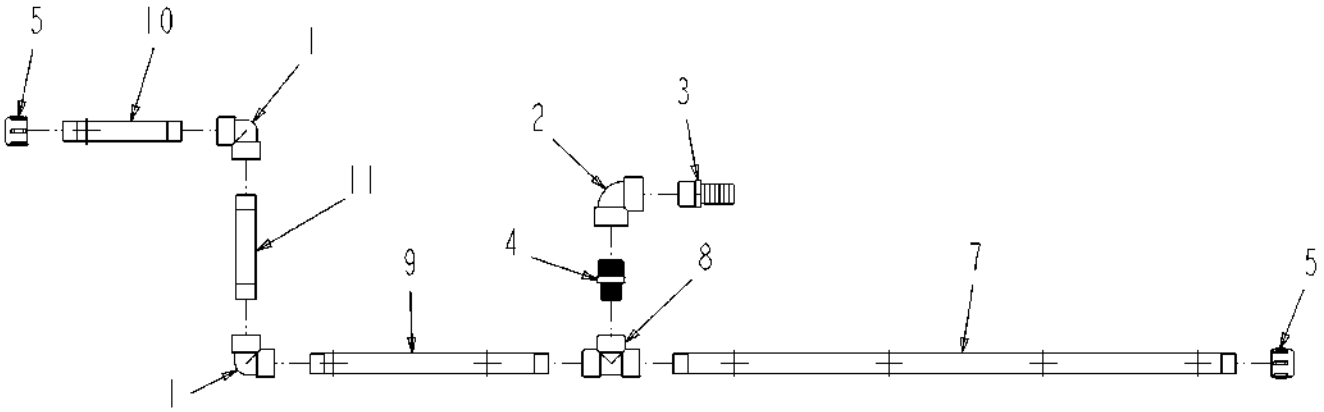

511594D1-01-R483-.TIF

Copyright © 2007 AGCO Corporation

PIPE ASM-90D W/1HB,7X10,PP,LH

ITEM	PART #	QTY	DESCRIPTION	COMMENTS
1	AG051127	2	ELBOW-PIPE,1.00FNPT,90D,PP	
2	AG051128	1	ELBOW-PIPE,1.25FNPT,90D,PP	
3	AG051186	1	BARB-HOSE,1.25MNPTX1.25BARB,PP	
4	AG051437	1	NIPPLE RED 1.25NPTX1.00NPT PP	
5	AG051536	2	CAP-PIPE,1.00NPT PP	
6	AG129187	AR	PIPE SEALANT-FLEX BLACK	
7	AG239935	1	TUBE-POLY,36.44,10IN CTR	
8	AG516405	1	TEE,PIPE,1.00FNPT,PP	
9	511643D1	1	TUBE-POLY,15.44,10IN CTR	
10	511644D1	1	TUBE-POLY, 7.69,10IN CTR	
11	511645D1	1	TUBE-POLY, 6.75,NO HOLES	

Copyright © 2007 AGCO Corporation

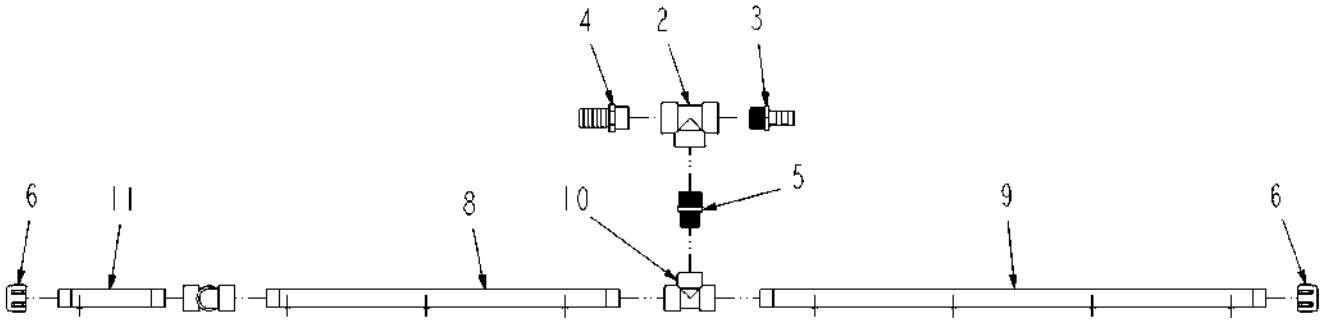

511595D1-01-R483-.TIF

Copyright © 2007 AGCO Corporation

PIPE ASM-T W/1.25/1HB,8X10,RH

ITEM	PART #	QTY	DESCRIPTION	COMMENTS
1	AG051127	2	ELBOW-PIPE,1.00FNPT,90D,PP	
2	AG051162	1	TEE,PIPE,1.25FNPT,PP	
3	AG051185	1	BARB-HOSE,1.25MNPTX1.00BARB,PP	
4	AG051186	1	BARB-HOSE,1.25MNPTX1.25BARB,PP	
5	AG051437	1	NIPPLE RED 1.25NPTX1.00NPT PP	
6	AG051536	2	CAP-PIPE,1.00NPT PP	
7	AG129187	AR	PIPE SEALANT-FLEX BLACK	
8	AG239929	1	TUBE-POLY,25.44,10IN CTR	
9	AG239935	1	TUBE-POLY,36.44,10IN CTR	
10	AG516405	1	TEE,PIPE,1.00FNPT,PP	
11	511644D1	1	TUBE-POLY, 7.69,10IN CTR	
12	511651D1	1	TUBE-POLY, 7.25,NO HOLES	

Copyright © 2007 AGCO Corporation

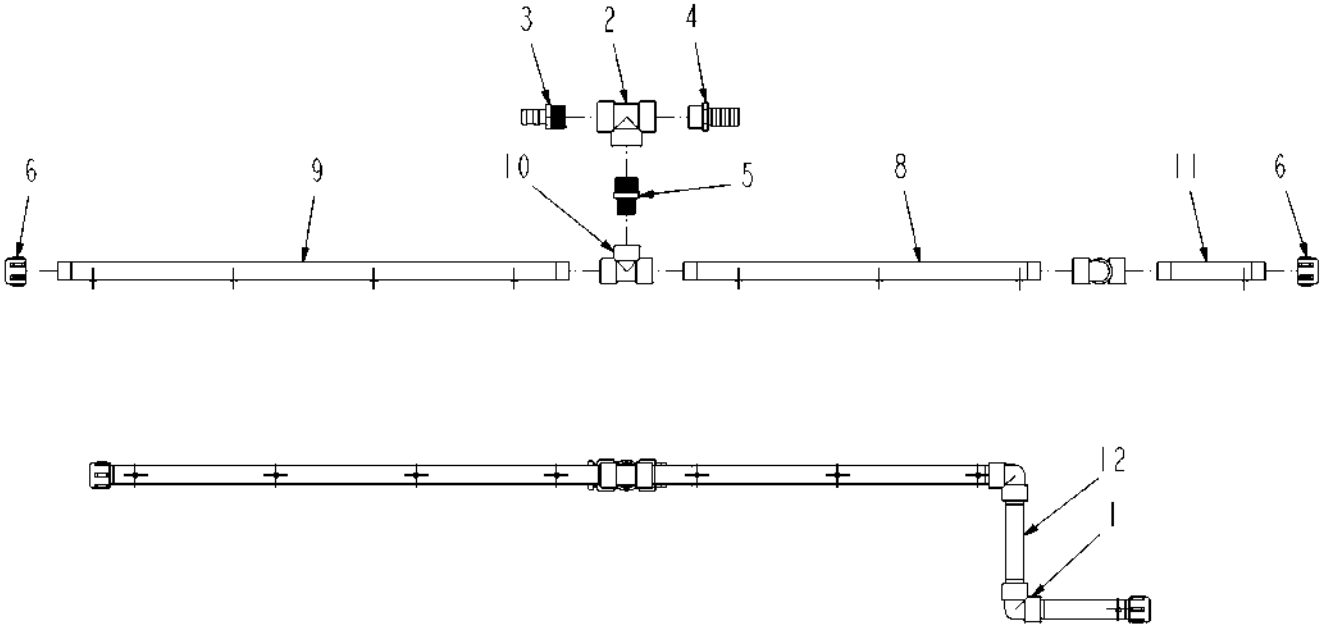

511596D1-01-R483-.TIF

Copyright © 2007 AGCO Corporation

PIPE ASM-T W/1.25/1HB,8X10,LH

ITEM	PART #	QTY	DESCRIPTION	COMMENTS
1	AG051127	2	ELBOW-PIPE,1.00FNPT,90D,PP	
2	AG051162	1	TEE,PIPE,1.25FNPT,PP	
3	AG051185	1	BARB-HOSE,1.25MNPTX1.00BARB,PP	
4	AG051186	1	BARB-HOSE,1.25MNPTX1.25BARB,PP	
5	AG051437	1	NIPPLE RED 1.25NPTX1.00NPT PP	
6	AG051536	2	CAP-PIPE,1.00NPT PP	
7	AG129187	AR	PIPE SEALANT-FLEX BLACK	
8	AG239929	1	TUBE-POLY,25.44,10IN CTR	
9	AG239935	1	TUBE-POLY,36.44,10IN CTR	
10	AG516405	1	TEE,PIPE,1.00FNPT,PP	
11	511644D1	1	TUBE-POLY, 7.69,10IN CTR	
12	511651D1	1	TUBE-POLY, 7.25,NO HOLES	

Copyright © 2007 AGCO Corporation

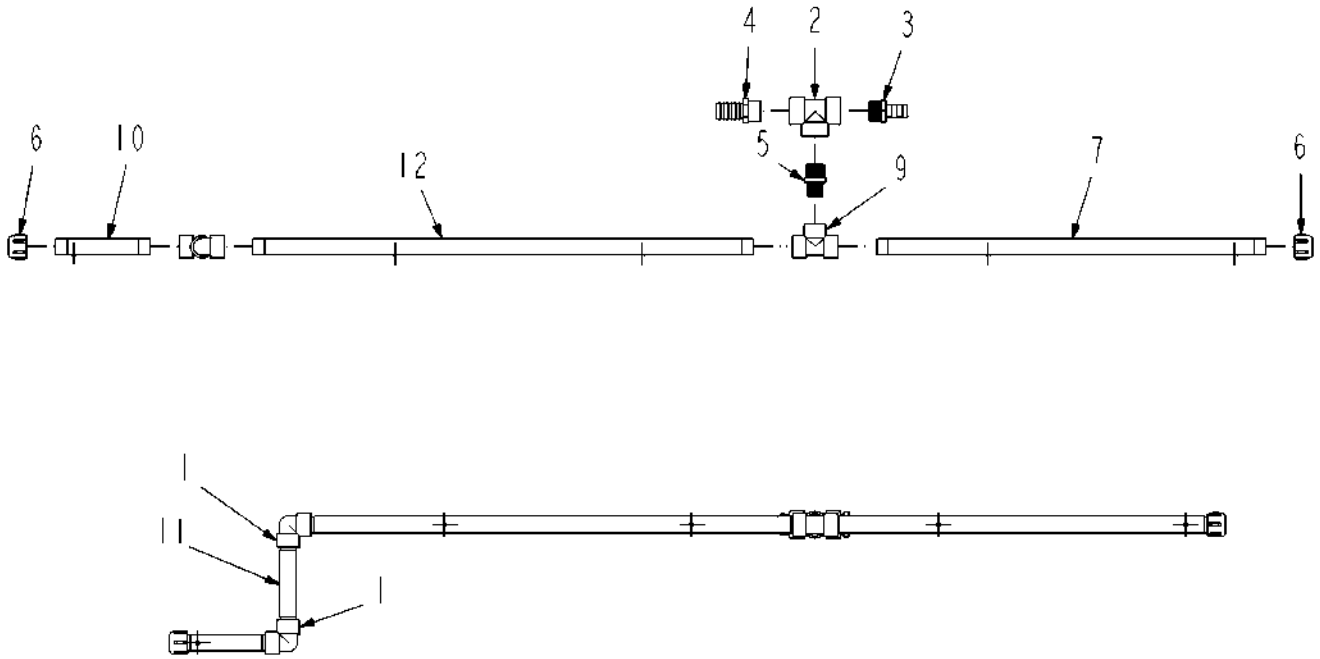

511597D1-01-R483-.TIF

Copyright © 2007 AGCO Corporation

PIPE ASM-T W/1.25/1HB,5X20,RH

ITEM	PART #	QTY	DESCRIPTION	COMMENTS
1	AG051127	2	ELBOW-PIPE,1.00FNPT,90D,PP	
2	AG051162	1	TEE,PIPE,1.25FNPT,PP	
3	AG051185	1	BARB-HOSE,1.25MNPTX1.00BARB,PP	
4	AG051186	1	BARB-HOSE,1.25MNPTX1.25BARB,PP	
5	AG051437	1	NIPPLE RED 1.25NPTX1.00NPT PP	
6	AG051536	2	CAP-PIPE,1.00NPT PP	
7	WR127785	1	TUBE-BOOM,PP,20,31.50	
8	AG129187	AR	PIPE SEALANT-FLEX BLACK	
9	AG516405	1	TEE,PIPE,1.00FNPT,PP	
10	511644D1	1	TUBE-POLY, 7.69,10IN CTR	
11	511651D1	1	TUBE-POLY, 7.25,NO HOLES	
12	511823D1	1	TUBE-POLY,40.50,20IN CTR	

Copyright © 2007 AGCO Corporation

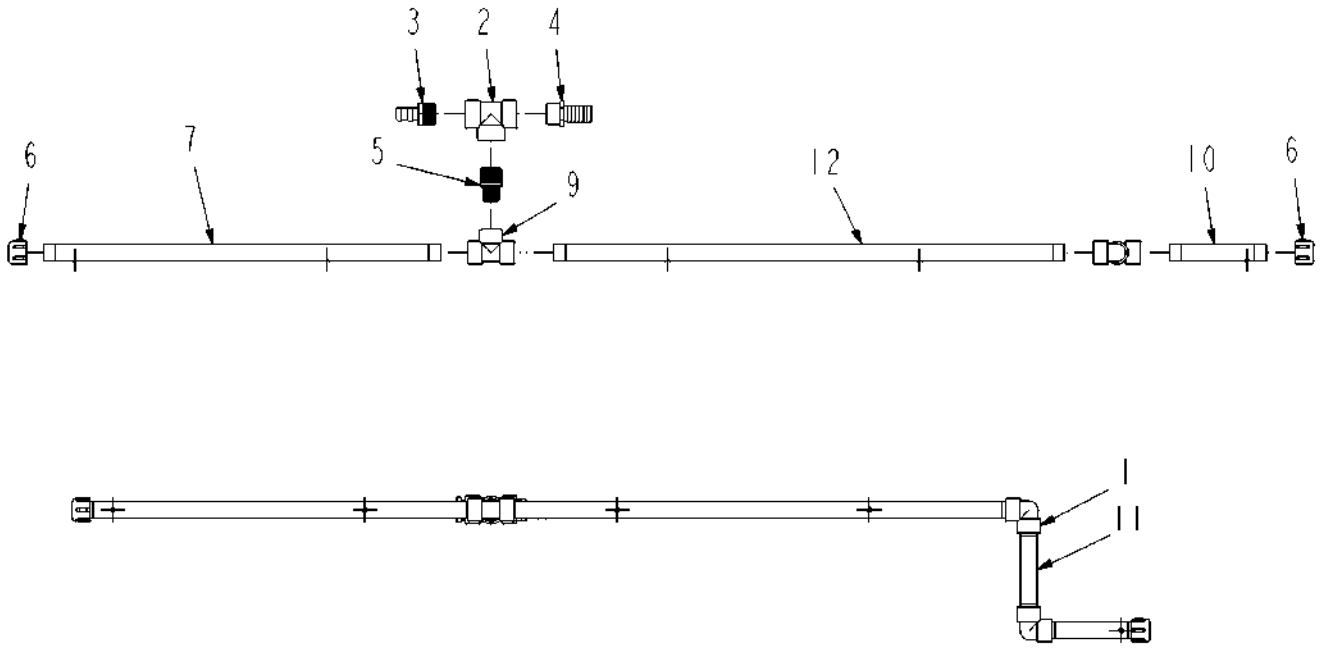

511598D1-01-R483-.TIF

Copyright © 2007 AGCO Corporation

PIPE ASM-T W/1.25/1HB,5X20,LH

ITEM	PART #	QTY	DESCRIPTION	COMMENTS
1	AG051127	2	ELBOW-PIPE,1.00FNPT,90D,PP	
2	AG051162	1	TEE,PIPE,1.25FNPT,PP	
3	AG051185	1	BARB-HOSE,1.25MNPTX1.00BARB,PP	
4	AG051186	1	BARB-HOSE,1.25MNPTX1.25BARB,PP	
5	AG051437	1	NIPPLE RED 1.25NPTX1.00NPT PP	
6	AG051536	2	CAP-PIPE,1.00NPT PP	
7	WR127785	1	TUBE-BOOM,PP,20,31.50	
8	AG129187	AR	PIPE SEALANT-FLEX BLACK	
9	AG516405	1	TEE,PIPE,1.00FNPT,PP	
10	511644D1	1	TUBE-POLY, 7.69,10IN CTR	
11	511651D1	1	TUBE-POLY, 7.25,NO HOLES	
12	511823D1	1	TUBE-POLY,40.50,20IN CTR	

Copyright © 2007 AGCO Corporation

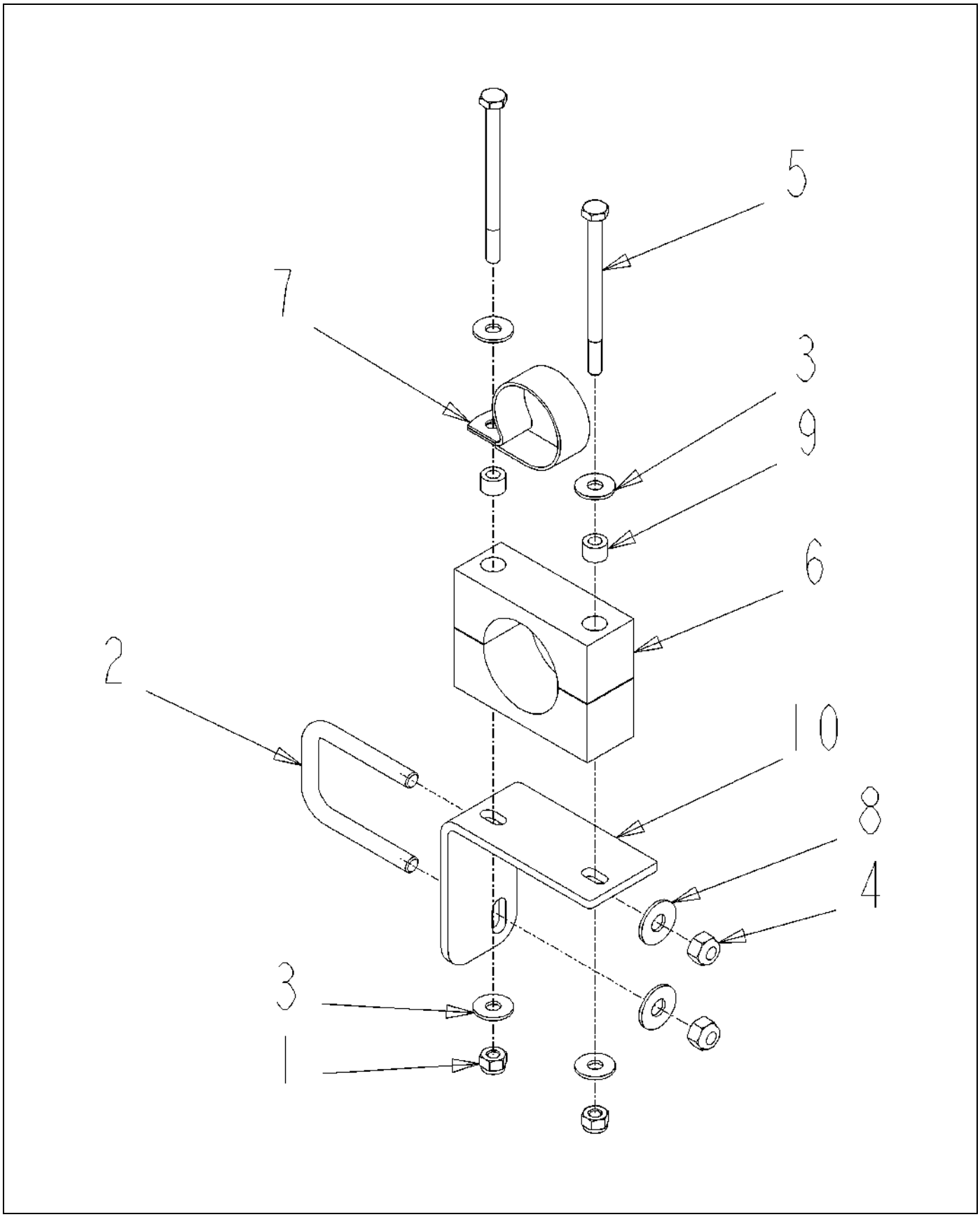

511601D1-01-R483-.TIF

Copyright © 2007 AGCO Corporation

BRKT ASM-L,1.50 STAUFF,PCLP

ITEM	PART #	QTY	DESCRIPTION	COMMENTS
1	AG027275	2	NUT 0.25-20NC HEX SS REG NY	
2	AG231204	1	BOLT-U .31-18X1.88X2.63	
3	AG515121	4	WASHER 0.25 FL SS REG TYPE-B	
4	AG516403	2	NUT 0.31-18NC HEX SS REG NY	
5	AG518507	2	BOLT 0.25-20NCX 3.50 SS HHD	
6	AG519180	1	CLAMP 1.50 BLACK POLY	
7	AG523412	1	CLAMP-1.62 DIA,COATED HOSE	
8	AG562074	2	WASHER 0.31 FL SS REG TYPE-B	
9	AG609777	2	INSERT STAUFF SPACER	
10	506786D1	1	BRKT-MTG,SH,CLAMP,STAUFF,1.50	

Copyright © 2007 AGCO Corporation

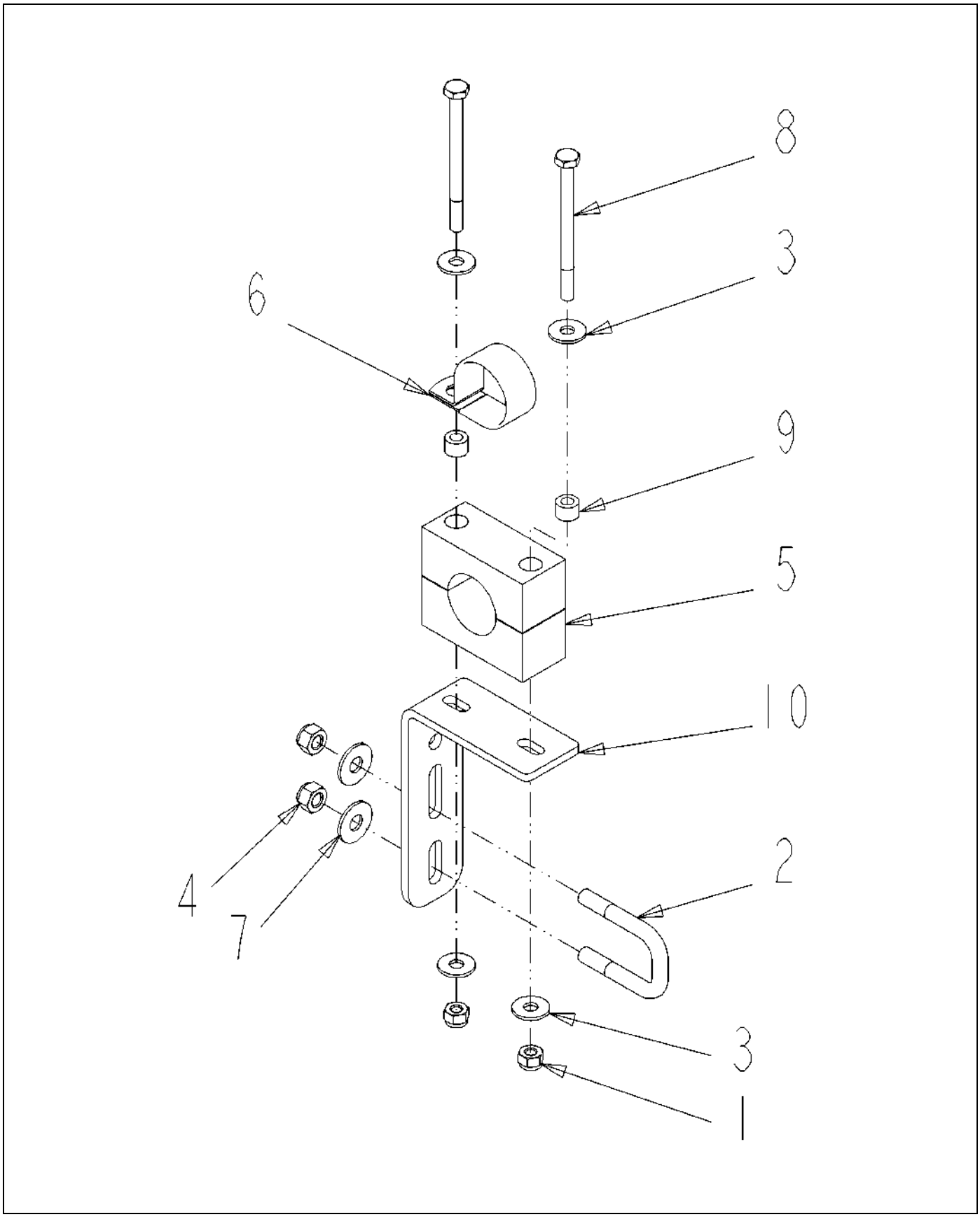

511602D1-01-R483-.TIF

Copyright © 2007 AGCO Corporation

BRKT ASM-L,LG,STAUFF,PCLP,1.O

ITEM	PART #	QTY	DESCRIPTION	COMMENTS
1	AG027275	2	NUT 0.25-20NC HEX SS REG NY	
2	WR129144	1	BOLT-U,.31-18X1.06X1.97,SQ,SS	
3	AG515121	4	WASHER 0.25 FL SS REG TYPE-B	
4	AG516403	2	NUT 0.31-18NC HEX SS REG NY	
5	AG519748	1	CLAMP 1.00 PIPE	[A]
6	AG519751	1	CLAMP 1.38 DIA COATED HOSE	
7	AG562074	2	WASHER 0.31 FL SS REG TYPE-B	
8	AG563061	2	BOLT 0.25-20NCX 3.25 SS HHD	
9	AG609777	2	INSERT STAUFF SPACER	
10	509885D1	1	BRKT-L,STANDOFF,STAUFF	
	FOOTNOTE [A]		2 INSERTS AND 2 CLAMP MAKE UP 1 PART. BOLT - AG563061, WASHER - AG515121, NUT - AG027275,	

Copyright © 2007 AGCO Corporation

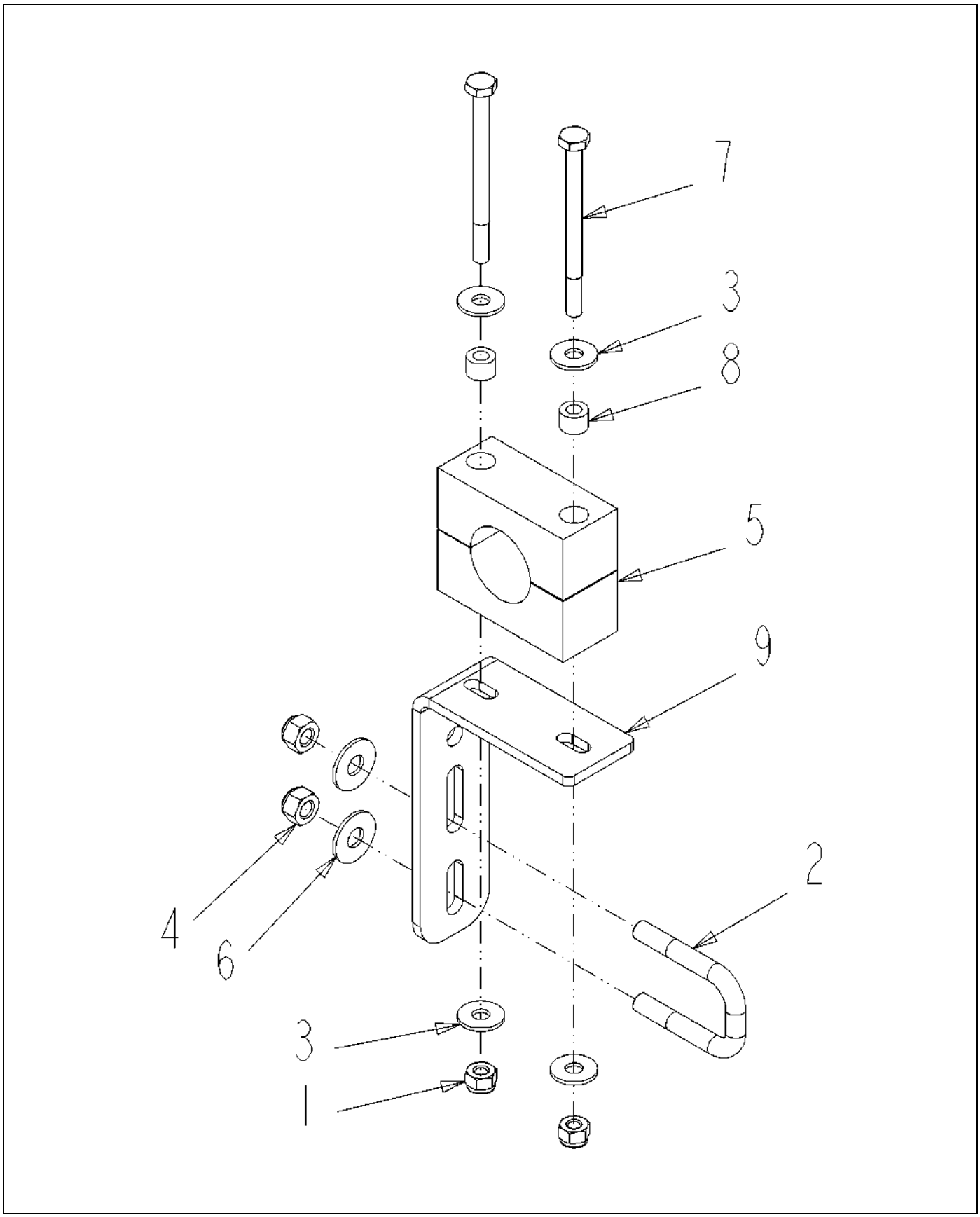

511603D1-01-R483-.TIF

Copyright © 2007 AGCO Corporation

BRKT ASM-L,LG,STAUFF,REV 1.00U

ITEM	PART #	QTY	DESCRIPTION	COMMENTS
1	AG027275	2	NUT 0.25-20NC HEX SS REG NY	
2	WR129144	1	BOLT-U,.31-18X1.06X1.97,SQ,SS	
3	AG515121	4	WASHER 0.25 FL SS REG TYPE-B	
4	AG516403	2	NUT 0.31-18NC HEX SS REG NY	
5	AG519748	1	CLAMP 1.00 PIPE	[A]
6	AG562074	2	WASHER 0.31 FL SS REG TYPE-B	
7	AG563061	2	BOLT 0.25-20NCX 3.25 SS HHD	
8	AG609777	2	INSERT STAUFF SPACER	
9	509885D1	1	BRKT-L,STANDOFF,STAUFF	
	FOOTNOTE [A]		2 INSERTS AND 2 CLAMP MAKE UP 1 PART. BOLT - AG563061, WASHER - AG515121, NUT - AG027275,	

Copyright © 2007 AGCO Corporation

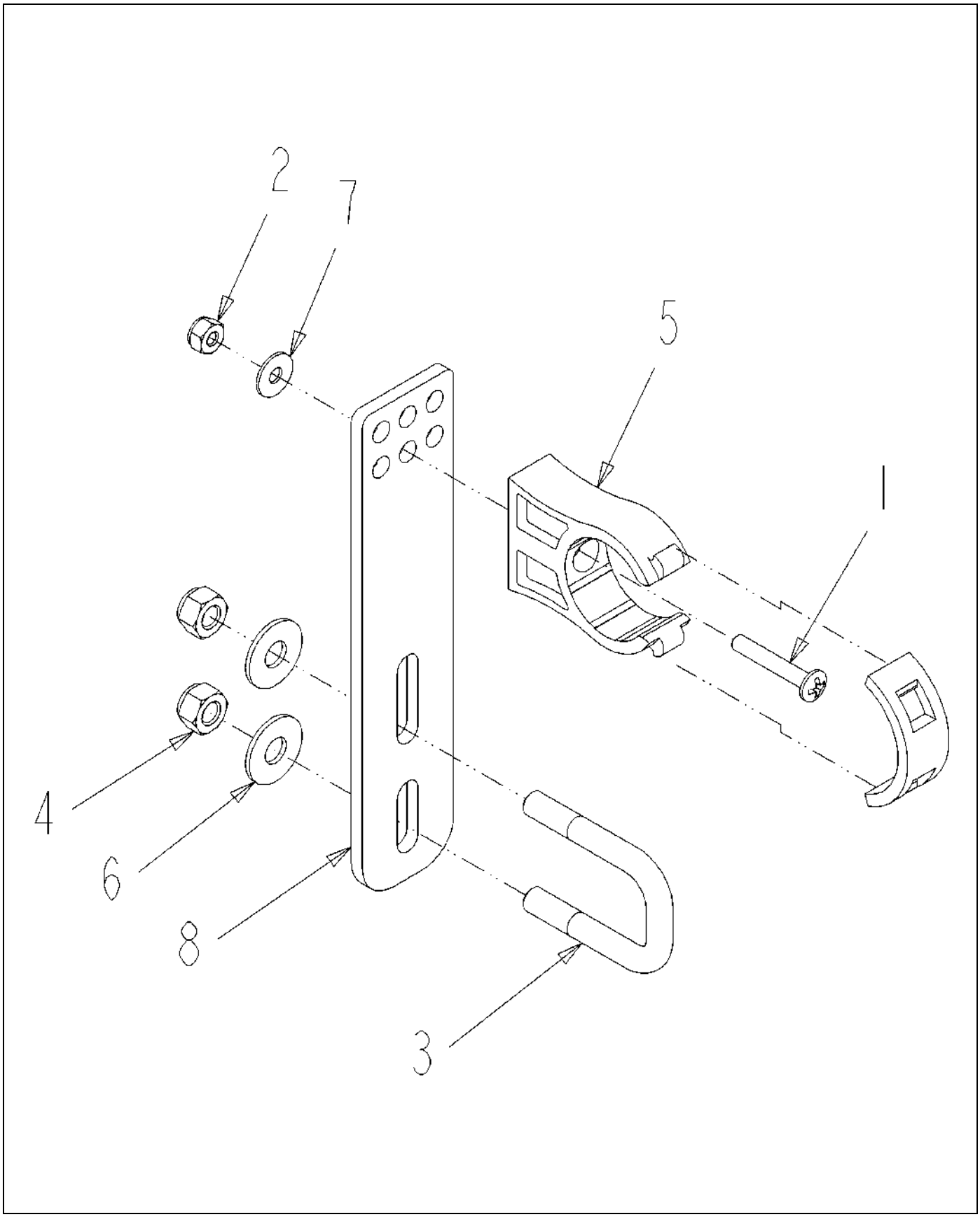

511604D1-01-R483-.TIF

Copyright © 2007 AGCO Corporation

BRKT ASM-STR,LG,IPS,REV 1.00U

ITEM	PART #	QTY	DESCRIPTION	COMMENTS
1	AG027273	1	SCREW 10-24X 1.25 PHD PHILSS(P	
2	AG027274	1	NUT #10-24NC HEX SS REG NY	
3	WR129144	1	BOLT-U,.31-18X1.06X1.97,SQ,SS	
4	AG516403	2	NUT 0.31-18NC HEX SS REG NY	
5	AG519749	1	CLAMP 1.00 IPS POLY	
6	AG562074	2	WASHER 0.31 FL SS REG TYPE-B	
7	AG562082	1	WASHER #10 FL SS REG TYPE-B	
8	511432D1	1	BRKT-STR,LG STANDOFF	

Copyright © 2007 AGCO Corporation

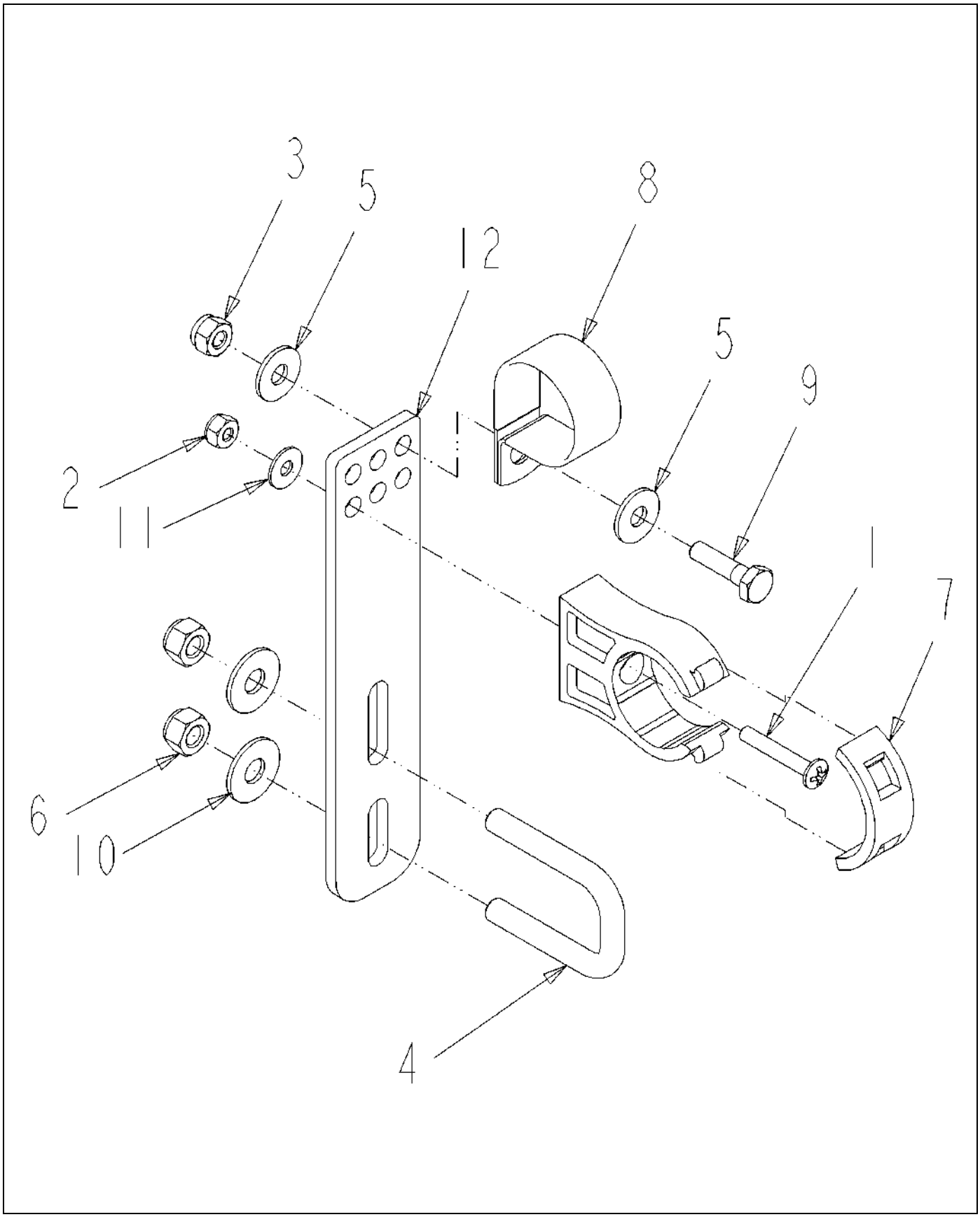

511605D1-01-R483-.TIF

Copyright © 2007 AGCO Corporation

BRKT ASM-STR,LG,IPS/PCLP,1.00U

ITEM	PART #	QTY	DESCRIPTION	COMMENTS
1	AG027273	1	SCREW 10-24X 1.25 PHD PHILSS(P	
2	AG027274	1	NUT #10-24NC HEX SS REG NY	
3	AG027275	1	NUT 0.25-20NC HEX SS REG NY	
4	WR129144	1	BOLT-U,.31-18X1.06X1.97,SQ,SS	
5	AG515121	2	WASHER 0.25 FL SS REG TYPE-B	
6	AG516403	2	NUT 0.31-18NC HEX SS REG NY	
7	AG519749	1	CLAMP 1.00 IPS POLY	
8	AG519751	1	CLAMP 1.38 DIA COATED HOSE	
9	AG562064	1	BOLT 0.25-20NCX 1.00 SS HHD	
10	AG562074	2	WASHER 0.31 FL SS REG TYPE-B	
11	AG562082	1	WASHER #10 FL SS REG TYPE-B	
12	511432D1	1	BRKT-STR,LG STANDOFF	

Copyright © 2007 AGCO Corporation

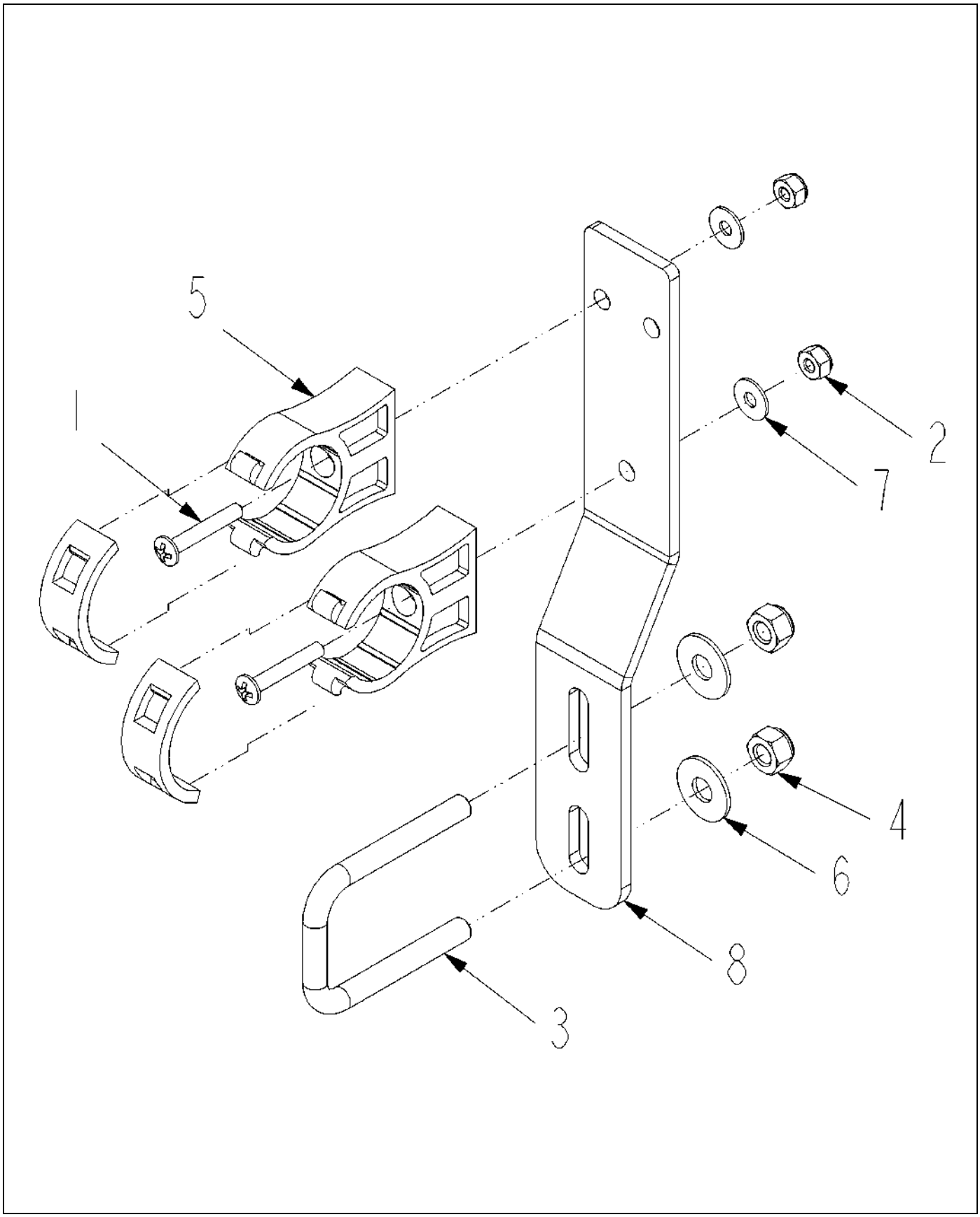

511617D1-01-R483-.TIF

Copyright © 2007 AGCO Corporation

BRKT ASM-Z,LG,2XIPS

ITEM	PART #	QTY	DESCRIPTION	COMMENTS
1	AG027273	2	SCREW 10-24X 1.25 PHD PHILSS(P	
2	AG027274	2	NUT #10-24NC HEX SS REG NY	
3	AG231204	1	BOLT-U .31-18X1.88X2.63	
4	AG516403	2	NUT 0.31-18NC HEX SS REG NY	
5	AG519749	2	CLAMP 1.00 IPS POLY	
6	AG562074	2	WASHER 0.31 FL SS REG TYPE-B	
7	AG562082	2	WASHER #10 FL SS REG TYPE-B	
8	509882D1	1	BRKT-Z,STANDOFF,LG	

Copyright © 2007 AGCO Corporation

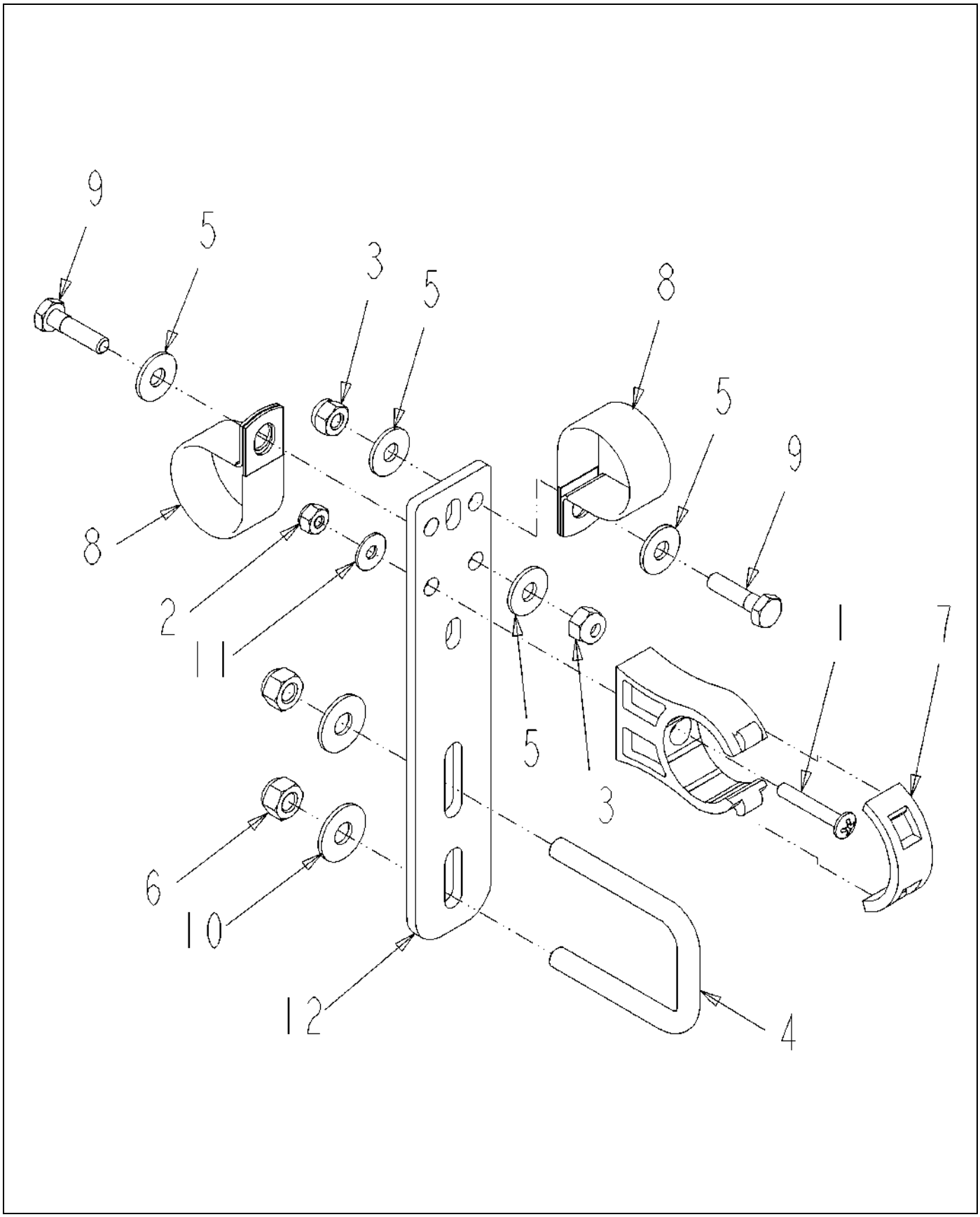

511624D1-01-R483-.TIF

Copyright © 2007 AGCO Corporation

BRKT ASM-STR,XLG,IPS,2XPCLP

ITEM	PART #	QTY	DESCRIPTION	COMMENTS
1	AG027273	1	SCREW 10-24X 1.25 PHD PHILSS(P	
2	AG027274	1	NUT #10-24NC HEX SS REG NY	
3	AG027275	2	NUT 0.25-20NC HEX SS REG NY	
4	AG231204	1	BOLT-U .31-18X1.88X2.63	
5	AG515121	4	WASHER 0.25 FL SS REG TYPE-B	
6	AG516403	2	NUT 0.31-18NC HEX SS REG NY	
7	AG519749	1	CLAMP 1.00 IPS POLY	
8	AG519751	2	CLAMP 1.38 DIA COATED HOSE	
9	AG562064	2	BOLT 0.25-20NCX 1.00 SS HHD	
10	AG562074	2	WASHER 0.31 FL SS REG TYPE-B	
11	AG562082	1	WASHER #10 FL SS REG TYPE-B	
12	511687D1	1	BRKT-STR,XLG,STANDOFF	

Copyright © 2007 AGCO Corporation

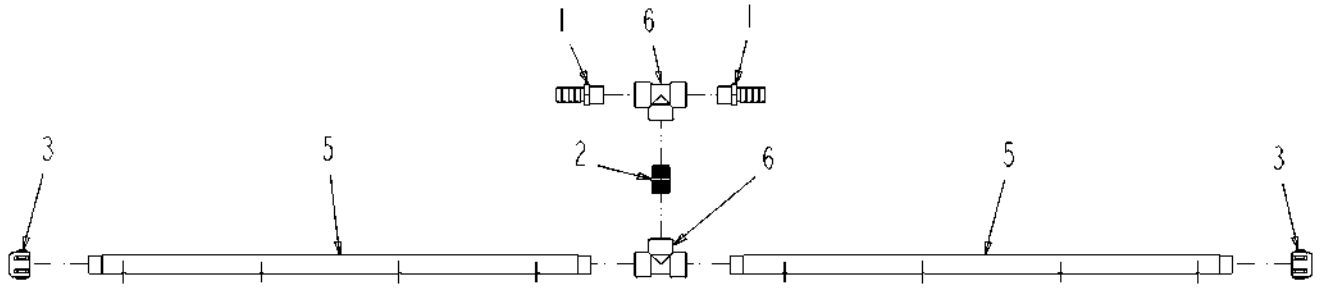

511672D1-01-R483-.TIF

Copyright © 2007 AGCO Corporation

PIPE ASM-T W/2 1.00HB,8X10,PP

ITEM	PART #	QTY	DESCRIPTION	COMMENTS
1	AG051059	2	BARB-HOSE,1.00MNPTX1.00BARB,PP	
2	AG051153	1	NIPPLE-PIPE,1.00NPTXCLS,PP	
3	AG051536	2	CAP-PIPE,1.00NPT PP	
4	AG129187	AR	PIPE SEALANT-FLEX BLACK	
5	AG239935	2	TUBE-POLY,36.44,10IN CTR	
6	AG516405	2	TEE,PIPE,1.00FNPT,PP	

Copyright © 2007 AGCO Corporation

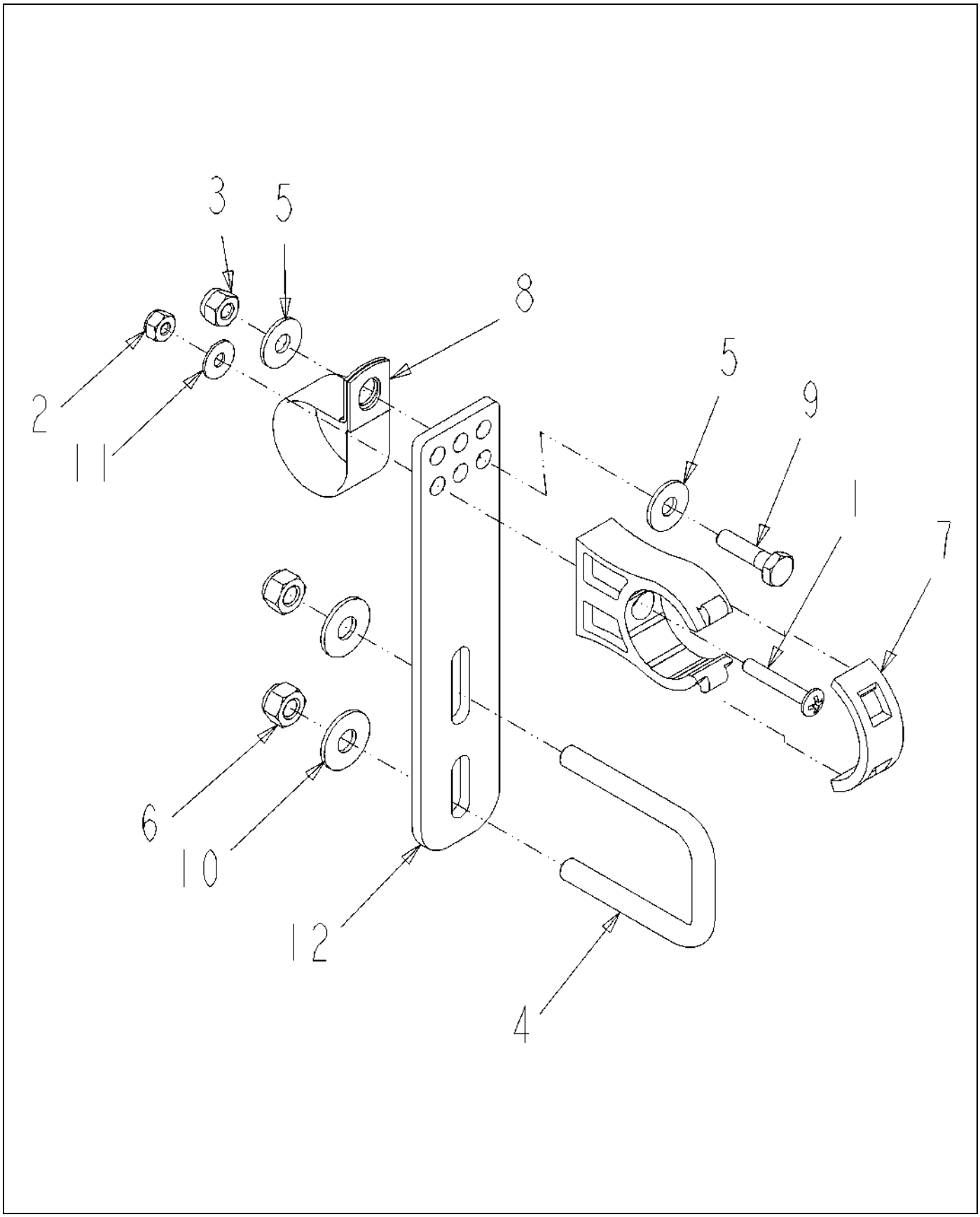

511675D1-01-R483-.TIF

Copyright © 2007 AGCO Corporation

BRKT ASM-STR,LG,IPS,1.25 PCLP

ITEM	PART #	QTY	DESCRIPTION	COMMENTS
1	AG027273	1	SCREW 10-24X 1.25 PHD PHILSS(P	
2	AG027274	1	NUT #10-24NC HEX SS REG NY	
3	AG027275	1	NUT 0.25-20NC HEX SS REG NY	
4	AG231204	1	BOLT-U .31-18X1.88X2.63	
5	AG515121	2	WASHER 0.25 FL SS REG TYPE-B	
6	AG516403	2	NUT 0.31-18NC HEX SS REG NY	
7	AG519749	1	CLAMP 1.00 IPS POLY	
8	AG519751	1	CLAMP 1.38 DIA COATED HOSE	
9	AG562064	1	BOLT 0.25-20NCX 1.00 SS HHD	
10	AG562074	2	WASHER 0.31 FL SS REG TYPE-B	
11	AG562082	1	WASHER #10 FL SS REG TYPE-B	
12	511432D1	1	BRKT-STR,LG STANDOFF	

Copyright © 2007 AGCO Corporation

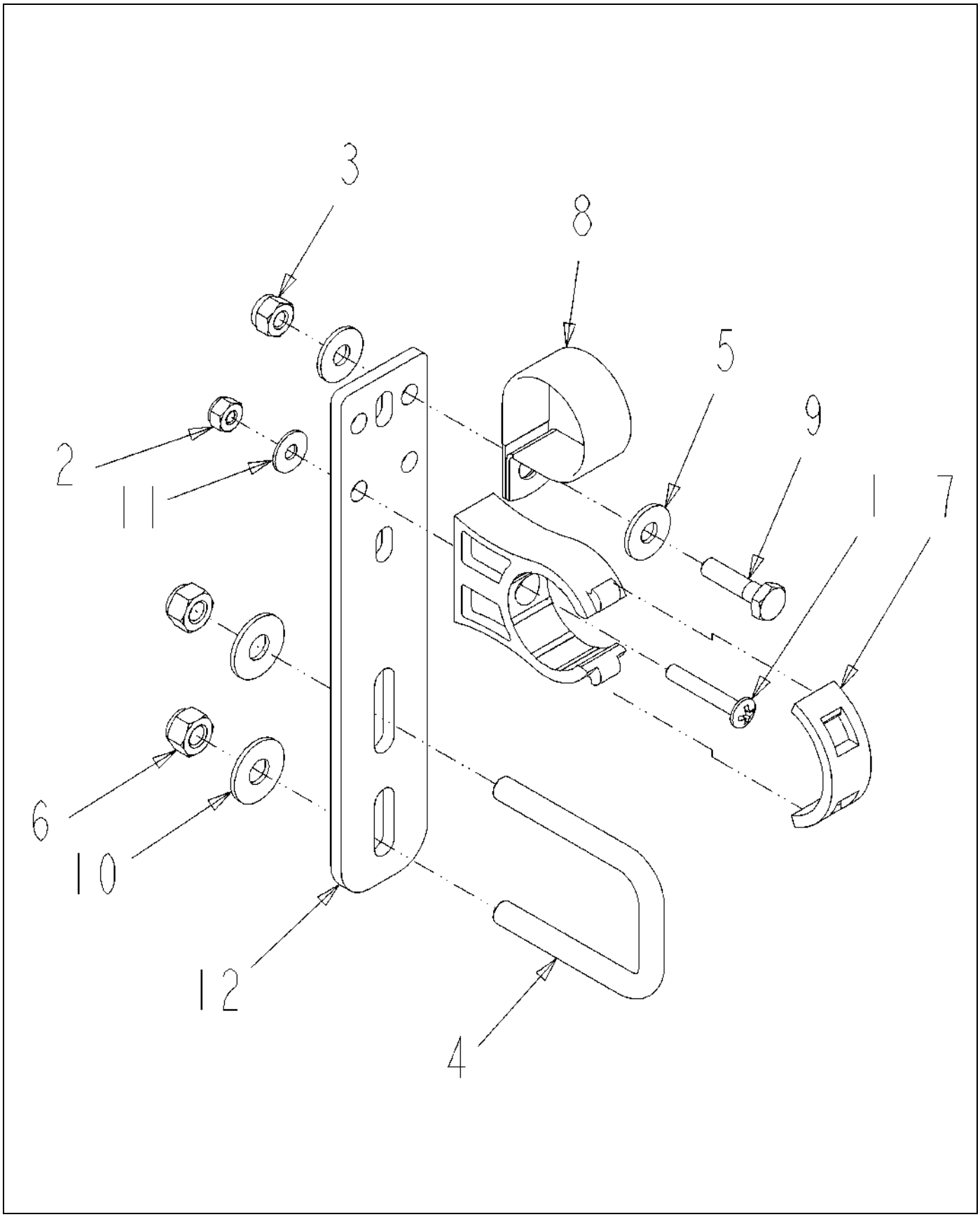

511688D1-01-R483-.TIF

Copyright © 2007 AGCO Corporation

BRKT ASM-STR,XLG,IPS,PCLP

ITEM	PART #	QTY	DESCRIPTION	COMMENTS
1	AG027273	1	SCREW 10-24X 1.25 PHD PHILSS(P	
2	AG027274	1	NUT #10-24NC HEX SS REG NY	
3	AG027275	1	NUT 0.25-20NC HEX SS REG NY	
4	AG231204	1	BOLT-U .31-18X1.88X2.63	
5	AG515121	2	WASHER 0.25 FL SS REG TYPE-B	
6	AG516403	2	NUT 0.31-18NC HEX SS REG NY	
7	AG519749	1	CLAMP 1.00 IPS POLY	
8	AG519751	1	CLAMP 1.38 DIA COATED HOSE	
9	AG562064	1	BOLT 0.25-20NCX 1.00 SS HHD	
10	AG562074	2	WASHER 0.31 FL SS REG TYPE-B	
11	AG562082	1	WASHER #10 FL SS REG TYPE-B	
12	511687D1	1	BRKT-STR,XLG,STANDOFF	

Copyright © 2007 AGCO Corporation

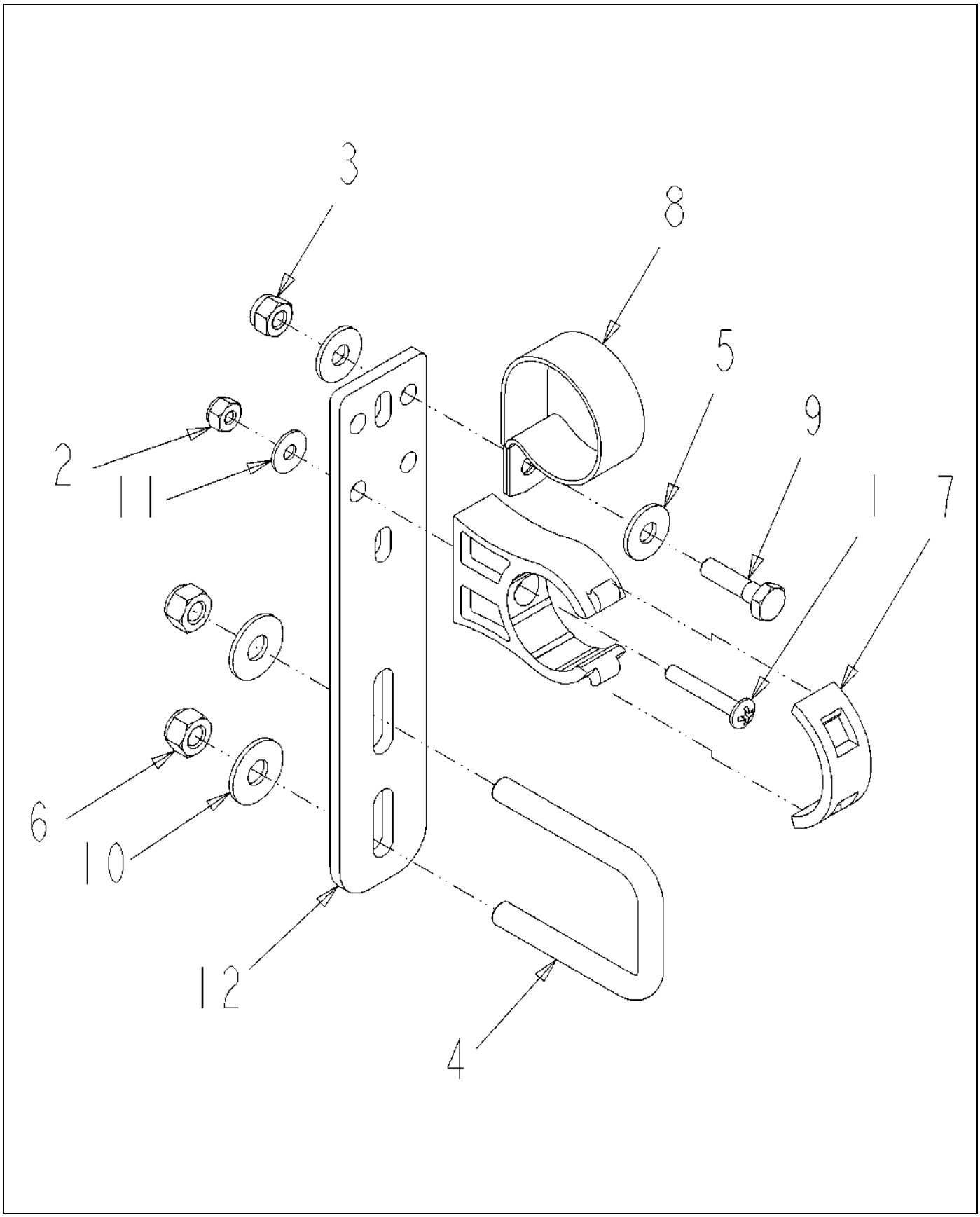

511789D1-01-R483-.TIF

Copyright © 2007 AGCO Corporation

BRKT ASM-STR,XLG,IPS,1.25 PCLP

ITEM	PART #	QTY	DESCRIPTION	COMMENTS
1	AG027273	1	SCREW 10-24X 1.25 PHD PHILSS(P	
2	AG027274	1	NUT #10-24NC HEX SS REG NY	
3	AG027275	1	NUT 0.25-20NC HEX SS REG NY	
4	AG231204	1	BOLT-U .31-18X1.88X2.63	
5	AG515121	2	WASHER 0.25 FL SS REG TYPE-B	
6	AG516403	2	NUT 0.31-18NC HEX SS REG NY	
7	AG519749	1	CLAMP 1.00 IPS POLY	
8	AG519751	1	CLAMP 1.38 DIA COATED HOSE	
9	AG562064	1	BOLT 0.25-20NCX 1.00 SS HHD	
10	AG562074	2	WASHER 0.31 FL SS REG TYPE-B	
11	AG562082	1	WASHER #10 FL SS REG TYPE-B	
12	511687D1	1	BRKT-STR,XLG,STANDOFF	

Copyright © 2007 AGCO Corporation

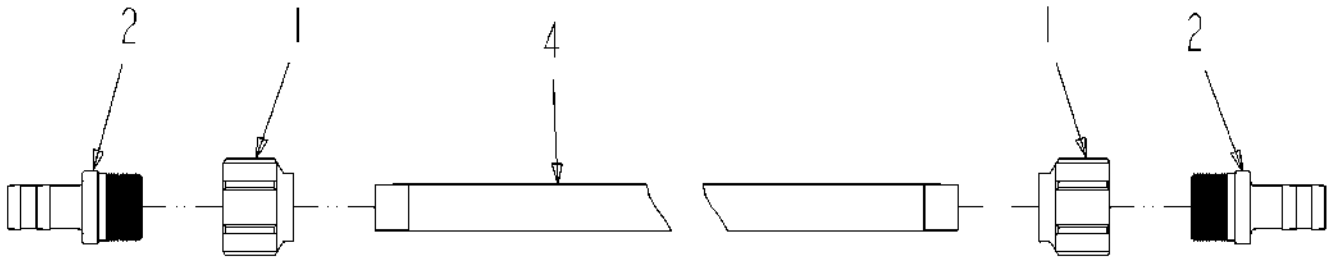

511820D1-01-R483-.TIF

Copyright © 2007 AGCO Corporation

PIPE ASM-W/2 1.00HB,102.00,PP

ITEM	PART #	QTY	DESCRIPTION	COMMENTS
1	AG050262	2	COUPLG RED 1.00X 1.50NPT POLYP	
2	AG051534	2	BARB-HOSE,1.50MNPTX1.25BARB,PP	
3	AG129187	AR	PIPE SEALANT-FLEX BLACK	
4	511821D1	1	TUBE-SECTION FEED,1.00X102.00	

Copyright © 2007 AGCO Corporation

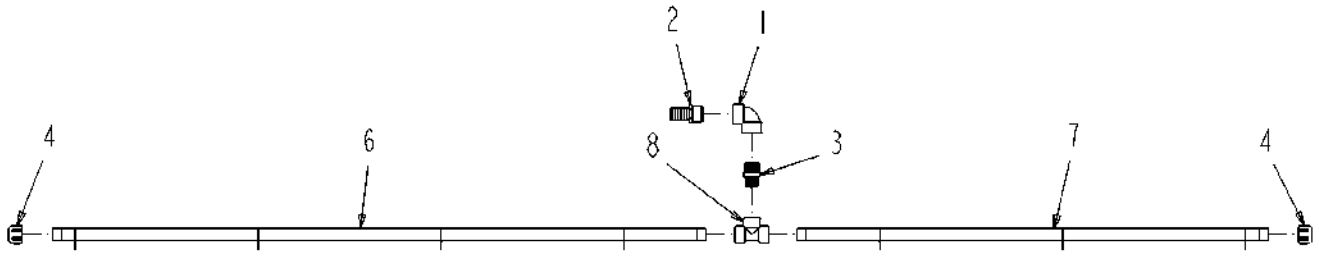

511822D1-01-R483-.TIF

Copyright © 2007 AGCO Corporation

PIPE ASM-90D W/1.00HB,7X20,PP

ITEM	PART #	QTY	DESCRIPTION	COMMENTS
1	AG051128	1	ELBOW-PIPE,1.25FNPT,90D,PP	
2	AG051186	1	BARB-HOSE,1.25MNPTX1.25BARB,PP	
3	AG051437	1	NIPPLE RED 1.25NPTX1.00NPT PP	
4	AG051536	2	CAP-PIPE,1.00NPT PP	
5	AG129187	AR	PIPE SEALANT-FLEX BLACK	
6	AG234462	1	TUBE 71.50 BOOM	
7	AG239721	1	TUBE-51.50,POLY	
8	AG516405	1	TEE,PIPE,1.00FNPT,PP	

Copyright © 2007 AGCO Corporation

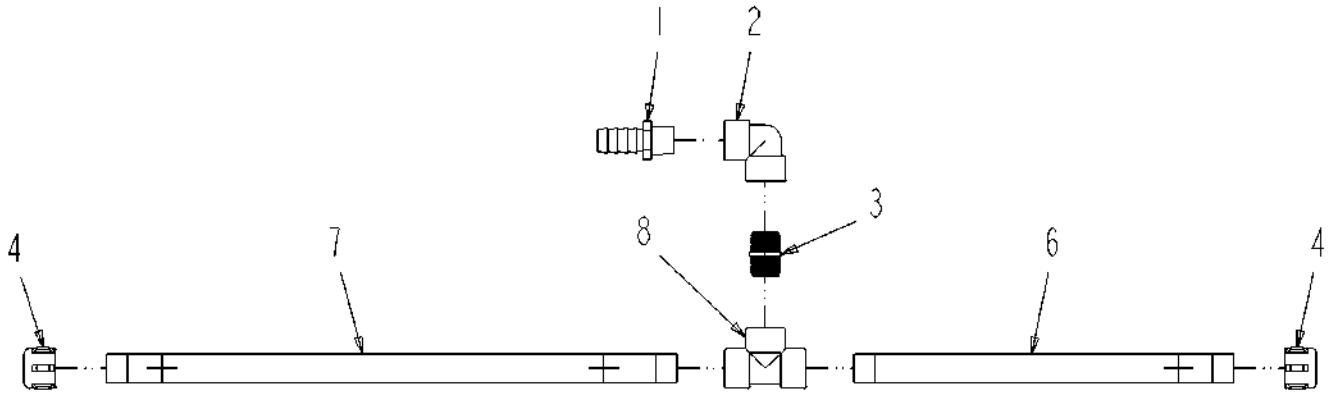

512412D1-01-R483-.TIF

Copyright © 2007 AGCO Corporation

PIPE ASM-90D W/1HB,3X20,PP,RH

ITEM	PART #	QTY	DESCRIPTION	COMMENTS
1	AG051059	1	BARB-HOSE,1.00MNPTX1.00BARB,PP	
2	AG051127	1	ELBOW-PIPE,1.00FNPT,90D,PP	
3	AG051153	1	NIPPLE-PIPE,1.00NPTXCLS,PP	
4	AG051536	2	CAP-PIPE,1.00NPT PP	
5	AG129187	AR	PIPE SEALANT-FLEX BLACK	
6	AG239722	1	TUBE-17.19,POLY	
7	AG239723	1	TUBE-25.81,POLY	
8	AG516405	1	TEE,PIPE,1.00FNPT,PP	

Copyright © 2007 AGCO Corporation

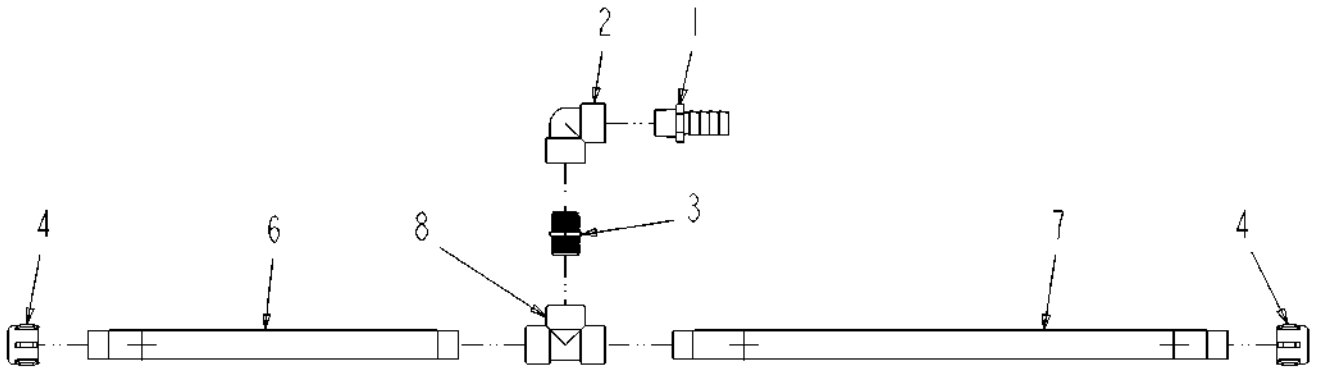

512413D1-01-R483-.TIF

Copyright © 2007 AGCO Corporation

PIPE ASM-90D W/1HB,3X20,PP,LH

ITEM	PART #	QTY	DESCRIPTION	COMMENTS
1	AG051059	1	BARB-HOSE,1.00MNPTX1.00BARB,PP	
2	AG051127	1	ELBOW-PIPE,1.00FNPT,90D,PP	
3	AG051153	1	NIPPLE-PIPE,1.00NPTXCLS,PP	
4	AG051536	2	CAP-PIPE,1.00NPT PP	
5	AG129187	AR	PIPE SEALANT-FLEX BLACK	
6	AG239722	1	TUBE-17.19,POLY	
7	AG239723	1	TUBE-25.81,POLY	
8	AG516405	1	TEE,PIPE,1.00FNPT,PP	

Copyright © 2007 AGCO Corporation

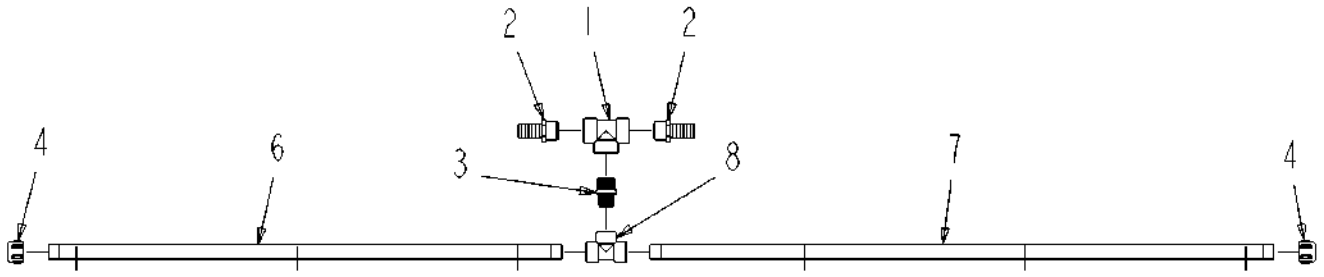

512414D1-01-R483-.TIF

Copyright © 2007 AGCO Corporation

PIPE ASM-T W/2 1.00HB,6X20,PP

ITEM	PART #	QTY	DESCRIPTION	COMMENTS
1	AG051162	1	TEE,PIPE,1.25FNPT,PP	
2	AG051186	2	BARB-HOSE,1.25MNPTX1.25BARB,PP	
3	AG051437	1	NIPPLE RED 1.25NPTX1.00NPT PP	
4	AG051536	2	CAP-PIPE,1.00NPT PP	
5	AG129187	AR	PIPE SEALANT-FLEX BLACK	
6	AG234469	1	TUBE 46.50 BOOM	
7	AG237787	1	TUBE-BOOM,20,56.50,PP	
8	AG516405	1	TEE,PIPE,1.00FNPT,PP	

Copyright © 2007 AGCO Corporation

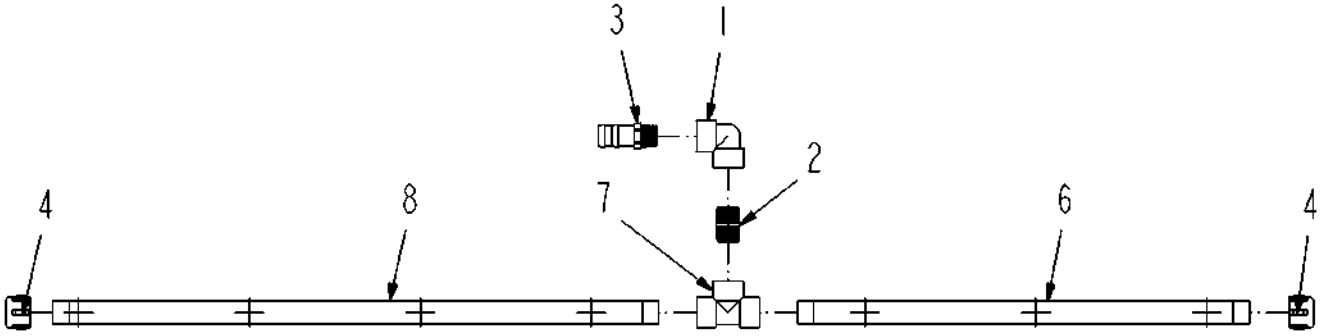

512415D1-01-R483-.TIF

Copyright © 2007 AGCO Corporation

PIPE ASM-90D W/1HB,7X10,PP,RH

ITEM	PART #	QTY	DESCRIPTION	COMMENTS
1	AG051127	1	ELBOW-PIPE,1.00FNPT,90D,PP	
2	AG051153	1	NIPPLE-PIPE,1.00NPTXCLS,PP	
3	AG051183	1	BARB-HOSE,1.00MNPTX1.25BARB,PP	
4	AG051536	2	CAP-PIPE,1.00NPT PP	
5	AG129187	AR	PIPE SEALANT-FLEX BLACK	
6	AG239936	1	TUBE-POLY,26.44,10IN CTR	
7	AG516405	1	TEE,PIPE,1.00FNPT,PP	
8	506805D1	1	TUBE-POLY,35.44,10IN CTR	

Copyright © 2007 AGCO Corporation

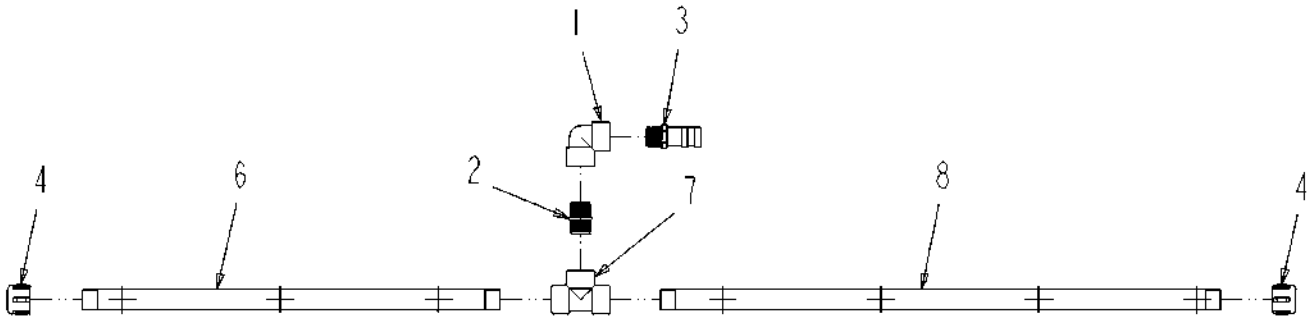

512416D1-01-R483-.TIF

Copyright © 2007 AGCO Corporation

PIPE ASM-90D W/1HB,7X10,PP,LH

ITEM	PART #	QTY	DESCRIPTION	COMMENTS
1	AG051127	1	ELBOW-PIPE,1.00FNPT,90D,PP	
2	AG051153	1	NIPPLE-PIPE,1.00NPTXCLS,PP	
3	AG051183	1	BARB-HOSE,1.00MNPTX1.25BARB,PP	
4	AG051536	2	CAP-PIPE,1.00NPT PP	
5	AG129187	AR	PIPE SEALANT-FLEX BLACK	
6	AG239936	1	TUBE-POLY,26.44,10IN CTR	
7	AG516405	1	TEE,PIPE,1.00FNPT,PP	
8	506805D1	1	TUBE-POLY,35.44,10IN CTR	

Copyright © 2007 AGCO Corporation

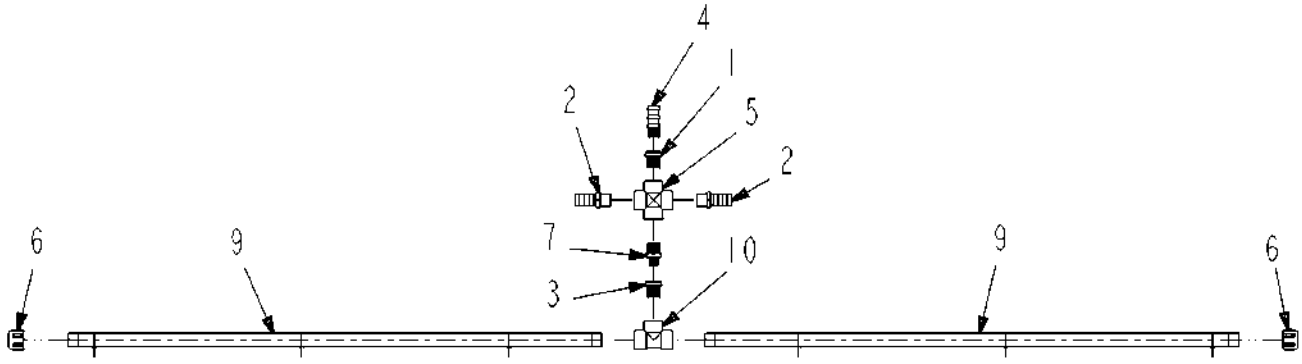

520487D1-01-R483-.TIF

Copyright © 2007 AGCO Corporation

PIPE ASM-X W/3 1.00HB,6X20,PP

ITEM	PART #	QTY	DESCRIPTION	COMMENTS
1	AG051057	1	BSHG-RDCR,HEX,1.00X0.75NPT,PP	
2	AG051059	2	BARB-HOSE,1.00MNPTX1.00BARB,PP	
3	AG051170	1	BSHG-RDCR,HEX,1.00X0.50NPT,PP	
4	AG051181	1	BARB-HOSE,0.75MNPTX1.00BARB,PP	
5	AG051442	1	CROSS-PIPE,1.00FNPT,PP	
6	AG051536	2	CAP-PIPE,1.00NPT PP	
7	AG053081	1	REDUCER NIPPLE 1.00 X .50	
8	AG129187	AR	PIPE SEALANT-FLEX BLACK	
9	AG239721	2	TUBE-51.50,POLY	
10	AG516405	1	TEE,PIPE,1.00FNPT,PP	

Copyright © 2007 AGCO Corporation

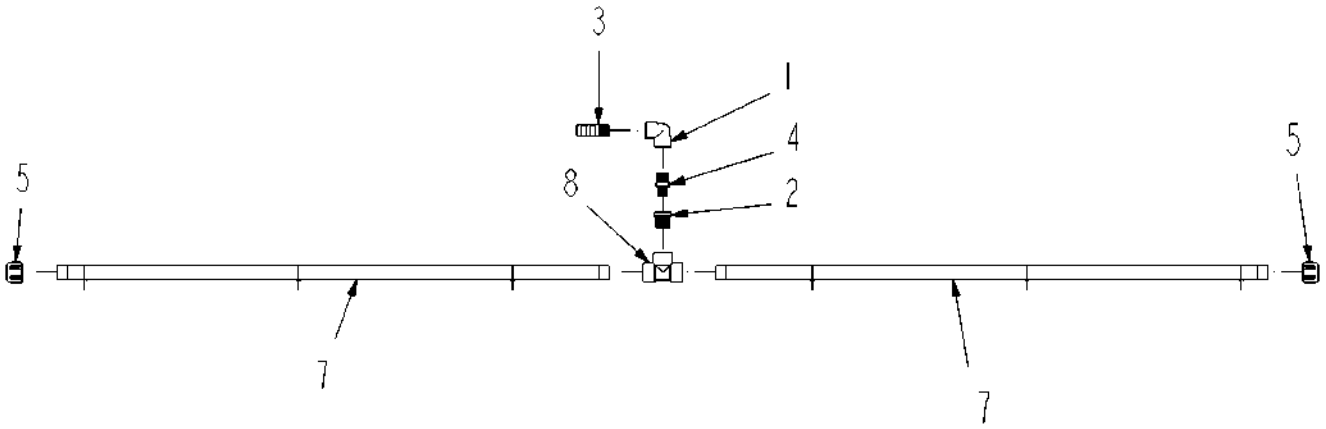

520488D1-01-R483-.TIF

Copyright © 2007 AGCO Corporation

PIPE ASM-90D W/1.00HB,6X20,PP

ITEM	PART #	QTY	DESCRIPTION	COMMENTS
1	AG051126	1	ELBOW-PIPE,0.75FNPT,90D,PP	
2	AG051170	1	BSHG-RDCR,HEX,1.00X0.50NPT,PP	
3	AG051181	1	BARB-HOSE,0.75MNPTX1.00BARB,PP	
4	AG051435	1	NIPPLE RED POLY 0.75 X 0.50	
5	AG051536	2	CAP-PIPE,1.00NPT PP	
6	AG129187	AR	PIPE SEALANT-FLEX BLACK	
7	AG239721	2	TUBE-51.50,POLY	
8	AG516405	1	TEE,PIPE,1.00FNPT,PP	

Copyright © 2007 AGCO Corporation

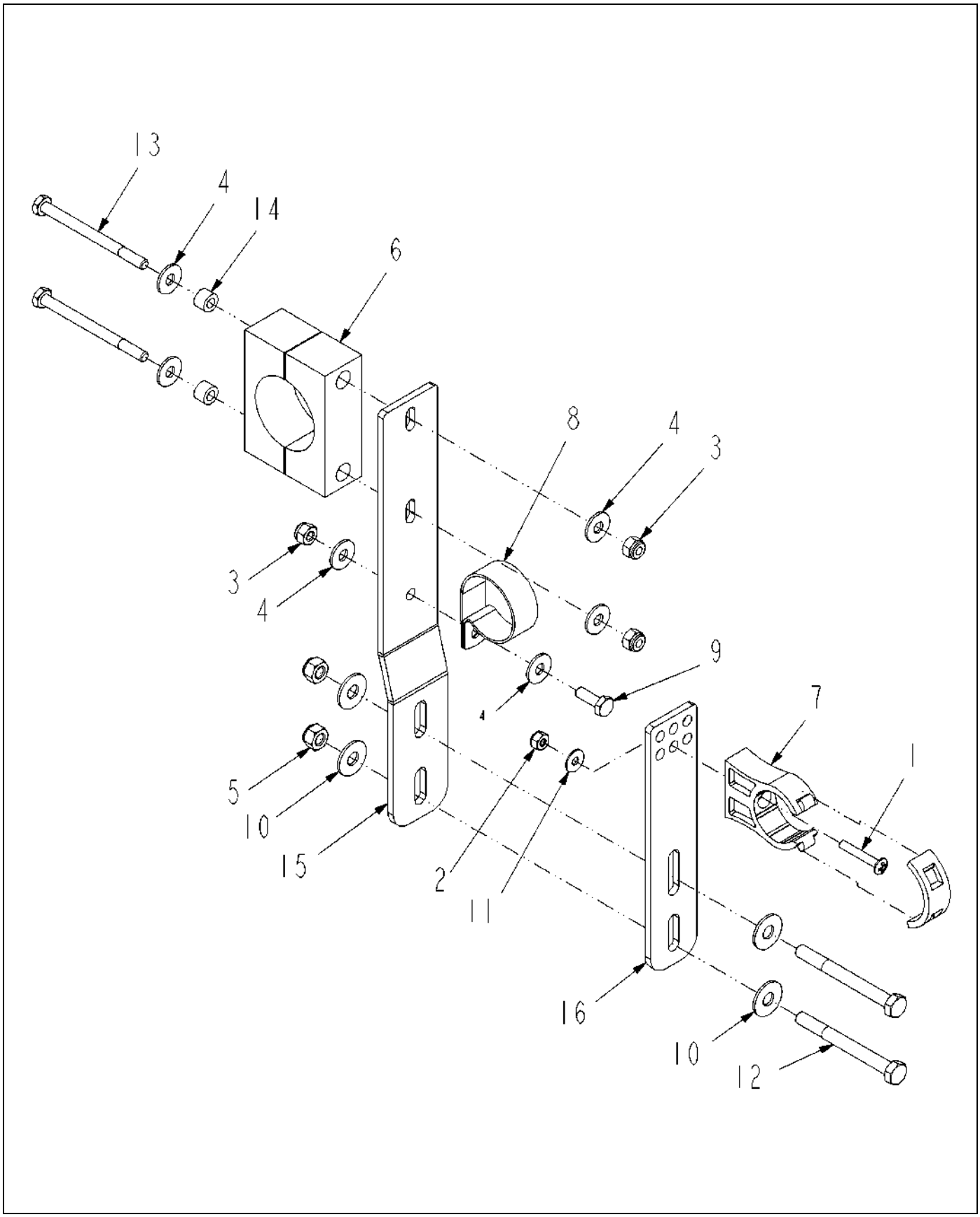

520541D1-01-R483-.TIF

Copyright © 2007 AGCO Corporation

BRKT ASM-L/STR,IPS/1.50 STAUFF

ITEM	PART #	QTY	DESCRIPTION	COMMENTS
1	AG027273	1	SCREW 10-24X 1.25 PHD PHILSS(P	
2	AG027274	1	NUT #10-24NC HEX SS REG NY	
3	AG027275	3	NUT 0.25-20NC HEX SS REG NY	
4	AG515121	6	WASHER 0.25 FL SS REG TYPE-B	
5	AG516403	2	NUT 0.31-18NC HEX SS REG NY	
6	AG519180	1	CLAMP 1.50 BLACK POLY	
7	AG519749	1	CLAMP 1.00 IPS POLY	
8	AG523412	1	CLAMP-1.62 DIA,COATED HOSE	
9	AG562054	1	BOLT 0.25-20NCX 0.75 SS HHD	
10	AG562074	4	WASHER 0.31 FL SS REG TYPE-B	
11	AG562082	1	WASHER #10 FL SS REG TYPE-B	
12	AG562105	2	BOLT 0.31-18NCX 3.00 SS HHD	
13	AG563061	2	BOLT 0.25-20NCX 3.25 SS HHD	
14	AG609777	2	INSERT STAUFF SPACER	
15	509884D1	1	BRKT-Z,STANDOFF,LG,1.50STAUFF	
16	511432D1	1	BRKT-STR,LG STANDOFF	

Copyright © 2007 AGCO Corporation

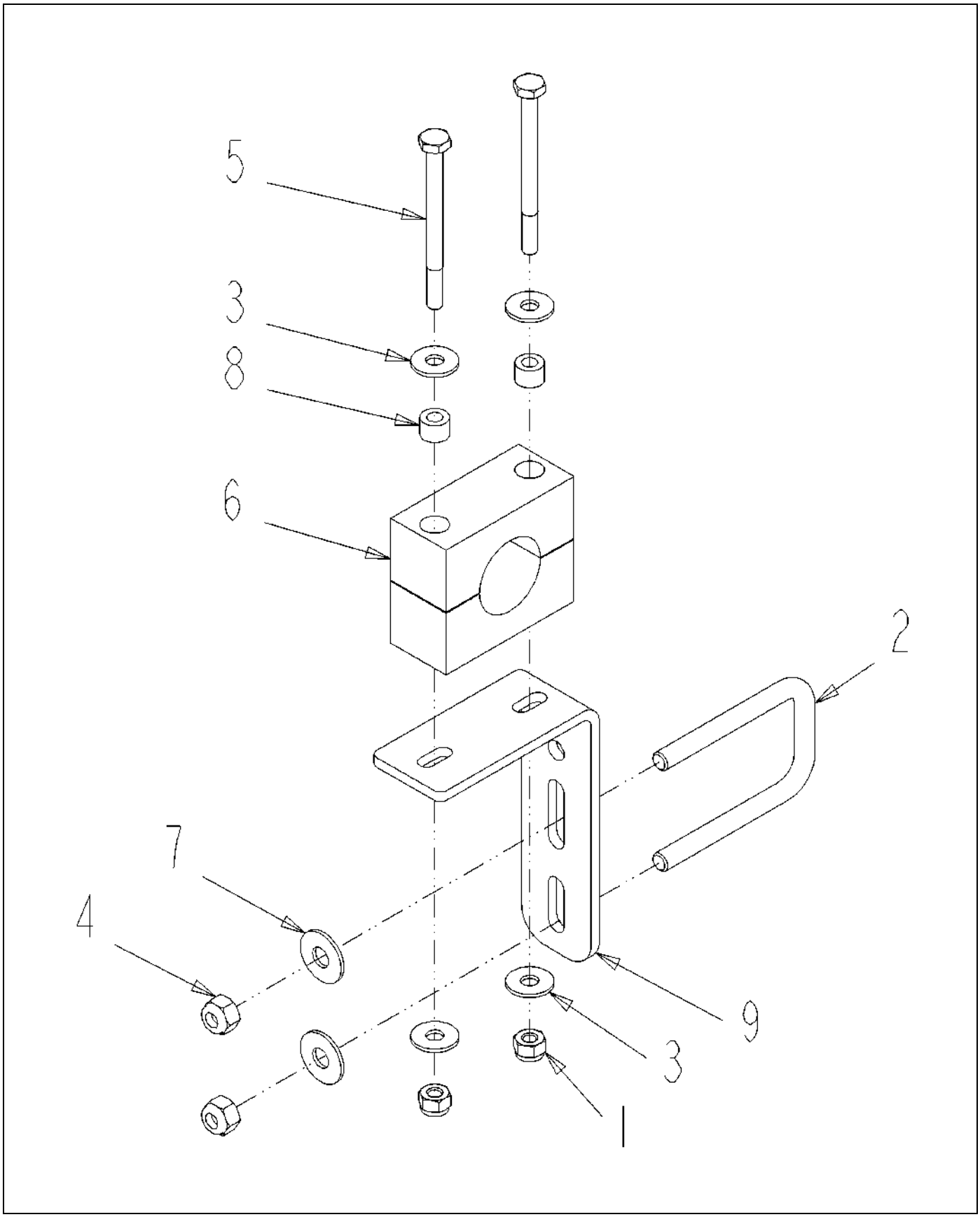

520542D1-01-R483-.TIF

Copyright © 2007 AGCO Corporation

BRKT ASM-L,LG,STAUFF,LG UBOLT

ITEM	PART #	QTY	DESCRIPTION	COMMENTS
1	AG027275	2	NUT 0.25-20NC HEX SS REG NY	
2	AG261322	1	BOLT-U .31-18X1.56X 2.97SQ,SS	
3	AG515121	4	WASHER 0.25 FL SS REG TYPE-B	
4	AG516403	2	NUT 0.31-18NC HEX SS REG NY	
5	AG518492	2	BOLT 0.25-20NCX 3.00 SS HHD	
6	AG519748	1	CLAMP 1.00 PIPE	[A]
7	AG562074	2	WASHER 0.31 FL SS REG TYPE-B	
8	AG609777	2	INSERT STAUFF SPACER	
9	509885D1	1	BRKT-L,STANDOFF,STAUFF	
	FOOTNOTE [A]		2 INSERTS AND 2 CLAMP MAKE UP 1 PART. BOLT - AG563061, WASHER - AG515121, NUT - AG027275,	

Copyright © 2007 AGCO Corporation

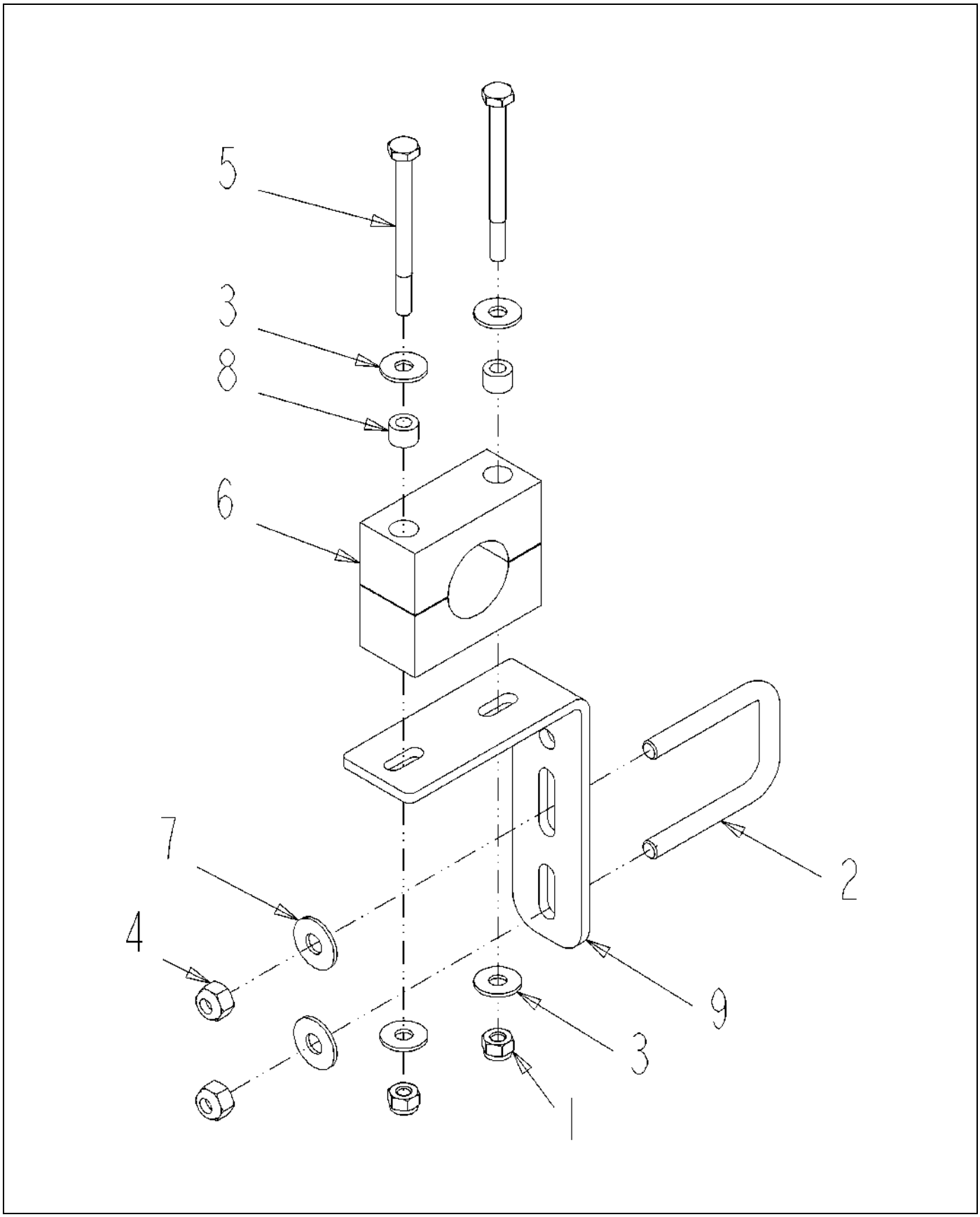

520543D1-01-R483-.TIF

Copyright © 2007 AGCO Corporation

BRKT ASM-L,LG,STAUFF,XLG OFFST

ITEM	PART #	QTY	DESCRIPTION	COMMENTS
1	AG027275	2	NUT 0.25-20NC HEX SS REG NY	
2	AG231204	1	BOLT-U .31-18X1.88X2.63	
3	AG515121	4	WASHER 0.25 FL SS REG TYPE-B	
4	AG516403	2	NUT 0.31-18NC HEX SS REG NY	
5	AG518492	2	BOLT 0.25-20NCX 3.00 SS HHD	
6	AG519748	1	CLAMP 1.00 PIPE	[A]
7	AG562074	2	WASHER 0.31 FL SS REG TYPE-B	
8	AG609777	2	INSERT STAUFF SPACER	
9	520540D1	1	BRKT-L,LG,STANDOFF,XLG OFFSET	
	FOOTNOTE [A]		2 INSERTS AND 2 CLAMP MAKE UP 1 PART. BOLT - AG563061, WASHER - AG515121, NUT - AG027275,	

Copyright © 2007 AGCO Corporation

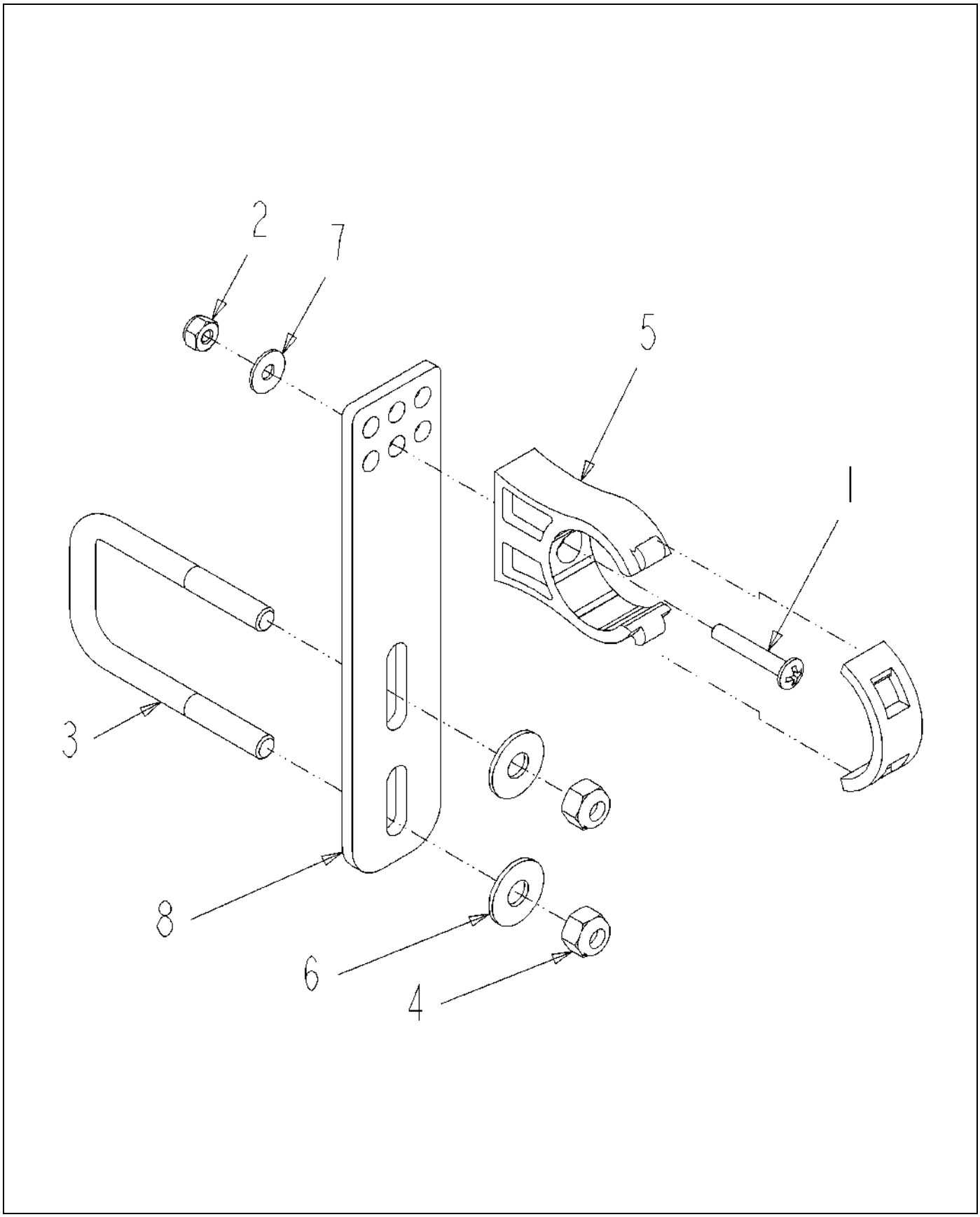

520544D1-01-R483-.TIF

Copyright © 2007 AGCO Corporation

BRKT ASM-STR,LG,IPS,LG UBOLT

ITEM	PART #	QTY	DESCRIPTION	COMMENTS
1	AG027273	1	SCREW 10-24X 1.25 PHD PHILSS(P	
2	AG027274	1	NUT #10-24NC HEX SS REG NY	
3	AG261322	1	BOLT-U .31-18X1.56X 2.97SQ,SS	
4	AG516403	2	NUT 0.31-18NC HEX SS REG NY	
5	AG519749	1	CLAMP 1.00 IPS POLY	
6	AG562074	2	WASHER 0.31 FL SS REG TYPE-B	
7	AG562082	1	WASHER #10 FL SS REG TYPE-B	
8	511432D1	1	BRKT-STR,LG STANDOFF	

Copyright © 2007 AGCO Corporation

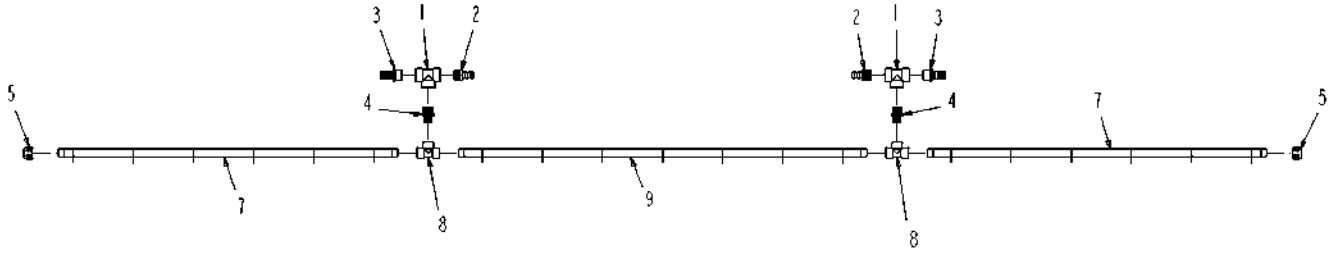

520581D1-01-R483-.TIF

Copyright © 2007 AGCO Corporation

PIPE ASM-2T,1HB/125HB,19X10,PP

ITEM	PART #	QTY	DESCRIPTION	COMMENTS
1	AG051162	2	TEE,PIPE,1.25FNPT,PP	
2	AG051185	2	BARB-HOSE,1.25MNPTX1.00BARB,PP	
3	AG051186	2	BARB-HOSE,1.25MNPTX1.25BARB,PP	
4	AG051437	2	NIPPLE RED 1.25NPTX1.00NPT PP	
5	AG051536	2	CAP-PIPE,1.00NPT PP	
6	AG129187	AR	PIPE SEALANT-FLEX BLACK	
7	AG239937	2	TUBE-POLY,56.44,10IN CTR	
8	AG516405	2	TEE,PIPE,1.00FNPT,PP	
9	506806D1	1	TUBE-POLY,67.88,10IN CTR	

Copyright © 2007 AGCO Corporation

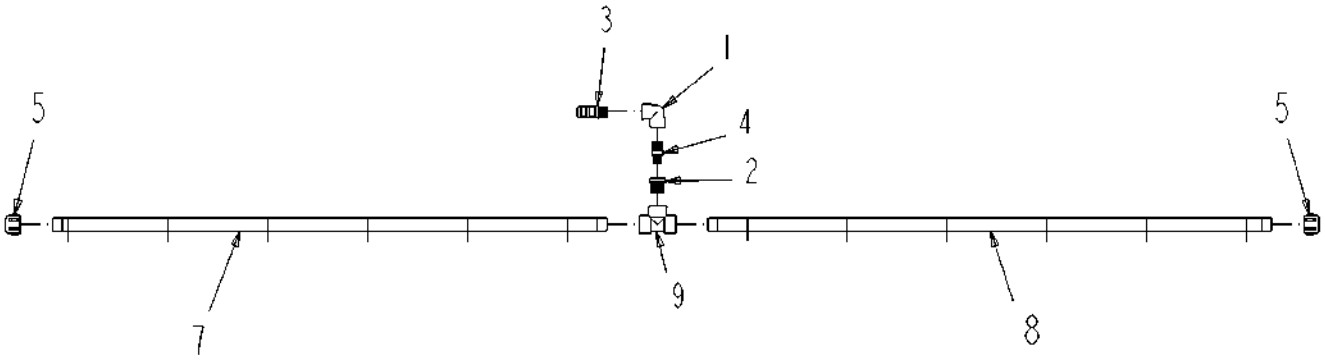

520582D1-01-R483-.TIF

Copyright © 2007 AGCO Corporation

PIPE ASM-90D W/1.00HB,12X10,PP

ITEM	PART #	QTY	DESCRIPTION	COMMENTS
1	AG051126	1	ELBOW-PIPE,0.75FNPT,90D,PP	
2	AG051170	1	BSHG-RDCR,HEX,1.00X0.50NPT,PP	
3	AG051181	1	BARB-HOSE,0.75MNPTX1.00BARB,PP	
4	AG051435	1	NIPPLE RED POLY 0.75 X 0.50	
5	AG051536	2	CAP-PIPE,1.00NPT PP	
6	AG129187	AR	PIPE SEALANT-FLEX BLACK	
7	AG134850	1	TUBE-PP,55.44,10IN CTR	
8	AG239937	1	TUBE-POLY,56.44,10IN CTR	
9	AG516405	1	TEE,PIPE,1.00FNPT,PP	

Copyright © 2007 AGCO Corporation

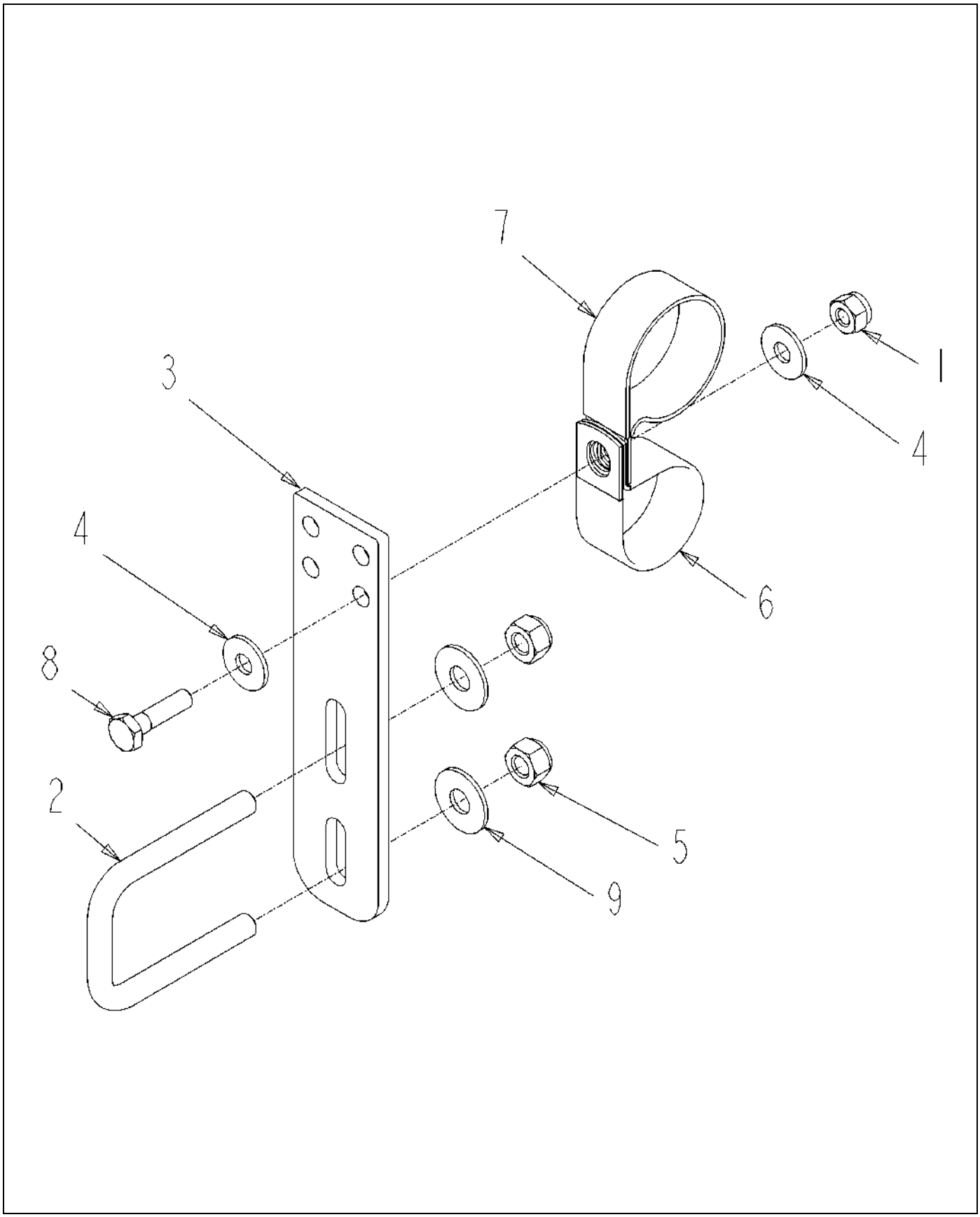

520626D1-01-R483-.TIF

Copyright © 2007 AGCO Corporation

BRKT ASM-STR,SH,1.00/1.25 PCLP

ITEM	PART #	QTY	DESCRIPTION	COMMENTS
1	AG027275	1	NUT 0.25-20NC HEX SS REG NY	
2	AG231204	1	BOLT-U .31-18X1.88X2.63	
3	AG234373	1	BRACKET SHORT STANDOFF	
4	AG515121	2	WASHER 0.25 FL SS REG TYPE-B	
5	AG516403	2	NUT 0.31-18NC HEX SS REG NY	
6	AG519751	1	CLAMP 1.38 DIA COATED HOSE	
7	AG523412	1	CLAMP-1.62 DIA,COATED HOSE	
8	AG562064	1	BOLT 0.25-20NCX 1.00 SS HHD	
9	AG562074	2	WASHER 0.31 FL SS REG TYPE-B	

Copyright © 2007 AGCO Corporation

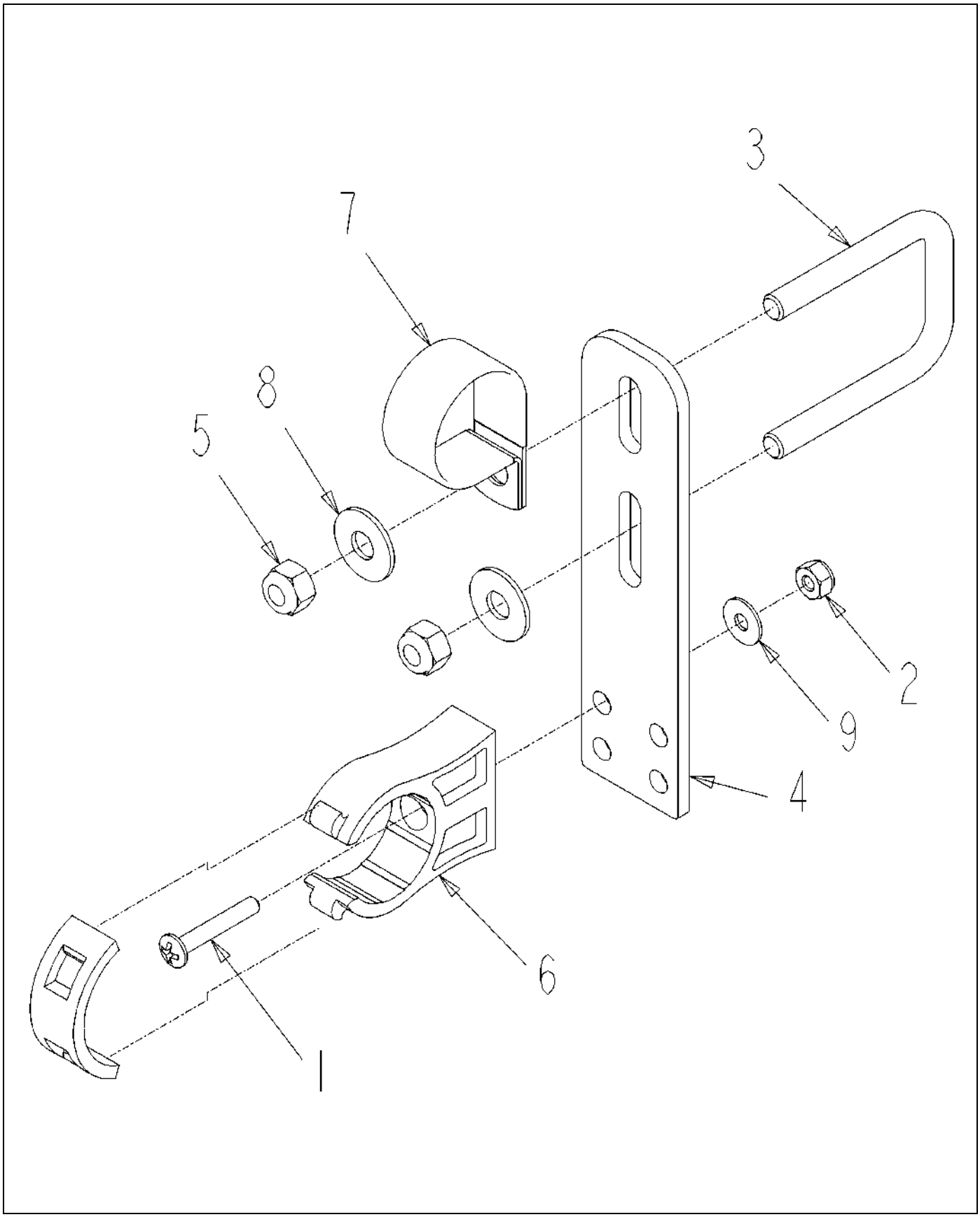

520634D1-01-R483-.TIF

Copyright © 2007 AGCO Corporation

BRKT ASM-STR,SH,IPS/1.00 PCLP

ITEM	PART #	QTY	DESCRIPTION	COMMENTS
1	AG027273	1	SCREW 10-24X 1.25 PHD PHILSS(P	
2	AG027274	1	NUT #10-24NC HEX SS REG NY	
3	AG231204	1	BOLT-U .31-18X1.88X2.63	
4	AG234373	1	BRACKET SHORT STANDOFF	
5	AG516403	2	NUT 0.31-18NC HEX SS REG NY	
6	AG519749	1	CLAMP 1.00 IPS POLY	
7	AG519751	1	CLAMP 1.38 DIA COATED HOSE	
8	AG562074	2	WASHER 0.31 FL SS REG TYPE-B	
9	AG562082	1	WASHER #10 FL SS REG TYPE-B	

Copyright © 2007 AGCO Corporation

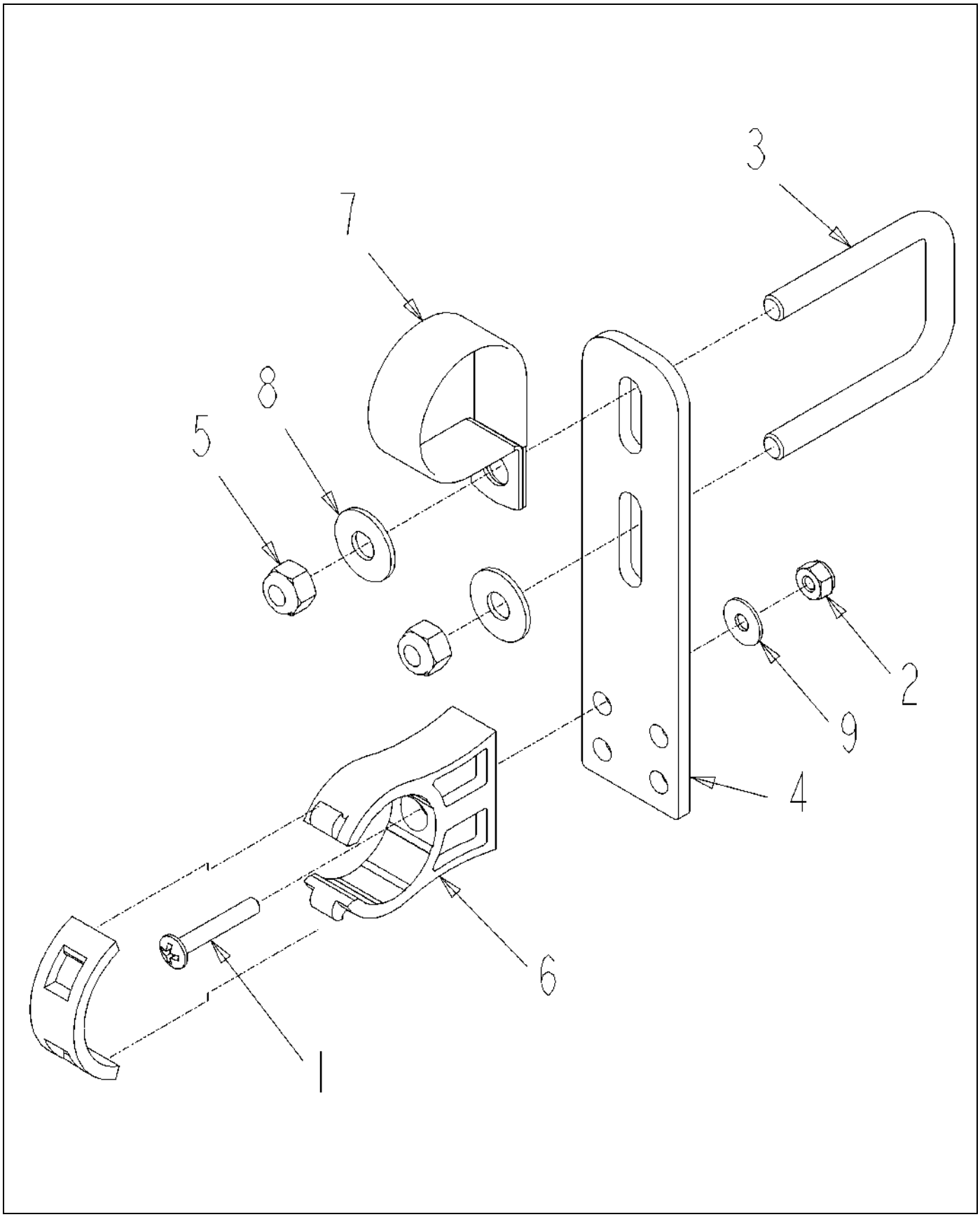

520635D1-01-R483-.TIF

Copyright © 2007 AGCO Corporation

SHAFT AS-PEDAL

ITEM	PART #	QTY	DESCRIPTION	COMMENTS
1	AG027273	1	SCREW 10-24X 1.25 PHD PHILSS(P	
2	AG027274	1	NUT #10-24NC HEX SS REG NY	
3	AG231204	1	BOLT-U .31-18X1.88X2.63	
4	AG234373	1	BRACKET SHORT STANDOFF	
5	AG516403	2	NUT 0.31-18NC HEX SS REG NY	
6	AG519749	1	CLAMP 1.00 IPS POLY	
7	AG523533	1	CLAMP-1.62 DIA,COATED,HOSE	
8	AG562074	2	WASHER 0.31 FL SS REG TYPE-B	
9	AG562082	1	WASHER #10 FL SS REG TYPE-B	

Copyright © 2007 AGCO Corporation

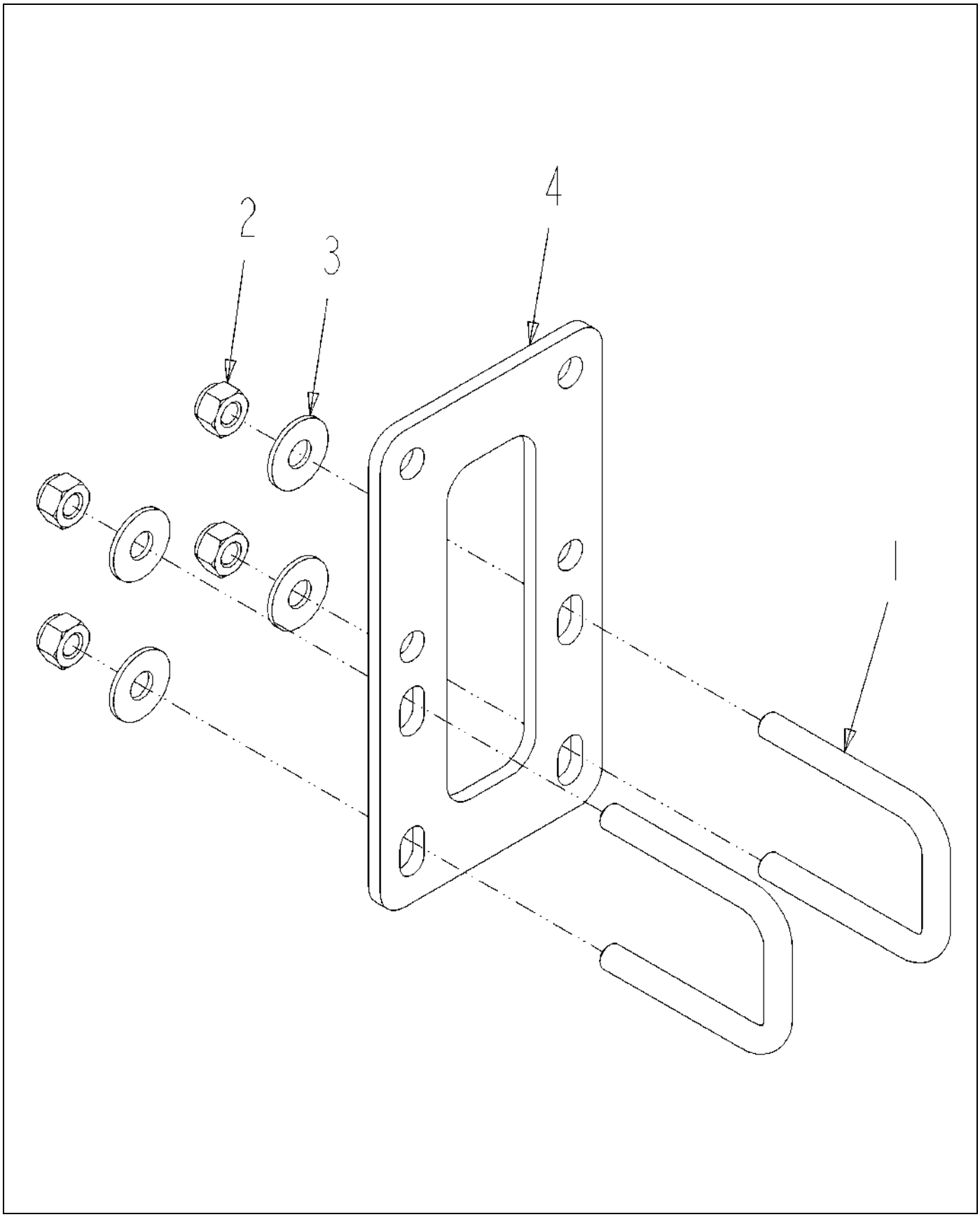

520705D1-01-R483-.TIF

Copyright © 2007 AGCO Corporation

BRKT ASM-MTG,SNSR

ITEM	PART #	QTY	DESCRIPTION	COMMENTS
1	AG231204	2	BOLT-U .31-18X1.88X2.63	
2	AG516403	4	NUT 0.31-18NC HEX SS REG NY	
3	AG562074	4	WASHER 0.31 FL SS REG TYPE-B	
4	520706D1	1	PLATE-MTG,SNSR,AUTOBOOM	

Copyright © 2007 AGCO Corporation

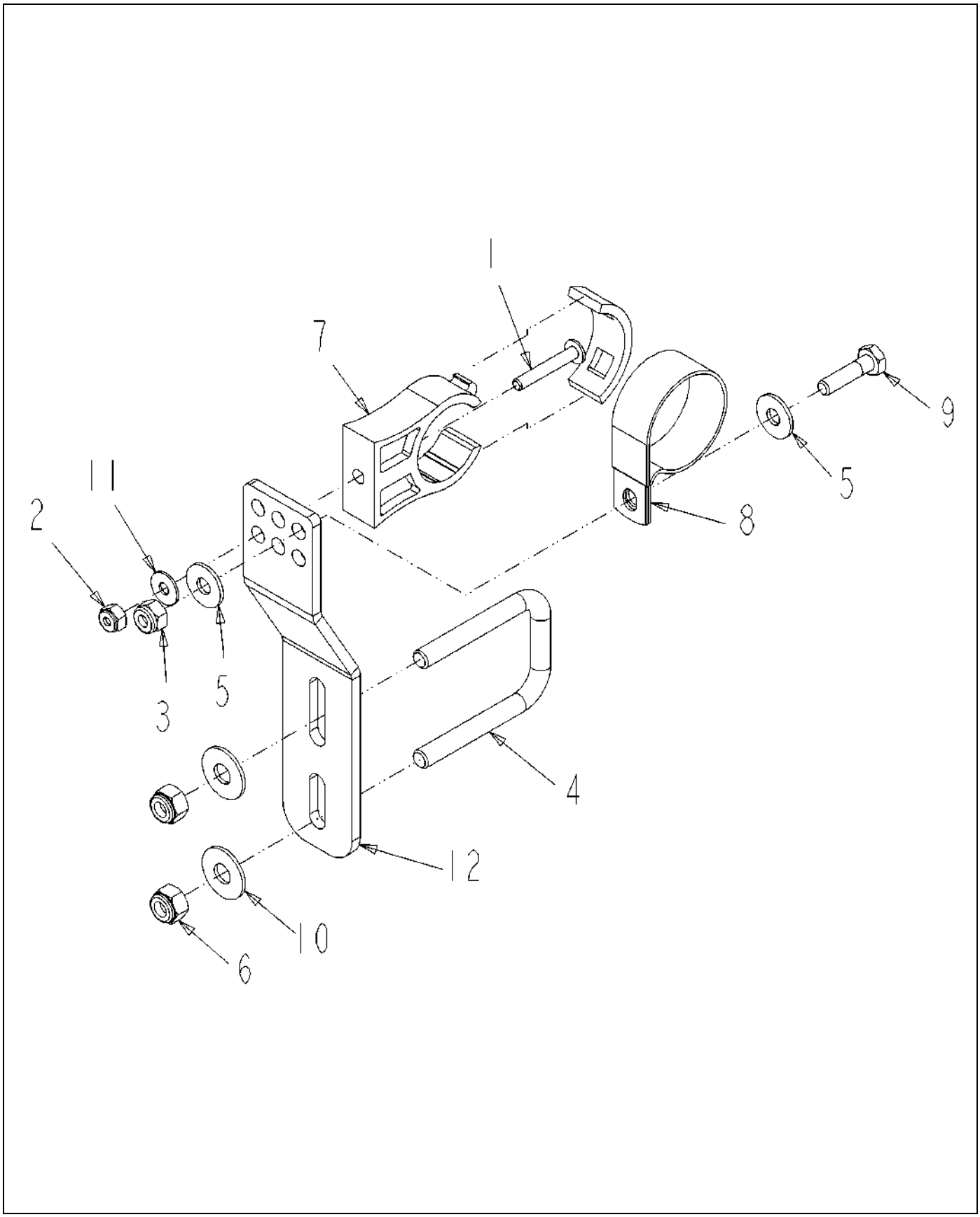

520893D1-01-R483-.TIF

Copyright © 2007 AGCO Corporation

BRKT ASM-Z,SH,1.00IPS/1.25PCLP

ITEM	PART #	QTY	DESCRIPTION	COMMENTS
1	AG027273	1	SCREW 10-24X 1.25 PHD PHILSS(P	
2	AG027274	1	NUT #10-24NC HEX SS REG NY	
3	AG027275	1	NUT 0.25-20NC HEX SS REG NY	
4	AG231204	1	BOLT-U .31-18X1.88X2.63	
5	AG515121	2	WASHER 0.25 FL SS REG TYPE-B	
6	AG516403	2	NUT 0.31-18NC HEX SS REG NY	
7	AG519749	1	CLAMP 1.00 IPS POLY	
8	AG523412	1	CLAMP-1.62 DIA,COATED HOSE	
9	AG562064	1	BOLT 0.25-20NCX 1.00 SS HHD	
10	AG562074	2	WASHER 0.31 FL SS REG TYPE-B	
11	AG562082	1	WASHER #10 FL SS REG TYPE-B	
12	509881D1	1	BRKT-Z,STANDOFF,SH	

Copyright © 2007 AGCO Corporation

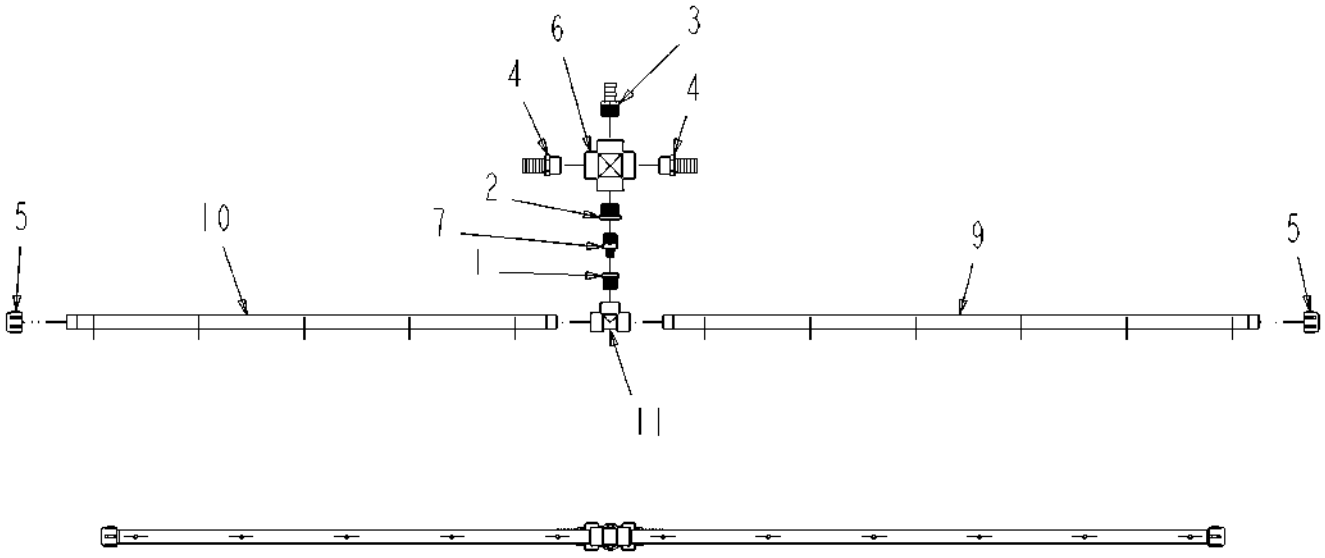

520901D1-01-R483-.TIF

Copyright © 2007 AGCO Corporation

PIPE ASM-X,W/2125/1HB,11X10,PP

ITEM	PART #	QTY	DESCRIPTION	COMMENTS
1	AG051170	1	BSHG-RDCR,HEX,1.00X0.50NPT,PP	
2	AG051172	1	BSHG-RDCR,HEX,1.25X1.00NPT,PP	
3	AG051185	1	BARB-HOSE,1.25MNPTX1.00BARB,PP	
4	AG051186	2	BARB-HOSE,1.25MNPTX1.25BARB,PP	
5	AG051536	2	CAP-PIPE,1.00NPT PP	
6	AG051850	1	CROSS-PIPE,1.25FNPT,PP	
7	AG053081	1	REDUCER NIPPLE 1.00 X .50	
8	AG129187	AR	PIPE SEALANT-FLEX BLACK	
9	AG239937	1	TUBE-POLY,56.44,10IN CTR	
10	AG239938	1	TUBE-POLY,46.44,10IN CTR	
11	AG516405	1	TEE,PIPE,1.00FNPT,PP	

Copyright © 2007 AGCO Corporation

CYLINDER ASM-BOOM SWING	5-1
CYLINDER-HYD,3.00X12.00X1.38	5-2
ELBOW-90D,-6STOR X -4ORFS	5-3
CYLINDER ASM-BOOM BREAKAWAY	5-4
VALVE-CHECK ASM,6MOR X 8ORFS	5-5
ELBOW AS-90DEG-6STOR-8ORFS	5-6
CONNECTOR AS-STR-6STOR-8ORFS	5-7
CYLINDER-HYD,3.00X6.00X1.38	5-8
CYLINDER ASM-HOIST,BOOM	5-9
CYL-HYD,2.5X52X1.75,W/CB VALVE	5-10
CYL INSTL-TLT,AUTOBM,80/90/100	5-11
CYL INSTL-TILT,STD,80/90/100	5-12
PLMB INSTL-HYD,BOOM,80/90/100	5-13
PLMB INSTL-HYD,BOOM,80/90/100	5-14
BLOCK ASM-HYD,BOOM	5-15
CONNECTOR AS-6 STOR -6 ORFS	5-16
CONNECTOR AS-STR-8STOR-6ORFS	5-17
CONNECTOR AS-STR-6STOR-40ORFS	5-18
VALVE-HYD,7 BANK,W/BREAKAWAY	5-19
VALVE-HYD,7 BANK,W/BREAKAWAY	5-20
VALVE-HYD,7 BANK,W/BREAKAWAY	5-21
ADPTR-STR,.50MO-R X .50MO-R	5-22
CONNECTOR AS. ELEC	5-23
ELBOW AS-90-6STOR X 6ORFS	5-24
BLOCK-VALVE,HYD,AUTOBOOM,G2	5-25
TEE AS-6 ORFSX3	5-26
TEE-SWIVEL 3X -8 ORFS	5-27
BLOCK INSTL-HYD,BM/AUTOBOOM,G2	5-28
CYLINDER-HYD,3.00X11.38X1.25	5-29
ELBOW-90D,-12STOR X -8ORFS	5-30
CYLINDER-HYD,4.00X6.00X2.00	5-31
CYL ASM-HYD,SWG,BM,120	5-32
CYL-HYD,4.00X21.89X1.75,BM SWG	5-33
ELBOW AS-90D 12STOR X 12ORFS	5-34
CYL ASM-HOIST,BM,5.00 SL	5-35
CYL INSTL-TILT,STD,80/90/100	5-36
CYLINDER ASM-BOOM TILT,LH	5-37
CYLINDER-HYD,2.50X12.00X1.12	5-38
CYLINDER ASM-BOOM TILT,RH	5-39
BLOCK INSTL-HYD,STD,BOOM	5-40
BLOCK ASM-HYD,BOOM	5-41
ADAP STR 0.37MO-R X 0.37MJIC	5-42
BLK INSTL-HYD,NO AUTOBM,SM BM	5-43
CYLINDER ASM-BOOM TIP FOLD	5-44
CYLINDER-HYD,2.00X16.00X1.25	5-45
VALVE INSTL-HYD,PWM,HV	5-46
FTG ASM-ORIENT,PWM VALVE,20GPM	5-47
ELBOW AS-45 -12STOR-12ORFS	5-48
VALVE-HYD,PWM,LIQ SYS,20 GPM	5-49
CONNECTOR AS-12 ORFSX 12STOR	5-50
PUMP INSTL-HYD,SYS,HV	5-51

PUMP ASM-HYD,SYS,HV	5-52
CONNECTOR AS.-16 STORX16 ORFS	5-53
VALVE-HYD,PWM,LIQ SYS,15 GPM	5-54
PUMP INSTL-HYD,20GPM,LIQ,1074C	5-55
PUMP ASM-HYD,2.11CIR,.88 13T	5-56
PUMP-HYD,2.11CIR,.88 13T	5-57
PUMP INSTL-HYD,SYS,1286C	5-58
PUMP ASM-HYD,SYS,HV	5-59
PUMP-HYD,1.87CIR,.88 13T	5-60
CYLINDER ASM-BOOM TIP FOLD	5-61
CYLINDER-HYD,2.25X14.00X1.25	5-62
CYLINDER ASM-FOLD BACK,BM,120	5-63
CYLINDER-HYD,3.00X14.00X1.38	5-64
CYL INSTL-TILT,W/O AUTOBM,120	5-65
CYL ASM-TILT,W/O AUTOBM,120,RH	5-66
BLOCK INSTL-HYD,W/O AUTOBM,120	5-67
BLOCK ASM-HYD,W/O AUTOBM,120	5-68
BLOCK-VALVE,7BANK,NO AUTOBOOM	5-69
BLOCK-VALVE,7BANK,NO AUTOBOOM	5-70
BLOCK INSTL-HYD,W/AUTOBOOM,120	5-71
BLOCK ASM-HYD,W/AUTOBOOM,120	5-72
HOSE INSTL-HYD,LIQ SYS,1286C	5-73
CAP INSTL-COMBO,LIQ,10/12X4C	5-74
CAP INSTL-COMBO,LIQ,10/12X4C	5-75
HOSE INSTL-HYD,LIQ SYS,8/1074	5-76
HOSE INSTL-HYD,BM BLOCK,RG	5-77
HOSE INSTL-HYD,LIQ SYS,1074C	5-78
HOSE INSTL-HYD,LIQ SYS,MONGREL	5-79
HOSE INSTL-HYD,LIQ SYS,MONG C	5-80
CYL ASM-HYD,SWG,BM,120	5-81

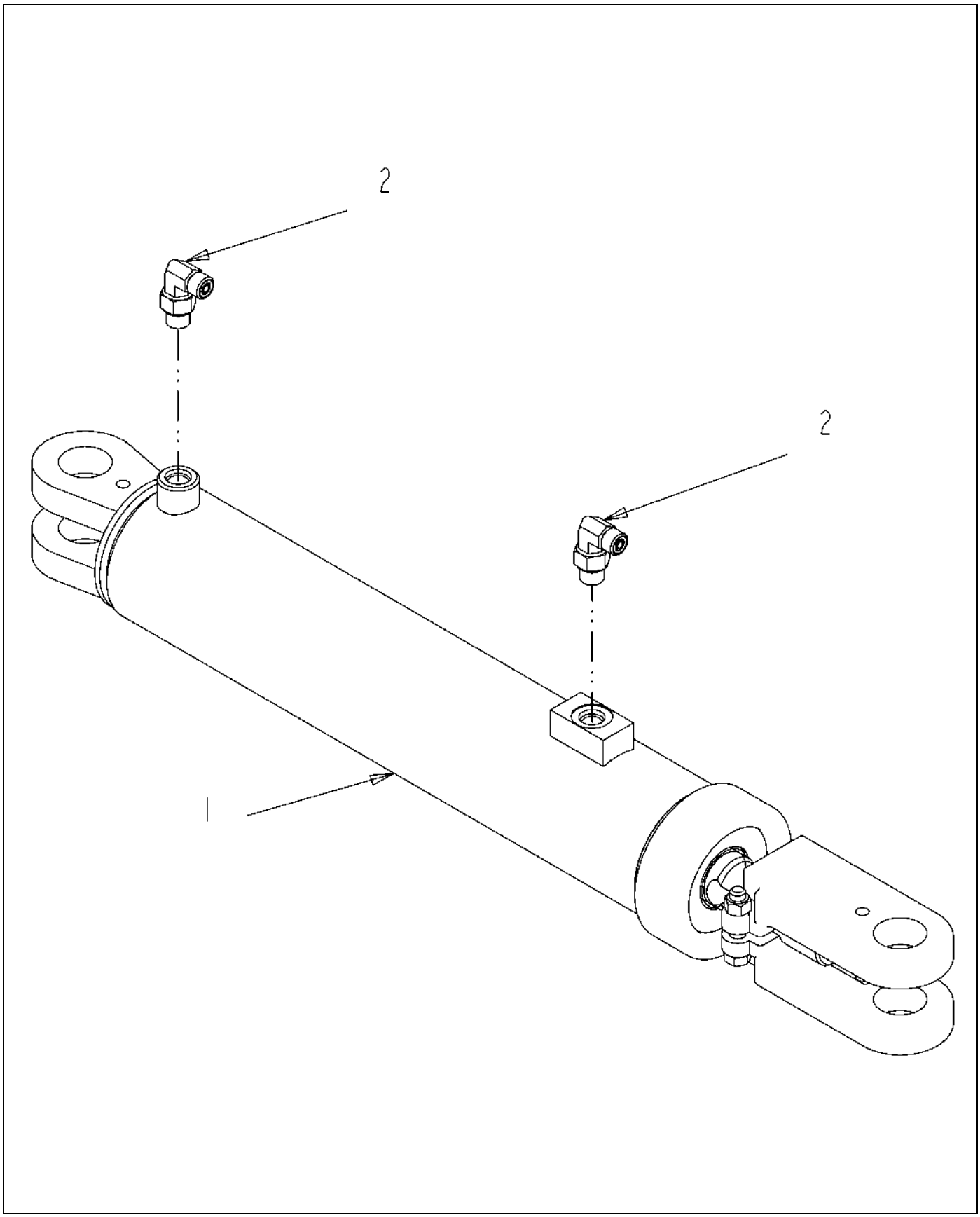

512480D1-01-N562-.TIF

Copyright © 2007 AGCO Corporation

CYLINDER ASM-BOOM SWING

ITEM	PART #	QTY	DESCRIPTION	COMMENTS
1	AG126326	1	CYLINDER-HYD,3.00X12.00X1.38	SEE PAGE 5-2
2	401289X1	2	ELBOW-90D,-6STOR X -4ORFS	SEE PAGE 5-3

Copyright © 2007 AGCO Corporation

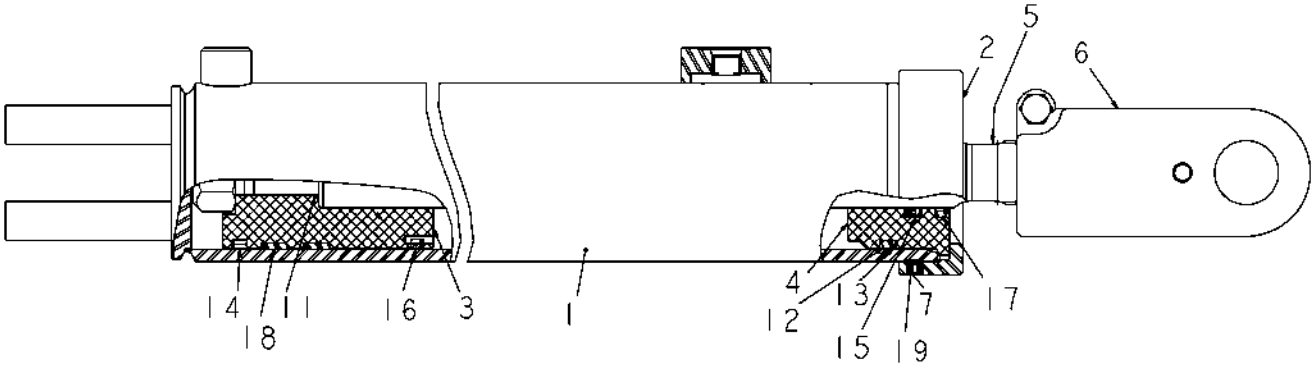

126326-F.TIF

Copyright © 2007 AGCO Corporation

ITEM	PART #	QTY	DESCRIPTION	COMMENTS
REF	AG727663	1	SEAL/KIT CYL (126326)	
REF	AG127749	1	SEAL KIT	[A]
2	AG138348	1	CAP/HEAD GLAND	
3	AG138416	1	PISTON	
4	AG727112	1	GLAND/HEAD	
5	AG727107	1	ROD/CYLINDER	
6	AG059665	1	CLEVIS,ADJUSTABLE 522928	
7	AG061236	1	SCREW/SET .313-18X.25	
	FOOTNOTE [A]		ITEMS 15 - 23 CANNOT BE PURCHASED INDIVIDUALLY BUT ARE INCLUDED IN SEAL KIT	

Copyright © 2007 AGCO Corporation

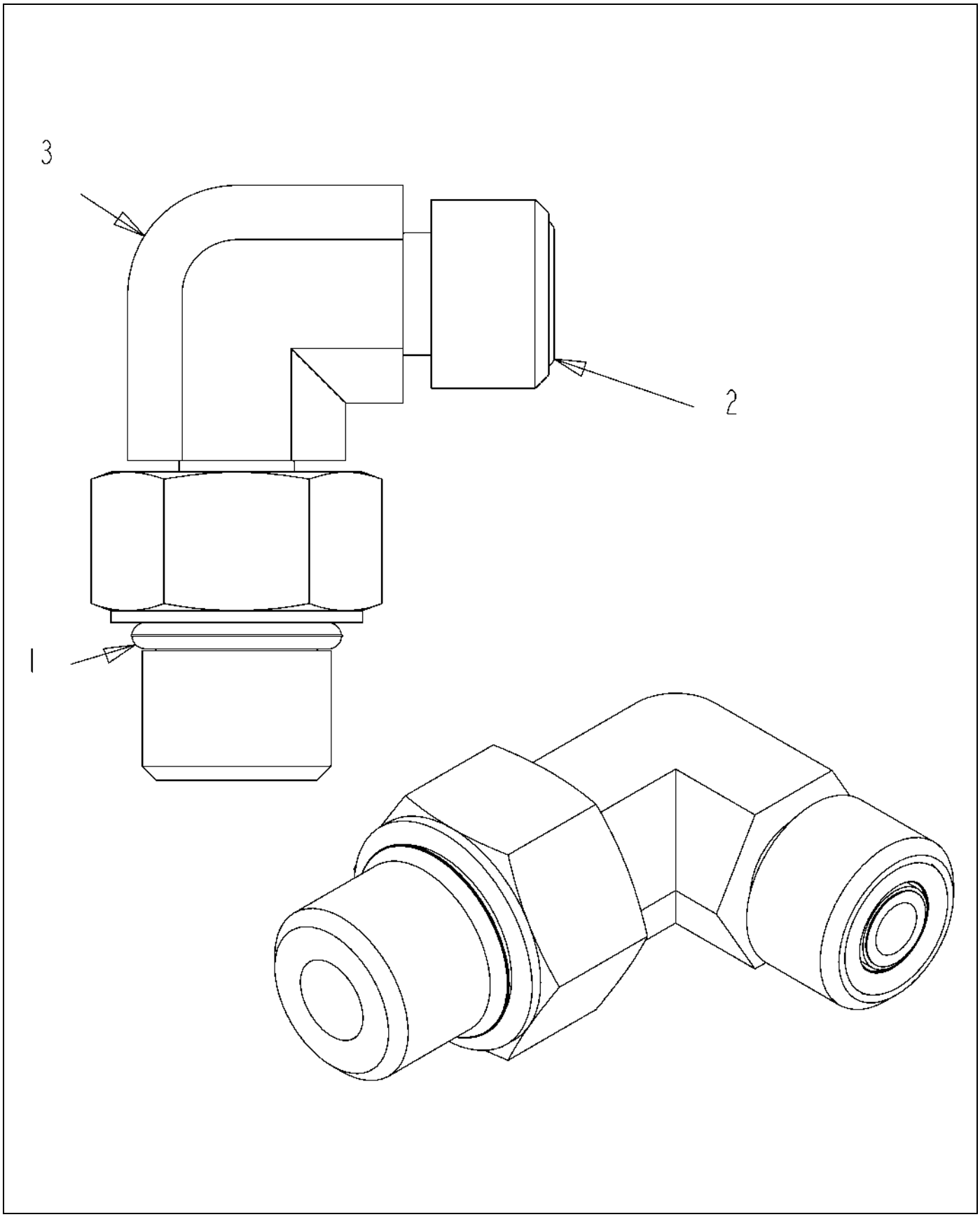

401289X1-01-N562-.TIF

Copyright © 2007 AGCO Corporation

ELBOW-90D,-6STOR X -4ORFS

ITEM	PART #	QTY	DESCRIPTION	COMMENTS
1	400318X1	1	SEAL-O-RING 11.89IDXDIA1.98	
2	400377X1	1	SEAL-O-RING 11.23 ODX1.78 DIA	
3	512476D1	1	ELBOW 90D -6STOR -4ORFS	

Copyright © 2007 AGCO Corporation

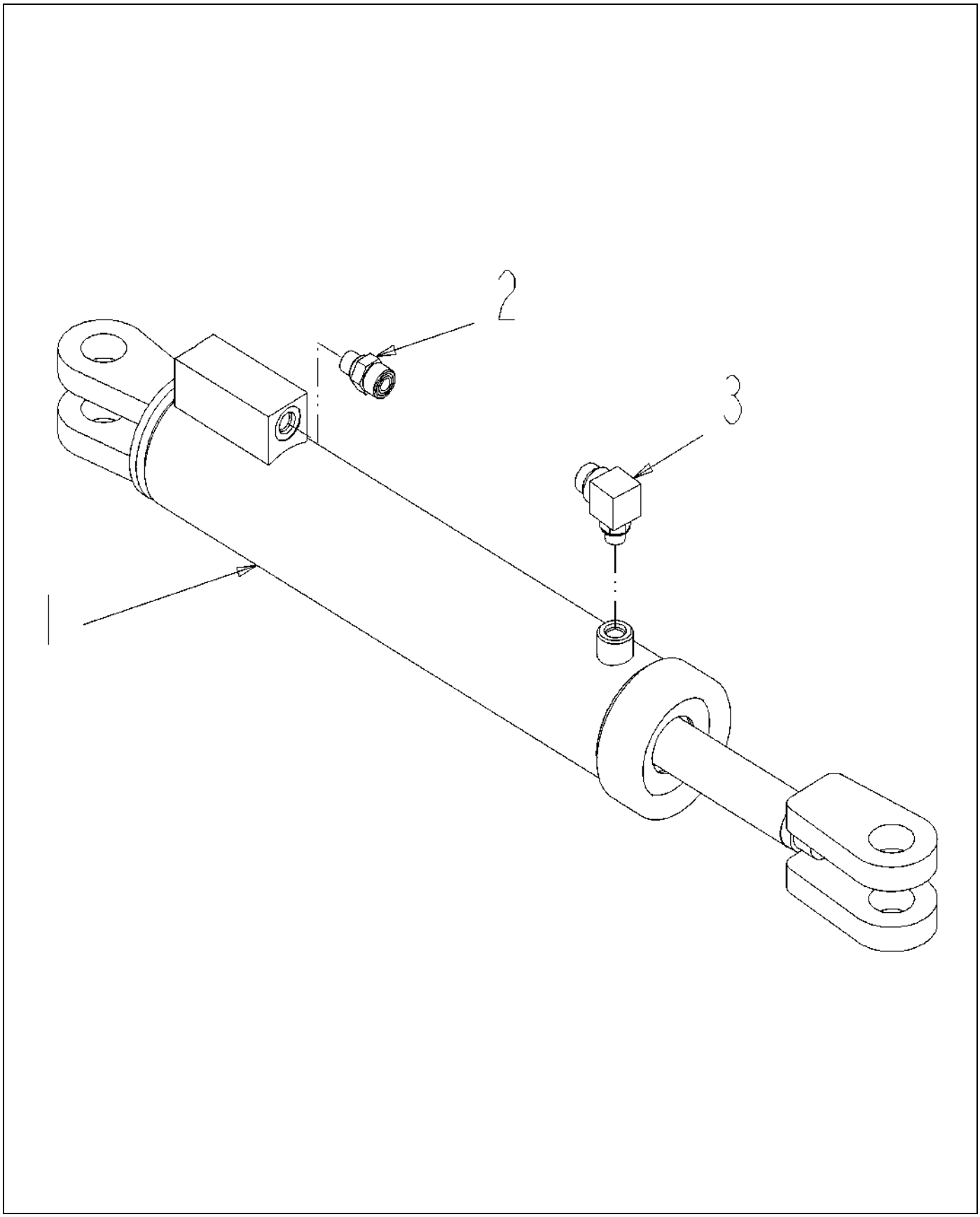

512481D1-02-R313-.TIF

Copyright © 2007 AGCO Corporation

CYLINDER ASM-BOOM BREAKAWAY

ITEM	PART #	QTY	DESCRIPTION	COMMENTS
1	AG424952	1	CYLINDER-HYD,3.00X6.00X1.38	SEE PAGE 5-8
2	400428X1	1	CONNECTOR AS-STR-6STOR-8ORFS	SEE PAGE 5-7
3	401563X1	1	VALVE-CHECK ASM,6MOR X 8ORFS	SEE PAGE 5-5

Copyright © 2007 AGCO Corporation

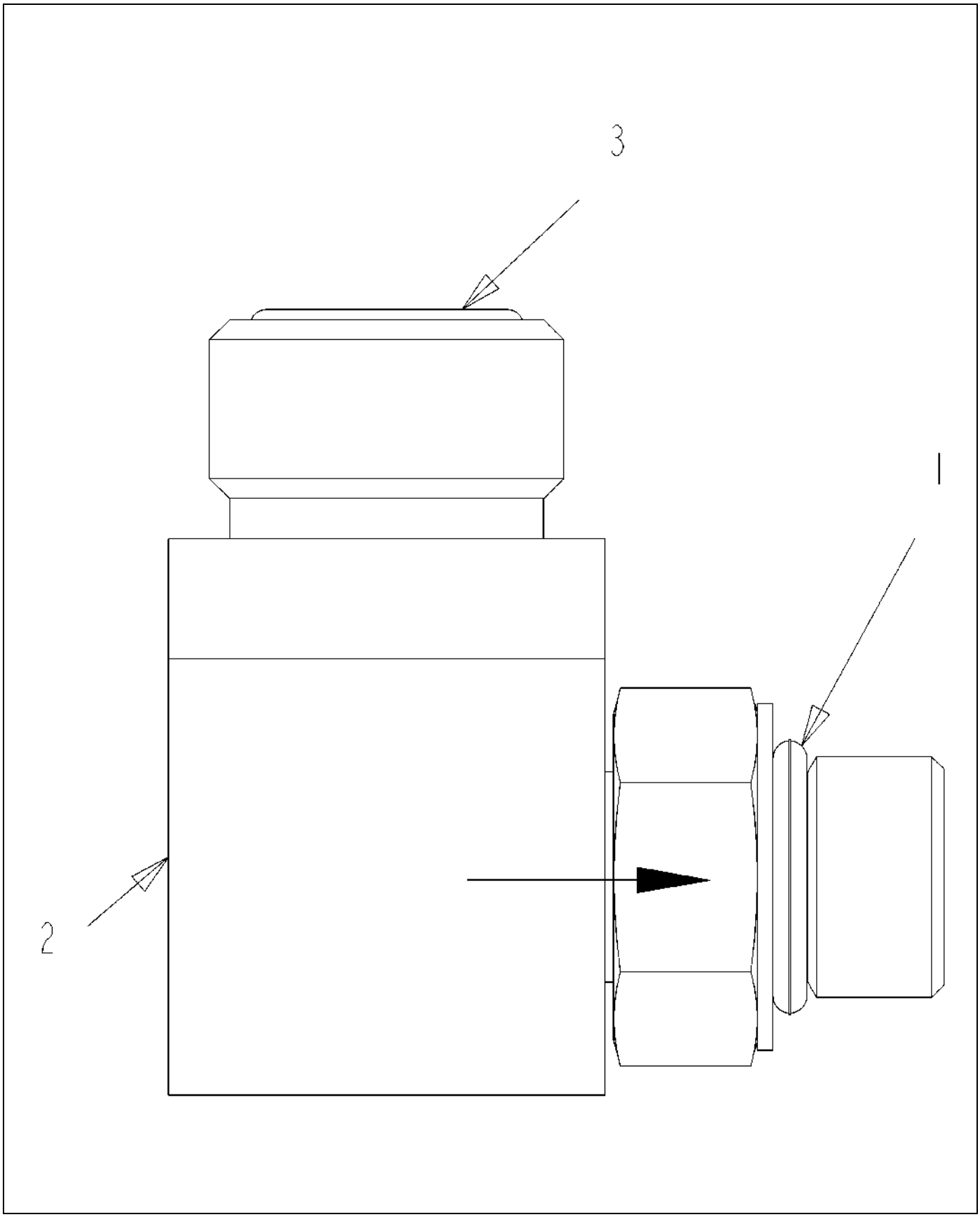

401563X1-01-R313-.TIF

Copyright © 2007 AGCO Corporation

VALVE-CHECK ASM,6MOR X 8ORFS

ITEM	PART #	QTY	DESCRIPTION	COMMENTS
1	400318X1	1	SEAL-O-RING 11.89IDXDIA1.98	
2	401562X1	1	VALVE-CHECK,90D,6MOR X 8ORFS	
3	CH6V-8398	1	SEAL-O-RING-16.03ODX1.78DIA	

Copyright © 2007 AGCO Corporation

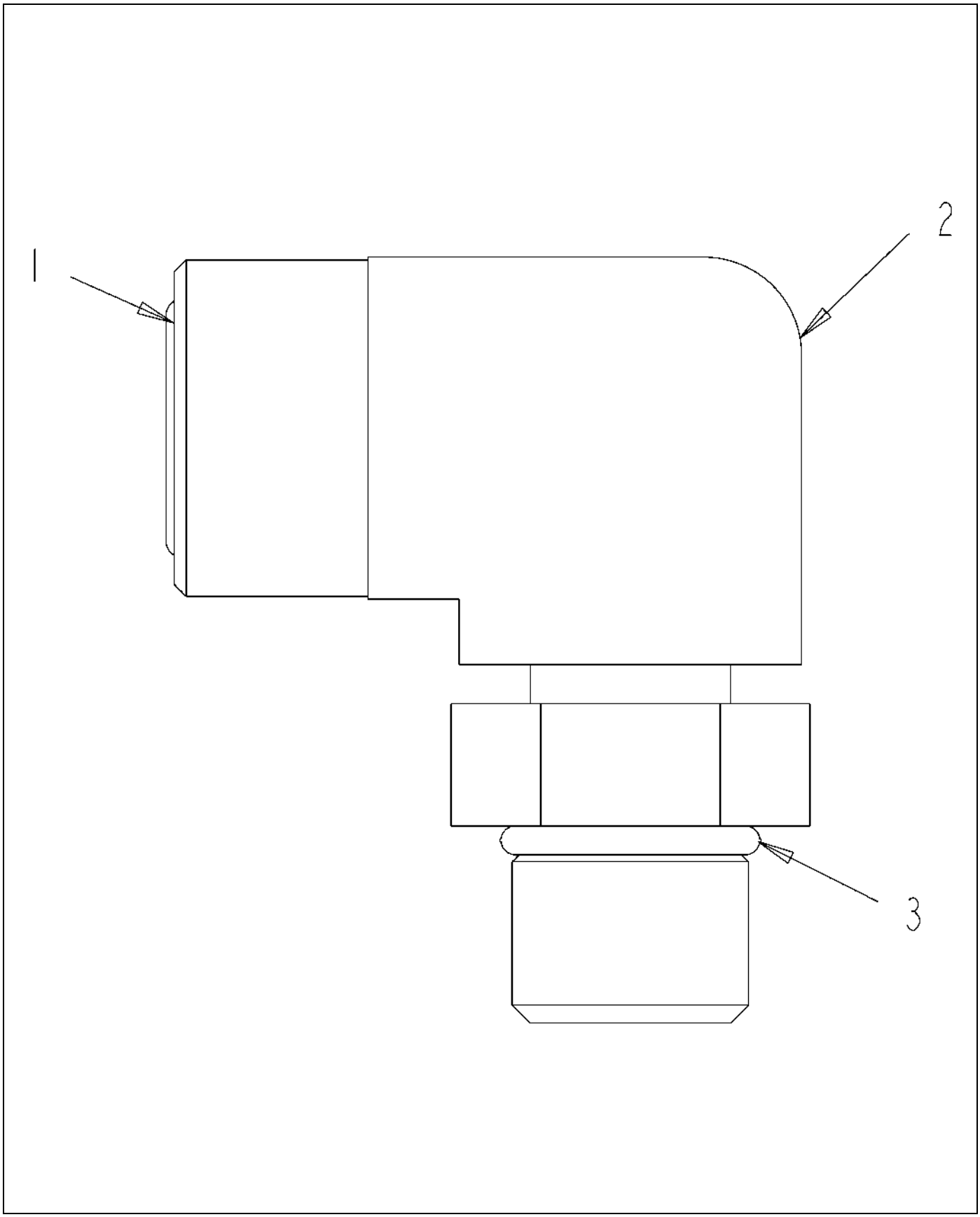

400417X1-01-.TIF

Copyright © 2007 AGCO Corporation

ELBOW AS-90DEG-6STOR-8ORFS

ITEM	PART #	QTY	DESCRIPTION	COMMENTS
1	400318X1	1	SEAL-O-RING 11.89IDXDIA1.98	
2	400418X1	1	ELBOW-90DEG-6STOR-8ORFS	
3	CH6V-8398	1	SEAL-O-RING-16.03ODX1.78DIA	

Copyright © 2007 AGCO Corporation

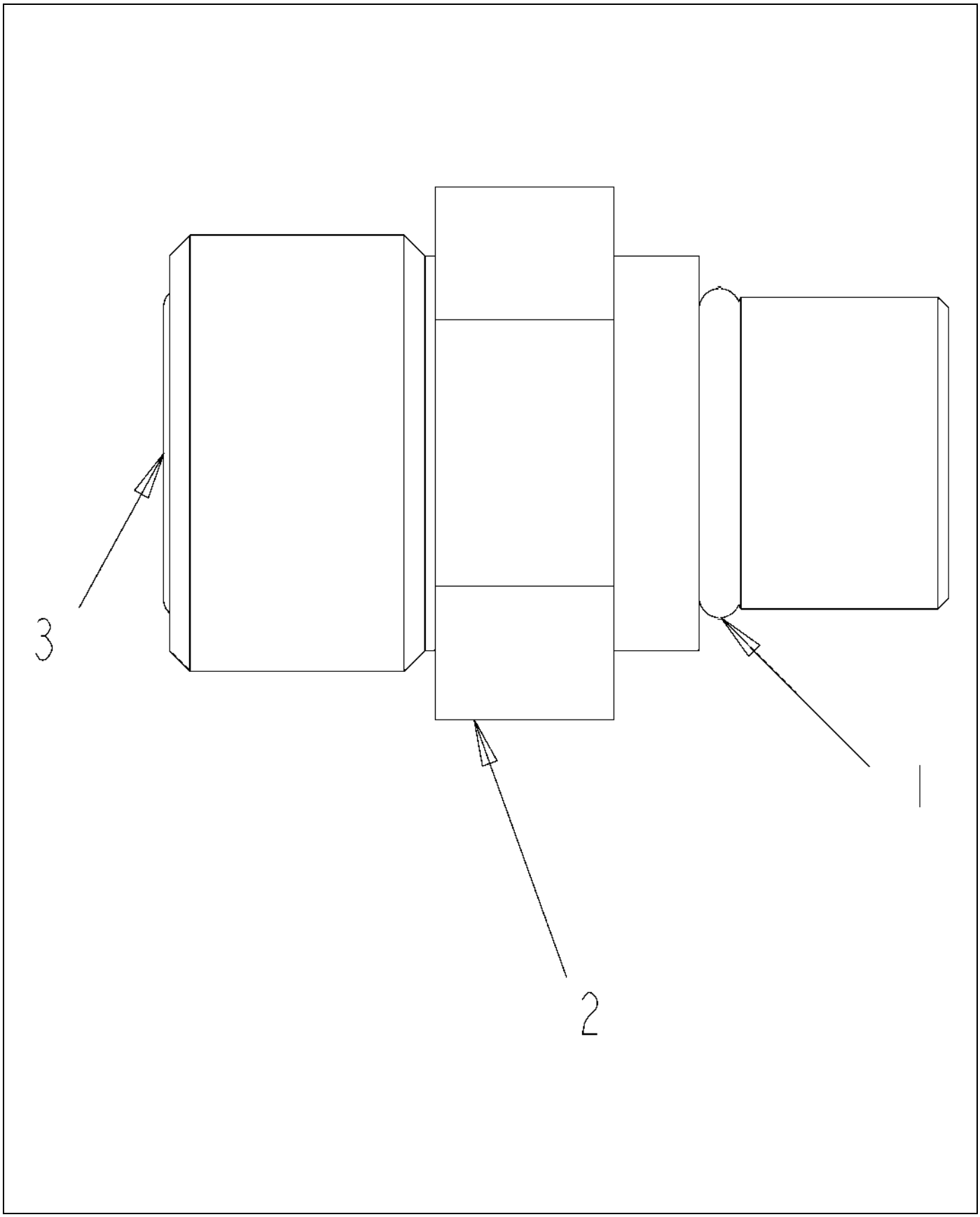

400428X1-01-.TIF

Copyright © 2007 AGCO Corporation

CONNECTOR AS-STR-6STOR-8ORFS

ITEM	PART #	QTY	DESCRIPTION	COMMENTS
1	400318X1	1	SEAL-O-RING 11.89IDXDIA1.98	
2	400429X1	1	CONNECTOR-STR -6 STOR-8 ORFS	
3	CH6V-8398	1	SEAL-O-RING-16.03ODX1.78DIA	

Copyright © 2007 AGCO Corporation

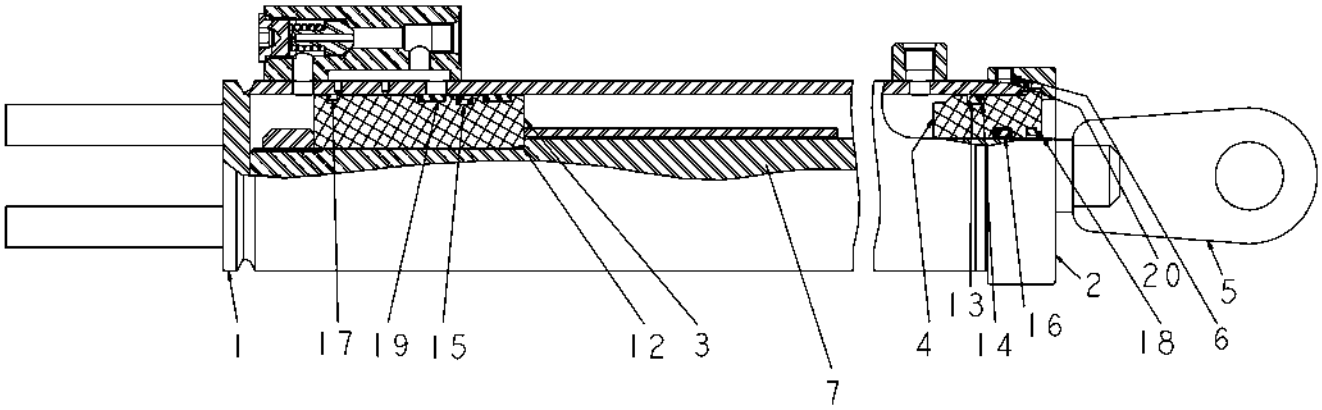

424952-A.TIF

Copyright © 2007 AGCO Corporation

CYLINDER-HYD,3.00X6.00X1.38

ITEM	PART #	QTY	DESCRIPTION	COMMENTS
1	AG727115	1	TUBE / CYLINDER	
2	AG138348	1	CAP/HEAD GLAND	
3	AG727114	1	PISTON	
4	AG727112	1	GLAND/HEAD	
5	AG727113	1	ROD/CYLINDER	
6	AG061236	1	SCREW/SET .313-18X.25	
7	AG610516	1	KIT-SEAL (523017)	[A]
	FOOTNOTE [A]		ITEMS 12 - 20 CANNOT BE PURCHASED INDIVIDUALLY BUT ARE INCLUDED IN SEAL KIT	

Copyright © 2007 AGCO Corporation

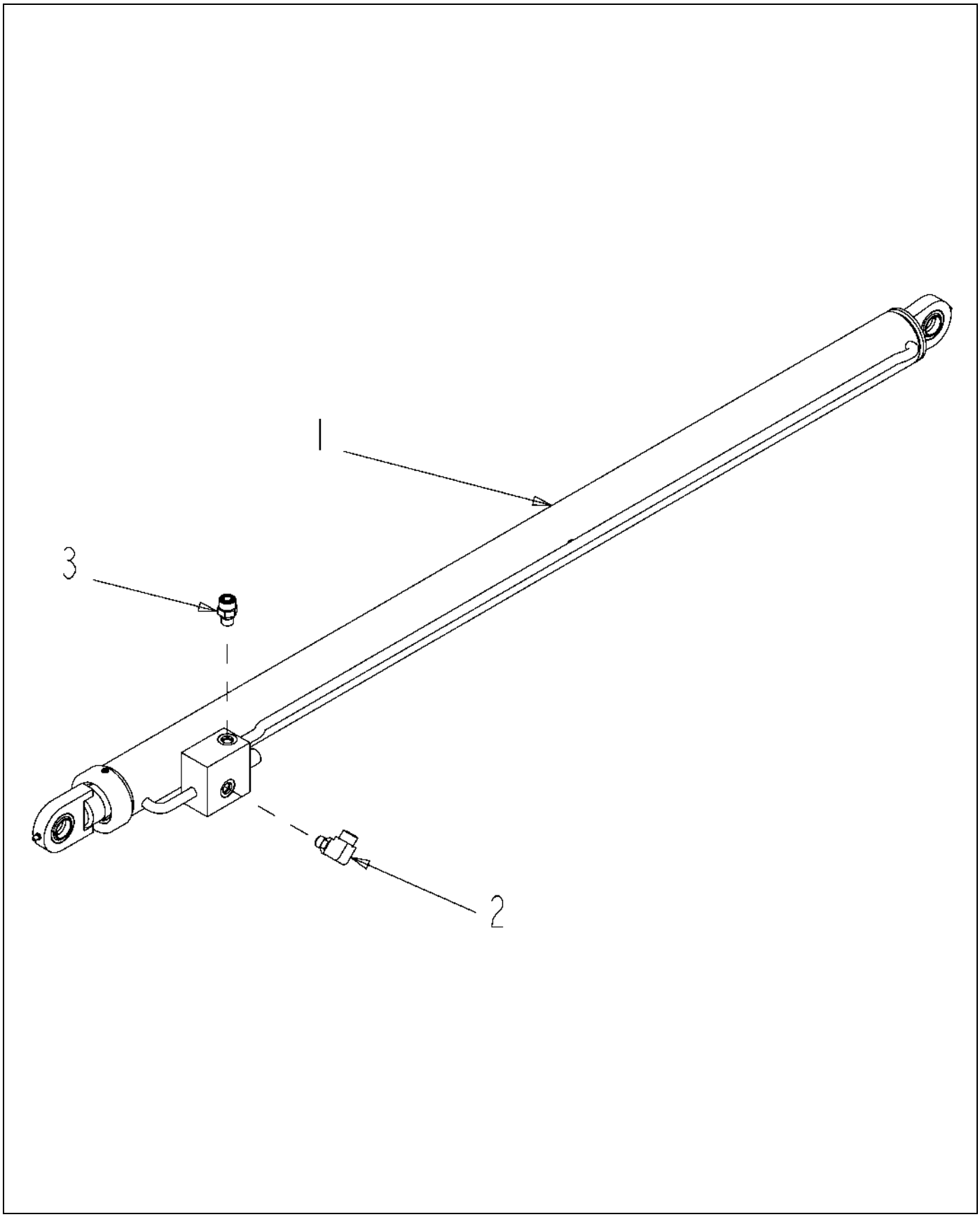

512483D1-01-N562-.TIF

Copyright © 2007 AGCO Corporation

CYLINDER ASM-HOIST,BOOM

ITEM	PART #	QTY	DESCRIPTION	COMMENTS
1	AG122392	1	CYL-HYD,2.5X52X1.75,W/CB VALVE	SEE PAGE 5-10
2	400417X1	1	ELBOW AS-90DEG-6STOR-8ORFS	SEE PAGE 5-6
3	400428X1	1	CONNECTOR AS-STR-6STOR-8ORFS	SEE PAGE 5-7

Copyright © 2007 AGCO Corporation

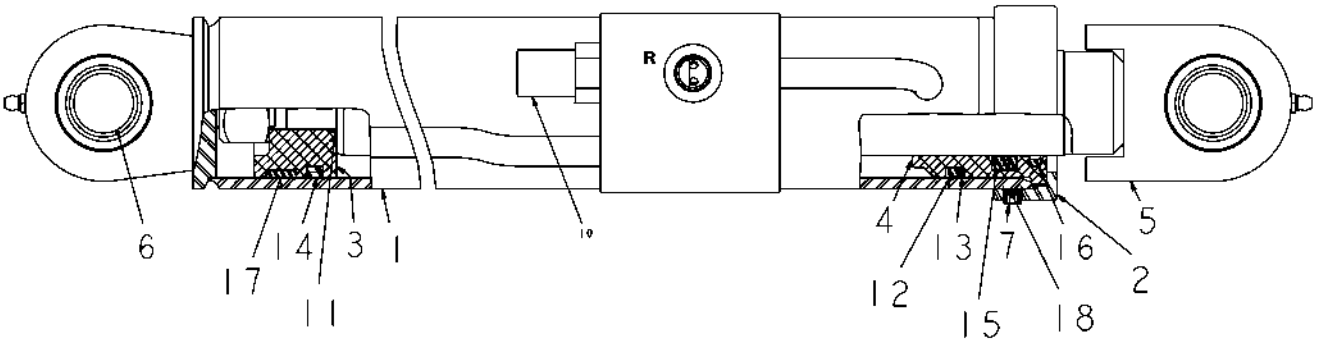

122392-F.TIF

Copyright © 2007 AGCO Corporation

CYL-HYD,2.5X52X1.75,W/CB VALVE

ITEM	PART #	QTY	DESCRIPTION	COMMENTS
1	AG727101	1	TUBE	
2	AG061231	1	CAP/HEAD GLAND	
3	AG727100	1	PISTON	
4	AG727099	1	HEAD/GLAND	
5	AG727098	1	ROD/CYLINDER 122392	
6	AG714999	2	SPHERICAL BEARING 517271	
7	AG061236	1	SCREW/SET .313-18X.25	
8	AG724682	1	ORING	
9	AG724681	1	RING BACKUP	
10	AG122436	1	KIT-SEAL,HYD CYL,092FR0015	[A]
10	AG561826	1	FITTING LUBE 0.25-28 NF 90D	
13	AG709125	1	ZERK GREASE 0.25-28	
	FOOTNOTE [A]		ITEMS 12 - 19 CANNOT BE PURCHASED INDIVIDUALLY BUT ARE INCLUDED IN SEAL KIT	

Copyright © 2007 AGCO Corporation

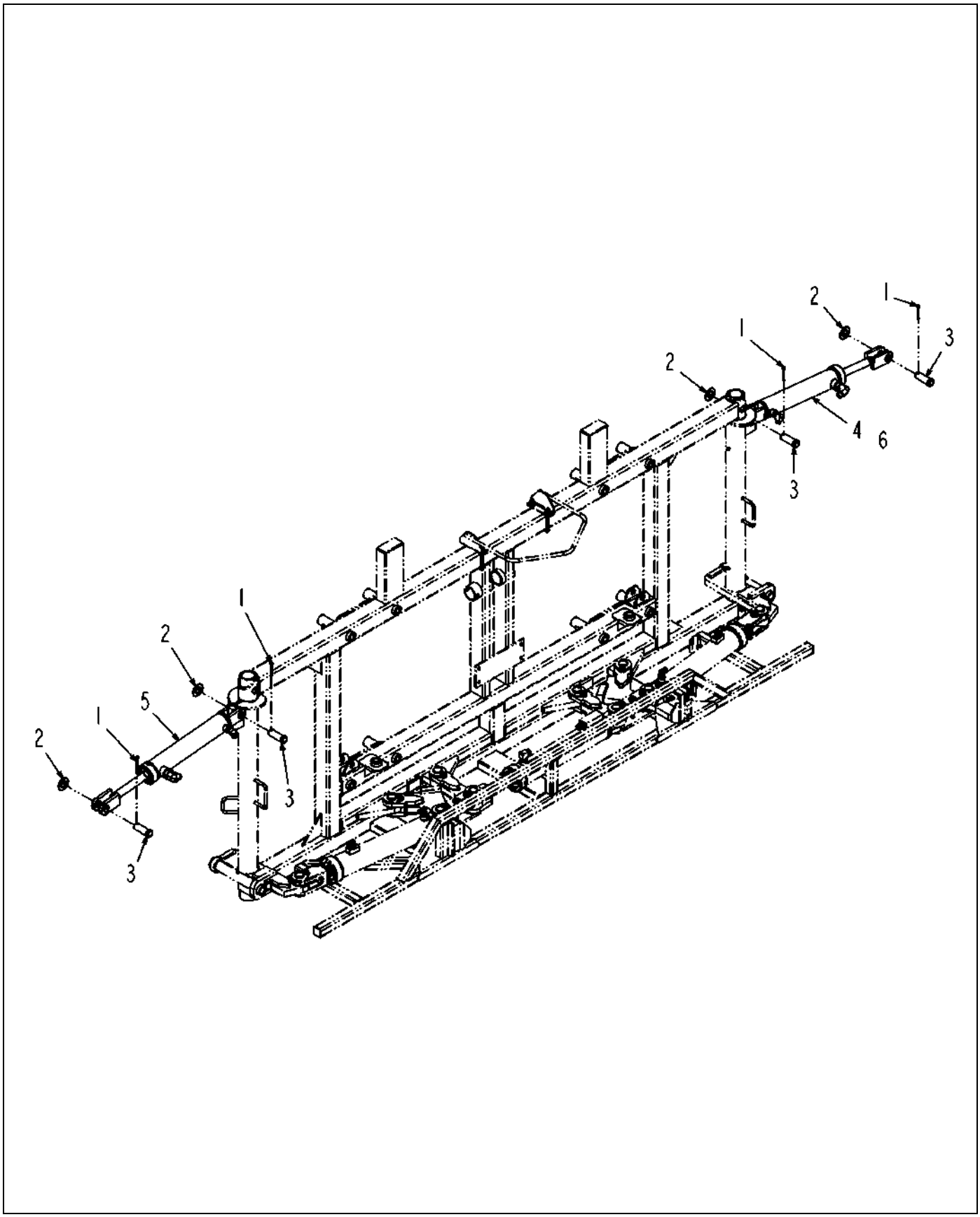

519371D1-01-R284-.TIF

Copyright © 2007 AGCO Corporation

CYL INSTL-TLT,AUTOBM,80/90/100

ITEM	PART #	QTY	DESCRIPTION	COMMENTS
1	AG515352	4	PIN COTTER 0.18X2.00 SS	
2	AG551856	4	WASHER 1.00 FL ZN SAE TYPE-A	
3	AG602132	4	PIN CLEVIS 1.00X2.62 ZN	[A]
4	512600D1	1	CYL ASM-TILT,BM,W/AUTOBOOM,RH	SEE PAGE 11-19
5	512601D1	1	CYL ASM-TILT,BM,W/AUTOBOOM,LH	SEE PAGE 11-20
6	519372D1	1	HOSE INSTL-HYD,W/AUTOBOOM,BM	
	FOOTNOTE [A]		GREASABLE PIN IS 519637	

Copyright © 2007 AGCO Corporation

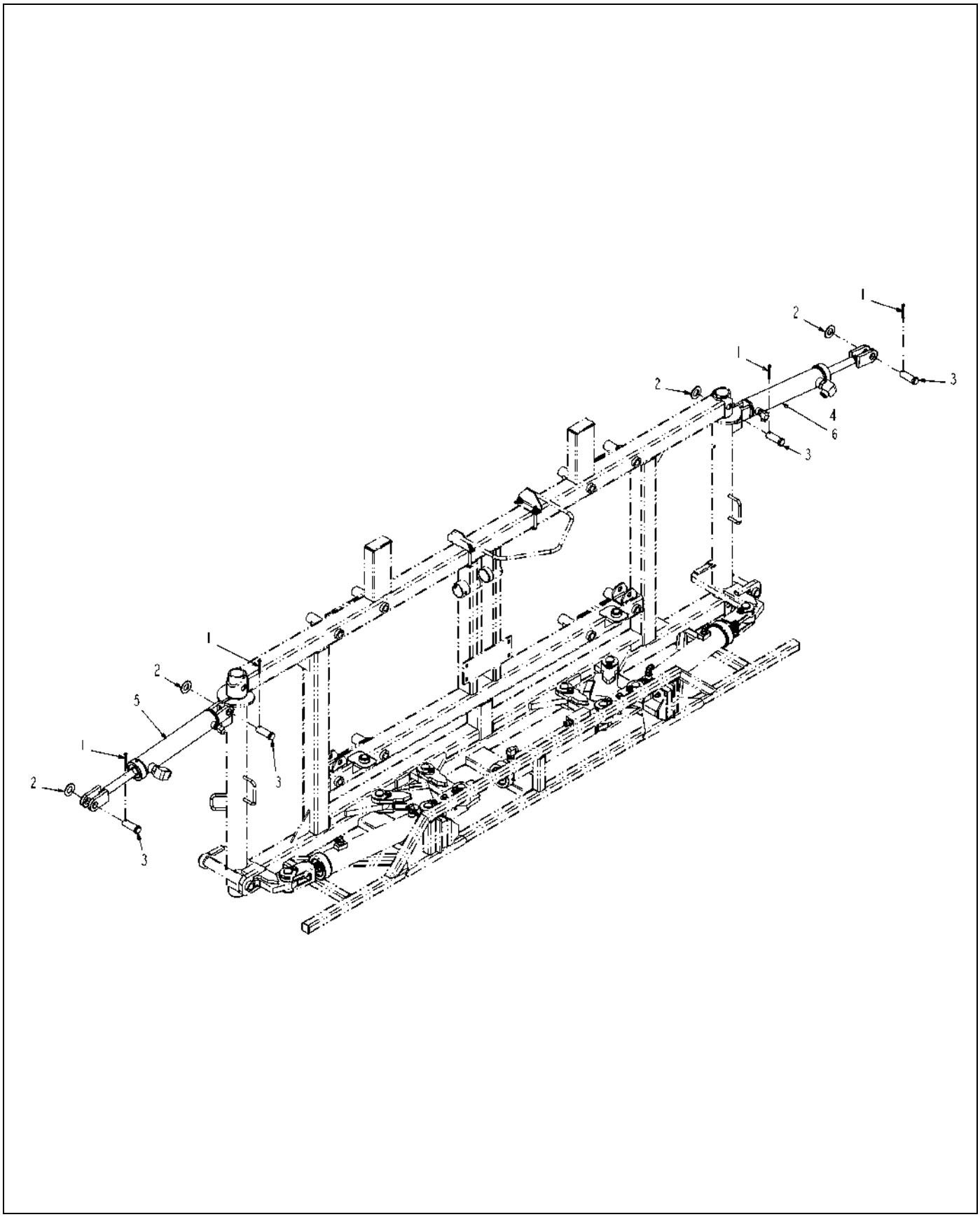

512517D1-02-R284-.TIF

Copyright © 2007 AGCO Corporation

CYL INSTL-TILT,STD,80/90/100

ITEM	PART #	QTY	DESCRIPTION	COMMENTS
1	AG515352	4	PIN COTTER 0.18X2.00 SS	
2	AG551856	4	WASHER 1.00 FL ZN SAE TYPE-A	
3	AG602132	4	PIN CLEVIS 1.00X2.62 ZN	[A]
4	512518D1	1	PLMB INSTL-HYD,BOOM,80/90/100	SEE PAGE 5-14
5	512521D1	1	CYLINDER ASM-BOOM TILT,LH	SEE PAGE 5-37
6	512522D1	1	CYLINDER ASM-BOOM TILT,RH	SEE PAGE 5-39
	FOOTNOTE [A]		GREASABLE PIN IS 519637	

Copyright © 2007 AGCO Corporation

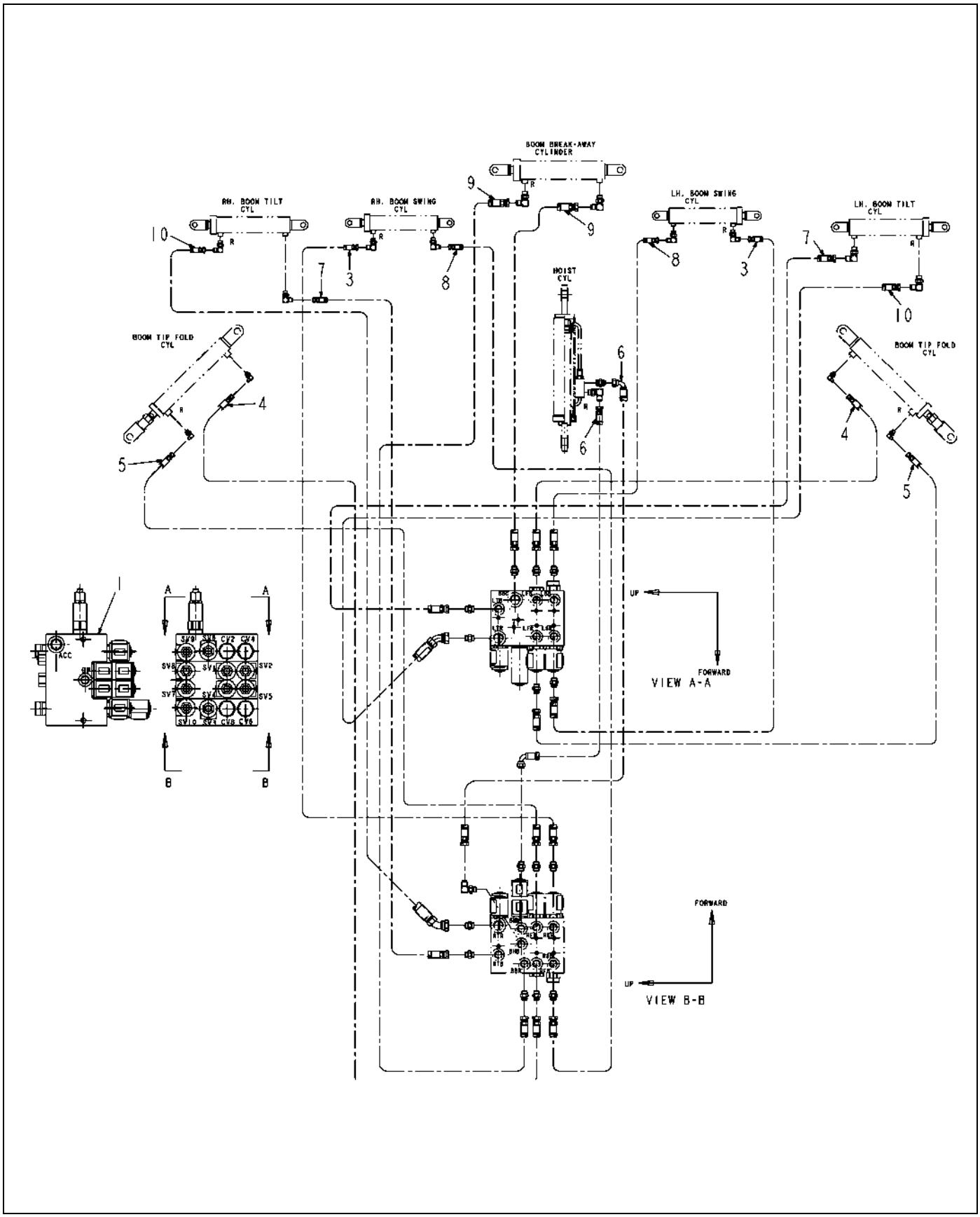

512518D1-01-N562-01.TIF

Copyright © 2007 AGCO Corporation

PLMB INSTL-HYD,BOOM,80/90/100

ITEM	PART #	QTY	DESCRIPTION	COMMENTS
1	512519D1	-	BLOCK ASM-HYD,BOOM	SEE PAGE 5-15
2	512520D1	1	KIT-HOSE,BOOM PLMB	
3	512544D1	-	HOSE ASM,-4X158.0 ORFS/ORFS	
4	512545D1	-	HOSE ASM,-4X399.0 6ORFS/ORFS	
5	512546D1	-	HOSE ASM,-4X417.0 6ORFS/ORFS	
6	512547D1	-	HOSE ASM,-8X60.0 ORFS/ORFS90	
7	512548D1	-	HOSE ASM,-6X126.0 ORFS/ORFS	
8	512549D1	-	HOSE ASM,-4X168.0 6ORFS/ORFS	
9	512550D1	-	HOSE ASM,-8X200.0 ORFS/ORFS	
10	512551D1	-	HOSE ASM,-12X132.0 ORFS/ORFS45	

Copyright © 2007 AGCO Corporation

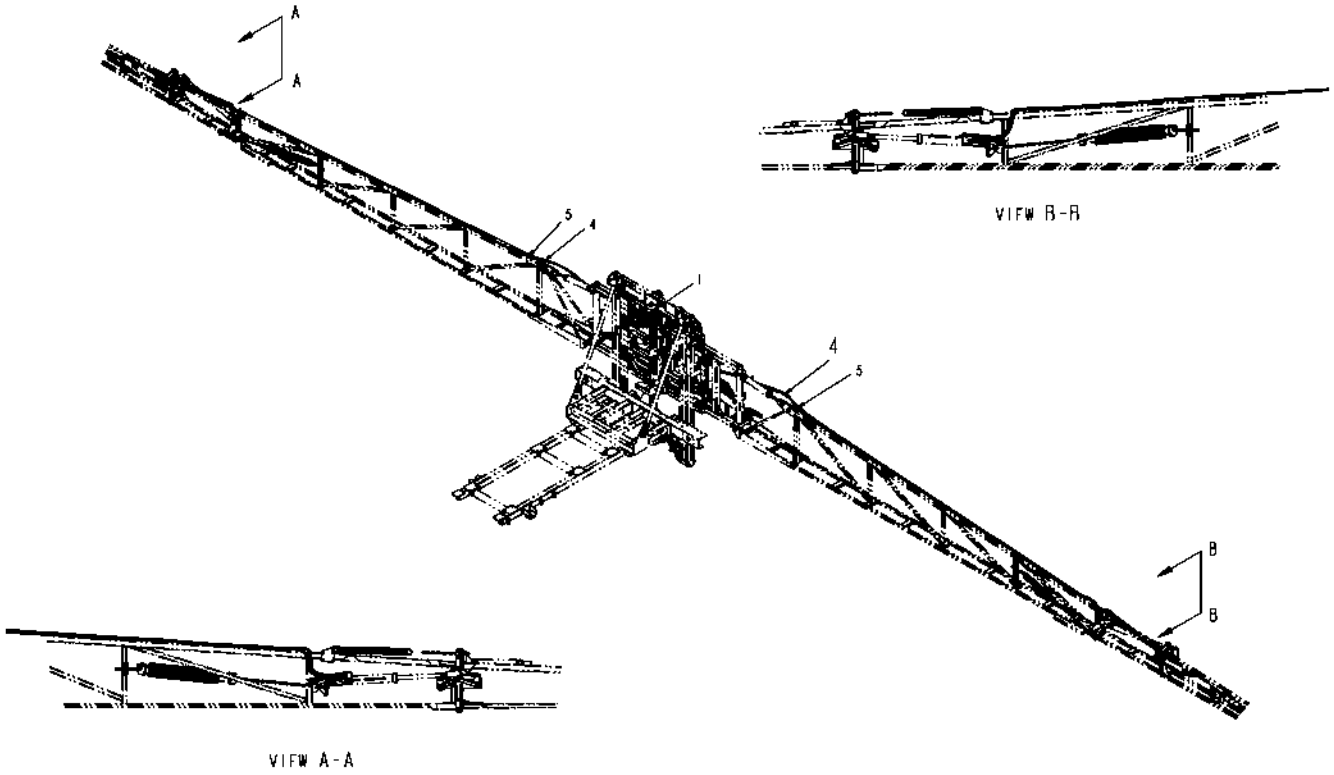

512518D1-01-N562-02.TIF

Copyright © 2007 AGCO Corporation

ITEM	PART #	QTY	DESCRIPTION	COMMENTS
1	512519D1	-	BLOCK ASM-HYD,BOOM	SEE PAGE 5-15
4	512545D1	-	HOSE ASM,-4X399.0 6ORFS/ORFS	
5	512546D1	-	HOSE ASM,-4X417.0 6ORFS/ORFS	

Copyright © 2007 AGCO Corporation

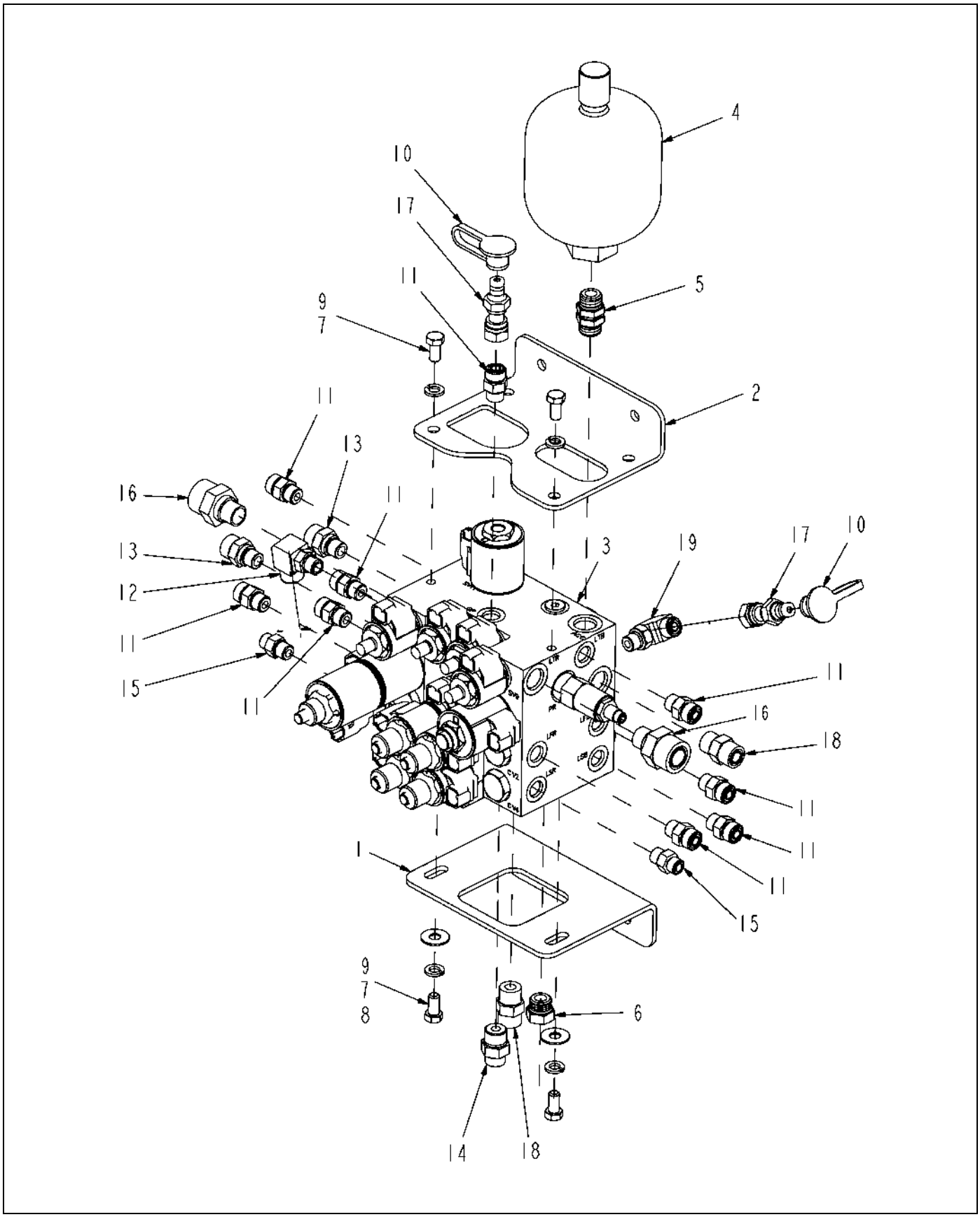

512519D1-01-N562-.TIF

Copyright © 2007 AGCO Corporation

BLOCK ASM-HYD,BOOM

ITEM	PART #	QTY	DESCRIPTION	COMMENTS
1	AG327803	1	BRKT-MTG,LOWER,VALVE BLOCK	
2	AG327804	1	BRKT-MTG,UPPER,BLOCK,VALVE	
3	AG424252	1	VALVE-HYD,7 BANK,W/BREAKAWAY	SEE PAGE 5-21
4	AG523544	1	ACCUM-HYD,DIAPH,45CU IN(MV)	
5	AG524378	1	ADPTR-STR,.50MO-R X .50MO-R	SEE PAGE 5-22
6	AG560899	1	PLUG 0.50MO-R HEX	
7	AG562050	4	WASHER 0.37 LK SS REG	
8	AG562073	2	WASHER 0.37 FL SS REG TYPE-B	
9	AG562120	4	BOLT 0.37-16NCX 0.75 S.S. HHD	
10	400323X1	2	CAP-DUST 12.6 DIA -RUBBER	
11	400367X1	9	CONNECTOR AS-6 STOR -6 ORFS	SEE PAGE 5-16
12	400417X1	1	ELBOW AS-90DEG-6STOR-8ORFS	SEE PAGE 5-6
13	400428X1	2	CONNECTOR AS-STR-6STOR-8ORFS	SEE PAGE 5-7
14	400628X1	1	CONNECTOR AS-STR-8STOR-6ORFS	SEE PAGE 5-17
15	400630X1	2	CONNECTOR AS-STR-6STOR-4ORFS	SEE PAGE 5-18
16	400963X1	2	CONNECTOR AS-STR -8STOR-12ORFS	
17	401024X1	2	NIPPLE-TEST PORT,PD,-06 ORFS	
18	CH148-8340	2	CONNECTOR AS -8ORFS-8STOR	SEE PAGE 5-23
19	CH148-8378	1	ELBOW AS-90-6STOR X 6ORFS	SEE PAGE 5-24

Copyright © 2007 AGCO Corporation

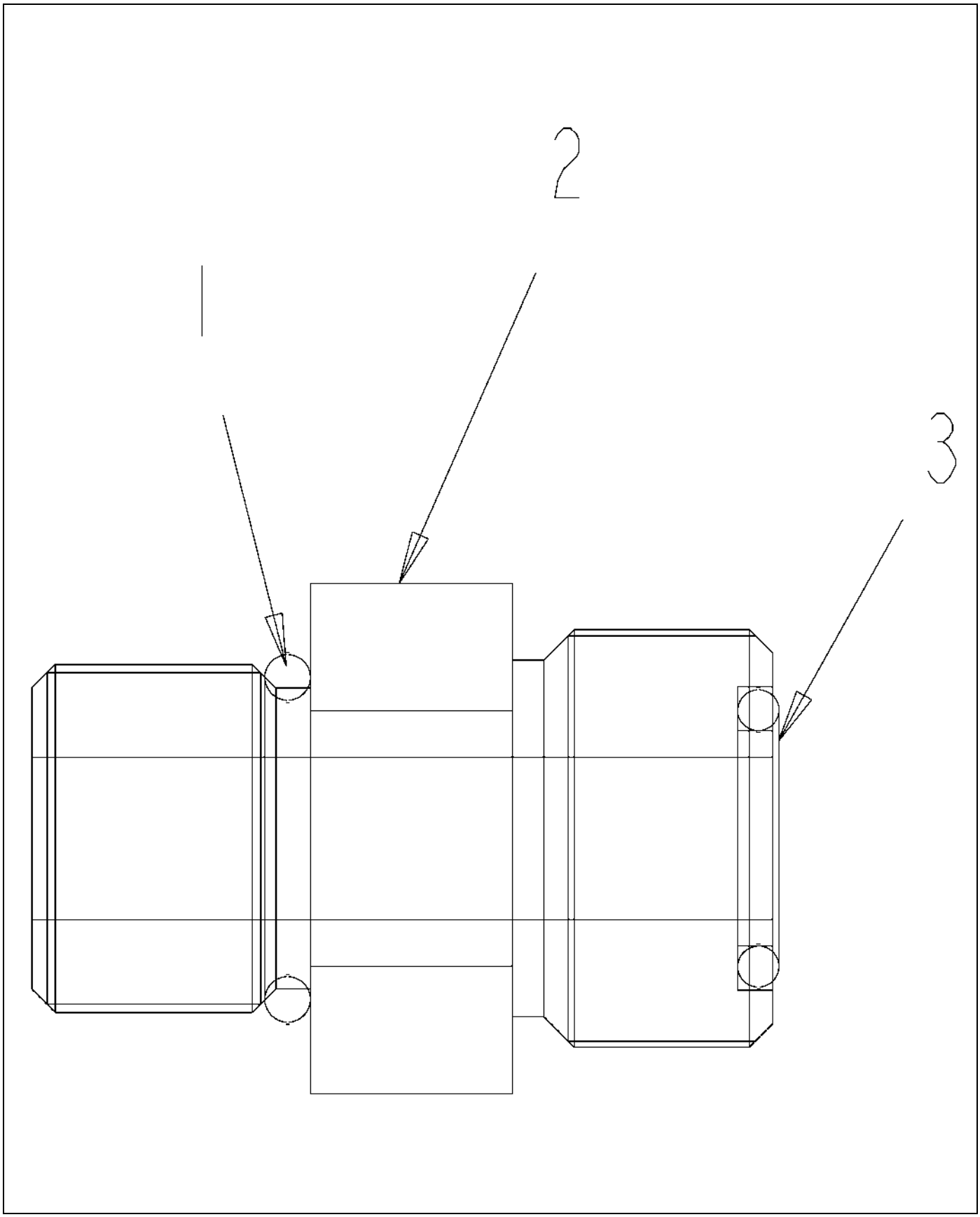

400367X1-01-.TIF

Copyright © 2007 AGCO Corporation

CONNECTOR AS-6 STOR -6 ORFS

ITEM	PART #	QTY	DESCRIPTION	COMMENTS
1	400318X1	1	SEAL-O-RING 11.89IDXDIA1.98	
2	400372X1	1	CONNECTOR-STR -6 STOR -6 ORFS	
3	400378X1	1	SEAL-O-RING 12.83 ODX1.78 DIA	

Copyright © 2007 AGCO Corporation

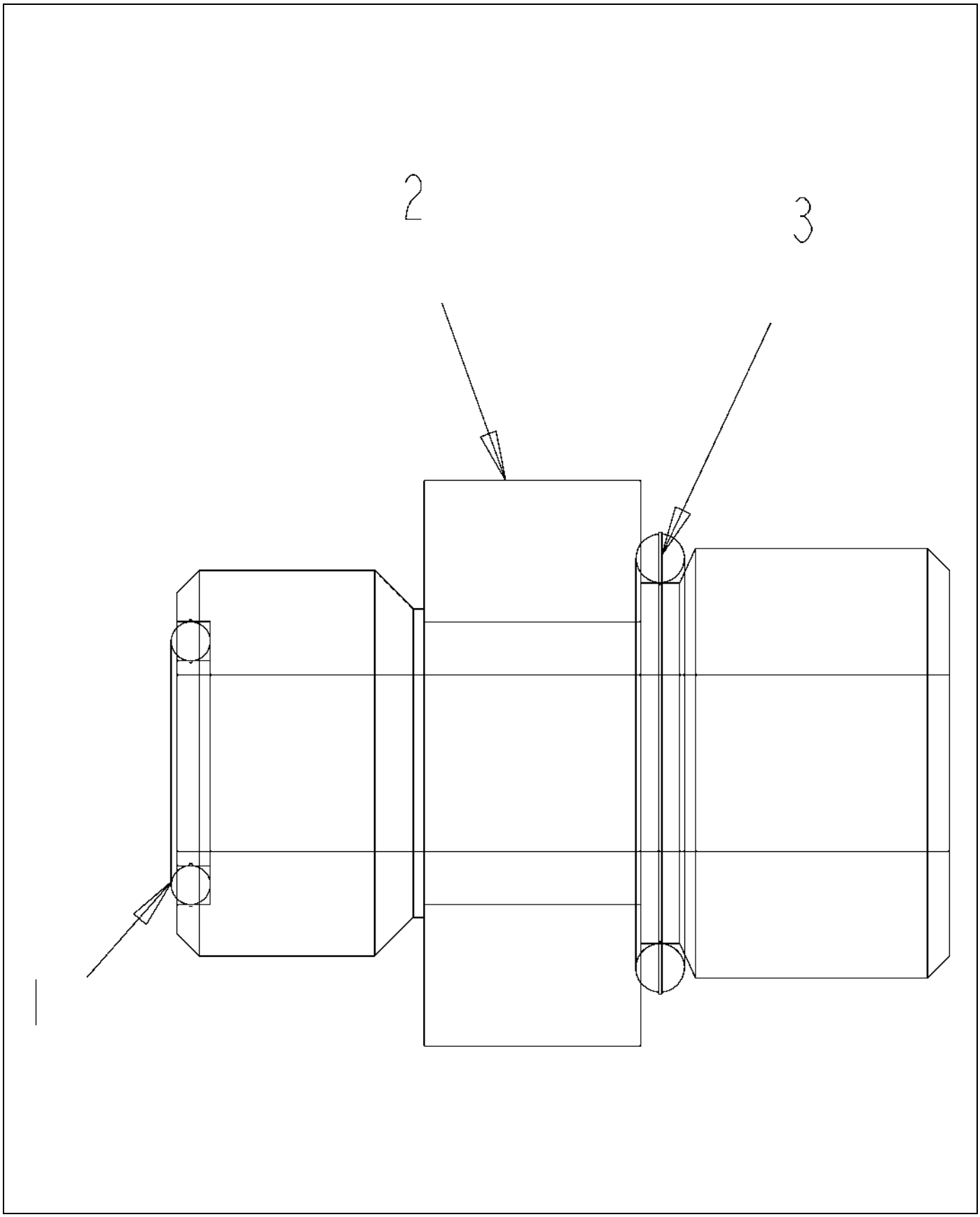

400628X1-01-.TIF

Copyright © 2007 AGCO Corporation

CONNECTOR AS-STR-8STOR-6ORFS

ITEM	PART #	QTY	DESCRIPTION	COMMENTS
1	400378X1	1	SEAL-O-RING 12.83 ODX1.78 DIA	
2	400627X1	1	CONNECTOR-STR-8STOR-6ORFS	
3	CH3K-0360	1	SEAL-O-RING 16.36IDX2.21DIA	

Copyright © 2007 AGCO Corporation

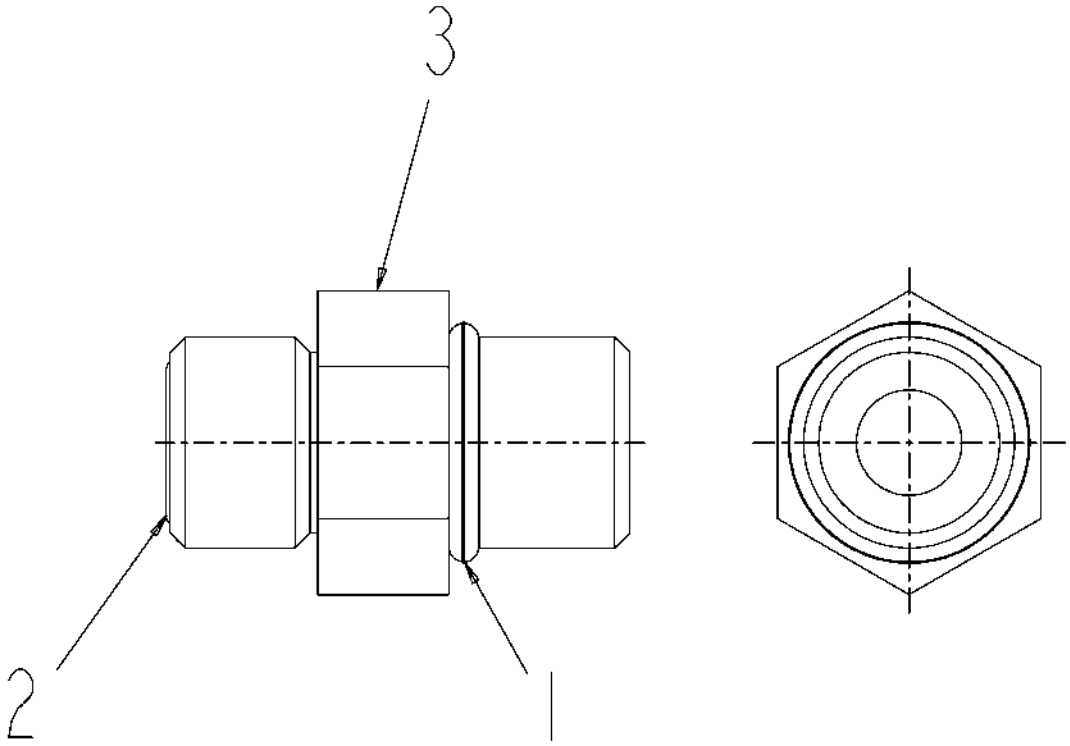

400630X1-01-.TIF

Copyright © 2007 AGCO Corporation

CONNECTOR AS-STR-6STOR-40ORFS

ITEM	PART #	QTY	DESCRIPTION	COMMENTS
1	400318X1	1	SEAL-O-RING 11.89IDXDIA1.98	
2	400377X1	1	SEAL-O-RING 11.23 ODX1.78 DIA	
3	400629X1	1	CONNECTOR-STR-6STOR-4ORFS	

Copyright © 2007 AGCO Corporation

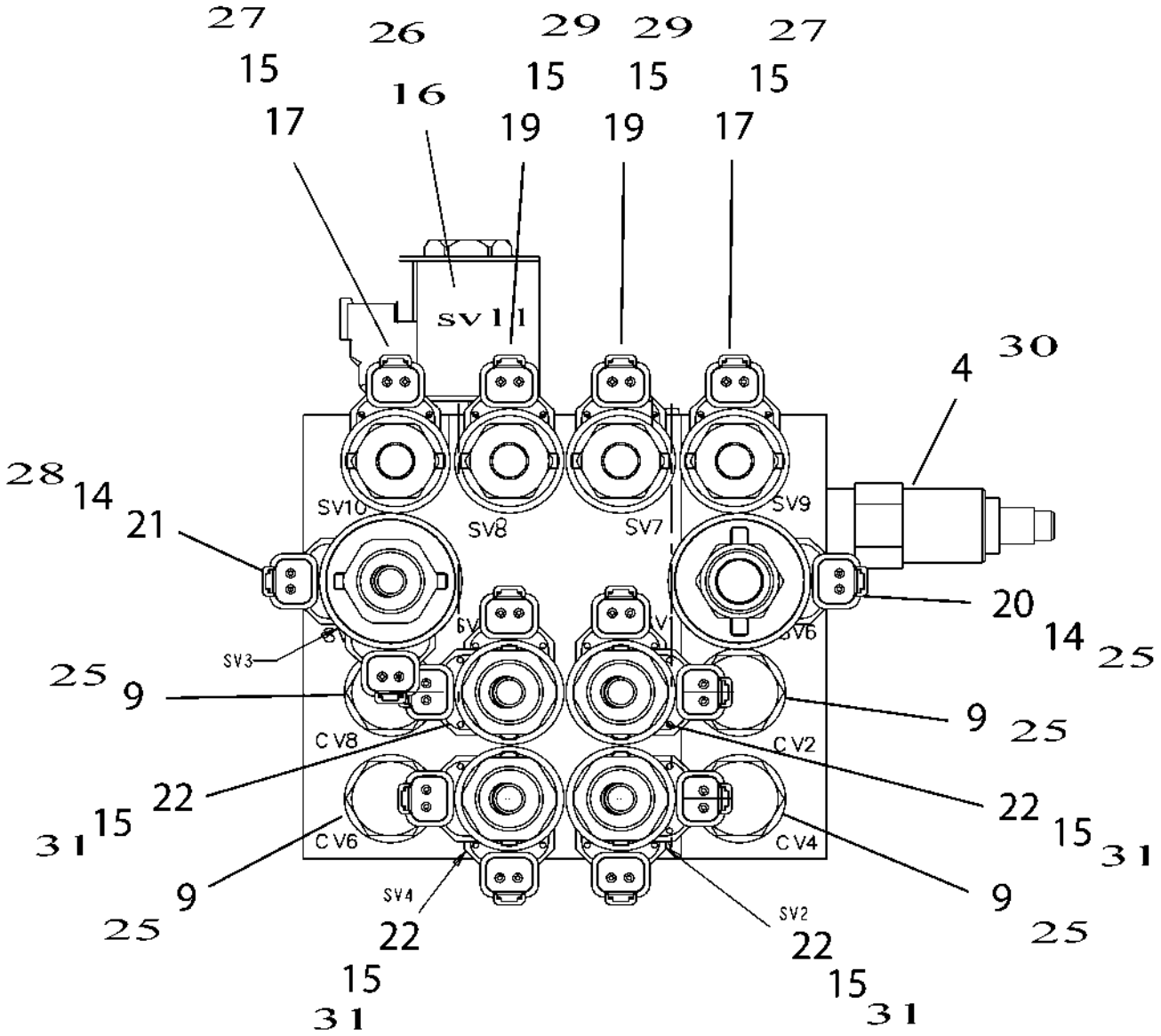

424252-G-J929-2.TIF

Copyright © 2007 AGCO Corporation

VALVE-HYD,7 BANK,W/BREAKAWAY

ITEM	PART #	QTY	DESCRIPTION	COMMENTS
1	AG522023	AR	PLATE-ORFICE,2 WAY,.040 DIA	
2	AG524369	AR	ORIFICE-2WAY,.052,-6SAE THR	
3	AG059148	AR	ORIFICE	
4	AG121489	AR	VLV-PILOT OPER,PRESS RED,10	
8	AG715569	AR	PILOT PISTON	
9	AG715570	AR	CHECK VALVE	
10	AG121485	AR	SPACER-E COIL,10	
11	AG121486	AR	SPACER-E COIL,08	
12	AG726853	AR	NUT/PUSH COIL,E-SERIES	
13	AG726854	AR	NUT/PULL COIL E-SERIES	
14	AG121484	AR	COIL-E,12VDC DEUTCH W/DIODE,10	
15	AG121483	AR	COIL-E,12VDC DEUTCH W/DIODE,08	
16	AG725602	AR	CARTRIDGE-SOLENOID VALVE	
17	AG718059	AR	CARTRIDGE-2WAY,NORMALLY CLOSED	[A]
18	AG718011	AR	ORIFICE BOOM	
19	AG724687	AR	SOLENOID VALVE 523480	
20	AG125811	1	VALVE-SOL,2WAY POPPET,18 GPM	
21	AG721899	AR	CARTRIDGE PUMP	
22	AG727147	-	VALVE/SOLENOID	
23	AG121921	AR	NUT-PULL COIL,E-SERIES,#8	
24	AG121920	AR	NUT-PULL COIL,E-SERIES,#10	
25	AG059018	-	SEAL KIT	
26	AG121382	-	KIT-SEAL,MANUAL,SPRING RETURN	
27	AG716811	-	KIT-ORING,ND VALVE(609465)	
28	AG715207	-	SEAL KIT	
29	AG714832	-	SEAL KIT 712817	
30	AG121495	-	KIT-SEAL,VALVE,-10	
31	AG716814	-	KIT-ORING,SPOOL VIV,4W(609463)	
	FOOTNOTE [A]		SEAL KIT - AG716811	

Copyright © 2007 AGCO Corporation

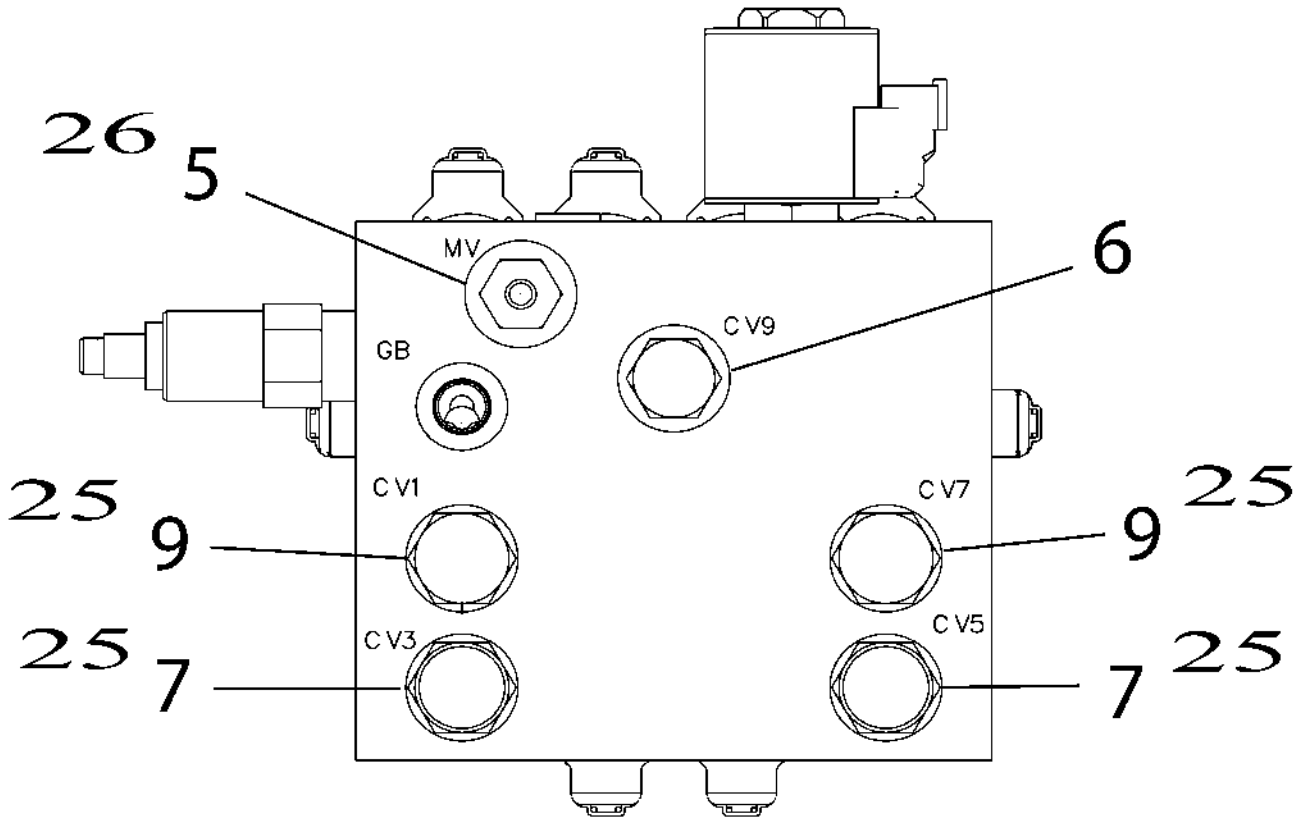

424252-G-J929-3.TIF

Copyright © 2007 AGCO Corporation

VALVE-HYD,7 BANK,W/BREAKAWAY

ITEM	PART #	QTY	DESCRIPTION	COMMENTS
5	AG121927	AR	VALVE-RELEASE,MANUAL,#8	
6	AG717712	AR	VALVE- CHECK	
7	AG715571	AR	CHECK VALVE	
9	AG715570	AR	CHECK VALVE	
25	AG059018	-	SEAL KIT	
26	AG121382	-	KIT-SEAL,MANUAL,SPRING RETURN	

Copyright © 2007 AGCO Corporation

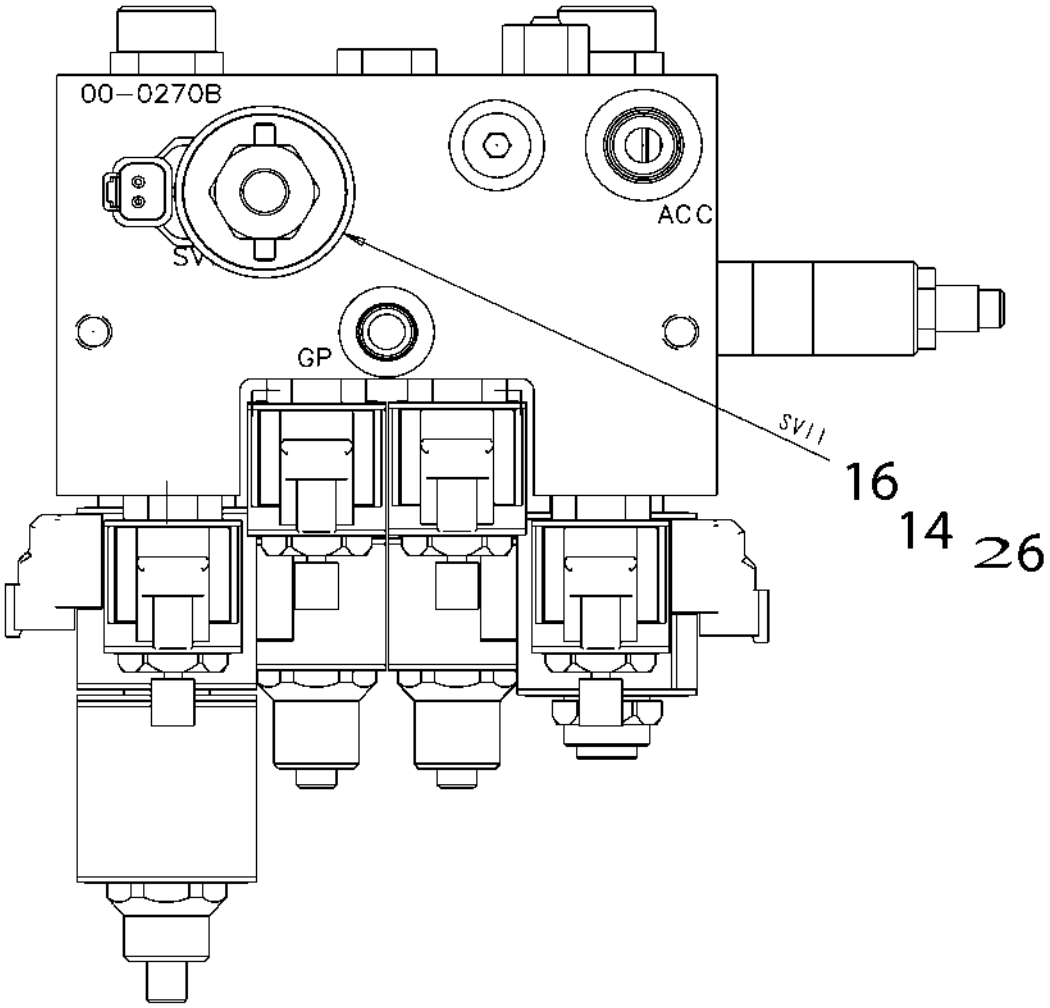

424252-G-J929-4.TIF

Copyright © 2007 AGCO Corporation

ITEM	PART #	QTY	DESCRIPTION	COMMENTS
14	AG121484	AR	COIL-E,12VDC DEUTCH W/DIODE,10	
16	AG725602	AR	CARTRIDGE-SOLENOID VALVE	
26	AG121382	-	KIT-SEAL,MANUAL,SPRING RETURN	

Copyright © 2007 AGCO Corporation

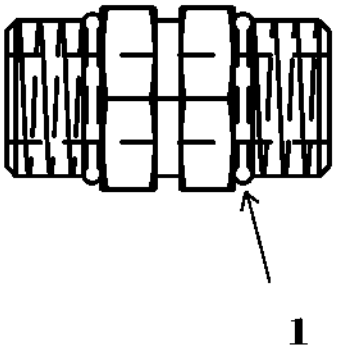

524378.TIF

Copyright © 2007 AGCO Corporation

ADPTR-STR,.50MO-R X .50MO-R

ITEM	PART #	QTY	DESCRIPTION	COMMENTS
1	AG713670	-	O RING POLY	

Copyright © 2007 AGCO Corporation

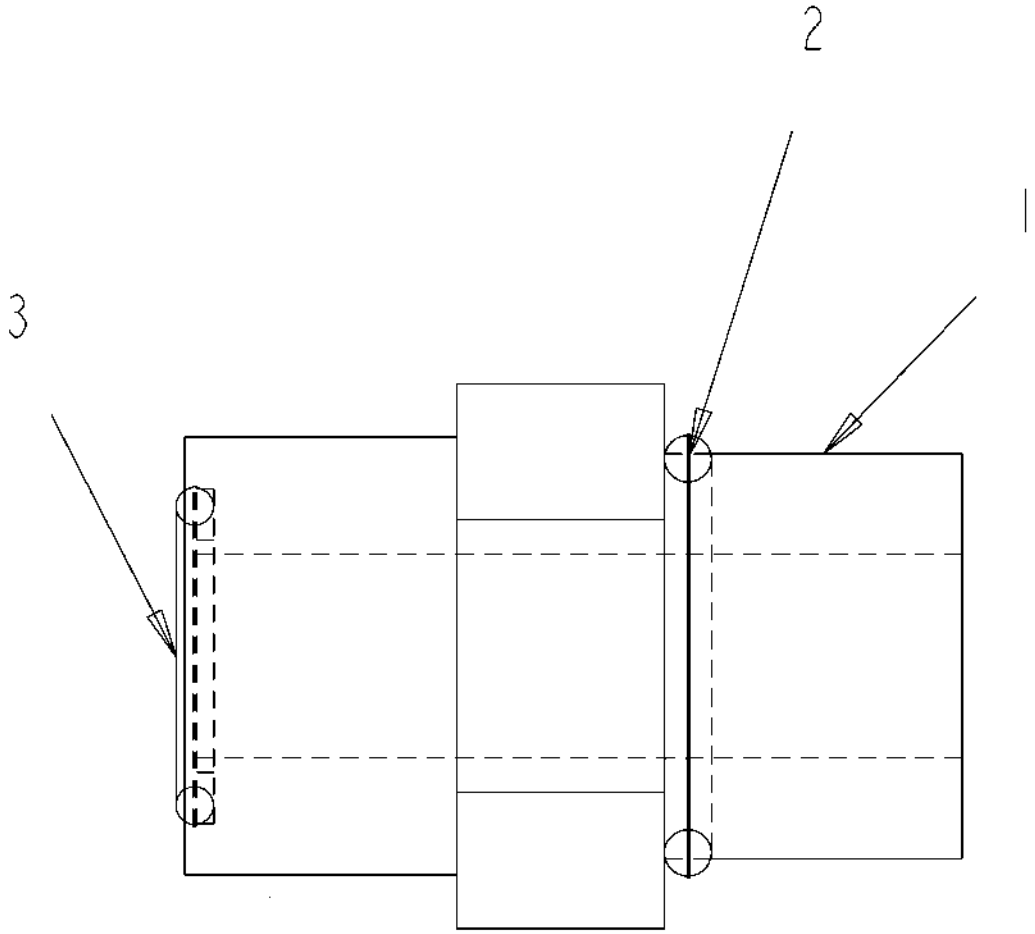

CH148-8340-K365-.TIF

Copyright © 2007 AGCO Corporation

CONNECTOR AS. ELEC

ITEM	PART #	QTY	DESCRIPTION	COMMENTS
1	CH6V-8639	1	CONNECTOR-STR-12.7 STR -8 ORFS	
2	CH3K-0360	1	SEAL-O-RING 16.36IDX2.21DIA	
3	CH6V-8398	1	SEAL-O-RING-16.03ODX1.78DIA	

Copyright © 2007 AGCO Corporation

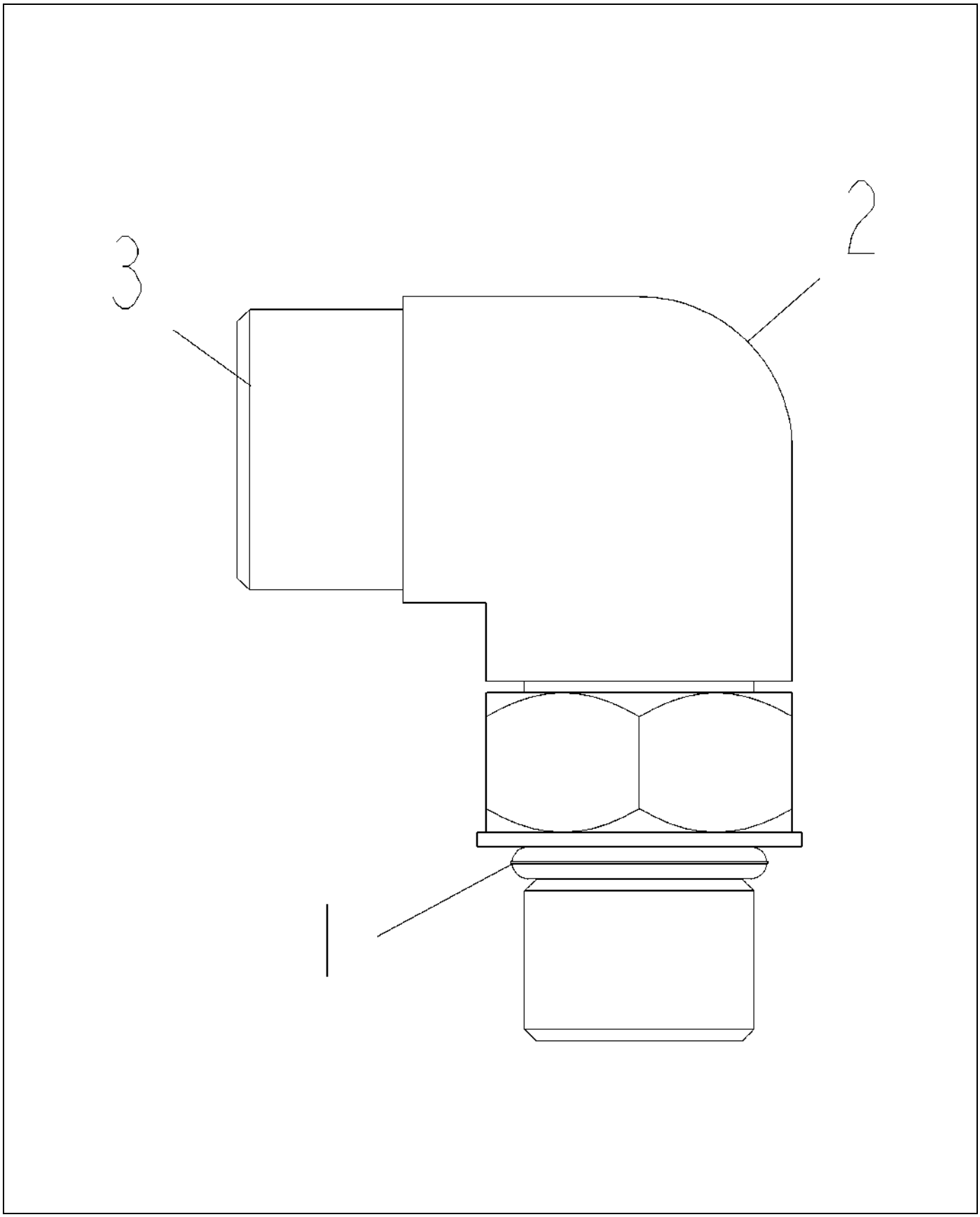

CH148-8378-01-K639-.TIF

Copyright © 2007 AGCO Corporation

ELBOW AS-90-6STOR X 6ORFS

ITEM	PART #	QTY	DESCRIPTION	COMMENTS
1	400318X1	1	SEAL-O-RING 11.89IDXDIA1.98	
2	CH6V-8724	1	ELBOW-90° 6 STOR X 6 ORFS	
3	400378X1	1	SEAL-O-RING 12.83 ODX1.78 DIA	

Copyright © 2007 AGCO Corporation

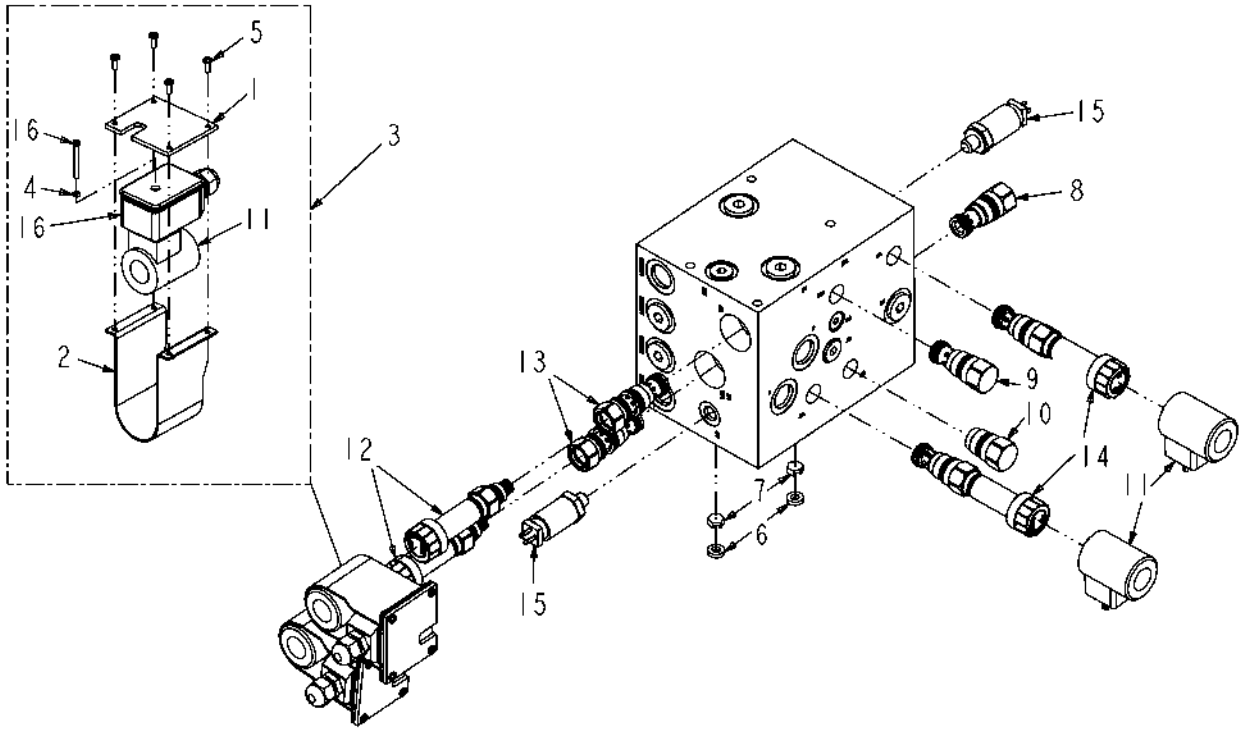

136740-03-N673-02.TIF

Copyright © 2007 AGCO Corporation

BLOCK-VALVE,HYD,AUTOBOOM,G2

ITEM	PART #	QTY	DESCRIPTION	COMMENTS
REF	AG330211	1	COIL	
1	507412D1	-	PLATE-UPPER,U BRACKET	
2	507413D1	-	BRKT-U,PWM CTRL VLV	
3	507414D1	-	KIT-SEAL,PWM DRIVER	
4	507415D1	-	O-RING	
5	507416D1	-	SCREW 6-32 X .38	
6	507417D1	-	SHIM-ORFICE,.50ODX.25IDX.25	
7	507418D1	-	ORIFICE-HYD,.060ID,HEX,FLOAT	
8	507419D1	-	VALVE-CHECK,CNDC-XAN,SUN	
9	507420D1	-	VALVE-CHECK,CXCD-XAN,SUN	
10	507421D1	-	PLUG-CAVITY,OPEN,XFOA-XXN,SUN	
11	507422D1	-	COIL-12V,HYD,PRES CTRL VLV	
12	507423D1	-	VLV-PILOT RELIEF,PROP HYD FLOW	
13	507424D1	1	ELEMENT-MOD,3 WAY,RED/REL	
14	507425D1	-	VLV-CARTRIDGE,DTDA-MCN,SUN	
15	507426D1	-	XDCR-PRESS,P51-300S-1-MD-20MA	
16	507525D1	-	DRIVER ASM-PROPORTIONAL	

Copyright © 2007 AGCO Corporation

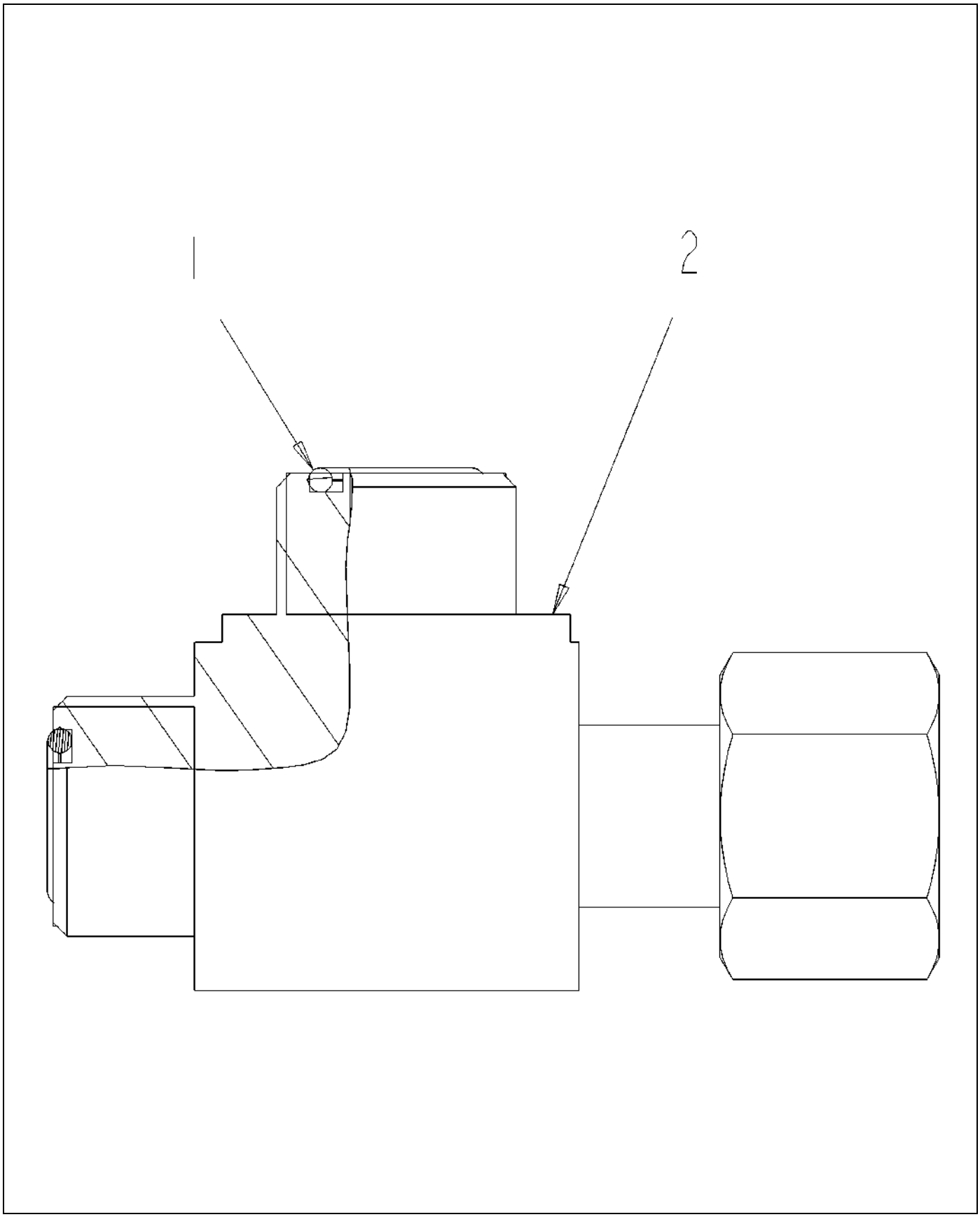

CH148-8433-01-.TIF

Copyright © 2007 AGCO Corporation

TEE AS-6 ORFSX3

ITEM	PART #	QTY	DESCRIPTION	COMMENTS
1	400378X1	2	SEAL-O-RING 12.83 ODX1.78 DIA	
2	CH6V-9836	1	TEE-6 ORFS X 3	

Copyright © 2007 AGCO Corporation

Please refer to the Bill Of Material on the opposite page for related Installations, Assemblies, or Parts

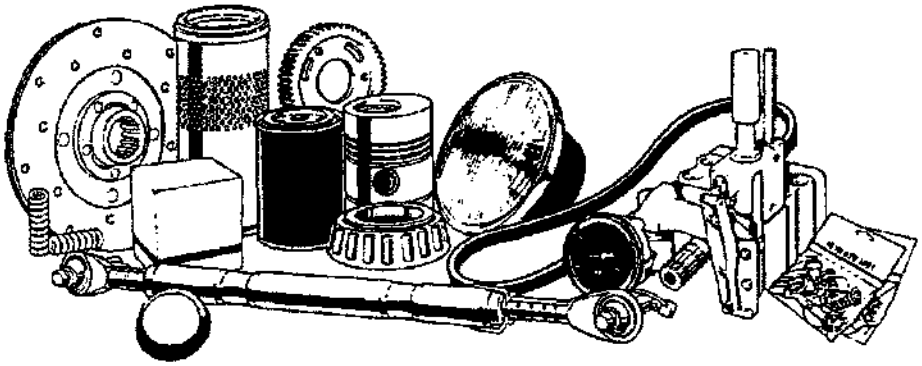

CH148-8444.tif

Copyright © 2007 AGCO Corporation

TEE-SWIVEL 3X -8 ORFS

ITEM	PART #	QTY	DESCRIPTION	COMMENTS
REF			DETAIL IMAGE, PLEASE REFER TO RELATED PAGES FOR MORE INFORMATION	
1	CH6V-9837	1	TEE-SWIVEL 3X -8 ORFS	
2	CH6V-8398	2	SEAL-O-RING-16.03ODX1.78DIA	

Copyright © 2007 AGCO Corporation

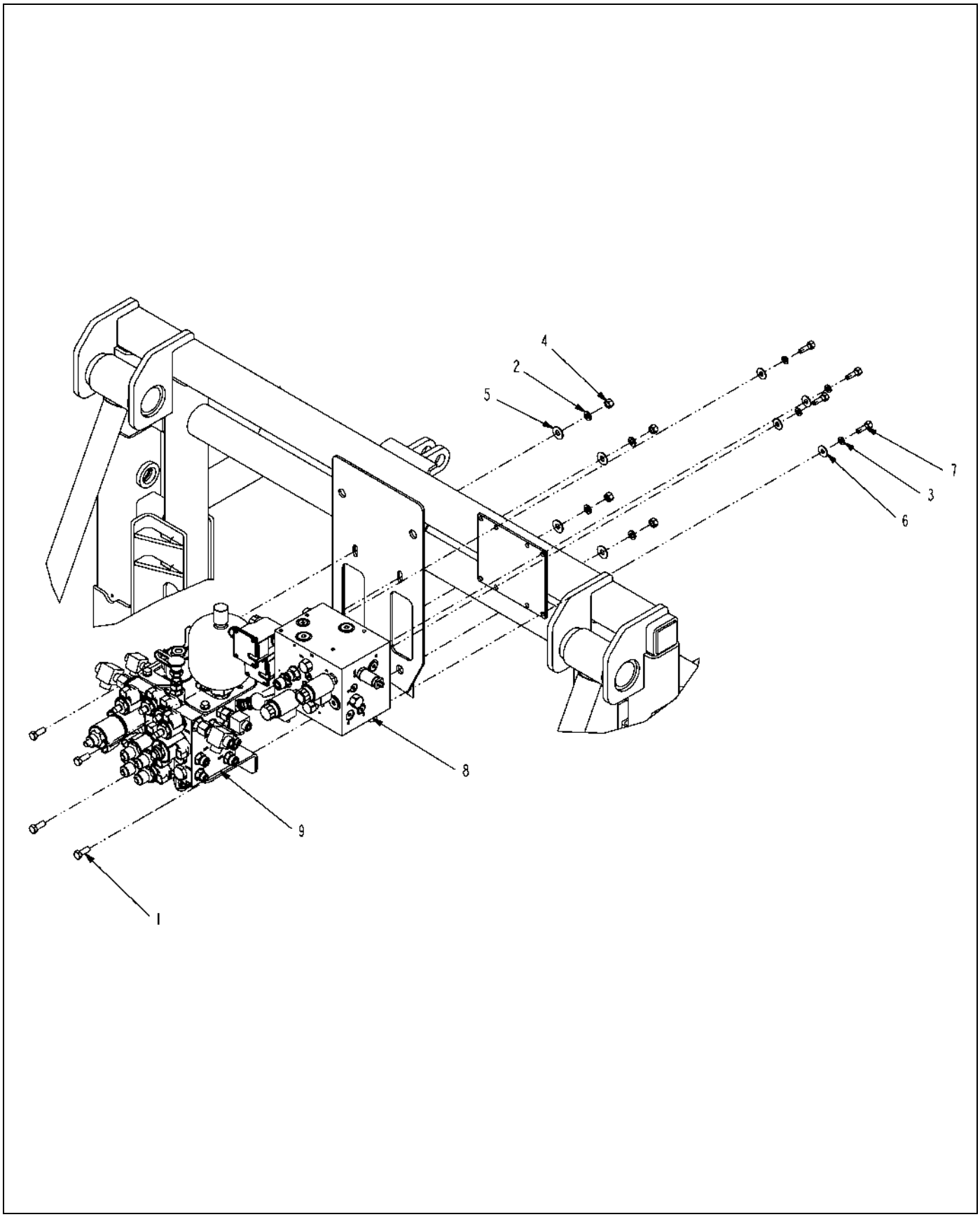

512599D1-01-N562-.TIF

Copyright © 2007 AGCO Corporation

BLOCK INSTL-HYD,BM/AUTOBOOM,G2

ITEM	PART #	QTY	DESCRIPTION	COMMENTS
1	AG550175	4	BOLT 0.37-16NCX 1.00 G5 ZN HHD	
2	AG550191	4	WASHER 0.37 LK ZN REG	
3	AG550205	4	WASHER 0.31 LK ZN REG	
4	AG550825	4	NUT 0.37-16NC HEX ZN REG	
5	AG551007	4	WASHER 0.37 FL ZN REG TYPE-B	
6	AG551015	4	WASHER 0.31 FL ZN REG TYPE-B	
7	AG556017	4	BOLT 0.31-24NFX 1.00 G5 PL HHD	
8	512603D1	1	BLOCK ASM-HYD,AUTOBOOM,G2	SEE PAGE 11-6
9	512605D1	1	BLOCK ASM-HYD,W/AUTOBOOM,BM	SEE PAGE 11-7

Copyright © 2007 AGCO Corporation

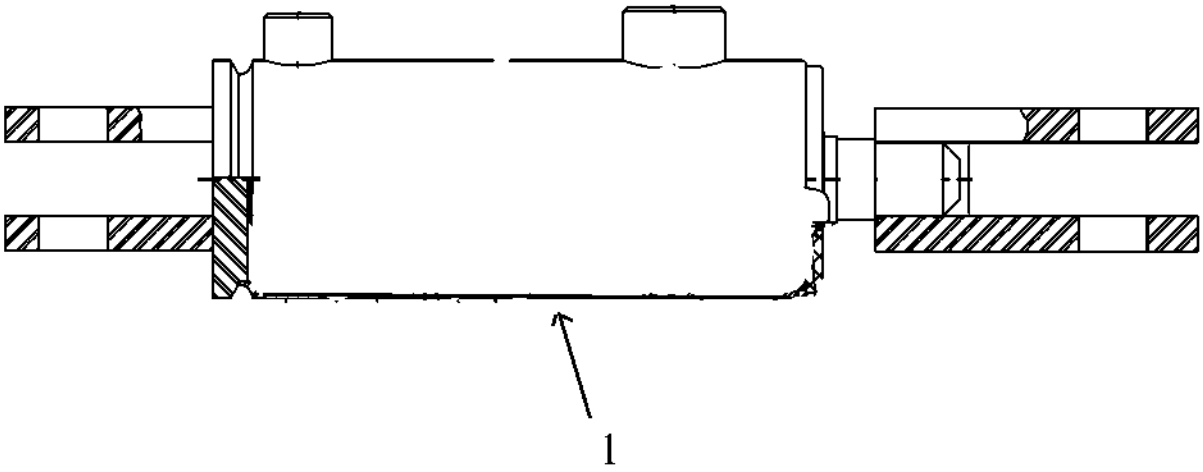

136825-A.tif

Copyright © 2007 AGCO Corporation

CYLINDER-HYD,3.00X11.38X1.25

ITEM	PART #	QTY	DESCRIPTION	COMMENTS
1	AG136826	-	KIT-SEAL,HYD CYL,092GN0129	

Copyright © 2007 AGCO Corporation

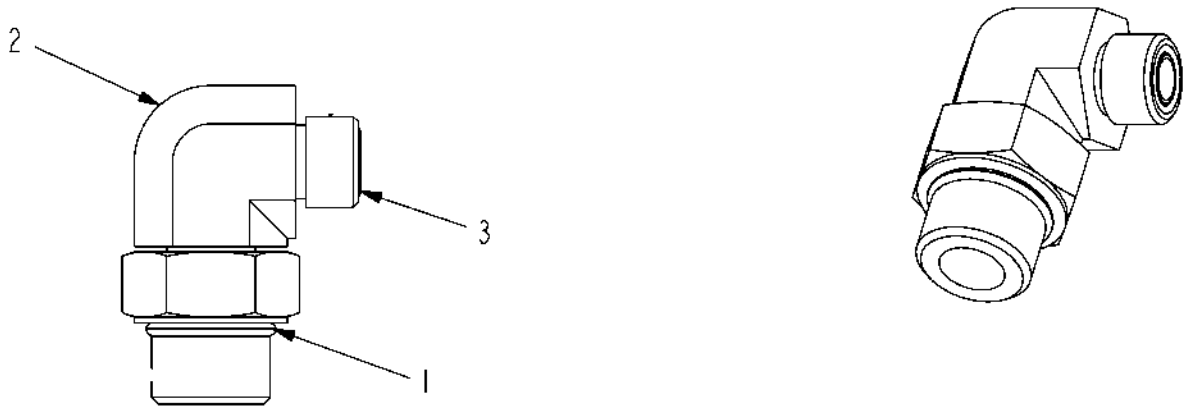

512771D1-01-N562-.TIF

Copyright © 2007 AGCO Corporation

ELBOW-90D,-12STOR X -8ORFS

ITEM	PART #	QTY	DESCRIPTION	COMMENTS
1	400416X1	1	SEAL-O-RING 23.47IDX2.95DIA	
2	401393X1	1	ELBOW-90D,-12STOR X -8ORFS	
3	CH6V-8398	1	SEAL-O-RING-16.03ODX1.78DIA	

Copyright © 2007 AGCO Corporation

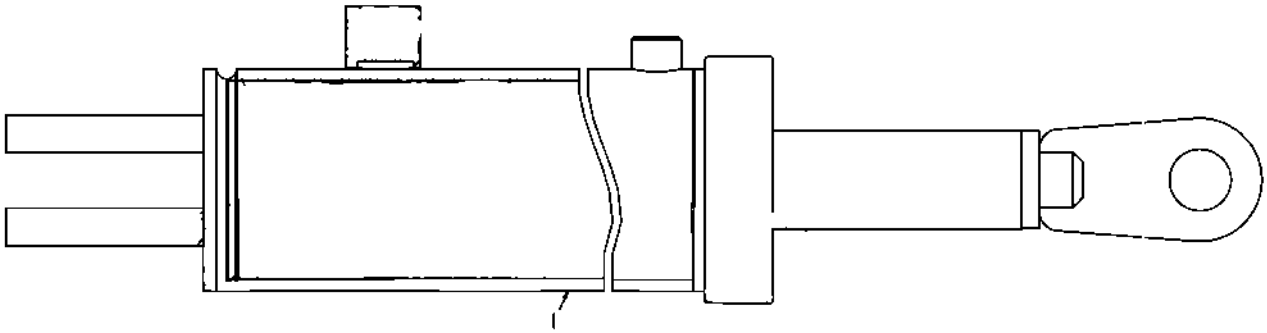

136742-01-M788.TIF

Copyright © 2007 AGCO Corporation

CYLINDER-HYD,4.00X6.00X2.00

ITEM	PART #	QTY	DESCRIPTION	COMMENTS
1	AG136743	-	KIT-SEAL,HYD CYL,092JS116	

Copyright © 2007 AGCO Corporation

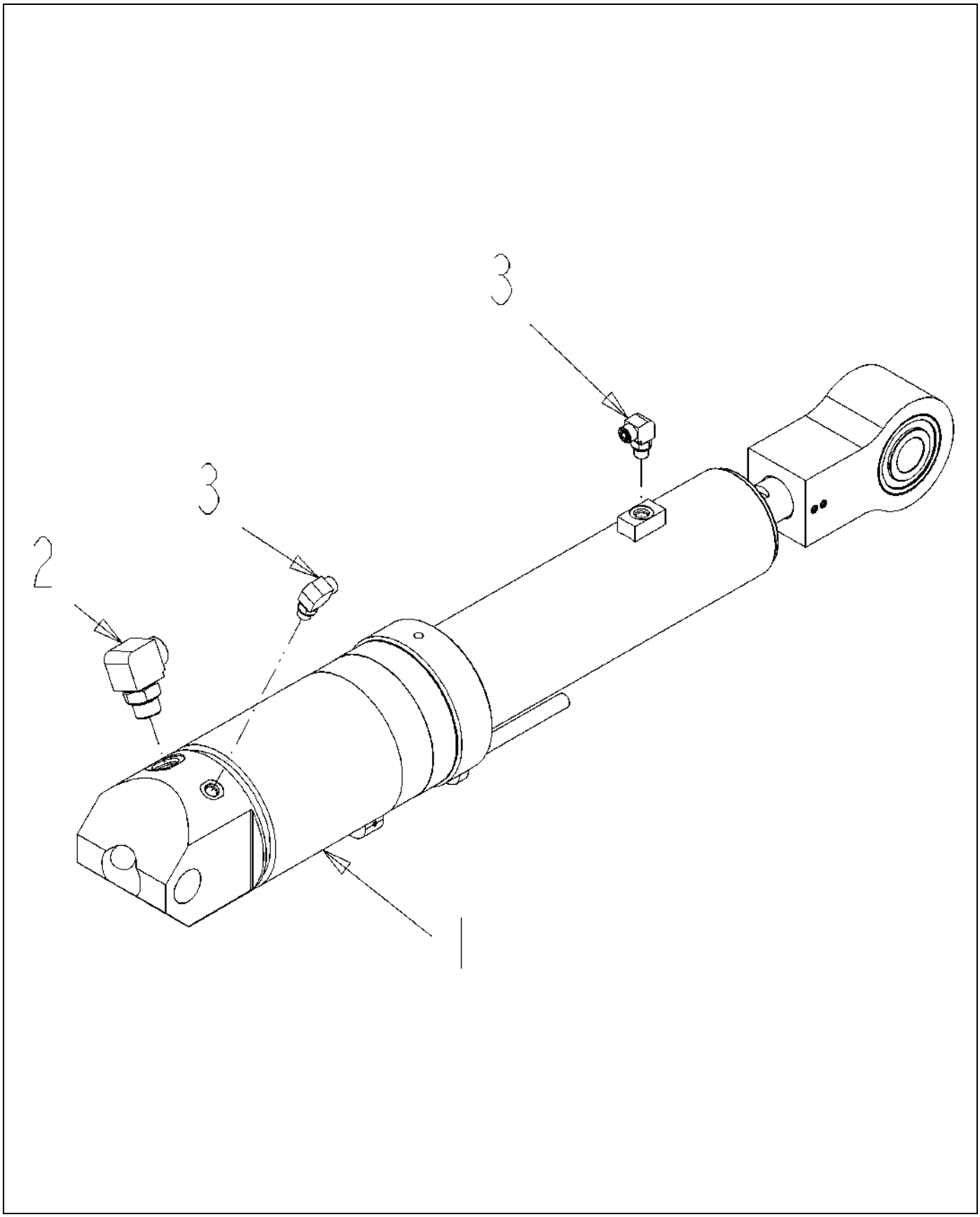

518027D1-02-R313-.TIF

Copyright © 2007 AGCO Corporation

CYL ASM-HYD,SWG,BM,120

ITEM	PART #	QTY	DESCRIPTION	COMMENTS
1	514560D1	1	CYL-HYD,4.00X21.89X1.75,BM SWG	SEE PAGE 5-33
2	CH148-8347	1	ELBOW AS-90° 12STOR X 12ORFS	SEE PAGE 5-34
3	CH148-8378	2	ELBOW AS-90-6STOR X 6ORFS	SEE PAGE 5-24

Copyright © 2007 AGCO Corporation

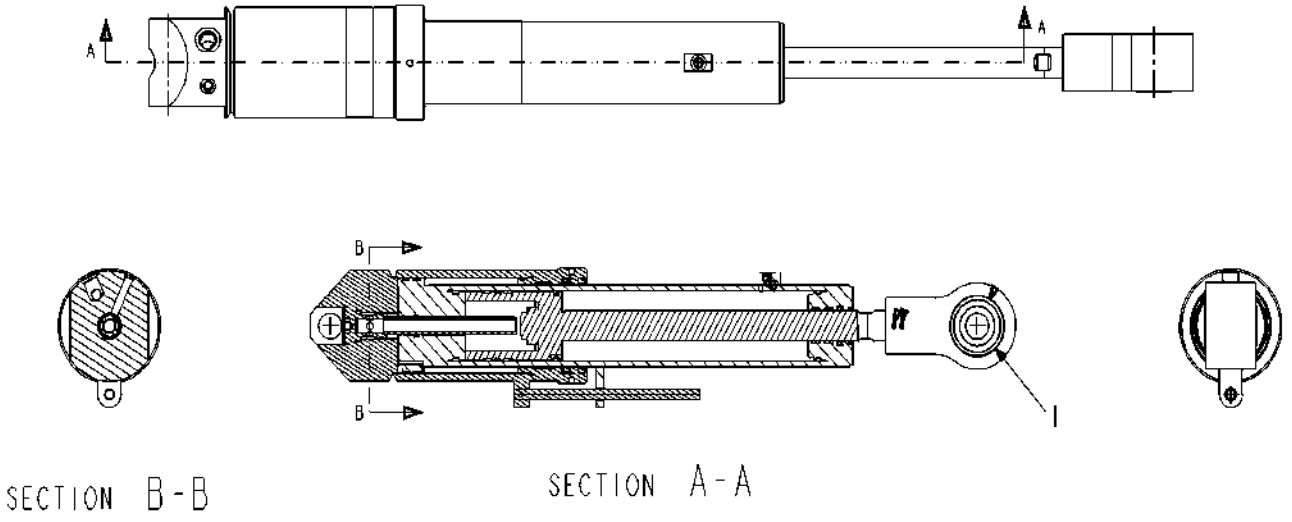

514560D1-03-R313-.TIF

Copyright © 2007 AGCO Corporation

CYL-HYD,4.00X21.89X1.75,BM SWG

ITEM	PART #	QTY	DESCRIPTION	COMMENTS
REF	515930D1	-	KIT-SEAL,CYL,HYD,093MB006	
1	514714D1	1	BSHG-ISLN,BM SWG,3.501 X 1.510	

Copyright © 2007 AGCO Corporation

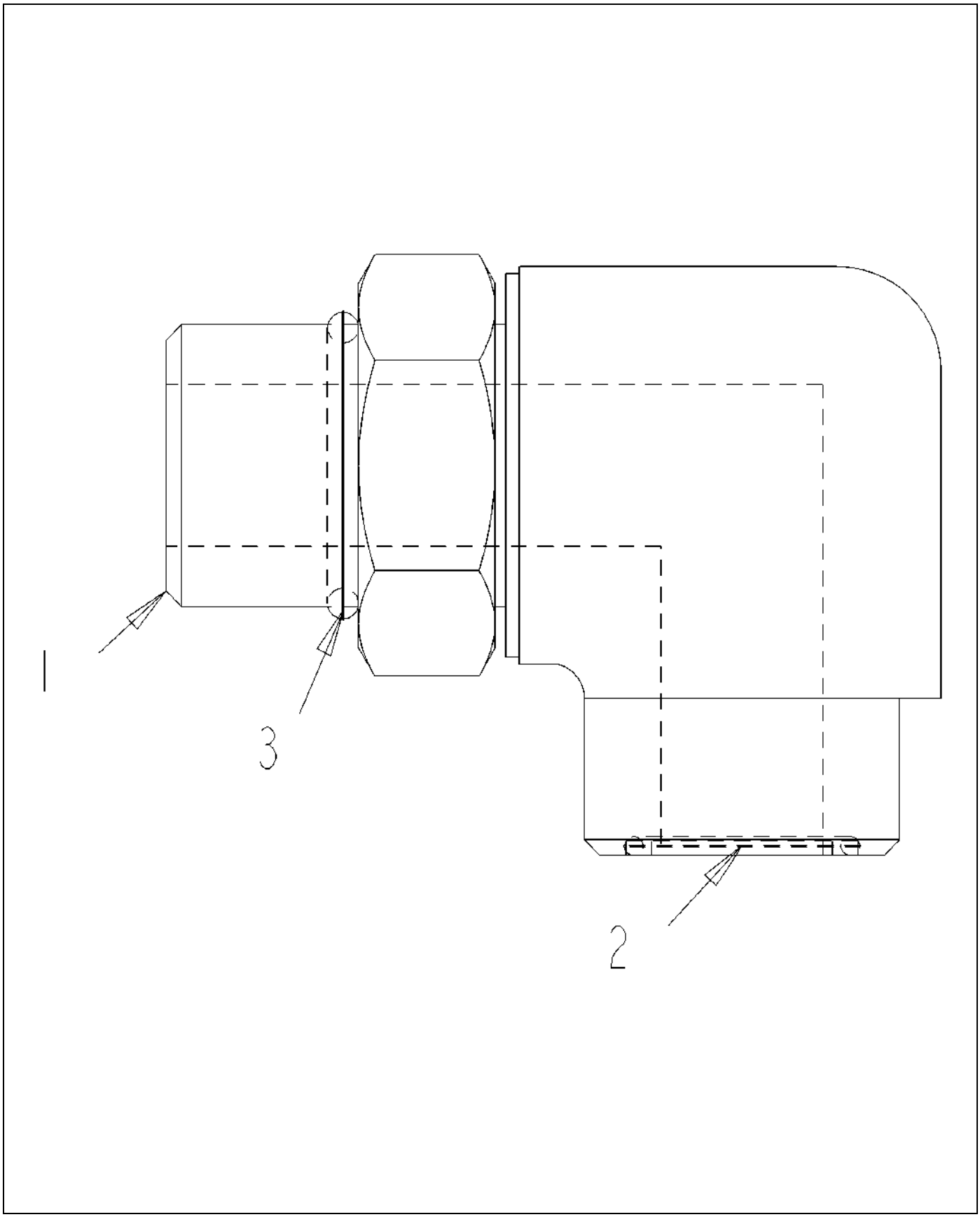

CH148-8347-02-K486-.TIF

Copyright © 2007 AGCO Corporation

ELBOW AS-90D 12STOR X 12ORFS

ITEM	PART #	QTY	DESCRIPTION	COMMENTS
1	CH6V-9007	1	ELBOW-90° 12STOR X 12ORFS	
2	400366X1	1	SEAL-O-RING 22.5 ODX1.78 DIA	
3	400416X1	1	SEAL-O-RING 23.47IDX2.95DIA	

Copyright © 2007 AGCO Corporation

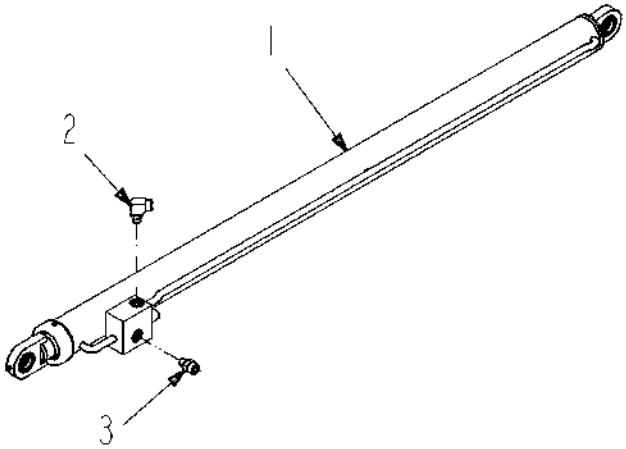

518026D1-01-R172-.TIF

Copyright © 2007 AGCO Corporation

CYL ASM-HOIST,BM,5.00 SL

ITEM	PART #	QTY	DESCRIPTION	COMMENTS
1	AG122392	1	CYL-HYD,2.5X52X1.75,W/CB VALVE	SEE PAGE 5-10
2	400417X1	1	ELBOW AS-90DEG-6STOR-8ORFS	SEE PAGE 5-6
3	400428X1	1	CONNECTOR AS-STR-6STOR-8ORFS	SEE PAGE 5-7

Copyright © 2007 AGCO Corporation

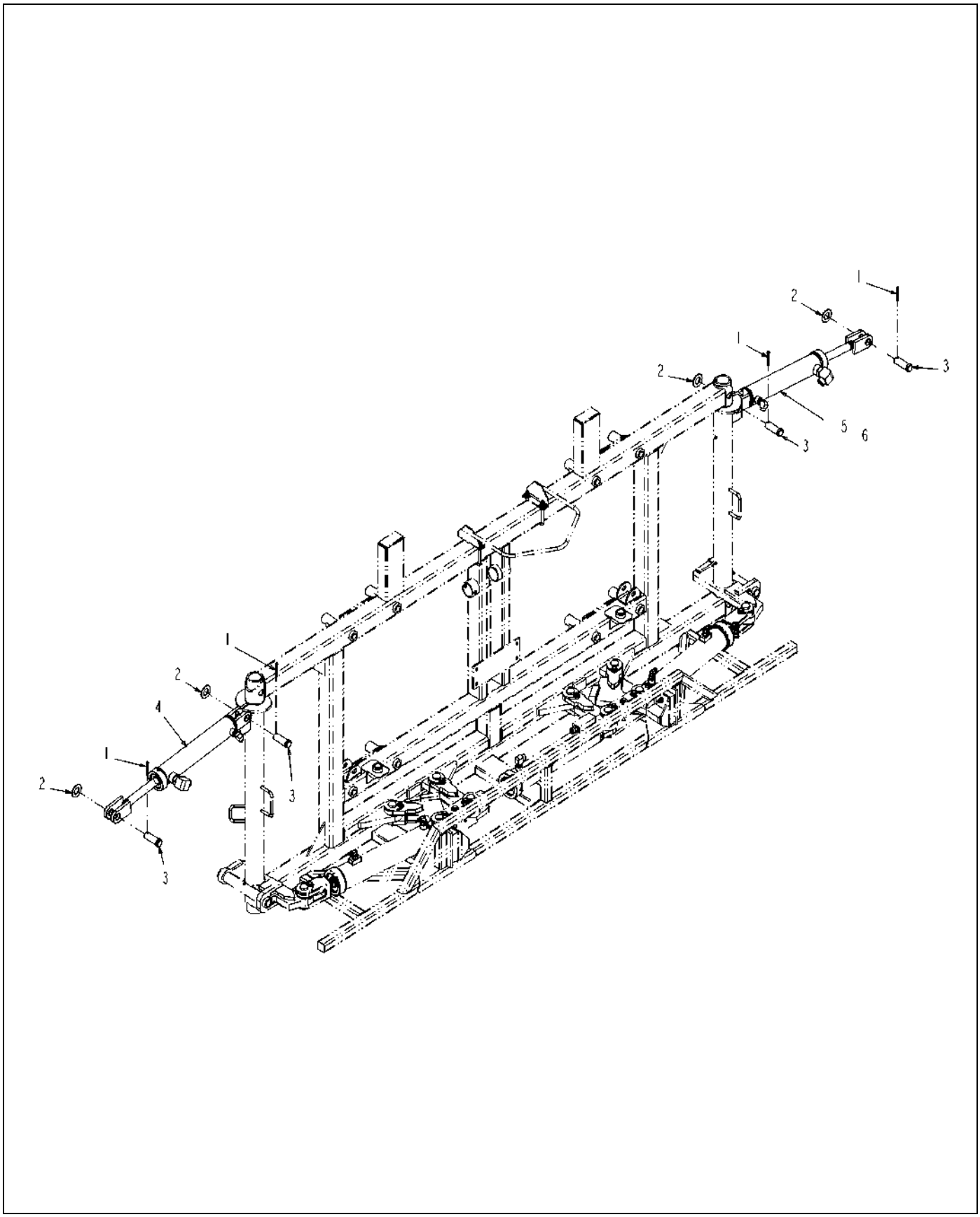

519367D1-01-R284-.TIF

Copyright © 2007 AGCO Corporation

CYL INSTL-TILT,STD,80/90/100

ITEM	PART #	QTY	DESCRIPTION	COMMENTS
1	AG515352	4	PIN COTTER 0.18X2.00 SS	
2	AG551856	4	WASHER 1.00 FL ZN SAE TYPE-A	
3	AG602132	4	PIN CLEVIS 1.00X2.62 ZN	[A]
4	512521D1	1	CYLINDER ASM-BOOM TILT,LH	SEE PAGE 5-37
5	512522D1	1	CYLINDER ASM-BOOM TILT,RH	SEE PAGE 5-39
6	519368D1	1	PLMB INSTL-HYD,BOOM,80/90/100	
	FOOTNOTE [A]		GREASABLE PIN IS 519637	

Copyright © 2007 AGCO Corporation

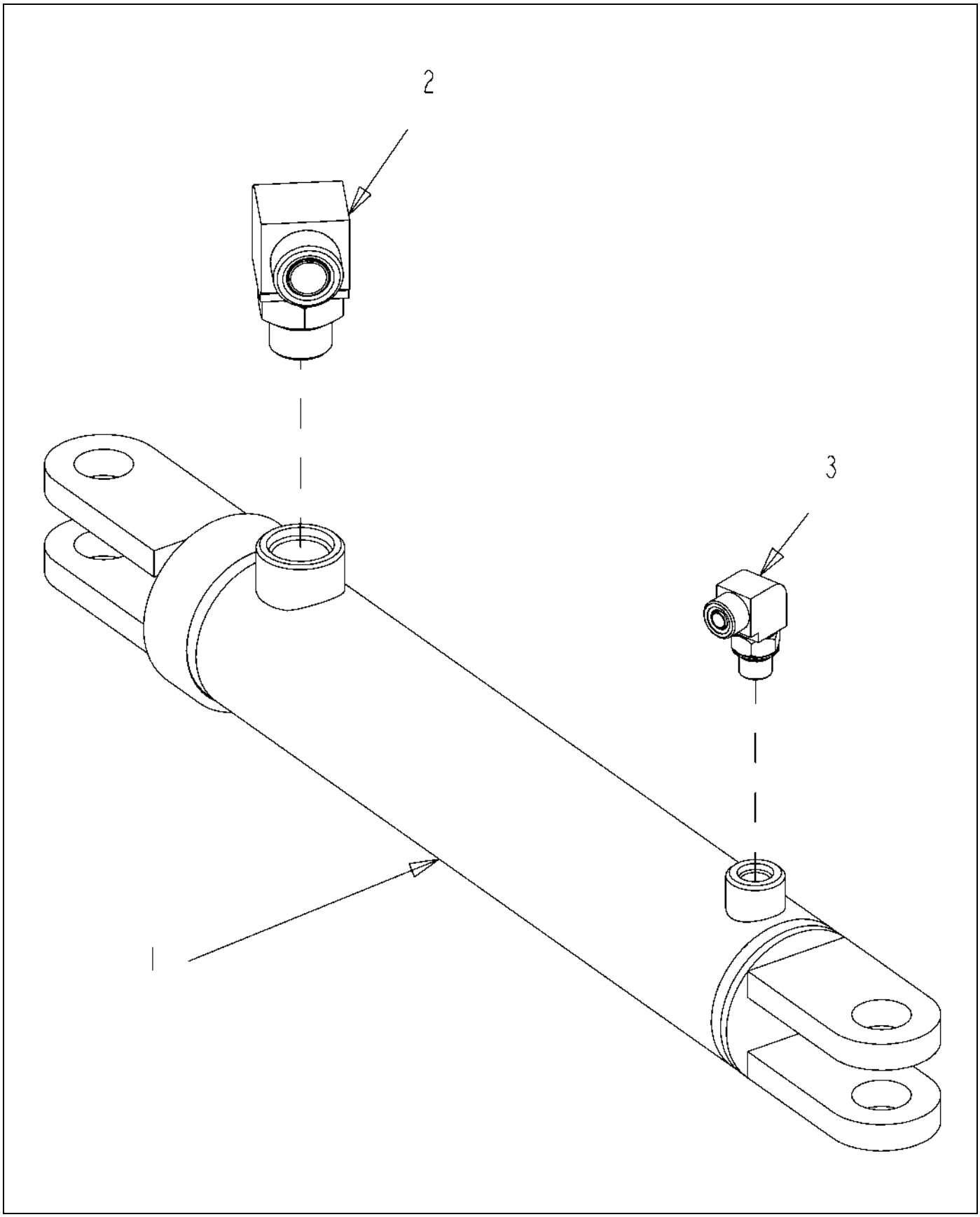

512521D1-01-N562-.TIF

Copyright © 2007 AGCO Corporation

CYLINDER ASM-BOOM TILT,LH

ITEM	PART #	QTY	DESCRIPTION	COMMENTS
1	AG122390	1	CYLINDER-HYD,2.50X12.00X1.12	SEE PAGE 5-38
2	CH148-8347	1	ELBOW AS-90° 12STOR X 12ORFS	SEE PAGE 5-34
3	CH148-8378	1	ELBOW AS-90-6STOR X 6ORFS	SEE PAGE 5-24

Copyright © 2007 AGCO Corporation

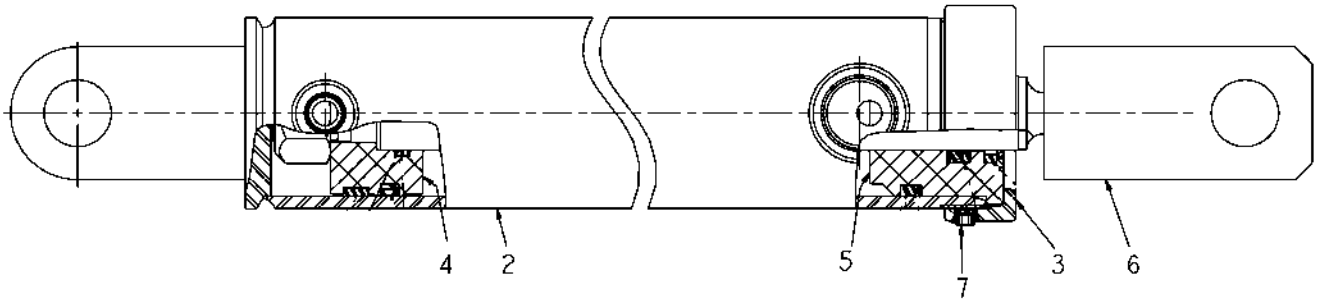

122390.TIF

Copyright © 2007 AGCO Corporation

CYLINDER-HYD,2.50X12.00X1.12

ITEM	PART #	QTY	DESCRIPTION	COMMENTS
REF	AG122448	-	KIT-SEAL,HYD CYL,092FM0035	
2	AG727108	1	TUBE / CYLINDER	
3	AG061231	1	CAP/HEAD GLAND	
4	AG727109	1	PISTON	
5	AG727110	1	ROD/CYLINDER	
5	AG727111	1	GLAND / HEAD	
6	AG138370	1	ROD WLDMT	
7	AG061236	1	SCREW/SET .313-18X.25	

Copyright © 2007 AGCO Corporation

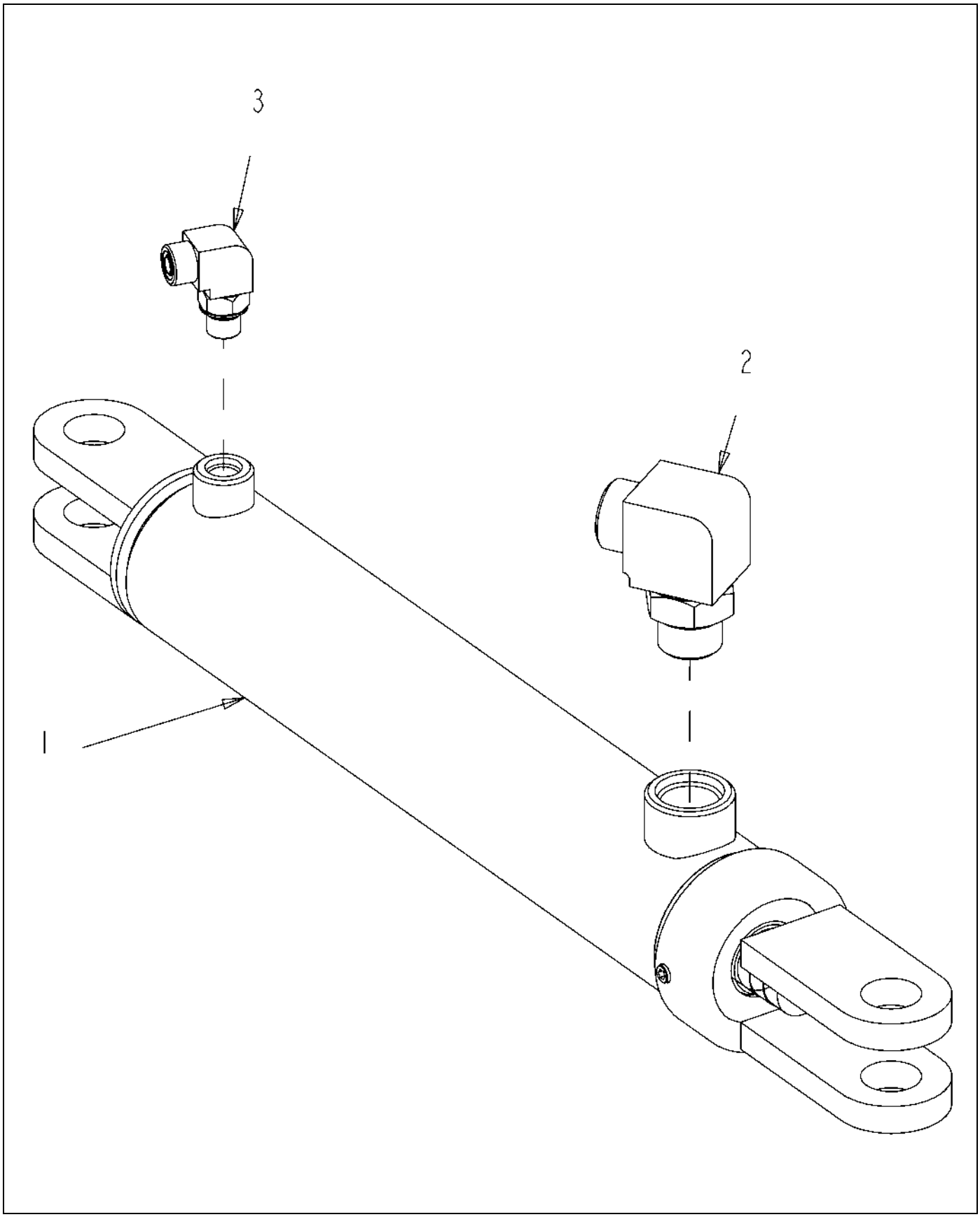

512522D1-01-N562-.TIF

Copyright © 2007 AGCO Corporation

CYLINDER ASM-BOOM TILT,RH

ITEM	PART #	QTY	DESCRIPTION	COMMENTS
1	AG122390	1	CYLINDER-HYD,2.50X12.00X1.12	SEE PAGE 5-38
2	CH148-8347	1	ELBOW AS-90° 12STOR X 12ORFS	SEE PAGE 5-34
3	CH148-8378	1	ELBOW AS-90-6STOR X 6ORFS	SEE PAGE 5-24

Copyright © 2007 AGCO Corporation

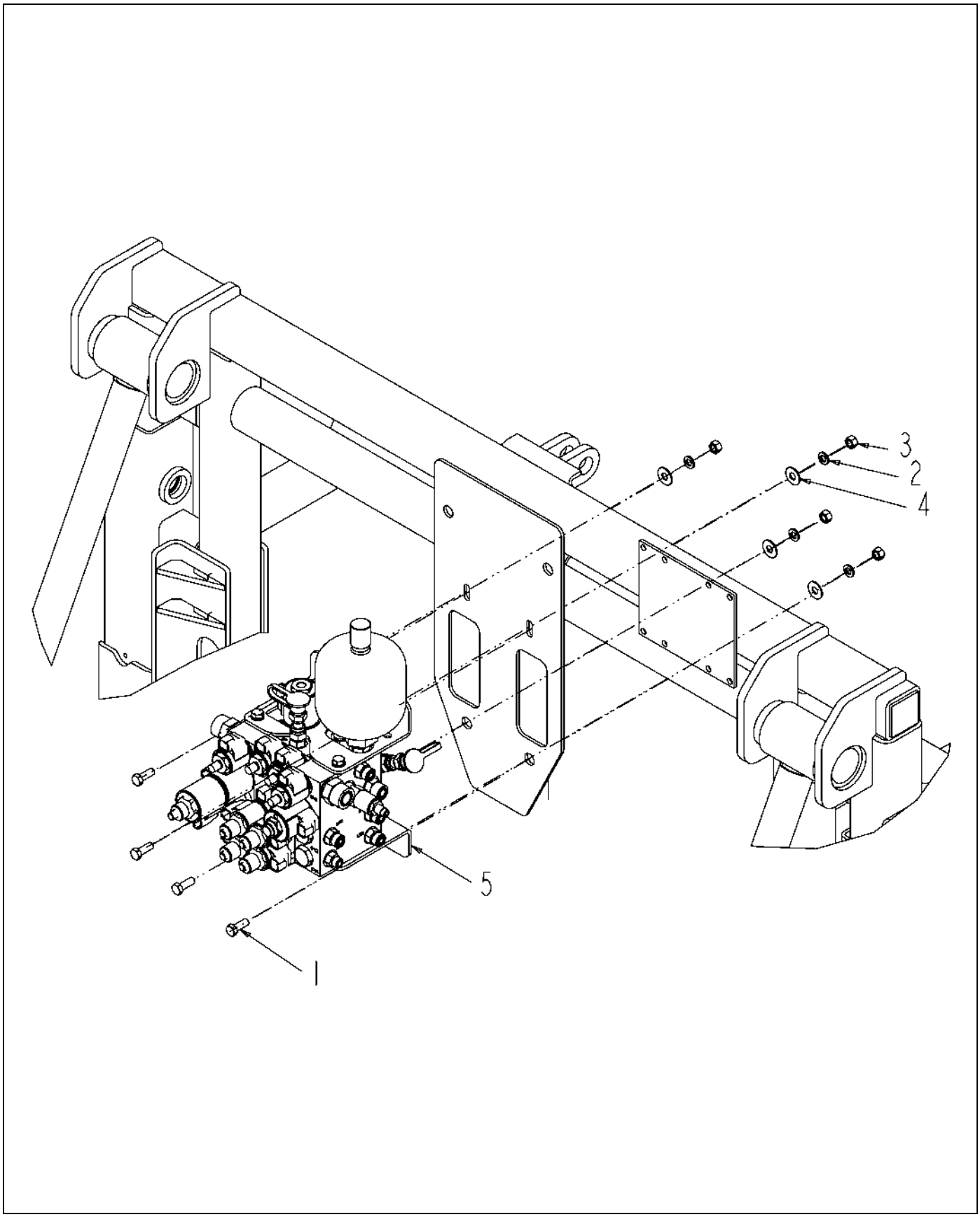

512523D1-01-N562-.TIF

Copyright © 2007 AGCO Corporation

BLOCK INSTL-HYD,STD,BOOM

ITEM	PART #	QTY	DESCRIPTION	COMMENTS
1	AG550175	4	BOLT 0.37-16NCX 1.00 G5 ZN HHD	
2	AG550191	4	WASHER 0.37 LK ZN REG	
3	AG550825	4	NUT 0.37-16NC HEX ZN REG	
4	AG551007	4	WASHER 0.37 FL ZN REG TYPE-B	
5	512519D1	1	BLOCK ASM-HYD,BOOM	SEE PAGE 5-15

Copyright © 2007 AGCO Corporation

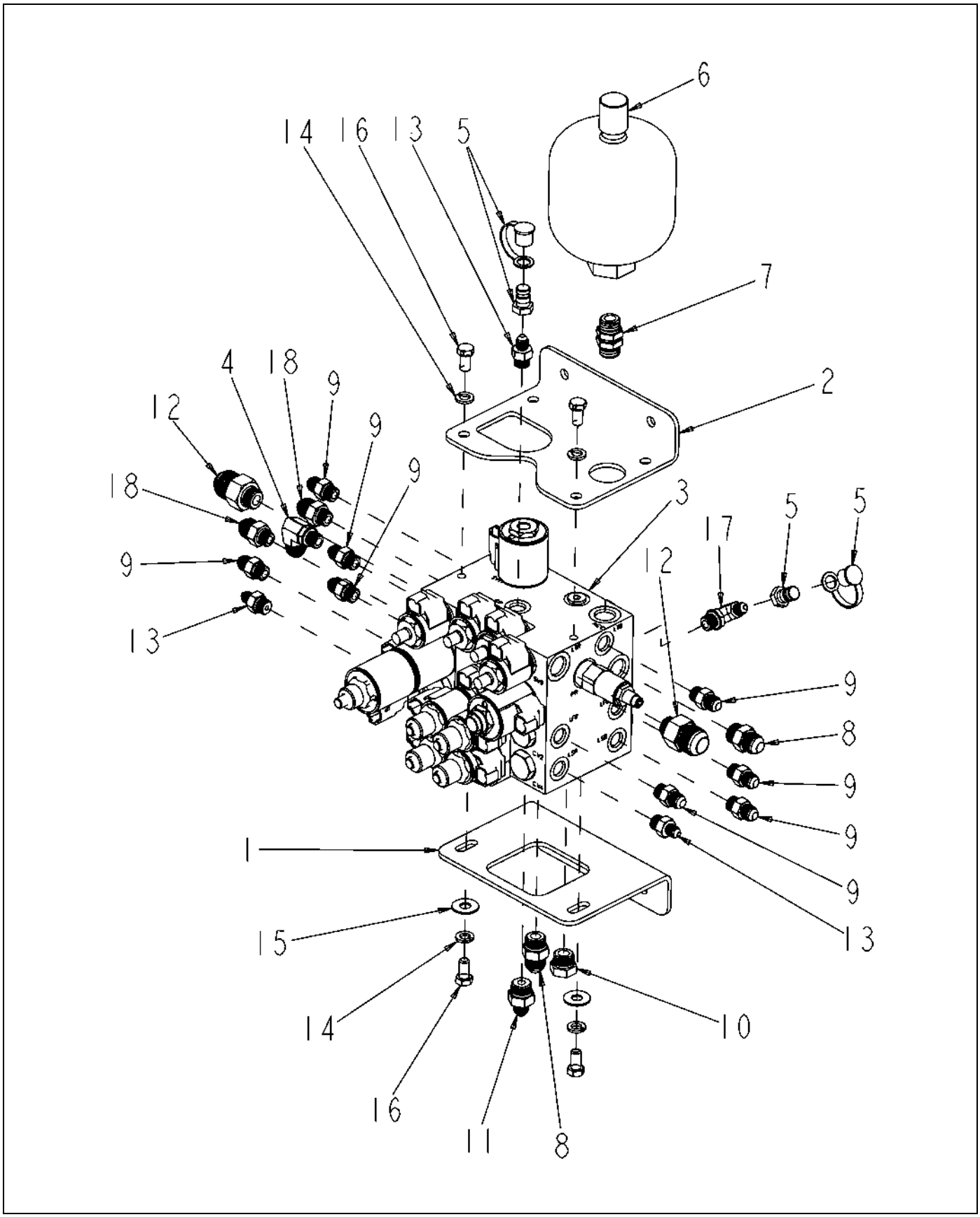

327802.TIF

Copyright © 2007 AGCO Corporation

BLOCK ASM-HYD,BOOM

ITEM	PART #	QTY	DESCRIPTION	COMMENTS
1	AG327803	1	BRKT-MTG,LOWER,VALVE BLOCK	
2	AG327804	1	BRKT-MTG,UPPER,BLOCK,VALVE	
3	AG424252	1	VALVE-HYD,7 BANK,W/BREAKAWAY	SEE PAGE 5-21
4	AG514800	1	ELBOW-90D,-6MORX-8 MJIC	[A]
5	AG519113	2	TUBE END NIPPLE -4	
6	AG523544	1	ACCUM-HYD,DIAPH,45CU IN(MV)	
7	AG524378	1	ADPTR-STR,.50MO-R X .50MO-R	SEE PAGE 5-22
8	AG551139	2	ADAP STR 0.50MO-R X 0.50 MJIC	[B]
9	AG560693	8	ADAP STR 0.37MO-R X 0.37MJIC	SEE PAGE 5-42
10	AG560899	1	PLUG 0.50MO-R HEX	
11	AG561308	1	ADAP STR 0.50MO-R X 0.37MJIC	
12	AG561339	2	ADAP STR 0.50MO-R X 0.75MJIC	[C]
13	AG561744	3	ADAP STR 0.37MO-R X 0.25MJIC	[D]
14	AG562050	4	WASHER 0.37 LK SS REG	
15	AG562073	2	WASHER 0.37 FL SS REG TYPE-B	
16	AG562120	4	BOLT 0.37-16NCX 0.75 S.S. HHD	
17	AG562354	1	ELBOW 90D 0.37MO-R X 0.25MJIC	[E]
18	AG562372	2	ADAP STR 0.37MO-R X 0.50MJIC	
	FOOTNOTE [A]		AG713166 - ORING	
	FOOTNOTE [B]		AG713670-O-RING	
	FOOTNOTE [C]		AG713670 O-RING	
	FOOTNOTE [D]		AG713166 O-RING	
	FOOTNOTE [E]		AG713166 O-RING	

Copyright © 2007 AGCO Corporation

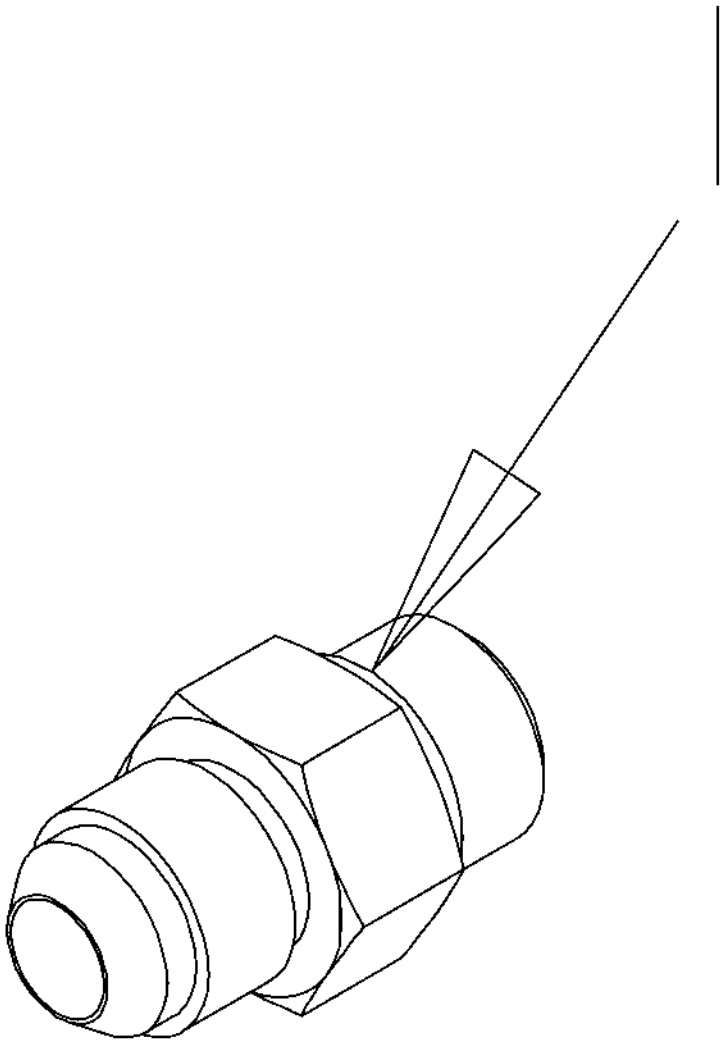

560693.TIF

Copyright © 2007 AGCO Corporation

ADAP STR 0.37MO-R X 0.37MJIC

ITEM	PART #	QTY	DESCRIPTION	COMMENTS
1	AG139107	1	O-RING,FLARE-O,BUNA	

Copyright © 2007 AGCO Corporation

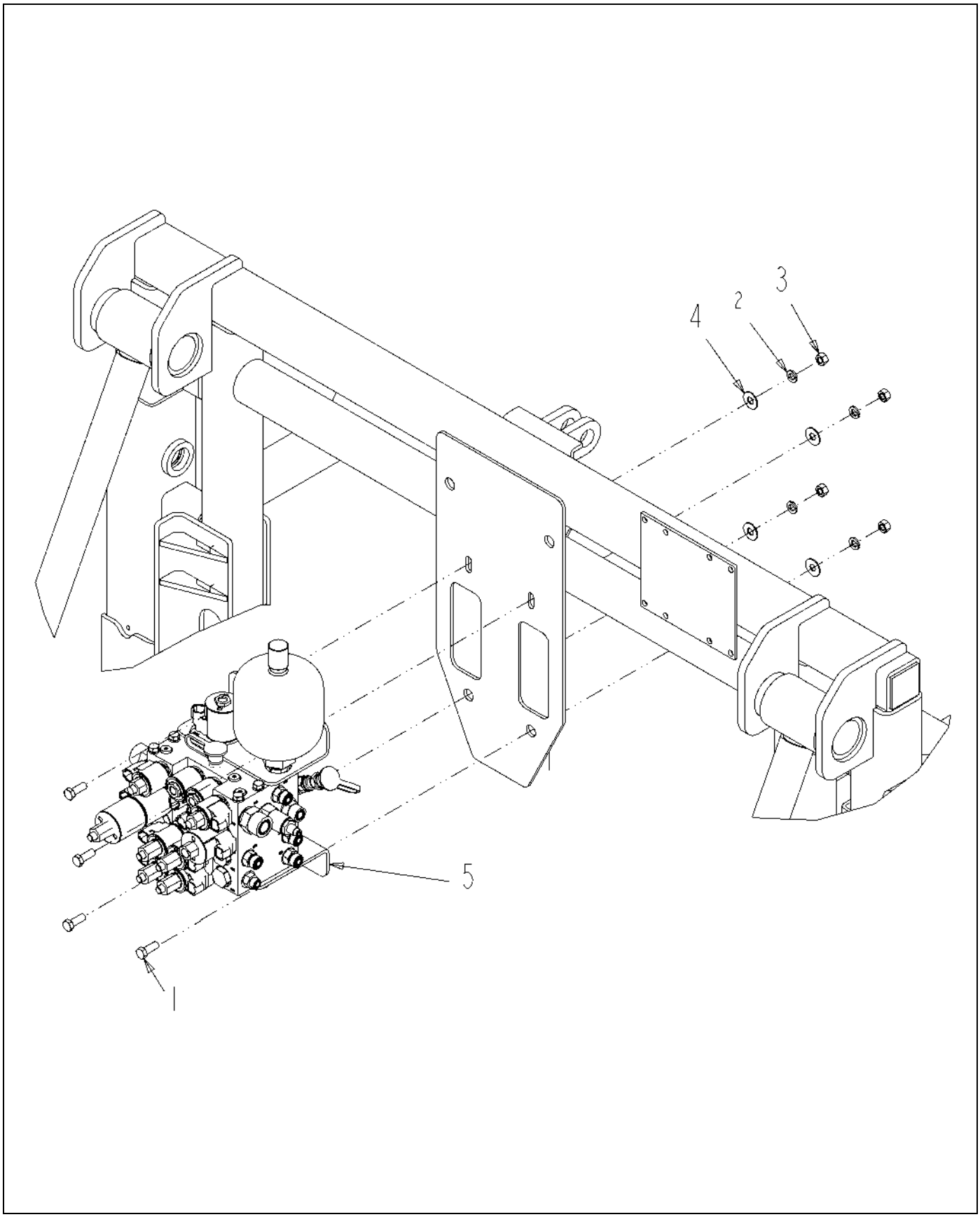

515128D1-01-R284-.TIF

Copyright © 2007 AGCO Corporation

BLK INSTL-HYD,NO AUTOBM,SM BM

ITEM	PART #	QTY	DESCRIPTION	COMMENTS
1	AG550175	4	BOLT 0.37-16NCX 1.00 G5 ZN HHD	
2	AG550191	4	WASHER 0.37 LK ZN REG	
3	AG550825	4	NUT 0.37-16NC HEX ZN REG	
4	AG551007	4	WASHER 0.37 FL ZN REG TYPE-B	
5	515129D1	1	BLK ASM-HYD,BM,NO AUTOBM,SM BM	SEE PAGE 11-22

Copyright © 2007 AGCO Corporation

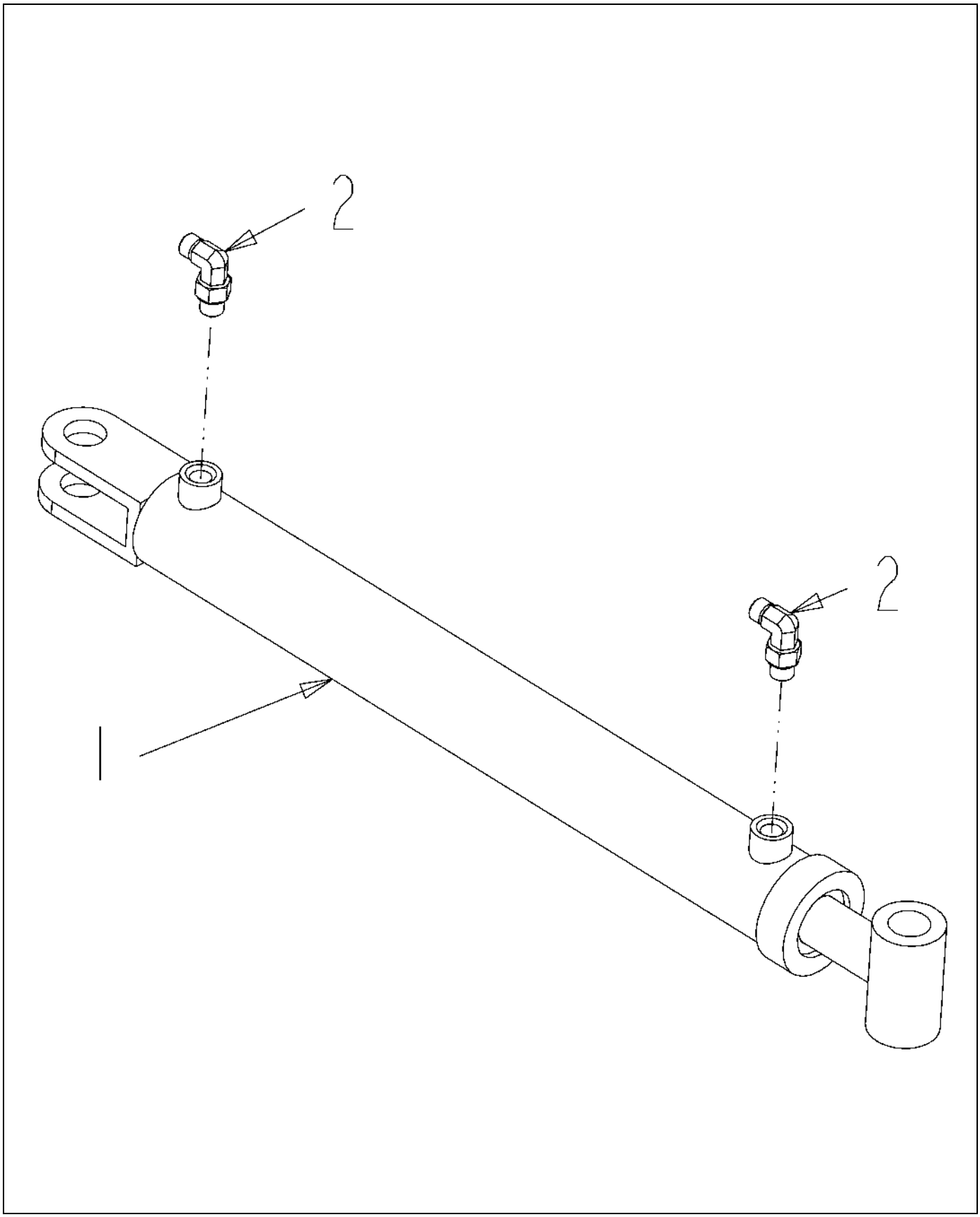

512791D1-01-N562-.TIF

Copyright © 2007 AGCO Corporation

CYLINDER ASM-BOOM TIP FOLD

ITEM	PART #	QTY	DESCRIPTION	COMMENTS
1	AG424374	1	CYLINDER-HYD,2.00X16.00X1.25	SEE PAGE 5-45
2	401289X1	2	ELBOW-90D,-6STOR X -4ORFS	SEE PAGE 5-3

Copyright © 2007 AGCO Corporation

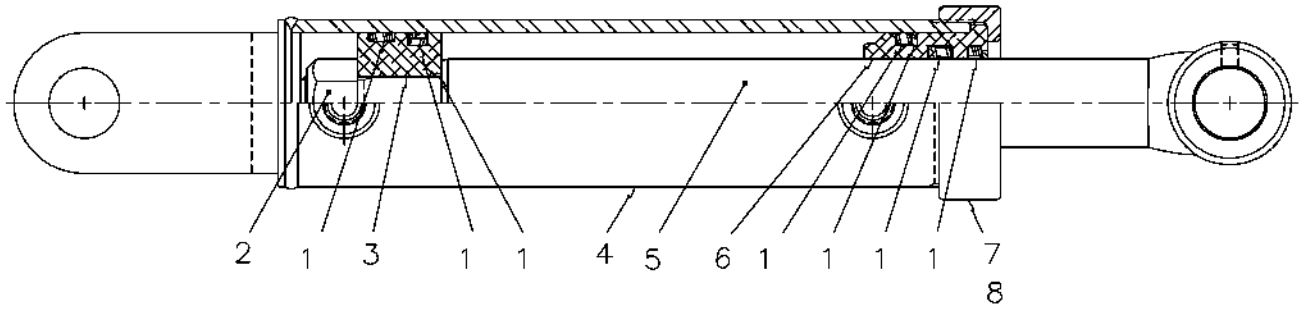

424374.TIF

Copyright © 2007 AGCO Corporation

CYLINDER-HYD,2.00X16.00X1.25

ITEM	PART #	QTY	DESCRIPTION	COMMENTS
1	AG714942	1	SEAL KIT 519117	
2	AG061235	1	NUT/LOCK UNF .75-16	
3	AG727125	1	PISTON	
4	AG727124	1	TUBE	
5	AG727123	1	ROD/CYLINDER	
6	AG727126	1	GLAND/HEAD	
7	AG138398	1	CAP/HEAD GLAND	
8	AG061236	1	SCREW/SET .313-18X.25	

Copyright © 2007 AGCO Corporation

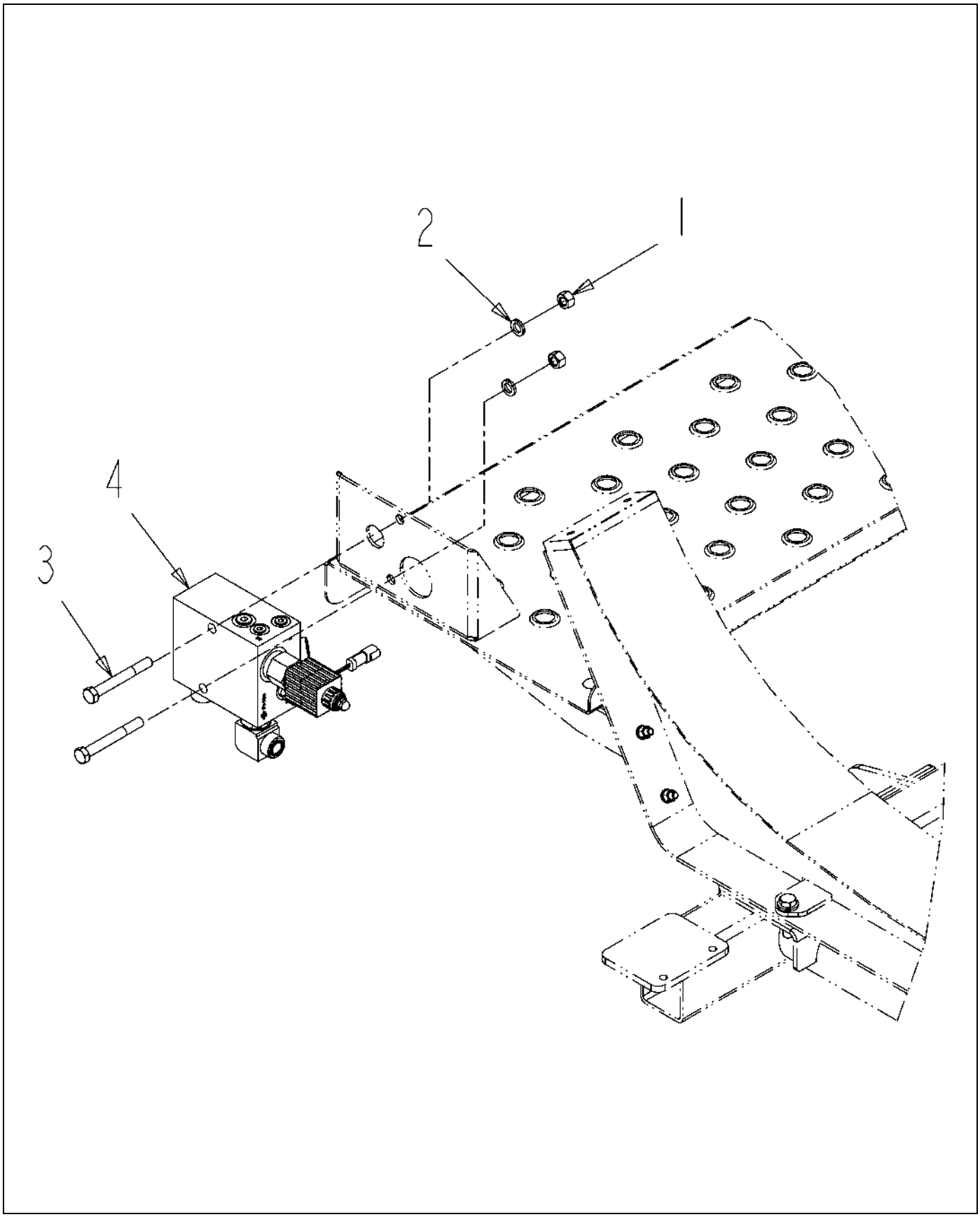

512857D1-01-N562-.TIF

Copyright © 2007 AGCO Corporation

VALVE INSTL-HYD,PWM,HV

ITEM	PART #	QTY	DESCRIPTION	COMMENTS
1	AG562045	2	NUT 0.50-13NC HEX SS REG	
2	AG562053	2	WASHER 0.50 LK SS REG	
3	AG562621	2	BOLT 0.50-13NCX 4.00 SS HHD	
4	512858D1	1	FTG ASM-ORIENT,PWM VALVE,20GPM	SEE PAGE 5-47

Copyright © 2007 AGCO Corporation

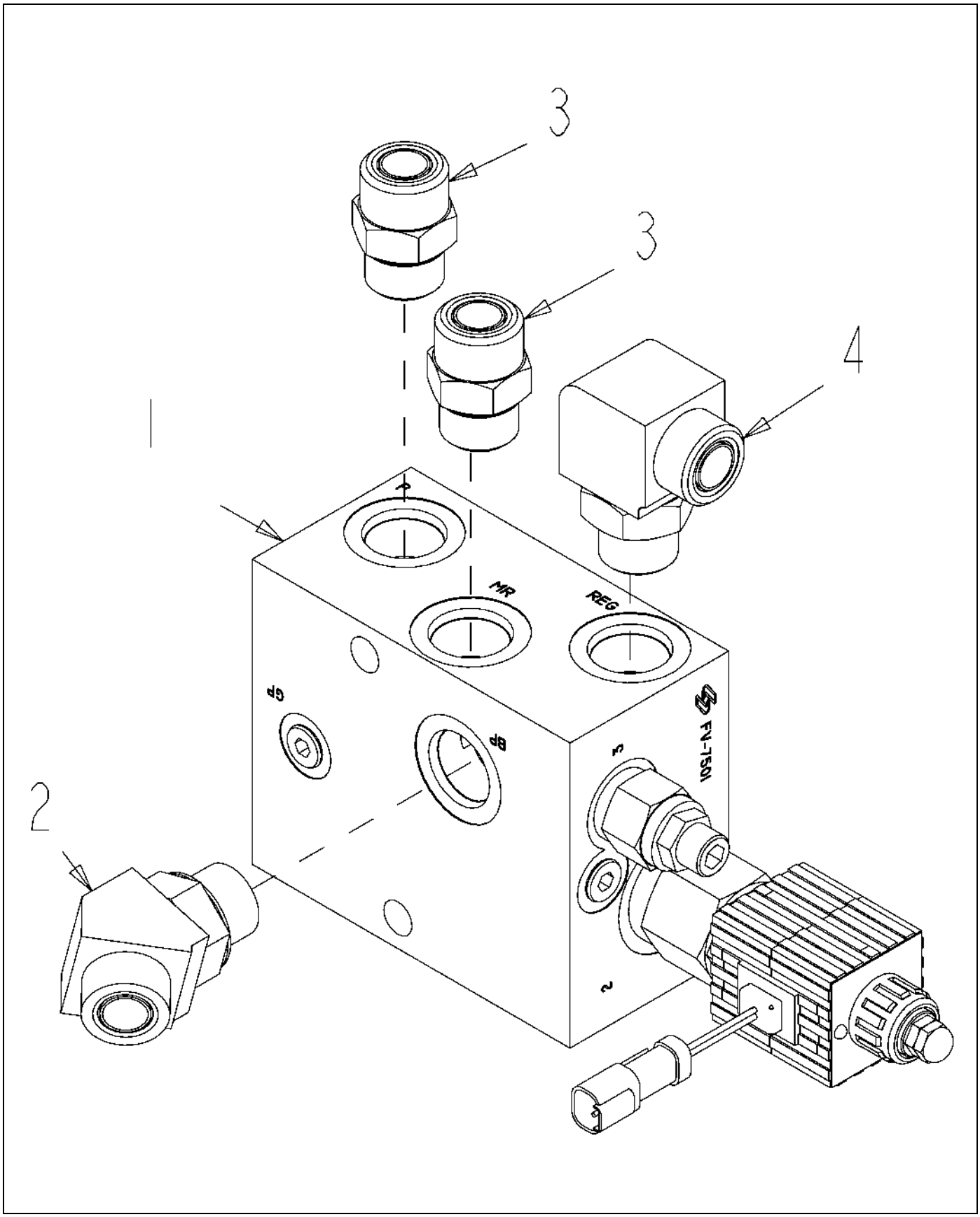

512858D1-01-N562-.TIF

Copyright © 2007 AGCO Corporation

FTG ASM-ORIENT,PWM VALVE,20GPM

ITEM	PART #	QTY	DESCRIPTION	COMMENTS
1	AG424319	1	VALVE-HYD,PWM,LIQ SYS,20 GPM	SEE PAGE 5-49
2	400967X1	1	ELBOW AS-45 -12STOR-12ORFS	SEE PAGE 5-48
3	CH148-8327	2	CONNECTOR AS-12 ORFSX 12STOR	SEE PAGE 5-50
4	CH148-8347	1	ELBOW AS-90° 12STOR X 12ORFS	SEE PAGE 5-34

Copyright © 2007 AGCO Corporation

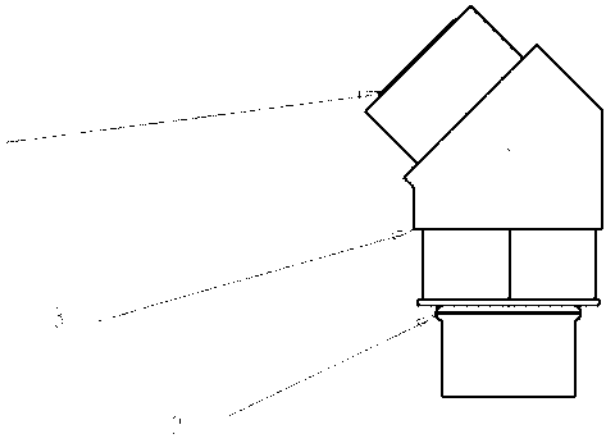

400967X1-01-K486-.tif

Copyright © 2007 AGCO Corporation

ELBOW AS-45 -12STOR-12ORFS

ITEM	PART #	QTY	DESCRIPTION	COMMENTS
1	400366X1	1	SEAL-O-RING 22.5 ODX1.78 DIA	
2	400416X1	1	SEAL-O-RING 23.47IDX2.95DIA	
3	400966X1	1	ELBOW-45 -12STOR-12ORFS	

Copyright © 2007 AGCO Corporation

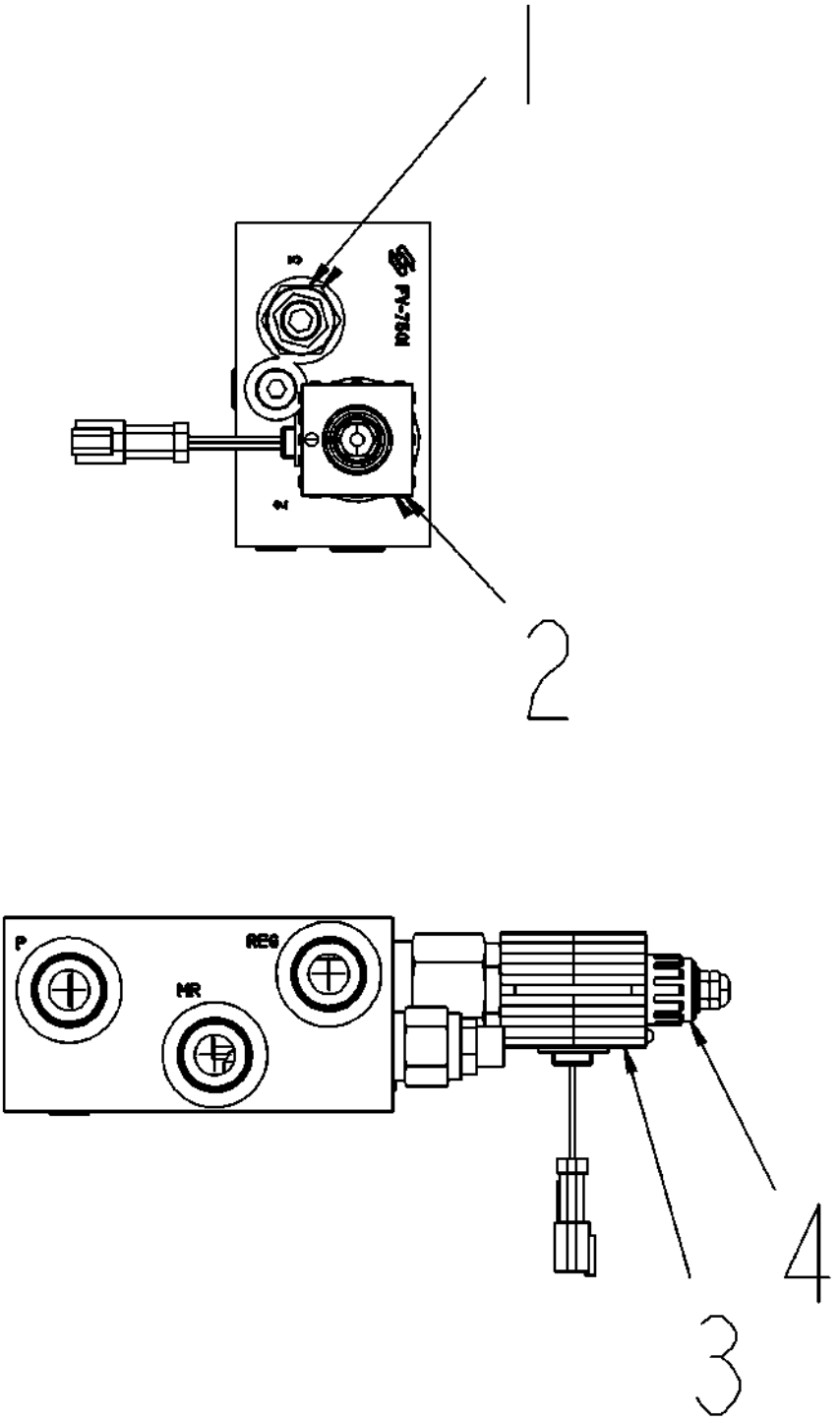

424319-M125-.TIF

Copyright © 2007 AGCO Corporation

VALVE-HYD,PWM,LIQ SYS,20 GPM

ITEM	PART #	QTY	DESCRIPTION	COMMENTS
1	AG059917	-	VALVE,RELIEF	
2	AG059914	-	PROP PRIORITY FLOW CONTROL	[A]
3	AG060702	-	COIL	
4	AG726404	-	NUT/COIL (424287)	
	FOOTNOTE [A]		059916-COIL - COIL IS NOT INCLUDED WITH 059914.	

Copyright © 2007 AGCO Corporation

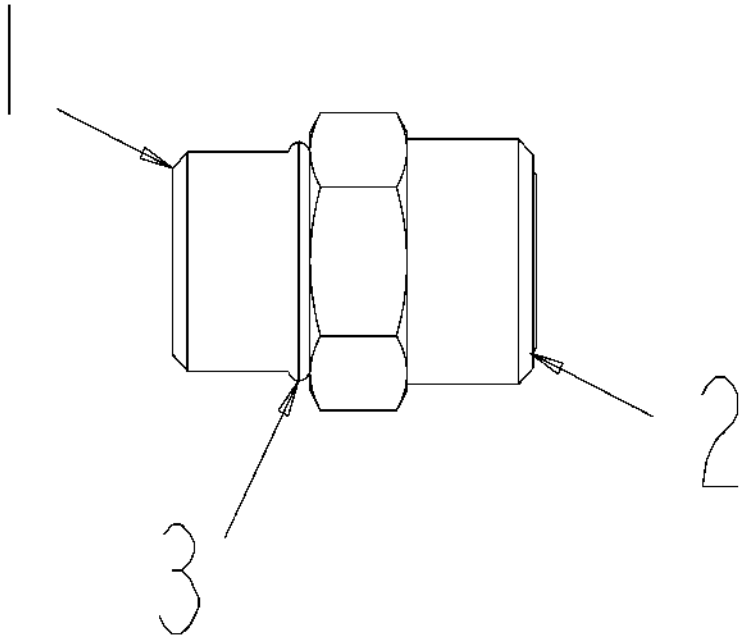

CH148-8327-01-.TIF

Copyright © 2007 AGCO Corporation

CONNECTOR AS-12 ORFSX 12STOR

ITEM	PART #	QTY	DESCRIPTION	COMMENTS
1	CH6V-8637	1	CONNECTOR-12 ORFSX 12STOR	
2	400366X1	1	SEAL-O-RING 22.5 ODX1.78 DIA	
3	400416X1	1	SEAL-O-RING 23.47IDX2.95DIA	

Copyright © 2007 AGCO Corporation

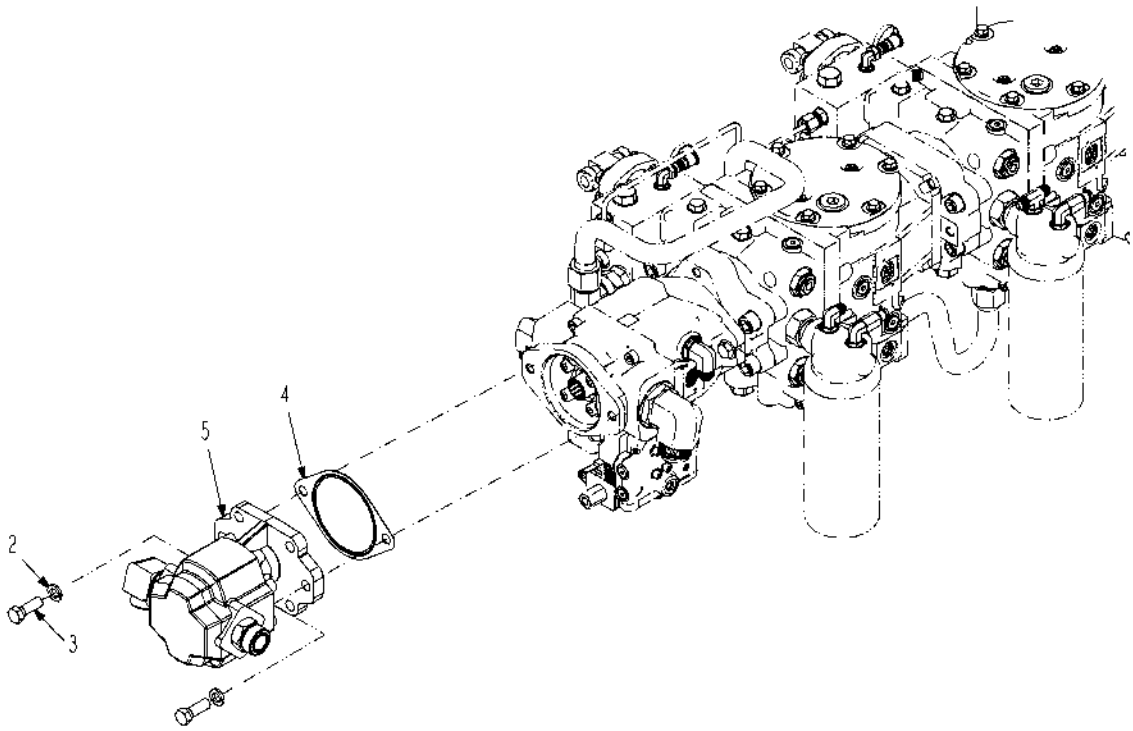

512859D1-01-N562-.TIF

Copyright © 2007 AGCO Corporation

ITEM	PART #	QTY	DESCRIPTION	COMMENTS
1	AG512885	AR	LOCTITE ADHESIVE SEALANT BLUE	
2	AG550264	2	WASHER 0.50 LK ZN REG	
3	AG550817	2	BOLT 0.50-13NCX 1.50 G5 ZN HHD	
4	AG714101	1	GASKET PUMP	[A]
5	512860D1	1	PUMP ASM-HYD,SYS,HV	SEE PAGE 5-52
	FOOTNOTE [A]		COVER PLATE - AG106560	

Copyright © 2007 AGCO Corporation

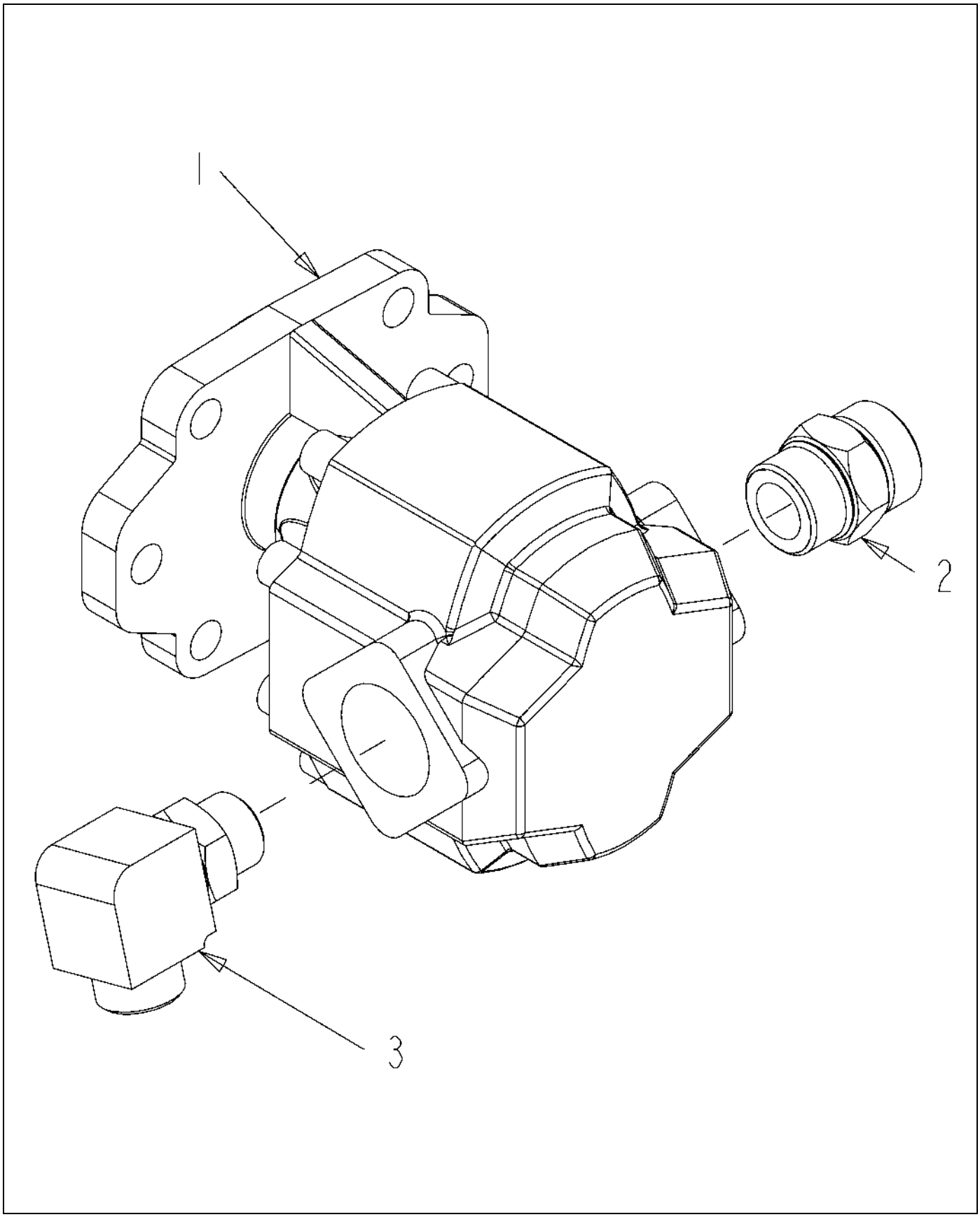

512860D1-01-N562-.TIF

Copyright © 2007 AGCO Corporation

PUMP ASM-HYD,SYS,HV

ITEM	PART #	QTY	DESCRIPTION	COMMENTS
1	AG121444	1	PUMP-HYD,2.11CIR,.88 13T	[A]
2	CH148-8335	1	CONNECTOR AS.-16 STORX16 ORFS	SEE PAGE 5-53
3	CH148-8347	1	ELBOW AS-90° 12STOR X 12ORFS	SEE PAGE 5-34
	FOOTNOTE [A]		AG726836 FRONT SEAL (2 USED)	

Copyright © 2007 AGCO Corporation

Please refer to the Bill Of Material on the opposite page for related Installations, Assemblies, or Parts

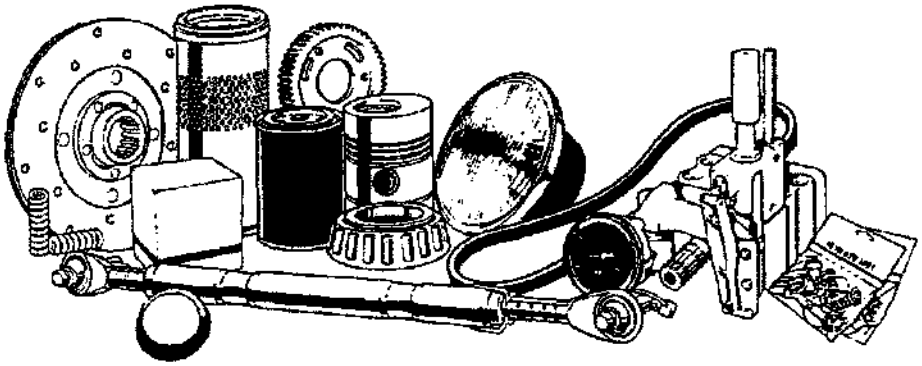

CH148-8335.tif

Copyright © 2007 AGCO Corporation

CONNECTOR AS.-16 STORX16 ORFS

ITEM	PART #	QTY	DESCRIPTION	COMMENTS
REF			DETAIL IMAGE, PLEASE REFER TO RELATED PAGES FOR MORE INFORMATION	
1	CH6V-8635	1	CONNECTOR-16 STORX -16ORFS	
2	400123X1	1	SEAL-O RING-27.22ODX1.78 DIA	
3	400376X1	1	SEAL-O-RING 29.74 IDX2.95 DIA	

Copyright © 2007 AGCO Corporation

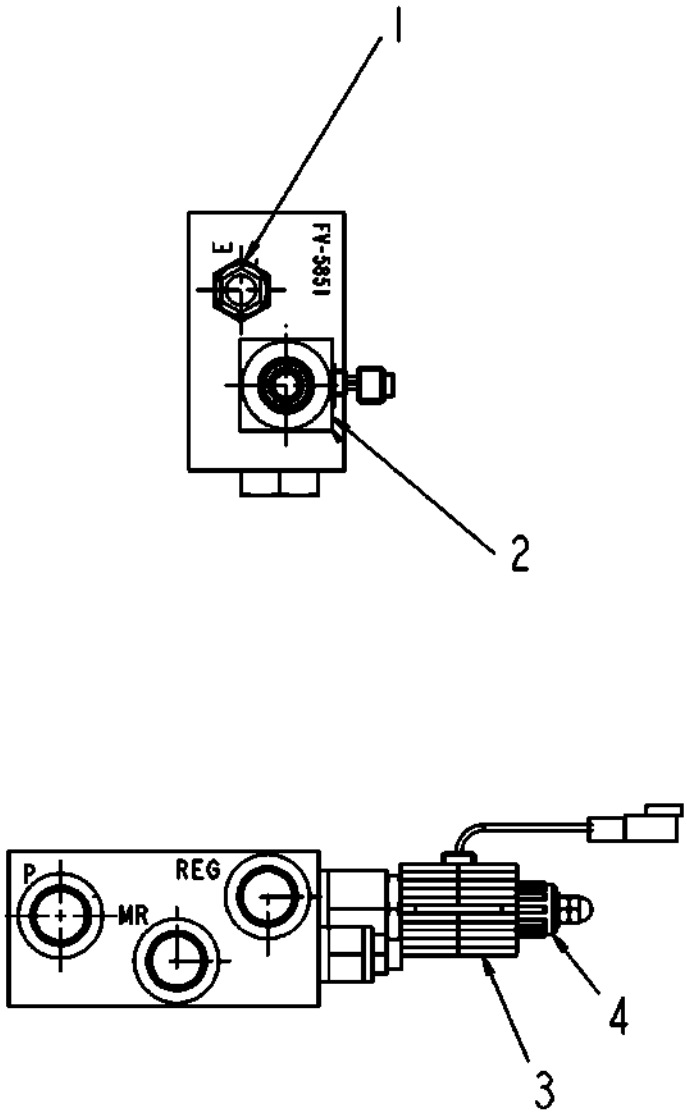

424287-D.tif

Copyright © 2007 AGCO Corporation

VALVE-HYD,PWM,LIQ SYS,15 GPM

ITEM	PART #	QTY	DESCRIPTION	COMMENTS
1	AG059917	-	VALVE,RELIEF	
2	AG121465	-	VALVE-PROPORTIONAL,15GPM	
3	AG060702	-	COIL	
4	AG726404	-	NUT/COIL (424287)	

Copyright © 2007 AGCO Corporation

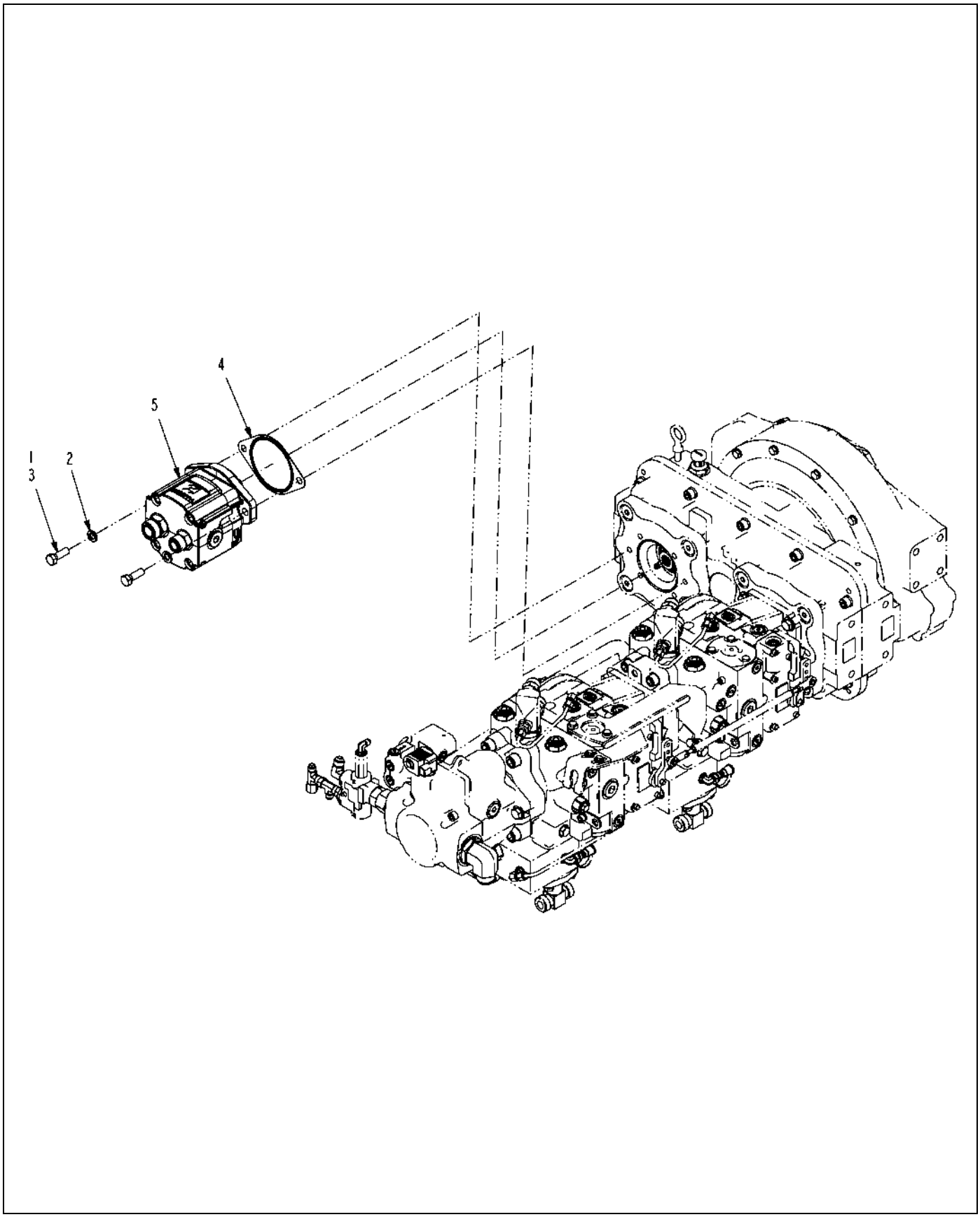

513011D1-01-N562-.TIF

Copyright © 2007 AGCO Corporation

PUMP INSTL-HYD,20GPM,LIQ,1074C

ITEM	PART #	QTY	DESCRIPTION	COMMENTS
1	AG512885	AR	LOCTITE ADHESIVE SEALANT BLUE	
2	AG550264	2	WASHER 0.50 LK ZN REG	
3	AG550817	2	BOLT 0.50-13NCX 1.50 G5 ZN HHD	
4	AG714101	1	GASKET PUMP	[A]
5	513013D1	1	PUMP ASM-HYD,2.11CIR,.88 13T	SEE PAGE 5-56
	FOOTNOTE [A]		COVER PLATE - AG106560	

Copyright © 2007 AGCO Corporation

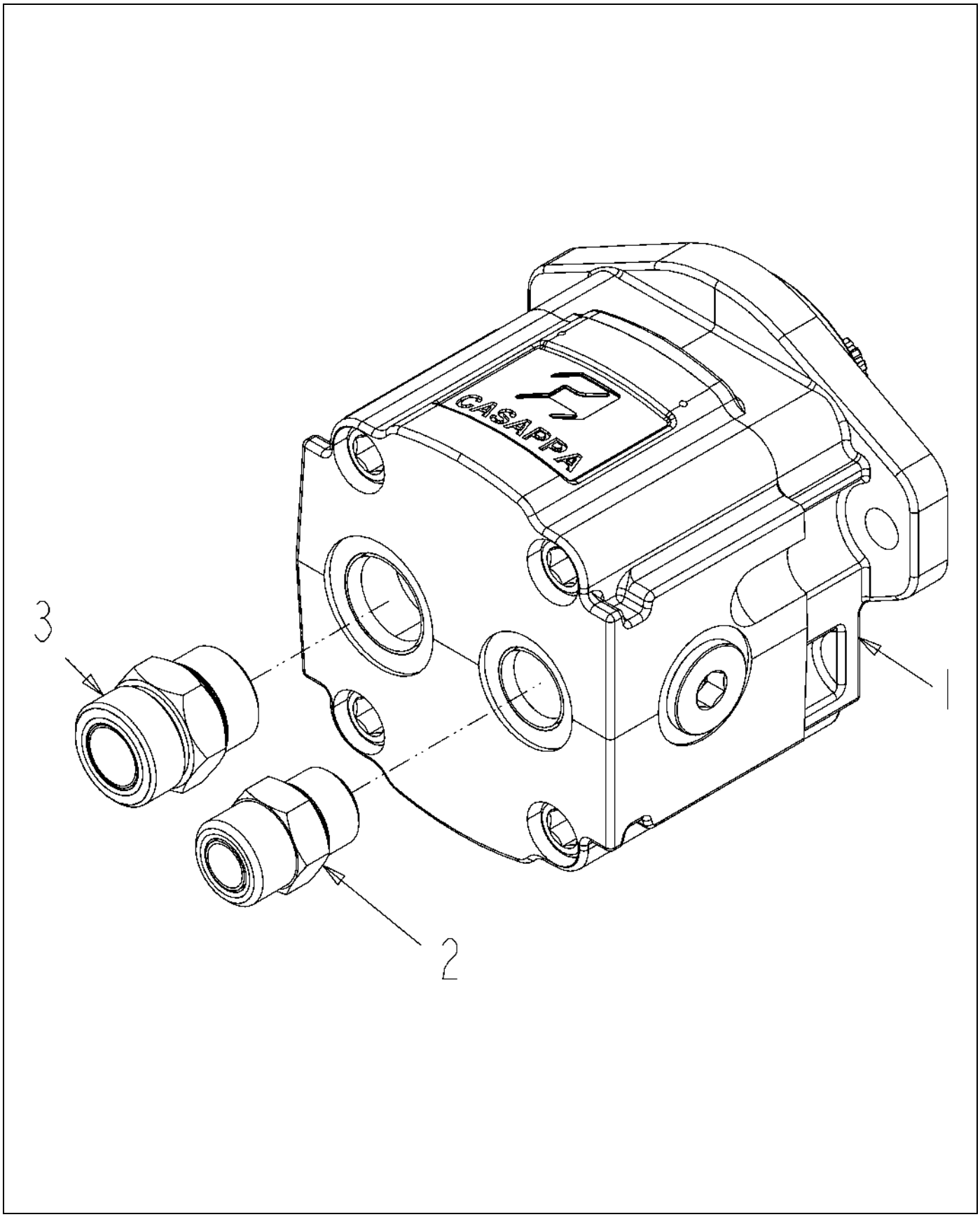

513013D1-01-N562-.TIF

Copyright © 2007 AGCO Corporation

PUMP ASM-HYD,2.11CIR,.88 13T

ITEM	PART #	QTY	DESCRIPTION	COMMENTS
1	AG132615	1	PUMP-HYD,2.11CIR,.88 13T	SEE PAGE 5-57
2	CH148-8327	1	CONNECTOR AS-12 ORFSX 12STOR	SEE PAGE 5-50
3	CH148-8335	1	CONNECTOR AS.-16 STORX16 ORFS	SEE PAGE 5-53

Copyright © 2007 AGCO Corporation

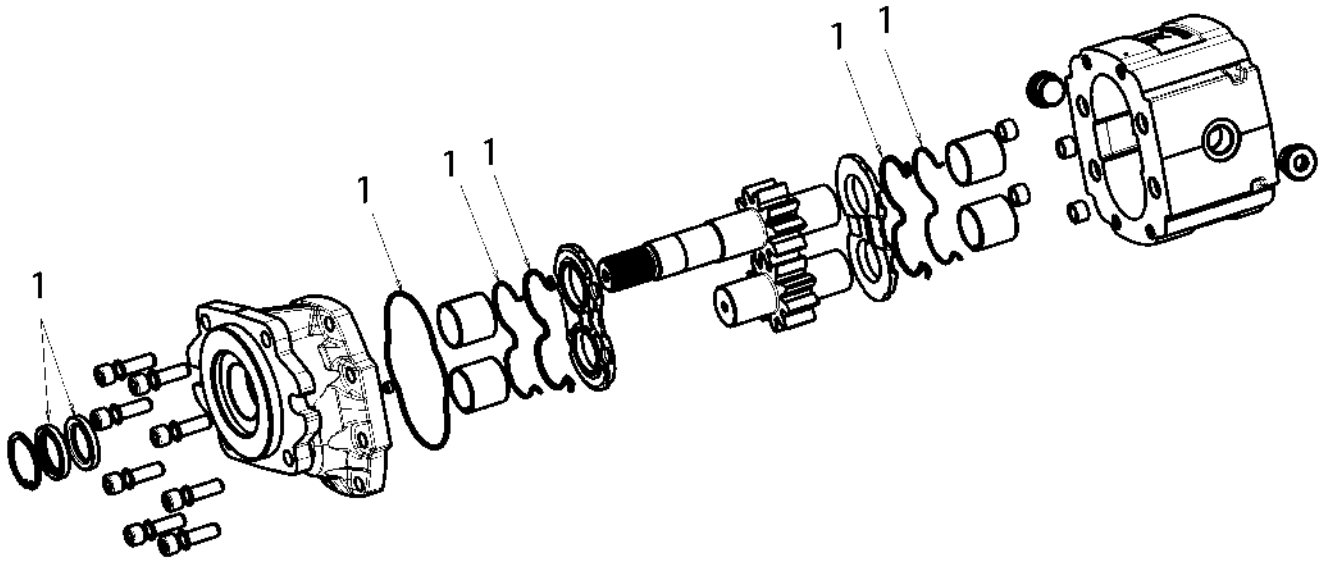

132615.TIF

Copyright © 2007 AGCO Corporation

PUMP-HYD,2.11CIR,.88 13T

ITEM	PART #	QTY	DESCRIPTION	COMMENTS
1	AG139087	1	SEAL KIT/KM30-A8K9	

Copyright © 2007 AGCO Corporation

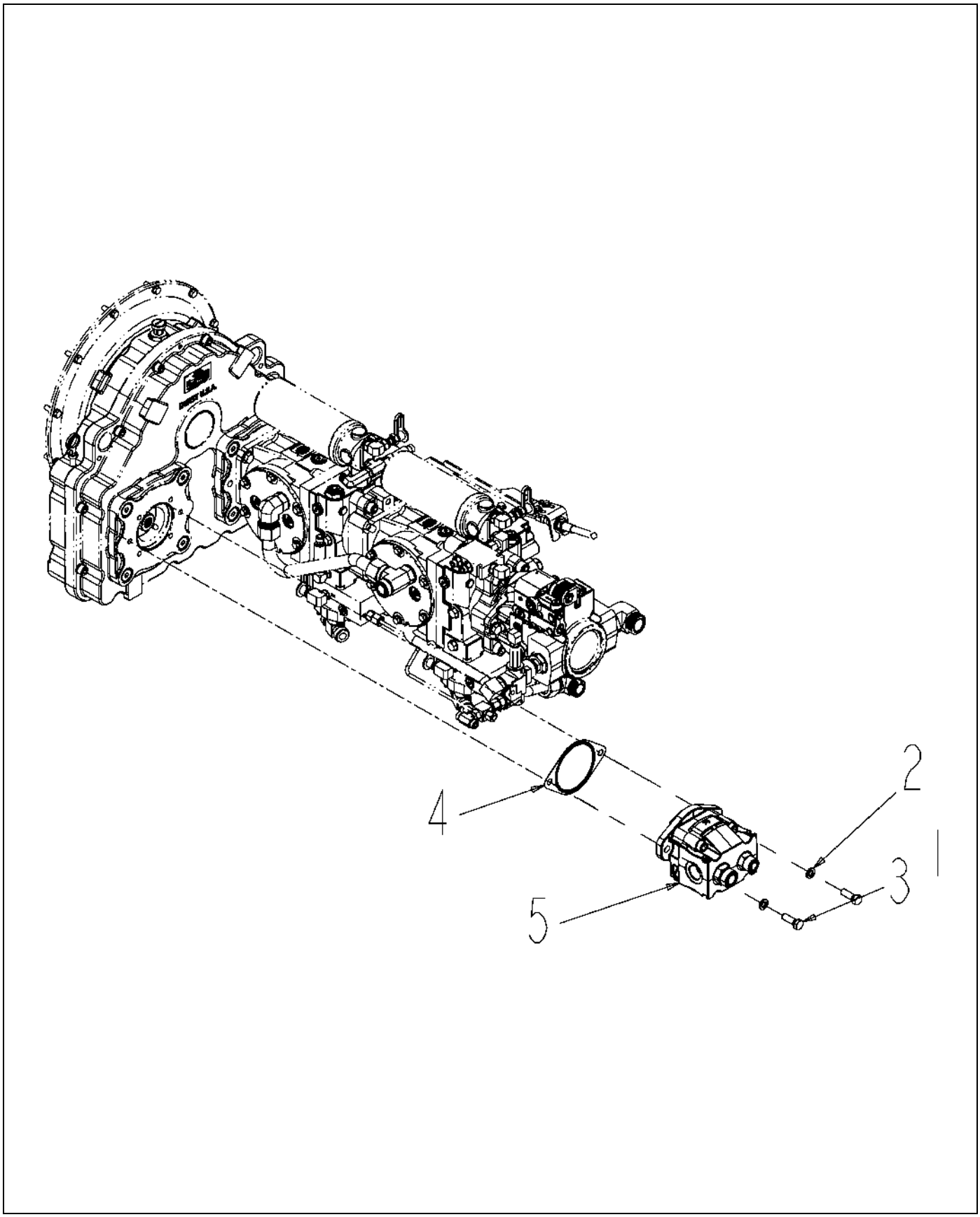

513233D1-01-N562-.TIF

Copyright © 2007 AGCO Corporation

ITEM	PART #	QTY	DESCRIPTION	COMMENTS
1	AG512885	AR	LOCTITE ADHESIVE SEALANT BLUE	
2	AG550264	2	WASHER 0.50 LK ZN REG	
3	AG550817	2	BOLT 0.50-13NCX 1.50 G5 ZN HHD	
4	AG714101	1	GASKET PUMP	[A]
5	513209D1	1	PUMP ASM-HYD,SYS,HV	SEE PAGE 5-59
	FOOTNOTE [A]		COVER PLATE - AG106560	

Copyright © 2007 AGCO Corporation

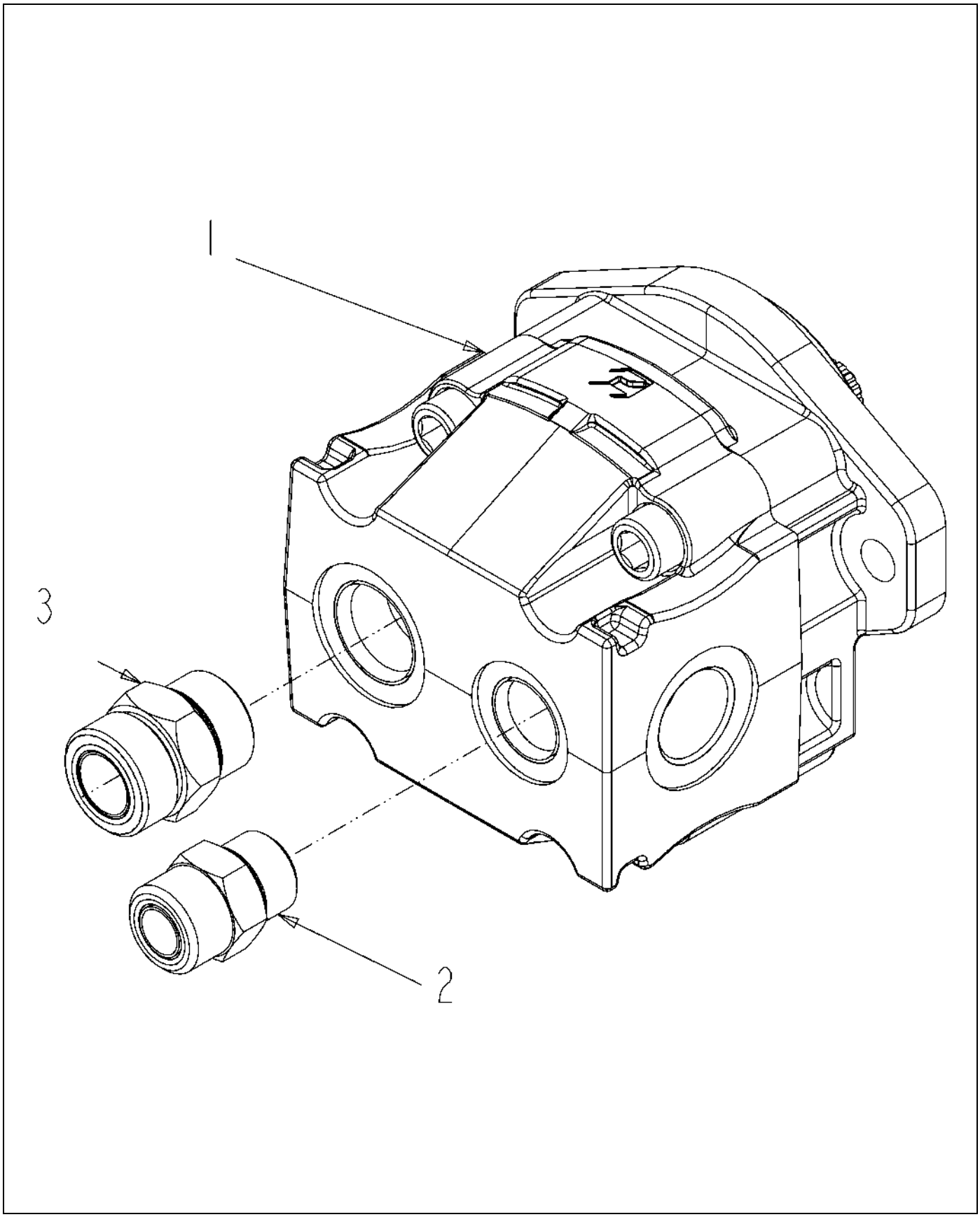

513209D1-01-N562-.TIF

Copyright © 2007 AGCO Corporation

PUMP ASM-HYD,SYS,HV

ITEM	PART #	QTY	DESCRIPTION	COMMENTS
1	AG123074	1	PUMP-HYD,1.87CIR,.88 13T	SEE PAGE 5-60
2	CH148-8327	1	CONNECTOR AS-12 ORFSX 12STOR	SEE PAGE 5-50
3	CH148-8335	1	CONNECTOR AS.-16 STORX16 ORFS	SEE PAGE 5-53

Copyright © 2007 AGCO Corporation

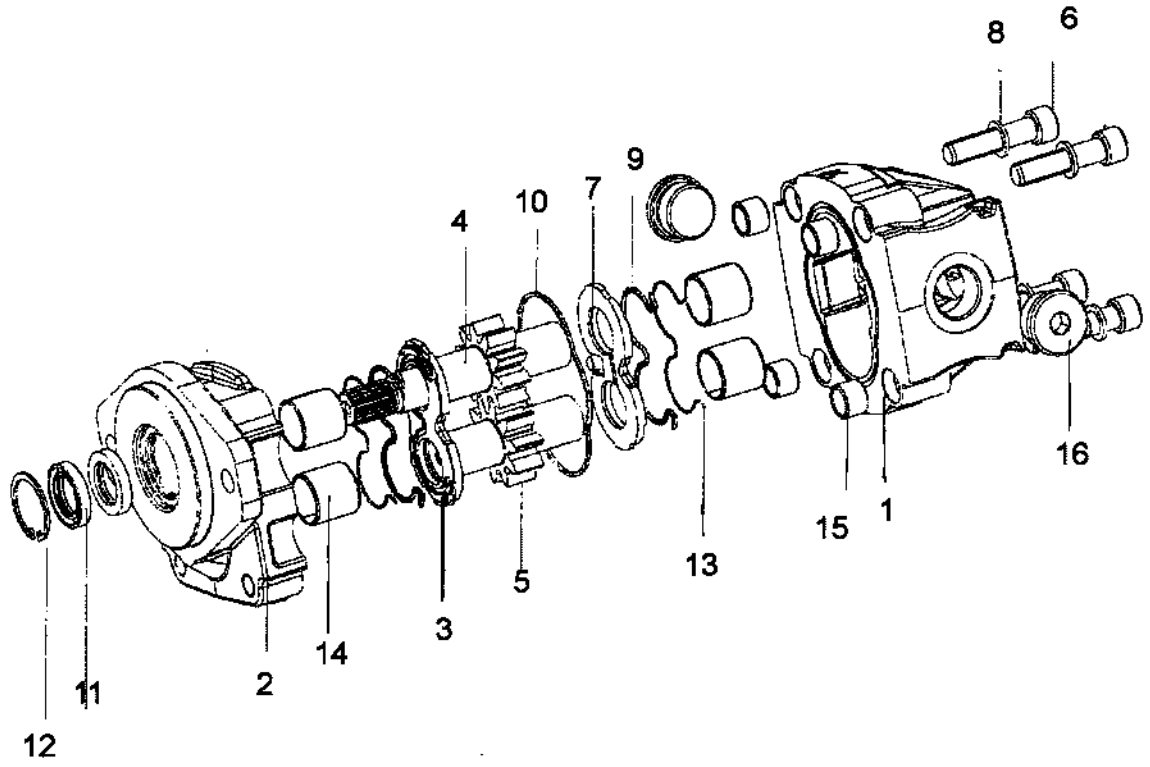

123074-D.TIF

Copyright © 2007 AGCO Corporation

PUMP-HYD,1.87CIR,.88 13T

ITEM	PART #	QTY	DESCRIPTION	COMMENTS
REF	AG137424	1	SEAL	
1	AG132126	1	BODY	
2	AG132127	1	COVER, PUMP FRONT	
3	AG132128	2	PLATE, THRUST	
4	AG132129	1	SHAFT, DRIVE	
5	AG132130	1	GEAR, DRIVEN	
6	AG132131	4	SCREW	
7	AG132132	1	SCREW, GRUB	
8	AG132133	4	WASHER	
9	AG132134	2	SEAL	
10	AG132135	1	SEAL	
11	AG132136	2	SEAL, SHAFT	
12	AG132137	1	RING	
13	AG132138	2	RING, RETAINER	
14	AG132139	4	SLEEVE, BEARING	
15	AG132140	4	BUSHING	
16	AG132141	2	PLUG	

Copyright © 2007 AGCO Corporation

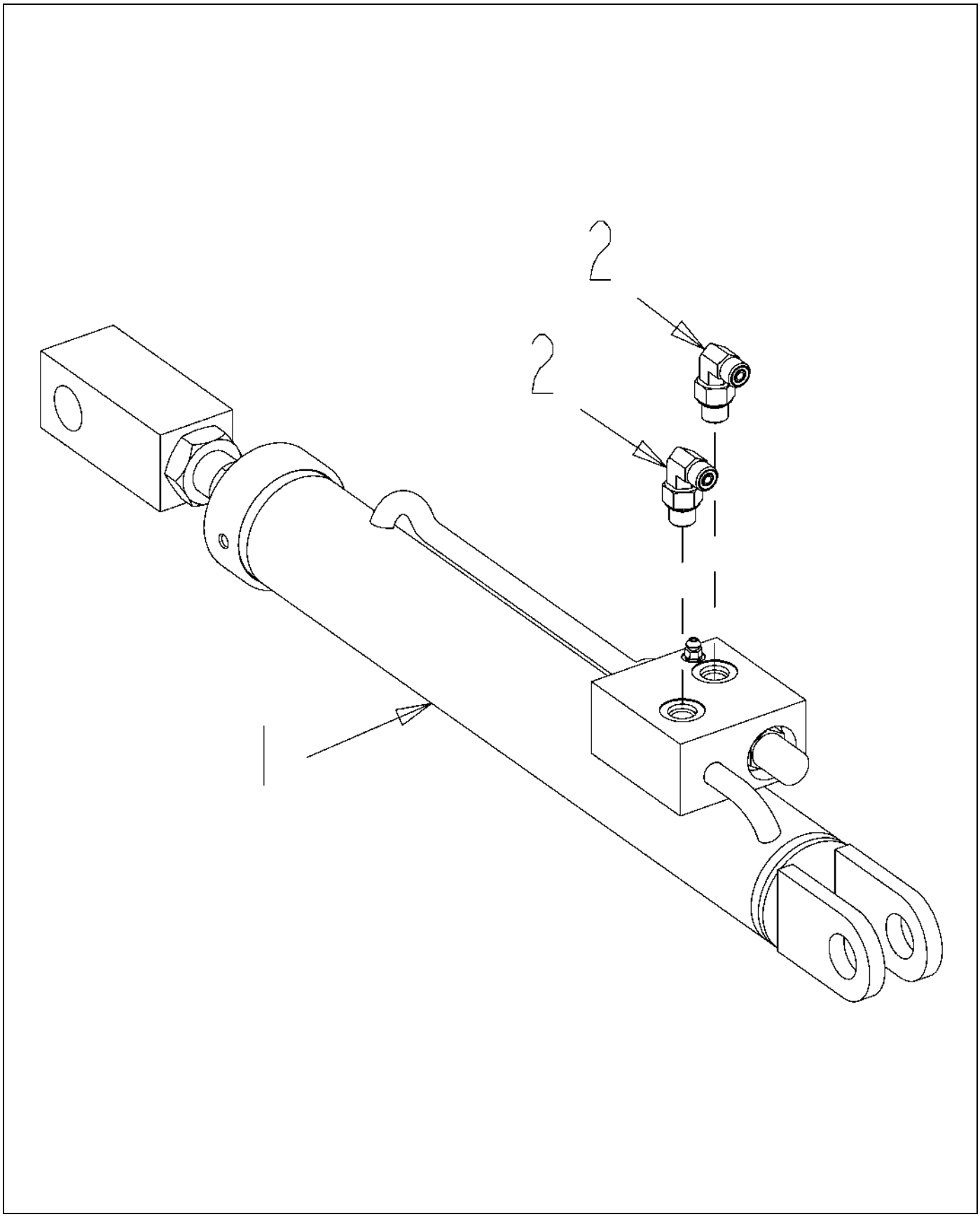

512868D1-01-N562-.TIF

Copyright © 2007 AGCO Corporation

CYLINDER ASM-BOOM TIP FOLD

ITEM	PART #	QTY	DESCRIPTION	COMMENTS
1	AG122391	1	CYLINDER-HYD,2.25X14.00X1.25	SEE PAGE 5-62
2	401289X1	2	ELBOW-90D,-6STOR X -4ORFS	SEE PAGE 5-3

Copyright © 2007 AGCO Corporation

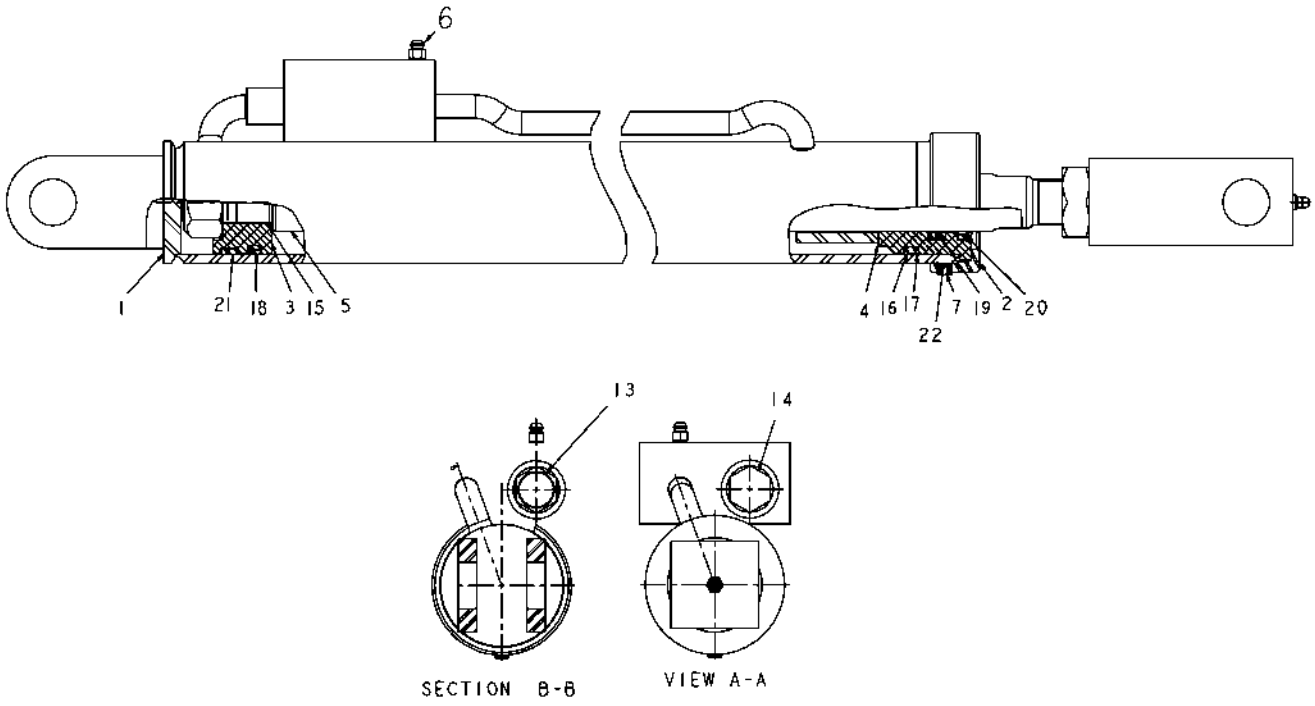

122391.TIF

Copyright © 2007 AGCO Corporation

ITEM	PART #	QTY	DESCRIPTION	COMMENTS
2	AG138402	1	CAP/HEAD GLAND	
2	AG131609	1	CAP, HEAD GLAND	
3	AG727106	1	PISTON	
3	AG131608	1	HEAD, GLAND	
4	AG727104	1	GLAND/HEAD	
5	AG727103	1	ROD/CYLINDER	
6	AG131593	1	SPACER, ROD	
6	AG129928	1	SCREW/BLEEDER	
7	AG061236	1	SCREW/SET .313-18X.25	
8	AG138401	1	VALVE/CB, CBCA-CHN (3000)	
9	AG138400	1	VALVE/CHECK PO, CKCB-XFN	
9	AG562560	1	NUT 1.00-14NS HEX ZN JAM G5	
10	AG122434	1	KIT-SEAL,HYD CYL,092EN0078	[A]
10	AG606707	1	NUT 0.87-14NF HEX ZN C-LK G8	
12	AG561892	1	FITTING LUBE STR 0.25UNF	
13	AG131551	1	VALVE, CHECK CB	
14	AG131550	1	VALVE,CHECK PO	
	FOOTNOTE [A]		ITEM 15 - 22 CANNOT BE PURCHASED INDIVIDUALLY BUT ARE INCLUDED IN THE SEAL KIT.	

Copyright © 2007 AGCO Corporation

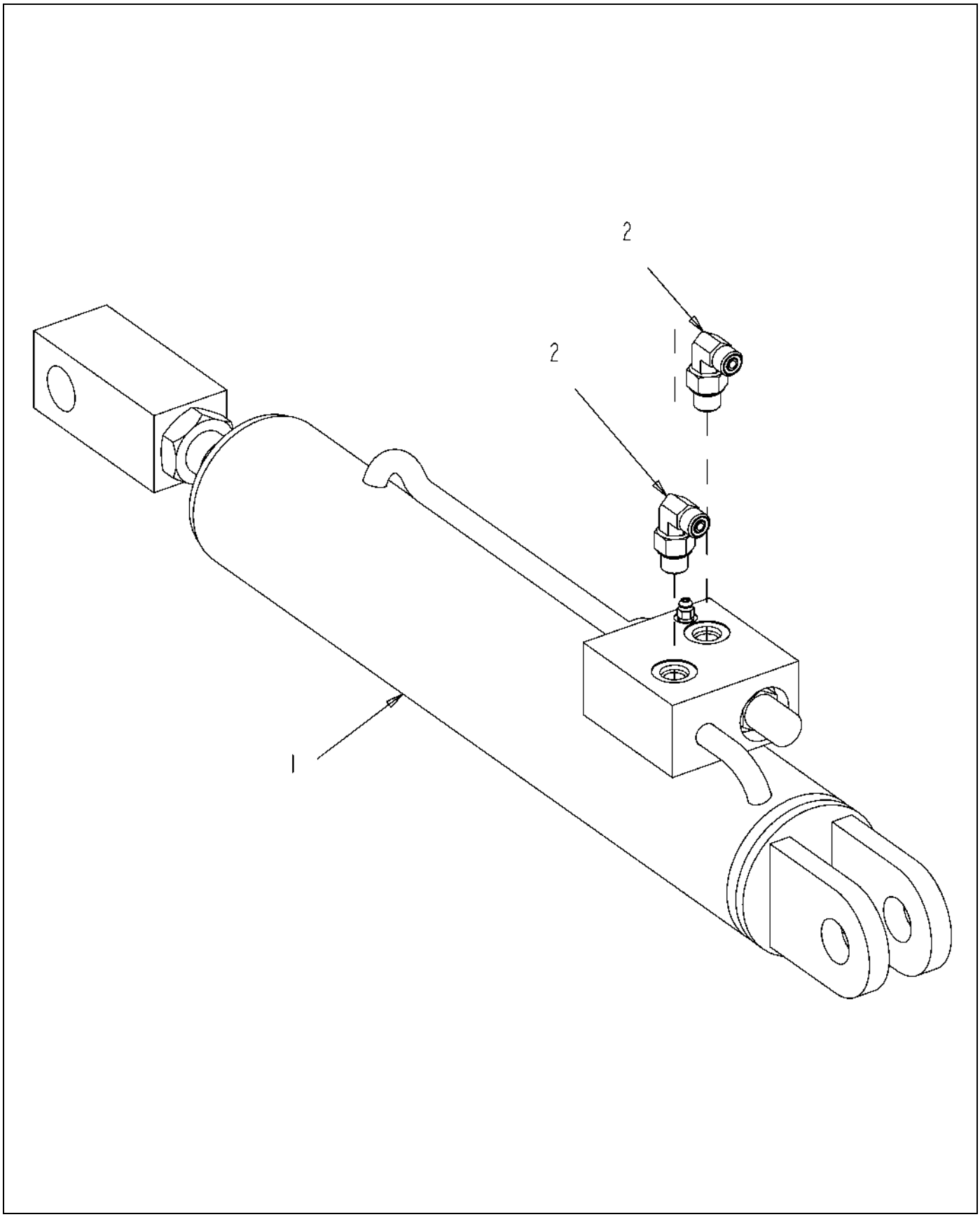

513448D1-01-N562-.TIF

Copyright © 2007 AGCO Corporation

CYLINDER ASM-FOLD BACK,BM,120

ITEM	PART #	QTY	DESCRIPTION	COMMENTS
1	AG136821	1	CYLINDER-HYD,3.00X14.00X1.38	SEE PAGE 5-64
2	401289X1	2	ELBOW-90D,-6STOR X -4ORFS	SEE PAGE 5-3

Copyright © 2007 AGCO Corporation

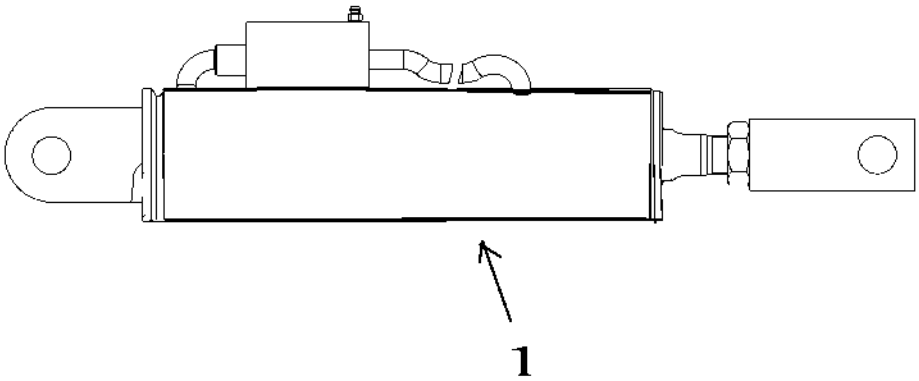

136821-A.TIF

Copyright © 2007 AGCO Corporation

CYLINDER-HYD,3.00X14.00X1.38

ITEM	PART #	QTY	DESCRIPTION	COMMENTS
1	AG136822	-	KIT-SEAL,HYD CYL,092GN0128	

Copyright © 2007 AGCO Corporation

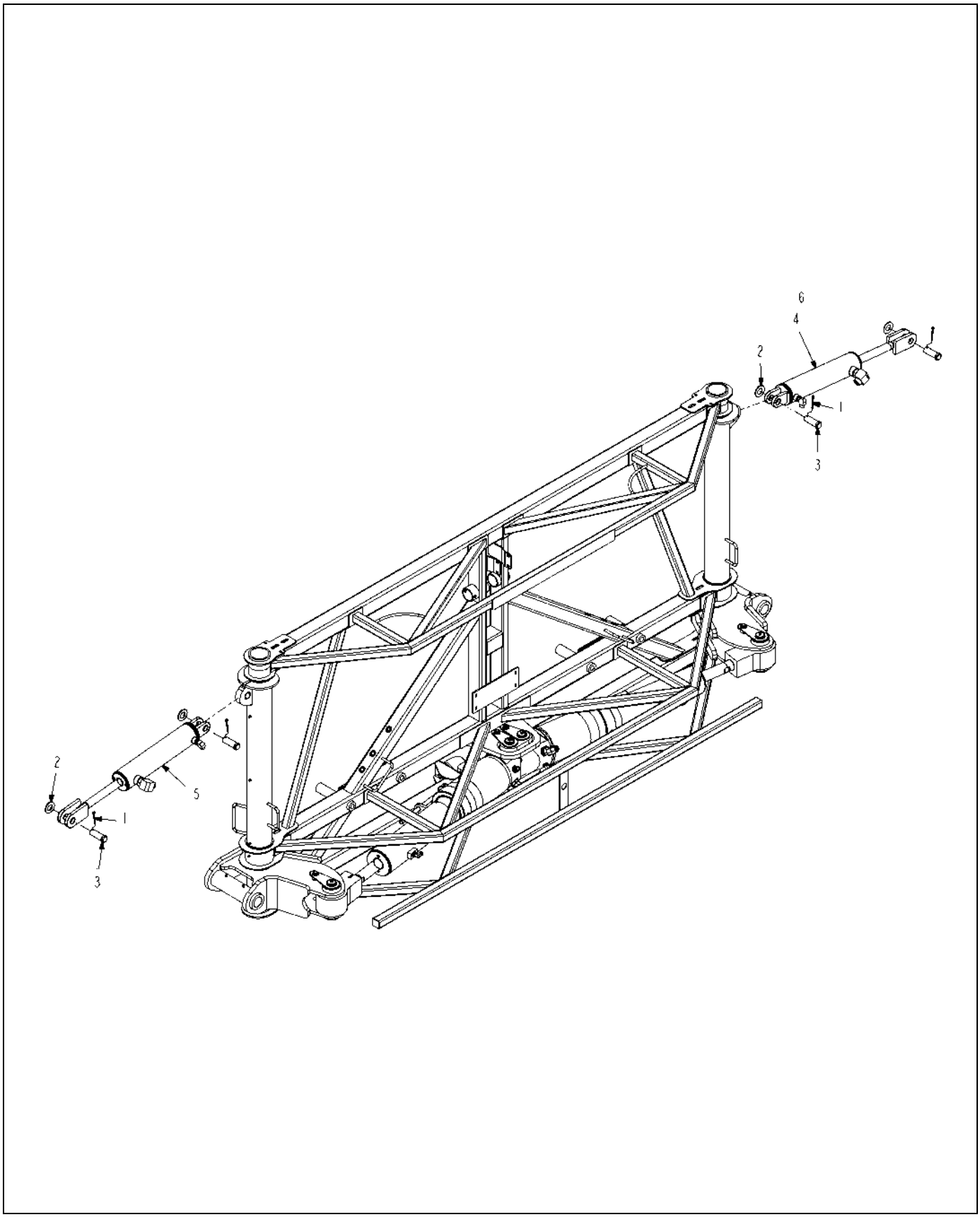

518288D1-01-R172-.TIF

Copyright © 2007 AGCO Corporation

CYL INSTL-TILT,W/O AUTOBM,120

ITEM	PART #	QTY	DESCRIPTION	COMMENTS
1	AG515352	4	PIN COTTER 0.18X2.00 SS	
2	AG551856	4	WASHER 1.00 FL ZN SAE TYPE-A	
3	AG602132	4	PIN CLEVIS 1.00X2.62 ZN	[A]
4	518290D1	1	CYL ASM-TILT,W/O AUTOBM,120,RH	SEE PAGE 5-66
5	518291D1	1	CYL ASM-TILT,W/O AUTOBM,120,LH	SEE PAGE 11-38
6	518292D1	1	HOSE INSTL-HYD,W/O AUTOBM,120	SEE PAGE 11-42
	FOOTNOTE [A]		GREASABLE PIN IS 519637	

Copyright © 2007 AGCO Corporation

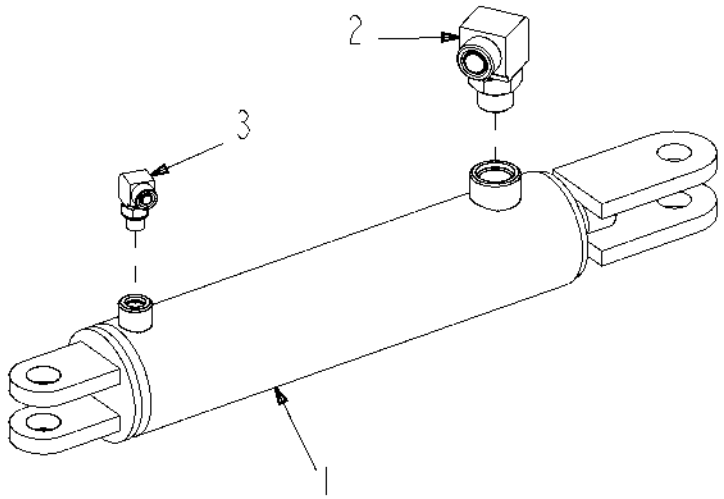

518290D1-01-R172-.TIF

Copyright © 2007 AGCO Corporation

CYL ASM-TILT,W/O AUTOBM,120,RH

ITEM	PART #	QTY	DESCRIPTION	COMMENTS
1	AG136825	1	CYLINDER-HYD,3.00X11.38X1.25	SEE PAGE 5-29
2	CH148-8347	1	ELBOW AS-90° 12STOR X 12ORFS	SEE PAGE 5-34
3	CH148-8378	1	ELBOW AS-90-6STOR X 6ORFS	SEE PAGE 5-24

Copyright © 2007 AGCO Corporation

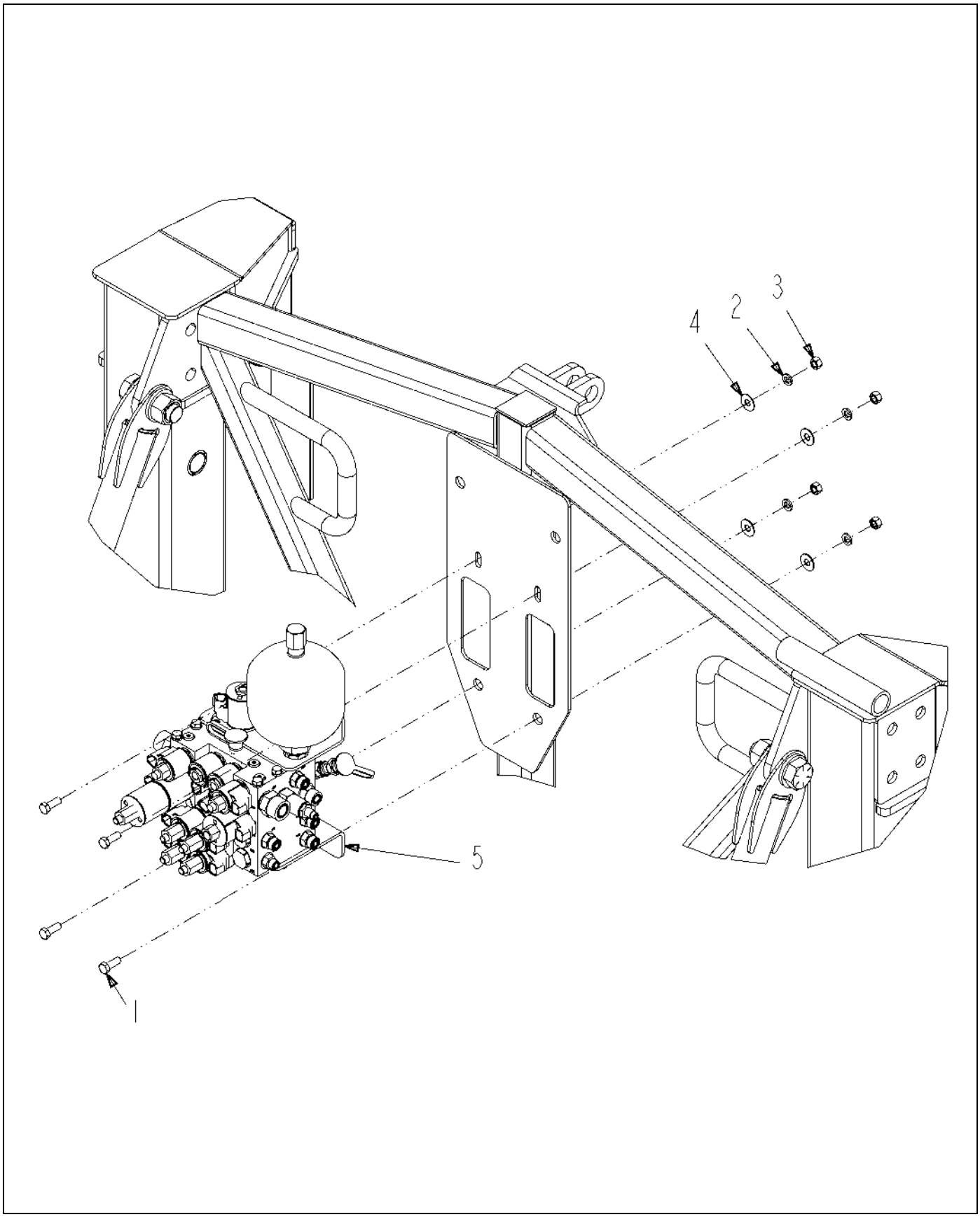

518296D1-01-R172-.TIF

Copyright © 2007 AGCO Corporation

BLOCK INSTL-HYD,W/O AUTOBM,120

ITEM	PART #	QTY	DESCRIPTION	COMMENTS
1	AG550175	4	BOLT 0.37-16NCX 1.00 G5 ZN HHD	
2	AG550191	4	WASHER 0.37 LK ZN REG	
3	AG550825	4	NUT 0.37-16NC HEX ZN REG	
4	AG551007	4	WASHER 0.37 FL ZN REG TYPE-B	
5	518298D1	1	BLOCK ASM-HYD,W/O AUTOBM,120	SEE PAGE 5-68

Copyright © 2007 AGCO Corporation

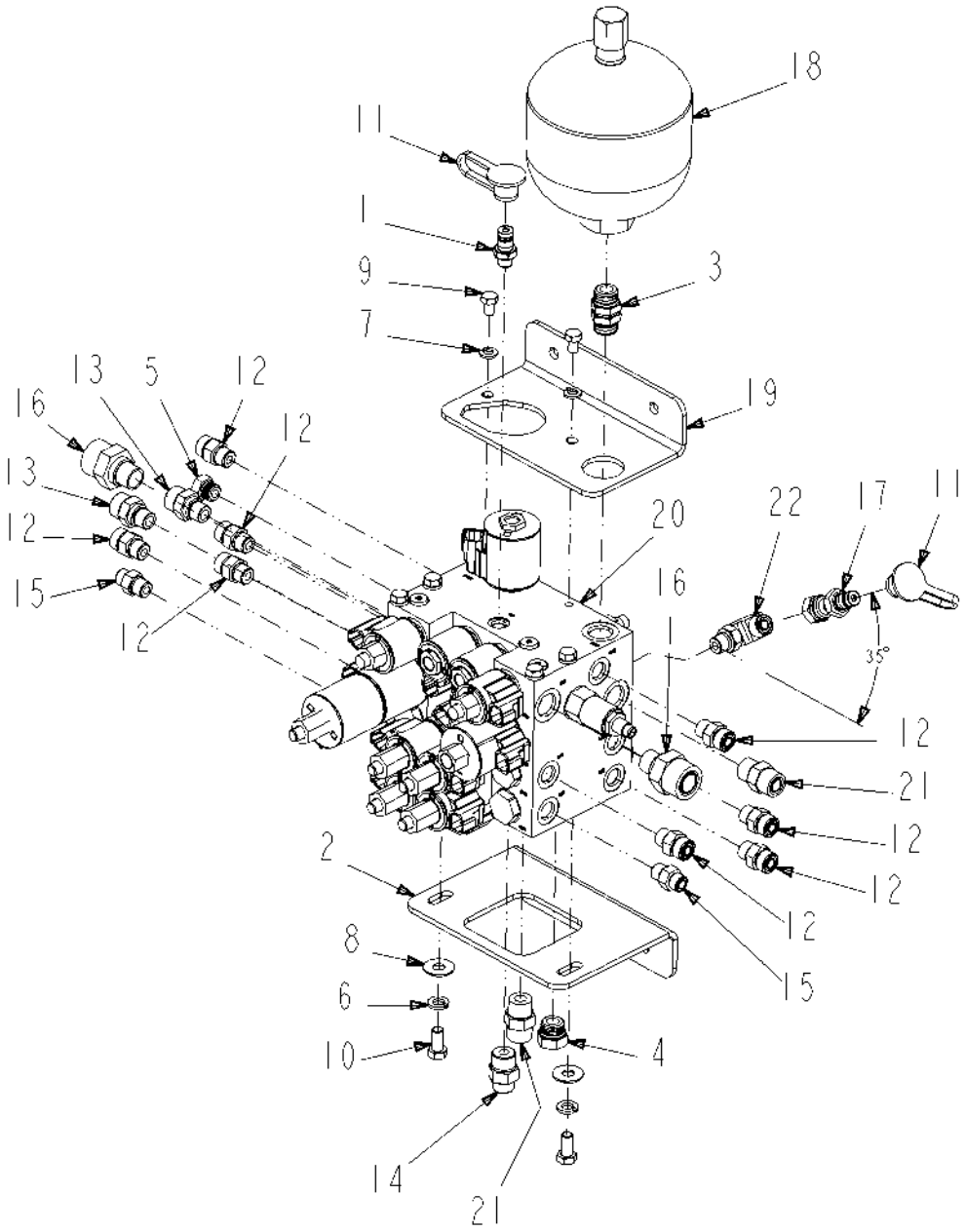

518298D1-01-R172-.TIF

Copyright © 2007 AGCO Corporation

BLOCK ASM-HYD,W/O AUTOBM,120

ITEM	PART #	QTY	DESCRIPTION	COMMENTS
1	WR32723	1	COUPLING-MPD/-04MB	
2	AG327803	1	BRKT-MTG,LOWER,VALVE BLOCK	
3	AG524378	1	ADPTR-STR,.50MO-R X .50MO-R	SEE PAGE 5-22
4	AG560899	1	PLUG 0.50MO-R HEX	
5	AG561797	1	PLUG 0.37MO-R HEX	[A]
6	AG562050	2	WASHER 0.37 LK SS REG	
7	AG562051	2	WASHER 0.31 LK SS REG	
8	AG562073	2	WASHER 0.37 FL SS REG TYPE-B	
9	AG562079	2	BOLT 0.31-18NCX 0.50 SS HHD	
10	AG562120	2	BOLT 0.37-16NCX 0.75 S.S. HHD	
11	400323X1	2	CAP-DUST 12.6 DIA -RUBBER	
12	400367X1	8	CONNECTOR AS-6 STOR -6 ORFS	SEE PAGE 5-16
13	400428X1	2	CONNECTOR AS-STR-6STOR-8ORFS	SEE PAGE 5-7
14	400628X1	1	CONNECTOR AS-STR-8STOR-6ORFS	SEE PAGE 5-17
15	400630X1	2	CONNECTOR AS-STR-6STOR-4ORFS	SEE PAGE 5-18
16	400963X1	2	CONNECTOR AS-STR -8STOR-12ORFS	
17	401024X1	1	NIPPLE-TEST PORT,PD,-06 ORFS	
18	507719D1	1	ACCUM-HYD,DIAPH,60CU IN,175PSI	
18	509921D1	1	BRKT-MTG,UPPER,VALVE BLOCK	
20	515130D1	1	BLOCK-VALVE,7BANK,NO AUTOBOOM	SEE PAGE 5-70
21	CH148-8340	2	CONNECTOR AS -8ORFS-8STOR	SEE PAGE 5-23
22	CH148-8378	1	ELBOW AS-90-6STOR X 6ORFS	SEE PAGE 5-24
	FOOTNOTE [A]		AG713166 O-RING	

Copyright © 2007 AGCO Corporation

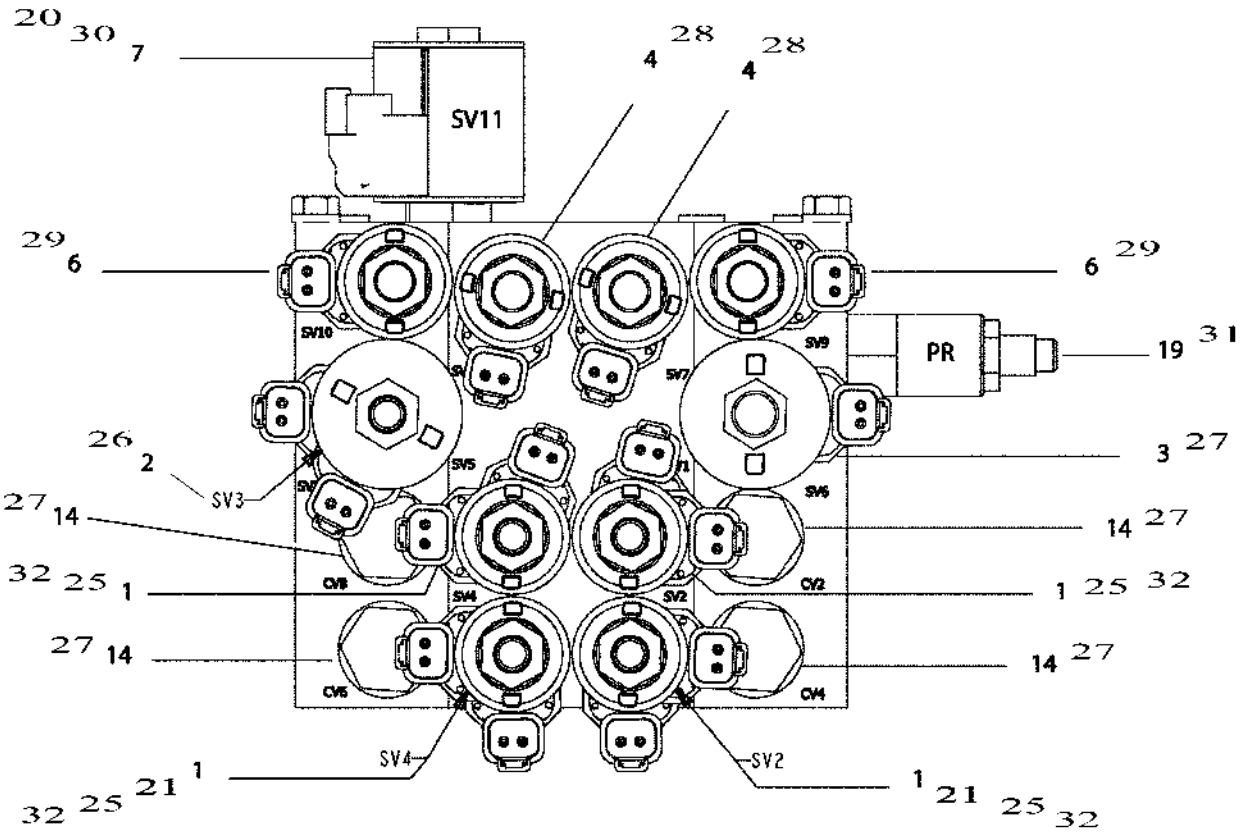

515130D1-01-R172-2.TIF

Copyright © 2007 AGCO Corporation

BLOCK-VALVE,7BANK,NO AUTOBOOM

ITEM	PART #	QTY	DESCRIPTION	COMMENTS
1	AG727147	-	VALVE/SOLENOID	
2	AG721899	AR	CARTRIDGE PUMP	
3	AG125811	AR	VALVE-SOL,2WAY POPPET,18 GPM	
4	AG724687	AR	SOLENOID VALVE 523480	
5	AG718011	AR	ORIFICE BOOM	
6	AG718059	AR	CARTRIDGE-2WAY,NORMALLY CLOSED	[A]
7	AG725602	AR	CARTRIDGE-SOLENOID VALVE	
8	AG121483	AR	COIL-E,12VDC DEUTCH W/DIODE,08	
9	AG121484	AR	COIL-E,12VDC DEUTCH W/DIODE,10	
10	AG726854	AR	NUT/PULL COIL E-SERIES	
11	AG726853	AR	NUT/PUSH COIL,E-SERIES	
12	AG121486	AR	SPACER-E COIL,08	
13	AG121485	AR	SPACER-E COIL,10	
14	AG715570	AR	CHECK VALVE	
15	AG715569	AR	PILOT PISTON	
19	517308D1	AR	VLV-PRESS RED,PLT OPT,1500/250	
20	AG059148	AR	ORIFICE	
21	517010D1	AR	ORIFICE-2WAY,.070,-6SAE THREAD	
22	AG522023	AR	PLATE-ORFICE,2 WAY,.040 DIA	
23	AG121920	AR	NUT-PULL COIL,E-SERIES,#10	
24	AG121921	AR	NUT-PULL COIL,E-SERIES,#8	
25	AG716814	-	KIT-ORING,SPOOL VIV,4W(609463)	
26	AG715207	AR	SEAL KIT	
27	AG059018	AR	SEAL KIT	
28	AG714832	AR	SEAL KIT 712817	
29	AG716811	AR	KIT-ORING,ND VALVE(609465)	
30	AG121382	-	KIT-SEAL,MANUAL,SPRING RETURN	
31	AG121495	AR	KIT-SEAL,VALVE,-10	
	FOOTNOTE [A]		SEAL KIT - AG716811	

Copyright © 2007 AGCO Corporation

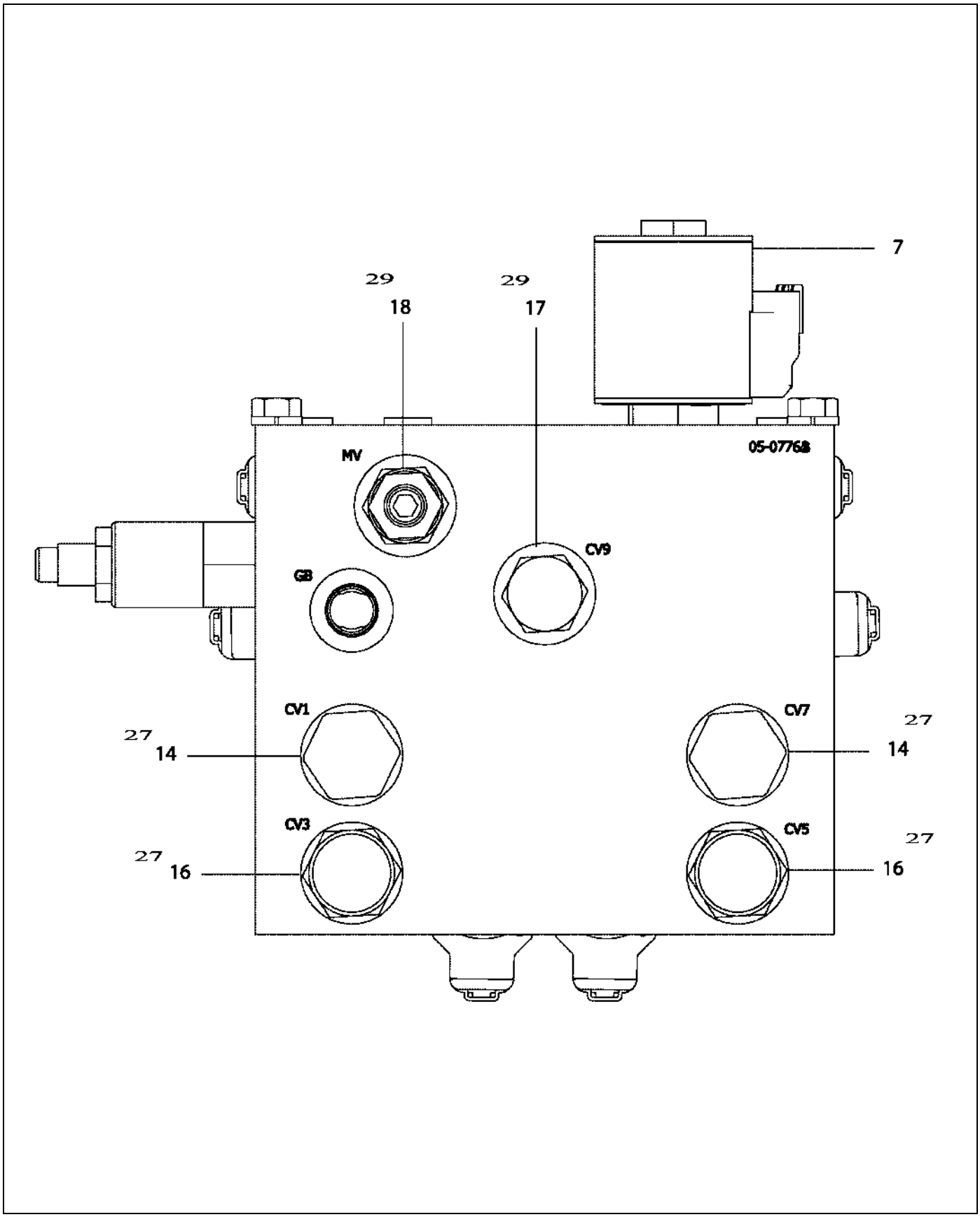

515130D1-01-R172-3.TIF

Copyright © 2007 AGCO Corporation

BLOCK-VALVE,7BANK,NO AUTOBOOM

ITEM	PART #	QTY	DESCRIPTION	COMMENTS
7	AG725602	AR	CARTRIDGE-SOLENOID VALVE	
14	AG715570	AR	CHECK VALVE	
16	AG715571	AR	CHECK VALVE	
17	AG717712	AR	VALVE- CHECK	
18	AG121927	AR	VALVE-RELEASE,MANUAL,#8	
27	AG059018	AR	SEAL KIT	
29	AG716811	AR	KIT-ORING,ND VALVE(609465)	

Copyright © 2007 AGCO Corporation

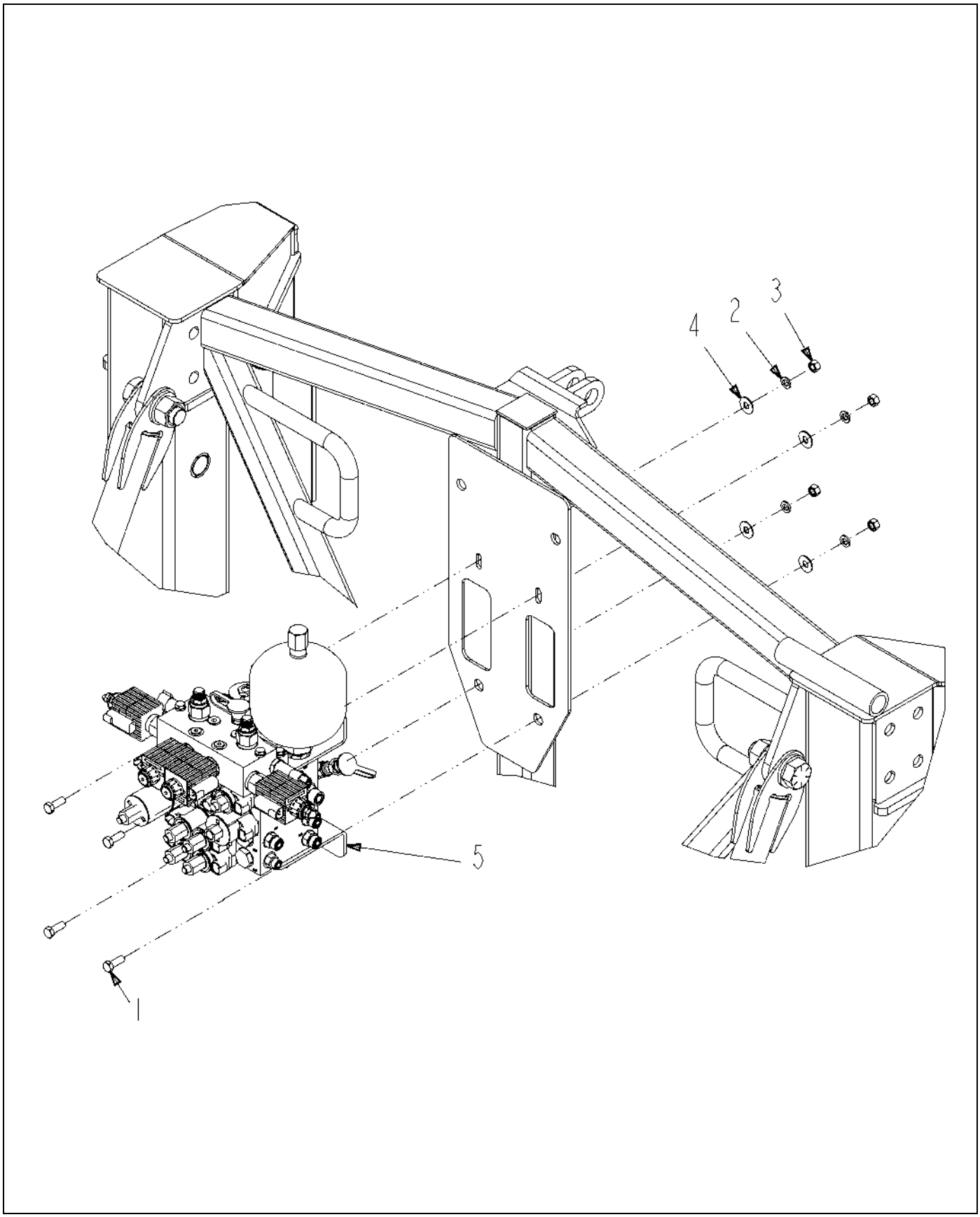

518297D1-01-R172-.TIF

Copyright © 2007 AGCO Corporation

BLOCK INSTL-HYD,W/AUTOBOOM,120

ITEM	PART #	QTY	DESCRIPTION	COMMENTS
1	AG550175	4	BOLT 0.37-16NCX 1.00 G5 ZN HHD	
2	AG550191	4	WASHER 0.37 LK ZN REG	
3	AG550825	4	NUT 0.37-16NC HEX ZN REG	
4	AG551007	4	WASHER 0.37 FL ZN REG TYPE-B	
5	518299D1	1	BLOCK ASM-HYD,W/AUTOBOOM,120	SEE PAGE 5-72

Copyright © 2007 AGCO Corporation

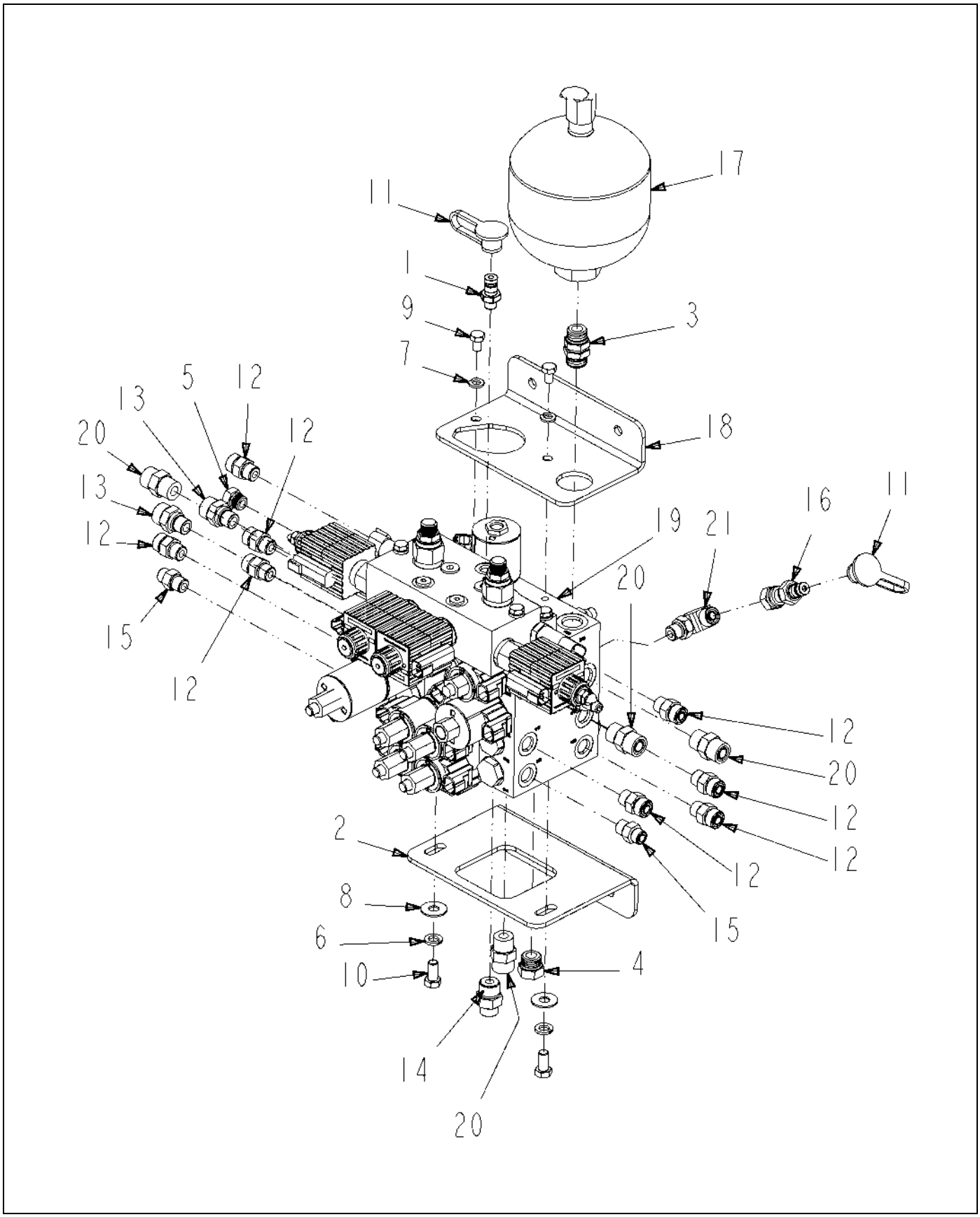

518299D1-01-R172-.TIF

Copyright © 2007 AGCO Corporation

BLOCK ASM-HYD,W/AUTOBOOM,120

ITEM	PART #	QTY	DESCRIPTION	COMMENTS
1	WR32723	1	COUPLING-MPD/-04MB	
2	AG327803	1	BRKT-MTG,LOWER,VALVE BLOCK	
3	AG524378	1	ADPTR-STR,.50MO-R X .50MO-R	SEE PAGE 5-22
4	AG560899	1	PLUG 0.50MO-R HEX	
5	AG561797	1	PLUG 0.37MO-R HEX	[A]
6	AG562050	2	WASHER 0.37 LK SS REG	
7	AG562051	2	WASHER 0.31 LK SS REG	
8	AG562073	2	WASHER 0.37 FL SS REG TYPE-B	
9	AG562079	2	BOLT 0.31-18NCX 0.50 SS HHD	
10	AG562120	2	BOLT 0.37-16NCX 0.75 S.S. HHD	
11	400323X1	2	CAP-DUST 12.6 DIA -RUBBER	
12	400367X1	8	CONNECTOR AS-6 STOR -6 ORFS	SEE PAGE 5-16
13	400428X1	2	CONNECTOR AS-STR-6STOR-8ORFS	SEE PAGE 5-7
14	400628X1	1	CONNECTOR AS-STR-8STOR-6ORFS	SEE PAGE 5-17
15	400630X1	2	CONNECTOR AS-STR-6STOR-4ORFS	SEE PAGE 5-18
16	401024X1	1	NIPPLE-TEST PORT,PD,-06 ORFS	
17	507719D1	1	ACCUM-HYD,DIAPH,60CU IN,175PSI	
18	509921D1	1	BRKT-MTG,UPPER,VALVE BLOCK	
19	515133D1	1	BLOCK-VALVE,7BANK,W/AUTOBOOM	SEE PAGE 11-49
20	CH148-8340	4	CONNECTOR AS -8ORFS-8STOR	SEE PAGE 5-23
21	CH148-8378	1	ELBOW AS-90-6STOR X 6ORFS	SEE PAGE 5-24
	FOOTNOTE [A]		AG713166 O-RING	

Copyright © 2007 AGCO Corporation

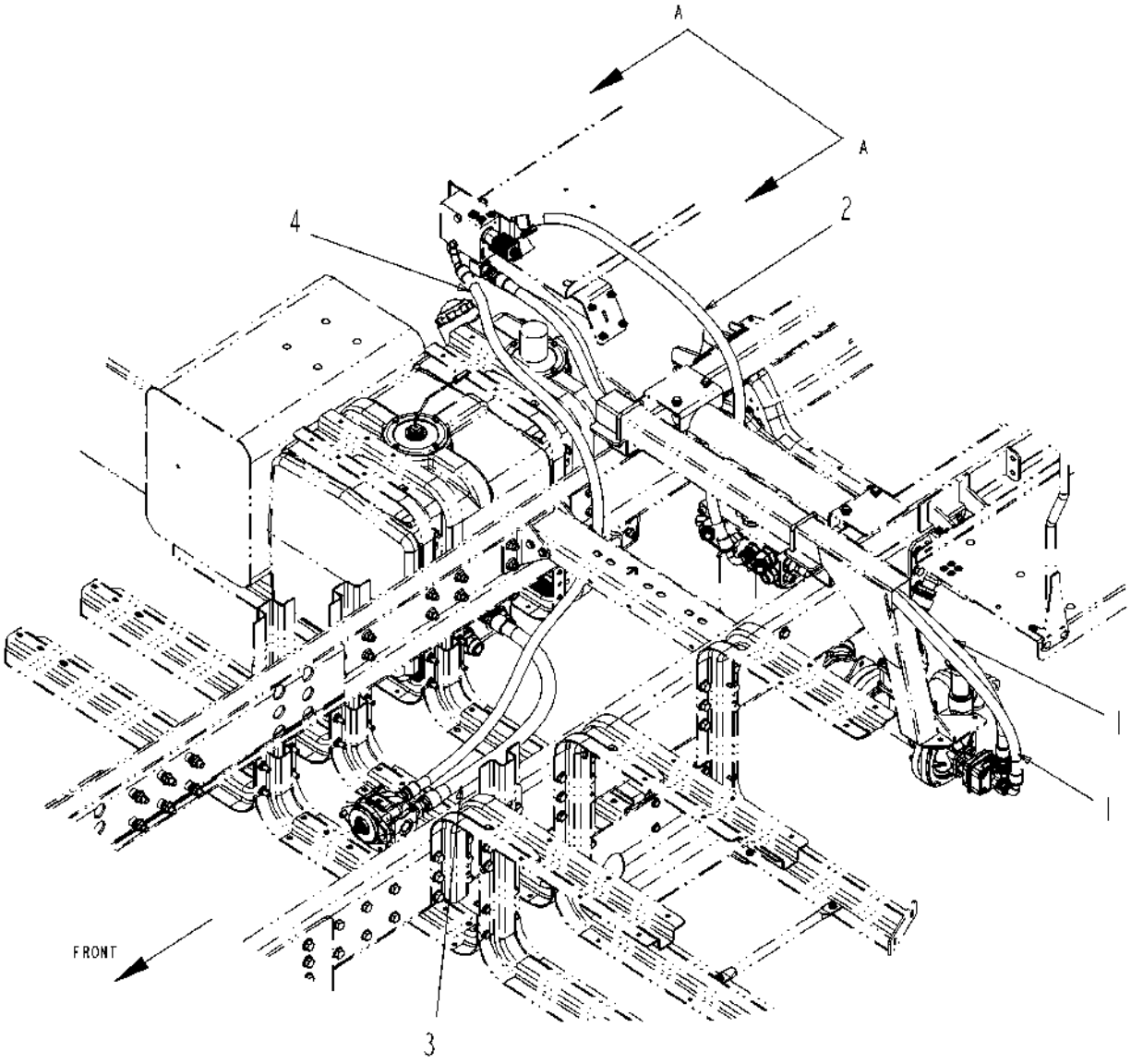

513230D1-01-N562-.TIF

Copyright © 2007 AGCO Corporation

HOSE INSTL-HYD,LIQ SYS,1286C

ITEM	PART #	QTY	DESCRIPTION	COMMENTS
REF	513232D1	1	KIT-HOSE,LIQ,SYS,1286C	
1	512851D1	-	HOSE ASM,-12X99 ORFS/ORFS90	
2	512852D1	-	HOSE ASM,-12X64 ORFS/ORFS90	
3	513153D1	-	HOSE ASM,-16X58 ORFS/ORFS	
4	513231D1	-	HOSE ASM,-12X102 ORFS/ORFS90	

Copyright © 2007 AGCO Corporation

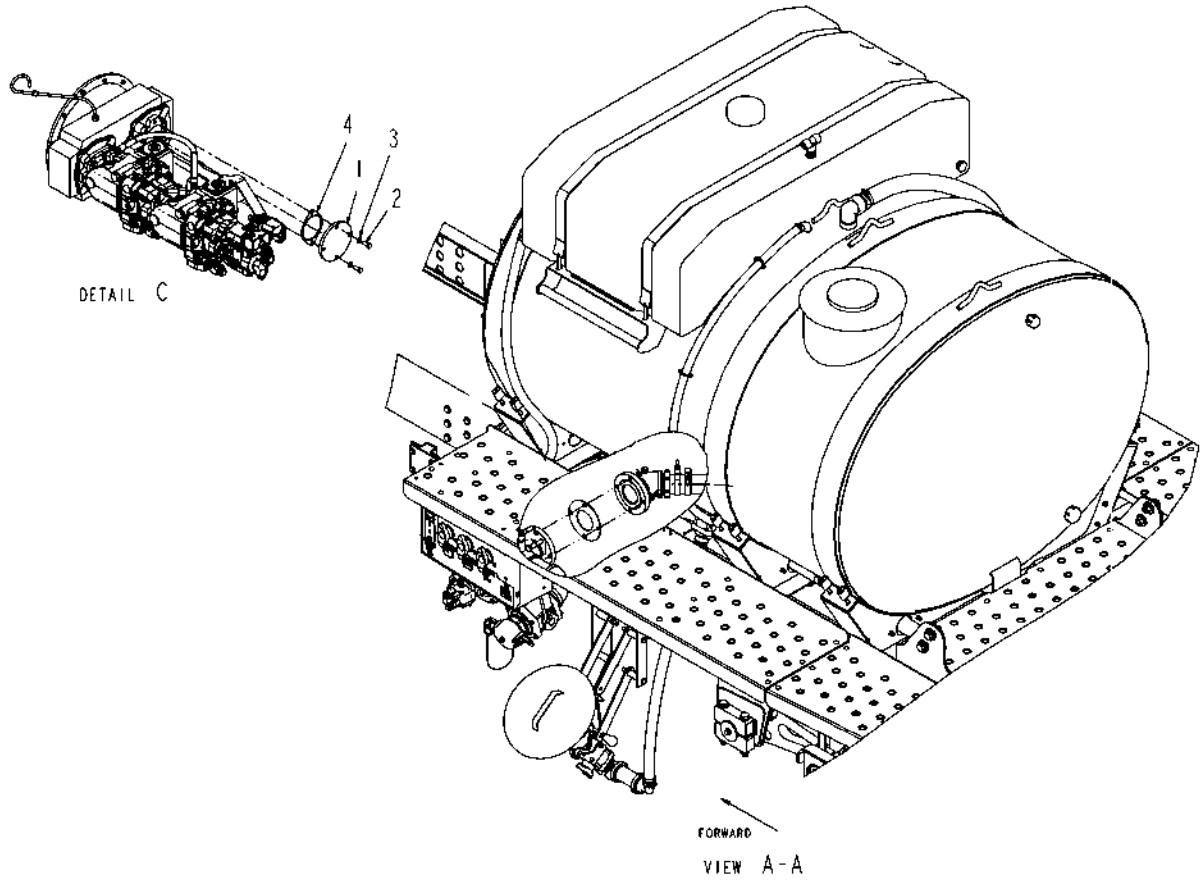

136367-01-M497-01.tif

Copyright © 2007 AGCO Corporation

ITEM	PART #	QTY	DESCRIPTION	COMMENTS
1	AG328690	-	COVER-PUMP,B PAD	
2	AG550256	-	BOLT.50-13NCX1.25 G5 ZN HHD	
3	AG550264	-	WASHER 0.50 LK ZN REG	
4	AG714101	-	GASKET PUMP	[A]
13	AG562496	AR	TIE CABLE 15.0 .18-4.00 BLACK	
	FOOTNOTE [A]		COVER PLATE - AG106560	

Copyright © 2007 AGCO Corporation

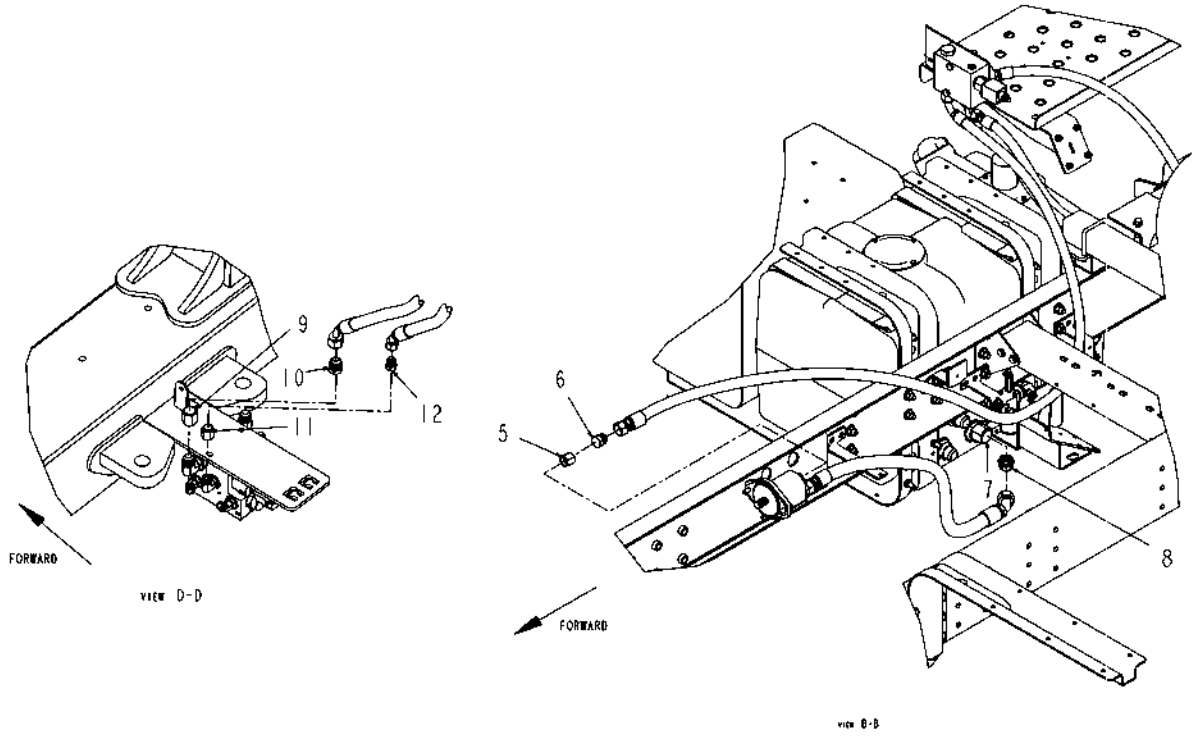

136367-01-M497-02.tif

Copyright © 2007 AGCO Corporation

ITEM	PART #	QTY	DESCRIPTION	COMMENTS
5	AG706259	1	NUT CAP 0.75FJIC	
6	AG706263	1	PLUG -12MJ HEX	
7	AG706258	1	NUT CAP 1.00FJIC	
8	AG706262	1	PLUG -16MJ HEX	
9	AG706265	1	PLUG 0.50MJIC HEX	
9	AG561169	1	NUT CAP 0.50FJIC	
11	AG708307	1	NUT CAP 0.37 FJIC	
12	AG703308	1	ASM ROD&BRKT SUB-LINK REMSHIFT	

Copyright © 2007 AGCO Corporation

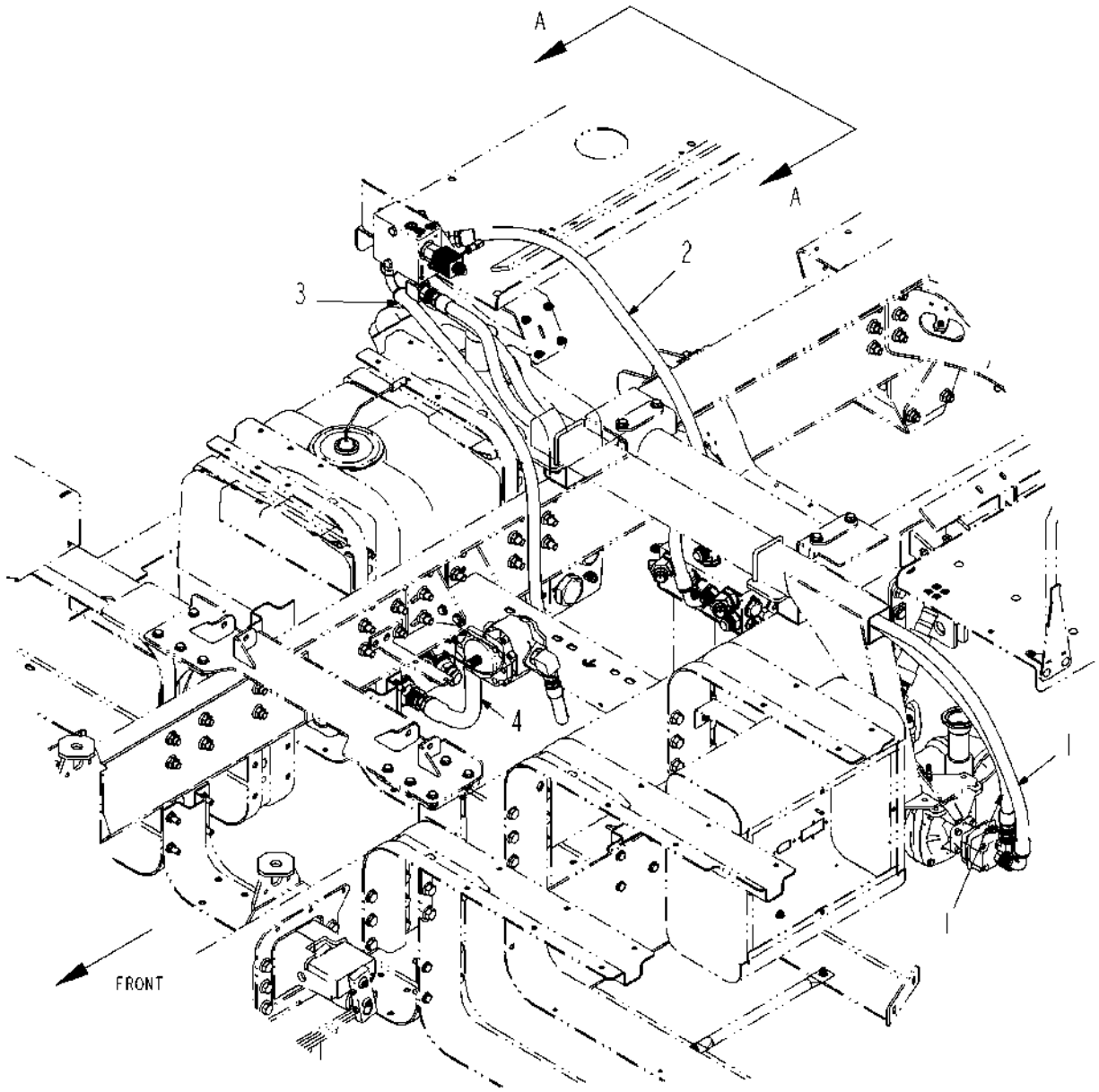

512861D1-01-N562-.TIF

Copyright © 2007 AGCO Corporation

HOSE INSTL-HYD,LIQ SYS,8/1074

ITEM	PART #	QTY	DESCRIPTION	COMMENTS
REF	512862D1	1	KIT-HOSE,LIQ SYS,8/1074	
1	512851D1	-	HOSE ASM,-12X99 ORFS/ORFS90	
2	512852D1	-	HOSE ASM,-12X64 ORFS/ORFS90	
3	512853D1	-	HOSE ASM,-12X75 ORFS/ORFS90	
4	512855D1	-	HOSE ASM,-16X27 ORFS/ORFS90	

Copyright © 2007 AGCO Corporation

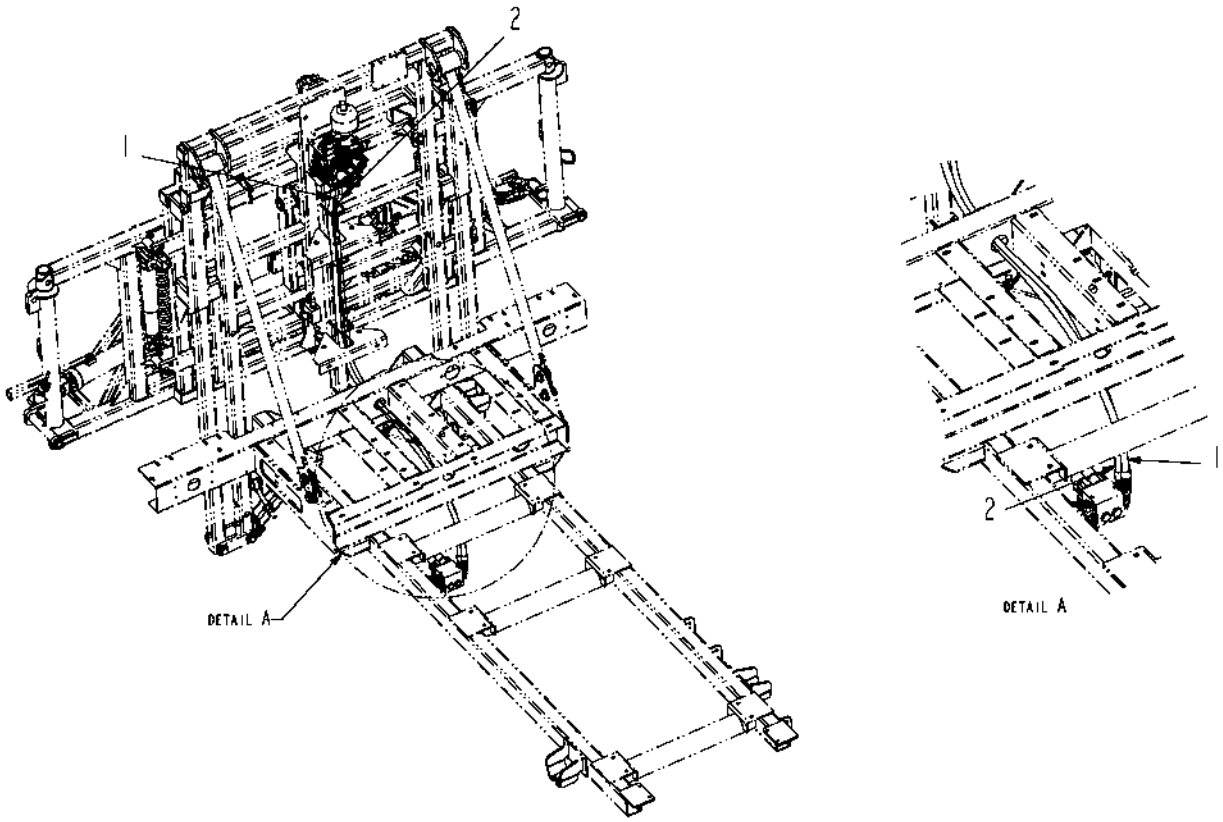

512863D1-01-N562-.TIF

Copyright © 2007 AGCO Corporation

HOSE INSTL-HYD,BM BLOCK,RG

ITEM	PART #	QTY	DESCRIPTION	COMMENTS
1	512850D1	-	HOSE ASM,-8X100 ORFS/ORFS	
2	512854D1	-	HOSE ASM,-6X100 ORFS/ORFS	

Copyright © 2007 AGCO Corporation

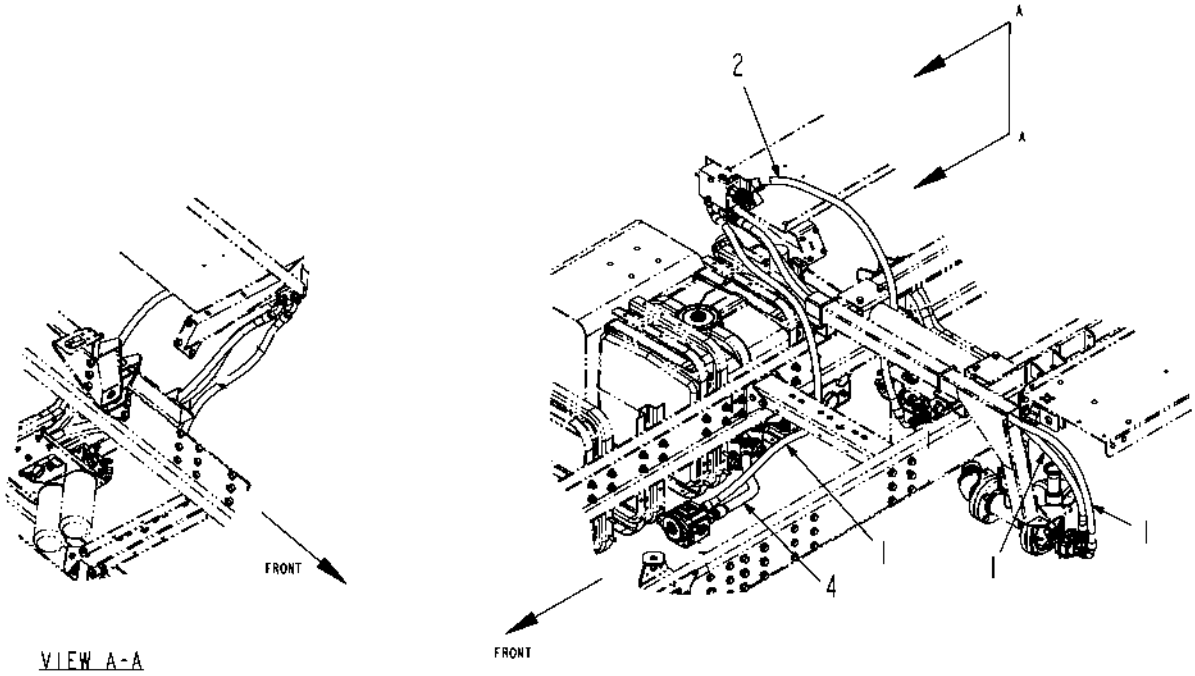

513012D1-01-N562-.TIF

Copyright © 2007 AGCO Corporation

HOSE INSTL-HYD,LIQ SYS,1074C

ITEM	PART #	QTY	DESCRIPTION	COMMENTS
1	512851D1	-	HOSE ASM,-12X99 ORFS/ORFS90	
2	512852D1	-	HOSE ASM,-12X64 ORFS/ORFS90	
3	513014D1	1	KIT-HOSE,LIQ SYS,1074C	
4	513015D1	-	HOSE ASM,-16X52 ORFS/ORFS	

Copyright © 2007 AGCO Corporation

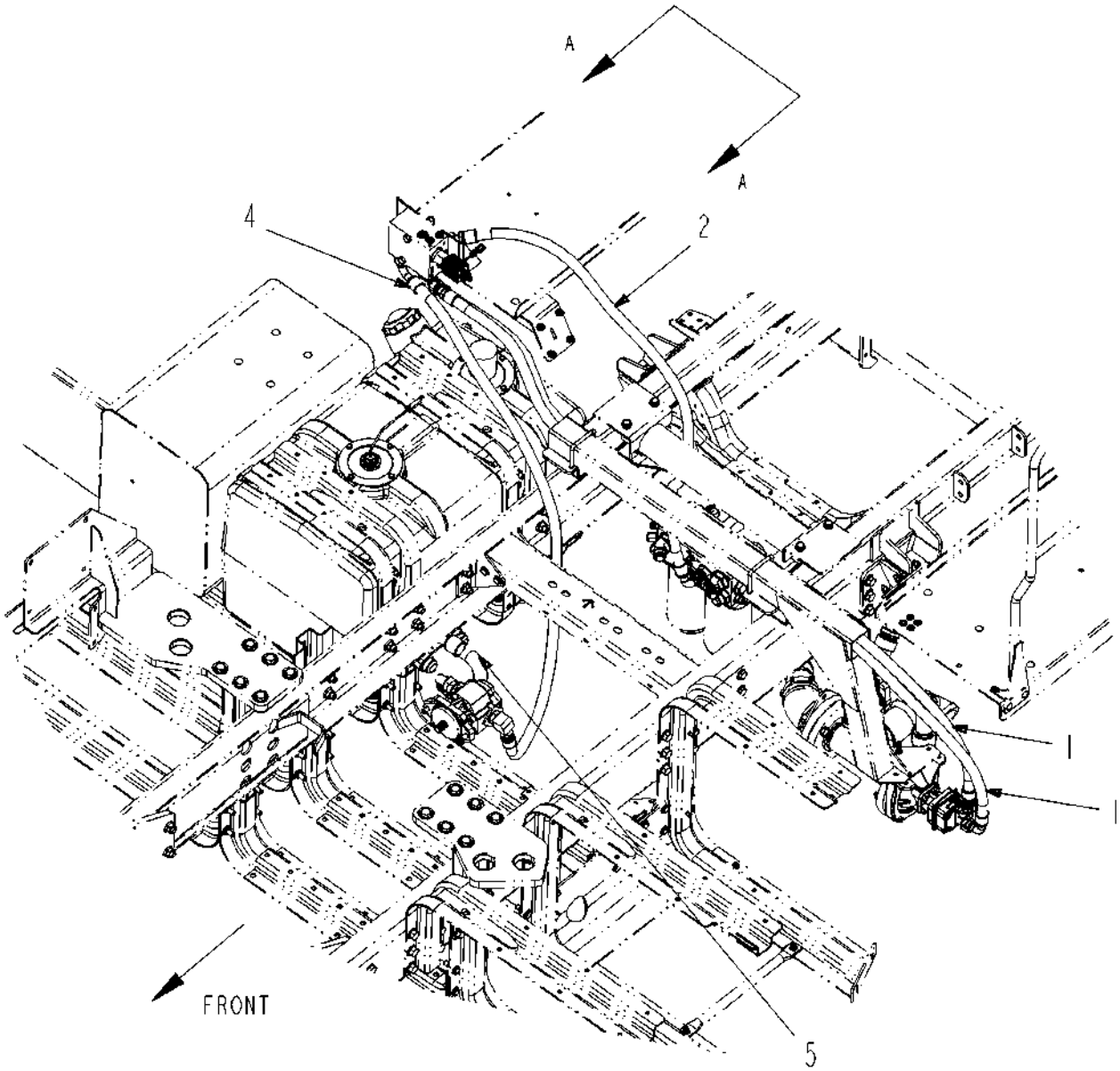

513127D1-01-N562-.TIF

Copyright © 2007 AGCO Corporation

HOSE INSTL-HYD,LIQ SYS,MONGREL

ITEM	PART #	QTY	DESCRIPTION	COMMENTS
REF	513128D1	1	KIT-HOSE,LIQ SYS,SS	
1	512851D1	-	HOSE ASM,-12X99 ORFS/ORFS90	
2	512852D1	-	HOSE ASM,-12X64 ORFS/ORFS90	
4	513129D1	-	HOSE ASM,-12X73 ORFS/ORFS90	
5	513130D1	-	HOSE ASM,-16X30 ORFS/ORFS90	

Copyright © 2007 AGCO Corporation

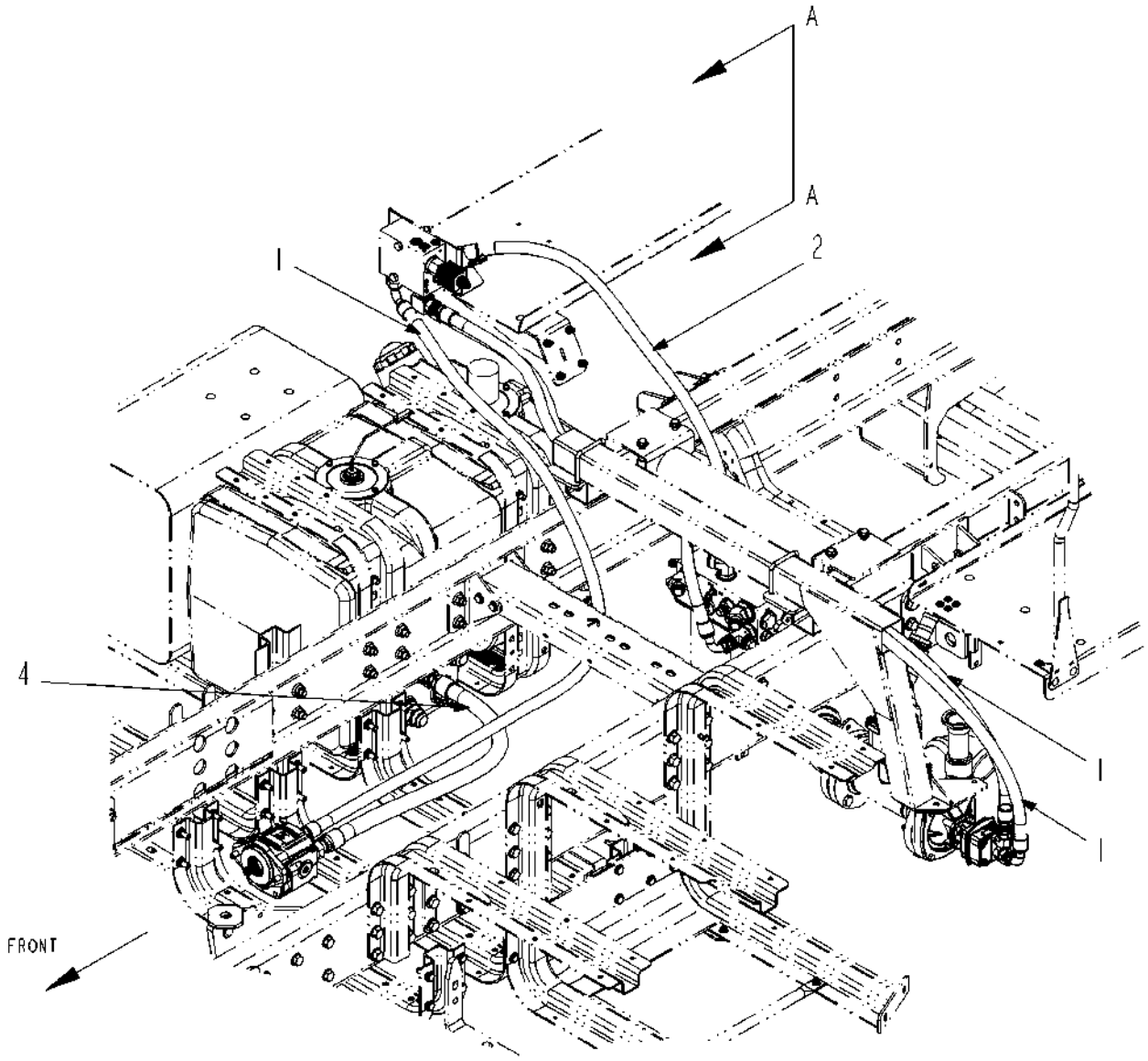

513151D1-01-N562-.TIF

Copyright © 2007 AGCO Corporation

HOSE INSTL-HYD,LIQ SYS,MONG C

ITEM	PART #	QTY	DESCRIPTION	COMMENTS
REF	513152D1	1	KIT-HOSE,LIQ SYS,SSC	
1	512851D1	-	HOSE ASM,-12X99 ORFS/ORFS90	
2	512852D1	-	HOSE ASM,-12X64 ORFS/ORFS90	
4	513153D1	-	HOSE ASM,-16X58 ORFS/ORFS	

Copyright © 2007 AGCO Corporation

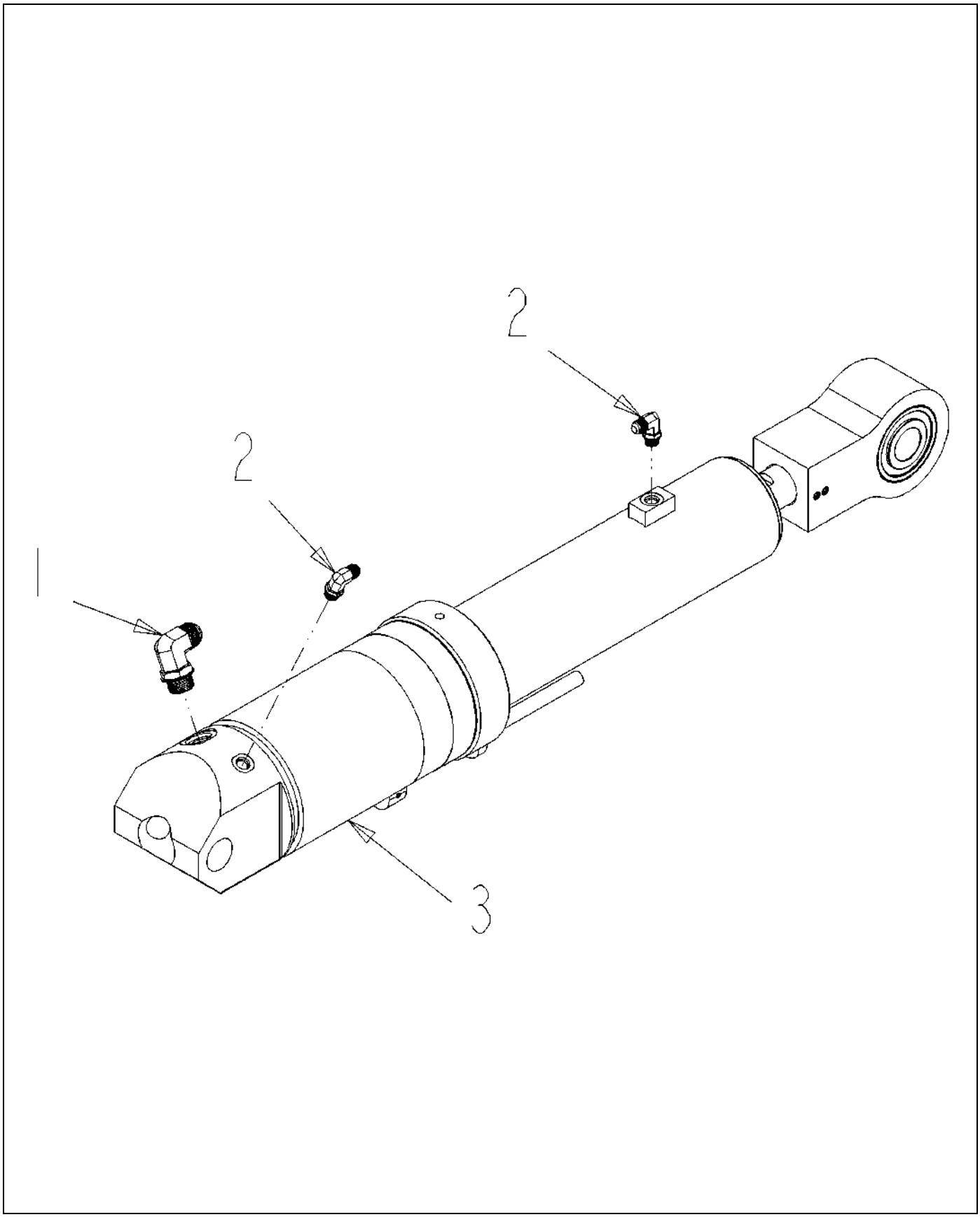

514561D1-02-R313-.TIF

Copyright © 2007 AGCO Corporation

CYL ASM-HYD,SWG,BM,120

ITEM	PART #	QTY	DESCRIPTION	COMMENTS
1	AG554510	1	ELBOW 90D 0.75MO-R X 0.75MJIC	[A]
2	AG562401	2	ELBOW -6MB90X-6MJ	
3	514560D1	1	CYL-HYD,4.00X21.89X1.75,BM SWG	SEE PAGE 5-33
	FOOTNOTE [A]		AG562511-O-RING	

Copyright © 2007 AGCO Corporation

HARN INSTL-ELEC BM SECT VLV	6-1
HARN INSTL-ELEC BM SECT VLV	6-2
ACTUATOR-000-60-M-9	6-3
HARNESS INSTL-BSO VLV,7 SECT	6-4
HARNESS INSTL-BSO VLV,7 SECT	6-5
HARN INSTL-ELEC BM SECT,90/100	6-6
HARN INSTL-ELEC BM SECT,90/100	6-7
SWITCH INSTL-BCO,8/1064	6-8
ARMREST RWK	6-9
ARMREST INSTL-ELECTRICAL	6-10
PC BOARD ASM-ARMREST	6-11
SYS INSTL-PNEU/ELEC,HV BOOM	6-12
SYS INSTL-PNEU/ELEC,HV BOOM	6-13
HARN INSTL-BM,(SYS)	6-14
HARN INSTL-BM,(SYS)	6-15
HARN INSTL-BM,(SYS)	6-16
ELEC INSTL-TLLT,LIQ,RG	6-17
LIGHT INSTL-TAIL,LED,RC LIQ	6-18
HARN INSTL-CTRL,AUTOBM,G2,SYS	6-19
HARN INSTL-CTRL,AUTOBM,G2,SYS	6-20
BRKT ASM-MTG,TAILLIGHT	6-21
SENSOR INSTL-AUTOBOOM,120FT	6-22
SNSR-ULTRASONIC,AUTOBM,LH MTG	6-23
SNSR-ULTRASONIC,AUTOBM,RH MTG	6-24
AWFL INSTL-BRKAWAY,LIQ SYS,RC	6-25
BRKT ASM-MTG,BREAKAWAY,AWFL,LH	6-26
BRKT ASM-MTG,BREAKAWAY,AWFL,RH	6-27
HARN INSTL-TLLT,WRN,LIQ(SYS)	6-28
HARN INSTL-TLLT,WRN,LIQ(SYS)	6-29
HARN INSTL-PROD CONT,RG 8/10XX	6-30
HARN INSTL-PROD CONT,RG 8/10XX	6-31
HARN INSTL-PROD CONT,RG 8/10XX	6-32
SWITCH INSTL-ER,8/1064	6-33
SWITCHBOX ASM-BOOM CTRL,8/1064	6-34
LIGHTBAR INSTL-REAR	6-35
SWITCH INSTL-SECT 6/7,8/10X4	6-36
LIGHT INSTL-TAIL,SADDLE,RC LIQ	6-37
LAMP CLUSTER REAR RH	6-38
LAMP CLUSTER REAR LH	6-39
HARN INSTL-PWR/CTRL,G2,8/1074	6-40
HARN INSTL-PWR/CTRL,G2,8/1074	6-41
HARNESS INSTL-PROD CONT,RG	6-42
HARNESS INSTL-PROD CONT,RG	6-43
HARNESS INSTL-PROD CONT,RG	6-44
OPT INSTL-ELECTRICAL,RG	6-45
OPT INSTL-ELECTRICAL,RG	6-46
ASM-PWR/GND STUD,RG	6-47
SWITCH INSTL-HV/STD	6-48
HARN INSTL-CTRL,SYS,G2	6-49
HARN INSTL-CTRL,SYS,G2	6-50
LIGHT INSTL-TAIL,LED,LIQ,120	6-51

SWITCH-INSTL,ER 6-52
HARNESS INSTL-B/M,RG 6-53
HARNESS INSTL-B/M,RG 6-54
HARNESS INSTL-B/M,RG 6-55
HARN INSTL-AFWL,LIQ SYS 6-56
ELEC INSTL-SYS,RG LIQ,RVN 6-57
ELEC INSTL-SYS,RG LIQ,RVN 6-58
ELEC INSTL-SYS,RG LIQ,RVN 6-59
ELEC INSTL-SYS,RG LIQ,GTA 6-60
ELEC INSTL-SYS,RG LIQ,GTA 6-61
ELEC INSTL-SYS,RG LIQ,GTA 6-62
SYS INSTL-INJ,LOOP 1,RVN,RG 6-63
SYS INSTL-INJ,LOOP 1,RVN,RG 6-64
SYS INSTL-INJ,LOOP 2,RVN,RG 6-65
SYS INSTL-INJ,LOOP 2,RVN,RG 6-66
ELEC INSTL-SYS RG,LIQ,FLCN 6-67
ELEC INSTL-SYS RG,LIQ,FLCN 6-68
ELEC INSTL-SYS RG,LIQ,FLCN 6-69
HARN INSTL-PWR/CTRL,CAB,G2 6-70
HARN INSTL-PWR/CTRL,CAB,G2 6-71
HARN INSTL-PWR/CTRL,CAB,G2 6-72
ELEC INSTL-CAB,8/1074 6-73

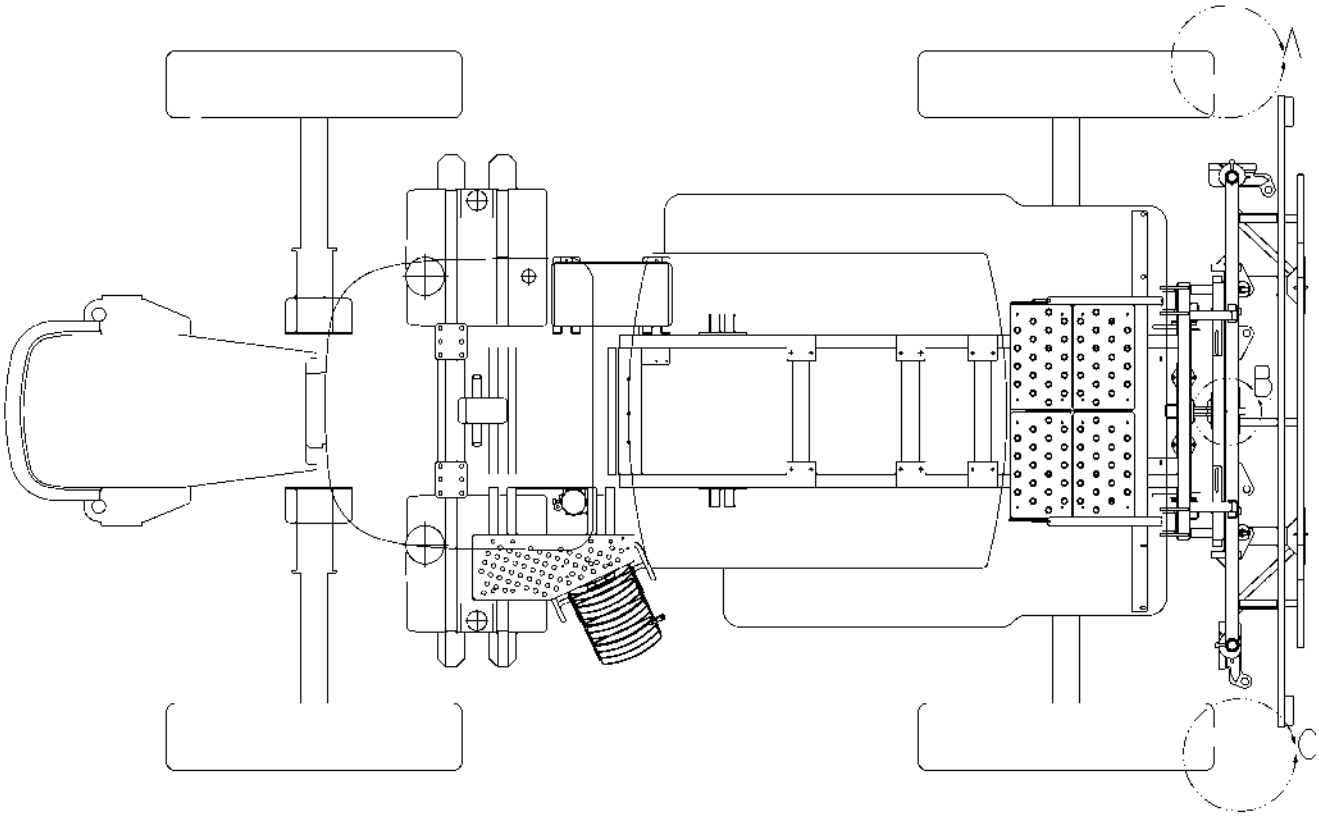

504301-02-N278-01.TIF

Copyright © 2007 AGCO Corporation

ITEM	PART #	QTY	DESCRIPTION	COMMENTS
REF			DETAIL IMAGE, PLEASE REFER TO RELATED PAGES FOR MORE INFORMATION	

Copyright © 2007 AGCO Corporation

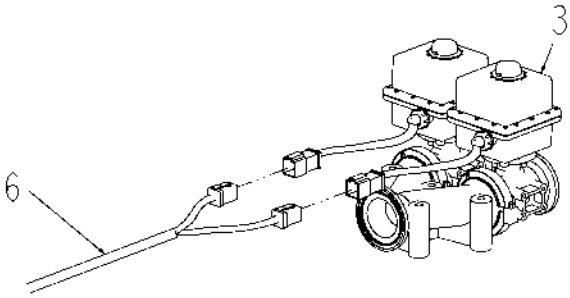

DETAI_ A

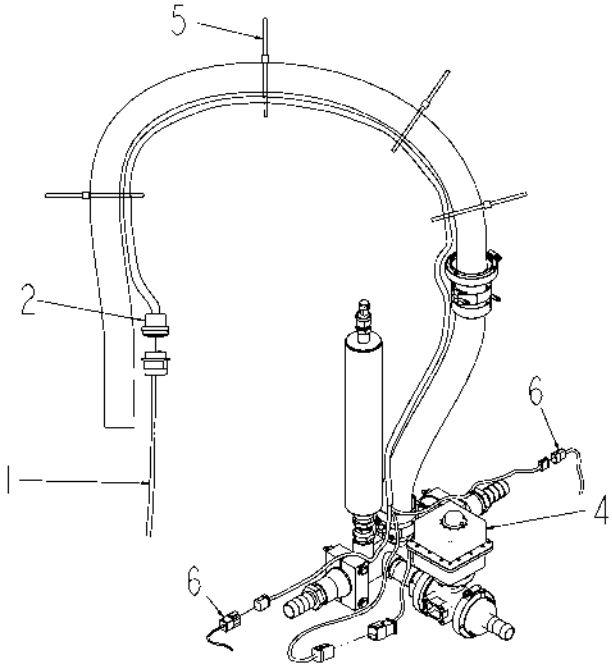

DETAIL B

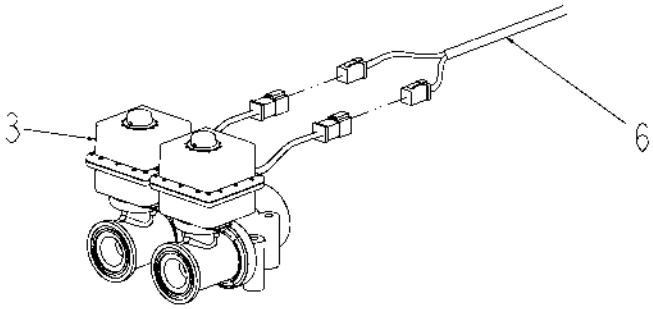

DETAIL C

504301-02-N278-02.TIF

Copyright © 2007 AGCO Corporation

HARN INSTL-ELEC BM SECT VLV

ITEM	PART #	QTY	DESCRIPTION	COMMENTS
1	AG504293	-	HARNESS-PRODUCT CONTROL(SYS)	
2	509417D1	1	HARNESS-BSO VLV,5SECT,CTR	
3	AG121882	-	MANIFOLD ASM-Y,1.00FP FLG,ELEC	SEE PAGE 2-2
4	AG424522	-	MANF ASM-BOOM,W/BALL VLV,STD	SEE PAGE 2-1
5	AG554278	6	TIE CABLE 11.0 .06-3.06 BLACK	
6	509713D1	2	HARN-BSO VLV,5SECT,OUTER,SHORT	

Copyright © 2007 AGCO Corporation

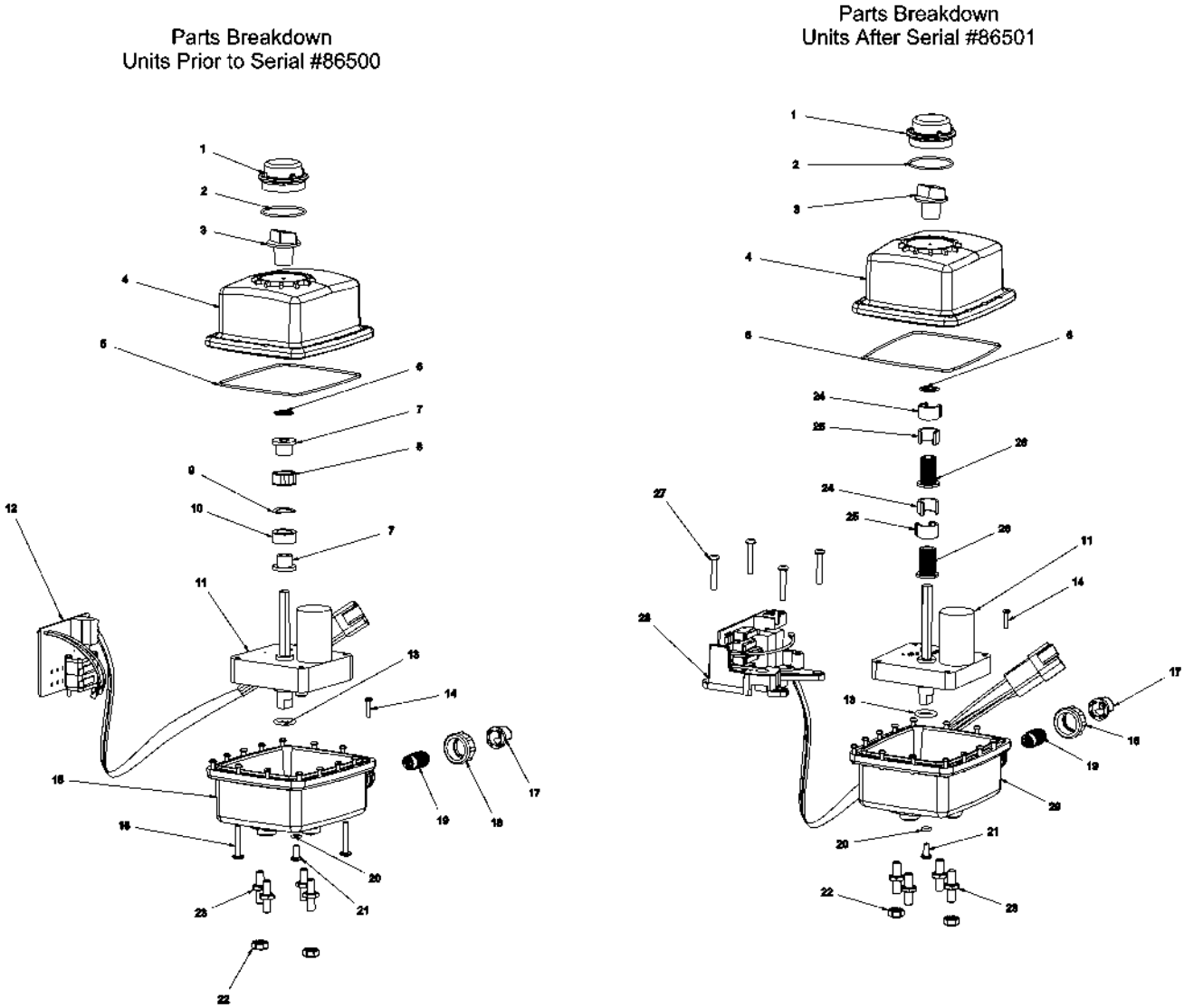

121929.TIF

Copyright © 2007 AGCO Corporation

ITEM	PART #	QTY	DESCRIPTION	COMMENTS
1	AG131743	1	DOME, CLEAR	
2	AG139433	1	O-RING/SILICONE DOME	
3	AG131744	1	FLAG	
4	AG131745	1	DOME, LID	
5	AG139434	1	O-RING/SILICONE LID	
6	AG139435	1	RING/PUSH-ON-RETAINER	
7	AG139429	2	CAM SHOULDER	
8	AG139430	1	CAM SINGLE LOBE	
9	AG139431	1	SPRING/WASHER	
10	AG139432	1	CAM DOUBLE LOBE	
11	AG131748	1	MOTOR, GEAR ASM	
12	AG131739	1	BOARD, CIRCUIT W/CABLE	
13	AG139436	1	O-RING/MOTOR SHAFT	
14	AG139437	14	SCREW/LID	
15	AG131746	14	CASE, BOTTOM	
16	AG139449	2	SCREW/SS #10-32X3/4	
17	AG139438	1	COVER/GROMMET STRAIN RELIEF	
18	AG139439	1	NUT/GROMMET STRAIN RELIEF	
19	AG139440	1	GROMMET/WIRE	
20	AG139441	1	O-RING/PRESSURE TEST	
21	AG139442	1	SCREW/PRESSURE TEST 9-18X3/8	
22	AG121926	2	NUT-KEP"S,.50-20NC	
23	AG131747	4	STUD, MOUNTING	
24	AG139443	2	BUMP CAM LOBE,DOUBLE	
25	AG139444	2	BUMP CAM LOBE,SINGLE	
26	AG139445	2	BUMP CAM,BASE SHOULDER	
27	AG139446	4	SCREW/SS #8-32X1	
28	AG139447	1	CIRCUIT BOARD/REPLACEMENT,CAM	
29	AG139448	1	EH3 LOWER CASE,INTERNAL MOUNT	

Copyright © 2007 AGCO Corporation

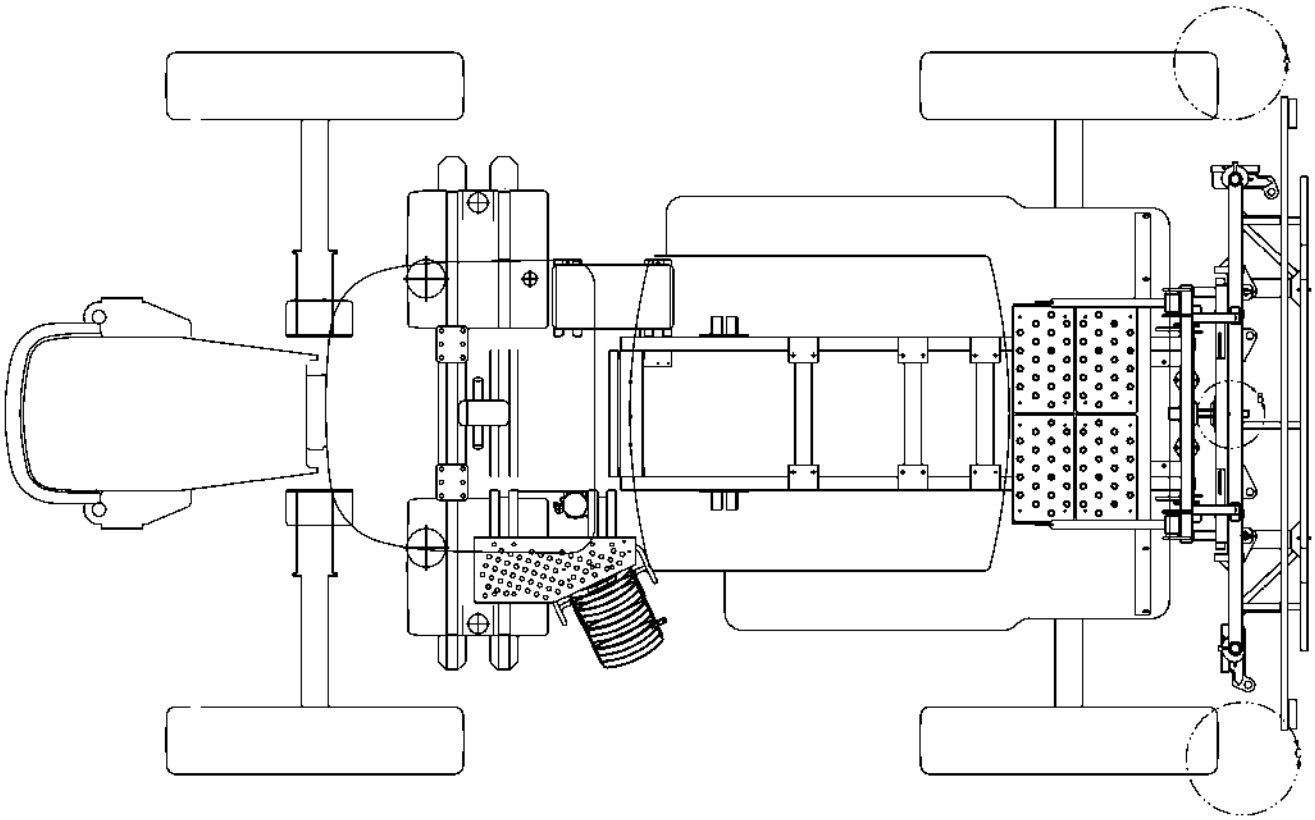

505271D1-04-N702-01.TIF

Copyright © 2007 AGCO Corporation

ITEM	PART #	QTY	DESCRIPTION	COMMENTS
REF			DETAIL IMAGE, PLEASE REFER TO RELATED PAGES FOR MORE INFORMATION	

Copyright © 2007 AGCO Corporation

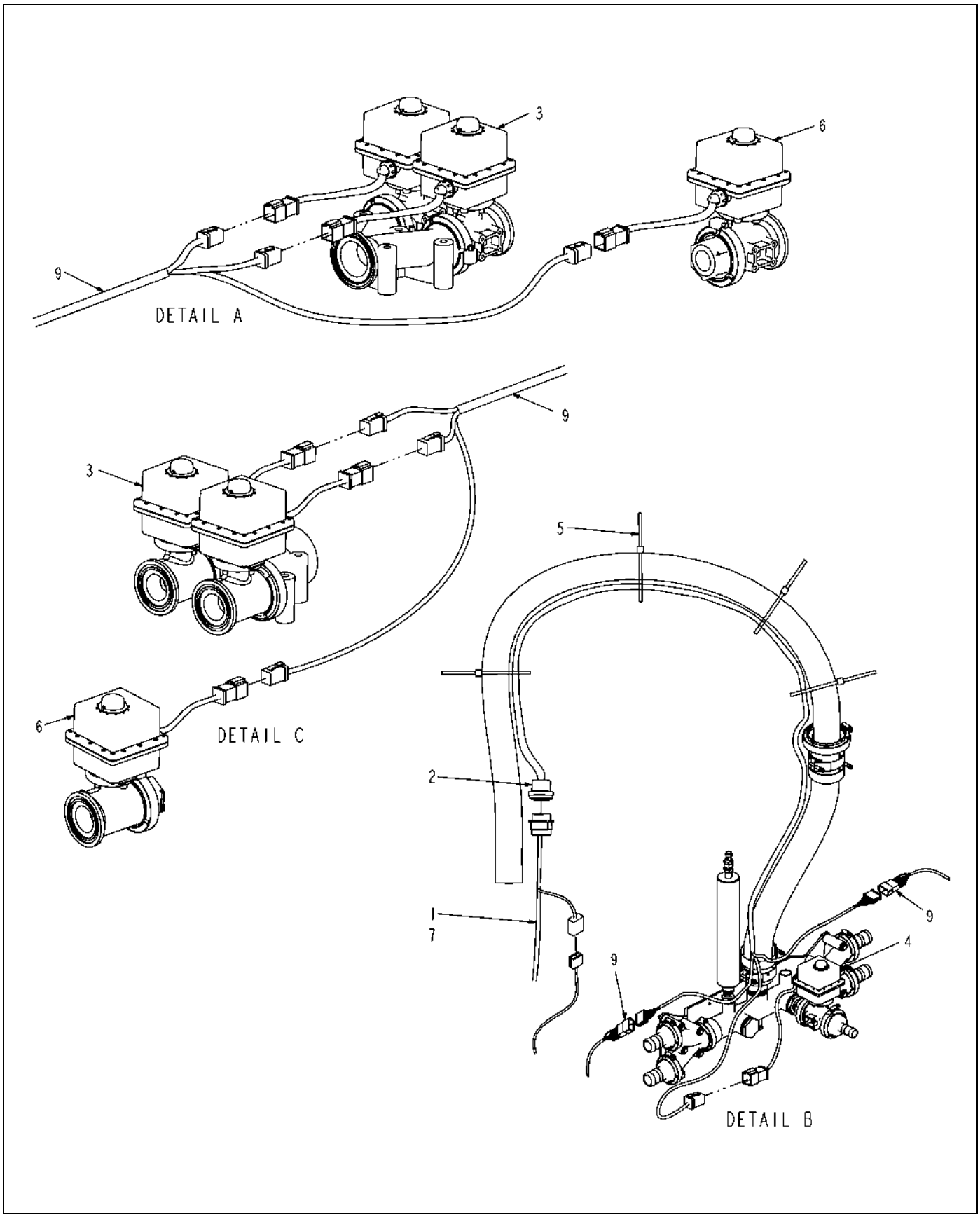

505271D1-04-N704-02.TIF

Copyright © 2007 AGCO Corporation

HARNESS INSTL-BSO VLV,7 SECT

ITEM	PART #	QTY	DESCRIPTION	COMMENTS
1	505110D1	-	HARNESS-PROD CONT.RG	
2	509415D1	1	HARNESS-BSO VLV,7SECT,CTR	
3	AG121882	-	MANIFOLD ASM-Y,1.00FP FLG,ELEC	SEE PAGE 2-2
4	AG424522	-	MANF ASM-BOOM,W/BALL VLV,STD	SEE PAGE 2-1
5	AG554278	6	TIE CABLE 11.0 .06-3.06 BLACK	
6	AG121883	-	VALVE-BALL,1.00FP FLGXNPT,ELEC	SEE PAGE 4-3
7	AG504293	-	HARNESS-PRODUCT CONTROL(SYS)	
9	509416D1	2	HARNESS-BSO VLV,7SECT,OUTER	

Copyright © 2007 AGCO Corporation

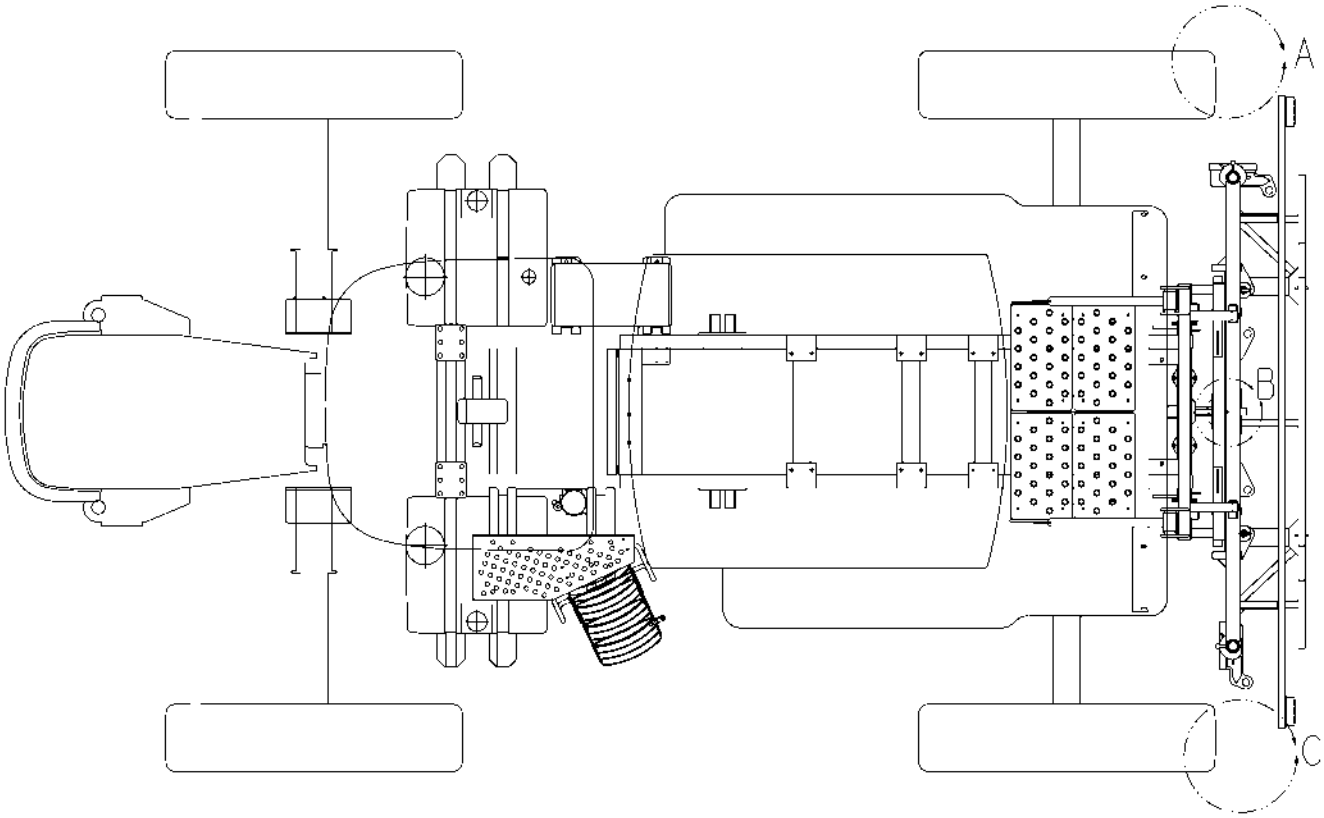

122591-02-N278-01.TIF

Copyright © 2007 AGCO Corporation

ITEM	PART #	QTY	DESCRIPTION	COMMENTS
REF			DETAIL IMAGE, PLEASE REFER TO RELATED PAGES FOR MORE INFORMATION	

Copyright © 2007 AGCO Corporation

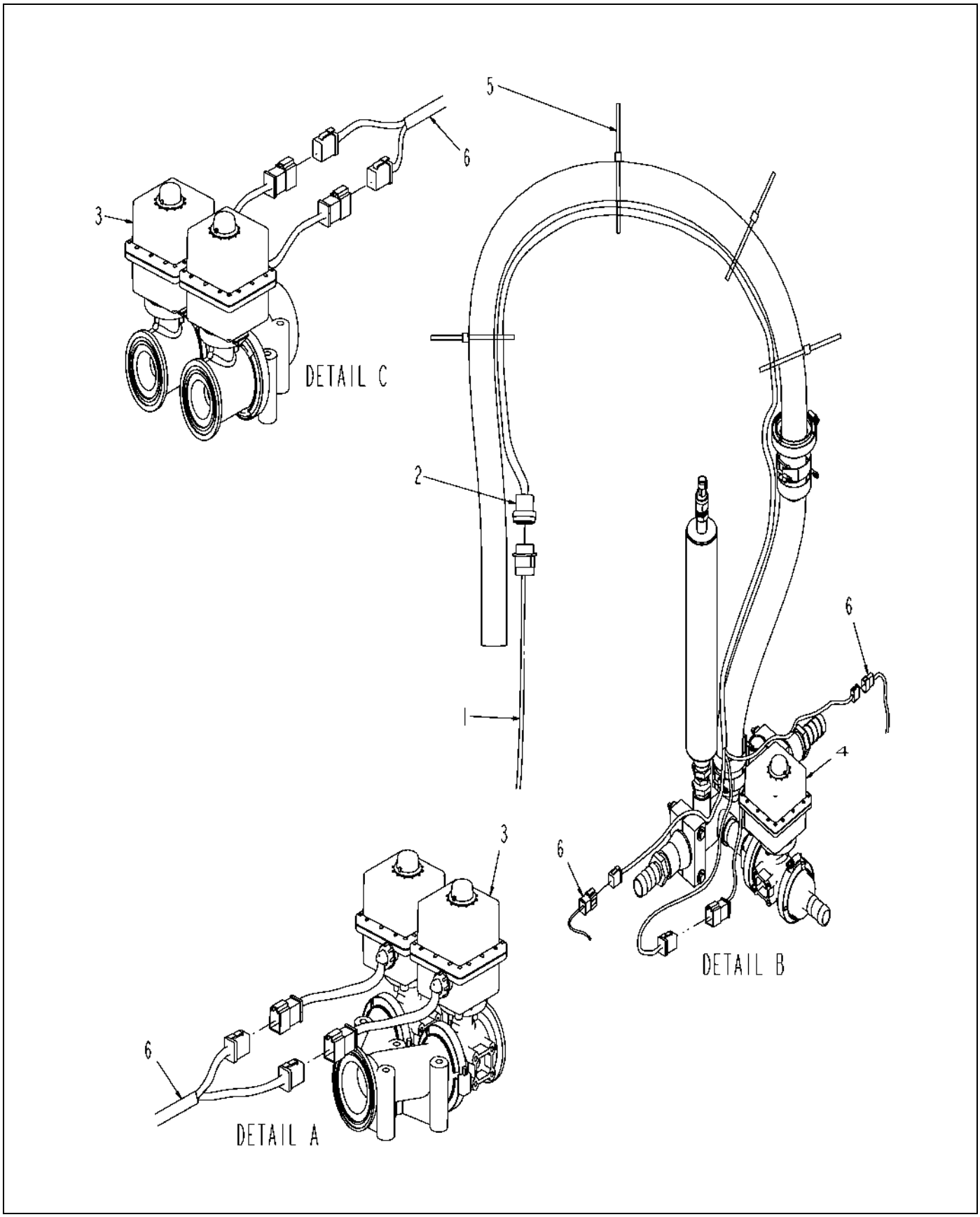

122591-02-N278-02.TIF

Copyright © 2007 AGCO Corporation

HARN INSTL-ELEC BM SECT,90/100

ITEM	PART #	QTY	DESCRIPTION	COMMENTS
1	AG504293	-	HARNESS-PRODUCT CONTROL(SYS)	
2	509417D1	1	HARNESS-BSO VLV,5SECT,CTR	
3	AG121882	-	MANIFOLD ASM-Y,1.00FP FLG,ELEC	SEE PAGE 2-2
4	AG424522	-	MANF ASM-BOOM,W/BALL VLV,STD	SEE PAGE 2-1
5	AG554278	6	TIE CABLE 11.0 .06-3.06 BLACK	
6	509418D1	2	HARNESS-BSO VLV,5SECT,OUTER	

Copyright © 2007 AGCO Corporation

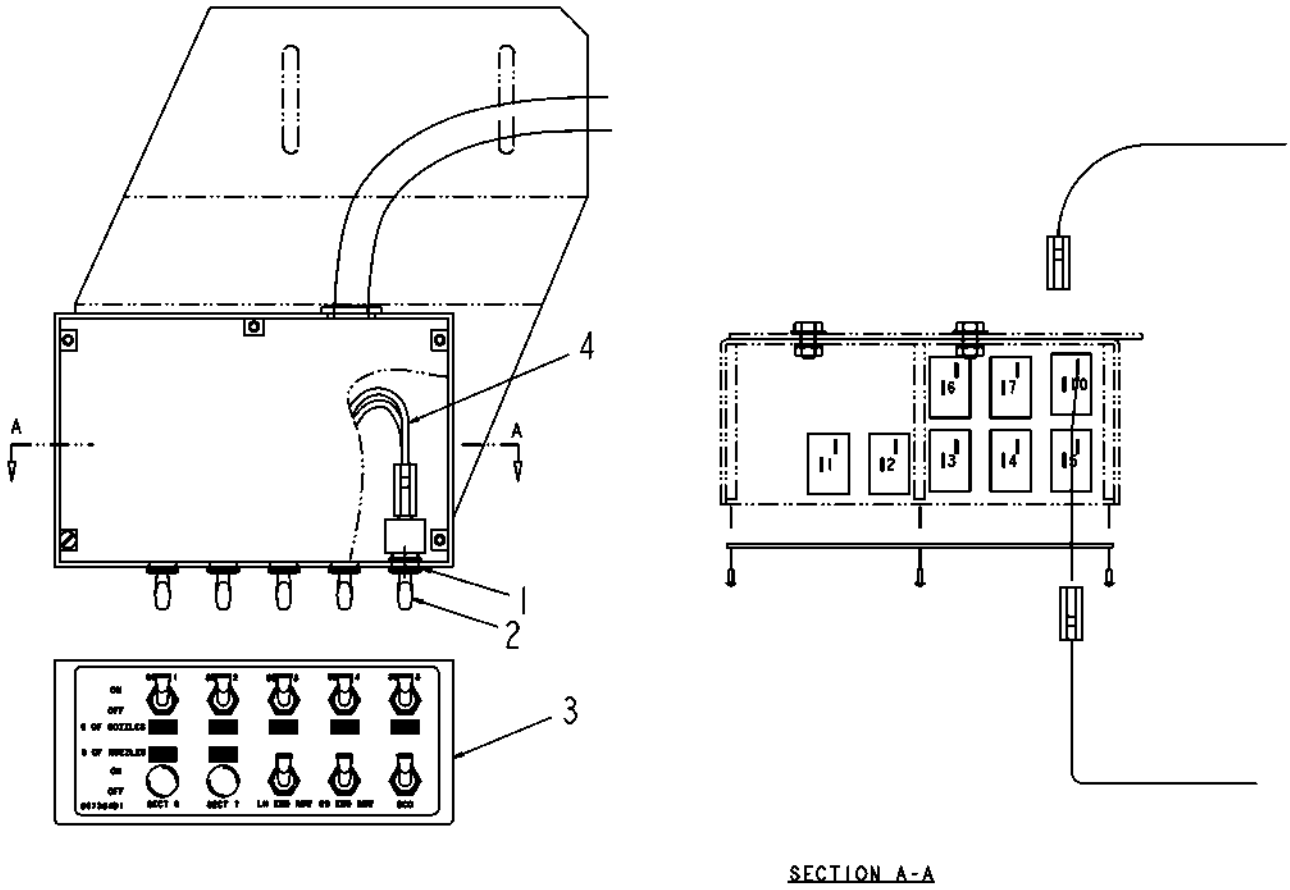

122452-02-M930.TIF

Copyright © 2007 AGCO Corporation

ITEM	PART #	QTY	DESCRIPTION	COMMENTS
REF	AG420264	1	ARMREST RWK	SEE PAGE 6-9
1	AG520326	2	WASHER 0.47 INT TOOTH LK CD	
2	AG518707	2	SWITCH ELECT SPST BAT HANDLE	
3	AG121868	-	SWITCHBOX ASM-BOOM CTRL,8/1064	SEE PAGE 6-34
4	507356D1	-	HARN-SWITCHBOX,7SECT,8/10X4	

Copyright © 2007 AGCO Corporation

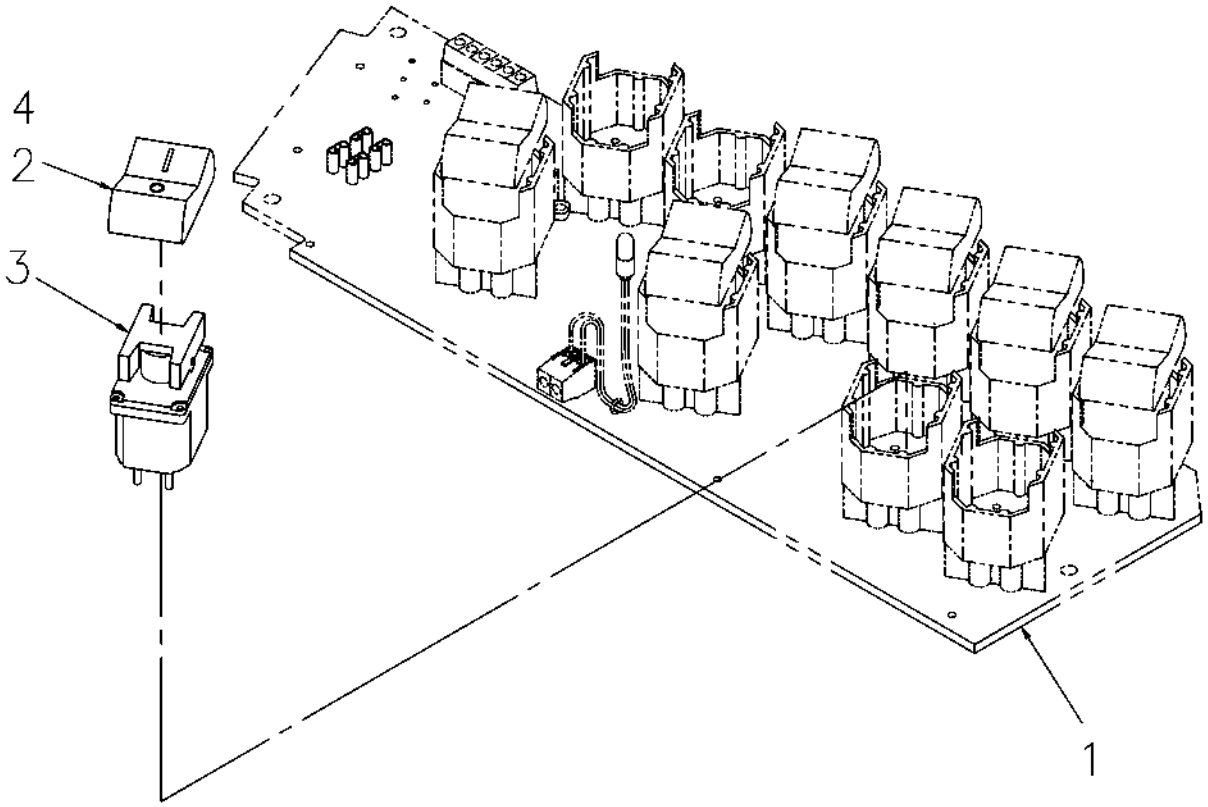

420264-C.TIF

Copyright © 2007 AGCO Corporation

ITEM	PART #	QTY	DESCRIPTION	COMMENTS
1	AG420146	-	ARMREST INSTL-ELECTRICAL	SEE PAGE 6-10
2	AG518088	1	ROCKER COVER BLANK	
3	AG609555	1	SWITCH-DPDT CTR OFF MOM,RKR	
4	AG108337	1	DECAL SWITCH	

Copyright © 2007 AGCO Corporation

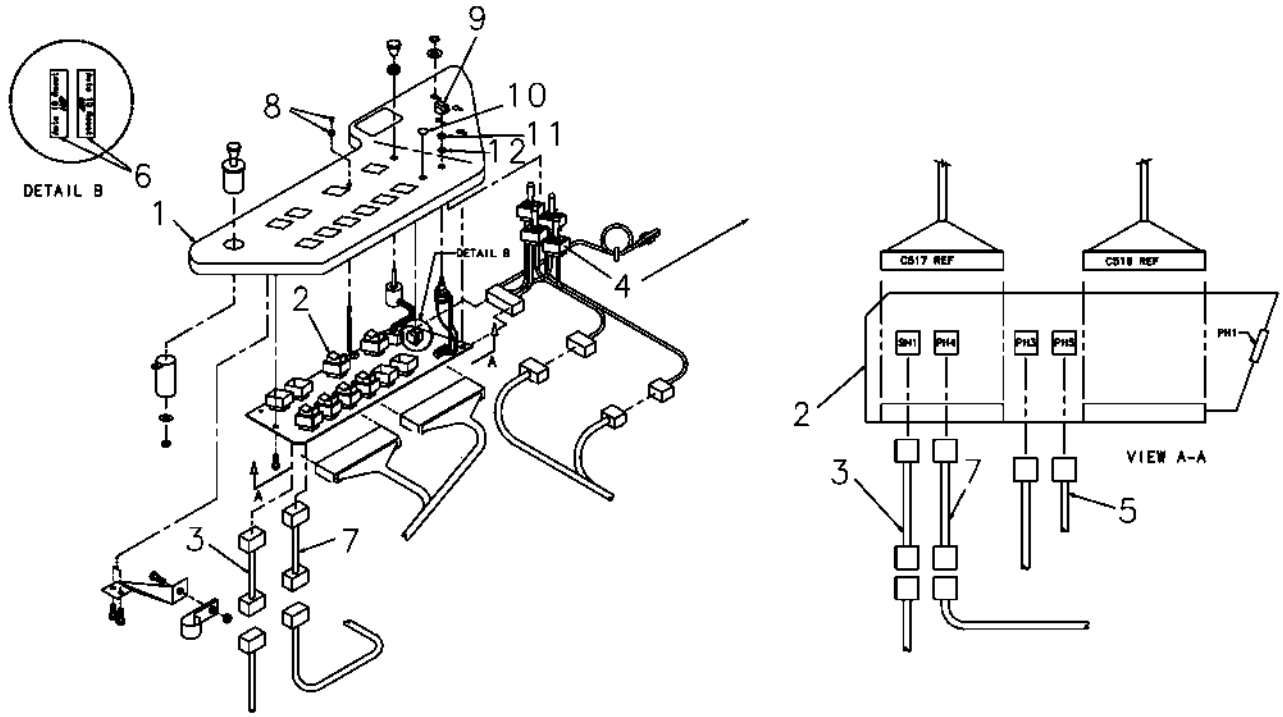

420146-B.TIF

Copyright © 2007 AGCO Corporation

ITEM	PART #	QTY	DESCRIPTION	COMMENTS
2	AG420189	1	PC BOARD ASM-ARMREST	SEE PAGE 6-11
3	AG322563	1	HARNESS-EXTENSION	
4	AG420185	1	HARNESS-TRACK ADJUST	
5	AG322712	1	HARNESS-RADAR & SWITCH BOX PWR	
6	AG520296	2	CIRCUIT BREAKER-10A CYCLING	
7	AG322562	1	HARNESS-EXTENSION	
8	AG517421	1	LENS/BUSHING ASM	
9	AG520559	1	KNOB-POINTER	
10	AG562251	1	PLUG BLACK 0.50 PLASTIC	
11	AG520327	1	NUT-.47-32UNS,HEX,BLK	
12	AG520326	1	WASHER 0.47 INT TOOTH LK CD	

Copyright © 2007 AGCO Corporation

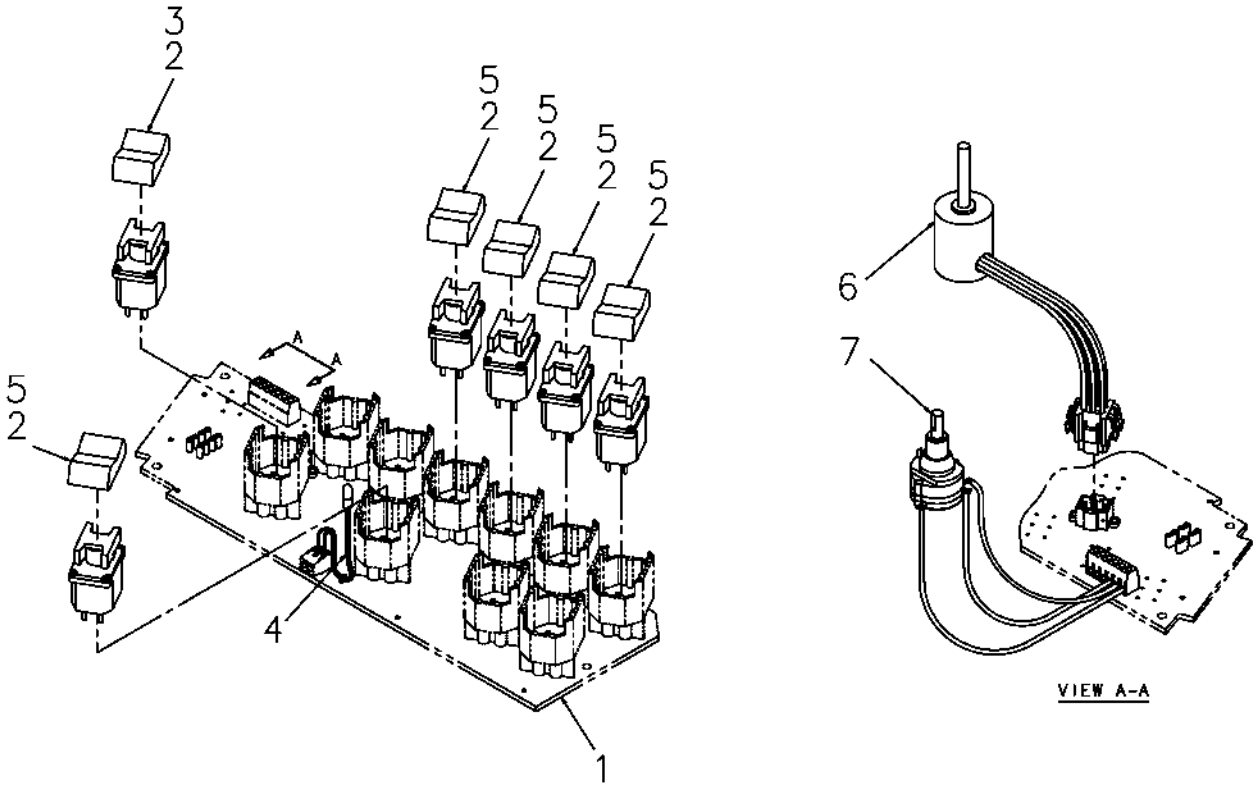

420189-A.TIF

Copyright © 2007 AGCO Corporation

PC BOARD ASM-ARMREST

ITEM	PART #	QTY	DESCRIPTION	COMMENTS
1	AG520222	1	CIRCUIT BOARD ARMREST	
2	AG518088	-	ROCKER COVER BLANK	
3	AG609557	-	SWITCH-DPDT CTR OFF MOM,RKR	
4	AG517420	1	LAMP 12VDC TYPE F614	
5	AG609555	-	SWITCH-DPDT CTR OFF MOM,RKR	
6	AG609556	-	SWITCH ARMREST SAFETY	
7	AG235928	1	SWITCH ASM-SPEED ADJUST	
	FOOTNOTE		[520222] - BOARD ONLY	

Copyright © 2007 AGCO Corporation

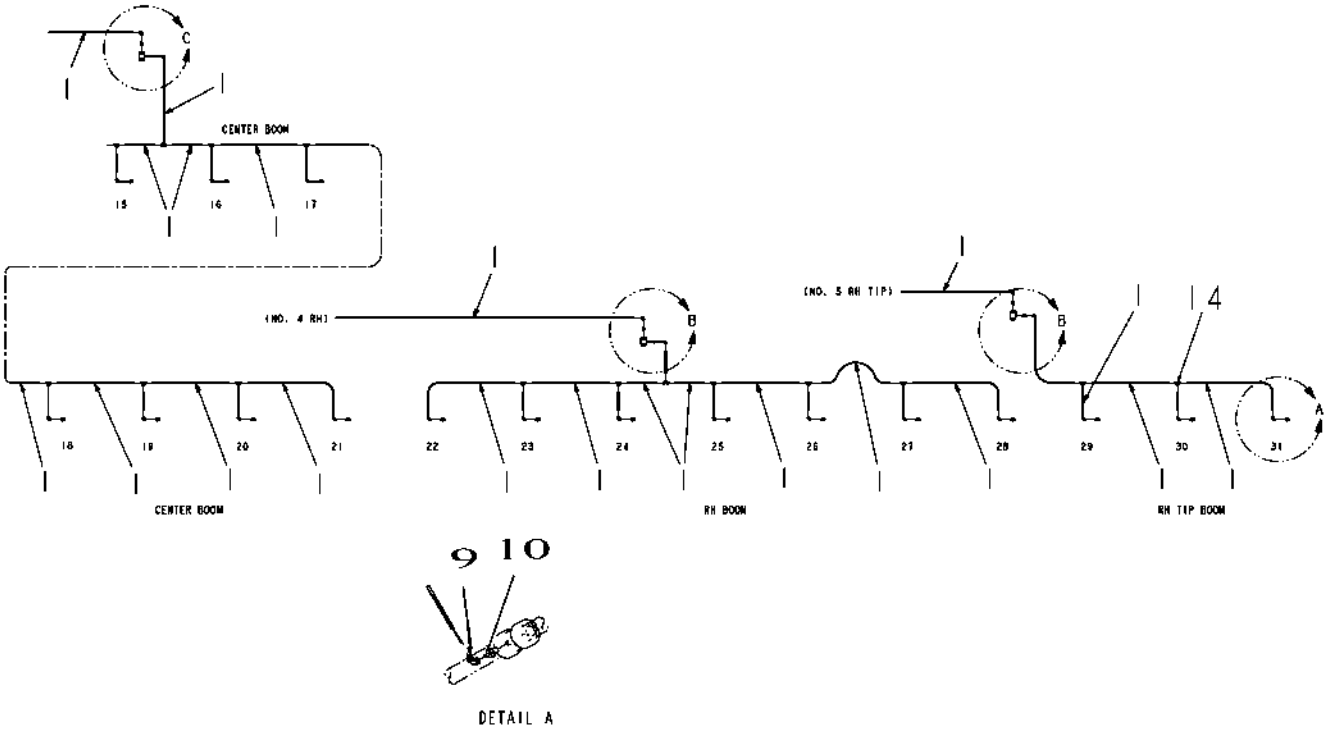

512368D1-02-N826-01.TIF

Copyright © 2007 AGCO Corporation

ITEM	PART #	QTY	DESCRIPTION	COMMENTS
1	AG511021	-	TUBING 0.25 OD NYLON BLACK [BULK: 257.584 FT]	
9	AG516229	41	ELBOW,UNION 0.25TUBE AUTO LCK	
10	AG516230	41	STEM MALE TUBE 0.25 X 0.25	
14	AG516206	26	TEE UNION 0.25 TUBE AUTO LOCK	

Copyright © 2007 AGCO Corporation

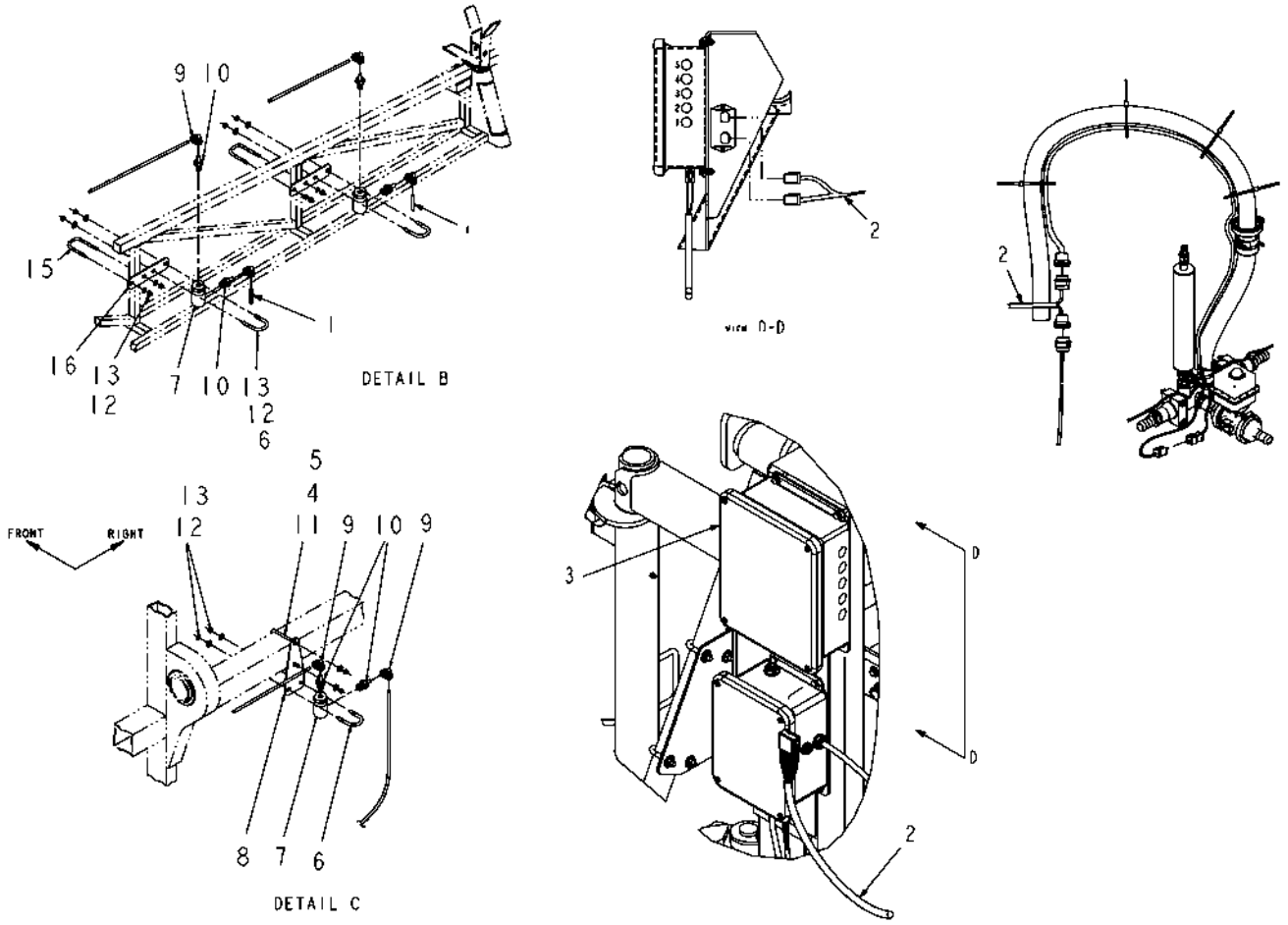

512368D1-02-N826-02.TIF

Copyright © 2007 AGCO Corporation

SYS INSTL-PNEU/ELEC,HV BOOM

ITEM	PART #	QTY	DESCRIPTION	COMMENTS
1	AG511021	-	TUBING 0.25 OD NYLON BLACK [BULK: 257.584 FT]	
2	509394D1	1	HARNESS-ADAPTER,HIGH VOLUME	
3	512375D1	1	BOX/RELAY INSTL-AIR,HI VOLUME	SEE PAGE 7-2
4	AG601411	2	NUT 0.37-16NC HEX ZN REG NY	
5	AG562073	2	WASHER 0.37 FL SS REG TYPE-B	
6	AG516402	5	BOLT-U .31-18X1.56X 2.25RD SS	
7	AG519314	5	VALVE-QUICK EXHAUST,POLY	SEE PAGE 7-6
8	AG239873	1	BRACKET-MTG,VALVE,RELIEF,CTR	
9	AG516229	41	ELBOW,UNION 0.25TUBE AUTO LCK	
10	AG516230	41	STEM MALE TUBE 0.25 X 0.25	
11	AG234310	1	U-BOLT - 2.56 X 3.50 SQ.	
12	AG562074	18	WASHER 0.31 FL SS REG TYPE-B	
13	AG516403	18	NUT 0.31-18NC HEX SS REG NY	
15	AG231204	4	BOLT-U .31-18X1.88X2.63	
16	AG239874	4	BRACKET-MTG,VALVE,RELIEF,BOOM	

Copyright © 2007 AGCO Corporation

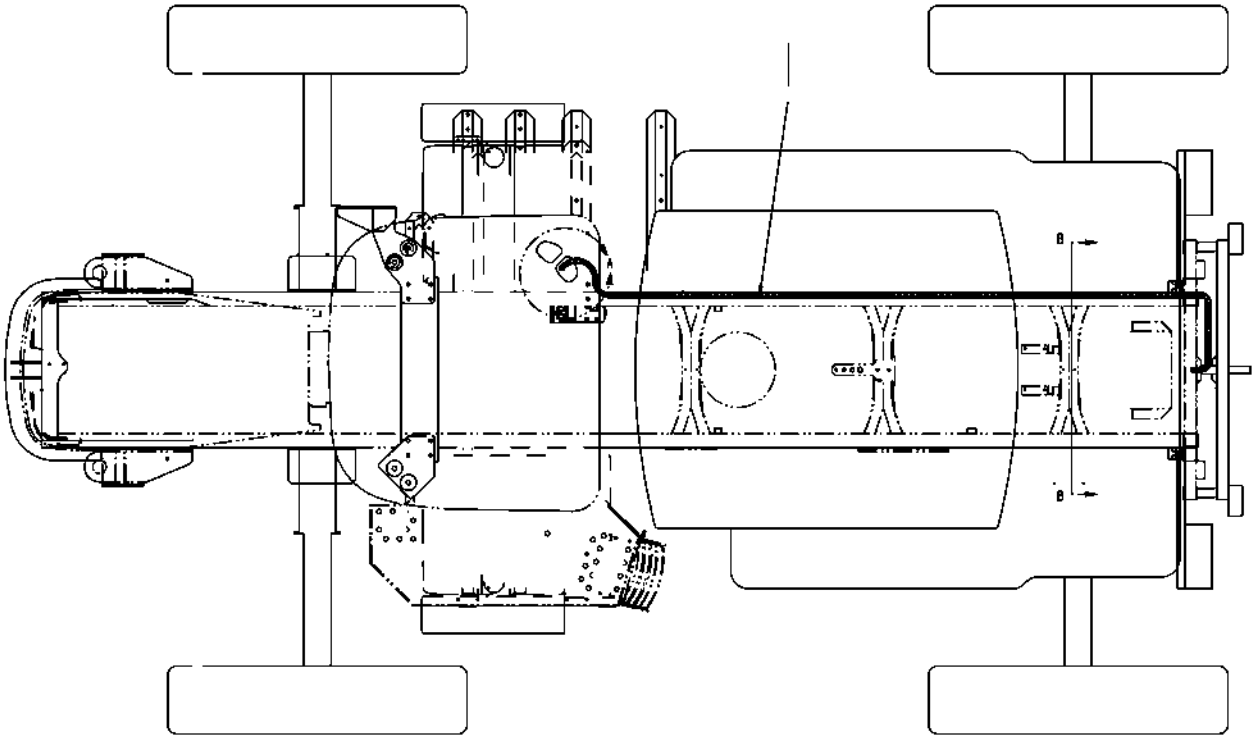

504292-C-1.TIF

Copyright © 2007 AGCO Corporation

HARN INSTL-BM,(SYS)

ITEM	PART #	QTY	DESCRIPTION	COMMENTS
1	AG504291	1	HARNESS-BM,F/M(SYS)	

Copyright © 2007 AGCO Corporation

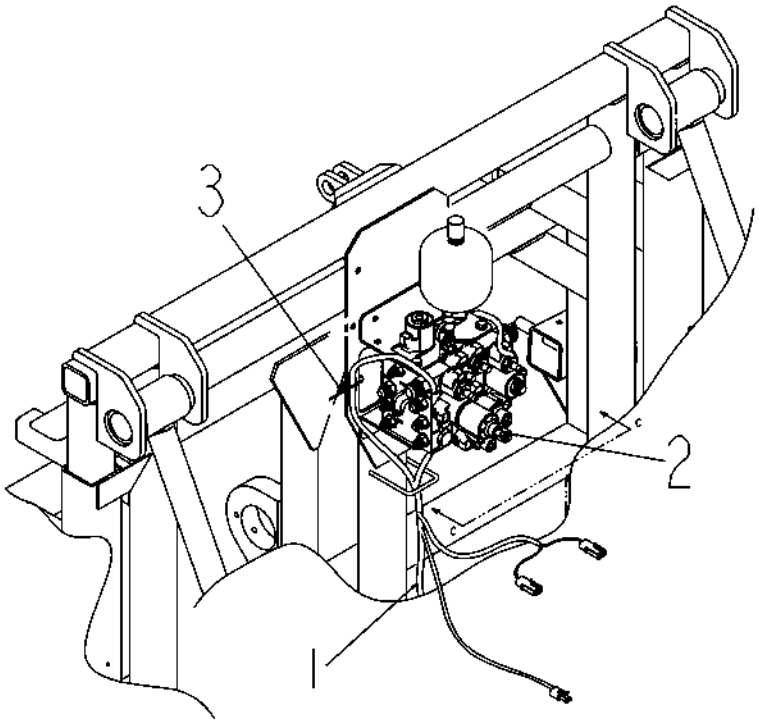

504292-C-2.tif

Copyright © 2007 AGCO Corporation

HARN INSTL-BM,(SYS)

ITEM	PART #	QTY	DESCRIPTION	COMMENTS
1	AG504291	1	HARNESS-BM,F/M(SYS)	
2	AG327802	-	BLOCK ASM-HYD,BOOM	SEE PAGE 5-41
3	AG554278	2	TIE CABLE 11.0 .06-3.06 BLACK	

Copyright © 2007 AGCO Corporation

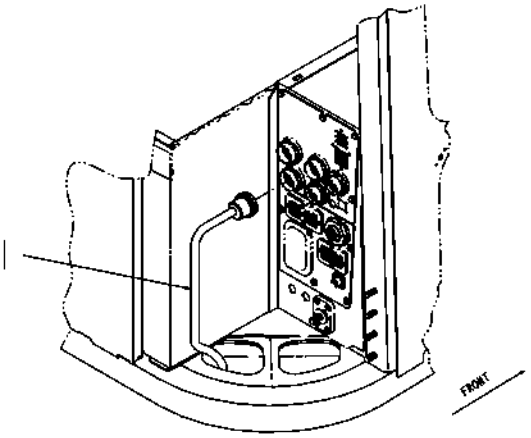

1264

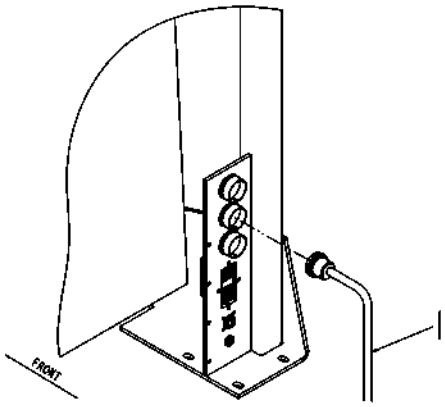

B/1084

DETAIL A

504292-C-3.TIF

Copyright © 2007 AGCO Corporation

HARN INSTL-BM,(SYS)

ITEM	PART #	QTY	DESCRIPTION	COMMENTS
1	AG504291	1	HARNESS-BM,F/M(SYS)	

Copyright © 2007 AGCO Corporation

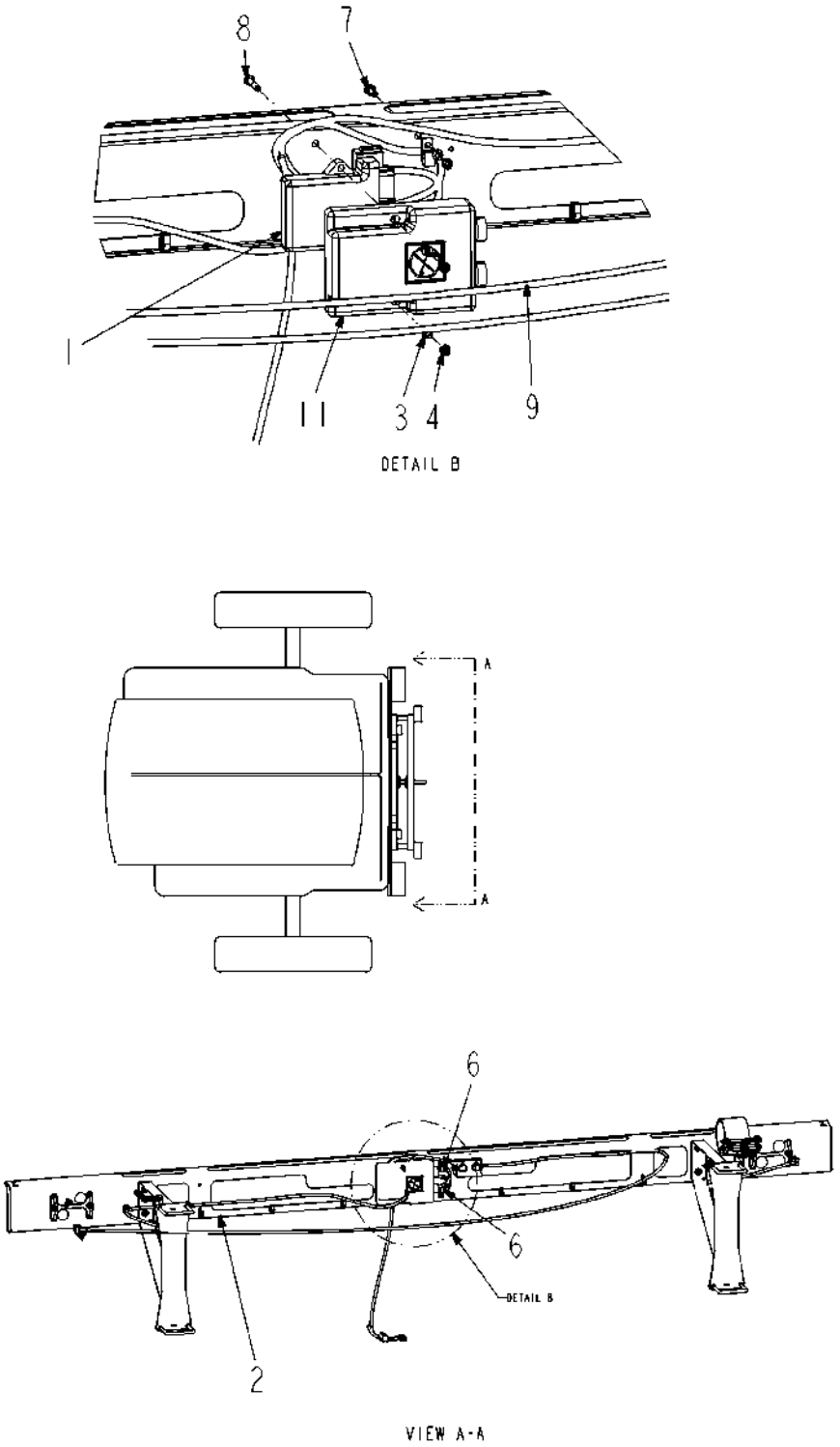

504401D1-09-R501-.TIF

Copyright © 2007 AGCO Corporation

ITEM	PART #	QTY	DESCRIPTION	COMMENTS
REF	505109D1	-	HARNESS-BOOM MOTION,RG	
1	516006D1	1	MODULE ASM-I/O,CAN	
2	AG134124	-	LIGHT INSTL-TAIL,LED,RC LIQ	SEE PAGE 6-18
3	AG515122	4	WASHER 0.25 LK SS REG	
4	AG515123	4	NUT 0.25-20NC HEX SS REG	
5	AG553557	AR	TIE CABLE 7.37 .06-1.37 BLACK	
6	AG561488	2	CLAMP 0.62 COATED HOSE	
7	AG562054	2	BOLT 0.25-20NCX 0.75 SS HHD	
8	AG562068	2	BOLT 0.25-20NCX 1.50 SS HHD	
9	519247D1	1	HARNESS-TLLT,LED,LIQ,RG	[A]
11	520331D1	1	COVER-I/O ASM.	
	FOOTNOTE [A]		EFF. S/N A00SSLNSS81283,A1286LNS001039,A1286CNS001053	

Copyright © 2007 AGCO Corporation

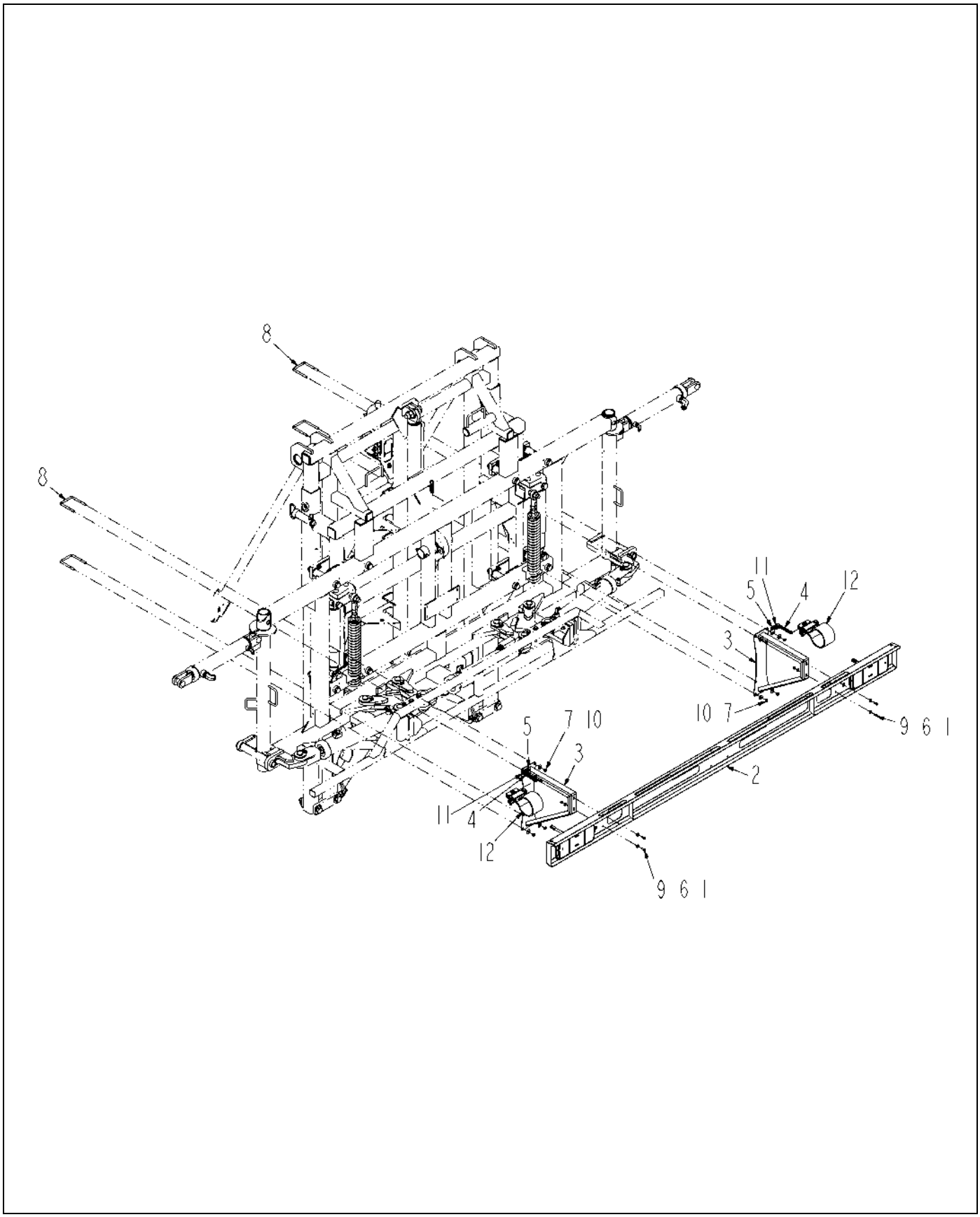

134124-03-N259-01.TIF

Copyright © 2007 AGCO Corporation

LIGHT INSTL-TAIL,LED,RC LIQ

ITEM	PART #	QTY	DESCRIPTION	COMMENTS
1	AG027275	4	NUT 0.25-20NC HEX SS REG NY	
2	AG130567	1	BRKT ASM-MTG,TAILLIGHT	SEE PAGE 6-21
3	AG134119	2	SUPPORT WLDMT-MTG,BRKT,TLLT	
4	AG140050	2	CHAIN PROOF COIL 0.18	
5	AG263132	2	WASHER-DOUBLE HOLE,.50	
6	AG515121	8	WASHER 0.25 FL SS REG TYPE-B	
7	AG515140	8	NUT 0.37-16NC HEX SS HVY NY	
8	AG523297	4	BOLT-U,.38-16X3.06X4.00L,SQ,SS	
9	AG562054	4	BOLT 0.25-20NCX 0.75 SS HHD	
10	AG562073	8	WASHER 0.37 FL SS REG TYPE-B	
11	6626327	2	LINK-CONNECTOR	
12	509480D1	2	HANGER ASM-HOSE	SEE PAGE 4-39

Copyright © 2007 AGCO Corporation

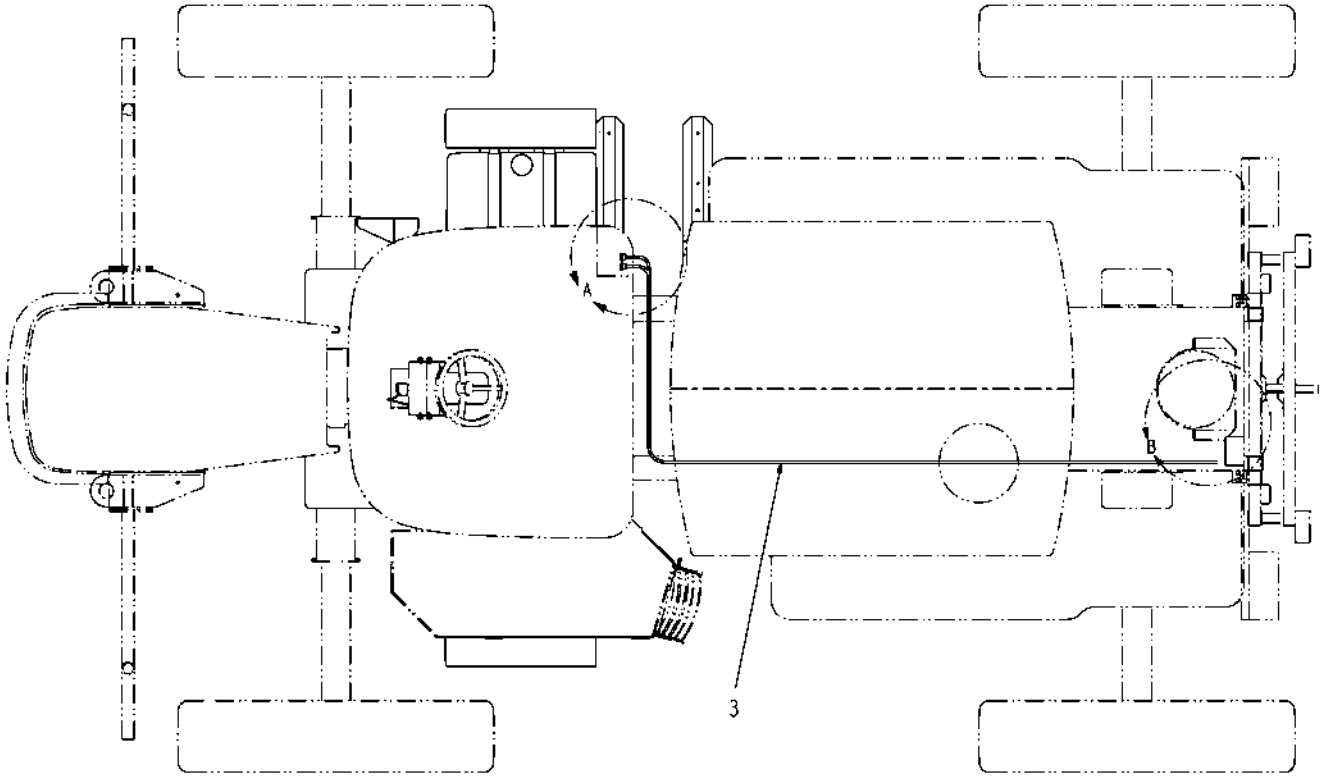

506898D1-01-M930-01.TIF

Copyright © 2007 AGCO Corporation

HARN INSTL-CTRL,AUTOBM,G2,SYS

ITEM	PART #	QTY	DESCRIPTION	COMMENTS
1	AG553557	AR	TIE CABLE 7.37 .06-1.37 BLACK	
3	506899D1	1	HARN-CTRL,SYS,AUTOBOOM,G2	

Copyright © 2007 AGCO Corporation

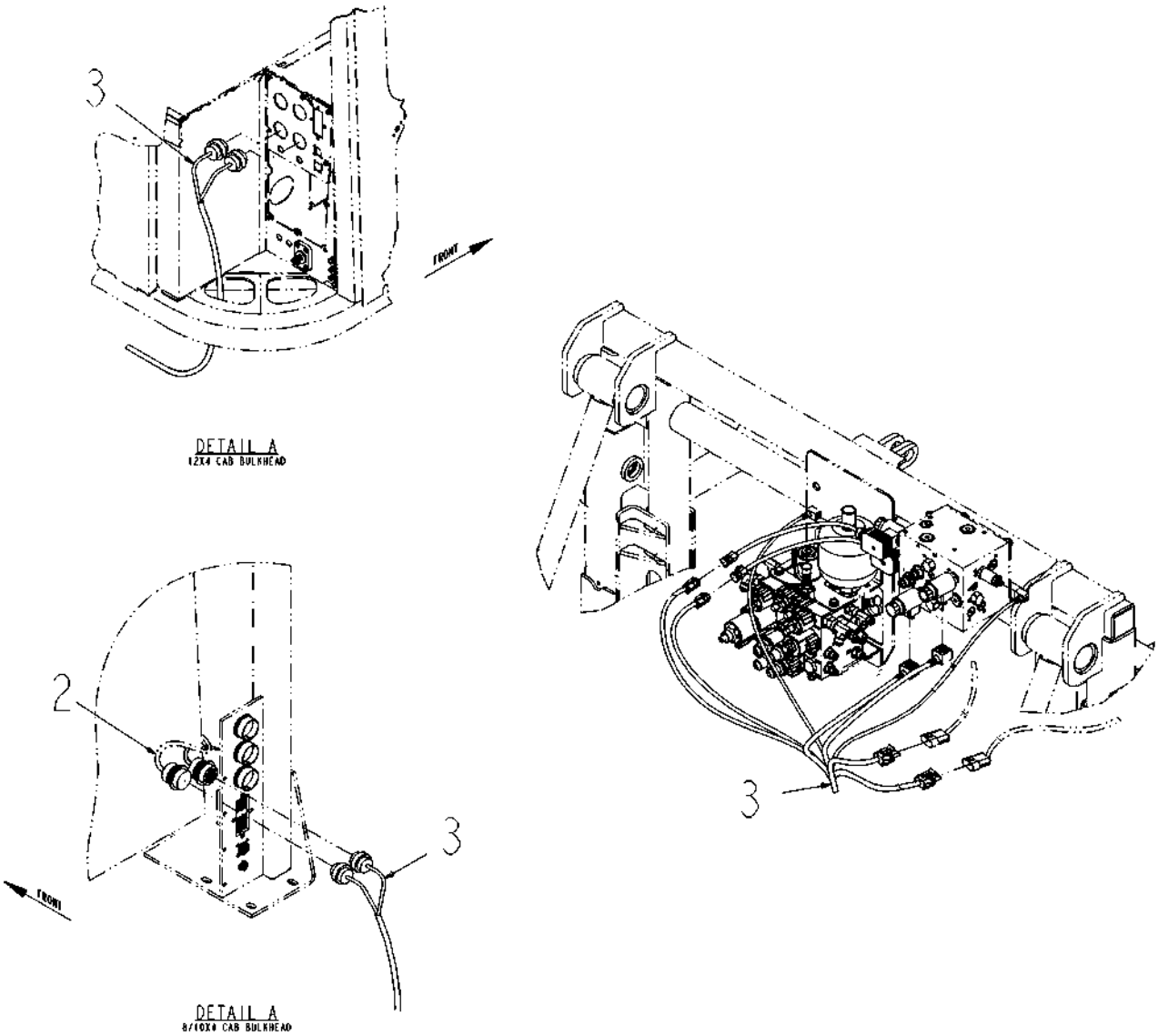

506898D1-01-M930-02.tif

Copyright © 2007 AGCO Corporation

ITEM	PART #	QTY	DESCRIPTION	COMMENTS
2	506892D1	-	HARN-CTRL,CAB,AUTOBOOM,G2	
3	506899D1	1	HARN-CTRL,SYS,AUTOBOOM,G2	

Copyright © 2007 AGCO Corporation

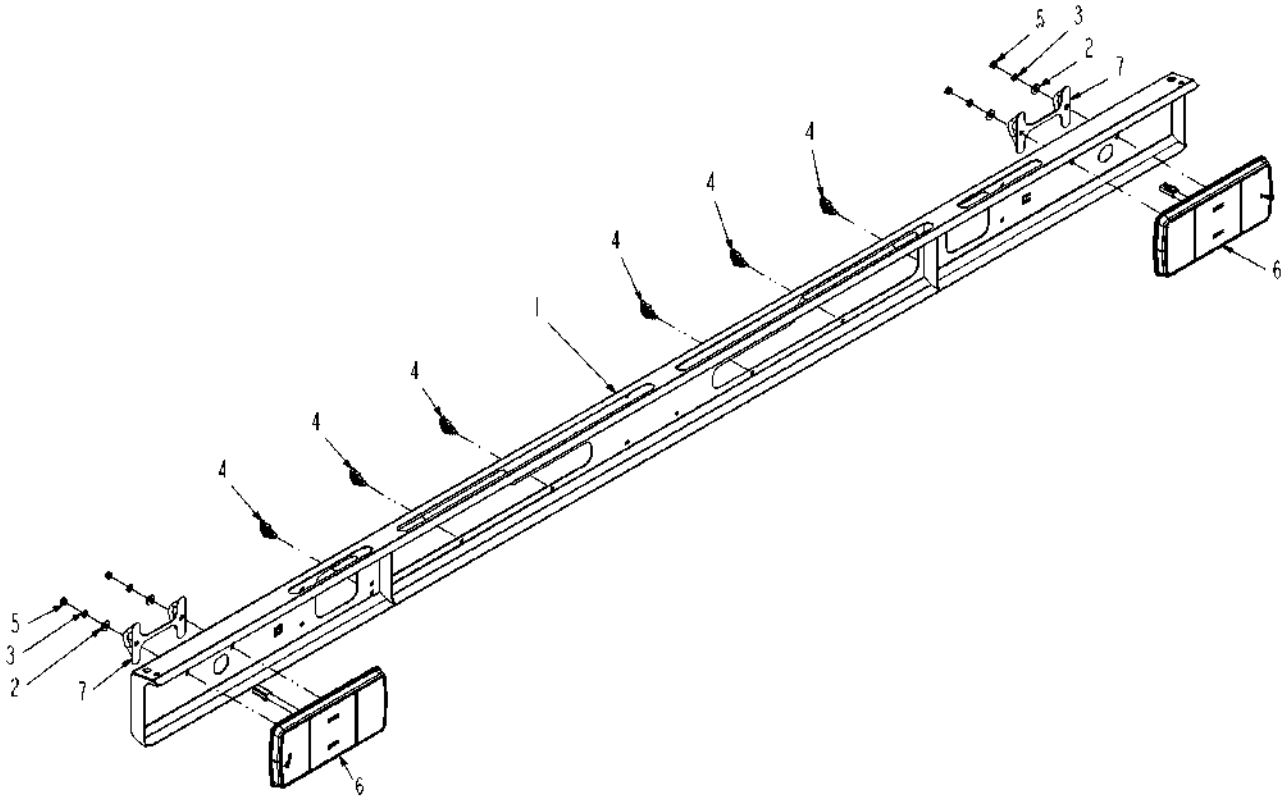

130567-04-R506-.TIF

Copyright © 2007 AGCO Corporation

BRKT ASM-MTG,TAILLIGHT

ITEM	PART #	QTY	DESCRIPTION	COMMENTS
1	AG134091	1	BRKT WLDMT-TLLT,RC LIQ SYS	
2	AG515121	4	WASHER 0.25 FL SS REG TYPE-B	
3	AG515122	4	WASHER 0.25 LK SS REG	
4	AG524001	6	CLIP-ROSEBUD,.350	
5	AG562793	4	NUT HEX M6 X 1.00	
6	503685D1	2	ASM-TLLT,LED,SPEAKER	
7	520864D1	2	GUARD WLDMT-BOLT,TAILLIGHT	

Copyright © 2007 AGCO Corporation

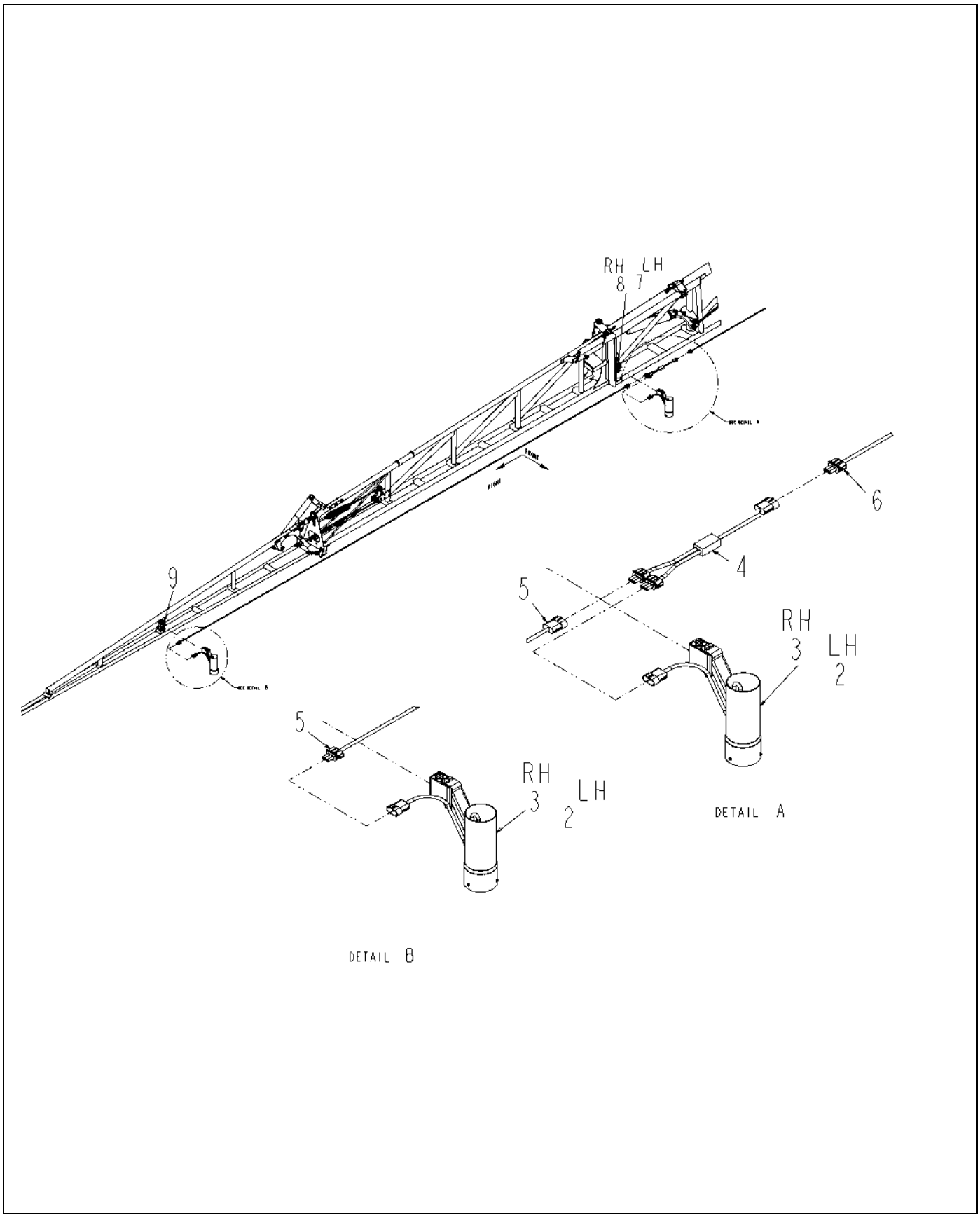

506900D1-01-M930.tif

Copyright © 2007 AGCO Corporation

SENSOR INSTL-AUTOBOOM,120FT

ITEM	PART #	QTY	DESCRIPTION	COMMENTS
1	AG553557	AR	TIE CABLE 7.37 .06-1.37 BLACK	
2	506901D1	2	SNSR-ULTRASONIC,AUTOBM,LH MTG	SEE PAGE 6-23
3	506902D1	2	SNSR-ULTRASONIC,AUTOBM,RH MTG	SEE PAGE 6-24
4	506903D1	2	DUPLICATOR-ULTRASONIC,AUTOBOOM	
5	506904D1	2	HARN-EXT,SNSR,ULTRASONIC,288	
6	506905D1	2	HARN-EXT,SNSR,ULTRASONIC,510	
7	507003D1	1	BRKT ASM-MTG,ANG,SNSR,LH	SEE PAGE 4-46
8	507004D1	1	BRKT ASM-MTG,ANG,SNSR,RH	SEE PAGE 4-47
9	507025D1	2	BRKT ASM-MTG,VERT,SNSR,AUTOBM	SEE PAGE 4-48

Copyright © 2007 AGCO Corporation

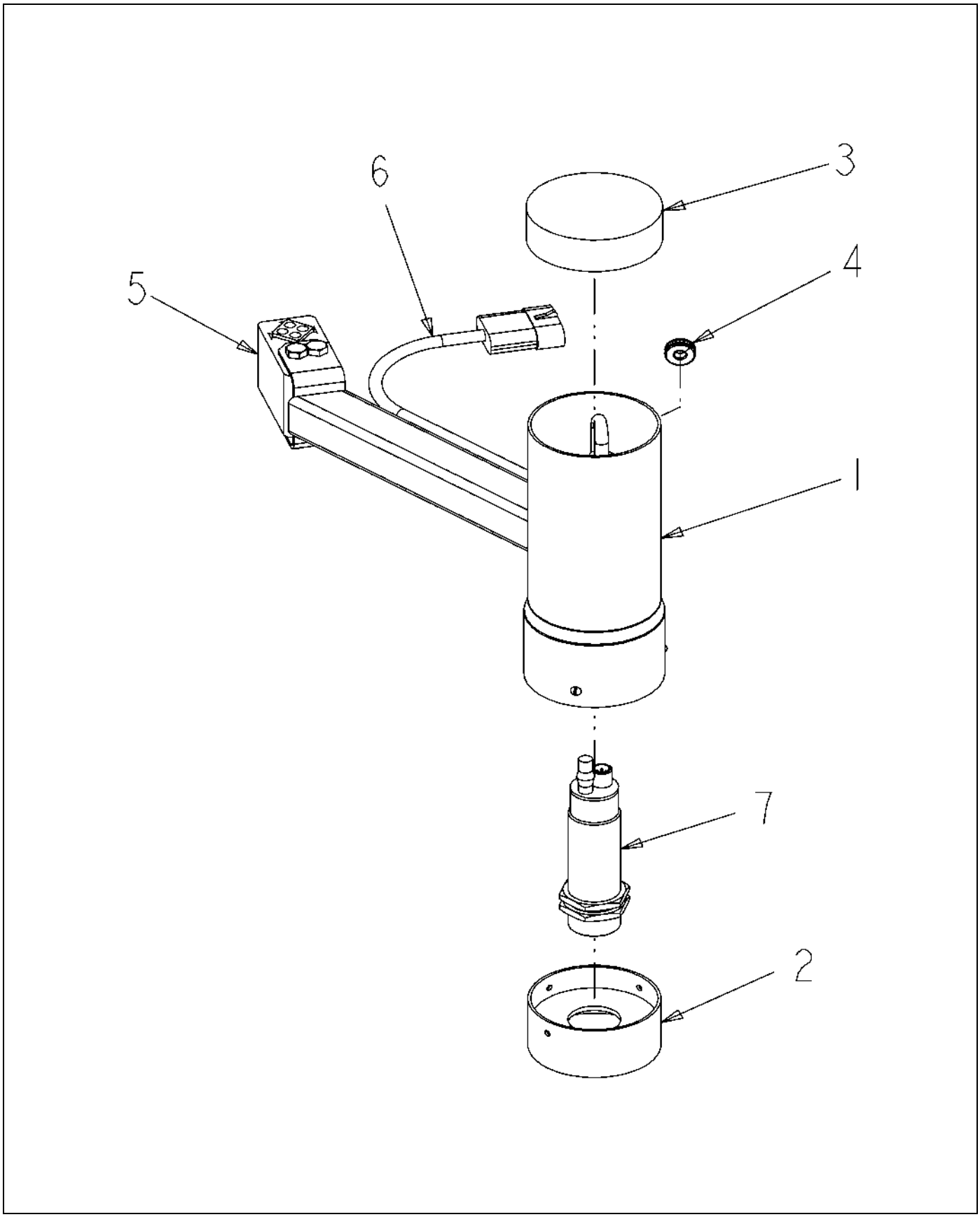

506901D1-02-M970-02.TIF

Copyright © 2007 AGCO Corporation

SNSR-ULTRASONIC,AUTOBM,LH MTG

ITEM	PART #	QTY	DESCRIPTION	COMMENTS
1	507615D1	1	HOUSING WLDMT-SNSR,LH	
2	507616D1	-	BRKT WLDMT-INR,ULTRASONIC SNSR	
3	507617D1	-	CAP-MOLDED,3.00,SNSR HOUSING	
4	507618D1	-	GROMMET-ULTRASONIC SNSR	
5	507619D1	-	DAMPENER-VIBRATION SNSR	
6	507620D1	-	HARN-ULTRASONIC SNSR	
7	507621D1	-	SNSR-ULTRASONIC,AUTOBOOM	

Copyright © 2007 AGCO Corporation

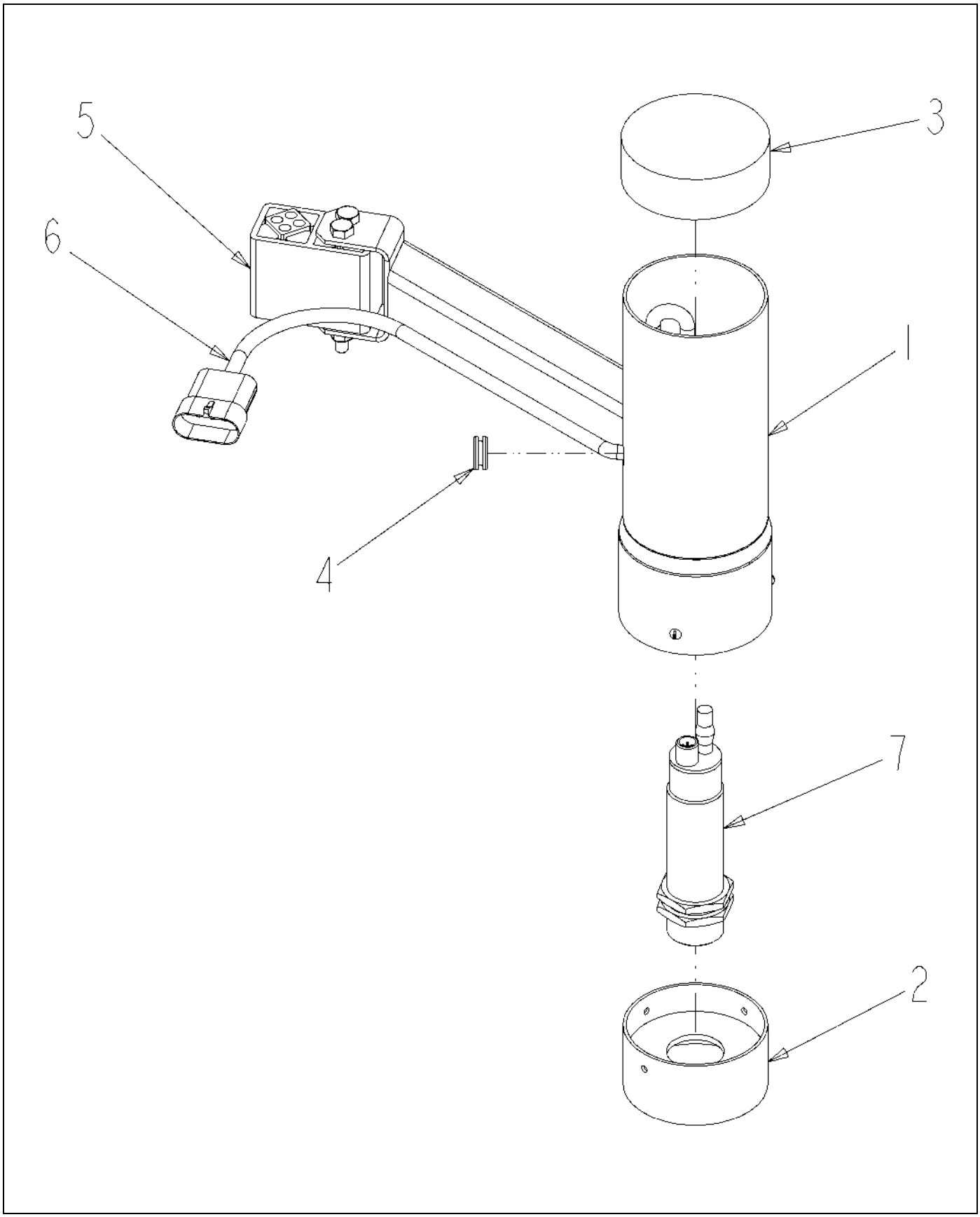

506902D1-02-M970-02.TIF

Copyright © 2007 AGCO Corporation

SNSR-ULTRASONIC,AUTOBM,RH MTG

ITEM	PART #	QTY	DESCRIPTION	COMMENTS
1	507614D1	-	HOUSING WLDMT-SNSR,RH	
2	507616D1	-	BRKT WLDMT-INR,ULTRASONIC SNSR	
3	507617D1	-	CAP-MOLDED,3.00,SNSR HOUSING	
4	507618D1	-	GROMMET-ULTRASONIC SNSR	
5	507619D1	-	DAMPENER-VIBRATION SNSR	
6	507620D1	-	HARN-ULTRASONIC SNSR	
7	507621D1	-	SNSR-ULTRASONIC,AUTOBOOM	

Copyright © 2007 AGCO Corporation

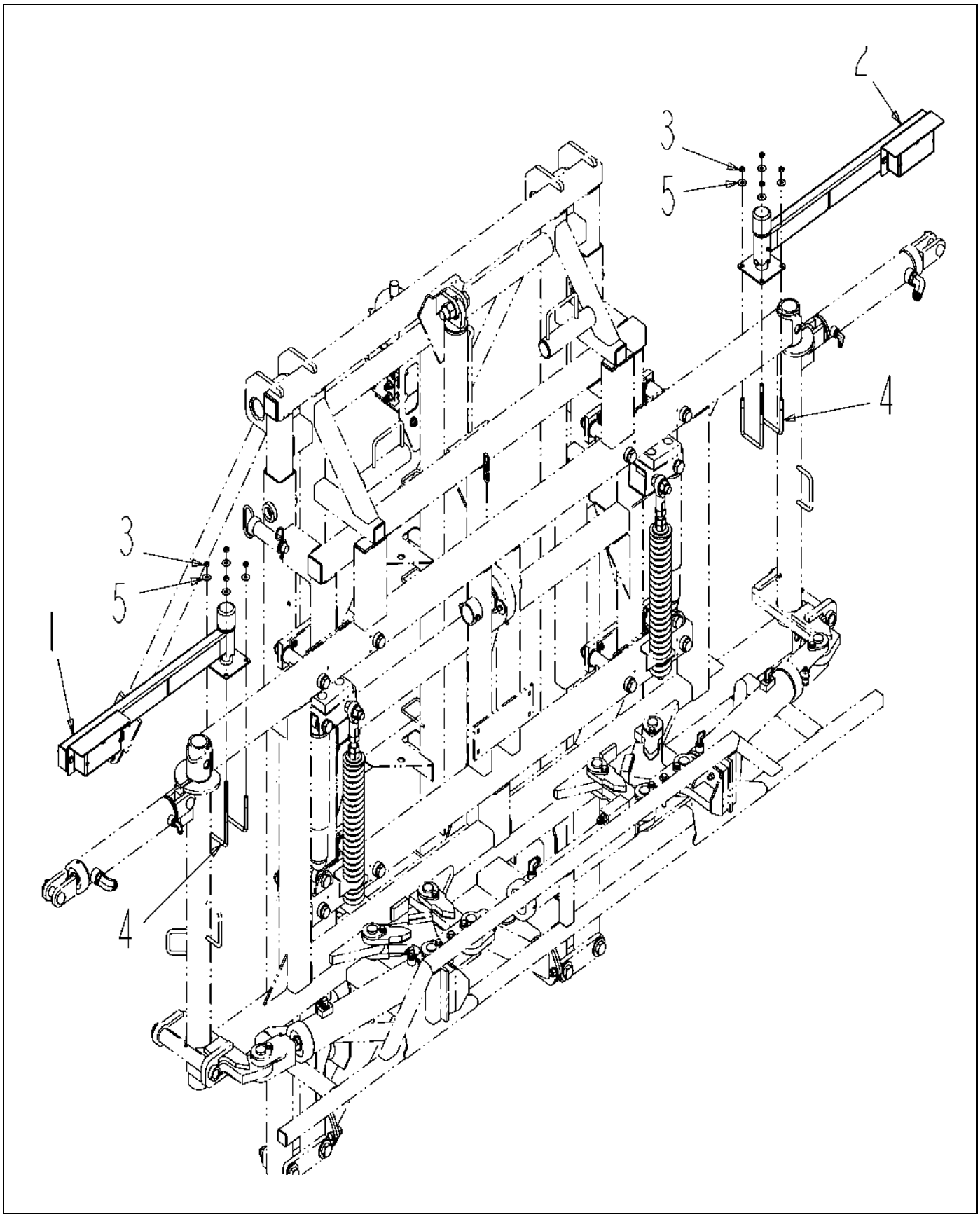

512266D1-01-N472-01.TIF

Copyright © 2007 AGCO Corporation

AWFL INSTL-BRKAWAY,LIQ SYS,RC

ITEM	PART #	QTY	DESCRIPTION	COMMENTS
1	AG130565	1	BRKT ASM-MTG,BREAKAWAY,AWFL,LH	SEE PAGE 6-26
2	AG130566	1	BRKT ASM-MTG,BREAKAWAY,AWFL,RH	SEE PAGE 6-27
3	AG515140	8	NUT 0.37-16NC HEX SS HVY NY	
4	AG523297	4	BOLT-U,.38-16X3.06X4.00L,SQ,SS	
5	AG562073	8	WASHER 0.37 FL SS REG TYPE-B	

Copyright © 2007 AGCO Corporation

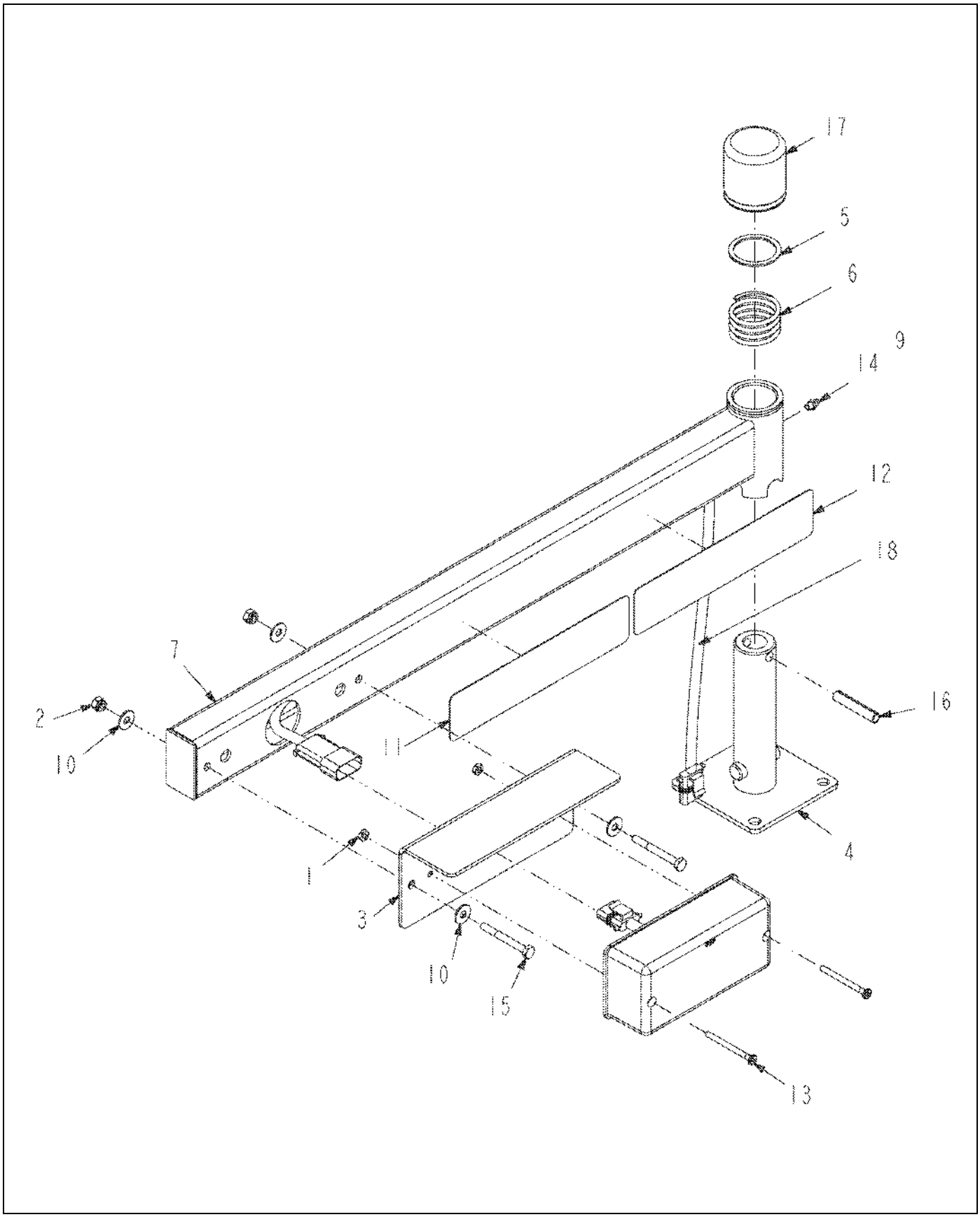

130565-02-R146-.TIF

Copyright © 2007 AGCO Corporation

BRKT ASM-MTG,BREAKAWAY,AWFL,LH

ITEM	PART #	QTY	DESCRIPTION	COMMENTS
1	AG027274	2	NUT #10-24NC HEX SS REG NY	
2	AG027275	2	NUT 0.25-20NC HEX SS REG NY	
3	AG122309	1	BRKT-MTG,LIGHT,AWFL	
4	AG130562	1	PIVOT WLDMT-MTG BRKT,AWFL	
5	AG130563	1	WASHER-1.53 ID X 1.88 OD	
6	AG130564	1	SPRING-COMP,1.52IDX.157X2.13LG	
7	AG134125	1	TUBE WLDMT-LIGHTBAR,LH	
8	AG327247	1	LAMP-WARNING,AMBER	
9	AG511099	AR	GREASE-MULTI PURPOSE LITH.	
10	AG515121	4	WASHER 0.25 FL SS REG TYPE-B	
11	AG523361	1	TAPE-REFLECTIVE,RED,DOT-C2	
12	AG523591	1	REFLECTOR-FLUOR RED/ORN2.0X9.0	
13	AG523814	2	SCR-10-24X2.25,PPH,SS	
14	AG561892	1	FITTING LUBE STR 0.25UNF	
15	AG562136	2	BOLT 0.25-20NCX 2.25 SS HHD	
16	AG562971	1	PIN ROLL .38 X 2.00 ZN	
17	3788369M1	1	CAP-PIVOT	
18	517729D1	1	HARNESS-EXT,BRKAWAY,AFWL	

Copyright © 2007 AGCO Corporation

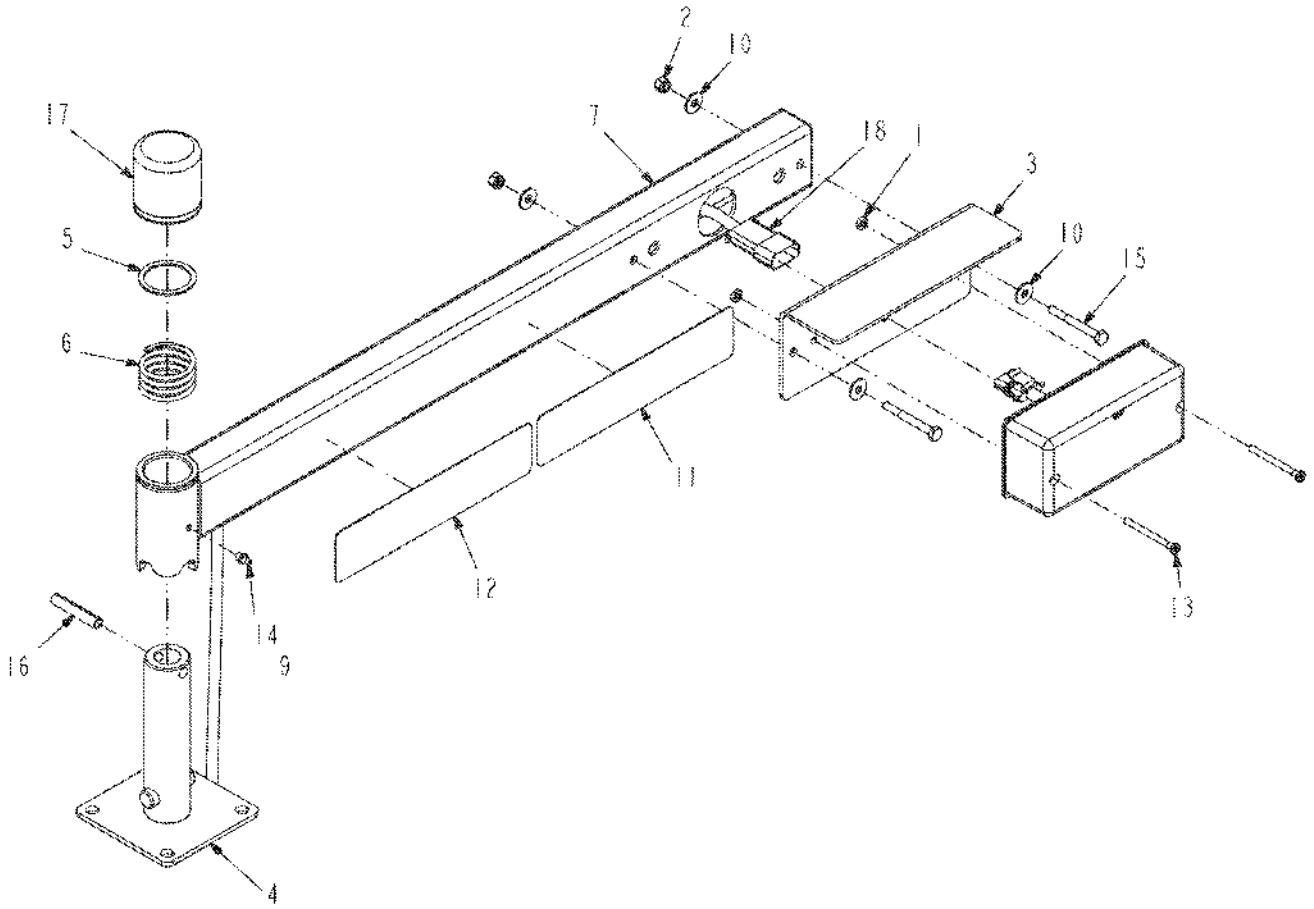

130566-02-R146-.TIF

Copyright © 2007 AGCO Corporation

BRKT ASM-MTG,BREAKAWAY,AWFL,RH

ITEM	PART #	QTY	DESCRIPTION	COMMENTS
1	AG027274	2	NUT #10-24NC HEX SS REG NY	
2	AG027275	2	NUT 0.25-20NC HEX SS REG NY	
3	AG122309	1	BRKT-MTG,LIGHT,AWFL	
4	AG130562	1	PIVOT WLDMT-MTG BRKT,AWFL	
5	AG130563	1	WASHER-1.53 ID X 1.88 OD	
6	AG130564	1	SPRING-COMP,1.52IDX.157X2.13LG	
7	AG134126	1	TUBE WLDMT-LIGHTBAR,RH	
8	AG327247	1	LAMP-WARNING,AMBER	
9	AG511099	AR	GREASE-MULTI PURPOSE LITH.	
10	AG515121	4	WASHER 0.25 FL SS REG TYPE-B	
11	AG523361	1	TAPE-REFLECTIVE,RED,DOT-C2	
12	AG523591	1	REFLECTOR-FLUOR RED/ORN2.0X9.0	
13	AG523814	2	SCR-10-24X2.25,PPH,SS	
14	AG561892	1	FITTING LUBE STR 0.25UNF	
15	AG562136	2	BOLT 0.25-20NCX 2.25 SS HHD	
16	AG562971	1	PIN ROLL .38 X 2.00 ZN	
17	3788369M1	1	CAP-PIVOT	
18	517729D1	1	HARNESS-EXT,BRKAWAY,AFWL	

Copyright © 2007 AGCO Corporation

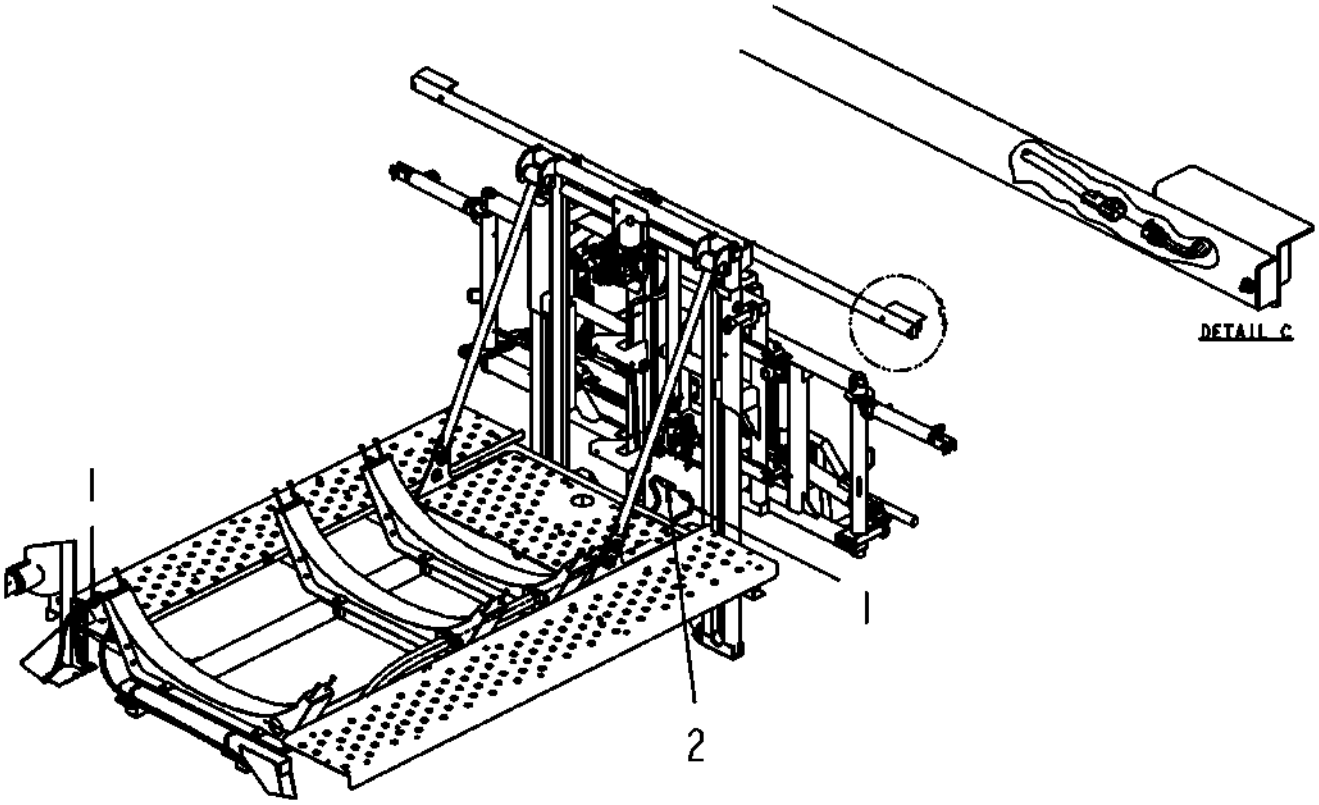

124035-A-1.tif

Copyright © 2007 AGCO Corporation

HARN INSTL-TLLT,WRN,LIQ(SYS)

ITEM	PART #	QTY	DESCRIPTION	COMMENTS
1	AG124036	1	HARNESS-LIGHT,LIQ SYS	
2	AG424336	1	HARNESS-WARNING LIGHT,LIQ	

Copyright © 2007 AGCO Corporation

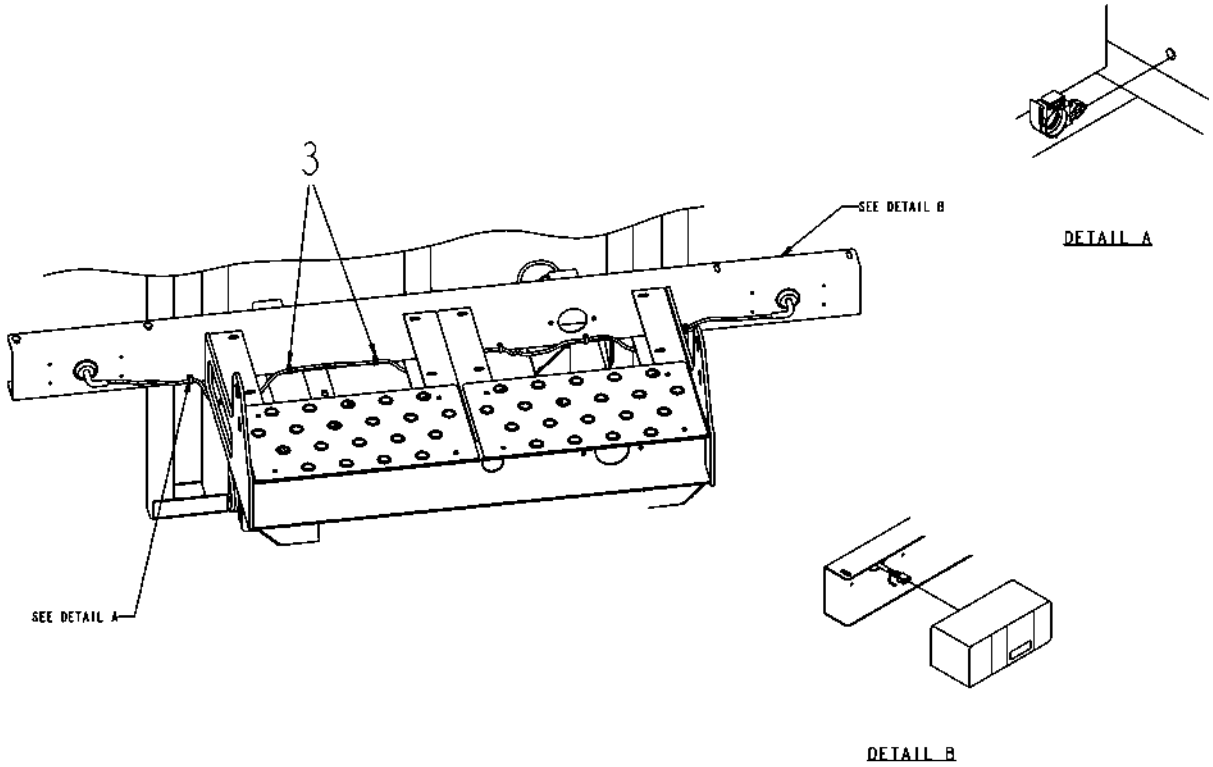

124035-A-2.TIF

Copyright © 2007 AGCO Corporation

ITEM	PART #	QTY	DESCRIPTION	COMMENTS
3	AG524001	6	CLIP-ROSEBUD,.350	

Copyright © 2007 AGCO Corporation

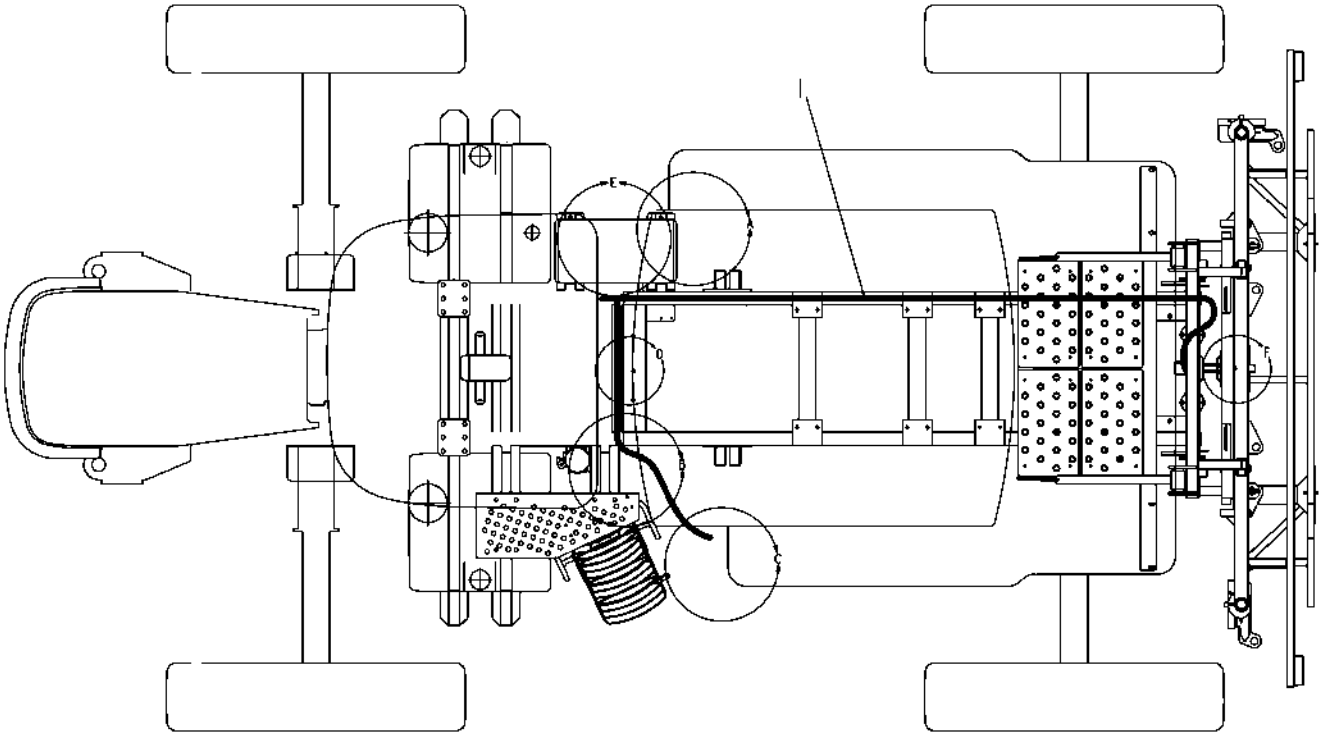

512904D1-01-N429-01.TIF

Copyright © 2007 AGCO Corporation

HARN INSTL-PROD CONT,RG 8/10XX

ITEM	PART #	QTY	DESCRIPTION	COMMENTS
1	509414D1	1	HARNESS-PROD CONT,SYS,LIQ,RG	

Copyright © 2007 AGCO Corporation

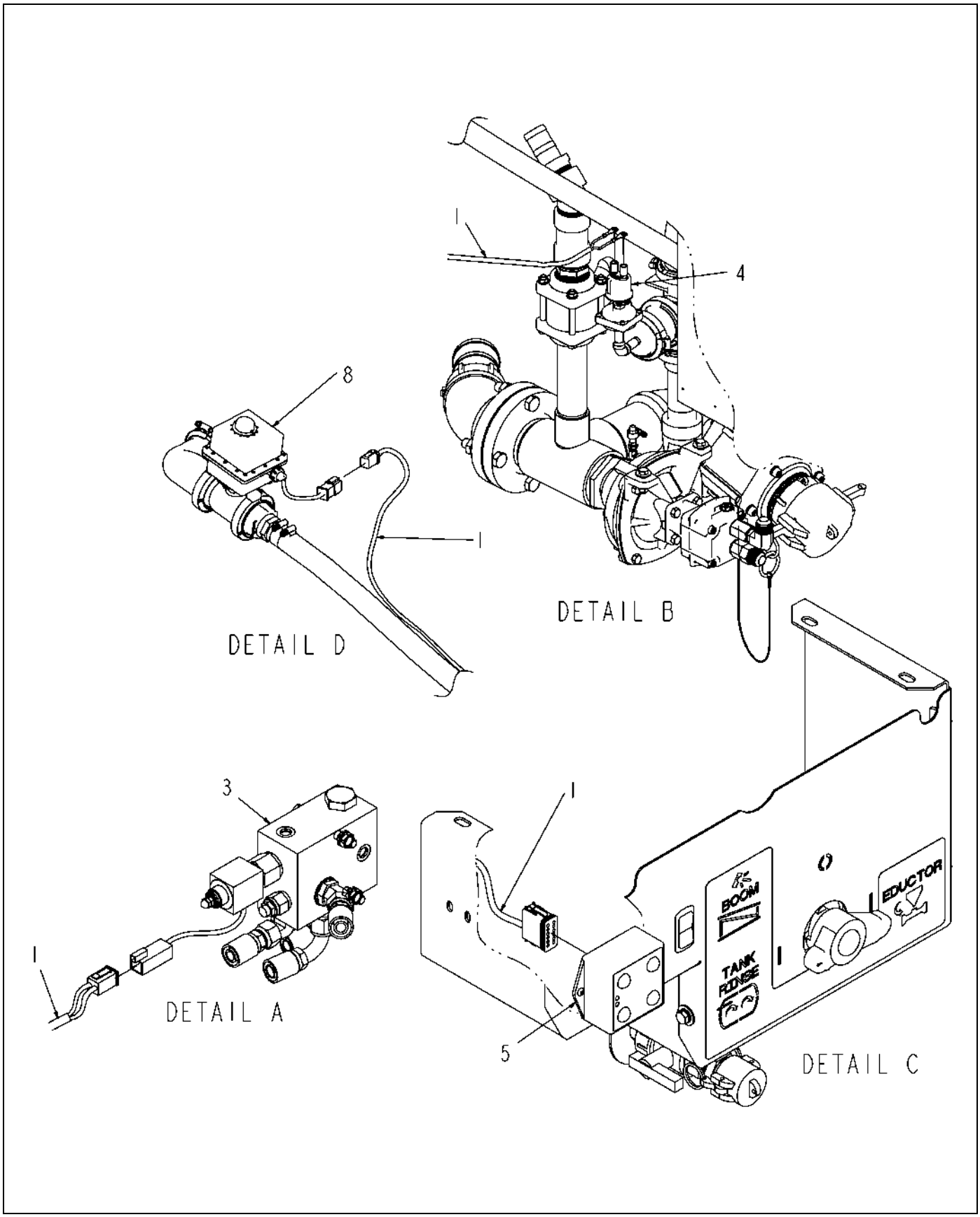

512904D1-01-N429-02.TIF

Copyright © 2007 AGCO Corporation

ITEM	PART #	QTY	DESCRIPTION	COMMENTS
1	509414D1	1	HARNESS-PROD CONT,SYS,LIQ,RG	
3	AG424287	-	VALVE-HYD,PWM,LIQ SYS,15 GPM	SEE PAGE 5-54
4	AG521017	-	SENDER-PRESSURE,0-150PSI,GRD	
5	509280D1	-	MODULE-CTRL,PLMB,PROD,LIQ SYS	
8	AG523925	-	VALVE-ELEC,REG,2.0FLGX1.0FNPT	SEE PAGE 2-18

Copyright © 2007 AGCO Corporation

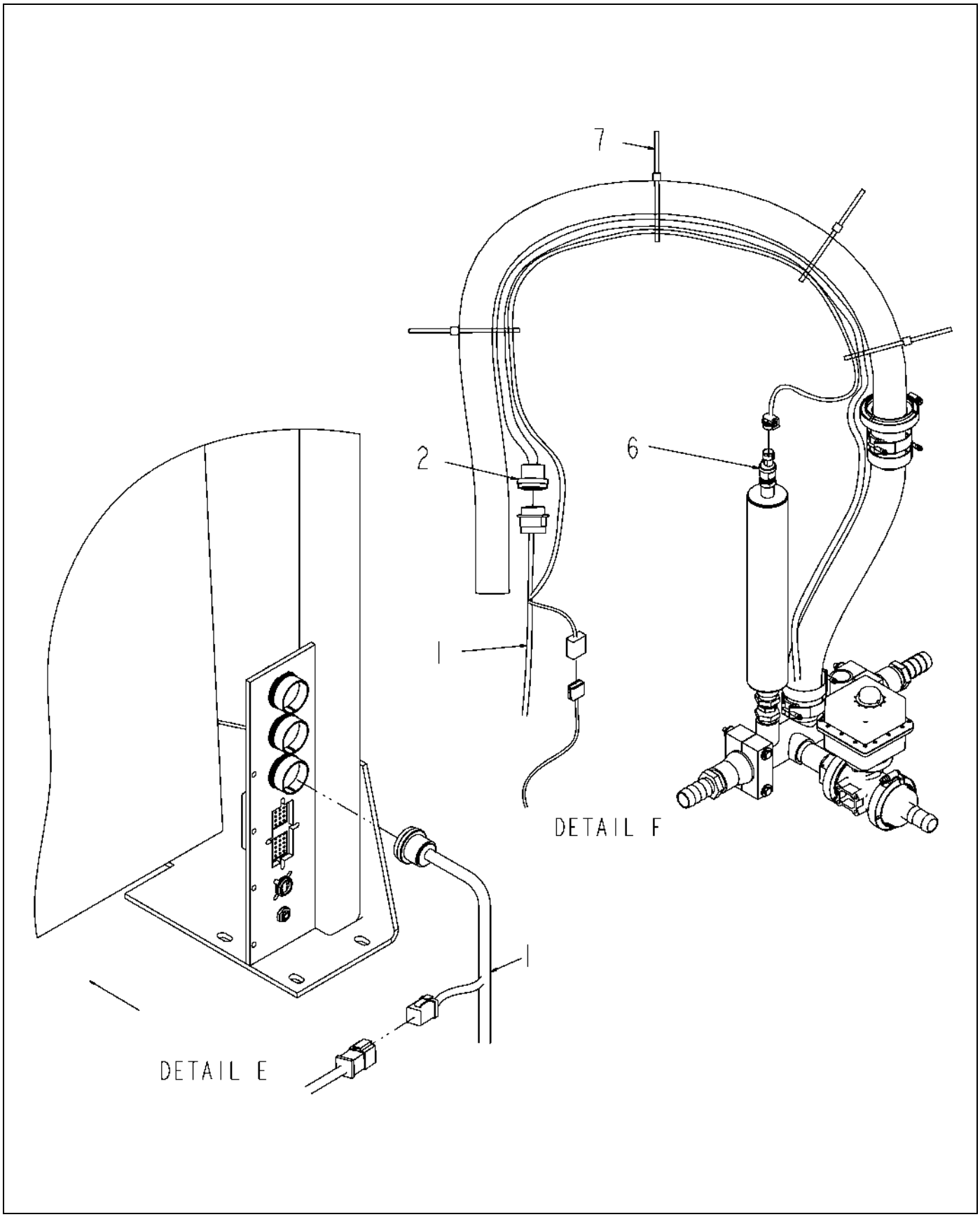

512904D1-01-N429-03.TIF

Copyright © 2007 AGCO Corporation

HARN INSTL-PROD CONT,RG 8/10XX

ITEM	PART #	QTY	DESCRIPTION	COMMENTS
1	509414D1	1	HARNESS-PROD CONT,SYS,LIQ,RG	
2	509417D1	-	HARNESS-BSO VLV,5SECT,CTR	
6	AG524270	-	TRANSDUCER-PRES R/B 517405D1	
7	AG554278	6	TIE CABLE 11.0 .06-3.06 BLACK	

Copyright © 2007 AGCO Corporation

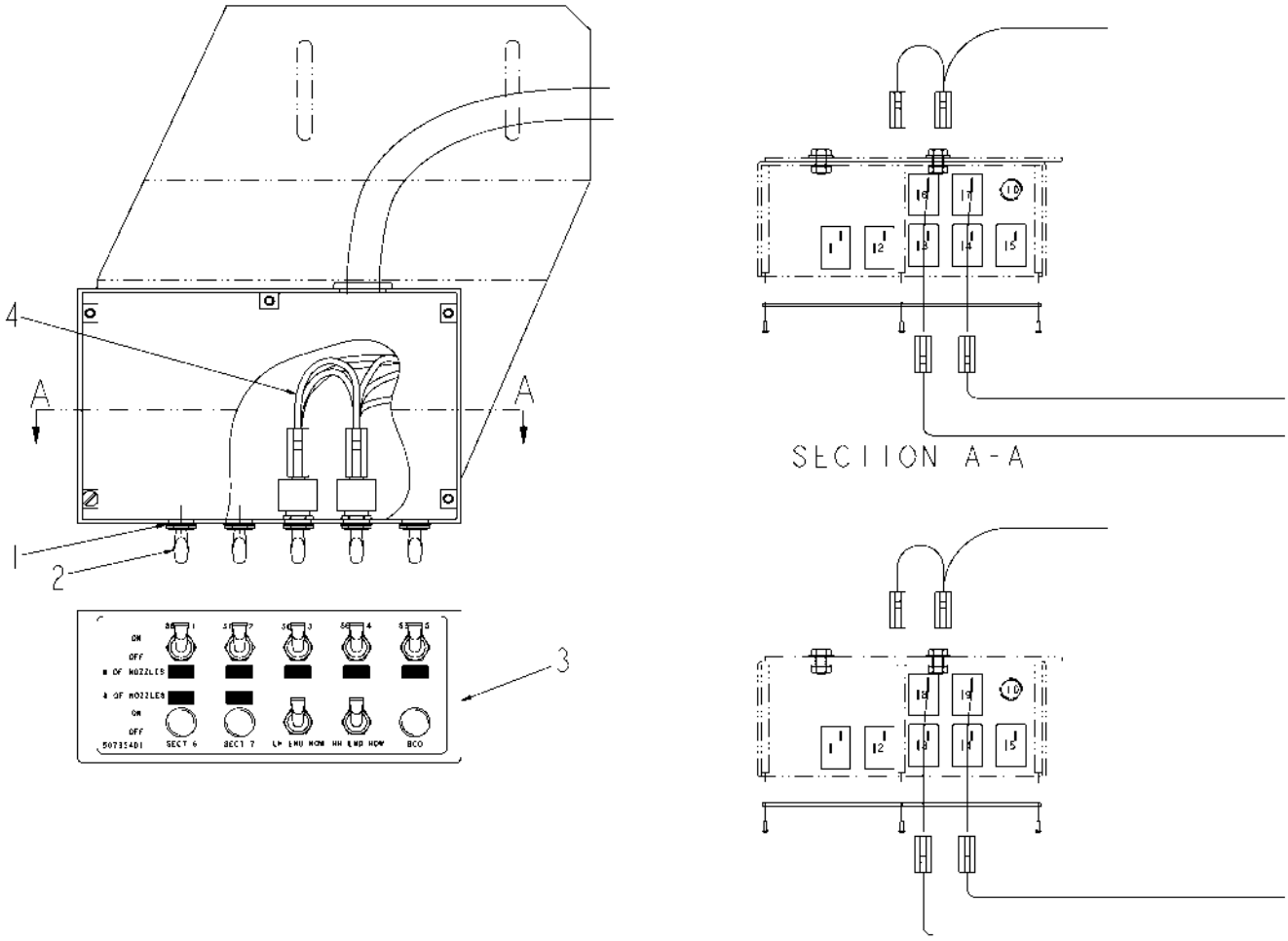

122451-03-N172-.tif

Copyright © 2007 AGCO Corporation

SWITCH INSTL-ER,8/1064

ITEM	PART #	QTY	DESCRIPTION	COMMENTS
1	AG520326	2	WASHER 0.47 INT TOOTH LK CD	
2	AG518707	2	SWITCH ELECT SPST BAT HANDLE	
3	AG121868	-	SWITCHBOX ASM-BOOM CTRL,8/1064	SEE PAGE 6-34
4	507356D1	-	HARN-SWITCHBOX,7SECT,8/10X4	

Copyright © 2007 AGCO Corporation

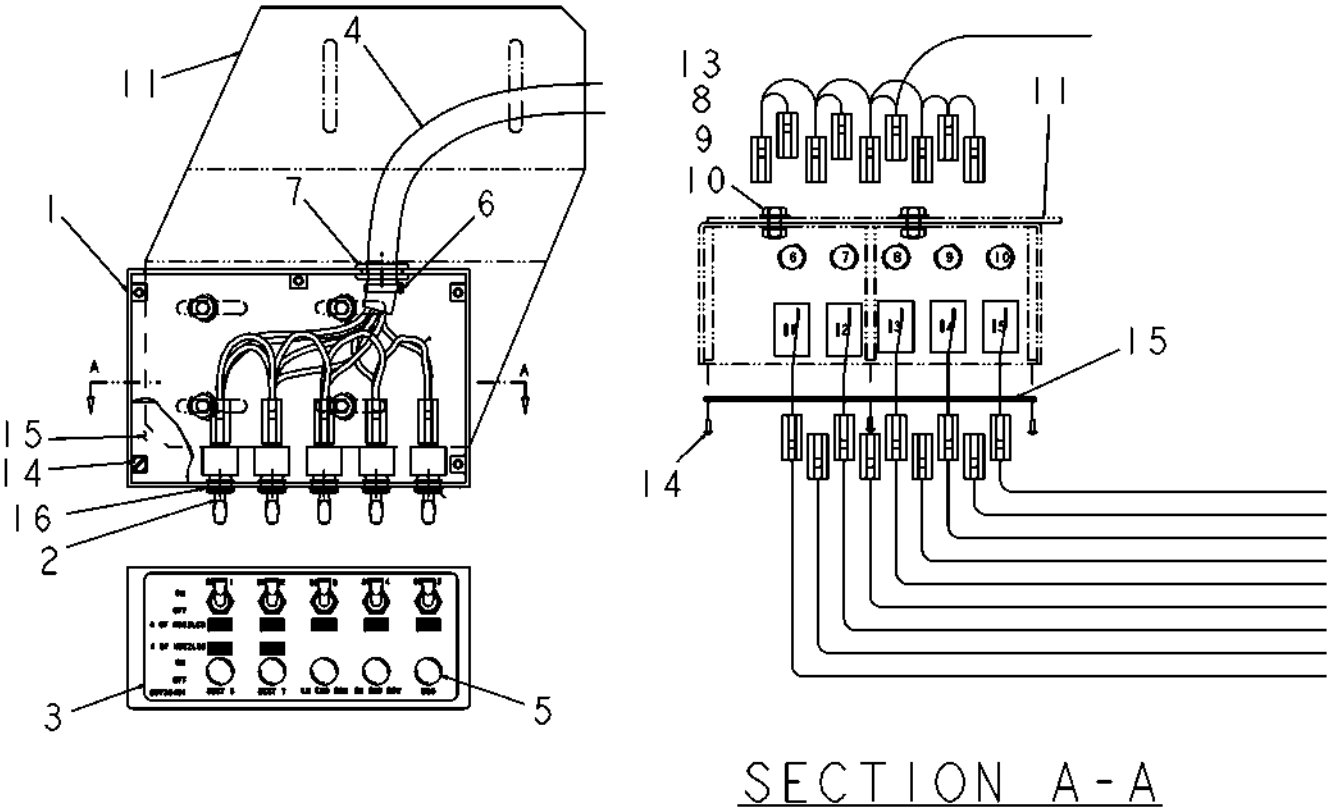

121868-04-M930.tif

Copyright © 2007 AGCO Corporation

SWITCHBOX ASM-BOOM CTRL,8/1064

ITEM	PART #	QTY	DESCRIPTION	COMMENTS
1	AG235467	1	CONTROL BOX	
2	AG518707	5	SWITCH ELECT SPST BAT HANDLE	
3	507354D1	1	DECAL-SWITCHBOX,7SECT,8/10X4	
4	507356D1	1	HARN-SWITCHBOX,7SECT,8/10X4	
5	AG562251	5	PLUG BLACK 0.50 PLASTIC	
6	AG553557	1	TIE CABLE 7.37 .06-1.37 BLACK	
7	AG515310	1	GROMMET .75ID X1.0 GROOVE DIA	
8	AG562047	4	BOLT 0.25-20NCX 0.50 SS HHD	
9	AG515122	4	WASHER 0.25 LK SS REG	
10	AG515123	4	NUT 0.25-20NC HEX SS REG	
11	AG231940	1	BRACKET,SWITCH	
13	AG515121	4	WASHER 0.25 FL SS REG TYPE-B	
14	AG029233	5	SCREW MACH RDHD SL ZN 8-32X.50	
15	AG322370	1	COVER	
16	AG520326	5	WASHER 0.47 INT TOOTH LK CD	

Copyright © 2007 AGCO Corporation

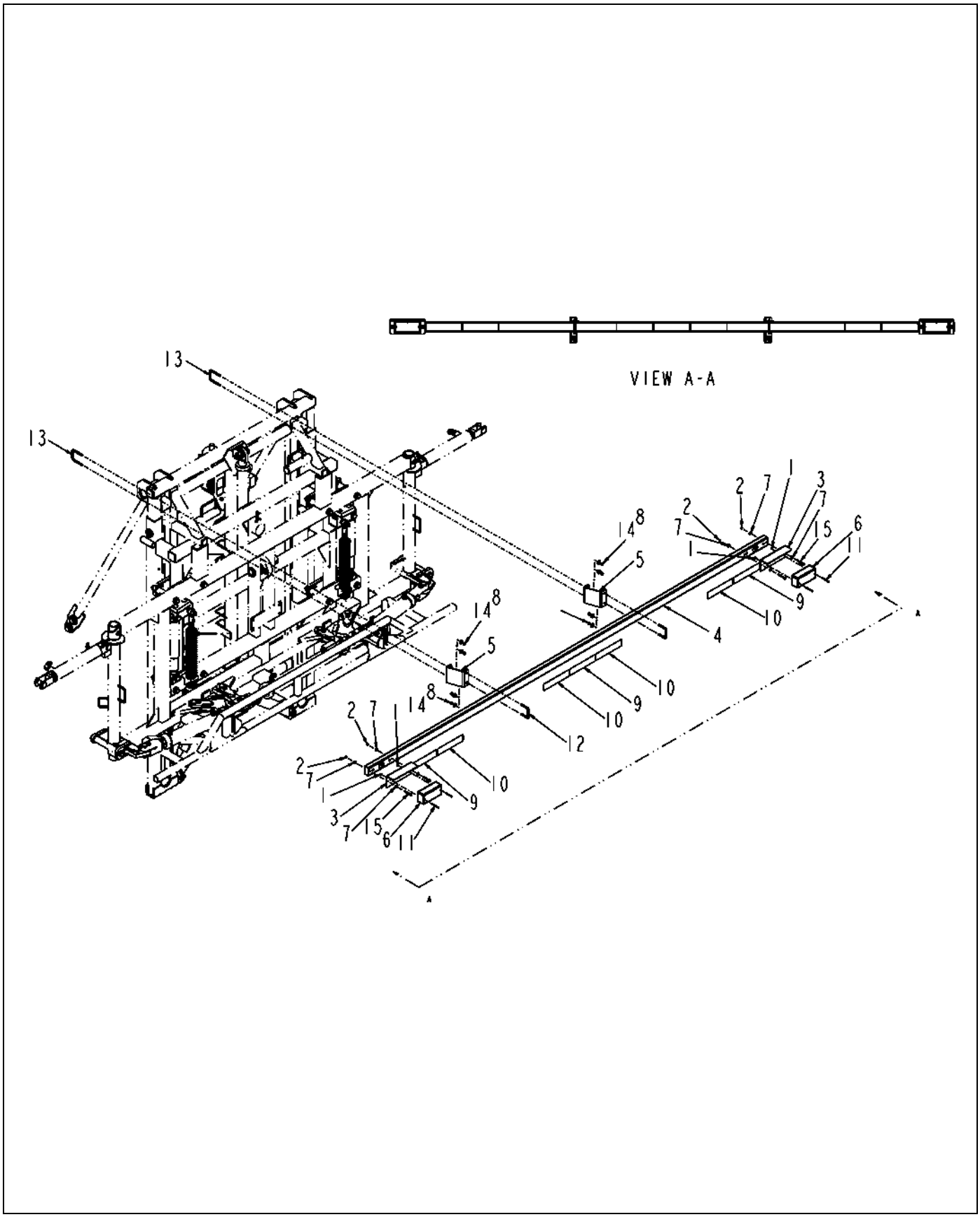

327861.TIF

Copyright © 2007 AGCO Corporation

LIGHTBAR INSTL-REAR

ITEM	PART #	QTY	DESCRIPTION	COMMENTS
1	AG027274	4	NUT #10-24NC HEX SS REG NY	
2	AG027275	4	NUT 0.25-20NC HEX SS REG NY	
3	AG122309	2	BRKT-MTG,LIGHT,AWFL	
4	AG122311	1	TUBE WLDMT-BAR,LIGHT	
5	AG262937	2	BRKT-MTG,LIGHTBAR,LH	
6	AG327247	2	LAMP-WARNING,AMBER	
7	AG515121	8	WASHER 0.25 FL SS REG TYPE-B	
8	AG515140	8	NUT 0.37-16NC HEX SS HVY NY	
9	AG523361	3	TAPE-REFLECTIVE,RED,DOT-C2	
10	AG523591	4	REFLECTOR-FLUOR RED/ORN2.0X9.0	
11	AG523814	4	SCR-10-24X2.25,PPH,SS	
12	AG523837	2	BOLT-U,.38-16X2.56X2.5,SQ,SS	
13	AG524292	2	BOLT-U,.38-16,2.56X3.50,SQ,SS	
14	AG562073	8	WASHER 0.37 FL SS REG TYPE-B	
15	AG562136	4	BOLT 0.25-20NCX 2.25 SS HHD	

Copyright © 2007 AGCO Corporation

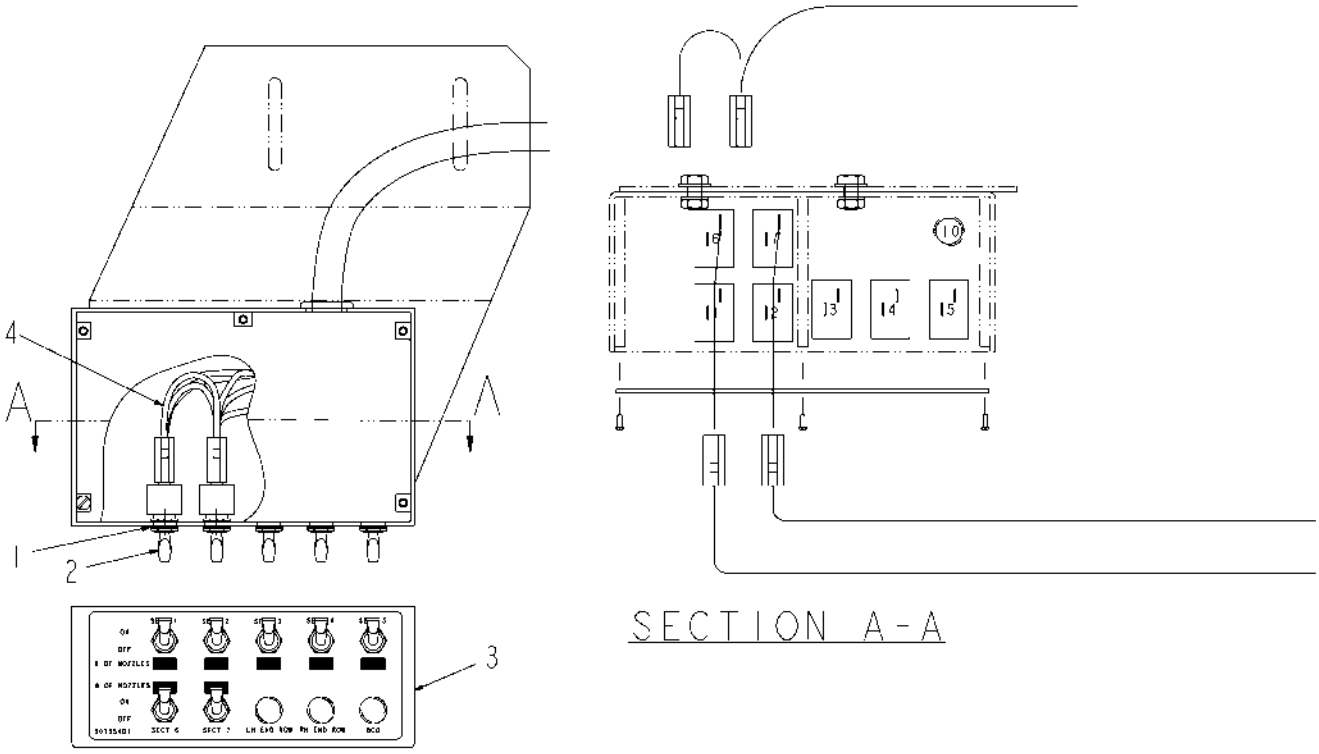

506962D1-02-N172-.TIF

Copyright © 2007 AGCO Corporation

SWITCH INSTL-SECT 6/7,8/10X4

ITEM	PART #	QTY	DESCRIPTION	COMMENTS
1	AG520326	2	WASHER 0.47 INT TOOTH LK CD	
2	AG518707	2	SWITCH ELECT SPST BAT HANDLE	
3	AG121868	-	SWITCHBOX ASM-BOOM CTRL,8/1064	SEE PAGE 6-34
4	507356D1	-	HARN-SWITCHBOX,7SECT,8/10X4	

Copyright © 2007 AGCO Corporation

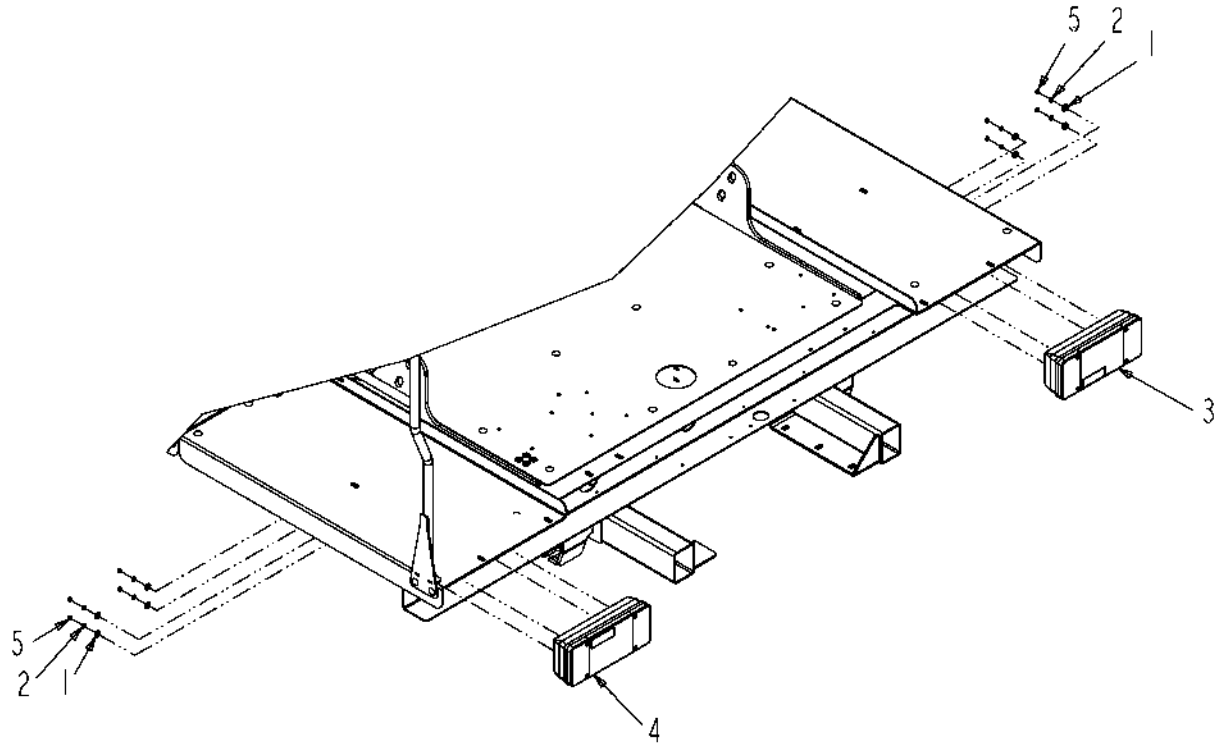

507860D1-01-N035.TIF

Copyright © 2007 AGCO Corporation

LIGHT INSTL-TAIL,SADDLE,RC LIQ

ITEM	PART #	QTY	DESCRIPTION	COMMENTS
1	AG515121	8	WASHER 0.25 FL SS REG TYPE-B	
2	AG515122	8	WASHER 0.25 LK SS REG	
3	AG516567	1	LAMP CLUSTER REAR RH	SEE PAGE 6-38
4	AG516568	1	LAMP CLUSTER REAR LH	SEE PAGE 6-39
5	AG562793	8	NUT HEX M6 X 1.00	

Copyright © 2007 AGCO Corporation

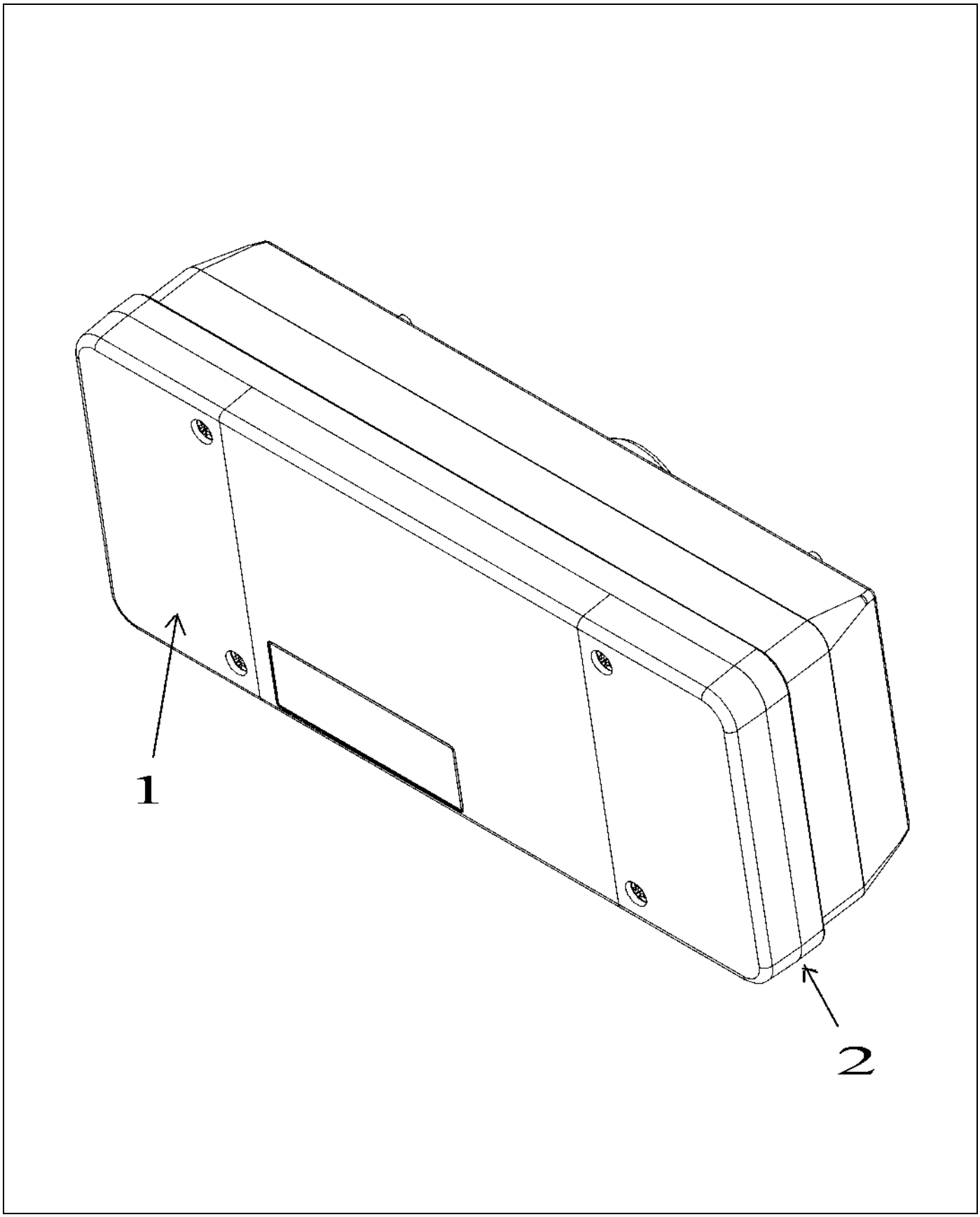

516567.TIF

Copyright © 2007 AGCO Corporation

LAMP CLUSTER REAR RH

ITEM	PART #	QTY	DESCRIPTION	COMMENTS
REF	AG515122	1	WASHER 0.25 LK SS REG	
REF	AG562327	1	BOLT M6-1.00X20MM G8.8 ZN HHD	
REF	AG562793	1	NUT HEX M6 X 1.00	
REF	AG834159	1	BULB (516567-516568) 12-5W	
REF	AG714828	1	BULB 12V 21W	
1	AG711448	1	LENS RH 516567	
2	AG719528	1	LENS GASKET (516567&516568)	

Copyright © 2007 AGCO Corporation

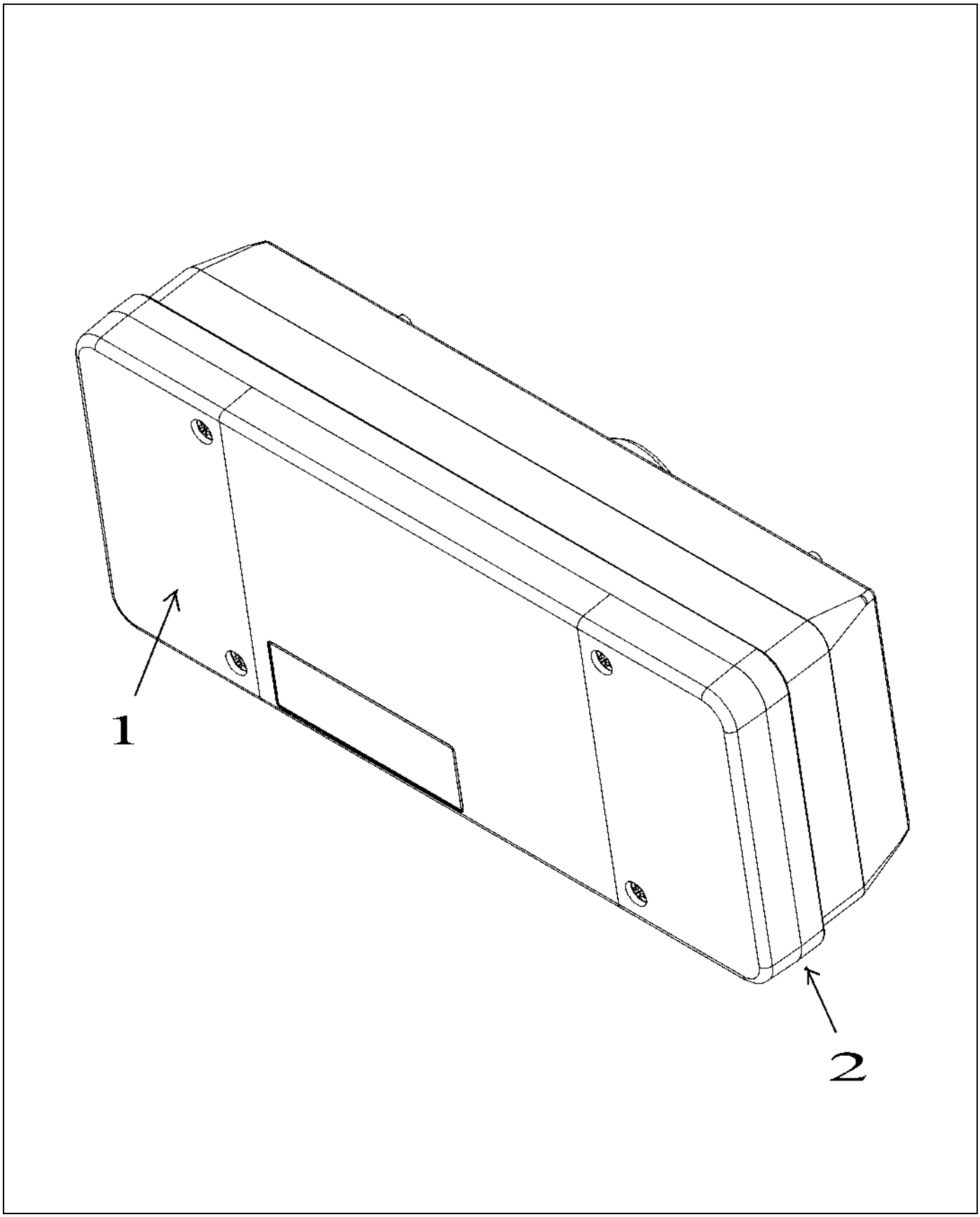

516568.TIF

Copyright © 2007 AGCO Corporation

LAMP CLUSTER REAR LH

ITEM	PART #	QTY	DESCRIPTION	COMMENTS
REF	AG515122	1	WASHER 0.25 LK SS REG	
REF	AG562327	1	BOLT M6-1.00X20MM G8.8 ZN HHD	
REF	AG562793	1	NUT HEX M6 X 1.00	
REF	AG834159	1	BULB (516567-516568) 12-5W	
REF	AG714828	1	BULB 12V 21W	
1	AG711448	1	LENS RH 516567	
2	AG719528	1	LENS GASKET (516567&516568)	

Copyright © 2007 AGCO Corporation

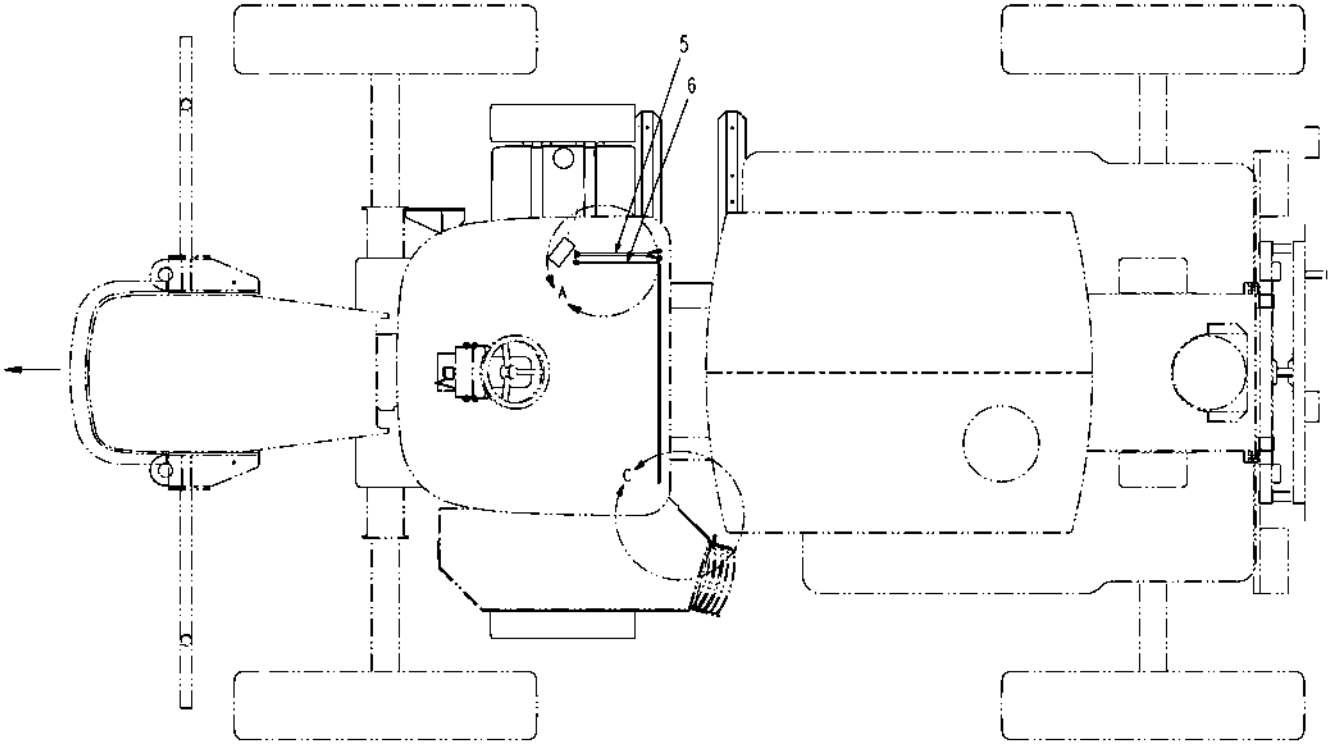

509994D1-01-N273-01.TIF

Copyright © 2007 AGCO Corporation

ITEM	PART #	QTY	DESCRIPTION	COMMENTS
REF	AG553557	AR	TIE CABLE 7.37 .06-1.37 BLACK	
5	506892D1	1	HARN-CTRL,CAB,AUTOBOOM,G2	
6	506894D1	1	HARN-PWR,AUTOBOOM,8/10X4	

Copyright © 2007 AGCO Corporation

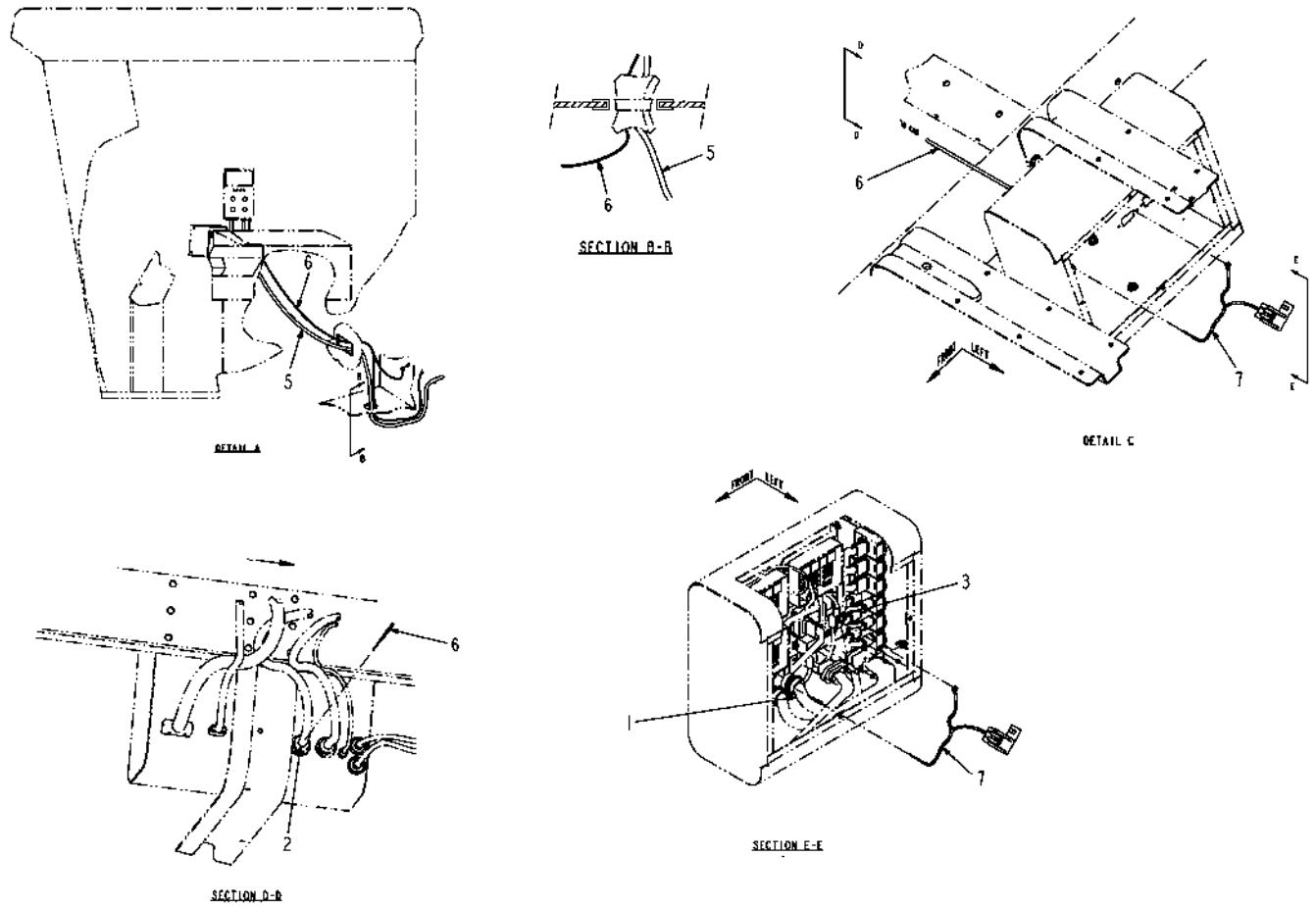

509994D1-01-N273-02.TIF

Copyright © 2007 AGCO Corporation

HARN INSTL-PWR/CTRL,G2,8/1074

ITEM	PART #	QTY	DESCRIPTION	COMMENTS
1	505566D1	-	HARNESS-FUSE BLOCK,864	
2	509964D1	-	HARNESS-CHASSIS	
3	AG516864	-	RELAY-ELEC,12VDC,75AMP	
5	506892D1	1	HARN-CTRL,CAB,AUTOBOOM,G2	
6	506894D1	1	HARN-PWR,AUTOBOOM,8/10X4	
7	506895D1	1	HARN-RELAY,10A,AUTOBOOM,8/10X4	

Copyright © 2007 AGCO Corporation

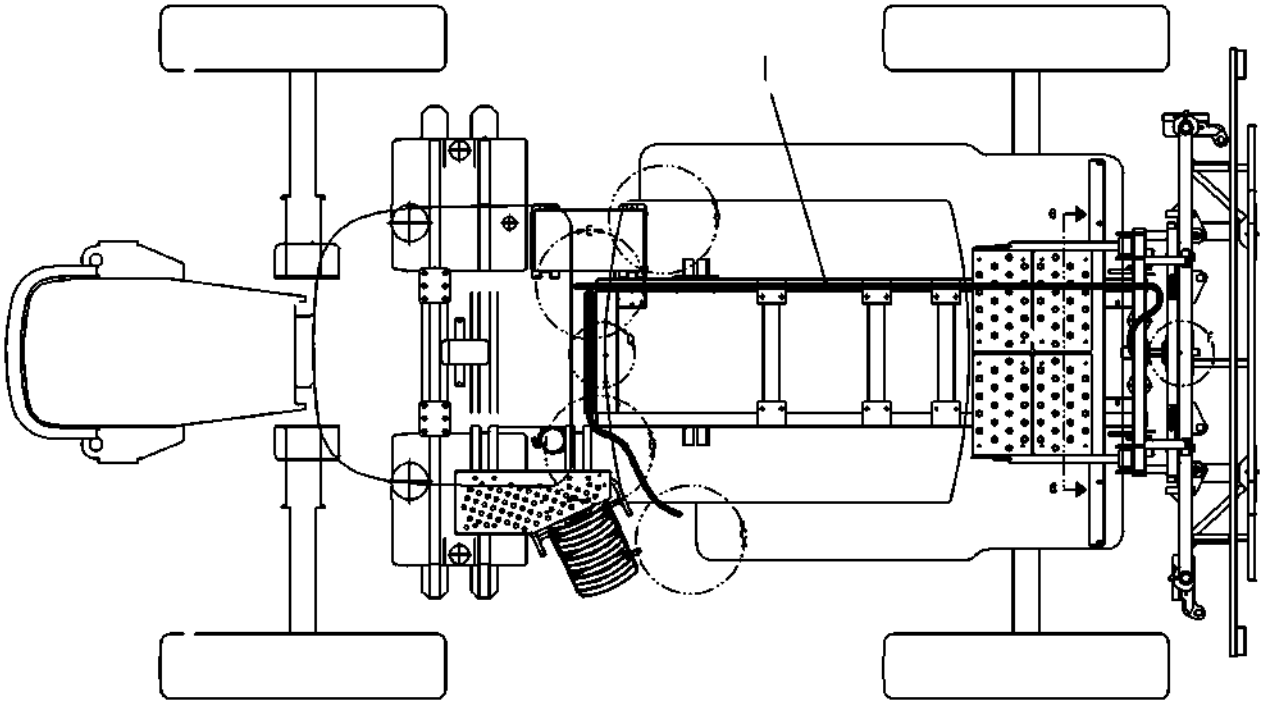

511817D1-03-R468-01.TIF

Copyright © 2007 AGCO Corporation

HARNESS INSTL-PROD CONT,RG

ITEM	PART #	QTY	DESCRIPTION	COMMENTS
1	511623D1	1	HARNESS-PRODUCT CONTROL(SYS)	

Copyright © 2007 AGCO Corporation

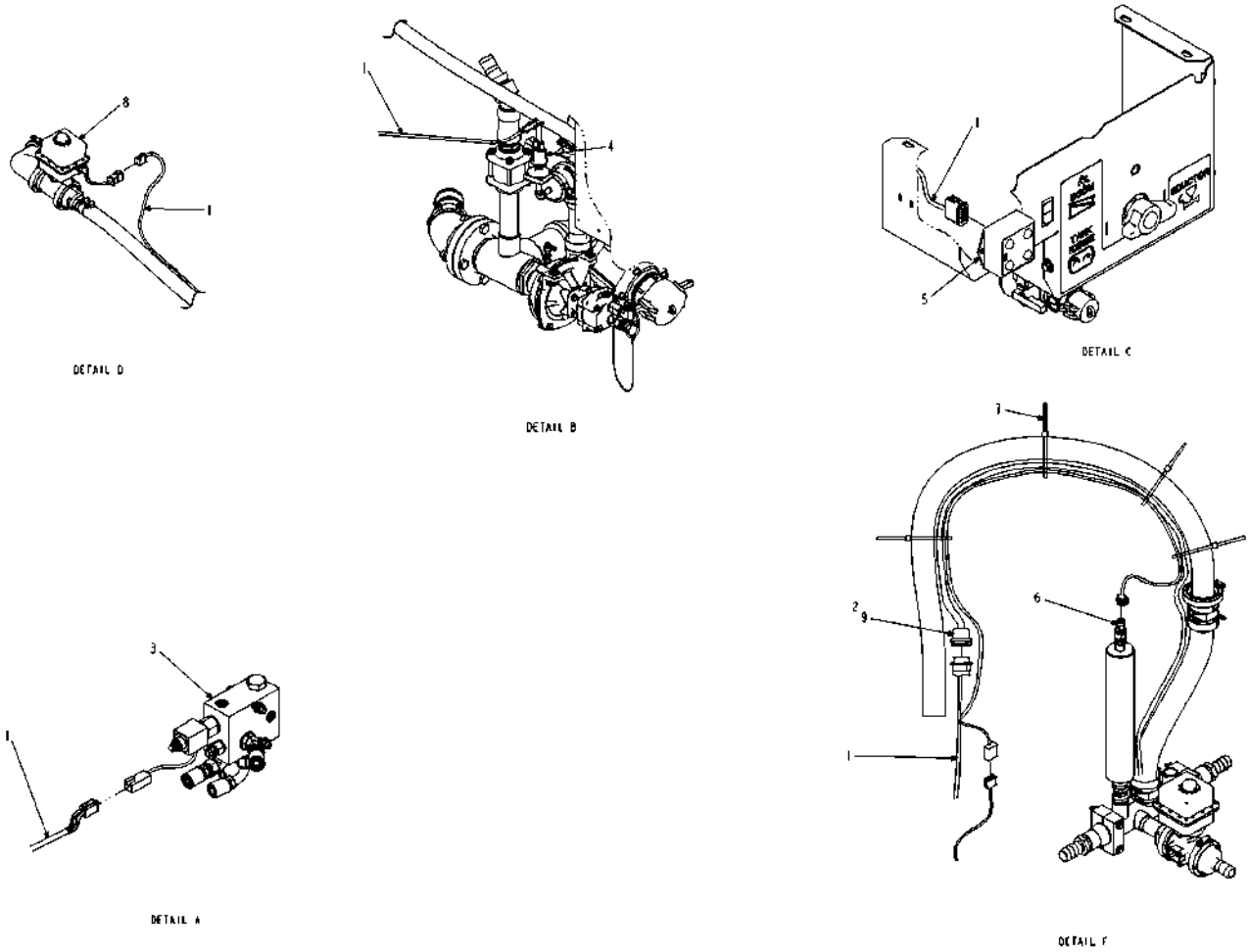

511817D1-03-R468-02.TIF

Copyright © 2007 AGCO Corporation

HARNESS INSTL-PROD CONT,RG

ITEM	PART #	QTY	DESCRIPTION	COMMENTS
1	511623D1	1	HARNESS-PRODUCT CONTROL(SYS)	
2	AG504299	-	HARNESS-ELEC BM SECT VLV(SYS)	
3	AG424287	-	VALVE-HYD,PWM,LIQ SYS,15 GPM	SEE PAGE 5-54
4	AG521017	-	SENDER-PRESSURE,0-150PSI,GRD	
5	509280D1	-	MODULE-CTRL,PLMB,PROD,LIQ SYS	
6	AG524270	-	TRANSDUCER-PRES R/B 517405D1	
7	AG554278	6	TIE CABLE 11.0 .06-3.06 BLACK	
8	AG523925	-	VALVE-ELEC,REG,2.0FLGX1.0FNPT	SEE PAGE 2-18
9	505270D1	-	HARNESS-BSO VLV,7 SECT	

Copyright © 2007 AGCO Corporation

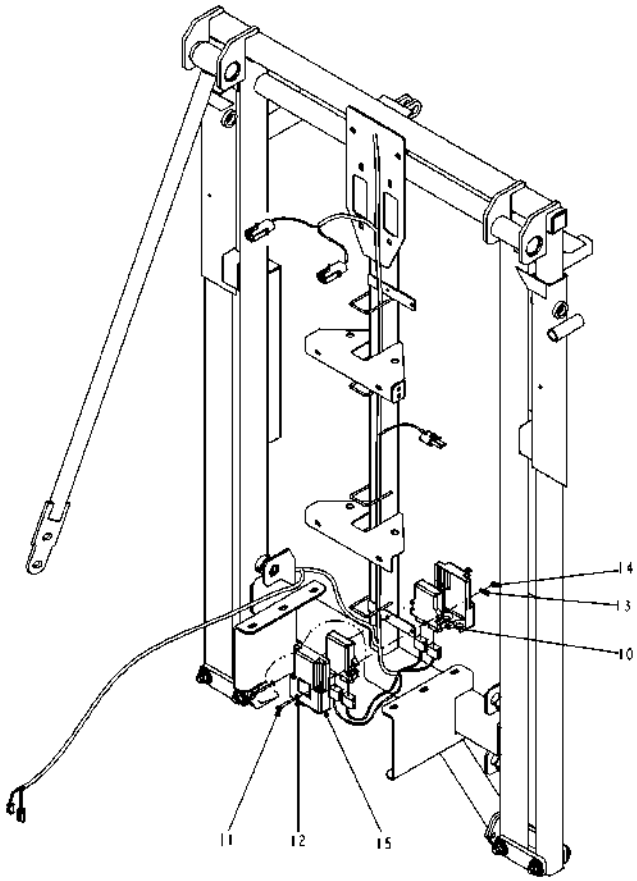

VIEW G-G

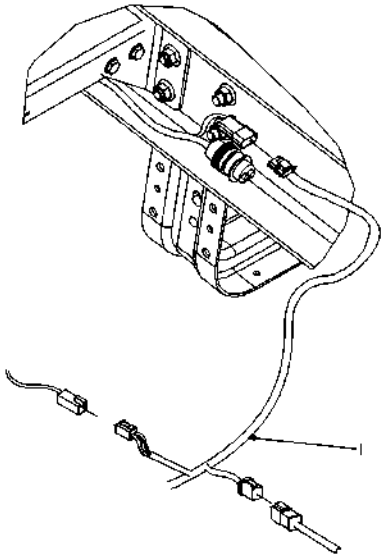

DETAIL E

511817D1-03-R468-03.TIF

Copyright © 2007 AGCO Corporation

HARNESS INSTL-PROD CONT,RG

ITEM	PART #	QTY	DESCRIPTION	COMMENTS
1	511623D1	1	HARNESS-PRODUCT CONTROL(SYS)	
10	516006D1	2	MODULE ASM-I/O,CAN	
11	AG562136	2	BOLT 0.25-20NCX 2.25 SS HHD	
12	AG517724	2	WASHER FLAT NARROW	
13	AG515122	2	WASHER 0.25 LK SS REG	
14	AG515123	2	NUT 0.25-20NC HEX SS REG	
15	520331D1	2	COVER-I/O ASM.	

Copyright © 2007 AGCO Corporation

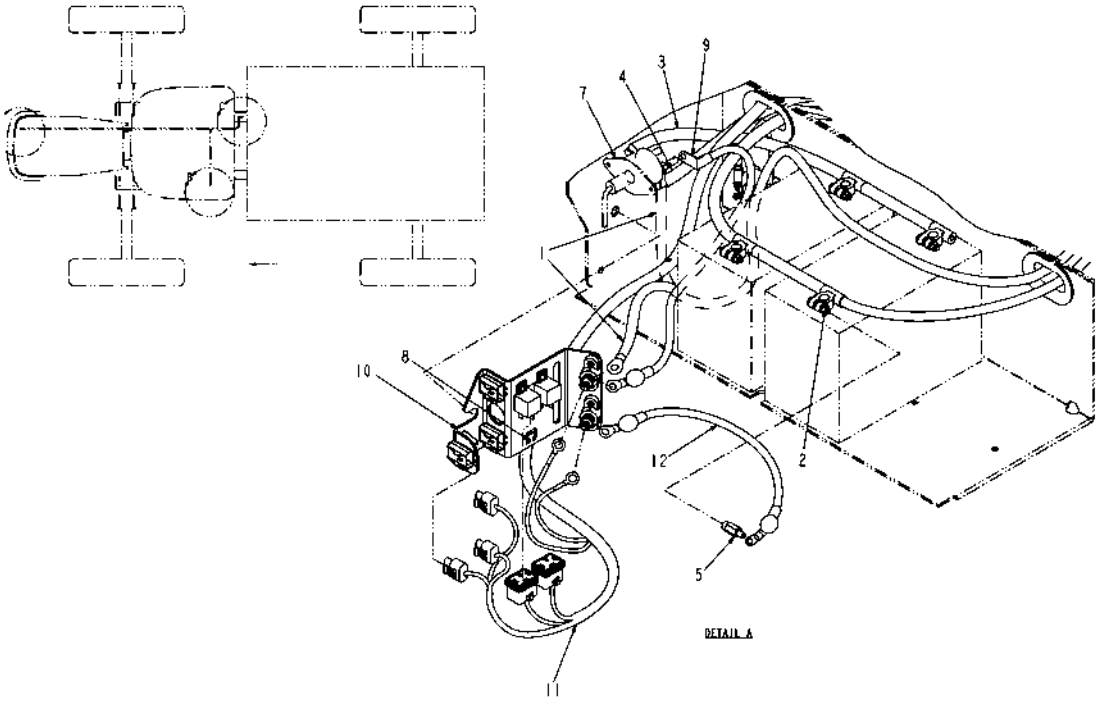

511925D1-01-N484-01.TIF

Copyright © 2007 AGCO Corporation

OPT INSTL-ELECTRICAL,RG

ITEM	PART #	QTY	DESCRIPTION	COMMENTS
1	AG122290	-	CABLE-NEG,AUX PWR,PWR BOX	
2	AG122291	-	CABLE-BATTERY,POSITIVE,864	
3	AG122292	-	CABLE-BATTERY,NEGATIVE,864	
4	AG122312	-	CABLE-BATTERY,NEG,STARTER	
5	AG125908	1	EXTENDER-BATTERY BOLT	
7	AG520910	-	SWITCH-BATTERY,SHUTOFF	
8	AG553557	AR	TIE CABLE 7.37 .06-1.37 BLACK	
9	503289D1	1	CABLE-DISCONNECT,STUD,GND,90	
10	511923D1	1	ASM-PWR/GND STUD,RG	SEE PAGE 6-47
11	511924D1	1	HARNESS-PWR/GND,OPT,RG	
12	512145D1	1	CABLE-BATTERY,STUD,POS	

Copyright © 2007 AGCO Corporation

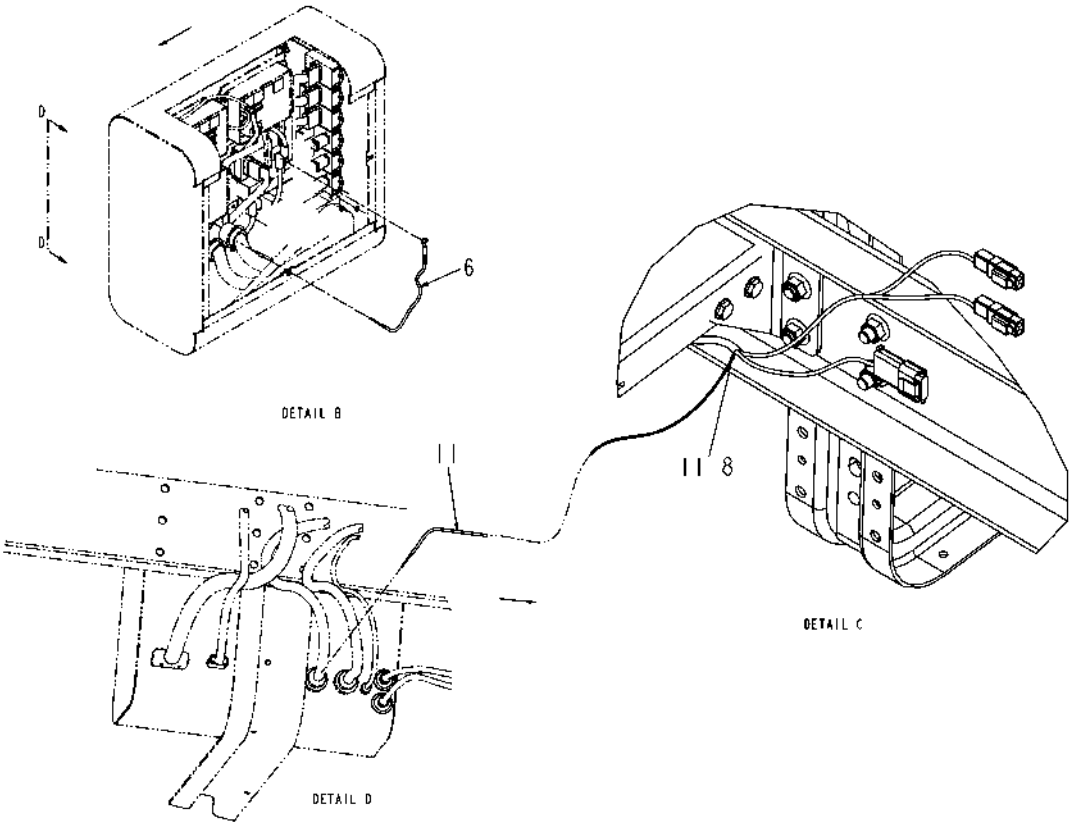

511925D1-01-N484-02.TIF

Copyright © 2007 AGCO Corporation

ITEM	PART #	QTY	DESCRIPTION	COMMENTS
6	AG126088	1	HARNESS-ENABLE,RELAY,INJ	
8	AG553557	AR	TIE CABLE 7.37 .06-1.37 BLACK	
11	511924D1	1	HARNESS-PWR/GND,OPT,RG	

Copyright © 2007 AGCO Corporation

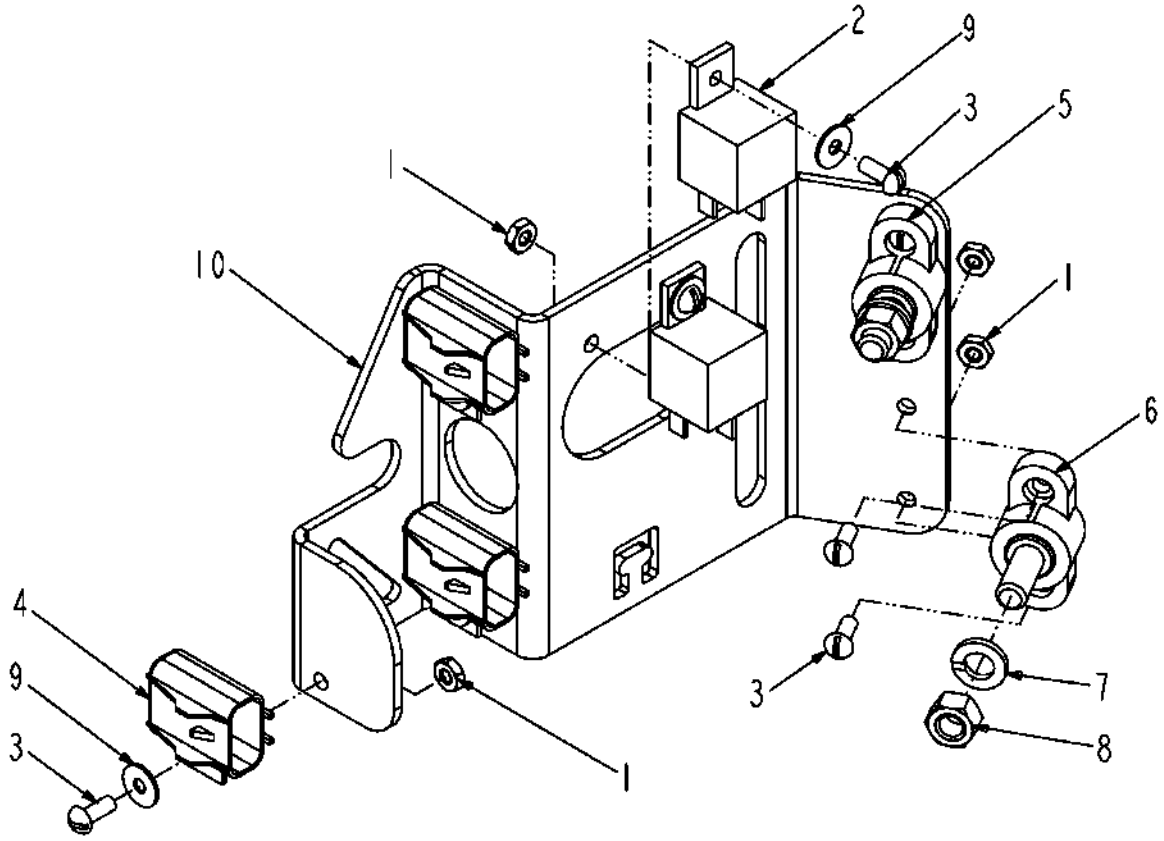

511923D1-01-N484-.TIF

Copyright © 2007 AGCO Corporation

ASM-PWR/GND STUD,RG

ITEM	PART #	QTY	DESCRIPTION	COMMENTS
1	AG027274	9	NUT #10-24NC HEX SS REG NY	
2	AG515756	2	RELAY,ELECTRICAL	
3	AG517975	9	SCREW 10-24NCX0.50 RD HD SS	
4	AG520052	3	CAP METRI PACK 630 P2S 2-WAY	
5	AG520092	1	JUNCTION BLOCK-STUD TYPE,BLK	
6	AG520093	1	JUNCTION BLOCK-STUD TYPE,RED	
7	AG562050	2	WASHER 0.37 LK SS REG	
8	AG562065	2	NUT 0.37-16NC HEX SS REG	
9	AG562082	5	WASHER #10 FL SS REG TYPE-B	
10	511922D1	1	PLATE-PWR/GND STUD	

Copyright © 2007 AGCO Corporation

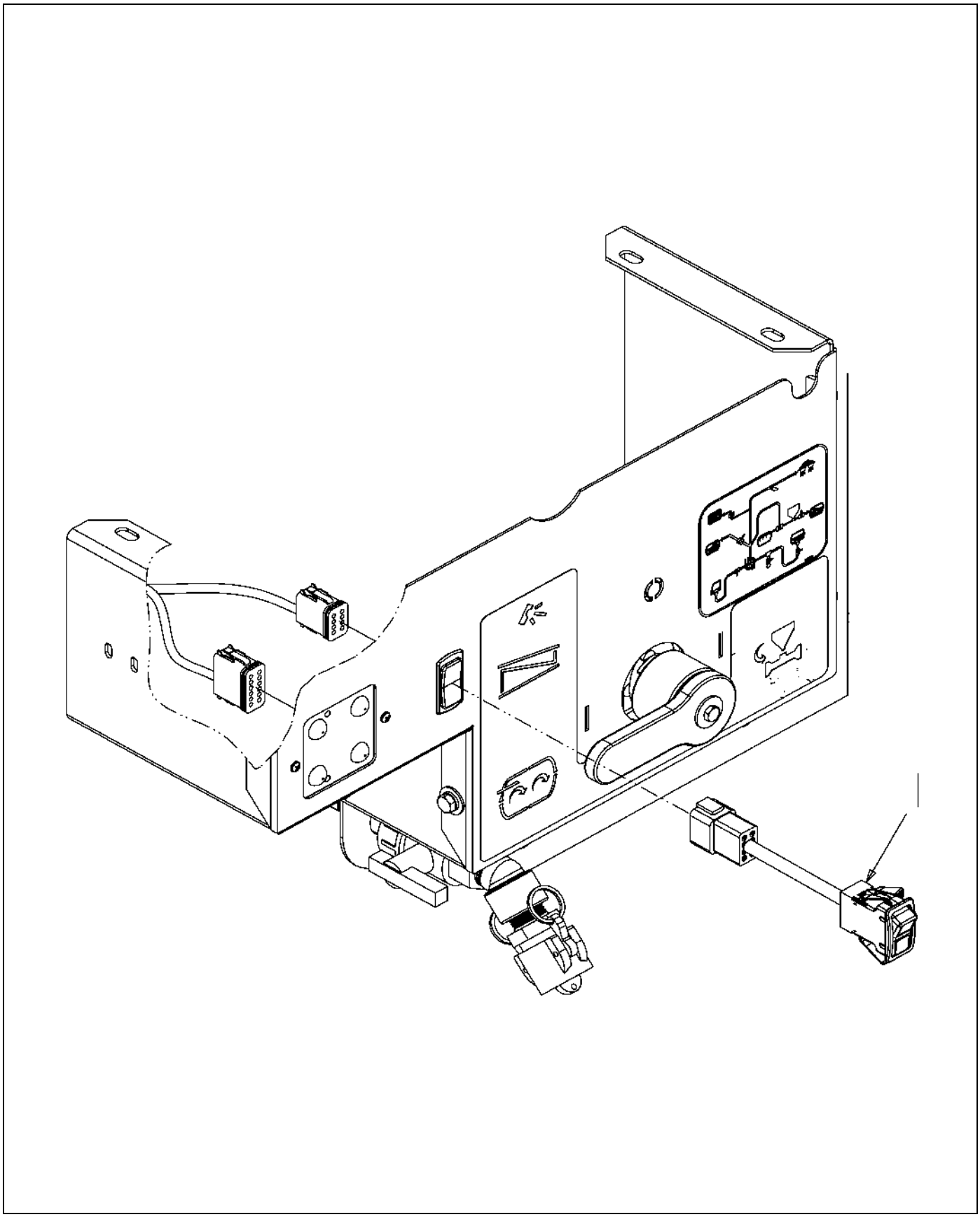

512367D1-01-N428-.TIF

Copyright © 2007 AGCO Corporation

SWITCH INSTL-HV/STD

ITEM	PART #	QTY	DESCRIPTION	COMMENTS
1	512869D1	1	HARNESS-SWITCH,SEALED,DPDT	

Copyright © 2007 AGCO Corporation

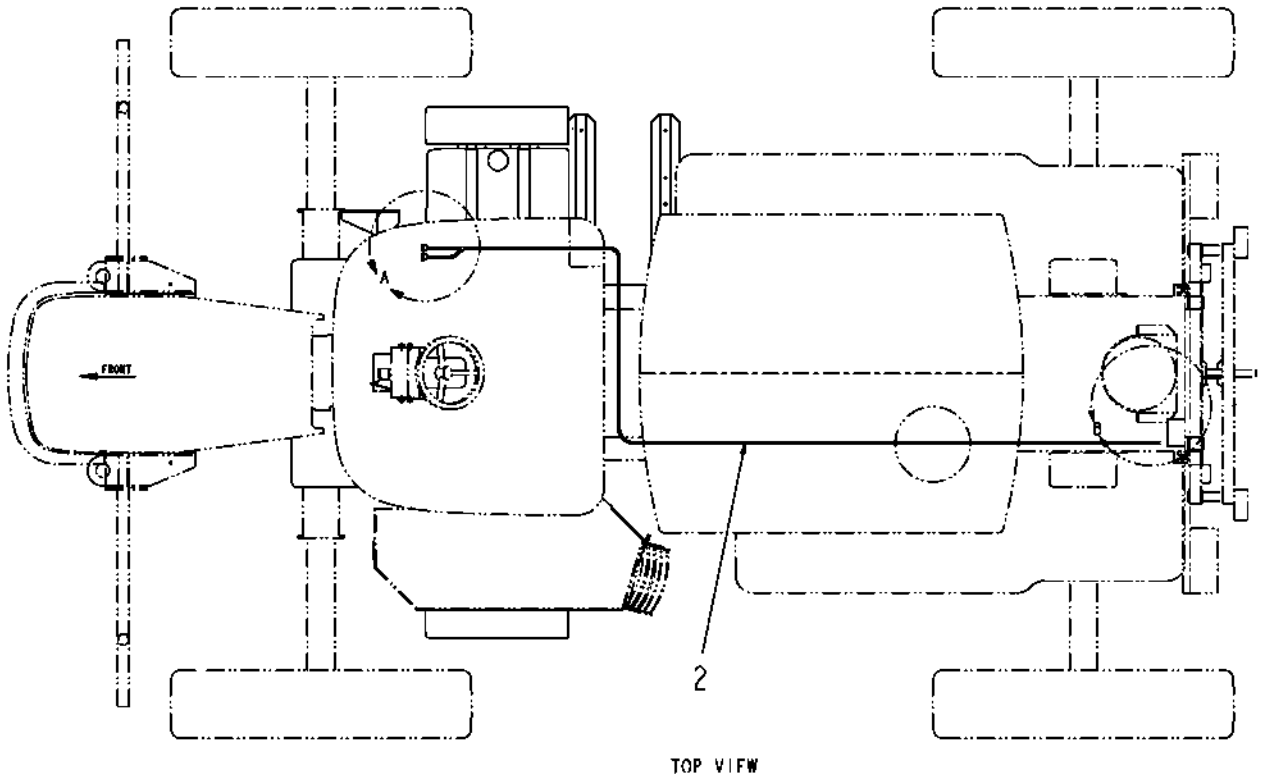

513224D1-01-N655-01.TIF

Copyright © 2007 AGCO Corporation

ITEM	PART #	QTY	DESCRIPTION	COMMENTS
2	506899D1	1	HARN-CTRL,SYS,AUTOBOOM,G2	
3	AG553557	AR	TIE CABLE 7.37 .06-1.37 BLACK	

Copyright © 2007 AGCO Corporation

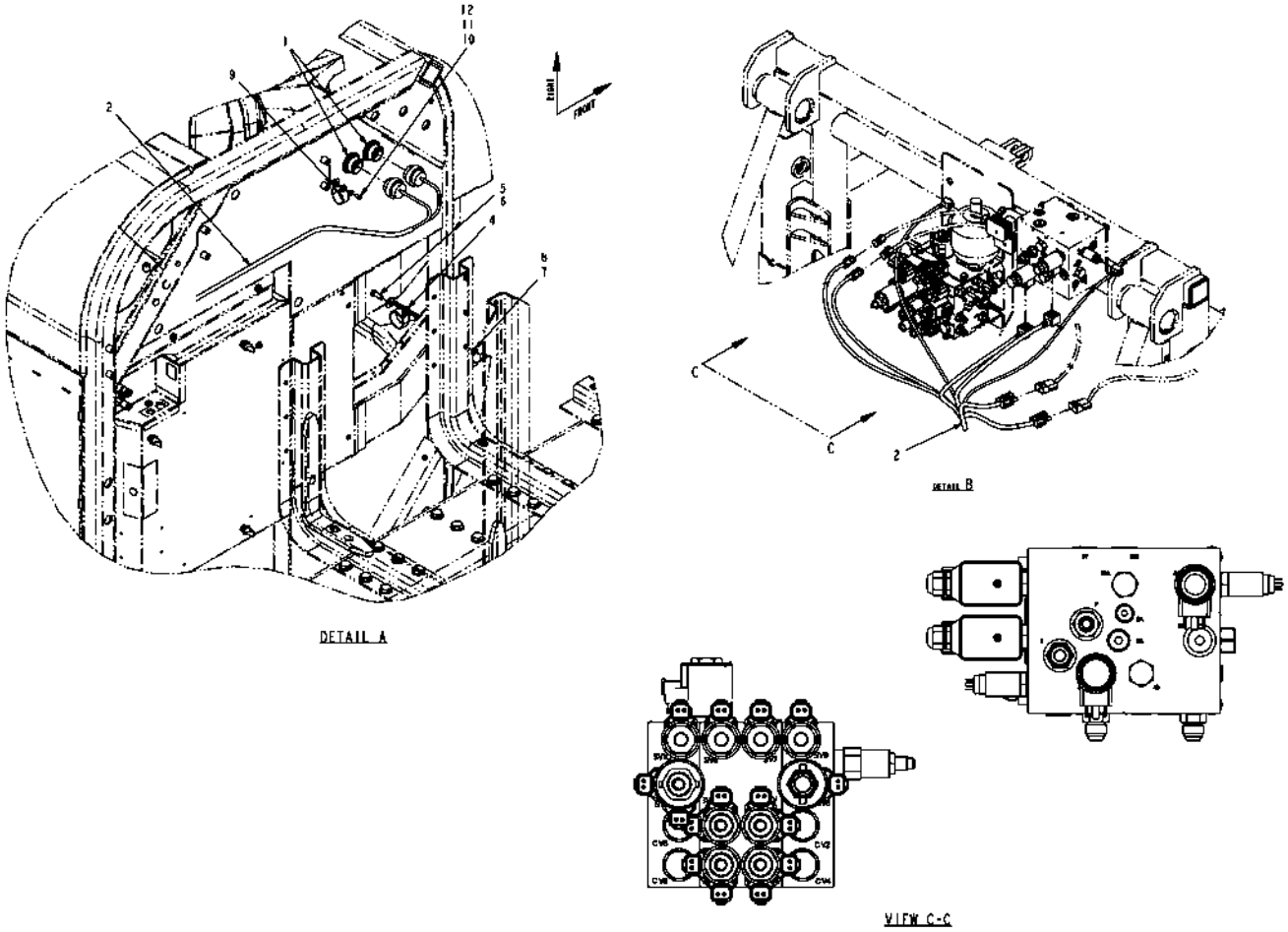

513224D1-01-N655-02.tif

Copyright © 2007 AGCO Corporation

HARN INSTL-CTRL,SYS,G2

ITEM	PART #	QTY	DESCRIPTION	COMMENTS
1	506892D1	-	HARN-CTRL,CAB,AUTOBOOM,G2	
2	506899D1	1	HARN-CTRL,SYS,AUTOBOOM,G2	
4	AG523412	1	CLAMP-1.62 DIA,COATED HOSE	
5	AG550175	1	BOLT 0.37-16NCX 1.00 G5 ZN HHD	
6	AG551007	1	WASHER 0.37 FL ZN REG TYPE-B	
7	AG550191	1	WASHER 0.37 LK ZN REG	
8	AG550825	1	NUT 0.37-16NC HEX ZN REG	
9	AG519751	1	CLAMP 1.38 DIA COATED HOSE	
10	AG562639	1	BOLT M6 1.00X12MM G8.8 ZN HHD	
11	AG562792	1	WASHER LOCK M6 SPRING ZN	
12	AG523088	1	WASHER-FLAT,M6,ZN,16MM OD	

Copyright © 2007 AGCO Corporation

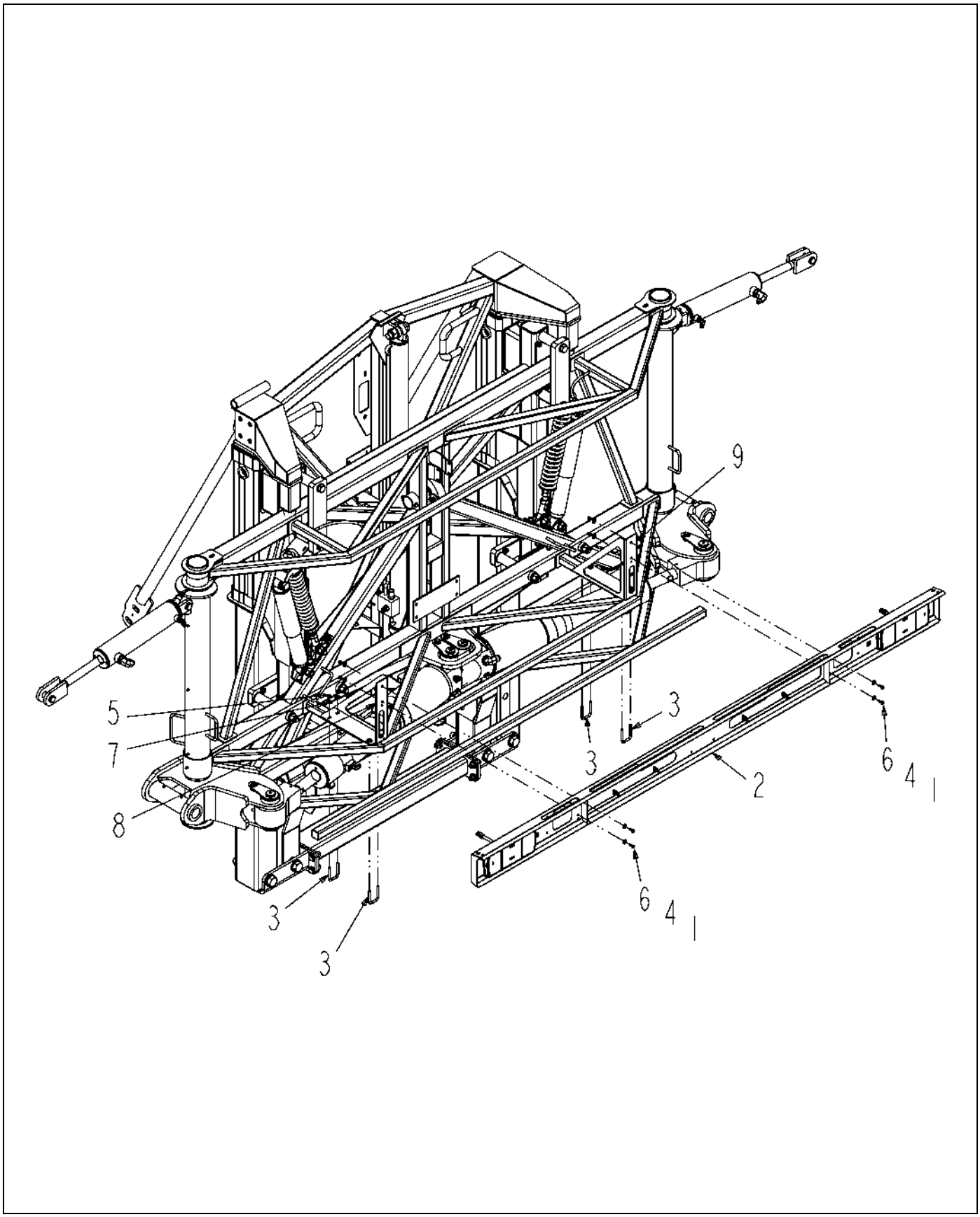

514990D1-01-N980-.TIF

Copyright © 2007 AGCO Corporation

LIGHT INSTL-TAIL,LED,LIQ,120

ITEM	PART #	QTY	DESCRIPTION	COMMENTS
1	AG027275	4	NUT 0.25-20NC HEX SS REG NY	
2	AG130567	1	BRKT ASM-MTG,TAILLIGHT	SEE PAGE 6-21
3	AG231204	4	BOLT-U .31-18X1.88X2.63	
4	AG515121	8	WASHER 0.25 FL SS REG TYPE-B	
5	AG516403	8	NUT 0.31-18NC HEX SS REG NY	
6	AG562054	4	BOLT 0.25-20NCX 0.75 SS HHD	
7	AG562074	8	WASHER 0.31 FL SS REG TYPE-B	
8	514991D1	1	BRKT-MTG,TLLT,LH	
9	514992D1	1	BRKT-MTG,TLLT,RH	

Copyright © 2007 AGCO Corporation

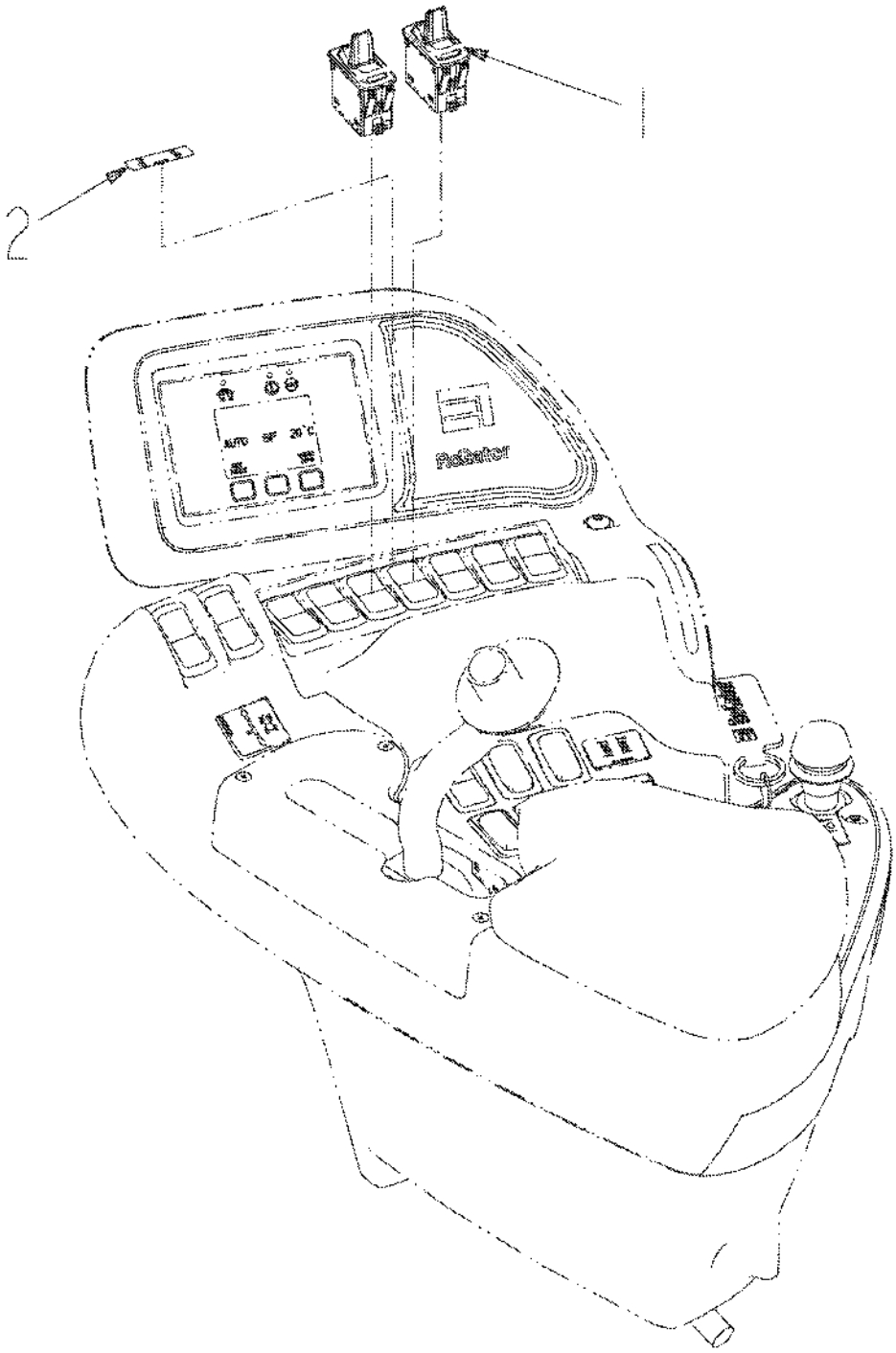

136178-02-N507-.TIF

Copyright © 2007 AGCO Corporation

SWITCH-INSTL,ER

ITEM	PART #	QTY	DESCRIPTION	COMMENTS
1	AG124433	2	SWITCH-PDL,OFF-ON,W/LT,CS-L	
2	504956D1	1	DECAL-SWITCH,END ROW	

Copyright © 2007 AGCO Corporation

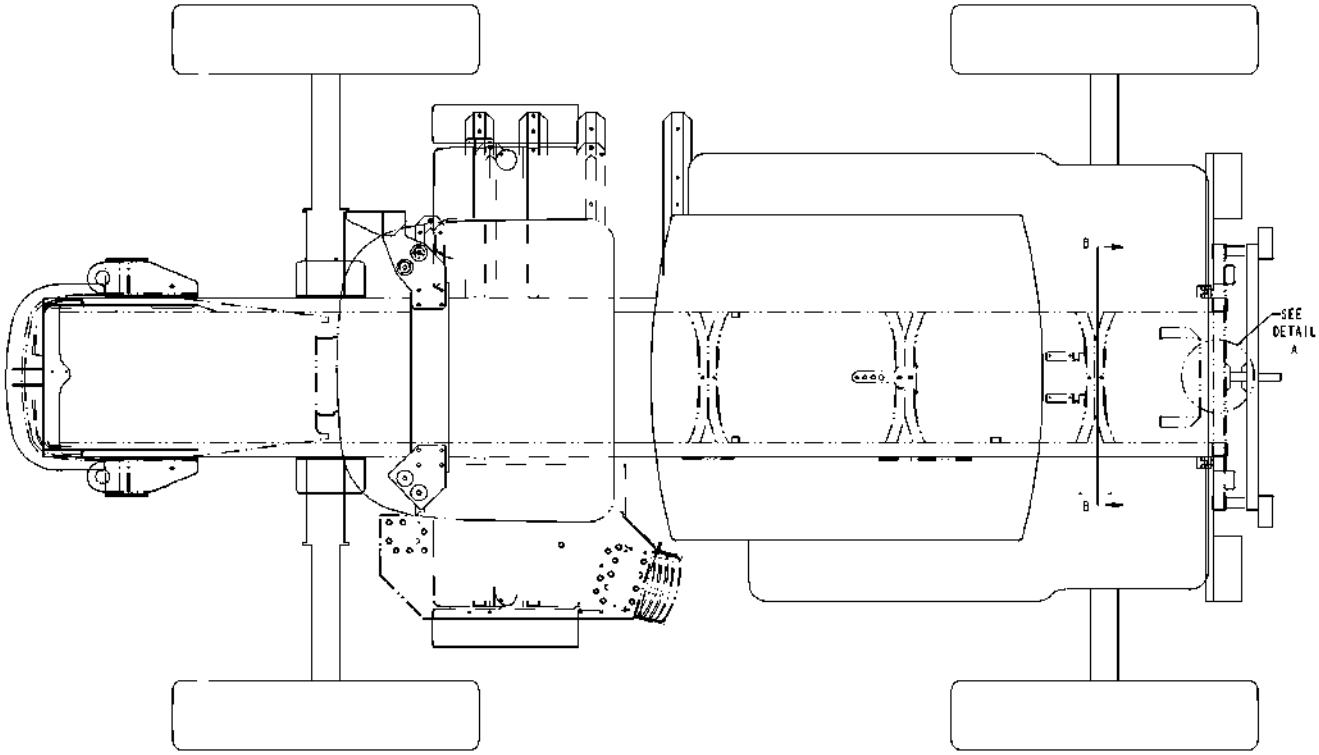

505232D1-04-R468-01.TIF

Copyright © 2007 AGCO Corporation

ITEM	PART #	QTY	DESCRIPTION	COMMENTS
REF			DETAIL IMAGE, PLEASE REFER TO RELATED PAGES FOR MORE INFORMATION	

Copyright © 2007 AGCO Corporation

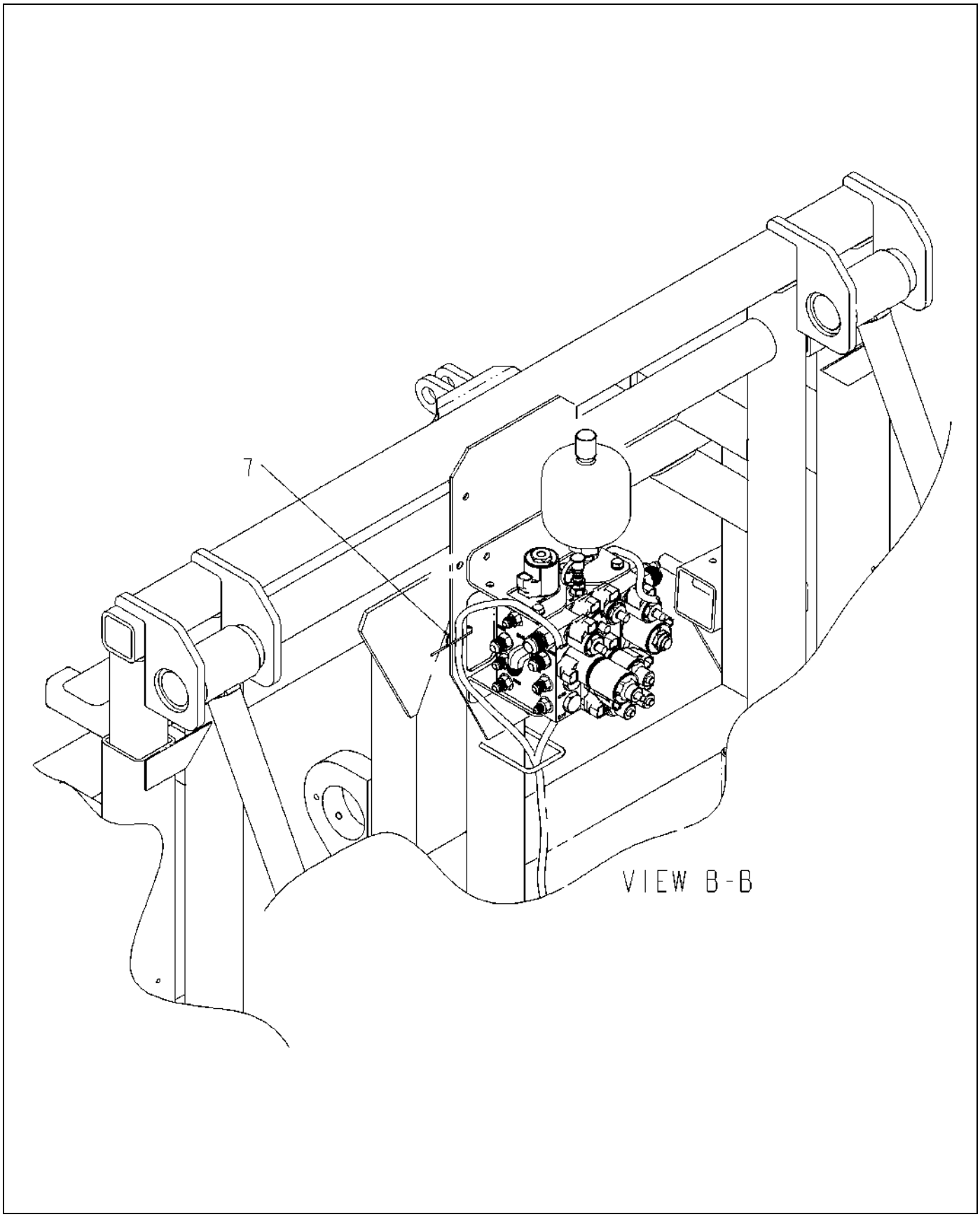

505232D1-04-R468-02.TIF

Copyright © 2007 AGCO Corporation

ITEM	PART #	QTY	DESCRIPTION	COMMENTS
7	AG554278	2	TIE CABLE 11.0 .06-3.06 BLACK	

Copyright © 2007 AGCO Corporation

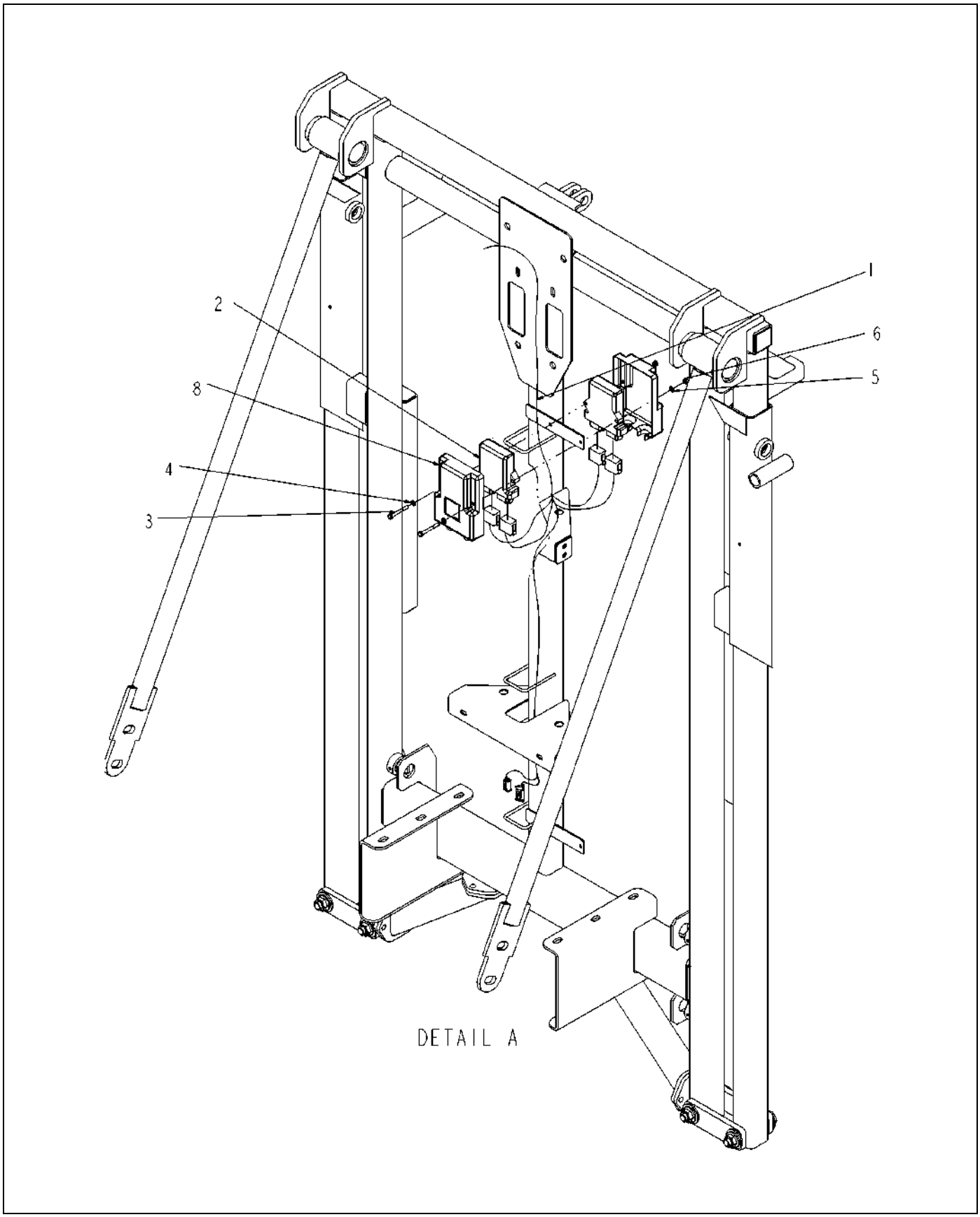

505232D1-04-R468-03.TIF

Copyright © 2007 AGCO Corporation

HARNESS INSTL-B/M,RG

ITEM	PART #	QTY	DESCRIPTION	COMMENTS
1	505109D1	1	HARNESS-BOOM MOTION,RG	
2	516006D1	2	MODULE ASM-I/O,CAN	
3	AG562136	2	BOLT 0.25-20NCX 2.25 SS HHD	
4	AG517724	2	WASHER FLAT NARROW	
5	AG515122	2	WASHER 0.25 LK SS REG	
6	AG515123	2	NUT 0.25-20NC HEX SS REG	
8	520331D1	8	COVER-I/O ASM.	

Copyright © 2007 AGCO Corporation

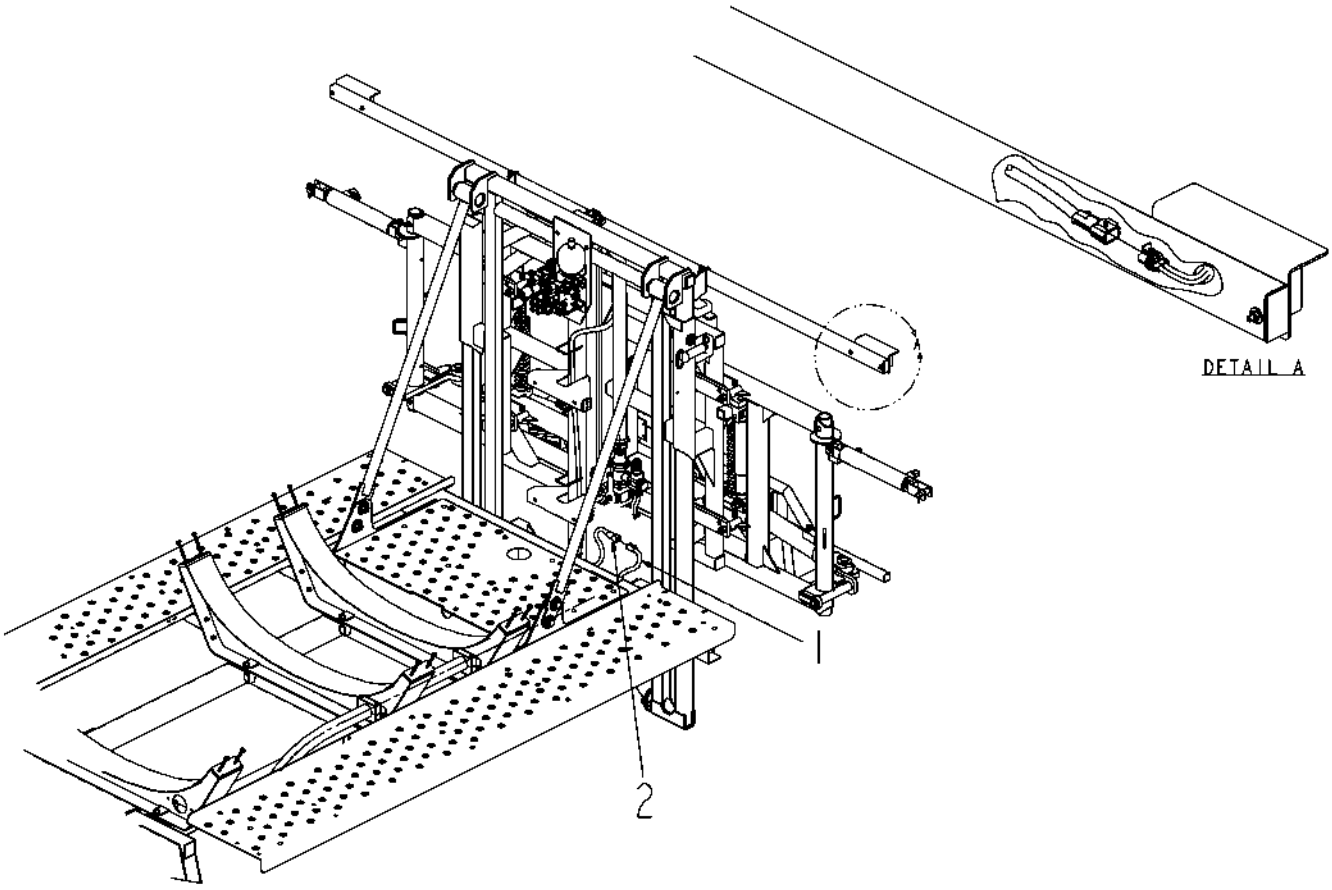

505426D1-01-M738-.TIF

Copyright © 2007 AGCO Corporation

HARN INSTL-AFWL,LIQ SYS

ITEM	PART #	QTY	DESCRIPTION	COMMENTS
1	505110D1	-	HARNESS-PROD CONT.RG	
2	505467D1	1	HARNESS-AFWL,LIQ,RG,06	

Copyright © 2007 AGCO Corporation

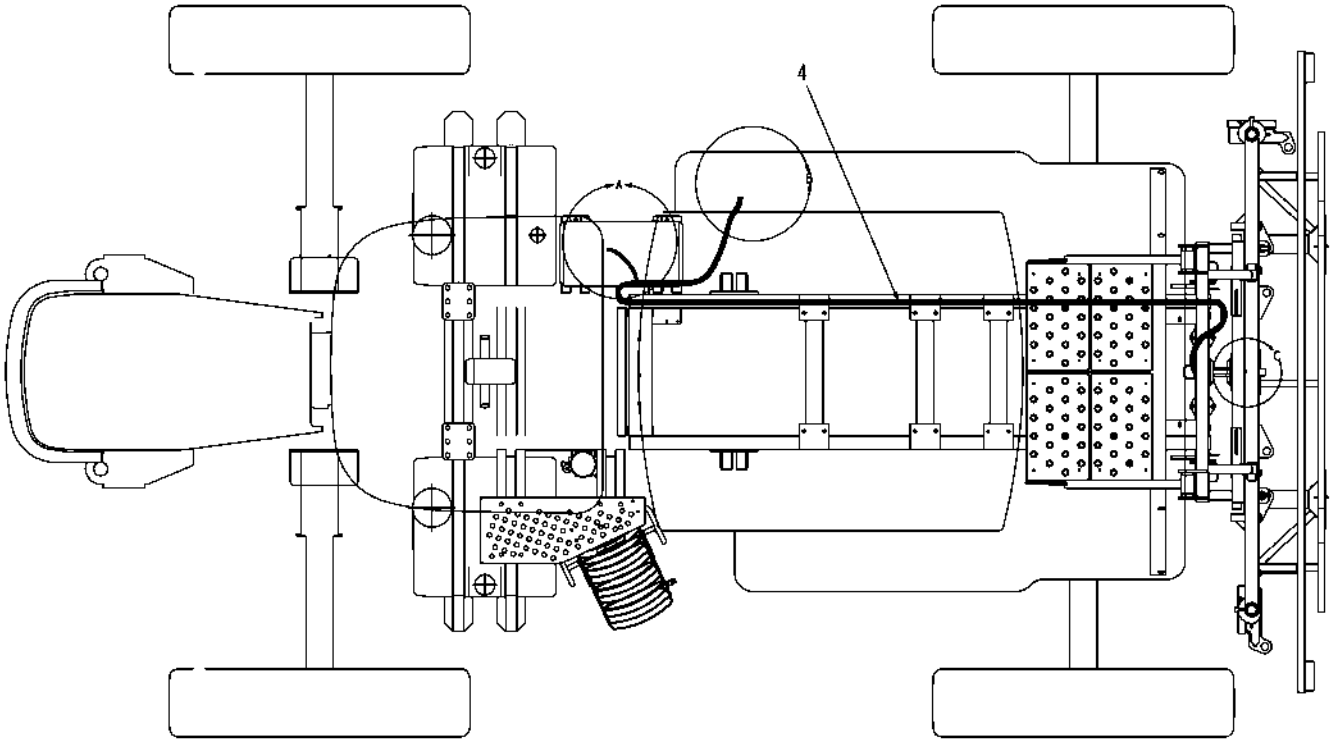

511818D1-02-N740-01.TIF

Copyright © 2007 AGCO Corporation

ITEM	PART #	QTY	DESCRIPTION	COMMENTS
4	AG131407	1	HARNESS-RG,LIQ SYS,VIPER	

Copyright © 2007 AGCO Corporation

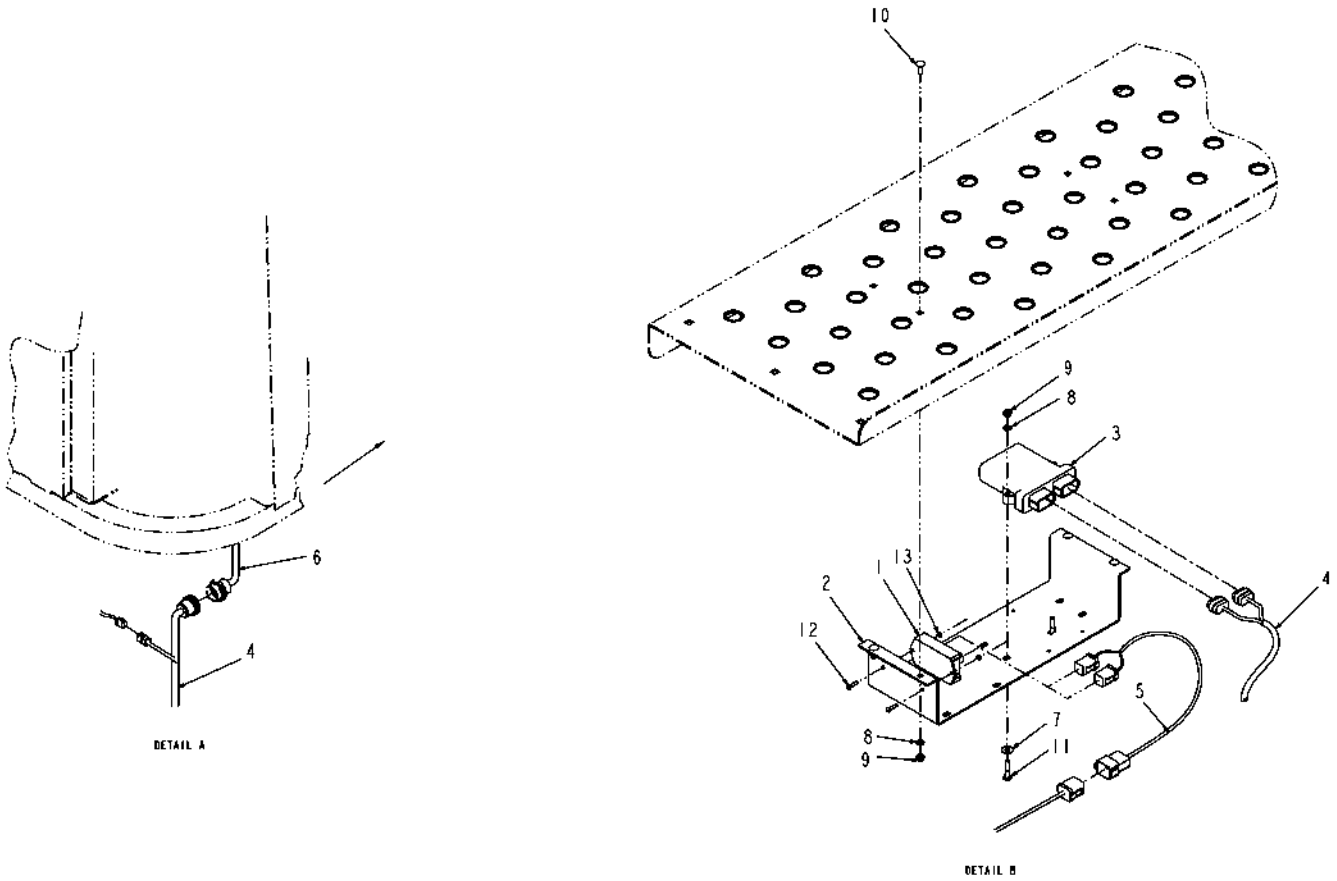

511818D1-02-N740-02.TIF

Copyright © 2007 AGCO Corporation

ELEC INSTL-SYS,RG LIQ,RVN

ITEM	PART #	QTY	DESCRIPTION	COMMENTS
1	AG121750	1	MODULE-RELAY,2 PACK	
2	AG122310	1	BRKT-MTG,NODE/TOGGLE BOX	
3	AG126234	1	NODE-SINGLE PRODUCT,PWM	
4	AG131407	1	HARNESS-RG,LIQ SYS,VIPER	
5	511801D1	1	HARNESS-ADAPTER,RVN,RG	
6	512220D1	-	HARNESS-NODE,BOOM/SPEED,RVN	
7	AG515121	2	WASHER 0.25 FL SS REG TYPE-B	
8	AG515122	6	WASHER 0.25 LK SS REG	
9	AG515123	6	NUT 0.25-20NC HEX SS REG	
10	AG523491	4	BOLT 0.25-20NCX 0.75 SS CRG	
11	AG561952	2	BOLT 0.25-20NCX 1.25 SS HHD	
12	AG562067	2	SCREW 8-32X 0.75 MA SS SL RHD	
13	AG563176	2	NUT #8-32NC HEX SS REG NY	

Copyright © 2007 AGCO Corporation

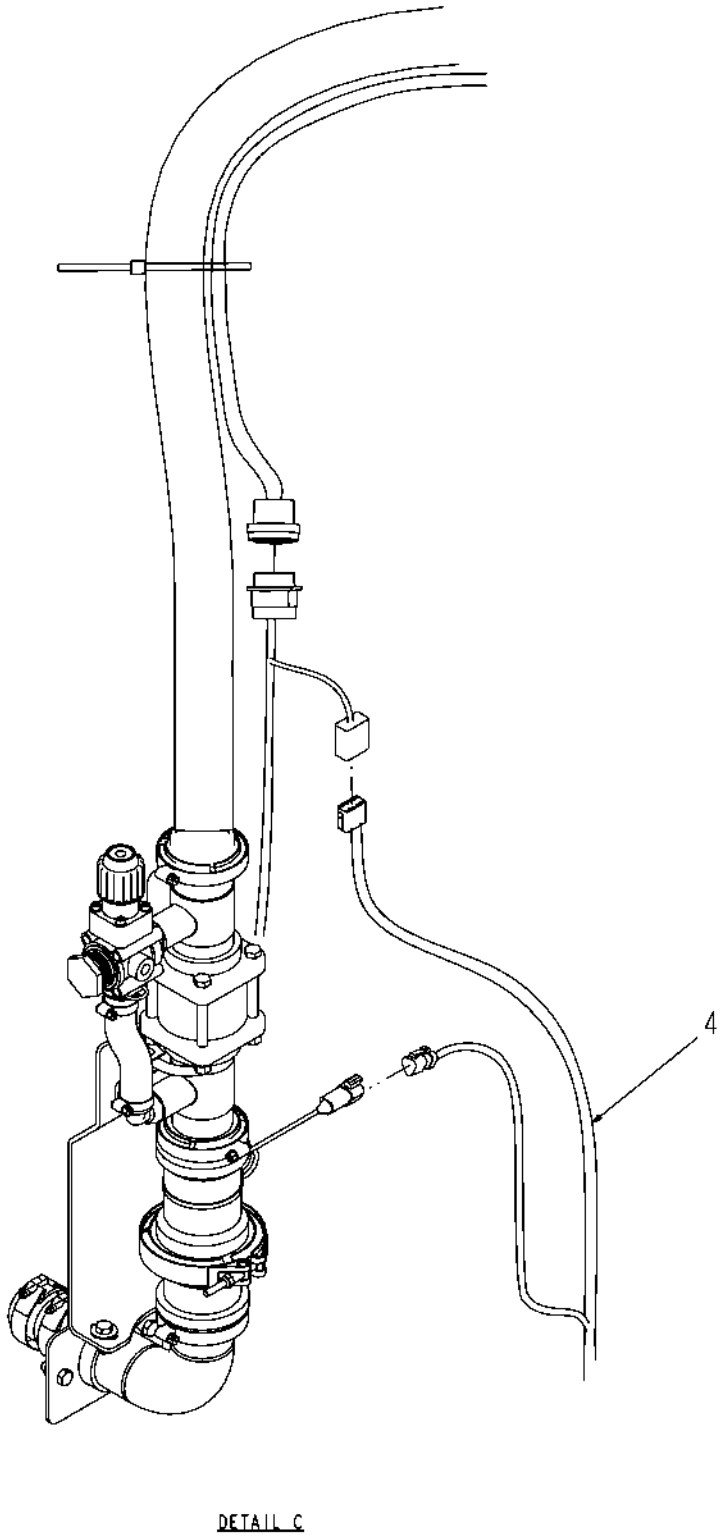

511818D1-02-N740-03.TIF

Copyright © 2007 AGCO Corporation

ITEM	PART #	QTY	DESCRIPTION	COMMENTS
4	AG131407	1	HARNESS-RG,LIQ SYS,VIPER	

Copyright © 2007 AGCO Corporation

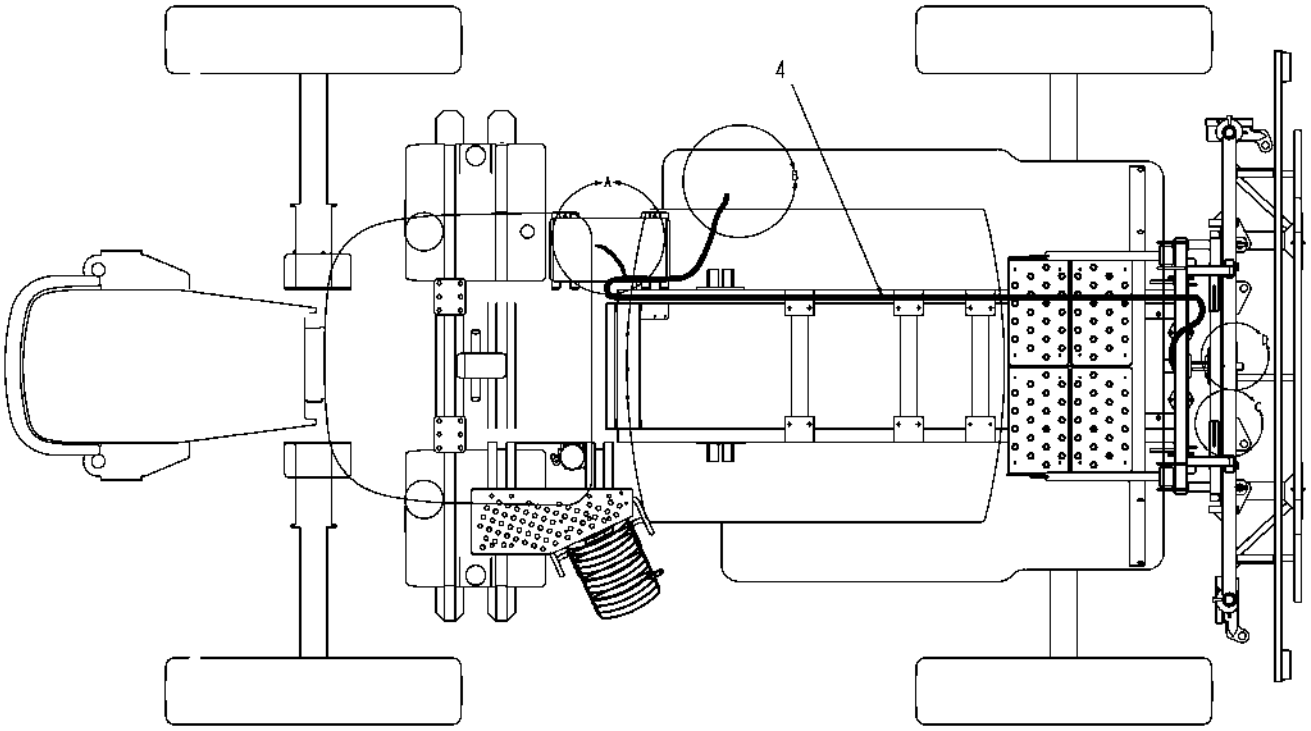

511819D1-02-R100-01.TIF

Copyright © 2007 AGCO Corporation

ITEM	PART #	QTY	DESCRIPTION	COMMENTS
4	505558D1	1	HARNESS-NODE,VT,RG LIQ	

Copyright © 2007 AGCO Corporation

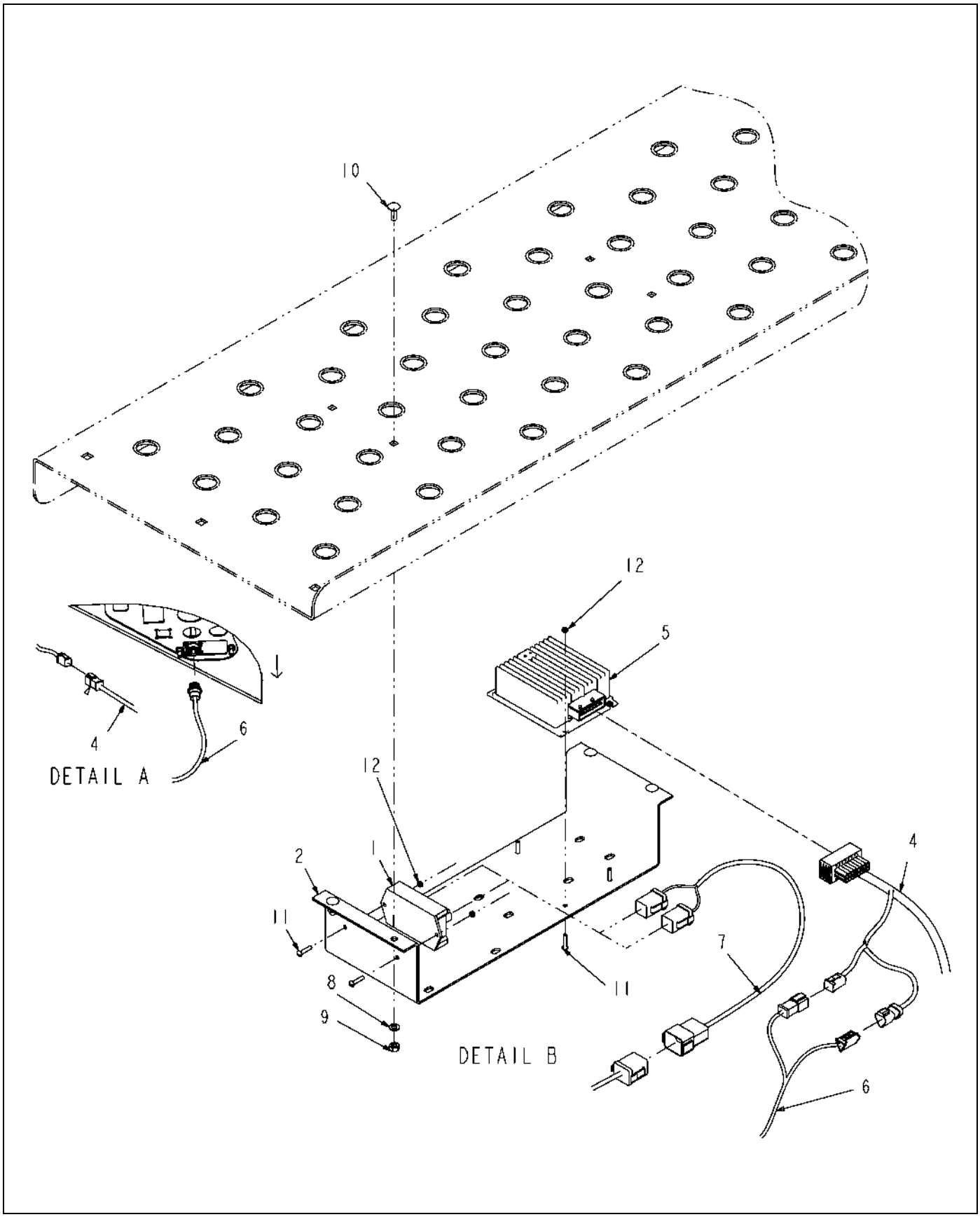

511819D1-02-R100-02.TIF

Copyright © 2007 AGCO Corporation

ELEC INSTL-SYS,RG LIQ,GTA

ITEM	PART #	QTY	DESCRIPTION	COMMENTS
1	AG121750	1	MODULE-RELAY,2 PACK	
2	AG122310	1	BRKT-MTG,NODE/TOGGLE BOX	
4	505558D1	1	HARNESS-NODE,VT,RG LIQ	
5	505581D1	1	NODE-MICRO,ESX	
6	507308D1	1	HARNESS-CAN/PWR,12 FT	
7	511802D1	1	HARNESS-ADAPTER,GTA,RG	
8	AG515122	4	WASHER 0.25 LK SS REG	
9	AG515123	4	NUT 0.25-20NC HEX SS REG	
10	AG523491	4	BOLT 0.25-20NCX 0.75 SS CRG	
11	AG562067	2	SCREW 8-32X 0.75 MA SS SL RHD	
12	AG563176	5	NUT #8-32NC HEX SS REG NY	

Copyright © 2007 AGCO Corporation

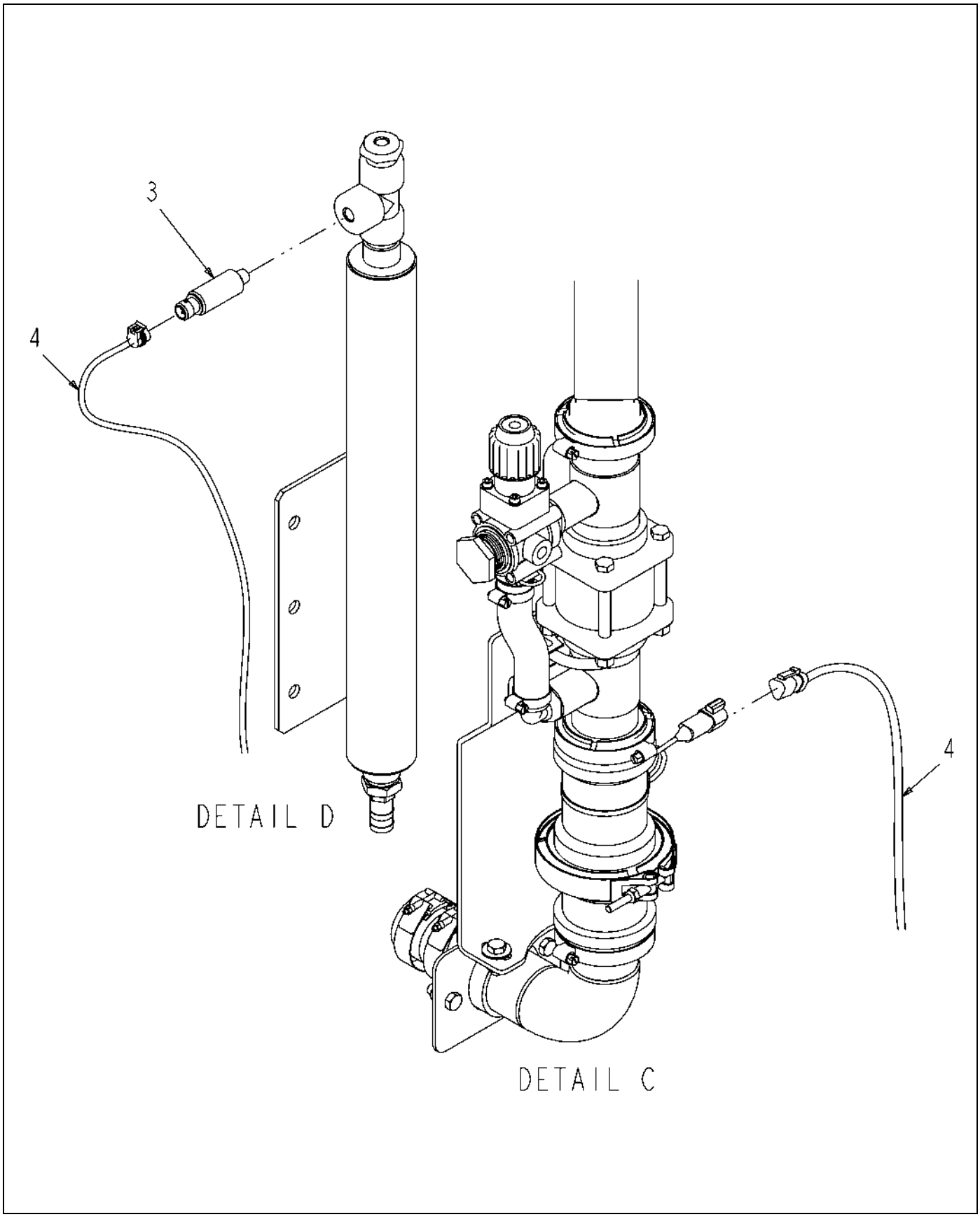

511819D1-02-R100-03.TIF

Copyright © 2007 AGCO Corporation

ITEM	PART #	QTY	DESCRIPTION	COMMENTS
3	517404D1	1	TRANSDUCER-PRESS,0-150PSI,1-5V	
4	505558D1	1	HARNESS-NODE,VT,RG LIQ	

Copyright © 2007 AGCO Corporation

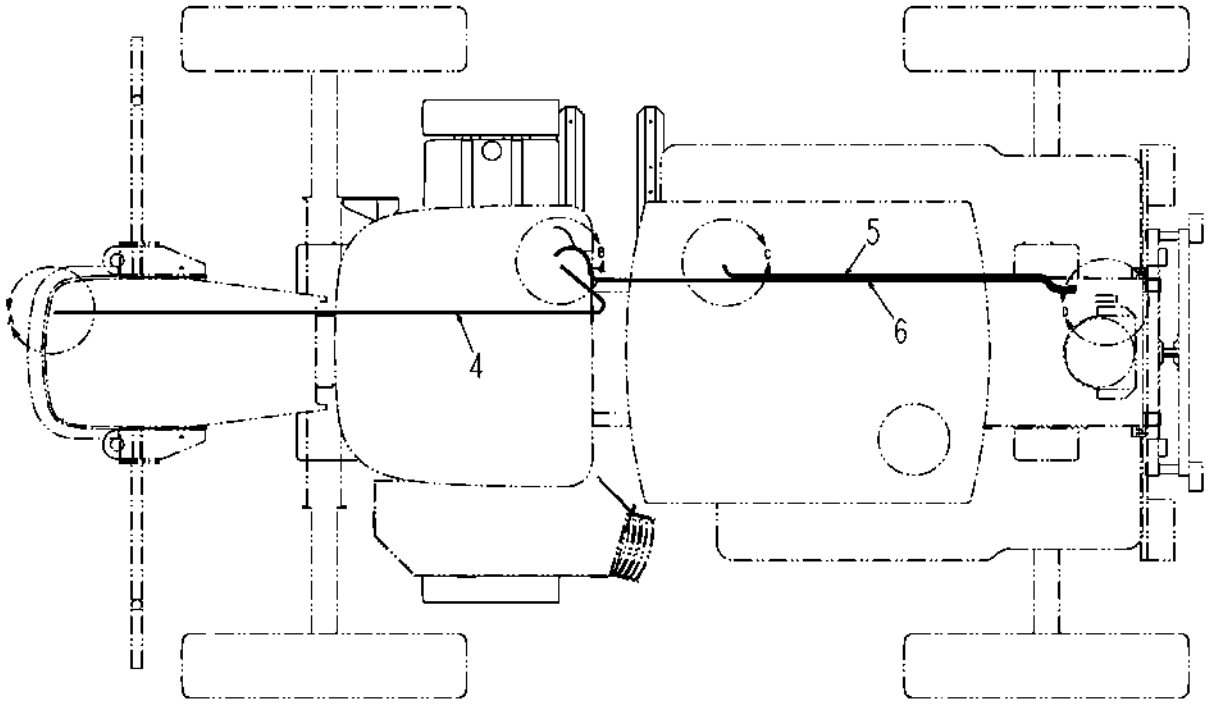

511926D1-01-N484-01.TIF

Copyright © 2007 AGCO Corporation

ITEM	PART #	QTY	DESCRIPTION	COMMENTS
4	511928D1	1	HARNESS-PWR/GND,INJ,RG	
5	511930D1	1	HARNESS-CAN,RAVEN,18 FT EXT	
6	511931D1	1	HARNESS-PWR,NODE/INJ PUMP,RVN	

Copyright © 2007 AGCO Corporation

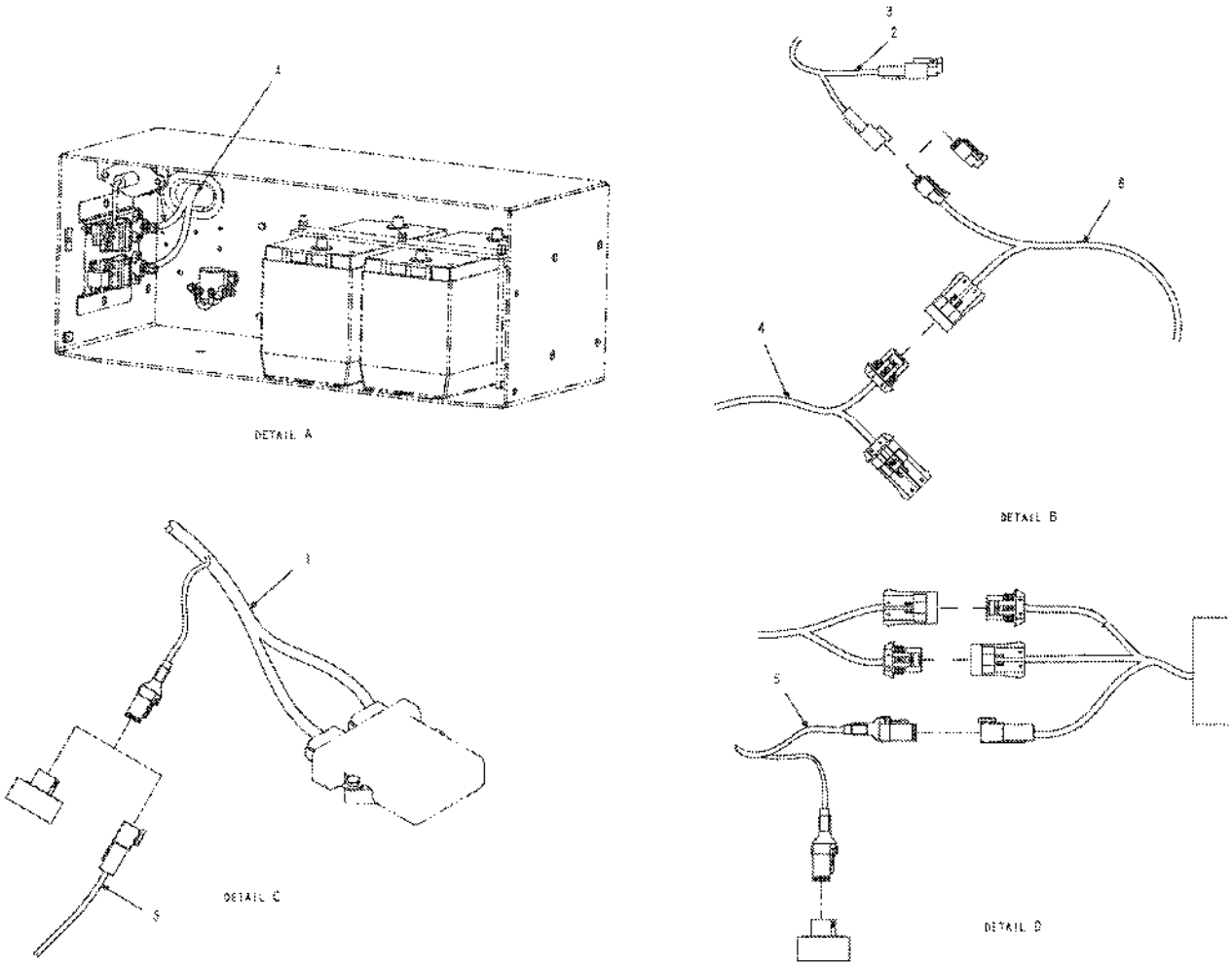

511926D1-01-N484-02.TIF

Copyright © 2007 AGCO Corporation

SYS INSTL-INJ,LOOP 1,RVN,RG

ITEM	PART #	QTY	DESCRIPTION	COMMENTS
1	AG131407	-	HARNESS-RG,LIQ SYS,VIPER	
2	503993D1	-	HARNESS-ENG ELECTRONICS,CHAS	
3	511924D1	-	HARNESS-PWR/GND,OPT,RG	
4	511928D1	1	HARNESS-PWR/GND,INJ,RG	
5	511930D1	1	HARNESS-CAN,RAVEN,18 FT EXT	
6	511931D1	1	HARNESS-PWR,NODE/INJ PUMP,RVN	

Copyright © 2007 AGCO Corporation

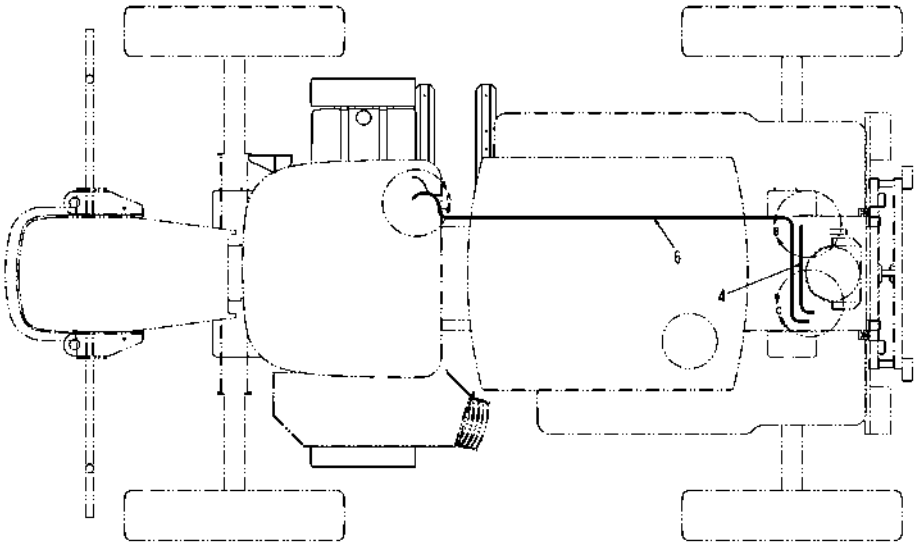

511927D1-01-N484-01.TIF

Copyright © 2007 AGCO Corporation

ITEM	PART #	QTY	DESCRIPTION	COMMENTS
4	511929D1	1	HARNESS-CAN,RAVEN,6 FT EXT	
6	511931D1	1	HARNESS-PWR,NODE/INJ PUMP,RVN	

Copyright © 2007 AGCO Corporation

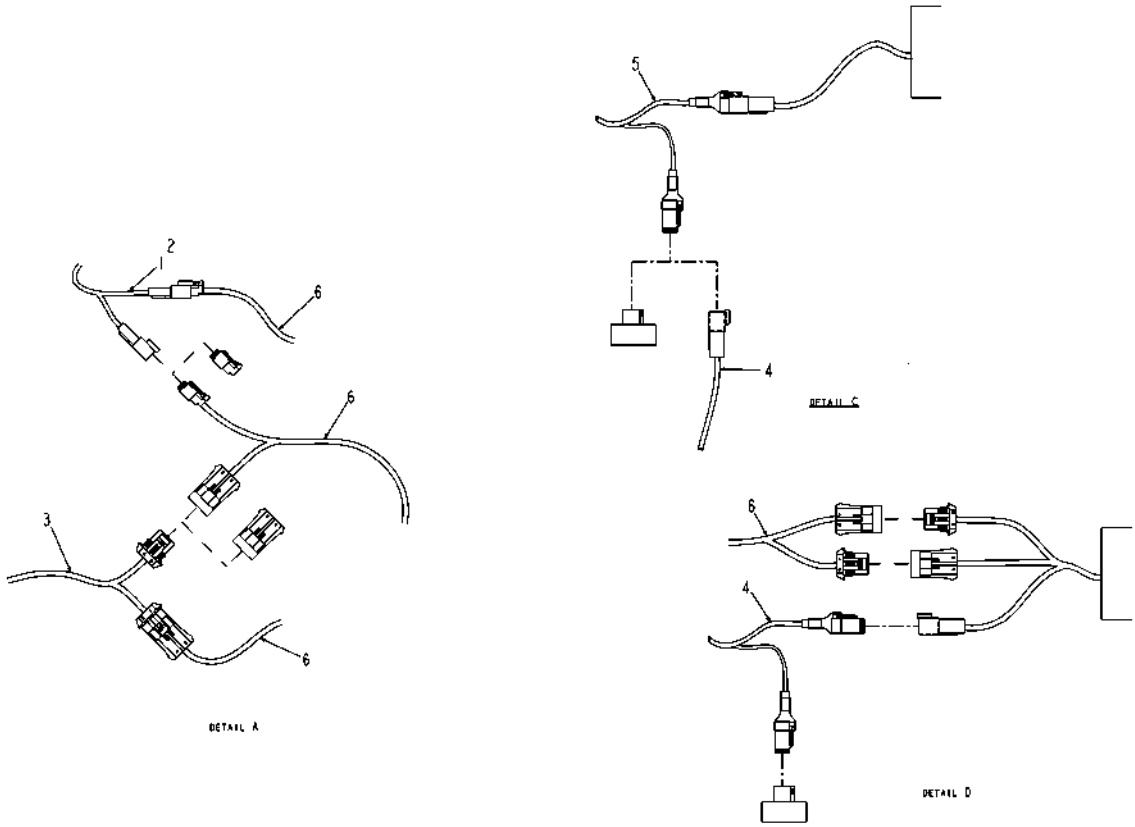

511927D1-01-N484-02.TIF

Copyright © 2007 AGCO Corporation

SYS INSTL-INJ,LOOP 2,RVN,RG

ITEM	PART #	QTY	DESCRIPTION	COMMENTS
1	503993D1	-	HARNESS-ENG ELECTRONICS,CHAS	
2	511924D1	-	HARNESS-PWR/GND,OPT,RG	
3	511928D1	1	HARNESS-PWR/GND,INJ,RG	
4	511929D1	1	HARNESS-CAN,RAVEN,6 FT EXT	
5	511930D1	1	HARNESS-CAN,RAVEN,18 FT EXT	
6	511931D1	1	HARNESS-PWR,NODE/INJ PUMP,RVN	

Copyright © 2007 AGCO Corporation

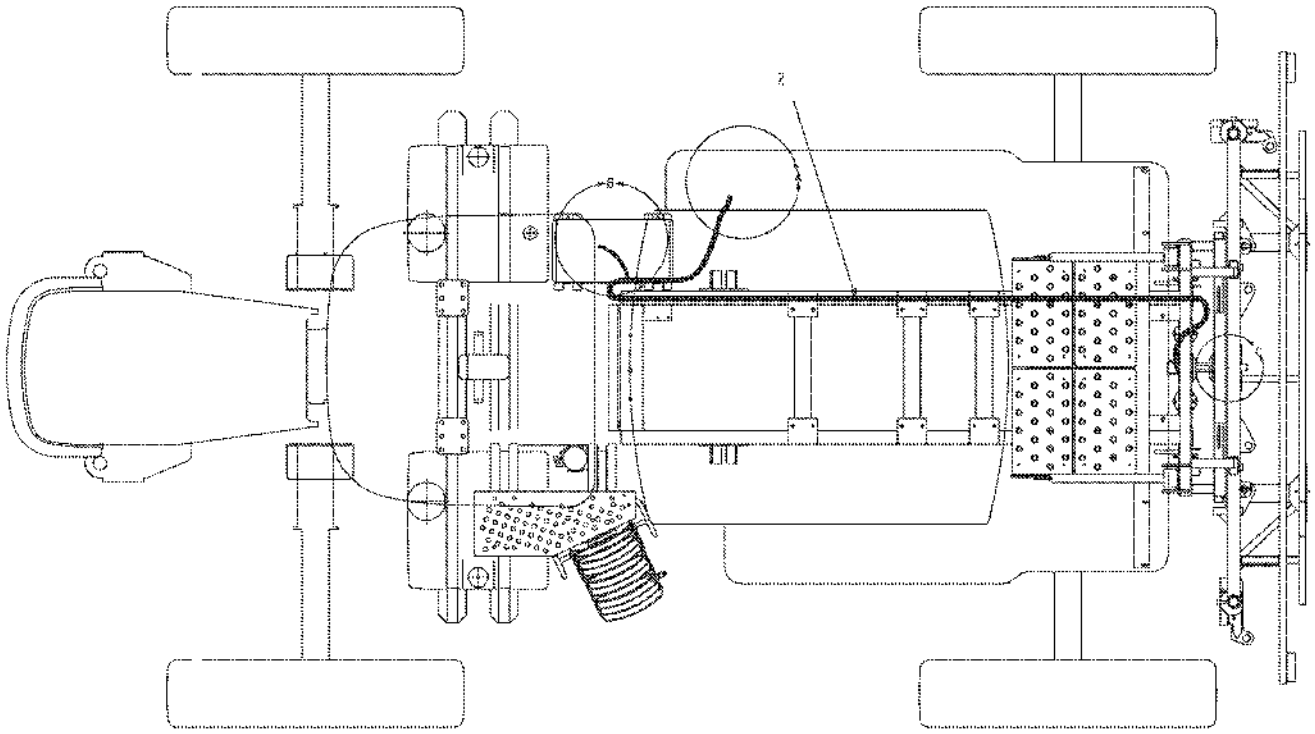

512486D1-02-N992-01.TIF

Copyright © 2007 AGCO Corporation

ITEM	PART #	QTY	DESCRIPTION	COMMENTS
2	AG122288	1	HARNESS-FLCN II(SYS)	
4	AG123003	1	SOFTWARE INSTL-INI,PWM LIQUID	

Copyright © 2007 AGCO Corporation

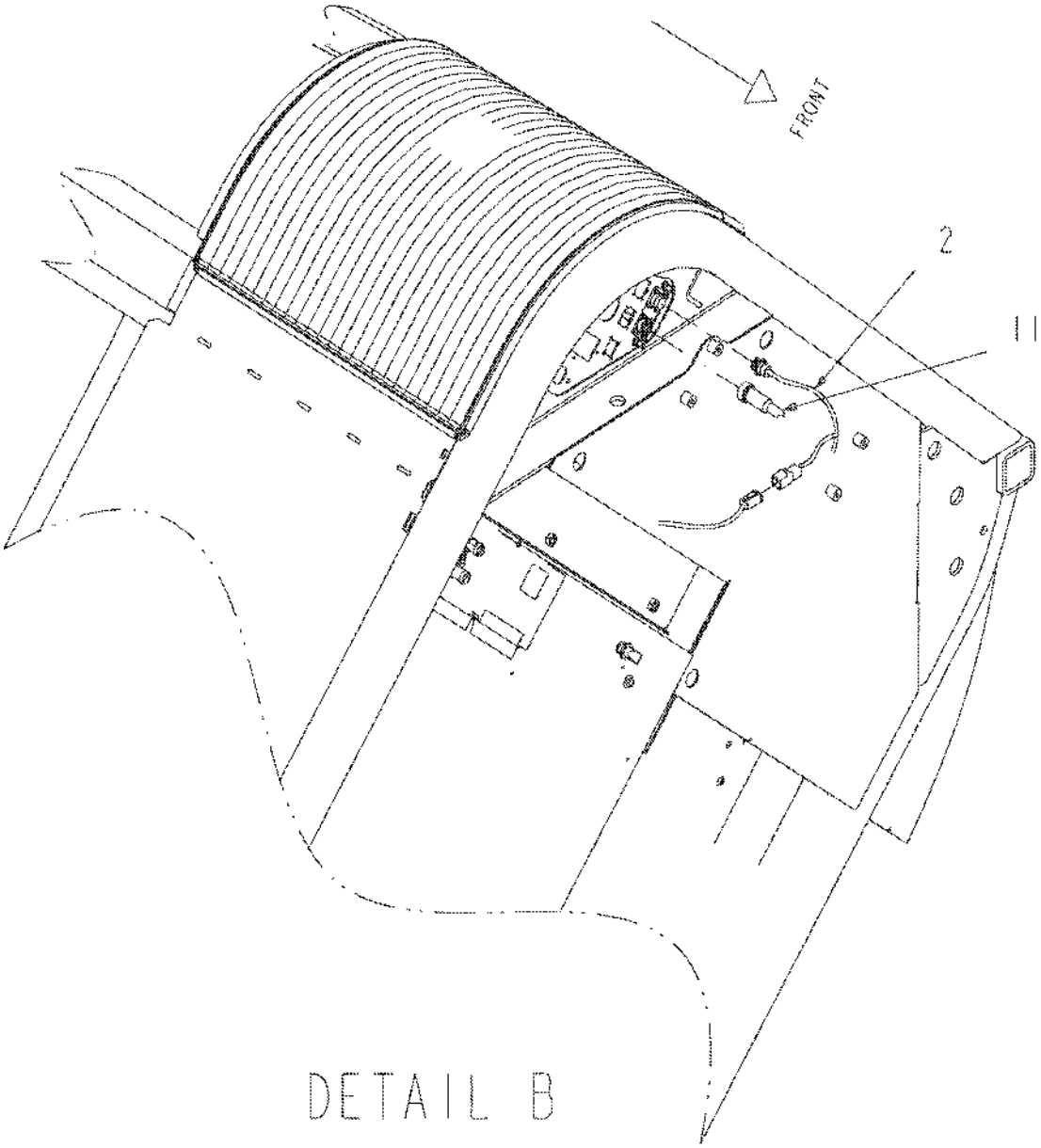

512486D1-02-N992-02.TIF

Copyright © 2007 AGCO Corporation

ITEM	PART #	QTY	DESCRIPTION	COMMENTS
2	AG122288	1	HARNESS-FLCN II(SYS)	
11	AG519088	1	CABLE,ELECTRICAL 4-P 12 FT LONG	

Copyright © 2007 AGCO Corporation

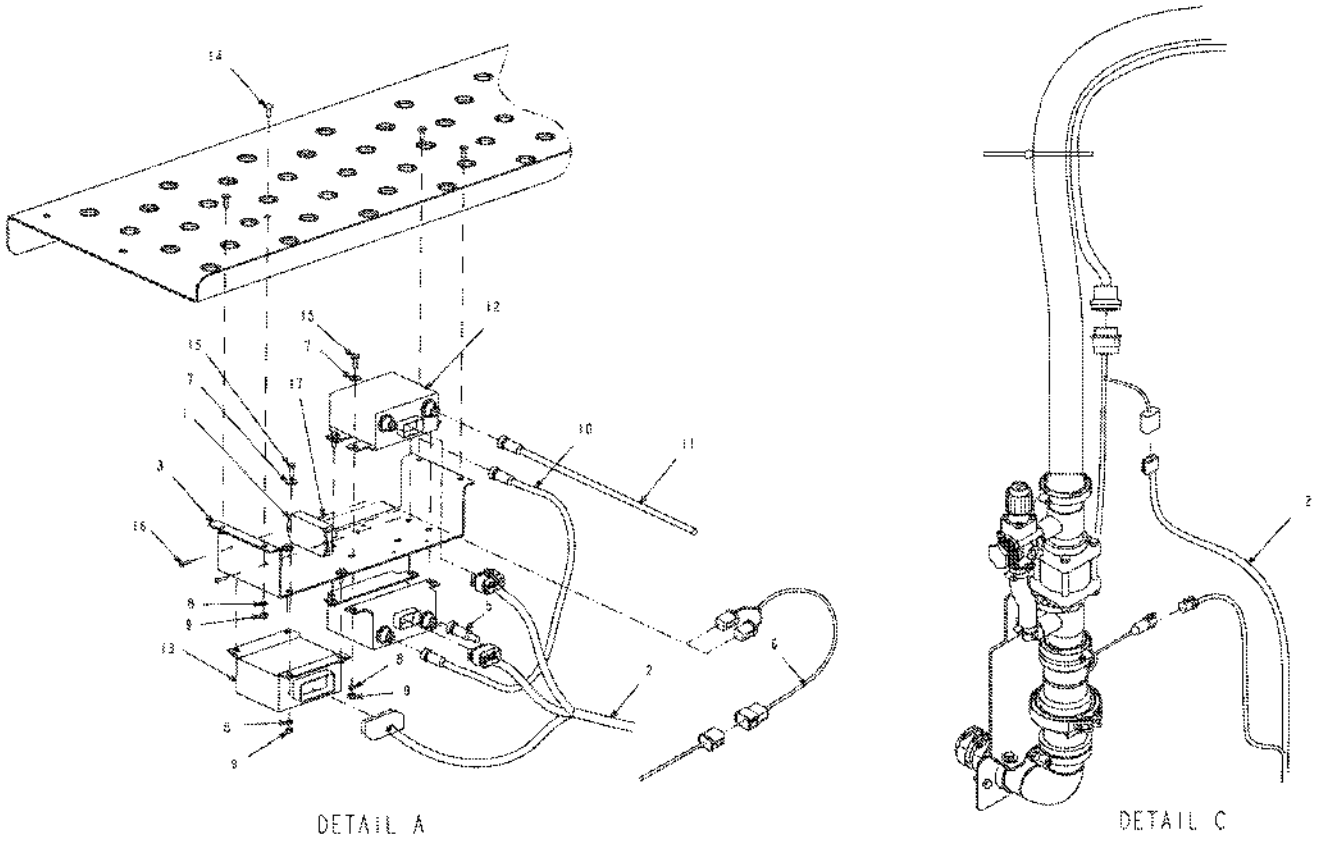

512486D1-02-N992-03.TIF

Copyright © 2007 AGCO Corporation

ITEM	PART #	QTY	DESCRIPTION	COMMENTS
1	AG121750	1	MODULE-RELAY,2 PACK	
2	AG122288	1	HARNESS-FLCN II(SYS)	
3	AG122310	1	BRKT-MTG,NODE/TOGGLE BOX	
5	AG232935	1	TERMINATOR ASM FALCON	
6	511801D1	1	HARNESS-ADAPTER,RVN,RG	
7	AG515121	8	WASHER 0.25 FL SS REG TYPE-B	
8	AG515122	12	WASHER 0.25 LK SS REG	
9	AG515123	12	NUT 0.25-20NC HEX SS REG	
10	AG519086	1	CABLE ELEC 4-P 3 FT FALCON	
11	AG519088	1	CABLE,ELECTRICAL 4-P 12 FT LONG	
12	AG519463	2	NODE BOX ASM FALCON CONTROL	
13	AG521476	1	BOX-CONT,TOGGLE SECT,FLCN	
14	AG523491	4	BOLT 0.25-20NCX 0.75 SS CRG	
15	AG562054	8	BOLT 0.25-20NCX 0.75 SS HHD	
16	AG562067	2	SCREW 8-32X 0.75 MA SS SL RHD	
17	AG563176	2	NUT #8-32NC HEX SS REG NY	

Copyright © 2007 AGCO Corporation

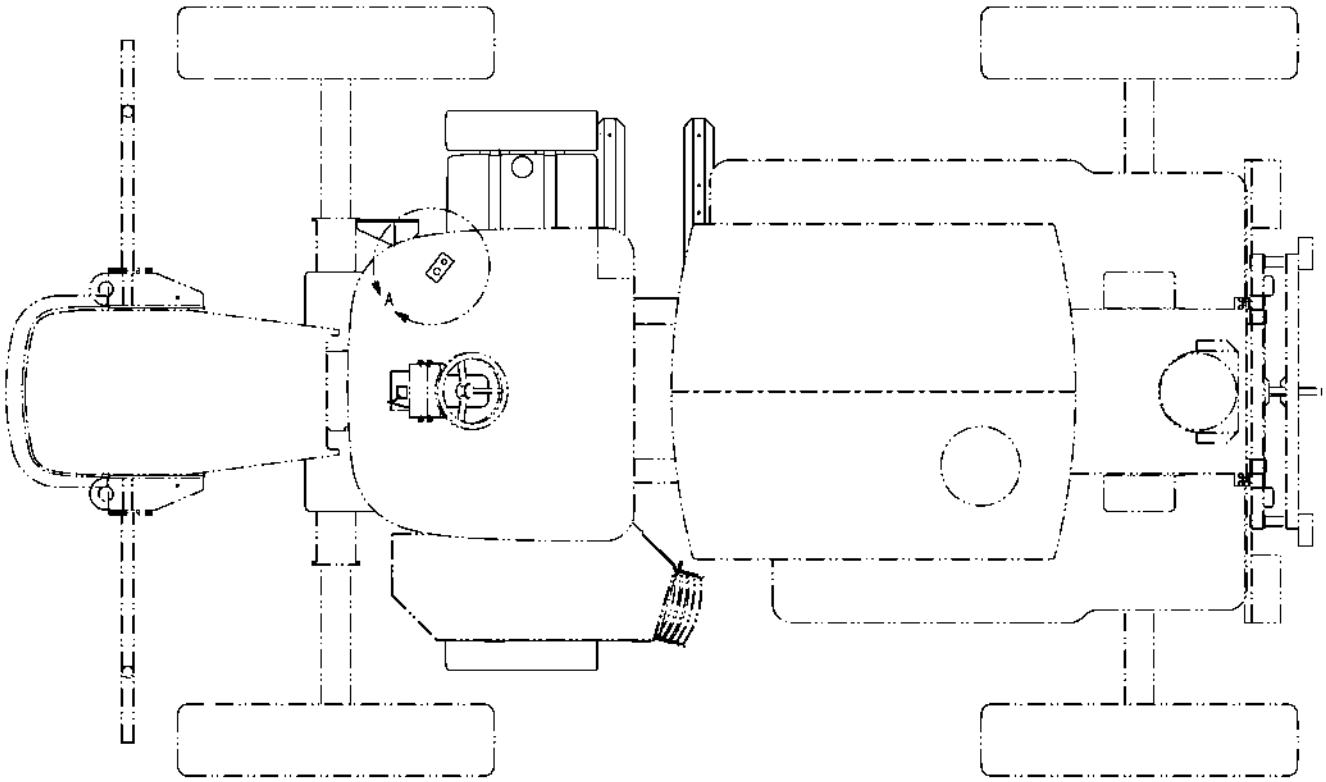

513223D1-01-N655-01.TIF

Copyright © 2007 AGCO Corporation

ITEM	PART #	QTY	DESCRIPTION	COMMENTS
REF			DETAIL IMAGE, PLEASE REFER TO RELATED PAGES FOR MORE INFORMATION	

Copyright © 2007 AGCO Corporation

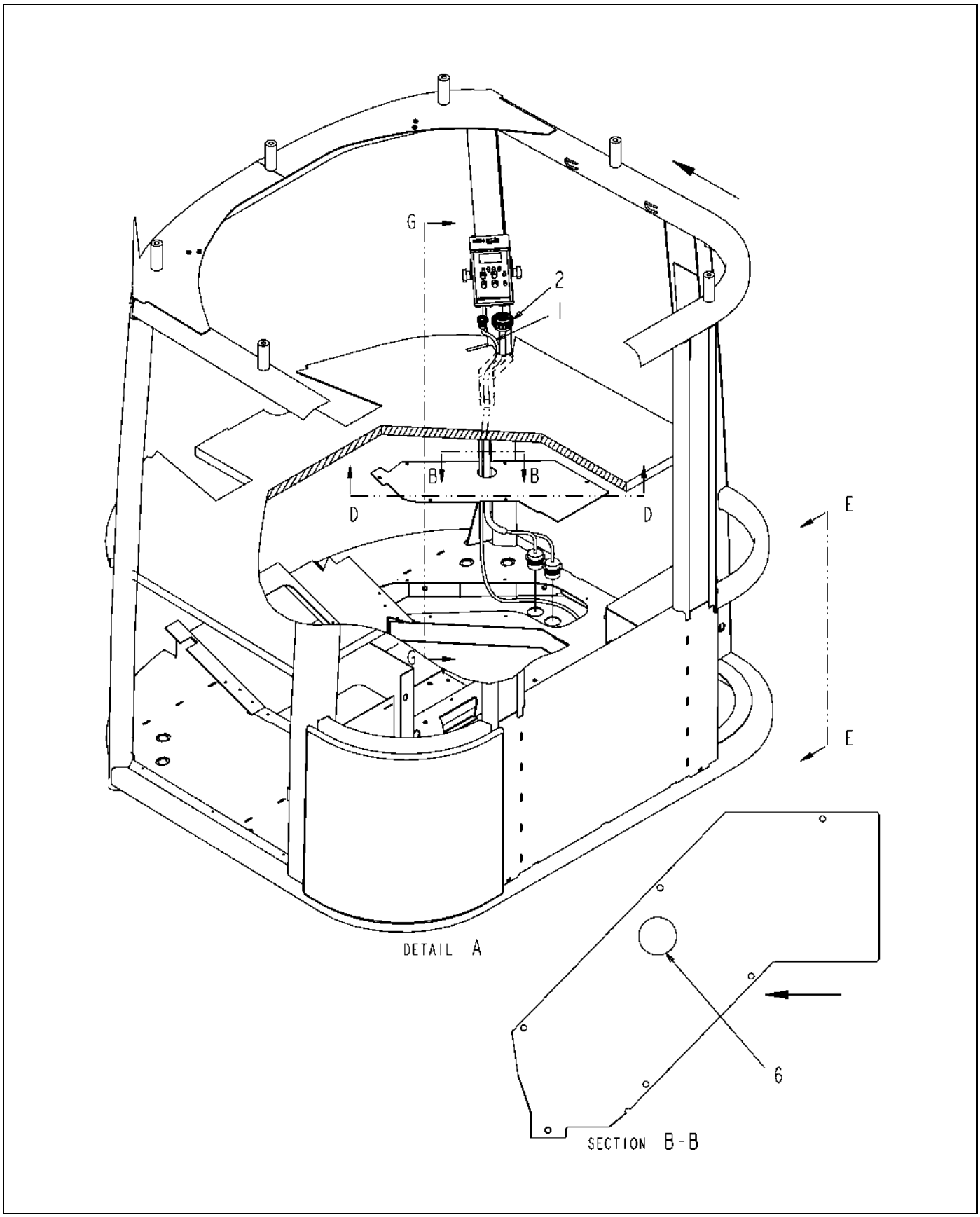

513223D1-01-N655-02.TIF

Copyright © 2007 AGCO Corporation

HARN INSTL-PWR/CTRL,CAB,G2

ITEM	PART #	QTY	DESCRIPTION	COMMENTS
1	508618D1	1	HARN-PWR,AUTOBOOM,UPGRADE CAB	
2	506892D1	1	HARN-CTRL,CAB,AUTOBOOM,G2	
6	AG513654	-	EDGE LINER .19 IN TK MAT PVC [BULK: 0.542 FT]	

Copyright © 2007 AGCO Corporation

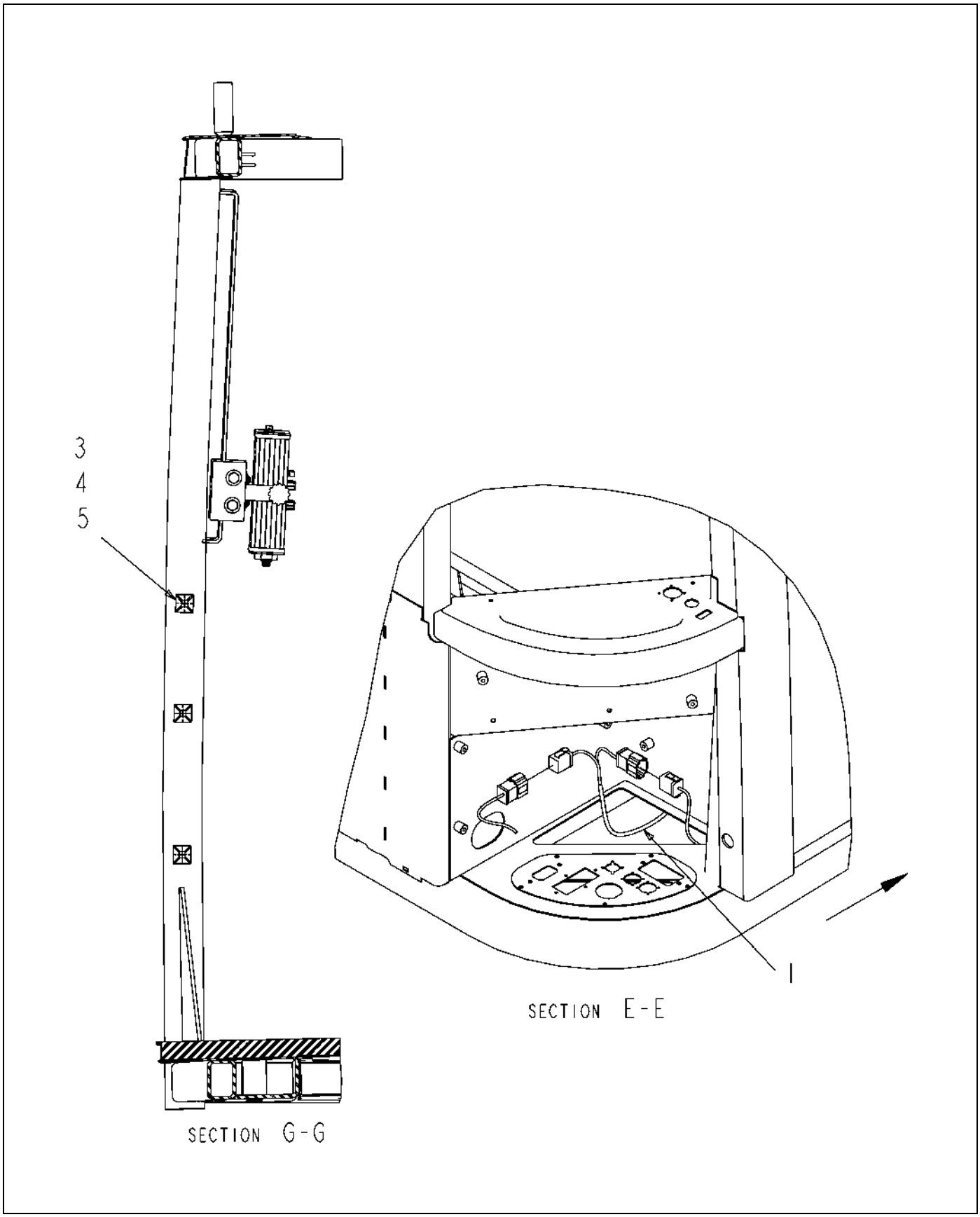

513223D1-01-N655-03.TIF

Copyright © 2007 AGCO Corporation

HARN INSTL-PWR/CTRL,CAB,G2

ITEM	PART #	QTY	DESCRIPTION	COMMENTS
1	508618D1	1	HARN-PWR,AUTOBOOM,UPGRADE CAB	
3	AG553557	3	TIE CABLE 7.37 .06-1.37 BLACK	
4	AG517942	3	MOUNT WIRE TIE ADHESIVE B 4WAY	
5	AG519190	AR	ADHESIVE HOT MELT	

Copyright © 2007 AGCO Corporation

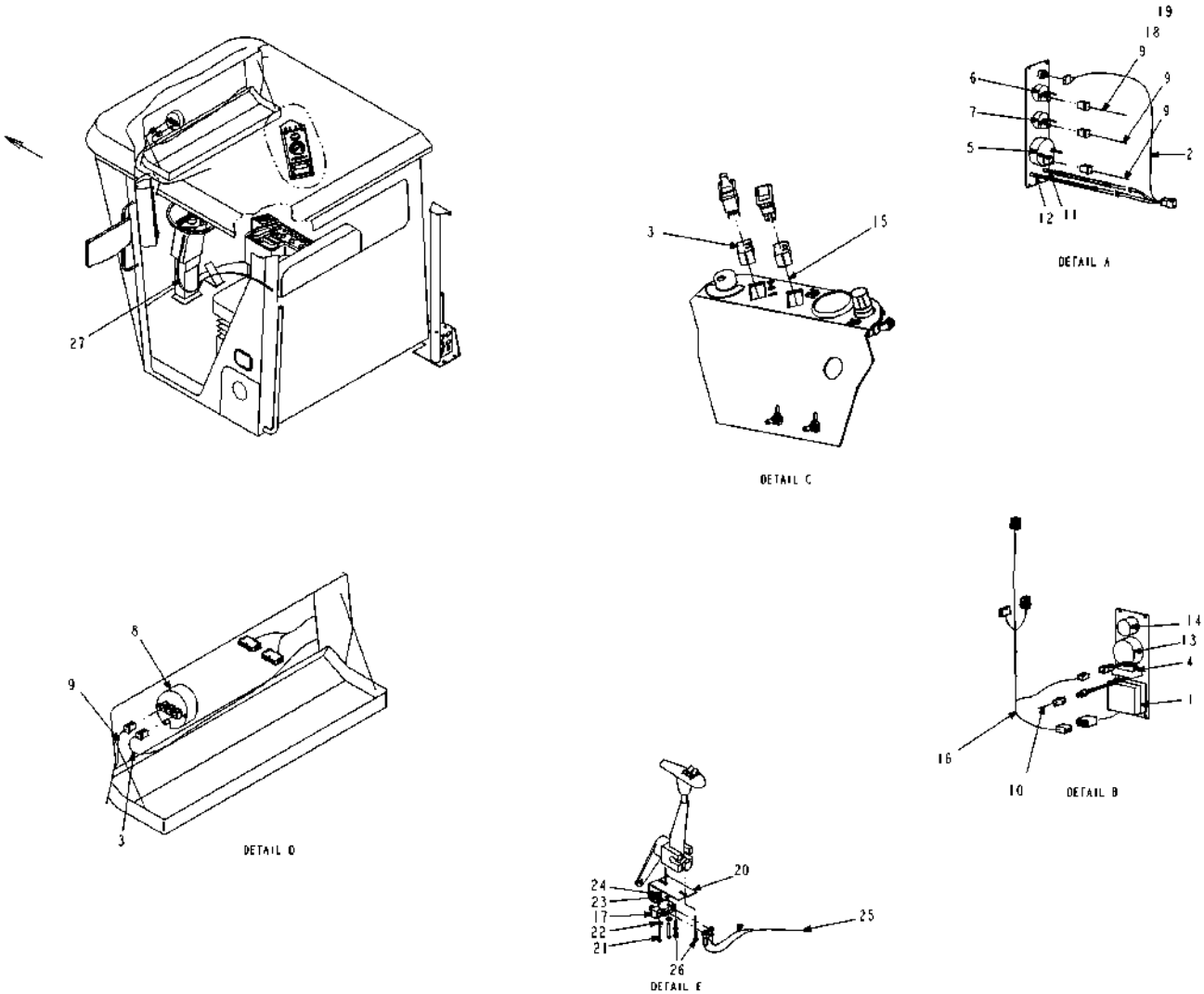

521071D1-01-R086-.TIF

Copyright © 2007 AGCO Corporation

ITEM	PART #	QTY	DESCRIPTION	COMMENTS
1	AG121752	-	DISPLAY-RADAR SPEED,DJ CIP	
2	AG121970	1	HARNESS-WARNING,LIGHTS	
3	AG121716	-	HARNESS-ENGINE ELECTRONICS,CH	
4	AG122134	-	VALVE POSITION INDICATOR	
5	AG122002	-	GAUGE-RPM,CAT	
6	AG122003	-	GAUGE-TEMP,CAT	
7	AG122004	-	GAUGE-PRESS,CAT	
8	AG122005	1	BOX-INTERFACE,CAN	
9	AG122006	3	CABLE-PIGTAIL,GAUGE	
10	AG420246	-	HARNESS-SWITCH ASM	
11	AG121969	-	INDICATOR ASM-PANEL,YELLOW	
12	AG235002	-	INDICATOR ASM PANEL LAMP	
13	AG520671	-	GAUGE-PRESSURE,0-100	
14	AG521016	-	GAUGE-PRESS, 0-150PSI	
15	521070D1	1	HARN-PROD CONT,CAB,8/10X4	
16	AG122232	1	HARNESS-GAUGE PNL,RH	
17	AG520347	1	SWITCH-MICRO,SPDT ROLLER	
18	AG522410	1	TERMINATOR-PLUG,3WAY,J1939	
19	AG122382	1	TERMINATOR-MA/FE	
20	AG122388	1	BRKT-MTG,SWITCH,REVERSE	
21	AG517219	2	SCREW #6-32X1.25 MA RDHD SLTZN	
22	AG517158	2	WASHER #6 FL ZN REG TYPE-B	
23	AG517159	2	WASHER #6 LK ZN REG	
24	AG517157	2	NUT #6-32NC HEX ZN REG	
25	AG124868	-	HARNESS-CHASSIS,864	
26	AG551287	2	SCREW 10-16X.50 TAP ZN HHD (D)	
84	512699D1	-	FLEX-GUARD, 2.0, LCP [BULK: 1 FT]	

Copyright © 2007 AGCO Corporation

SYS INSTL-BCO,2.00 BTFY,AIR 7-1
BOX/RELAY INSTL-AIR,HI VOLUME 7-2
BOX ASM-AIR,HIGH VOLUME 7-3
BRKT ASM-MTG,AIR BOX,MSO,AIR 7-4
BOX ASM-AIR,BCO,2.00 BTFL 7-5
VALVE-QUICK EXHAUST,POLY 7-6
BRKT ASM-MTG,AIR BOX,BCO 7-7
BOX ASM-AIR,BOOM CLEAN OUT 7-8

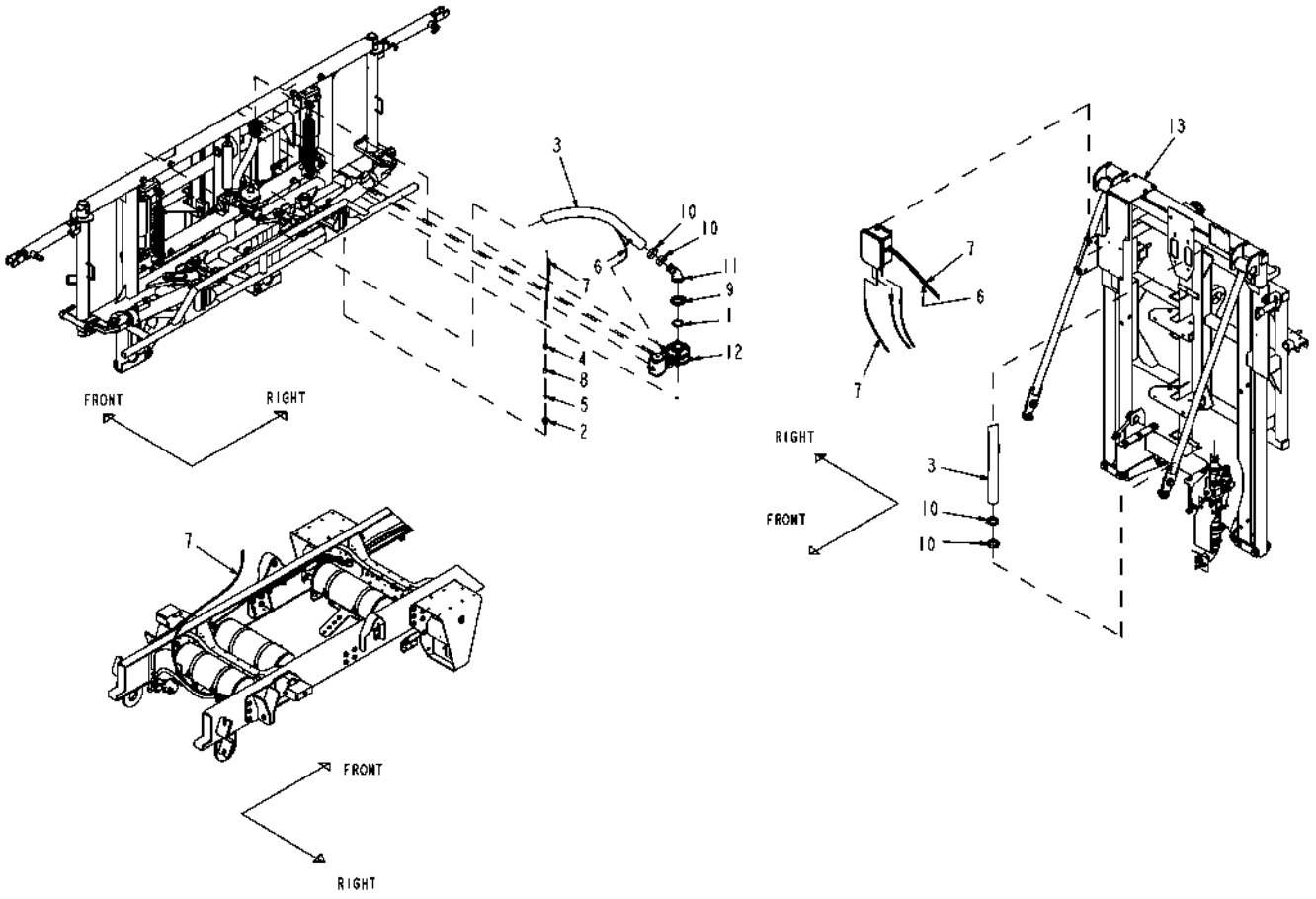

508755D1-01-N428-.TIF

Copyright © 2007 AGCO Corporation

SYS INSTL-BCO,2.00 BTFY,AIR

ITEM	PART #	QTY	DESCRIPTION	COMMENTS
1	AG000773	1	GASKET 2.00 EPDM	
2	AG051573	1	BSHG-RDCR,HEX,0.75X0.25NPT,PP	
3	AG511021	-	TUBING 0.25 OD NYLON BLACK [BULK: 7.084 FT]	
4	AG511722	-	HOSE-2.00,WIRE BRAID,EPDM [BULK: 6.084 FT]	
5	AG516481	1	CONNECTOR M 0.38X0.25NPT AUTLK	
6	AG517999	1	VALVE CHECK 0.25NPTF 3000PSI	
7	AG518847	-	TUBING H.D.P.E. 3/8 IN [BULK: 21.334 FT]	
8	AG519336	1	COUPLING PIPE 0.25 NPT 304SS	
9	AG522895	1	CLAMP-WORM SCREW,2.00,SS	
10	AG561630	4	CLAMP 2.28-2.59HOSE VOSS-250SS	
11	507731D1	1	BARB-45D,2.00FP FLGX2.00 HOSE	
12	508756D1	1	VALVE/BRKT ASM-MAIN,2.00 BTFL	SEE PAGE 4-30
13	511736D1	1	BRKT ASM-MTG,AIR BOX,MSO,AIR	SEE PAGE 7-4

Copyright © 2007 AGCO Corporation

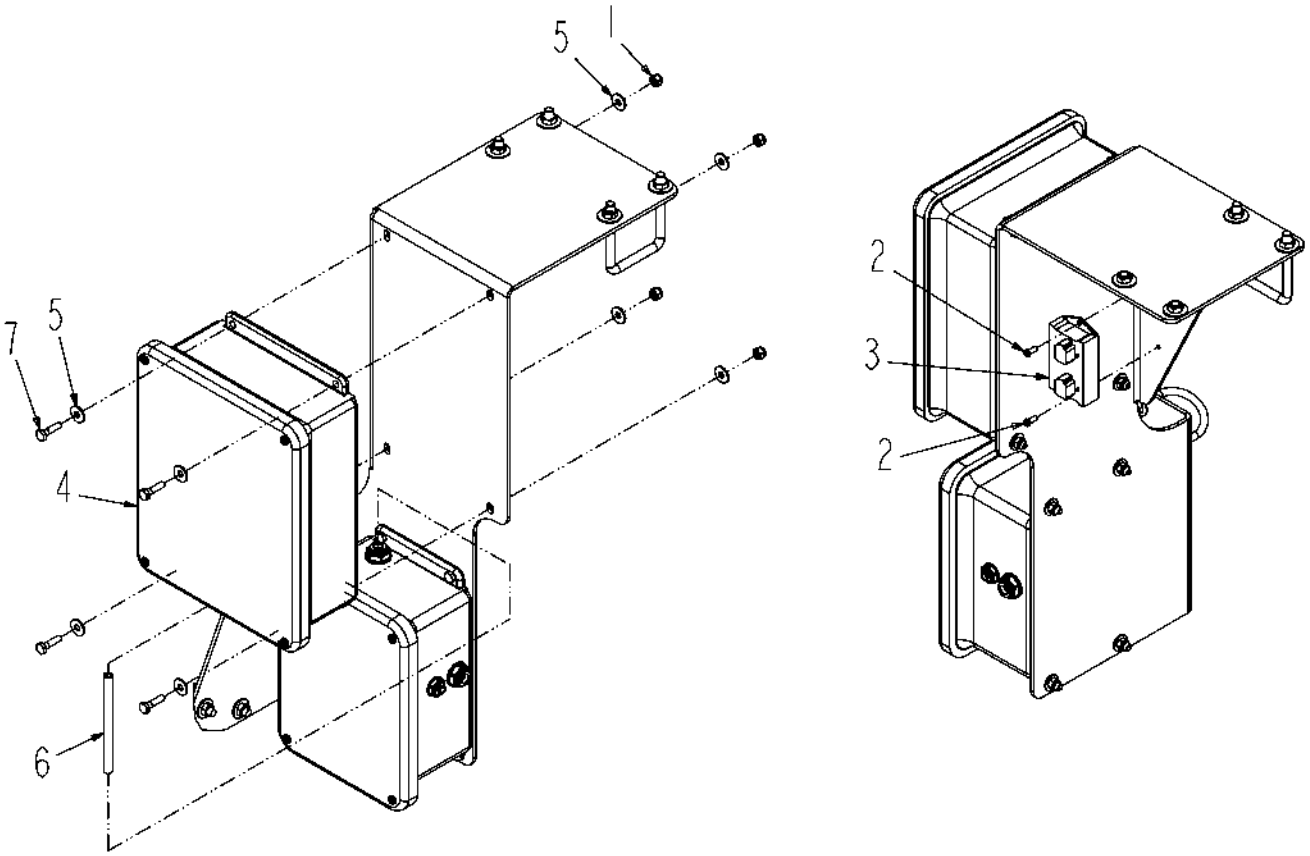

512375D1-01-N428-.TIF

Copyright © 2007 AGCO Corporation

BOX/RELAY INSTL-AIR,HI VOLUME

ITEM	PART #	QTY	DESCRIPTION	COMMENTS
1	AG027275	4	NUT 0.25-20NC HEX SS REG NY	
2	AG029293	2	SCREW 10-24X0.50 TAP IWHHD	
3	AG121750	1	MODULE-RELAY,2 PACK	
4	AG122561	1	BOX ASM-AIR,HIGH VOLUME	SEE PAGE 7-3
5	AG515121	8	WASHER 0.25 FL SS REG TYPE-B	
6	AG518847	-	TUBING H.D.P.E. 3/8 IN [BULK: 0.417 FT]	
7	AG562064	4	BOLT 0.25-20NCX 1.00 SS HHD	

Copyright © 2007 AGCO Corporation

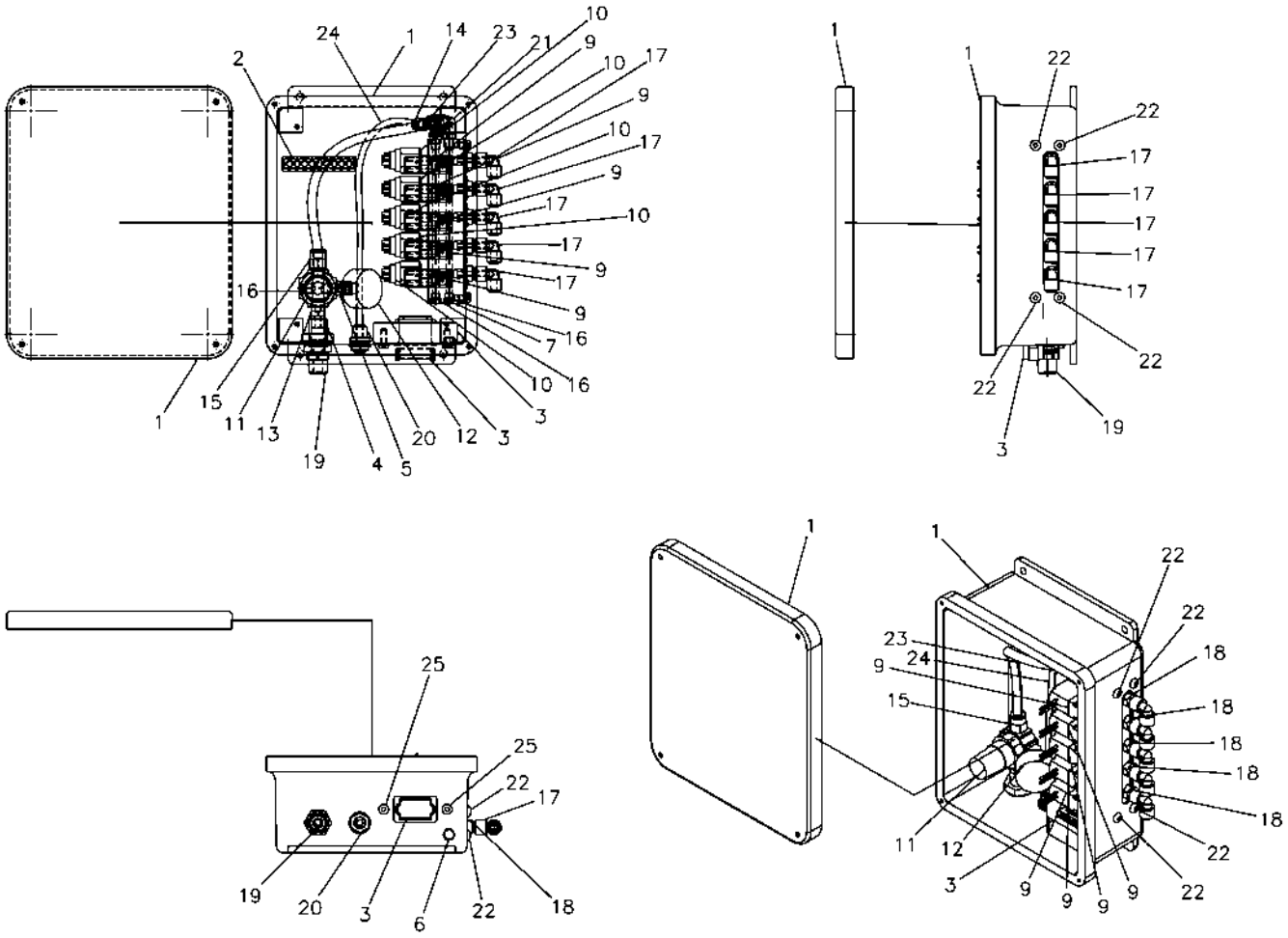

122561.TIF

Copyright © 2007 AGCO Corporation

BOX ASM-AIR,HIGH VOLUME

ITEM	PART #	QTY	DESCRIPTION	COMMENTS
1	AG726847	1	ENCLOSURE/AIR BOX HV	
2	AG726846	1	STRIP/TERMINAL	
3	AG521959	1	CONN-RCPT,12WAY,A INDEX	
4	AG726848	1	BULKHEAD/BRASS	
5	AG726849	1	ELBOW/45 AIR	
6	AG726845	1	MUFFLER/AIR	
7	AG726844	1	MANIFOLD/AIR VALVE	
8	AG726843	1	GASKET/AIR VALVE	
9	AG518625	5	VALVE SOLENOID	[A]
10	AG520970	5	SWITCH-AIR,NORMALLY CLOSED	
11	AG519079	1	REGULATOR MINIATURE 0-125PSI	[B]
12	AG726850	1	GAUGE/AIR	
13	AG726841	1	NIPPLE/HEX	
14	AG726839	1	ELBOW/SWIVEL MALE	
15	AG726838	1	CONNECTOR/MALE	
16	AG609024	3	PLUG-PIPE,0.12NPT,HEX SOC HD	
17	AG516229	5	ELBOW,UNION 0.25TUBE AUTO LCK	
18	AG516231	5	STEM MALE TUBE 0.25X0.12	
19	AG516481	1	CONNECTOR M 0.38X0.25NPT AUTLK	
20	AG518668	1	UNION BULKHEAD 0.25 TUBE	
21	AG726837	1	ELBOW / SWL	
22	AG562047	4	BOLT 0.25-20NCX 0.50 SS HHD	
23	AG514288	-	TUBING-THERMOPLASTIC,J844-B, [BULK: 1 FT]	
24	AG511021	-	TUBING 0.25 OD NYLON BLACK [BULK: 1 FT]	
25	AG562327	2	BOLT M6-1.00X20MM G8.8 ZN HHD	
	FOOTNOTE [A]		VALVE BODY ONLY AG723367	
	FOOTNOTE [B]		REPAIR KIT AG609851	
	FOOTNOTE [B]		REGULATOR ONLY - AG120745	

Copyright © 2007 AGCO Corporation

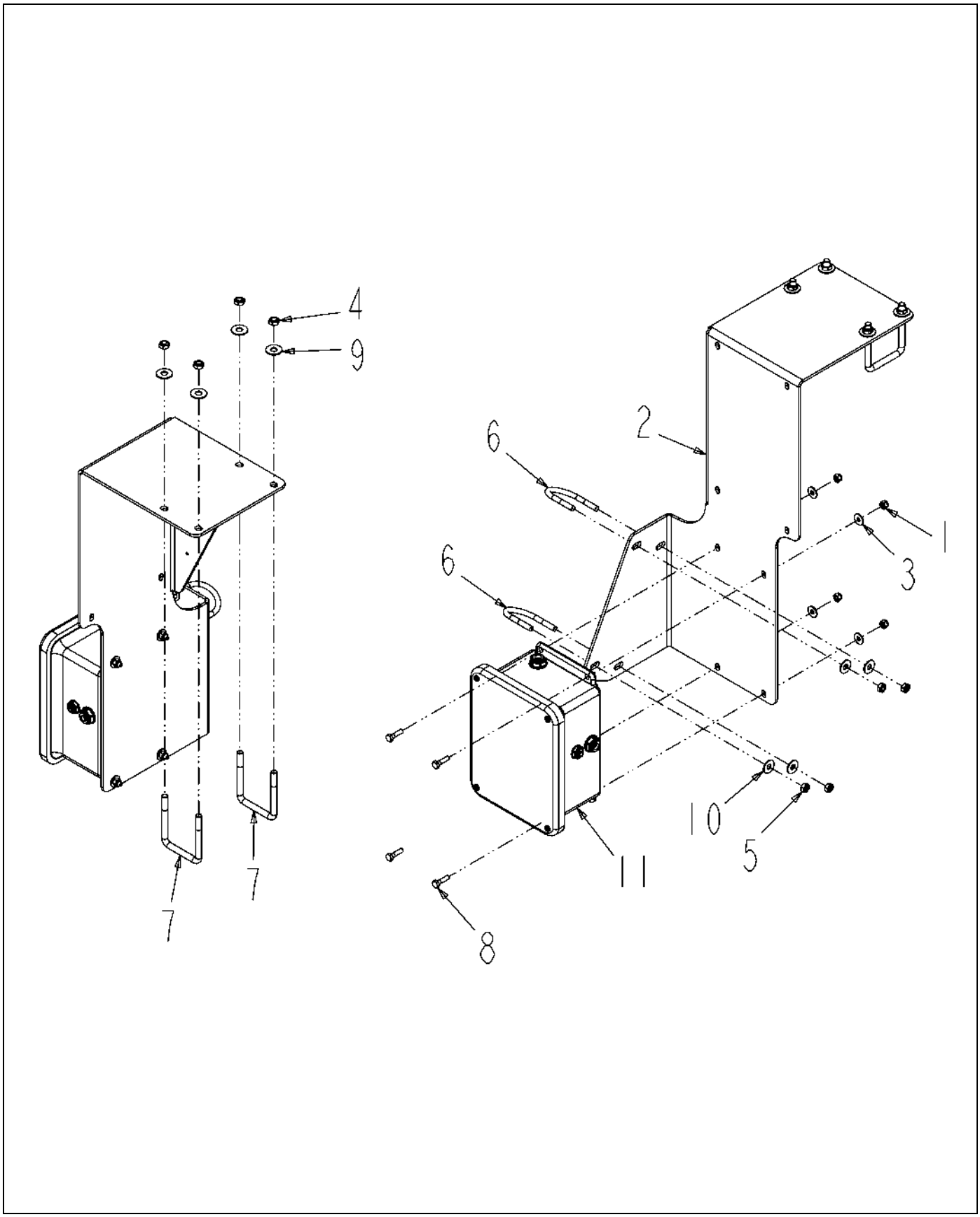

511736D1-01-N428-.TIF

Copyright © 2007 AGCO Corporation

BRKT ASM-MTG,AIR BOX,MSO,AIR

ITEM	PART #	QTY	DESCRIPTION	COMMENTS
1	AG027275	4	NUT 0.25-20NC HEX SS REG NY	
2	AG122611	1	BRKT-MTG,AIR BOX, BCO/HV	
3	AG515121	4	WASHER 0.25 FL SS REG TYPE-B	
4	AG515140	4	NUT 0.37-16NC HEX SS HVY NY	
5	AG516403	4	NUT 0.31-18NC HEX SS REG NY	
6	AG518292	2	BOLT-U .31-18X2.00X 2.69 RD SS	
7	AG524292	2	BOLT-U,.38-16,2.56X3.50,SQ,SS	
8	AG562064	4	BOLT 0.25-20NCX 1.00 SS HHD	
9	AG562073	4	WASHER 0.37 FL SS REG TYPE-B	
10	AG562074	4	WASHER 0.31 FL SS REG TYPE-B	
11	508757D1	1	BOX ASM-AIR,BCO,2.00 BTFL	SEE PAGE 7-5

Copyright © 2007 AGCO Corporation

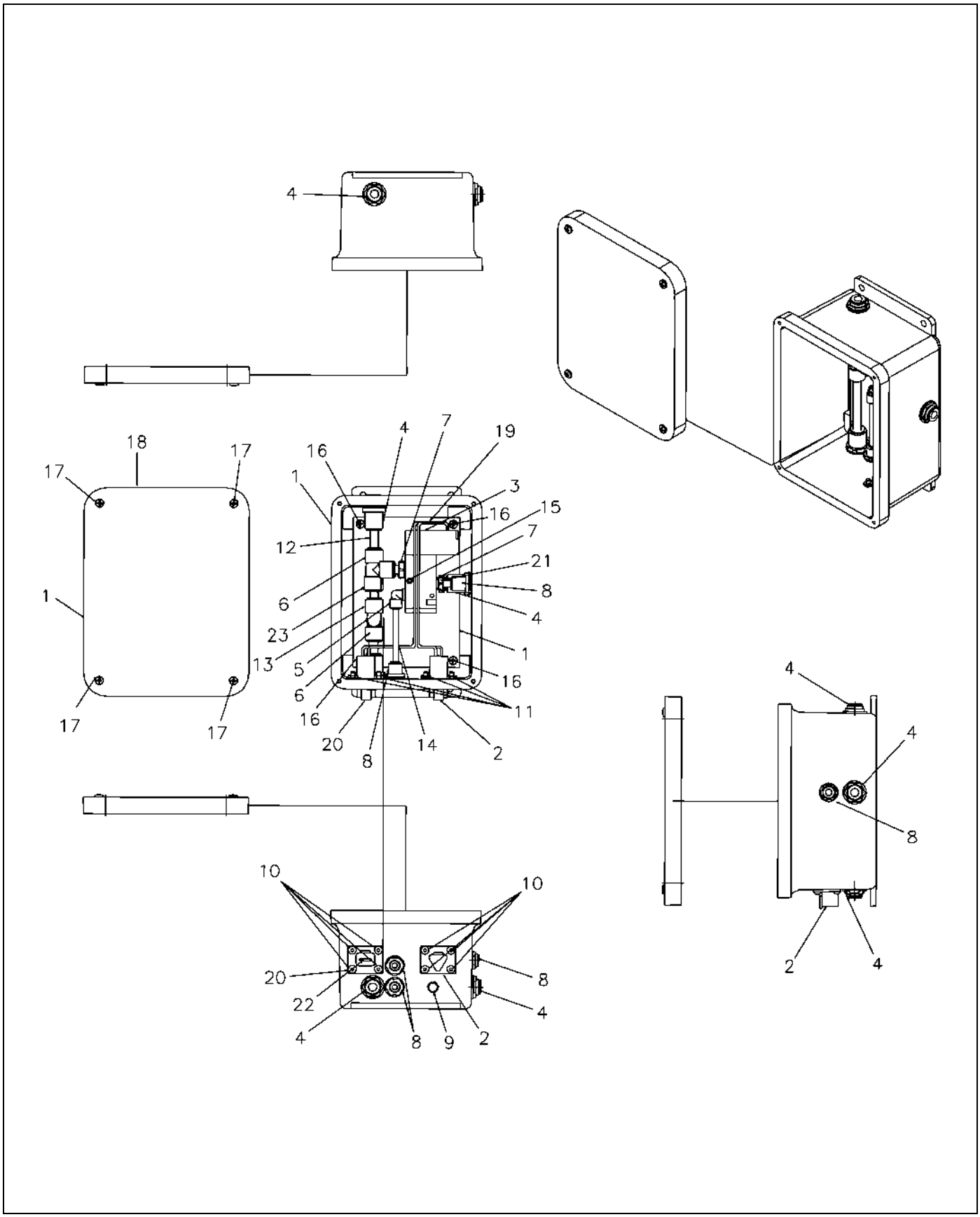

508757D1.TIF

Copyright © 2007 AGCO Corporation

BOX ASM-AIR,BCO,2.00 BTFL

ITEM	PART #	QTY	DESCRIPTION	COMMENTS
REF	AG523078	1	LOCK-RCPT,4WAY	
REF	AG521024	1	LOCK-RCPT,3WAY,18-14GA	
REF	AG515707	4	TERMINAL-PIN,16-18GA,NICKEL	
2	AG522335	1	CONN-RCPT,3WAY,W/BOOT,BULKHEAD	
3	AG331601	2	AIR VALVE	
4	AG520939	3	UNION-BULKHEAD,.38 TUBE	
5	AG516643	2	ELBOW 90D 0.25TUBE X0.25NPT	
6	AG516478	2	TEE UNION 0.37 TUBE AUTO LOCK	
7	AG517851	3	STEM MALE TUBE 0.37X0.25 NPT	
8	AG518668	3	UNION BULKHEAD 0.25 TUBE	
9	AG726845	1	MUFFLER/AIR	
13	WR124586	1	ELBOW PLUG IN .38T X .38T	
20	AG331602	1	4 PIN/FLANGE CONNECTOR	
21	AG516230	1	STEM MALE TUBE 0.25 X 0.25	
23	AG516476	1	ELBOW UNION 0.37 TUBE AUTOLOCK	

Copyright © 2007 AGCO Corporation

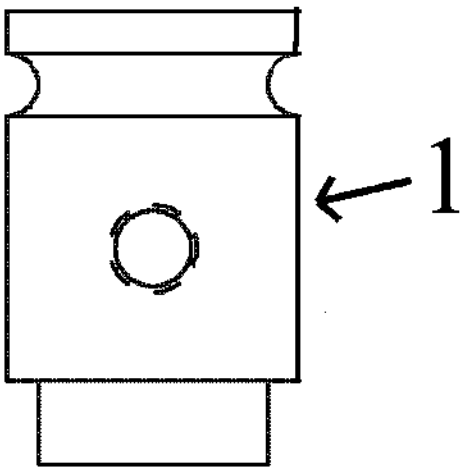

519314-C.tif

Copyright © 2007 AGCO Corporation

VALVE-QUICK EXHAUST,POLY

ITEM	PART #	QTY	DESCRIPTION	COMMENTS
1	AG713710	-	REPAIR KIT	

Copyright © 2007 AGCO Corporation

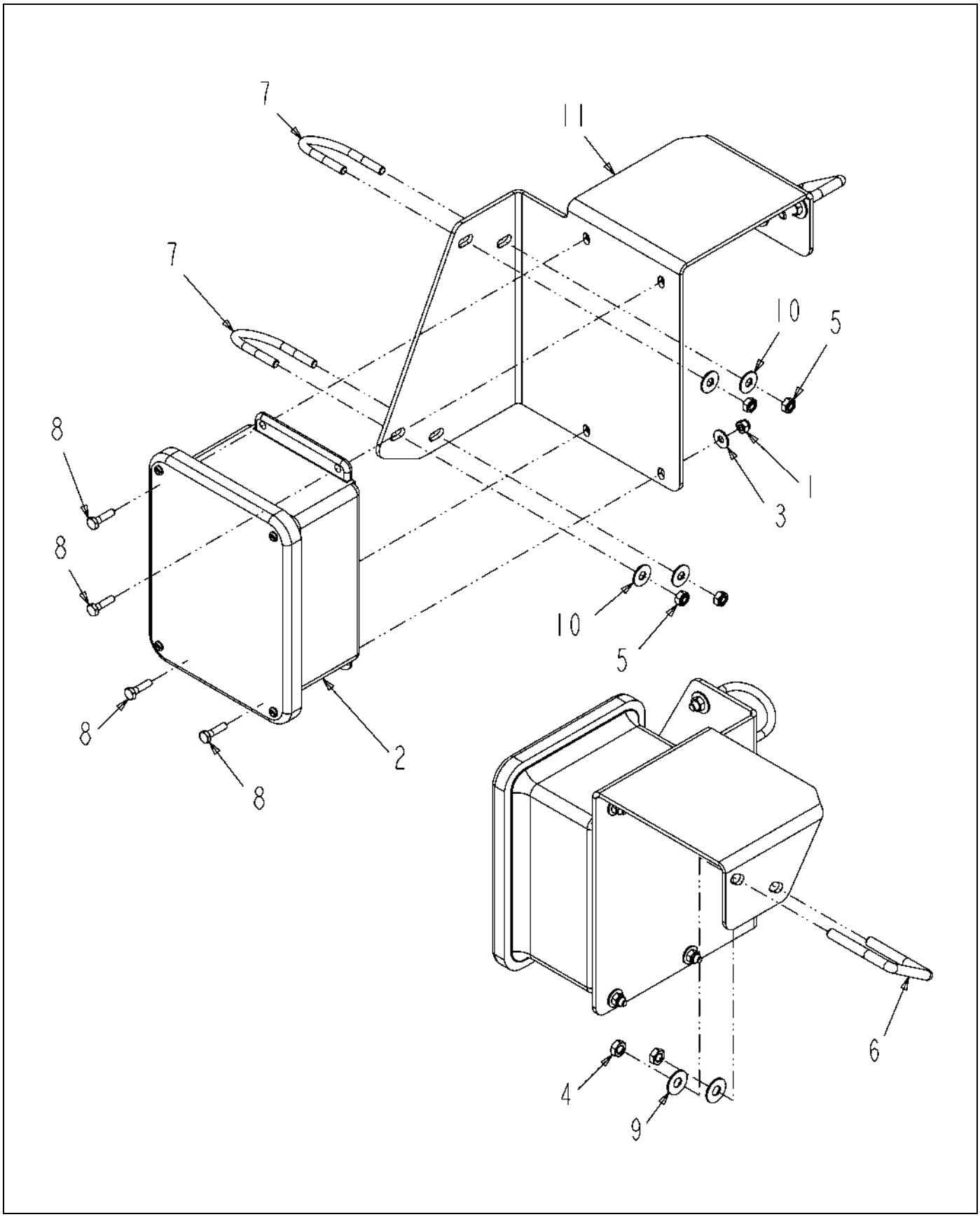

514996D1-01-N980-.TIF

Copyright © 2007 AGCO Corporation

BRKT ASM-MTG,AIR BOX,BCO

ITEM	PART #	QTY	DESCRIPTION	COMMENTS
1	AG027275	4	NUT 0.25-20NC HEX SS REG NY	
2	AG122562	1	BOX ASM-AIR,BOOM CLEAN OUT	SEE PAGE 7-8
3	AG515121	4	WASHER 0.25 FL SS REG TYPE-B	
4	AG515140	2	NUT 0.37-16NC HEX SS HVY NY	
5	AG516403	4	NUT 0.31-18NC HEX SS REG NY	
6	AG516992	1	BOLT-U .38-16X2.12X 3.06SQ SS	
7	AG518292	2	BOLT-U .31-18X2.00X 2.69 RD SS	
8	AG562064	4	BOLT 0.25-20NCX 1.00 SS HHD	
9	AG562073	2	WASHER 0.37 FL SS REG TYPE-B	
10	AG562074	4	WASHER 0.31 FL SS REG TYPE-B	
11	514994D1	1	BRKT-MTG,AIR BOX,BCO/HV	

Copyright © 2007 AGCO Corporation

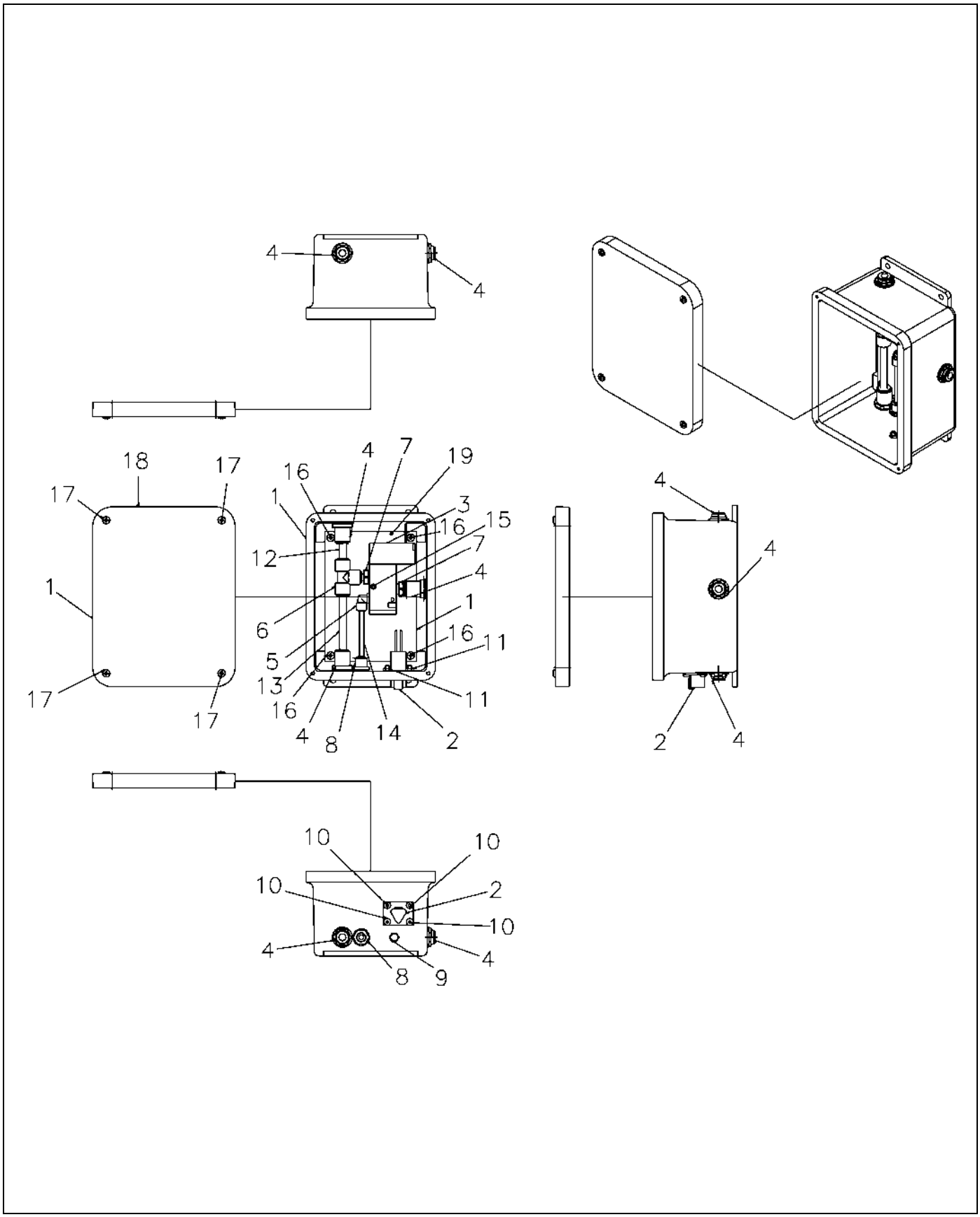

122562-A.TIF

Copyright © 2007 AGCO Corporation

BOX ASM-AIR,BOOM CLEAN OUT

ITEM	PART #	QTY	DESCRIPTION	COMMENTS
1	NS	1	NON-SERVICEABLE PART	
2	AG522335	1	CONN-RCPT,3WAY,W/BOOT,BULKHEAD	
3	AG726952	1	VALVE / AIR	[A]
4	AG520939	3	UNION-BULKHEAD,.38 TUBE	
5	AG516643	1	ELBOW 90D 0.25TUBE X0.25NPT	
6	AG516478	1	TEE UNION 0.37 TUBE AUTO LOCK	
7	AG517851	2	STEM MALE TUBE 0.37X0.25 NPT	
8	AG518668	1	UNION BULKHEAD 0.25 TUBE	
9	AG726845	1	MUFFLER/AIR	
10	NS	4	NON-SERVICEABLE PART	
11	NS	4	NON-SERVICEABLE PART	
12	AG514288	-	TUBING-THERMOPLASTIC,J844-B, [BULK: 1 FT]	
13	AG514288	-	TUBING-THERMOPLASTIC,J844-B, [BULK: 1 FT]	
14	AG511021	-	TUBING 0.25 OD NYLON BLACK [BULK: 1 FT]	
15	AG562199	1	SCREW 8-32X1.25 ZN RD HD	
16	AG561637	4	SCREW 10-32X0.37MAC RDHD SL ZN	
17	AG517975	4	SCREW 10-24NCX0.50 RD HD SS	
18	NS	1	NON-SERVICEABLE PART	
19	NS	1	NON-SERVICEABLE PART	
	FOOTNOTE [A]		AG721482 REPAIR KIT	
	FOOTNOTE		[721482] - VALVE REPAIR KIT	

Copyright © 2007 AGCO Corporation

OPT-FOAM MARKER,STD,LIQ,RG	8-1
TANK ASM-FOAM,SS,36.5GL	8-2
VALVE REWORK - SOLENOID	8-3
VALVE SOLENOID	8-4
CTRL ASM-FOAM MARKER,LIQ,RC	8-5
FOAM MARKER ASM-BOOM,90FT	8-6
FOAM MARKER ASM-BOOM,100FT	8-7
FOAM MARKER ASM-BOOM, 90FT	8-8
FOAM MARKER ASM-BOOM, 100FT	8-9
FOAM MARKER ASM-10X80X5	8-10
FOAM MARKER ASM-15X80X5	8-11
FOAM MARKER ASM-20X80X5	8-12
F/M ASM-BOOM,120FT	8-13
FOAM MARKER ASM-BOOM 90FT	8-14
FOAM MARKER ASM-BOOM 100FT	8-15
FOAM MARKER ASM-BOOM 90FT	8-16
FOAM MARKER ASM-BOOM 100FT	8-17

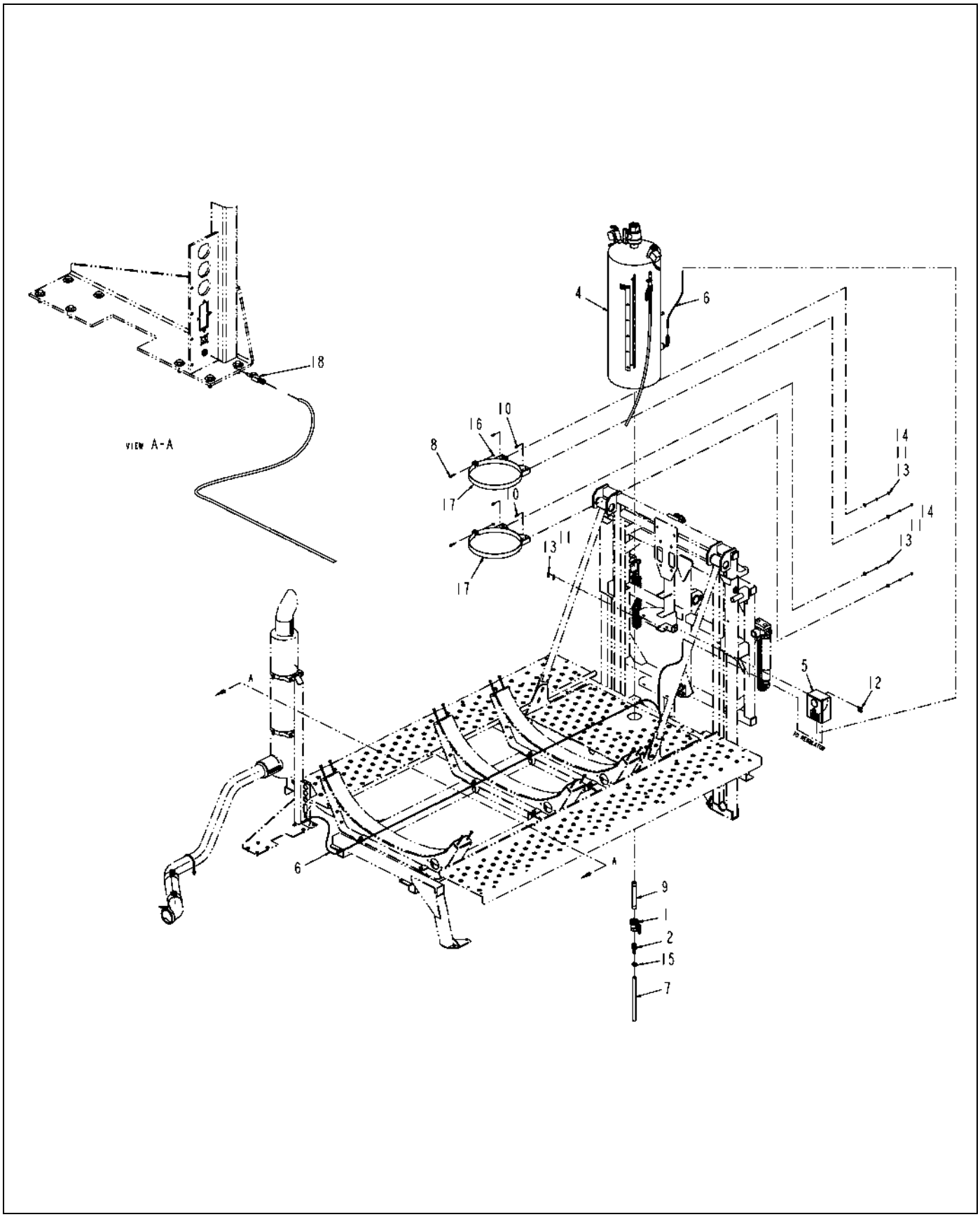

135918-03-N601-.tif

Copyright © 2007 AGCO Corporation

OPT-FOAM MARKER,STD,LIQ,RG

ITEM	PART #	QTY	DESCRIPTION	COMMENTS
1	AG050206	1	VALVE 1.00 NPT BALL UNION POLY	SEE PAGE 2-23
2	AG051182	1	BARB-HOSE,1.00MNPTX0.75BARB,PP	
3	AG129187	-	PIPE SEALANT-FLEX BLACK	
4	AG136118	1	TANK ASM-FOAM,SS,36.5GL	SEE PAGE 8-2
5	AG136120	1	CTRL ASM-FOAM MARKER,LIQ,RC	SEE PAGE 8-5
6	AG511021	-	TUBING 0.25 OD NYLON BLACK [BULK: 21.084 FT]	
7	AG512141	-	HOSE 0.75 CLEAR VINYL [BULK: 0.417 FT]	
8	AG515277	2	BOLT 0.37-16NCX 1.75 S.S. HHD	
9	AG518218	1	NIPPLE 1.00NPTX 8.00 304SS	
10	AG550175	4	BOLT 0.37-16NCX 1.00 G5 ZN HHD	
11	AG550191	6	WASHER 0.37 LK ZN REG	
12	AG550515	2	BOLT 0.37-16NCX 1.25 G5 ZN HHD	
13	AG550825	6	NUT 0.37-16NC HEX ZN REG	
14	AG551007	4	WASHER 0.37 FL ZN REG TYPE-B	
15	AG561229	1	CLAMP 0.68-1.25 HOSE 12HS	
16	AG562123	2	NUT 0.37-16NC HEX SS C-LK	
17	AG600830	2	BAND ASM-AIR CLEANER 16 IN DIA B	
18	AG700081	1	INSERT 0.25SS PNEU CPLR 513822	

Copyright © 2007 AGCO Corporation

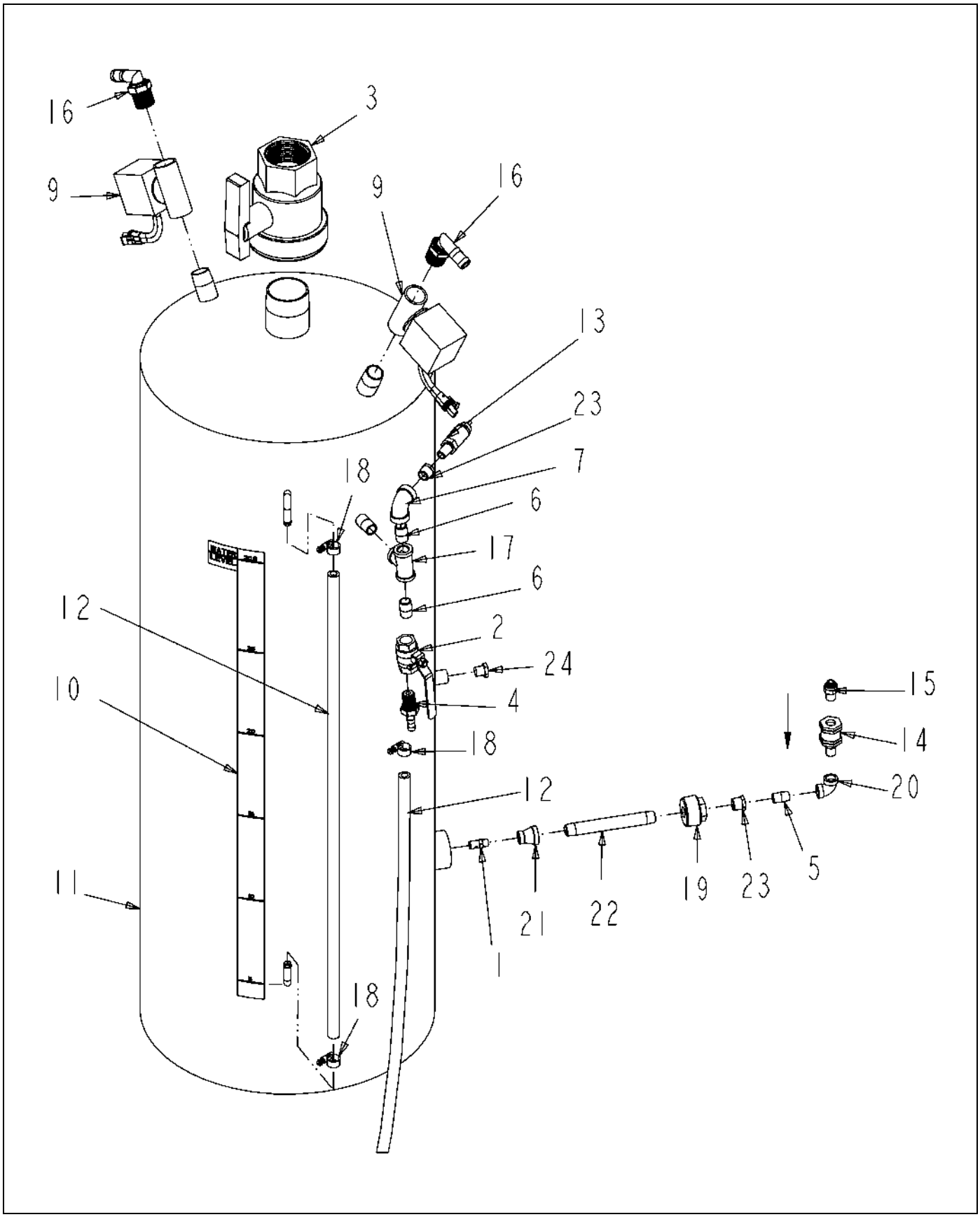

136118-02-R101-.TIF

Copyright © 2007 AGCO Corporation

TANK ASM-FOAM,SS,36.5GL

ITEM	PART #	QTY	DESCRIPTION	COMMENTS
1	AG001260	1	FLOODJET 1/8KSS5	
2	AG007785	1	VALVE STAINLESS STEEL 0.375	
3	AG050209	1	VALVE 2.00 NPT BALL UNION POLY	
4	AG051174	1	BARB-HOSE,0.37MNPTX0.37BARB,PP	
5	AG051740	1	NIPPLE 0.25NPTX 0.87CLS 304SS	
6	AG051901	2	NIPPLE 0.37NPTX 1.00CLS 304SS	
7	AG051934	1	ELBOW 90D 0.37 304SS	
8	AG129187	-	PIPE SEALANT-FLEX BLACK	
9	AG234240	2	VALVE REWORK - SOLENOID	SEE PAGE 8-3
10	AG402427	1	DECAL TANK CAPACITY (36GAL)	
11	AG405382	1	TANK FOAM MARKER 36 GAL SS	
12	AG512362	-	HOSE 0.38 CLEAR VINYL [BULK: 8.250 FT]	
13	AG512370	1	VALVE SAFETY 45 PSI	
14	AG514243	1	VALVE CHECK 0.25NPT	
15	AG516233	1	CONN STR .25 TUBE X .25 NPT AL	
16	AG518413	2	FITTING-90DX.75NPTX.62MHB PP	
17	AG521846	1	TEE-.38 FNPT,SS	
18	AG561227	3	CLAMP 0.44-0.78 HOSE 6HS	
19	AG561508	1	BUSHG 1.25X 0.37 HX DBL TPD SS	
20	AG562693	1	ELBOW 90DEG 1/4 NPT 304SS	
21	AG563038	1	COUPLING RED .12X .37NPT 304SS	
22	AG563039	1	NIPPLE 0.37NPTX 5.00 304SS	
23	AG563055	2	BUSHING .38MA NPTX .25FE NPT	
24	AG710638	1	PLUG-PIPE,HEX,0.25NPT,304SS	

Copyright © 2007 AGCO Corporation

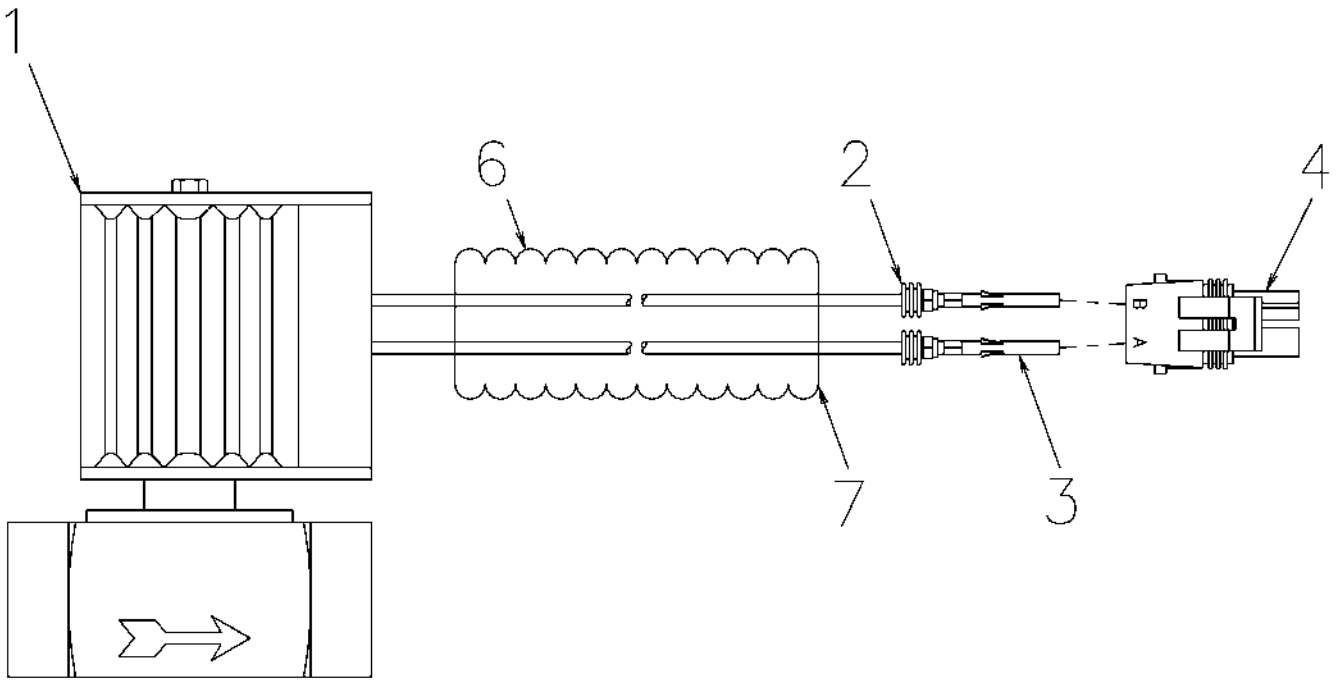

234240-D.TIF

Copyright © 2007 AGCO Corporation

VALVE REWORK - SOLENOID

ITEM	PART #	QTY	DESCRIPTION	COMMENTS
1	AG514014	1	VALVE SOLENOID	SEE PAGE 8-4
2	AG515764	2	SEAL CABLE GREEN REEL 18-16 GA	
3	AG517467	2	TERM FE 20-18 GA W/PACK	
4	AG515851	1	CONNECTOR ELEC TOWER 2-CONT M	
6	AG562330	-	FLEX GUARD .250 [BULK: 0.667 FT]	
7	AG513083	AR	TAPE ELECTRICAL 0.75	

Copyright © 2007 AGCO Corporation

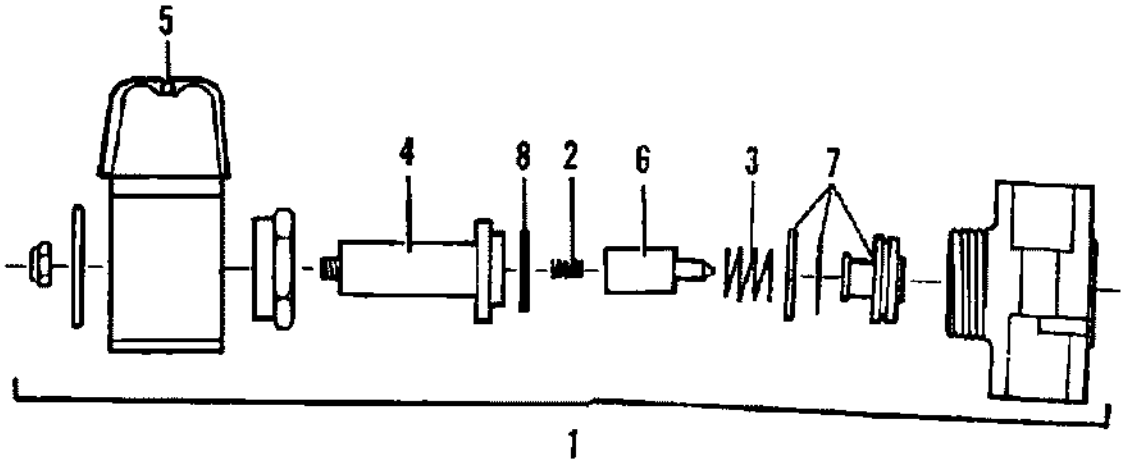

514014.TIF

Copyright © 2007 AGCO Corporation

VALVE SOLENOID

ITEM	PART #	QTY	DESCRIPTION	COMMENTS
2	AG701012	1	SPRING PLUNGER (514014)	
3	AG701015	1	SPRING PISTON (514014)	
4	AG701016	1	TUBE & O-RING ENCLOSING(514014	
5	AG701011	1	ASM COIL 12 VOLT (514014)	
6	AG701013	1	ASM PLUNGER (514014)	
7	AG701014	1	ASM PISTON (514014)	
8	AG701010	1	O-RING TUBE ASSY (514014)	

Copyright © 2007 AGCO Corporation

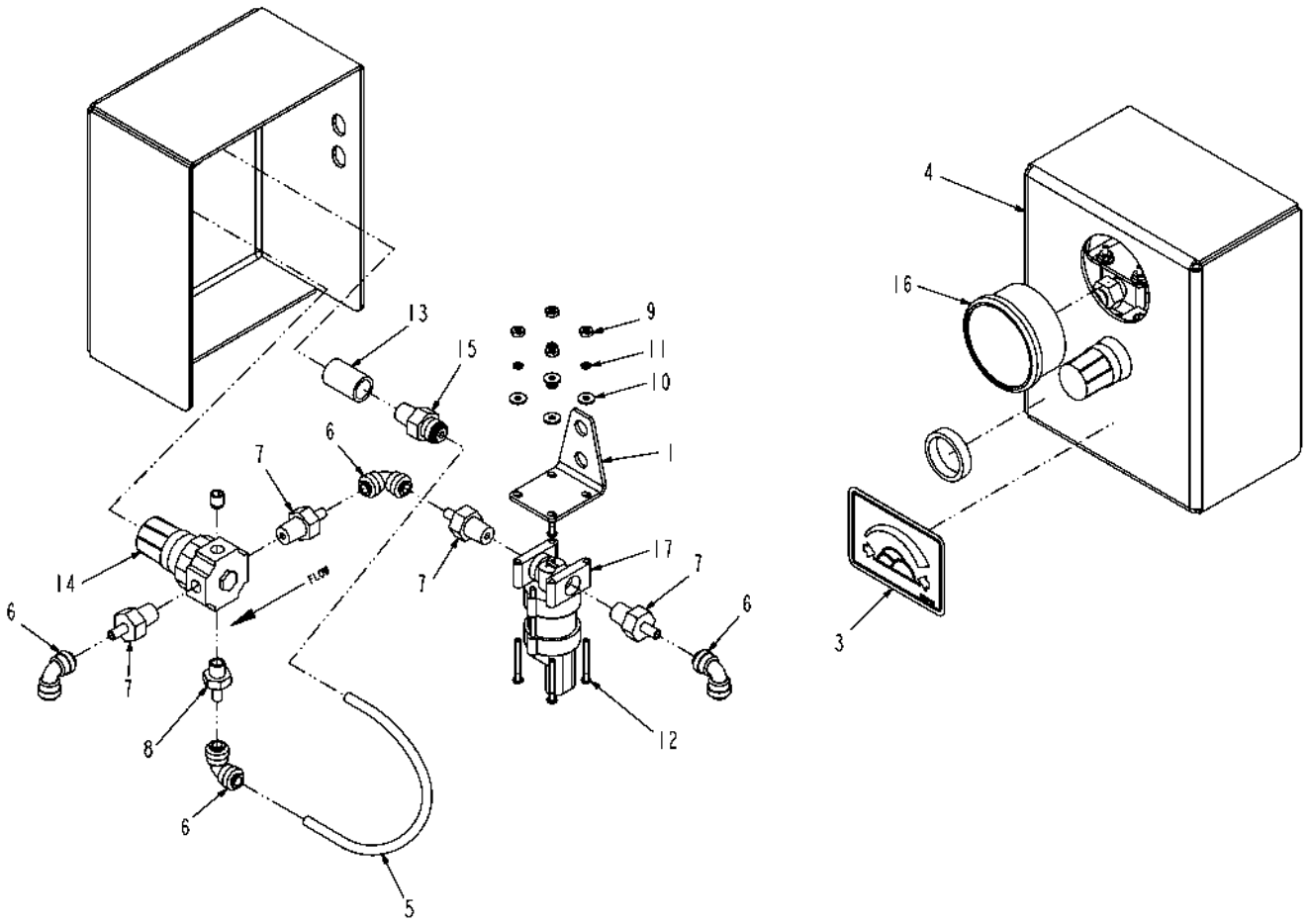

136120-04-N801-.TIF

Copyright © 2007 AGCO Corporation

CTRL ASM-FOAM MARKER,LIQ,RC

ITEM	PART #	QTY	DESCRIPTION	COMMENTS
REF	AG521354	1	CONN-STR,.25TUBE X .25NPT,POLY	
1	AG122116	1	BRKT-MTG,F/M ENABLE VALVE	
2	AG129187	-	PIPE SEALANT-FLEX BLACK	
3	AG135942	1	DECAL-FOAM MARKER	
4	AG136119	1	BRKT-MTG,CTRL,FOAM MARKER,RD	
5	AG511021	-	TUBING 0.25 OD NYLON BLACK [BULK: 0.813 FT]	
6	AG516229	4	ELBOW,UNION 0.25TUBE AUTO LCK	
7	AG516230	4	STEM MALE TUBE 0.25 X 0.25	
8	AG516231	1	STEM MALE TUBE 0.25X0.12	
9	AG517157	4	NUT #6-32NC HEX ZN REG	
10	AG517158	4	WASHER #6 FL ZN REG TYPE-B	
11	AG517159	4	WASHER #6 LK ZN REG	
12	AG517219	4	SCREW #6-32X1.25 MA RDHD SLTZN	
13	AG519336	1	COUPLING PIPE 0.25 NPT 304SS	
14	AG520889	1	REGULATOR-MINIATURE 0-60 PSI	
16	AG521934	1	GAUGE-PRESS,0-7 BAR/100PSI	
17	AG522466	1	VALVE-SOLENOID,25NPT,12V	

Copyright © 2007 AGCO Corporation

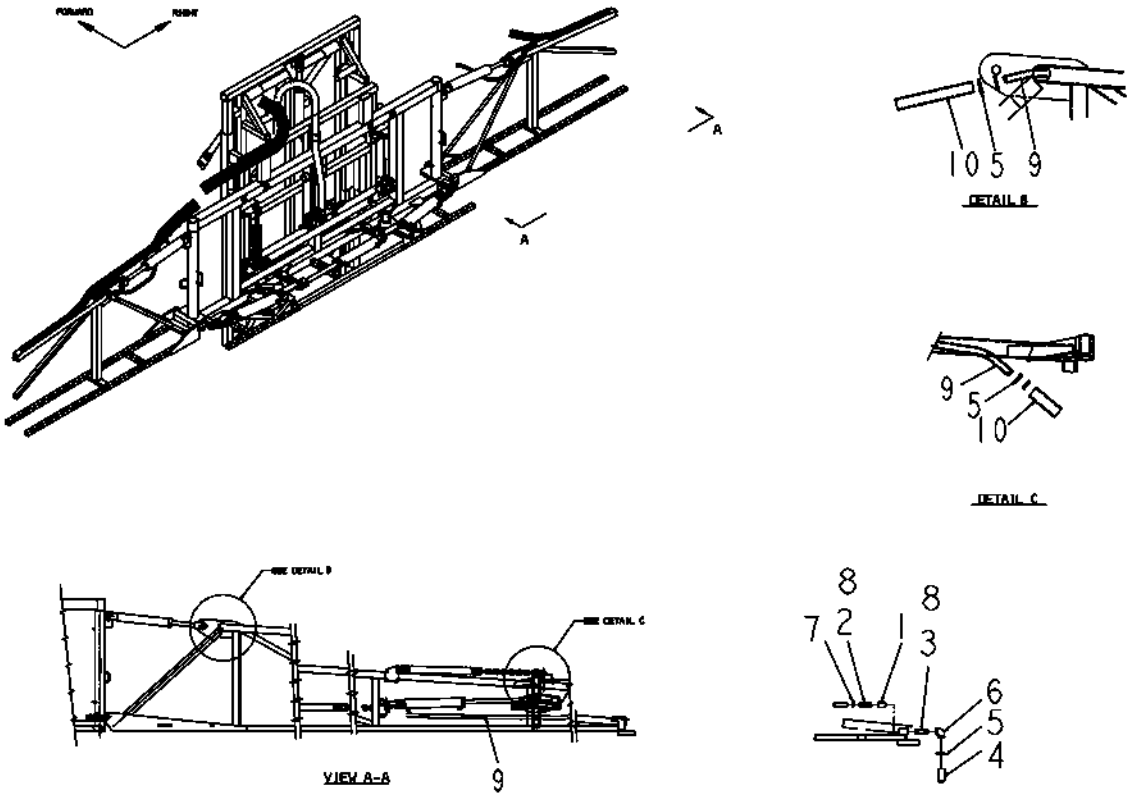

125405-B.tif

Copyright © 2007 AGCO Corporation

FOAM MARKER ASM-BOOM,90FT

ITEM	PART #	QTY	DESCRIPTION	COMMENTS
1	AG553875	2	COUPLING 0.75NS PIPE STEEL PL	
2	AG051180	2	BARB-HOSE,0.75MNPTX0.62BARB,PP	
3	AG559385	2	NIPPLE .75NPT X 3.00 WR ST	
4	AG512230	-	HOSE 1.50 2BRD EPDM [BULK: 4 FT]	
5	AG561213	10	CLAMP 0.81-1.50 HOSE 16HS	
6	AG554480	2	ELBOW 90D 0.75NPT MAL IR PL	
7	AG561227	2	CLAMP 0.44-0.78 HOSE 6HS	
8	AG129187	AR	PIPE SEALANT-FLEX BLACK	
9	AG515449	-	HOSE 0.62 CLEAR VINYL [BULK: 120 FT]	
10	AG511528	-	HOSE 1.00 2BRD EPDM [BULK: 4 FT]	

Copyright © 2007 AGCO Corporation

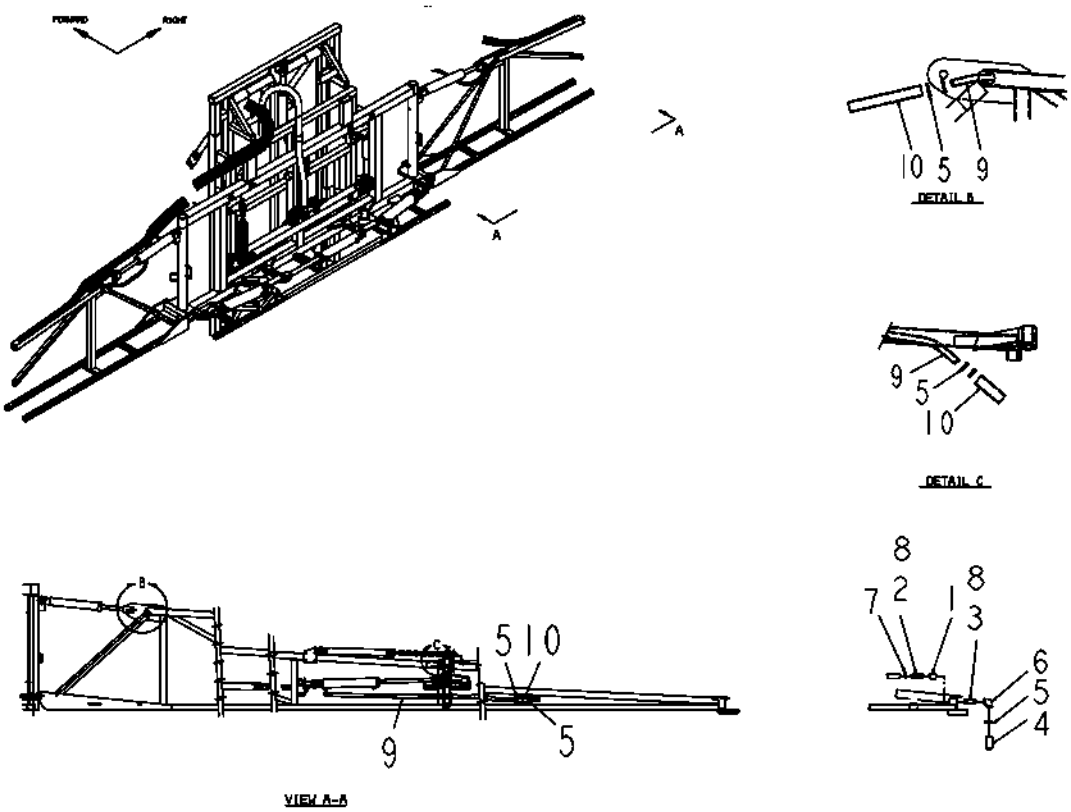

125406-B.tif

Copyright © 2007 AGCO Corporation

FOAM MARKER ASM-BOOM,100FT

ITEM	PART #	QTY	DESCRIPTION	COMMENTS
1	AG553875	2	COUPLING 0.75NS PIPE STEEL PL	
2	AG051180	2	BARB-HOSE,0.75MNPTX0.62BARB,PP	
3	AG559385	2	NIPPLE .75NPT X 3.00 WR ST	
4	AG512230	-	HOSE 1.50 2BRD EPDM [BULK: 4 FT]	
5	AG561213	14	CLAMP 0.81-1.50 HOSE 16HS	
6	AG554480	2	ELBOW 90D 0.75NPT MAL IR PL	
7	AG561227	2	CLAMP 0.44-0.78 HOSE 6HS	
8	AG129187	AR	PIPE SEALANT-FLEX BLACK	
9	AG515449	-	HOSE 0.62 CLEAR VINYL [BULK: 130 FT]	
10	AG511528	-	HOSE 1.00 2BRD EPDM [BULK: 5 FT]	

Copyright © 2007 AGCO Corporation

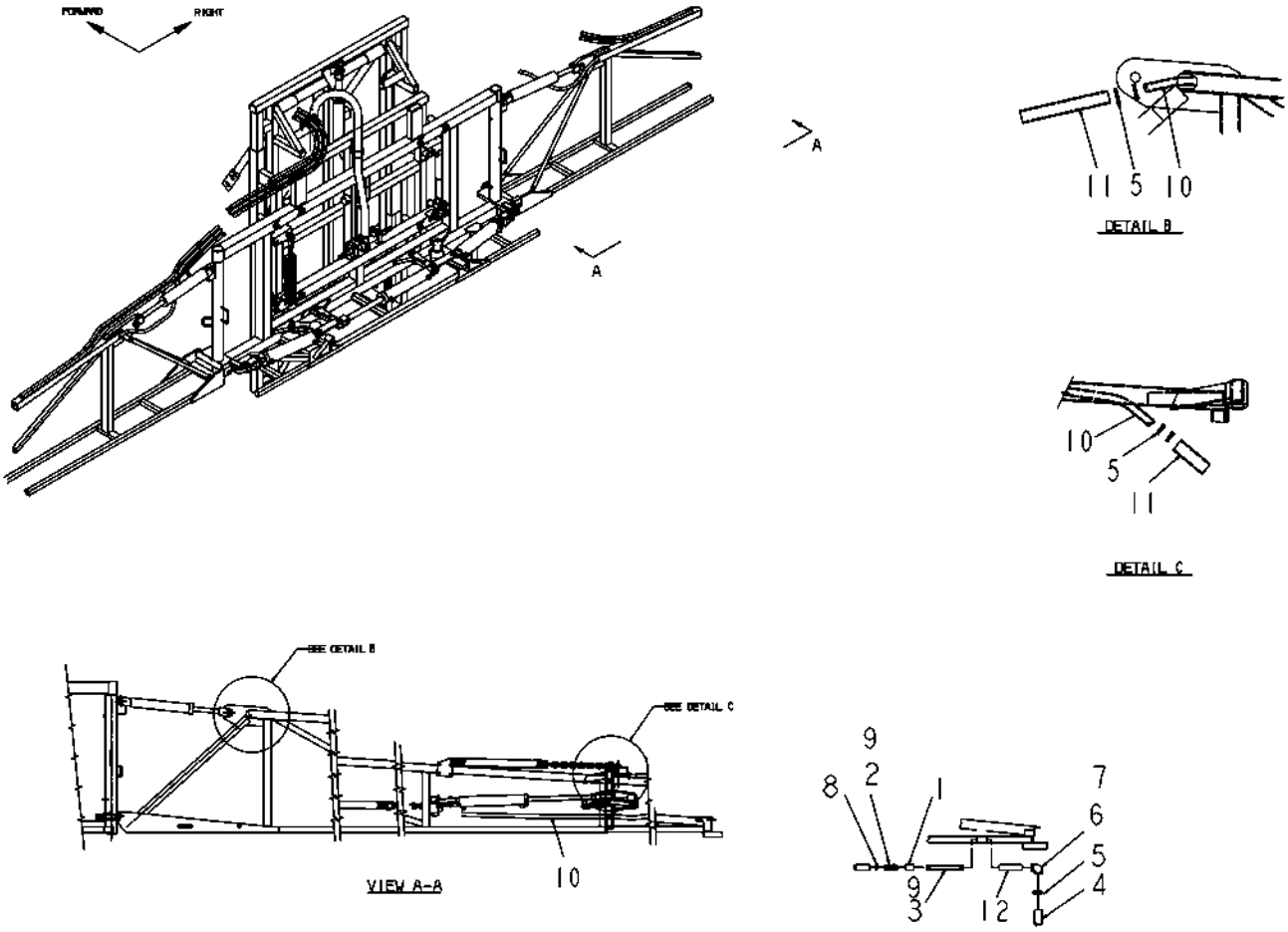

129722-A.tif

Copyright © 2007 AGCO Corporation

FOAM MARKER ASM-BOOM, 90FT

ITEM	PART #	QTY	DESCRIPTION	COMMENTS
1	AG553875	2	COUPLING 0.75NS PIPE STEEL PL	
2	AG051180	2	BARB-HOSE,0.75MNPTX0.62BARB,PP	
3	AG108618	2	NIPPLE 0.75NPTX 8.50 SCH40	
4	AG512230	-	HOSE 1.50 2BRD EPDM [BULK: 4 FT]	
5	AG561213	10	CLAMP 0.81-1.50 HOSE 16HS	
6	AG217585	1	ELBOW FOAM MARKER WLDMT LH	
7	AG217586	1	ELBOW FOAM MARKER WLDMT RH	
8	WR55293	2	CLAMP-HOSE,.91 SST	
9	AG129187	AR	PIPE SEALANT-FLEX BLACK	
10	AG515449	-	HOSE 0.62 CLEAR VINYL [BULK: 120 FT]	
11	AG511528	-	HOSE 1.00 2BRD EPDM [BULK: 4 FT]	
12	AG108617	2	SPACER PIPE	

Copyright © 2007 AGCO Corporation

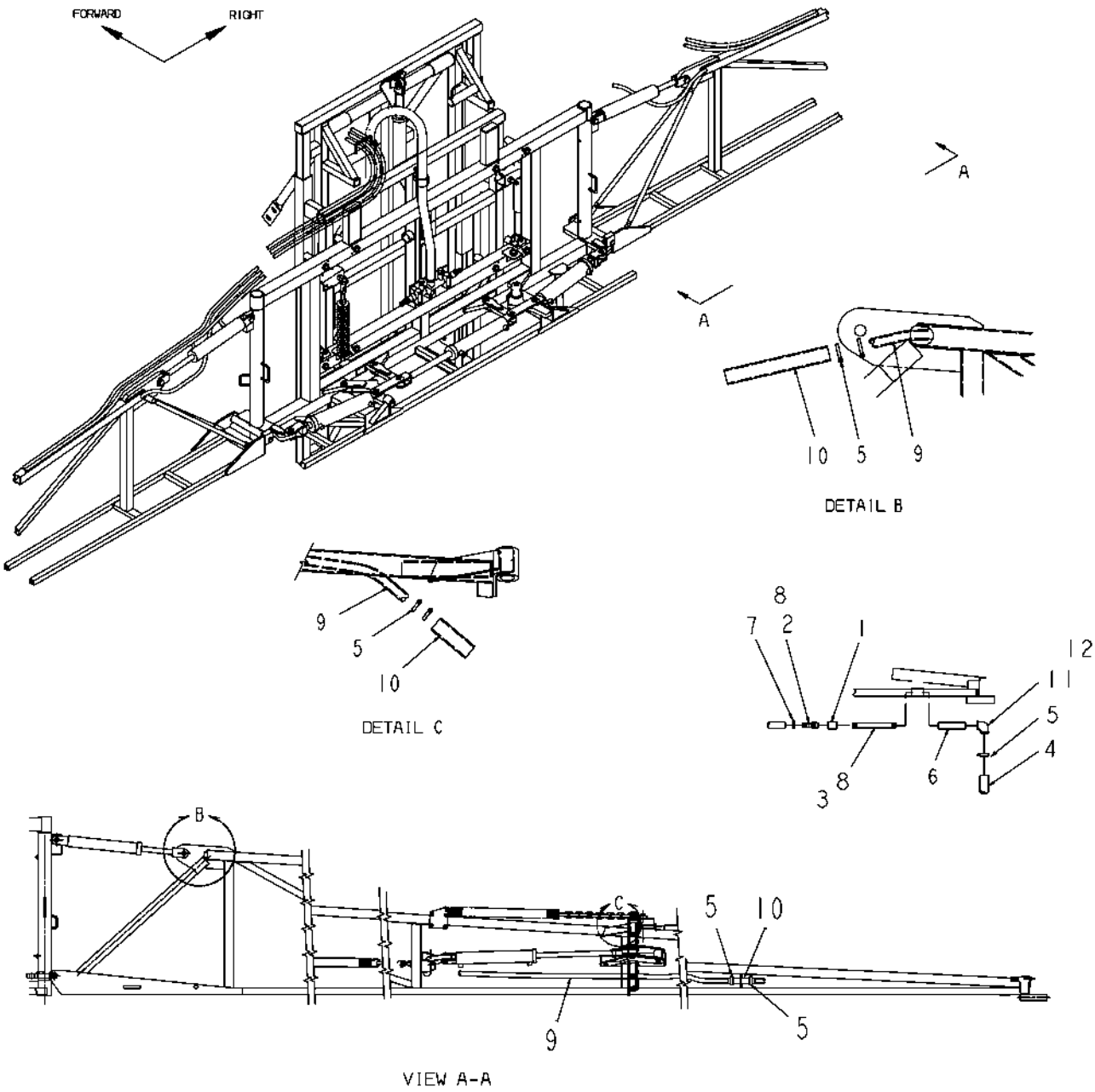

129723-B-M330-.TIF

Copyright © 2007 AGCO Corporation

FOAM MARKER ASM-BOOM, 100FT

ITEM	PART #	QTY	DESCRIPTION	COMMENTS
1	AG553875	2	COUPLING 0.75NS PIPE STEEL PL	
2	AG051180	2	BARB-HOSE,0.75MNPTX0.62BARB,PP	
3	AG108618	2	NIPPLE 0.75NPTX 8.50 SCH40	
4	AG512230	-	HOSE 1.50 2BRD EPDM [BULK: 4 FT]	
5	AG561213	14	CLAMP 0.81-1.50 HOSE 16HS	
6	AG108617	2	SPACER PIPE	
7	AG561227	2	CLAMP 0.44-0.78 HOSE 6HS	
8	AG129187	AR	PIPE SEALANT-FLEX BLACK	
9	AG515449	-	HOSE 0.62 CLEAR VINYL [BULK: 130 FT]	
10	AG511528	-	HOSE 1.00 2BRD EPDM [BULK: 5 FT]	
11	AG217585	1	ELBOW FOAM MARKER WLDMT LH	
12	AG217586	1	ELBOW FOAM MARKER WLDMT RH	

Copyright © 2007 AGCO Corporation

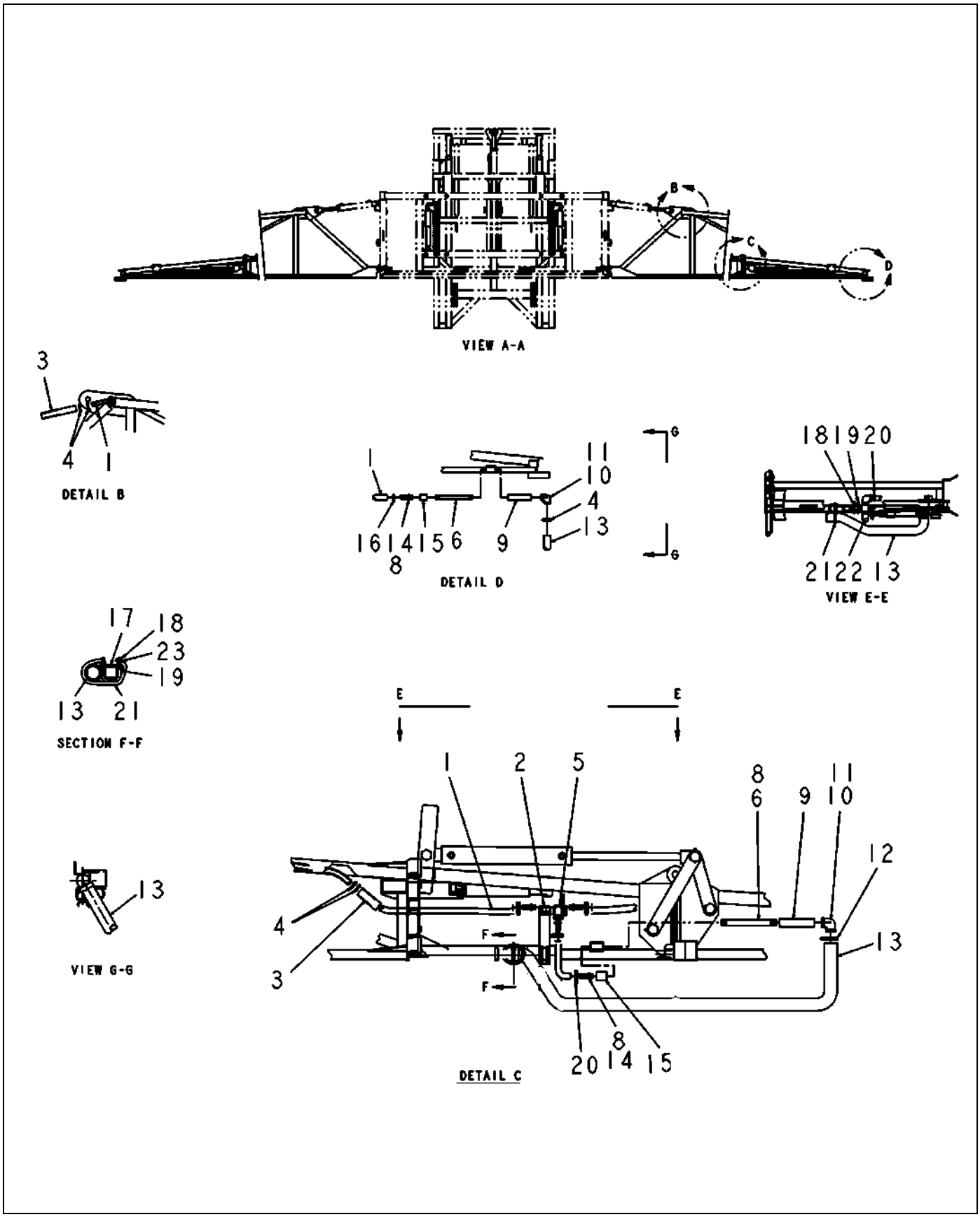

502325-F.tif

Copyright © 2007 AGCO Corporation

ITEM	PART #	QTY	DESCRIPTION	COMMENTS
1	AG515449	-	HOSE 0.62 CLEAR VINYL [BULK: 110 FT]	
2	AG232718	2	MOUNT VALVE WLDMT	
3	AG511528	-	HOSE 1.00 2BRD EPDM [BULK: 4.200 FT]	
4	AG561213	10	CLAMP 0.81-1.50 HOSE 16HS	
5	AG515001	2	VALVE 3-WAY 0.75NPT MA PVC	[A]
6	AG108618	4	NIPPLE 0.75NPTX 8.50 SCH40	
8	AG129187	AR	PIPE SEALANT-FLEX BLACK	
9	AG108617	4	SPACER PIPE	
10	AG217585	2	ELBOW FOAM MARKER WLDMT LH	
11	AG217586	2	ELBOW FOAM MARKER WLDMT RH	
12	AG561231	2	CLAMP 1.06-2.00 HOSE 24HS	
13	AG512230	-	HOSE 1.50 2BRD EPDM [BULK: 8.400 FT]	
14	AG051180	10	BARB-HOSE,0.75MNPTX0.62BARB,PP	
15	AG553875	4	COUPLING 0.75NS PIPE STEEL PL	
16	AG561227	2	CLAMP 0.44-0.78 HOSE 6HS	
17	AG108935	2	PLATE BACKING	
18	AG516403	24	NUT 0.31-18NC HEX SS REG NY	
19	AG231204	6	BOLT-U .31-18X1.88X2.63	
20	AG561215	8	CLAMP 0.50-0.91 HOSE 8HS	
21	AG523327	2	STRAP-HOLDDOWN,14.00,EPDM	
22	AG051126	4	ELBOW-PIPE,0.75FNPT,90D,PP	
23	AG562074	18	WASHER 0.31 FL SS REG TYPE-B	
	FOOTNOTE [A]		HANDLE ONLY- AG711378	

Copyright © 2007 AGCO Corporation

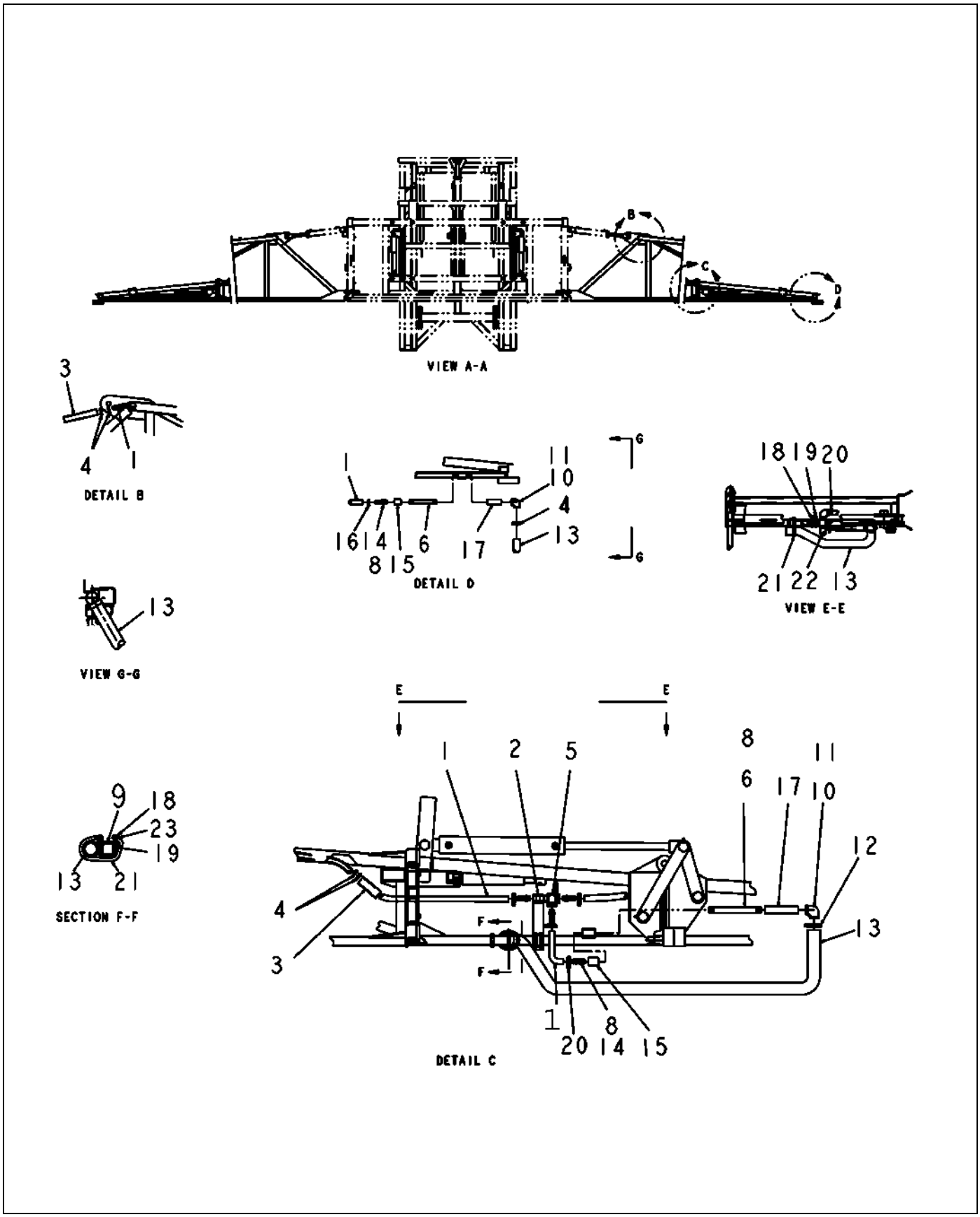

502326-F.tif

Copyright © 2007 AGCO Corporation

ITEM	PART #	QTY	DESCRIPTION	COMMENTS
1	AG515449	-	HOSE 0.62 CLEAR VINYL [BULK: 110 FT]	
2	AG232718	2	MOUNT VALVE WLDMT	
3	AG511528	-	HOSE 1.00 2BRD EPDM [BULK: 4.200 FT]	
4	AG561213	10	CLAMP 0.81-1.50 HOSE 16HS	
5	AG515001	2	VALVE 3-WAY 0.75NPT MA PVC	[A]
6	AG217656	4	NIPPLE .75 IN X6.5 IN	
8	AG129187	AR	PIPE SEALANT-FLEX BLACK	
9	AG108935	2	PLATE BACKING	
10	AG217585	2	ELBOW FOAM MARKER WLDMT LH	
11	AG217586	2	ELBOW FOAM MARKER WLDMT RH	
12	AG561231	2	CLAMP 1.06-2.00 HOSE 24HS	
13	AG512230	-	HOSE 1.50 2BRD EPDM [BULK: 8.400 FT]	
14	AG051180	10	BARB-HOSE,0.75MNPTX0.62BARB,PP	
15	AG553875	4	COUPLING 0.75NS PIPE STEEL PL	
16	AG561227	2	CLAMP 0.44-0.78 HOSE 6HS	
17	AG217642	4	PIPE SPACER	
18	AG516403	24	NUT 0.31-18NC HEX SS REG NY	
19	AG231204	6	BOLT-U .31-18X1.88X2.63	
20	AG561215	8	CLAMP 0.50-0.91 HOSE 8HS	
21	AG523327	2	STRAP-HOLDDOWN,14.00,EPDM	
22	AG051126	4	ELBOW-PIPE,0.75FNPT,90D,PP	
23	AG562074	2	WASHER 0.31 FL SS REG TYPE-B	
	FOOTNOTE [A]		HANDLE ONLY- AG711378	

Copyright © 2007 AGCO Corporation

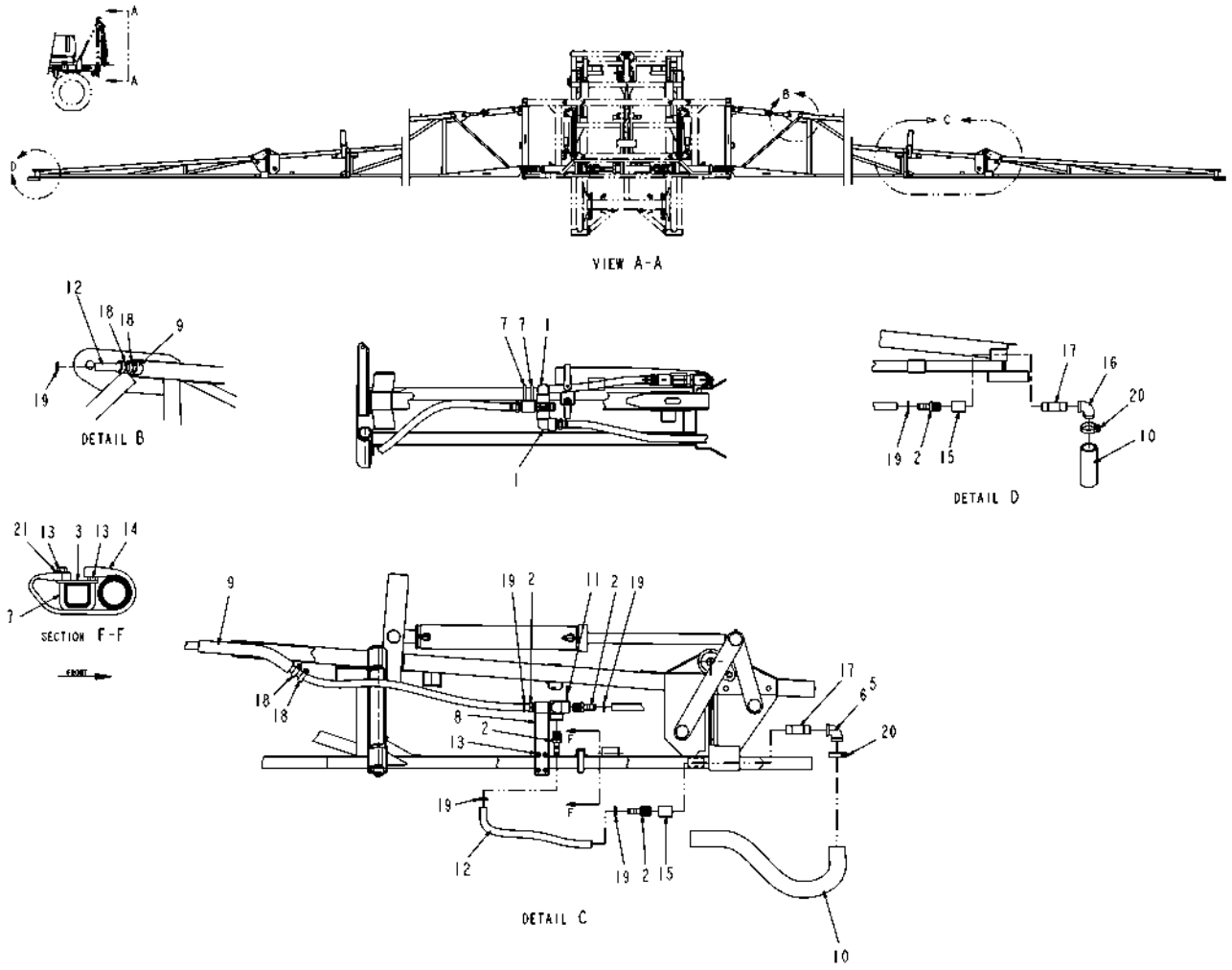

502327.tif

Copyright © 2007 AGCO Corporation

ITEM	PART #	QTY	DESCRIPTION	COMMENTS
1	AG051126	4	ELBOW-PIPE,0.75FNPT,90D,PP	
2	AG051180	10	BARB-HOSE,0.75MNPTX0.62BARB,PP	
3	AG108935	2	PLATE BACKING	
4	AG129187	AR	PIPE SEALANT-FLEX BLACK	
5	AG217585	1	ELBOW FOAM MARKER WLDMT LH	
6	AG217586	1	ELBOW FOAM MARKER WLDMT RH	
7	AG231204	6	BOLT-U .31-18X1.88X2.63	
8	AG232718	2	MOUNT VALVE WLDMT	
9	AG511528	-	HOSE 1.00 2BRD EPDM [BULK: 2.450 FT]	
10	AG512230	-	HOSE 1.50 2BRD EPDM [BULK: 8.400 FT]	
11	AG515001	2	VALVE 3-WAY 0.75NPT MA PVC	[A]
12	AG515449	-	HOSE 0.62 CLEAR VINYL [BULK: 111.667 FT]	
13	AG516403	12	NUT 0.31-18NC HEX SS REG NY	
14	AG523327	2	STRAP-HOLDDOWN,14.00,EPDM	
15	AG553875	4	COUPLING 0.75NS PIPE STEEL PL	
16	AG554480	2	ELBOW 90D 0.75NPT MAL IR PL	
17	AG559385	4	NIPPLE .75NPT X 3.00 WR ST	
18	AG561213	8	CLAMP 0.81-1.50 HOSE 16HS	
19	AG561215	12	CLAMP 0.50-0.91 HOSE 8HS	
20	AG561231	4	CLAMP 1.06-2.00 HOSE 24HS	
21	AG562074	2	WASHER 0.31 FL SS REG TYPE-B	
	FOOTNOTE [A]		HANDLE ONLY- AG711378	

Copyright © 2007 AGCO Corporation

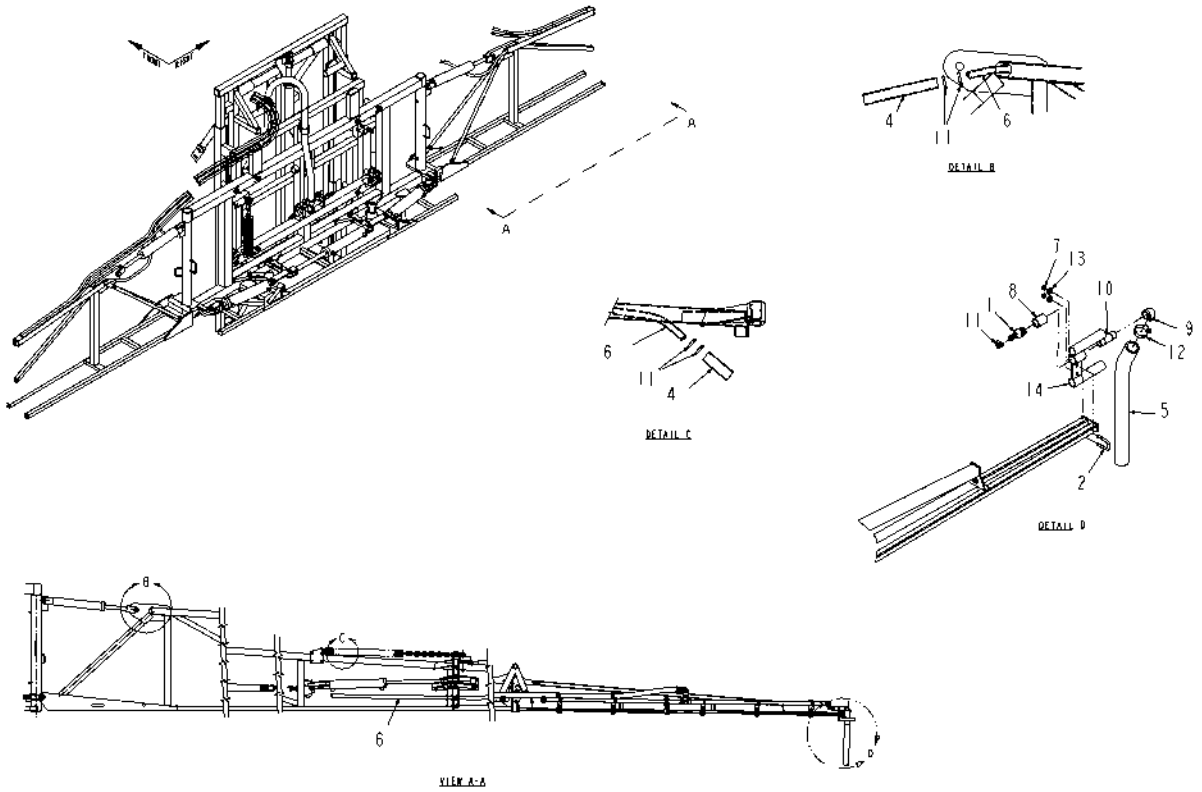

506856D1-02-M930.tif

Copyright © 2007 AGCO Corporation

F/M ASM-BOOM,120FT

ITEM	PART #	QTY	DESCRIPTION	COMMENTS
1	AG051180	2	BARB-HOSE,0.75MNPTX0.62BARB,PP	
2	WR129144	2	BOLT-U,.31-18X1.06X1.97,SQ,SS	
3	AG129187	AR	PIPE SEALANT-FLEX BLACK	
4	AG511528	-	HOSE 1.00 2BRD EPDM [BULK: 4 FT]	
5	AG512230	-	HOSE 1.50 2BRD EPDM [BULK: 4 FT]	
6	AG515449	-	HOSE 0.62 CLEAR VINYL [BULK: 150 FT]	
7	AG516403	4	NUT 0.31-18NC HEX SS REG NY	
8	AG553875	2	COUPLING 0.75NS PIPE STEEL PL	
9	AG554480	2	ELBOW 90D 0.75NPT MAL IR PL	
10	AG559385	2	NIPPLE .75NPT X 3.00 WR ST	
11	AG561227	8	CLAMP 0.44-0.78 HOSE 6HS	
12	AG561231	2	CLAMP 1.06-2.00 HOSE 24HS	
13	AG562074	4	WASHER 0.31 FL SS REG TYPE-B	
14	506857D1	2	BRKT WLDMT-MTG,DROP,F/M,BM TIP	

Copyright © 2007 AGCO Corporation

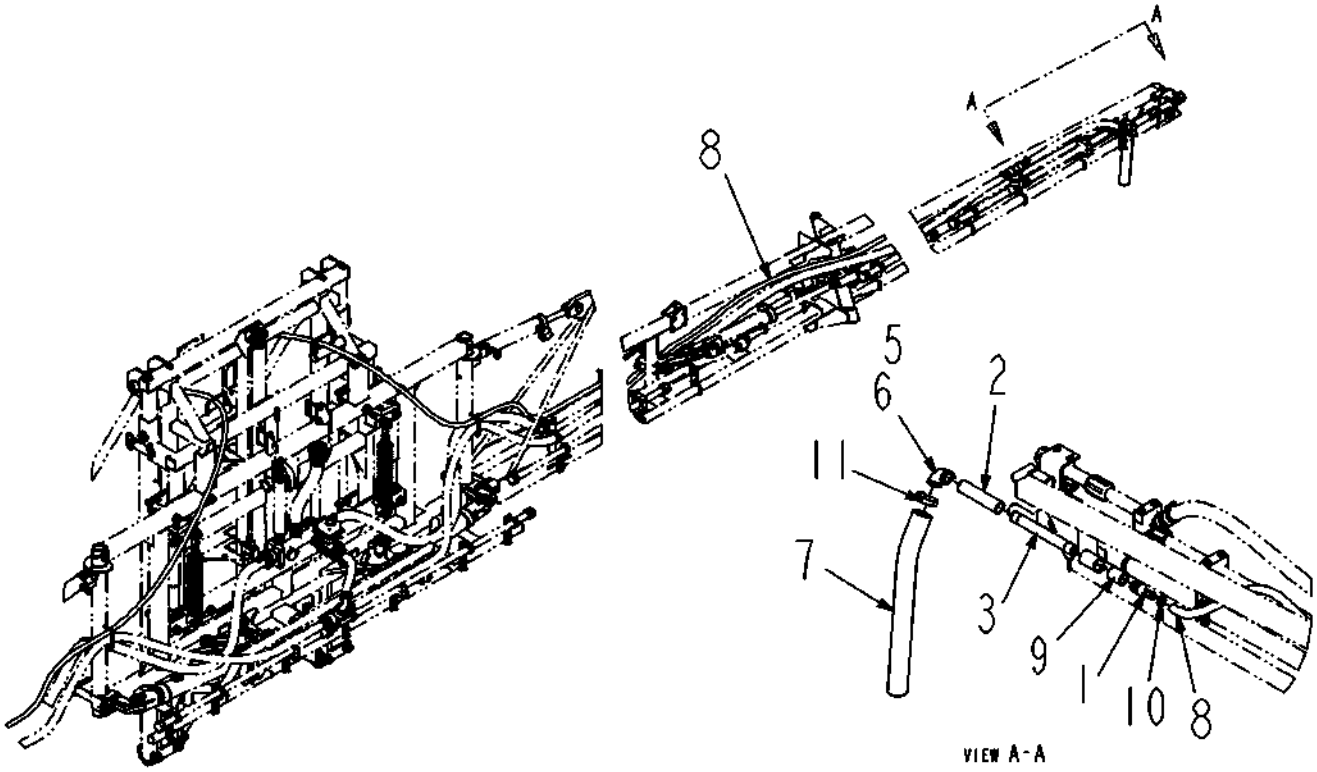

519281D1-01-R267-.TIF

Copyright © 2007 AGCO Corporation

FOAM MARKER ASM-BOOM 90FT

ITEM	PART #	QTY	DESCRIPTION	COMMENTS
1	AG051180	2	BARB-HOSE,0.75MNPTX0.62BARB,PP	
2	AG108617	2	SPACER PIPE	
3	AG108618	2	NIPPLE 0.75NPTX 8.50 SCH40	
4	AG129187	AR	PIPE SEALANT-FLEX BLACK	
5	AG217585	1	ELBOW FOAM MARKER WLDMT LH	
6	AG217586	1	ELBOW FOAM MARKER WLDMT RH	
7	AG512230	-	HOSE 1.50 2BRD EPDM [BULK: 4 FT]	
8	AG515449	-	HOSE 0.62 CLEAR VINYL [BULK: 120 FT]	
9	AG553875	2	COUPLING 0.75NS PIPE STEEL PL	
10	AG561228	4	CLAMP 0.56-1.06 HOSE 10HS	
11	AG561231	2	CLAMP 1.06-2.00 HOSE 24HS	

Copyright © 2007 AGCO Corporation

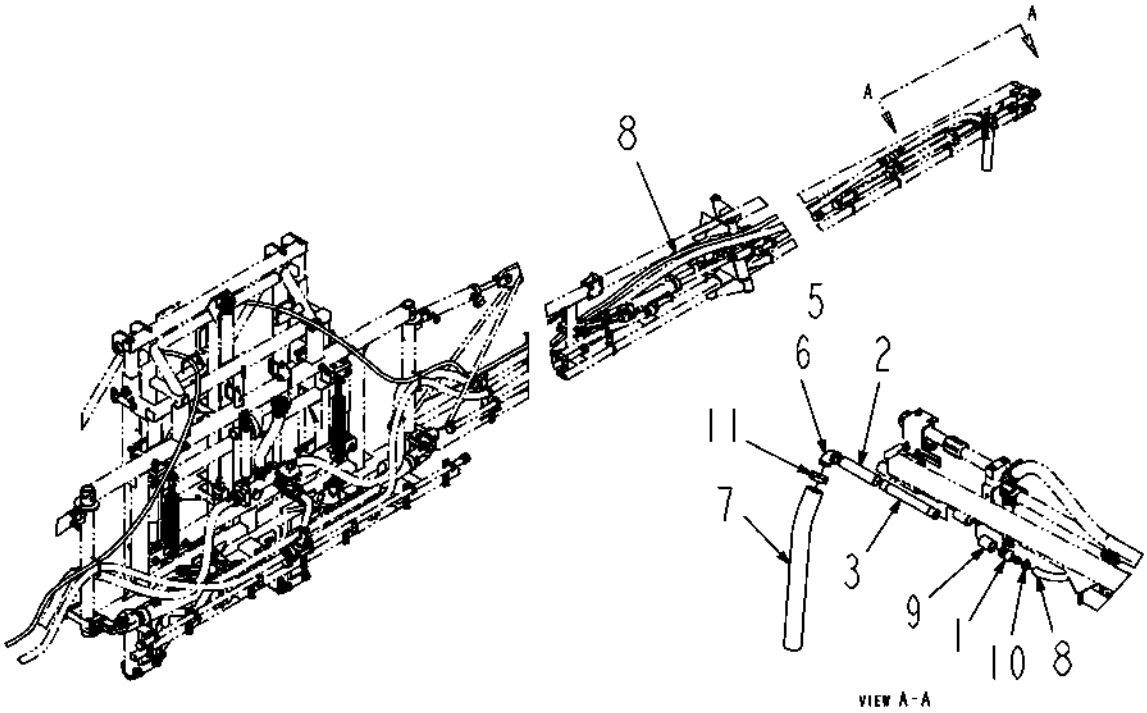

519282D1-01-R267-.TIF

Copyright © 2007 AGCO Corporation

FOAM MARKER ASM-BOOM 100FT

ITEM	PART #	QTY	DESCRIPTION	COMMENTS
1	AG051180	2	BARB-HOSE,0.75MNPTX0.62BARB,PP	
2	AG108617	2	SPACER PIPE	
3	AG108618	2	NIPPLE 0.75NPTX 8.50 SCH40	
4	AG129187	AR	PIPE SEALANT-FLEX BLACK	
5	AG217585	1	ELBOW FOAM MARKER WLDMT LH	
6	AG217586	1	ELBOW FOAM MARKER WLDMT RH	
7	AG512230	-	HOSE 1.50 2BRD EPDM [BULK: 4 FT]	
8	AG515449	-	HOSE 0.62 CLEAR VINYL [BULK: 130 FT]	
9	AG553875	2	COUPLING 0.75NS PIPE STEEL PL	
10	AG561228	4	CLAMP 0.56-1.06 HOSE 10HS	
11	AG561231	2	CLAMP 1.06-2.00 HOSE 24HS	

Copyright © 2007 AGCO Corporation

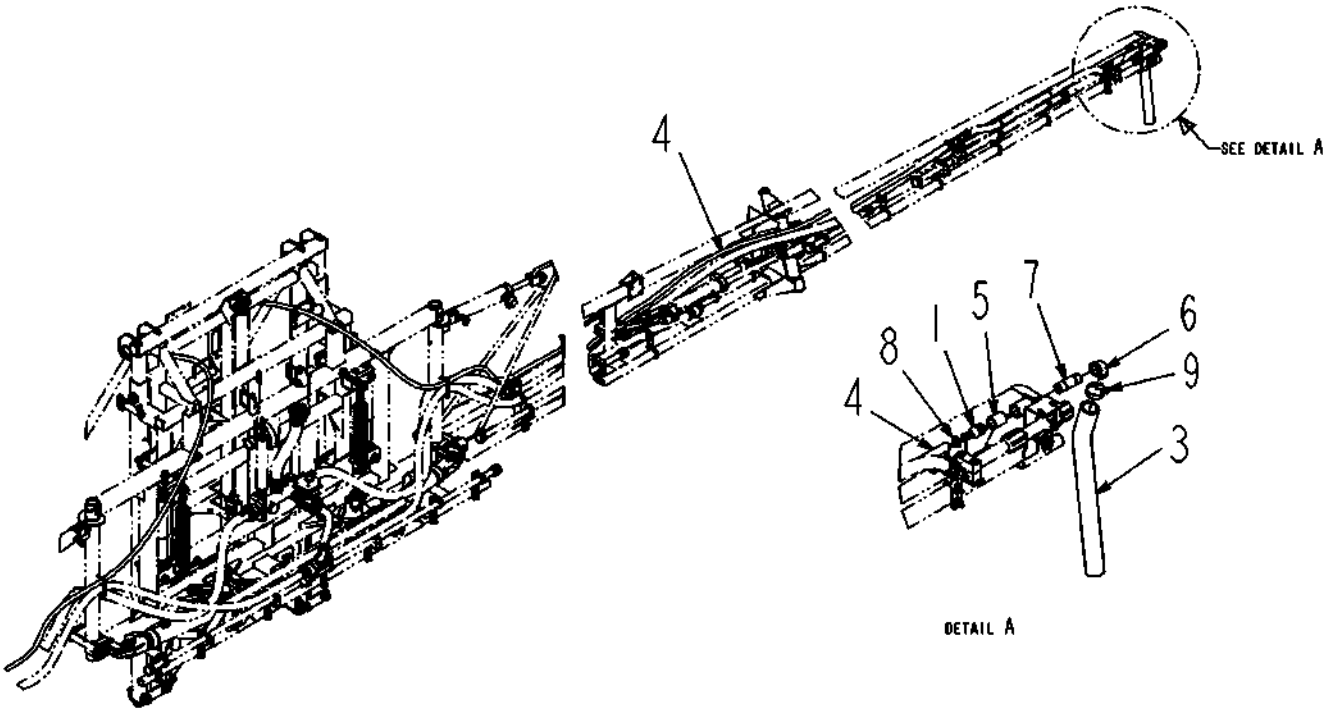

519283D1-01-R267-.TIF

Copyright © 2007 AGCO Corporation

FOAM MARKER ASM-BOOM 90FT

ITEM	PART #	QTY	DESCRIPTION	COMMENTS
1	AG051180	2	BARB-HOSE,0.75MNPTX0.62BARB,PP	
2	AG129187	AR	PIPE SEALANT-FLEX BLACK	
3	AG512230	-	HOSE 1.50 2BRD EPDM [BULK: 4 FT]	
4	AG515449	-	HOSE 0.62 CLEAR VINYL [BULK: 120 FT]	
5	AG553875	2	COUPLING 0.75NS PIPE STEEL PL	
6	AG554480	2	ELBOW 90D 0.75NPT MAL IR PL	
7	AG559385	2	NIPPLE .75NPT X 3.00 WR ST	
8	AG561228	4	CLAMP 0.56-1.06 HOSE 10HS	
9	AG561231	2	CLAMP 1.06-2.00 HOSE 24HS	

Copyright © 2007 AGCO Corporation

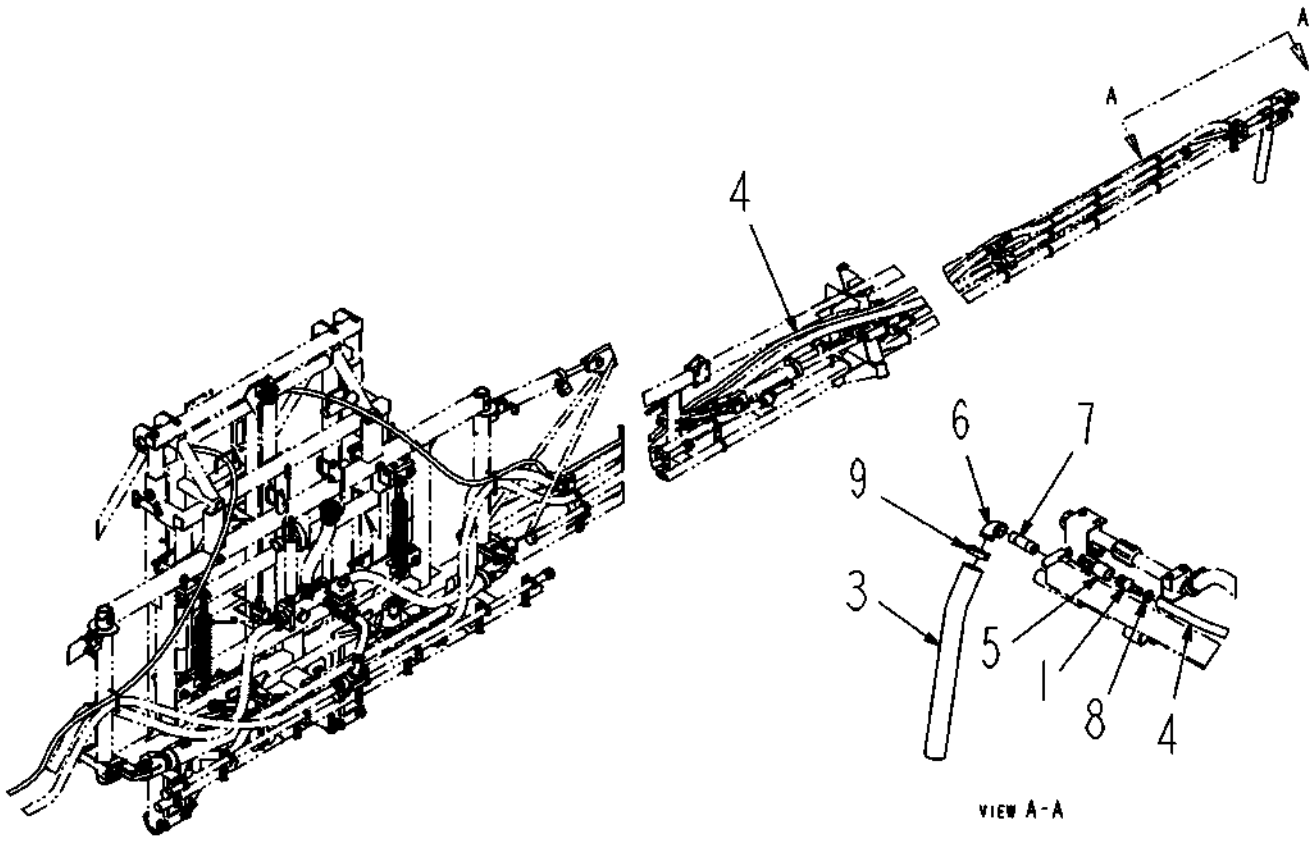

519284D1-01-R267-.TIF

Copyright © 2007 AGCO Corporation

FOAM MARKER ASM-BOOM 100FT

ITEM	PART #	QTY	DESCRIPTION	COMMENTS
1	AG051180	2	BARB-HOSE,0.75MNPTX0.62BARB,PP	
2	AG129187	AR	PIPE SEALANT-FLEX BLACK	
3	AG512230	-	HOSE 1.50 2BRD EPDM [BULK: 4 FT]	
4	AG515449	-	HOSE 0.62 CLEAR VINYL [BULK: 130 FT]	
5	AG553875	2	COUPLING 0.75NS PIPE STEEL PL	
6	AG554480	2	ELBOW 90D 0.75NPT MAL IR PL	
7	AG559385	2	NIPPLE .75NPT X 3.00 WR ST	
8	AG561228	4	CLAMP 0.56-1.06 HOSE 10HS	
9	AG561231	2	CLAMP 1.06-2.00 HOSE 24HS	

Copyright © 2007 AGCO Corporation

DECAL INSTL-LIQ SYS,8/10X4,ENG 9-1
DECAL INSTL-LIQ SYS,12X4,ENG 9-2

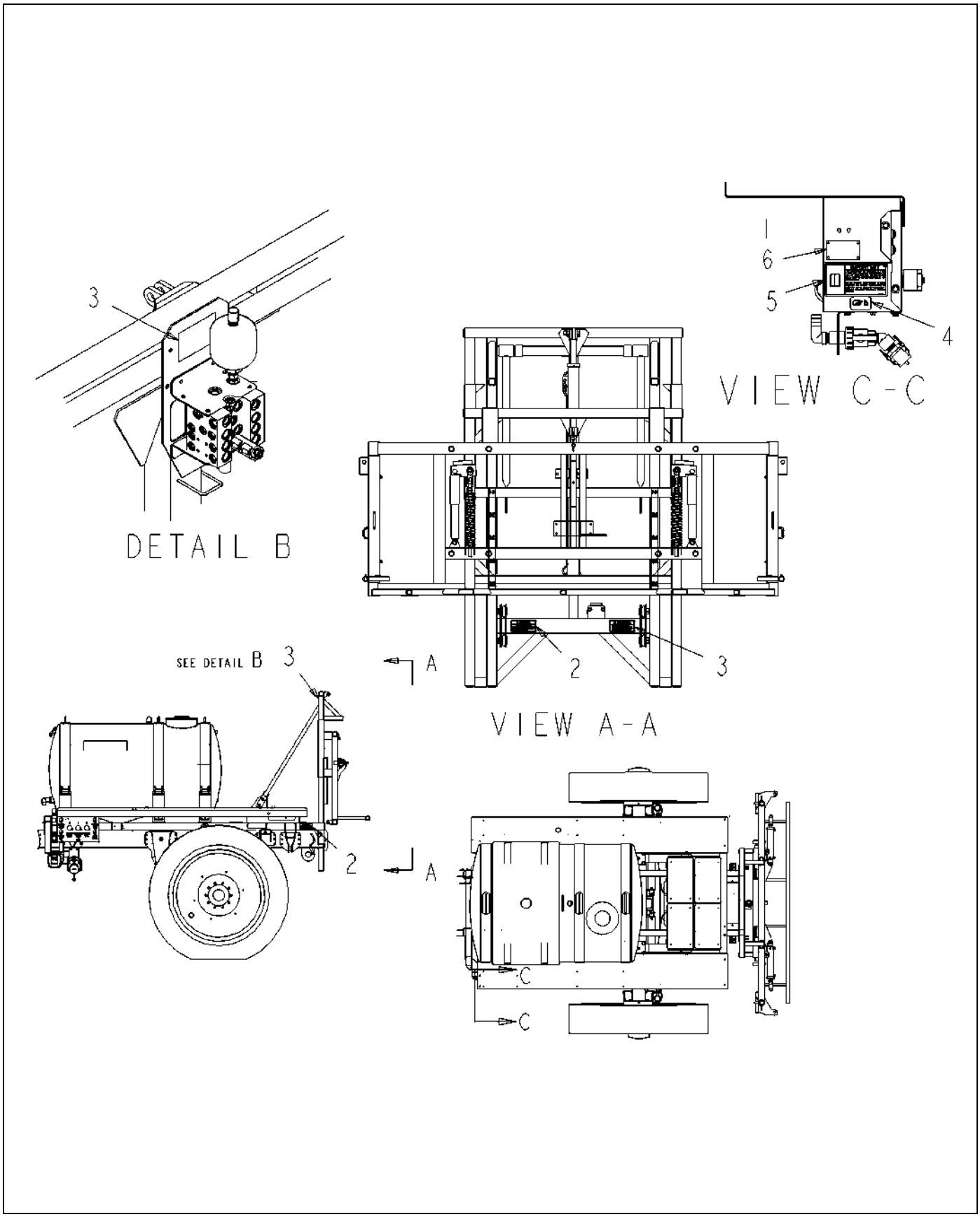

519080D1-01-R284-.TIF

Copyright © 2007 AGCO Corporation

DECAL INSTL-LIQ SYS,8/10X4,ENG

ITEM	PART #	QTY	DESCRIPTION	COMMENTS
1	AG201588	1	PLATE SERIAL # AG-CHEM 2.0X3.5	
2	AG229555	3	DECAL-DANGER,MOVING PARTS	[A]
3	AG234703	2	DECAL-WARNING,VALVE MNL OVRD	[B]
4	AG237562	1	DECAL-FRESH WATER RELOAD	
5	AG260869	1	DECAL-INFORMATION,RESPONSIBILI	
6	AG554863	4	RIVET POP 0.12X0.62 DOME-HD AL	
	FOOTNOTE [A]		SPANISH DECAL: AG237874	
	FOOTNOTE [B]		SPANISH DECAL: AG237895	

Copyright © 2007 AGCO Corporation

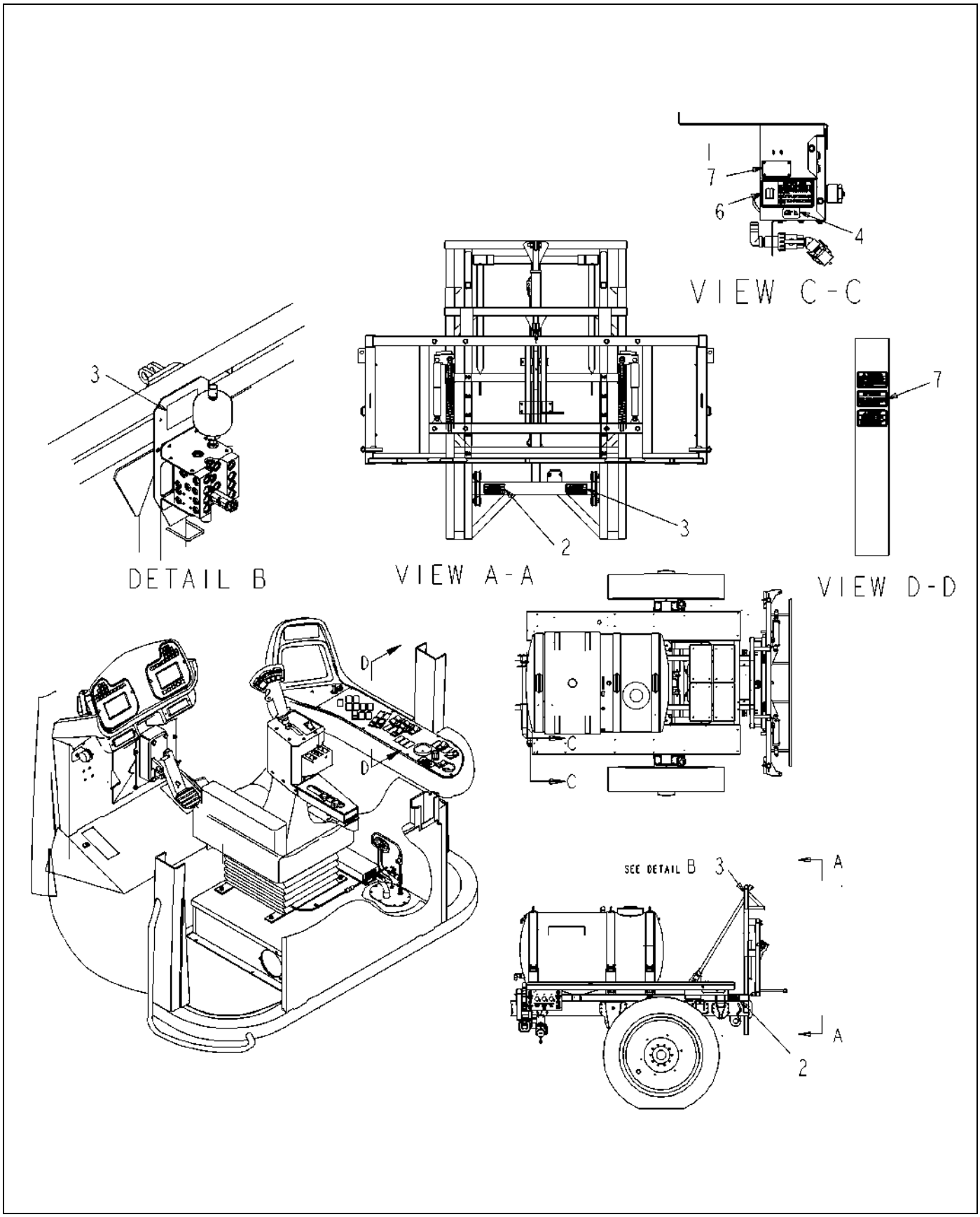

519081D1-01-R284-.TIF

Copyright © 2007 AGCO Corporation

DECAL INSTL-LIQ SYS,12X4,ENG

ITEM	PART #	QTY	DESCRIPTION	COMMENTS
1	AG201588	1	PLATE SERIAL # AG-CHEM 2.0X3.5	
2	AG229555	3	DECAL-DANGER,MOVING PARTS	[A]
3	AG234703	2	DECAL-WARNING,VALVE MNL OVRD	[B]
4	AG237562	1	DECAL-FRESH WATER RELOAD	
5	AG260121	1	DECAL-IMPORTANT,BM OPN	
6	AG260869	1	DECAL-INFORMATION,RESPONSIBILI	
7	AG554863	4	RIVET POP 0.12X0.62 DOME-HD AL	
	FOOTNOTE [A]		SPANISH DECAL: AG237874	
	FOOTNOTE [B]		SPANISH DECAL: AG237895	

Copyright © 2007 AGCO Corporation

VALVE-BTFL,2.00	10-1
TANK INSTL-RINSE,TOP,1240GL	10-2
TANK INSTL-RINSE,RH SIDE,55GL	10-3
TANK ASM-RINSE,55GL	10-4
TANK INSTL-RINSE,TOP	10-5
TANK REWORK-100GL,POLY	10-6
TANK INSTL-RINSE,TOP,1080GL	10-7
PLMB INSTL-PRES,W/O CHEM INJ	10-8
OPT-PLMB,P/W	10-9

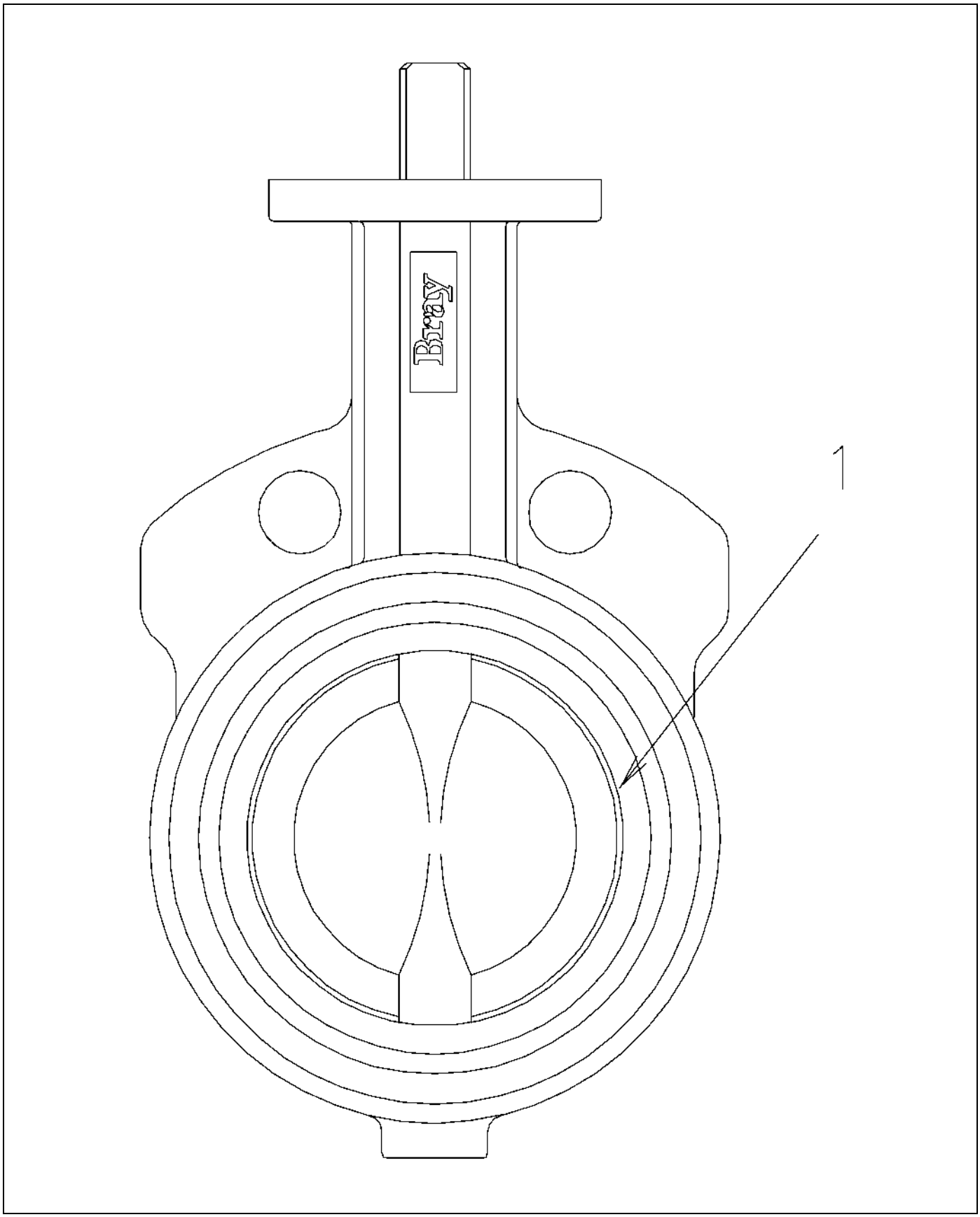

520373-C.TIF

Copyright © 2007 AGCO Corporation

VALVE-BTFL,2.00

ITEM	PART #	QTY	DESCRIPTION	COMMENTS
1	AG717133	1	KIT-REPAIR,VALVE 2.00	[A]
	FOOTNOTE [A]		AG714004 NY BUSHING (INCLUDED IN REPAIR KIT)	

Copyright © 2007 AGCO Corporation

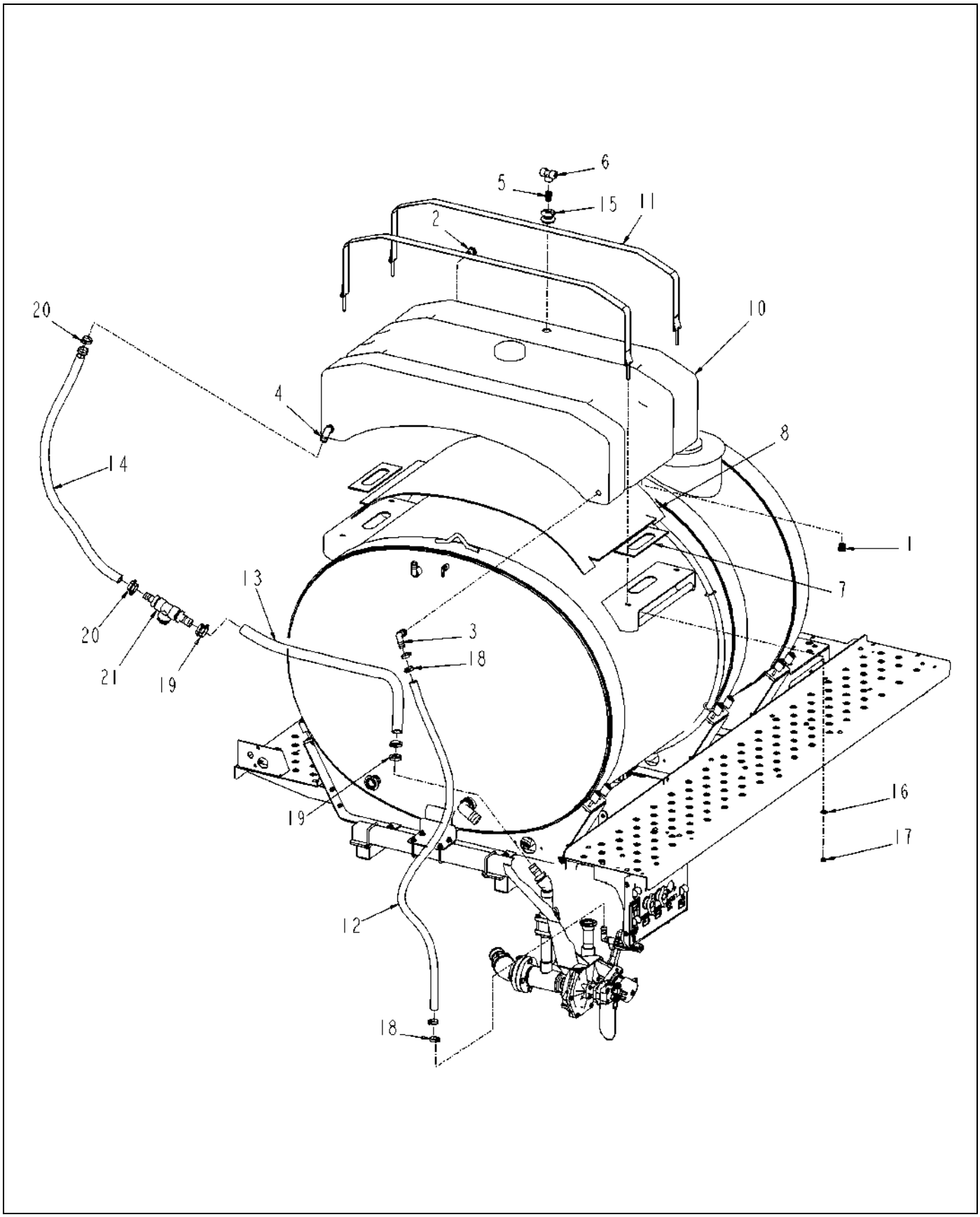

122202-05-R506-.TIF

Copyright © 2007 AGCO Corporation

TANK INSTL-RINSE,TOP,1240GL

ITEM	PART #	QTY	DESCRIPTION	COMMENTS
1	AG051134	3	PLUG-PIPE,HEX,0.75NPT,PP	
2	AG051135	1	PLUG-PIPE,HEX,1.00NPT,PP	
3	AG051145	1	ELBOW 90D 1.00NPTX1.00 BARB PP	
4	AG051146	1	ELBOW 90D 1.00NPTX1.25 BARB PP	
5	AG051151	1	NIPPLE-PIPE,0.75NPTXCLS,PP	
6	AG051161	1	TEE,PIPE,0.75FNPT,PP	
7	AG121864	2	MATTING-RUBBER,.25X13.50X3.50	
8	AG122859	1	MATTING-RUBBER,TANK,RINSE,TOP	
9	AG129187	AR	PIPE SEALANT-FLEX BLACK	
10	AG328859	1	TANK-REWORK	SEE PAGE 1-14
11	AG423867	2	STRAP-MTG,RINSE TANK	
12	AG511528	-	HOSE 1.00 2BRD EPDM [BULK: 6.417 FT]	
13	AG512230	-	HOSE 1.50 2BRD EPDM [BULK: 3.917 FT]	
14	AG513393	-	HOSE 1.25 2BRD EPDM [BULK: 4.875 FT]	
15	AG515295	1	FITTING TANK 0.75 DOUBLE THRD	[A]
16	AG550353	4	WASHER 0.50 FL ZN REG TYPE-B	
17	AG559253	4	NUT 0.50-13NC HEX ZN C-LK	
18	AG561213	4	CLAMP 0.81-1.50 HOSE 16HS	
19	AG561218	4	CLAMP 1.31-2.25 HOSE 28HS	
20	AG561231	4	CLAMP 1.06-2.00 HOSE 24HS	
21	520580D1	1	TEE ASM-1.50,125HBXPLUGX150HB	
	FOOTNOTE [A]		AG608613 NUT, AG608615 O-RING, AG608617 FITTING	

Copyright © 2007 AGCO Corporation

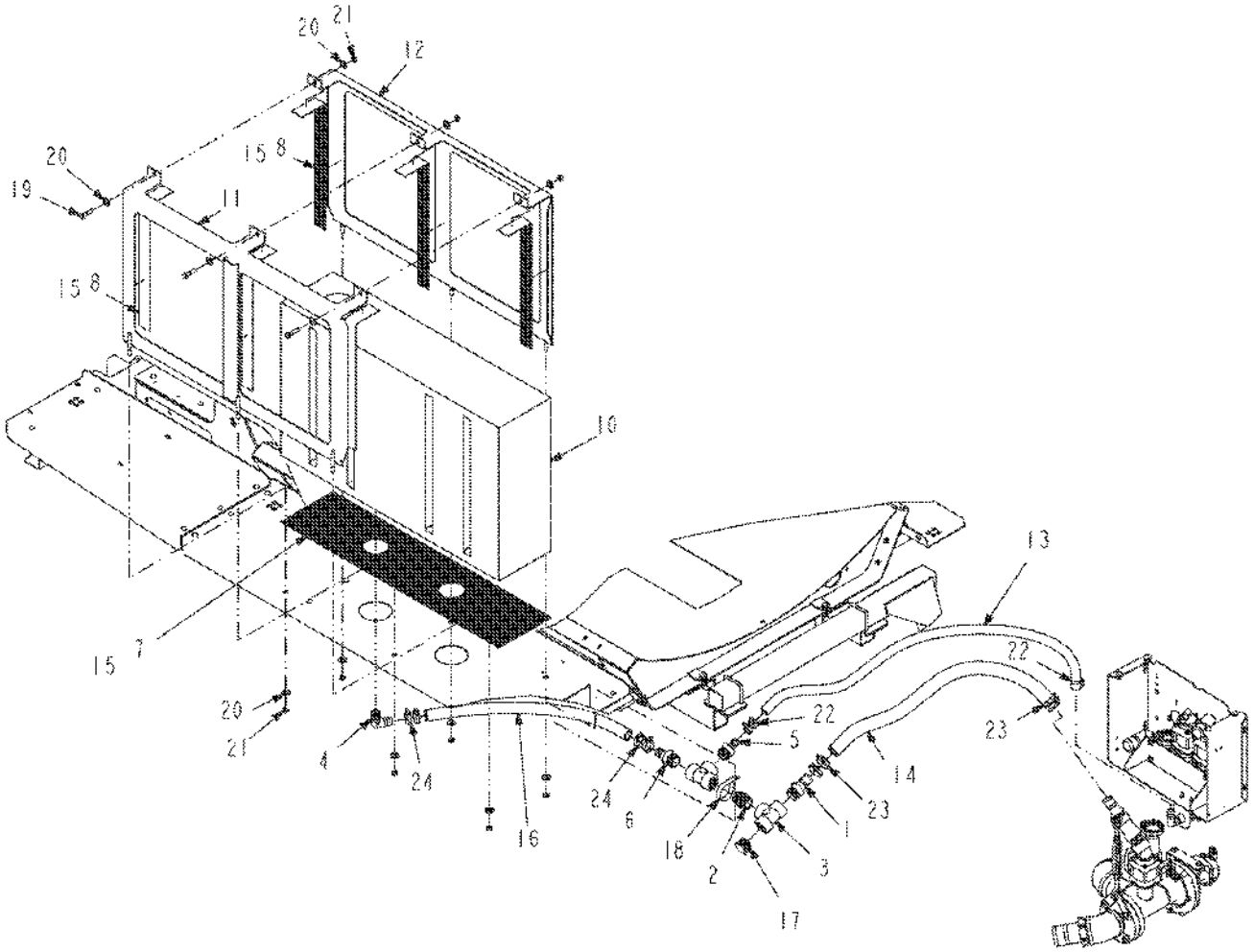

135906-03-R128-.TIF

Copyright © 2007 AGCO Corporation

TANK INSTL-RINSE,RH SIDE,55GL

ITEM	PART #	QTY	DESCRIPTION	COMMENTS
1	AG000766	1	BARB-HOSE,1.50MNTTX1.50BARB,PP	
2	AG050253	1	NIPPLE-PIPE,1.50NPTXCLS,PP	
3	AG050273	2	TEE,PIPE,1.50FNPT,PP	
4	AG051146	1	ELBOW 90D 1.00NPTX1.25 BARB PP	
5	AG051533	1	BARB-HOSE,1.50MNPTX1.00BARB,PP	
6	AG051534	1	BARB-HOSE,1.50MNPTX1.25BARB,PP	
7	AG108486	1	RUBBER MATTING	
8	AG108487	6	RUBBER MATTING	
9	AG129187	AR	PIPE SEALANT-FLEX BLACK	
10	AG136200	1	TANK ASM-RINSE,55GL	SEE PAGE 10-4
11	AG327117	1	BRACKET WLDMT-RINSE TANK,RH	
12	AG327284	1	BRACKET WLDMT-RINSE TANK,LH	
13	AG511528	-	HOSE 1.00 2BRD EPDM [BULK: 7 FT]	
14	AG512230	-	HOSE 1.50 2BRD EPDM [BULK: 5.167 FT]	
15	AG512346	AR	3M 1300 YELLOW ADHESIVE (GAL)	
16	AG513393	-	HOSE 1.25 2BRD EPDM [BULK: 1.917 FT]	
17	AG522149	1	PLUG-PIPE,HEX,1.50NPT,PP	
18	AG523688	1	CLAMP-2.75 DIA,COATED HOSE	
19	AG550132	3	BOLT .50-13NCX 2 G5 ZN HHD	
20	AG550353	12	WASHER 0.50 FL ZN REG TYPE-B	
21	AG559253	9	NUT 0.50-13NC HEX ZN C-LK	
22	AG561213	4	CLAMP 0.81-1.50 HOSE 16HS	
23	AG561218	4	CLAMP 1.31-2.25 HOSE 28HS	
24	AG561231	4	CLAMP 1.06-2.00 HOSE 24HS	

Copyright © 2007 AGCO Corporation

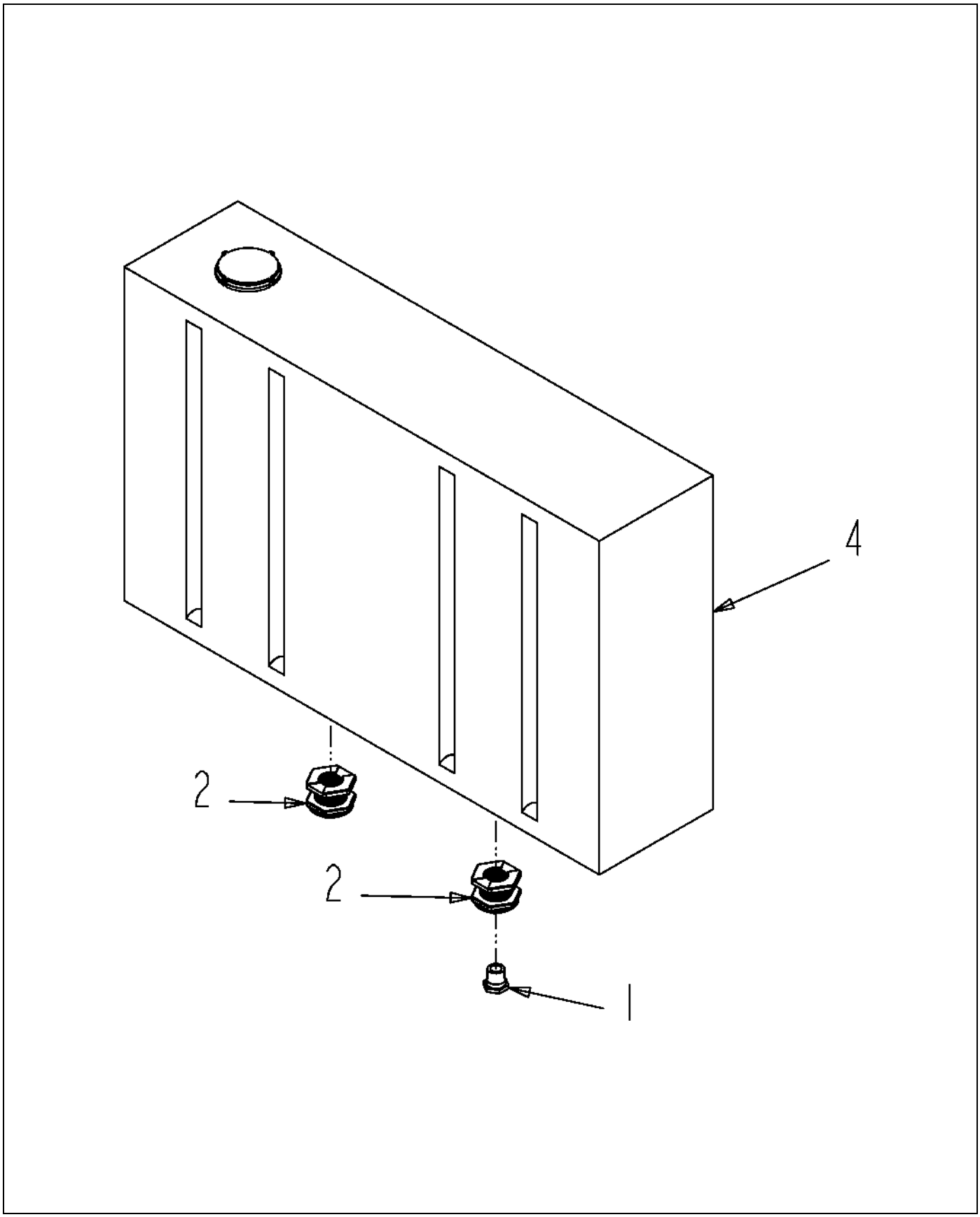

136200-01-M887.TIF

Copyright © 2007 AGCO Corporation

TANK ASM-RINSE,55GL

ITEM	PART #	QTY	DESCRIPTION	COMMENTS
1	AG051135	1	PLUG-PIPE,HEX,1.00NPT,PP	
2	AG054739	2	TANK FITTING 1.00 POLY	
3	AG129187	AR	PIPE SEALANT-FLEX BLACK	
4	AG517892	1	TANK 55 GAL POLY W/3 IN CAP	[A]
	FOOTNOTE [A]		LID AG052940, LID GASKET AG052941	

Copyright © 2007 AGCO Corporation

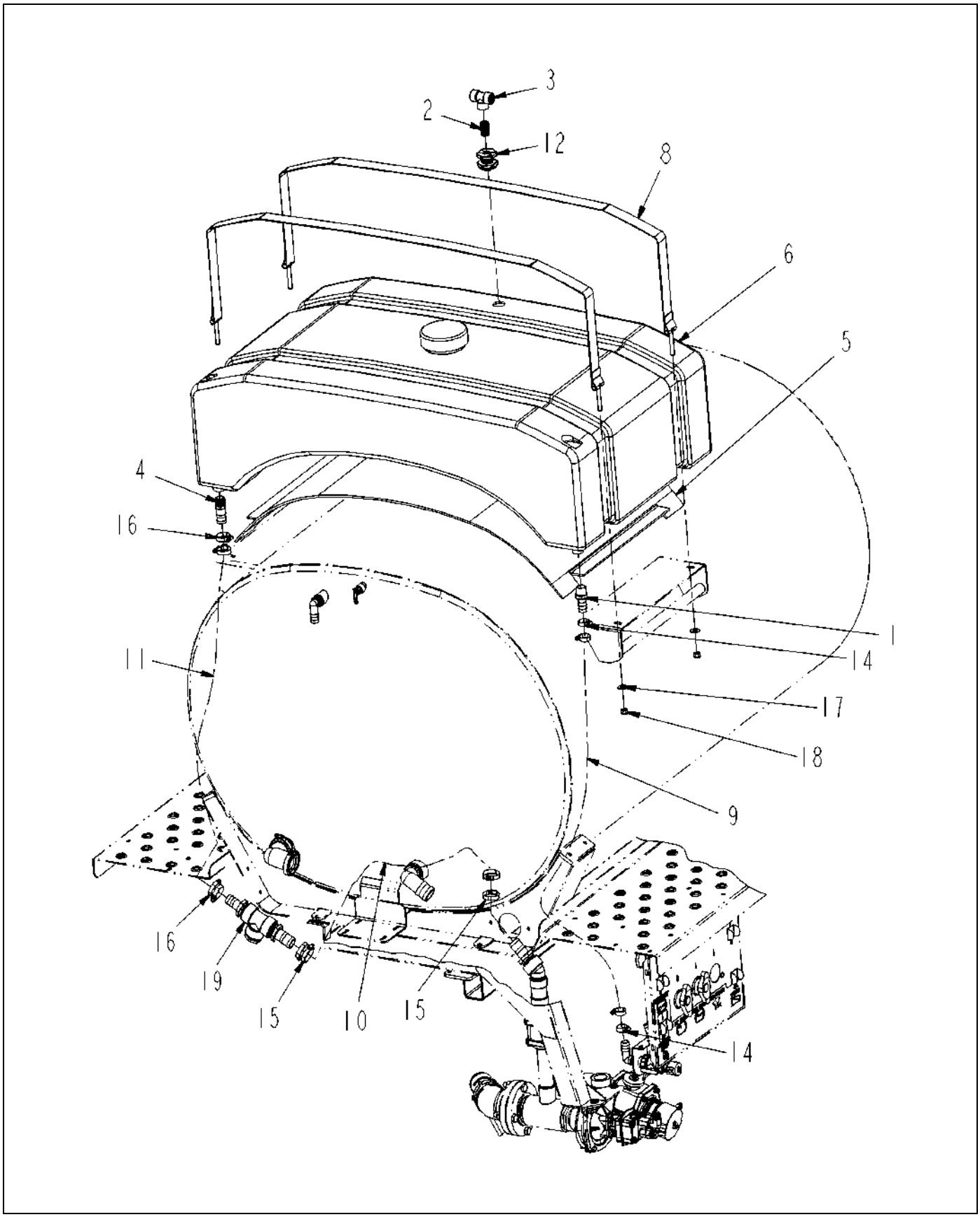

424494-07-R506-.TIF

Copyright © 2007 AGCO Corporation

TANK INSTL-RINSE,TOP

ITEM	PART #	QTY	DESCRIPTION	COMMENTS
1	AG051059	1	BARB-HOSE,1.00MNPTX1.00BARB,PP	
2	AG051151	1	NIPPLE-PIPE,0.75NPTXCLS,PP	
3	AG051161	1	TEE,PIPE,0.75FNPT,PP	
4	AG051183	2	BARB-HOSE,1.00MNPTX1.25BARB,PP	
5	AG122859	1	MATTING-RUBBER,TANK,RINSE,TOP	
6	AG122879	1	TANK REWORK-100GL,POLY	SEE PAGE 10-6
7	AG129187	AR	PIPE SEALANT-FLEX BLACK	
8	AG423867	2	STRAP-MTG,RINSE TANK	
9	AG511528	-	HOSE 1.00 2BRD EPDM [BULK: 5.209 FT]	
10	AG512230	-	HOSE 1.50 2BRD EPDM [BULK: 3.917 FT]	
11	AG513393	-	HOSE 1.25 2BRD EPDM [BULK: 5.250 FT]	
12	AG515295	1	FITTING TANK 0.75 DOUBLE THRD	[A]
13	AG553557	AR	TIE CABLE 7.37 .06-1.37 BLACK	
14	AG561213	4	CLAMP 0.81-1.50 HOSE 16HS	
15	AG561218	4	CLAMP 1.31-2.25 HOSE 28HS	
16	AG561231	4	CLAMP 1.06-2.00 HOSE 24HS	
17	AG562046	4	WASHER 0.50 FL SS REG TYPE-B	
18	AG601152	4	NUT 0.50-13NC HEX ZN REG NY	
19	520580D1	1	TEE ASM-1.50,125HBXPLUGX150HB	
	FOOTNOTE [A]		AG608613 NUT, AG608615 O-RING, AG608617 FITTING	

Copyright © 2007 AGCO Corporation

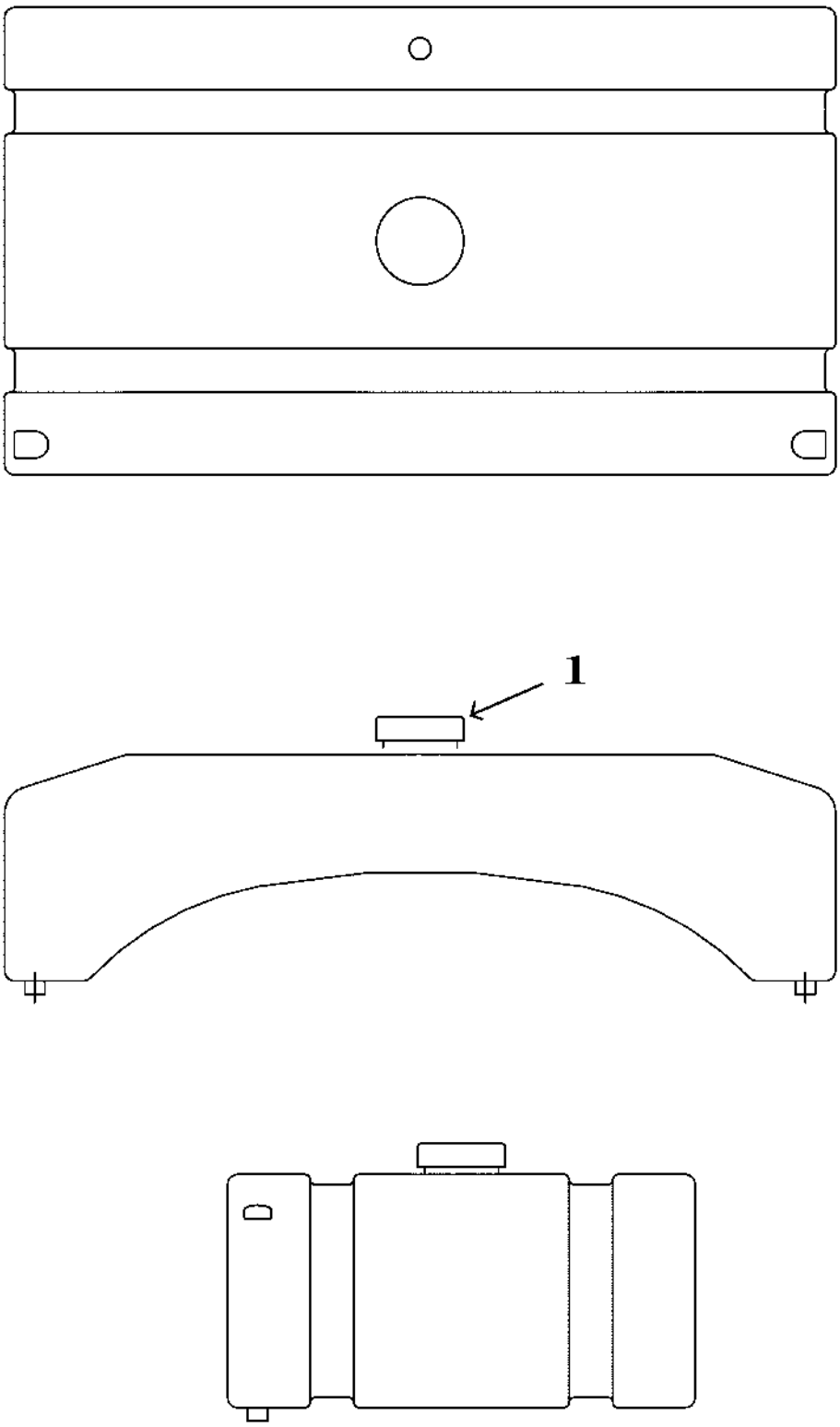

122879.TIF

Copyright © 2007 AGCO Corporation

TANK REWORK-100GL,POLY

ITEM	PART #	QTY	DESCRIPTION	COMMENTS
1	AG711024	1	LID REPLACMENT TOP TNK(711002)	[A]
	FOOTNOTE [A]		MOUNT ONLY-AG516798, STRAP ONLY-AG711871, THIS LID IS 6 DIAMETER	
	FOOTNOTE [A]		USE AG007302 ON KOCH TANKS.	

Copyright © 2007 AGCO Corporation

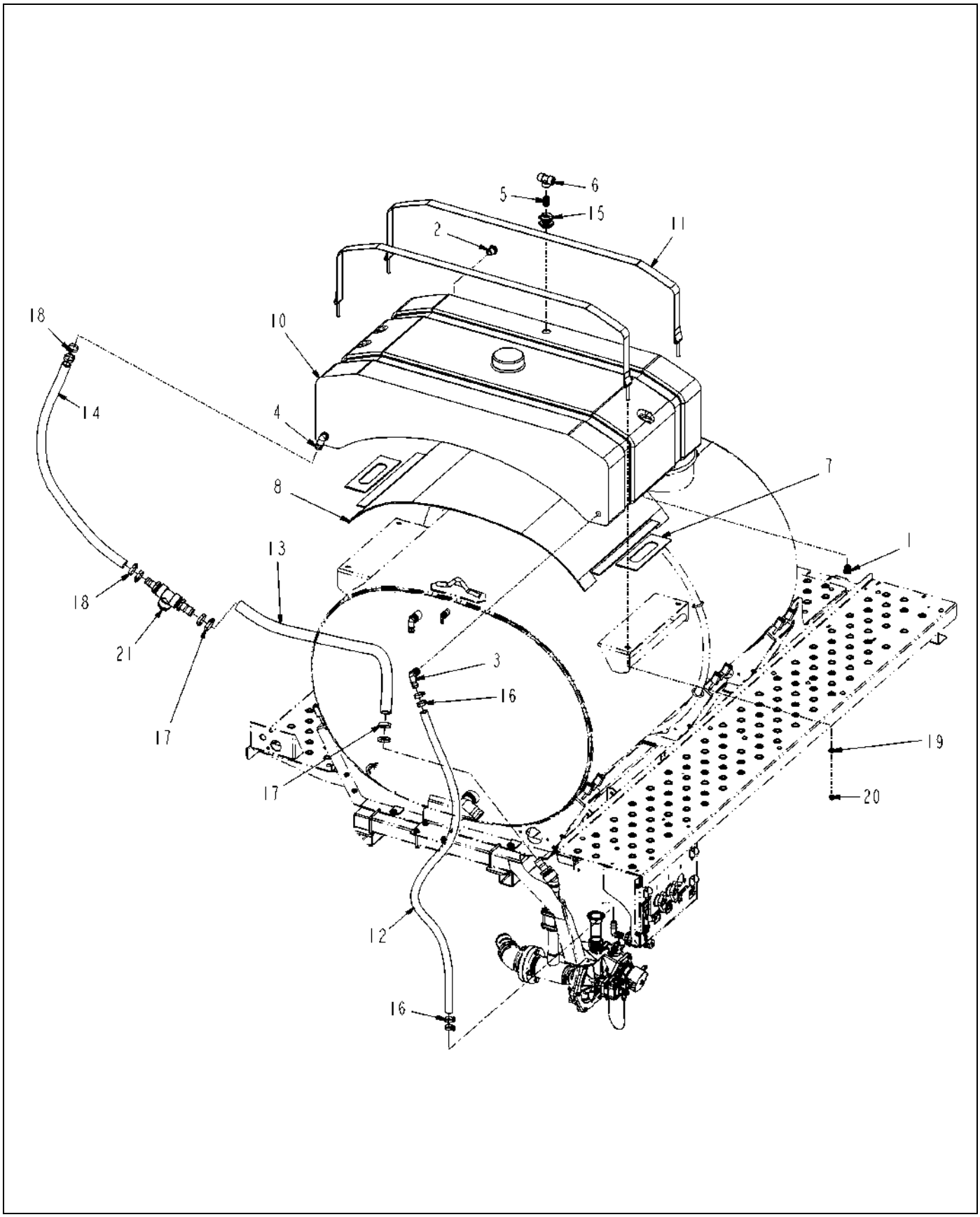

121862-05-R506-.TIF

Copyright © 2007 AGCO Corporation

TANK INSTL-RINSE,TOP,1080GL

ITEM	PART #	QTY	DESCRIPTION	COMMENTS
1	AG051134	3	PLUG-PIPE,HEX,0.75NPT,PP	
2	AG051135	1	PLUG-PIPE,HEX,1.00NPT,PP	
3	AG051145	1	ELBOW 90D 1.00NPTX1.00 BARB PP	
4	AG051146	1	ELBOW 90D 1.00NPTX1.25 BARB PP	
5	AG051151	1	NIPPLE-PIPE,0.75NPTXCLS,PP	
6	AG051161	1	TEE,PIPE,0.75FNPT,PP	
7	AG121864	2	MATTING-RUBBER,.25X13.50X3.50	
8	AG122859	1	MATTING-RUBBER,TANK,RINSE,TOP	
9	AG129187	AR	PIPE SEALANT-FLEX BLACK	
10	AG328859	1	TANK-REWORK	SEE PAGE 1-14
11	AG423867	2	STRAP-MTG,RINSE TANK	
12	AG511528	-	HOSE 1.00 2BRD EPDM [BULK: 5.959 FT]	
13	AG512230	-	HOSE 1.50 2BRD EPDM [BULK: 3.917 FT]	
14	AG513393	-	HOSE 1.25 2BRD EPDM [BULK: 4.375 FT]	
15	AG515295	1	FITTING TANK 0.75 DOUBLE THRD	[A]
16	AG561213	4	CLAMP 0.81-1.50 HOSE 16HS	
17	AG561218	4	CLAMP 1.31-2.25 HOSE 28HS	
18	AG561231	4	CLAMP 1.06-2.00 HOSE 24HS	
19	AG562046	4	WASHER 0.50 FL SS REG TYPE-B	
20	AG601152	4	NUT 0.50-13NC HEX ZN REG NY	
21	520580D1	1	TEE ASM-1.50,125HBXPLUGX150HB	
	FOOTNOTE [A]		AG608613 NUT, AG608615 O-RING, AG608617 FITTING	

Copyright © 2007 AGCO Corporation

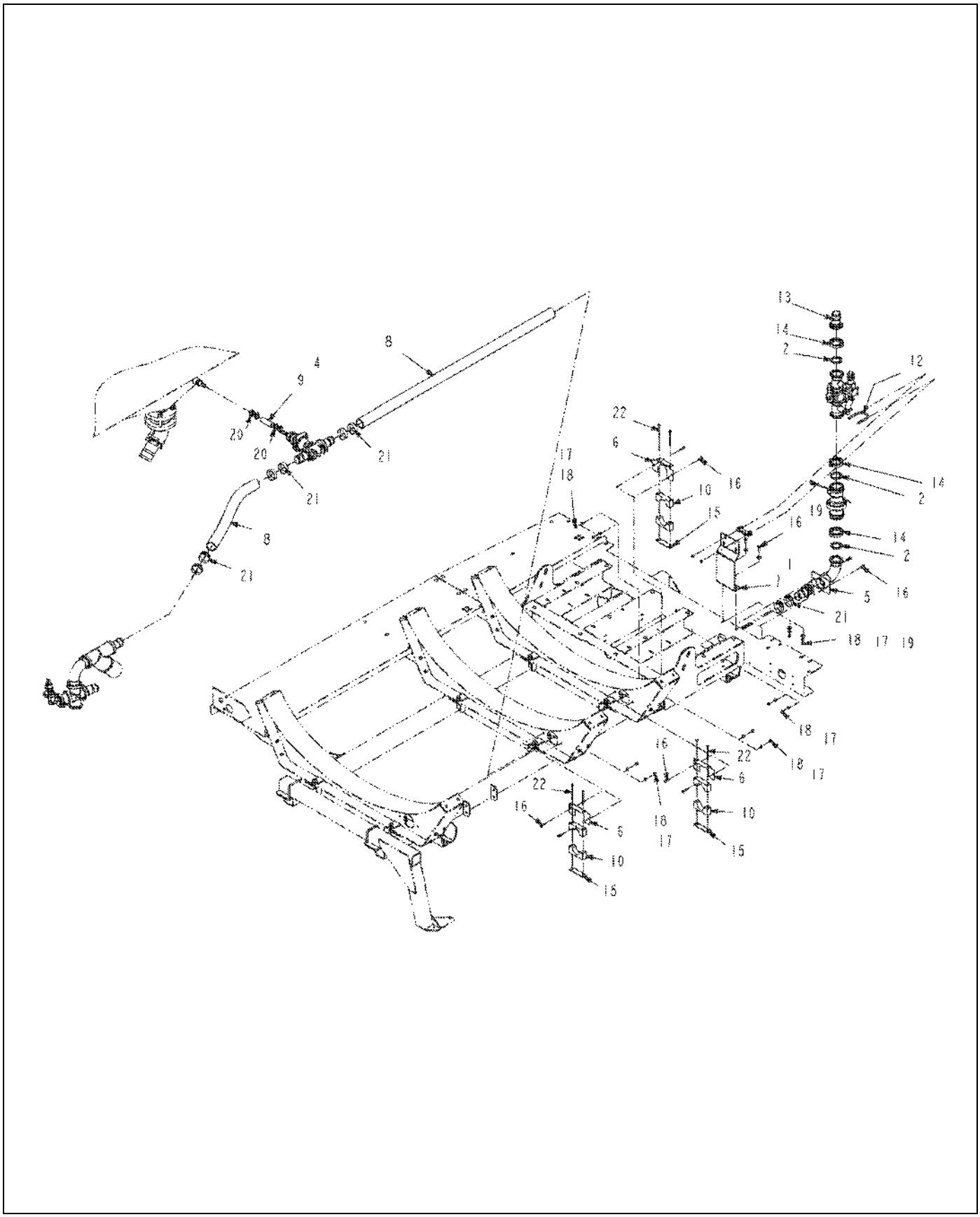

135907-02-N977-.TIF

Copyright © 2007 AGCO Corporation

PLMB INSTL-PRES,W/O CHEM INJ

ITEM	PART #	QTY	DESCRIPTION	COMMENTS
1	AG000767	1	BARB-HOSE,2.00MNPTX2.00BARB,PP	
2	AG000773	3	GASKET 2.00 EPDM	
3	AG129187	-	PIPE SEALANT-FLEX BLACK	
4	AG134343	1	TEE ASM-MANG,220X100,RLF VALVE	SEE PAGE 2-25
5	AG327785	1	MANIFOLD WLDMT-REAR,PRESS PLMB	
6	AG327850	3	BRKT-CLAMP,HOSE,PRESSURE	
7	AG327928	1	BRKT-FLOWMETER	
8	AG511722	-	HOSE-2.00,WIRE BRAID,EPDM [BULK: 7.521 FT]	
9	AG513385	-	HOSE,MED.PRESS 0.75 2BRD EPDM [BULK: 0.292 FT]	
10	AG518340	3	CLAMP 2.50 BLACK POLY (RTG)	
11	AG519861	AR	PROTECTOR HOSE 6.00 IN EPHA	
12	AG522044	1	CLAMP-MUFFLER,2.50,SS	
13	AG522894	1	CONN-2.00 FLG X2.00 HOSE BARB	
14	AG522895	3	CLAMP-WORM SCREW,2.00,SS	
15	AG523940	3	PLATE-WELD,SINGLE,GROUP 7	
16	AG550175	10	BOLT 0.37-16NCX 1.00 G5 ZN HHD	
17	AG550191	10	WASHER 0.37 LK ZN REG	
18	AG550825	10	NUT 0.37-16NC HEX ZN REG	
19	AG551007	4	WASHER 0.37 FL ZN REG TYPE-B	
20	AG561229	4	CLAMP 0.68-1.25 HOSE 12HS	
21	AG561630	8	CLAMP 2.28-2.59HOSE VOSS-250SS	
22	AG562148	6	BOLT 0.25-20NCX 4.00 G5 ZN HHD	

Copyright © 2007 AGCO Corporation

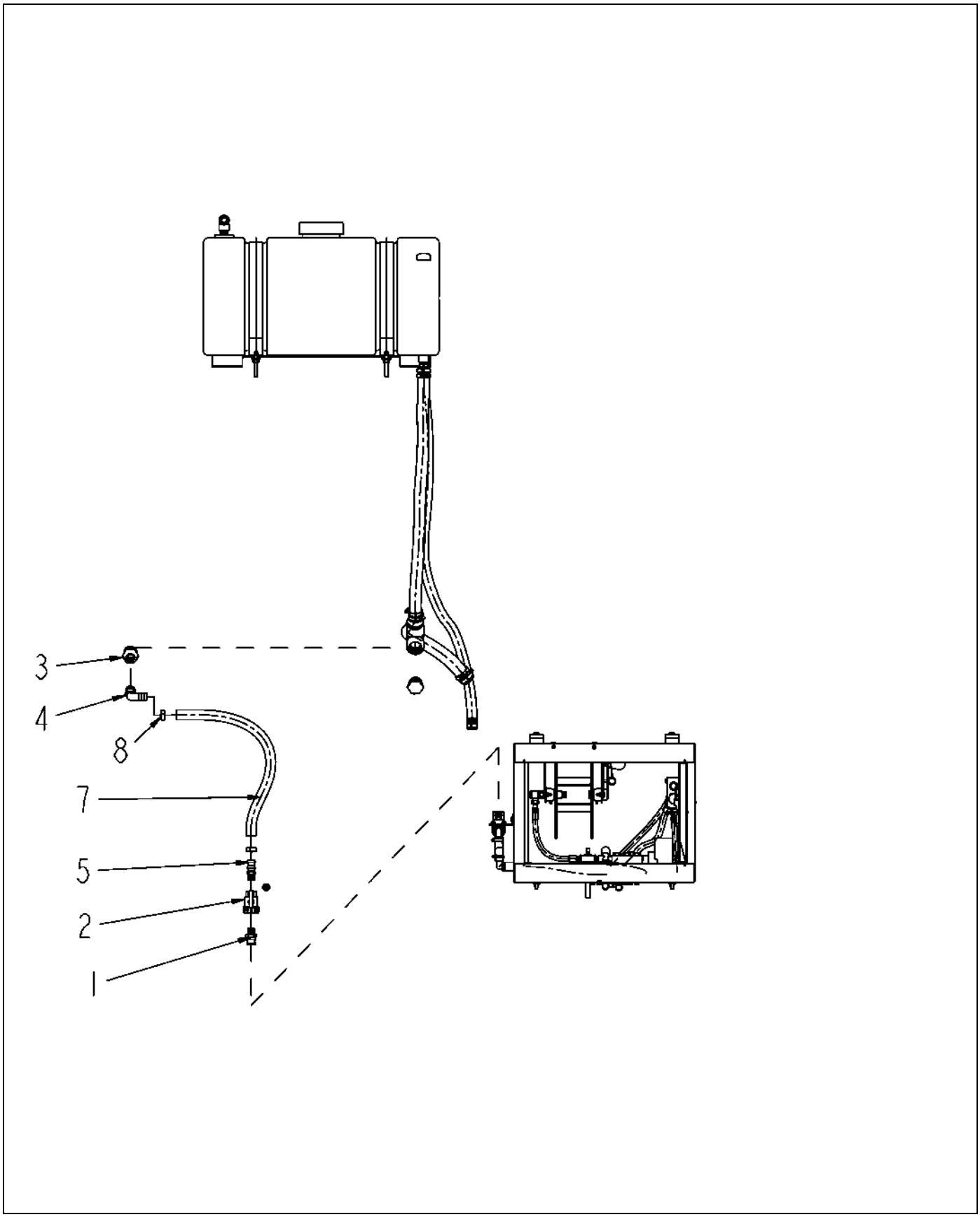

327800-C.tif

Copyright © 2007 AGCO Corporation

ITEM	PART #	QTY	DESCRIPTION	COMMENTS
1	AG006671	1	ADAPTER 0.75NPTX0.75MALE	
2	AG050205	1	VALVE 0.75 NPT BALL UNION POLY	SEE PAGE 4-45
3	AG050257	1	BSHG-RDCR,HEX,1.50X1.00NPT,PP	
4	AG051145	1	ELBOW 90D 1.00NPTX1.00 BARB PP	
5	AG051181	1	BARB-HOSE,0.75MNPTX1.00BARB,PP	
7	AG511528	-	HOSE 1.00 2BRD EPDM [BULK: 2.100 FT]	
8	AG561213	2	CLAMP 0.81-1.50 HOSE 16HS	

Copyright © 2007 AGCO Corporation

CYL INSTL-TLT,AUTOBM,80/90/100	11-1
HOSE INSTL-HYD,W/AUTOBOOM,BM	11-2
HOSE INSTL-HYD,W/AUTOBOOM,BM	11-3
HOSE INSTL-HYD,W/AUTOBOOM,BM	11-4
HOSE INSTL-HYD,W/AUTOBOOM,BM	11-5
BLOCK ASM-HYD,AUTOBOOM,G2	11-6
BLOCK ASM-HYD,W/AUTOBOOM,BM	11-7
CYLINDER ASM-TILT,BOOM,120,RH	11-8
CYLINDER ASM-TILT,BOOM,120,LH	11-9
CYLINDER ASM-4.00,BM BREAKAWAY	11-10
HOSE INSTL-HYD,W/AUTOBM,BM,120	11-11
HOSE INSTL-HYD,W/AUTOBM,BM,120	11-12
HOSE INSTL-HYD,W/AUTOBM,BM,120	11-13
HOSE INSTL-HYD,W/AUTOBM,BM,120	11-14
NOZZLE ASM-FENCE ROW,10/20,PP	11-15
PARTS-SERV,NOZ VALV,(508196D1)	11-16
NOZZLE ASM-FENCE ROW,10/20,SS	11-17
NOZZLE ASM-FENCE ROW,15,SS	11-18
CYL ASM-TILT,BM,W/AUTOBOOM,RH	11-19
CYL ASM-TILT,BM,W/AUTOBOOM,LH	11-20
NODE INSTL-CAN,AUTOBOOM,RAVEN	11-21
BLK ASM-HYD,BM,NO AUTOBM,SM BM	11-22
KIT INSTL-LOW RATE,8/10/12X4	11-23
WHEEL INSTL-AUTOBOOM,120	11-24
FORK ASM-WHEEL,AUTOBOOM	11-25
HUB WLDMT-WHEEL,AUTOBOOM	11-26
WHEEL INSTL-AUTOBOOM,80/90/100	11-27
OPT-CHEM EDUCTOR,PE CLEANLOAD	11-28
OPT-SUMP VALVE,3.00,ELEC	11-29
SYS INSTL-BCO,BM TREE,5.00 SL	11-30
AWFL INSTL-BRKAWAY,120 BM,RC	11-31
AWFL INSTL-BRKAWAY,120 BM,RC	11-32
WHEEL INSTL-CUSH,AUTOBOOM,120	11-33
WHEEL/AXLE ASM-CUSH,AUTOBM,LH	11-34
AXLE ASM-CUSH,AUTOBM,LH	11-35
WHEEL/AXLE ASM-CUSH,AUTOBM,RH	11-36
AXLE ASM-CUSH,AUTOBM,RH	11-37
CYL ASM-TILT,W/O AUTOBM,120,LH	11-38
HOSE INSTL-HYD,W/O AUTOBM,120	11-39
HOSE INSTL-HYD,W/O AUTOBM,120	11-40
HOSE INSTL-HYD,W/O AUTOBM,120	11-41
HOSE INSTL-HYD,W/O AUTOBM,120	11-42
CYL INSTL-TILT,W/AUTOBOOM,120	11-43
HOSE INSTL-HYD,W/AUTOBOOM,120	11-44
HOSE INSTL-HYD,W/AUTOBOOM,120	11-45
HOSE INSTL-HYD,W/AUTOBOOM,120	11-46
HOSE INSTL-HYD,W/AUTOBOOM,120	11-47
BLOCK-VALVE,7BANK,W/AUTOBOOM	11-48
BLOCK-VALVE,7BANK,W/AUTOBOOM	11-49
WHEEL INSTL-AUTOBM,80/90/100	11-50
PLMB INSTL-PRESS,W/CHEM INJ	11-51

ARM ASM-WHEEL,AUTOBOOM,120	11-52
SENSOR INSTL-AUTOBOOM,80FT	11-53
SNSR-ULTRASONIC,AUTOBM,RH MTG	11-54
SNSR-ULTRASONIC,AUTOBM,LH MTG	11-55
BRKT ASM-MTG,80,SNSR,AUTOBM	11-56
SENSOR INSTL-AUTOBOOM,90/100FT	11-57
SENSOR INSTL-ADD,AUTOBM,90/100	11-58
BRKT ASM-MTG,ANG,SNSR,LH	11-59
BRKT ASM-MTG,ANG,SNSR,RH	11-60
ARM ASM-WHEEL,AUTOBM,80/90/100	11-61
CONT INSTL-AUTOBOOM,G2,8/10X4	11-62
PUMP INSTL-LOOP1,RVN,RG	11-63
PUMP ASM-INJ,RVN	11-64
PUMP INSTL-LOOP2,RVN,RG	11-65
PLMB/TANK INSTL-INJ,RH,RG	11-66
PLMB/TANK INSTL-INJ,RH,RG	11-67
PLMB/TANK INSTL-INJ,DUAL,RG	11-68
PLMB/TANK INSTL-INJ,DUAL,RG	11-69
PLMB/TANK INSTL-INJ,LH,RG	11-70
PLMB/TANK INSTL-INJ,LH,RG	11-71
OPT-CHEM EDUCTOR,SS	11-72
SNSR INSTL-AUTOBOOM,120FT	11-73
ARM ASM-MTG,WHL,CUSH,120	11-74
ARM ASM-MTG,WHL,CUSH,120	11-75
SNSR INSTL-ADD,AUTOBM,90/100	11-76
BLK INSTL-HYD,W/AUTOBM,SM BM	11-77
HARN INSTL-SYS,AUTOBOOM,CAN	11-78
HARN INSTL-SYS,AUTOBOOM,CAN	11-79
HARN INSTL-SYS,AUTOBOOM,CAN	11-80
CONT INSTL-AUTOBM,CAN,12XX/SS	11-81
HARN INSTL-CAB,AUTOBM,12XX/SS	11-82
HARN INSTL-CAB,AUTOBM,12XX/SS	11-83
HARN INSTL-CAB,AUTOBM,12XX/SS	11-84
HARN INSTL-CAB,AUTOBM,12XX/SS	11-85
TUBE INSTL-W/O LOW RATE KIT	11-86
CONT INSTL-AUTOBOOM,G2,12X4	11-87
OPT-W/O CHEM EDUCTOR	11-88
OPT-NOZ,5WAY,RTRY,90X10,ON	11-89
OPT-NOZ,5WAY,RTRY,90X20,OFF	11-90
OPT-NOZ,5WAY,RTRY,100X10,ON	11-91
OPT-NOZ,5WAY,RTRY,100X20,OFF	11-92

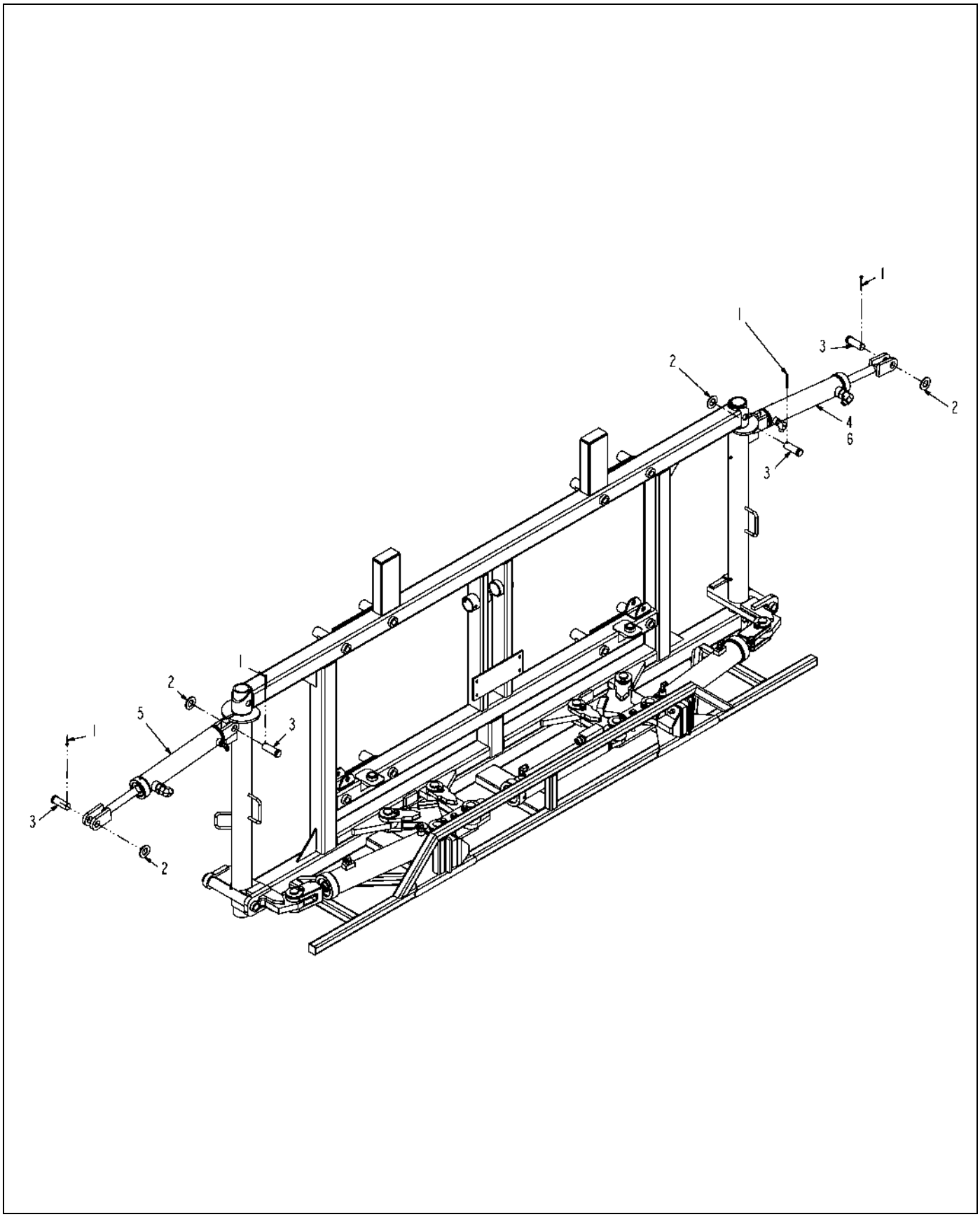

512597D1-01-N562-.TIF

Copyright © 2007 AGCO Corporation

CYL INSTL-TLT,AUTOBM,80/90/100

ITEM	PART #	QTY	DESCRIPTION	COMMENTS
1	AG515352	4	PIN COTTER 0.18X2.00 SS	
2	AG551856	4	WASHER 1.00 FL ZN SAE TYPE-A	
3	AG602132	4	PIN CLEVIS 1.00X2.62 ZN	[A]
4	512600D1	1	CYL ASM-TILT,BM,W/AUTOBOOM,RH	SEE PAGE 11-19
5	512601D1	1	CYL ASM-TILT,BM,W/AUTOBOOM,LH	SEE PAGE 11-20
6	512602D1	1	HOSE INSTL-HYD,W/AUTOBOOM,BM	SEE PAGE 11-5
	FOOTNOTE [A]		GREASABLE PIN IS 519637	

Copyright © 2007 AGCO Corporation

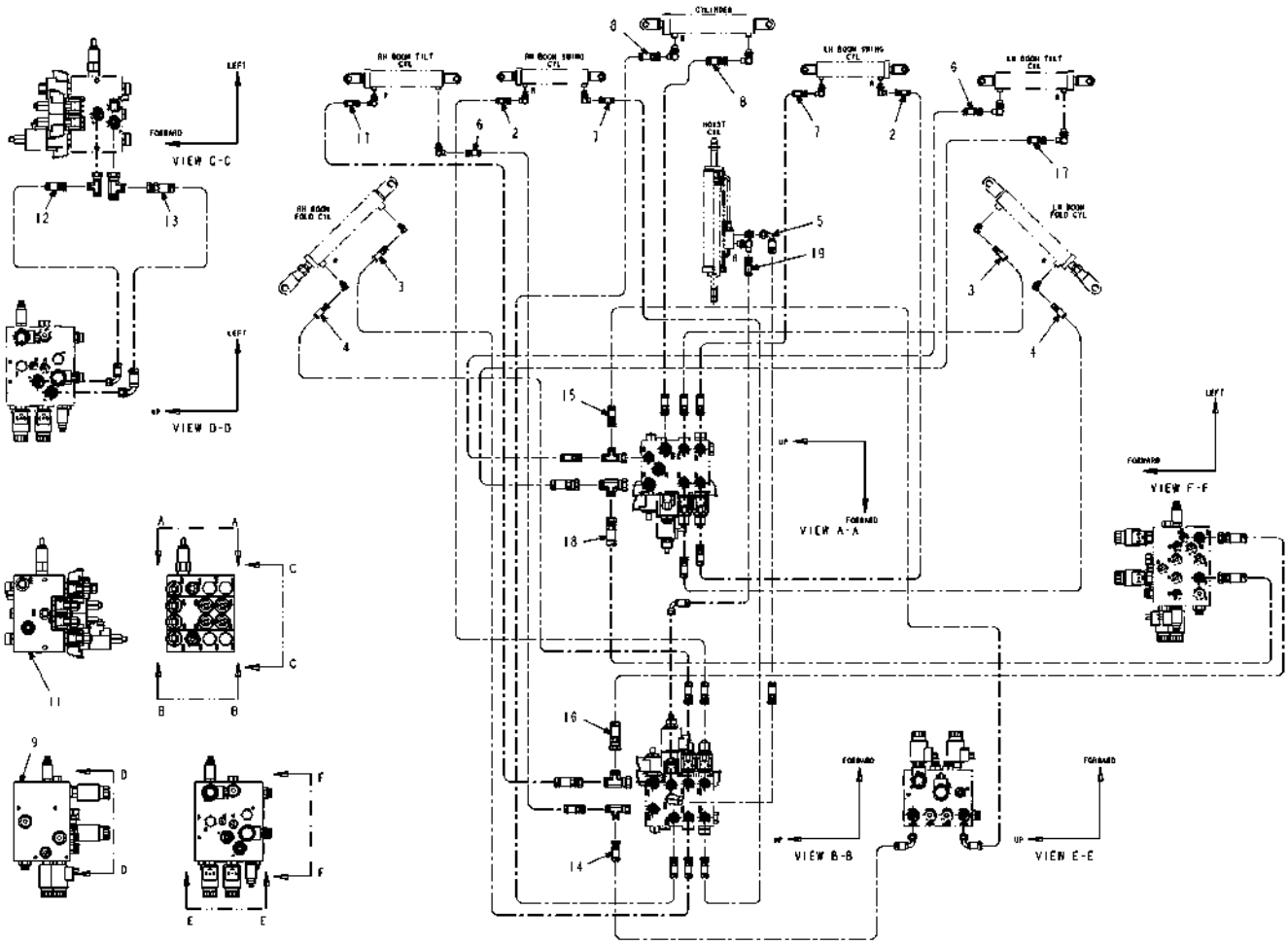

512602D1-01-N562-01.TIF

Copyright © 2007 AGCO Corporation

HOSE INSTL-HYD,W/AUTOBOOM,BM

ITEM	PART #	QTY	DESCRIPTION	COMMENTS
1	AG553557	AR	TIE CABLE 7.37 .06-1.37 BLACK	
2	512544D1	-	HOSE ASM,-4X158.0 ORFS/ORFS	
3	512545D1	-	HOSE ASM,-4X399.0 6ORFS/ORFS	
4	512546D1	-	HOSE ASM,-4X417.0 6ORFS/ORFS	
5	512547D1	-	HOSE ASM,-8X60.0 ORFS/ORFS90	
6	512548D1	-	HOSE ASM,-6X126.0 ORFS/ORFS	
7	512549D1	-	HOSE ASM,-4X168.0 6ORFS/ORFS	
8	512550D1	-	HOSE ASM,-8X200.0 ORFS/ORFS	
9	512603D1	-	BLOCK ASM-HYD,AUTOBOOM,G2	SEE PAGE 11-6
10	512604D1	1	KIT-HOSE,W/AUTOBM,BM,80/90/100	
11	512605D1	-	BLOCK ASM-HYD,W/AUTOBOOM,BM	SEE PAGE 11-7
12	512606D1	-	HOSE ASM, -6X25.0 ORFS/ORFS90	
13	512607D1	-	HOSE ASM,-8X25.0 ORFS/ORFS90	
14	512608D1	-	HOSE ASM,-6X39.0 ORFS/ORFS90	
15	512609D1	-	HOSE ASM,-6X27.0 ORFS/ORFS90	
16	512610D1	-	HOSE ASM,-8X39.0 ORFS/ORFS	
17	512611D1	-	HOSE ASM,-6X136.0 8ORFS/8ORFS	
18	512612D1	-	HOSE ASM,-8X30.0 ORFS/ORFS	
19	512744D1	-	HOSE ASM,-8X60.0 ORFS/ORFS90L	

Copyright © 2007 AGCO Corporation

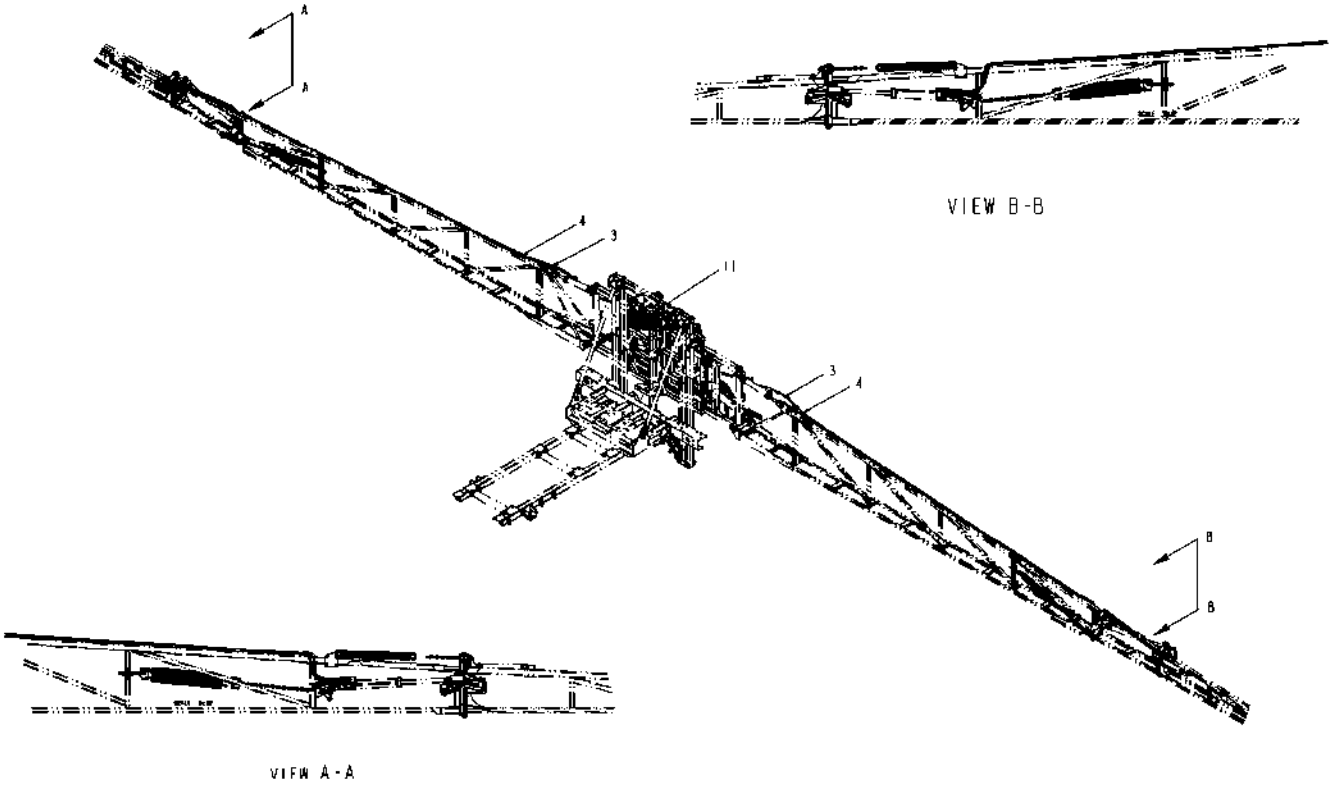

512602D1-01-N562-02.TIF

Copyright © 2007 AGCO Corporation

HOSE INSTL-HYD,W/AUTOBOOM,BM

ITEM	PART #	QTY	DESCRIPTION	COMMENTS
1	AG553557	AR	TIE CABLE 7.37 .06-1.37 BLACK	
3	512545D1	-	HOSE ASM,-4X399.0 6ORFS/ORFS	
4	512546D1	-	HOSE ASM,-4X417.0 6ORFS/ORFS	
11	512605D1	-	BLOCK ASM-HYD,W/AUTOBOOM,BM	SEE PAGE 11-7

Copyright © 2007 AGCO Corporation

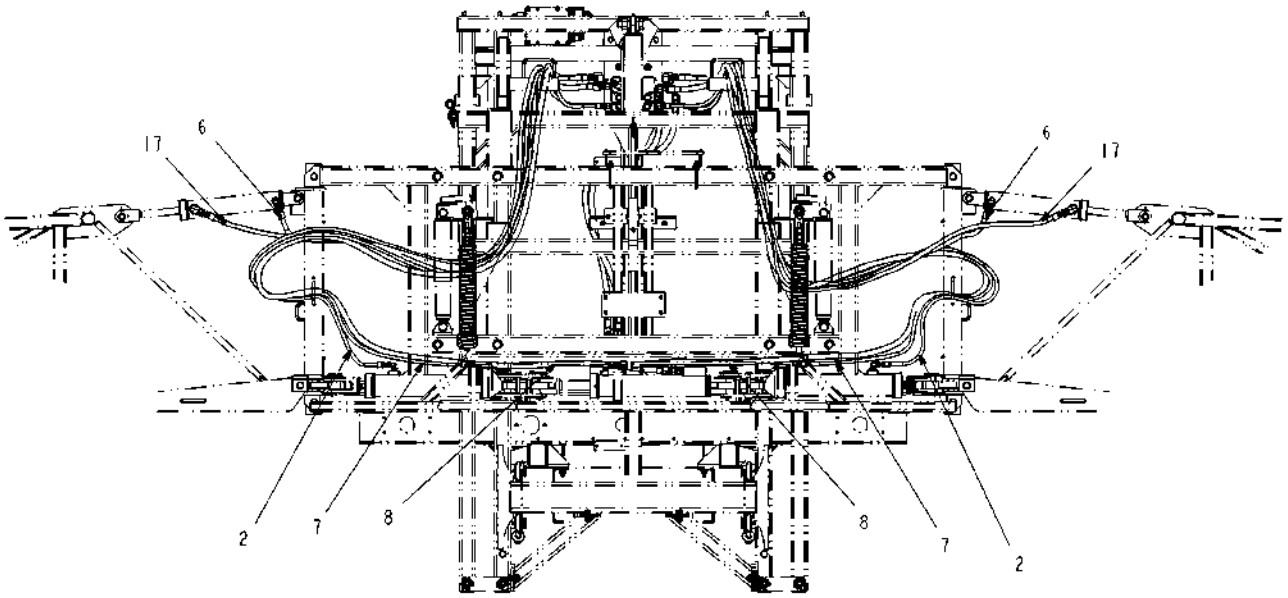

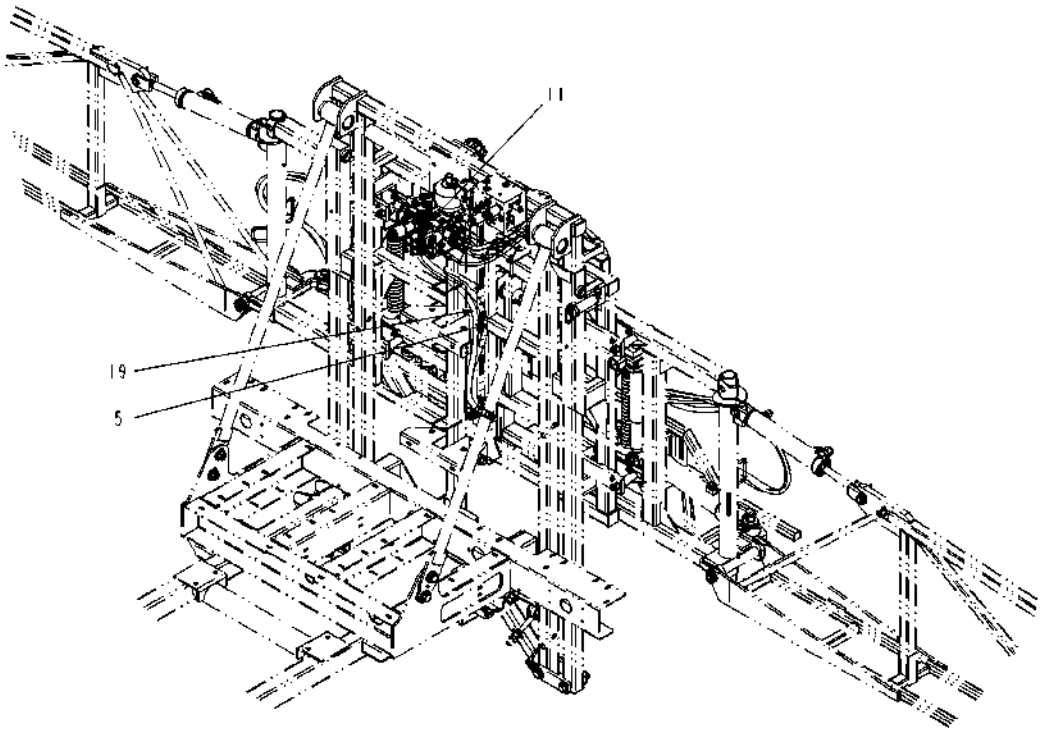

512602D1-01-N562-03.TIF

Copyright © 2007 AGCO Corporation

HOSE INSTL-HYD,W/AUTOBOOM,BM

ITEM	PART #	QTY	DESCRIPTION	COMMENTS
1	AG553557	AR	TIE CABLE 7.37 .06-1.37 BLACK	
2	512544D1	-	HOSE ASM,-4X158.0 ORFS/ORFS	
5	512547D1	-	HOSE ASM,-8X60.0 ORFS/ORFS90	
6	512548D1	-	HOSE ASM,-6X126.0 ORFS/ORFS	
7	512549D1	-	HOSE ASM,-4X168.0 6ORFS/ORFS	
8	512550D1	-	HOSE ASM,-8X200.0 ORFS/ORFS	
11	512605D1	-	BLOCK ASM-HYD,W/AUTOBOOM,BM	SEE PAGE 11-7
17	512611D1	-	HOSE ASM,-6X136.0 8ORFS/8ORFS	
19	512744D1	-	HOSE ASM,-8X60.0 ORFS/ORFS90L	

Copyright © 2007 AGCO Corporation

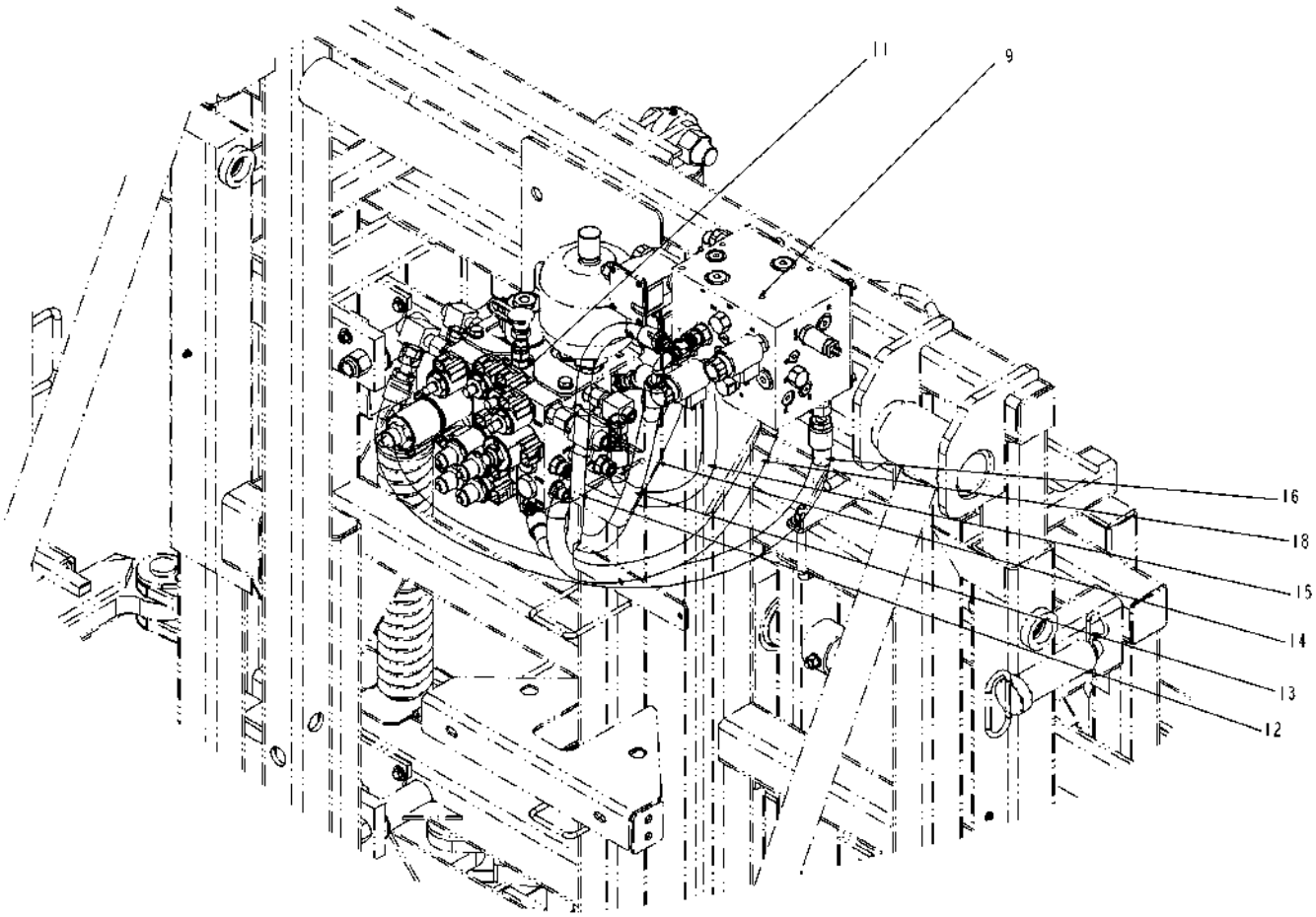

512602D1-01-N562-04.TIF

Copyright © 2007 AGCO Corporation

ITEM	PART #	QTY	DESCRIPTION	COMMENTS
9	512603D1	-	BLOCK ASM-HYD,AUTOBOOM,G2	SEE PAGE 11-6
11	512605D1	-	BLOCK ASM-HYD,W/AUTOBOOM,BM	SEE PAGE 11-7
12	512606D1	-	HOSE ASM, -6X25.0 ORFS/ORFS90	
13	512607D1	-	HOSE ASM,-8X25.0 ORFS/ORFS90	
14	512608D1	-	HOSE ASM,-6X39.0 ORFS/ORFS90	
15	512609D1	-	HOSE ASM,-6X27.0 ORFS/ORFS90	
16	512610D1	-	HOSE ASM,-8X39.0 ORFS/ORFS	
18	512612D1	-	HOSE ASM,-8X30.0 ORFS/ORFS	

Copyright © 2007 AGCO Corporation

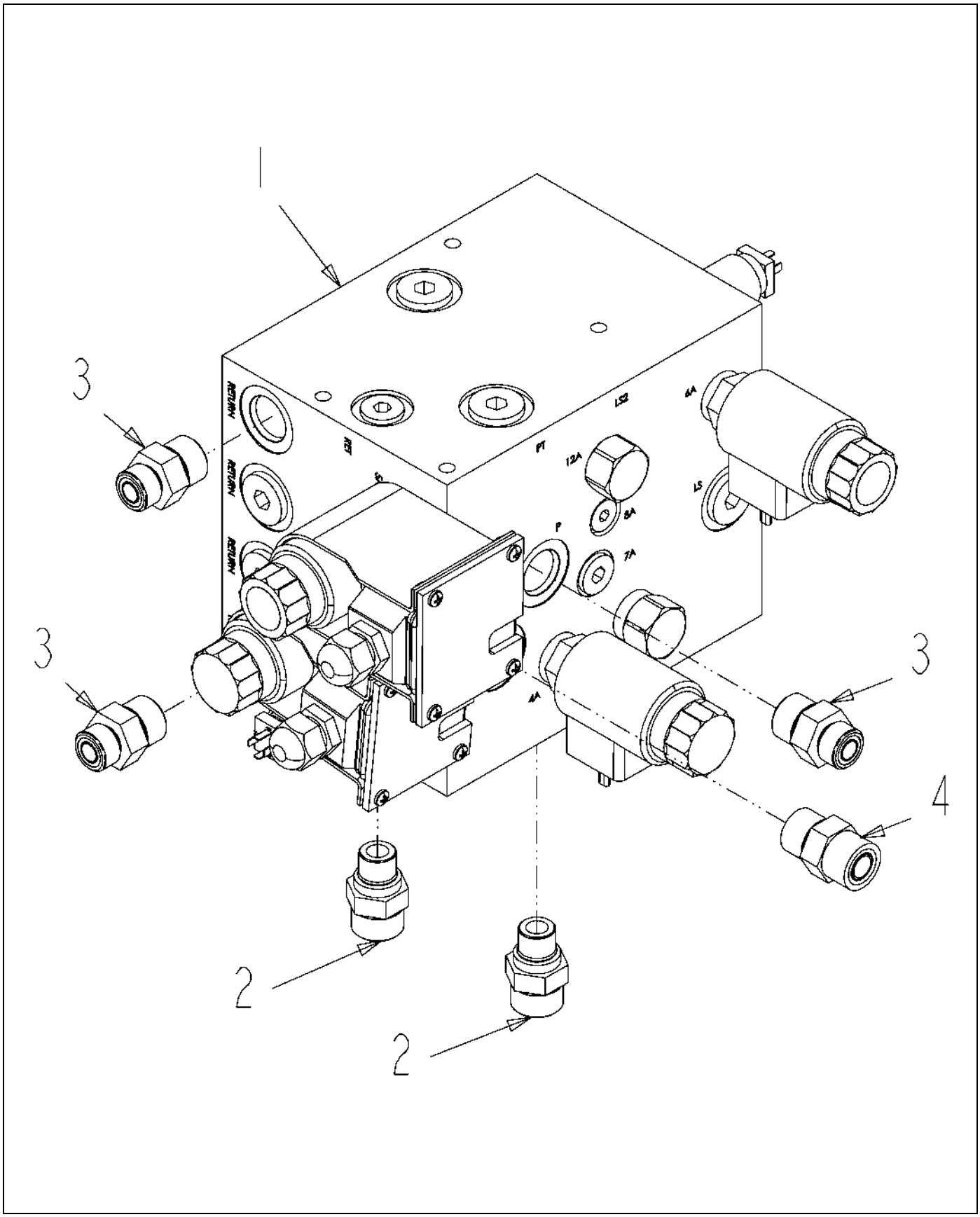

512603D1-01-N562-.TIF

Copyright © 2007 AGCO Corporation

BLOCK ASM-HYD,AUTOBOOM,G2

ITEM	PART #	QTY	DESCRIPTION	COMMENTS
1	AG136740	1	BLOCK-VALVE,HYD,AUTOBOOM,G2	SEE PAGE 5-25
2	400428X1	2	CONNECTOR AS-STR-6STOR-8ORFS	SEE PAGE 5-7
3	400628X1	3	CONNECTOR AS-STR-8STOR-6ORFS	SEE PAGE 5-17
4	CH148-8340	1	CONNECTOR AS -8ORFS-8STOR	SEE PAGE 5-23

Copyright © 2007 AGCO Corporation

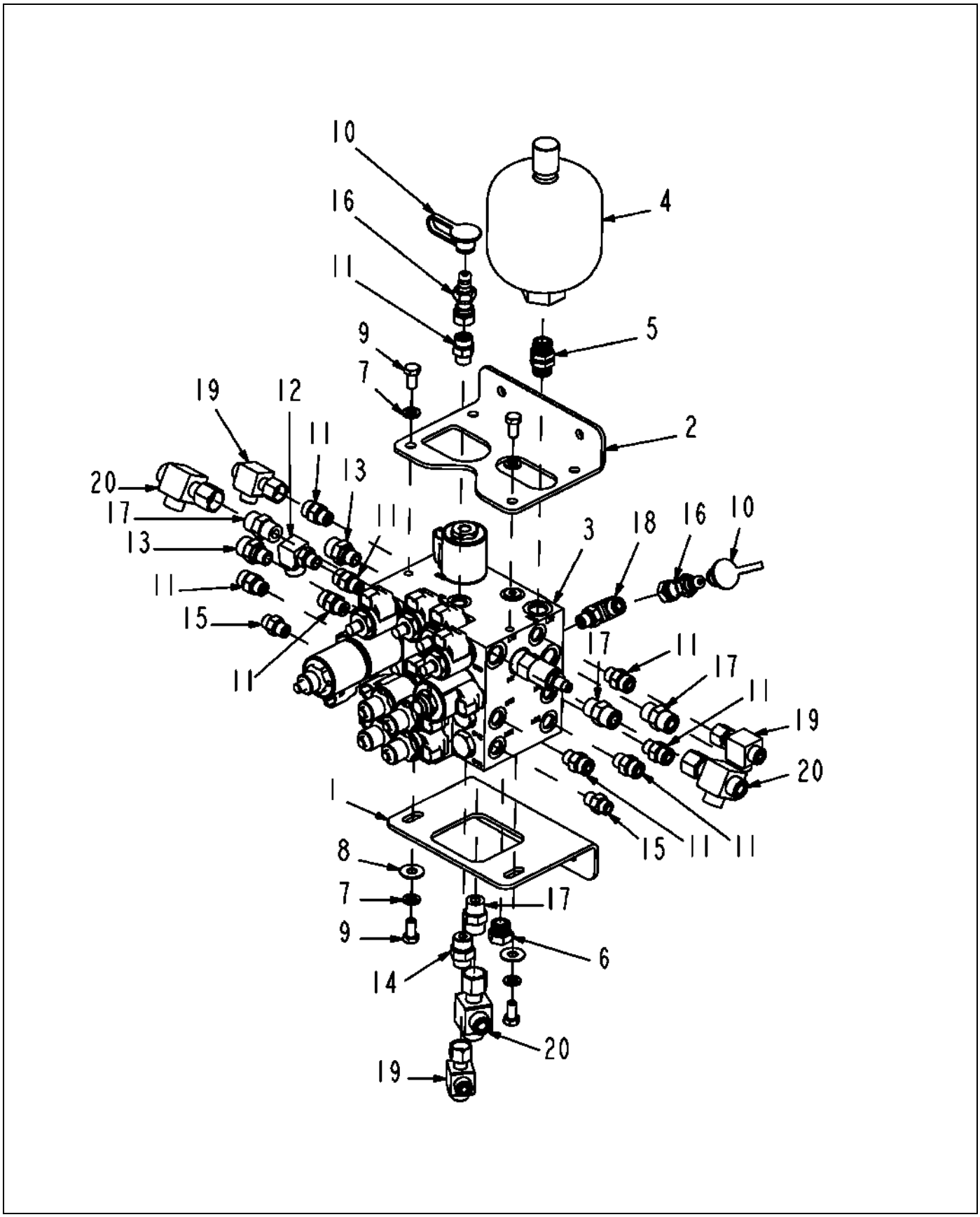

512605D1-01-N562-.TIF

Copyright © 2007 AGCO Corporation

BLOCK ASM-HYD,W/AUTOBOOM,BM

ITEM	PART #	QTY	DESCRIPTION	COMMENTS
1	AG327803	1	BRKT-MTG,LOWER,VALVE BLOCK	
2	AG327804	1	BRKT-MTG,UPPER,BLOCK,VALVE	
3	AG424252	1	VALVE-HYD,7 BANK,W/BREAKAWAY	SEE PAGE 5-21
4	AG523544	1	ACCUM-HYD,DIAPH,45CU IN(MV)	
5	AG524378	1	ADPTR-STR,.50MO-R X .50MO-R	SEE PAGE 5-22
6	AG560899	1	PLUG 0.50MO-R HEX	
7	AG562050	4	WASHER 0.37 LK SS REG	
8	AG562073	2	WASHER 0.37 FL SS REG TYPE-B	
9	AG562120	4	BOLT 0.37-16NCX 0.75 S.S. HHD	
10	400323X1	2	CAP-DUST 12.6 DIA -RUBBER	
11	400367X1	9	CONNECTOR AS-6 STOR -6 ORFS	SEE PAGE 5-16
12	400417X1	1	ELBOW AS-90DEG-6STOR-8ORFS	SEE PAGE 5-6
13	400428X1	2	CONNECTOR AS-STR-6STOR-8ORFS	SEE PAGE 5-7
14	400628X1	1	CONNECTOR AS-STR-8STOR-6ORFS	SEE PAGE 5-17
15	400630X1	1	CONNECTOR AS-STR-6STOR-4ORFS	SEE PAGE 5-18
16	401024X1	2	NIPPLE-TEST PORT,PD,-06 ORFS	
17	CH148-8340	4	CONNECTOR AS -8ORFS-8STOR	SEE PAGE 5-23
18	CH148-8378	1	ELBOW AS-90-6STOR X 6ORFS	SEE PAGE 5-24
19	CH148-8433	3	TEE AS-6 ORFS X 3	SEE PAGE 5-26
20	CH148-8444	3	TEE-SWIVEL 3X -8 ORFS	SEE PAGE 5-27

Copyright © 2007 AGCO Corporation

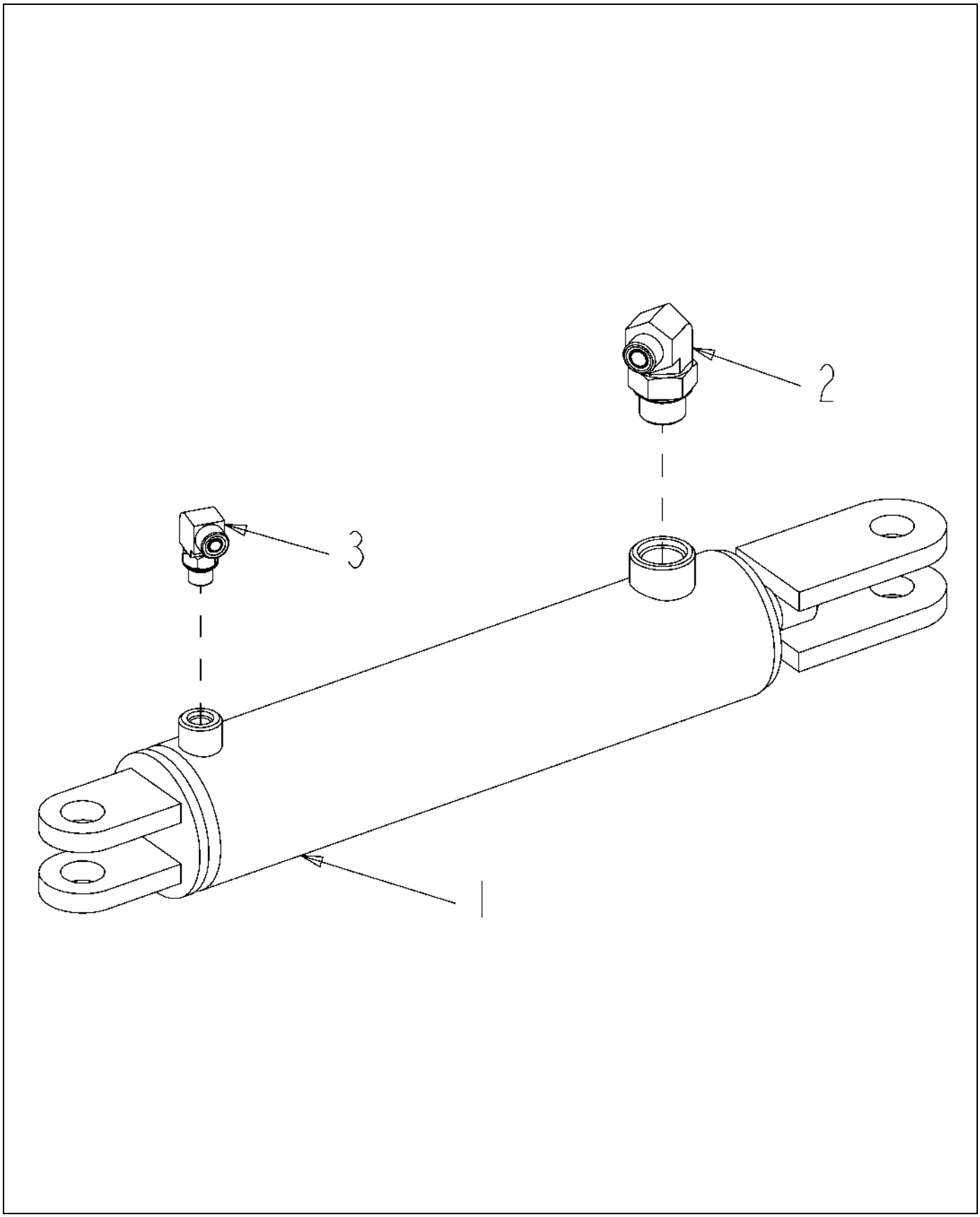

513464D1-01-N562-.TIF

Copyright © 2007 AGCO Corporation

CYLINDER ASM-TILT,BOOM,120,RH

ITEM	PART #	QTY	DESCRIPTION	COMMENTS
1	AG136825	1	CYLINDER-HYD,3.00X11.38X1.25	SEE PAGE 5-29
2	512771D1	1	ELBOW-90D,-12STOR X -8ORFS	SEE PAGE 5-30
3	CH148-8378	1	ELBOW AS-90-6STOR X 6ORFS	SEE PAGE 5-24

Copyright © 2007 AGCO Corporation

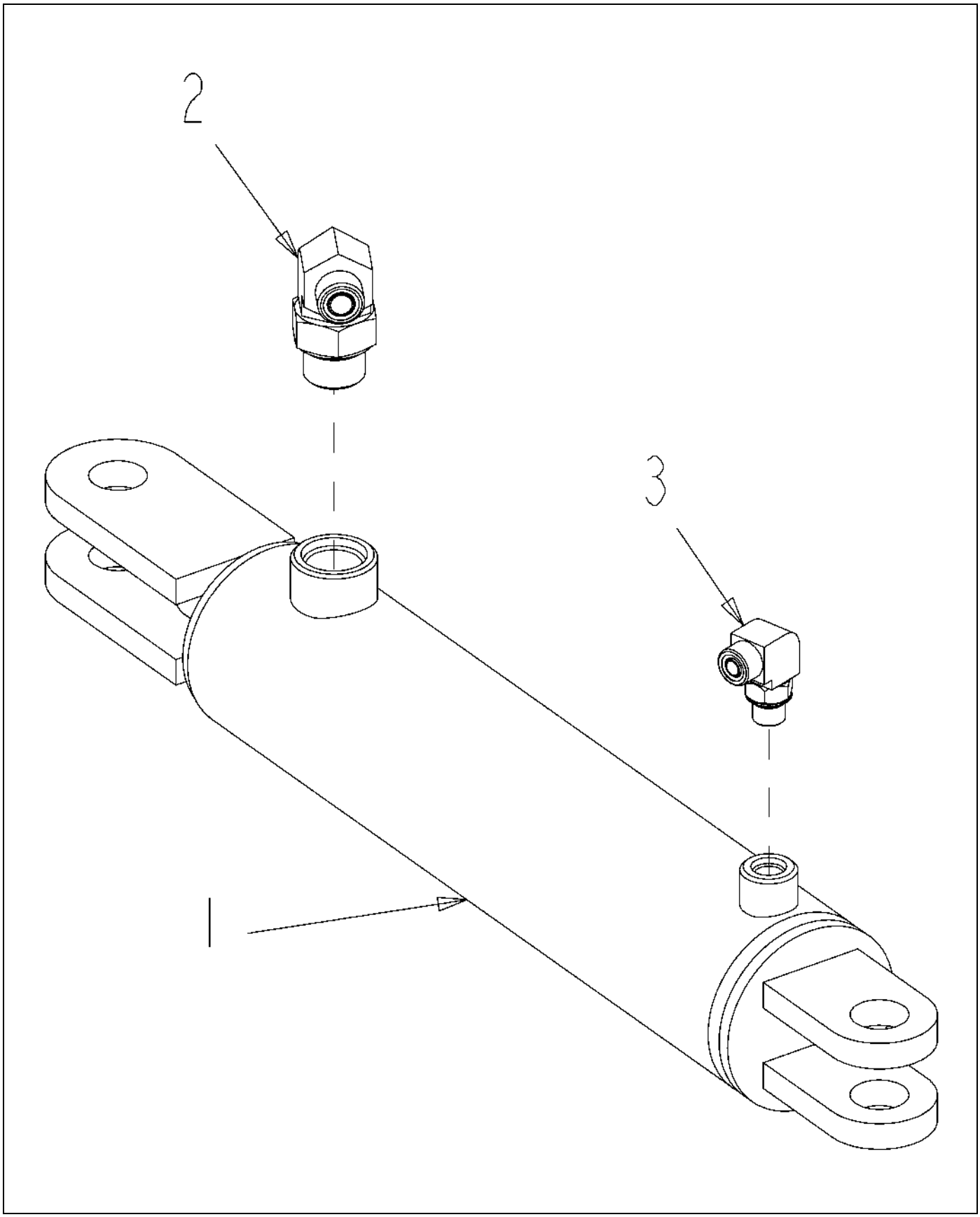

513465D1-01-N562-.TIF

Copyright © 2007 AGCO Corporation

CYLINDER ASM-TILT,BOOM,120,LH

ITEM	PART #	QTY	DESCRIPTION	COMMENTS
1	AG136825	1	CYLINDER-HYD,3.00X11.38X1.25	SEE PAGE 5-29
2	512771D1	1	ELBOW-90D,-12STOR X -8ORFS	SEE PAGE 5-30
3	CH148-8378	1	ELBOW AS-90-6STOR X 6ORFS	SEE PAGE 5-24

Copyright © 2007 AGCO Corporation

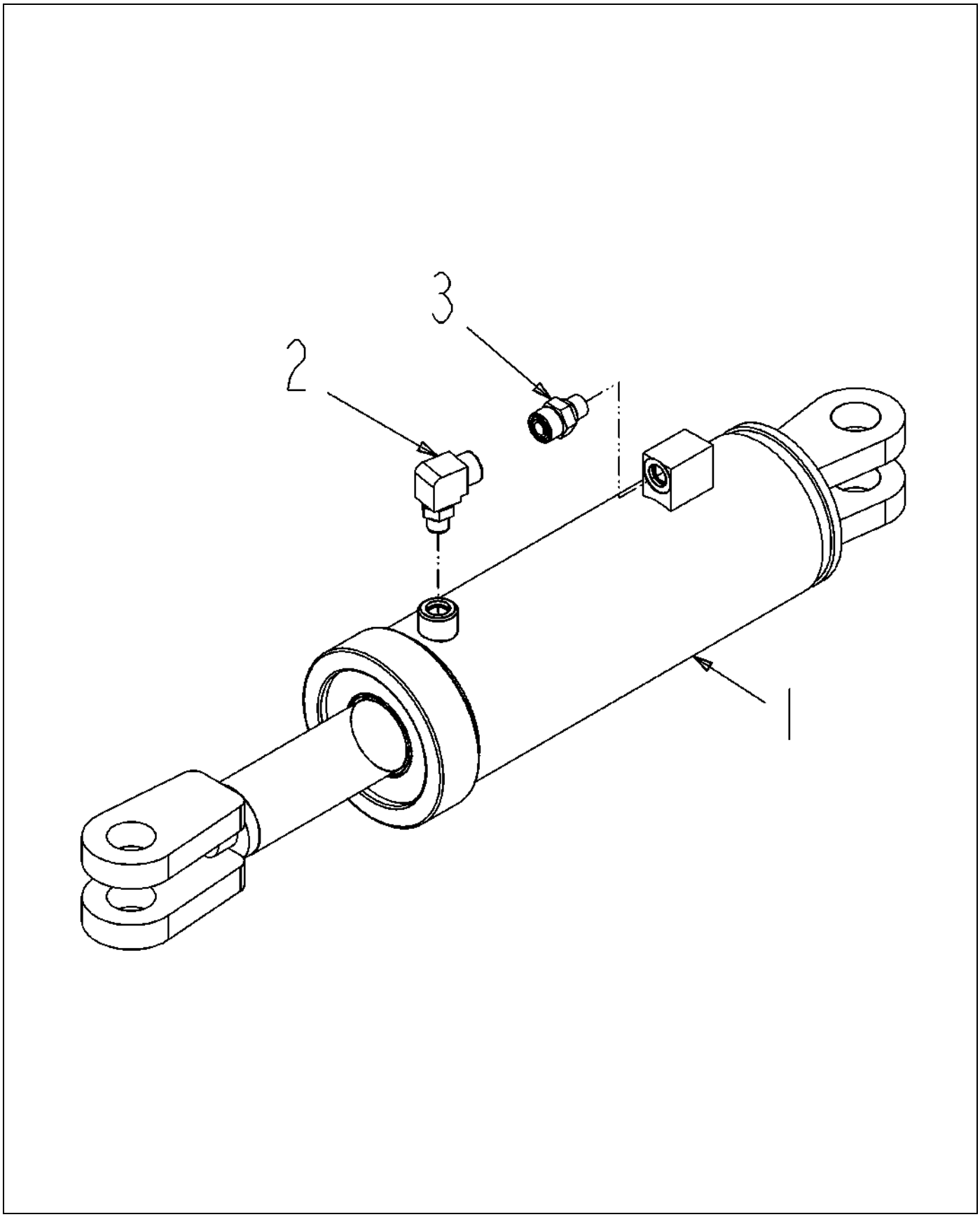

513466D1-01-N562-.TIF

Copyright © 2007 AGCO Corporation

CYLINDER ASM-4.00,BM BREAKAWAY

ITEM	PART #	QTY	DESCRIPTION	COMMENTS
1	AG136742	1	CYLINDER-HYD,4.00X6.00X2.00	SEE PAGE 5-31
2	400417X1	1	ELBOW AS-90DEG-6STOR-8ORFS	SEE PAGE 5-6
3	400428X1	1	CONNECTOR AS-STR-6STOR-8ORFS	SEE PAGE 5-7

Copyright © 2007 AGCO Corporation

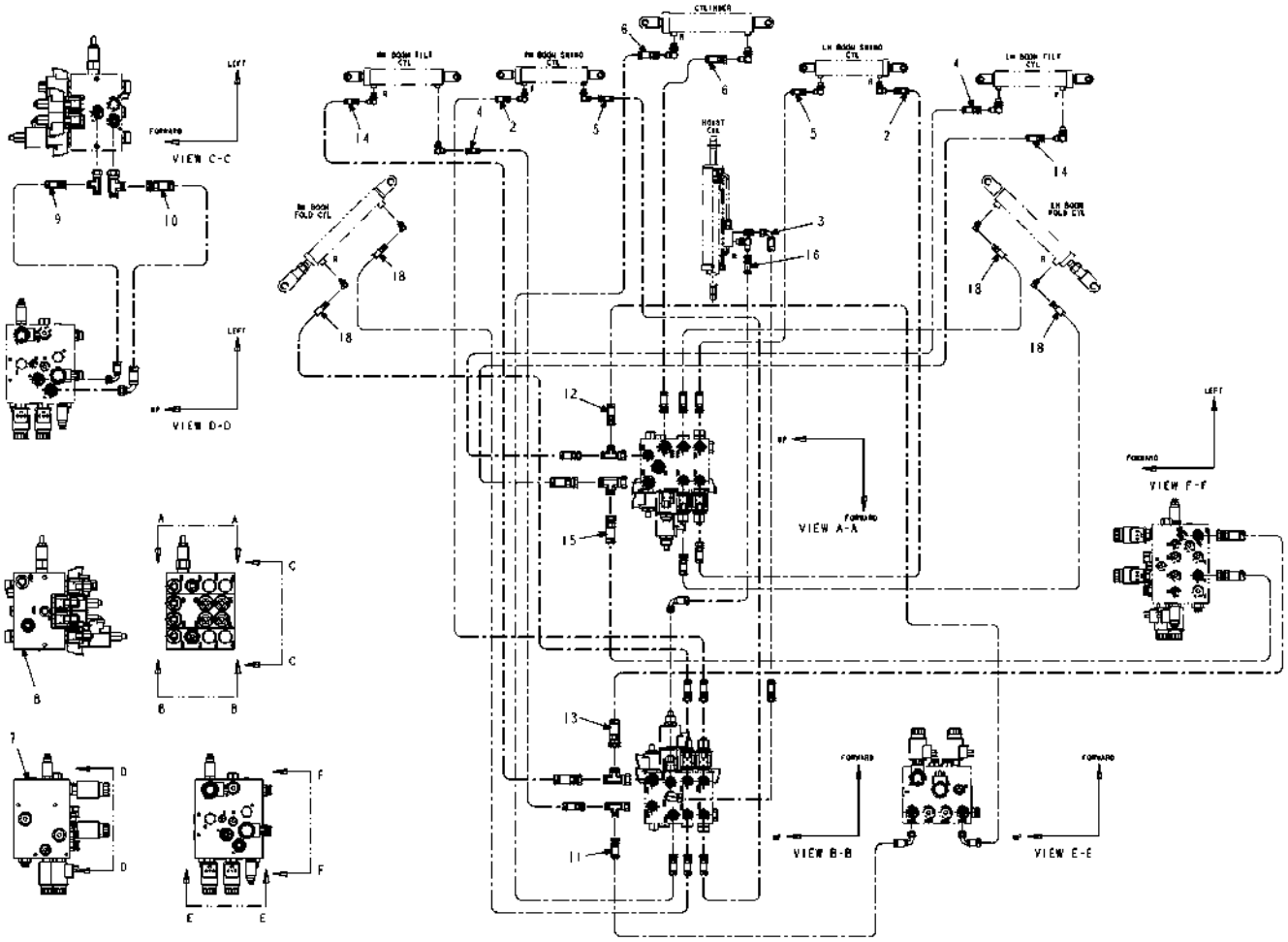

513463D1-01-N562-01.TIF

Copyright © 2007 AGCO Corporation

HOSE INSTL-HYD,W/AUTOBM,BM,120

ITEM	PART #	QTY	DESCRIPTION	COMMENTS
1	AG553557	AR	TIE CABLE 7.37 .06-1.37 BLACK	
2	512544D1	-	HOSE ASM,-4X158.0 ORFS/ORFS	
3	512547D1	-	HOSE ASM,-8X60.0 ORFS/ORFS90	
4	512548D1	-	HOSE ASM,-6X126.0 ORFS/ORFS	
5	512549D1	-	HOSE ASM,-4X168.0 6ORFS/ORFS	
6	512550D1	-	HOSE ASM,-8X200.0 ORFS/ORFS	
7	512603D1	-	BLOCK ASM-HYD,AUTOBOOM,G2	SEE PAGE 11-6
8	512605D1	-	BLOCK ASM-HYD,W/AUTOBOOM,BM	SEE PAGE 11-7
9	512606D1	-	HOSE ASM, -6X25.0 ORFS/ORFS90	
10	512607D1	-	HOSE ASM,-8X25.0 ORFS/ORFS90	
11	512608D1	-	HOSE ASM,-6X39.0 ORFS/ORFS90	
12	512609D1	-	HOSE ASM,-6X27.0 ORFS/ORFS90	
13	512610D1	-	HOSE ASM,-8X39.0 ORFS/ORFS	
14	512611D1	-	HOSE ASM,-6X136.0 8ORFS/8ORFS	
15	512612D1	-	HOSE ASM,-8X30.0 ORFS/ORFS	
16	512744D1	-	HOSE ASM,-8X60.0 ORFS/ORFS90L	
17	513467D1	1	KIT-HOSE,W/AUTOBOOM,BM,120	
18	513468D1	-	HOSE ASM,-4X429 6ORFS/ORFS	

Copyright © 2007 AGCO Corporation

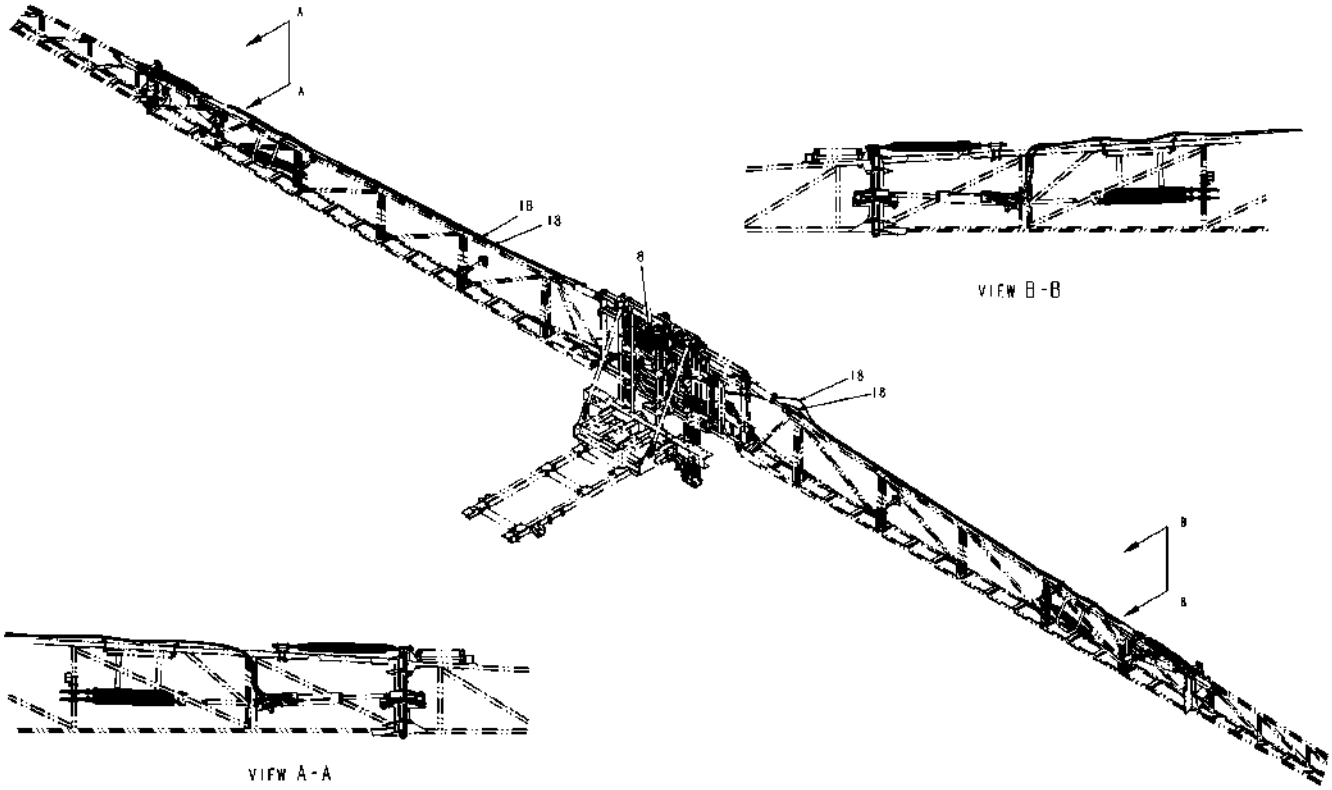

513463D1-01-N562-02.TIF

Copyright © 2007 AGCO Corporation

HOSE INSTL-HYD,W/AUTOBM,BM,120

ITEM	PART #	QTY	DESCRIPTION	COMMENTS
8	512605D1	-	BLOCK ASM-HYD,W/AUTOBOOM,BM	SEE PAGE 11-7
18	513468D1	-	HOSE ASM,-4X429 6ORFS/ORFS	

Copyright © 2007 AGCO Corporation

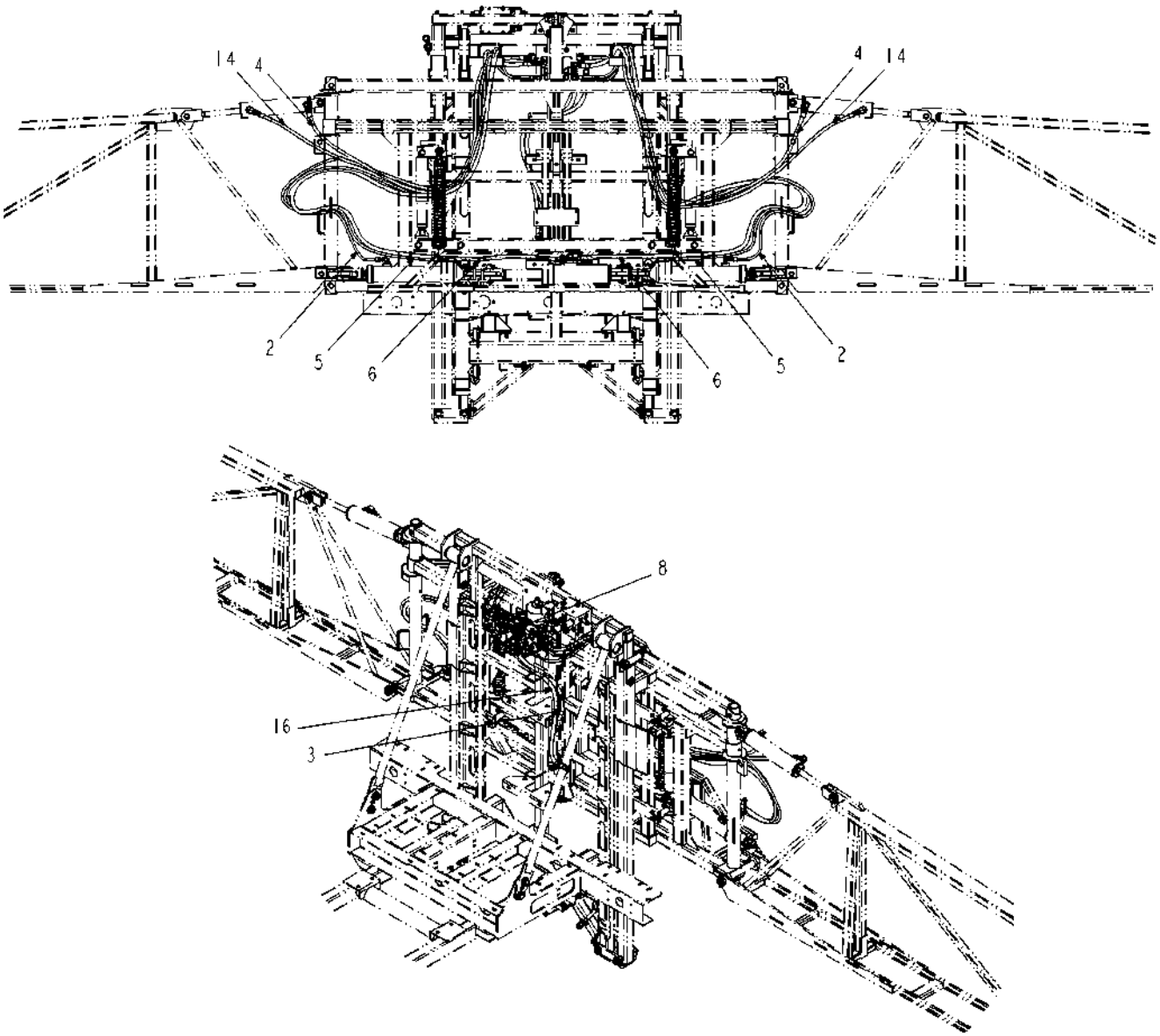

513463D1-01-N562-03.TIF

Copyright © 2007 AGCO Corporation

ITEM	PART #	QTY	DESCRIPTION	COMMENTS
2	512544D1	-	HOSE ASM,-4X158.0 ORFS/ORFS	
3	512547D1	-	HOSE ASM,-8X60.0 ORFS/ORFS90	
4	512548D1	-	HOSE ASM,-6X126.0 ORFS/ORFS	
5	512549D1	-	HOSE ASM,-4X168.0 6ORFS/ORFS	
6	512550D1	-	HOSE ASM,-8X200.0 ORFS/ORFS	
8	512605D1	-	BLOCK ASM-HYD,W/AUTOBOOM,BM	SEE PAGE 11-7
14	512611D1	-	HOSE ASM,-6X136.0 8ORFS/8ORFS	
16	512744D1	-	HOSE ASM,-8X60.0 ORFS/ORFS90L	

Copyright © 2007 AGCO Corporation

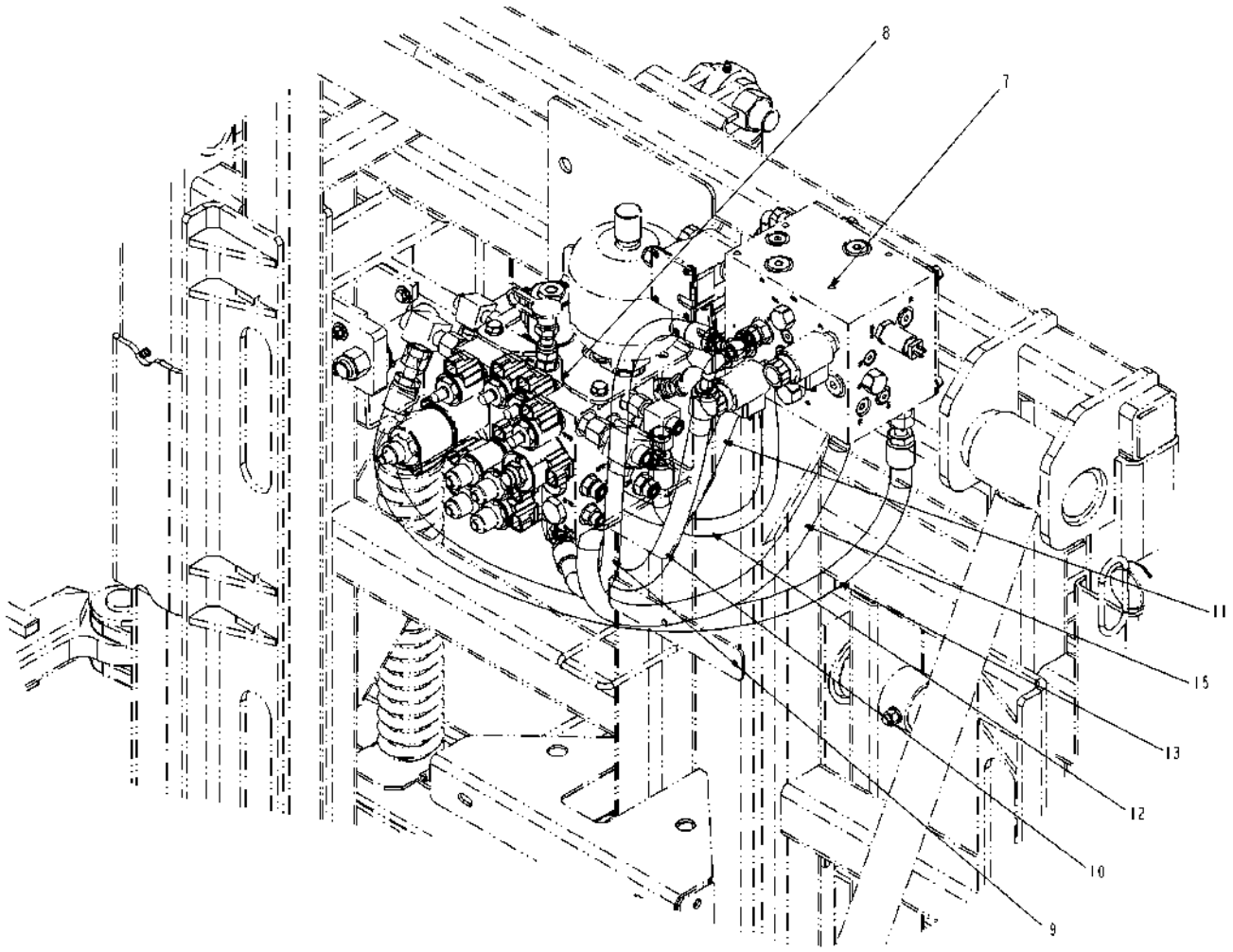

513463D1-01-N562-04.TIF

Copyright © 2007 AGCO Corporation

ITEM	PART #	QTY	DESCRIPTION	COMMENTS
7	512603D1	-	BLOCK ASM-HYD,AUTOBOOM,G2	SEE PAGE 11-6
8	512605D1	-	BLOCK ASM-HYD,W/AUTOBOOM,BM	SEE PAGE 11-7
9	512606D1	-	HOSE ASM, -6X25.0 ORFS/ORFS90	
10	512607D1	-	HOSE ASM,-8X25.0 ORFS/ORFS90	
11	512608D1	-	HOSE ASM,-6X39.0 ORFS/ORFS90	
12	512609D1	-	HOSE ASM,-6X27.0 ORFS/ORFS90	
13	512610D1	-	HOSE ASM,-8X39.0 ORFS/ORFS	
15	512612D1	-	HOSE ASM,-8X30.0 ORFS/ORFS	

Copyright © 2007 AGCO Corporation

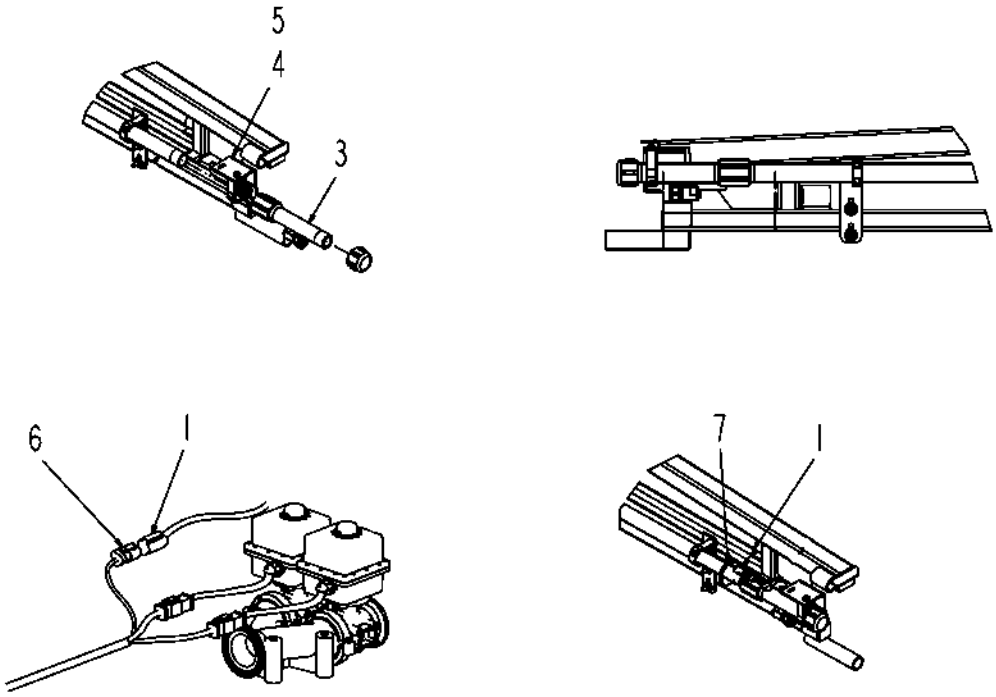

134748-A.tif

Copyright © 2007 AGCO Corporation

NOZZLE ASM-FENCE ROW,10/20,PP

ITEM	PART #	QTY	DESCRIPTION	COMMENTS
1	AG122657	2	HARNESS-END ROW	
2	AG129187	AR	PIPE SEALANT-FLEX BLACK	
3	AG134668	2	PIPE ASM-ENDROW,ELEC,10/20,PP	SEE PAGE 4-20
4	AG134670	1	BRKT ASM-ENDROW,IPS CLP,RH	SEE PAGE 4-85
5	AG134747	1	BRKT ASM-ENDROW,IPS CLP,LH	SEE PAGE 4-86
6	AG504299	-	HARNESS-ELEC BM SECT VLV(SYS)	
7	AG553557	AR	TIE CABLE 7.37 .06-1.37 BLACK	

Copyright © 2007 AGCO Corporation

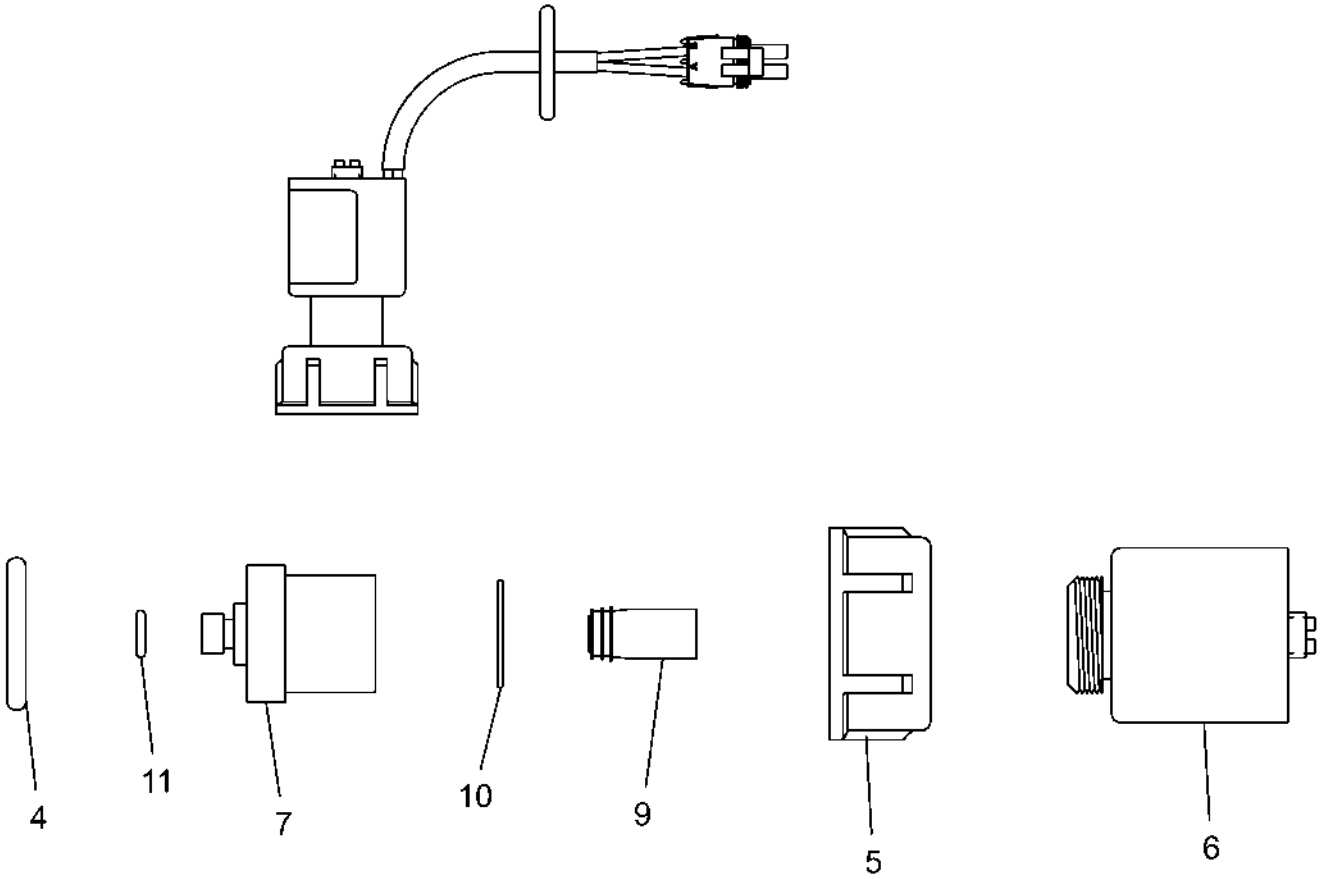

508197D1-01.TIF

Copyright © 2007 AGCO Corporation

PARTS-SERV,NOZ VALV,(508196D1)

ITEM	PART #	QTY	DESCRIPTION	COMMENTS
4	AG131469	1	O-RING	
5	AG131475	1	NUT, FLY	
6	AG131476	1	COIL ASM 7 WATT	
7	AG131471	1	BODY,VALVE	
9	AG330727	1	PLUNGER ASM/PFE 80DU	
10	AG131470	1	O-RING,VITON	
11	AG131468	1	O-RING,VITON	

Copyright © 2007 AGCO Corporation

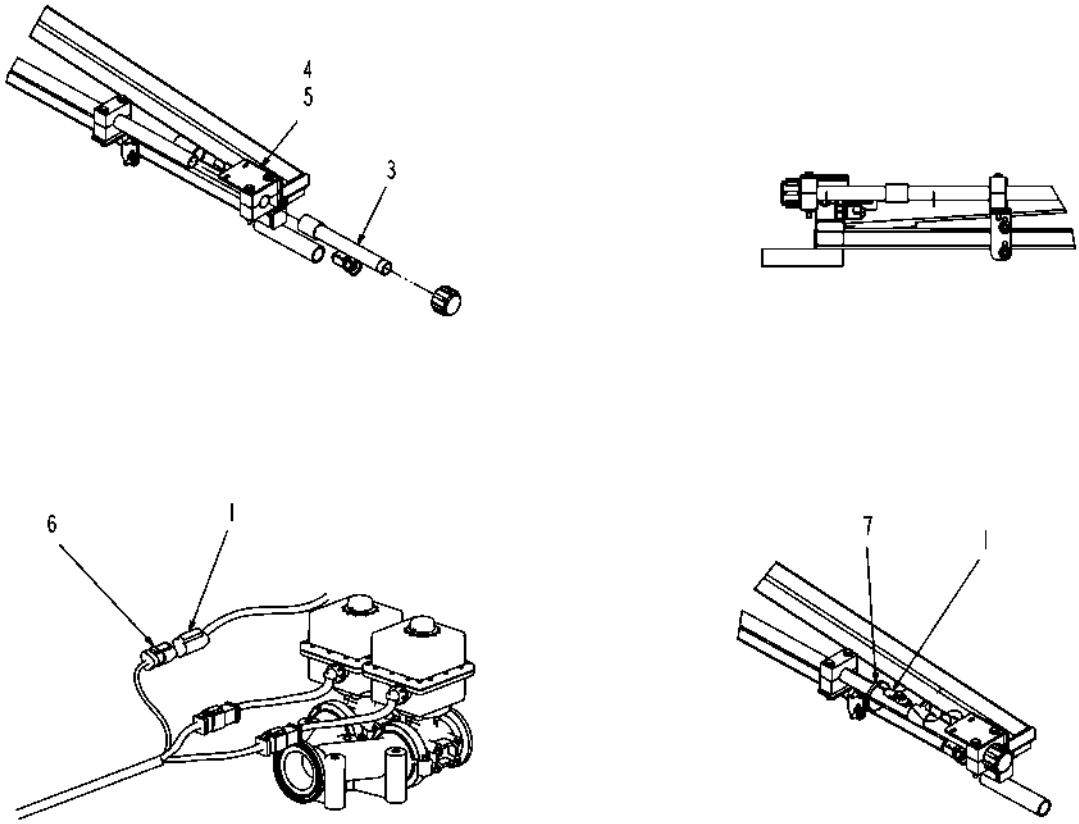

134749-A.tif

Copyright © 2007 AGCO Corporation

NOZZLE ASM-FENCE ROW,10/20,SS

ITEM	PART #	QTY	DESCRIPTION	COMMENTS
1	AG122657	2	HARNESS-END ROW	
2	AG129187	AR	PIPE SEALANT-FLEX BLACK	
3	AG134669	2	PIPE ASM-ENDROW,ELEC,10/20,SS	SEE PAGE 4-22
4	AG134845	1	BRKT ASM-ENDROW,STAUFF,.75,LH	SEE PAGE 4-87
5	AG134846	1	BRKT ASM-ENDROW,STAUFF,.75,RH	SEE PAGE 4-88
6	AG504229	-	OPT-PP PLMB,20X90X5,OFF,GS	
7	AG553557	AR	TIE CABLE 7.37 .06-1.37 BLACK	

Copyright © 2007 AGCO Corporation

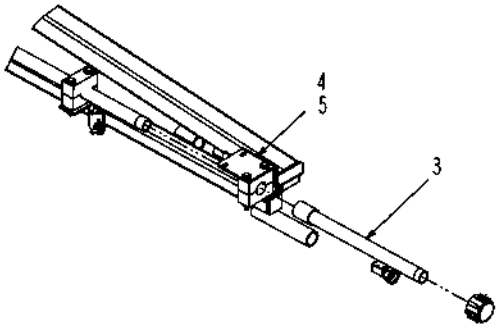

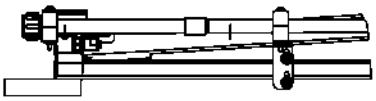

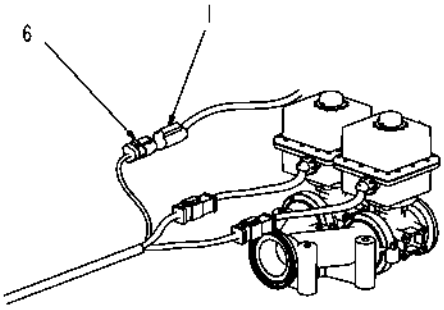

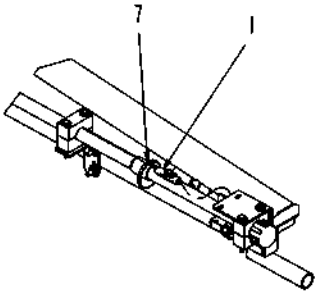

134750-A.tif

Copyright © 2007 AGCO Corporation

NOZZLE ASM-FENCE ROW,15,SS

ITEM	PART #	QTY	DESCRIPTION	COMMENTS
1	AG122657	2	HARNESS-END ROW	
2	AG129187	AR	PIPE SEALANT-FLEX BLACK	
3	AG134604	2	PIPE ASM-ENDROW,ELEC,15,SS	SEE PAGE 4-23
4	AG134845	1	BRKT ASM-ENDROW,STAUFF,.75,LH	SEE PAGE 4-87
5	AG134846	1	BRKT ASM-ENDROW,STAUFF,.75,RH	SEE PAGE 4-88
6	AG504299	-	HARNESS-ELEC BM SECT VLV(SYS)	
7	AG553557	AR	TIE CABLE 7.37 .06-1.37 BLACK	

Copyright © 2007 AGCO Corporation

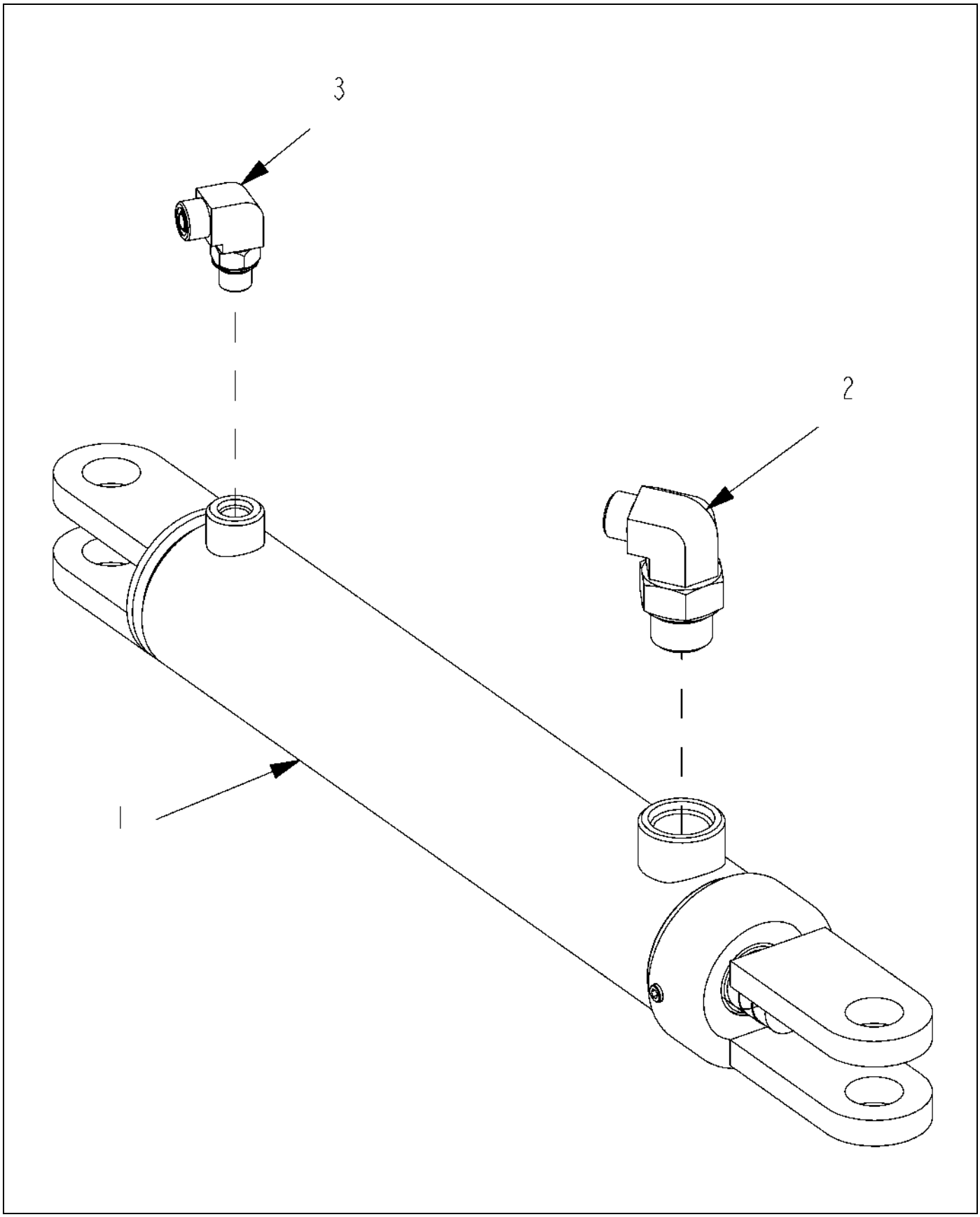

512600D1-01-N562-.TIF

Copyright © 2007 AGCO Corporation

CYL ASM-TILT,BM,W/AUTOBOOM,RH

ITEM	PART #	QTY	DESCRIPTION	COMMENTS
1	AG122390	1	CYLINDER-HYD,2.50X12.00X1.12	SEE PAGE 5-38
2	512771D1	1	ELBOW-90D,-12STOR X -8ORFS	SEE PAGE 5-30
3	CH148-8378	1	ELBOW AS-90-6STOR X 6ORFS	SEE PAGE 5-24

Copyright © 2007 AGCO Corporation

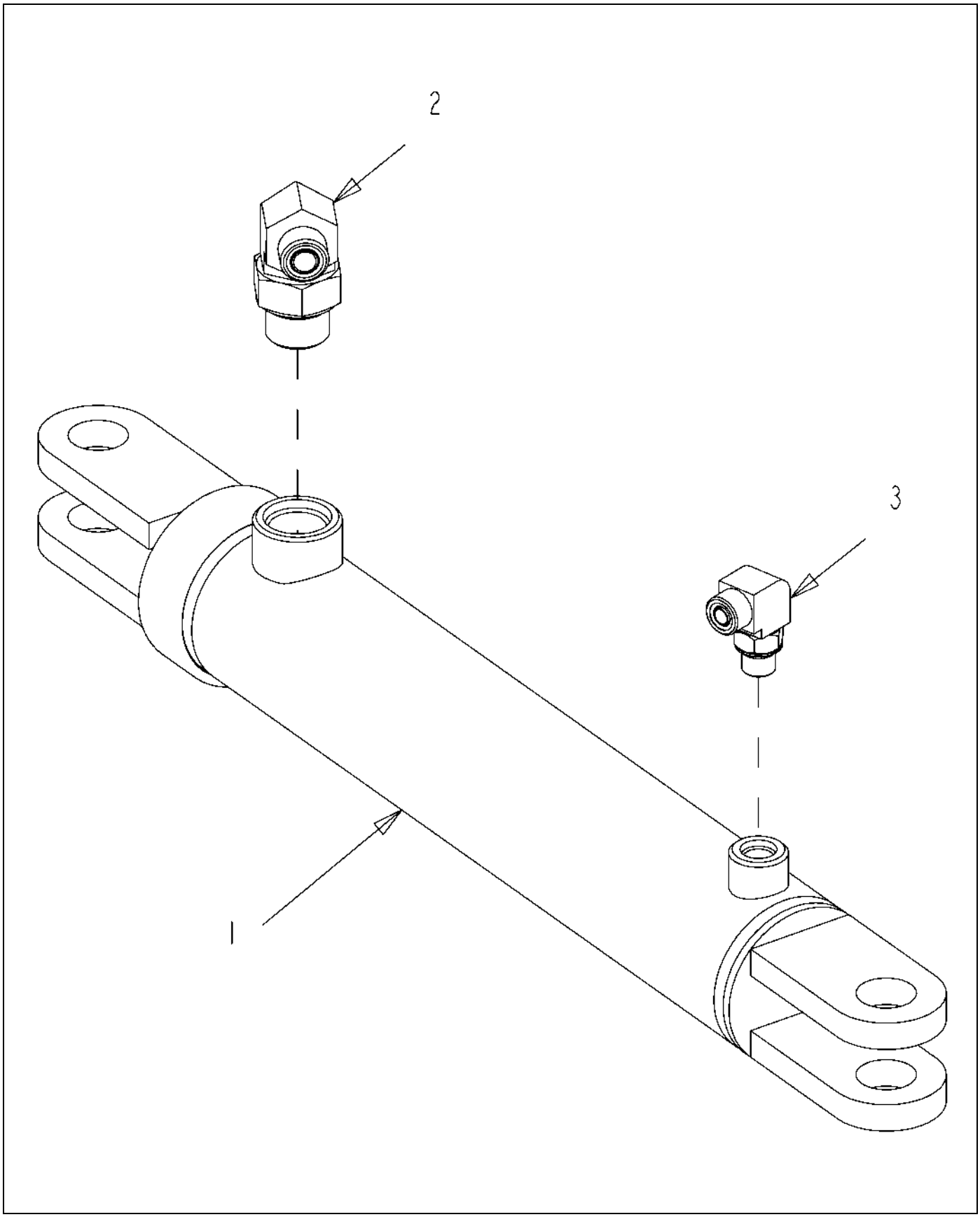

512601D1-01-N562-.TIF

Copyright © 2007 AGCO Corporation

CYL ASM-TILT,BM,W/AUTOBOOM,LH

ITEM	PART #	QTY	DESCRIPTION	COMMENTS
1	AG122390	1	CYLINDER-HYD,2.50X12.00X1.12	SEE PAGE 5-38
2	512771D1	1	ELBOW-90D,-12STOR X -8ORFS	SEE PAGE 5-30
3	CH148-8378	1	ELBOW AS-90-6STOR X 6ORFS	SEE PAGE 5-24

Copyright © 2007 AGCO Corporation

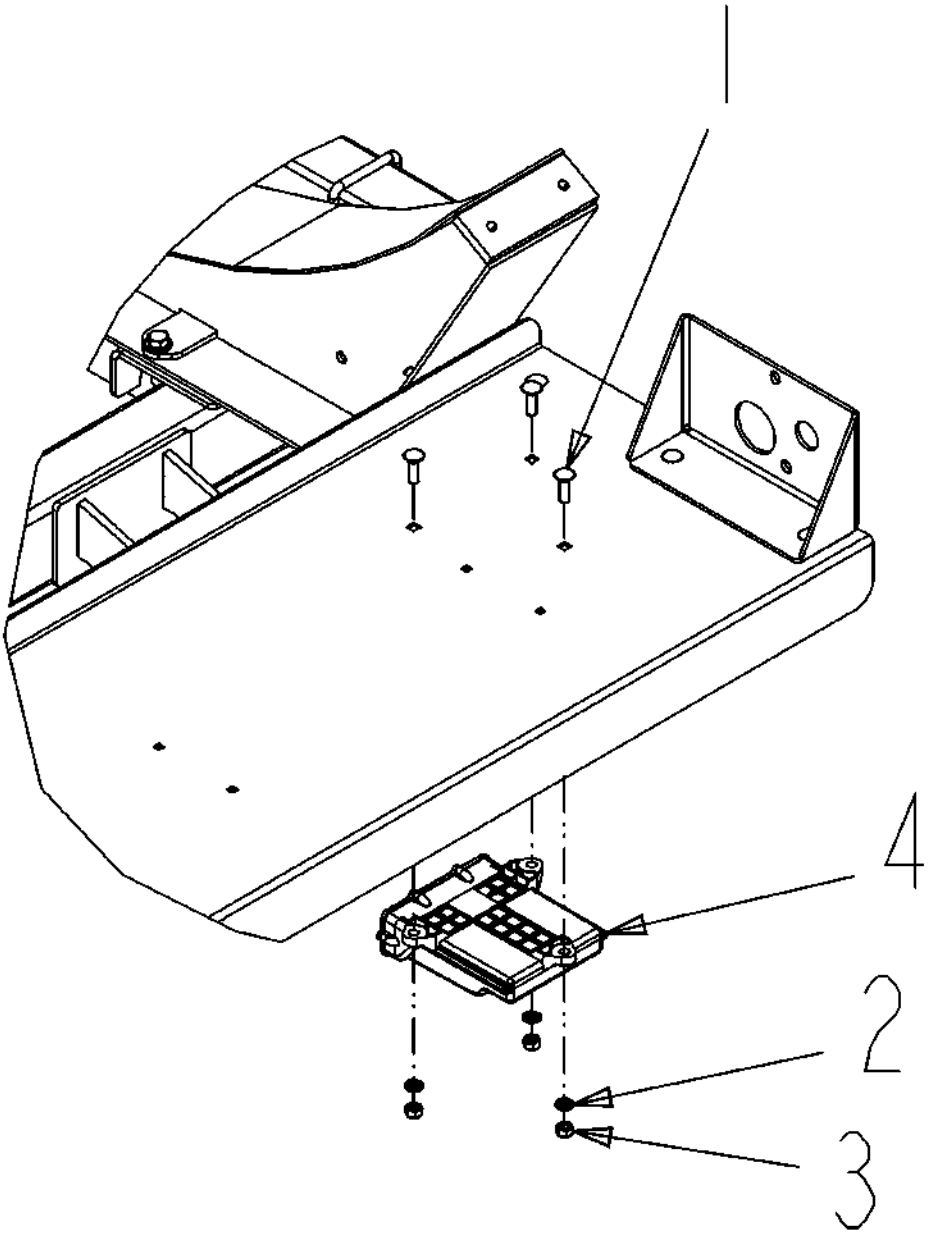

517127D1-01-R059-.TIF

Copyright © 2007 AGCO Corporation

NODE INSTL-CAN,AUTOBOOM,RAVEN

ITEM	PART #	QTY	DESCRIPTION	COMMENTS
1	AG522571	3	BOLT 0.37-16NCX 1.25 304SS CRG	
2	AG562050	3	WASHER 0.37 LK SS REG	
3	AG562065	3	NUT 0.37-16NC HEX SS REG	
4	516512D1	1	NODE-I/O,CAN,AUTOBOOM,RVN	

Copyright © 2007 AGCO Corporation

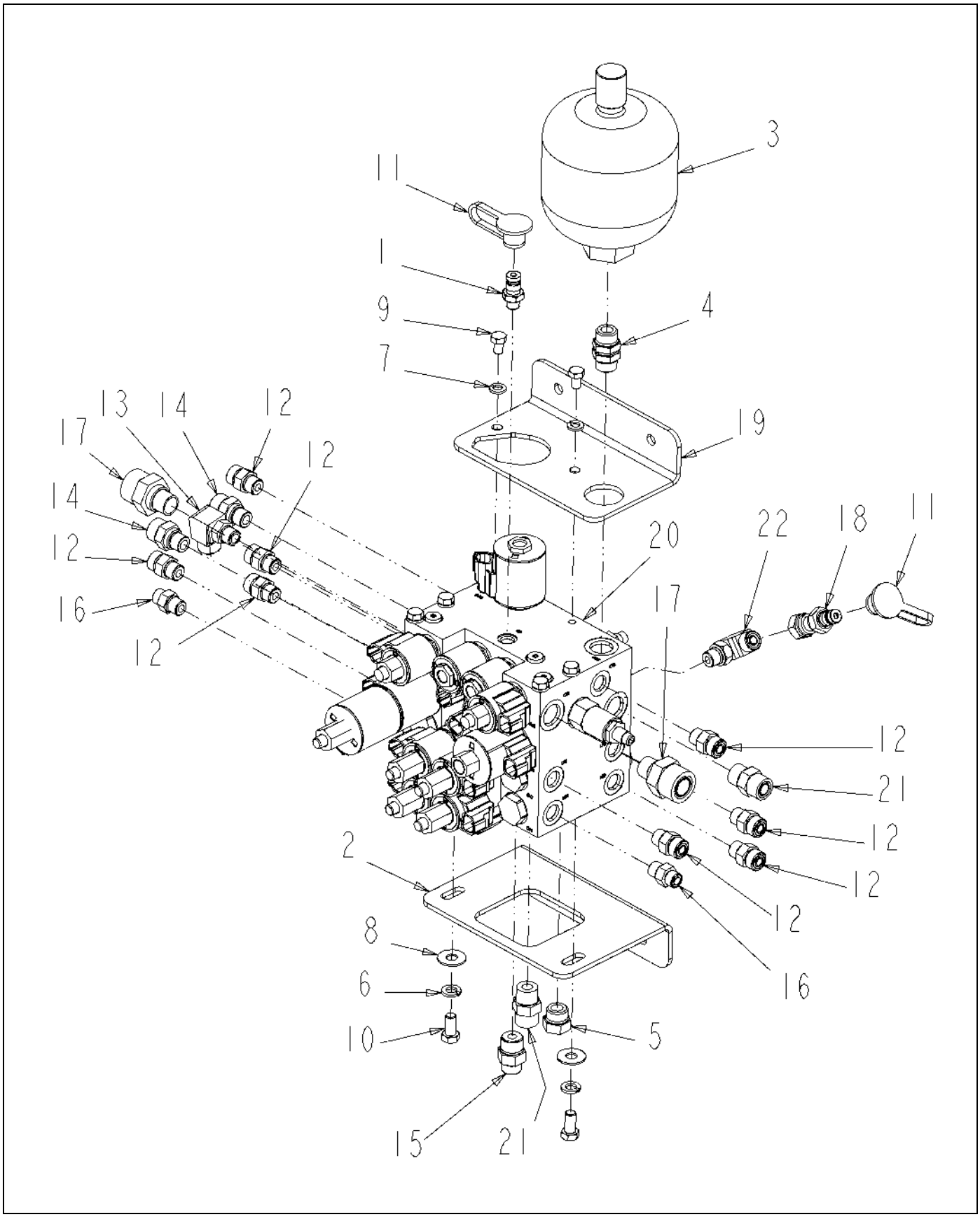

515129D1-01-R284-.TIF

Copyright © 2007 AGCO Corporation

BLK ASM-HYD,BM,NO AUTOBM,SM BM

ITEM	PART #	QTY	DESCRIPTION	COMMENTS
1	WR32723	1	COUPLING-MPD/-04MB	
2	AG327803	1	BRKT-MTG,LOWER,VALVE BLOCK	
3	AG523544	1	ACCUM-HYD,DIAPH,45CU IN(MV)	
4	AG524378	1	ADPTR-STR,.50MO-R X .50MO-R	SEE PAGE 5-22
5	AG560899	1	PLUG 0.50MO-R HEX	
6	AG562050	2	WASHER 0.37 LK SS REG	
7	AG562051	2	WASHER 0.31 LK SS REG	
8	AG562073	2	WASHER 0.37 FL SS REG TYPE-B	
9	AG562079	2	BOLT 0.31-18NCX 0.50 SS HHD	
10	AG562120	2	BOLT 0.37-16NCX 0.75 S.S. HHD	
11	400323X1	2	CAP-DUST 12.6 DIA -RUBBER	
12	400367X1	8	CONNECTOR AS-6 STOR -6 ORFS	SEE PAGE 5-16
13	400417X1	1	ELBOW AS-90DEG-6STOR-8ORFS	SEE PAGE 5-6
14	400428X1	2	CONNECTOR AS-STR-6STOR-8ORFS	SEE PAGE 5-7
15	400628X1	1	CONNECTOR AS-STR-8STOR-6ORFS	SEE PAGE 5-17
16	400630X1	2	CONNECTOR AS-STR-6STOR-4ORFS	SEE PAGE 5-18
17	400963X1	2	CONNECTOR AS-STR -8STOR-12ORFS	
18	401024X1	1	NIPPLE-TEST PORT,PD,-06 ORFS	
19	509921D1	1	BRKT-MTG,UPPER,VALVE BLOCK	
20	519330D1	1	BLK-VLV,7BANK,W/O AUTOBM,SM BM	
21	CH148-8340	2	CONNECTOR AS -8ORFS-8STOR	SEE PAGE 5-23
22	CH148-8378	1	ELBOW AS-90-6STOR X 6ORFS	SEE PAGE 5-24

Copyright © 2007 AGCO Corporation

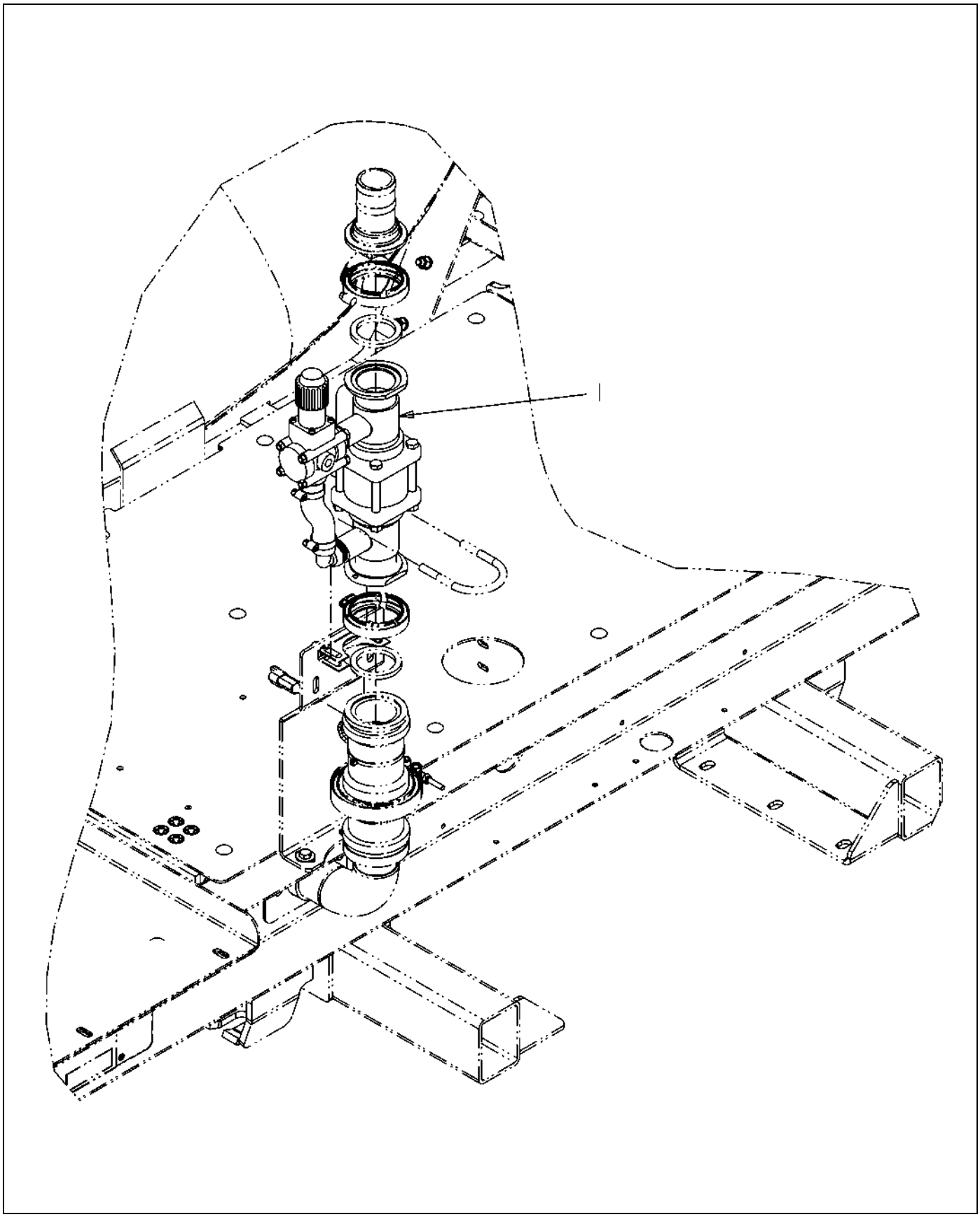

135912-01-M399-.TIF

Copyright © 2007 AGCO Corporation

KIT INSTL-LOW RATE,8/10/12X4

ITEM	PART #	QTY	DESCRIPTION	COMMENTS
1	AG135913	1	KIT ASM-LOW RATE,2.00FP FLG	SEE PAGE 2-14

Copyright © 2007 AGCO Corporation

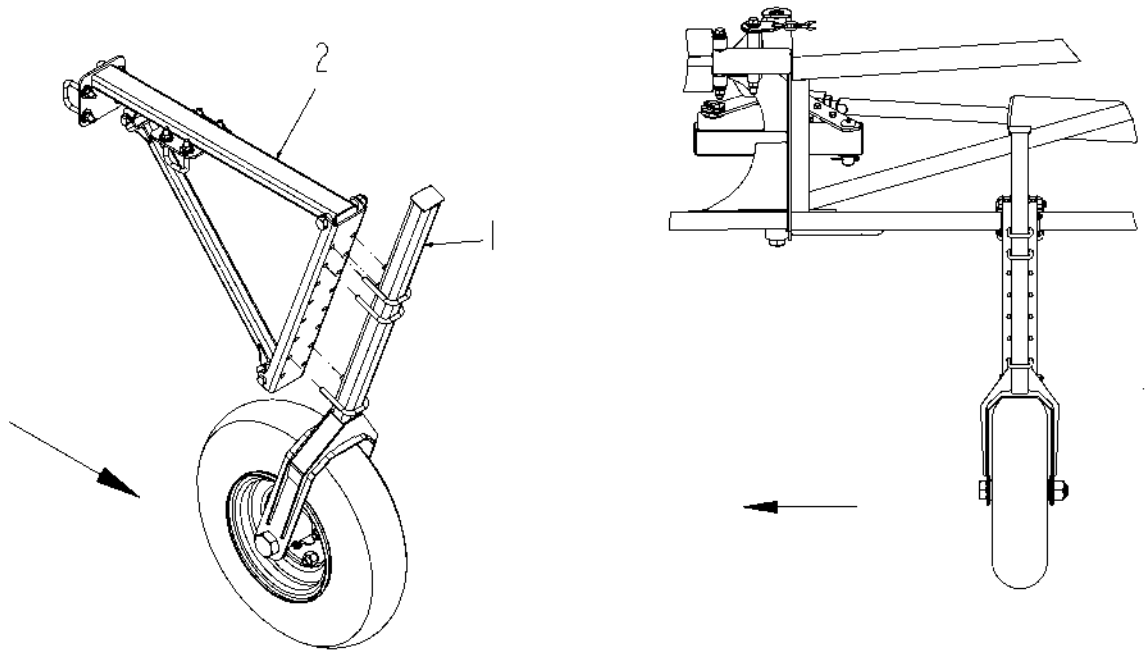

506909D1-01-M930.tif

Copyright © 2007 AGCO Corporation

WHEEL INSTL-AUTOBOOM,120

ITEM	PART #	QTY	DESCRIPTION	COMMENTS
1	506910D1	2	FORK ASM-WHEEL,AUTOBOOM	SEE PAGE 11-25
2	506911D1	2	ARM ASM-WHEEL,AUTOBOOM,120	SEE PAGE 11-52

Copyright © 2007 AGCO Corporation

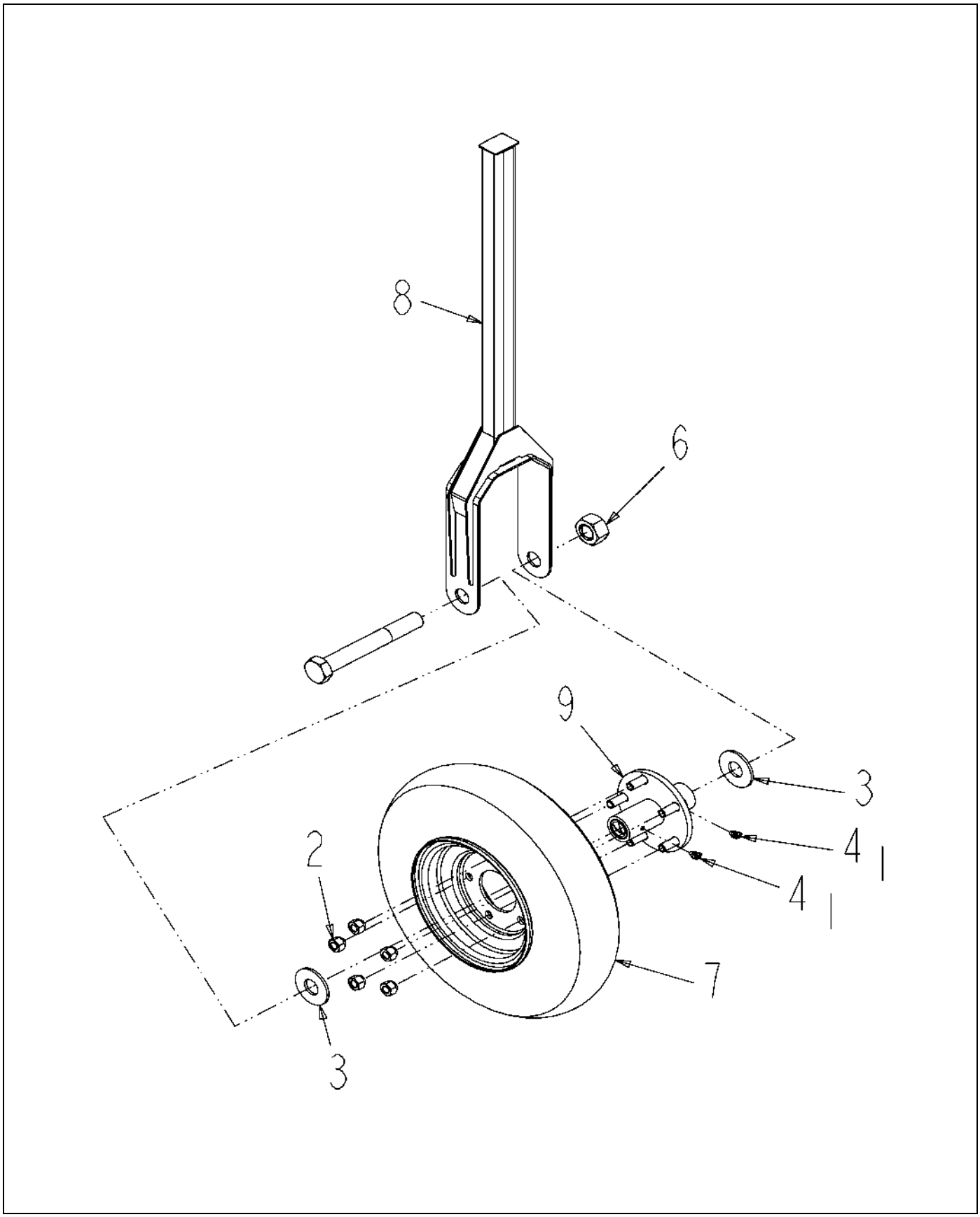

506910D1-03-N607-.TIF

Copyright © 2007 AGCO Corporation

FORK ASM-WHEEL,AUTOBOOM

ITEM	PART #	QTY	DESCRIPTION	COMMENTS
1	AG511099	AR	GREASE-MULTI PURPOSE LITH.	
2	AG514567	5	NUT WHEEL BOLT .50-20NFX.62X60	
3	AG552232	2	WASHER 1.0FL ZN REG TYPE-B (D)	
4	AG562467	2	ZERK GREASE 45D 1/4-28 NF	
5	AG562584	1	BOLT 1.00- 8NCX 7.50 G8 ZN HHD	
6	AG604185	1	NUT 1.00-08NC HEX ZN HVY NY	
7	506912D1	1	WHEEL ASM-AUTOBOOM	
8	506914D1	1	FORK WLDMT-WHEEL,AUTOBOOM	
9	506921D1	1	HUB WLDMT-WHEEL,AUTOBOOM	SEE PAGE 11-26

Copyright © 2007 AGCO Corporation

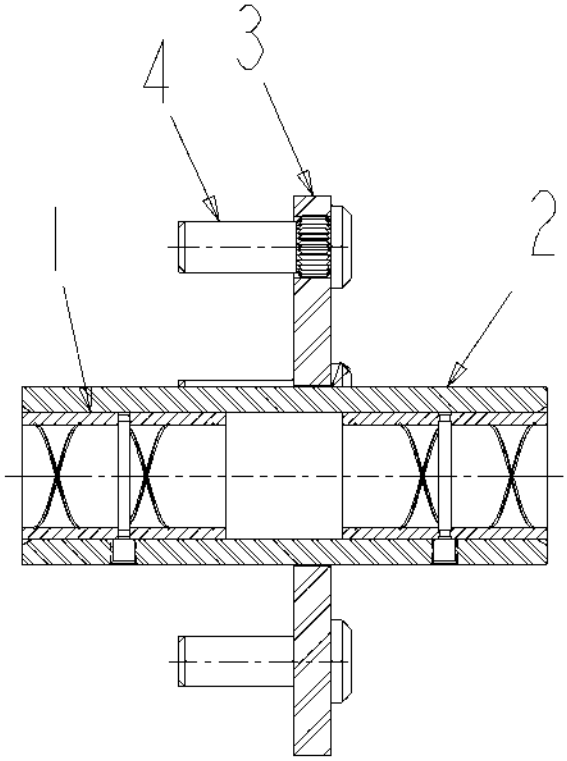

SECTION A-A

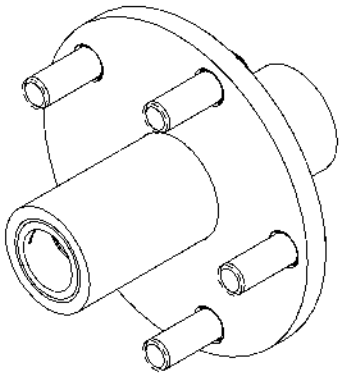

506921D1-01-M930.TIF

Copyright © 2007 AGCO Corporation

HUB WLDMT-WHEEL,AUTOBOOM

ITEM	PART #	QTY	DESCRIPTION	COMMENTS
1	506922D1	2	BUSHING RWK-1.253X1.008X2.00	
2	506923D1	1	TUBE-MTG,HUB,WHEEL,AUTOBOOM	
3	506924D1	1	PLATE-MTG,HUB,WHEEL,AUTOBOOM	
4	506943D1	5	BOLT-STUD,WHEEL,.50-20NFX1.13	

Copyright © 2007 AGCO Corporation

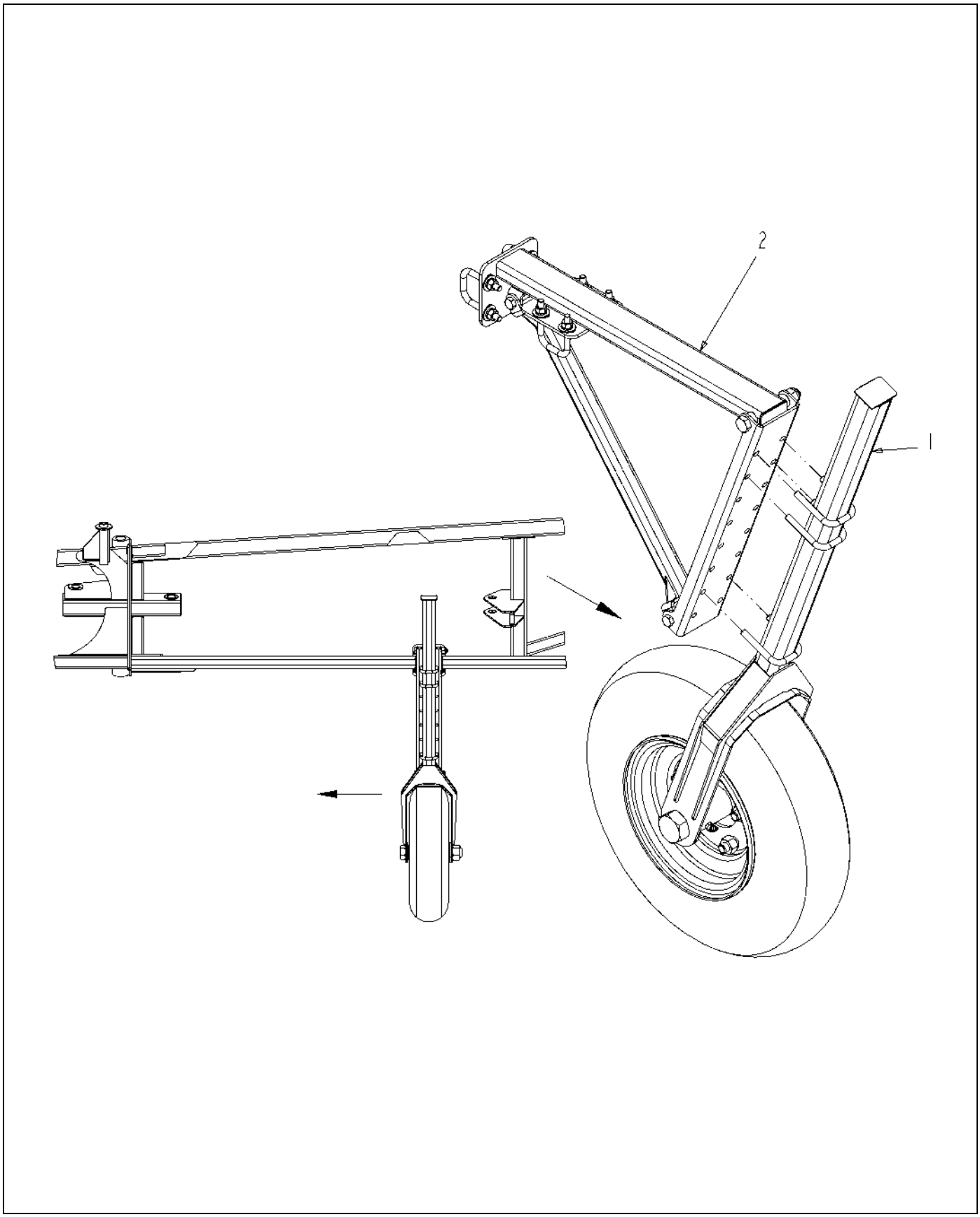

508038D1-02-R245-.TIF

Copyright © 2007 AGCO Corporation

WHEEL INSTL-AUTOBOOM,80/90/100

ITEM	PART #	QTY	DESCRIPTION	COMMENTS
1	506910D1	2	FORK ASM-WHEEL,AUTOBOOM	SEE PAGE 11-25
2	508278D1	2	ARM ASM-WHEEL,AUTOBM,80/90/100	SEE PAGE 11-61

Copyright © 2007 AGCO Corporation

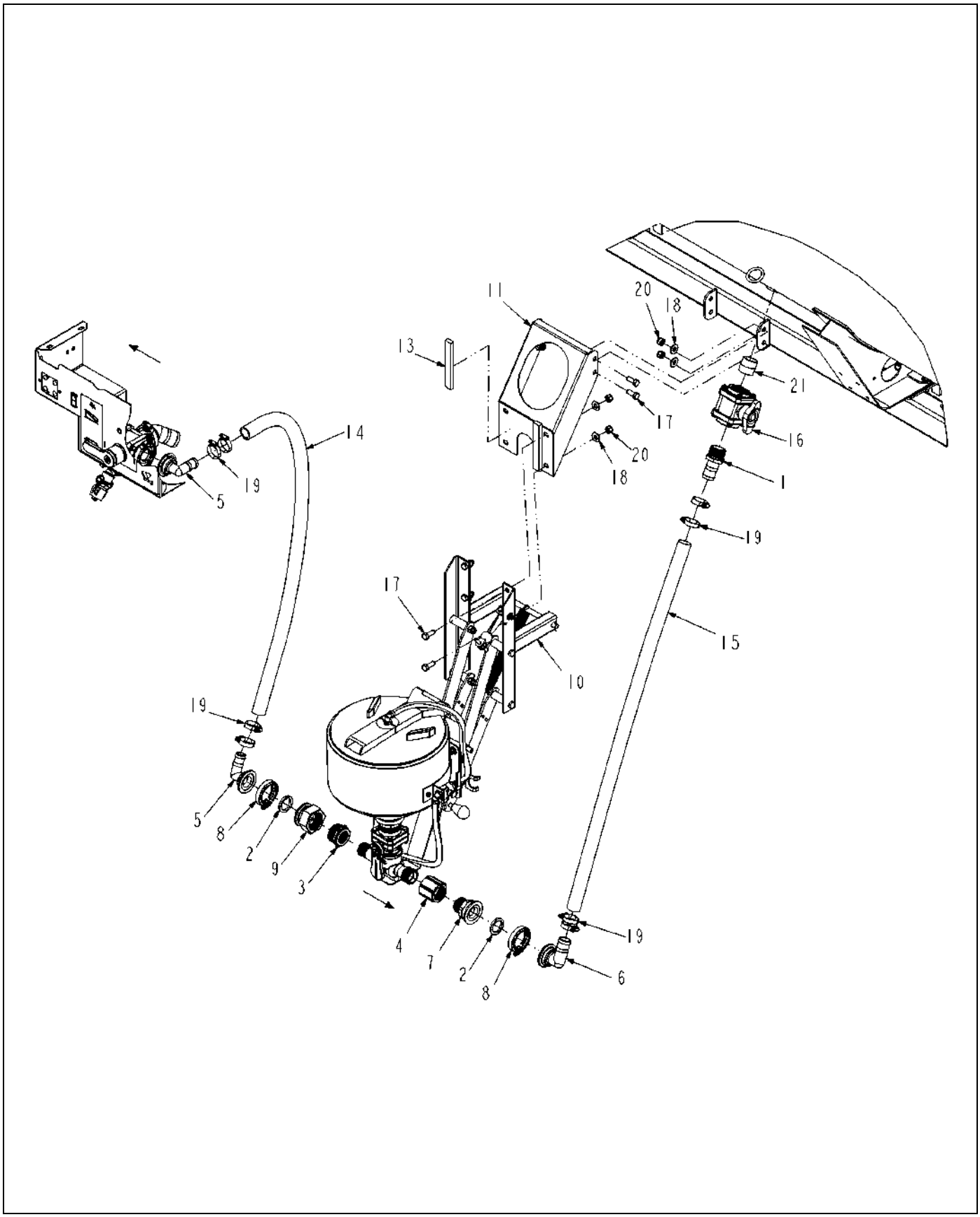

512943D1-02-R529-.TIF

Copyright © 2007 AGCO Corporation

OPT-CHEM EDUCTOR,PE CLEANLOAD

ITEM	PART #	QTY	DESCRIPTION	COMMENTS
1	AG000766	1	BARB-HOSE,1.50MNTTX1.50BARB,PP	
2	AG000772	2	GASKET 1.50 EPDM	
3	AG050260	1	BSHG-RDCR,HEX,2.00X1.25NPT,PP	
4	AG050271	1	COUPLING-PIPE,1.50NPT,PP	
5	AG056290	2	CONNECTOR 2.00FLGX1.25HOSE 90D	
6	AG056292	1	CONNECTOR 2.00FLGX1.50HOSE 90D	
7	AG056293	1	CONNECTOR 2.00FLGX1.50MNPT	
8	AG056785	2	CLAMP 2.00 FLANGE	
9	AG057573	1	ADAPTER 2.00FLANGEX2.00FPT	
10	AG124281	1	EDUCTOR ASM-CHEMICAL,PE	SEE PAGE 2-19
11	AG124288	1	BRACKET-MTG,SHORT,EDUCTOR	
12	AG129187	AR	PIPE SEALANT-FLEX BLACK	
13	AG230095	2	STRIP INSULATION LONG	
14	AG513393	-	HOSE 1.25 2BRD EPDM [BULK: 4.834 FT]	
15	AG522800	-	HOSE-1.50,DISCHARGE,NITRILE [BULK: 4.334 FT]	
16	AG524024	1	VALVE-BALL,1.50NPT,T HANDLE	SEE PAGE 2-29
17	AG550256	8	BOLT.50-13NCX1.25 G5 ZN HHD	
18	AG550353	8	WASHER 0.50 FL ZN REG TYPE-B	
19	AG561231	8	CLAMP 1.06-2.00 HOSE 24HS	
20	AG601152	8	NUT 0.50-13NC HEX ZN REG NY	
21	AG710515	1	NIPPLE 1.50NPTX 1.75CLS 304SS	

Copyright © 2007 AGCO Corporation

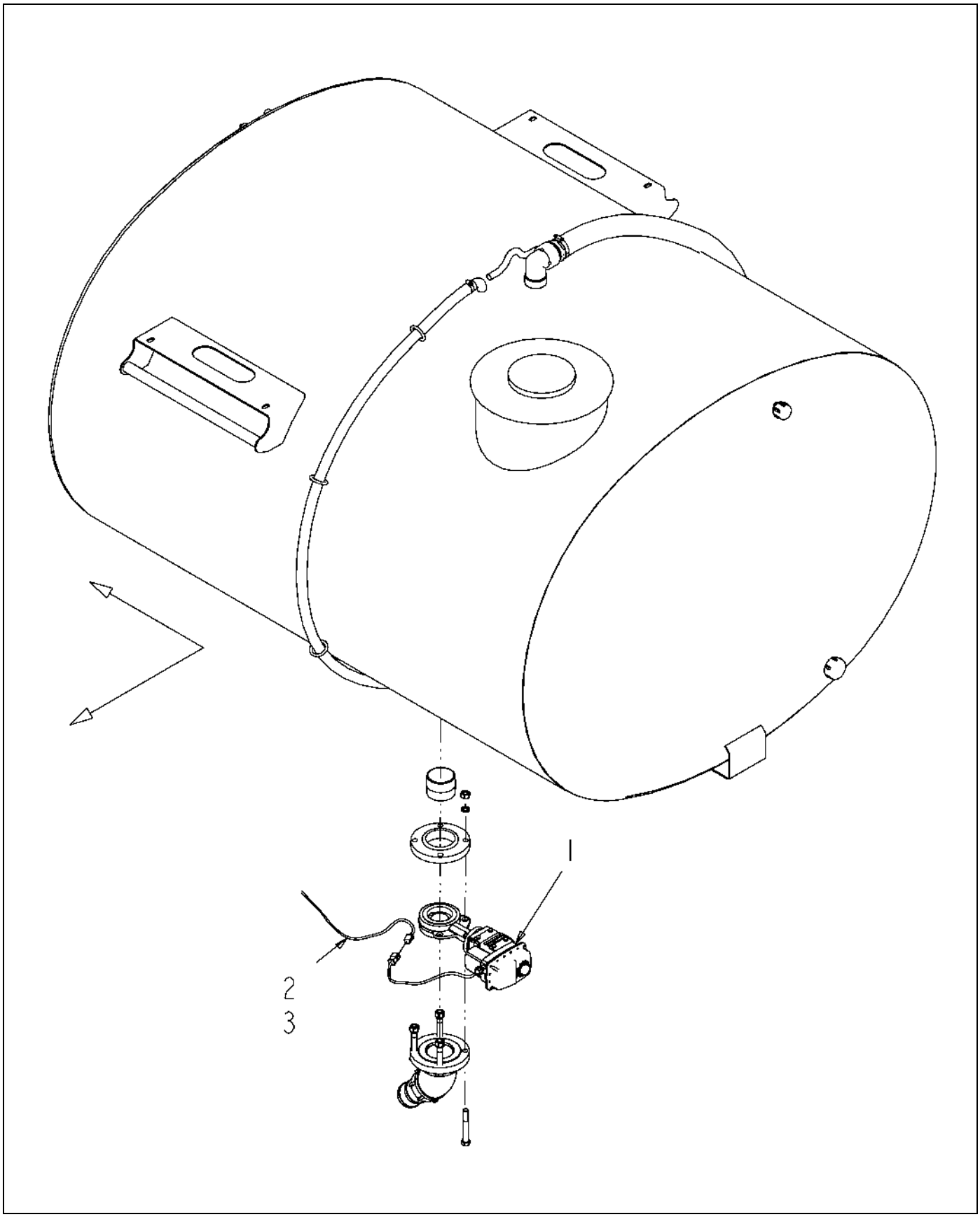

513303D1-01-N620-.TIF

Copyright © 2007 AGCO Corporation

OPT-SUMP VALVE,3.00,ELEC

ITEM	PART #	QTY	DESCRIPTION	COMMENTS
1	AG123760	1	VALVE ASM-3.00 ELEC,EH4,3 SEC	SEE PAGE 1-16
2	509414D1	-	HARNESS-PROD CONT,SYS,LIQ,RG	
3	511623D1	-	HARNESS-PRODUCT CONTROL(SYS)	

Copyright © 2007 AGCO Corporation

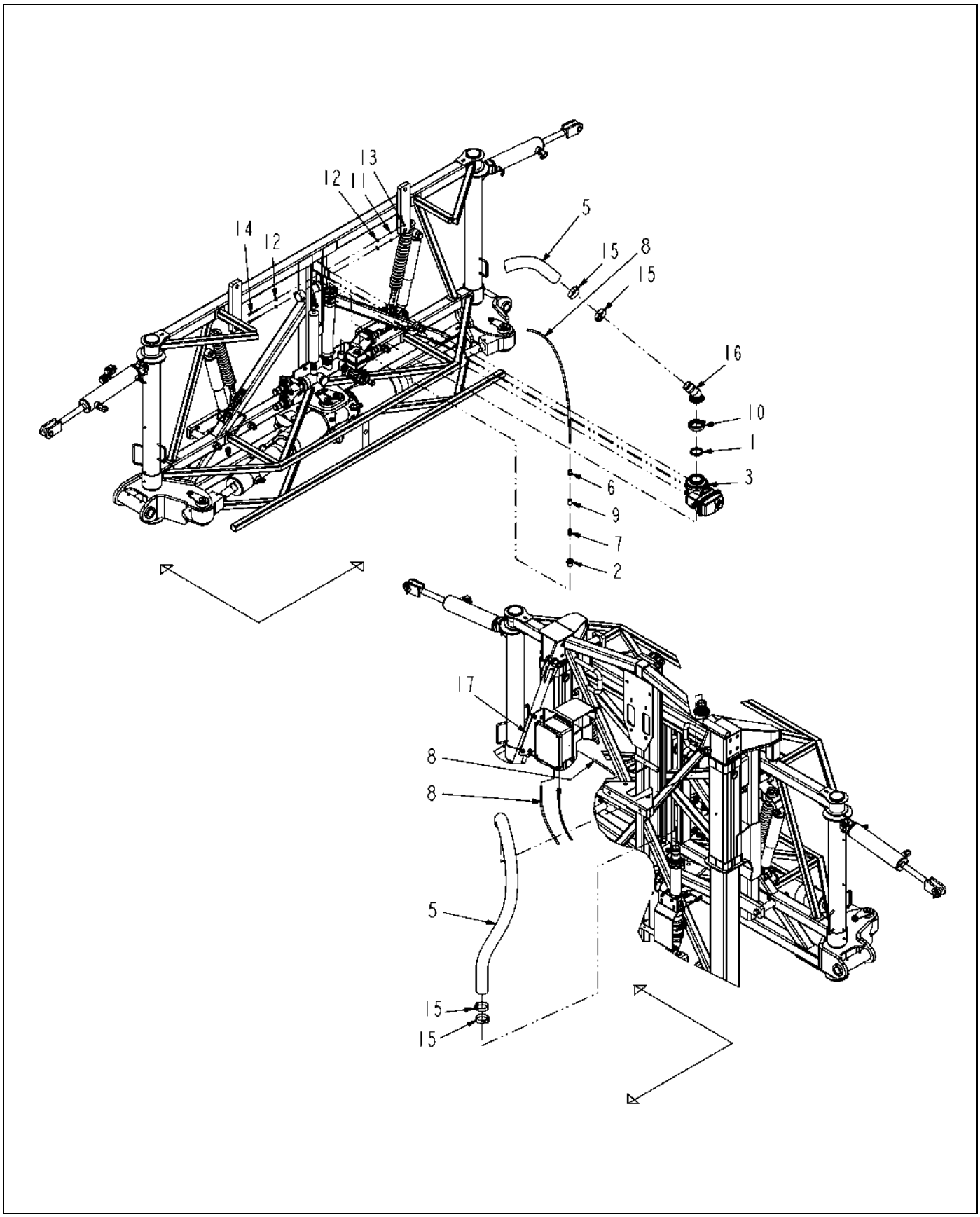

514998D1-01-N980-.TIF

Copyright © 2007 AGCO Corporation

SYS INSTL-BCO,BM TREE,5.00 SL

ITEM	PART #	QTY	DESCRIPTION	COMMENTS
1	AG000773	1	GASKET 2.00 EPDM	
2	AG051573	1	BSHG-RDCR,HEX,0.75X0.25NPT,PP	
3	AG121956	1	VALVE-BALL,2.00FP FLG,ELEC	SEE PAGE 2-21
4	AG129187	AR	PIPE SEALANT-FLEX BLACK	
5	AG511722	-	HOSE-2.00,WIRE BRAID,EPDM [BULK: 6.084 FT]	
6	AG516481	1	CONNECTOR M 0.38X0.25NPT AUTLK	
7	AG517999	1	VALVE CHECK 0.25NPTF 3000PSI	
8	AG518847	-	TUBING H.D.P.E. 3/8 IN [BULK: 21.334 FT]	
9	AG519336	1	COUPLING PIPE 0.25 NPT 304SS	
10	AG522895	1	CLAMP-WORM SCREW,2.00,SS	
11	AG550493	2	WASHER 0.25 LK ZN REG	
12	AG550507	4	WASHER 0.25 FL ZN REG TYPE-B	
13	AG550612	2	NUT 0.25-20NC HEX ZN REG	
14	AG561246	2	BOLT 0.25-20NCX 3.25 G5 ZN HHD	
15	AG561630	4	CLAMP 2.28-2.59HOSE VOSS-250SS	
16	507731D1	1	BARB-45D,2.00FP FLGX2.00 HOSE	
17	514996D1	1	BRKT ASM-MTG,AIR BOX,BCO	SEE PAGE 7-7

Copyright © 2007 AGCO Corporation

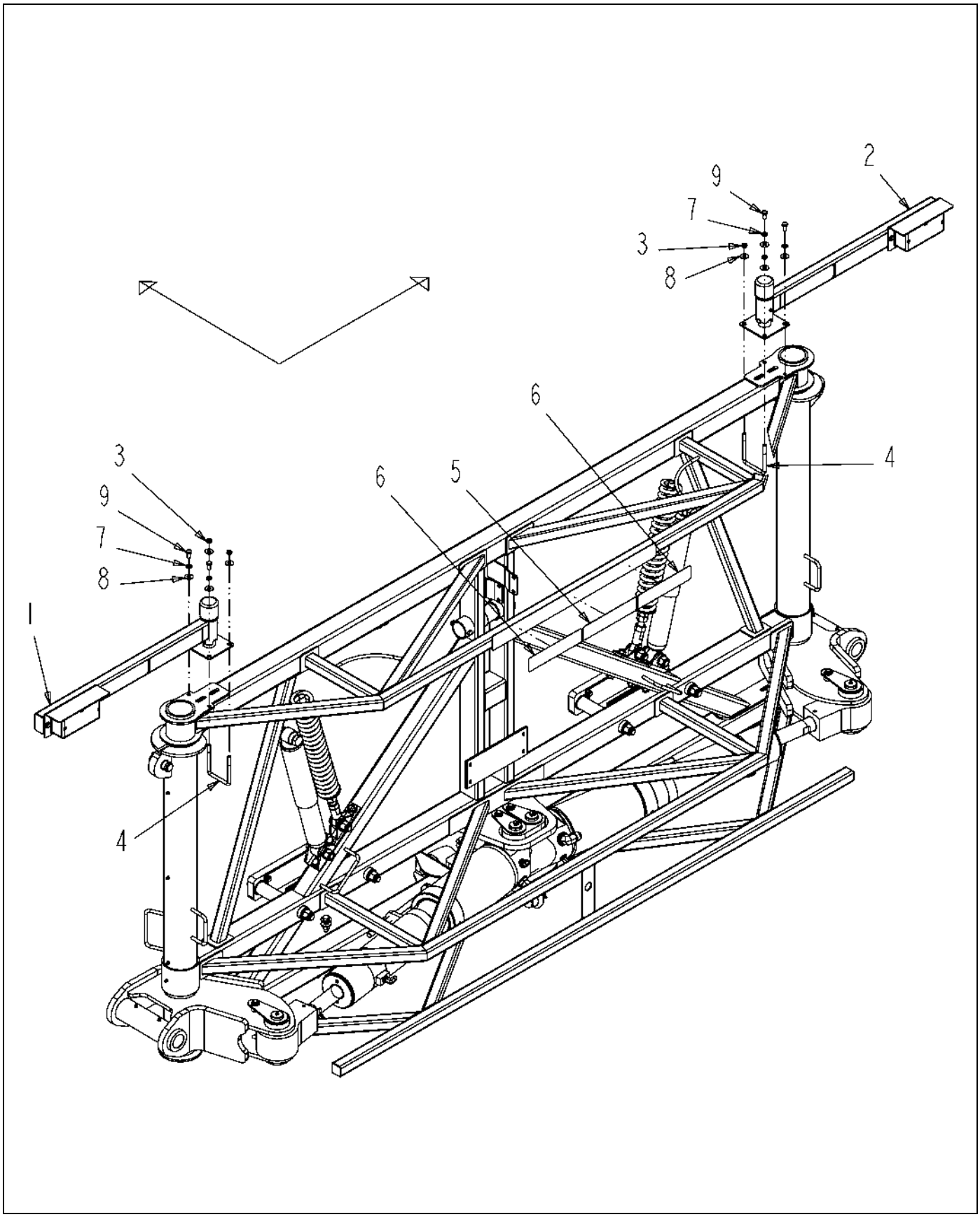

516450D1-01-N980-01.TIF

Copyright © 2007 AGCO Corporation

AWFL INSTL-BRKAWAY,120 BM,RC

ITEM	PART #	QTY	DESCRIPTION	COMMENTS
1	AG130565	1	BRKT ASM-MTG,BREAKAWAY,AWFL,LH	SEE PAGE 6-26
2	AG130566	1	BRKT ASM-MTG,BREAKAWAY,AWFL,RH	SEE PAGE 6-27
3	AG515140	4	NUT 0.37-16NC HEX SS HVY NY	
4	AG523297	2	BOLT-U,.38-16X3.06X4.00L,SQ,SS	
5	AG523361	1	TAPE-REFLECTIVE,RED,DOT-C2	
6	AG523591	2	REFLECTOR-FLUOR RED/ORN2.0X9.0	
7	AG562050	4	WASHER 0.37 LK SS REG	
8	AG562073	8	WASHER 0.37 FL SS REG TYPE-B	
9	AG562120	4	BOLT 0.37-16NCX 0.75 S.S. HHD	

Copyright © 2007 AGCO Corporation

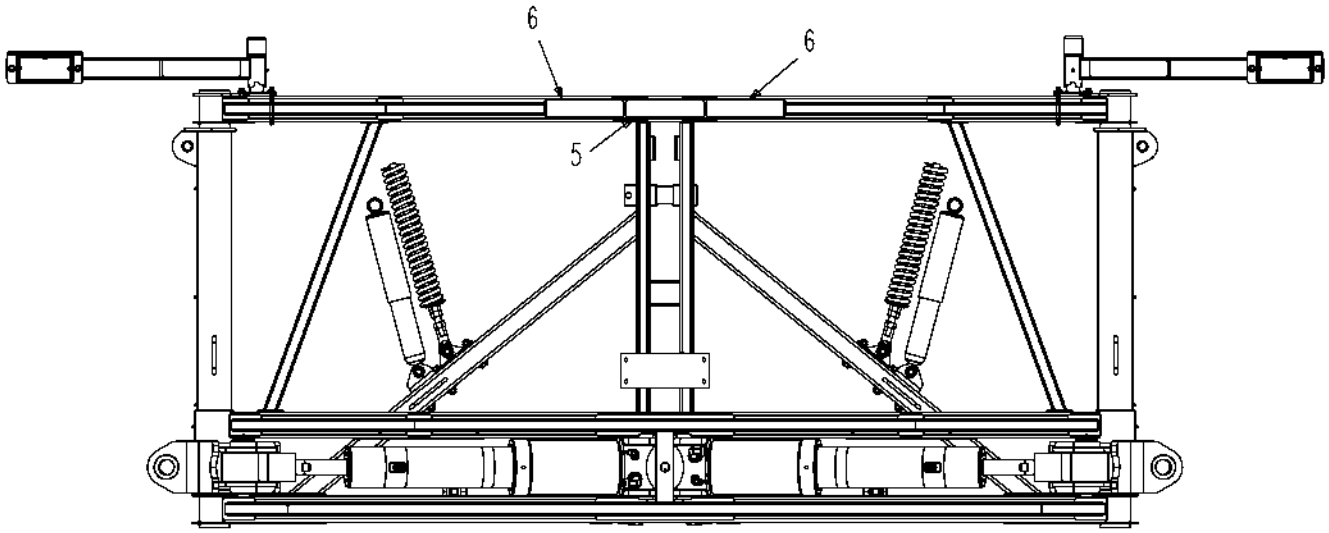

516450D1-01-N980-02.TIF

Copyright © 2007 AGCO Corporation

ITEM	PART #	QTY	DESCRIPTION	COMMENTS
5	AG523361	1	TAPE-REFLECTIVE,RED,DOT-C2	
6	AG523591	2	REFLECTOR-FLUOR RED/ORN2.0X9.0	

Copyright © 2007 AGCO Corporation

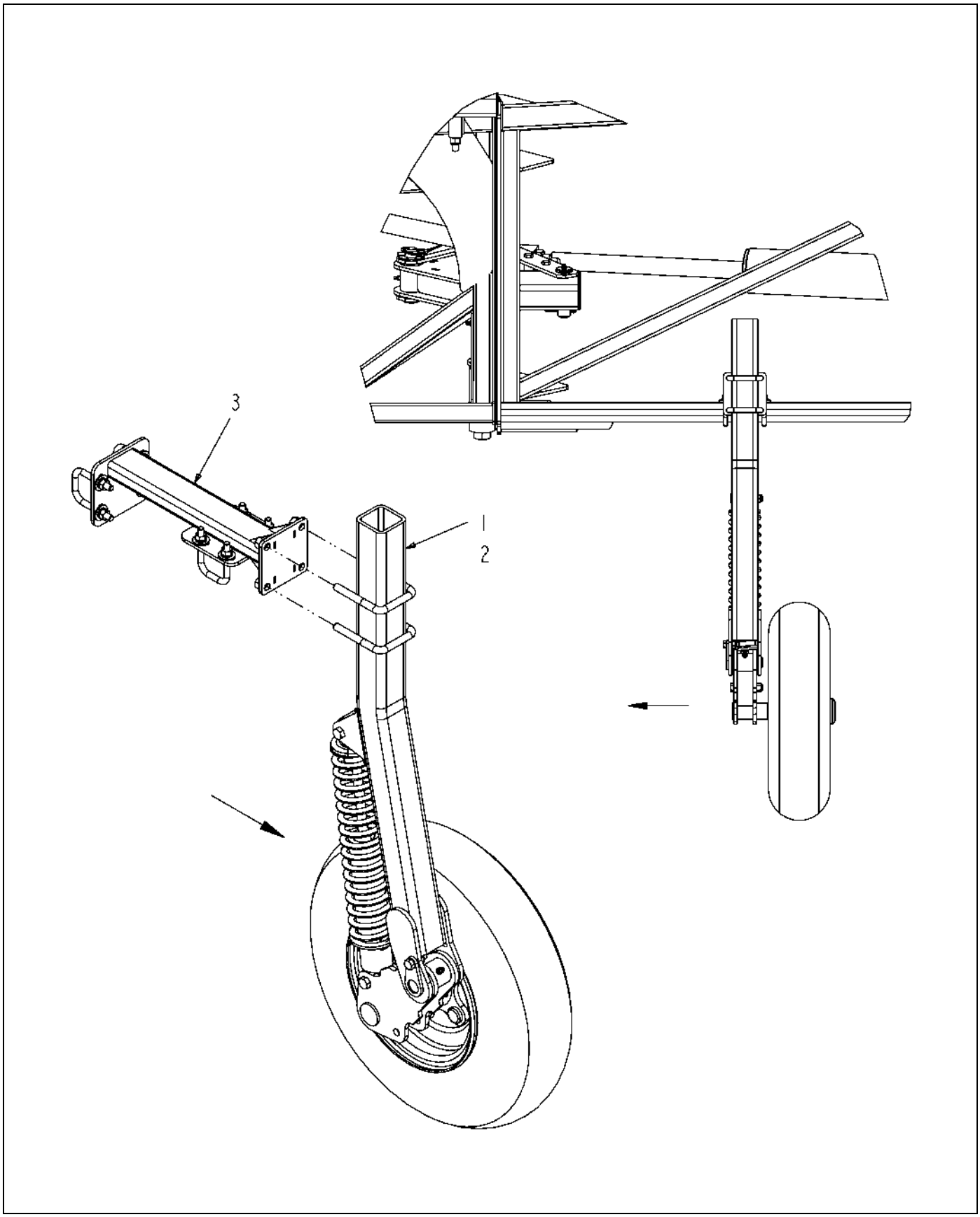

516973D1-01-R059-.TIF

Copyright © 2007 AGCO Corporation

WHEEL INSTL-CUSH,AUTOBOOM,120

ITEM	PART #	QTY	DESCRIPTION	COMMENTS
1	516969D1	1	WHEEL/AXLE ASM-CUSH,AUTOBM,LH	SEE PAGE 11-34
2	516970D1	1	WHEEL/AXLE ASM-CUSH,AUTOBM,RH	SEE PAGE 11-36
3	516972D1	2	ARM ASM-MTG,WHL,CUSH,120	SEE PAGE 11-74

Copyright © 2007 AGCO Corporation

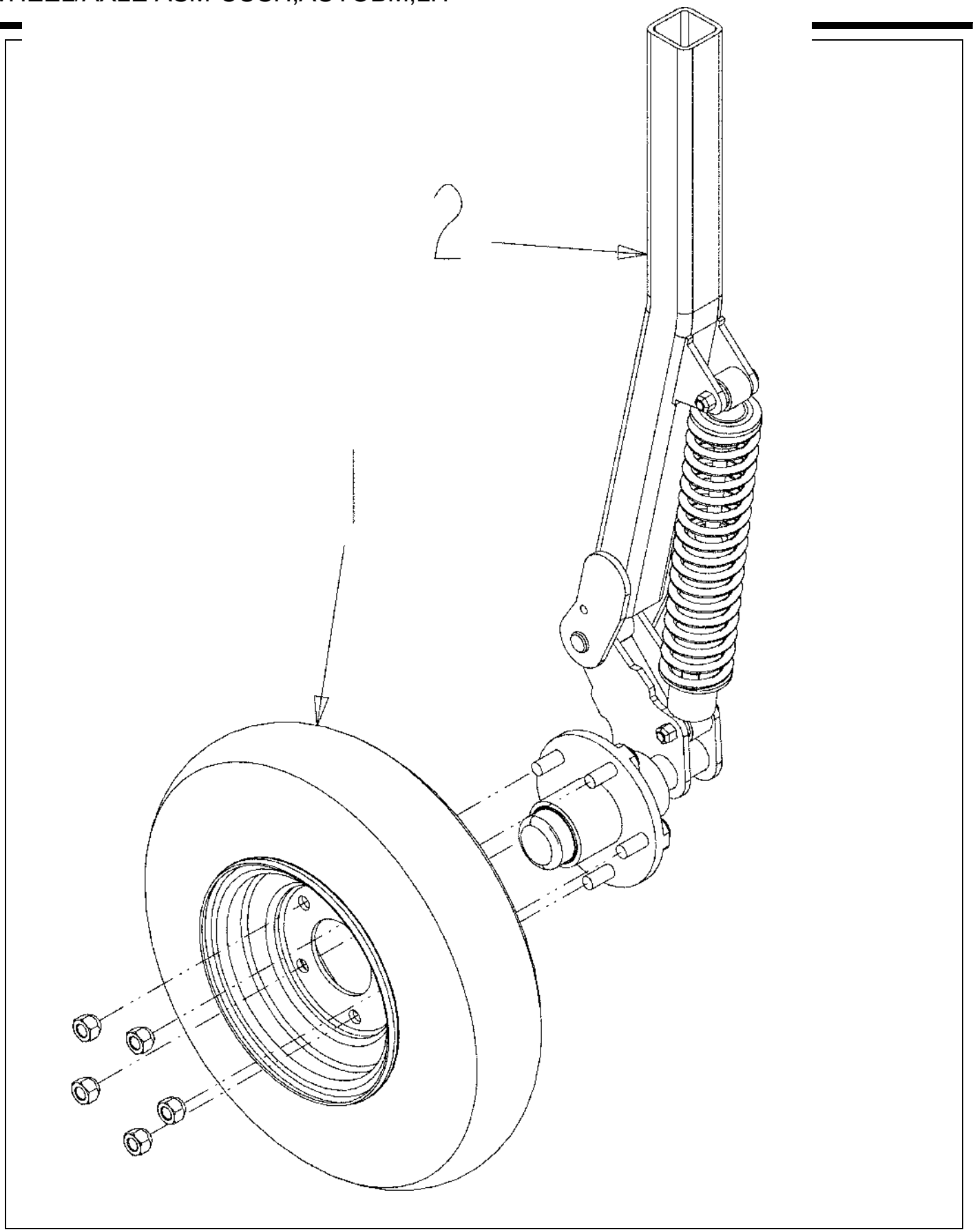

516969D1-01-R059-.tif

Copyright © 2007 AGCO Corporation

WHEEL/AXLE ASM-CUSH,AUTOBM,LH

ITEM	PART #	QTY	DESCRIPTION	COMMENTS
1	506912D1	1	WHEEL ASM-AUTOBOOM	
2	516967D1	1	AXLE ASM-CUSH,AUTOBM,LH	SEE PAGE 11-35

Copyright © 2007 AGCO Corporation

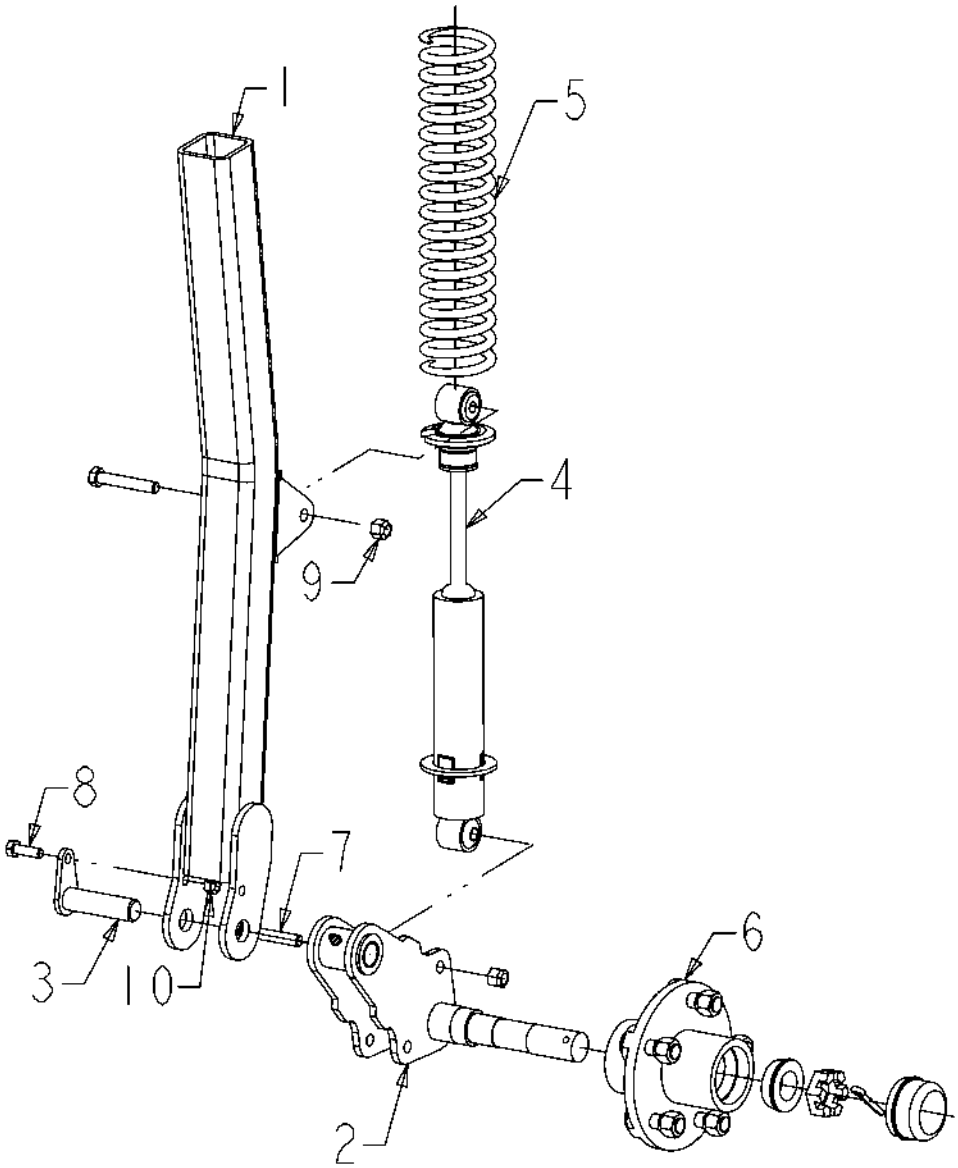

516967D1-01-R059-02.TIF

Copyright © 2007 AGCO Corporation

AXLE ASM-CUSH,AUTOBM,LH

ITEM	PART #	QTY	DESCRIPTION	COMMENTS
1	AG332166	1	WLDMT/ARM/GAGEWHL/CUSH/ATOBOOM	
2	AG332165	1	ARM/PIVOT/CUSHIONED GAGE WHL	
3	AG332164	1	WLDMNT/PIVOT/CUSHIONEDGAGE WHL	
4	AG426900	1	SHOCK/ABSORBER - AG426744	
5	AG426899	1	SPRING/COIL-12.25 L X 1.8 ID	
6	AG332163	1	ASSEMBLY/HUB 5-BOLT	
7	AG332160	2	BOLT/3/8-16 X 2-1/4	
8	AG332159	1	BOLT/5/16-18 X 1	
9	AG332158	2	NUT/LOCK/NYLON INSERT-3/8-16	
10	AG716744	1	INSERT-LOCKNUT NY 5/16 -18	

Copyright © 2007 AGCO Corporation

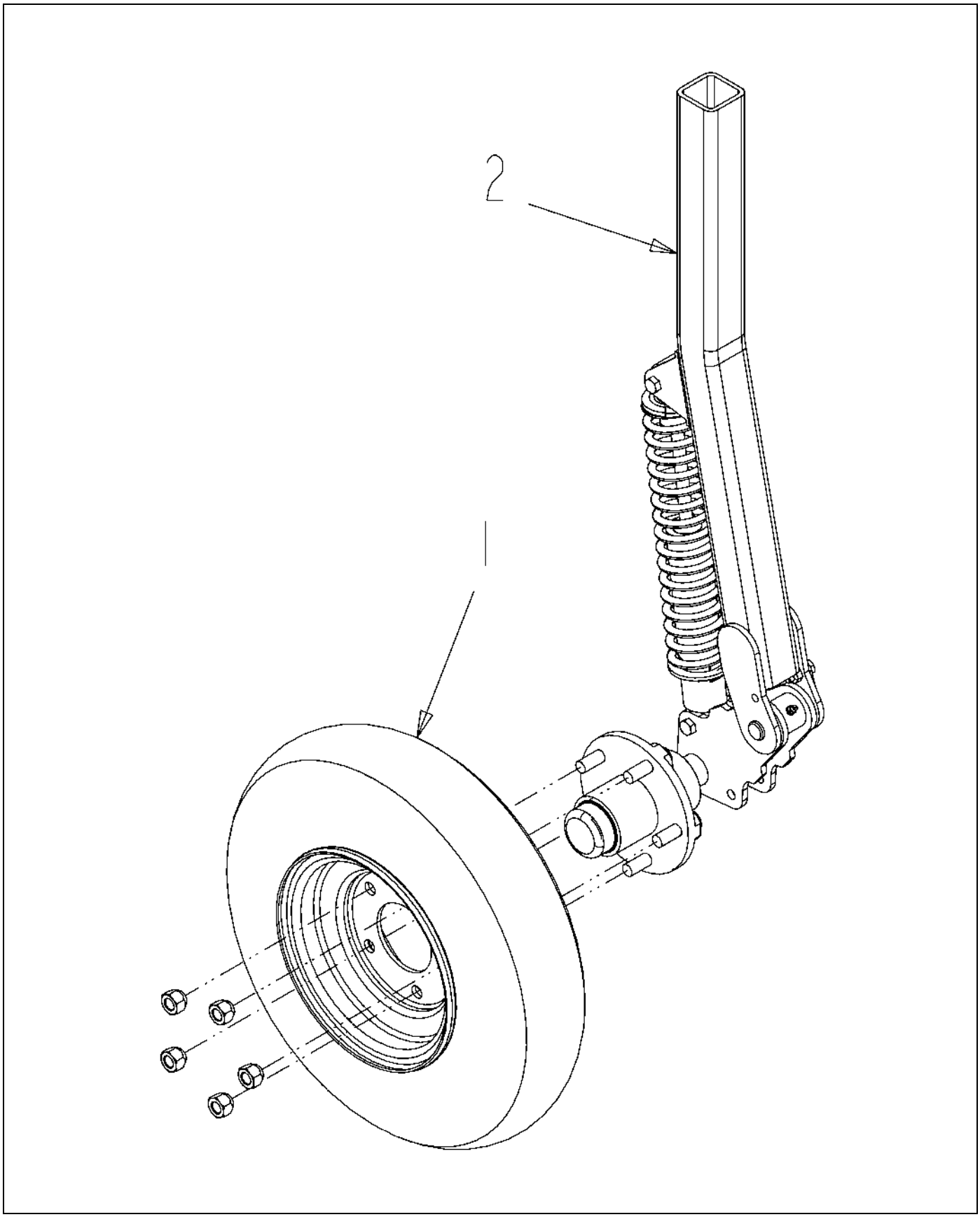

516970D1-01-R059-.TIF

Copyright © 2007 AGCO Corporation

WHEEL/AXLE ASM-CUSH,AUTOBM,RH

ITEM	PART #	QTY	DESCRIPTION	COMMENTS
1	506912D1	1	WHEEL ASM-AUTOBOOM	
2	516968D1	1	AXLE ASM-CUSH,AUTOBM,RH	SEE PAGE 11-37

Copyright © 2007 AGCO Corporation

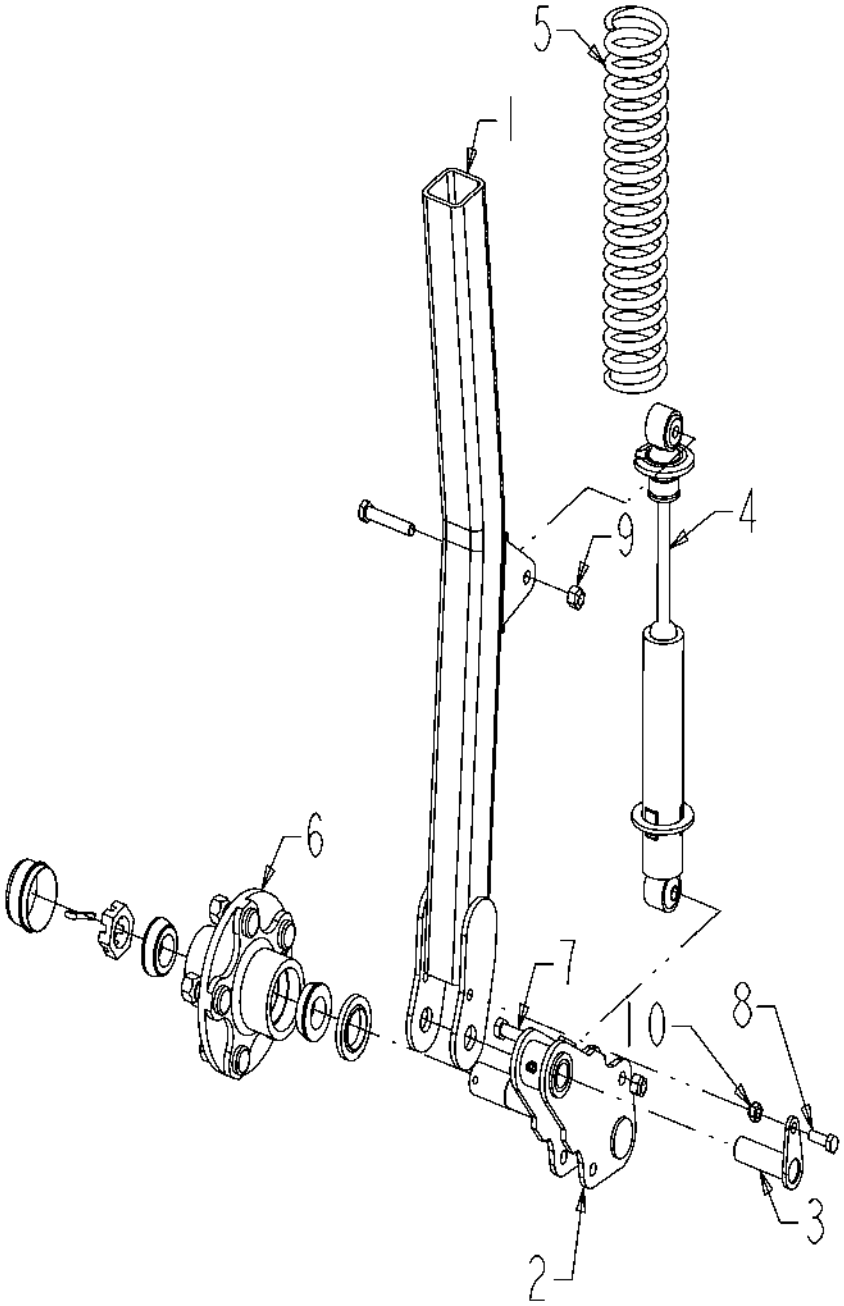

516968D1-01-R059-02.TIF

Copyright © 2007 AGCO Corporation

AXLE ASM-CUSH,AUTOBM,RH

ITEM	PART #	QTY	DESCRIPTION	COMMENTS
1	AG332166	1	WLDMT/ARM/GAGEWHL/CUSH/ATOBOOM	
2	AG332165	1	ARM/PIVOT/CUSHIONED GAGE WHL	
3	AG332164	1	WLDMNT/PIVOT/CUSHIONEDGAGE WHL	
4	AG426900	1	SHOCK/ABSORBER - AG426744	
5	AG426899	1	SPRING/COIL-12.25 L X 1.8 ID	
6	AG332163	1	ASSEMBLY/HUB 5-BOLT	
7	AG332160	2	BOLT/3/8-16 X 2-1/4	
8	AG332159	1	BOLT/5/16-18 X 1	
9	AG332158	2	NUT/LOCK/NYLON INSERT-3/8-16	
10	AG716744	1	INSERT-LOCKNUT NY 5/16 -18	

Copyright © 2007 AGCO Corporation

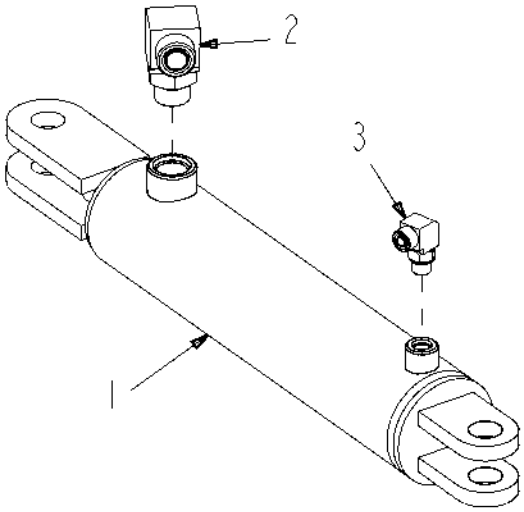

518291D1-01-R172-.TIF

Copyright © 2007 AGCO Corporation

CYL ASM-TILT,W/O AUTOBM,120,LH

ITEM	PART #	QTY	DESCRIPTION	COMMENTS
1	AG136825	1	CYLINDER-HYD,3.00X11.38X1.25	SEE PAGE 5-29
2	CH148-8347	1	ELBOW AS-90° 12STOR X 12ORFS	SEE PAGE 5-34
3	CH148-8378	1	ELBOW AS-90-6STOR X 6ORFS	SEE PAGE 5-24

Copyright © 2007 AGCO Corporation

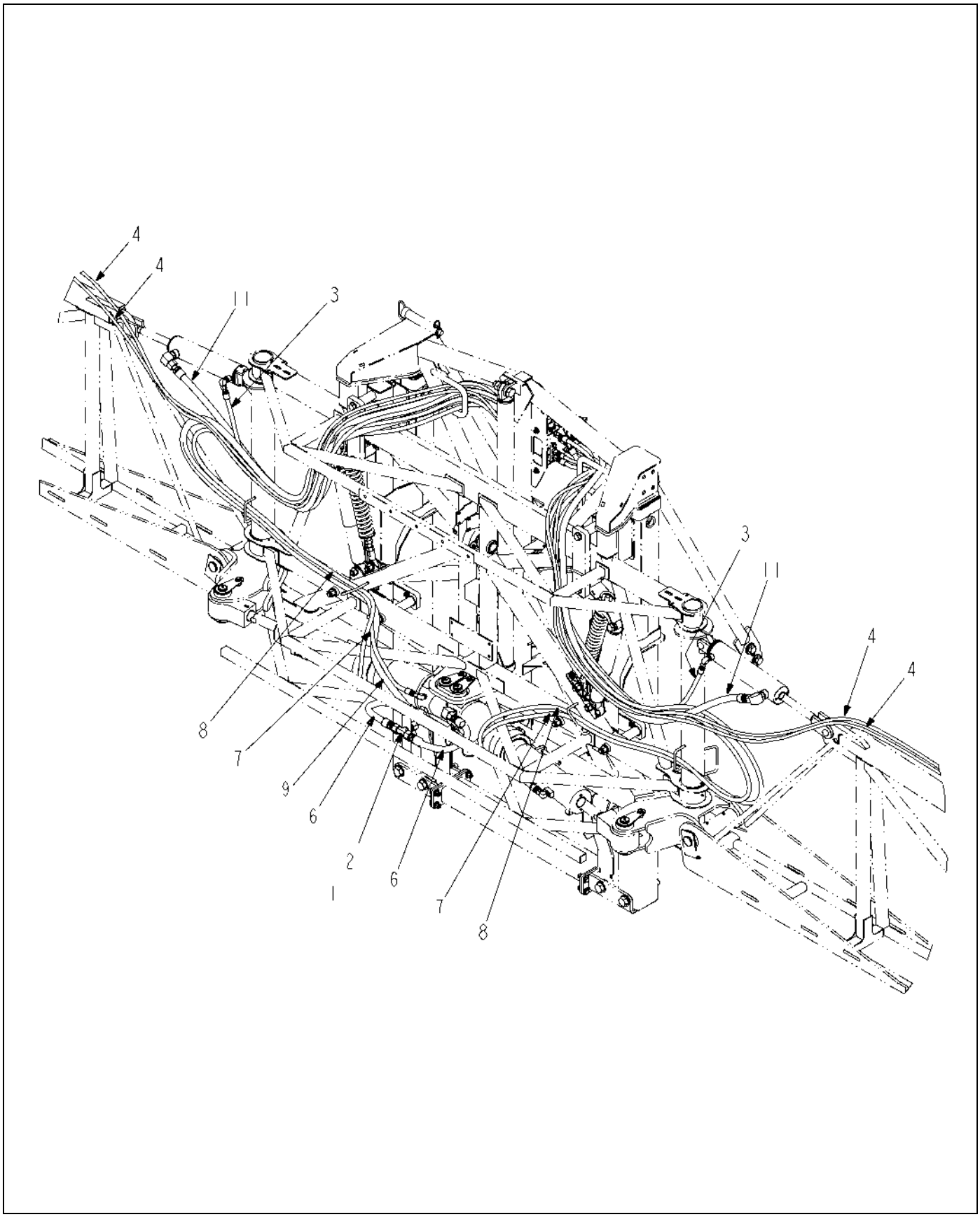

518292D1-01-R172-01.TIF

Copyright © 2007 AGCO Corporation

HOSE INSTL-HYD,W/O AUTOBM,120

ITEM	PART #	QTY	DESCRIPTION	COMMENTS
1	400961X1	1	BULKHEAD NUT-12ORFS	
2	401320X1	1	BLKHD BR TEE ASM,-12 ORFS	SEE PAGE 4-53
3	512548D1	-	HOSE ASM,-6X126.0 ORFS/ORFS	
4	513468D1	-	HOSE ASM,-4X429 6ORFS/ORFS	
5	518294D1	1	KIT-HOSE,HYD,W/O AUTOBOOM,120	
6	518324D1	-	HOSE ASM,-12X24 ORFS/ORFS	
7	518325D1	-	HOSE ASM,-6X204 ORFS/ORFS	
8	518326D1	-	HOSE ASM,-6X204 4ORFS/ORFS	
9	518327D1	-	HOSE ASM,-12X204 8ORFS/ORFS90	
11	518329D1	-	HOSE ASM PARF-12X136 ORFS/ORFS	

Copyright © 2007 AGCO Corporation

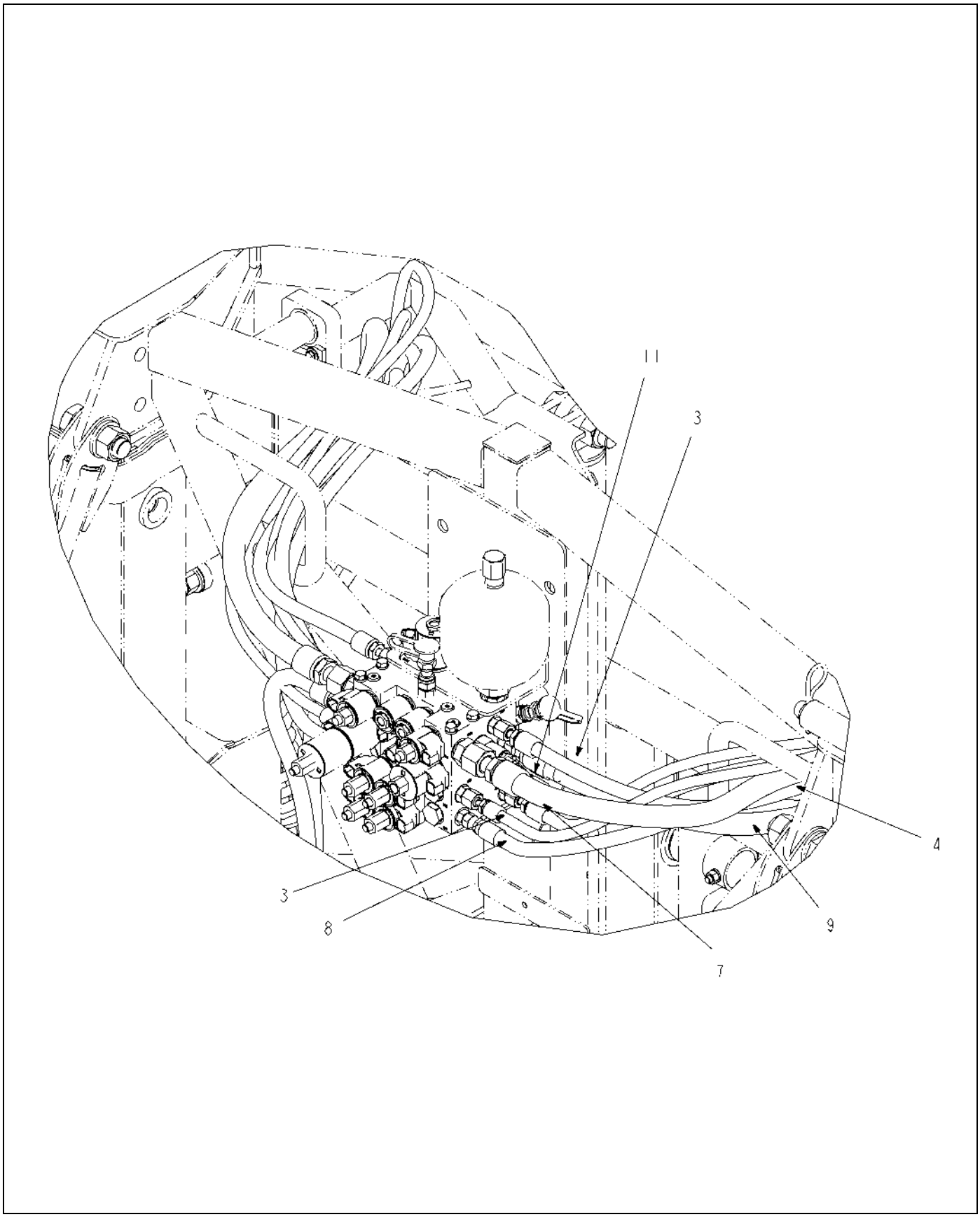

518292D1-01-R172-02.TIF

Copyright © 2007 AGCO Corporation

HOSE INSTL-HYD,W/O AUTOBM,120

ITEM	PART #	QTY	DESCRIPTION	COMMENTS
3	512548D1	-	HOSE ASM,-6X126.0 ORFS/ORFS	
4	513468D1	-	HOSE ASM,-4X429 6ORFS/ORFS	
7	518325D1	-	HOSE ASM,-6X204 ORFS/ORFS	
8	518326D1	-	HOSE ASM,-6X204 4ORFS/ORFS	
9	518327D1	-	HOSE ASM,-12X204 8ORFS/ORFS90	
11	518329D1	-	HOSE ASM PARF-12X136 ORFS/ORFS	

Copyright © 2007 AGCO Corporation

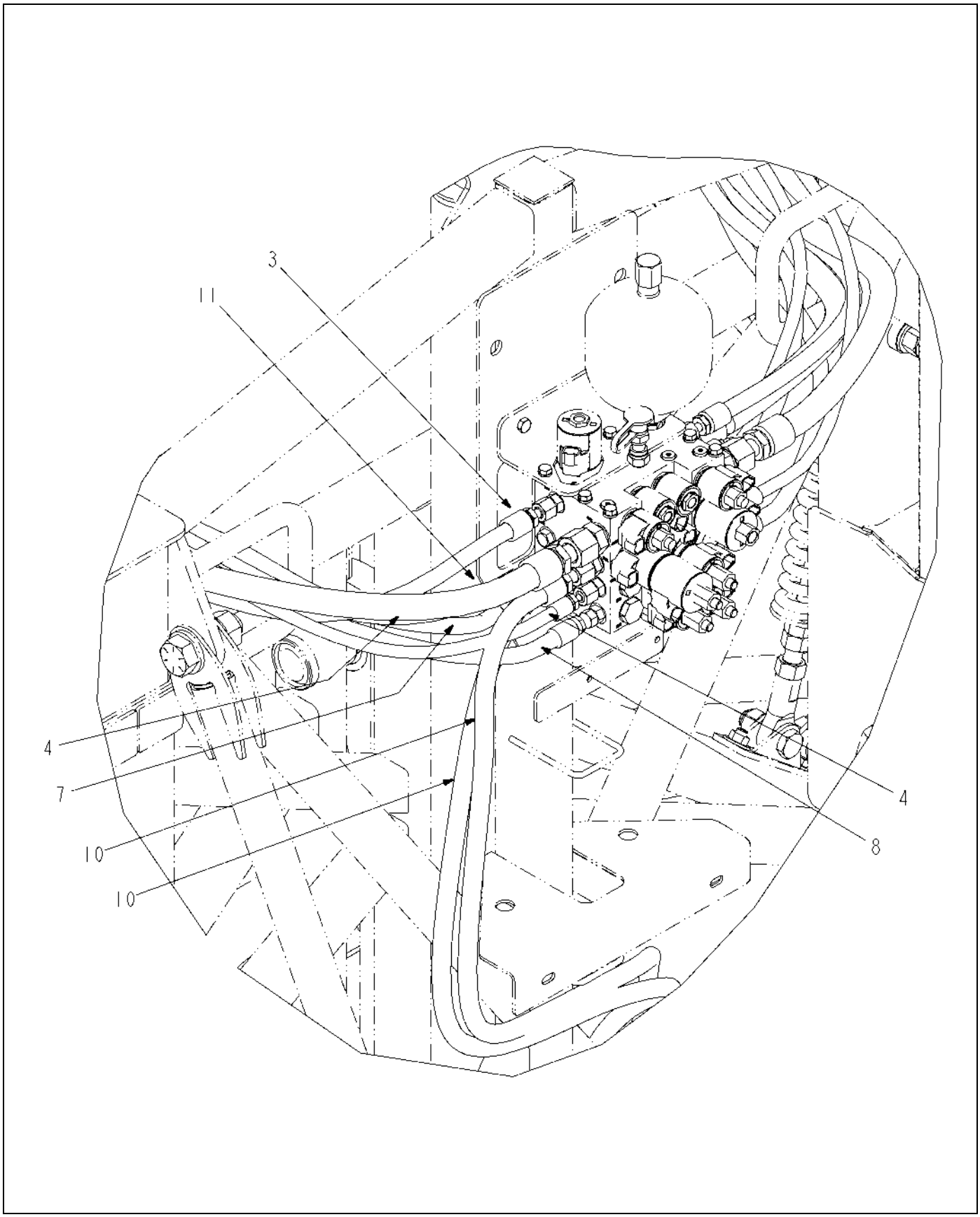

518292D1-01-R172-03.TIF

Copyright © 2007 AGCO Corporation

HOSE INSTL-HYD,W/O AUTOBM,120

ITEM	PART #	QTY	DESCRIPTION	COMMENTS
3	512548D1	-	HOSE ASM,-6X126.0 ORFS/ORFS	
4	513468D1	-	HOSE ASM,-4X429 6ORFS/ORFS	
7	518325D1	-	HOSE ASM,-6X204 ORFS/ORFS	
8	518326D1	-	HOSE ASM,-6X204 4ORFS/ORFS	
10	518328D1	-	HOSE ASM,-8X54 ORFS/ORFS45	
11	518329D1	-	HOSE ASM PARF-12X136 ORFS/ORFS	

Copyright © 2007 AGCO Corporation

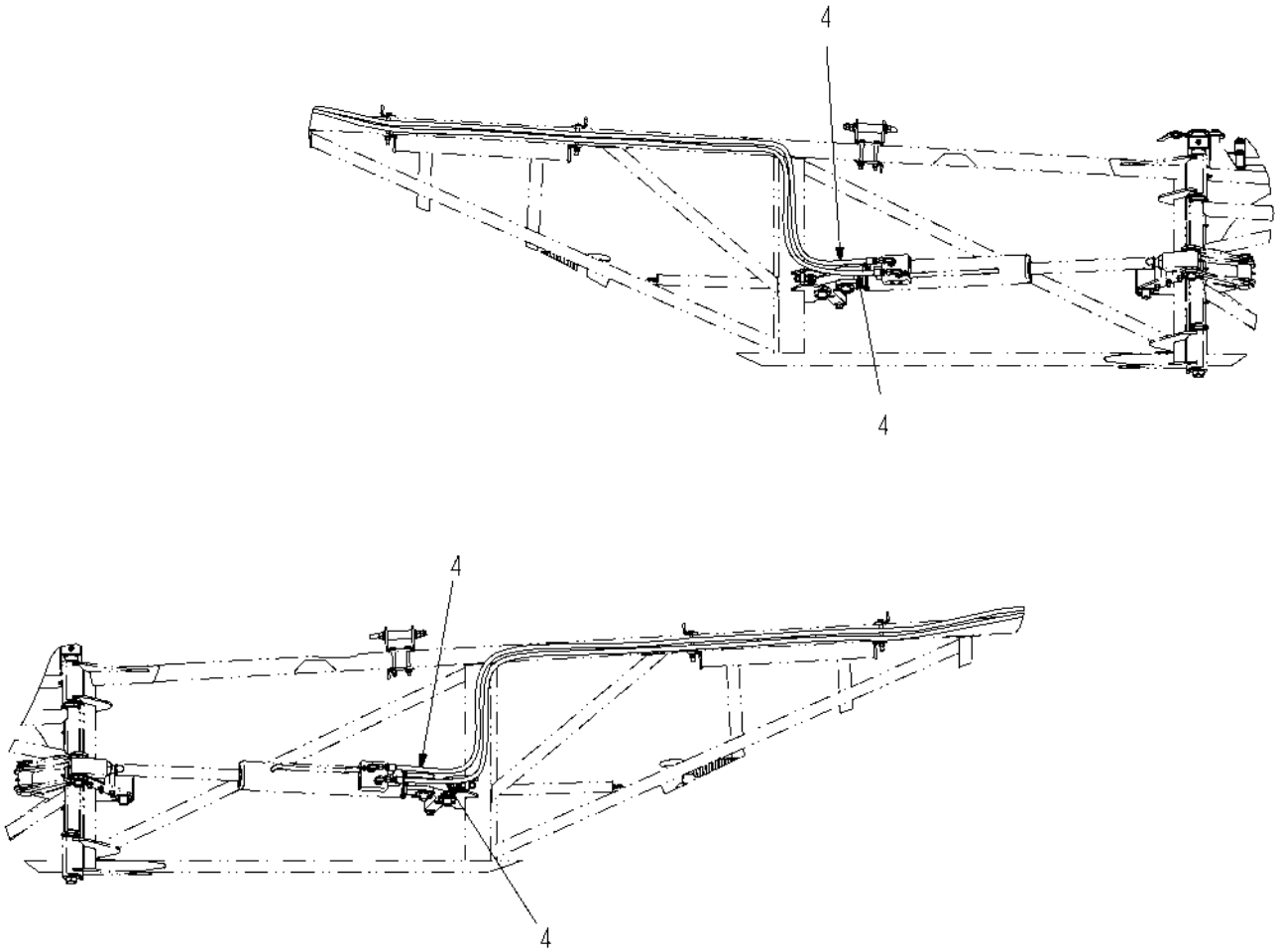

518292D1-01-R172-04.TIF

Copyright © 2007 AGCO Corporation

ITEM	PART #	QTY	DESCRIPTION	COMMENTS
4	513468D1	-	HOSE ASM,-4X429 6ORFS/ORFS	

Copyright © 2007 AGCO Corporation

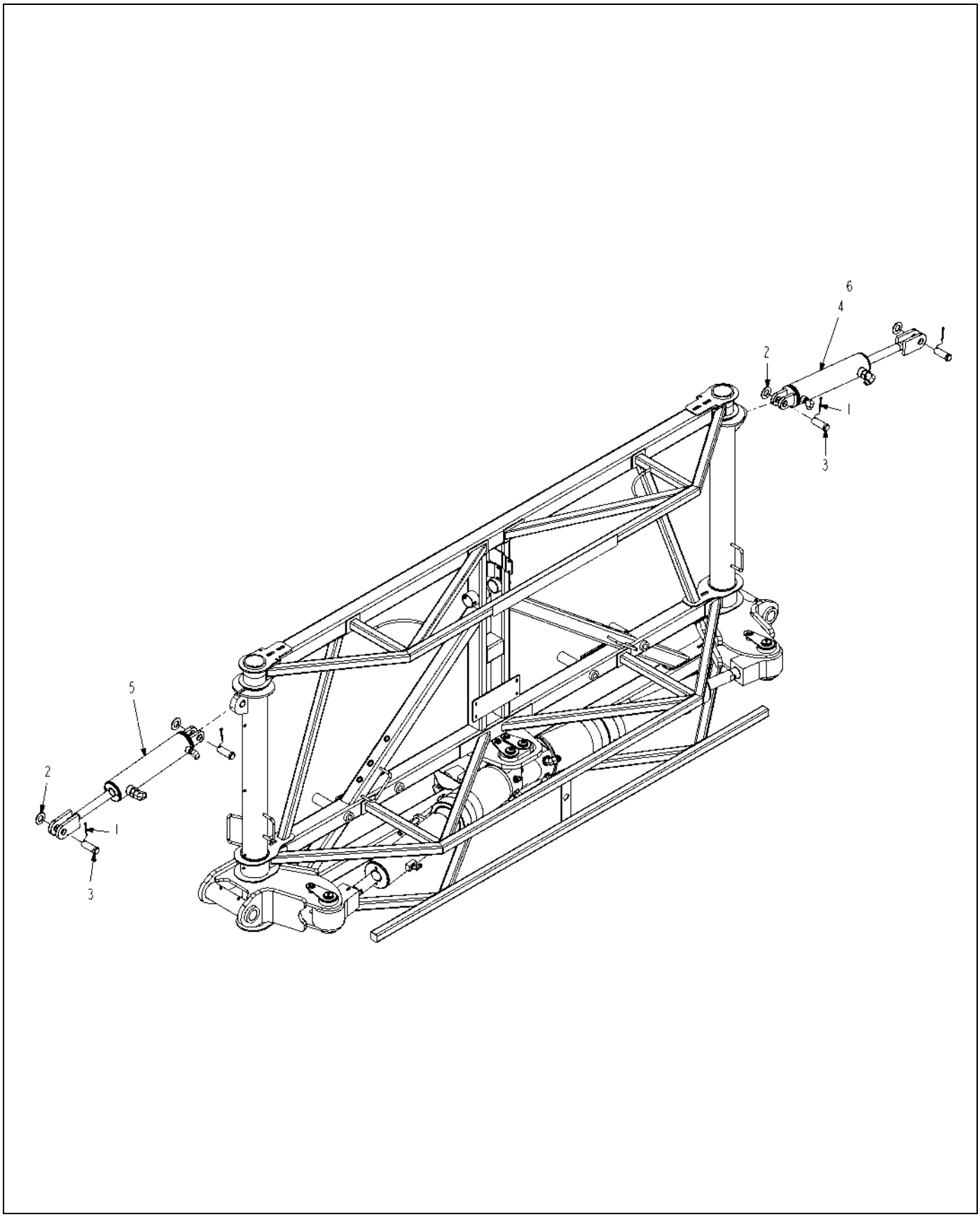

518289D1-01-R172-.TIF

Copyright © 2007 AGCO Corporation

CYL INSTL-TILT,W/AUTOBOOM,120

ITEM	PART #	QTY	DESCRIPTION	COMMENTS
1	AG515352	4	PIN COTTER 0.18X2.00 SS	
2	AG551856	4	WASHER 1.00 FL ZN SAE TYPE-A	
3	AG602132	4	PIN CLEVIS 1.00X2.62 ZN	[A]
4	513464D1	1	CYLINDER ASM-TILT,BOOM,120,RH	SEE PAGE 11-8
5	513465D1	1	CYLINDER ASM-TILT,BOOM,120,LH	SEE PAGE 11-9
6	518293D1	1	HOSE INSTL-HYD,W/AUTOBOOM,120	SEE PAGE 11-47
	FOOTNOTE [A]		GREASABLE PIN IS 519637	

Copyright © 2007 AGCO Corporation

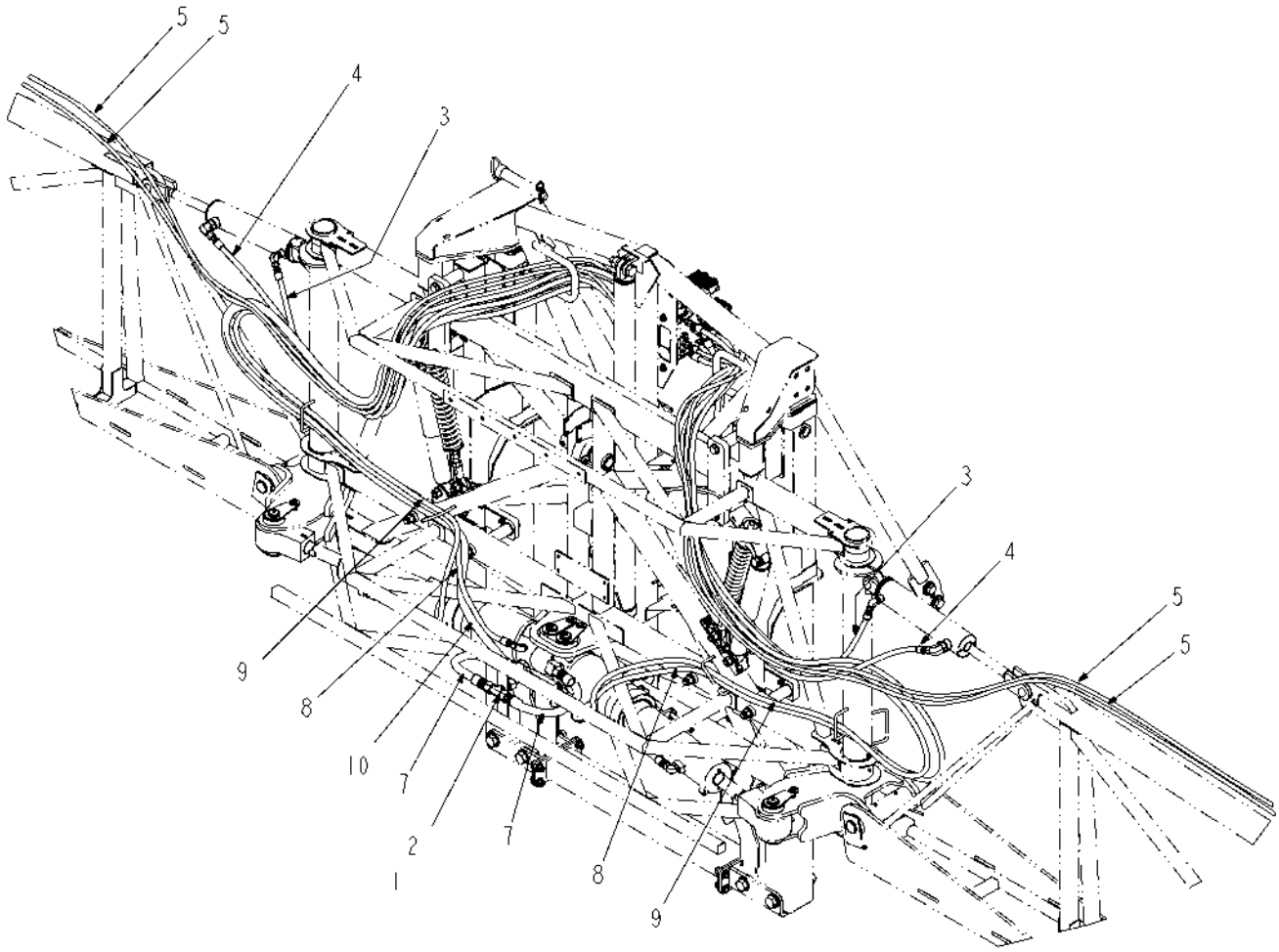

518293D1-01-R172-01.TIF

Copyright © 2007 AGCO Corporation

HOSE INSTL-HYD,W/AUTOBOOM,120

ITEM	PART #	QTY	DESCRIPTION	COMMENTS
1	400961X1	1	BULKHEAD NUT-12ORFS	
2	401320X1	1	BLKHD BR TEE ASM,-12 ORFS	SEE PAGE 4-53
3	512548D1	-	HOSE ASM,-6X126.0 ORFS/ORFS	
4	512611D1	-	HOSE ASM,-6X136.0 8ORFS/8ORFS	
5	513468D1	-	HOSE ASM,-4X429 6ORFS/ORFS	
6	518295D1	1	KIT-HOSE,HYD,W/AUTOBOOM,120	
7	518324D1	-	HOSE ASM,-12X24 ORFS/ORFS	
8	518325D1	-	HOSE ASM,-6X204 ORFS/ORFS	
9	518326D1	-	HOSE ASM,-6X204 4ORFS/ORFS	
10	518327D1	-	HOSE ASM,-12X204 8ORFS/ORFS90	

Copyright © 2007 AGCO Corporation

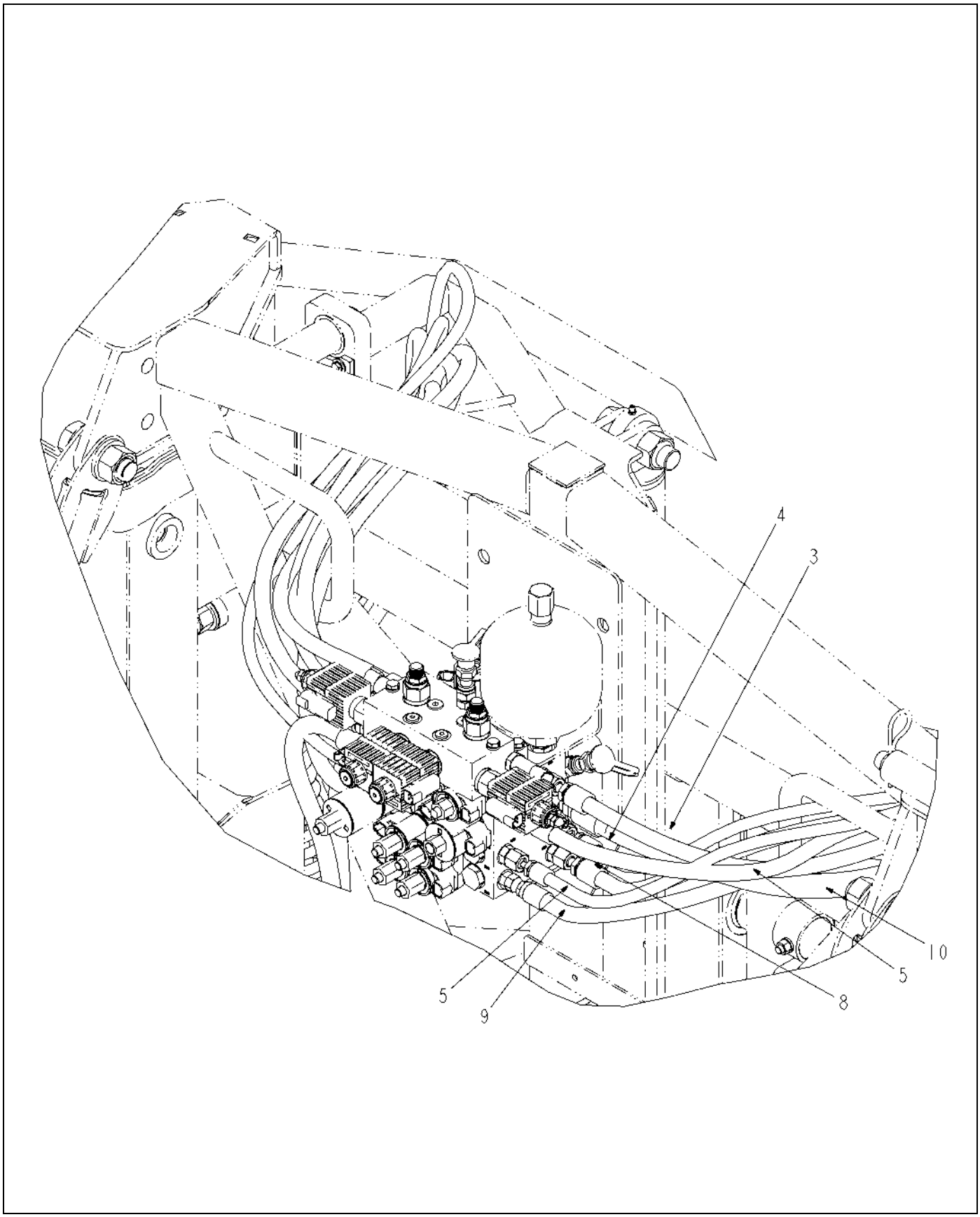

518293D1-01-R172-02.TIF

Copyright © 2007 AGCO Corporation

HOSE INSTL-HYD,W/AUTOBOOM,120

ITEM	PART #	QTY	DESCRIPTION	COMMENTS
3	512548D1	-	HOSE ASM,-6X126.0 ORFS/ORFS	
4	512611D1	-	HOSE ASM,-6X136.0 8ORFS/8ORFS	
5	513468D1	-	HOSE ASM,-4X429 6ORFS/ORFS	
8	518325D1	-	HOSE ASM,-6X204 ORFS/ORFS	
9	518326D1	-	HOSE ASM,-6X204 4ORFS/ORFS	
10	518327D1	-	HOSE ASM,-12X204 8ORFS/ORFS90	

Copyright © 2007 AGCO Corporation

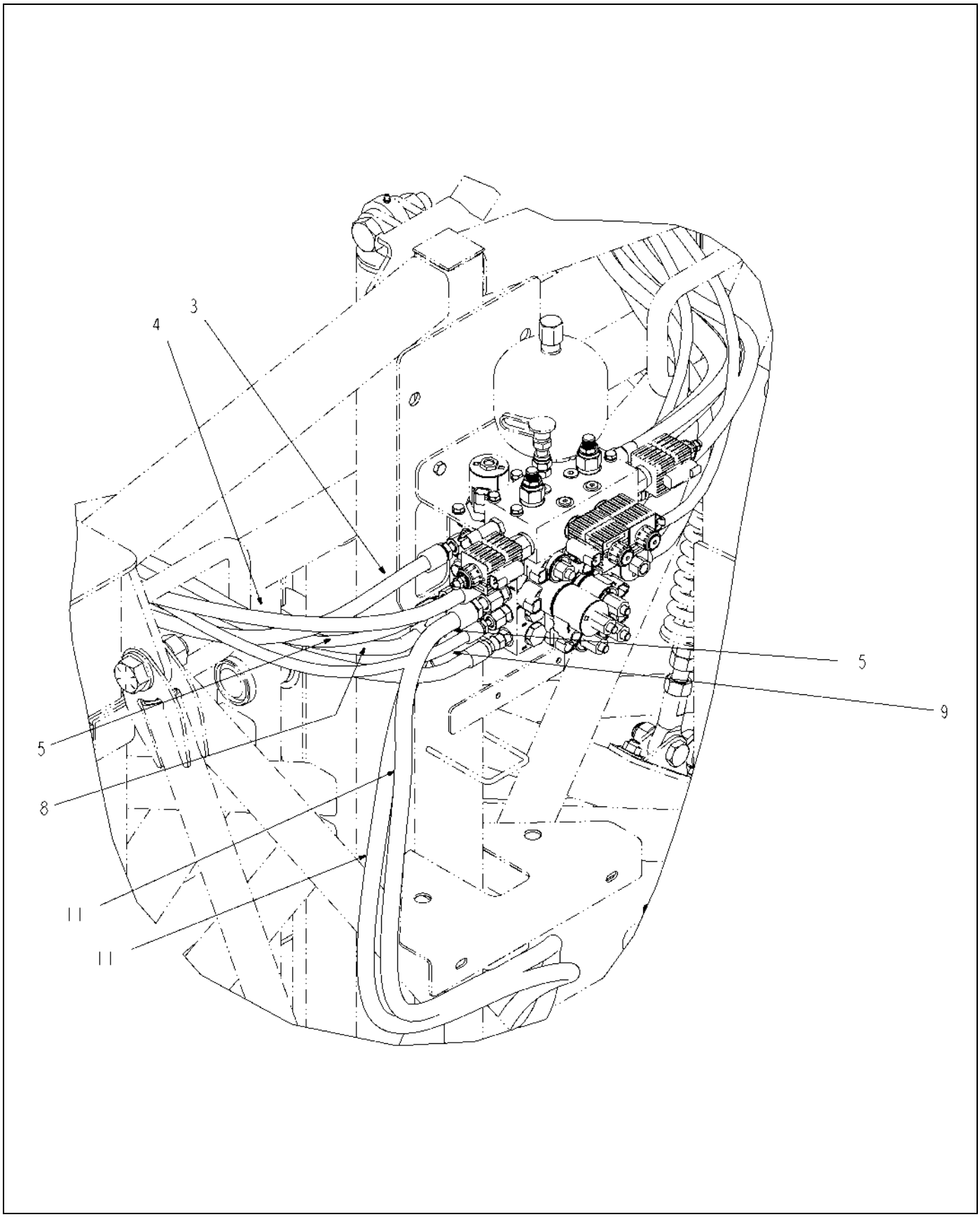

518293D1-01-R172-03.TIF

Copyright © 2007 AGCO Corporation

HOSE INSTL-HYD,W/AUTOBOOM,120

ITEM	PART #	QTY	DESCRIPTION	COMMENTS
3	512548D1	-	HOSE ASM,-6X126.0 ORFS/ORFS	
4	512611D1	-	HOSE ASM,-6X136.0 8ORFS/8ORFS	
5	513468D1	-	HOSE ASM,-4X429 6ORFS/ORFS	
8	518325D1	-	HOSE ASM,-6X204 ORFS/ORFS	
9	518326D1	-	HOSE ASM,-6X204 4ORFS/ORFS	
11	518328D1	-	HOSE ASM,-8X54 ORFS/ORFS45	

Copyright © 2007 AGCO Corporation

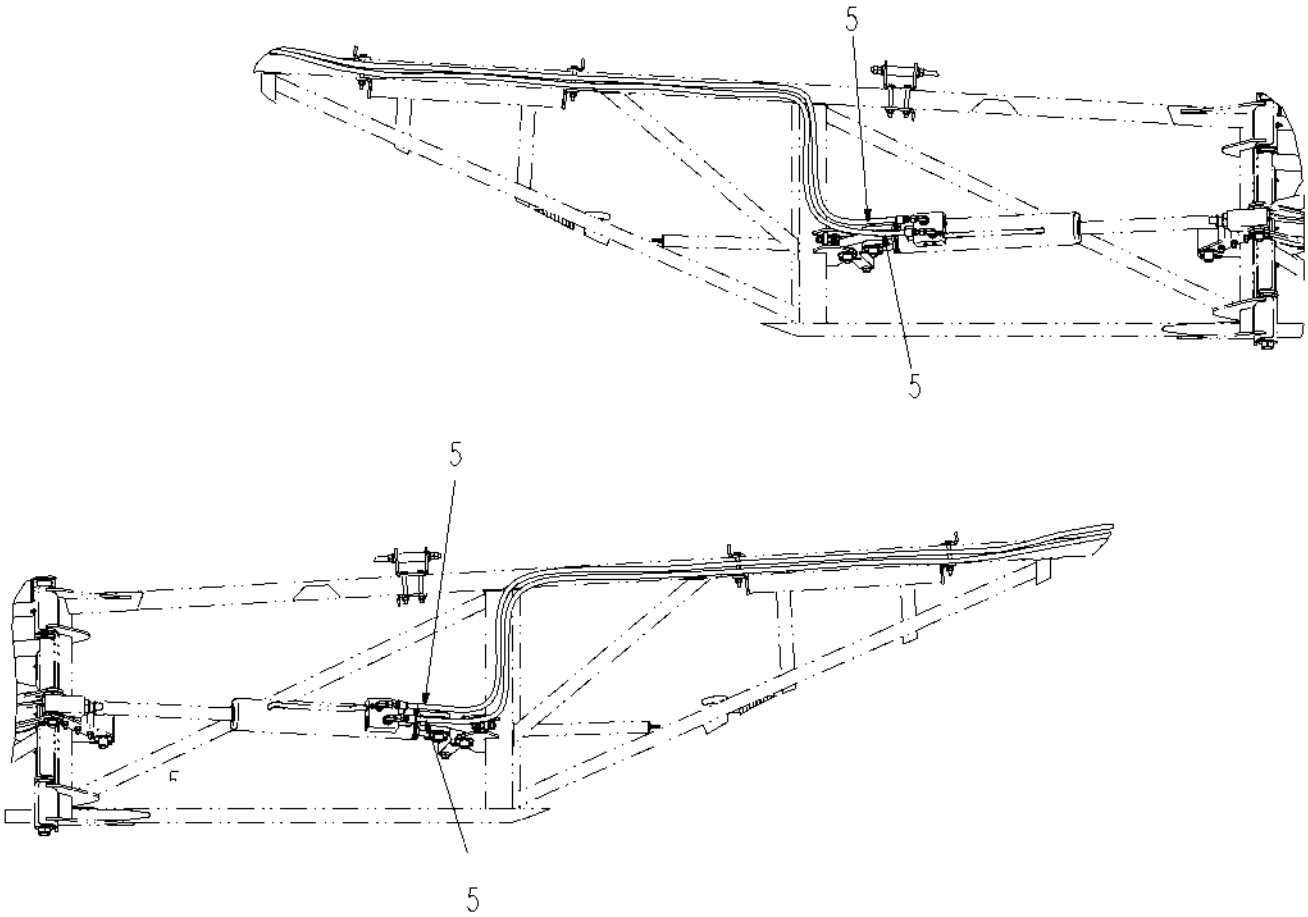

518293D1-01-R172-04.TIF

Copyright © 2007 AGCO Corporation

ITEM	PART #	QTY	DESCRIPTION	COMMENTS
5	513468D1	-	HOSE ASM,-4X429 6ORFS/ORFS	

Copyright © 2007 AGCO Corporation

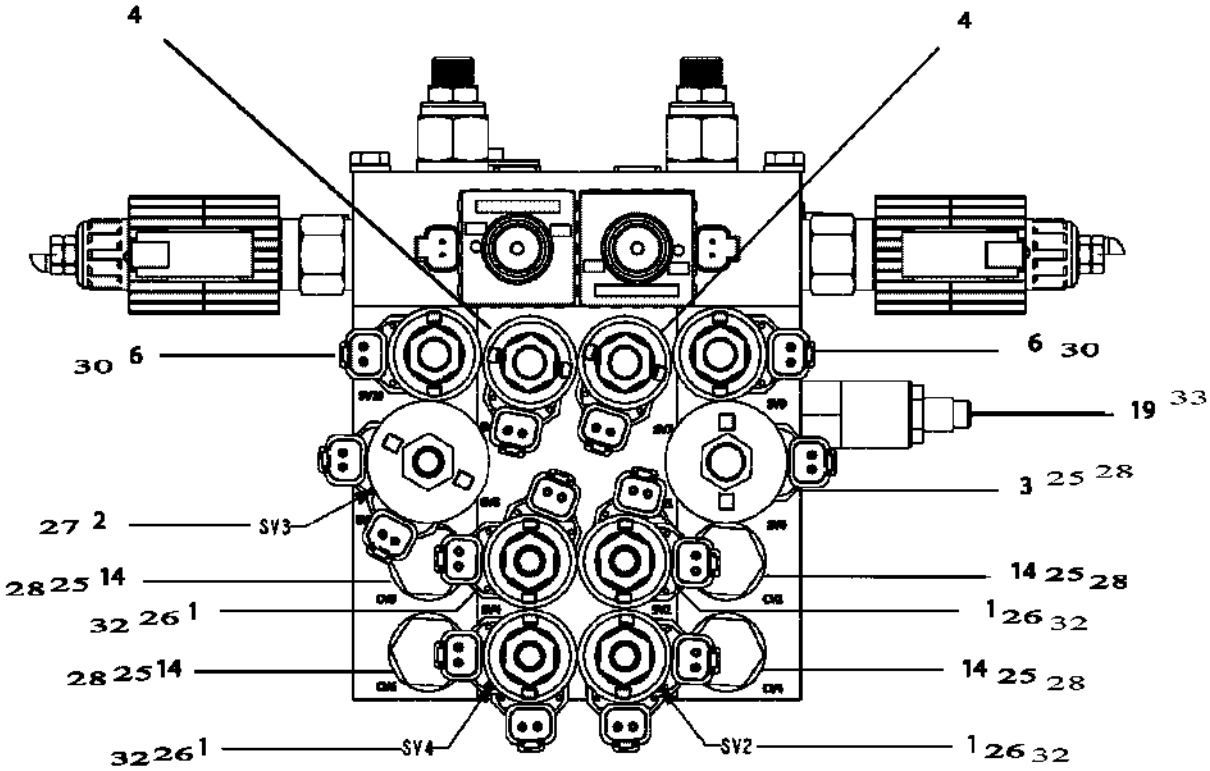

515133D1-04-R284-2.TIF

Copyright © 2007 AGCO Corporation

ITEM	PART #	QTY	DESCRIPTION	COMMENTS
REF	AG550671	8	WASHER 0.25 FL ZN SAE TYPE-A	
1	AG727147	AR	VALVE/SOLENOID	
2	AG721899	AR	CARTRIDGE PUMP	
3	AG125811	AR	VALVE-SOL,2WAY POPPET,18 GPM	
4	AG724687	AR	SOLENOID VALVE 523480	
5	AG718011	AR	ORIFICE BOOM	
6	AG718059	AR	CARTRIDGE-2WAY,NORMALLY CLOSED	[A]
8	AG121483	AR	COIL-E,12VDC DEUTCH W/DIODE,08	
9	AG121484	AR	COIL-E,12VDC DEUTCH W/DIODE,10	
10	AG726854	AR	NUT/PULL COIL E-SERIES	
11	AG726853	AR	NUT/PUSH COIL,E-SERIES	
12	AG121486	AR	SPACER-E COIL,08	
13	AG121485	AR	SPACER-E COIL,10	
14	AG715570	AR	CHECK VALVE	
15	AG715569	AR	PILOT PISTON	
19	517308D1	1	VLV-PRESS RED,PLT OPT,1500/250	
20	AG059148	AR	ORIFICE	
21	517010D1	1	ORIFICE-2WAY,.070,-6SAE THREAD	
22	AG522023	AR	PLATE-ORFICE,2 WAY,.040 DIA	
23	AG121920	AR	NUT-PULL COIL,E-SERIES,#10	
24	AG121921	AR	NUT-PULL COIL,E-SERIES,#8	
26	AG716814	-	KIT-ORING,SPOOL VIV,4W(609463)	
27	AG715207	-	SEAL KIT	
28	AG059018	1	SEAL KIT	
29	AG714832	-	SEAL KIT 712817	
30	AG716811	-	KIT-ORING,ND VALVE(609465)	
32	AG715567	-	SOLENOID VALVE	[B]
33	AG121495	-	KIT-SEAL,VALVE,-10	
	FOOTNOTE [A]		SEAL KIT - AG716811	
	FOOTNOTE [B]		REPLACED BY AG727147	

Copyright © 2007 AGCO Corporation

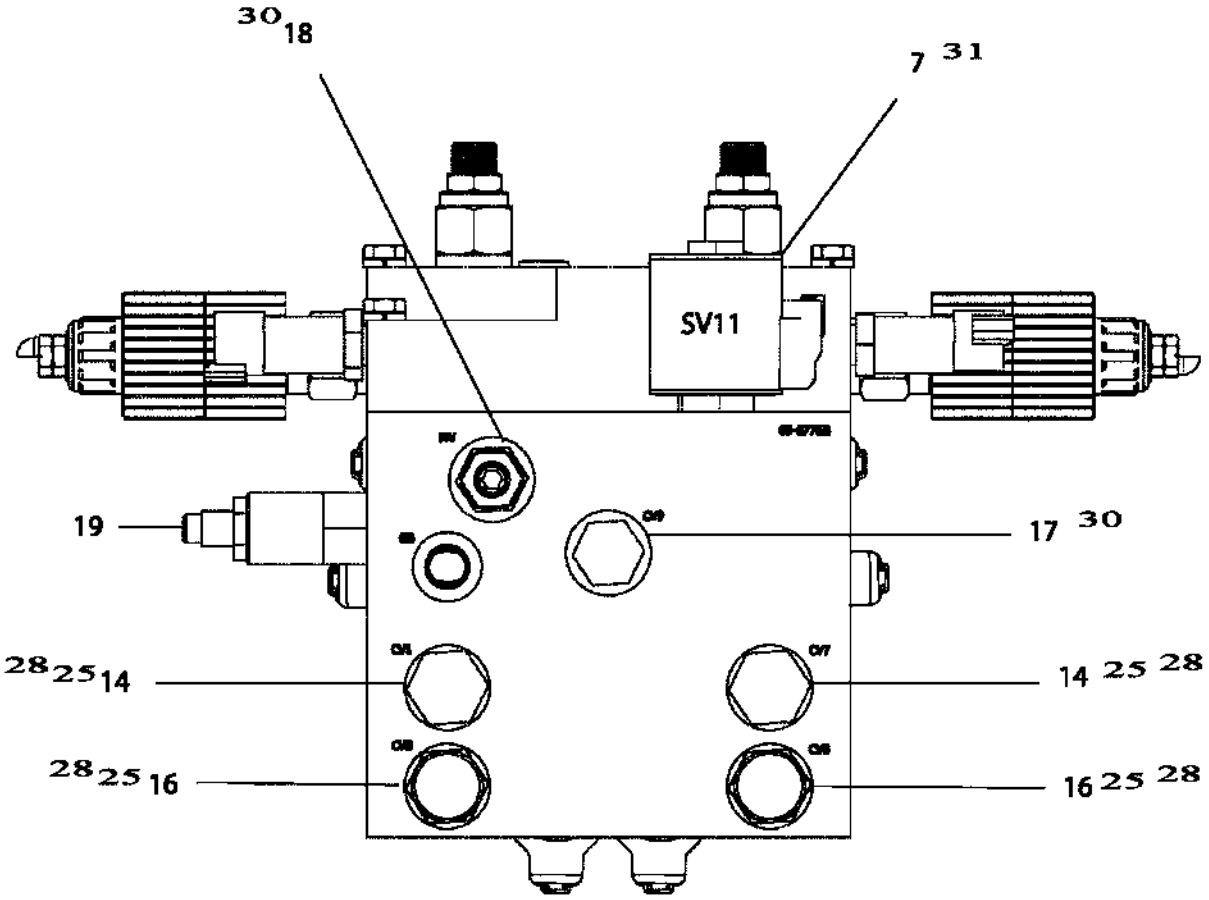

515133D1-04-R284-3.TIF

Copyright © 2007 AGCO Corporation

BLOCK-VALVE,7BANK,W/AUTOBOOM

ITEM	PART #	QTY	DESCRIPTION	COMMENTS
7	AG725602	AR	CARTRIDGE-SOLENOID VALVE	
14	AG715570	AR	CHECK VALVE	
16	AG715571	AR	CHECK VALVE	
17	AG717712	AR	VALVE- CHECK	
18	AG121927	AR	VALVE-RELEASE,MANUAL,#8	
19	517308D1	1	VLV-PRESS RED,PLT OPT,1500/250	
28	AG059018	1	SEAL KIT	
30	AG716811	-	KIT-ORING,ND VALVE(609465)	
31	AG121382	-	KIT-SEAL,MANUAL,SPRING RETURN	

Copyright © 2007 AGCO Corporation

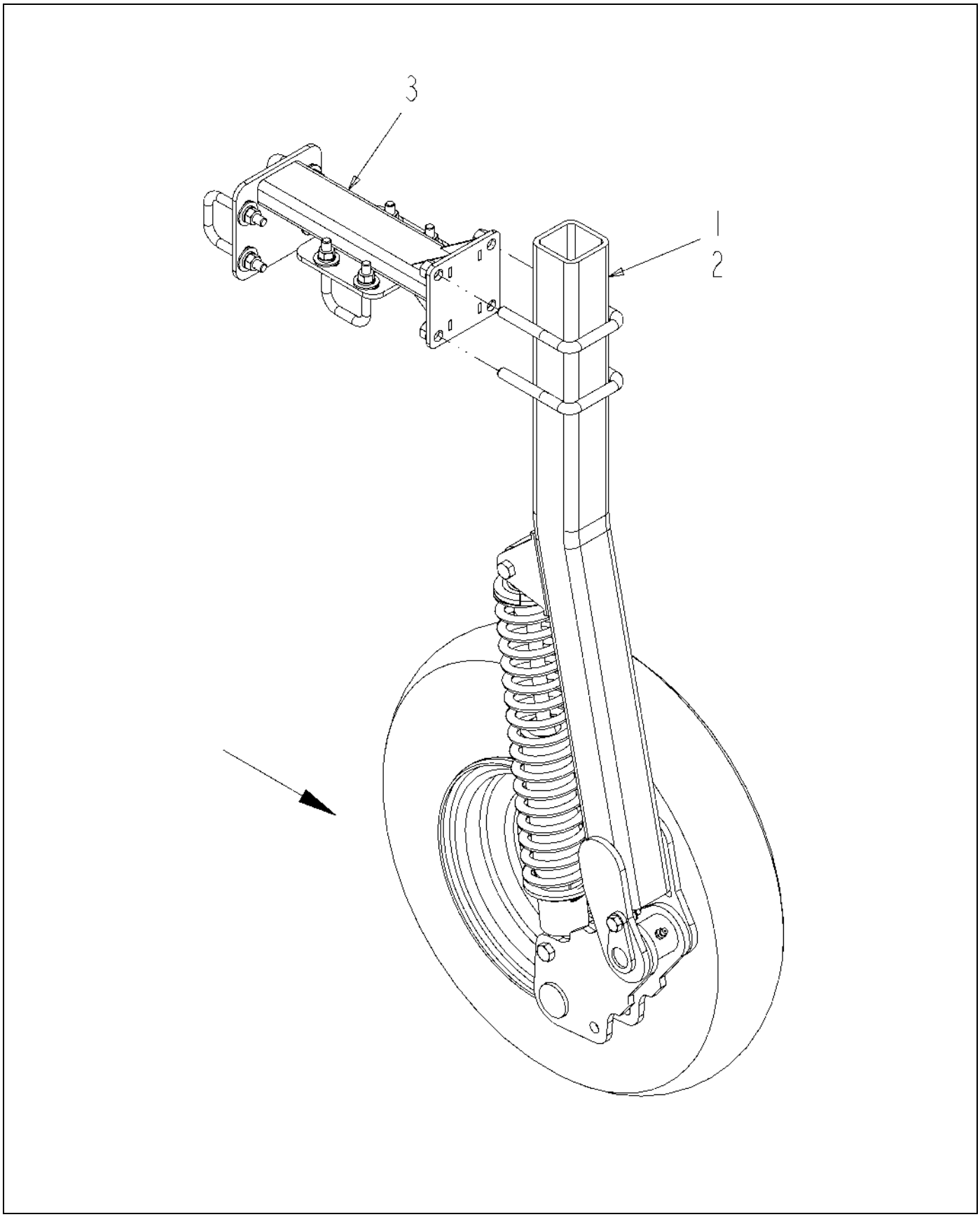

519331D1-01-R284-.TIF

Copyright © 2007 AGCO Corporation

WHEEL INSTL-AUTOBM,80/90/100

ITEM	PART #	QTY	DESCRIPTION	COMMENTS
1	516969D1	1	WHEEL/AXLE ASM-CUSH,AUTOBM,LH	SEE PAGE 11-34
2	516970D1	1	WHEEL/AXLE ASM-CUSH,AUTOBM,RH	SEE PAGE 11-36
3	519340D1	2	ARM ASM-MTG,WHL,CUSH,120	SEE PAGE 11-75

Copyright © 2007 AGCO Corporation

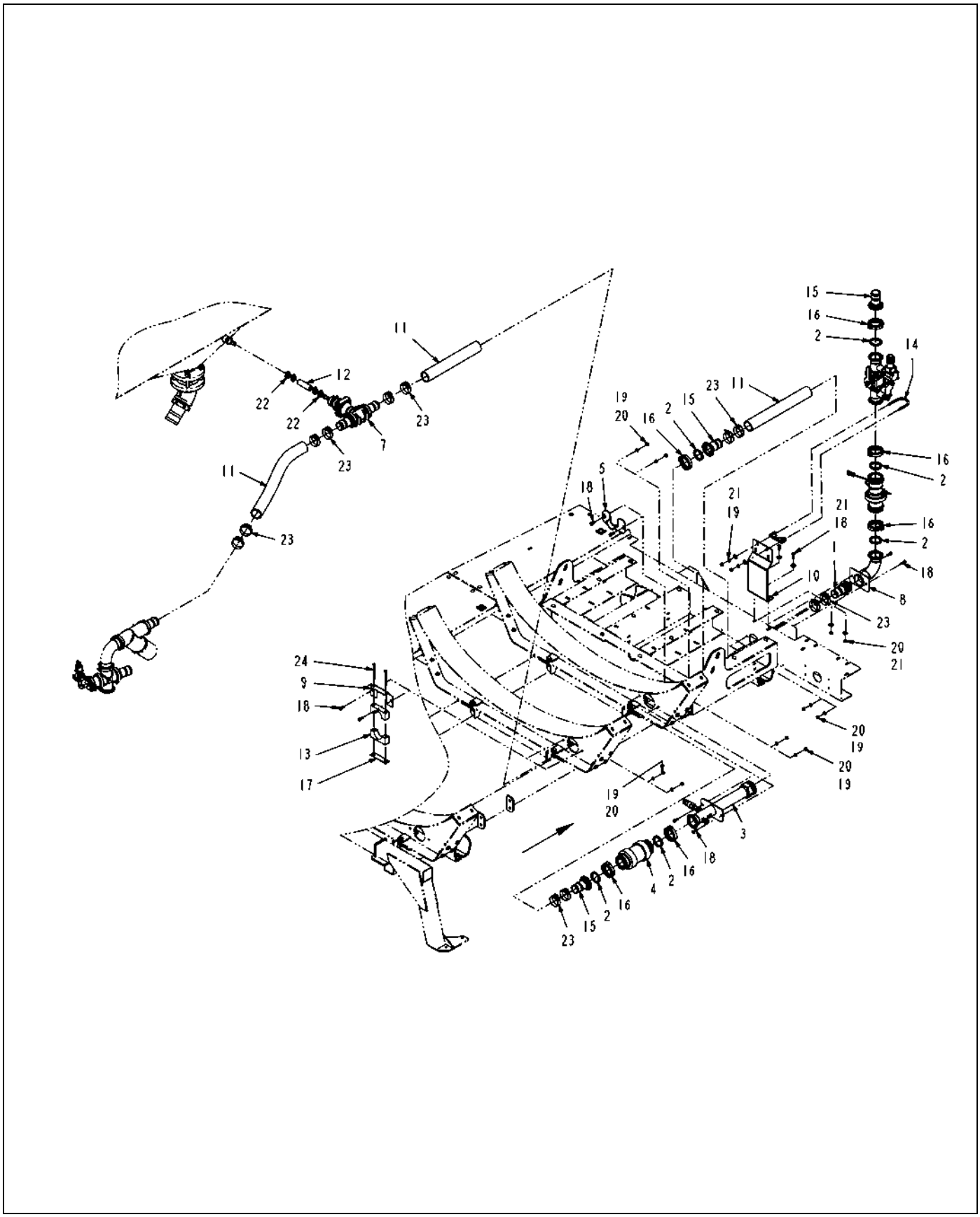

135908-01-M399-.TIF

Copyright © 2007 AGCO Corporation

PLMB INSTL-PRESS,W/CHEM INJ

ITEM	PART #	QTY	DESCRIPTION	COMMENTS
1	AG000767	1	BARB-HOSE,2.00MNPTX2.00BARB,PP	
2	AG000773	6	GASKET 2.00 EPDM	
3	AG123592	1	NOZZLE ASM-INJ,2 LOOP,2.00 NPT	SEE PAGE 4-89
4	AG123996	1	VALVE ASM-CHECK,2.00 FP FLG	SEE PAGE 2-26
5	AG123999	1	SUPPORT WLDMT-2.00 MXR/INJ	
6	AG129187	-	PIPE SEALANT-FLEX BLACK	
7	AG134343	1	TEE ASM-MANG,220X100,RLF VALVE	SEE PAGE 2-25
8	AG327785	1	MANIFOLD WLDMT-REAR,PRESS PLMB	
9	AG327850	1	BRKT-CLAMP,HOSE,PRESSURE	
10	AG327928	1	BRKT-FLOWMETER	
11	AG511722	-	HOSE-2.00,WIRE BRAID,EPDM [BULK: 5.042 FT]	
12	AG513385	-	HOSE,MED.PRESS 0.75 2BRD EPDM [BULK: 0.292 FT]	
13	AG518340	1	CLAMP 2.50 BLACK POLY (RTG)	
14	AG522044	1	CLAMP-MUFFLER,2.50,SS	
15	AG522894	3	CONN-2.00 FLG X2.00 HOSE BARB	
16	AG522895	6	CLAMP-WORM SCREW,2.00,SS	
17	AG523940	1	PLATE-WELD,SINGLE,GROUP 7	
18	AG550175	10	BOLT 0.37-16NCX 1.00 G5 ZN HHD	
19	AG550191	10	WASHER 0.37 LK ZN REG	
20	AG550825	10	NUT 0.37-16NC HEX ZN REG	
21	AG551007	6	WASHER 0.37 FL ZN REG TYPE-B	
22	AG561229	4	CLAMP 0.68-1.25 HOSE 12HS	
23	AG561630	12	CLAMP 2.28-2.59HOSE VOSS-250SS	
24	AG562148	2	BOLT 0.25-20NCX 4.00 G5 ZN HHD	

Copyright © 2007 AGCO Corporation

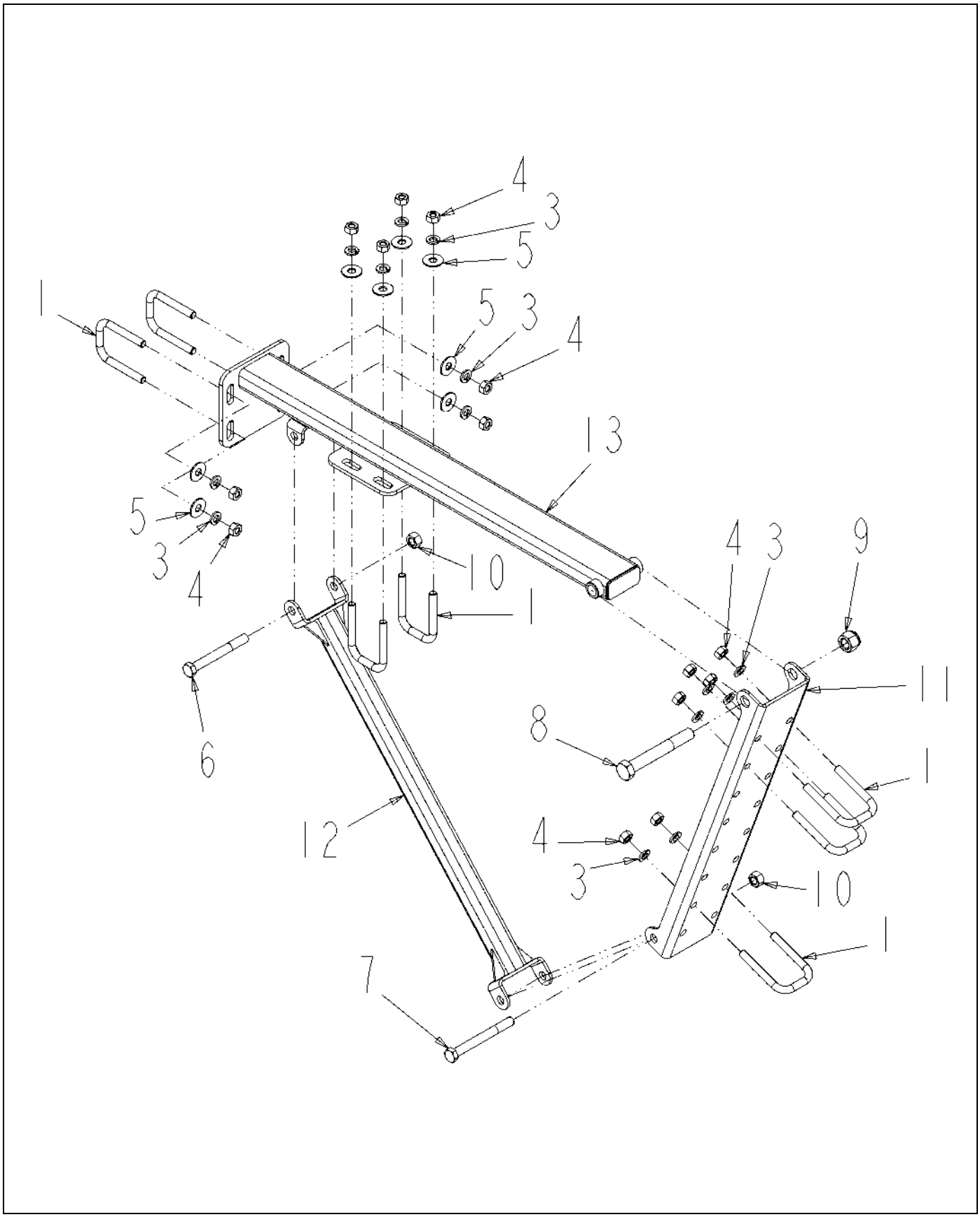

506911D1-01-M930.TIF

Copyright © 2007 AGCO Corporation

ARM ASM-WHEEL,AUTOBOOM,120

ITEM	PART #	QTY	DESCRIPTION	COMMENTS
1	AG209384	7	BOLT-U .31-18X1.56X 2.46SQG5ZN	
2	AG511099	AR	GREASE-MULTI PURPOSE LITH.	
3	AG550205	14	WASHER 0.31 LK ZN REG	
4	AG550213	14	NUT 0.31-18NC HEX ZN REG	
5	AG551015	8	WASHER 0.31 FL ZN REG TYPE-B	
6	AG551058	1	BOLT 0.37-16NCX 3.25 G5 ZN HHD	
7	AG557471	1	BOLT 0.37-16NCX 3.50 G5 ZN HHD	
8	AG561592	1	BOLT 0.50-13NCX 3.75 G5 ZN HHD	
9	AG601152	1	NUT 0.50-13NC HEX ZN REG NY	
10	AG601411	2	NUT 0.37-16NC HEX ZN REG NY	
11	506913D1	1	BRKT-MTG,FORK,WHEEL,AUTOBOOM	
12	506925D1	1	BRACE WLDMT-MTG,WHEEL,AUTOBOOM	
13	506929D1	1	ARM WLDMT-MTG,WHL,AUTOBOOM,120	

Copyright © 2007 AGCO Corporation

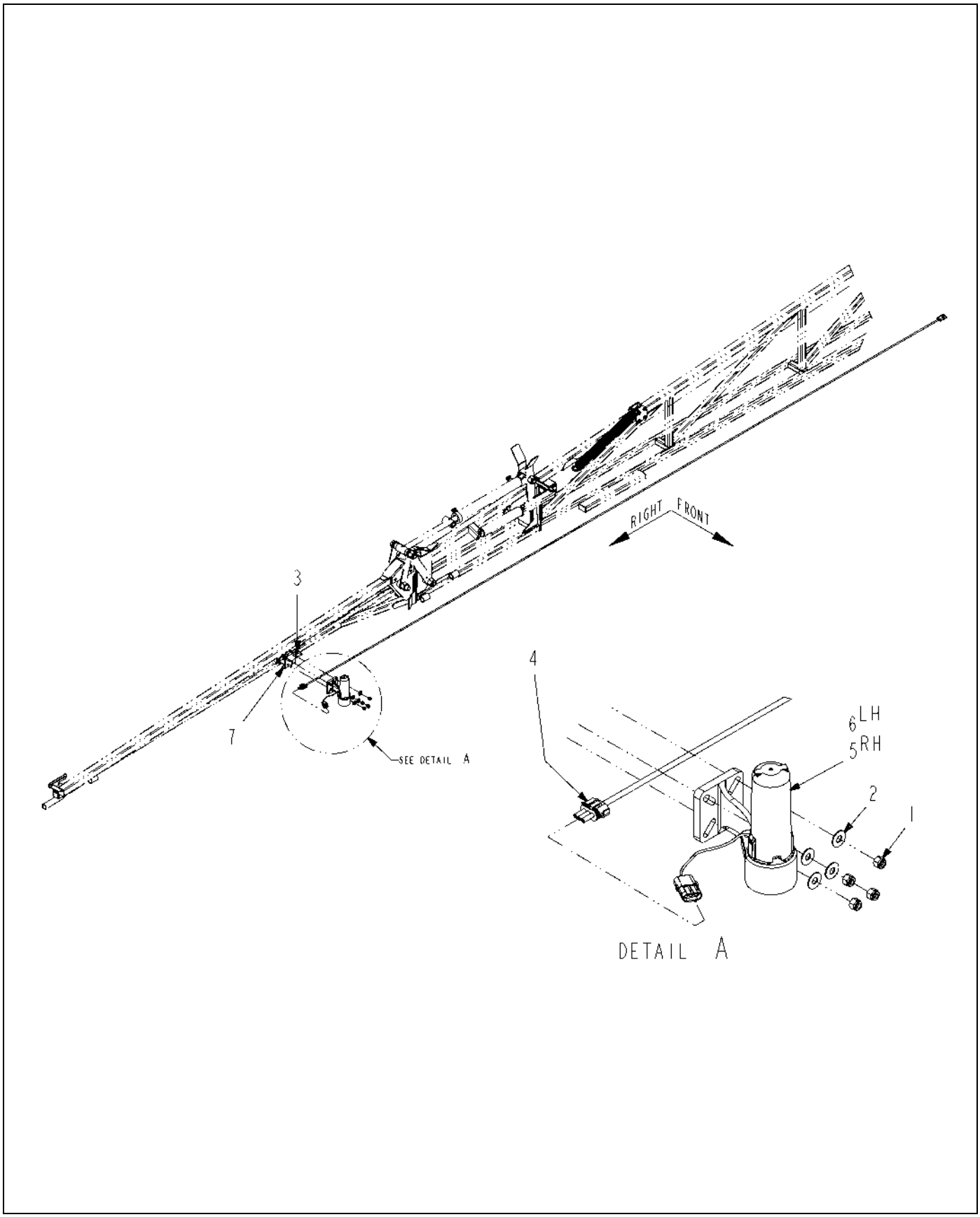

508035D1-02-R310-.TIF

Copyright © 2007 AGCO Corporation

SENSOR INSTL-AUTOBOOM,80FT

ITEM	PART #	QTY	DESCRIPTION	COMMENTS
1	AG515140	8	NUT 0.37-16NC HEX SS HVY NY	
2	AG562073	8	WASHER 0.37 FL SS REG TYPE-B	
3	AG604167	8	BOLT 0.37-16NCX 1.25 S.S. HHD	
4	509027D1	2	HARN-EXT,SNSR,ULTRASONIC,552	
5	516990D1	1	SNSR-ULTRASONIC,AUTOBM,RH MTG	SEE PAGE 11-54
6	516991D1	1	SNSR-ULTRASONIC,AUTOBM,LH MTG	SEE PAGE 11-55
7	519270D1	2	BRKT ASM-MTG,80,SNSR,AUTOBM	SEE PAGE 11-56

Copyright © 2007 AGCO Corporation

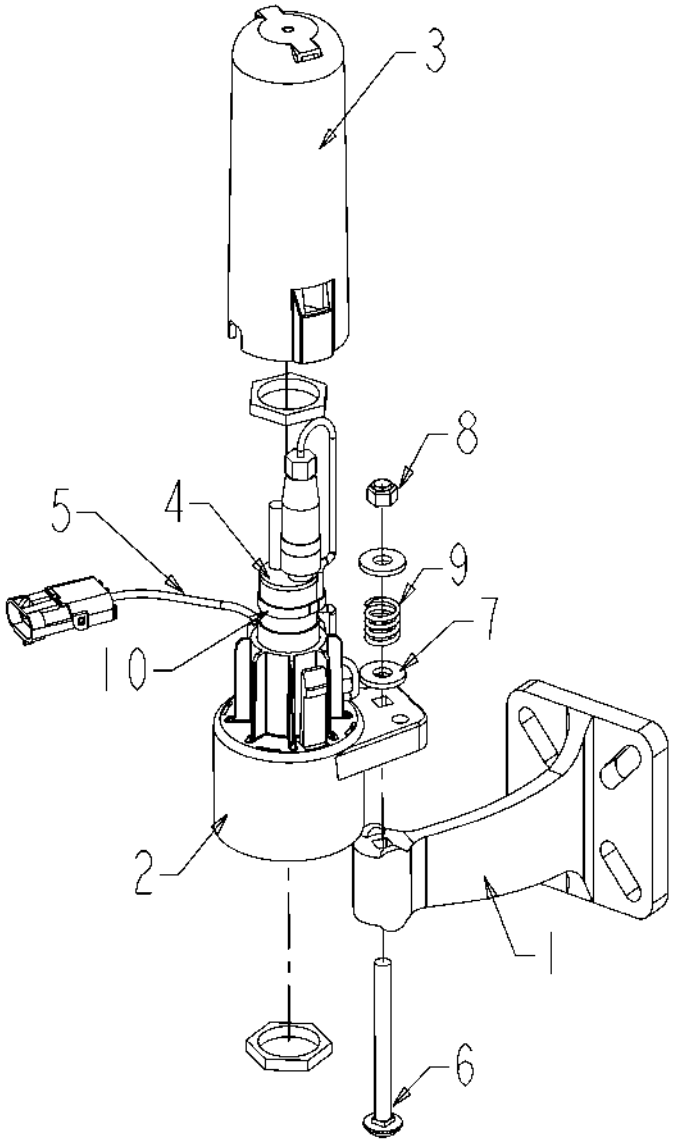

516990D1-01-R059-02.tif

Copyright © 2007 AGCO Corporation

SNSR-ULTRASONIC,AUTOBM,RH MTG

ITEM	PART #	QTY	DESCRIPTION	COMMENTS
REF	516992D1	1	LIST-PARTS,MTG,SNSR,ULTRASONIC	
1	AG332176	1	ARM/ULTRASONIC-SENSOR	
2	AG332175	1	LOWER/HOUSING-ULTRASONICSENSOR	
3	AG332174	1	COVER/ULTRASONIC-SENSOR	
4	AG332173	1	SENSOR/ULTRASONIC	
5	AG332172	1	CABLE/ULTRASONICSENSOR/ATOBOOM	
6	AG332171	1	BOLT/CARRIAGE	
7	AG332170	2	WASHER/STEEL/FLAT	
8	AG716444	1	CONTROL SCS450W/GPS W/O SPD SN	
9	AG332169	1	SPRING/COMPRESSION	
10	AG332168	1	TIE/CABLE/LOCKING/NYLON/BLACK	
11	AG332167	1	ENVELOPE/PLASTIC	

Copyright © 2007 AGCO Corporation

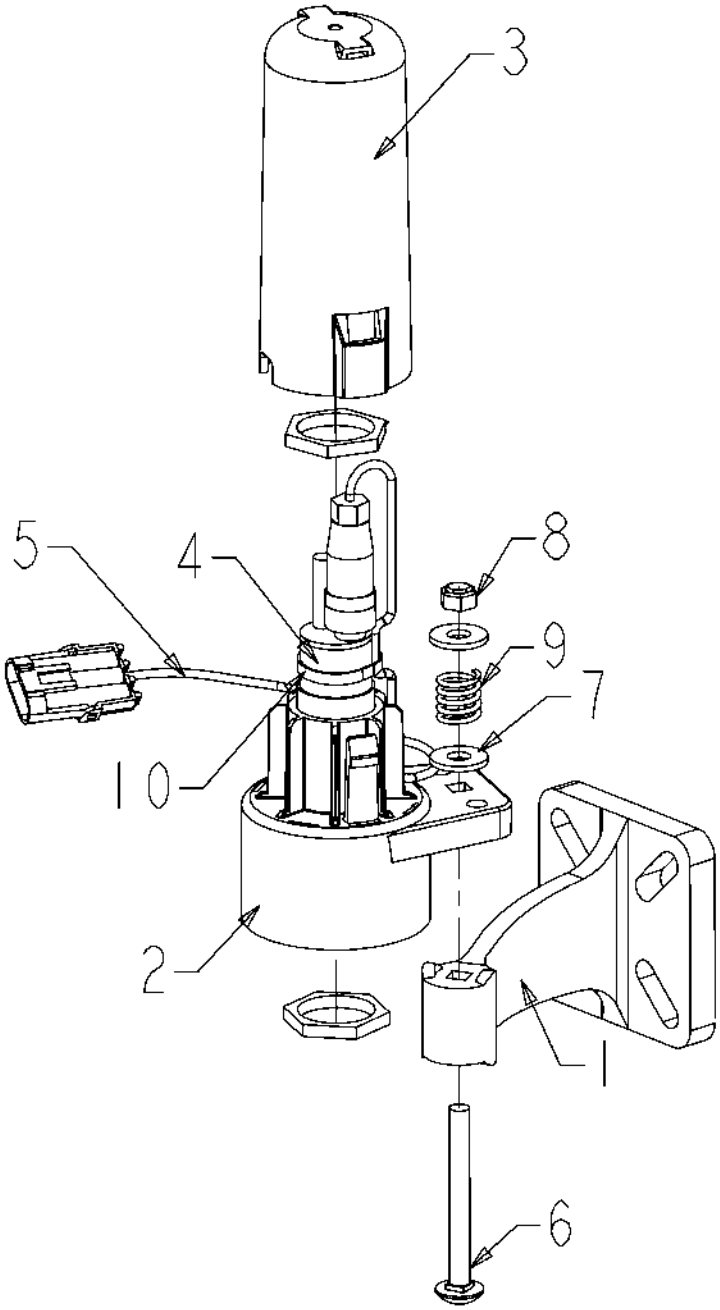

516991D1-01-R059-02.tif

Copyright © 2007 AGCO Corporation

SNSR-ULTRASONIC,AUTOBM,LH MTG

ITEM	PART #	QTY	DESCRIPTION	COMMENTS
REF	516992D1	1	LIST-PARTS,MTG,SNSR,ULTRASONIC	
1	AG332176	1	ARM/ULTRASONIC-SENSOR	
2	AG332175	1	LOWER/HOUSING-ULTRASONICSENSOR	
3	AG332174	1	COVER/ULTRASONIC-SENSOR	
4	AG332173	1	SENSOR/ULTRASONIC	
5	AG332172	1	CABLE/ULTRASONICSENSOR/ATOBOOM	
6	AG332171	1	BOLT/CARRIAGE	
7	AG332170	2	WASHER/STEEL/FLAT	
8	AG716744	1	INSERT-LOCKNUT NY 5/16 -18	
9	AG332169	1	SPRING/COMPRESSION	
10	AG332168	1	TIE/CABLE/LOCKING/NYLON/BLACK	
11	AG332167	1	ENVELOPE/PLASTIC	

Copyright © 2007 AGCO Corporation

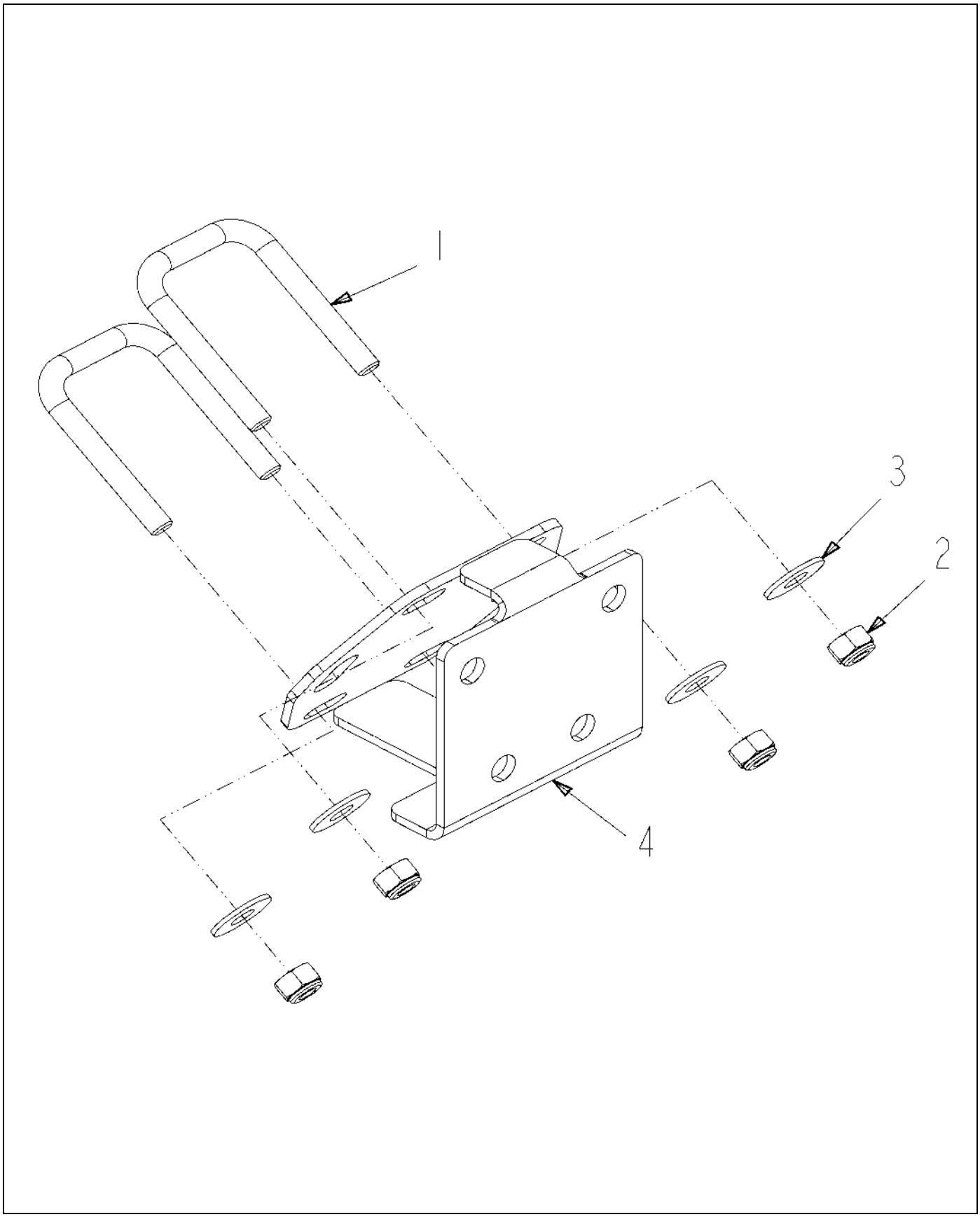

519270D1-01-R310-.TIF

Copyright © 2007 AGCO Corporation

BRKT ASM-MTG,80,SNSR,AUTOBM

ITEM	PART #	QTY	DESCRIPTION	COMMENTS
1	AG231204	2	BOLT-U .31-18X1.88X2.63	
2	AG516403	4	NUT 0.31-18NC HEX SS REG NY	
3	AG562074	4	WASHER 0.31 FL SS REG TYPE-B	
4	519271D1	1	BRKT WLDMT-MTG,80,SNSR,AUTOBM	

Copyright © 2007 AGCO Corporation

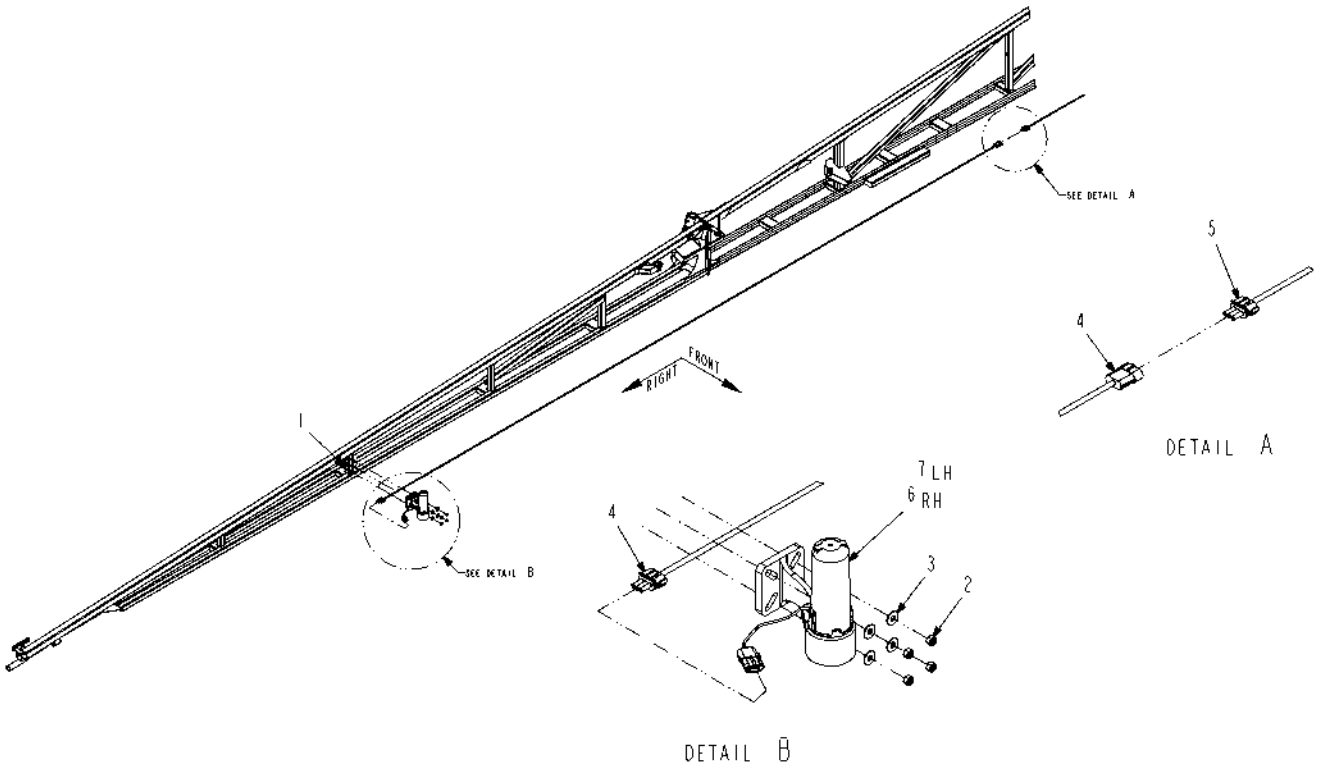

508036D1-02-R310-.TIF

Copyright © 2007 AGCO Corporation

SENSOR INSTL-AUTOBOOM,90/100FT

ITEM	PART #	QTY	DESCRIPTION	COMMENTS
1	AG231204	4	BOLT-U .31-18X1.88X2.63	
2	AG516403	8	NUT 0.31-18NC HEX SS REG NY	
3	AG562074	8	WASHER 0.31 FL SS REG TYPE-B	
4	508293D1	2	HARN-EXT,SNSR,ULTRASONIC,210	
5	508294D1	2	HARN-EXT,SNSR,ULTRASONIC,410	
6	516990D1	1	SNSR-ULTRASONIC,AUTOBM,RH MTG	SEE PAGE 11-54
7	516991D1	1	SNSR-ULTRASONIC,AUTOBM,LH MTG	SEE PAGE 11-55

Copyright © 2007 AGCO Corporation

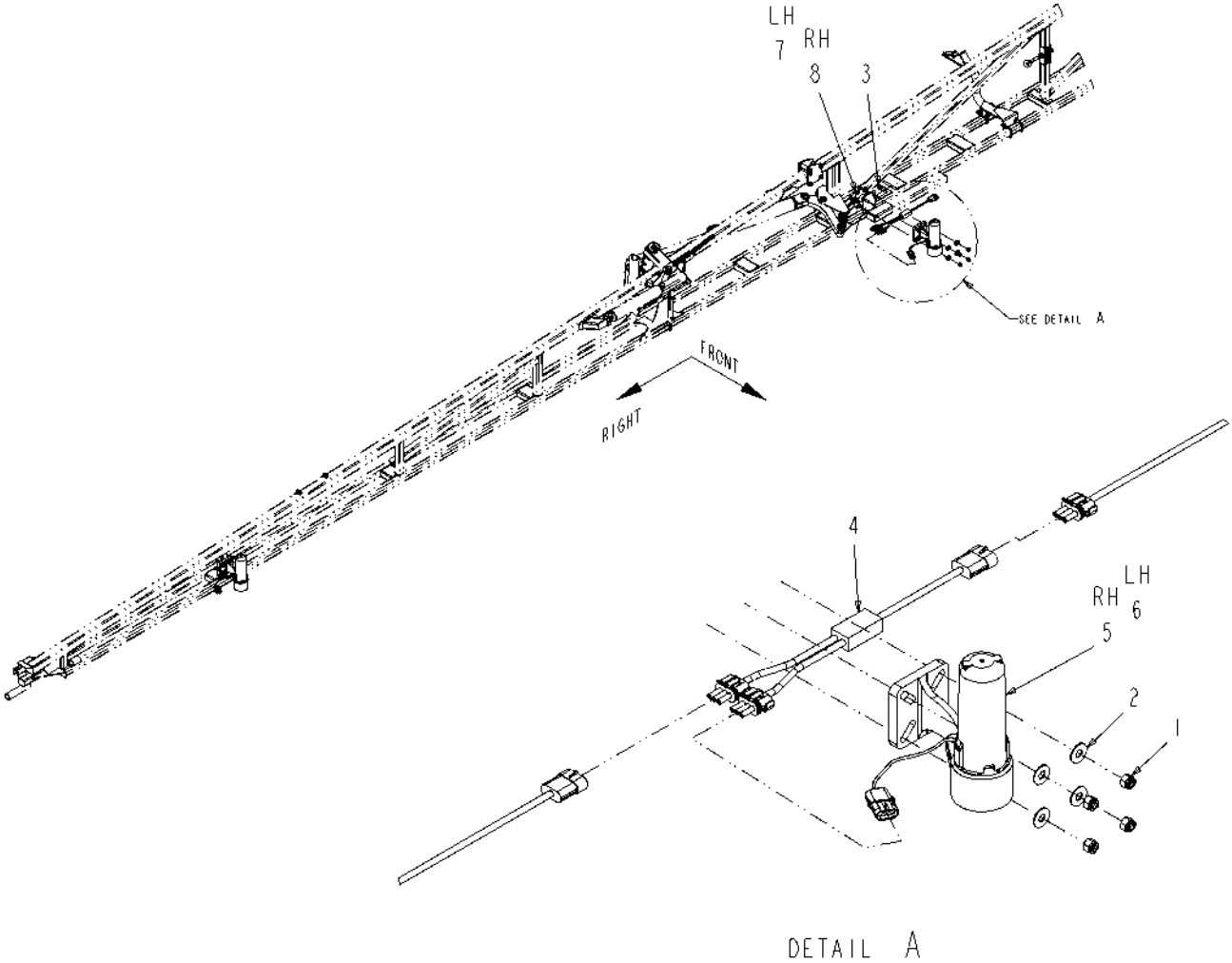

508037D1-02-R310-.TIF

Copyright © 2007 AGCO Corporation

SENSOR INSTL-ADD,AUTOBM,90/100

ITEM	PART #	QTY	DESCRIPTION	COMMENTS
1	AG515140	8	NUT 0.37-16NC HEX SS HVY NY	
2	AG562073	8	WASHER 0.37 FL SS REG TYPE-B	
3	AG604167	8	BOLT 0.37-16NCX 1.25 S.S. HHD	
4	506903D1	2	DUPLICATOR-ULTRASONIC,AUTOBOOM	
5	516990D1	1	SNSR-ULTRASONIC,AUTOBM,RH MTG	SEE PAGE 11-54
6	516991D1	1	SNSR-ULTRASONIC,AUTOBM,LH MTG	SEE PAGE 11-55
7	517005D1	1	BRKT ASM-MTG,ANG,SNSR,LH	SEE PAGE 11-59
8	517006D1	1	BRKT ASM-MTG,ANG,SNSR,RH	SEE PAGE 11-60

Copyright © 2007 AGCO Corporation

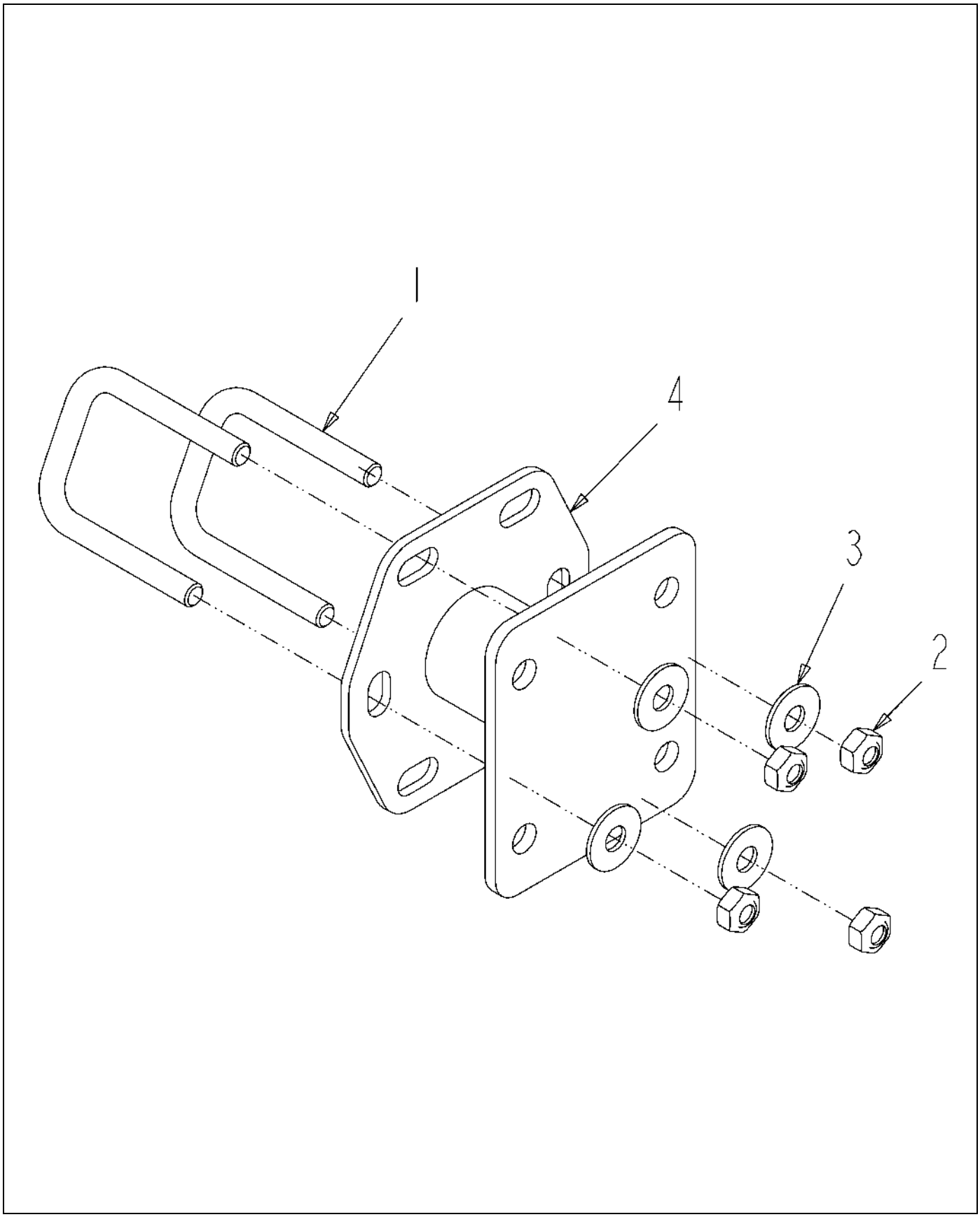

517005D1-01-R059-.TIF

Copyright © 2007 AGCO Corporation

BRKT ASM-MTG,ANG,SNSR,LH

ITEM	PART #	QTY	DESCRIPTION	COMMENTS
1	AG231204	2	BOLT-U .31-18X1.88X2.63	
2	AG516403	4	NUT 0.31-18NC HEX SS REG NY	
3	AG562074	4	WASHER 0.31 FL SS REG TYPE-B	
4	517007D1	1	BRKT WLDMT-MTG,SNSR,AUTOBOOM	

Copyright © 2007 AGCO Corporation

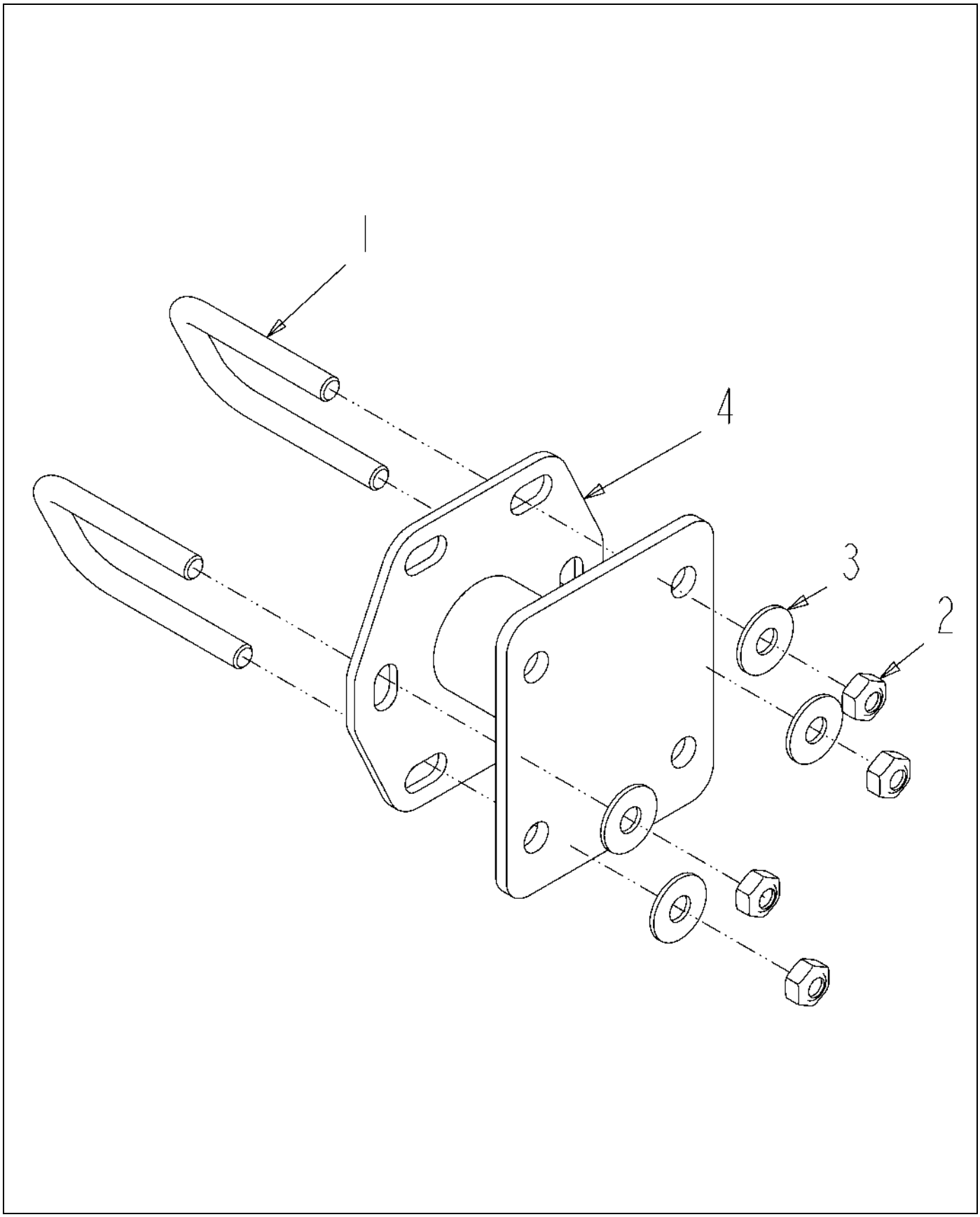

517006D1-01-R059-.TIF

Copyright © 2007 AGCO Corporation

BRKT ASM-MTG,ANG,SNSR,RH

ITEM	PART #	QTY	DESCRIPTION	COMMENTS
1	AG231204	2	BOLT-U .31-18X1.88X2.63	
2	AG516403	4	NUT 0.31-18NC HEX SS REG NY	
3	AG562074	4	WASHER 0.31 FL SS REG TYPE-B	
4	517007D1	1	BRKT WLDMT-MTG,SNSR,AUTOBOOM	

Copyright © 2007 AGCO Corporation

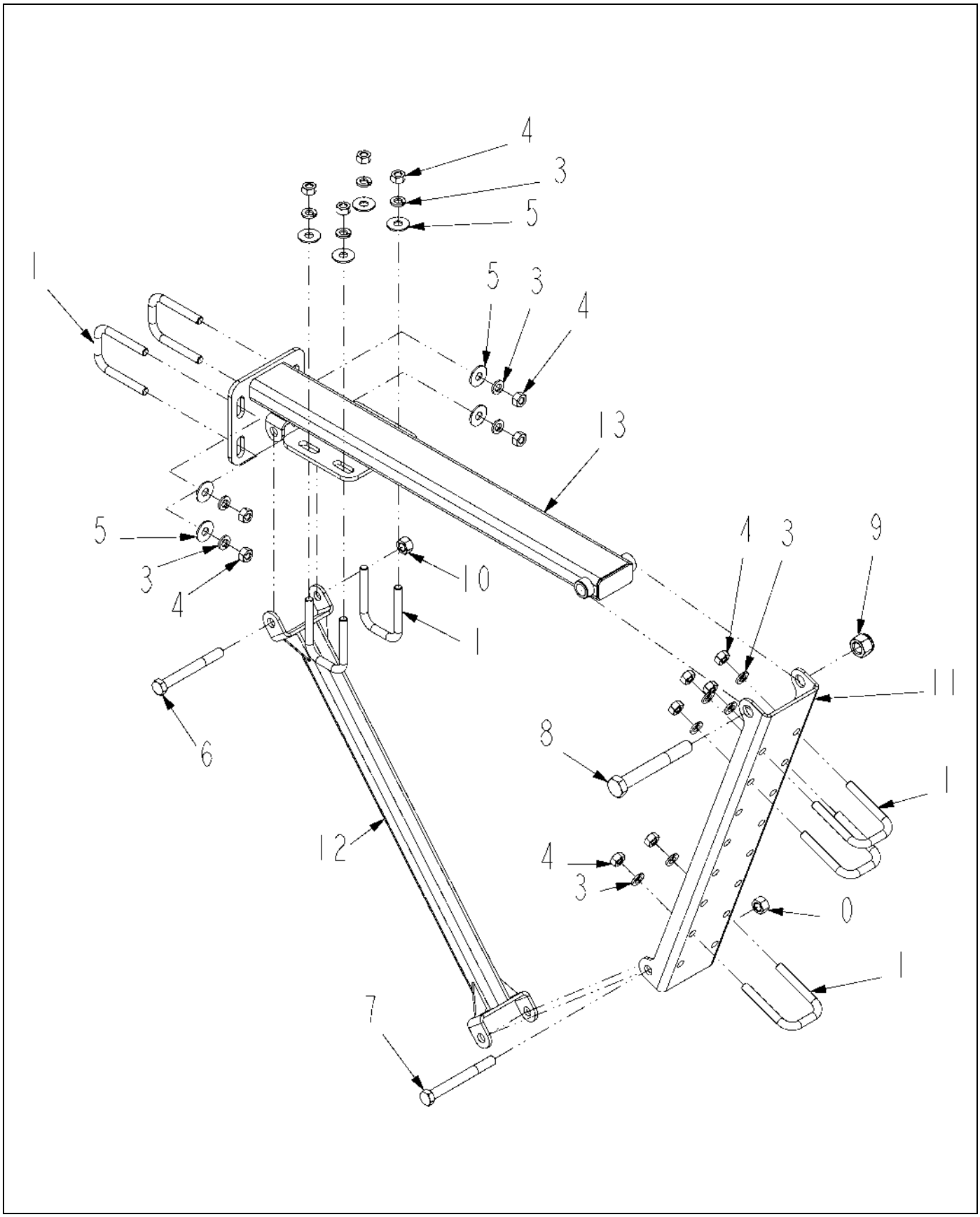

508278D1-01-N056-.TIF

Copyright © 2007 AGCO Corporation

ARM ASM-WHEEL,AUTOBM,80/90/100

ITEM	PART #	QTY	DESCRIPTION	COMMENTS
1	AG209384	7	BOLT-U .31-18X1.56X 2.46SQG5ZN	
2	AG511099	AR	GREASE-MULTI PURPOSE LITH.	
3	AG550205	14	WASHER 0.31 LK ZN REG	
4	AG550213	14	NUT 0.31-18NC HEX ZN REG	
5	AG551015	8	WASHER 0.31 FL ZN REG TYPE-B	
6	AG551058	1	BOLT 0.37-16NCX 3.25 G5 ZN HHD	
7	AG557471	1	BOLT 0.37-16NCX 3.50 G5 ZN HHD	
8	AG561592	1	BOLT 0.50-13NCX 3.75 G5 ZN HHD	
9	AG601152	1	NUT 0.50-13NC HEX ZN REG NY	
10	AG601411	2	NUT 0.37-16NC HEX ZN REG NY	
11	506913D1	1	BRKT-MTG,FORK,WHEEL,AUTOBOOM	
12	508279D1	1	BRACE WLDMT-MTG,WHL,AUTOBM	
13	508280D1	1	ARM WLDMT-MTG,WHL,AUTOBM	

Copyright © 2007 AGCO Corporation

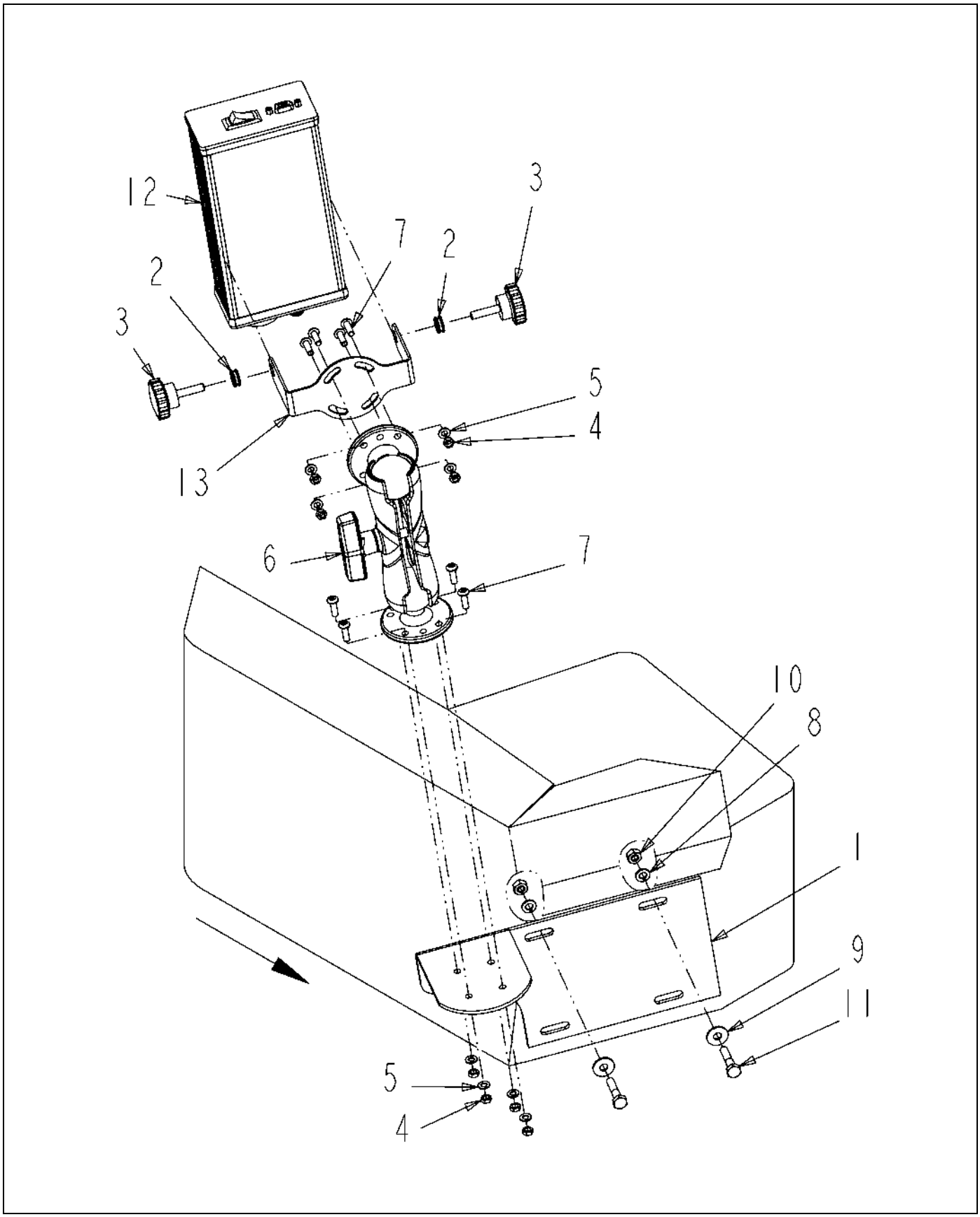

506888D1-01-M930-.TIF

Copyright © 2007 AGCO Corporation

ITEM	PART #	QTY	DESCRIPTION	COMMENTS
1	AG121934	1	BRKT-MTG,KEYBOARD,FLCN II	
2	AG514342	2	GROMMET 0.25 ID .44 GROOVE DIA	
3	AG514446	2	KNOB 0.25NC ROUND BL PLASTIC	
4	AG522220	8	NUT-M5-0.8,CL10.9,ZN,H	
5	AG522247	8	WASHER-LK,M5,SS,REG	
6	AG523464	1	CLAMP ASM-MTG,BALL,7.50	
7	AG523508	8	SCR-M5-0.8X16,CL10.9,BLK,BHHS	
8	AG550493	2	WASHER 0.25 LK ZN REG	
9	AG550507	2	WASHER 0.25 FL ZN REG TYPE-B	
10	AG550612	2	NUT 0.25-20NC HEX ZN REG	
11	AG558788	2	BOLT 0.25-20NCX 1.25 G5 ZN HHD	
12	506896D1	1	CONSOLE-AUTOBOOM,G2,RVN	
13	506897D1	1	BRKT-MTG,CONSOLE,AUTOBOOM,G2	

Copyright © 2007 AGCO Corporation

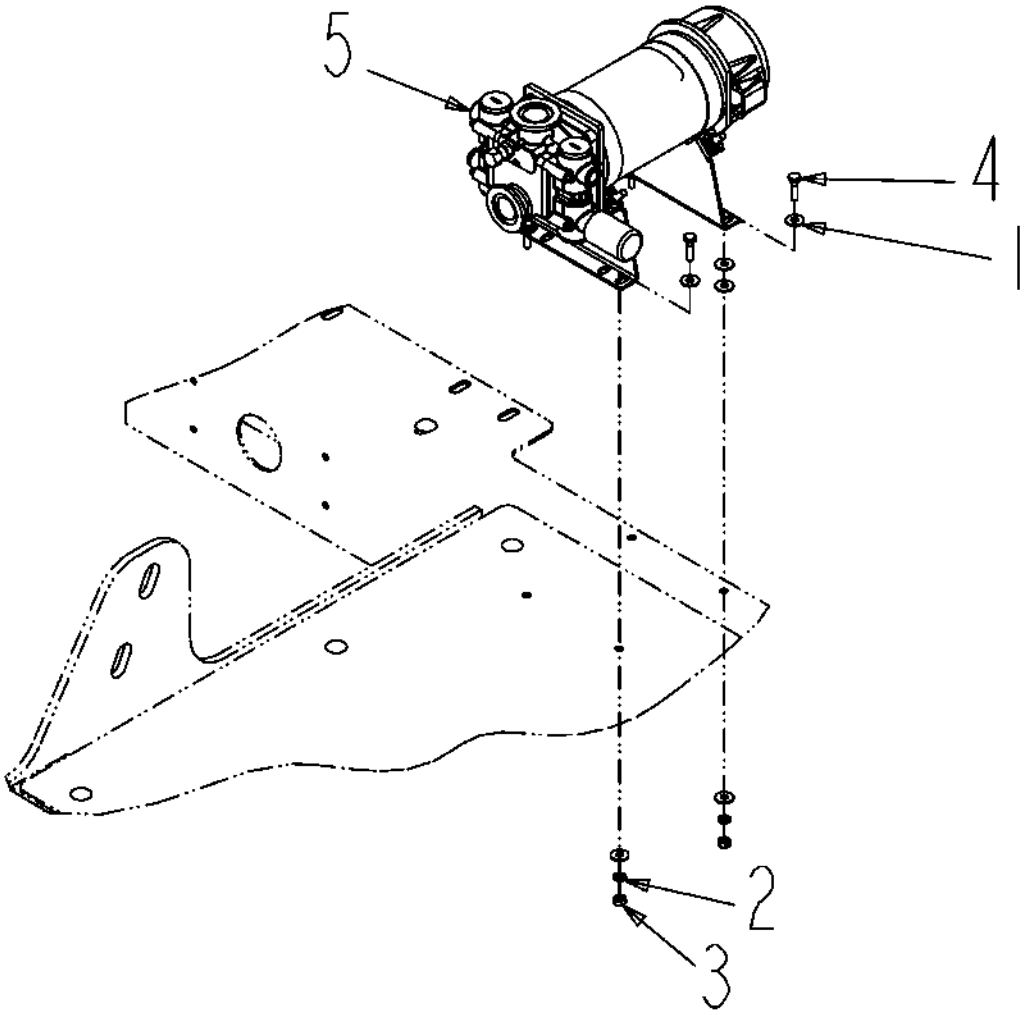

511968D1-01-N484-.TIF

Copyright © 2007 AGCO Corporation

PUMP INSTL-LOOP1,RVN,RG

ITEM	PART #	QTY	DESCRIPTION	COMMENTS
1	AG515121	12	WASHER 0.25 FL SS REG TYPE-B	
2	AG515122	4	WASHER 0.25 LK SS REG	
3	AG515123	4	NUT 0.25-20NC HEX SS REG	
4	AG562064	4	BOLT 0.25-20NCX 1.00 SS HHD	
5	511967D1	1	PUMP ASM-INJ,RVN	SEE PAGE 11-64

Copyright © 2007 AGCO Corporation

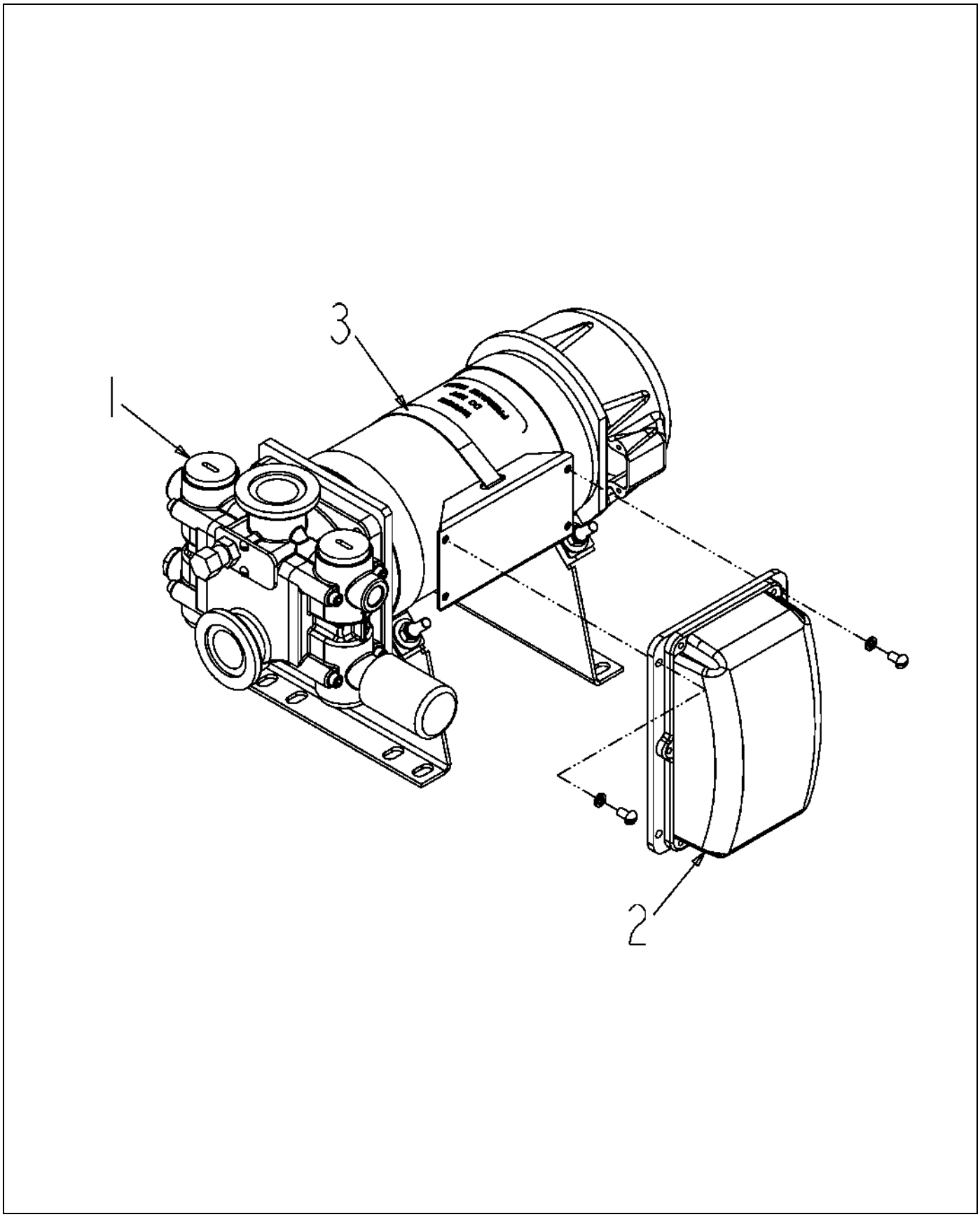

511967D1-01-N484-.TIF

Copyright © 2007 AGCO Corporation

PUMP ASM-INJ,RVN

ITEM	PART #	QTY	DESCRIPTION	COMMENTS
1	511963D1	1	PUMP-INJ,RVN	
2	511965D1	1	NODE-PUMP DRIVE,RVN,360	
3	511966D1	1	KIT-MTG,NODE,RVN	

Copyright © 2007 AGCO Corporation

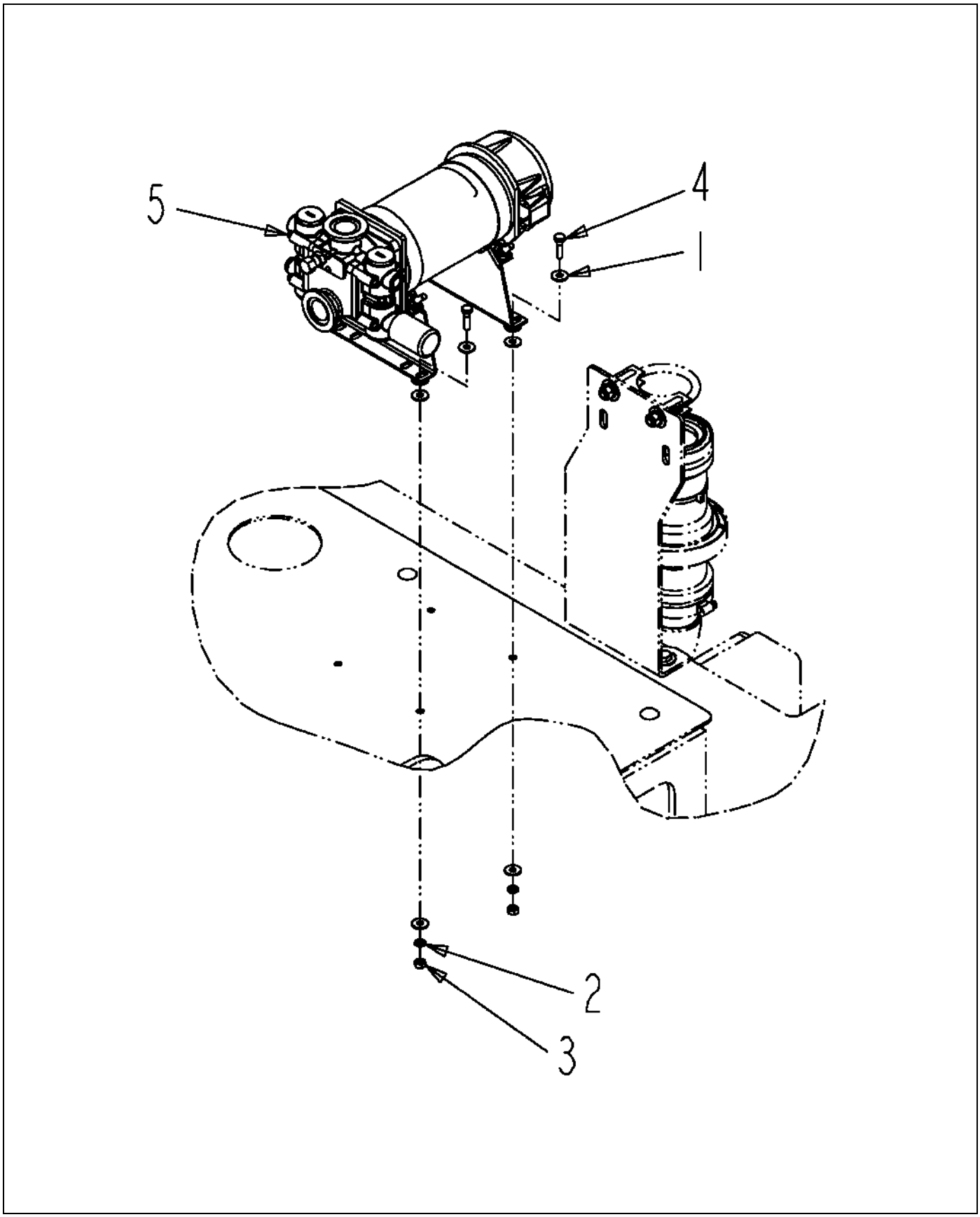

511969D1-01-N484-.TIF

Copyright © 2007 AGCO Corporation

PUMP INSTL-LOOP2,RVN,RG

ITEM	PART #	QTY	DESCRIPTION	COMMENTS
1	AG515121	20	WASHER 0.25 FL SS REG TYPE-B	
2	AG515122	4	WASHER 0.25 LK SS REG	
3	AG515123	4	NUT 0.25-20NC HEX SS REG	
4	AG562064	4	BOLT 0.25-20NCX 1.00 SS HHD	
5	511967D1	1	PUMP ASM-INJ,RVN	SEE PAGE 11-64

Copyright © 2007 AGCO Corporation

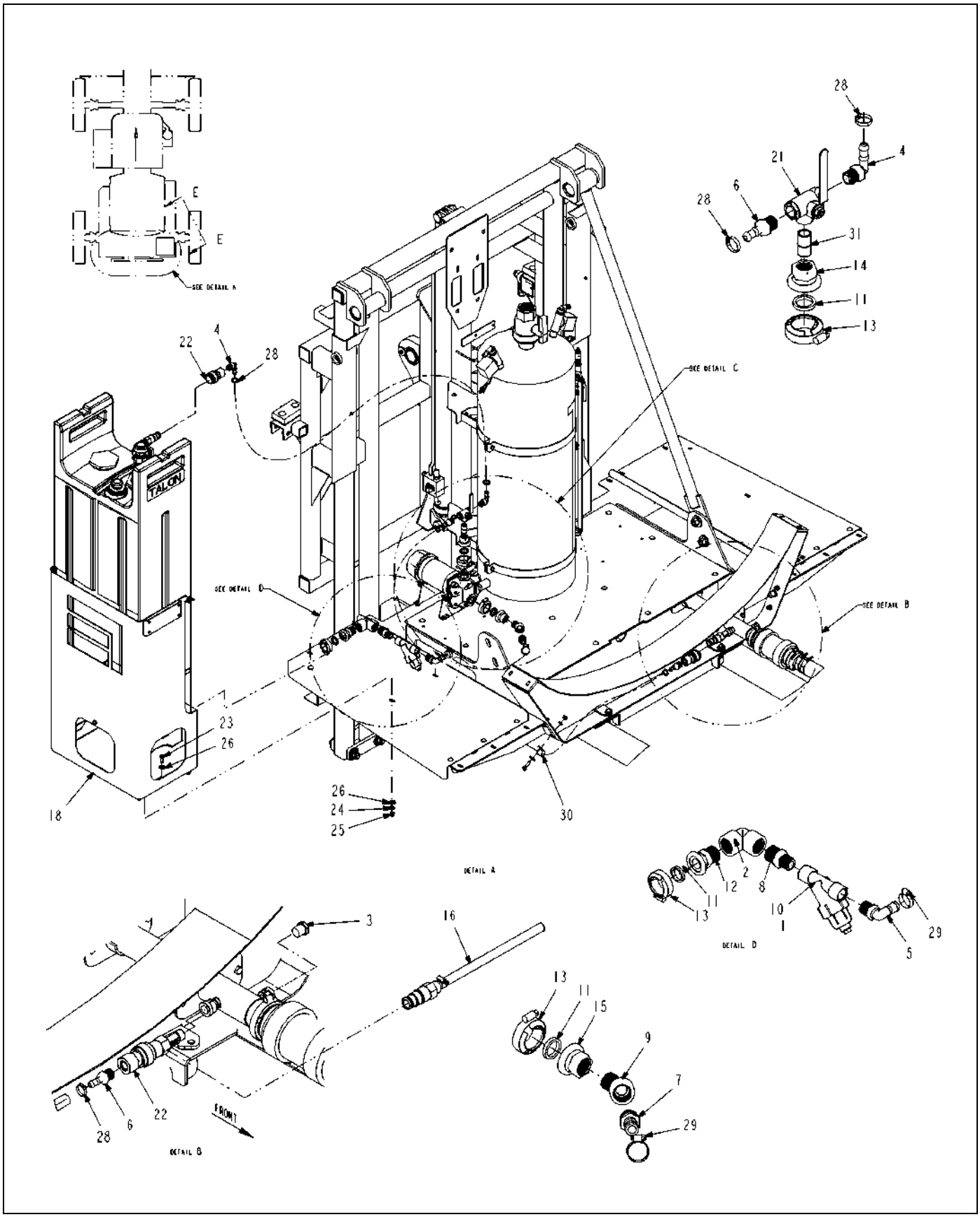

511996D1-02-N890-01.TIF

Copyright © 2007 AGCO Corporation

PLMB/TANK INSTL-INJ,RH,RG

ITEM	PART #	QTY	DESCRIPTION	COMMENTS
1	AG002435	1	SCREEN 80 MESH 0.75	
2	AG051127	1	ELBOW-PIPE,1.00FNPT,90D,PP	
3	AG051133	1	PLUG-PIPE,HEX,0.50NPT,PP	
4	AG051139	2	ELBOW 90D 0.50NPTX0.50 BARB PP	
5	AG051142	1	ELBOW 90D 0.75NPTX0.75 BARB PP	
6	AG051176	2	BARB-HOSE,0.50MNPTX0.50BARB,PP	
7	AG051179	1	BARB-HOSE,0.75MNPTX0.75BARB,PP	
8	AG051436	1	NIPPLE POLY RED 1.00 X 0.75	
9	AG052343	1	ELBOW-PIPE,0.75STREET,45D,PP	
10	AG053070	1	STRAINER BODY ASM .75	
11	AG056275	3	GASKET 1.00 EPDM MANIFOLD	
12	AG056277	1	CONNECTOR 1.00 MANIFOLD MATHD	
13	AG056778	3	CLAMP 1.00	
14	AG059581	1	ADAPTER 1.00FLGX.50(F)NPT	
15	AG059582	1	ADAPTER 1.00FLANGEX.75FNPT	
16	AG126100	1	CALIBRATION ASM-SDKCK	SEE PAGE 4-190
18	AG502347	1	SUPPORT ASM-TANK,PLASTIC	SEE PAGE 1-35
21	AG517926	1	VALVE 3-WAY	
22	AG520346	2	COUPLER-.50 NPT,DRY BREAK	
23	AG550175	4	BOLT 0.37-16NCX 1.00 G5 ZN HHD	
24	AG550191	4	WASHER 0.37 LK ZN REG	
25	AG550825	4	NUT 0.37-16NC HEX ZN REG	
26	AG551007	8	WASHER 0.37 FL ZN REG TYPE-B	
27	AG559024	AR	TIE CABLE 15.0 .06-4.00 BLACK	
28	AG561215	4	CLAMP 0.50-0.91 HOSE 8HS	
29	AG561229	2	CLAMP 0.68-1.25 HOSE 12HS	
30	AG562237	1	CLAMP CTD 0.75IDX0.75WIDE	
31	AG711595	1	NIPPLE 0.50NPTX 1.12CLS 304SS	

Copyright © 2007 AGCO Corporation

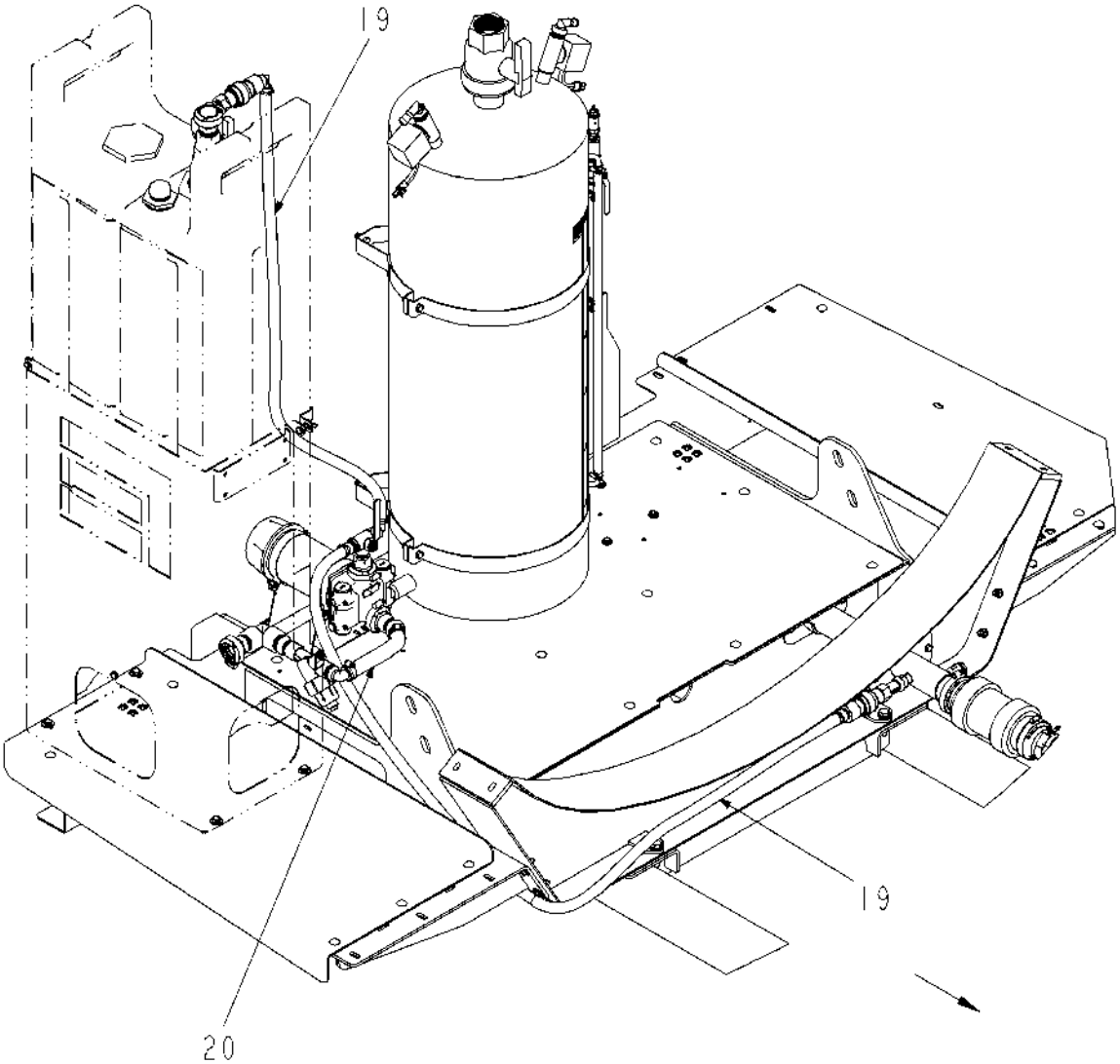

VIEW E-E

511996D1-02-N890-02.TIF

Copyright © 2007 AGCO Corporation

ITEM	PART #	QTY	DESCRIPTION	COMMENTS
19	AG513377	-	HOSE 0.50 2BRD EPDM [BULK: 10.250 FT]	
20	AG513385	-	HOSE,MED.PRESS 0.75 2BRD EPDM [BULK: 0.792 FT]	

Copyright © 2007 AGCO Corporation

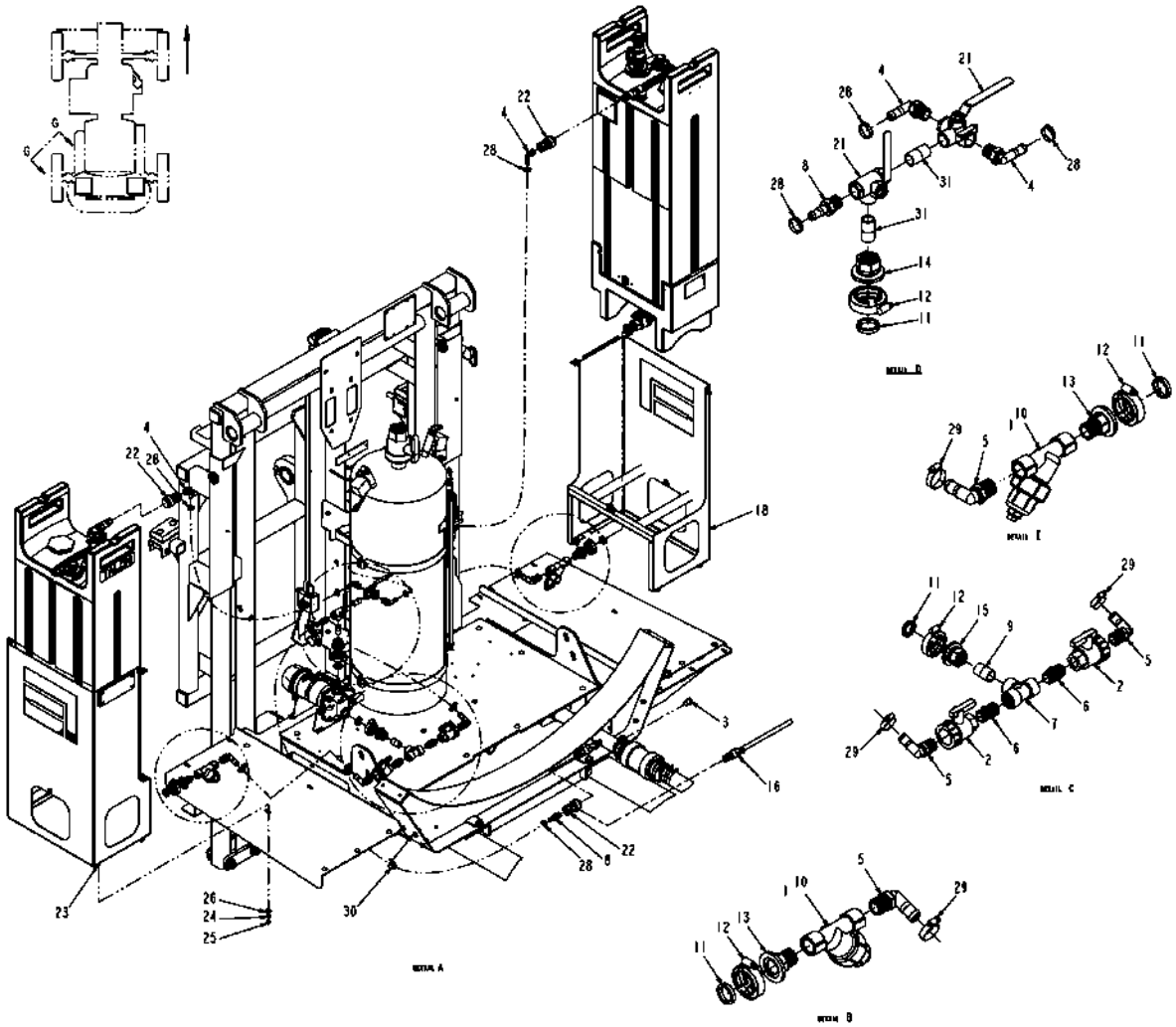

511997D1-01-N484-01.TIF

Copyright © 2007 AGCO Corporation

PLMB/TANK INSTL-INJ,DUAL,RG

ITEM	PART #	QTY	DESCRIPTION	COMMENTS
1	AG002435	2	SCREEN 80 MESH 0.75	
2	AG050205	2	VALVE 0.75 NPT BALL UNION POLY	SEE PAGE 4-45
3	AG051133	1	PLUG-PIPE,HEX,0.50NPT,PP	
4	AG051139	4	ELBOW 90D 0.50NPTX0.50 BARB PP	
5	AG051142	4	ELBOW 90D 0.75NPTX0.75 BARB PP	
6	AG051151	2	NIPPLE-PIPE,0.75NPTXCLS,PP	
7	AG051161	1	TEE,PIPE,0.75FNPT,PP	
8	AG051176	2	BARB-HOSE,0.50MNPTX0.50BARB,PP	
9	AG051903	1	NIPPLE 0.75NPTX 1.37CLS 304SS	
10	AG053070	2	STRAINER BODY ASM .75	
11	AG056275	4	GASKET 1.00 EPDM MANIFOLD	
12	AG056778	4	CLAMP 1.00	
13	AG059566	2	ADAPTER 1.00FLANGEX.75MNPT	
14	AG059581	1	ADAPTER 1.00FLGX.50(F)NPT	
15	AG059582	1	ADAPTER 1.00FLANGEX.75FNPT	
16	AG126100	1	CALIBRATION ASM-SDKCK	SEE PAGE 4-190
17	AG129187	AR	PIPE SEALANT-FLEX BLACK	
18	AG502347	2	SUPPORT ASM-TANK,PLASTIC	SEE PAGE 1-35
21	AG517926	2	VALVE 3-WAY	
22	AG520346	3	COUPLER-.50 NPT,DRY BREAK	
23	AG550175	8	BOLT 0.37-16NCX 1.00 G5 ZN HHD	
24	AG550191	8	WASHER 0.37 LK ZN REG	
25	AG550825	8	NUT 0.37-16NC HEX ZN REG	
26	AG551007	16	WASHER 0.37 FL ZN REG TYPE-B	
27	AG559024	AR	TIE CABLE 15.0 .06-4.00 BLACK	
28	AG561215	6	CLAMP 0.50-0.91 HOSE 8HS	
29	AG561229	4	CLAMP 0.68-1.25 HOSE 12HS	
30	AG562237	1	CLAMP CTD 0.75IDX0.75WIDE	
31	AG711595	2	NIPPLE 0.50NPTX 1.12CLS 304SS	

Copyright © 2007 AGCO Corporation

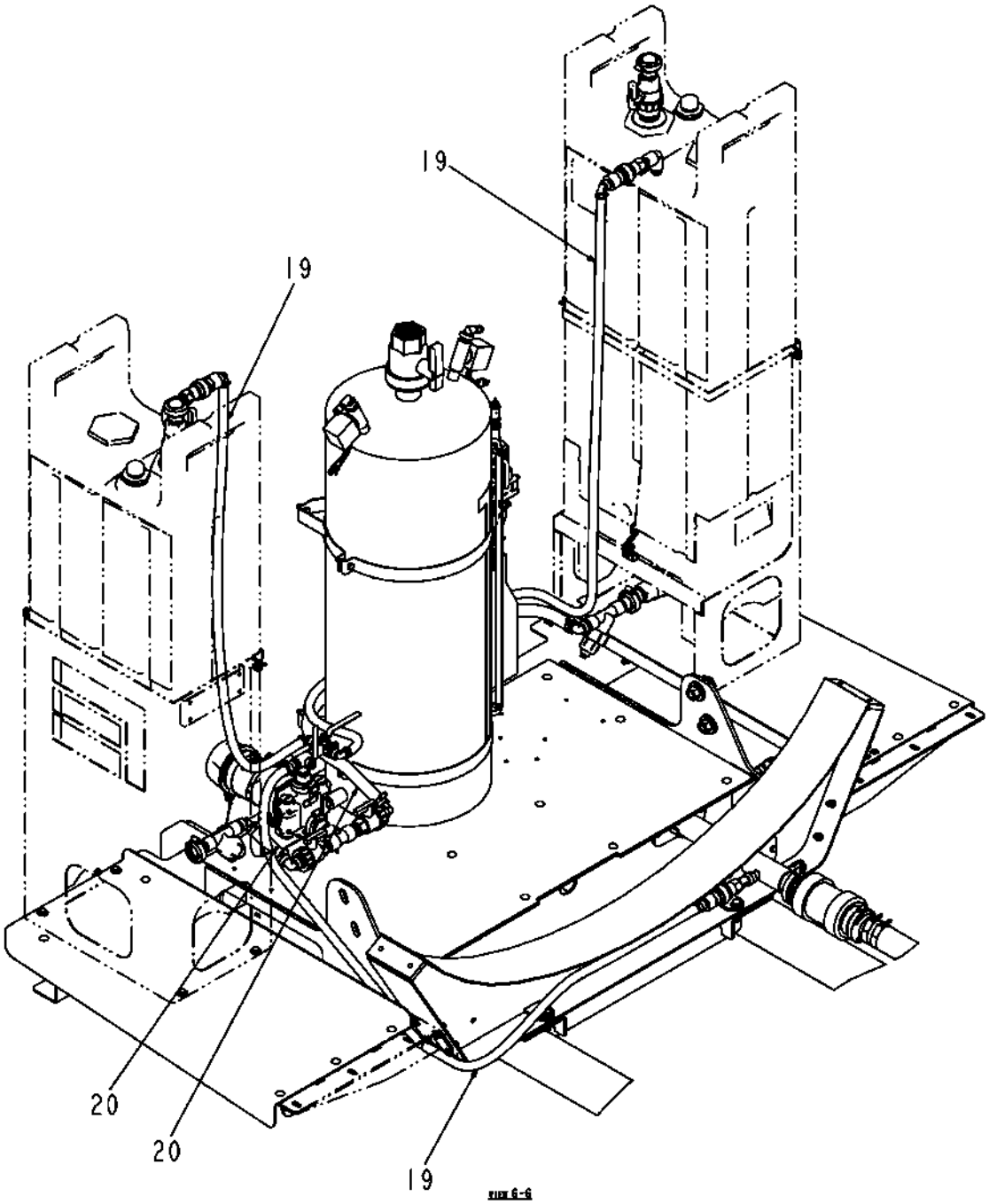

511997D1-01-N484-02.TIF

Copyright © 2007 AGCO Corporation

ITEM	PART #	QTY	DESCRIPTION	COMMENTS
19	AG513377	-	HOSE 0.50 2BRD EPDM [BULK: 18.667 FT]	
20	AG513385	-	HOSE,MED.PRESS 0.75 2BRD EPDM [BULK: 7.792 FT]	

Copyright © 2007 AGCO Corporation

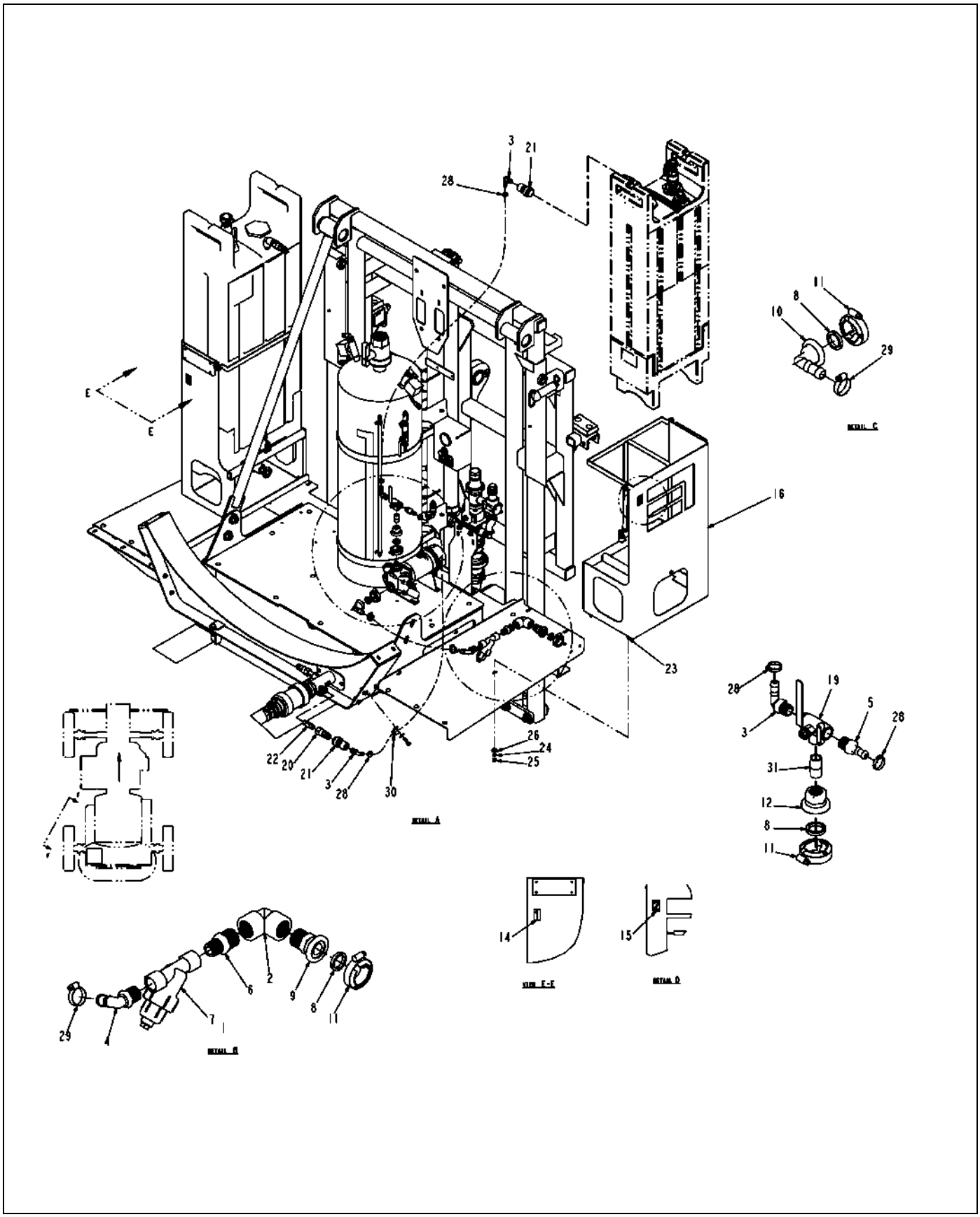

511998D1-01-N484-01.TIF

Copyright © 2007 AGCO Corporation

PLMB/TANK INSTL-INJ,LH,RG

ITEM	PART #	QTY	DESCRIPTION	COMMENTS
1	AG002435	1	SCREEN 80 MESH 0.75	
2	AG051127	1	ELBOW-PIPE,1.00FNPT,90D,PP	
3	AG051139	3	ELBOW 90D 0.50NPTX0.50 BARB PP	
4	AG051142	1	ELBOW 90D 0.75NPTX0.75 BARB PP	
5	AG051176	2	BARB-HOSE,0.50MNPTX0.50BARB,PP	
6	AG051436	1	NIPPLE POLY RED 1.00 X 0.75	
7	AG053070	1	STRAINER BODY ASM .75	
8	AG056275	3	GASKET 1.00 EPDM MANIFOLD	
9	AG056277	1	CONNECTOR 1.00 MANIFOLD MATHD	
10	AG056280	1	CPLG 1.00 MANIFOLDX0.75ELBOW	
11	AG056778	3	CLAMP 1.00	
12	AG059581	1	ADAPTER 1.00FLGX.50(F)NPT	
13	AG129187	AR	PIPE SEALANT-FLEX BLACK	
14	AG212432	1	DECAL NUMBER 1	
15	AG212433	1	DECAL NUMBER 2	
16	AG502347	1	SUPPORT ASM-TANK,PLASTIC	SEE PAGE 1-35
19	AG517926	1	VALVE 3-WAY	
20	AG520345	1	NIPPLE END-.50 NPT,DRY BREAK	
21	AG520346	2	COUPLER-.50 NPT,DRY BREAK	
22	AG522513	1	VALVE-CHECK,.50NPT,SS	
23	AG550175	4	BOLT 0.37-16NCX 1.00 G5 ZN HHD	
24	AG550191	4	WASHER 0.37 LK ZN REG	
25	AG550825	4	NUT 0.37-16NC HEX ZN REG	
26	AG551007	8	WASHER 0.37 FL ZN REG TYPE-B	
27	AG559024	AR	TIE CABLE 15.0 .06-4.00 BLACK	
28	AG561215	4	CLAMP 0.50-0.91 HOSE 8HS	
29	AG561229	2	CLAMP 0.68-1.25 HOSE 12HS	
30	AG562237	1	CLAMP CTD 0.75IDX0.75WIDE	
31	AG711595	1	NIPPLE 0.50NPTX 1.12CLS 304SS	

Copyright © 2007 AGCO Corporation

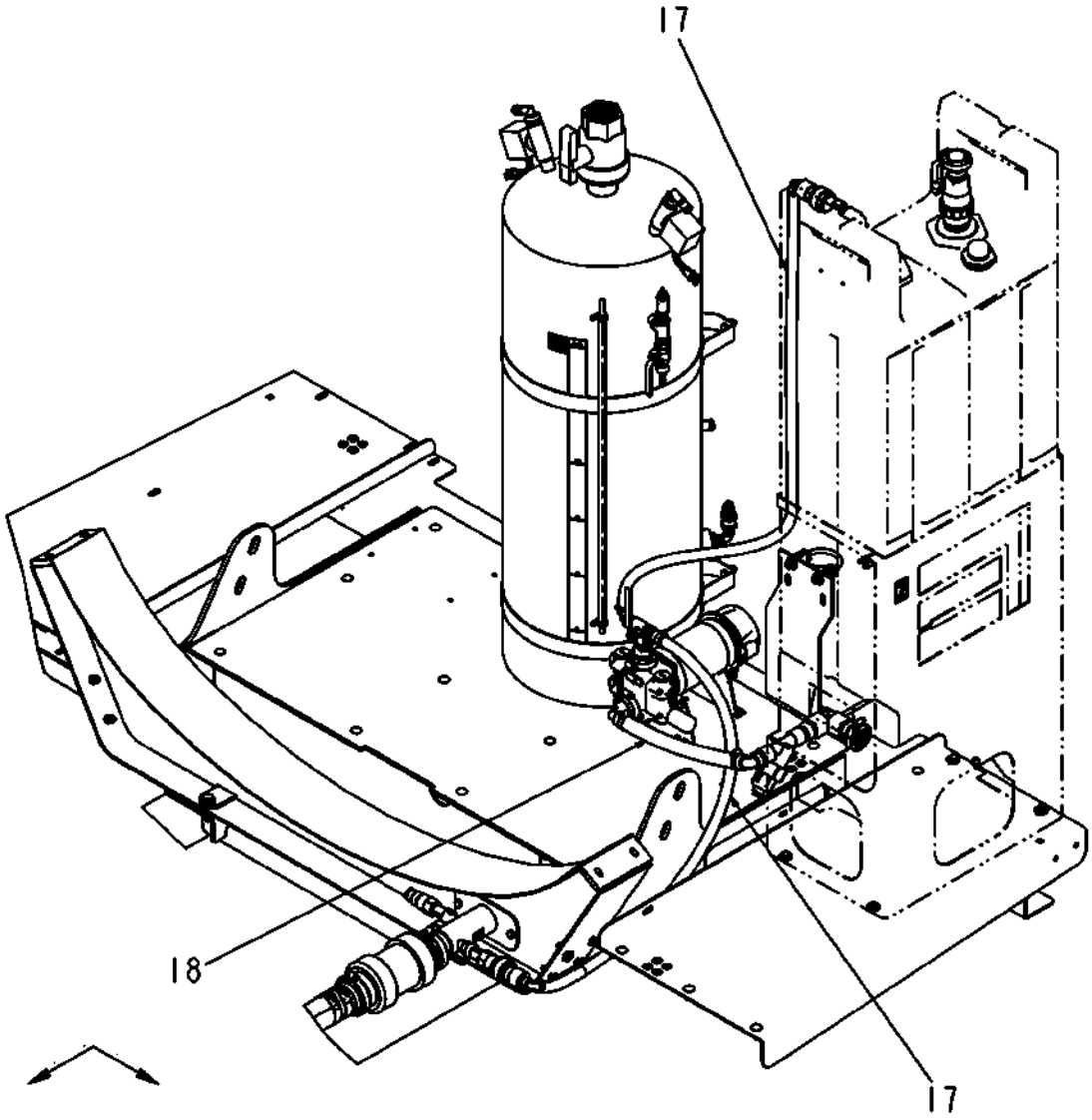

511998D1-01-N484-02.TIF

Copyright © 2007 AGCO Corporation

ITEM	PART #	QTY	DESCRIPTION	COMMENTS
17	AG513377	-	HOSE 0.50 2BRD EPDM [BULK: 8.084 FT]	
18	AG513385	-	HOSE,MED.PRESS 0.75 2BRD EPDM [BULK: 1.167 FT]	

Copyright © 2007 AGCO Corporation

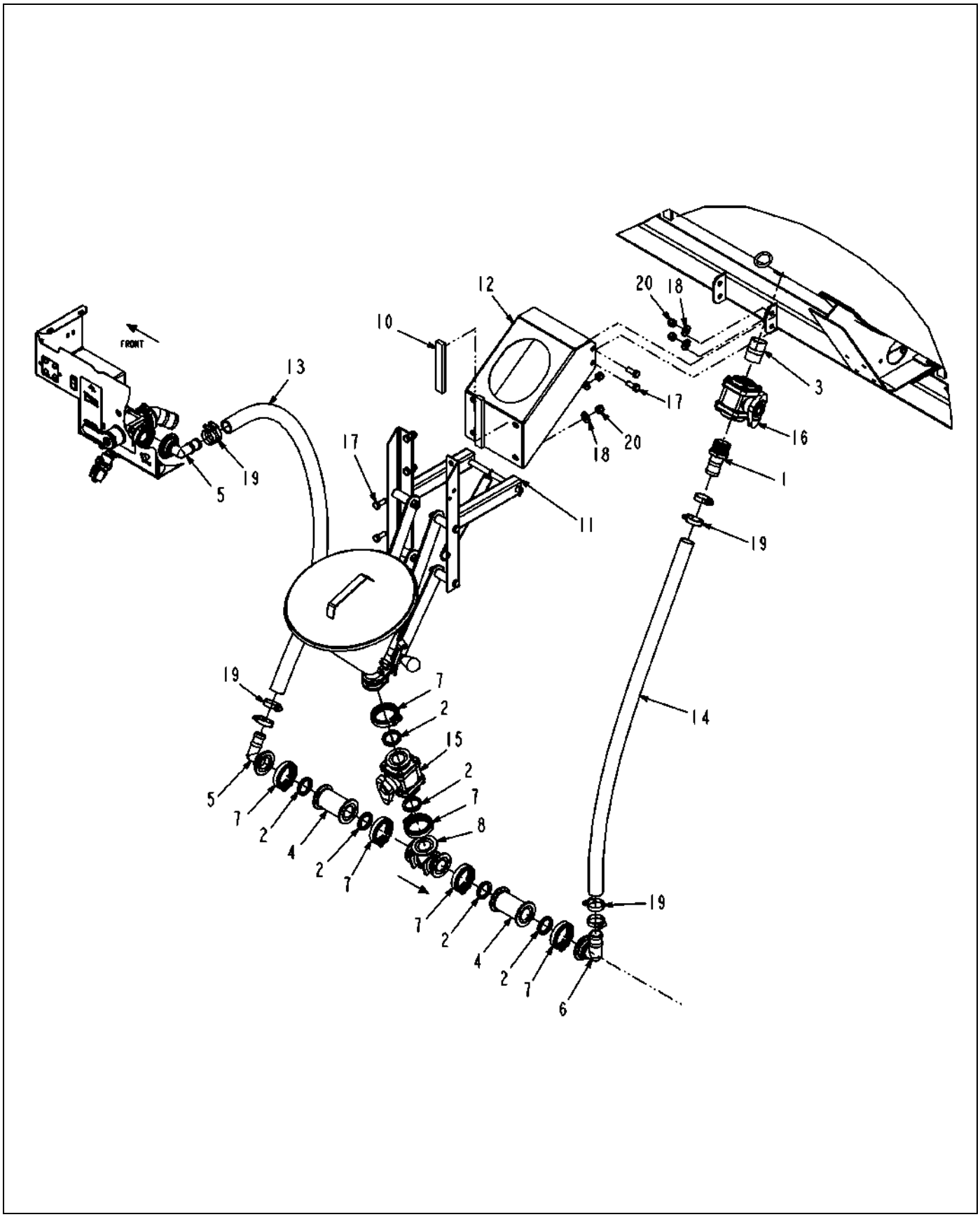

512944D1-03-R407-.TIF

Copyright © 2007 AGCO Corporation

OPT-CHEM EDUCTOR,SS

ITEM	PART #	QTY	DESCRIPTION	COMMENTS
1	AG000766	1	BARB-HOSE,1.50MNTTX1.50BARB,PP	
2	AG000772	6	GASKET 1.50 EPDM	
3	AG053738	1	NIPPLE 1.50NPTX 2.50 304SS	
4	AG056283	2	COUPLING 2.00 MANIFOLD FLANGE	
5	AG056290	2	CONNECTOR 2.00FLGX1.25HOSE 90D	
6	AG056292	1	CONNECTOR 2.00FLGX1.50HOSE 90D	
7	AG056785	6	CLAMP 2.00 FLANGE	
8	AG057999	1	TEE-VENTURI,2.0FLG W/.75INDUCT	
9	AG129187	AR	PIPE SEALANT-FLEX BLACK	
10	AG230095	2	STRIP INSULATION LONG	
11	AG328960	1	EDUCTOR ASM-CHEMICAL,SS	SEE PAGE 2-30
12	AG424445	1	BRKT-MTG,EDUCTOR	
13	AG513393	-	HOSE 1.25 2BRD EPDM [BULK: 4.667 FT]	
14	AG522800	-	HOSE-1.50,DISCHARGE,NITRILE [BULK: 4 FT]	
15	AG523923	1	VALVE-2.0 FLG,T HANDLE,PP	SEE PAGE 2-31
16	AG524024	1	VALVE-BALL,1.50NPT,T HANDLE	SEE PAGE 2-29
17	AG550256	8	BOLT.50-13NCX1.25 G5 ZN HHD	
18	AG550353	8	WASHER 0.50 FL ZN REG TYPE-B	
19	AG561231	8	CLAMP 1.06-2.00 HOSE 24HS	
20	AG601152	8	NUT 0.50-13NC HEX ZN REG NY	

Copyright © 2007 AGCO Corporation

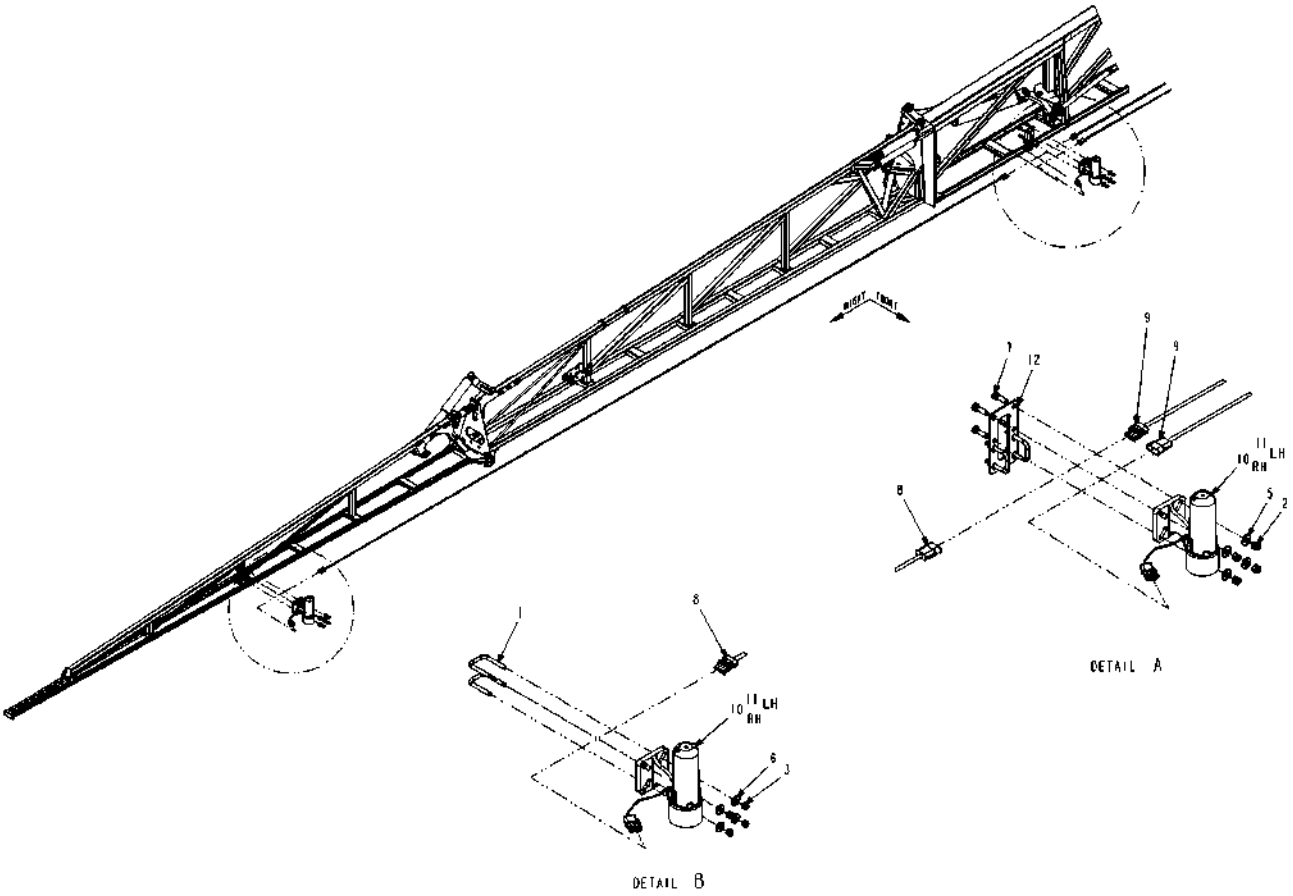

520704D1-01-R483-.TIF

Copyright © 2007 AGCO Corporation

ITEM	PART #	QTY	DESCRIPTION	COMMENTS
1	AG231204	4	BOLT-U .31-18X1.88X2.63	
2	AG515140	8	NUT 0.37-16NC HEX SS HVY NY	
3	AG516403	8	NUT 0.31-18NC HEX SS REG NY	
4	AG553557	AR	TIE CABLE 7.37 .06-1.37 BLACK	
5	AG562073	8	WASHER 0.37 FL SS REG TYPE-B	
6	AG562074	8	WASHER 0.31 FL SS REG TYPE-B	
7	AG604167	8	BOLT 0.37-16NCX 1.25 S.S. HHD	
8	506904D1	2	HARN-EXT,SNSR,ULTRASONIC,288	
9	506905D1	4	HARN-EXT,SNSR,ULTRASONIC,510	
10	516990D1	2	SNSR-ULTRASONIC,AUTOBM,RH MTG	SEE PAGE 11-54
11	516991D1	2	SNSR-ULTRASONIC,AUTOBM,LH MTG	SEE PAGE 11-55
12	520705D1	2	BRKT ASM-MTG,SNSR	SEE PAGE 4-238

Copyright © 2007 AGCO Corporation

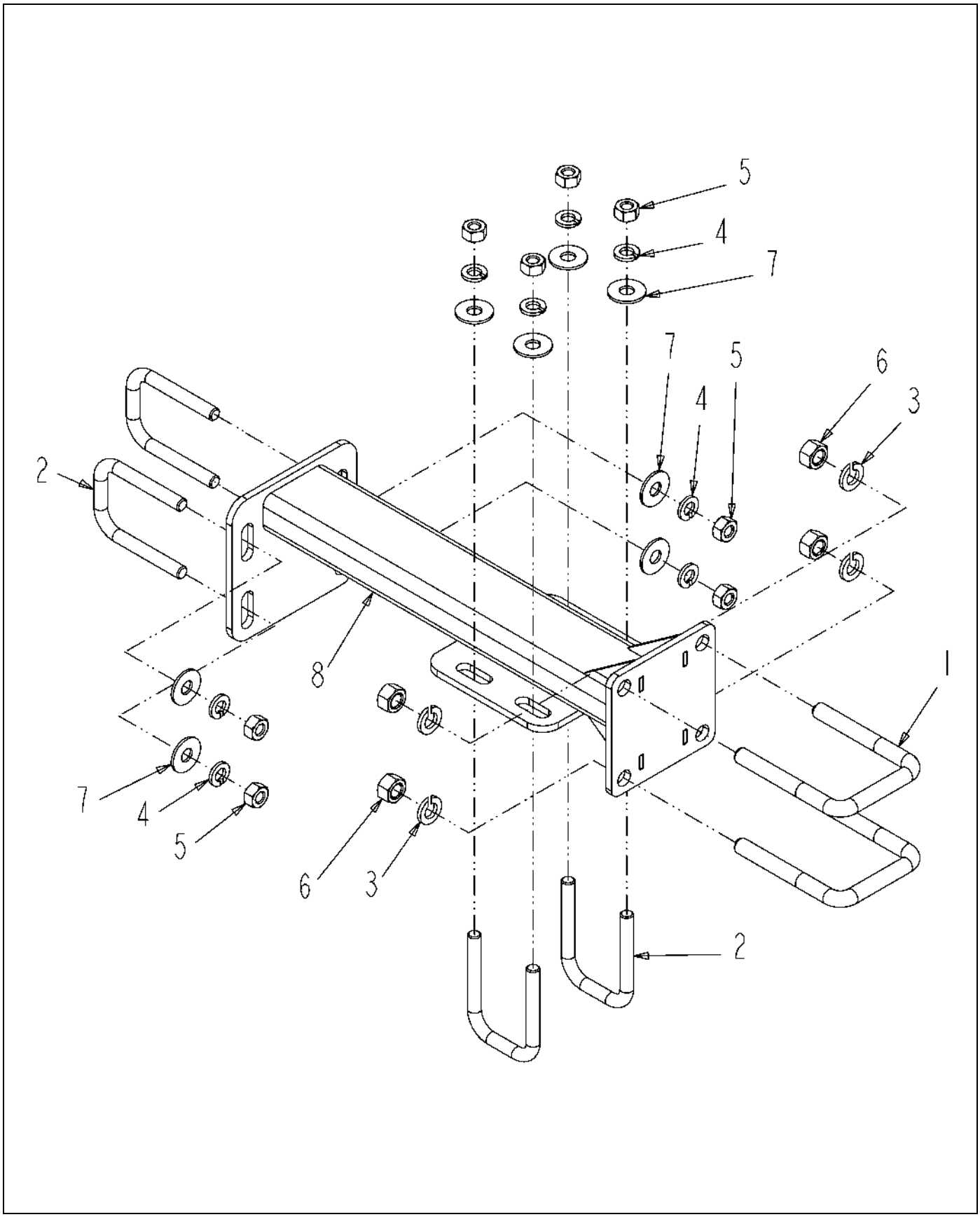

516972D1-02-R177-.TIF

Copyright © 2007 AGCO Corporation

ARM ASM-MTG,WHL,CUSH,120

ITEM	PART #	QTY	DESCRIPTION	COMMENTS
1	AG209236	2	BOLT-U .38-16X2.12X 3.06SQG5ZN	
2	AG209384	4	BOLT-U .31-18X1.56X 2.46SQG5ZN	
3	AG550191	4	WASHER 0.37 LK ZN REG	
4	AG550205	8	WASHER 0.31 LK ZN REG	
5	AG550213	8	NUT 0.31-18NC HEX ZN REG	
6	AG550825	4	NUT 0.37-16NC HEX ZN REG	
7	AG551015	8	WASHER 0.31 FL ZN REG TYPE-B	
8	516971D1	1	ARM WLDMT-MTG,WHL,CUSH,120	

Copyright © 2007 AGCO Corporation

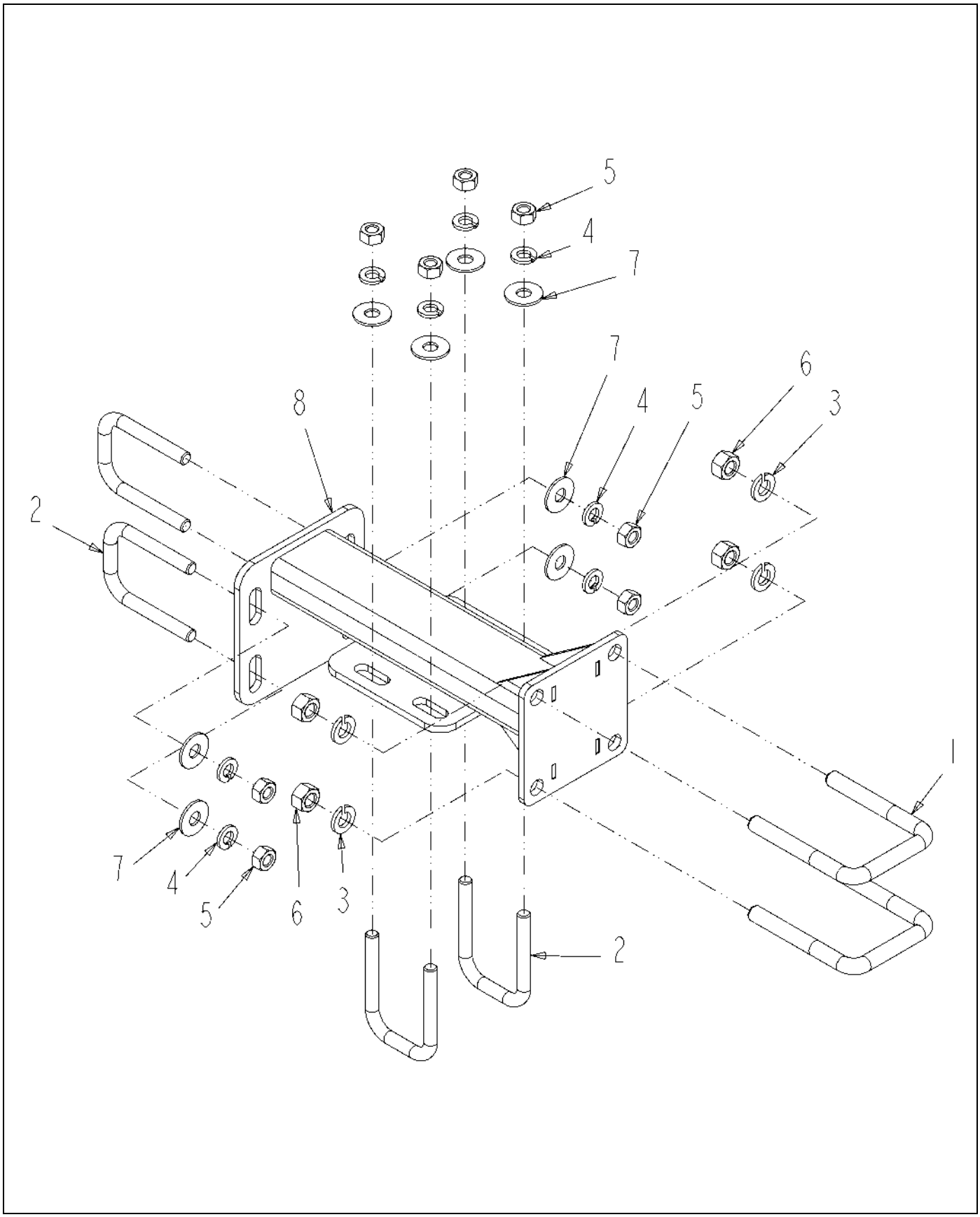

519340D1-01-R284-.TIF

Copyright © 2007 AGCO Corporation

ARM ASM-MTG,WHL,CUSH,120

ITEM	PART #	QTY	DESCRIPTION	COMMENTS
1	AG209236	2	BOLT-U .38-16X2.12X 3.06SQG5ZN	
2	AG209384	4	BOLT-U .31-18X1.56X 2.46SQG5ZN	
3	AG550191	4	WASHER 0.37 LK ZN REG	
4	AG550205	8	WASHER 0.31 LK ZN REG	
5	AG550213	8	NUT 0.31-18NC HEX ZN REG	
6	AG550825	4	NUT 0.37-16NC HEX ZN REG	
7	AG551015	8	WASHER 0.31 FL ZN REG TYPE-B	
8	519332D1	1	ARM WLDMT-MTG,WHL,80/90/100	

Copyright © 2007 AGCO Corporation

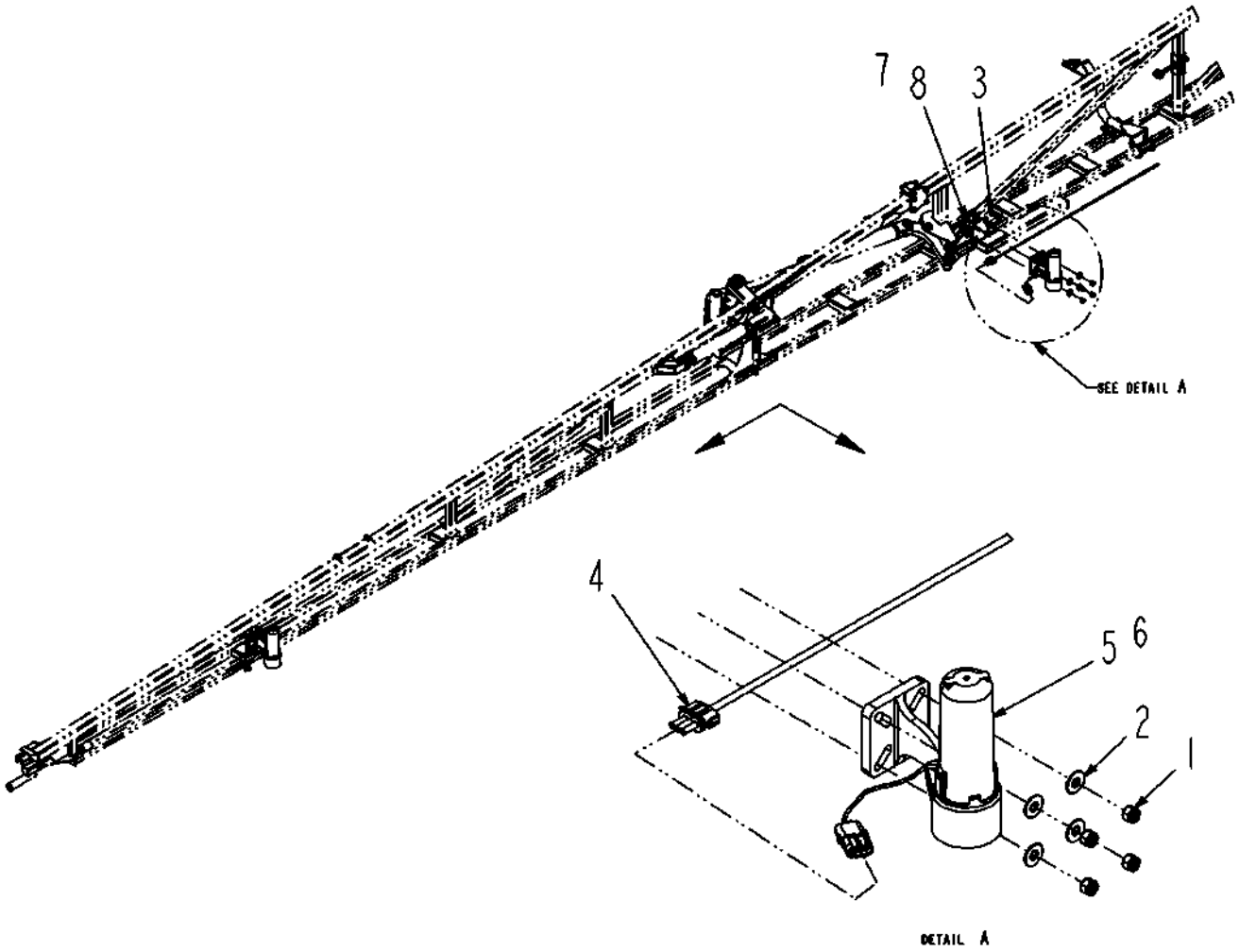

519356D1-01-R284-.TIF

Copyright © 2007 AGCO Corporation

SNSR INSTL-ADD,AUTOBM,90/100

ITEM	PART #	QTY	DESCRIPTION	COMMENTS
1	AG515140	8	NUT 0.37-16NC HEX SS HVY NY	
2	AG562073	8	WASHER 0.37 FL SS REG TYPE-B	
3	AG604167	8	BOLT 0.37-16NCX 1.25 S.S. HHD	
4	508294D1	2	HARN-EXT,SNSR,ULTRASONIC,410	
5	516990D1	1	SNSR-ULTRASONIC,AUTOBM,RH MTG	SEE PAGE 11-54
6	516991D1	1	SNSR-ULTRASONIC,AUTOBM,LH MTG	SEE PAGE 11-55
7	517005D1	1	BRKT ASM-MTG,ANG,SNSR,LH	SEE PAGE 11-59
8	517006D1	1	BRKT ASM-MTG,ANG,SNSR,RH	SEE PAGE 11-60

Copyright © 2007 AGCO Corporation

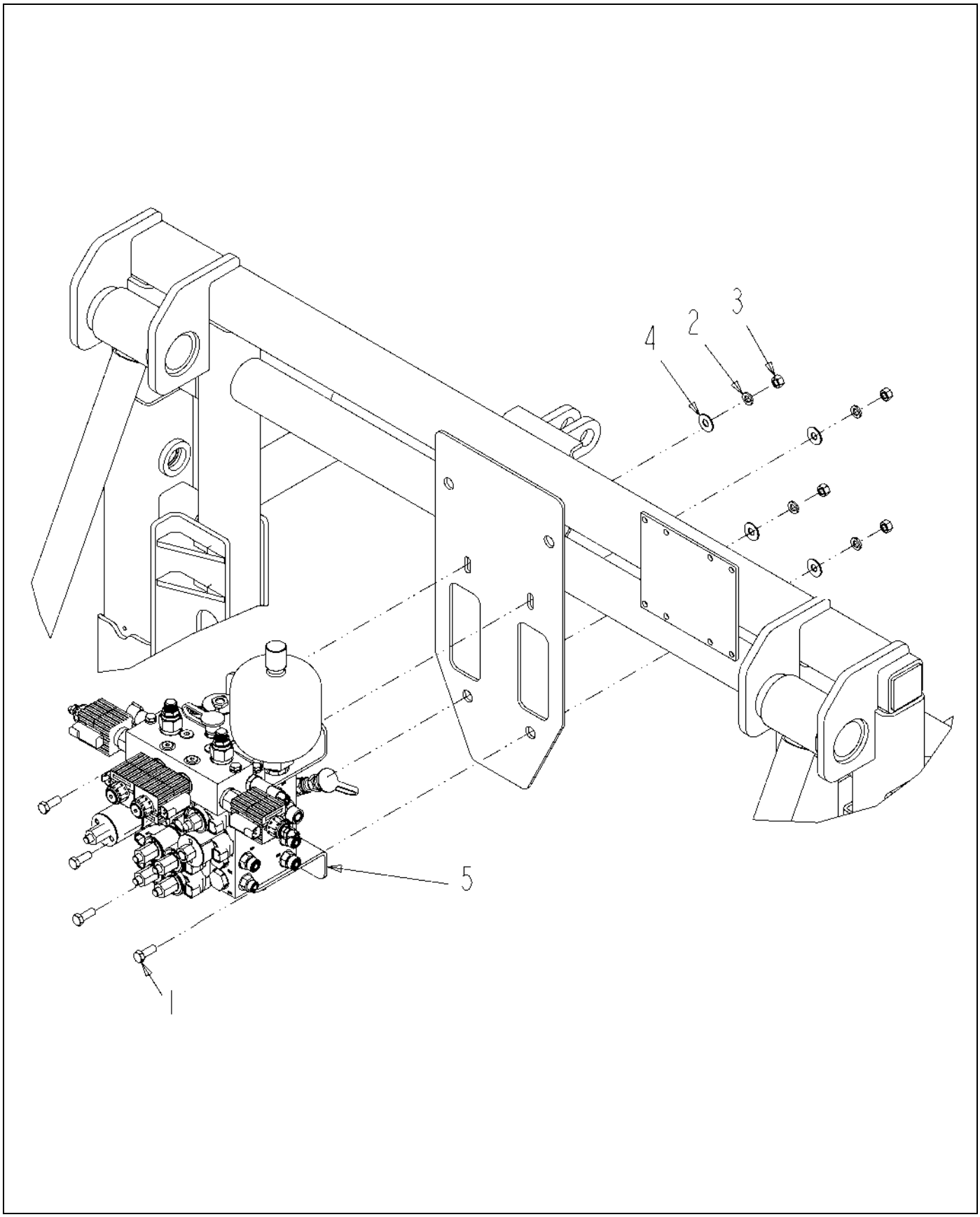

515131D1-01-R284-.TIF

Copyright © 2007 AGCO Corporation

BLK INSTL-HYD,W/AUTOBM,SM BM

ITEM	PART #	QTY	DESCRIPTION	COMMENTS
1	AG550175	4	BOLT 0.37-16NCX 1.00 G5 ZN HHD	
2	AG550191	4	WASHER 0.37 LK ZN REG	
3	AG550825	4	NUT 0.37-16NC HEX ZN REG	
4	AG551007	4	WASHER 0.37 FL ZN REG TYPE-B	
5	515132D1	1	BLK ASM-HYD,BM,W/AUTOBM,SM BM	

Copyright © 2007 AGCO Corporation

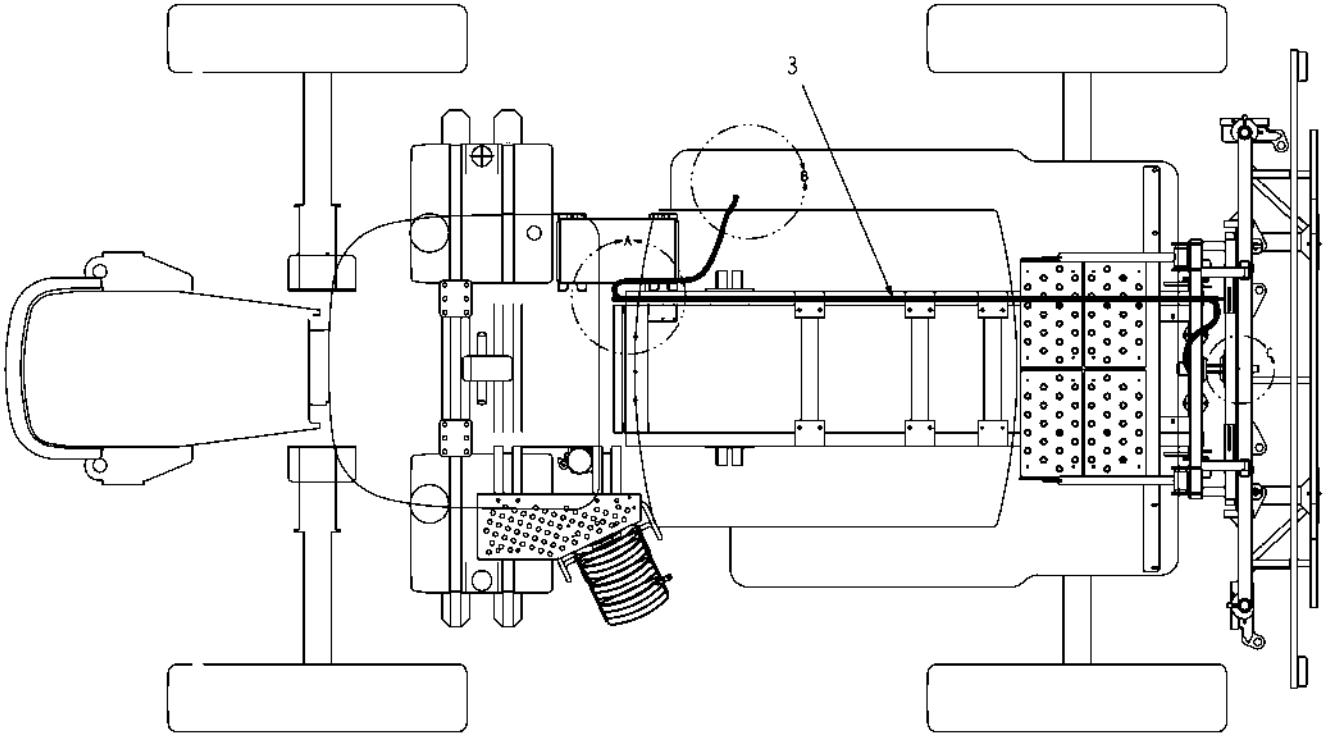

516602D1-01-R059-01.TIF

Copyright © 2007 AGCO Corporation

ITEM	PART #	QTY	DESCRIPTION	COMMENTS
3	516605D1	1	HARN-CTRL,SYS,AUTOBOOM,CAN	

Copyright © 2007 AGCO Corporation

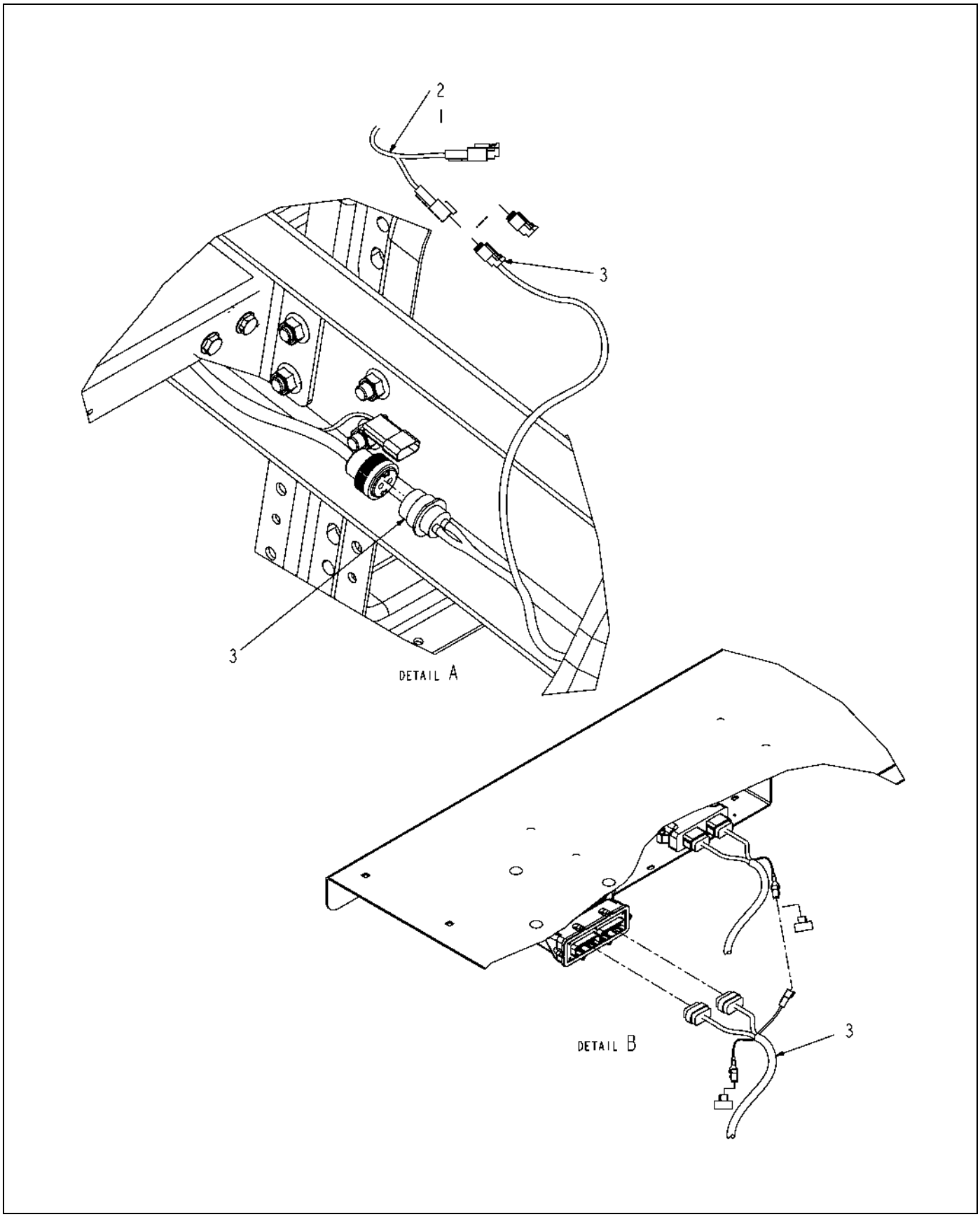

516602D1-01-R059-02.TIF

Copyright © 2007 AGCO Corporation

HARN INSTL-SYS,AUTOBOOM,CAN

ITEM	PART #	QTY	DESCRIPTION	COMMENTS
1	503993D1	-	HARNESS-ENG ELECTRONICS,CHAS	
2	511924D1	-	HARNESS-PWR/GND,OPT,RG	
3	516605D1	1	HARN-CTRL,SYS,AUTOBOOM,CAN	

Copyright © 2007 AGCO Corporation

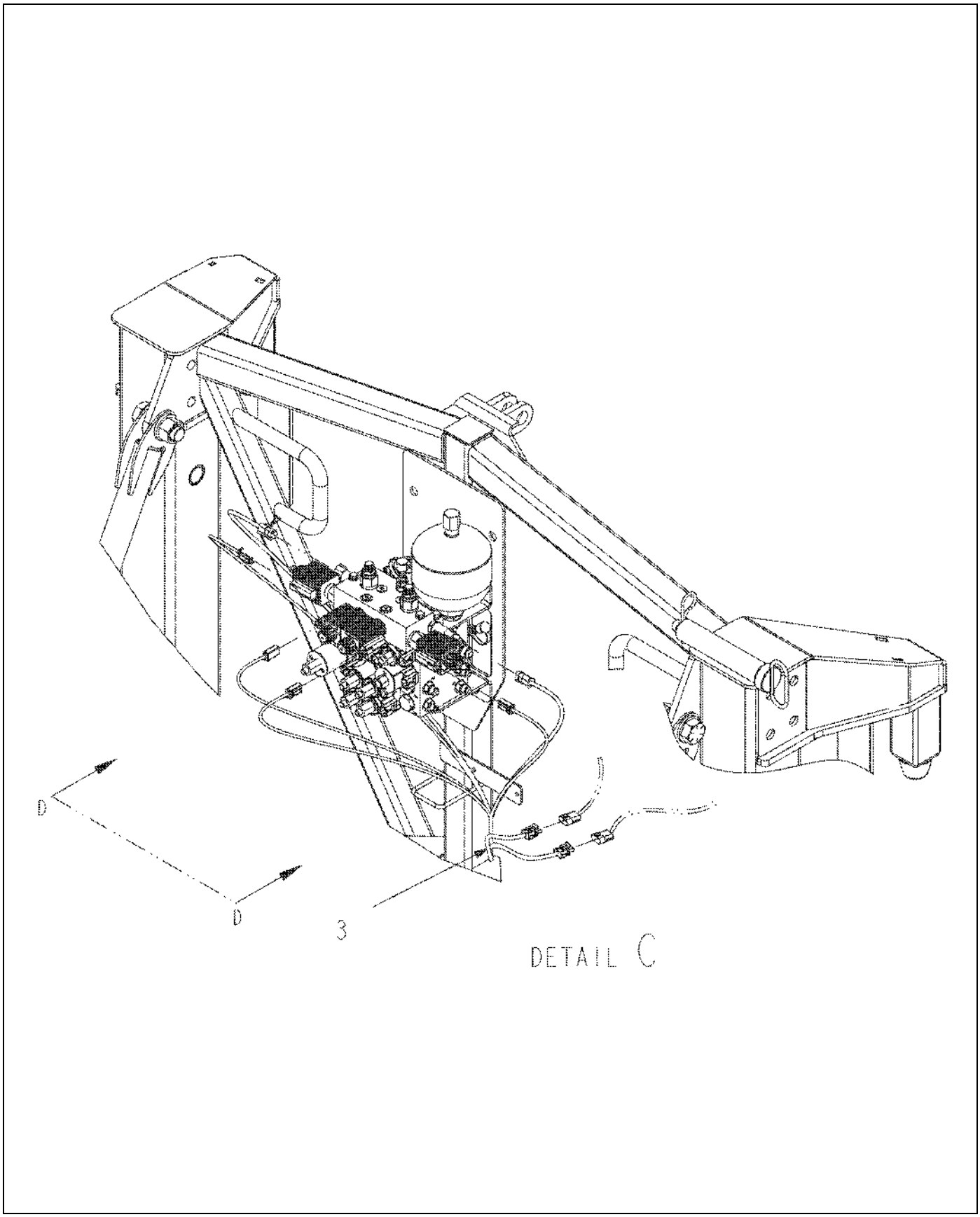

516602D1-01-R059-03.TIF

Copyright © 2007 AGCO Corporation

ITEM	PART #	QTY	DESCRIPTION	COMMENTS
3	516605D1	1	HARN-CTRL,SYS,AUTOBOOM,CAN	

Copyright © 2007 AGCO Corporation

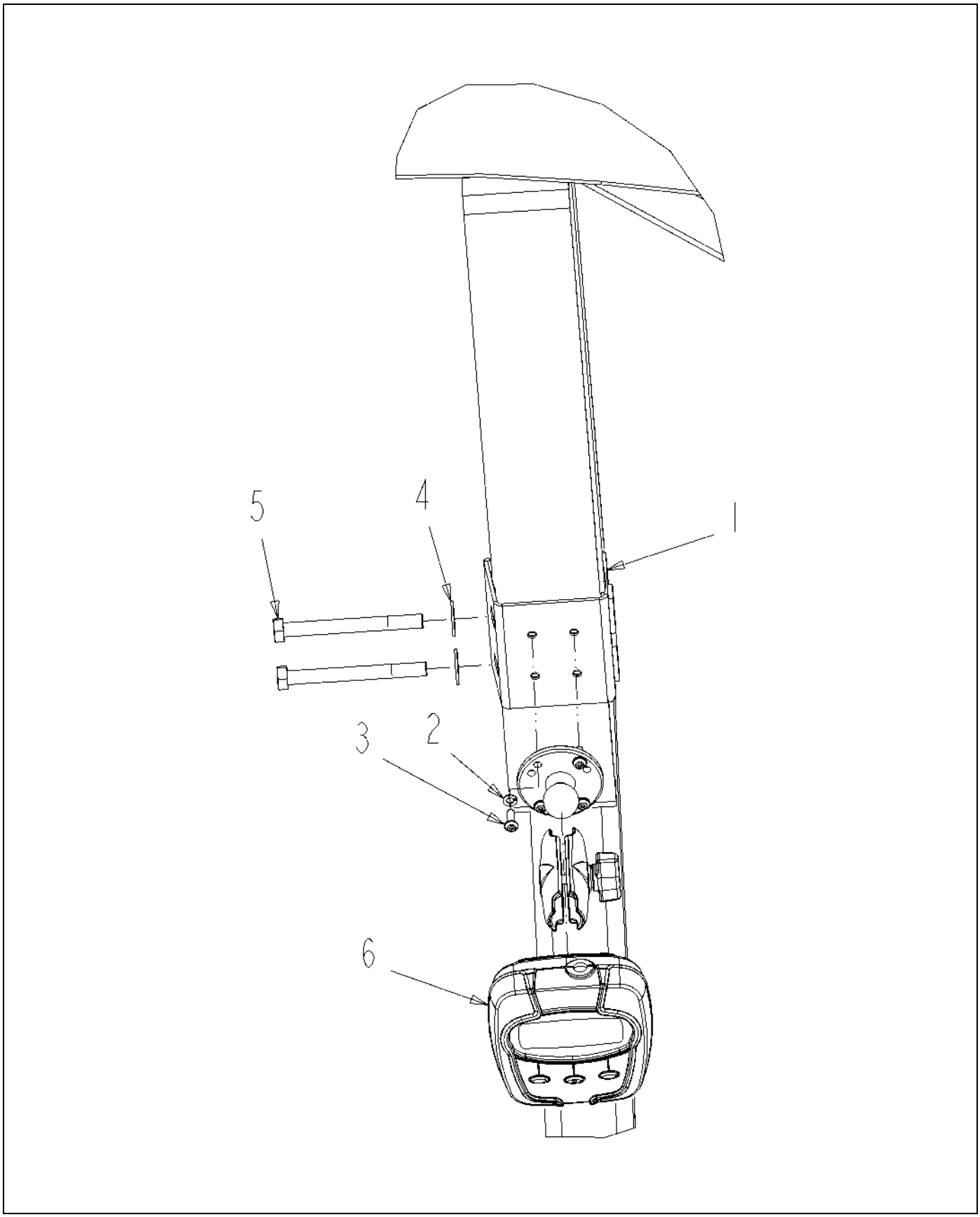

516599D1-02-R221-.TIF

Copyright © 2007 AGCO Corporation

ITEM	PART #	QTY	DESCRIPTION	COMMENTS
1	AG326925	1	CLAMP WLDMT-MTG,CTRL/MONITOR	
2	AG522247	4	WASHER-LK,M5,SS,REG	
3	AG523508	4	SCR-M5-0.8X16,CL10.9,BLK,BHHS	
4	AG551007	2	WASHER 0.37 FL ZN REG TYPE-B	
5	AG562364	2	BOLT M10-1.5X100MM G8.8 ZN HHD	
6	516511D1	1	CONSOLE-CAN,AUTOBOOM,RVN	

Copyright © 2007 AGCO Corporation

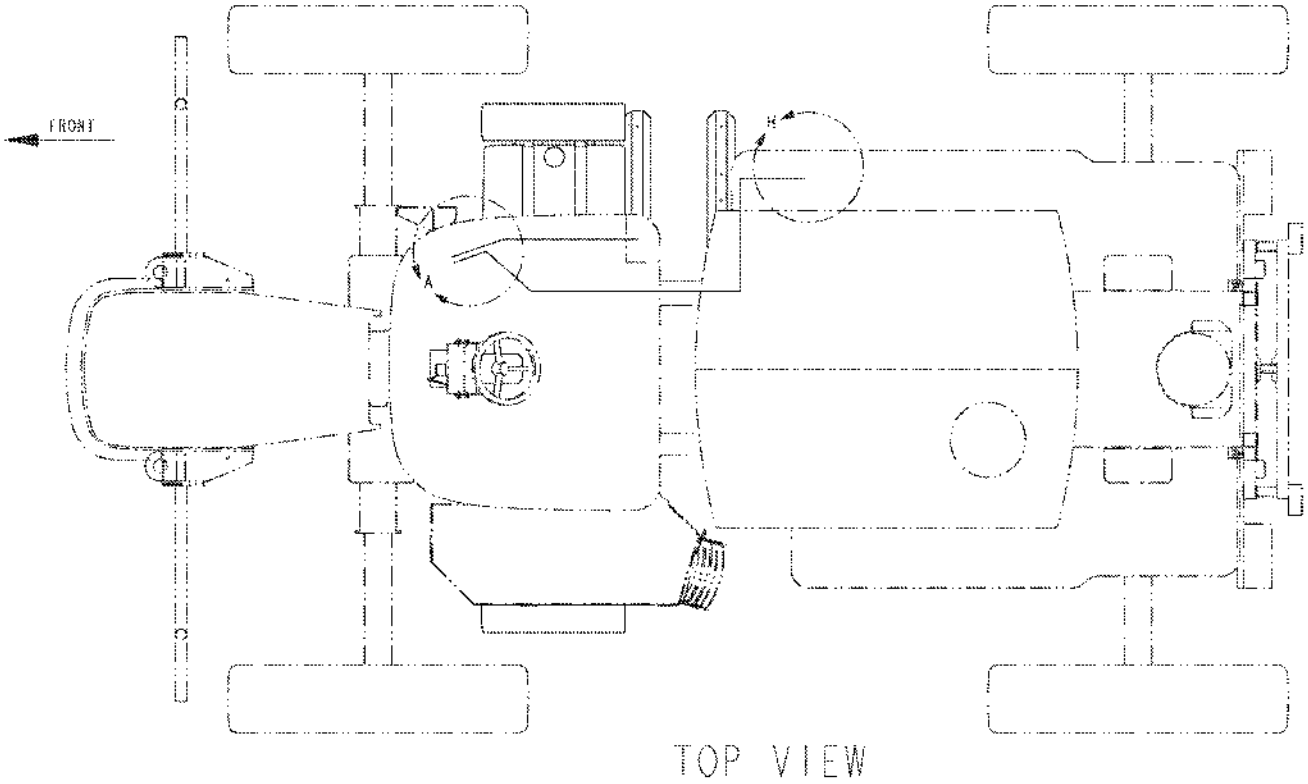

516601D1-01-R194-01.TIF

Copyright © 2007 AGCO Corporation

ITEM	PART #	QTY	DESCRIPTION	COMMENTS
REF			DETAIL IMAGE, PLEASE REFER TO RELATED PAGES FOR MORE INFORMATION	

Copyright © 2007 AGCO Corporation

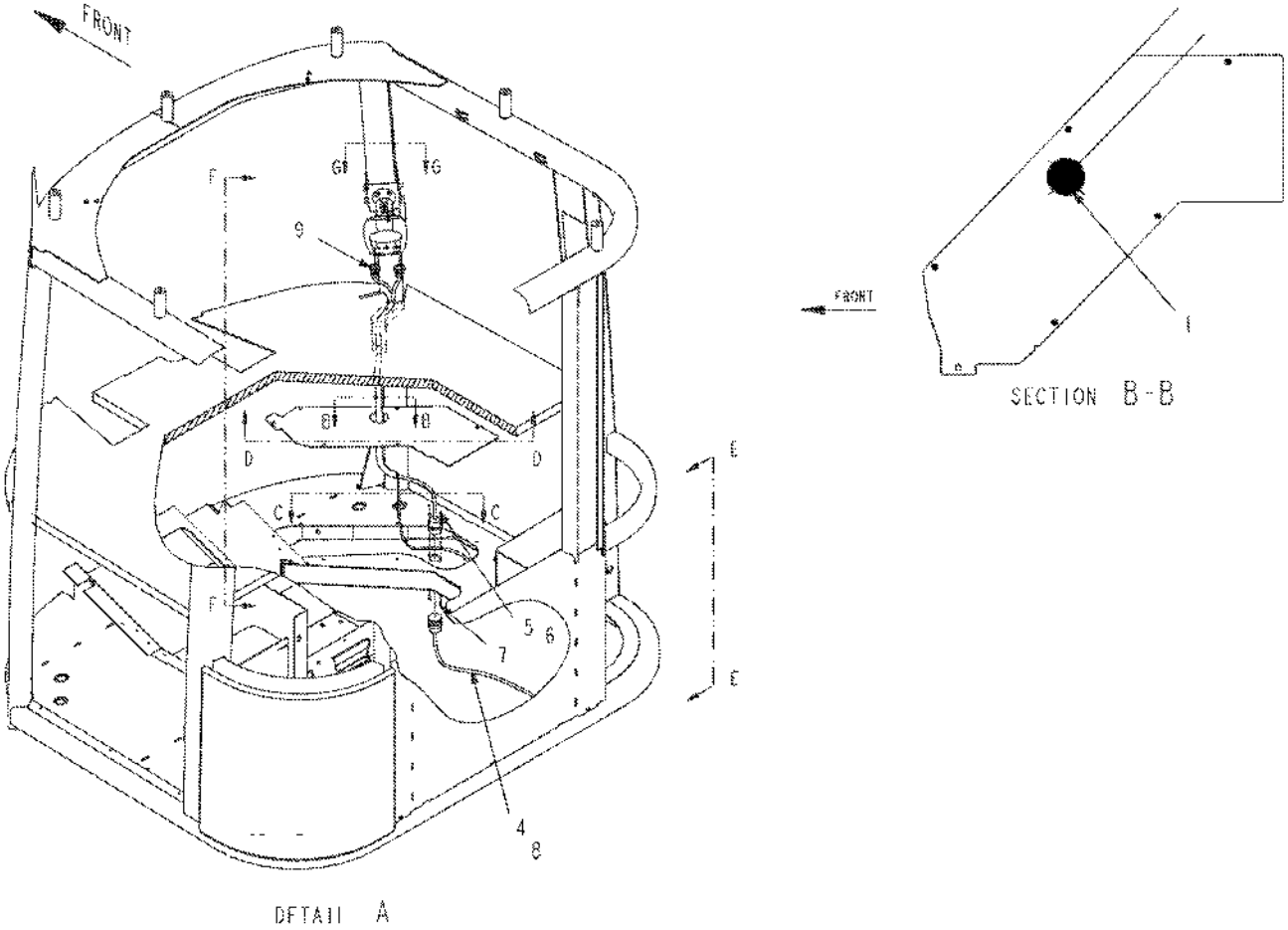

516601D1-01-R194-02.TIF

Copyright © 2007 AGCO Corporation

HARN INSTL-CAB,AUTOBM,12XX/SS

ITEM	PART #	QTY	DESCRIPTION	COMMENTS
1	AG513654	-	EDGE LINER .19 IN TK MAT PVC [BULK: 6.500 FT]	
4	AG553557	AR	TIE CABLE 7.37 .06-1.37 BLACK	
5	AG563174	2	WASHER #4 FL SS NAR TYPE-B	
6	AG563175	2	NUT #4-40NC HEX SS REG NY	
7	AG710181	2	SCREW #4-40 X .50LG PAN HD SS	
8	516607D1	1	HARN-EXT,CTRL,AUTOBM,12XX/SS	
9	516609D1	1	HARN-PWR/CTRL,AUTOBM,12XX/SS	

Copyright © 2007 AGCO Corporation

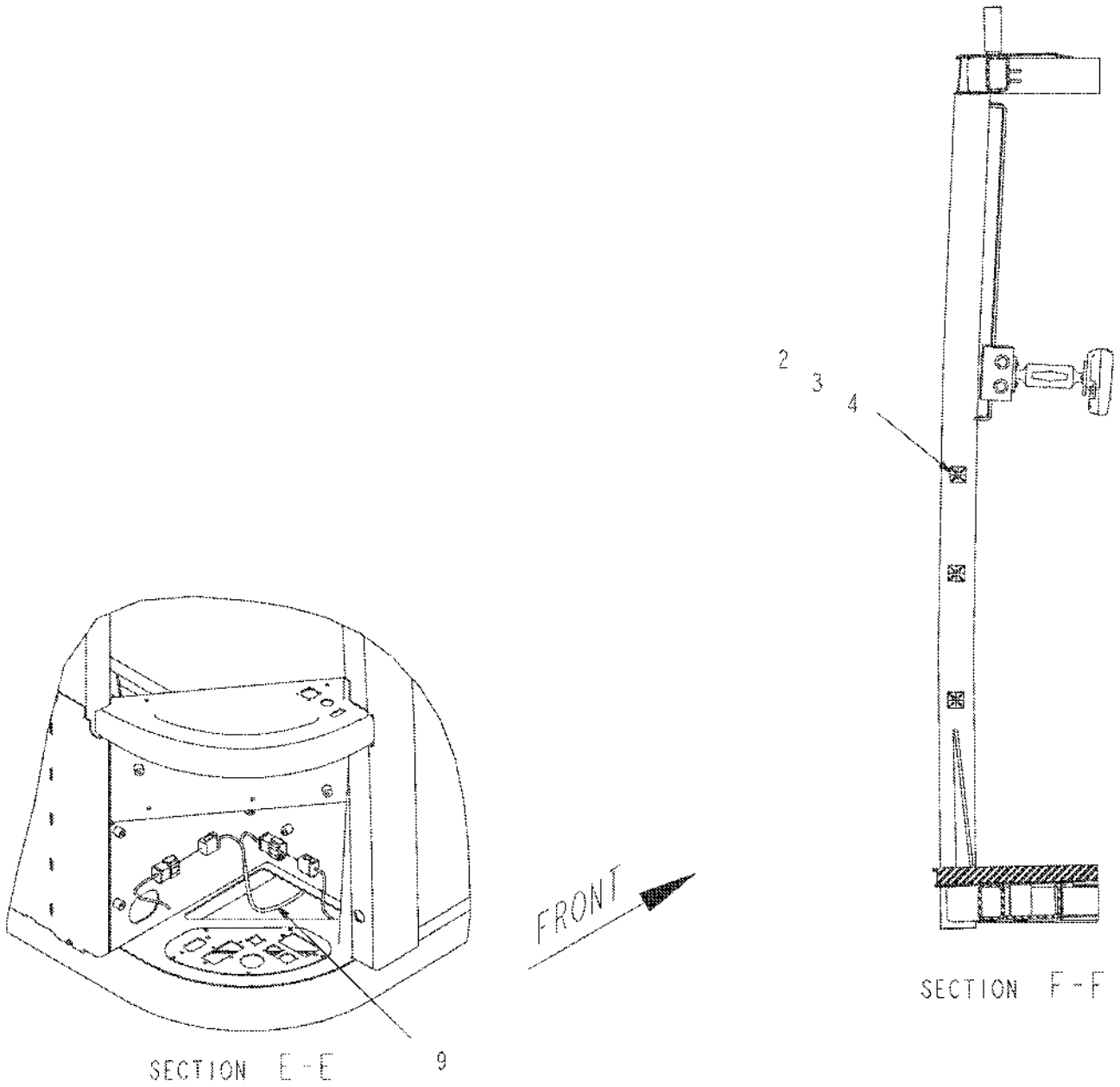

516601D1-01-R194-03.TIF

Copyright © 2007 AGCO Corporation

ITEM	PART #	QTY	DESCRIPTION	COMMENTS
2	AG517942	3	MOUNT WIRE TIE ADHESIVE B 4WAY	
3	AG519190	AR	ADHESIVE HOT MELT	
4	AG553557	AR	TIE CABLE 7.37 .06-1.37 BLACK	
9	516609D1	1	HARN-PWR/CTRL,AUTOBM,12XX/SS	

Copyright © 2007 AGCO Corporation

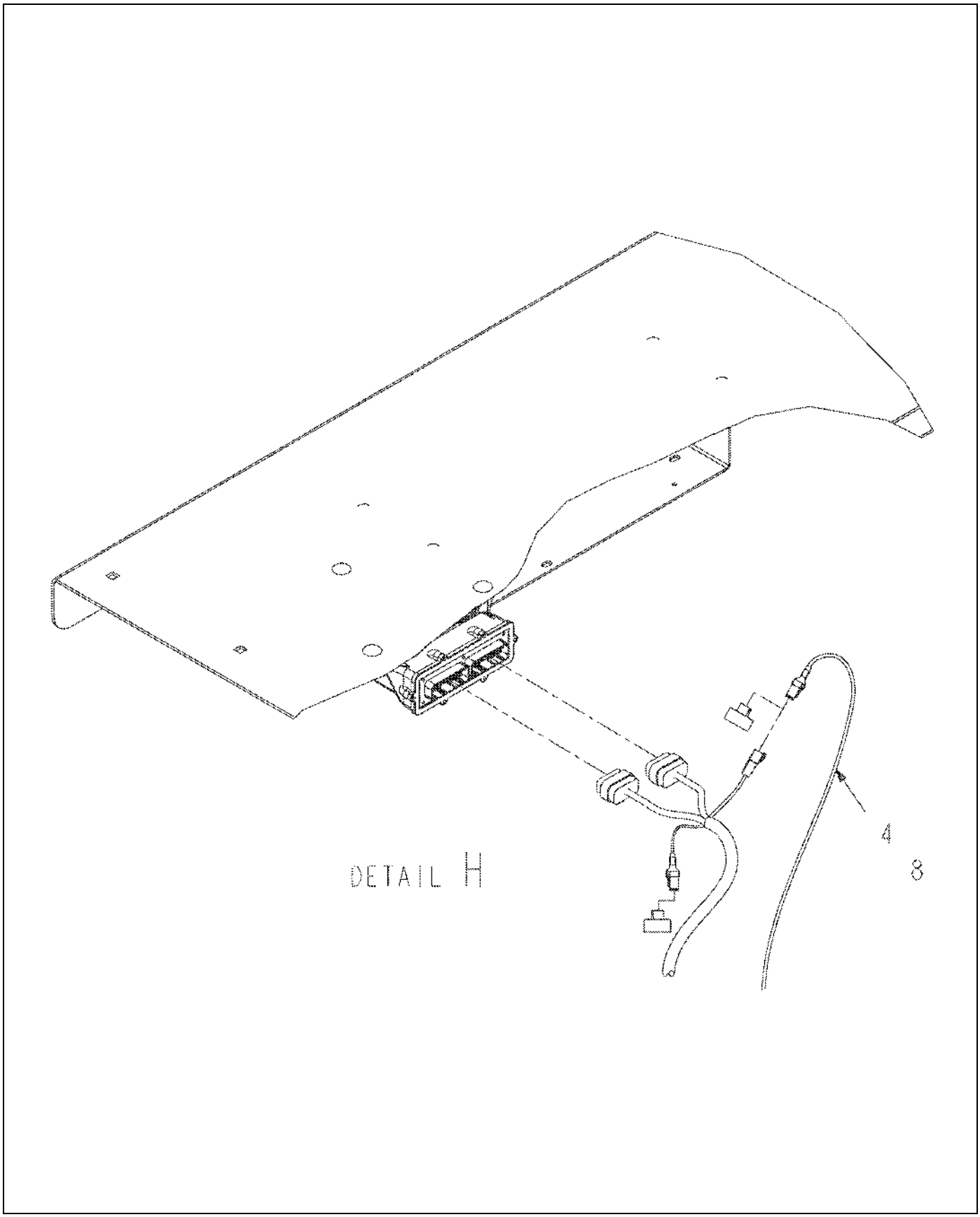

516601D1-01-R194-04.TIF

Copyright © 2007 AGCO Corporation

ITEM	PART #	QTY	DESCRIPTION	COMMENTS
4	AG553557	AR	TIE CABLE 7.37 .06-1.37 BLACK	
8	516607D1	1	HARN-EXT,CTRL,AUTOBM,12XX/SS	

Copyright © 2007 AGCO Corporation

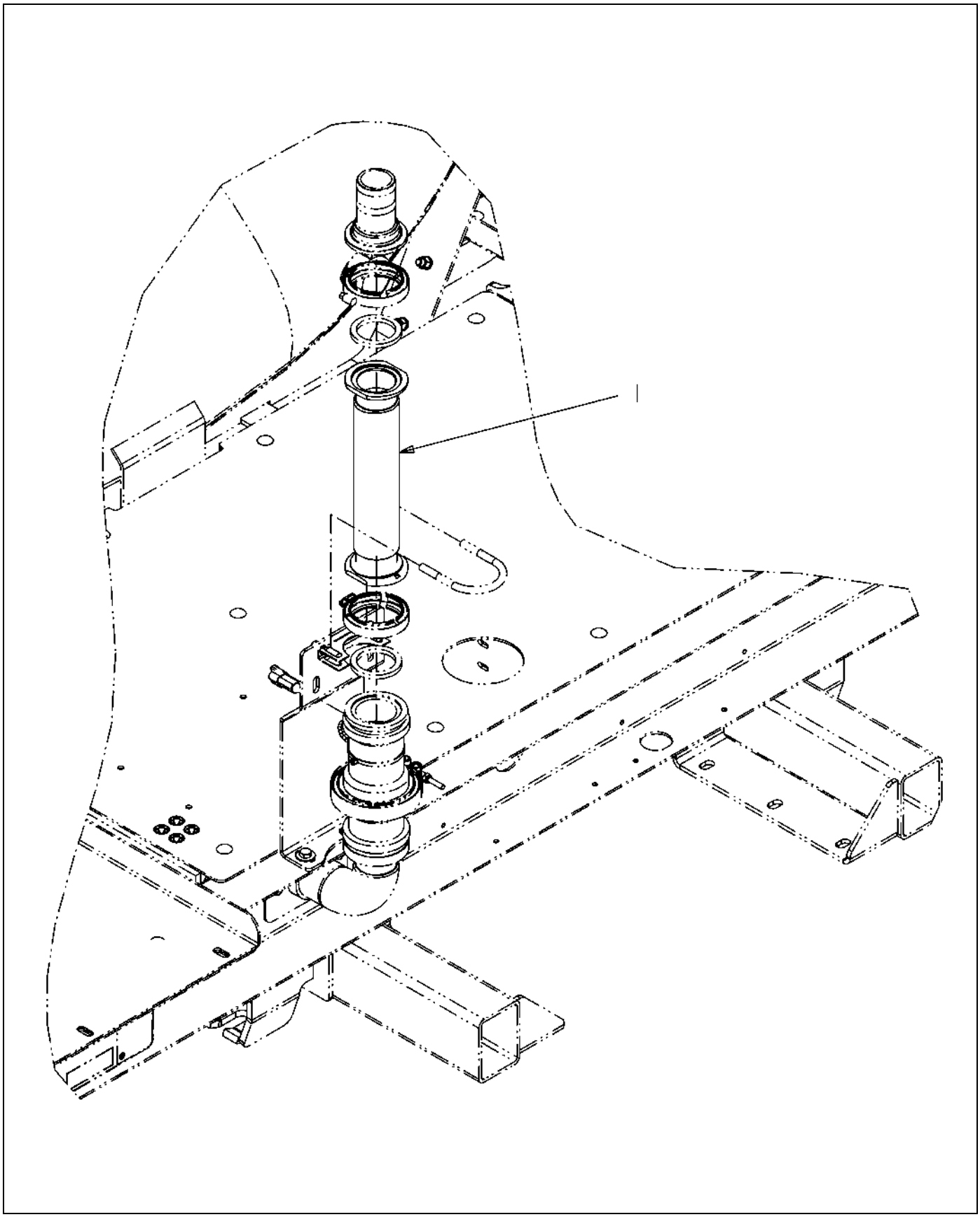

135914-01-M399-.TIF

Copyright © 2007 AGCO Corporation

TUBE INSTL-W/O LOW RATE KIT

ITEM	PART #	QTY	DESCRIPTION	COMMENTS
1	AG135919	1	STR WLDMT-12.06,2.00FPX2.00FP	

Copyright © 2007 AGCO Corporation

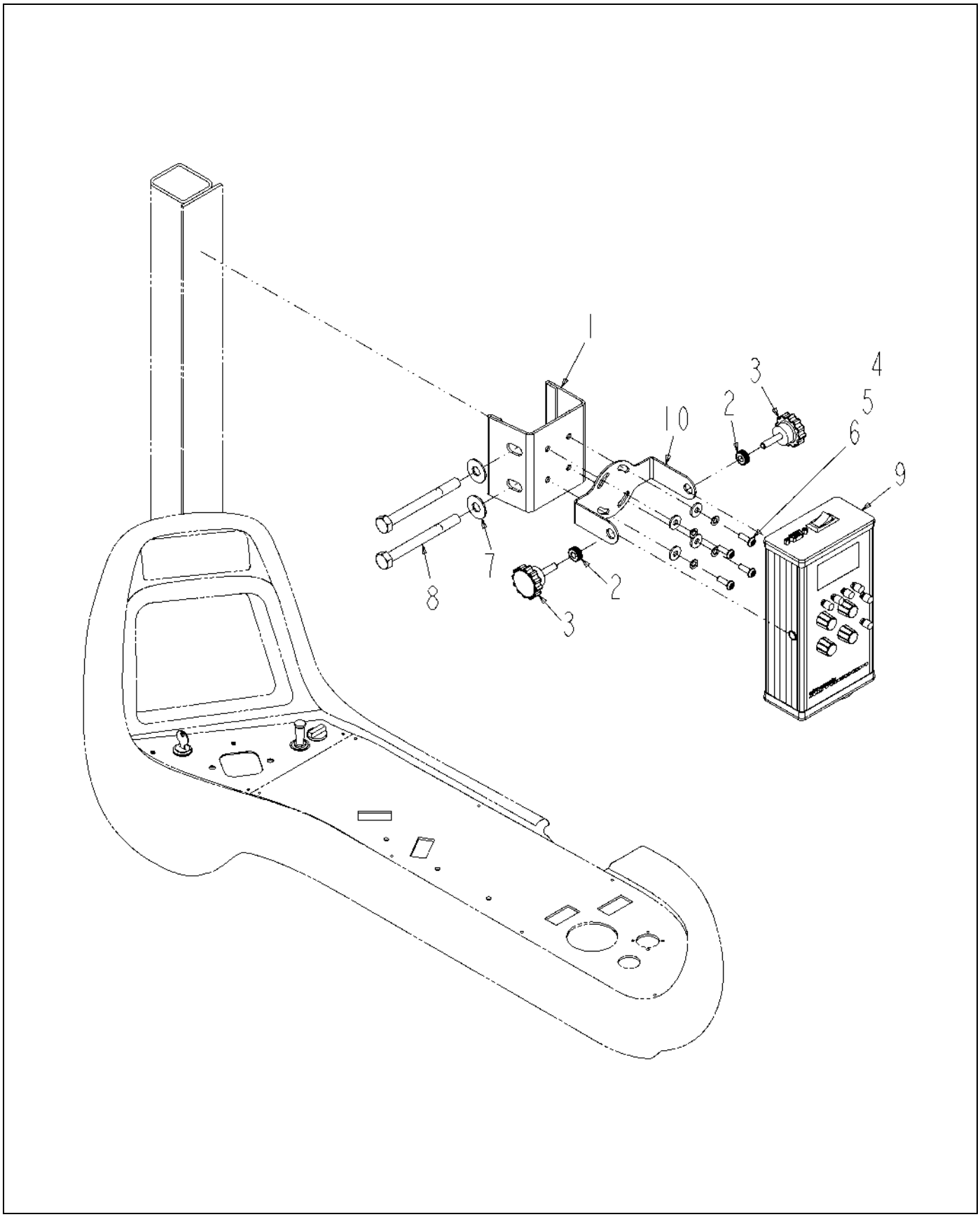

506889D1-01-M930.TIF

Copyright © 2007 AGCO Corporation

ITEM	PART #	QTY	DESCRIPTION	COMMENTS
1	AG326925	1	CLAMP WLDMT-MTG,CTRL/MONITOR	
2	AG514342	2	GROMMET 0.25 ID .44 GROOVE DIA	
3	AG514446	2	KNOB 0.25NC ROUND BL PLASTIC	
4	AG522244	4	WASHER-FL,M5,SS,REG	
5	AG522247	4	WASHER-LK,M5,SS,REG	
6	AG523508	4	SCR-M5-0.8X16,CL10.9,BLK,BHHS	
7	AG551007	2	WASHER 0.37 FL ZN REG TYPE-B	
8	AG562364	2	BOLT M10-1.5X100MM G8.8 ZN HHD	
9	506896D1	1	CONSOLE-AUTOBOOM,G2,RVN	
10	506897D1	1	BRKT-MTG,CONSOLE,AUTOBOOM,G2	

Copyright © 2007 AGCO Corporation

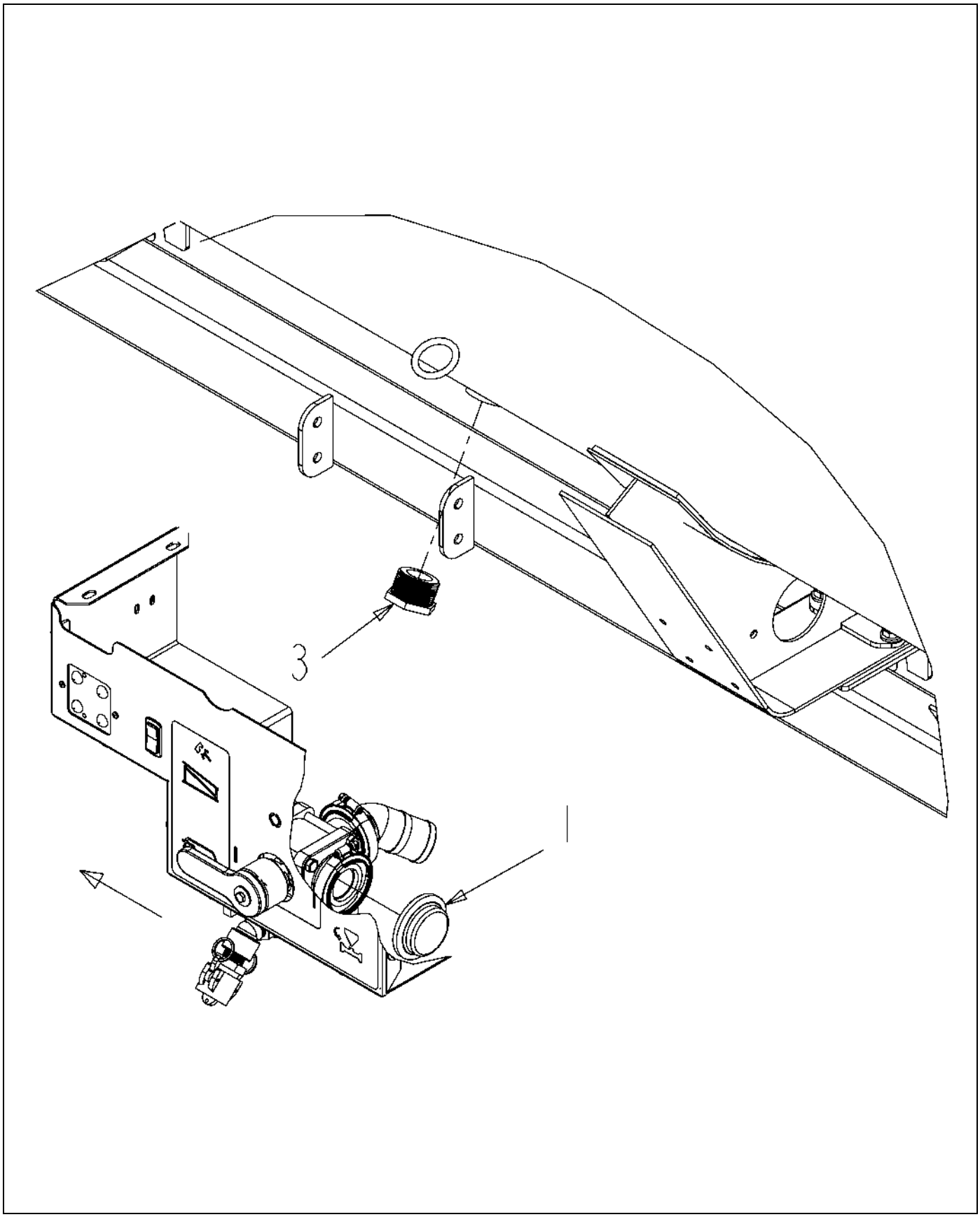

512945D1-01-N620-.TIF

Copyright © 2007 AGCO Corporation

OPT-W/O CHEM EDUCTOR

ITEM	PART #	QTY	DESCRIPTION	COMMENTS
1	AG056286	1	PLUG 2.00 MANIFOLD	[A]
2	AG129187	AR	PIPE SEALANT-FLEX BLACK	
3	AG522149	1	PLUG-PIPE,HEX,1.50NPT,PP	
	FOOTNOTE [A]		USE AG143717	

Copyright © 2007 AGCO Corporation

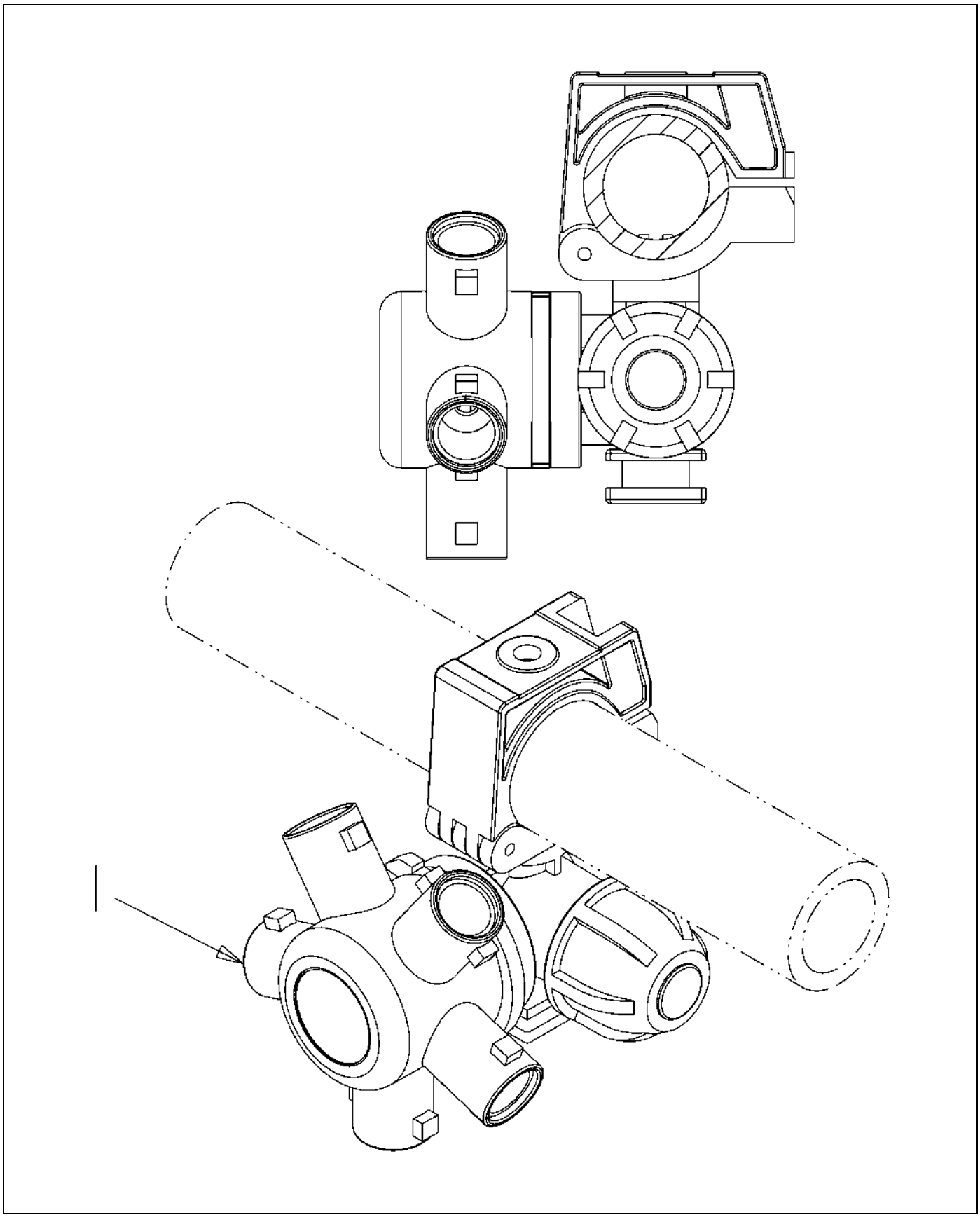

513298D1-01-N649-.TIF

Copyright © 2007 AGCO Corporation

OPT-NOZ,5WAY,RTRY,90X10,ON

ITEM	PART #	QTY	DESCRIPTION	COMMENTS
1	513297D1	107	BODY-NOZZLE,5WAY,RTRY,1.00	

Copyright © 2007 AGCO Corporation

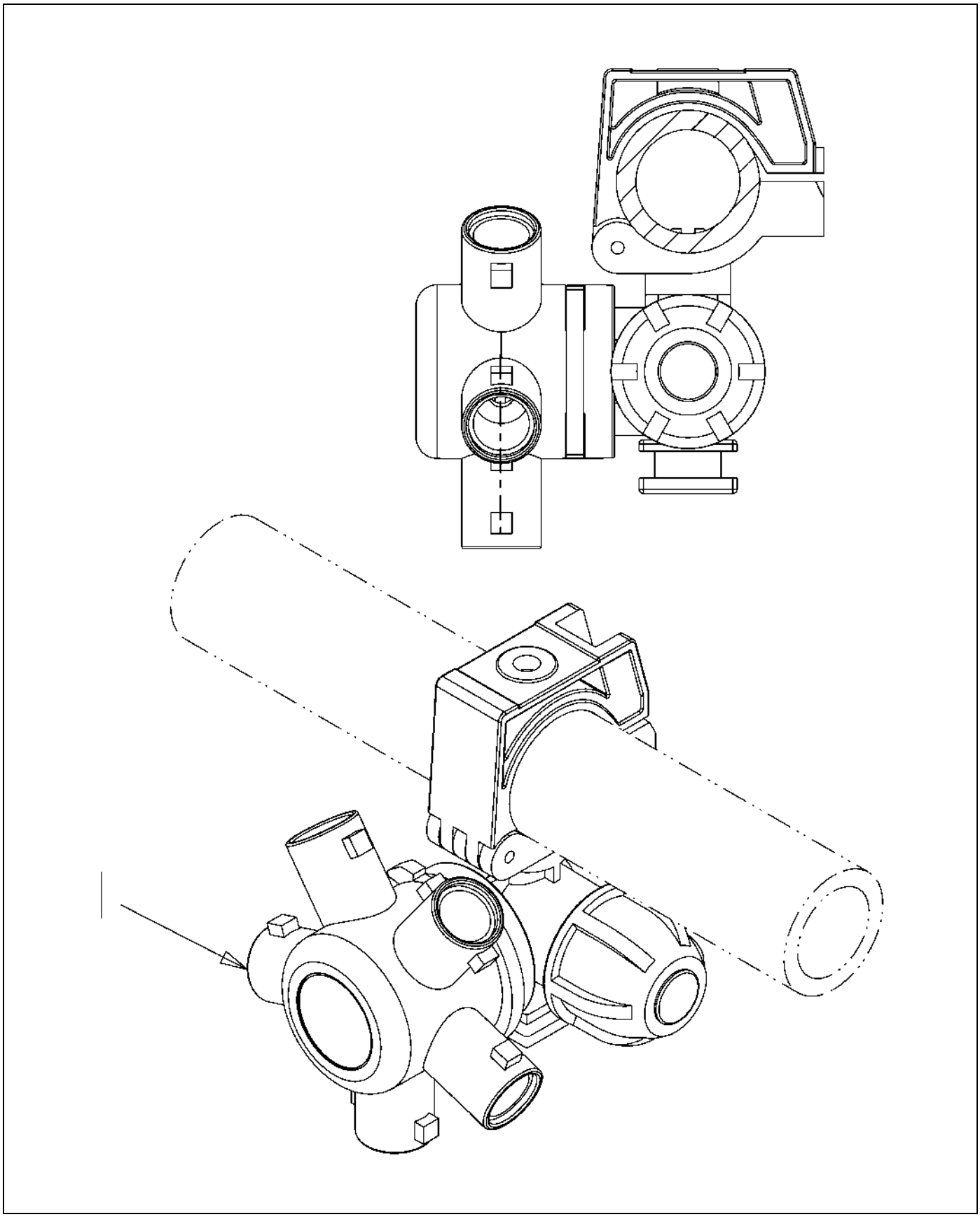

513299D1-01-N649-.TIF

Copyright © 2007 AGCO Corporation

OPT-NOZ,5WAY,RTRY,90X20,OFF

ITEM	PART #	QTY	DESCRIPTION	COMMENTS
1	513297D1	54	BODY-NOZZLE,5WAY,RTRY,1.00	

Copyright © 2007 AGCO Corporation

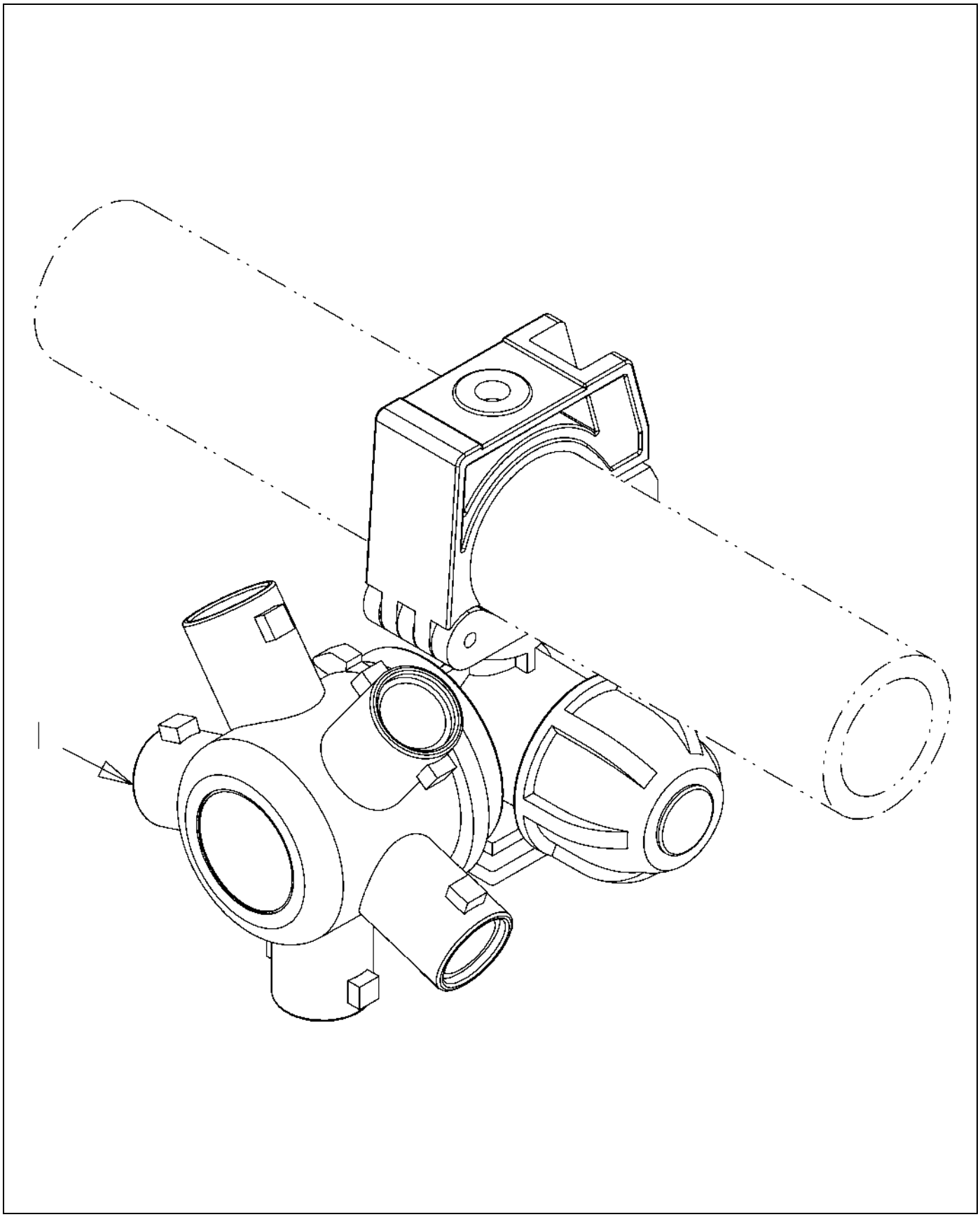

513300D1-01-N648-.TIF

Copyright © 2007 AGCO Corporation

OPT-NOZ,5WAY,RTRY,100X10,ON

ITEM	PART #	QTY	DESCRIPTION	COMMENTS
1	513297D1	119	BODY-NOZZLE,5WAY,RTRY,1.00	

Copyright © 2007 AGCO Corporation

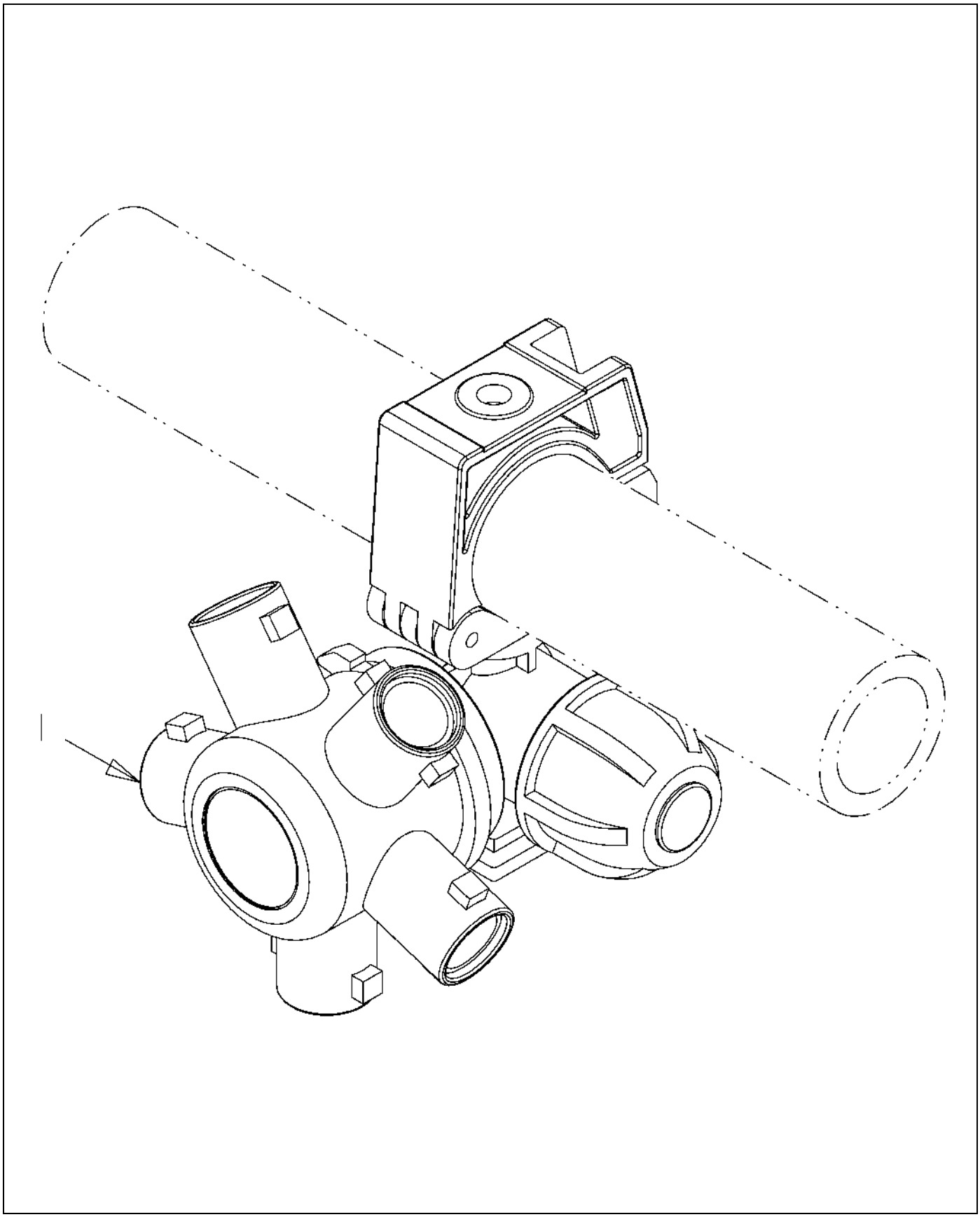

513301D1-01-N648-.TIF

Copyright © 2007 AGCO Corporation

OPT-NOZ,5WAY,RTRY,100X20,OFF

ITEM	PART #	QTY	DESCRIPTION	COMMENTS
1	513297D1	60	BODY-NOZZLE,5WAY,RTRY,1.00	

Copyright © 2007 AGCO Corporation

NUMERIC INDEX

228098D 2-30
228099D 2-30
309263D 2-30
3788369M1 6-26
3788369M1 6-27
400123X1 5-53
400318X1 5-16
400318X1 5-18
400318X1 5-24
400318X1 5-3
400318X1 5-5
400318X1 5-6
400318X1 5-7
400323X1 11-22
400323X1 11-7
400323X1 5-15
400323X1 5-68
400323X1 5-72
400366X1 4-53
400366X1 5-34
400366X1 5-48
400366X1 5-50
400367X1 11-22
400367X1 11-7
400367X1 5-15
400367X1 5-68
400367X1 5-72
400372X1 5-16
400376X1 5-53
400377X1 5-18
400377X1 5-3
400378X1 5-16
400378X1 5-17
400378X1 5-24
400378X1 5-26
400416X1 5-30
400416X1 5-34
400416X1 5-48
400416X1 5-50
400417X1 11-10
400417X1 11-22
400417X1 11-7
400417X1 5-15
400417X1 5-35
400417X1 5-9
400418X1 5-6
400428X1 11-10
400428X1 11-22
400428X1 11-6
400428X1 11-7
400428X1 5-15
400428X1 5-35
400428X1 5-4
400428X1 5-68
400428X1 5-72
400428X1 5-9
400429X1 5-7
400627X1 5-17
400628X1 11-22
400628X1 11-6
400628X1 11-7
400628X1 5-15
400628X1 5-68
400628X1 5-72
400629X1 5-18
400630X1 11-22
400630X1 11-7
400630X1 5-15
400630X1 5-68
400630X1 5-72
400961X1 11-39
400961X1 11-44
400963X1 11-22
400963X1 4-43
400963X1 5-15
400963X1 5-68
400966X1 5-48
400967X1 5-47
401024X1 11-22
401024X1 11-7
401024X1 5-15
401024X1 5-68
401024X1 5-72
401075X1 3-41
401075X1 3-48
401076X1 3-41
401076X1 3-48
401108X1 3-20
401108X1 3-24
401289X1 5-1
401289X1 5-44
401289X1 5-61
401289X1 5-63
401320X1 11-39
401320X1 11-44
401393X1 5-30
401487X1 4-53
401562X1 5-5
401563X1 5-4
503289D1 6-45
503475D1 3-43
503475D1 3-45
503475D1 3-50
503475D1 3-52
503685D1 6-21
503993D1 11-79
503993D1 6-64
503993D1 6-66
504956D1 6-52
505109D1 6-17
505109D1 6-55
505110D1 6-5
505110D1 6-56
505270D1 4-28
505270D1 6-43
505271D1 2-4
505271D1 4-17
505271D1 4-202
505467D1 6-56
505516D1 3-47
505558D1 6-60
505558D1 6-61
505558D1 6-62
505566D1 6-41
505581D1 6-61
506321D1 3-33
506322D1 3-20
506322D1 3-24
506334D1 3-13
506334D1 3-17
506334D1 3-21
506334D1 3-25
506334D1 3-5
506334D1 3-9
506451D1 4-7
506451D1 4-9
506452D1 2-4
506452D1 4-17
506452D1 4-202
506453D1 2-4
506453D1 4-17
506454D1 2-4
506454D1 4-17
506454D1 4-202
506455D1 2-4
506455D1 4-17
506455D1 4-202
506477D1 3-20
506477D1 3-58
506593D1 3-32
506624D1 3-35
506685D1 3-65
506686D1 3-66
506720D1 4-18
506720D1 4-200
506720D1 4-6
506720D1 4-8
506721D1 4-6
506722D1 4-6
506722D1 4-8
506723D1 4-6
506723D1 4-8
506724D1 4-6
506724D1 4-8
506725D1 4-6
506725D1 4-8
506726D1 4-18
506726D1 4-200
506726D1 4-6
506726D1 4-8
506727D1 4-18
506727D1 4-200
506727D1 4-6
506727D1 4-8
506728D1 4-6
506729D1 4-6
506729D1 4-8

NUMERIC INDEX

506730D1 4-6
506731D1 4-6
506732D1 4-8
506733D1 4-8
506734D1 4-7
506735D1 4-201
506735D1 4-7
506736D1 4-201
506736D1 4-7
506737D1 4-7
506738D1 4-7
506739D1 4-7
506740D1 4-7
506741D1 4-7
506742D1 4-9
506743D1 4-19
506743D1 4-9
506744D1 4-19
506744D1 4-9
506745D1 4-19
506745D1 4-9
506746D1 4-9
506747D1 4-9
506785D1 4-101
506785D1 4-102
506786D1 4-105
506786D1 4-106
506786D1 4-209
506796D1 4-112
506796D1 4-113
506805D1 4-115
506805D1 4-116
506805D1 4-117
506805D1 4-163
506805D1 4-164
506805D1 4-192
506805D1 4-225
506805D1 4-226
506806D1 4-118
506806D1 4-233
506807D1 4-132
506807D1 4-133
506808D1 4-135
506808D1 4-197
506845D1 2-6
506845D1 4-33
506846D1 2-7
506857D1 8-13
506873D1 4-28
506874D1 4-29
506892D1 6-20
506892D1 6-40
506892D1 6-41
506892D1 6-50
506892D1 6-71
506894D1 6-40
506894D1 6-41
506895D1 6-41
506896D1 11-62
506896D1 11-87
506897D1 11-62
506897D1 11-87
506899D1 6-19
506899D1 6-20
506899D1 6-49
506899D1 6-50
506901D1 6-22
506902D1 6-22
506903D1 11-58
506903D1 6-22
506904D1 11-73
506904D1 6-22
506905D1 11-73
506905D1 6-22
506906D1 4-194
506906D1 4-46
506906D1 4-47
506906D1 4-48
506910D1 11-24
506910D1 11-27
506911D1 11-24
506912D1 11-25
506912D1 11-34
506912D1 11-36
506913D1 11-52
506913D1 11-61
506914D1 11-25
506921D1 11-25
506922D1 11-26
506923D1 11-26
506924D1 11-26
506925D1 11-52
506929D1 11-52
506943D1 11-26
507003D1 6-22
507004D1 6-22
507025D1 6-22
507308D1 6-61
507354D1 6-34
507356D1 6-33
507356D1 6-34
507356D1 6-36
507356D1 6-8
507412D1 5-25
507413D1 5-25
507414D1 5-25
507415D1 5-25
507416D1 5-25
507417D1 5-25
507418D1 5-25
507419D1 5-25
507420D1 5-25
507421D1 5-25
507422D1 5-25
507423D1 5-25
507424D1 5-25
507425D1 5-25
507426D1 5-25
507525D1 5-25
507614D1 6-24
507615D1 6-23
507616D1 6-23
507616D1 6-24
507617D1 6-23
507617D1 6-24
507618D1 6-23
507618D1 6-24
507619D1 6-23
507619D1 6-24
507620D1 6-23
507620D1 6-24
507621D1 6-23
507621D1 6-24
507684D1 1-9
507719D1 5-68
507719D1 5-72
507731D1 11-30
507731D1 4-196
507731D1 4-41
507731D1 7-1
508196D1 4-20
508196D1 4-22
508196D1 4-23
508196D1 4-29
508197D1 4-21
508278D1 11-27
508279D1 11-61
508280D1 11-61
508293D1 11-57
508294D1 11-57
508294D1 11-76
508618D1 6-71
508618D1 6-72
508662D1 4-41
508663D1 4-42
508664D1 4-42
508665D1 4-42
508666D1 4-42
508671D1 4-18
508671D1 4-200
508671D1 4-6
508671D1 4-9
508756D1 7-1
508757D1 7-4
508857D1 4-44
508869D1 3-21
508869D1 3-25
509020D1 4-195
509027D1 11-53
509058D1 4-139
509058D1 4-140
509261D1 4-41
509262D1 4-40
509263D1 4-40
509264D1 4-40
509265D1 4-44
509267D1 4-44

NUMERIC INDEX

509268D1 4-44
509269D1 4-44
509270D1 4-44
509280D1 4-44
509280D1 6-31
509280D1 6-43
509394D1 6-13
509414D1 11-29
509414D1 6-30
509414D1 6-31
509414D1 6-32
509415D1 6-5
509416D1 6-5
509417D1 6-2
509417D1 6-32
509417D1 6-7
509418D1 6-7
509480D1 6-18
509713D1 6-2
509724D1 4-10
509724D1 4-12
509725D1 2-5
509725D1 4-11
509881D1 4-142
509881D1 4-239
509882D1 4-144
509882D1 4-145
509882D1 4-171
509882D1 4-182
509882D1 4-183
509882D1 4-188
509882D1 4-214
509883D1 4-147
509883D1 4-148
509884D1 4-146
509884D1 4-154
509884D1 4-229
509885D1 4-151
509885D1 4-152
509885D1 4-162
509885D1 4-168
509885D1 4-184
509885D1 4-185
509885D1 4-198
509885D1 4-210
509885D1 4-211
509885D1 4-230
509886D1 4-155
509886D1 4-156
509887D1 4-10
509887D1 4-12
509887D1 4-13
509887D1 4-14
509887D1 4-18
509887D1 4-200
509888D1 4-10
509888D1 4-12
509888D1 4-13
509888D1 4-14
509889D1 4-10
509889D1 4-12
509890D1 4-10
509890D1 4-12
509891D1 4-12
509892D1 4-10
509892D1 4-12
509892D1 4-13
509892D1 4-14
509892D1 4-18
509892D1 4-200
509893D1 4-10
509893D1 4-12
509893D1 4-13
509893D1 4-14
509893D1 4-18
509893D1 4-200
509894D1 4-10
509894D1 4-12
509894D1 4-13
509894D1 4-14
509894D1 4-18
509894D1 4-200
509895D1 4-18
509895D1 4-200
509896D1 4-10
509896D1 4-12
509896D1 4-13
509896D1 4-14
509896D1 4-18
509896D1 4-200
509921D1 11-22
509921D1 5-68
509921D1 5-72
509953D1 4-10
509953D1 4-12
509953D1 4-13
509953D1 4-14
509955D1 4-10
509955D1 4-12
509955D1 4-13
509955D1 4-14
509956D1 4-10
509956D1 4-12
509957D1 4-10
509957D1 4-13
509958D1 4-18
509959D1 4-10
509959D1 4-12
509959D1 4-13
509959D1 4-14
509959D1 4-18
509960D1 4-10
509960D1 4-12
509960D1 4-13
509960D1 4-14
509961D1 4-10
509961D1 4-12
509961D1 4-13
509961D1 4-14
509964D1 6-41
509996D1 4-154
509996D1 4-199
509997D1 4-149
509999D1 4-10
509999D1 4-12
509999D1 4-13
509999D1 4-14
511036D1 4-12
511036D1 4-14
511037D1 4-12
511037D1 4-14
511038D1 4-12
511038D1 4-14
511039D1 4-12
511039D1 4-14
511040D1 4-12
511040D1 4-14
511041D1 4-12
511041D1 4-14
511043D1 4-172
511043D1 4-173
511044D1 4-176
511153D1 4-10
511153D1 4-12
511153D1 4-13
511153D1 4-14
511154D1 4-12
511154D1 4-14
511432D1 4-143
511432D1 4-158
511432D1 4-170
511432D1 4-212
511432D1 4-213
511432D1 4-217
511432D1 4-229
511432D1 4-232
511433D1 4-159
511434D1 4-14
511435D1 4-10
511435D1 4-13
511436D1 4-10
511437D1 4-10
511437D1 4-13
511438D1 4-10
511438D1 4-12
511439D1 4-10
511439D1 4-13
511440D1 4-10
511440D1 4-13
511441D1 4-10
511441D1 4-13
511442D1 4-10
511442D1 4-13
511490D1 4-13
511490D1 4-14
511491D1 4-13
511491D1 4-14

NUMERIC INDEX

511492D1 4-14
511493D1 4-10
511493D1 4-13
511494D1 4-13
511494D1 4-14
511495D1 4-13
511495D1 4-14
511496D1 4-13
511497D1 4-10
511497D1 4-12
511497D1 4-13
511497D1 4-14
511497D1 4-18
511497D1 4-200
511498D1 4-13
511498D1 4-14
511589D1 4-19
511589D1 4-201
511590D1 4-202
511593D1 4-201
511594D1 4-201
511595D1 4-201
511596D1 4-201
511597D1 4-19
511598D1 4-19
511601D1 4-18
511601D1 4-200
511602D1 4-18
511602D1 4-200
511603D1 4-18
511603D1 4-200
511604D1 4-18
511604D1 4-200
511605D1 4-18
511617D1 4-18
511617D1 4-200
511621D1 4-157
511622D1 4-157
511623D1 11-29
511623D1 6-42
511623D1 6-43
511623D1 6-44
511624D1 4-18
511624D1 4-200
511643D1 4-203
511643D1 4-204
511644D1 4-203
511644D1 4-204
511644D1 4-205
511644D1 4-206
511644D1 4-207
511644D1 4-208
511645D1 4-203
511645D1 4-204
511651D1 4-205
511651D1 4-206
511651D1 4-207
511651D1 4-208
511672D1 4-201
511675D1 4-18
511675D1 4-200
511687D1 4-169
511687D1 4-215
511687D1 4-218
511687D1 4-219
511688D1 4-18
511688D1 4-200
511689D1 4-10
511689D1 4-12
511689D1 4-13
511689D1 4-14
511689D1 4-18
511736D1 7-1
511763D1 4-202
511765D1 4-10
511765D1 4-12
511765D1 4-13
511765D1 4-14
511765D1 4-18
511765D1 4-200
511801D1 6-58
511801D1 6-69
511802D1 6-61
511820D1 4-19
511821D1 4-220
511822D1 4-19
511823D1 4-207
511823D1 4-208
511877D1 3-21
511877D1 3-25
511922D1 6-47
511923D1 6-45
511924D1 11-79
511924D1 6-45
511924D1 6-46
511924D1 6-64
511924D1 6-66
511928D1 6-63
511928D1 6-64
511928D1 6-66
511929D1 6-65
511929D1 6-66
511930D1 6-63
511930D1 6-64
511930D1 6-66
511931D1 6-63
511931D1 6-64
511931D1 6-65
511931D1 6-66
511963D1 11-64
511965D1 11-64
511966D1 11-64
511967D1 11-63
511967D1 11-65
512145D1 6-45
512220D1 6-58
512375D1 6-13
512412D1 4-19
512413D1 4-19
512414D1 4-19
512415D1 4-201
512416D1 4-201
512476D1 5-3
512478D1 3-27
512479D1 3-28
512480D1 3-29
512480D1 3-34
512481D1 3-30
512482D1 3-28
512483D1 3-31
512483D1 3-33
512493D1 4-14
512518D1 5-12
512519D1 5-13
512519D1 5-14
512519D1 5-40
512520D1 5-13
512521D1 5-12
512521D1 5-36
512522D1 5-12
512522D1 5-36
512544D1 11-11
512544D1 11-13
512544D1 11-2
512544D1 11-4
512544D1 5-13
512545D1 11-2
512545D1 11-3
512545D1 5-13
512545D1 5-14
512546D1 11-2
512546D1 11-3
512546D1 5-13
512546D1 5-14
512547D1 11-11
512547D1 11-13
512547D1 11-2
512547D1 11-4
512547D1 5-13
512548D1 11-11
512548D1 11-13
512548D1 11-2
512548D1 11-39
512548D1 11-4
512548D1 11-40
512548D1 11-41
512548D1 11-44
512548D1 11-45
512548D1 11-46
512548D1 5-13
512549D1 11-11
512549D1 11-13
512549D1 11-2
512549D1 11-4
512549D1 5-13
512550D1 11-11
512550D1 11-13

NUMERIC INDEX

512550D1 11-2
512550D1 11-4
512550D1 5-13
512551D1 5-13
512555D1 4-174
512555D1 4-175
512599D1 3-32
512600D1 11-1
512600D1 5-11
512601D1 11-1
512601D1 5-11
512602D1 11-1
512603D1 11-11
512603D1 11-14
512603D1 11-2
512603D1 11-5
512603D1 5-28
512604D1 11-2
512605D1 11-11
512605D1 11-12
512605D1 11-13
512605D1 11-14
512605D1 11-2
512605D1 11-3
512605D1 11-4
512605D1 11-5
512605D1 5-28
512606D1 11-11
512606D1 11-14
512606D1 11-2
512606D1 11-5
512607D1 11-11
512607D1 11-14
512607D1 11-2
512607D1 11-5
512608D1 11-11
512608D1 11-14
512608D1 11-2
512608D1 11-5
512609D1 11-11
512609D1 11-14
512609D1 11-2
512609D1 11-5
512610D1 11-11
512610D1 11-14
512610D1 11-2
512610D1 11-5
512611D1 11-11
512611D1 11-13
512611D1 11-2
512611D1 11-4
512611D1 11-44
512611D1 11-45
512611D1 11-46
512612D1 11-11
512612D1 11-14
512612D1 11-2
512612D1 11-5
512658D1 3-30
512699D1 6-73
512740D1 3-56
512740D1 3-57
512744D1 11-11
512744D1 11-13
512744D1 11-2
512744D1 11-4
512767D1 4-44
512771D1 11-19
512771D1 11-20
512771D1 11-8
512771D1 11-9
512791D1 3-1
512791D1 3-2
512850D1 5-77
512851D1 5-73
512851D1 5-76
512851D1 5-78
512851D1 5-79
512851D1 5-80
512852D1 5-73
512852D1 5-76
512852D1 5-78
512852D1 5-79
512852D1 5-80
512853D1 5-76
512854D1 5-77
512855D1 5-76
512858D1 5-46
512860D1 5-51
512862D1 5-76
512868D1 3-13
512868D1 3-17
512868D1 3-5
512868D1 3-9
512869D1 6-48
513013D1 5-55
513014D1 5-78
513015D1 5-78
513020D1 4-43
513021D1 4-41
513128D1 5-79
513129D1 5-79
513130D1 5-79
513152D1 5-80
513153D1 5-73
513153D1 5-80
513209D1 5-58
513231D1 5-73
513232D1 5-73
513272D1 3-12
513272D1 3-4
513273D1 3-16
513273D1 3-8
513297D1 11-89
513297D1 11-90
513297D1 11-91
513297D1 11-92
513297D1 4-136
513297D1 4-138
513448D1 3-21
513448D1 3-25
513461D1 3-32
513462D1 3-32
513463D1 3-32
513464D1 11-43
513464D1 3-34
513465D1 11-43
513465D1 3-34
513466D1 3-35
513467D1 11-11
513468D1 11-11
513468D1 11-12
513468D1 11-39
513468D1 11-40
513468D1 11-41
513468D1 11-42
513468D1 11-44
513468D1 11-45
513468D1 11-46
513468D1 11-47
513816D1 4-12
513817D1 4-12
514258D1 3-39
514264D1 3-39
514264D1 3-40
514265D1 3-20
514265D1 3-24
514332D1 3-19
514332D1 3-20
514332D1 3-22
514333D1 3-23
514333D1 3-24
514333D1 3-26
514339D1 3-20
514339D1 3-24
514528D1 3-39
514531D1 3-39
514532D1 3-39
514535D1 3-39
514560D1 5-32
514560D1 5-81
514655D1 3-38
514714D1 5-33
514715D1 3-40
514715D1 3-41
514715D1 3-53
514836D1 3-41
514837D1 3-48
514842D1 3-41
514843D1 3-40
514843D1 3-41
514846D1 3-37
514991D1 6-51
514992D1 6-51
514994D1 7-7
514995D1 3-37
514996D1 11-30

NUMERIC INDEX

515129D1 5-43
515130D1 5-68
515132D1 11-77
515133D1 5-72
515197D1 3-12
515197D1 3-16
515416D1 3-37
515422D1 3-48
515573D1 3-41
515573D1 3-48
515575D1 3-48
515578D1 3-48
515600D1 3-48
515615D1 3-53
515930D1 5-33
515995D 2-30
516006D1 6-17
516006D1 6-44
516006D1 6-55
516452D1 4-196
516475D1 2-19
516475D1 2-30
516476D1 2-30
516477D1 2-30
516480D1 2-19
516481D1 2-19
516511D1 11-81
516512D1 11-21
516605D1 11-78
516605D1 11-79
516605D1 11-80
516607D1 11-83
516607D1 11-85
516609D1 11-83
516609D1 11-84
516622D1 3-19
516622D1 3-20
516622D1 3-21
516622D1 3-22
516623D1 3-23
516623D1 3-24
516623D1 3-25
516623D1 3-26
516624D1 3-51
516625D1 3-49
516815D1 3-66
516934D1 3-50
516934D1 3-52
516967D1 11-34
516968D1 11-36
516969D1 11-33
516969D1 11-50
516970D1 11-33
516970D1 11-50
516971D1 11-74
516972D1 11-33
516990D1 11-53
516990D1 11-57
516990D1 11-58
516990D1 11-73
516990D1 11-76
516991D1 11-53
516991D1 11-57
516991D1 11-58
516991D1 11-73
516991D1 11-76
516992D1 11-54
516992D1 11-55
517005D1 11-58
517005D1 11-76
517006D1 11-58
517006D1 11-76
517007D1 11-59
517007D1 11-60
517010D1 11-48
517010D1 5-69
517156D1 3-20
517156D1 3-24
517308D1 11-48
517308D1 11-49
517308D1 5-69
517404D1 6-62
517405D1 2-1
517405D1 2-3
517405D1 2-7
517405D1 4-25
517520D1 3-20
517520D1 3-24
517729D1 6-26
517729D1 6-27
518023D1 3-37
518024D1 3-36
518025D1 3-37
518026D1 3-41
518027D1 3-39
518290D1 5-65
518291D1 5-65
518292D1 5-65
518293D1 11-43
518294D1 11-39
518295D1 11-44
518298D1 5-67
518299D1 5-71
518324D1 11-39
518324D1 11-44
518325D1 11-39
518325D1 11-40
518325D1 11-41
518325D1 11-44
518325D1 11-45
518325D1 11-46
518326D1 11-39
518326D1 11-40
518326D1 11-41
518326D1 11-44
518326D1 11-45
518326D1 11-46
518327D1 11-39
518327D1 11-40
518327D1 11-44
518327D1 11-45
518328D1 11-41
518328D1 11-46
518329D1 11-39
518329D1 11-40
518329D1 11-41
518860D1 3-11
518860D1 3-12
518860D1 3-14
518860D1 3-3
518860D1 3-4
518860D1 3-6
518861D1 3-10
518861D1 3-15
518861D1 3-16
518861D1 3-18
518861D1 3-7
518861D1 3-8
519079D1 4-43
519134D1 2-30
519247D1 6-17
519270D1 11-53
519271D1 11-56
519330D1 11-22
519332D1 11-75
519340D1 11-50
519368D1 5-36
519372D1 5-11
519380D1 4-41
520331D1 6-17
520331D1 6-44
520331D1 6-55
520487D1 4-19
520488D1 4-19
520540D1 4-231
520541D1 4-200
520542D1 4-200
520543D1 4-200
520544D1 4-200
520580D1 10-2
520580D1 10-5
520580D1 10-7
520581D1 4-201
520582D1 4-201
520583D1 2-5
520583D1 4-11
520626D1 4-18
520626D1 4-200
520634D1 4-18
520635D1 4-200
520705D1 11-73
520706D1 4-238
520754D1 1-1
520755D1 1-2
520756D1 1-4
520756D1 1-6
520811D1 4-14

NUMERIC INDEX

520864D1 6-21
520893D1 4-200
520901D1 4-201
520952D1 2-19
521070D1 6-73
6623263 3-43
6623263 3-45
6623263 3-50
6623263 3-52
6626327 6-18
6626401 3-12
6626401 3-16
6626401 3-4
6626401 3-43
6626401 3-45
6626401 3-46
6626401 3-50
6626401 3-52
6626401 3-8
6630367 4-41
6670277 1-9
6672457 1-9
6804681 1-9
AG000313 2-17
AG000338 2-17
AG000346 2-17
AG000349 2-17
AG000482 2-17
AG000766 10-3
AG000766 11-28
AG000766 11-72
AG000766 1-8
AG000766 2-3
AG000766 2-4
AG000766 2-5
AG000766 4-11
AG000766 4-17
AG000766 4-186
AG000766 4-187
AG000766 4-202
AG000766 4-43
AG000766 4-49
AG000766 4-50
AG000766 4-51
AG000767 10-8
AG000767 11-51
AG000767 1-23
AG000767 1-27
AG000767 1-31
AG000768 1-23
AG000768 1-27
AG000768 1-31
AG000768 1-8
AG000768 4-43
AG000772 11-28
AG000772 11-72
AG000772 2-1
AG000772 2-13
AG000772 2-3
AG000772 2-4
AG000772 2-5
AG000772 2-7
AG000772 4-11
AG000772 4-17
AG000772 4-2
AG000772 4-202
AG000772 4-25
AG000772 4-40
AG000772 4-41
AG000772 4-44
AG000773 10-8
AG000773 11-30
AG000773 11-51
AG000773 2-2
AG000773 2-20
AG000773 2-22
AG000773 2-25
AG000773 2-4
AG000773 2-5
AG000773 2-6
AG000773 2-7
AG000773 4-11
AG000773 4-17
AG000773 4-196
AG000773 4-2
AG000773 4-202
AG000773 4-24
AG000773 4-25
AG000773 4-26
AG000773 4-27
AG000773 4-33
AG000773 4-40
AG000773 4-41
AG000773 7-1
AG000780 2-29
AG000780 2-31
AG000780 2-33
AG000789 2-29
AG000789 2-31
AG000789 2-33
AG000790 2-29
AG000790 2-31
AG000790 2-33
AG000793 2-29
AG000793 2-31
AG000793 2-33
AG000794 1-21
AG000794 2-15
AG000795 2-15
AG000795 2-24
AG000796 1-21
AG000796 2-15
AG000796 2-24
AG000801 1-21
AG000801 2-15
AG000801 2-24
AG000803 1-21
AG000803 2-15
AG000803 2-24
AG000823 1-20
AG000824 1-22
AG000829 1-20
AG000830 1-22
AG001260 8-2
AG002309 1-10
AG002435 11-66
AG002435 11-68
AG002435 11-70
AG005168 2-17
AG005492 1-22
AG005536 2-17
AG005662 2-24
AG005687 2-17
AG006175 2-17
AG006500 2-17
AG006504 2-17
AG006518 4-43
AG006573 2-29
AG006573 2-31
AG006573 2-33
AG006577 2-29
AG006578 1-21
AG006578 2-15
AG006581 1-21
AG006581 2-15
AG006582 1-21
AG006670 4-44
AG006671 10-9
AG006671 4-44
AG006947 2-17
AG006990 2-17
AG006991 2-17
AG006992 2-17
AG006993 2-17
AG006995 2-17
AG006997 2-17
AG007002 2-17
AG007004 2-17
AG007006 2-17
AG007007 2-17
AG007008 2-17
AG007009 2-17
AG007010 2-17
AG007170 2-17
AG007470 2-29
AG007470 2-31
AG007470 2-33
AG007474 2-24
AG007489 2-29
AG007489 2-31
AG007489 2-33
AG007505 1-10
AG007558 2-24
AG007566 2-24
AG007568 2-24
AG007578 1-21
AG007578 2-15

NUMERIC INDEX

AG007579 2-33
AG007580 2-31
AG007580 2-33
AG007657 2-17
AG007785 8-2
AG010220 3-1
AG010220 3-2
AG010220 3-43
AG010220 3-45
AG010220 3-50
AG010220 3-52
AG010354 4-1
AG010354 4-4
AG027273 4-100
AG027273 4-101
AG027273 4-102
AG027273 4-103
AG027273 4-104
AG027273 4-107
AG027273 4-120
AG027273 4-121
AG027273 4-129
AG027273 4-142
AG027273 4-143
AG027273 4-144
AG027273 4-145
AG027273 4-154
AG027273 4-155
AG027273 4-156
AG027273 4-158
AG027273 4-159
AG027273 4-170
AG027273 4-182
AG027273 4-183
AG027273 4-199
AG027273 4-212
AG027273 4-213
AG027273 4-214
AG027273 4-215
AG027273 4-217
AG027273 4-218
AG027273 4-219
AG027273 4-229
AG027273 4-232
AG027273 4-236
AG027273 4-237
AG027273 4-239
AG027273 4-85
AG027273 4-86
AG027273 4-93
AG027273 4-94
AG027273 4-96
AG027273 4-98
AG027274 3-65
AG027274 3-66
AG027274 4-100
AG027274 4-101
AG027274 4-102
AG027274 4-103
AG027274 4-104
AG027274 4-107
AG027274 4-120
AG027274 4-121
AG027274 4-129
AG027274 4-142
AG027274 4-143
AG027274 4-144
AG027274 4-145
AG027274 4-154
AG027274 4-155
AG027274 4-156
AG027274 4-158
AG027274 4-159
AG027274 4-170
AG027274 4-182
AG027274 4-183
AG027274 4-199
AG027274 4-212
AG027274 4-213
AG027274 4-214
AG027274 4-215
AG027274 4-217
AG027274 4-218
AG027274 4-219
AG027274 4-229
AG027274 4-232
AG027274 4-236
AG027274 4-237
AG027274 4-239
AG027274 4-85
AG027274 4-86
AG027274 4-93
AG027274 4-94
AG027274 4-96
AG027274 4-98
AG027274 6-26
AG027274 6-27
AG027274 6-35
AG027274 6-47
AG027275 1-16
AG027275 2-20
AG027275 2-3
AG027275 2-6
AG027275 3-36
AG027275 3-63
AG027275 3-64
AG027275 4-1
AG027275 4-100
AG027275 4-101
AG027275 4-102
AG027275 4-103
AG027275 4-104
AG027275 4-105
AG027275 4-106
AG027275 4-107
AG027275 4-108
AG027275 4-109
AG027275 4-110
AG027275 4-119
AG027275 4-120
AG027275 4-121
AG027275 4-122
AG027275 4-128
AG027275 4-129
AG027275 4-139
AG027275 4-140
AG027275 4-143
AG027275 4-144
AG027275 4-145
AG027275 4-146
AG027275 4-147
AG027275 4-148
AG027275 4-149
AG027275 4-150
AG027275 4-151
AG027275 4-152
AG027275 4-154
AG027275 4-155
AG027275 4-156
AG027275 4-162
AG027275 4-168
AG027275 4-169
AG027275 4-171
AG027275 4-182
AG027275 4-183
AG027275 4-184
AG027275 4-185
AG027275 4-188
AG027275 4-194
AG027275 4-195
AG027275 4-198
AG027275 4-209
AG027275 4-210
AG027275 4-211
AG027275 4-213
AG027275 4-215
AG027275 4-217
AG027275 4-218
AG027275 4-219
AG027275 4-229
AG027275 4-230
AG027275 4-231
AG027275 4-235
AG027275 4-239
AG027275 4-24
AG027275 4-25
AG027275 4-26
AG027275 4-27
AG027275 4-33
AG027275 4-4
AG027275 4-46
AG027275 4-47
AG027275 4-48
AG027275 4-49
AG027275 4-50
AG027275 4-51
AG027275 4-55

NUMERIC INDEX

AG027275	4-56
AG027275	4-57
AG027275	4-58
AG027275	4-59
AG027275	4-60
AG027275	4-69
AG027275	4-78
AG027275	4-85
AG027275	4-86
AG027275	4-87
AG027275	4-88
AG027275	4-91
AG027275	4-92
AG027275	4-94
AG027275	4-95
AG027275	4-96
AG027275	4-97
AG027275	6-18
AG027275	6-26
AG027275	6-27
AG027275	6-35
AG027275	6-51
AG027275	7-2
AG027275	7-4
AG027275	7-7
AG029233	6-34
AG029293	7-2
AG050205	10-9
AG050205	11-68
AG050205	4-44
AG050206	1-17
AG050206	1-19
AG050206	8-1
AG050209	8-2
AG050253	10-3
AG050253	2-3
AG050253	4-43
AG050257	10-9
AG050257	4-49
AG050257	4-50
AG050257	4-51
AG050259	1-17
AG050259	1-19
AG050260	11-28
AG050262	4-220
AG050264	4-2
AG050266	2-4
AG050266	2-5
AG050266	4-11
AG050266	4-17
AG050266	4-202
AG050269	1-23
AG050269	1-27
AG050269	1-31
AG050271	11-28
AG050271	2-4
AG050271	4-17
AG050271	4-202
AG050273	10-3
AG050273	4-186
AG050273	4-187
AG050273	4-49
AG050273	4-50
AG050275	1-8
AG050275	2-3
AG050394	2-11
AG050474	2-23
AG050475	4-45
AG050513	4-45
AG050514	4-45
AG050515	4-45
AG050516	4-45
AG050517	4-45
AG050518	4-45
AG050519	4-45
AG050520	4-45
AG050521	2-23
AG050522	2-23
AG050523	2-23
AG050524	2-23
AG050525	2-23
AG050526	2-23
AG050527	2-23
AG050528	2-23
AG050680	1-17
AG050680	1-19
AG050681	2-10
AG050683	1-17
AG050683	1-19
AG050689	1-23
AG050689	1-27
AG050689	1-31
AG050692	1-23
AG050692	1-27
AG050692	1-31
AG050692	1-8
AG051057	4-227
AG051059	10-5
AG051059	1-25
AG051059	1-26
AG051059	1-29
AG051059	1-30
AG051059	1-33
AG051059	1-34
AG051059	2-1
AG051059	4-111
AG051059	4-112
AG051059	4-113
AG051059	4-115
AG051059	4-116
AG051059	4-118
AG051059	4-123
AG051059	4-124
AG051059	4-125
AG051059	4-126
AG051059	4-131
AG051059	4-132
AG051059	4-133
AG051059	4-134
AG051059	4-157
AG051059	4-160
AG051059	4-181
AG051059	4-2
AG051059	4-202
AG051059	4-216
AG051059	4-222
AG051059	4-223
AG051059	4-227
AG051059	4-99
AG051125	1-17
AG051125	1-19
AG051126	4-228
AG051126	4-234
AG051126	8-10
AG051126	8-11
AG051126	8-12
AG051127	11-66
AG051127	11-70
AG051127	4-112
AG051127	4-113
AG051127	4-114
AG051127	4-115
AG051127	4-116
AG051127	4-123
AG051127	4-125
AG051127	4-126
AG051127	4-130
AG051127	4-132
AG051127	4-133
AG051127	4-165
AG051127	4-166
AG051127	4-203
AG051127	4-204
AG051127	4-205
AG051127	4-206
AG051127	4-207
AG051127	4-208
AG051127	4-222
AG051127	4-223
AG051127	4-225
AG051127	4-226
AG051128	4-163
AG051128	4-164
AG051128	4-165
AG051128	4-166
AG051128	4-172
AG051128	4-173
AG051128	4-174
AG051128	4-175
AG051128	4-203
AG051128	4-204
AG051128	4-221
AG051128	4-49
AG051128	4-50
AG051131	4-157
AG051131	4-20
AG051131	4-29

NUMERIC INDEX

AG051133 11-66
AG051133 11-68
AG051133 2-1
AG051133 2-3
AG051133 2-7
AG051133 4-25
AG051134 10-2
AG051134 10-7
AG051134 1-8
AG051134 2-22
AG051134 4-196
AG051135 10-2
AG051135 10-4
AG051135 10-7
AG051135 1-25
AG051135 1-26
AG051135 1-29
AG051135 1-30
AG051135 1-33
AG051135 1-34
AG051135 1-8
AG051136 1-8
AG051138 1-23
AG051138 1-27
AG051138 1-31
AG051138 1-8
AG051139 11-66
AG051139 11-68
AG051139 11-70
AG051142 11-66
AG051142 11-68
AG051142 11-70
AG051142 2-14
AG051143 4-44
AG051145 10-2
AG051145 10-7
AG051145 10-9
AG051145 1-23
AG051145 1-27
AG051145 1-31
AG051145 1-8
AG051146 10-2
AG051146 10-3
AG051146 10-7
AG051149 1-17
AG051149 1-19
AG051151 10-2
AG051151 10-5
AG051151 10-7
AG051151 11-68
AG051153 1-8
AG051153 4-111
AG051153 4-112
AG051153 4-113
AG051153 4-114
AG051153 4-115
AG051153 4-116
AG051153 4-118
AG051153 4-123
AG051153 4-124
AG051153 4-125
AG051153 4-126
AG051153 4-130
AG051153 4-131
AG051153 4-132
AG051153 4-133
AG051153 4-134
AG051153 4-160
AG051153 4-165
AG051153 4-166
AG051153 4-181
AG051153 4-216
AG051153 4-222
AG051153 4-223
AG051153 4-225
AG051153 4-226
AG051153 4-99
AG051161 10-2
AG051161 10-5
AG051161 10-7
AG051161 11-68
AG051161 4-180
AG051161 4-189
AG051162 1-9
AG051162 4-117
AG051162 4-135
AG051162 4-141
AG051162 4-161
AG051162 4-167
AG051162 4-176
AG051162 4-177
AG051162 4-179
AG051162 4-192
AG051162 4-197
AG051162 4-205
AG051162 4-206
AG051162 4-207
AG051162 4-208
AG051162 4-224
AG051162 4-233
AG051170 4-227
AG051170 4-228
AG051170 4-234
AG051170 4-240
AG051172 4-240
AG051172 4-49
AG051172 4-50
AG051174 8-2
AG051175 4-190
AG051176 11-66
AG051176 11-68
AG051176 11-70
AG051179 11-66
AG051180 8-10
AG051180 8-11
AG051180 8-12
AG051180 8-13
AG051180 8-14
AG051180 8-15
AG051180 8-16
AG051180 8-17
AG051180 8-6
AG051180 8-7
AG051180 8-8
AG051180 8-9
AG051181 10-9
AG051181 4-180
AG051181 4-189
AG051181 4-227
AG051181 4-228
AG051181 4-234
AG051182 1-23
AG051182 1-27
AG051182 1-31
AG051182 1-8
AG051182 8-1
AG051183 10-5
AG051183 2-4
AG051183 4-114
AG051183 4-130
AG051183 4-17
AG051183 4-225
AG051183 4-226
AG051183 4-40
AG051185 4-117
AG051185 4-135
AG051185 4-141
AG051185 4-179
AG051185 4-192
AG051185 4-197
AG051185 4-205
AG051185 4-206
AG051185 4-207
AG051185 4-208
AG051185 4-233
AG051185 4-240
AG051186 4-117
AG051186 4-135
AG051186 4-141
AG051186 4-161
AG051186 4-163
AG051186 4-164
AG051186 4-165
AG051186 4-166
AG051186 4-167
AG051186 4-172
AG051186 4-173
AG051186 4-174
AG051186 4-175
AG051186 4-176
AG051186 4-177
AG051186 4-179
AG051186 4-192
AG051186 4-197
AG051186 4-203
AG051186 4-204
AG051186 4-205

NUMERIC INDEX

AG051186 4-206
AG051186 4-207
AG051186 4-208
AG051186 4-221
AG051186 4-224
AG051186 4-233
AG051186 4-240
AG051186 4-49
AG051186 4-50
AG051435 4-228
AG051435 4-234
AG051436 11-66
AG051436 11-70
AG051436 4-180
AG051436 4-189
AG051437 4-117
AG051437 4-135
AG051437 4-141
AG051437 4-161
AG051437 4-163
AG051437 4-164
AG051437 4-165
AG051437 4-166
AG051437 4-167
AG051437 4-172
AG051437 4-173
AG051437 4-174
AG051437 4-175
AG051437 4-176
AG051437 4-177
AG051437 4-179
AG051437 4-192
AG051437 4-197
AG051437 4-203
AG051437 4-204
AG051437 4-205
AG051437 4-206
AG051437 4-207
AG051437 4-208
AG051437 4-221
AG051437 4-224
AG051437 4-233
AG051438 1-8
AG051439 2-3
AG051442 4-124
AG051442 4-227
AG051442 4-99
AG051443 4-153
AG051443 4-51
AG051533 10-3
AG051533 2-3
AG051533 4-186
AG051533 4-187
AG051533 4-202
AG051534 10-3
AG051534 2-4
AG051534 4-153
AG051534 4-17
AG051534 4-178
AG051534 4-220
AG051534 4-49
AG051534 4-50
AG051534 4-51
AG051535 4-61
AG051535 4-62
AG051535 4-63
AG051535 4-64
AG051535 4-65
AG051535 4-66
AG051535 4-67
AG051535 4-68
AG051535 4-70
AG051535 4-71
AG051535 4-72
AG051535 4-73
AG051535 4-74
AG051535 4-75
AG051535 4-76
AG051535 4-77
AG051535 4-79
AG051535 4-80
AG051535 4-81
AG051535 4-82
AG051535 4-83
AG051535 4-84
AG051536 1-23
AG051536 1-27
AG051536 1-31
AG051536 4-111
AG051536 4-112
AG051536 4-113
AG051536 4-114
AG051536 4-115
AG051536 4-116
AG051536 4-117
AG051536 4-118
AG051536 4-123
AG051536 4-124
AG051536 4-125
AG051536 4-126
AG051536 4-130
AG051536 4-131
AG051536 4-132
AG051536 4-133
AG051536 4-134
AG051536 4-135
AG051536 4-141
AG051536 4-153
AG051536 4-157
AG051536 4-160
AG051536 4-161
AG051536 4-163
AG051536 4-164
AG051536 4-165
AG051536 4-166
AG051536 4-167
AG051536 4-172
AG051536 4-173
AG051536 4-174
AG051536 4-175
AG051536 4-176
AG051536 4-177
AG051536 4-178
AG051536 4-179
AG051536 4-180
AG051536 4-181
AG051536 4-186
AG051536 4-187
AG051536 4-189
AG051536 4-192
AG051536 4-197
AG051536 4-203
AG051536 4-204
AG051536 4-205
AG051536 4-206
AG051536 4-207
AG051536 4-208
AG051536 4-216
AG051536 4-221
AG051536 4-222
AG051536 4-223
AG051536 4-224
AG051536 4-225
AG051536 4-226
AG051536 4-227
AG051536 4-228
AG051536 4-233
AG051536 4-234
AG051536 4-240
AG051536 4-99
AG051573 11-30
AG051573 2-20
AG051573 7-1
AG051740 2-1
AG051740 2-3
AG051740 2-7
AG051740 4-25
AG051740 8-2
AG051822 2-15
AG051850 4-240
AG051884 4-61
AG051884 4-62
AG051884 4-63
AG051884 4-64
AG051884 4-65
AG051884 4-66
AG051884 4-67
AG051884 4-68
AG051884 4-70
AG051884 4-71
AG051884 4-72
AG051884 4-73
AG051884 4-74
AG051884 4-75
AG051884 4-76
AG051884 4-77
AG051884 4-79

NUMERIC INDEX

AG051884 4-80
AG051884 4-81
AG051884 4-82
AG051884 4-83
AG051884 4-84
AG051888 2-4
AG051888 2-5
AG051888 4-11
AG051888 4-17
AG051888 4-202
AG051894 2-3
AG051894 2-7
AG051894 4-25
AG051901 8-2
AG051903 11-68
AG051903 4-67
AG051903 4-68
AG051903 4-76
AG051903 4-77
AG051904 2-1
AG051904 4-112
AG051904 4-113
AG051904 4-132
AG051904 4-133
AG051910 4-61
AG051910 4-70
AG051910 4-79
AG051932 4-65
AG051932 4-66
AG051932 4-67
AG051932 4-68
AG051932 4-73
AG051932 4-74
AG051932 4-76
AG051932 4-77
AG051934 8-2
AG051940 4-22
AG051940 4-23
AG052340 4-43
AG052343 11-66
AG052343 4-44
AG052351 4-42
AG052456 2-3
AG052456 2-7
AG052456 4-25
AG052854 2-17
AG053044 2-3
AG053070 11-66
AG053070 11-68
AG053070 11-70
AG053079 1-17
AG053079 1-19
AG053079 4-153
AG053079 4-186
AG053079 4-187
AG053081 4-227
AG053081 4-240
AG053265 4-34
AG053265 4-35
AG053484 4-42
AG053485 4-42
AG053738 11-72
AG053860 1-21
AG053860 2-15
AG054233 2-29
AG054233 2-31
AG054233 2-33
AG054234 1-21
AG054234 2-15
AG054234 2-24
AG054234 2-31
AG054234 2-33
AG054235 1-21
AG054235 2-15
AG054235 2-24
AG054235 2-29
AG054235 2-31
AG054235 2-33
AG054488 1-21
AG054488 2-15
AG054488 2-24
AG054738 1-9
AG054739 10-4
AG054739 1-9
AG054740 1-9
AG054822 2-15
AG055073 2-17
AG055120 2-29
AG055120 2-31
AG055120 2-33
AG055296 4-49
AG055296 4-50
AG055296 4-51
AG055299 4-153
AG055299 4-178
AG055672 1-9
AG055912 4-41
AG056114 2-29
AG056114 2-33
AG056115 2-29
AG056115 2-33
AG056146 2-14
AG056226 2-17
AG056270 2-25
AG056275 11-66
AG056275 11-68
AG056275 1-17
AG056275 11-70
AG056275 1-19
AG056275 2-25
AG056277 11-66
AG056277 1-17
AG056277 11-70
AG056277 1-19
AG056278 1-17
AG056278 1-19
AG056280 11-70
AG056283 11-72
AG056284 4-40
AG056286 11-88
AG056289 2-4
AG056289 2-5
AG056289 4-11
AG056289 4-17
AG056289 4-202
AG056289 4-25
AG056290 11-28
AG056290 11-72
AG056290 4-41
AG056290 4-44
AG056291 2-5
AG056291 2-7
AG056292 11-28
AG056292 11-72
AG056293 11-28
AG056778 11-66
AG056778 11-68
AG056778 1-17
AG056778 11-70
AG056778 1-19
AG056778 2-25
AG056785 11-28
AG056785 11-72
AG056785 2-1
AG056785 2-13
AG056785 2-3
AG056785 2-4
AG056785 2-5
AG056785 2-7
AG056785 4-11
AG056785 4-17
AG056785 4-2
AG056785 4-202
AG056785 4-25
AG056785 4-40
AG056785 4-41
AG056785 4-44
AG057341 2-24
AG057573 11-28
AG057575 2-13
AG057593 2-1
AG057593 2-3
AG057593 2-4
AG057593 2-7
AG057593 4-17
AG057593 4-2
AG057593 4-202
AG057594 4-25
AG057594 4-26
AG057764 2-21
AG057999 11-72
AG058978 2-17
AG058979 2-17
AG059011 2-15
AG059018 11-48
AG059018 11-49
AG059018 5-19

NUMERIC INDEX

AG059018 5-20
AG059018 5-69
AG059018 5-70
AG059020 2-29
AG059020 2-31
AG059020 2-33
AG059106 2-28
AG059148 11-48
AG059148 5-19
AG059148 5-69
AG059545 1-9
AG059565 2-20
AG059565 2-22
AG059566 11-68
AG059570 4-43
AG059580 1-8
AG059581 11-66
AG059581 11-68
AG059581 11-70
AG059582 11-66
AG059582 11-68
AG059665 5-2
AG059914 5-49
AG059917 5-49
AG059917 5-54
AG060056 2-28
AG060083 2-11
AG060084 2-11
AG060085 2-28
AG060231 1-9
AG060702 5-49
AG060702 5-54
AG060921 2-18
AG060921 4-3
AG061231 5-10
AG061231 5-38
AG061235 5-45
AG061236 5-10
AG061236 5-2
AG061236 5-38
AG061236 5-45
AG061236 5-62
AG061236 5-8
AG106152 2-1
AG106152 2-3
AG106152 2-7
AG106152 4-25
AG108268 3-28
AG108268 3-32
AG108268 3-38
AG108316 2-19
AG108316 2-30
AG108337 6-9
AG108486 10-3
AG108487 10-3
AG108604 3-28
AG108604 3-32
AG108604 3-38
AG108617 8-10
AG108617 8-14
AG108617 8-15
AG108617 8-8
AG108617 8-9
AG108618 8-10
AG108618 8-14
AG108618 8-15
AG108618 8-8
AG108618 8-9
AG108622 3-28
AG108622 3-32
AG108622 3-37
AG108659 4-190
AG108935 3-56
AG108935 3-57
AG108935 8-10
AG108935 8-11
AG108935 8-12
AG109190 4-89
AG109953 3-63
AG109953 3-64
AG121042 1-1
AG121042 1-2
AG121042 1-4
AG121042 1-6
AG121093 1-24
AG121382 11-49
AG121382 5-19
AG121382 5-20
AG121382 5-21
AG121382 5-69
AG121444 5-52
AG121461 1-6
AG121462 1-4
AG121462 1-6
AG121463 1-4
AG121465 5-54
AG121483 11-48
AG121483 5-19
AG121483 5-69
AG121484 11-48
AG121484 5-19
AG121484 5-21
AG121484 5-69
AG121485 11-48
AG121485 5-19
AG121485 5-69
AG121486 11-48
AG121486 5-19
AG121486 5-69
AG121489 5-19
AG121495 11-48
AG121495 5-19
AG121495 5-69
AG121525 1-32
AG121716 6-73
AG121750 6-58
AG121750 6-61
AG121750 6-69
AG121750 7-2
AG121752 6-73
AG121862 1-4
AG121864 10-2
AG121864 10-7
AG121868 6-33
AG121868 6-36
AG121868 6-8
AG121882 2-4
AG121882 2-5
AG121882 4-11
AG121882 4-17
AG121882 4-2
AG121882 4-202
AG121882 6-2
AG121882 6-5
AG121882 6-7
AG121883 2-1
AG121883 2-3
AG121883 2-4
AG121883 2-7
AG121883 4-17
AG121883 4-202
AG121883 4-25
AG121883 6-5
AG121920 11-48
AG121920 5-19
AG121920 5-69
AG121921 11-48
AG121921 5-19
AG121921 5-69
AG121922 2-18
AG121922 2-2
AG121922 4-3
AG121923 2-18
AG121924 2-18
AG121924 2-2
AG121924 4-3
AG121925 2-18
AG121925 4-3
AG121926 2-18
AG121926 2-2
AG121926 4-3
AG121926 6-3
AG121927 11-49
AG121927 5-20
AG121927 5-70
AG121929 2-2
AG121929 4-3
AG121930 2-2
AG121930 2-7
AG121934 11-62
AG121951 2-20
AG121956 11-30
AG121956 2-20
AG121959 2-21
AG121960 2-21
AG121961 2-21
AG121962 2-21

NUMERIC INDEX

AG121969 6-73
AG121970 6-73
AG122002 6-73
AG122003 6-73
AG122004 6-73
AG122005 6-73
AG122006 6-73
AG122038 1-15
AG122038 1-24
AG122038 1-28
AG122038 1-32
AG122116 8-5
AG122134 6-73
AG122147 2-4
AG122147 4-17
AG122147 4-2
AG122148 4-1
AG122148 4-4
AG122148 4-5
AG122202 1-6
AG122232 6-73
AG122288 6-67
AG122288 6-68
AG122288 6-69
AG122290 6-45
AG122291 6-45
AG122292 6-45
AG122309 6-26
AG122309 6-27
AG122309 6-35
AG122310 6-58
AG122310 6-61
AG122310 6-69
AG122311 6-35
AG122312 6-45
AG122328 4-1
AG122329 4-1
AG122329 4-4
AG122329 4-5
AG122330 4-1
AG122330 4-4
AG122330 4-5
AG122331 4-1
AG122331 4-4
AG122331 4-5
AG122382 6-73
AG122388 6-73
AG122390 11-19
AG122390 11-20
AG122390 5-37
AG122390 5-39
AG122391 5-61
AG122392 5-35
AG122392 5-9
AG122434 5-62
AG122436 5-10
AG122448 5-38
AG122450 4-4
AG122510 4-127
AG122512 4-1
AG122512 4-5
AG122513 4-6
AG122513 4-8
AG122514 4-1
AG122514 4-5
AG122515 4-5
AG122520 4-6
AG122520 4-8
AG122521 4-12
AG122521 4-18
AG122521 4-200
AG122521 4-6
AG122521 4-8
AG122561 7-2
AG122562 2-20
AG122562 7-7
AG122606 4-8
AG122607 4-8
AG122608 4-6
AG122609 4-8
AG122610 4-6
AG122611 2-20
AG122611 7-4
AG122651 2-10
AG122657 11-15
AG122657 11-17
AG122657 11-18
AG122657 4-28
AG122859 10-2
AG122859 10-5
AG122859 10-7
AG122879 10-5
AG122957 4-6
AG122957 4-8
AG122992 4-59
AG122992 4-60
AG123003 6-67
AG123005 3-31
AG123029 4-2
AG123068 2-14
AG123070 2-16
AG123071 2-16
AG123072 2-16
AG123073 2-16
AG123074 5-59
AG123189 3-65
AG123189 3-66
AG123190 3-65
AG123190 3-66
AG123592 11-51
AG123593 4-89
AG123647 1-16
AG123648 1-16
AG123649 1-16
AG123760 11-29
AG123805 1-15
AG123805 1-24
AG123805 1-28
AG123805 1-32
AG123944 4-89
AG123996 11-51
AG123999 11-51
AG124036 6-28
AG124281 11-28
AG124282 2-19
AG124283 2-19
AG124285 2-19
AG124288 11-28
AG124433 6-52
AG124437 4-44
AG124868 6-73
AG125811 11-48
AG125811 5-19
AG125811 5-69
AG125908 6-45
AG126088 6-46
AG126100 11-66
AG126100 11-68
AG126234 6-58
AG126326 5-1
AG126884 3-12
AG126884 3-13
AG126884 3-16
AG126884 3-17
AG126884 3-20
AG126884 3-21
AG126884 3-25
AG126884 3-4
AG126884 3-5
AG126884 3-8
AG126884 3-9
AG127749 5-2
AG127816 1-23
AG127817 1-31
AG127818 1-27
AG127822 1-6
AG127823 1-4
AG127824 1-2
AG127825 1-15
AG127825 1-24
AG127825 1-28
AG127825 1-32
AG127826 1-24
AG127826 1-28
AG127826 1-32
AG127827 1-15
AG127827 1-24
AG127827 1-32
AG127828 1-15
AG127828 1-24
AG127828 1-32
AG127829 1-28
AG127830 1-28
AG127831 1-15
AG127831 1-24
AG127831 1-28
AG127831 1-32

NUMERIC INDEX

AG127832	1-6
AG127833	1-4
AG127834	1-2
AG127882	1-3
AG127882	1-5
AG127882	1-7
AG128011	1-15
AG128011	1-24
AG128011	1-32
AG128103	1-25
AG128103	1-26
AG128108	1-7
AG128109	1-7
AG128110	1-7
AG128111	1-7
AG128264	1-25
AG128264	1-26
AG128264	1-29
AG128264	1-30
AG128264	1-33
AG128264	1-34
AG128265	1-5
AG128266	1-5
AG128268	1-33
AG128268	1-34
AG128269	1-5
AG128270	1-5
AG128490	1-3
AG128491	1-3
AG128492	1-3
AG128493	1-3
AG128495	1-29
AG128510	1-30
AG128771	2-13
AG128842	3-46
AG128843	3-46
AG128843	4-40
AG128977	4-43
AG129132	4-40
AG129187	10-2
AG129187	10-3
AG129187	10-4
AG129187	10-5
AG129187	10-7
AG129187	10-8
AG129187	11-15
AG129187	11-17
AG129187	11-18
AG129187	11-28
AG129187	11-30
AG129187	11-51
AG129187	11-68
AG129187	1-17
AG129187	11-70
AG129187	11-72
AG129187	1-18
AG129187	11-88
AG129187	1-19
AG129187	1-20
AG129187	1-22
AG129187	1-23
AG129187	1-25
AG129187	1-26
AG129187	1-27
AG129187	1-29
AG129187	1-30
AG129187	1-31
AG129187	1-33
AG129187	1-34
AG129187	1-8
AG129187	2-1
AG129187	2-10
AG129187	2-14
AG129187	2-26
AG129187	2-3
AG129187	2-30
AG129187	2-4
AG129187	2-5
AG129187	2-7
AG129187	4-11
AG129187	4-111
AG129187	4-112
AG129187	4-113
AG129187	4-114
AG129187	4-115
AG129187	4-116
AG129187	4-117
AG129187	4-118
AG129187	4-123
AG129187	4-124
AG129187	4-125
AG129187	4-126
AG129187	4-127
AG129187	4-130
AG129187	4-131
AG129187	4-132
AG129187	4-133
AG129187	4-134
AG129187	4-135
AG129187	4-141
AG129187	4-153
AG129187	4-157
AG129187	4-160
AG129187	4-161
AG129187	4-163
AG129187	4-164
AG129187	4-165
AG129187	4-166
AG129187	4-167
AG129187	4-17
AG129187	4-172
AG129187	4-173
AG129187	4-174
AG129187	4-175
AG129187	4-176
AG129187	4-177
AG129187	4-178
AG129187	4-179
AG129187	4-180
AG129187	4-181
AG129187	4-186
AG129187	4-187
AG129187	4-189
AG129187	4-190
AG129187	4-192
AG129187	4-196
AG129187	4-197
AG129187	4-2
AG129187	4-20
AG129187	4-202
AG129187	4-203
AG129187	4-204
AG129187	4-205
AG129187	4-206
AG129187	4-207
AG129187	4-208
AG129187	4-216
AG129187	4-22
AG129187	4-220
AG129187	4-221
AG129187	4-222
AG129187	4-223
AG129187	4-224
AG129187	4-225
AG129187	4-226
AG129187	4-227
AG129187	4-228
AG129187	4-23
AG129187	4-233
AG129187	4-234
AG129187	4-240
AG129187	4-25
AG129187	4-28
AG129187	4-29
AG129187	4-30
AG129187	4-40
AG129187	4-41
AG129187	4-43
AG129187	4-44
AG129187	4-51
AG129187	4-61
AG129187	4-62
AG129187	4-63
AG129187	4-64
AG129187	4-65
AG129187	4-66
AG129187	4-67
AG129187	4-68
AG129187	4-70
AG129187	4-71
AG129187	4-72
AG129187	4-73
AG129187	4-74
AG129187	4-75
AG129187	4-76
AG129187	4-77
AG129187	4-79

NUMERIC INDEX

AG129187	4-80
AG129187	4-81
AG129187	4-82
AG129187	4-83
AG129187	4-84
AG129187	4-89
AG129187	4-99
AG129187	8-1
AG129187	8-10
AG129187	8-11
AG129187	8-12
AG129187	8-13
AG129187	8-14
AG129187	8-15
AG129187	8-16
AG129187	8-17
AG129187	8-2
AG129187	8-5
AG129187	8-6
AG129187	8-7
AG129187	8-8
AG129187	8-9
AG129192	3-43
AG129192	3-45
AG129192	3-50
AG129192	3-52
AG129193	3-43
AG129193	3-45
AG129193	3-50
AG129193	3-52
AG129928	5-62
AG130562	6-26
AG130562	6-27
AG130563	6-26
AG130563	6-27
AG130564	6-26
AG130564	6-27
AG130565	11-31
AG130565	6-25
AG130566	11-31
AG130566	6-25
AG130567	6-18
AG130567	6-51
AG131011	4-43
AG131014	1-13
AG131015	1-13
AG131407	6-57
AG131407	6-58
AG131407	6-59
AG131407	6-64
AG131468	11-16
AG131469	11-16
AG131470	11-16
AG131471	11-16
AG131475	11-16
AG131476	11-16
AG131486	2-17
AG131487	2-17
AG131494	2-17
AG131550	5-62
AG131551	5-62
AG131593	5-62
AG131608	5-62
AG131609	5-62
AG131680	2-22
AG131681	4-54
AG131682	4-54
AG131683	4-54
AG131731	2-2
AG131731	4-3
AG131732	2-2
AG131732	4-3
AG131733	2-2
AG131733	4-3
AG131734	2-2
AG131734	4-3
AG131735	2-2
AG131735	4-3
AG131736	2-2
AG131737	2-2
AG131737	4-3
AG131738	2-2
AG131738	4-3
AG131739	2-2
AG131739	4-3
AG131739	6-3
AG131743	2-2
AG131743	4-3
AG131743	6-3
AG131744	2-2
AG131744	4-3
AG131744	6-3
AG131745	2-2
AG131745	4-3
AG131745	6-3
AG131746	2-2
AG131746	4-3
AG131746	6-3
AG131747	2-2
AG131747	4-3
AG131747	6-3
AG131748	2-2
AG131748	4-3
AG131748	6-3
AG131776	4-3
AG132126	5-60
AG132127	5-60
AG132128	5-60
AG132129	5-60
AG132130	5-60
AG132131	5-60
AG132132	5-60
AG132133	5-60
AG132134	5-60
AG132135	5-60
AG132136	5-60
AG132137	5-60
AG132138	5-60
AG132139	5-60
AG132140	5-60
AG132141	5-60
AG132375	2-32
AG132376	2-32
AG132377	2-32
AG132378	2-32
AG132615	5-56
AG134004	1-28
AG134024	1-25
AG134024	1-26
AG134025	1-33
AG134025	1-34
AG134026	1-29
AG134026	1-30
AG134091	6-21
AG134119	6-18
AG134124	6-17
AG134125	6-26
AG134126	6-27
AG134191	4-41
AG134343	10-8
AG134343	11-51
AG134357	2-25
AG134603	4-157
AG134603	4-20
AG134604	11-18
AG134605	4-85
AG134605	4-86
AG134620	4-1
AG134621	4-1
AG134622	4-1
AG134623	4-1
AG134624	4-1
AG134625	4-1
AG134626	4-1
AG134627	4-1
AG134628	4-4
AG134629	4-4
AG134630	4-4
AG134631	4-4
AG134632	4-4
AG134633	4-4
AG134634	4-4
AG134635	4-4
AG134636	4-5
AG134637	4-5
AG134638	4-5
AG134639	4-5
AG134640	4-5
AG134641	4-5
AG134642	4-7
AG134649	4-13
AG134651	4-9
AG134652	4-9
AG134653	4-9
AG134657	4-10
AG134667	4-9
AG134668	11-15

NUMERIC INDEX

AG134669 11-17
AG134670 11-15
AG134747 11-15
AG134753 4-22
AG134756 4-87
AG134756 4-88
AG134845 11-17
AG134845 11-18
AG134846 11-17
AG134846 11-18
AG134849 4-23
AG134850 4-114
AG134850 4-234
AG135071 4-24
AG135097 2-5
AG135097 4-11
AG135312 1-8
AG135332 1-1
AG135333 1-15
AG135379 1-1
AG135380 1-1
AG135432 1-15
AG135906 1-1
AG135911 2-12
AG135913 11-23
AG135919 11-86
AG135942 8-5
AG136100 1-15
AG136118 8-1
AG136119 8-5
AG136120 8-1
AG136200 10-3
AG136740 11-6
AG136741 3-28
AG136741 3-32
AG136741 3-37
AG136742 11-10
AG136743 5-31
AG136788 3-42
AG136788 3-43
AG136788 3-44
AG136788 3-45
AG136788 3-49
AG136788 3-50
AG136788 3-51
AG136788 3-52
AG136814 3-42
AG136815 3-44
AG136818 3-43
AG136818 3-45
AG136818 3-50
AG136818 3-52
AG136819 3-46
AG136821 5-63
AG136822 5-64
AG136825 11-38
AG136825 11-8
AG136825 11-9
AG136825 5-66
AG136826 5-29
AG136946 3-35
AG136947 3-20
AG136947 3-24
AG136947 3-39
AG136947 3-40
AG136949 3-34
AG136967 3-20
AG136967 3-24
AG136969 3-22
AG136969 3-26
AG136970 3-20
AG136970 3-24
AG136971 3-20
AG136971 3-24
AG136973 3-58
AG136973 3-59
AG136974 4-191
AG136977 4-191
AG136979 3-20
AG136979 3-24
AG136980 3-20
AG136981 3-24
AG136982 3-61
AG136983 3-60
AG136987 3-20
AG136987 3-24
AG136988 3-62
AG136992 3-62
AG136993 3-26
AG136994 3-22
AG136995 3-63
AG136996 3-64
AG137424 5-60
AG138348 5-2
AG138348 5-8
AG138370 5-38
AG138398 5-45
AG138400 5-62
AG138401 5-62
AG138402 5-62
AG138416 5-2
AG139087 5-57
AG139107 5-42
AG139429 6-3
AG139430 6-3
AG139431 6-3
AG139432 6-3
AG139433 6-3
AG139434 6-3
AG139435 6-3
AG139436 6-3
AG139437 6-3
AG139438 6-3
AG139439 6-3
AG139440 6-3
AG139441 6-3
AG139442 6-3
AG139443 6-3
AG139444 6-3
AG139445 6-3
AG139446 6-3
AG139447 6-3
AG139448 6-3
AG139449 6-3
AG140050 6-18
AG200557 3-27
AG200557 3-36
AG200573 3-27
AG200573 3-36
AG201588 9-1
AG201588 9-2
AG209236 11-74
AG209236 11-75
AG209384 11-52
AG209384 11-61
AG209384 11-74
AG209384 11-75
AG211441 4-48
AG212432 11-70
AG212433 11-70
AG216360 1-1
AG216853 1-36
AG217489 4-83
AG217494 4-65
AG217494 4-66
AG217585 8-10
AG217585 8-11
AG217585 8-12
AG217585 8-14
AG217585 8-15
AG217585 8-8
AG217585 8-9
AG217586 8-10
AG217586 8-11
AG217586 8-12
AG217586 8-14
AG217586 8-15
AG217586 8-8
AG217586 8-9
AG217597 4-61
AG217598 4-61
AG217599 4-62
AG217599 4-63
AG217603 4-65
AG217603 4-66
AG217605 4-64
AG217605 4-67
AG217605 4-68
AG217609 4-1
AG217609 4-4
AG217610 4-65
AG217610 4-66
AG217610 4-73
AG217610 4-74
AG217611 4-67
AG217611 4-68
AG217612 4-67

NUMERIC INDEX

AG217612 4-68
AG217616 4-80
AG217616 4-81
AG217616 4-84
AG217622 4-84
AG217642 8-11
AG217643 4-73
AG217643 4-74
AG217645 4-70
AG217646 4-70
AG217648 4-75
AG217649 4-76
AG217649 4-77
AG217650 4-76
AG217650 4-77
AG217651 4-76
AG217651 4-77
AG217656 8-11
AG228236 3-1
AG228236 3-2
AG228237 3-1
AG228237 3-2
AG229555 9-1
AG229555 9-2
AG229652 3-28
AG229652 3-32
AG229652 3-37
AG229659 3-28
AG229660 3-30
AG229660 3-35
AG229661 3-28
AG229661 3-30
AG229661 3-32
AG229661 3-35
AG229828 3-1
AG229828 3-2
AG229905 3-1
AG229905 3-2
AG230095 11-28
AG230095 11-72
AG230129 3-13
AG230129 3-17
AG230129 3-5
AG230129 3-9
AG230237 3-12
AG230237 3-16
AG230237 3-4
AG230237 3-8
AG230238 3-12
AG230238 3-16
AG230238 3-4
AG230238 3-8
AG230263 3-12
AG230263 3-16
AG230263 3-4
AG230263 3-8
AG230312 3-55
AG230314 2-20
AG230314 2-22
AG230314 4-30
AG231204 11-56
AG231204 11-57
AG231204 11-59
AG231204 11-60
AG231204 11-73
AG231204 2-4
AG231204 2-5
AG231204 3-56
AG231204 3-57
AG231204 3-60
AG231204 3-61
AG231204 3-63
AG231204 3-64
AG231204 4-1
AG231204 4-100
AG231204 4-101
AG231204 4-103
AG231204 4-105
AG231204 4-107
AG231204 4-109
AG231204 4-11
AG231204 4-110
AG231204 4-119
AG231204 4-120
AG231204 4-121
AG231204 4-122
AG231204 4-128
AG231204 4-129
AG231204 4-139
AG231204 4-140
AG231204 4-142
AG231204 4-143
AG231204 4-144
AG231204 4-145
AG231204 4-146
AG231204 4-147
AG231204 4-148
AG231204 4-150
AG231204 4-151
AG231204 4-152
AG231204 4-158
AG231204 4-159
AG231204 4-162
AG231204 4-168
AG231204 4-17
AG231204 4-170
AG231204 4-171
AG231204 4-182
AG231204 4-183
AG231204 4-184
AG231204 4-185
AG231204 4-188
AG231204 4-194
AG231204 4-195
AG231204 4-198
AG231204 4-2
AG231204 4-202
AG231204 4-209
AG231204 4-214
AG231204 4-215
AG231204 4-217
AG231204 4-218
AG231204 4-219
AG231204 4-231
AG231204 4-235
AG231204 4-236
AG231204 4-237
AG231204 4-238
AG231204 4-239
AG231204 4-4
AG231204 4-46
AG231204 4-47
AG231204 4-49
AG231204 4-50
AG231204 4-51
AG231204 4-55
AG231204 4-56
AG231204 4-57
AG231204 4-58
AG231204 4-60
AG231204 4-78
AG231204 4-91
AG231204 4-92
AG231204 4-93
AG231204 4-94
AG231204 4-95
AG231204 4-96
AG231204 6-13
AG231204 6-51
AG231204 8-10
AG231204 8-11
AG231204 8-12
AG231211 4-79
AG231212 4-79
AG231940 6-34
AG232241 3-12
AG232241 3-16
AG232241 3-4
AG232241 3-8
AG232718 8-10
AG232718 8-11
AG232718 8-12
AG232784 4-108
AG232784 4-109
AG232784 4-119
AG232784 4-122
AG232784 4-55
AG232784 4-56
AG232784 4-57
AG232784 4-58
AG232784 4-59
AG232784 4-60
AG232784 4-69
AG232784 4-78
AG232784 4-91
AG232784 4-92
AG232784 4-95

NUMERIC INDEX

AG232784 4-97
AG232797 3-56
AG232797 3-57
AG232935 6-69
AG232940 4-64
AG233057 3-1
AG233057 3-10
AG233057 3-14
AG233057 3-18
AG233057 3-2
AG233057 3-6
AG233132 1-9
AG233134 1-9
AG233237 4-82
AG234240 8-2
AG234310 6-13
AG234372 4-71
AG234372 4-72
AG234373 4-104
AG234373 4-110
AG234373 4-120
AG234373 4-128
AG234373 4-150
AG234373 4-235
AG234373 4-236
AG234373 4-237
AG234373 4-93
AG234373 4-98
AG234375 4-100
AG234375 4-103
AG234375 4-107
AG234375 4-121
AG234375 4-129
AG234375 4-94
AG234375 4-96
AG234462 4-134
AG234462 4-221
AG234467 4-180
AG234469 4-177
AG234469 4-224
AG234489 4-127
AG234703 9-1
AG234703 9-2
AG234787 4-112
AG234787 4-113
AG234787 4-132
AG234787 4-133
AG235002 6-73
AG235467 6-34
AG235928 6-11
AG237562 9-1
AG237562 9-2
AG237653 1-17
AG237653 1-19
AG237787 4-177
AG237787 4-224
AG237961 4-39
AG238315 4-39
AG238431 4-71
AG238431 4-72
AG238498 4-73
AG238498 4-74
AG238499 4-73
AG238499 4-74
AG239692 4-89
AG239721 4-123
AG239721 4-124
AG239721 4-130
AG239721 4-134
AG239721 4-135
AG239721 4-178
AG239721 4-179
AG239721 4-187
AG239721 4-189
AG239721 4-197
AG239721 4-221
AG239721 4-227
AG239721 4-228
AG239722 4-125
AG239722 4-126
AG239722 4-131
AG239722 4-222
AG239722 4-223
AG239723 4-125
AG239723 4-126
AG239723 4-131
AG239723 4-132
AG239723 4-133
AG239723 4-174
AG239723 4-175
AG239723 4-222
AG239723 4-223
AG239791 4-80
AG239791 4-81
AG239792 4-75
AG239797 4-176
AG239873 6-13
AG239874 6-13
AG239929 4-111
AG239929 4-205
AG239929 4-206
AG239930 4-117
AG239930 4-141
AG239930 4-167
AG239930 4-181
AG239930 4-186
AG239930 4-192
AG239933 4-157
AG239933 4-165
AG239933 4-166
AG239934 4-160
AG239934 4-165
AG239934 4-166
AG239935 4-111
AG239935 4-203
AG239935 4-204
AG239935 4-205
AG239935 4-206
AG239935 4-216
AG239936 4-112
AG239936 4-113
AG239936 4-115
AG239936 4-116
AG239936 4-160
AG239936 4-161
AG239936 4-163
AG239936 4-164
AG239936 4-225
AG239936 4-226
AG239937 4-114
AG239937 4-118
AG239937 4-141
AG239937 4-153
AG239937 4-167
AG239937 4-181
AG239937 4-186
AG239937 4-233
AG239937 4-234
AG239937 4-240
AG239937 4-99
AG239938 4-153
AG239938 4-161
AG239938 4-240
AG239938 4-99
AG239998 4-172
AG239998 4-173
AG260019 1-17
AG260019 1-19
AG260021 1-18
AG260022 1-18
AG260121 9-2
AG260239 4-49
AG260239 4-50
AG260241 4-49
AG260241 4-50
AG260241 4-51
AG260458 4-49
AG260458 4-50
AG260461 4-49
AG260461 4-50
AG260508 2-3
AG260508 4-25
AG260590 3-1
AG260590 3-2
AG260592 3-1
AG260592 3-2
AG260631 3-1
AG260631 3-2
AG260770 3-13
AG260770 3-17
AG260770 3-21
AG260770 3-25
AG260770 3-5
AG260770 3-9
AG260869 9-1
AG260869 9-2
AG261322 4-102

NUMERIC INDEX

AG261322 4-106
AG261322 4-169
AG261322 4-199
AG261322 4-230
AG261322 4-232
AG261322 4-49
AG261322 4-50
AG261322 4-59
AG261322 4-69
AG261821 3-29
AG261821 3-30
AG261821 3-34
AG261821 3-35
AG261822 3-29
AG261822 3-34
AG262382 2-14
AG262418 1-15
AG262418 1-24
AG262418 1-28
AG262418 1-32
AG262426 1-2
AG262427 1-2
AG262492 4-44
AG262556 3-65
AG262556 3-66
AG262785 3-4
AG262785 3-8
AG262937 6-35
AG262985 3-55
AG263036 3-12
AG263036 3-16
AG263036 3-20
AG263036 3-24
AG263053 3-12
AG263053 3-16
AG263053 3-4
AG263053 3-8
AG263132 6-18
AG263209 1-9
AG263217 3-54
AG308378 3-1
AG308378 3-12
AG308378 3-16
AG308378 3-2
AG308378 3-4
AG308378 3-8
AG309261 2-30
AG309923 3-12
AG309923 3-16
AG309923 3-20
AG309923 3-24
AG309923 3-4
AG309923 3-8
AG309966 3-12
AG309966 3-13
AG309966 3-20
AG309966 3-21
AG309966 3-4
AG309966 3-5
AG309967 3-16
AG309967 3-17
AG309967 3-24
AG309967 3-25
AG309967 3-8
AG309967 3-9
AG311914 2-1
AG311914 2-3
AG311914 2-7
AG311914 4-25
AG322370 6-34
AG322562 6-10
AG322563 6-10
AG322712 6-10
AG324064 1-35
AG325615 4-30
AG326175 2-3
AG326175 2-7
AG326175 4-25
AG326187 4-49
AG326187 4-50
AG326225 4-51
AG326276 4-49
AG326276 4-50
AG326925 11-81
AG326925 11-87
AG327117 10-3
AG327247 3-65
AG327247 3-66
AG327247 6-26
AG327247 6-27
AG327247 6-35
AG327284 10-3
AG327314 3-30
AG327314 3-35
AG327315 3-30
AG327315 3-35
AG327785 10-8
AG327785 11-51
AG327802 6-15
AG327803 11-22
AG327803 11-7
AG327803 5-15
AG327803 5-41
AG327803 5-68
AG327803 5-72
AG327804 11-7
AG327804 5-15
AG327804 5-41
AG327850 10-8
AG327850 11-51
AG327928 10-8
AG327928 11-51
AG328690 5-74
AG328772 3-54
AG328788 3-54
AG328805 3-29
AG328805 3-34
AG328806 3-29
AG328806 3-34
AG328859 10-2
AG328859 10-7
AG328960 11-72
AG330211 5-25
AG330727 11-16
AG330729 2-24
AG331436 4-3
AG331601 7-5
AG331602 7-5
AG331613 4-31
AG332158 11-35
AG332158 11-37
AG332159 11-35
AG332159 11-37
AG332160 11-35
AG332160 11-37
AG332163 11-35
AG332163 11-37
AG332164 11-35
AG332164 11-37
AG332165 11-35
AG332165 11-37
AG332166 11-35
AG332166 11-37
AG332167 11-54
AG332167 11-55
AG332168 11-54
AG332168 11-55
AG332169 11-54
AG332169 11-55
AG332170 11-54
AG332170 11-55
AG332171 11-54
AG332171 11-55
AG332172 11-54
AG332172 11-55
AG332173 11-54
AG332173 11-55
AG332174 11-54
AG332174 11-55
AG332175 11-54
AG332175 11-55
AG332176 11-54
AG332176 11-55
AG332403 2-24
AG402427 8-2
AG405382 8-2
AG407963 2-1
AG420146 6-9
AG420185 6-10
AG420189 6-10
AG420246 6-73
AG420264 6-8
AG422602 1-14
AG423007 4-49
AG423007 4-50
AG423384 4-49
AG423384 4-50

NUMERIC INDEX

AG423867 10-2
AG423867 10-5
AG423867 10-7
AG424252 11-7
AG424252 5-15
AG424252 5-41
AG424287 6-31
AG424287 6-43
AG424319 5-47
AG424327 3-65
AG424336 6-28
AG424374 5-44
AG424381 1-28
AG424387 1-15
AG424387 1-24
AG424387 1-28
AG424387 1-32
AG424445 11-72
AG424494 1-2
AG424522 4-26
AG424522 6-2
AG424522 6-5
AG424522 6-7
AG424524 4-27
AG424952 5-4
AG425341 4-90
AG425342 4-90
AG425345 4-90
AG426003 4-36
AG426003 4-38
AG426005 4-193
AG426006 4-193
AG426006 4-37
AG426009 4-37
AG426899 11-35
AG426899 11-37
AG426900 11-35
AG426900 11-37
AG501329 1-19
AG501330 1-17
AG501330 1-19
AG501336 1-17
AG501443 4-178
AG502342 1-35
AG502347 11-66
AG502347 11-68
AG502347 11-70
AG503079 4-178
AG503468 3-2
AG503469 3-1
AG503510 3-2
AG503511 3-1
AG504006 3-2
AG504007 3-1
AG504229 11-17
AG504291 6-14
AG504291 6-15
AG504291 6-16
AG504293 6-2
AG504293 6-5
AG504293 6-7
AG504299 11-15
AG504299 11-18
AG504299 6-43
AG504509 3-15
AG504509 3-16
AG504509 3-17
AG504509 3-18
AG504510 3-11
AG504510 3-12
AG504510 3-13
AG504510 3-14
AG504542 3-3
AG504542 3-4
AG504542 3-5
AG504542 3-6
AG504543 3-10
AG504543 3-7
AG504543 3-8
AG504543 3-9
AG504622 3-29
AG504795 3-54
AG511021 6-12
AG511021 6-13
AG511021 7-1
AG511021 7-3
AG511021 7-8
AG511021 8-1
AG511021 8-5
AG511099 11-25
AG511099 11-52
AG511099 11-61
AG511099 2-19
AG511099 2-30
AG511099 3-1
AG511099 3-12
AG511099 3-13
AG511099 3-16
AG511099 3-17
AG511099 3-2
AG511099 3-20
AG511099 3-21
AG511099 3-24
AG511099 3-25
AG511099 3-29
AG511099 3-30
AG511099 3-31
AG511099 3-33
AG511099 3-34
AG511099 3-35
AG511099 3-39
AG511099 3-4
AG511099 3-41
AG511099 3-5
AG511099 3-8
AG511099 3-9
AG511099 6-26
AG511099 6-27
AG511528 10-2
AG511528 10-3
AG511528 10-5
AG511528 10-7
AG511528 10-9
AG511528 1-3
AG511528 1-5
AG511528 1-7
AG511528 4-1
AG511528 4-10
AG511528 4-12
AG511528 4-13
AG511528 4-14
AG511528 4-19
AG511528 4-2
AG511528 4-201
AG511528 4-4
AG511528 4-5
AG511528 4-7
AG511528 4-9
AG511528 8-10
AG511528 8-11
AG511528 8-12
AG511528 8-13
AG511528 8-6
AG511528 8-7
AG511528 8-8
AG511528 8-9
AG511722 10-8
AG511722 11-30
AG511722 11-51
AG511722 1-23
AG511722 1-27
AG511722 1-31
AG511722 2-20
AG511722 2-22
AG511722 2-6
AG511722 4-196
AG511722 4-24
AG511722 4-27
AG511722 4-33
AG511722 4-40
AG511722 7-1
AG511730 4-40
AG512141 8-1
AG512230 10-2
AG512230 10-3
AG512230 10-5
AG512230 10-7
AG512230 2-4
AG512230 2-5
AG512230 4-11
AG512230 4-13
AG512230 4-14
AG512230 4-17
AG512230 4-202
AG512230 4-49
AG512230 4-50
AG512230 4-51

NUMERIC INDEX

AG512230 8-10
AG512230 8-11
AG512230 8-12
AG512230 8-13
AG512230 8-14
AG512230 8-15
AG512230 8-16
AG512230 8-17
AG512230 8-6
AG512230 8-7
AG512230 8-8
AG512230 8-9
AG512346 10-3
AG512346 1-1
AG512346 1-2
AG512346 1-4
AG512346 1-6
AG512346 3-1
AG512346 3-10
AG512346 3-14
AG512346 3-18
AG512346 3-2
AG512346 3-22
AG512346 3-26
AG512346 3-6
AG512362 8-2
AG512370 8-2
AG512885 2-19
AG512885 2-30
AG512885 3-12
AG512885 3-16
AG512885 3-20
AG512885 3-25
AG512885 3-30
AG512885 3-35
AG512885 3-39
AG512885 3-4
AG512885 3-41
AG512885 3-8
AG512885 5-51
AG512885 5-55
AG512885 5-58
AG513083 8-3
AG513377 11-67
AG513377 11-69
AG513377 11-71
AG513385 10-8
AG513385 11-51
AG513385 11-67
AG513385 11-69
AG513385 11-71
AG513385 2-14
AG513393 10-2
AG513393 10-3
AG513393 10-5
AG513393 10-7
AG513393 11-28
AG513393 11-72
AG513393 4-10
AG513393 4-12
AG513393 4-13
AG513393 4-14
AG513393 4-19
AG513393 4-201
AG513393 4-40
AG513393 4-49
AG513393 4-50
AG513393 4-51
AG513393 4-7
AG513393 4-9
AG513466 1-8
AG513466 4-26
AG513466 4-51
AG513654 11-83
AG513654 6-71
AG513679 1-25
AG513679 1-26
AG513679 1-29
AG513679 1-3
AG513679 1-30
AG513679 1-33
AG513679 1-34
AG513679 1-5
AG513679 1-7
AG513679 3-20
AG513679 3-24
AG513689 4-40
AG513722 2-3
AG513859 1-20
AG514014 8-3
AG514243 8-2
AG514288 7-3
AG514288 7-8
AG514326 3-54
AG514342 11-62
AG514342 11-87
AG514446 11-62
AG514446 11-87
AG514554 1-15
AG514554 1-24
AG514554 1-28
AG514554 1-32
AG514554 3-12
AG514554 3-13
AG514554 3-16
AG514554 3-17
AG514554 3-20
AG514554 3-21
AG514554 3-24
AG514554 3-25
AG514554 3-4
AG514554 3-5
AG514554 3-65
AG514554 3-66
AG514554 3-8
AG514554 3-9
AG514554 4-191
AG514559 1-2
AG514559 1-4
AG514559 1-6
AG514559 3-29
AG514559 3-34
AG514559 3-62
AG514567 11-25
AG514800 5-41
AG514814 3-30
AG514814 3-31
AG514814 3-33
AG514814 3-35
AG515001 8-10
AG515001 8-11
AG515001 8-12
AG515121 11-63
AG515121 11-65
AG515121 2-20
AG515121 2-3
AG515121 2-4
AG515121 2-6
AG515121 3-36
AG515121 3-63
AG515121 3-64
AG515121 3-65
AG515121 3-66
AG515121 4-1
AG515121 4-100
AG515121 4-101
AG515121 4-102
AG515121 4-103
AG515121 4-104
AG515121 4-105
AG515121 4-106
AG515121 4-107
AG515121 4-108
AG515121 4-109
AG515121 4-110
AG515121 4-119
AG515121 4-120
AG515121 4-121
AG515121 4-122
AG515121 4-128
AG515121 4-129
AG515121 4-143
AG515121 4-144
AG515121 4-145
AG515121 4-146
AG515121 4-147
AG515121 4-148
AG515121 4-149
AG515121 4-150
AG515121 4-151
AG515121 4-152
AG515121 4-154
AG515121 4-155
AG515121 4-156
AG515121 4-162
AG515121 4-168
AG515121 4-169

NUMERIC INDEX

AG515121 4-17
AG515121 4-171
AG515121 4-182
AG515121 4-183
AG515121 4-184
AG515121 4-185
AG515121 4-188
AG515121 4-198
AG515121 4-202
AG515121 4-209
AG515121 4-210
AG515121 4-211
AG515121 4-213
AG515121 4-215
AG515121 4-217
AG515121 4-218
AG515121 4-219
AG515121 4-229
AG515121 4-230
AG515121 4-231
AG515121 4-235
AG515121 4-239
AG515121 4-24
AG515121 4-25
AG515121 4-26
AG515121 4-27
AG515121 4-33
AG515121 4-4
AG515121 4-49
AG515121 4-50
AG515121 4-51
AG515121 4-55
AG515121 4-56
AG515121 4-57
AG515121 4-58
AG515121 4-59
AG515121 4-60
AG515121 4-69
AG515121 4-78
AG515121 4-85
AG515121 4-86
AG515121 4-87
AG515121 4-88
AG515121 4-91
AG515121 4-92
AG515121 4-94
AG515121 4-95
AG515121 4-96
AG515121 4-97
AG515121 6-18
AG515121 6-21
AG515121 6-26
AG515121 6-27
AG515121 6-34
AG515121 6-35
AG515121 6-37
AG515121 6-51
AG515121 6-58
AG515121 6-69
AG515121 7-2
AG515121 7-4
AG515121 7-7
AG515122 11-63
AG515122 11-65
AG515122 2-4
AG515122 4-17
AG515122 4-202
AG515122 6-17
AG515122 6-21
AG515122 6-34
AG515122 6-37
AG515122 6-38
AG515122 6-39
AG515122 6-44
AG515122 6-55
AG515122 6-58
AG515122 6-61
AG515122 6-69
AG515123 11-63
AG515123 11-65
AG515123 6-17
AG515123 6-34
AG515123 6-44
AG515123 6-55
AG515123 6-58
AG515123 6-61
AG515123 6-69
AG515140 11-31
AG515140 11-53
AG515140 11-58
AG515140 11-73
AG515140 11-76
AG515140 2-20
AG515140 4-39
AG515140 4-44
AG515140 6-18
AG515140 6-25
AG515140 6-35
AG515140 7-4
AG515140 7-7
AG515210 1-36
AG515274 3-1
AG515274 3-12
AG515274 3-16
AG515274 3-2
AG515274 3-20
AG515274 3-24
AG515274 3-4
AG515274 3-8
AG515277 4-39
AG515277 8-1
AG515295 10-2
AG515295 10-5
AG515295 10-7
AG515310 6-34
AG515352 11-1
AG515352 11-43
AG515352 3-1
AG515352 3-13
AG515352 3-17
AG515352 3-2
AG515352 3-21
AG515352 3-25
AG515352 3-34
AG515352 3-5
AG515352 3-9
AG515352 5-11
AG515352 5-12
AG515352 5-36
AG515352 5-65
AG515414 4-41
AG515449 8-10
AG515449 8-11
AG515449 8-12
AG515449 8-13
AG515449 8-14
AG515449 8-15
AG515449 8-16
AG515449 8-17
AG515449 8-6
AG515449 8-7
AG515449 8-8
AG515449 8-9
AG515669 2-10
AG515707 7-5
AG515756 6-47
AG515764 8-3
AG515851 8-3
AG515981 1-20
AG515981 1-22
AG515981 4-44
AG515981 4-90
AG516060 1-20
AG516060 1-22
AG516060 4-44
AG516060 4-90
AG516089 1-1
AG516105 4-90
AG516106 3-1
AG516106 3-12
AG516106 3-16
AG516106 3-2
AG516106 3-4
AG516106 3-8
AG516181 1-18
AG516206 6-12
AG516229 4-30
AG516229 6-12
AG516229 6-13
AG516229 7-3
AG516229 8-5
AG516230 6-12
AG516230 6-13
AG516230 7-5
AG516230 8-5
AG516231 4-30
AG516231 7-3

NUMERIC INDEX

AG516231 8-5
AG516233 8-2
AG516402 6-13
AG516403 11-56
AG516403 11-57
AG516403 11-59
AG516403 11-60
AG516403 11-73
AG516403 1-25
AG516403 1-26
AG516403 1-29
AG516403 1-30
AG516403 1-33
AG516403 1-34
AG516403 2-19
AG516403 2-20
AG516403 2-4
AG516403 2-5
AG516403 3-31
AG516403 3-33
AG516403 3-41
AG516403 3-60
AG516403 3-61
AG516403 3-63
AG516403 3-64
AG516403 4-1
AG516403 4-100
AG516403 4-101
AG516403 4-102
AG516403 4-103
AG516403 4-104
AG516403 4-105
AG516403 4-106
AG516403 4-107
AG516403 4-108
AG516403 4-109
AG516403 4-11
AG516403 4-110
AG516403 4-119
AG516403 4-120
AG516403 4-121
AG516403 4-122
AG516403 4-128
AG516403 4-129
AG516403 4-139
AG516403 4-140
AG516403 4-142
AG516403 4-143
AG516403 4-144
AG516403 4-145
AG516403 4-146
AG516403 4-147
AG516403 4-148
AG516403 4-150
AG516403 4-151
AG516403 4-152
AG516403 4-154
AG516403 4-158
AG516403 4-159
AG516403 4-162
AG516403 4-168
AG516403 4-169
AG516403 4-17
AG516403 4-170
AG516403 4-171
AG516403 4-182
AG516403 4-183
AG516403 4-184
AG516403 4-185
AG516403 4-188
AG516403 4-194
AG516403 4-195
AG516403 4-198
AG516403 4-199
AG516403 4-2
AG516403 4-202
AG516403 4-209
AG516403 4-210
AG516403 4-211
AG516403 4-212
AG516403 4-213
AG516403 4-214
AG516403 4-215
AG516403 4-217
AG516403 4-218
AG516403 4-219
AG516403 4-229
AG516403 4-230
AG516403 4-231
AG516403 4-232
AG516403 4-235
AG516403 4-236
AG516403 4-237
AG516403 4-238
AG516403 4-239
AG516403 4-4
AG516403 4-44
AG516403 4-46
AG516403 4-47
AG516403 4-48
AG516403 4-49
AG516403 4-50
AG516403 4-51
AG516403 4-55
AG516403 4-56
AG516403 4-57
AG516403 4-58
AG516403 4-59
AG516403 4-60
AG516403 4-69
AG516403 4-78
AG516403 4-91
AG516403 4-92
AG516403 4-93
AG516403 4-94
AG516403 4-95
AG516403 4-96
AG516403 4-97
AG516403 4-98
AG516403 6-13
AG516403 6-51
AG516403 7-4
AG516403 7-7
AG516403 8-10
AG516403 8-11
AG516403 8-12
AG516403 8-13
AG516405 1-25
AG516405 1-26
AG516405 1-29
AG516405 1-30
AG516405 1-33
AG516405 1-34
AG516405 4-111
AG516405 4-112
AG516405 4-113
AG516405 4-114
AG516405 4-115
AG516405 4-116
AG516405 4-117
AG516405 4-118
AG516405 4-123
AG516405 4-124
AG516405 4-125
AG516405 4-126
AG516405 4-130
AG516405 4-131
AG516405 4-132
AG516405 4-133
AG516405 4-134
AG516405 4-135
AG516405 4-141
AG516405 4-153
AG516405 4-160
AG516405 4-161
AG516405 4-163
AG516405 4-164
AG516405 4-165
AG516405 4-166
AG516405 4-167
AG516405 4-172
AG516405 4-173
AG516405 4-174
AG516405 4-175
AG516405 4-176
AG516405 4-177
AG516405 4-178
AG516405 4-179
AG516405 4-180
AG516405 4-181
AG516405 4-186
AG516405 4-187
AG516405 4-189
AG516405 4-192
AG516405 4-197
AG516405 4-203
AG516405 4-204

NUMERIC INDEX

AG516405 4-205
AG516405 4-206
AG516405 4-207
AG516405 4-208
AG516405 4-216
AG516405 4-221
AG516405 4-222
AG516405 4-223
AG516405 4-224
AG516405 4-225
AG516405 4-226
AG516405 4-227
AG516405 4-228
AG516405 4-233
AG516405 4-234
AG516405 4-240
AG516405 4-99
AG516476 7-5
AG516478 7-5
AG516478 7-8
AG516481 11-30
AG516481 2-20
AG516481 7-1
AG516481 7-3
AG516567 6-37
AG516568 6-37
AG516611 2-9
AG516643 7-5
AG516643 7-8
AG516864 6-41
AG516992 4-149
AG516992 7-7
AG517044 4-43
AG517157 6-73
AG517157 8-5
AG517158 6-73
AG517158 8-5
AG517159 6-73
AG517159 8-5
AG517219 6-73
AG517219 8-5
AG517248 3-28
AG517248 3-32
AG517248 3-38
AG517420 6-11
AG517421 6-10
AG517467 8-3
AG517536 2-19
AG517536 2-30
AG517602 4-65
AG517602 4-66
AG517724 6-44
AG517724 6-55
AG517793 3-1
AG517793 3-12
AG517793 3-16
AG517793 3-2
AG517793 3-20
AG517793 3-24
AG517793 3-4
AG517793 3-8
AG517851 7-5
AG517851 7-8
AG517855 2-1
AG517855 2-3
AG517855 2-7
AG517855 4-25
AG517855 4-41
AG517858 4-49
AG517858 4-50
AG517858 4-51
AG517892 10-4
AG517926 11-66
AG517926 11-68
AG517926 11-70
AG517942 11-84
AG517942 6-72
AG517975 6-47
AG517975 7-8
AG517993 3-28
AG517993 3-32
AG517993 3-37
AG517993 3-38
AG517994 2-30
AG517999 11-30
AG517999 2-20
AG517999 7-1
AG518025 3-20
AG518025 3-24
AG518025 4-191
AG518032 3-31
AG518032 3-33
AG518032 3-41
AG518088 6-11
AG518088 6-9
AG518092 3-28
AG518092 3-32
AG518195 4-43
AG518218 8-1
AG518236 4-89
AG518292 1-25
AG518292 1-26
AG518292 1-29
AG518292 1-30
AG518292 1-33
AG518292 1-34
AG518292 2-20
AG518292 7-4
AG518292 7-7
AG518326 4-55
AG518326 4-56
AG518326 4-57
AG518326 4-58
AG518326 4-59
AG518326 4-69
AG518326 4-78
AG518326 4-87
AG518326 4-88
AG518339 4-26
AG518340 10-8
AG518340 11-51
AG518340 2-3
AG518340 4-25
AG518358 3-31
AG518358 3-33
AG518358 3-41
AG518413 8-2
AG518425 4-49
AG518425 4-50
AG518425 4-51
AG518492 4-139
AG518492 4-140
AG518492 4-147
AG518492 4-151
AG518492 4-152
AG518492 4-168
AG518492 4-185
AG518492 4-194
AG518492 4-195
AG518492 4-230
AG518492 4-231
AG518492 4-46
AG518492 4-47
AG518492 4-48
AG518500 3-43
AG518500 3-45
AG518500 3-50
AG518500 3-52
AG518504 4-41
AG518507 4-106
AG518507 4-209
AG518507 4-26
AG518507 4-49
AG518507 4-50
AG518625 7-3
AG518660 4-22
AG518660 4-23
AG518668 7-3
AG518668 7-5
AG518668 7-8
AG518707 6-33
AG518707 6-34
AG518707 6-36
AG518707 6-8
AG518847 11-30
AG518847 2-20
AG518847 7-1
AG518847 7-2
AG518988 4-40
AG519079 7-3
AG519086 6-69
AG519088 6-68
AG519088 6-69
AG519113 5-41
AG519180 4-101
AG519180 4-102
AG519180 4-105

NUMERIC INDEX

AG519180 4-106
AG519180 4-146
AG519180 4-149
AG519180 4-154
AG519180 4-209
AG519180 4-229
AG519190 11-84
AG519190 6-72
AG519314 6-13
AG519336 11-30
AG519336 2-20
AG519336 7-1
AG519336 8-5
AG519463 6-69
AG519561 4-20
AG519561 4-29
AG519748 4-108
AG519748 4-109
AG519748 4-119
AG519748 4-122
AG519748 4-147
AG519748 4-148
AG519748 4-151
AG519748 4-152
AG519748 4-162
AG519748 4-168
AG519748 4-169
AG519748 4-184
AG519748 4-185
AG519748 4-198
AG519748 4-210
AG519748 4-211
AG519748 4-230
AG519748 4-231
AG519748 4-59
AG519748 4-60
AG519748 4-91
AG519748 4-92
AG519748 4-95
AG519748 4-97
AG519749 4-100
AG519749 4-101
AG519749 4-102
AG519749 4-103
AG519749 4-104
AG519749 4-107
AG519749 4-120
AG519749 4-121
AG519749 4-129
AG519749 4-142
AG519749 4-143
AG519749 4-144
AG519749 4-145
AG519749 4-154
AG519749 4-155
AG519749 4-156
AG519749 4-158
AG519749 4-159
AG519749 4-170
AG519749 4-182
AG519749 4-183
AG519749 4-199
AG519749 4-212
AG519749 4-213
AG519749 4-214
AG519749 4-215
AG519749 4-217
AG519749 4-218
AG519749 4-219
AG519749 4-229
AG519749 4-232
AG519749 4-236
AG519749 4-237
AG519749 4-239
AG519749 4-85
AG519749 4-86
AG519749 4-93
AG519749 4-94
AG519749 4-96
AG519749 4-98
AG519751 4-103
AG519751 4-106
AG519751 4-107
AG519751 4-143
AG519751 4-198
AG519751 4-210
AG519751 4-213
AG519751 4-215
AG519751 4-217
AG519751 4-218
AG519751 4-219
AG519751 4-235
AG519751 4-236
AG519751 4-94
AG519751 4-96
AG519751 6-50
AG519838 4-157
AG519838 4-2
AG519861 10-8
AG520052 6-47
AG520092 6-47
AG520093 6-47
AG520095 1-12
AG520222 6-11
AG520296 6-10
AG520326 6-10
AG520326 6-33
AG520326 6-34
AG520326 6-36
AG520326 6-8
AG520327 6-10
AG520345 1-17
AG520345 11-70
AG520345 1-19
AG520345 4-190
AG520345 4-89
AG520346 11-66
AG520346 11-68
AG520346 11-70
AG520347 6-73
AG520373 4-31
AG520375 4-30
AG520377 1-13
AG520377 1-16
AG520386 2-16
AG520559 6-10
AG520614 1-15
AG520614 1-24
AG520614 1-28
AG520614 1-32
AG520614 3-65
AG520614 3-66
AG520671 6-73
AG520889 8-5
AG520910 6-45
AG520939 7-5
AG520939 7-8
AG520970 7-3
AG521016 6-73
AG521017 4-41
AG521017 6-31
AG521017 6-43
AG521021 2-10
AG521023 2-10
AG521024 7-5
AG521354 8-5
AG521412 1-35
AG521476 6-69
AG521690 3-27
AG521690 3-36
AG521846 8-2
AG521934 8-5
AG521959 7-3
AG522023 11-48
AG522023 5-19
AG522023 5-69
AG522044 10-8
AG522044 11-51
AG522056 3-13
AG522056 3-17
AG522056 3-21
AG522056 3-25
AG522056 3-5
AG522056 3-9
AG522057 3-13
AG522057 3-17
AG522057 3-5
AG522057 3-9
AG522058 3-13
AG522058 3-17
AG522058 3-21
AG522058 3-25
AG522058 3-5
AG522058 3-9
AG522149 10-3
AG522149 11-88
AG522149 2-7

NUMERIC INDEX

AG522149 4-25
AG522220 11-62
AG522244 11-87
AG522247 11-62
AG522247 11-81
AG522247 11-87
AG522335 7-5
AG522335 7-8
AG522410 6-73
AG522466 8-5
AG522513 11-70
AG522513 4-89
AG522562 4-49
AG522562 4-50
AG522563 2-10
AG522571 11-21
AG522571 1-15
AG522571 1-24
AG522571 1-28
AG522571 1-32
AG522571 4-40
AG522572 1-15
AG522572 1-28
AG522572 1-32
AG522603 3-48
AG522616 4-30
AG522616 4-32
AG522699 2-26
AG522703 3-27
AG522703 3-36
AG522800 11-28
AG522800 11-72
AG522893 2-10
AG522893 2-4
AG522893 2-5
AG522893 4-11
AG522893 4-17
AG522893 4-2
AG522893 4-202
AG522894 10-8
AG522894 11-51
AG522894 2-20
AG522894 2-22
AG522894 2-25
AG522894 2-6
AG522894 4-24
AG522894 4-27
AG522894 4-33
AG522894 4-41
AG522895 10-8
AG522895 11-30
AG522895 11-51
AG522895 2-20
AG522895 2-22
AG522895 2-25
AG522895 2-4
AG522895 2-5
AG522895 2-6
AG522895 2-7
AG522895 4-11
AG522895 4-17
AG522895 4-196
AG522895 4-2
AG522895 4-202
AG522895 4-24
AG522895 4-25
AG522895 4-26
AG522895 4-27
AG522895 4-33
AG522895 4-40
AG522895 4-41
AG522895 7-1
AG522925 3-29
AG522925 3-30
AG522925 3-34
AG522925 3-35
AG522980 3-1
AG522980 3-12
AG522980 3-16
AG522980 3-2
AG522980 3-20
AG522980 3-24
AG522980 3-29
AG522980 3-30
AG522980 3-34
AG522980 3-35
AG522980 3-39
AG522980 3-4
AG522980 3-8
AG523061 4-40
AG523078 7-5
AG523088 6-50
AG523166 2-27
AG523175 3-41
AG523259 3-62
AG523297 11-31
AG523297 6-18
AG523297 6-25
AG523327 8-10
AG523327 8-11
AG523327 8-12
AG523361 11-31
AG523361 11-32
AG523361 6-26
AG523361 6-27
AG523361 6-35
AG523412 4-100
AG523412 4-103
AG523412 4-104
AG523412 4-107
AG523412 4-108
AG523412 4-109
AG523412 4-110
AG523412 4-120
AG523412 4-121
AG523412 4-122
AG523412 4-128
AG523412 4-129
AG523412 4-144
AG523412 4-145
AG523412 4-148
AG523412 4-150
AG523412 4-152
AG523412 4-154
AG523412 4-162
AG523412 4-171
AG523412 4-182
AG523412 4-188
AG523412 4-209
AG523412 4-229
AG523412 4-235
AG523412 4-239
AG523412 4-91
AG523412 4-94
AG523412 6-50
AG523417 1-36
AG523421 3-48
AG523464 11-62
AG523491 6-58
AG523491 6-61
AG523491 6-69
AG523508 11-62
AG523508 11-81
AG523508 11-87
AG523524 2-26
AG523524 2-7
AG523524 4-25
AG523524 4-30
AG523526 4-54
AG523533 4-237
AG523544 11-22
AG523544 11-7
AG523544 5-15
AG523544 5-41
AG523563 3-13
AG523563 3-17
AG523563 3-21
AG523563 3-25
AG523563 3-5
AG523563 3-9
AG523590 3-65
AG523590 3-66
AG523591 11-31
AG523591 11-32
AG523591 6-26
AG523591 6-27
AG523591 6-35
AG523653 3-1
AG523653 3-12
AG523653 3-16
AG523653 3-2
AG523653 3-4
AG523653 3-8
AG523688 10-3
AG523814 3-65
AG523814 3-66
AG523814 6-26

NUMERIC INDEX

AG523814 6-27
AG523814 6-35
AG523837 6-35
AG523923 11-72
AG523925 4-40
AG523925 6-31
AG523925 6-43
AG523935 1-1
AG523935 1-15
AG523935 1-2
AG523935 1-24
AG523935 1-28
AG523935 1-32
AG523935 1-4
AG523935 1-6
AG523940 10-8
AG523940 11-51
AG524001 6-21
AG524001 6-29
AG524024 11-28
AG524024 11-72
AG524255 3-13
AG524255 3-17
AG524255 3-21
AG524255 3-25
AG524255 3-5
AG524255 3-9
AG524263 3-31
AG524263 3-33
AG524270 6-32
AG524270 6-43
AG524292 2-20
AG524292 6-35
AG524292 7-4
AG524369 5-19
AG524378 11-22
AG524378 11-7
AG524378 5-15
AG524378 5-41
AG524378 5-68
AG524378 5-72
AG550108 3-28
AG550108 3-32
AG550108 3-37
AG550108 3-38
AG550108 3-40
AG550116 3-27
AG550116 3-36
AG550124 3-12
AG550124 3-13
AG550124 3-16
AG550124 3-17
AG550124 3-21
AG550124 3-25
AG550124 3-27
AG550124 3-31
AG550124 3-33
AG550124 3-36
AG550124 3-4
AG550124 3-43
AG550124 3-45
AG550124 3-48
AG550124 3-5
AG550124 3-50
AG550124 3-52
AG550124 3-54
AG550124 3-8
AG550124 3-9
AG550132 10-3
AG550167 3-31
AG550167 3-33
AG550175 10-8
AG550175 11-51
AG550175 11-66
AG550175 11-68
AG550175 11-70
AG550175 11-77
AG550175 2-19
AG550175 3-29
AG550175 3-34
AG550175 5-28
AG550175 5-40
AG550175 5-43
AG550175 5-67
AG550175 5-71
AG550175 6-50
AG550175 8-1
AG550191 10-8
AG550191 1-15
AG550191 11-51
AG550191 11-66
AG550191 11-68
AG550191 11-70
AG550191 11-74
AG550191 11-75
AG550191 11-77
AG550191 1-24
AG550191 1-28
AG550191 1-32
AG550191 2-19
AG550191 2-20
AG550191 2-22
AG550191 2-9
AG550191 3-1
AG550191 3-2
AG550191 3-28
AG550191 3-30
AG550191 3-31
AG550191 3-32
AG550191 3-33
AG550191 3-35
AG550191 3-37
AG550191 3-39
AG550191 3-62
AG550191 4-30
AG550191 4-40
AG550191 5-28
AG550191 5-40
AG550191 5-43
AG550191 5-67
AG550191 5-71
AG550191 6-50
AG550191 8-1
AG550205 11-52
AG550205 11-61
AG550205 11-74
AG550205 11-75
AG550205 2-19
AG550205 4-32
AG550205 5-28
AG550213 11-52
AG550213 11-61
AG550213 11-74
AG550213 11-75
AG550213 2-19
AG550256 11-28
AG550256 11-72
AG550256 5-74
AG550264 3-13
AG550264 3-17
AG550264 3-21
AG550264 3-25
AG550264 3-27
AG550264 3-31
AG550264 3-33
AG550264 3-36
AG550264 3-43
AG550264 3-45
AG550264 3-48
AG550264 3-5
AG550264 3-50
AG550264 3-52
AG550264 3-54
AG550264 3-9
AG550264 5-51
AG550264 5-55
AG550264 5-58
AG550264 5-74
AG550280 3-31
AG550280 3-33
AG550353 10-2
AG550353 10-3
AG550353 11-28
AG550353 11-72
AG550353 3-12
AG550353 3-16
AG550353 3-20
AG550353 3-24
AG550353 3-27
AG550353 3-36
AG550353 3-37
AG550353 3-4
AG550353 3-43
AG550353 3-45
AG550353 3-46
AG550353 3-48
AG550353 3-50

NUMERIC INDEX

AG550353 3-52
AG550353 3-8
AG550450 1-23
AG550450 1-27
AG550450 1-31
AG550450 1-8
AG550450 4-30
AG550450 4-43
AG550477 1-23
AG550477 1-27
AG550477 1-31
AG550477 1-8
AG550477 4-30
AG550477 4-43
AG550485 3-30
AG550485 3-35
AG550485 3-40
AG550485 3-41
AG550485 3-53
AG550493 11-30
AG550493 11-62
AG550493 2-20
AG550493 3-28
AG550493 3-30
AG550493 3-32
AG550493 3-35
AG550493 3-40
AG550493 3-41
AG550493 3-53
AG550493 4-196
AG550507 11-30
AG550507 11-62
AG550507 2-20
AG550507 3-28
AG550507 3-30
AG550507 3-32
AG550507 3-35
AG550507 3-43
AG550507 3-45
AG550507 3-53
AG550507 4-196
AG550515 1-15
AG550515 1-24
AG550515 1-28
AG550515 1-32
AG550515 3-30
AG550515 3-35
AG550515 3-50
AG550515 3-52
AG550515 8-1
AG550590 3-28
AG550590 3-32
AG550590 3-37
AG550590 3-38
AG550590 3-40
AG550612 11-30
AG550612 11-62
AG550612 2-20
AG550612 3-13
AG550612 3-17
AG550612 3-21
AG550612 3-25
AG550612 3-28
AG550612 3-32
AG550612 3-5
AG550612 3-9
AG550612 4-196
AG550620 2-19
AG550647 2-19
AG550671 11-48
AG550671 3-40
AG550671 3-41
AG550698 3-43
AG550698 3-45
AG550779 3-35
AG550787 3-43
AG550787 3-45
AG550787 3-50
AG550787 3-52
AG550817 3-31
AG550817 3-33
AG550817 3-54
AG550817 5-51
AG550817 5-55
AG550817 5-58
AG550825 10-8
AG550825 1-15
AG550825 11-51
AG550825 11-66
AG550825 11-68
AG550825 11-70
AG550825 11-74
AG550825 11-75
AG550825 11-77
AG550825 1-24
AG550825 1-28
AG550825 1-32
AG550825 2-19
AG550825 2-20
AG550825 2-22
AG550825 2-9
AG550825 3-1
AG550825 3-2
AG550825 3-28
AG550825 3-30
AG550825 3-32
AG550825 3-35
AG550825 3-37
AG550825 4-30
AG550825 4-40
AG550825 5-28
AG550825 5-40
AG550825 5-43
AG550825 5-67
AG550825 5-71
AG550825 6-50
AG550825 8-1
AG550949 3-28
AG550949 3-32
AG550949 3-47
AG550981 3-1
AG550981 3-2
AG551007 10-8
AG551007 1-1
AG551007 1-15
AG551007 11-51
AG551007 11-66
AG551007 11-68
AG551007 11-70
AG551007 11-77
AG551007 11-81
AG551007 11-87
AG551007 1-2
AG551007 1-24
AG551007 1-28
AG551007 1-32
AG551007 1-4
AG551007 1-6
AG551007 2-19
AG551007 2-20
AG551007 2-22
AG551007 2-9
AG551007 3-39
AG551007 3-50
AG551007 3-52
AG551007 4-30
AG551007 4-40
AG551007 4-90
AG551007 5-28
AG551007 5-40
AG551007 5-43
AG551007 5-67
AG551007 5-71
AG551007 6-50
AG551007 8-1
AG551015 11-52
AG551015 11-61
AG551015 11-74
AG551015 11-75
AG551015 2-19
AG551015 4-32
AG551015 5-28
AG551031 4-30
AG551058 11-52
AG551058 11-61
AG551058 3-55
AG551058 4-191
AG551139 5-41
AG551252 2-19
AG551252 4-32
AG551287 6-73
AG551392 3-1
AG551392 3-12
AG551392 3-16
AG551392 3-2
AG551392 3-4
AG551392 3-8

NUMERIC INDEX

AG551406 3-29
AG551406 3-34
AG551503 3-39
AG551546 3-20
AG551546 3-24
AG551856 11-1
AG551856 11-43
AG551856 3-1
AG551856 3-12
AG551856 3-13
AG551856 3-16
AG551856 3-17
AG551856 3-2
AG551856 3-21
AG551856 3-25
AG551856 3-34
AG551856 3-4
AG551856 3-5
AG551856 3-8
AG551856 3-9
AG551856 5-11
AG551856 5-12
AG551856 5-36
AG551856 5-65
AG552046 1-23
AG552046 1-27
AG552046 1-31
AG552046 1-8
AG552127 4-90
AG552232 11-25
AG552305 1-20
AG552321 2-19
AG552321 2-30
AG552410 2-19
AG552410 2-30
AG552410 3-12
AG552410 3-16
AG552410 3-20
AG552410 3-24
AG552410 3-4
AG552410 3-8
AG552550 1-22
AG553026 1-23
AG553026 1-27
AG553026 1-31
AG553026 1-8
AG553026 4-43
AG553182 2-19
AG553492 2-1
AG553492 2-3
AG553492 2-7
AG553492 4-25
AG553557 10-5
AG553557 1-1
AG553557 11-11
AG553557 11-15
AG553557 11-17
AG553557 11-18
AG553557 11-2
AG553557 11-3
AG553557 11-4
AG553557 11-73
AG553557 11-83
AG553557 11-84
AG553557 11-85
AG553557 1-2
AG553557 1-4
AG553557 1-6
AG553557 4-28
AG553557 6-17
AG553557 6-19
AG553557 6-22
AG553557 6-34
AG553557 6-40
AG553557 6-45
AG553557 6-46
AG553557 6-49
AG553557 6-72
AG553646 3-28
AG553646 3-32
AG553670 2-19
AG553875 8-10
AG553875 8-11
AG553875 8-12
AG553875 8-13
AG553875 8-14
AG553875 8-15
AG553875 8-16
AG553875 8-17
AG553875 8-6
AG553875 8-7
AG553875 8-8
AG553875 8-9
AG553956 3-27
AG553956 3-36
AG553956 3-54
AG554278 6-15
AG554278 6-2
AG554278 6-32
AG554278 6-43
AG554278 6-5
AG554278 6-54
AG554278 6-7
AG554472 4-44
AG554480 8-12
AG554480 8-13
AG554480 8-16
AG554480 8-17
AG554480 8-6
AG554480 8-7
AG554510 5-81
AG554537 3-40
AG554758 4-43
AG554766 1-20
AG554774 4-30
AG554863 9-1
AG554863 9-2
AG556017 5-28
AG556149 3-37
AG556149 3-43
AG556149 3-45
AG556149 3-50
AG556149 3-52
AG556424 2-1
AG556424 2-3
AG556424 2-7
AG556424 4-25
AG556742 4-43
AG557471 11-52
AG557471 11-61
AG558788 11-62
AG558796 3-29
AG558796 3-34
AG558869 4-40
AG559024 11-66
AG559024 11-68
AG559024 11-70
AG559083 3-41
AG559237 3-65
AG559237 3-66
AG559253 10-2
AG559253 10-3
AG559253 3-37
AG559385 8-12
AG559385 8-13
AG559385 8-16
AG559385 8-17
AG559385 8-6
AG559385 8-7
AG560286 3-20
AG560286 3-24
AG560456 3-62
AG560480 4-55
AG560480 4-56
AG560480 4-57
AG560480 4-69
AG560480 4-78
AG560480 4-95
AG560693 5-41
AG560870 4-43
AG560899 11-22
AG560899 11-7
AG560899 5-15
AG560899 5-41
AG560899 5-68
AG560899 5-72
AG560931 1-23
AG560931 1-27
AG560931 1-31
AG560931 1-8
AG560931 4-43
AG561072 3-1
AG561072 3-12
AG561072 3-16
AG561072 3-2
AG561072 3-28
AG561072 3-32

NUMERIC INDEX

AG561072 3-37
AG561072 3-4
AG561072 3-8
AG561078 3-13
AG561078 3-17
AG561078 3-21
AG561078 3-25
AG561078 3-5
AG561078 3-9
AG561156 3-28
AG561156 3-32
AG561156 3-38
AG561156 3-43
AG561156 3-45
AG561156 3-50
AG561156 3-52
AG561169 5-75
AG561177 3-31
AG561177 3-33
AG561177 3-41
AG561199 3-27
AG561199 3-36
AG561201 3-27
AG561201 3-36
AG561203 3-12
AG561203 3-16
AG561203 3-4
AG561203 3-8
AG561212 4-43
AG561213 10-2
AG561213 10-3
AG561213 10-5
AG561213 10-7
AG561213 10-9
AG561213 1-3
AG561213 1-5
AG561213 1-7
AG561213 4-1
AG561213 4-10
AG561213 4-12
AG561213 4-13
AG561213 4-14
AG561213 4-19
AG561213 4-2
AG561213 4-201
AG561213 4-4
AG561213 4-5
AG561213 4-7
AG561213 4-9
AG561213 8-10
AG561213 8-11
AG561213 8-12
AG561213 8-6
AG561213 8-7
AG561213 8-8
AG561213 8-9
AG561215 11-66
AG561215 11-68
AG561215 11-70
AG561215 8-10
AG561215 8-11
AG561215 8-12
AG561218 10-2
AG561218 10-3
AG561218 10-5
AG561218 10-7
AG561218 3-21
AG561218 3-25
AG561218 4-49
AG561218 4-50
AG561218 4-51
AG561227 4-190
AG561227 4-40
AG561227 8-10
AG561227 8-11
AG561227 8-13
AG561227 8-2
AG561227 8-6
AG561227 8-7
AG561227 8-9
AG561228 8-14
AG561228 8-15
AG561228 8-16
AG561228 8-17
AG561229 10-8
AG561229 11-51
AG561229 11-66
AG561229 11-68
AG561229 11-70
AG561229 1-25
AG561229 1-26
AG561229 1-29
AG561229 1-3
AG561229 1-30
AG561229 1-33
AG561229 1-34
AG561229 1-5
AG561229 1-7
AG561229 2-14
AG561229 8-1
AG561230 4-10
AG561230 4-12
AG561230 4-13
AG561230 4-14
AG561230 4-19
AG561230 4-201
AG561230 4-40
AG561230 4-49
AG561230 4-50
AG561230 4-51
AG561230 4-7
AG561230 4-9
AG561231 10-2
AG561231 10-3
AG561231 10-5
AG561231 10-7
AG561231 11-28
AG561231 11-72
AG561231 2-4
AG561231 2-5
AG561231 4-11
AG561231 4-14
AG561231 4-17
AG561231 4-202
AG561231 8-10
AG561231 8-11
AG561231 8-12
AG561231 8-13
AG561231 8-14
AG561231 8-15
AG561231 8-16
AG561231 8-17
AG561233 1-23
AG561233 1-27
AG561233 1-31
AG561233 1-8
AG561233 3-13
AG561233 3-17
AG561233 3-5
AG561233 3-9
AG561246 11-30
AG561246 2-20
AG561246 4-196
AG561251 3-31
AG561251 3-33
AG561251 3-41
AG561262 1-36
AG561308 5-41
AG561339 5-41
AG561352 4-49
AG561352 4-50
AG561488 6-17
AG561508 8-2
AG561538 4-26
AG561538 4-51
AG561592 11-52
AG561592 11-61
AG561630 10-8
AG561630 11-30
AG561630 11-51
AG561630 2-20
AG561630 2-22
AG561630 2-6
AG561630 4-196
AG561630 4-24
AG561630 4-27
AG561630 4-33
AG561630 4-40
AG561630 7-1
AG561635 3-46
AG561637 7-8
AG561665 1-15
AG561665 1-24
AG561665 1-28
AG561665 1-32
AG561665 3-65
AG561665 3-66

NUMERIC INDEX

AG561667 3-1
AG561667 3-2
AG561698 3-1
AG561698 3-2
AG561744 5-41
AG561793 4-182
AG561793 4-183
AG561793 4-184
AG561793 4-185
AG561793 4-188
AG561797 5-68
AG561797 5-72
AG561826 3-29
AG561826 3-34
AG561826 3-39
AG561826 3-41
AG561826 5-10
AG561892 2-19
AG561892 2-30
AG561892 3-1
AG561892 3-12
AG561892 3-13
AG561892 3-16
AG561892 3-17
AG561892 3-2
AG561892 3-20
AG561892 3-21
AG561892 3-24
AG561892 3-25
AG561892 3-29
AG561892 3-30
AG561892 3-31
AG561892 3-33
AG561892 3-34
AG561892 3-35
AG561892 3-39
AG561892 3-4
AG561892 3-41
AG561892 3-5
AG561892 3-8
AG561892 3-9
AG561892 5-62
AG561892 6-26
AG561892 6-27
AG561952 3-36
AG561952 3-65
AG561952 3-66
AG561952 4-1
AG561952 4-4
AG561952 6-58
AG562011 3-38
AG562045 5-46
AG562046 10-5
AG562046 10-7
AG562047 6-34
AG562047 7-3
AG562048 1-3
AG562048 1-5
AG562048 1-7
AG562048 4-44
AG562049 4-44
AG562050 11-21
AG562050 11-22
AG562050 11-31
AG562050 1-15
AG562050 1-16
AG562050 11-7
AG562050 1-24
AG562050 1-25
AG562050 1-26
AG562050 1-28
AG562050 1-29
AG562050 1-3
AG562050 1-30
AG562050 1-32
AG562050 1-33
AG562050 1-34
AG562050 1-5
AG562050 1-7
AG562050 4-40
AG562050 5-15
AG562050 5-41
AG562050 5-68
AG562050 5-72
AG562050 6-47
AG562051 11-22
AG562051 2-7
AG562051 3-56
AG562051 3-57
AG562051 4-44
AG562051 5-68
AG562051 5-72
AG562053 5-46
AG562054 1-16
AG562054 2-4
AG562054 4-143
AG562054 4-144
AG562054 4-145
AG562054 4-150
AG562054 4-152
AG562054 4-154
AG562054 4-155
AG562054 4-156
AG562054 4-17
AG562054 4-171
AG562054 4-182
AG562054 4-183
AG562054 4-188
AG562054 4-202
AG562054 4-229
AG562054 4-85
AG562054 4-86
AG562054 4-87
AG562054 4-88
AG562054 6-17
AG562054 6-18
AG562054 6-51
AG562054 6-69
AG562064 11-63
AG562064 11-65
AG562064 2-20
AG562064 2-6
AG562064 3-63
AG562064 3-64
AG562064 4-100
AG562064 4-103
AG562064 4-104
AG562064 4-107
AG562064 4-110
AG562064 4-120
AG562064 4-121
AG562064 4-128
AG562064 4-129
AG562064 4-213
AG562064 4-215
AG562064 4-217
AG562064 4-218
AG562064 4-219
AG562064 4-235
AG562064 4-239
AG562064 4-24
AG562064 4-27
AG562064 4-33
AG562064 4-94
AG562064 4-96
AG562064 7-2
AG562064 7-4
AG562064 7-7
AG562065 11-21
AG562065 1-15
AG562065 1-16
AG562065 1-24
AG562065 1-25
AG562065 1-26
AG562065 1-28
AG562065 1-29
AG562065 1-3
AG562065 1-30
AG562065 1-32
AG562065 1-33
AG562065 1-34
AG562065 1-5
AG562065 1-7
AG562065 4-40
AG562065 6-47
AG562067 6-58
AG562067 6-61
AG562067 6-69
AG562068 6-17
AG562073 1-1
AG562073 11-22
AG562073 11-31
AG562073 1-15
AG562073 11-53
AG562073 11-58
AG562073 11-7
AG562073 11-73

NUMERIC INDEX

AG562073	11-76
AG562073	1-24
AG562073	1-25
AG562073	1-26
AG562073	1-28
AG562073	1-29
AG562073	1-3
AG562073	1-30
AG562073	1-32
AG562073	1-33
AG562073	1-34
AG562073	1-35
AG562073	1-5
AG562073	1-7
AG562073	2-20
AG562073	4-149
AG562073	4-39
AG562073	5-15
AG562073	5-41
AG562073	5-68
AG562073	5-72
AG562073	6-13
AG562073	6-18
AG562073	6-25
AG562073	6-35
AG562073	7-4
AG562073	7-7
AG562074	11-56
AG562074	11-57
AG562074	11-59
AG562074	11-60
AG562074	11-73
AG562074	1-25
AG562074	1-26
AG562074	1-29
AG562074	1-30
AG562074	1-33
AG562074	1-34
AG562074	2-20
AG562074	2-4
AG562074	2-5
AG562074	2-7
AG562074	3-56
AG562074	3-57
AG562074	3-60
AG562074	3-61
AG562074	3-63
AG562074	3-64
AG562074	4-1
AG562074	4-100
AG562074	4-101
AG562074	4-102
AG562074	4-103
AG562074	4-104
AG562074	4-105
AG562074	4-106
AG562074	4-107
AG562074	4-108
AG562074	4-109
AG562074	4-11
AG562074	4-110
AG562074	4-119
AG562074	4-120
AG562074	4-121
AG562074	4-122
AG562074	4-128
AG562074	4-129
AG562074	4-139
AG562074	4-140
AG562074	4-142
AG562074	4-143
AG562074	4-144
AG562074	4-145
AG562074	4-146
AG562074	4-147
AG562074	4-148
AG562074	4-150
AG562074	4-151
AG562074	4-152
AG562074	4-154
AG562074	4-158
AG562074	4-159
AG562074	4-162
AG562074	4-168
AG562074	4-169
AG562074	4-17
AG562074	4-170
AG562074	4-171
AG562074	4-182
AG562074	4-183
AG562074	4-184
AG562074	4-185
AG562074	4-188
AG562074	4-194
AG562074	4-195
AG562074	4-198
AG562074	4-199
AG562074	4-2
AG562074	4-202
AG562074	4-209
AG562074	4-210
AG562074	4-211
AG562074	4-212
AG562074	4-213
AG562074	4-214
AG562074	4-215
AG562074	4-217
AG562074	4-218
AG562074	4-219
AG562074	4-229
AG562074	4-230
AG562074	4-231
AG562074	4-232
AG562074	4-235
AG562074	4-236
AG562074	4-237
AG562074	4-238
AG562074	4-239
AG562074	4-4
AG562074	4-44
AG562074	4-46
AG562074	4-47
AG562074	4-48
AG562074	4-49
AG562074	4-50
AG562074	4-51
AG562074	4-55
AG562074	4-56
AG562074	4-57
AG562074	4-58
AG562074	4-59
AG562074	4-60
AG562074	4-69
AG562074	4-78
AG562074	4-91
AG562074	4-92
AG562074	4-93
AG562074	4-94
AG562074	4-95
AG562074	4-96
AG562074	4-97
AG562074	4-98
AG562074	6-13
AG562074	6-51
AG562074	7-4
AG562074	7-7
AG562074	8-10
AG562074	8-11
AG562074	8-12
AG562074	8-13
AG562079	11-22
AG562079	5-68
AG562079	5-72
AG562080	2-19
AG562082	3-65
AG562082	3-66
AG562082	4-100
AG562082	4-101
AG562082	4-102
AG562082	4-103
AG562082	4-104
AG562082	4-107
AG562082	4-120
AG562082	4-121
AG562082	4-129
AG562082	4-142
AG562082	4-143
AG562082	4-144
AG562082	4-145
AG562082	4-154
AG562082	4-155
AG562082	4-156
AG562082	4-158
AG562082	4-159
AG562082	4-170
AG562082	4-182
AG562082	4-183

NUMERIC INDEX

AG562082 4-199
AG562082 4-212
AG562082 4-213
AG562082 4-214
AG562082 4-215
AG562082 4-217
AG562082 4-218
AG562082 4-219
AG562082 4-229
AG562082 4-232
AG562082 4-236
AG562082 4-237
AG562082 4-239
AG562082 4-85
AG562082 4-86
AG562082 4-93
AG562082 4-94
AG562082 4-96
AG562082 4-98
AG562082 6-47
AG562090 2-7
AG562090 3-56
AG562090 3-57
AG562105 4-154
AG562105 4-229
AG562120 11-22
AG562120 11-31
AG562120 11-7
AG562120 1-35
AG562120 5-15
AG562120 5-41
AG562120 5-68
AG562120 5-72
AG562123 1-3
AG562123 1-35
AG562123 1-5
AG562123 1-7
AG562123 4-149
AG562123 4-44
AG562123 8-1
AG562136 6-26
AG562136 6-27
AG562136 6-35
AG562136 6-44
AG562136 6-55
AG562148 10-8
AG562148 11-51
AG562193 3-29
AG562193 3-34
AG562199 7-8
AG562237 11-66
AG562237 11-68
AG562237 11-70
AG562251 6-10
AG562251 6-34
AG562291 3-28
AG562291 3-32
AG562291 3-38
AG562304 1-17
AG562304 1-19
AG562304 4-62
AG562304 4-63
AG562304 4-65
AG562304 4-66
AG562304 4-67
AG562304 4-68
AG562304 4-71
AG562304 4-72
AG562304 4-75
AG562304 4-76
AG562304 4-77
AG562304 4-80
AG562304 4-81
AG562304 4-83
AG562304 4-84
AG562327 6-38
AG562327 6-39
AG562327 7-3
AG562330 8-3
AG562354 5-41
AG562364 11-81
AG562364 11-87
AG562372 5-41
AG562385 1-35
AG562401 5-81
AG562467 11-25
AG562496 4-1
AG562496 4-18
AG562496 4-200
AG562496 4-4
AG562496 4-5
AG562496 4-6
AG562496 4-8
AG562496 5-74
AG562537 3-27
AG562537 3-36
AG562538 3-20
AG562538 3-24
AG562538 4-191
AG562538 4-40
AG562560 5-62
AG562584 11-25
AG562607 4-41
AG562621 5-46
AG562639 6-50
AG562693 8-2
AG562712 4-61
AG562712 4-62
AG562712 4-63
AG562712 4-64
AG562712 4-65
AG562712 4-66
AG562712 4-67
AG562712 4-68
AG562712 4-70
AG562712 4-71
AG562712 4-72
AG562712 4-73
AG562712 4-74
AG562712 4-75
AG562712 4-76
AG562712 4-77
AG562712 4-79
AG562712 4-80
AG562712 4-81
AG562712 4-82
AG562712 4-83
AG562712 4-84
AG562792 6-50
AG562793 6-21
AG562793 6-37
AG562793 6-38
AG562793 6-39
AG562890 4-44
AG562971 6-26
AG562971 6-27
AG563036 3-31
AG563036 3-33
AG563036 3-41
AG563038 8-2
AG563039 8-2
AG563055 4-41
AG563055 8-2
AG563061 4-101
AG563061 4-102
AG563061 4-105
AG563061 4-106
AG563061 4-108
AG563061 4-109
AG563061 4-119
AG563061 4-122
AG563061 4-146
AG563061 4-148
AG563061 4-149
AG563061 4-154
AG563061 4-162
AG563061 4-169
AG563061 4-184
AG563061 4-198
AG563061 4-210
AG563061 4-211
AG563061 4-229
AG563061 4-49
AG563061 4-50
AG563061 4-51
AG563061 4-55
AG563061 4-56
AG563061 4-57
AG563061 4-58
AG563061 4-69
AG563061 4-78
AG563061 4-87
AG563061 4-88
AG563061 4-91
AG563061 4-92
AG563061 4-95
AG563061 4-97

NUMERIC INDEX

AG563069 2-3
AG563069 4-25
AG563070 2-7
AG563095 4-137
AG563095 4-34
AG563095 4-35
AG563096 4-137
AG563096 4-34
AG563096 4-35
AG563151 1-9
AG563174 11-83
AG563175 11-83
AG563176 4-44
AG563176 6-58
AG563176 6-61
AG563176 6-69
AG600008 2-19
AG600016 2-19
AG600830 8-1
AG601152 10-5
AG601152 10-7
AG601152 11-28
AG601152 11-52
AG601152 11-61
AG601152 11-72
AG601152 2-19
AG601152 2-30
AG601152 3-1
AG601152 3-12
AG601152 3-16
AG601152 3-2
AG601152 3-20
AG601152 3-24
AG601152 3-4
AG601152 3-43
AG601152 3-45
AG601152 3-46
AG601152 3-50
AG601152 3-52
AG601152 3-8
AG601411 1-1
AG601411 1-15
AG601411 11-52
AG601411 11-61
AG601411 1-2
AG601411 1-24
AG601411 1-28
AG601411 1-32
AG601411 1-4
AG601411 1-6
AG601411 3-12
AG601411 3-16
AG601411 3-4
AG601411 3-43
AG601411 3-45
AG601411 3-50
AG601411 3-52
AG601411 3-55
AG601411 3-8
AG601411 4-191
AG601411 6-13
AG601764 2-19
AG602132 11-1
AG602132 11-43
AG602132 3-1
AG602132 3-2
AG602132 3-34
AG602132 5-11
AG602132 5-12
AG602132 5-36
AG602132 5-65
AG603864 3-28
AG603864 3-32
AG603864 3-37
AG603864 3-38
AG603864 3-43
AG603864 3-45
AG603864 3-50
AG603864 3-52
AG604138 4-90
AG604167 11-53
AG604167 11-58
AG604167 1-16
AG604167 11-73
AG604167 11-76
AG604167 1-3
AG604167 1-5
AG604167 1-7
AG604184 3-48
AG604185 11-25
AG604185 3-1
AG604185 3-2
AG604185 3-43
AG604185 3-45
AG604185 3-50
AG604185 3-52
AG604203 3-37
AG604203 3-38
AG604203 3-40
AG604216 3-43
AG604216 3-45
AG604216 3-47
AG606683 1-2
AG606683 1-4
AG606683 1-6
AG606707 5-62
AG609024 7-3
AG609084 1-15
AG609084 1-24
AG609084 1-25
AG609084 1-26
AG609084 1-28
AG609084 1-29
AG609084 1-3
AG609084 1-30
AG609084 1-32
AG609084 1-33
AG609084 1-34
AG609084 1-5
AG609084 1-7
AG609084 4-40
AG609113 4-49
AG609113 4-50
AG609470 4-52
AG609471 4-52
AG609474 4-52
AG609475 4-52
AG609476 4-52
AG609477 4-52
AG609555 6-11
AG609555 6-9
AG609556 6-11
AG609557 6-11
AG609737 4-137
AG609737 4-34
AG609737 4-35
AG609738 4-137
AG609738 4-34
AG609738 4-35
AG609739 4-137
AG609739 4-34
AG609739 4-35
AG609741 4-137
AG609741 4-34
AG609741 4-35
AG609743 4-137
AG609745 4-137
AG609747 4-35
AG609748 4-35
AG609777 2-3
AG609777 4-101
AG609777 4-102
AG609777 4-105
AG609777 4-106
AG609777 4-108
AG609777 4-109
AG609777 4-119
AG609777 4-122
AG609777 4-146
AG609777 4-147
AG609777 4-148
AG609777 4-149
AG609777 4-151
AG609777 4-152
AG609777 4-154
AG609777 4-162
AG609777 4-168
AG609777 4-169
AG609777 4-184
AG609777 4-185
AG609777 4-198
AG609777 4-209
AG609777 4-210
AG609777 4-211
AG609777 4-229
AG609777 4-230
AG609777 4-231

NUMERIC INDEX

AG609777 4-25
AG609777 4-26
AG609777 4-55
AG609777 4-56
AG609777 4-57
AG609777 4-58
AG609777 4-59
AG609777 4-60
AG609777 4-69
AG609777 4-78
AG609777 4-87
AG609777 4-88
AG609777 4-91
AG609777 4-92
AG609777 4-95
AG609777 4-97
AG609918 4-137
AG609921 4-137
AG609921 4-34
AG609922 4-137
AG609923 4-34
AG610179 4-31
AG610181 1-13
AG610516 5-8
AG700081 8-1
AG701010 8-4
AG701011 8-4
AG701012 8-4
AG701013 8-4
AG701014 8-4
AG701015 8-4
AG701016 8-4
AG703081 1-10
AG703083 1-10
AG703084 1-10
AG703308 5-75
AG706258 5-75
AG706259 5-75
AG706262 5-75
AG706263 5-75
AG706265 5-75
AG708300 2-4
AG708300 2-5
AG708300 4-11
AG708300 4-17
AG708300 4-2
AG708300 4-202
AG708307 5-75
AG708715 2-11
AG709046 1-10
AG709125 5-10
AG709339 2-32
AG709343 2-11
AG709344 2-11
AG710181 11-83
AG710367 1-1
AG710515 11-28
AG710515 2-3
AG710516 1-17
AG710516 1-19
AG710516 2-3
AG710516 2-7
AG710516 4-25
AG710516 4-61
AG710516 4-62
AG710516 4-63
AG710516 4-64
AG710516 4-65
AG710516 4-66
AG710516 4-67
AG710516 4-68
AG710516 4-70
AG710516 4-71
AG710516 4-72
AG710516 4-73
AG710516 4-74
AG710516 4-75
AG710516 4-76
AG710516 4-77
AG710516 4-79
AG710516 4-80
AG710516 4-81
AG710516 4-82
AG710516 4-83
AG710516 4-84
AG710638 2-1
AG710638 2-3
AG710638 2-7
AG710638 4-25
AG710638 8-2
AG710655 2-11
AG711024 10-6
AG711226 2-11
AG711448 6-38
AG711448 6-39
AG711522 1-12
AG711522 1-23
AG711522 1-27
AG711522 1-31
AG711522 1-8
AG711522 2-1
AG711522 4-43
AG711595 11-66
AG711595 11-68
AG711595 11-70
AG711903 2-11
AG711934 2-11
AG711986 1-23
AG711986 1-27
AG711986 1-31
AG711986 1-8
AG711986 4-43
AG713670 5-22
AG713710 7-6
AG714000 4-32
AG714004 4-31
AG714085 1-18
AG714101 5-51
AG714101 5-55
AG714101 5-58
AG714101 5-74
AG714828 6-38
AG714828 6-39
AG714832 11-48
AG714832 5-19
AG714832 5-69
AG714942 5-45
AG714982 2-28
AG714986 2-28
AG714988 2-28
AG714989 2-28
AG714990 2-28
AG714991 2-28
AG714992 2-28
AG714993 2-28
AG714994 2-28
AG714995 2-28
AG714996 2-11
AG714998 2-28
AG714999 5-10
AG715207 11-48
AG715207 5-19
AG715207 5-69
AG715567 11-48
AG715569 11-48
AG715569 5-19
AG715569 5-69
AG715570 11-48
AG715570 11-49
AG715570 5-19
AG715570 5-20
AG715570 5-69
AG715570 5-70
AG715571 11-49
AG715571 5-20
AG715571 5-70
AG716188 1-13
AG716190 1-13
AG716444 11-54
AG716744 11-35
AG716744 11-37
AG716744 11-55
AG716811 11-48
AG716811 11-49
AG716811 5-19
AG716811 5-69
AG716811 5-70
AG716814 11-48
AG716814 5-19
AG716814 5-69
AG717132 1-13
AG717132 2-8
AG717133 10-1
AG717712 11-49
AG717712 5-20
AG717712 5-70
AG718011 11-48

NUMERIC INDEX

AG718011 5-19
AG718011 5-69
AG718059 11-48
AG718059 5-19
AG718059 5-69
AG719528 6-38
AG719528 6-39
AG721680 4-32
AG721899 11-48
AG721899 5-19
AG721899 5-69
AG722268 2-32
AG722270 2-32
AG722818 2-11
AG722819 2-11
AG723074 1-13
AG723606 2-32
AG724335 2-32
AG724681 5-10
AG724682 5-10
AG724687 11-48
AG724687 5-19
AG724687 5-69
AG724790 2-11
AG724790 2-28
AG724793 2-11
AG725602 11-49
AG725602 5-19
AG725602 5-21
AG725602 5-69
AG725602 5-70
AG726404 5-49
AG726404 5-54
AG726837 7-3
AG726838 7-3
AG726839 7-3
AG726841 7-3
AG726843 7-3
AG726844 7-3
AG726845 7-3
AG726845 7-5
AG726845 7-8
AG726846 7-3
AG726847 7-3
AG726848 7-3
AG726849 7-3
AG726850 7-3
AG726853 11-48
AG726853 5-19
AG726853 5-69
AG726854 11-48
AG726854 5-19
AG726854 5-69
AG726952 7-8
AG726981 2-18
AG726981 2-2
AG726981 4-3
AG726982 2-18
AG726982 2-2
AG726982 4-3
AG727083 1-13
AG727085 1-13
AG727089 1-13
AG727098 5-10
AG727099 5-10
AG727100 5-10
AG727101 5-10
AG727103 5-62
AG727104 5-62
AG727106 5-62
AG727107 5-2
AG727108 5-38
AG727109 5-38
AG727110 5-38
AG727111 5-38
AG727112 5-2
AG727112 5-8
AG727113 5-8
AG727114 5-8
AG727115 5-8
AG727123 5-45
AG727124 5-45
AG727125 5-45
AG727126 5-45
AG727147 11-48
AG727147 5-19
AG727147 5-69
AG727427 2-25
AG727654 2-31
AG727654 2-33
AG727663 5-2
AG834159 6-38
AG834159 6-39
AG844769 1-10
AG845079 4-61
AG845079 4-62
AG845079 4-63
AG845079 4-64
AG845079 4-65
AG845079 4-66
AG845079 4-67
AG845079 4-68
AG845079 4-70
AG845079 4-71
AG845079 4-72
AG845079 4-73
AG845079 4-74
AG845079 4-75
AG845079 4-76
AG845079 4-77
AG845079 4-79
AG845079 4-80
AG845079 4-81
AG845079 4-82
AG845079 4-83
AG845079 4-84
AG850263 1-10
CH148-8327 5-47
CH148-8327 5-56
CH148-8327 5-59
CH148-8335 5-52
CH148-8335 5-56
CH148-8335 5-59
CH148-8340 11-22
CH148-8340 11-6
CH148-8340 11-7
CH148-8340 5-15
CH148-8340 5-68
CH148-8340 5-72
CH148-8347 11-38
CH148-8347 5-32
CH148-8347 5-37
CH148-8347 5-39
CH148-8347 5-47
CH148-8347 5-52
CH148-8347 5-66
CH148-8359 4-43
CH148-8378 11-19
CH148-8378 11-20
CH148-8378 11-22
CH148-8378 11-38
CH148-8378 11-7
CH148-8378 11-8
CH148-8378 11-9
CH148-8378 5-15
CH148-8378 5-32
CH148-8378 5-37
CH148-8378 5-39
CH148-8378 5-66
CH148-8378 5-68
CH148-8378 5-72
CH148-8433 11-7
CH148-8444 11-7
CH3K-0360 5-17
CH3K-0360 5-23
CH6V-8398 5-23
CH6V-8398 5-27
CH6V-8398 5-30
CH6V-8398 5-5
CH6V-8398 5-6
CH6V-8398 5-7
CH6V-8635 5-53
CH6V-8637 5-50
CH6V-8639 5-23
CH6V-8724 5-24
CH6V-9007 5-34
CH6V-9836 5-26
CH6V-9837 5-27
NS 2-23
NS 7-8
WR10359 3-20
WR10359 3-24
WR12030 2-19
WR121865 3-41
WR121865 3-48
WR122648 2-9
WR123067 3-40

NUMERIC INDEX

WR124539 3-43
WR124539 3-45
WR124539 3-50
WR124539 3-52
WR124586 7-5
WR125301 3-46
WR125305 3-47
WR125310 3-46
WR126491 3-43
WR126491 3-45
WR126491 3-50
WR126491 3-52
WR127095 4-9
WR127785 4-179
WR127785 4-180
WR127785 4-189
WR127785 4-207
WR127785 4-208
WR128835 3-43
WR128835 3-45
WR129085 4-6
WR129085 4-8
WR129086 4-28
WR129086 4-6
WR129086 4-8
WR129144 4-104
WR129144 4-108
WR129144 4-210
WR129144 4-211
WR129144 4-212
WR129144 4-213
WR129144 4-97
WR129144 4-98
WR129144 8-13
WR129194 3-46
WR129706 3-46
WR135545 3-43
WR135545 3-45
WR135545 3-50
WR135545 3-52
WR136831 3-65
WR136831 3-66
WR136832 3-65
WR136832 3-66
WR232770 3-59
WR32723 11-22
WR32723 5-68
WR32723 5-72
WR34606 3-43
WR34606 3-45
WR34606 3-50
WR34606 3-52
WR34609 3-43
WR34609 3-45
WR34609 3-50
WR34609 3-52
WR35020 2-2
WR35020 4-3
WR504301 4-2
WR55197 3-43
WR55197 3-45
WR55197 3-50
WR55197 3-52
WR55293 8-8
WR55589 1-11
WR55622 1-11

AGCO Corporation
4205 River Green Parkway
Duluth, GA 30096-2568

©AGCO Corporation, 2006
Printed in U.S.A.