A1

MT 655/665B
TECHstar CVT

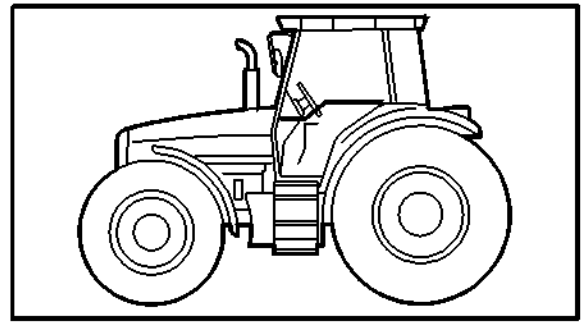

1637452M2 (0) 04/05

Challenger 240/265HP

MT 600B Series

CONTENTS / SOMMAIRE / INHALT / CONTENUTO / SUMARIO

A2

CONTENTS

SECTION ONE

- GENERAL INFORMATION
- SYMBOLS
- GROUP INDEX ALPHA.
- RECOMMENDED STOCKING PARTS
- MARKETING KEY PARTS INDEX
- CHANGES AFTER PREVIOUS PUBLICATION INDEX
- NUMERICAL PART NUMBER INDEX

SECTION TWO

- ILLUSTRATIONS WITH REFERENCES
- PART NUMBER REFERENCE LISTS

SOMMAIRE

SECTION UNE

- INFORMATIONS GENERALES
- SYMBOLES
- GROUPES DE MONTAGE
- PIECES DONT LE STOCKAGE EST RECOMMANDE
- PIECES DE VENTES COURANTES
- CHANGEMENT DEPUIS LA DERNIERE EDITION
- INDEX NUMERIQUE PIECES

SECTION DEUX

- ILLUSTRATIONS AVEC REFERENCES
- LISTES DES NUMEROS DE REFERENCE DES PIECES

INHALT

ABSCHNITTEINS

- ALLGEMEINE HINWEISE
- SYMBOLE
- GRUPPENVERZEICHNIS
- LAGERVOSCHLAGSTEILE
- SCHWERPUNKTEILE MARKETING
- AENDERUNG GEGENEUBER VORIGER AUSGABE
- NUMMERN - INDEX

ABSCHNITT ZWEI

- ABBILDUNGEN MIT POSITIONS NUMMERN
- TEXTSEITEN MIT TEILNUMMERN

CONTENUTO

SEZIONE PRIMA

- INFORMAZIONI GENERALI
- SIMBOLI
- GRUPPO INDICE
- PEZZI CHE RECCOMANDIANO DI TENERE A MAGAZZINO
- PEZZI ESSENZIALI PER IL MARKETING
- VARIAZIONE RISPETTO ALL ULTIMA EMISSIONE
- INDICE NUMERICO

SEZIONE SECONDA

- ILLUSTRAZIONI CON REFERIMENTI
- ELENCO DEI PARTICOLARI RICAMBIO

SUMARIO

SECCION PRIMERA

- INFORMATION GENERAL
- SIMBOLOS
- GROUPOS DE MONTAJE
- RECAMBIO QUE SE RECOMIENDA MANTENER EN STOCK
- RECAMBIO SELECCIONADO POR MARKETING COMO PIEZAS CLAVE
- MOD. DESDE LA ULTIMA EDICION
- INDICE NUMERICO

SECCION SEGUNDA

- DJBUJOS CON REFERENCIAS
- LISTAS CON LOS NUMEROS DE REFERENCIA

I PART NUMBER REFERENCE LIST

(1) EXAMPLE

A	B	C	D	E	F	G	H / K	J / L
1		*1611168M4*	1		1	DIFFERENTIAL	DIFFERENTIEL DIFFERENZIALE	DIFFERENTIAL DIFFERENCIAL
2		*3619014M1*	2		1	KIT	JEU IL GRUPPO	REPARATURSATZ JUEGO
3			2	REF.2	1	CROWNWHEEL	COURONNE CORONA	TELLERRAD CORONA
4			2	REF.2	1	PINION	PIGNON PIGNONE	ZAHNRAD PINON
5	*	**3617401M5**	2	1234567	1	BOLT	BOULON BULLONE	SCHRAUBE PERNO
6	*	3617352M3	2	1234567	1	BOLT	BOULON BULLONE	SCHRAUBE PERNO

(2) EXPLANATION

COL. A	ILLUSTRATION REFERENCE NUMBER
COL. B	AN ASTERISK INDICATES A CHANGE SINCE LAST PRINT
COL. C	PART NUMBER (SEE PARAGRAPH 2)
COL. D	ITEM ALSO A COMPONENT OF AN ASSEMBLY. SEE ASSEMBLY ILLUSTRATION NUMBER INDICATED
COL. E	COMMENT (SEE SYMBOLS AND NOTES)
COL. F	QUANTITY REQUIRED (SEE NOTES BELOW)
COL. G.H.J.K.L	DESCRIPTION LANGUAGE FORMAT : ENGLISH, FRENCH, GERMAN, ITALIAN, SPANISH

II PART NUMBER IDENTIFICATION

1611168M4	= RECOMMENDED STOCKING PARTS AND MARKETING KEY PARTS
3619014M1	= RECOMMENDED STOCKING PARTS
3617401M5	= MARKETING KEY PARTS INDEX
3617352M3	= PART WITHOUT SPECIFIC MARKS

(3) SPECIAL NOTES

THE QUANTITY SHOWN IN COLUMN 'F' IS THE QUANTITY REQUIRED FOR THE PARTICULAR APPLICATION THAT IS ILLUSTRATED. WHERE THESE PARTS ARE COMPONENTS OF AN ASSEMBLY THIS REFERS TO THE QUANTITY IN ONE ASSEMBLY OR SUB-ASSEMBLY.

FOR PARTS SUCH AS SHIMS, WASHERS, ETC. AN 'X' IN THE QUANTITY COLUMN MEANS "QUANTITY AS REQUIRED"

THE PARTS BOOK NUMBER, ISSUE NUMBER AND DATE ARE SHOWN IN THE LOWER RIGHT HAND CORNER OF THE ILLUSTRATED PAGE. THE ISSUE NUMBER IS PRINTED IN BRACKETS

RECOMMENDED STOCKING PARTS

THE INDEX OF THESE PARTS INCLUDES A COLUMN QTY REPORTING THE QUANTITY USED FOR EACH PART IN THE RELEVANT FITTING.

SAFETY NOTE

WHEN ORDERING REPLACEMENT PARTS TO WHICH SAFETY DECALS WERE ORIGINALLY ATTACHED THE APPROPRIATE SAFETY DECALS MUST BE ORDERED AND FITTED.

I LISTES DES NUMEROS DE REFERENCE DES PIECES

(1) EXEMPLE

A	B	C	D	E	F	G	H	J
							K	L
1		*1611168M4*	1		1	DIFFERENTIAL	DIFFERENTIEL DIFFERENZIALE	DIFFERENTIAL DIFFERENCIAL
2		*3619014M1*	2		1	KIT	JEU IL GRUPPO	REPARATURSATZ JUEGO
3			2	REF.2	1	CROWNWHEEL	COURONNE CORONA	TELLERRAD CORONA
4			2	REF.2	1	PINION	PIGNON PIGNONE	ZAHNRAD PINON
5	*	**3617401M5**	2	→ 1234567	1	BOLT	BOULON BULLONE	SCHRAUBE PERNO
6	*	3617352M3	2	→ 1234567	1	BOLT	BOULON BULLONE	SCHRAUBE PERNO

(2) EXPLICATIONS

COL. A	NUMERO DE REFERENCE DE L'ILLUSTRATION
COL. B	UN ASTERISQUE INDIQUE UN CHANGEMENT DEPUIS LA DERNIERE EDITION
COL. C	NUMERO DE PIECE (VOIR PARAGRAPHE 2)
COL. D	PIECE COMPRISE DANS L'ENSEMBLE DONT LE NUMERO DE REFERENCE DE L'ILLUSTRATION EST INDIQUE
COL. E	REMARQUE (VOIR SYMBOLES ET NOTES)
COL. F	QUANTITE (VOIR NOTE CI-DESSOUS)
COL. G.H.J.K.L	DESIGNATION ORDRE DES LANGUES ANGLAIS, FRANCAIS, ALLEMAND, ITALIEN, ESPAGNOL

II IDENTIFICATION DES NUMEROS DE PIECES

1611168M4	= PIECES DONT LE STOCKAGE EST RECOMMANDE ET PIECES DE VENTES COURANTES
3619014M1	= PIECES DONT LE STOCKAGE EST RECOMMANDE
3617401M5	= PIECES DE VENTES COURANTES
3617352M3	= PIECES SANS SIGNIFICATION PARTICULIERE

(3) NOTES SPECIALES

LA QUANTITE INDIQUEE DANS LA COLONNE 'F' EST CELLE APPLICABLE A L'ENSEMBLE ILLUSTRE SUR LA PAGE ADJACENTE, LE NOMBRE INDIQUE DONC LA QUANTITE DANS L'ENSEMBLE OU SOUS-ENSEMBLE ET NON POUR LA MACHINE COMPLETE.

POUR DES PIECES TELLES QUE CALES D'EPAISSEUR, RONDELLES, ETC. UN "X" DANS LA COLONNE QUANTITE SIGNIFIE "SUIVANT BESOIN".

LE NUMERO DU CATALOGUE, LE NUMERO D'EMISSION ET LA DATE SONT INDIQUES DANS LE COIN INFERIEUR DROIT DE LA PAGE ILLUSTREE. LE NUMERO D'EMISSION EST IMPRIME ENTRE PARENTHESES.

PIECES DONT LE STOCKAGE EST RECOMMANDE

L'INDEX DE CES PIECES INCLUS UNE COLONNE QTY QUI LISTE LA QUANTITE UTILISEE DE CHAQUE PIECE POUR LE MONTAGE.

NOTE DE SECURITE

LORS DU REMPLACEMENT DE PIECES MUNIES A L'ORIGINE D'UNE DECALCOMANIE DE SECURITE. LA DECALCOMANIE CORRESPONDANTE DOIT AUSSI ETRE COMMANDEE ET MONTEE.

ALLGEMEINE HINWEISE

A5

I TEXTSEITEN MIT TEILNUMMERN

(1) BEISPEIL

A	B	C	D	E	F	G	H	J
							K	L
1		*1611168M4*	1		1	DIFFERENTIAL	DIFFERENTIEL DIFFERENZIALE	DIFFERENTIAL DIFFERENCIAL
2		*3619014M1*	2		1	KIT	JEU IL GRUPPO	REPARATURSATZ JUEGO
3			2	REF.2	1	CROWNWHEEL	COURONNE CORONA	TELLERRAD CORONA
4			2	REF.2	1	PINION	PIGNON PIGNONE	ZAHNRAD PINON
5	*	**3617401M5**	2	1234567	1	BOLT	BOULON BULLONE	SCHRAUBE PERNO
6	*	3617352M3	2	1234567	1	BOLT	BOULON BULLONE	SCHRAUBE PERNO

(2) ERLAEUTERUNG

COL. A	POSITIONSNUMMER DER ABBILDUNG
COL. B	EIN STERN BEDEUTET AENDERUNG GEGENEUBER VORIGER AUSGABE
COL. C	TEILNUMMER (SEHE ABSATZ 2)
COL. D	EINZELTEIL VON KOMPLETTEIL, DESSEN POSITIONSNUMMER HIER ANGEGEBEN IST
COL. E	BEMERKUNGEN (SIEHE SYMBOLE UND HINWEISE)
COL. F	ANZAHL (SIEHE UNTENSTEHENDE ANMERKUNG)
COL. G.H.J.K.L	SPRACHEN - DESCHREIBUNG ENGLICH, FRANZOESISCH, DEUTSCH, ITALIENSCH UND SPANISCH

II FESTSTELLEN DER TEILNUMMER

1611168M4 = LAGERVORSCHLAGSTEILE UND SCHWERPUNKTEILE MARKETING

3619014M1 = LAGERVORSCHLASTEILE

3617401M5 = SCHWERPUNKTEILE MARKETING

3617352M3 = TEIL OHNE SPEZIFIKATIONS KENNZEICHNUNG

(3) ANMERKUNGEN

DIE IN SPALTE 'F' AUFGEFUEHRTE ANZAHL IST DIE AND DIESTER STELLE BENOETIGTE ANZAHL. FALLS ES SICH UMEIN EINZELTEIL EINES KOMPLETTEILS HANDEL, IST DIE ANZAHL PRO KOMPLETTEIL ORDER ZUSAM-MENBAUGEMEINT.

FUER TEILE WIE EINSTELLBLECHE, SCHEIBEN USW BEDEUTET EIN 'X' IN DER ANZAHLSPALT "ANZAHL NACH BEDARF".

DIE TEILNUMMER DER ERSATZTEILLISTE, AUSGABENUMMER UND DATUM SIND IN DER RECHTEN UNTEREN ECKE DER BILDSEITE AUFGEFUEHRT. DIE AUSGABENUMER STEHT IN KLAMMERN.

ZUR LAGERHALTUNG EMPFOHLENE ERSATZTEILE

DER ERSATZTEIL INDEX ENTHAELT EINE SPALTE "MENGE", WELCHE DIE ANZAHL DER ZUM ZUSAMMENBAU ERFORDERLICHEN ANGIBT.

WECHTIGER HINWEIS

WENN ERSETZTE TEILE BESTELLT WERDEN, BEI DENEN SICHERHEITSABZIEHBILDER WAREN, MUESSEN DIE ENTSPRECHENDEN SICHERHEITZABZIEHBILDER BESTELLT UND ANGEBRACHT WERDEN.

I ELENCO DEL PARTICOLARI RICAMBIO

(1) ESEMPION

A	B	C	D	E	F	G	H	J
							K	L
1		*1611168M4*	1		1	DIFFERENTIAL	DIFFERENTIEL DIFFERENZIALE	DIFFERENTIAL DIFFERENCIAL
2		*3619014M1*	2		1	KIT	JEU IL GRUPPO	REPARATURSATZ JUEGO
3			2	REF.2	1	CROWNWHEEL	COURONNE CORONA	TELLERRAD CORONA
4			2	REF.2	1	PINION	PIGNON PIGNONE	ZAHNRAD PINON
5	*	**3617401M5**	2	1234567	1	BOLT	BOULON BULLONE	SCHRAUBE PERNO
6	*	3617352M3	2	1234567	1	BOLT	BOULON BULLONE	SCHRAUBE PERNO

(2) SPIEGAZIONE

COL. A	NUMERO DI RIFERIMENTO DELL ILLUSTRAZIONE
COL. B	UN ASTERISCO INDICA UNA VARIAZIONE RISPETO ALL ULTIMA EMISSIONE
COL. C	NUMERO DEL RECAMBIO (VEDER PARAGRAFO 2)
COL. D	IL PARTICOLARE E ANCHE COMPONENTE DI UN GRUPPO IL CUI NUMERO DI ILLUSTRAZIONE E INDICATO
COL. E	COMENTO (VEDER SIMBOLI E NOTE)
COL. F	QUANTITA RECHIESTA (VEDERE NOTA A SEQUITO)
COL. G.H.J.K.L	DESCRIZIONE - SEQUENZA LIGNUA : INGLESE, FRANCESE, TEDESCO, ITALIANO E SPAGNOLO

II CODICE IDENTIFICAZIONE DEL PARTICOLARE

1611168M4 = PEZZI CHE RECOMANDIANO DI TENERE A MAGAZZINO E PEZZI ESSENZIALI PER IL MARKETING

3619014M1 = PEZZI CHE RECOMANDIANO DI TENERE A MAGAZZINO

3617401M5 = PEZZI ESSENZIALI PER IL MARKETING

3617352M3 = SENZA CODICE IDENTIFICAZIONE DEL PARTICOLARE

(3) NOTE AGGIUNTIVE

LA QUANTITA INDICATA NELLA COLONNA 'F' CORRISPONDE ALLA QUANTITA RICHIESTA PER LA PARTICOLARE APPLICAZIONE ILLUSTRATA. QUALORA LA PARTE SIA COMPONENTE DI UN GRUPPO, LA QUANTITA INDICATA SI REFERISCE ALLA QUANTITA CONTENUTA NEL GRUPPO.
PER PARTICOLARI COME SPESSORI, RONDELLE ETC. UNA 'X' NELLA COLONNA DELLA QUANTITA STA A INDICARE "QUANTITA A RICHIESTA"

IL NUMERO DI RIFERIMENTO DEL CATALOGO, IL NUMERO DI EDIZIONE E LA DATA SONO RIPORTATI IN BASSO A DESTRA NELLA PAGINA ILLUSTRATIVA.

PEZZI CHE RECCOMANDIANO DI TENERE A

L'INDICE DELA LISTA RICAMBI INCLUDE UNA COLONNA QTY CHE INDICA LA QUANTITA PER OGNI CODICE RICAMBI NECESSARIA PER IL MONTAGIO.

NOTA PER LA SICUREZZA

QUANDO VIENE ORDINATO UN PEZZO AL QUALE ERANO ORIGINARIAMENTE APPLICATE LE DECALCOMANIE PER LA SICUREZZA ANCHE QUESTE ULTIME DEVONO ESSERE ORDINATE E APPLICATE AL PEZZO PRIMA DELLA CONSEGNA AL CLIENTE.

I LISTAS CON LOS NUMEROS DE REFERENCIA DE LAS PIEZAS

(1) EJEMPLO

A	B	C	D	E	F	G	H	J
							K	L
1		*1611168M4*	1		1	DIFFERENTIAL	DIFFERENTIEL DIFFERENZIALE	DIFFERENTIAL DIFFERENCIAL
2		*3619014M1*	2		1	KIT	JEU IL GRUPPO	REPARATURSATZ JUEGO
3			2	REF.2	1	CROWNWHEEL	COURONNE CORONA	TELLERRAD CORONA
4			2	REF.2	1	PINION	PIGNON PIGNONE	ZAHNRAD PINON
5	*	**3617401M5**	2	1234567	1	BOLT	BOULON BULLONE	SCHRAUBE PERNO
6	*	3617352M3	2	1234567	1	BOLT	BOULON BULLONE	SCHRAUBE PERNO

(2) EXPLICACION

COL. A NUMERO DE REFERENCIA DEL DIBUJO

COL. B UN ASTERISCO INDICA UNA MODIFICATION DESDE LA ULTIMA EDICION

COL. C NUMERO DE PIEZA (VER PARAGRAFO 2)

COL. D PIEZA INCLUIDA EN EL CONJUNTO CUYO NUMERO DE REFERENCIA DE DIBUJO SE INDICA COMENTARIO (VEANSE LOS SIMBOLOS Y LAS NOTAS)

COL. E CANDIDAD NECESARIA (VER NOTA A CONTINUACION)

COL. F CANDIDAD NECESARIA (VER NOTA A CONTINUACION)

COL. G.H.J.K.L DESCRIPCION - FORMATO DE IDIOMA - INGLES, FRANCES, ALEMAN, ITALIANO Y ESPANOL

II IDENTIFICATION DE NUMERO DE REFERENCIA

1611168M4 = RECAMBIO QUE SE RECOMENDA MANTENER EN STOCK Y RECAMBIO SELECCIONADO POR MARKETING COMO PIEZAS CLAVE

3619014M1 = RECAMBIO QUE SE RECOMIENDA MANTENER EN STOCK

3617401M5 = RECAMBIO SELECCIONADO POR MARKETING COMO PIEZAS CLAVE

3617352M3 = RECAMBIO SIN MARCAS ESPECIFICAS

(3) NOTAS ESPECIALES

LA CANTIDAD INDICADA EN LA COLUMNA 'F' ES LA CANTIDAD NECESARIA PARA EL CONJUNTO DISENADO EN LA PAGINA CONTIGUA, EL NUMERO POR LO TANTO INDICA LA CANTIDAD CORRESPONDIENTE AL CONJUNTO O SUBCONJUNTO Y NO A LA MAQUINA COMPLETA.

PARA DETERMINADAS PIEZAS COMO ESPACIADORES, ARANDELAS, ETC. UNA 'X' EN LA COLUMNA DE CANDIDADES INDICA "SEGUN NECESIDADES".

LA REFERENCIA DEL CATALOGO NUMERO Y FECHA DE EDICION ESTAN IMPRESAS EN EL ANGULO DERECHO INFERIOR DE LA PAGINA ILLUSTRADA EL NUMERO DE EDICION ESTA INDICADO ENTRE PARENTESIS.

RECAMBIO QUE SE RECOMIENDIA MANTENER EN STOCK

L'INDEX NUMERICO DE ESTAS PIEZAS INCLUSO UNA COLUMNA QTY QUE LISTA LA CANTIDAD UTILISADA DE CADA PIEZA POR MEL MONTAJE.

AVISO DE SEGURIDAD

CUANDO SE PIDEN PIEZAS DE REPUESTO QUE ORIGINALIMENTE LLEVABAN CALCOMANIAS DE SEGURIDAD HAY QUE PEDIR Y COLOCAR TAMBIEN LAS CALCOMANIAS APROPIADAS.

SYMBOLS / SYMBOLES / SYMBOLE / SIMBOLI / SIMBOLOS

A8

	FOUR WHEEL DRIVE	4 ROUES MOTRICES 4 RUEDAS MOTRIZ	4 RAD ANTRIEB 4 RUEDAS MOTRIZ
	TWO WHEEL DRIVE	2 ROUES MOTRICES 2 RUEDAS MOTRIZ	2 RAD ANTRIEB 2 RUEDAS MOTRIZ
D	FOR GERMANY ONLY OR ANY TEXT IN GERMAN ONLY	POUR ALLEMAGNE SEULEMENT OU EN ALLEMAND PARA ALEMANIA SOLAMENTE O EN ALEMAN SOLAMENTE	NUR FUER DEUTSCHLAND ODER TEXT NUR IN DEUTSCH PARA ALEMANIA SOLAMENTE O EN ALEMAN SOLAMENTE
F	FOR FRANCE ONLY OR ANY TEXT IN FRENCH ONLY	POUR FRANCE SEULEMENT OU EN FRANÇAIS PARA FRANCIA SOLAMENTE O EN FRANCES SOLAMENTE	NUR FUER FRANKREICH ODER TEXT NUR IN FRANZOESICH PARA FRANCIA SOLAMENTE O EN FRANCES SOLAMENTE
I	FOR ITALY ONLY OR ANY TEXT IN ITALIAN ONLY	POUR ITALIE SEULEMENT OU EN ITALIEN PARA ITALIA SOLAMENTE O EN ITALIANO SOLAMENTE	NUR FUER ITALIEN ODER TEXT NUR IN ITALIENSCH PARA ITALIA SOLAMENTE O EN ITALIANO SOLAMENTE
GB	FOR UK ONLY OR ANY TEXT IN ENGLISH ONLY	POUR ROYAUME UNI SEULEMENT OU EN ANGLAIS PARA INGLATERRA SOLAMENTE O EN INGLES SOLAMENTE	NUR FUER ENGLAND ODER TEXT NUR IN ENGLISCH PARA INGLATERRA SOLAMENTE O EN INGLES SOLAMENTE
2A	FOR AMERICAS REGION	POUR AMERIQUES PARA REGION DE LAS AMERICAS SOLAMENTE	FUER AMERICA PARA REGION DE LAS AMERICAS SOLAMENTE
3A	FOR ASIA/AFRICA/AUSTRALASIA REGION	POUR ASIE/AFRIQUE/AUSTRALASIE PARA ASIA/AGRICA/AUSTRALASIA SOLAMENTE	FUER ASIEN/AFRIKA/AUSTRALIEN PARA ASIA/AFRICA/AUSTRALASIA SOLAMENTE
EE	FOR EXPORT EUROPE	POUR EXPORT EUROPE PARA EXPORTACION EUROPA	FUER EUROPA PARA EXPORTACION EUROPA
US	FOR UNITED STATES OF AMERICA	POUR ETATS UNIS D'AMERIQUE PARA EE UU DE AMERICA	FUER USA PARA EE UU DE AMERICA
AA	FOR AUSTRALIA	POUR AUSTRALIE PARA AUSTRALIA	FUER AUSTRALIEN PARA AUSTRALIA
S	FOR SWEDEN	POUR SUEDE PARA SUECA	FUER SCHWEDEN PARA SUECA
N	FOR NORWAY	POUR NORVEGE PARA NORVEGA	FUER NORWEGEN PARA NORVEGA
ZA	FOR SOUTH AFRICA	POUR AFRIQUE DU SUD PARA AFRICA DEL SUR	FUER SUED-AFRIKA PARA AFRICA DEL SUR
	REPLACE AND REPAIR OLD IS NOT INTERCHANGEABLE WITH NEW	REMPLACE ET RECHANGE NON INTERCHANGEABLE SOSTITUIRE E RIPARARE/NUOVO-VECCHIO NON INTERC.	FUER ERSATZ ALTE VERSION NICHT AUSTAUS. MIT NEUER VERSION REEMPLAZAR Y REPARAR/LA ANTERIOR NO ES INTERCAM. CON LA NUEVA
	REPLACE AND REPAIR - OLD AND NEW INTERCHANGEABLE	REMPLACE ET RECHANGE - INTERCHANGEABLE SOSTITUIRE E RIPARARE/NUOVO-VECCHIO SONO INTERC.	FUER ERSATZ - ALTE VERSION AUSTAUS. MIT NEUER VERSION REEMPLAZAR Y REPARAR/ANTERIOR Y NUEVAS SON INTERCAMB.

SYMBOLS / SYMBOLES / SYMBOLE / SIMBOLI / SIMBOLOS

A9

▶	RIGHT HAND	DROITE DESTRA	RECHTS DERECHA
◀	LEFT HAND	GAUCHE SINISTRA	LINKS IZQUIERDA
▶◀	WIDTH	LARGEUR LARGHEZZA	BREITE ANCHURA
◀▶	LENGTH	LONGUEUR LUNGHEZZA	LANGE LONGITUD
▼▲	THICKNESS	EPAISSEUR SPESSEZZA	STAERKE ESPESOR
∅	DIAMETER	DIAMETRE DIAMETRO	DURCHMESSER DIAMETRO
	NUMBER OF TEETH/SPLINES	NOMBRE DE DENTS/CANNELURES NUMERO DE DENTES/CALETTATURAS	ANZAHL DER ZAEHNE/YERZAHNUNG NUMERO DE DIENTES/RANURAS
▲	TOP	HAUT PARTE SUPERIORE	OBEN PARTE SUPERIOR
▼	BOTTOM	BAS PARTE INFERIORE	UNTEN PARTE INFERIOR
	FROM SERIAL OR ENGINE NUMBER	A PARTIR DU NUMERO DE SERIE DU NUMERO DE MOTEUR DESDE EL NUMERO	AB SERIEN-ODER MOTOR NUMMER DESDE EL NUMERO
	UP TO SERIAL OR ENGINE NUMBER	JUSQU'AU NUMERO DE SERIE OU NUMERO DE MOTEUR HASTA EL NUMERO	DROITE HASTA EL NUMERO
	REPAIRS AND REPLACES	REMPLACE ET RECHANGE SURROGARE Y RICAMBIO	ERSETZT REEMPLAZA Y SUSTIUYE
	SEE PAGE - REFERENCE NUMBER	VOIR PAGE - NUMERO DE REFERENCE VER PAGINA - NUMERO DE REFERENCIA	SIEHE SEITE - POSITIONSNUMMER VER PAGINA NUMERO DE REFERENCIA
	ALTERNATIVE	ALTERNATIVE ALTERNATIVO	WAHLWEISE ALTERNATIVO
	NOT SERVICED, ORDER	PAS FOURNIES, COMMANDER NO SUMINISTRADAS, PEDIR	NICHT LIEFERTEILE, BESTELLE NO SUMINISTRADAS, PEDIR
	WITHOUT OR NOT FOR. EXAMPLE: NOT FOR ENGLAND	SANS OU PAS POUR EXAMPLE : PAS POUR ANGLETERRE SON O NO PARA. EJEMPLO : NO PARA INGHILTERRA	OHNE ODER NICHT FUER. BEISPEL : FUER DEUTSCHLAND SON O NO PARA. EJEMPLO : NO PARA INGLETERRA

RESERVED

GROUP INDEX ALPHA
GROUPES DE MONTAGE
GRUPPENVERZEICHNIS
GRUPPO INDICE
GRUPOS DE MONTAJE

B 1

		PAGE
XA06	ENGINE AND EQUIPMENT MOTEUR ET EQUIPEMENT ENGINZUBEHOER MOTORE E EQUIPAGGIAMENTO MOTOR Y EQUIPAMENTE	10
XD01	CLUTCH EMBRAYAGE KUPPLUNG FRIZIONE EMBRAGUE	20
XE04	TRANSMISSION TRANSMISSION GETRIEBE TRASMISSIONE TRANSMISION	25
XG01	REAR AXLE ESSIEU ARRIERE HINTERACHSE ASSALE POSTERIORE EJE TRASERO	30
XG55	LINKAGE ATTELAGE LENKER TIRANTERIA ENGANCHES	40
XG56	PTO–DRIVE MECHANISM TRANSMISSION PRISE DE FORCE ZAPFWELLENANTRIEB MECCANISMO PRESA DI FORZA MECANISMO ACCIONAMIENTO TOMA DE FUERZA	50
XJ01	FRONT AXLE ESSIEU AVANT VORDERACHSE ASSALE ANTERIORE EJE DELANTERO	60
XP28	HYDRAULICS HYDRAULIQUE HYDRAULISCHE ANLAGE IDRAULICI HIDRAULICOS	70
XU21	ELECTRIC EQUIPMENT & INSTRUMENT PANEL EQUIPEMENT ELECTRIQUE ET TABLEAU DE BORD ELEKTR.–ANLAGE UND INSTR.–BREH IMPIANTO ELETTRICO E CRUSCOTTO EQUIPO ELECTRICO Y TABLERO DE INSTRUMENTOS	80
XU22	ELECTRONIC EQUIPMENT EQUIPEMENT ELECTRONIQUE ELEKTRONISCHAUSSTATTUNG EQUIPAGGIAMENTO ELETTRONICA EQUIPO ELECTRONICA	90
XY54	SHEET METAL CARROSSERIE VERKLEIDUNG CARROZZERIA EMPLANCHADOS	100
XY55	TRACTOR CAB CABINE TRACTEUR SCHLEPPERKABINE CABINA TRATTORE CABINA TRACTOR	110

PAGE

XY56

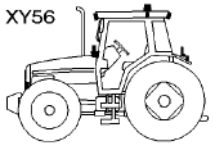

LIGHTING EQUIPMENT
ECLAIRAGE
BELEUCHTUNGSANLAGE
EQUIPAGGIAMENTO ILLUMINAZIONE
EQUIPO ALUMBRADO — 120

XY57

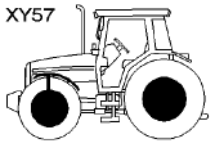

RIMS AND WHEELS WEIGHTS
JANTE ET MASSES DE ROUES
FELGE UND RADGEWICHTE
CERCHIONE Y CONTRAPPESI PER RUOTE
LLANTA E PESOS DE RUEDAS — 130

PAGE

RESERVED

ALPHABETICAL INDEX

C1

PAGE

Clutch
Clutch Control 20–20
Flywheel & Flywheel Housing 20–15
Front Spacer 20–5

Electric Equipment & Instrument Panel
Automatic Air Conditioner Harness & Sensors 80–95
Electric Equipment & Instrument Panel 80–10
Engine Harness 80–25
External Controls Fitted On The Rear Fenders 80–20
Field Lights Harness 80–90
Front Lightning Harness 80–60
Instrument Panel And Instruments 80–5
Instrument Panel Harness 80–35
Armrest 80–35
Pillar Harness 80–55
Plate Relay & Fuse Holder 80–40
Rear Lightning Harness 80–70
Roof Harness 80–45
Side Console Switches 80–15
Trailor Electric Socket 80–80

Electronic Equipment
Aboard Computer And Plate Lighting Equipement 90–40
Control Box
Cab 90–65
Control Box Harness & Cab Controls 90–70
Electrical Wiring 90–5
Electronic Equipment
Sensors 90–85
Electronic Lift
Console 90–30
Main Harness 90–10
Fieldstar 90–60
Radar 90–55
Sensor Harness Dual Control 90–20
Side Console Harness
Cab 90–75
Transmission Main Harness 90–80

PAGE

Engine And Equipment
Additional Tank 10–185
Air Cooler 10–230
Air Filter
Dry – Dual Element 10–235
Air Induction And Exhaust System 10–115
Alternator 10–15
Alternator & Bracket 10–10
Batteries And Cables 10–195
Belt Tensioner 10–130
Cab Heating System
Engine Part 10–175
Compresser 10–215
Cooling System
Air Conditioned Installation 10–210
Engine 10–220
Crankshaft, Pistons And Connecting Rods 10–35
Cylinder Block 10–25
Cylinder Head 10–55
Cylinder Head Cover 10–65
Electronic Engine Management 10–135
Engine And Equipment 10–5
Engine Gaskets Sets 10–155
Engine Repair Kits
Piston– Cylinder Head With Valves 10–145
Fuel Injection Equipment 10–90
Fuel Pipes 10–190
Fuel Tank & Attachments 10–180
Heater Engine Block 10–165
Low Pressure Fuel System 10–110
Lubricating Oil Cooler And Filter 10–80
Lubricating Oil Sump 10–75
Starter 10–20
Throttle Controls 10–255
Timing Gear Housing 10–30
Turbocharger
Pipes 10–125
Valve Mechanism And Camshaft 10–45
Vertical Exhaust On The Side 10–245
Water Pump 10–85

ALPHABETICAL INDEX

C2

PAGE

Front Axle

Belly Weight 60–20
Front Axle 4 Wheel Drive 60–25
Bracket 60–25
Clutch 60–40
Differential 60–60
Differential Lock Mechanism 60–30
Final Drive 60–65
Housing 60–55
Guard And Transmission Shaft 60–35
Weight Frame And Tow Pin 60–5

Hydraulics

Auxiliary Distributor 70–175
Auxiliary Distributors Installation 70–160
Auxiliary Hydraulics 70–120
Brackets Pedal 70–30
Brake Pedals 70–35
Brakes
Hydraulic Pipes 70–40
Control With 5–6 Distributors Electrodynamique
Module Fingertip 70–225
Feed Pump
System Comfort 70–65
Gear Box Lubrication 70–75
Interior 70–75
Hydraulic Brake Assy 70–50
Hydraulic Circuit
Transmission 70–80
Hydraulic Coupling 70–195
Hydraulic Pump 70–150
Hydraulic Valve Block 70–110
Hydraulic Lines 70–110
Pressure Filter 70–90
Solenoid Valve 70–100
Hydraulique Manifold 70–140
Lighting Power Shuttle Drive 70–15
Lube Oil Pump
Filter 70–60
Male Coupler 70–215

PAGE

Oil Cooler 70–115
Oil Recovery 70–220
Pump Drive 70–55
Steering Hydraulic Lines 70–25
Steering Pump 70–20
Steering Wheel And Telescopic Column 70–5

Lighting Equipment

Field Lights 120–25
Lighting Equipment
Front 120–5
Rear 120–40
Rotating Light 120–50
Traffic Warning 120–35

Linkage

Automatic Hitch
With Remote Control 40–155
Automatic Stabilizers 40–55
Drawbar 40–65
Front Linkage
Hydraulic 40–160
Front Linkage 35000n 40–180
Front Linkage 50000n 40–190
Hitch 40–135
Levelling Box 40–15
Lift Cylinders 40–5
Lift Cylinders Feeding 40–10
Long Hay Ladder 40–125
Lower Bar With Hook 40–40
Lower Bar With Toogle 40–45
Sensing Pin 40–35
Shoe Stabilizers 40–60
Swinging Drawbar 40–100
Ball And Sscket Hitch 40–100
Piton Attachment 40–95
Swinging Drawbar Support 40–105
Swinging Drawbar Tidying 40–130
Top Link Lock 40–30
Top Link With Ball End 40–25
Top Link With Hook End 40–20

	PAGE
Tube Stabilizers	40 – 50
Pto–Drive Mechanism	
Engine P . T . O	
Cylinder	50 – 15
Flange – Bridle	50 – 10
Pipes	50 – 20
Guard	
Pto	50 – 25
Independant Power Take Off Clutch	50 – 5
Rear Axle	
Angle Sensor	30 – 65
Bevel Drive	30 – 35
Cardan Brake	30 – 55
Differential	30 – 30
Disc Brakes	30 – 50
Handbrake	30 – 5
Lift Arms	30 – 60
Oil Level Indicator	30 – 25
Rear Axle Housings	
Inner Final Drive Gear	30 – 45
Wheel Shaft Housing	30 – 20
Rims And Wheels Weights	
Front Axle 4 Wheel Drive	
Mudguards And Supports	130 – 30
Front Wheels	
4 Wheel Drive	130 – 5
Rear Wheels	130 – 65
Fixing By Cone	130 – 65
Wheel Wedges	130 – 80
Wheel Weights	130 – 75
Sheet Metal	
Decals	
Safety	100 – 35
Emblems	100 – 30
Footstep	100 – 25
Literature	100 – 50

	PAGE
Sheet Metal	
Grille	100 – 5
Hood	100 – 15
Hood Frame	100 – 20
Tractor Cab	
Air Conditioner	110 – 105
Hose	110 – 105
Cab Filter	110 – 135
Cab Mountings	110 – 10
With Suspension	110 – 10
Canopy	110 – 165
Doors	110 – 40
Electric Control Rear Reflecting Miror	110 – 200
Electrical Plug And Cigar Lighter	110 – 175
External Mirrors	110 – 190
Front Windscreen Wiper	110 – 145
Glass	110 – 45
Heater	
High Cold	110 – 130
Heater Control	110 – 140
Instrument Panel Cladding	110 – 85
Internal Mirrors	110 – 185
Radio Installation	110 – 170
Rear Window Mechanism	110 – 55
Rear Window Wiper	110 – 155
Roof	110 – 60
Seat	110 – 205
Seat Belt	110 – 230
Secondary Seat	110 – 235
Side Window Mechanism	110 – 50
Suspended Cab Control Unit	110 – 15
Tractor Cab	110 – 90
Cab Insulation	110 – 90
Cladding	110 – 65
Fenders	110 – 100
Windscreen Washer	110 – 150
Transmission	
Accumulator Shaft	25 – 30

ALPHABETICAL INDEX

C4

	PAGE
Adjusting Device	25 – 50
Control Armrest	25 – 80
Duct Plate	25 – 45
Gear Box	25 – 10
Group Gear Shifting	25 – 65
Hydraulic Pump	25 – 35
Hydraulique Motor	25 – 40
Inner Housing	25 – 15
Module Fingertip For Distributor With Electrodynamique Control	25 – 90
Planetary Drive	25 – 20
Pump Shaft	25 – 25
Transmission Housing	25 – 5
Transmission Control	25 – 70
Emergency Control – Drive Line	25 – 70
Emergency Control – Range	25 – 75

PAGE

INDEX ALPHABETIQUE

C5

PAGE

Attelage

Alimentation Verin De Relevage 40 – 10
Attelage Avant
Hydraulique 40 – 160
Attelage Avant 35000n 40 – 180
Attelage Avant 50000n 40 – 190
Barre A Trous 40 – 65
Barre De 3eme Point A Crochet 40 – 20
Barre De 3eme Point A Rotule 40 – 25
Barre Oscillante 40 – 95
Accrochage Par Piton 40 – 95
Attelage A Rotule 40 – 100
Barres Inferieures A Crochet 40 – 40
Barres Inferieures A Rotule 40 – 45
Boitier De Nivellement 40 – 15
Capteur D'Effort 40 – 35
Crochet Automatique
Avec Commande A Distance 40 – 155
Crochet D'Attelage 40 – 135
Echelle Longue 40 – 125
Rangement Barre Oscillante 40 – 130
Stabilisateurs A Sabots 40 – 60
Stabilisateurs A Tube 40 – 50
Stabilisateurs Automatique 40 – 55
Support De Barre Oscillante 40 – 105
Verins De Relevage 40 – 5
Verrouillage Barre De 3eme Point 40 – 30

Cabine Tracteur

Air Conditionne 110 – 105
Durite 110 – 105
Boite De Commande Cabine Suspendue 110 – 15
Cabine Tracteur 110 – 100
Ailes 110 – 100
Habillage 110 – 65
Insonorisation 110 – 90
Ceinture De Securite 110 – 230
Chauffage
Grand Froid 110 – 130
Commande De Chauffage 110 – 140

PAGE

Essuie Glace Arriere 110 – 155
Essuie Glace Avant 110 – 145
Filtre De Cabine 110 – 135
Fixation Cabine 110 – 10
Avec Suspension 110 – 10
Habillage Tableau De Bord 110 – 85
Lave Glace 110 – 150
Mecanisme De Glace Arriere 110 – 55
Mecanisme De Glace Laterale 110 – 50
Montage Radio 110 – 170
Pare Soleil 110 – 165
Portes 110 – 40
Prise De Courant Et Allume Cigare 110 – 175
Retroviseur A Commande Electrique 110 – 200
Retroviseurs Exterieurs 110 – 190
Retroviseurs Interieurs 110 – 185
Siege 110 – 205
Siege Secondaire 110 – 235
Toit 110 – 60
Vitres 110 – 45

Carrosserie

Carrosserie
Armature Capot 100 – 20
Calandre 100 – 5
Capot 100 – 15
Decalcomanies
Securite 100 – 35
Emblemes 100 – 30
Litterature 100 – 50
Marchepieds 100 – 25

Eclairage

Eclairage
Arriere 120 – 40
Avant 120 – 5
Equipement Signalisation 120 – 35
Gyrophare 120 – 50
Phare De Travail 120 – 25

Embrayage

INDEX ALPHABETIQUE

C6

	PAGE
Carter Entretoise Avant	20–5
Commande De L'Embrayage	20–20
Volant Moteur & Carter De Volant	20–15
Equipement Electrique Et Tableau De Bord	
Commandes Externes Montee Sur Les Ailes Arrieres	80–20
Equipement Electrique Et Tableau De Bord	80–10
Faisceau Climatiseur Automatique & Capteurs	80–95
Faisceau De Pilier	80–55
Faisceau Eclairage Arriere	80–70
Faisceau Eclairage Avant	80–60
Faisceau Moteur	80–25
Faisceau Phares De Travail	80–90
Faisceau Plafond	80–45
Faisceau Tableau De Bord	80–35
Accoudoir	80–35
Interrupteurs Console Laterale	80–15
Platine Porte Fusibles & Relais	80–40
Prise Electrique De Remorque	80–80
Tableau De Bord Et Instruments	80–5
Equipement Electronique	
Boite De Controle	
Cabine	90–65
Cablage Electrique	90–5
Equipement Electronique	
Capteurs	90–85
Faisceau Boite De Controle & Commandes Cabine	90–70
Faisceau Capteur Dual Control	90–20
Faisceau De Console Laterale	
Cabine	90–75
Faisceau Transmission Principal	90–80
Fieldstar	90–60
Ordinateur De Bord & Platine D'Eclairage	90–40
Radar	90–55
Relevage Electronique	
Console	90–30
Faisceau Principal	90–10
Essieu Arriere	
Bras De Relevage	30–60
Capteur D'Angle	30–65
Carter D'Arbres De Roues	30–20
Controle De Niveau D'Huile	30–25
Couple Conique	30–35
Differentiel	30–30
Frein A Cardan	30–55
Frein A Main	30–5
Freins A Disques	30–50
Trompettes D Essieu Arriere	
Couronne Reduct.Finale Interieure	30–45
Essieu Avant	
Essieu Avant 4 Roues Motrices	60–30
Blocage De Differentiel	60–30
Carter	60–55
Differentiel	60–60
Embrayage	60–40
Reduction Finale	60–65
Support	60–25
Garant Et Arbre De Transmission	60–35
Masse Ventrale	60–20
Support De Masses Et Broche	60–5
Hydraulique	
Bloc Valve Hydraulique	70–90
Filtre Pression	70–90
Tuyauteries	70–110
Valve Solenoide	70–100
Circuit Hydraulique	
Transmission	70–80
Commande Avec 5–6 Distributeurs Electro –Hydraulique	
Module Fingertip	70–225
Commande Eclairage Et Inverseur Sous Couple	70–15
Commande Pompe	70–55
Coupleur Hydraulique	70–195
Coupleur Male	70–215
Distributeur Auxiliaire	70–175
Freinage Hydraulique	70–50
Freins	
Tuyauterie Hydraulique	70–40

INDEX ALPHABETIQUE

C7

	PAGE
Hydraulique Auxiliaire	70 – 120
Lubrification Boite De Vitesses	70 – 75
Interieur	70 – 75
Montage Distributeurs Auxiliaires	70 – 160
Pedales De Frein	70 – 35
Pompe A Huile	
Filtre	70 – 60
Pompe D' Alimentation	
Systeme Confort	70 – 65
Pompe De Direction	70 – 20
Pompe Hydraulique	70 – 150
Recuperation D'Huile	70 – 220
Refroidisseur D'Huile	70 – 115
Repartiteur Hydraulique	70 – 140
Supports Pedales	70 – 30
Tuyauteries Hydrauliques De Direction	70 – 25
Volant De Direction Et Colonne Telescopique	70 – 5

Jante Et Masses De Roues

Cales De Roues	130 – 80
Essieu Avant 4 Roues Motrices	
Garde Boue Et Supports	130 – 30
Masses De Roue	130 – 75
Roues Arriere	130 – 65
Fixation Par Cone	130 – 65
Roues Avant	
4 Roues Motrices	130 – 5

Moteur Et Equipement

Admission D'Air Et Echappement	10 – 115
Alternateur	10 – 15
Alternateur Et Support	10 – 10
Batterie Et Cables	10 – 195
Bloc–Cylindres	10 – 25
Cache Culbuteurs	10 – 65
Carter D'Huile	10 – 75
Carter Distribution	10 – 30
Chauffage Cabine	
Partie Moteur	10 – 175
Circuit Carburant Basse Pression	10 – 110
Commande D'Acceleration	10 – 255
Compresseur	10 – 215
Culasse	10 – 55
Demarreur	10 – 20
Echappement Vertical Lateral	10 – 245
Equipement D'Injection	10 – 90
Filtre A Air	
Sec Deux Elements	10 – 235
Gestion Moteur Electronique	10 – 135
Jeux De Joints Moteur	10 – 155
Kits Reparation Moteur	
Pistons – Culasse Avec Soupapes	10 – 145
Moteur Et Equipement	10 – 5
Pompe A Eau	10 – 85
Rechauffeur Bloc Moteur	10 – 165
Refroidisseur D'Air	10 – 230
Refroidisseur D'Huile Et Filtre	10 – 80
Reservoir A Carburant Et Fixation	10 – 180
Reservoir Supplementaire	10 – 185
Soupapes Et Arbre A Cames	10 – 45
Systeme De Refroidissement	
Installation Air Conditionne	10 – 210
Moteur	10 – 220
Tendeur De Courroies	10 – 130
Turbocompresseur	
Canalisations	10 – 125
Tuyauteries A Carburant	10 – 190
Vilebrequin Pistons Et Bielles	10 – 35

Transmission

Accoudoir De Commande	25 – 80
Arbre De Pompe	25 – 25
Arbre Sommateur	25 – 30
Boite De Vitesses	25 – 5
Carter	25 – 5
Carter Interieur	25 – 15
Commande Boite De Vitesses	25 – 55
Commande De Vitesses	
Operation De Secours – Cable	25 – 70
Operation De Secours – Gamme	25 – 75

	PAGE
Enclenchement De Groupe	25 – 65
Module Fingertip Pour Distrib. A Commande Electro – Hydraulique	25 – 90
Moteur Hydraulique	25 – 40
Plaque De Conduite	25 – 45
Pompe Hydraulique	25 – 35
Reglage	25 – 50
Train Planetaire	25 – 20

Transmission Prise De Force

Embrayage De Prise De Force Independante	50 – 5
Garant	
Prise De Force	50 – 25
Prise De Force Independante	
Cylindre	50 – 15
Flasque – Bride	50 – 10
Tuyauteries	50 – 20

ALPHABETISCHER INDEX

C9

PAGE

Beleuchtungsanlage

Arbeitsscheinwerfer 120–25
Beleuchtungsanlage
Hinterteil 120–40
Vorderseite 120–5
Rundumkennleucht 120–50
Warausrustung 120–35

Elektr.–Anlage Und Instr.–Breh

Armaturenbrett Und Armaturen 80–5
Aussenschaltung Auf Die Kotfluegel 80–20
Automatisch Klimaanlage Kabelnezt Und Sensoren 80–95
Elektr.–Anlage Und Instr.–Breh 80–10
Hinten Kabelnezt Beleuchtung 80–70
Kabelnezt Arbeitsscheinwerfer 80–90
Kabelnezt Dach 80–45
Kabelnezt Der Kabinesaeule 80–55
Kabelnezt Instrumentenbrett 80–35
Armlehne 80–35
Kabelnezt Motor 80–25
Relais & Sicherung Halter Platte 80–40
Seitenkonsole Schalter 80–15
Steckeranhaenger 80–80
Vorne Kabelnezt Beleuchtung 80–60

Elektronischausstattung

Bord. Computer Und Beleuchtungsanlage Plate 90–40
Electron Aushebg
Hauplkabelbaum 90–10
Elektron Ausrstg
Sensoren 90–85
Elektron–Aushbg
Konsole 90–30
Fieldstar 90–60
Kabelausruestung 90–5
Kraftubertragung Hauptkabelbaum 90–80
Radar 90–55
Seiten Konsole Kabel
Kabine 90–75
Sensor Kabel Dual Control 90–20

PAGE

Steuergeraet
Kabine 90–65
Steuergeraet Kabel Und Kabineantriebe 90–70

Enginzubehoer

Anlasser 10–20
Batterie Und Kabel 10–195
Drehstromlichtmaschine 10–15
Drehstromlichtmaschine Und Support 10–10
Einspritzanlage 10–90
Enginzubehoer 10–5
Heizung Motor 10–165
Kabinen–Heizungssystem
Motor Teile 10–175
Kompressor 10–215
Kraftstof Leitungen 10–190
Kraftstoff–Niederdruckanlage 10–110
Kraftstoffbehaelter Und Befestig. 10–180
Kraftstoffregelung 10–255
Kuehlsystem
Klimaanlage–Einbau 10–210
Kuehlung
Motor 10–220
Kurbelwelle, Kolben Und Pleuel 10–35
Luftansaugung Und Auspuff 10–115
Luftfilter
Doppelter Trockenfiltereinsatz 10–235
Luftkuehler 10–230
Motor – Dichtungssaetze 10–155
Motor – Reparatursaetze
Kolben, Zylinderkopf Mit Ventilen 10–145
Oelkuehler Und Filter 10–80
Riemenspanner 10–130
Schmieroelwanne 10–75
Senkrechtem Seitenauspuff 10–245
Steuergehaeuse 10–30
Turbolader
Rohre 10–125
Ventil–Anordnung Und Nockenwelle 10–45
Verwaltung Motor Electronische 10–135

ALPHABETISCHER INDEX

C10

	PAGE
Wasserpumpe	10 – 85
Zusastzlich Tank	10 – 185
Zylinderblock	10 – 25
Zylinderkopef	10 – 55
Zylinderkopfdeckel	10 – 65
Felge Und Radgewichte	
Hinterraeder	130 – 65
Anbau Der Konus	130 – 65
Radgewichte	130 – 75
Unterlegkeile	130 – 80
Vorderachse–4wd	
Radabdeckung Mit Stutze	130 – 30
Vorderraeder	
Allradantrieb	130 – 5
Getriebe	
Getriebe	25 – 5
Gehaeuse	25 – 5
Getriebe–Schaltung	25 – 55
Gruppenschaltung	25 – 65
Hydraulikpumpe	25 – 35
Hydromotor	25 – 40
Innengehaeuse	25 – 15
Kanalplatte	25 – 45
Model Fingertip Fur Verteiler Mit Elektrodynamischer	
Antrieb	25 – 90
Planetentrieb	25 – 20
Pumpenwelle	25 – 25
Schaltung	
Hilfsbetaetigung – Fahren	25 – 70
Hilfsbetaetigung – Gruppe	25 – 75
Schaltung Armlehne	25 – 80
Summierungswelle	25 – 30
Verstellung	25 – 50
Hinterachse	
Ausgleichgetriebe	30 – 30
Handbremse	30 – 5
Hinterachsgehaeuse	30 – 45
Endantrieb Innen	30 – 45
Hubarme	30 – 60
Kardanwellenbremse	30 – 55
Oelstandskontrolle	30 – 25
Scheibenbremsen	30 – 50
Tellerradsatz	30 – 35
Winkelsensor	30 – 65
Hydraulische Anlage	
Antrieb Mit 5–6 Verteilers Elektrodynamischer	
Model Fingertip	70 – 225
Beleuchtung Unter Drehmoment Schaltung	70 – 15
Bremsen	
Hydraulik Leitungen	70 – 40
Bremspedal	70 – 35
Flussigkeitsumlauf	
Getriebe	70 – 80
Foerderpumpe	
Komfortbetaet	70 – 65
Getriebeschmierung	70 – 75
Innen	70 – 75
Halteren Pedal	70 – 30
Hydr. – Kupplung	70 – 195
Hydraulik Ventilblock	70 – 90
Druckfilter	70 – 90
Leitungen	70 – 110
Magnetventil	70 – 100
Hydraulik Verteilerdose	70 – 140
Hydraulikleitungen Lenkung	70 – 25
Hydraulikpumpe	70 – 150
Hydraulische Bremse	70 – 50
Kuppist.Innen	70 – 215
Lenkhilfepumpe	70 – 20
Lenkrad Und Saeuleteleskopisch	70 – 5
Oelkuehler	70 – 115
Olruckgewinnung	70 – 220
Pumpenantrieb	70 – 55
Schmieroelpumpe	
Filter	70 – 60
Zusatzhydraulik	70 – 120

PAGE

Zuzatzeinbausverteilers 70–160
Zuzatzverteiler 70–175

Kupplung
Kupplungsbetatigung 20–20
Schwungrad Und Schwungradgehaeuse 20–15
Vorderer Spacer 20–5

Lenker
Ackerschiene 40–65
Anhaengekupplung 40–135
Anschluss 40–35
Automatische Anhaengekupplung
Mit Fernbedienung 40–155
Druckzylinder 40–5
Druckzylinderversorgung 40–10
Frontkraftheber
Hydraulik 40–160
Frontkraftheber 35000n 40–180
Frontkraftheber 50000n 40–190
Hohenflosseschuh 40–60
Longladegatter 40–125
Oberlenker Mit Haken 40–20
Oberlenker Mit Kugelgelenk 40–25
Oberlenkerriegel 40–30
Stabilisatoren 40–50
Stabilisatoren Automatisch 40–55
Unterstab Mit Gelenkzappen 40–45
Unterstab Mit Haken 40–40
Verstellgehaeuse 40–15
Zugpendel 40–70
Zugpendelaufraumen 40–130
Zugpendelschwenker
Gelenkkupplung 40–100
Zugbolzen Zusatzeinricht 40–95
Zugstangestuetze 40–105

Schlepperkabine
Asserruckspiegel 110–190
Beifahrersitz 110–235
Dach 110–60

PAGE

Einfassung Fuer Instr.–Brett 110–85
Elektr. Stecker Und Zigarrenanzuender 110–175
Fahrersitz 110–205
Filter Die Kabine 110–135
Heckfenster Ausstellvor 110–55
Heizung
Grosskalte 110–130
Heizung Schaltung 110–140
Hinterscheibenwischer 110–155
Innerruckspiegel 110–185
Kabinenbefestigung 110–10
Mit Federung 110–10
Klimaanlage 110–105
Schlauch 110–105
Ruckspiegel Mit Elektrische Schaltung 110–200
Rundfunk Anbau 110–170
Scheiben 110–45
Scheibenwascher 110–150
Scheibenwischer Vorderteil 110–145
Schlepper–Cabine
Verkleidung 110–65
Schlepperkabine 110–90
Isolierung 110–90
Kotfluegel 110–100
Seitenfenster Ausstellvor 110–50
Sicherheitsgurt 110–230
Steuereinheit Aufgehangtes Fahrerhaus 110–15
Tuer 110–40
Vordach 110–165

Verkleidung
Abziehbilder
Sicherheit 100–35
Firmenzeichen 100–30
Literatur 100–50
Trittberetter 100–25
Verkleidung
Kuehlergrill 100–5
Motorhaube 100–15
Motorhaube Armatur 100–20

PAGE

Vorderachse

Allradantrieb Vorderachse
- Kupplung **60 – 40**

Gewichtrahmen Und Kupplungsbolzen **60 – 5**
Grundgewicht **60 – 20**
Schutz Und Allradantriebswelle **60 – 35**
Vorderachse 4 Rad Antrieb
- Halter **60 – 25**

Vorderachse Allradantrieb **60 – 60**
- Differential **60 – 60**
- Endantrieb **60 – 65**
- Gehaeuse **60 – 55**

Vorderachse–4wd
- Diff –Sperre **60 – 30**

Zapfwellenantrieb

Ipto Kupplung **50 – 5**
Motorzapfwelle
- Flansh – Spannband **50 – 10**
- Rohrleitung **50 – 20**
- Zylinder **50 – 15**

Schutzbleche
- Zapfwelle **50 – 25**

PAGE

INDICE ALFABETICO

C13

PAGE

Assale Anteriore

Assale Anteriore
- Frizione 60–40

Assale Anteriore 4 Ruedas Motriz
- Supporto 60–25

Assale Anteriore 4 Ruote Motrici 60–55
- Carcassa 60–55
- Comando Bloccaggio Differenziale 60–30
- Differenziale 60–60
- Riduzione Finale 60–65

Riparo E Albero Trasmissione 60–35
Telaio Pesante E Perno Di Rimorchio 60–5
Zavorra Ventrale 60–20

Assale Posteriore

Carcassa Di Crocera Ruota 30–20
Control Livello Di Olio 30–25
Corona E Pignone 30–35
Differenziale 30–30
Freno A Disco 30–50
Freno A Mano 30–5
Freno Cardanico 30–55
Scatole Riduttori
- Corona Interna 30–45

Sensor Di Angolo 30–65
Sollevamento Bracci 30–60

Cabina Trattore

Aria Condizionata 110–105
- Tubo 110–105

Cabina
- Leggera 110–65

Cabina Trattore 110–90
- Isolante Cabina 110–90
- Parafango 110–100

Centralina Di Comando Cabina Sospesa 110–15
Cintura Sicurezza 110–230
Comando De Riscaldamento 110–140
Comando Finestra Laterale 110–50
Comando Portello Posteriore 110–55

PAGE

Cruscotto Cabina 110–85
Filtro Di Cabina 110–135
Lavacristallo 110–150
Montaggio Cabina 110–10
- Con Sospensione 110–10

Porta 110–40
Radio Installazione 110–170
Retrovisore 110–190
Retrovisore A Comando Elettrico 110–200
Retrovisore Interior 110–185
Riscaldatore
- Grand Freddo 110–130

Sedile 110–205
Sedile Secondario 110–235
Spina Elettrica E Accedisigari 110–175
Tergicristallo Anteriore 110–145
Tergicristallo Parte Posteriore 110–155
Tetto 110–60
Tettuccio 110–165
Vetro 110–45

Carrozzeria

Carrozzeria
- Armatura Cofano 100–20
- Cofano 100–15
- Griglia 100–5

Decalcomanie
- Sicurezza 100–35

Emblemi 100–30
Letteratura 100–50
Pedana 100–25

Cerchione Y Contrappesi Per Ruote

Assale Anteriore 4 Ruote Motrici
- Parafanghi E Supporto 130–30

Contrappesi Per Ruote 130–75
Ruote Anteriori
- 4 Ruote Motrici 130–5

Ruote Posteriori 130–65
- Montaggio Con Cono 130–65

INDICE ALFABETICO

C14

	PAGE
Zeppe Per Ruote	130–80
Equipaggiamento Elettronica	
Cavi Scatola Controllo E Commando De La Cabina	90–70
Cavo Principale De Transmissione	90–80
Equipaggiamento Elettrico	90–5
Equipaggiamento Elettronico	
Senori	90–85
Fascio Mensola Latarale	
Cabina	90–75
Fieldstar	90–60
Panello Computer I Placa Equipaggiamento Illuminazione	90–40
Radar	90–55
Scatola Controllo	
Cabina	90–65
Sensore Cavi Dual Control	90–20
Sollevatore Elettronico	
Cavi Principali	90–10
Pannello	90–30
Equipaggiamento Illuminazione	
Equipaggiamento Illuminazione	
Frontale	120–5
Posteriore	120–40
Equipaggiamento Segnalazione	120–35
Luce Illuminazione Campo	120–25
Luce Rotativa	120–50
Frizione	
Comando Della Frizione	20–20
Distanziale Anteriore	20–5
Volano E Carcassa Volano	20–15
Idraulici	
Blocco Valvole Idraulico	70–90
Filtro A Pressione	70–90
Tubazioni	70–110
Valvolasolenoide	70–100
Circuito Idraulico	
Trasmissione	70–80
Comandi Con 5–6 Distributors Eletttro–Idraulico	
Modulo Fingertip	70–225
Comando Illuminazione E Sotto Coppia	70–15
Comando Pompa	70–55
Distributore Auxiliarie	70–175
Freni	
Tubi Idraulica	70–40
Freno Idraulico	70–50
Giunto Idraulico	70–195
Guinto Maschio	70–215
Idraulica Ausiliare	70–120
Intallazione Distributori Ausiliari	70–160
Lubrificazione Scatola Cambio	70–75
Interni	70–75
Pedali Freni	70–35
Pompa Alimentazione	
Comandi Conforto	70–65
Pompa Di Sterzo	70–20
Pompa Idraulica	70–150
Pompa Per Lubrificazione	
Filtro	70–60
Radiatore Olio	70–115
Recupero D'Olio	70–220
Ripartitore Di Idraulica	70–140
Suporti Pedale	70–30
Tubazioni Idrauliche Di Sterzo	70–25
Volante E Colonna Telescopico	70–5
Impianto Elettrico E Cruscotto	
Commando Esterno Sopra Il Parafangos	80–20
Fasciacavi Di Luce Illuminazione Campo	80–90
Fasciocavi Anteriore Di Illuminazione	80–60
Fasciocavi Di Condizionatore Di Aria Automatico E	
Sensori	80–95
Fasciocavi Di Cruscoto	80–35
Bracciolo	80–35
Fasciocavi Di Montante	80–55
Fasciocavi Di Motore	80–25
Fasciocavi Di Tetto	80–45
Fasciocavi Posteriore Di Illuminazione	80–70

INDICE ALFABETICO

C15

	PAGE
Impianto Elettrico E Cruscotto	80 – 10
Interrupttores De La Pannello Laterale	80 – 15
Pannello Strumenti E Strumenti	80 – 5
Placa Porta Rele & Fusibile	80 – 40
Presaellectric Di Rimorchio	80 – 80
Meccanismo Presa Di Forza	
Difesa	
Presa Di Forza	50 – 25
Frizione Pto Indipendente	50 – 5
Presa Di Forza Indipendente	
Cilindro	50 – 15
Flangia – Briglia	50 – 10
Tubatura	50 – 20
Motore E Equipaggiamento	
Albero Motore–Bielle E Pistoni	10 – 35
Alternatore	10 – 15
Alternatore Cone Soporte	10 – 10
Batteria A Cavo	10 – 195
Carter Distribuzione	10 – 30
Comandi Acceleratore	10 – 255
Compressore	10 – 215
Coperchio Testata	10 – 65
Coppa Olio	10 – 75
Filtro Aria	
Doppio Elemento	10 – 235
Gestion Motore Elettronico	10 – 135
Impianto Iniezione Nafta	10 – 90
Kits Riparazione Motore	
Pistoni E Testata Con Valvole	10 – 145
Monoblocco	10 – 25
Motore E Equipaggiamento	10 – 5
Motorino Di Avviamento	10 – 20
Pompa Acqua	10 – 85
Raffreddamento D'Aria	10 – 230
Raffreddamento Olio E Filtro	10 – 80
Riscaldatore Motore	10 – 165
Scarico Verticale Lateral	10 – 245
Serbatoio Addizionale	10 – 185
Serbatoio Nafta E Fissaggio	10 – 180
Serie Guarnizioni Motore	10 – 155
Sistema Di Aspirazione E Sistema Di Scarico	10 – 115
Sistema Di Raffreddamento	
Motore	10 – 220
Sistema Di Riscaldamento	
Parte Motore	10 – 175
Sistema Nafta A Bassa Pressione	10 – 110
Sistema Raffreddamento	
Installazione Aria Condizionata	10 – 210
Tendicinghia	10 – 130
Testata	10 – 55
Tubazioni A Nafta	10 – 190
Turbocompressore	
Tubo	10 – 125
Valvole E Albero A Camme	10 – 45
Tiranteria	
Alimentazione Cilindro Di Sollevatore	40 – 10
Attacco	40 – 135
Attacco Anteriore	
Idraulico	40 – 160
Attacco Anteriore 35000n	40 – 180
Attacco Anteriore 50000n	40 – 190
Barra Di Trazione	40 – 65
Barra Inferiori Con Gancio	40 – 40
Barra Inferiori Con Rotula	40 – 45
Barra Traino	
Attacco A Giunto A Sfera	40 – 100
Attacco A Occhione	40 – 95
Barra Trazione Orientabile	40 – 70
Cerrojo Barra Superior	40 – 30
Cilindro Di Sollevatore	40 – 5
Gancio Automatico	
Con Comando	40 – 155
Lunga Guida Scala	40 – 125
Maglia Superior Con Ganci	40 – 20
Maglia Superior Con Snodo Sferico	40 – 25
Ordinamento Barra Trazione Orientabile	40 – 130
Presa	40 – 35
Scatola Livello	40 – 15

PAGE

Stabilizzatore Automatico 40 – 55
Stabilizzatore Suola 40 – 60
Stabilizzatore Tubo 40 – 50
Support De Barra Oscillante 40 – 105

Trasmissione

Albero Di Accumulo 25 – 30
Albero Di Pompa 25 – 25
Bracciolo Di Comando 25 – 80
Cambio Di Gruppo 25 – 65
Comando Trasmissione 25 – 70
Commando Di Emergenza – Cavo 25 – 70
Commando Di Emergenza – Gruppo 25 – 75
Modulo Fingertip Per Distributore A Comando Eletttro–Idraulico 25 – 90
Motore Idraulico 25 – 40
Piastra Comando Idraulico 25 – 45
Pompa Idraulica 25 – 35
Regolazione 25 – 50
Riduttore Planetario 25 – 20
Scatola Interna 25 – 15
Trasmissione 25 – 5
Carcassa 25 – 5

PAGE

INDICE ALFABETICO

C17

PAGE

Cabina Tractor

Aire Acondicionado 110–105
Flexible 110–105
Asiento 110–205
Cabina De Tractor
Revestimiento 110–65
Cabina Tractor 110–90
Aislamiento 110–90
Guardabarros 110–100
Caja De Mando Cabina Suspendida 110–15
Cinturon De Seguridad 110–230
Cristal 110–45
Dosel 110–165
Filtro De Cabina 110–135
Lavaparabrisas 110–150
Limpiaparabrisas Parte Trasera 110–155
Mando De Calefaccoin 110–140
Mecanismo De Ventana Lateral 110–50
Mecanismo De Ventana Trasera 110–55
Monturas De Cabina 110–10
Con Suspension 110–10
Puerta 110–40
Radio Instalacion 110–170
Retrovisor 110–190
Retrovisor Con Mando Electrico 110–200
Retrovisor Interior 110–185
Revestimiento Panel Instrumentos 110–85
Riscaldatore
Gran Freo 110–130
Tejado 110–60
Toma Electrica Y Encendor De Cigarillos 110–175
Varillaje De Limpiaparabrisas Delantero 110–145

Eje Delantero

Bastidor Para Pesas Y Perno De Remolque 60–5
Defensa Y Arbol De Transmision 60–35
Doble Traccion De Eje Frontal
Mecanismo Bloqueo Diferencial 60–30
Eje Delantero 4 Ruedas Motrices 60–65
Accionamiento Final 60–65
Carter 60–55
Diferencial 60–60
Embrague 60–40
Eje Delantero 4 Ruedas Motriz
Soporte 60–25
Pesa Central 60–20

Eje Trasero

Brazos Elevador 30–60
Cajas De Eje Trasero
Pinon Interior De Mando Final 30–45
Captador De Angulo 30–65
Carter De Husillo De Rueda 30–20
Differencial 30–30
Disco De Freno 30–50
Freno Cardan 30–55
Freno De Mano 30–5
Indicador Nivel De Aceite 30–25
Rueda Conica 30–35

Embrague

Espaciador Delantero 20–5
Mando Del Embrague 20–20
Volante Y Carter Del Volante 20–15

Emplanchados

Calcomanias
Seguridad 100–35
Emblemas 100–30
Emplanchados
Armadura Capo 100–20
Capo 100–15
Griglia 100–5
Estribos 100–25
Literatura 100–50

Enganches

Alimentacion Gato Hidraulico 40–10
Arreglo Barra De Tiro Oscilante 40–130
Barra De Tiro 40–65
Barra De Tiro Oscilante 40–95

INDICE ALFABETICO

C18

	PAGE
Aditamento De Pivote Y Tejuelo	40–95
Enganche De Rotula	40–100
Barra Enganche Con Bola	40–25
Barra Enganche Con Gancho	40–20
Barras Inferiores Con Gancho	40–40
Barras Inferiores Con Perno Enganche	40–45
Caja Niveladora	40–15
Chiavistello Barra Superior	40–30
Enganche	40–135
Enganche Automatico	
Con Control Remoto	40–155
Enganche Delantero	
Hydraulico	40–160
Enganche Delantero 35000n	40–180
Enganche Delantero 50000n	40–190
Estabilizador A Zapata	40–60
Estabilizador Automatico	40–55
Estabilizador Tubo	40–50
Gato Hidraulico	40–5
Longituda Guia Scala	40–125
Support De Barra De Tiro	40–105
Toma	40–35
Equipo Alumbrado	
Equipo Alumbrado	
Frontal	120–5
Trasera	120–40
Herramental Senalizacion	120–35
Luces De Campo	120–25
Luz Giratoria	120–50
Equipo Electrico Y Tablero De Instrumentos	
Equipo Electrico Y Tablero De Instrumentos	80–10
Haz De Hilos De Montante	80–55
Haz De Hilos De Motor	80–25
Haz De Hilos De Techo	80–45
Haz De Hilos Del Acondicionator De Aire Automatico Y	
Sensores	80–95
Haz De Hilos Del Luces De Campo	80–90
Haz De Hilos Delantero De Iluminacion	80–60
Haz De Hilos Panel De Instrumentos	80–35
Reposa Brazos	80–35
Haz De Hilos Trasero De Iluminacion	80–70
Interruptores Del Consola Lateral	80–15
Mando Externo Sobre El Guadabarros	80–20
Panel De Instrumentos Con Indicapores	80–5
Placa Porta Rele & Fusibile	80–40
Tomacorriente De Remolque	80–80
Equipo electronica	
Cableado Electrico	90–5
Caja De Control	
Cabina	90–65
Captore De Arnes Dual Control	90–20
Computador A Bordo Y Placa Equipo Alumbrado	90–40
Equipo Electronico	
Sensores	90–85
Fieldstar	90–60
Levante Electronico	
Consola	90–30
Levante Hidraulico	
Arnes Principal	90–10
Mazo Cables Caja De Control Y Mando Del Cabina	90–70
Mazo Cables Consola Lateral	
Cabina	90–75
Mazo Cables Principale Ttransmission	90–80
Radar	90–55
Hidraulicos	
Acoplador Hidraulico	70–195
Acoplador.Macho	70–215
Bloque Valvulas Hydraulico	70–110
Circuito	70–110
Filtro Presion	70–90
Valvula Solenoid	70–100
Bomba Alimentadora	
Comando De Comodidad	70–65
Bomba De Aceite Lubrificacion	
Filtro	70–60
Bomba Direccion	70–20
Bomba Hidraulica	70–150

INDICE ALFABETICO

C19

	PAGE
Circuito Hidraulico	
Transmision	70–80
Distribuidor Auxiliar	70–175
Enfriador El Aciete	70–115
Freno Hidraulica	70–50
Frenos	
Tubos Hidraulica	70–40
Instalacion Distribuidores Auxiliares	70–160
Instalacion Hidraulica De Direccion	70–25
Lubrificacion Caja De Velocidades	70–75
Internas	70–75
Mando Alumbrado Y Inversor Sub Par	70–15
Mando Con 5–6 Distribuidors Electro–Hydraulico	
Modulo Fingertip	70–225
Mando De Bomba	70–55
Pedals Del Freno	70–35
Recuperacion Del Aceite	70–220
Sistema Hidraulico Auxiliar	70–120
Soportes Pedales	70–30
Valvula Distribuidora De Hidraulica	70–140
Volante Direccion Y Columna Telescopico	70–5

Llanta E Pesos De Ruedas

Cunas De Rueda	130–80
Doble Traccion De Eje Frontal	
Guardabarros Y Soporte	130–30
Pesos De Rueda	130–75
Ruedas Delanteras	
4 Ruedas Motrices	130–5
Ruedas Traseras	130–65
Fijacion Con Cono	130–65

Mecanismo Accionamiento Toma De Fuerza

Embrague De Toma De Fuerza Independiente	50–5
Proteccion	
Toma De Fuerza	50–25
Toma De Fuerza Independiente	
Cilindro	50–15
Pletina – Brida	50–10
Tuberias	50–20

Motor Y Equipamente

	PAGE
Admision Y Escape	10–115
Alternador	10–15
Alternador Y Support	10–10
Arranque	10–20
Batterie Y Cable	10–195
Bloque–Cylindros	10–25
Bomba De Agua	10–85
Caja De Engranajes De Distribucion	10–30
Caja Supplementario	10–185
Calentador Motor	10–165
Carter Del Aceite Lubricante	10–75
Ciguenal, Pistones A Bielas	10–35
Compresor	10–215
Conducciones A Combustible	10–190
Culata	10–55
Deposito Combustible Sujecciones	10–180
Enfriador De Aire	10–230
Equipo De Inyeccion Del Combustible	10–90
Escape Vertical Lano Lateral	10–245
Filtro Del Aire	
Elemento Doble Seco	10–235
Gestione Motor Electronico	10–135
Jeugos De Empaquetaduras De Motor	10–155
Jeugos De Reparacion De Motor	
Pistones–Culata Con Valvulas	10–145
Mandos Acelerador	10–255
Mecanismo Valv. Y Arbol De Levas	10–45
Motor Y Equipamente	10–5
Refrigerador Y Filtro De Aceite	10–80
Sistema De Calefaccion De Cabina	
Pieza De Motor	10–175
Sistema De Combustible A Baja Presion	10–110
Sistema De Refrigeracion	
Instalacion Con Aire Acondicionad	10–210
Sistema Refrigeracion	
Motor	10–220
Tapa Culata	10–65
Tensor De Correa	10–130
Turbo–Soplador	

	PAGE
Tubos	10 – 125
Transmision	
Bomba Hidraulica	25 – 35
Caja Del Velocidades	25 – 10
Cambio De Grupo	25 – 65
Carter Interior	25 – 15
Control De Transmision	25 – 75
Accionamento De Emergencia – Gama	25 – 75
Accionamento Emergencia – Cable	25 – 70
Disposotivo Ajustable	25 – 50
Eje De Bomba	25 – 25
Eje Sumatorio	25 – 30
Modulo Fingertip Para Distribuidor A Mando Electro– Hydraulico	25 – 90
Motor Hidraulico	25 – 40
Placa Del Conducto	25 – 45
Reposa Brazos De Control	25 – 80
Transmision	
Caja	25 – 5
Transmision Planetaria	25 – 20

PAGE

RESERVED

RECOMMENDED STOCKING PARTS

D1

		Qty	PAGE
AIR FITR.ELEMENT	4270018M1	1	10–240
AIR FITR.ELEMENT	4278631M1	1	10–240
ALTERNATOR	3789983M91	1	10–10
		1	10–15
BELT	4275545M3	1	10–5
		1	10–130
BELT	4276375M1	1	10–210
BLINKER	4271989M1	1	80–40
BLINKER	4271990M1	1	80–40
BULB	175–1323	3	120–5
		3	120–10
BULB	3907077M1	1	120–30
BULB	3907384M1	1	120–30
BULB	9X–8118	1	120–50
BULB 12V 1.2W	3302213M1	1	110–175
		1	110–180
BULB 12V 1.2W	3405185M1	1	80–15
BULB 12V 10W	3385821M1	1	80–45
		1	80–50
BULB 12V 21W SBC	621235M1	1	120–15
		1	120–20
		1	120–40
BULB 12V 5W	1420037M1	1	120–15
BULB 12V 5W	3907271M1	1	80–45
		1	80–50
BULB 12V 60/55W	3713341M1	1	120–25
BULB H/L 45/40W	961866M1	1	120–10
BULB H3	1628494M1	1	120–25
		2	120–25
		1	120–30
		2	120–30
BULB S/L 21/5W	908543M1	1	120–40
CAB FILTER	3786649M1	1	110–135
CIRCLIP	X530106046000	1	70–55
CLEVIS PIN	G916501120050	1	40–75
		1	40–80
		1	40–85
COVER GASKET	V836667243	2	10–70
DIODE	3907284M1	1	110–140
DIRECTIONAL VALV	G312100600110	2	70–95
DIRECTIONAL VALV	G411151600020	4	70–100
		4	70–105
DISCHARGE VALVE	G716100600122	1	70–95
ELECTRICAL PLUG	G205900900020	1	110–175
ELECTROVALVE	3903960M1	1	70–175
		1	70–180
		1	70–185
ELEMENT	V836855484	1	10–80

		Qty	PAGE
ENG.SPEED SENSOR	V836866392	1	10–25
		1	10–135
		1	10–140
FEMALE COUPLER	3785907M2	2	40–170
		2	40–175
FEMALE COUPLER	3786820M2	1	70–130
FILTER	3712495M1	1	10–210
FILTER	F916100490010	1	70–60
FILTER INSERT	4276648M1	1	70–120
FILTER INSERT	F916100600010	1	70–90
FUEL ELEMENT	V836867231	1	10–110
FUEL ELEMENT	V836867233	1	10–110
FUEL FILTER	V836862600	1	10–110
FUEL FILTER	V836862602	1	10–110
FUSE	3387322M1	X	80–40
		1	110–215
FUSE	3580868M1	X	80–40
FUSE	3712661M1	X	80–40
FUSE	3780003M1	X	80–40
FUSE	4271799M1	3	80–25
		X	80–40
FUSE	4271800M1	X	80–40
		1	120–50
FUSE	4271801M1	2	80–25
		1	80–30
		X	80–40
		1	120–50
FUSE	4271802M1	2	80–25
		X	80–40
FUSE	4271803M1	1	80–40
FUSE	4271842M1	1	80–30
		X	80–40
FUSE	4276186M1	1	10–195
		1	10–200
		1	10–205
HALL SENSOR	G816970020040	1	20–10
		2	90–85
HEAD GASKET	V836666302	2	10–55
		2	10–60
HEADLAMP	3713799M91	2	120–10
HEATER	V836864398	1	10–120
HOSE	3777798M1	1	10–225
HOSE	3780247M1	1	10–230
IGNITION KEY	4271358M1	1	80–10
INDICATOR	3789379M1	1	70–120
INDUCTIVE SENSOR	3618249M1	1	70–120
INDUCTIVE SENSOR	3716981M1	2	40–35

		Qty	PAGE
KIT, FILTER	G001990100010	1	70–175
		1	70–180
		1	70–185
KIT, JOINT	3903317M91	1	40–180
		1	40–190
KIT, JOINT	V836840993	1	10–160
KIT, SPANNER	3902584M91	1	110–40
LENS	136–5254	1	120–50
MALE COUPLER	1026700M91	X	70–215
MALE COUPLER	3583932M1	X	70–215
NON RETURN VALVE	3808023M91	1	10–180
NUT SPECIAL	3384600M2	24	130–60
NUT SPECIAL	3712611M2	20	130–5
		24	130–10
		20	130–15
		24	130–20
		24	130–25
		20	130–65
		80	130–70
O RING	3008359X1	2	60–35
O RING	3010471X1	5	10–210
		1	110–105
O RING	3907428M1	1	70–120
O RING	X548960666000	1	70–90
O RING	X548987066000	1	70–60
O RING	X548989201000	1	70–60
OIL FILTER	V836859108	1	10–150
OIL FILTER	V836867234	1	10–80
		1	10–145
PIN	3011024X1	1	40–30
PIN HITCH	3387270M92	1	60–5
PIN HITCH	3790349M92	1	60–5
PIN HITCH	4272346M2	1	40–70
PLATE	202–9223	2	60–5
POSITION SENSOR	3797129M1	1	70–225
POTENTIOMETER	4274087M1	1	25–80
PRESS.TRANSDUCER	G718970020020	1	90–85
PRESSURE INTAKE	3785665M1	4	70–140
PRESSURE SWITCH	3712526M1	1	10–210
PRESSURE SWITCH	3808462M1	1	10–235
		1	10–250
PRESSURE SWITCH	4278368M1	1	70–140
PRESSURE SWITCH	G716970160030	1	25–75
		1	90–65
		1	90–75
RAM	3902121M4	1	110–40
RELAY	3387326M2	1	80–40
RELAY	3779879M1	2	80–25
RELAY	4270844M1	X	80–40

		Qty	PAGE
RELAY	4271991M1	1	80–40
RELAY	4272431M1	4	80–25
		1	80–30
		X	80–40
		1	120–50
RELAY	4272432M1	X	80–40
RING	X540004078000	1	90–85
RING	X540009478000	1	20–10
		4	30–45
SEAL	V615870610	14	10–95
SEAL	V615881827	1	10–75
SEAL	V835336276	6	10–95
SENSOR	G916970020014	1	90–85
SENSOR	G916971020033	1	25–65
SENSOR	V836666797	1	10–110
SENSOR	V836666980	1	10–115
		1	10–120
		1	10–135
		1	10–140
SENSOR	V836866613	1	10–25
		1	10–135
		1	10–140
SHOCK ABSORBER	4273315M91	2	110–10
SOLENOID SWITCH	H312900150010	1	30–5
		1	30–10
		2	70–35
SOLENOID VALVE	G916100600142	1	70–95
STRAINER	3787655M2	1	70–155
STUB	3778648M1	2	40–185
STUD	3716105M2	20	130–65
		40	130–70
		60	130–70
SUCTION FILTER	G916951010010	1	70–145
SWITCH	F916100600040	1	70–90
SWITCH,INDIRECT	3714137M1	1	40–185
		1	40–195
SWITCH,INDIRECT	3714138M1	1	40–185
		1	40–195
SWITCH,INDIRECT	3780395M2	1	80–45
		1	80–50
SWITCH,INDIRECT	3783086M1	1	80–15
SWITCH,INDIRECT	3783832M2	1	20–20
SWITCH,INDIRECT	4270312M2	2	80–20
SWITCH,INDIRECT	4270313M2	2	80–20
SWITCH,INDIRECT	4270755M1	1	80–15
SWITCH,INDIRECT	4270756M2	1	25–85
SWITCH,INDIRECT	4270970M3	1	25–85
SWITCH,INDIRECT	4271342M1	1	80–10

RECOMMENDED STOCKING PARTS

D2

		Qty	PAGE
SWITCH,INDIRECT	4271344M1	1	**110 – 155**
		1	**110 – 160**
SWITCH,INDIRECT	4271346M1	1	**80 – 15**
SWITCH,INDIRECT	4271347M1	1	**80 – 15**
SWITCH,INDIRECT	4271348M2	1	**80 – 15**
SWITCH,INDIRECT	4271349M2	1	**80 – 15**
SWITCH,INDIRECT	4271351M2	1	**80 – 15**
SWITCH,INDIRECT	4271353M2	1	**80 – 15**
SWITCH,INDIRECT	4271356M1	1	**90 – 10**
SWITCH,INDIRECT	4271809M1	1	**20 – 20**
SWITCH,INDIRECT	4271916M2	1	**80 – 10**
SWITCH,INDIRECT	4271992M2	1	**80 – 15**
		X	**80 – 20**
SWITCH,INDIRECT	4272778M1	1	**20 – 20**
TEMP. SENSOR	H312100360030	1	**90 – 85**
TEMP. SENSOR	V836864360	1	**10 – 55**
		1	**10 – 60**
		1	**10 – 135**
		1	**10 – 140**
THERMOSTAT	V836015156	1	**10 – 85**
THERMOSTAT	V836331590	1	**10 – 85**
TOGGLE	3042427M1	2	**40 – 40**
TOGGLE	3042428M1	2	**40 – 40**
TOGGLE	3042430M1	2	**40 – 40**
TOGGLE	3042431M1	2	**40 – 40**
TOGGLE	3042433M1	1	**40 – 20**
		1	**40 – 30**
TOGGLE	3778880M1	4	**100 – 15**
TOGGLE	3782685M1	2	**40 – 180**
		2	**40 – 190**
TOGGLE	3782686M1	2	**40 – 180**
		2	**40 – 190**
TOGGLE	3783029M1	1	**40 – 190**
TOGGLE	3783030M1	1	**40 – 190**
TOGGLE	3900885M1	1	**40 – 180**
TRANSDUCER	3784361M1	1	**10 – 260**
		1	**20 – 20**
		1	**40 – 185**
		1	**40 – 195**
TRANSDUCER	4275671M1	1	**70 – 40**
TRANSDUCER	4278263M1	1	**70 – 155**
TRANSDUCER	G716860100040	1	**30 – 65**
VALVE.	G716150200060	1	**70 – 100**
		1	**70 – 105**
WASHER	V836652170	6	**10 – 95**
WASHER	V899901495	6	**10 – 95**
WEIGHT	202–9220	6	**60 – 5**
WIPER BLADE	3713195M1	1	**110 – 155**
WIPER BLADE	3777648M1	1	**110 – 145**

		Qty	PAGE
WIPER BLADE	4275049M1	1	**110 – 160**
WIPER BLADE	4275053M1	1	**110 – 145**

Qty	PAGE

Qty	PAGE

PIECES DONT LE STOCKAGE EST RECOMMANDE

D3

		Qty	PAGE
ALTERNATEUR	3789983M91	1	10–10
		1	10–15
AMORTISSEUR	4273315M91	2	110–10
AMP H4 60/55 W	3713341M1	1	120–25
AMPOULE	175–1323	3	120–5
		3	120–10
AMPOULE	3907077M1	1	120–30
AMPOULE	3907384M1	1	120–30
AMPOULE	9X–8118	1	120–50
AMPOULE 12V 1.2W	3302213M1	1	110–175
		1	110–180
AMPOULE 12V 1.2W	3405185M1	1	80–15
AMPOULE 12V 10W	3385821M1	1	80–45
		1	80–50
AMPOULE 12V 21W	621235M1	1	120–15
		1	120–20
		1	120–40
AMPOULE 12V 5W	1420037M1	1	120–15
AMPOULE 12V 5W	3907271M1	1	80–45
		1	80–50
AMPOULE 21/5W	908543M1	1	120–40
AMPOULE 45/40W	961866M1	1	120–10
AMPOULE H3	1628494M1	1	120–25
		2	120–25
		1	120–30
		2	120–30
ANNEAU	X540004078000	1	90–85
ANNEAU	X540009478000	1	20–10
		4	30–45
AXE	G916501120050	1	40–75
		1	40–80
		1	40–85
BALAI ESSUIE GL	3713195M1	1	110–155
BALAI ESSUIE GL	3777648M1	1	110–145
BALAI ESSUIE GL	4275049M1	1	110–160
BALAI ESSUIE GL	4275053M1	1	110–145
BROCHE	3387270M92	1	60–5
BROCHE	3790349M92	1	60–5
BROCHE	4272346M2	1	40–70
CAPTEUR	3784361M1	1	10–260
		1	20–20
		1	40–185
		1	40–195
CAPTEUR	4275671M1	1	70–40
CAPTEUR	4278263M1	1	70–155
CAPTEUR	G716860100040	1	30–65
CAPTEUR DE HALL	G816970020040	1	20–10
		2	90–85
CAPTEUR INDUCTIF	3618249M1	1	70–120

		Qty	PAGE
CAPTEUR INDUCTIF	3716981M1	2	40–35
CAPTEUR POSITION	3797129M1	1	70–225
CAPTEUR PRESSION	G718970020020	1	90–85
CAPTEUR VIT MOT	V836866392	1	10–25
		1	10–135
		1	10–140
CENTRALE CLIGNOT	4271989M1	1	80–40
CENTRALE CLIGNOT	4271990M1	1	80–40
CHAUFFAGE	V836864398	1	10–120
CIRCLIP	X530106046000	1	70–55
CLAPET	3808023M91	1	10–180
CLE DE CONTACT	4271358M1	1	80–10
CONTACTEUR	3714137M1	1	40–185
		1	40–195
CONTACTEUR	3714138M1	1	40–185
		1	40–195
CONTACTEUR	3780395M2	1	80–45
		1	80–50
CONTACTEUR	3783086M1	1	80–15
CONTACTEUR	3783832M2	1	20–20
CONTACTEUR	4270312M2	2	80–20
CONTACTEUR	4270313M2	2	80–20
CONTACTEUR	4270755M1	1	80–15
CONTACTEUR	4270756M2	1	25–85
CONTACTEUR	4270970M3	1	25–85
CONTACTEUR	4271342M1	1	80–10
CONTACTEUR	4271344M1	1	110–155
		1	110–160
CONTACTEUR	4271346M1	1	80–15
CONTACTEUR	4271347M1	1	80–15
CONTACTEUR	4271348M2	1	80–15
CONTACTEUR	4271349M2	1	80–15
CONTACTEUR	4271351M2	1	80–15
CONTACTEUR	4271353M2	1	80–15
CONTACTEUR	4271356M1	1	90–10
CONTACTEUR	4271809M1	1	20–20
CONTACTEUR	4271916M2	1	80–10
CONTACTEUR	4271992M2	1	80–15
		X	80–20
CONTACTEUR	4272778M1	1	20–20
COUPLEUR FEMELLE	3785907M2	2	40–170
		2	40–175
COUPLEUR FEMELLE	3786820M2	1	70–130
COUPLEUR MALE	1026700M91	X	70–215
COUPLEUR MALE	3583932M1	X	70–215
COURROIE	4275545M3	1	10–5
		1	10–130
COURROIE	4276375M1	1	10–210
CREPINE	3787655M2	1	70–155

		Qty	PAGE
DETECTEUR	G916970020014	1	90–85
DETECTEUR	G916971020033	1	25–65
DETECTEUR	V836666797	1	10–110
DETECTEUR	V836666980	1	10–115
		1	10–120
		1	10–135
		1	10–140
DETECTEUR	V836866613	1	10–25
		1	10–135
		1	10–140
DIODE	3907284M1	1	110–140
DURITE	3777798M1	1	10–225
DURITE	3780247M1	1	10–230
ECROU SPECIAL	3384600M2	24	130–60
ECROU SPECIAL	3712611M2	20	130–5
		24	130–10
		20	130–15
		24	130–20
		24	130–25
		20	130–65
		80	130–70
ELECTROVANNE	3903960M1	1	70–175
		1	70–180
		1	70–185
ELEMENT	V836855484	1	10–80
ELEMENT FILTRANT	4276648M1	1	70–120
ELEMENT FILTRANT	F916100600010	1	70–90
ELEMENTCARBURANT	V836867231	1	10–110
ELEMENTCARBURANT	V836867233	1	10–110
ELEMENTFILTREAIR	4270018M1	1	10–240
ELEMENTFILTREAIR	4278631M1	1	10–240
EMBOUT	3778648M1	2	40–185
FILTRE	3712495M1	1	10–210
FILTRE	F916100490010	1	70–60
FILTRE ASPIRATIO	G916951010010	1	70–145
FILTRE CABINE	3786649M1	1	110–135
FILTRE CARBURANT	V836862600	1	10–110
FILTRE CARBURANT	V836862602	1	10–110
FILTRE HUILE	V836859108	1	10–150
FILTRE HUILE	V836867234	1	10–80
		1	10–145
FUSIBLE	3387322M1	X	80–40
		1	110–215
FUSIBLE	3580868M1	X	80–40
FUSIBLE	3712661M1	X	80–40
FUSIBLE	3780003M1	X	80–40
FUSIBLE	4271799M1	3	80–25
		X	80–40

		Qty	PAGE
FUSIBLE	4271800M1	X	80–40
		1	120–50
FUSIBLE	4271801M1	2	80–25
		1	80–30
		X	80–40
		1	120–50
FUSIBLE	4271802M1	2	80–25
		X	80–40
FUSIBLE	4271803M1	1	80–40
FUSIBLE	4271842M1	1	80–30
		X	80–40
FUSIBLE	4276186M1	1	10–195
		1	10–200
		1	10–205
GOUJON	3716105M2	20	130–65
		40	130–70
		60	130–70
GOUPILLE	3011024X1	1	40–30
INDICATEUR	3789379M1	1	70–120
INTERRUPTEUR	F916100600040	1	70–90
JEU CLES	3902584M91	1	110–40
JEU FILTRE	G001990100010	1	70–175
		1	70–180
		1	70–185
JEU JOINTS	3903317M91	1	40–180
		1	40–190
JEU JOINTS	V836840993	1	10–160
JOINT COUVERCLE	V836667243	2	10–70
JOINT CULASSE	V836666302	2	10–55
		2	10–60
JOINT ETANCHEITE	V615870610	14	10–95
JOINT ETANCHEITE	V615881827	1	10–75
JOINT ETANCHEITE	V835336276	6	10–95
JOINT TORIQUE	3008359X1	2	60–35
JOINT TORIQUE	3010471X1	5	10–210
		1	110–105
JOINT TORIQUE	3907428M1	1	70–120
JOINT TORIQUE	X548960666000	1	70–90
JOINT TORIQUE	X548987066000	1	70–60
JOINT TORIQUE	X548989201000	1	70–60
LENTILLE	136–5254	1	120–50
MANO CONTACT	3712526M1	1	10–210
MANO CONTACT	3808462M1	1	10–235
		1	10–250
MANO CONTACT	4278368M1	1	70–140
MANO CONTACT	G716970160030	1	25–75
		1	90–65
		1	90–75
MASSE	202–9220	6	60–5

PIECES DONT LE STOCKAGE EST RECOMMANDE

D4

		Qty	PAGE
PHARE AVANT	3713799M91	2	120 – 10
PLAQUE	202–9223	2	60 – 5
POTENTIOMETRE	4274087M1	1	25 – 80
PRISE ELECT MALE	G205900900020	1	110 – 175
PRISE PRESSION	3785665M1	4	70 – 140
RELAIS	3387326M2	1	80 – 40
RELAIS	3779879M1	2	80 – 25
RELAIS	4270844M1	X	80 – 40
RELAIS	4271991M1	1	80 – 40
RELAIS	4272431M1	4	80 – 25
		1	80 – 30
		X	80 – 40
		1	120 – 50
RELAIS	4272432M1	X	80 – 40
RELAIS SOLENOIDE	H312900150010	1	30 – 5
		1	30 – 10
		2	70 – 35
RONDELLE	V836652170	6	10 – 95
RONDELLE	V899901495	6	10 – 95
ROTULE	3042427M1	2	40 – 40
ROTULE	3042428M1	2	40 – 40
ROTULE	3042430M1	2	40 – 40
ROTULE	3042431M1	2	40 – 40
ROTULE	3042433M1	1	40 – 20
		1	40 – 30
ROTULE	3778880M1	4	100 – 15
ROTULE	3782685M1	2	40 – 180
		2	40 – 190
ROTULE	3782686M1	2	40 – 180
		2	40 – 190
ROTULE	3783029M1	1	40 – 190
ROTULE	3783030M1	1	40 – 190
ROTULE	3900885M1	1	40 – 180
SONDE TEMPERATUR	H312100360030	1	90 – 85
SONDE TEMPERATUR	V836864360	1	10 – 55
		1	10 – 60
		1	10 – 135
		1	10 – 140
SOUPAPE	G716150200060	1	70 – 100
		1	70 – 105
THERMOSTAT	V836015156	1	10 – 85
THERMOSTAT	V836331590	1	10 – 85
VALVE DECHARGE	G716100600122	1	70 – 95
VALVE SOLENOIDE	G916100600142	1	70 – 95
VANNE COMMANDE	G312100600110	2	70 – 95
VANNE COMMANDE	G411151600020	4	70 – 100
		4	70 – 105
VERIN	3902121M4	1	110 – 40

Qty	PAGE

Qty	PAGE

Qty	PAGE

LAGERVORSCHLAGSTEILE

D5

		Qty	PAGE
ANSAUGDRUCK	3785665M1	4	70–140
ANZEIGER	3789379M1	1	70–120
BLINKGERAET	4271989M1	1	80–40
BLINKGERAET	4271990M1	1	80–40
BOLZEN	3011024X1	1	40–30
DECKELDICHTUNG	V836667243	2	10–70
DICHTRING	V615870610	14	10–95
DICHTRING	V615881827	1	10–75
DICHTRING	V835336276	6	10–95
DICHTUNGSSATZ	3903317M91	1	40–180
		1	40–190
DICHTUNGSSATZ	V836840993	1	10–160
DIODE	3907284M1	1	110–140
DRUCKBEGR.VENTIL	G716100600122	1	70–95
DRUCKGEBER	G718970020020	1	90–85
DRUCKSCHALTER	3712526M1	1	10–210
DRUCKSCHALTER	3808462M1	1	10–235
		1	10–250
DRUCKSCHALTER	4278368M1	1	70–140
DRUCKSCHALTER	G716970160030	1	25–75
		1	90–65
		1	90–75
ELECTRON.VENTIL	3903960M1	1	70–175
		1	70–180
		1	70–185
ELEMENT	V836855484	1	10–80
EMPFANGER	G916970020014	1	90–85
EMPFANGER	G916971020033	1	25–65
EMPFANGER	V836666797	1	10–110
EMPFANGER	V836666980	1	10–115
		1	10–120
		1	10–135
		1	10–140
EMPFANGER	V836866613	1	10–25
		1	10–135
		1	10–140
FAHRSCHEINWERFER	3713799M91	2	120–10
FILTER	3712495M1	1	10–210
FILTER	F916100490010	1	70–60
FILTEREINSATZ	4276648M1	1	70–120
FILTEREINSATZ	F916100600010	1	70–90
FILTEREINSATZ.	V836867231	1	10–110
FILTEREINSATZ.	V836867233	1	10–110
FILTERSATZ	G001990100010	1	70–175
		1	70–180
		1	70–185
FILTERSIEB	3787655M2	1	70–155
GELENKZAPFEN	3042427M1	2	40–40
GELENKZAPFEN	3042428M1	2	40–40

		Qty	PAGE
GELENKZAPFEN	3042430M1	2	40–40
GELENKZAPFEN	3042431M1	2	40–40
GELENKZAPFEN	3042433M1	1	40–20
		1	40–30
GELENKZAPFEN	3778880M1	4	100–15
GELENKZAPFEN	3782685M1	2	40–180
		2	40–190
GELENKZAPFEN	3782686M1	2	40–180
		2	40–190
GELENKZAPFEN	3783029M1	1	40–190
GELENKZAPFEN	3783030M1	1	40–190
GELENKZAPFEN	3900885M1	1	40–180
GEWICHT	202–9220	6	60–5
GLUEHL 12V 1.2W	3302213M1	1	110–175
		1	110–180
GLUEHL 12V 1.2W	3405185M1	1	80–15
GLUEHL 12V 10W	3385821M1	1	80–45
		1	80–50
GLUEHL 12V 5W	1420037M1	1	120–15
GLUEHL 12V 5W	3907271M1	1	80–45
		1	80–50
GLUEHL 12V21WSBC	621235M1	1	120–15
		1	120–20
		1	120–40
GLUEHL 12V60/55W	3713341M1	1	120–25
GLUEHL.45/40W	961866M1	1	120–10
GLUEHLAMPE	175–1323	3	120–5
		3	120–10
GLUEHLAMPE	3907077M1	1	120–30
GLUEHLAMPE	3907384M1	1	120–30
GLUEHLAMPE	9X–8118	1	120–50
GLUEHLAMPE 21/5W	908543M1	1	120–40
GLUEHLAMPE H3	1628494M1	1	120–25
		2	120–25
		1	120–30
		2	120–30
HALL–GEBER	G816970020040	1	20–10
		2	90–85
HEIZUNG	V836864398	1	10–120
HYDR.ZYLINDER	3902121M4	1	110–40
INDUKT EMPFANGER	3618249M1	1	70–120
INDUKT EMPFANGER	3716981M1	2	40–35
KABINE FILTER	3786649M1	1	110–135
KONTAKTSCHALTER	3714137M1	1	40–185
		1	40–195
KONTAKTSCHALTER	3714138M1	1	40–185
		1	40–195
KONTAKTSCHALTER	3780395M2	1	80–45
		1	80–50

		Qty	PAGE
KONTAKTSCHALTER	3783086M1	1	80–15
KONTAKTSCHALTER	3783832M2	1	20–20
KONTAKTSCHALTER	4270312M2	2	80–20
KONTAKTSCHALTER	4270313M2	2	80–20
KONTAKTSCHALTER	4270755M1	1	80–15
KONTAKTSCHALTER	4270756M2	1	25–85
KONTAKTSCHALTER	4270970M3	1	25–85
KONTAKTSCHALTER	4271342M1	1	80–10
KONTAKTSCHALTER	4271344M1	1	110–155
		1	110–160
KONTAKTSCHALTER	4271346M1	1	80–15
KONTAKTSCHALTER	4271347M1	1	80–15
KONTAKTSCHALTER	4271348M2	1	80–15
KONTAKTSCHALTER	4271349M2	1	80–15
KONTAKTSCHALTER	4271351M2	1	80–15
KONTAKTSCHALTER	4271353M2	1	80–15
KONTAKTSCHALTER	4271356M1	1	90–10
KONTAKTSCHALTER	4271809M1	1	20–20
KONTAKTSCHALTER	4271916M2	1	80–10
KONTAKTSCHALTER	4271992M2	1	80–15
		X	80–20
KONTAKTSCHALTER	4272778M1	1	20–20
KRAFTSTOFFILTER	V836862600	1	10–110
KRAFTSTOFFILTER	V836862602	1	10–110
KUPPLST.AUSSEN	3785907M2	2	40–170
		2	40–175
KUPPLST.AUSSEN	3786820M2	1	70–130
KUPPLST.INNEN	1026700M91	X	70–215
KUPPLST.INNEN	3583932M1	X	70–215
KUPPLUNGSBOLZEN	3387270M92	1	60–5
KUPPLUNGSBOLZEN	3790349M92	1	60–5
KUPPLUNGSBOLZEN	4272346M2	1	40–70
LICHTM.DREHSTROM	3789983M91	1	10–10
		1	10–15
LINSE	136–5254	1	120–50
LUFTFILTEREINS	4270018M1	1	10–240
LUFTFILTEREINS	4278631M1	1	10–240
MAGNETSCHALTER	H312900150010	1	30–5
		1	30–10
		2	70–35
MAGNETVENTIL	G916100600142	1	70–95
NABENTRIEB.	3784361M1	1	10–260
		1	20–20
		1	40–185
		1	40–195
NABENTRIEB.	4275671M1	1	70–40
NABENTRIEB.	4278263M1	1	70–155
NABENTRIEB.	G716860100040	1	30–65
O–RING	3008359X1	2	60–35

		Qty	PAGE
O–RING	3010471X1	5	10–210
		1	110–105
O–RING	3907428M1	1	70–120
O–RING	X548960666000	1	70–90
O–RING	X548987066000	1	70–60
O–RING	X548989201000	1	70–60
OELFILTER	V836859108	1	10–150
OELFILTER	V836867234	1	10–80
		1	10–145
PLATTE	202–9223	2	60–5
POTENTIOMETER	4274087M1	1	25–80
RELAIS	3387326M2	1	80–40
RELAIS	3779879M1	2	80–25
RELAIS	4270844M1	X	80–40
RELAIS	4271991M1	1	80–40
RELAIS	4272431M1	4	80–25
		1	80–30
		X	80–40
		1	120–50
RELAIS	4272432M1	X	80–40
RIEMEN	4275545M3	1	10–5
		1	10–130
RIEMEN	4276375M1	1	10–210
RING	X540004078000	1	90–85
RING	X540009478000	1	20–10
		4	30–45
RUECKSCHLAGVENT.	3808023M91	1	10–180
SAUGFILTER	G916951010010	1	70–145
SCHALTER	F916100600040	1	70–90
SCHLAUCH	3777798M1	1	10–225
SCHLAUCH	3780247M1	1	10–230
SCHLUESSEL–SATZ	3902584M91	1	110–40
SEEGERING	X530106046000	1	70–55
SENSOR	3797129M1	1	70–225
SENSOR MOTORDREH	V836866392	1	10–25
		1	10–135
		1	10–140
SICHERUNG	3387322M1	X	80–40
		1	110–215
SICHERUNG	3580868M1	X	80–40
SICHERUNG	3712661M1	X	80–40
SICHERUNG	3780003M1	X	80–40
SICHERUNG	4271799M1	3	80–25
		X	80–40
SICHERUNG	4271800M1	X	80–40
		1	120–50

LAGERVORSCHLAGSTEILE

D6

		Qty	PAGE
SICHERUNG	4271801M1	2	**80 – 25**
		1	**80 – 30**
		X	**80 – 40**
		1	**120 – 50**
SICHERUNG	4271802M1	2	**80 – 25**
		X	**80 – 40**
SICHERUNG	4271803M1	1	**80 – 40**
SICHERUNG	4271842M1	1	**80 – 30**
		X	**80 – 40**
SICHERUNG	4276186M1	1	**10 – 195**
		1	**10 – 200**
		1	**10 – 205**
SPEZIALMUTTER	3384600M2	24	**130 – 60**
SPEZIALMUTTER	3712611M2	20	**130 – 5**
		24	**130 – 10**
		20	**130 – 15**
		24	**130 – 20**
		24	**130 – 25**
		20	**130 – 65**
		80	**130 – 70**
SPLINTBOLZEN	G916501120050	1	**40 – 75**
		1	**40 – 80**
		1	**40 – 85**
STECKER	G205900900020	1	**110 – 175**
STEHBOLZEN	3716105M2	20	**130 – 65**
		40	**130 – 70**
		60	**130 – 70**
STOSSDAEMPFER	4273315M91	2	**110 – 10**
STUMMEL	3778648M1	2	**40 – 185**
TEMPERATURGEBER	H312100360030	1	**90 – 85**
TEMPERATURGEBER	V836864360	1	**10 – 55**
		1	**10 – 60**
		1	**10 – 135**
		1	**10 – 140**
THERMOSTAT	V836015156	1	**10 – 85**
THERMOSTAT	V836331590	1	**10 – 85**
UNTERLEGSCHEIBE	V836652170	6	**10 – 95**
UNTERLEGSCHEIBE	V899901495	6	**10 – 95**
VENTIL	G716150200060	1	**70 – 100**
		1	**70 – 105**
WEGEVENTIL	G312100600110	2	**70 – 95**
WEGEVENTIL	G411151600020	4	**70 – 100**
		4	**70 – 105**
WISCHERBLATT	3713195M1	1	**110 – 155**
WISCHERBLATT	3777648M1	1	**110 – 145**
WISCHERBLATT	4275049M1	1	**110 – 160**
WISCHERBLATT	4275053M1	1	**110 – 145**
ZUENDSCHLUESSEL	4271358M1	1	**80 – 10**

		Qty	PAGE
ZYL.KOPFDICHTUNG	V836666302	2	**10 – 55**
		2	**10 – 60**

	Qty	PAGE

	Qty	PAGE

PEZZI CHE RECCOMANDIANO DI TENERE A MAGAZZINO

D7

		Qty	PAGE
ALTERNATORE	3789983M91	1	10 – 10
		1	10 – 15
AMMORTIZZATORE*	4273315M91	2	110 – 10
ANELLO	X540004078000	1	90 – 85
ANELLO	X540009478000	1	20 – 10
		4	30 – 45
ANELLO RACCORD	V615870610	14	10 – 95
ANELLO RACCORD	V615881827	1	10 – 75
ANELLO RACCORD	V835336276	6	10 – 95
ANELLO TENUTA	3008359X1	2	60 – 35
ANELLO TENUTA	3010471X1	5	10 – 210
		1	110 – 105
ANELLO TENUTA	3907428M1	1	70 – 120
ANELLO TENUTA	X548960666000	1	70 – 90
ANELLO TENUTA	X548987066000	1	70 – 60
ANELLO TENUTA	X548989201000	1	70 – 60
ANNELLO ELASTICO	X530106046000	1	70 – 55
BULBO	175–1323	3	120 – 5
		3	120 – 10
BULBO	3907077M1	1	120 – 30
BULBO	3907384M1	1	120 – 30
BULBO	9X–8118	1	120 – 50
BULBO 12V 1,2W	3302213M1	1	110 – 175
		1	110 – 180
BULBO 12V 1,2W	3405185M1	1	80 – 15
BULBO 12V 10W	3385821M1	1	80 – 45
		1	80 – 50
BULBO 12V 21W	621235M1	1	120 – 15
		1	120 – 20
		1	120 – 40
BULBO 12V 5W	1420037M1	1	120 – 15
BULBO 12V 5W	3907271M1	1	80 – 45
		1	80 – 50
BULBO 12V 60/55W	3713341M1	1	120 – 25
BULBO 21/5W	908543M1	1	120 – 40
BULBO 45/40W HL	961866M1	1	120 – 10
BULBO H3	1628494M1	1	120 – 25
		2	120 – 25
		1	120 – 30
		2	120 – 30
CEPPO	3778648M1	2	40 – 185
CHIAVE CONTATTO	4271358M1	1	80 – 10
CILINDRO IDRAUL.	3902121M4	1	110 – 40
CINGHIA	4275545M3	1	10 – 5
		1	10 – 130
CINGHIA	4276375M1	1	10 – 210
COLINO	3787655M2	1	70 – 155
COVER GASKET	V836667243	2	10 – 70
DADO SPECIALE	3384600M2	24	130 – 60

		Qty	PAGE
DADO SPECIALE	3712611M2	20	130 – 5
		24	130 – 10
		20	130 – 15
		24	130 – 20
		24	130 – 25
		20	130 – 65
		80	130 – 70
DIODO	3907284M1	1	110 – 140
DIRECTIONAL VALV	G312100600110	2	70 – 95
DIRECTIONAL VALV	G411151600020	4	70 – 100
		4	70 – 105
ELEM.CARBURANTE	V836867231	1	10 – 110
ELEM.CARBURANTE	V836867233	1	10 – 110
ELEM.FILTRO ARIA	4270018M1	1	10 – 240
ELEM.FILTRO ARIA	4278631M1	1	10 – 240
ELEMENTO	V836855484	1	10 – 80
ELEMENTO FILTRAN	4276648M1	1	70 – 120
ELEMENTO FILTRAN	F916100600010	1	70 – 90
ELETTROVALVOLA	3903960M1	1	70 – 175
		1	70 – 180
		1	70 – 185
FILTRO	3712495M1	1	10 – 210
FILTRO	F916100490010	1	70 – 60
FILTRO CABINA	3786649M1	1	110 – 135
FILTRO NAFTA	V836862600	1	10 – 110
FILTRO NAFTA	V836862602	1	10 – 110
FILTRO OLIO	V836859108	1	10 – 150
FILTRO OLIO	V836867234	1	10 – 80
		1	10 – 145
GIUNTO FEMMINA	3785907M2	2	40 – 170
		2	40 – 175
GIUNTO FEMMINA	3786820M2	1	70 – 130
GIUNTO MASCHIO	1026700M91	X	70 – 215
GIUNTO MASCHIO	3583932M1	X	70 – 215
GUARNIZIONETESTA	V836666302	2	10 – 55
		2	10 – 60
HALL SENSOR	G816970020040	1	20 – 10
		2	90 – 85
INDICATORE	3789379M1	1	70 – 120
INTERRUTTORE	F916100600040	1	70 – 90
INTERRUTTORE IND	3714137M1	1	40 – 185
		1	40 – 195
INTERRUTTORE IND	3714138M1	1	40 – 185
		1	40 – 195
INTERRUTTORE IND	3780395M2	1	80 – 45
		1	80 – 50
INTERRUTTORE IND	3783086M1	1	80 – 15
INTERRUTTORE IND	3783832M2	1	20 – 20
INTERRUTTORE IND	4270312M2	2	80 – 20

		Qty	PAGE
INTERRUTTORE IND	4270313M2	2	80 – 20
INTERRUTTORE IND	4270755M1	1	80 – 15
INTERRUTTORE IND	4270756M2	1	25 – 85
INTERRUTTORE IND	4270970M3	1	25 – 85
INTERRUTTORE IND	4271342M1	1	80 – 10
INTERRUTTORE IND	4271344M1	1	110 – 155
		1	110 – 160
INTERRUTTORE IND	4271346M1	1	80 – 15
INTERRUTTORE IND	4271347M1	1	80 – 15
INTERRUTTORE IND	4271348M2	1	80 – 15
INTERRUTTORE IND	4271349M2	1	80 – 15
INTERRUTTORE IND	4271351M2	1	80 – 15
INTERRUTTORE IND	4271353M2	1	80 – 15
INTERRUTTORE IND	4271356M1	1	90 – 10
INTERRUTTORE IND	4271809M1	1	20 – 20
INTERRUTTORE IND	4271916M2	1	80 – 10
INTERRUTTORE IND	4271992M2	1	80 – 15
		X	80 – 20
INTERRUTTORE IND	4272778M1	1	20 – 20
INTERRUTTORE SOL	H312900150010	1	30 – 5
		1	30 – 10
		2	70 – 35
KIT CHIAVE	3902584M91	1	110 – 40
KIT FILTRO	G001990100010	1	70 – 175
		1	70 – 180
		1	70 – 185
KIT GIUNTO	3903317M91	1	40 – 180
		1	40 – 190
KIT GIUNTO	V836840993	1	10 – 160
LAMPADA	3713799M91	2	120 – 10
LAMPEGGIATORE	4271989M1	1	80 – 40
LAMPEGGIATORE	4271990M1	1	80 – 40
LENTE	136–5254	1	120 – 50
PERNO	3011024X1	1	40 – 30
PERNO ATTACCO	3387270M92	1	60 – 5
PERNO ATTACCO	3790349M92	1	60 – 5
PERNO ATTACCO	4272346M2	1	40 – 70
PERNO D'ATTACCO	G916501120050	1	40 – 75
		1	40 – 80
		1	40 – 85
PESO	202–9220	6	60 – 5
PIASTRA	202–9223	2	60 – 5
POTENZIOMETRO	4274087M1	1	25 – 80
PRESA PRESSIONE	3785665M1	4	70 – 140
PRESAELETTRICI M	G205900900020	1	110 – 175
PRESS.TRANSDUCER	G718970020020	1	90 – 85
PRESSOSTATO	3712526M1	1	10 – 210
PRESSOSTATO	3808462M1	1	10 – 235
		1	10 – 250

		Qty	PAGE
PRESSOSTATO	4278368M1	1	70 – 140
PRESSOSTATO	G716970160030	1	25 – 75
		1	90 – 65
		1	90 – 75
PRIGIONIERO	3716105M2	20	130 – 65
		40	130 – 70
		60	130 – 70
RELE	3387326M2	1	80 – 40
RELE	3779879M1	2	80 – 25
RELE	4270844M1	X	80 – 40
RELE	4271991M1	1	80 – 40
RELE	4272431M1	4	80 – 25
		1	80 – 30
		X	80 – 40
		1	120 – 50
RELE	4272432M1	X	80 – 40
RISCALDAMENTO	V836864398	1	10 – 120
RONDELLA	V836652170	6	10 – 95
RONDELLA	V899901495	6	10 – 95
ROTULA	3042427M1	2	40 – 40
ROTULA	3042428M1	2	40 – 40
ROTULA	3042430M1	2	40 – 40
ROTULA	3042431M1	2	40 – 40
ROTULA	3042433M1	1	40 – 20
		1	40 – 30
ROTULA	3778880M1	4	100 – 15
ROTULA	3782685M1	2	40 – 180
		2	40 – 190
ROTULA	3782686M1	2	40 – 180
		2	40 – 190
ROTULA	3783029M1	1	40 – 190
ROTULA	3783030M1	1	40 – 190
ROTULA	3900885M1	1	40 – 180
SENSORE	G916970020014	1	90 – 85
SENSORE	G916971020033	1	25 – 65
SENSORE	V836666797	1	10 – 110
SENSORE	V836666980	1	10 – 115
		1	10 – 120
		1	10 – 135
		1	10 – 140
SENSORE	V836866613	1	10 – 25
		1	10 – 135
		1	10 – 140
SENSORE DI POSIZ	3797129M1	1	70 – 225
SENSORE GIRIMOTO	V836866392	1	10 – 25
		1	10 – 135
		1	10 – 140
SENSORE INDUTTIV	3618249M1	1	70 – 120
SENSORE INDUTTIV	3716981M1	2	40 – 35

PEZZI CHE RECCOMANDIANO DI TENERE A MAGAZZINO

D8

		Qty	PAGE
SPAZZOLA TERGICR	3713195M1	1	110 – 155
SPAZZOLA TERGICR	3777648M1	1	110 – 145
SPAZZOLA TERGICR	4275049M1	1	110 – 160
SPAZZOLA TERGICR	4275053M1	1	110 – 145
SUCTION FILTER	G916951010010	1	70 – 145
TEMP. SENSOR	H312100360030	1	90 – 85
TEMP. SENSOR	V836864360	1	10 – 55
		1	10 – 60
		1	10 – 135
		1	10 – 140
TERMOSTATO	V836015156	1	10 – 85
TERMOSTATO	V836331590	1	10 – 85
TRANSDUCER	3784361M1	1	10 – 260
		1	20 – 20
		1	40 – 185
		1	40 – 195
TRANSDUCER	4275671M1	1	70 – 40
TRANSDUCER	4278263M1	1	70 – 155
TRANSDUCER	G716860100040	1	30 – 65
TUBO FLESSIBILE	3777798M1	1	10 – 225
TUBO FLESSIBILE	3780247M1	1	10 – 230
VALVOLA	G716150200060	1	70 – 100
		1	70 – 105
VALVOLA NO RITOR	3808023M91	1	10 – 180
VALVOLA–SICUREZZ	G716100600122	1	70 – 95
VALVOLASOLENOIDE	G916100600142	1	70 – 95
VALVOLINA	3387322M1	X	80 – 40
		1	110 – 215
VALVOLINA	3580868M1	X	80 – 40
VALVOLINA	3712661M1	X	80 – 40
VALVOLINA	3780003M1	X	80 – 40
VALVOLINA	4271799M1	3	80 – 25
		X	80 – 40
VALVOLINA	4271800M1	X	80 – 40
		1	120 – 50
VALVOLINA	4271801M1	2	80 – 25
		1	80 – 30
		X	80 – 40
		1	120 – 50
VALVOLINA	4271802M1	2	80 – 25
		X	80 – 40
VALVOLINA	4271803M1	1	80 – 40
VALVOLINA	4271842M1	1	80 – 30
		X	80 – 40
VALVOLINA	4276186M1	1	10 – 195
		1	10 – 200
		1	10 – 205

RECAMBIO QUE SE RECOMIENDA MANTENER EN STOCK

D9

		Qty	PAGE
ACOPLADOR HEMBRA	3785907M2	2	40–170
		2	40–175
ACOPLADOR HEMBRA	3786820M2	1	70–130
ACOPLADOR MACHO	1026700M91	X	70–215
ACOPLADOR MACHO	3583932M1	X	70–215
ALTERNADOR	3789983M91	1	10–10
		1	10–15
AMORTIGUADOR	4273315M91	2	110–10
ANILLO FORMA 'O'	3008359X1	2	60–35
ANILLO FORMA 'O'	3010471X1	5	10–210
		1	110–105
ANILLO FORMA 'O'	3907428M1	1	70–120
ANILLO FORMA 'O'	X548960666000	1	70–90
ANILLO FORMA 'O'	X548987066000	1	70–60
ANILLO FORMA 'O'	X548989201000	1	70–60
ARANDELA	V836652170	6	10–95
ARANDELA	V899901495	6	10–95
ARENDELA D'JUNTA	V615870610	14	10–95
ARENDELA D'JUNTA	V615881827	1	10–75
ARENDELA D'JUNTA	V835336276	6	10–95
ARIETE	3902121M4	1	110–40
ARO	X540004078000	1	90–85
ARO	X540009478000	1	20–10
		4	30–45
BOMB 12V 21W SBC	621235M1	1	120–15
		1	120–20
		1	120–40
BOMB C/I 21/5W	908543M1	1	120–40
BOMBFARO 45/40W	961866M1	1	120–10
BOMBILLA	175–1323	3	120–5
		3	120–10
BOMBILLA	3907077M1	1	120–30
BOMBILLA	3907384M1	1	120–30
BOMBILLA	9X–8118	1	120–50
BOMBILLA 12V 10W	3385821M1	1	80–45
		1	80–50
BOMBILLA 12V 5W	1420037M1	1	120–15
BOMBILLA 12V 5W	3907271M1	1	80–45
		1	80–50
BOMBILLA 12V1,2W	3302213M1	1	110–175
		1	110–180
BOMBILLA 12V1,2W	3405185M1	1	80–15
BOMBILLA H3	1628494M1	1	120–25
		2	120–25
		1	120–30
		2	120–30
BOMBILLA12V60/55	3713341M1	1	120–25

		Qty	PAGE
BULON CILINDRICO	G916501120050	1	40–75
		1	40–80
		1	40–85
CALENTADOR	V836864398	1	10–120
CAPTADOR INDUCTI	3618249M1	1	70–120
CAPTADOR INDUCTI	3716981M1	2	40–35
CHAVETA ROSCADO	3716105M2	20	130–65
		40	130–70
		60	130–70
COLADOR	3787655M2	1	70–155
CONTACTOR	3714137M1	1	40–185
		1	40–195
CONTACTOR	3714138M1	1	40–185
		1	40–195
CONTACTOR	3780395M2	1	80–45
		1	80–50
CONTACTOR	3783086M1	1	80–15
CONTACTOR	3783832M2	1	20–20
CONTACTOR	4270312M2	2	80–20
CONTACTOR	4270313M2	2	80–20
CONTACTOR	4270755M1	1	80–15
CONTACTOR	4270756M2	1	25–85
CONTACTOR	4270970M3	1	25–85
CONTACTOR	4271342M1	1	80–10
CONTACTOR	4271344M1	1	110–155
		1	110–160
CONTACTOR	4271346M1	1	80–15
CONTACTOR	4271347M1	1	80–15
CONTACTOR	4271348M2	1	80–15
CONTACTOR	4271349M2	1	80–15
CONTACTOR	4271351M2	1	80–15
CONTACTOR	4271353M2	1	80–15
CONTACTOR	4271356M1	1	90–10
CONTACTOR	4271809M1	1	20–20
CONTACTOR	4271916M2	1	80–10
CONTACTOR	4271992M2	1	80–15
		X	80–20
CONTACTOR	4272778M1	1	20–20
CORREA	4275545M3	1	10–5
		1	10–130
CORREA	4276375M1	1	10–210
COVER GASKET	V836667243	2	10–70
DETECTOR	G916970020014	1	90–85
DETECTOR	G916971020033	1	25–65
DETECTOR	V836666797	1	10–110
DETECTOR	V836666980	1	10–115
		1	10–120
		1	10–135
		1	10–140

		Qty	PAGE
DETECTOR	V836866613	1	10–25
		1	10–135
		1	10–140
DIODO	3907284M1	1	110–140
DIRECTIONAL VALV	G312100600110	2	70–95
DIRECTIONAL VALV	G411151600020	4	70–100
		4	70–105
ELECTROVALVULA	3903960M1	1	70–175
		1	70–180
		1	70–185
ELEMENTO	V836855484	1	10–80
ELEMENTO FL.AIRE	4270018M1	1	10–240
ELEMENTO FL.AIRE	4278631M1	1	10–240
ELEMENTO GASOLEO	V836867231	1	10–110
ELEMENTO GASOLEO	V836867233	1	10–110
EMISOR DEL CALOR	H312100360030	1	90–85
EMISOR DEL CALOR	V836864360	1	10–55
		1	10–60
		1	10–135
		1	10–140
ENTRADA PRESION	3785665M1	4	70–140
ESCOBILLA L P BR	3713195M1	1	110–155
ESCOBILLA L P BR	3777648M1	1	110–145
ESCOBILLA L P BR	4275049M1	1	110–160
ESCOBILLA L P BR	4275053M1	1	110–145
FARO DELANTERO	3713799M91	2	120–10
FILTRO	3712495M1	1	10–210
FILTRO	F916100490010	1	70–60
FILTRO CABINA	3786649M1	1	110–135
FILTRO D'SUCCION	G916951010010	1	70–145
FILTRO DE ACEITE	V836859108	1	10–150
FILTRO DE ACEITE	V836867234	1	10–80
		1	10–145
FILTRO GAS OIL	V836862600	1	10–110
FILTRO GAS OIL	V836862602	1	10–110
FLEXIBLE	3777798M1	1	10–225
FLEXIBLE	3780247M1	1	10–230
FUSIBLE	3387322M1	X	80–40
		1	110–215
FUSIBLE	3580868M1	X	80–40
FUSIBLE	3712661M1	X	80–40
FUSIBLE	3780003M1	X	80–40
FUSIBLE	4271799M1	3	80–25
		X	80–40
FUSIBLE	4271800M1	X	80–40
		1	120–50

		Qty	PAGE
FUSIBLE	4271801M1	2	80–25
		1	80–30
		X	80–40
		1	120–50
FUSIBLE	4271802M1	2	80–25
		X	80–40
FUSIBLE	4271803M1	1	80–40
FUSIBLE	4271842M1	1	80–30
		X	80–40
FUSIBLE	4276186M1	1	10–195
		1	10–200
		1	10–205
GRAPA CIRCULAR	X530106046000	1	70–55
HALL SENSOR	G816970020040	1	20–10
		2	90–85
INDICADOR	3789379M1	1	70–120
INTERMITENTE	4271989M1	1	80–40
INTERMITENTE	4271990M1	1	80–40
INTERR SOLENOIDE	H312900150010	1	30–5
		1	30–10
		2	70–35
INTERRUP PRESION	3712526M1	1	10–210
INTERRUP PRESION	3808462M1	1	10–235
		1	10–250
INTERRUP PRESION	4278368M1	1	70–140
INTERRUP PRESION	G716970160030	1	25–75
		1	90–65
		1	90–75
INTERRUPTOR	F916100600040	1	70–90
JUEGO ALICATES	3902584M91	1	110–40
JUEGO FILTRO	G001990100010	1	70–175
		1	70–180
		1	70–185
JUEGO JUNTAS	3903317M91	1	40–180
		1	40–190
JUEGO JUNTAS	V836840993	1	10–160
JUNTA DE CULATA	V836666302	2	10–55
		2	10–60
LENTE DE VIDRIO	136–5254	1	120–50
LLAVE CONTACTO	4271358M1	1	80–10
PASADOR	3011024X1	1	40–30
PASADOR ENGAN.	3387270M92	1	60–5
PASADOR ENGAN.	3790349M92	1	60–5
PASADOR ENGAN.	4272346M2	1	40–70
PESO DE CARGA	202–9220	6	60–5
PLATO	202–9223	2	60–5
PRESS.TRANSDUCER	G718970020020	1	90–85
REGULADOR ELECT.	4274087M1	1	25–80
RELE	3387326M2	1	80–40

RECAMBIO QUE SE RECOMIENDA MANTENER EN STOCK

D10

		Qty	PAGE
RELE	3779879M1	2	80 – 25
RELE	4270844M1	X	80 – 40
RELE	4271991M1	1	80 – 40
RELE	4272431M1	4	80 – 25
		1	80 – 30
		X	80 – 40
		1	120 – 50
RELE	4272432M1	X	80 – 40
ROTULA	3042427M1	2	40 – 40
ROTULA	3042428M1	2	40 – 40
ROTULA	3042430M1	2	40 – 40
ROTULA	3042431M1	2	40 – 40
ROTULA	3042433M1	1	40 – 20
		1	40 – 30
ROTULA	3778880M1	4	100 – 15
ROTULA	3782685M1	2	40 – 180
		2	40 – 190
ROTULA	3782686M1	2	40 – 180
		2	40 – 190
ROTULA	3783029M1	1	40 – 190
ROTULA	3783030M1	1	40 – 190
ROTULA	3900885M1	1	40 – 180
SALIENTE	3778648M1	2	40 – 185
SENSOR	3797129M1	1	70 – 225
SENSOR VEL.MOTOR	V836866392	1	10 – 25
		1	10 – 135
		1	10 – 140
SUPLEMENT FILTRO	4276648M1	1	70 – 120
SUPLEMENT FILTRO	F916100600010	1	70 – 90
TERMOSTATO	V836015156	1	10 – 85
TERMOSTATO	V836331590	1	10 – 85
TOMACORRIENTE M	G205900900020	1	110 – 175
TRANSDUCER	3784361M1	1	10 – 260
		1	20 – 20
		1	40 – 185
		1	40 – 195
TRANSDUCER	4275671M1	1	70 – 40
TRANSDUCER	4278263M1	1	70 – 155
TRANSDUCER	G716860100040	1	30 – 65
TUERCA ESPECIAL	3384600M2	24	130 – 60
TUERCA ESPECIAL	3712611M2	20	130 – 5
		24	130 – 10
		20	130 – 15
		24	130 – 20
		24	130 – 25
		20	130 – 65
		80	130 – 70
VALV.SIN RETORNO	3808023M91	1	10 – 180

		Qty	PAGE
VALVULA	G716150200060	1	70 – 100
		1	70 – 105
VALVULA ALIVIO	G716100600122	1	70 – 95
VALVULA SOLENOID	G916100600142	1	70 – 95

	Qty	PAGE

	Qty	PAGE

RESERVED

NUMERICAL INDEX
INDEX NUMERIQUE
NUMMERN-INDEX
INDICE NUMERICO
INDICE NUMERICO

G1

000051867	60-65
000054058	60-55
000057061	60-65
000057073	60-65
000057970	60-60
000058321	60-65
000065060	60-55
000137100	60-60
000139339	60-60
000145120	60-65
000215040A	60-60
000245025A	60-60
000245027A	60-60
000245028A	60-60
000245560B	60-65
000245680	60-60
000245837	60-60
000345621	60-60
000345622	60-60
000345623A	60-60
000513236	60-65
000727512A	60-60
001051564	60-60
001051577	60-65
001053338	60-65
001423359	60-60
001423360	60-60
002011260	60-65
002011794	60-60
002013405	60-65
002020903	60-65
002021812	60-60
002023410	60-65
002072756	60-65
002143202	60-65
005013296	60-65
005093366	60-60
005100497	60-65
005101427	60-65
005103365	60-60
005733367	60-60
006011489	60-60
006033208	60-55
006053774	60-60
0099047000000	25-10
011041318	60-60
011043431	60-60
011053790	60-60
011141455	60-60
012100090080	25-65
014010327	60-60
014013773	60-60
015149020030	60-40
015149020031	60-40
015149020032	60-40
015149020035	60-40
015149020036	60-40
016010367	60-65
016010786	60-60
	60-65
016033621	60-55
016083444	60-65
017023490	60-60
025840020110	70-70
	70-80
1026700M91	70-215
1028097M1	10-235
136-5254	120-50
138715140010	30-15
1420037M1	120-15
1427000M1	110-70
	110-75
	110-80
1427024M1	110-100
1440012X1	70-120
	70-155
1440022X1	110-235
1440207X1	90-55
1440231X1	30-5
	30-10
1440264X1	25-80
1440319X1	40-75
	40-80
	40-85
1440329X1	50-25
	110-55
	110-190
	110-195
	110-200
1440330X1	70-35
1440349X1	40-190
1440350X1	10-5
	110-75
	110-165
	130-65
	130-70
1440396X1	110-50
1440433X1	10-195
	10-200
	10-205
1440716X1	10-235
	130-35
1440921X1	70-5
1440922X1	70-115
	110-70
1440988X1	110-55
1441121X1	70-220
1441206X1	110-225
1441226X1	130-35
1441302X1	130-35
1441462X1	70-30
	110-135
1441494X1	10-255
	120-30
1441500X1	10-5
	10-260
	40-170
	40-175
	70-40
	70-115
	70-225
	80-40
	100-5
	100-10
	100-20
	100-30
	120-30
	120-40
1441664X1	10-180
	130-35
1441704X1	40-130
1441728X1	10-260
1441782X1	70-35
1441786X1	60-35
1441932X1	10-5
	60-35
	70-195
	70-200
	70-205
1441967X1	40-160
1442034X1	30-5
	30-10
1442171X1	40-185
	40-195
	110-140
1442172X1	30-5
	30-10
1442190X1	130-35
1442332X91	70-195
	70-200
	70-205
1442477X1	70-140
1442602X1	130-35
1442900X1	110-40
1442958X1	25-80
1442962X1	100-20
1442963X1	110-40
1442967X1	40-20
	40-25
	100-15
1442970X1	10-180
1442994X1	10-260
	20-20
1443512X1	40-180
1443615X1	30-5
	30-10
	70-35
	110-175
	110-180
1444071X1	60-60
1444351X1	20-20
	110-220
155302010110	30-15
1617869M2	10-185
1619032M1	20-15
1619912M1	70-5
1626321M2	20-20
	70-35
1628494M1	120-25
	120-30
1677803M1	80-45
	80-50
1678404M1	120-5
	120-10
1694534M1	80-10
1696477M1	110-140
1699748M1	10-260
1719867M1	110-220
	110-225
1719896M1	110-225
175-1323	120-5
	120-10
178100360050	25-75
178107080030	70-60
178810030450	70-60
1803494M1	110-80
184870050020	40-25
1894397M1	110-195
195562M1	70-140
198100080520	70-70
	70-75
199100080110	50-5
199860070010	40-35
199870030160	40-95
202-9220	60-5
202-9223	60-5
205100150130	25-5
205100480010	30-25
205116300081	25-65
205800580030	30-15
205900163040	50-25
205950010340	70-85
22428X	80-30
225100100160	70-75
238950010010	70-85
246860030130	25-75
268600130110	70-70
	70-75
	70-80
2752579M1	100-45
281100350040	40-95
281880010070	40-35
30-3076830	10-175
3000193X1	110-220
	110-225
3000483X1	10-225
3000845X1	130-40
3000926X1	110-225
3001317X1	70-195
	70-200
	70-205
3001345X91	70-120
3001462X1	130-70
3001757X1	110-40
3001758X1	110-105
3001856X1	10-195
	10-200
	10-205
	25-80
	80-45
	80-50
	110-175
	110-180
3001968X1	40-190
	60-5
3002070X91	60-30
3002813X1	10-10
3005728X1	10-180
	10-185
3005908X1	70-195
	70-200
	70-205
3006429X1	40-190
3007432X1	70-195
	70-200
	70-205
3007850X1	10-260
3007920X1	110-15
3007934X1	10-185
3008317X1	40-190
3008359X1	60-35
3008483X1	25-80
	110-215
3008914X1	110-145
3009132X1	110-5
3009193X1	110-65
3009244X1	130-75
3009248X1	130-75
3009257X1	70-115
3009280X1	70-35
	110-100
3009281X1	20-20
	70-190
	120-30
3009283X1	10-5
3009285X1	20-10
	40-95
	70-195
	70-200
	70-205
	110-35
	110-215
	110-220

3009439X1 110–220
3009444X1 110–40
3009480X1 130–30
3009491X1 10–180
10–195
10–200
10–205
10–225
40–125
40–195
110–70
3009492X1 10–210
10–235
40–75
40–80
40–85
40–90
40–95
40–100
50–25
100–25
110–5
130–30
3009493X1 10–235
20–20
70–45
100–15
100–20
110–5
110–10
3009494X1 50–25
50–30
70–195
70–200
70–205
3009502X1 10–10
3009505X1 10–220
70–140
3009506X1 10–220
3009508X1 70–35
3009509X1 10–250
3009510X1 10–245
130–35
3009512X1 110–10
3009513X1 130–30
3009515X1 110–10
3009530X1 110–25
3009538X1 80–80

3009695X1 10–235
10–245
10–250
130–30
3009746X1 40–75
40–80
40–85
60–25
3009747X1 40–95
40–190
3009778X1 70–5
3009805X1 40–60
3009930X1 20–10
3009933X1 130–75
3010007X1 20–10
3010021X1 10–195
10–200
10–205
10–210
10–220
70–115
3010025X1 20–15
3010067X1 40–50
40–55
110–10
3010070X1 10–220
120–20
120–40
3010156X1 10–230
3010160X1 10–235
3010162X1 10–235
3010164X1 40–190
3010181X1 110–65
3010239X1 10–210
3010334X1 40–70
3010349X1 60–35
3010351X1 25–80
3010434X1 60–5
3010467X1 90–40
110–150
110–235
3010471X1 10–210
110–105
3010472X1 10–210
3010473X1 10–210
110–105

3010477X1 10–170
80–80
120–15
120–40
3010505X1 40–115
3010506X1 25–80
90–10
90–65
110–70
110–75
110–80
110–85
110–95
110–170
120–30
3010556X1 20–10
3010557X1 60–25
3010560X1 40–85
3010563X1 40–115
40–180
60–25
3010567X1 10–170
3010569X1 130–65
130–70
3010572X1 10–245
10–250
3010578X1 10–260
90–45
110–70
110–80
110–85
120–15
3010597X1 110–65
3010604X1 10–195
10–200
10–205
3010613X1 110–10
3010683X1 110–105
110–110
110–115
3010684X1 70–120
3010749X1 60–35
3010757X1 40–125
3010762X1 110–145
3010765X1 130–65
130–70

3010775X1 110–40
110–50
110–55
3010791X1 80–5
3010804X1 10–260
90–10
90–65
110–140
110–175
110–180
3010808X1 80–25
3010818X1 20–20
70–15
70–35
3010842X1 20–15
3010850X1 60–25
3010852X1 60–25
3010872X1 110–205
110–210
3010875X1 110–10
3010885X1 40–105
40–110
3010894X1 60–5
3010895X1 70–15
70–35
3010909X1 110–205
110–210
3010910X1 110–100
3010915X1 40–190
60–5
3010927X1 40–190
3010945X1 40–90
3010965X1 40–180
3011018X1 10–220
3011023X1 20–10
3011024X1 40–30
3011035X1 110–40
110–50
3011036X1 20–10
40–10
70–130
70–135
70–140
3011037X1 70–115
70–120
70–135
70–140
70–155

3011038X91 30–5
30–10
70–40
70–125
70–140
3011040X91 40–10
70–130
70–135
3011041X91 70–130
3011042X91 70–140
3011043X91 70–135
70–140
3011044X91 70–155
3011045X91 70–160
70–165
70–170
3011055X91 70–160
70–165
70–170
3011059X91 70–145
3011061X1 70–25
70–160
70–165
70–170
3011062X1 70–160
70–165
70–170
3011063X1 70–115
3011065X1 40–170
40–175
3011071X91 40–170
40–175
3011082X91 70–120
70–145
70–160
70–165
70–170
3011083X91 70–220
3011084X91 70–195
70–200
70–205
3011085X91 40–160
40–165
70–130
70–160
70–165
70–170
3011087X91 70–155

3011088X91 70–140
70–160
70–165
70–170
3011089X91 40–10
70–135
70–160
70–165
70–170
3011093X91 40–165
70–160
70–165
70–170
3011099X91 70–140
70–220
3011103X91 40–10
3011105X91 20–10
70–130
70–140
3011107X91 70–120
70–140
3011117X1 70–195
70–200
70–205
3011118X1 70–195
70–200
70–205
3011119X1 40–160
40–170
40–175
70–160
70–165
70–170
3011120X1 70–195
70–200
70–205
3011132X91 70–195
70–200
70–205
3011134X91 70–195
70–200
70–205
3011136X91 40–160
40–170
40–175
70–160
70–165
70–170

3011138X91 70–195
70–200
70–205
3011144X1 70–40
70–120
70–125
70–135
70–140
70–145
70–160
70–165
70–170
3011145X1 70–195
70–200
70–205
70–220
3011146X1 40–170
70–195
70–200
70–205
3011147X1 40–10
40–160
40–165
40–170
40–175
70–130
70–135
70–155
70–160
70–165
70–170
3011148X1 70–195
70–200
70–205
3011149X1 70–155
3011150X1 70–140
70–160
70–165
70–170
3011154X1 40–165
70–125
3011172X1 130–35
3011175X1 25–80
3011180X1 10–10
3011194X1 40–105
40–110
40–120

3011202X1 40–185
40–195
3011203X1 40–185
40–195
3011214X1 90–40
110–175
110–180
3011222X1 70–115
3011223X91 40–170
40–175
3011246X91 60–30
3011268X1 70–5
70–15
3011279X1 20–10
3011281X1 20–10
3011282X1 20–10
3011289X91 40–170
3011314X91 70–145
3011338X1 40–70
3011339X1 10–5
3011352X1 40–85
3011362X1 120–20
120–40
3011368X1 110–190
110–195
110–200
3011372X1 100–20
3011383X1 40–70
3011390X1 40–105
40–110
40–115
40–120
40–125
70–195
70–200
70–205
3011404X91 70–195
70–200
70–205
3011422X1 60–20
3011434X1 110–70
110–85
3011445X1 110–230
3011495X1 20–10
110–105
3011496X1 110–105

3011517X1 40–115
40–120
40–125
3011533X91 70–115
3011534X91 70–160
70–165
70–170
70–195
70–200
70–205
3011538X1 40–105
40–110
3011539X1 30–5
30–10
3011543X91 70–40
70–125
70–140
3011544X91 70–125
70–135
3011545X1 40–105
40–110
50–25
50–30
50–35
3011546X1 40–105
40–110
40–115
40–120
40–125
3011547X91 70–40
70–125
3011548X91 40–165
3011550X91 70–125
3011553X91 70–40
3011554X91 70–40
70–135
3011582X91 70–155
3011593X91 70–115
3011594X1 70–115
3011600X1 90–40
3011608X1 40–50
40–55
40–60
3011610X1 20–10
100–25
3011611X1 60–15
3011618X91 70–155
3011619X91 60–30

3011639X91 70–115
3011649X1 10–180
3011675X1 60–5
3011679X1 60–5
3011704X1 60–5
3011705X1 60–5
3013353X1 80–30
80–70
80–75
90–10
90–70
3013354X1 80–30
80–70
80–75
90–10
90–70
3013355X1 80–30
80–70
80–75
90–10
90–70
3015134X1 70–115
3015163X1 60–30
3019056X1 80–40
3019057X1 80–40
3019123X1 110–70
3019124X1 110–205
110–210
3019139X1 10–260
20–20
70–35
80–45
80–50
110–20
110–25
3019214X1 20–20
3019228X1 40–50
40–55
3019302X91 10–225
3019393X1 10–225
3019397X1 70–155
3019398X1 70–130
70–160
70–165
70–170
70–195
70–200
70–205

3019546X1 120–45
3019560X1 10–255
20–10
100–5
100–10
3019564X1 110–105
110–110
110–115
110–130
3019571X1 30–5
30–10
3019575X1 130–75
3019852X1 60–5
3019862X1 70–125
3019863X1 70–145
3019865X1 110–10
3019871X1 20–10
3019874X1 20–10
3019880X1 30–5
30–10
110–20
3019894X1 90–55
3038134M1 10–245
10–250
3041656M2 80–80
3041932M1 110–80
3042427M1 40–40
3042428M1 40–40
3042430M1 40–40
3042431M1 40–40
3042433M1 40–20
40–30
3042434M1 40–20
3042523M1 120–15
3052943M2 120–40
3052944M2 120–40
3101663M1 110–225
3101996M1 110–225
3102086M91 40–40
3102401M1 110–225
3104902M1 110–220
3105034M1 110–220
3105395M1 110–225
3105404M1 110–225
3105505M1 120–15
3105772M1 40–60
3105774M1 40–60
3108243M1 70–190

3108244M1 70–190
3108248M1 70–190
311200020050 50–25
3302213M1 110–175
110–180
3310827M92 110–120
110–125
3310833M1 110–120
110–125
3310836M1 110–120
110–125
3310839M1 110–120
110–125
3310849M1 110–120
110–125
3310902M91 120–45
3378701M1 100–50
3378704M1 100–50
3382812M91 60–5
3382824M1 40–115
40–130
3382826M1 40–70
40–75
40–80
40–85
40–95
3382952M1 40–180
338317X1 110–65
3383977M1 10–210
3384129M1 40–190
3384131M1 40–105
40–110
3384132M1 60–25
3384600M2 130–60
3384603M1 130–60
3385604M1 20–20
70–35
3385820M1 80–45
80–50
3385821M1 80–45
80–50
3385913M2 10–260
3385920M1 130–35
338600X1 110–235
338612X1 10–225
338614X1 10–225
110–115
110–130

NUMERICAL INDEX
INDEX NUMERIQUE
NUMMERN–INDEX
INDICE NUMERICO
INDICE NUMERICO

G 4

338615X1 **10–245**
10–250
338617X1 **70–145**
110–75
338618X1 **10–180**
10–185
10–225
3386192M1 **90–40**
3386216M1 **60–5**
3386406M1 **130–60**
3386466M1 **130–75**
3386626M1 **10–245**
10–250
338662X1 **80–95**
338686X1 **70–145**
3387153M1 **40–65**
3387161M2 **40–20**
40–25
338716X91 **20–20**
70–120
338717X91 **40–10**
70–120
338725X1 **70–160**
70–165
70–170
3387270M92 **60–5**
3387321M1 **80–40**
3387322M1 **80–40**
110–215
3387326M2 **80–40**
338737X1 **40–175**
3387512M1 **110–105**
3387513M1 **110–105**
3387555M1 **80–45**
80–50
100–15
100–20
338760X1 **60–30**
70–45
70–155
338761X1 **20–20**
70–40
70–120
70–135

338762X1 **30–5**
30–10
60–30
70–40
70–125
70–130
70–140
70–220
338763X1 **70–40**
70–120
70–125
338764X1 **40–10**
70–120
3387756M1 **10–190**
60–30
338795X91 **60–30**
70–130
70–220
3388264M1 **120–10**
3388272M1 **110–5**
338828X1 **10–195**
10–200
10–205
3388779M1 **110–105**
110–110
110–115
3388920M94 **70–5**
338906X91 **70–45**
338923X1 **40–170**
40–175
3389664M1 **110–145**
3389680M1 **40–170**
40–175
3389703M1 **10–220**
3389841M1 **40–35**
90–70
3389958M1 **70–5**
339003X1 **60–65**
339004X1 **60–65**
339009X1 **10–10**
10–250
40–185
40–195
110–80

339010X1 **10–210**
10–230
10–245
10–250
60–35
70–145
339011X1 **10–210**
339013X1 **90–40**
339019X1 **40–35**
339020X1 **40–190**
339030X1 **10–5**
10–205
10–210
80–40
80–80
80–85
90–55
90–60
90–70
100–15
100–20
339034X1 **10–180**
60–25
100–25
110–10
130–75
339040X1 **60–65**
339054X1 **30–5**
30–10
130–35
339070X1 **20–20**
70–5
339080X1 **40–20**
339091X1 **110–40**
339102X1 **25–80**
40–185
40–195
70–35

339123X1 **10–5**
10–170
10–180
10–205
10–210
10–220
10–225
10–235
10–260
20–20
25–80
40–120
50–25
70–30
70–45
80–25
80–85
90–40
90–55
110–10
110–235
339124X1 **10–5**
10–195
10–200
10–205
10–220
10–225
10–245
10–250
70–5
70–30
70–120
70–155
70–195
70–200
70–205
100–5
100–10
100–15
100–25
110–220
110–235
120–40
130–80
339132X1 **40–75**
40–80
40–85
339135X1 **40–15**

339136X1 **90–65**
339160X1 **70–155**
339168X1 **10–10**
70–25
110–220
339169X1 **10–5**
10–210
10–220
10–225
10–235
20–20
40–185
60–30
70–30
70–160
70–165
70–170
70–175
70–180
70–185
80–25
80–85
100–5
100–10
100–15
100–20
100–25
110–10
110–35
110–40
110–65
110–80
110–145
110–220
120–5
120–10
120–25
120–30
120–45
339182X1 **110–5**
110–10
339192X1 **40–20**
40–25

339228X1 **10–245**
10–250
30–5
30–10
40–160
70–195
70–200
70–205
110–220
339229X1 **40–160**
40–170
40–175
339230X1 **70–120**
70–160
70–165
70–170
70–195
70–200
70–205
90–55
339234X1 **110–5**
110–10
339262X1 **100–20**
339275X1 **40–95**
110–5
339282X1 **70–5**
70–125
70–195
70–200
70–205
339287X1 **110–225**
339291X1 **110–10**
339303X1 **10–255**
339307X1 **40–15**
339337X1 **40–105**
40–110
50–25
60–30
110–80
110–105
110–145
339362X1 **110–220**
110–225
339368X1 **110–150**

339374X1 20–10
40–120
70–145
80–85
120–5
120–10
339375X1 80–80
80–85
110–165
120–35
339376X1 40–35
339377X1 40–60
40–75
40–80
40–85
40–95
339381X1 10–170
339402X1 10–5
10–10
10–210
10–235
10–245
10–250
20–20
50–30
70–120
100–15
100–20
110–5
110–10
110–185
120–25
120–30
130–30
130–35
339437X1 20–15
60–25
339451X1 40–15
339526X1 10–175
339548X1 10–260

339560X1 10–5
10–180
10–245
10–260
30–5
30–10
40–130
70–115
70–145
80–80
80–85
100–15
110–145
120–35
339563X1 10–255
339602X1 60–35
339605X1 60–35
339608X1 40–15
40–20
40–25
40–50
40–55
60–30
339615X1 40–30
339648X1 40–105
40–110
40–115
40–120
40–125
339666X1 10–205
70–30
90–60
339721X1 20–10
90–40
100–20
339761X1 10–220
10–230
10–260
30–5
30–10
40–30
40–170
40–175
70–30
100–25
110–65
110–100
339783X1 40–190

339800X1 70–35
339806X1 40–20
339820X1 20–15
339881X1 10–245
10–250
130–35
3405185M1 80–15
345300100110 30–30
3476132M91 110–50
3476133M91 110–50
3478051M1 110–50
3478052M1 110–50
353428X1 110–220
353443X1 40–85
353557X1 110–220
353558X1 110–235
353562X1 110–220
354080X1 40–30
354092X1 40–15
40–20
40–25
357145X1 10–260
357740X1 70–155
3580117M1 100–5
100–10
3580173M1 110–170
3580230M1 130–65
130–70
3580257M1 110–175
110–180
3580315M1 100–45
3580581M1 100–20
3580599M1 110–75
3580639M1 90–65
3580695M1 70–30
70–125
80–30
3580774M1 110–60
3580796M1 40–115
3580848M1 120–45
3580868M1 80–40
3580971M1 10–190
3581131M1 70–25
3581239M1 110–185

3581424M1 10–175
10–225
30–5
30–10
80–30
3581507M1 10–230
110–185
3581527M1 60–5
3581563M1 100–45
3581642M1 40–115
3581687M1 40–65
40–90
358176X1 70–145
3581980M1 40–85
3581985M1 40–75
40–80
40–85
3582043M2 40–20
40–50
40–55
3582094M1 80–25
90–10
90–65
90–70
3582139M4 130–60
3582441M1 110–150
3582442M1 110–150
3582443M1 110–150
3582802M1 90–55
3583069M1 110–150
3583086M1 110–150
110–155
110–160
3583427M1 10–225
3583548M1 90–55
3583932M1 70–215
358724X91 10–220
359305X1 70–145
3595678M1 100–45
3595679M1 100–45
3595685M1 100–45
3596314M1 120–15
3596432M1 100–45
3597445M1 110–230
3597454M1 110–230
3600191M1 40–155
3611974M1 10–170
3613598M91 10–205

3613599M91 10–205
3613600M1 10–205
361530X1 110–230
3615352M1 110–75
3615370M3 130–60
3615709M1 40–50
3615710M1 40–50
3615711M1 40–50
3615752M2 10–170
3615822M1 70–215
3616277M1 110–40
110–80
110–145
110–155
110–160
110–235
3616399M1 10–255
3617848M91 110–175
110–180
3617859M1 110–35
3618249M1 70–120
3618683M1 110–260
3618951M1 120–40
3619096M1 80–15
110–215
3619219M1 40–20
3619229M2 130–30
130–35
3619603M1 110–55
3619604M1 110–55
3619605M1 110–55
3619609M1 110–55
3619610M1 110–55
3619622M1 10–190
10–225
40–185
40–195
80–45
80–50
80–90
90–10
90–40
90–80
110–75
110–85
3619813M1 40–190
3619814M1 40–190
3619906M1 110–55

3619907M1 110–55
3619908M1 110–55
364461X1 40–85
365909X1 110–65
365916X1 110–120
110–125
365924X1 110–165
120–50
367073X1 40–20
367439X1 80–45
80–50
367788X1 70–145
368374X1 40–170
40–175
3712122M1 40–180
3712175M2 80–25
3712185M1 120–35
3712465M1 10–180
3712495M1 10–210
3712526M1 10–210
3712611M2 130–5
130–10
130–15
130–20
130–25
130–65
130–70
3712661M1 80–40
3712693M1 110–5
3712744M1 110–115
110–130
3712809M2 110–5
3712851M91 10–260
3712866M2 10–260
3712867M1 10–260
90–40
3712886M1 10–260
3713042M1 10–260
3713127M1 110–175
3713140M1 110–235
3713151M1 80–15
90–10
110–155
110–160
3713195M1 110–155
3713196M2 110–155
3713341M1 120–25
3713367M1 80–10

3713385M1 80–15
3713404M1 40–170
40–175
70–35
3713587M1 110–80
3713669M3 70–15
3713699M1 100–45
3713741M1 110–155
110–160
3713742M1 110–155
110–160
3713785M1 70–15
3713799M91 120–10
3713803M1 110–60
3714072M91 110–165
3714137M1 40–185
40–195
3714138M1 40–185
40–195
3714197M1 60–30
3714264M1 80–45
80–50
3714290M2 90–55
3714291M2 90–55
3714482M1 110–80
3714488M3 20–20
70–35
3714516M2 110–175
3714694M1 80–45
80–50
110–60
110–150
120–50
3714795M1 20–10
3715074M1 110–145
3715118M1 110–235
3715142M1 10–260
110–170
3715143M1 25–80
110–70
110–85
3715438M1 110–45
3715610M2 110–155
3715689M1 40–15
3715690M1 40–15
3715849M2 40–20
3715923M91 80–85
3715925M1 80–85

3715991M1 110–80
3716105M2 130–65
130–70
3716106M4 130–65
130–70
3716107M2 130–65
130–70
3716108M3 130–60
3716268M1 130–65
130–70
3716269M1 130–65
130–70
3716934M1 20–10
3716981M1 40–35
372081X1 60–25
375102X1 40–85
3760678M1 110–230
3760697M1 80–30
3760733M1 110–230
3764012M1 60–60
3764103M1 60–65
3764700M1 60–50
3765039M1 60–60
3765756M1 60–65
3765786M1 60–60
3765787M1 60–60
3765836M1 60–60
3765837M1 60–60
3765842M91 60–50
3765843M91 60–50
3765844M91 60–50
3765873M1 60–60
3765874M1 60–60
3765875M1 60–60
3765876M1 60–60
3765877M1 60–60
3765878M1 60–60
3765879M1 60–60
3765880M1 60–60
3765881M1 60–60
3765882M1 60–60
3765883M1 60–60
3765884M1 60–60
3765885M1 60–60
3765886M1 60–60
3765887M1 60–60
3765888M1 60–60
3765889M1 60–60

3765890M1 60–60
3765891M1 60–60
3765892M1 60–60
3765893M1 60–60
3765894M1 60–60
3765895M1 60–60
3765896M1 60–60
3765897M1 60–60
3765898M1 60–60
3765899M1 60–60
3765900M1 60–60
3765901M1 60–60
3765902M1 60–50
3765904M91 60–50
3766050M1 60–65
3766054M1 60–60
3766055M1 60–60
3766056M1 60–60
3766058M1 60–65
3766059M91 60–65
3766060M91 60–65
3766061M91 60–60
3766063M1 60–60
3766065M1 60–60
3766169M91 60–65
3766280M91 60–50
3777017M2 100–35
100–40
3777020M1 100–35
100–40
3777021M3 40–165
70–95
70–125
100–35
100–40
3777425M1 10–190
3777586M2 130–30
130–35
3777587M2 130–30
130–35
3777588M1 130–30
3777590M1 130–30
3777613M1 110–105
110–110
110–115
3777615M1 110–105
110–110
110–115

3777617M1 110–105
110–110
110–115
3777648M1 110–145
3777649M1 110–145
3777698M92 110–145
3777699M2 110–145
3777700M2 110–145
3777737M1 110–105
110–110
110–115
3777798M1 10–225
3778091M1 110–185
3778258M1 110–145
3778279M1 70–40
3778361M1 110–105
110–110
110–115
3778372M1 110–145
3778519M1 25–80
110–215
3778648M1 40–185
3778708M2 110–175
110–180
3778749M1 90–65
110–80
110–95
3778809M1 10–170
3778841M2 80–25
120–5
120–10
3778880M1 100–15
3779038M1 10–225
3779507M6 60–20
3779514M2 60–20
3779515M2 60–20
3779565M2 130–30
3779567M1 130–30
130–35
3779699M1 80–10
3779786M2 110–180
3779879M1 80–25
3780003M1 80–40
3780214M1 10–165
3780247M1 10–230
3780302M1 130–60
3780395M2 80–45
80–50

3780467M1 130–30
130–35
3780468M2 130–30
130–35
3780483M1 10–245
10–250
3780872M3 60–25
3780939M1 20–20
3781310M1 90–55
3781512M1 25–80
3781621M1 10–220
3781629M1 10–220
3781630M1 10–220
3781911M1 10–220
3781926M1 130–60
3781929M1 130–60
3781930M1 130–60
3781968M2 130–45
3781969M2 130–45
3781970M2 130–45
3781971M2 130–45
3781972M2 130–45
3781982M2 130–45
3782154M1 130–60
3782155M1 130–60
3782157M2 130–60
3782172M1 80–20
3782344M1 70–115
3782356M1 10–245
10–250
3782489M1 100–45
3782608M1 10–245
10–250
3782680M1 40–180
3782684M1 40–180
40–190
60–10
60–15
3782685M1 40–180
40–190
3782686M1 40–180
40–190
3782691M1 40–190
3782780M1 40–195
100–20
3782881M1 40–130
3783021M2 40–190
3783022M1 40–190

3783023M1 40–190
3783024M1 40–190
3783027M1 40–190
3783029M1 40–190
3783030M1 40–190
3783046M1 10–220
3783086M1 80–15
3783099M4 10–220
3783100M4 10–220
3783101M1 10–220
3783168M1 40–190
3783169M1 40–190
3783201M1 110–50
3783272M1 70–115
3783273M2 100–10
3783419M1 100–20
3783428M2 100–20
3783573M1 10–225
3783632M5 40–190
3783633M6 40–190
3783670M2 10–220
3783677M1 80–95
110–75
120–50
3783832M2 20–20
3783857M1 20–20
80–30
3784119M1 130–45
3784237M1 25–85
80–15
3784336M1 110–80
3784337M1 110–80
3784341M2 10–260
3784343M2 10–260
3784361M1 10–260
20–20
40–185
40–195
3784381M1 25–80
3784569M1 130–30
3784571M1 130–30
3784572M1 130–30
3784654M1 10–210
3784666M1 10–195
10–200
10–205
80–25

3784893M1 10–195
10–200
10–205
3784894M1 110–80
3784918M1 10–230
3784945M92 130–35
3784946M92 130–35
3784947M2 130–35
3784948M1 130–35
3784995M91 90–20
3785000M1 10–255
3785031M1 10–260
3785049M1 130–35
3785050M1 130–35
3785051M1 130–35
3785052M1 130–35
3785075M1 60–25
3785098M1 130–20
3785109M2 130–35
130–40
3785240M1 130–15
130–20
3785241M1 130–15
3785306M2 130–35
130–40
3785335M3 10–255
3785336M3 10–255
3785624M1 10–190
3785645M5 20–20
3785650M1 70–30
3785651M1 70–35
3785652M2 70–35
3785665M1 70–140
3785693M91 110–230
3785702M1 10–210
3785778M1 130–15
130–20
3785786M1 130–15
130–20
3785846M1 130–15
130–20
130–25
3785847M1 130–15
130–20
130–25
3785848M1 130–15
130–20
130–25
3785878M3 10–210
3785907M2 40–170
40–175
3785913M1 80–80
3785914M1 80–85
3785976M2 10–220
3786050M1 10–180
3786069M1 40–170
40–175
3786087M1 130–15
3786088M1 130–15
3786092M1 10–20
3786093M1 10–20
3786098M2 40–195
3786131M2 40–195
3786133M2 40–195
3786146M2 40–185
3786147M2 40–185
3786152M2 10–255
3786158M2 40–185
3786164M1 25–80
3786186M2 40–195
3786187M1 40–185
3786188M1 40–185
3786216M1 25–80
110–215
3786259M1 40–195
3786263M1 40–185
40–195
3786264M2 40–185
40–195
3786267M1 110–10
3786299M1 100–25
3786382M3 90–45
90–50
3786383M3 90–45
90–50
3786408M1 10–225
3786411M1 110–80
3786462M91 60–10
3786490M1 130–65
130–70
3786495M2 110–180
3786508M1 130–15
3786510M1 130–15
3786511M1 130–15
3786512M1 130–15
3786577M2 130–70
3786607M1 130–15
130–20
3786637M1 110–60
3786649M1 110–135
3786650M91 110–135
3786651M91 110–105
3786653M2 110–105
3786654M2 110–105
3786659M2 110–140
3786660M95 110–140
3786664M91 120–25
3786665M91 120–25
3786666M91 120–25
3786668M93 120–25
120–30
3786670M1 120–40
3786672M1 110–75
3786673M1 80–45
80–50
3786678M1 110–75
3786684M1 110–75
3786689M91 120–40
3786690M91 120–40
3786691M91 120–40
3786692M91 120–40
3786693M91 120–25
3786703M1 130–5
3786754M91 10–180
3786764M1 10–180
3786775M91 110–150
3786778M1 110–145
110–150
3786779M1 110–150
3786780M1 110–145
110–150
3786781M1 110–150
3786782M1 110–150
110–155
110–160
3786791M92 120–15
3786800M1 110–150
3786812M1 100–35
100–40
3786820M2 70–130
3786844M2 10–245
10–250
3786847M1 130–65
130–70
3786848M1 130–65
130–70
3786913P1 110–100
3786914P1 110–100
3786915P1 110–100
3786916P1 110–100
3786919P1 110–100
3786920P1 110–100
3786991M3 110–5
3786992M3 110–5
3787065M92 110–10
3787068M1 110–10
3787069M1 110–10
3787080M4 110–5
3787081M1 110–10
3787102M1 130–65
130–70
3787111M1 110–100
3787112M1 110–100
3787113M1 110–100
3787114M1 110–100
3787115M1 110–100
3787116M1 110–100
3787123M1 110–100
3787124M1 110–100
3787125M1 110–100
3787126M1 110–100
3787127M1 110–100
3787128M1 110–100
3787129M1 110–100
3787130M1 110–100
3787143M1 25–80
80–95
3787144M91 110–195
3787145M91 110–190
3787146M91 110–190
3787147M91 110–190
3787148M91 110–195
3787149M91 110–195
3787152M1 110–190
3787154M91 110–200
3787155M91 110–200
3787156M91 110–200
3787157M1 110–200
3787184M1 80–95
3787185M1 80–95
3787186M1 110–110
3787187M1 110–110
110–115
3787192M1 80–95
3787195M1 110–100
3787196M1 110–100
3787215M91 100–25
3787332M1 130–70
3787345M1 120–20
120–40
3787366M1 10–5
3787409M93 80–5
3787415M1 70–15
3787429M1 90–35
3787437M1 90–10
3787494M1 25–85
3787495M1 25–80
3787500M92 70–15
3787512M91 80–90
3787513M91 80–45
80–50
3787520M2 80–40
3787528M93 80–70
3787528M94 80–70
3787570M1 110–70
3787578M1 70–225
3787580M93 10–255
3787595M91 70–225
3787596M2 70–225
3787597M2 70–225
3787600M2 70–225
3787612M1 10–225
3787634M1 10–210
3787655M2 70–155
3787683M1 100–35
100–40
110–235
3787689M1 130–5
3787712M1 130–45
3787713M1 130–60
3787717M11 60–25
3787719M11 60–25
3787722M2 60–25
3787723M1 60–25
3787886M1 10–210
3787910M1 70–145
3787911M1 70–120
3787918M1 70–25
3787920M1 70–160
70–165
70–170
3788045M1 10–195
10–200
10–205
3788068M1 20–20
3788079M1 60–25
3788127M3 130–35
3788128M3 130–35
3788160M2 80–15
3788163M1 10–235
3788193M1 10–20
3788222M1 10–175
110–110
110–115
3788224M1 110–110
110–115
3788231M91 120–30
3788232M91 120–30
3788235M91 110–170
3788236M91 110–170
3788364M2 120–45
3788365M2 120–45
3788367M2 120–45
3788368M1 120–45
3788369M1 120–45
3788381M1 10–220
10–225
3788385M93 120–45
3788386M93 120–45
3788403M91 40–15
3788405M1 40–15
3788407M1 40–15
3788414M1 40–15
3788415M1 40–15
3788426M1 90–5
3788427M1 110–70
3788452M1 25–80
3788460M1 120–45
3788461M1 120–45
3788462M1 120–45
3788465M2 120–45
3788537M1 40–20
3788572M1 130–5
3788573M1 130–10
3788574M1 130–55
3788588M91 40–130

3788596M1 40–180
3788597M1 40–180
3788599M1 40–180
3788600M1 40–180
3788601M1 40–180
3788603M1 40–180
3788604M1 40–180
3788605M1 40–180
3788607M1 40–180
3788608M1 40–180
3788609M1 40–180
3788617M1 10–230
3788718M1 30–5
30–10
3788734M1 70–115
3788754M1 70–35
3788783M1 60–30
3788784M1 60–30
3788813M1 60–35
3788932M1 110–65
3788950M91 110–135
3789032M1 60–35
3789035M1 10–210
10–215
3789077M1 130–75
3789078M1 130–75
3789236M1 110–235
3789249M1 10–220
3789258M1 10–5
3789287M1 10–245
10–250
3789315M1 10–210
3789331M1 25–85
70–15
80–15
3789339M91 20–15
3789379M1 70–120
3789398M91 40–40
3789399M91 40–40
3789400M1 40–50
40–55
3789401M1 40–50
40–55
3789441M1 60–35
3789475M1 60–35
3789482M2 10–235
3789486M1 110–70
3789513M1 10–255
3789540M1 40–15
3789701M1 120–35
3789721M1 70–25
3789722M1 10–210
3789733M1 10–195
10–200
10–205
3789802M1 25–85
3789861M1 10–10
3789862M1 10–10
3789876M1 10–10
3789904M1 110–10
3789905M2 110–10
3789906M2 110–10
3789925M96 110–90
3789926M96 110–90
3789927M95 110–90
3789928M92 110–90
3789956M1 40–30
3789957M2 40–30
3789983M91 10–10
10–15
3790004M1 40–50
3790349M92 60–5
3790457M1 40–85
3791467M2 40–85
3791469M1 40–85
3791470M1 40–85
3791823M1 40–85
3791968M1 130–65
130–70
3792034M1 40–15
40–50
40–55
40–70
40–75
40–80
40–90
40–95
3792237M1 40–60
3792488M2 130–65
130–70
3792734M1 70–195
70–200
70–205
3793414M1 40–70
3793729M1 70–160
70–165
70–170
3794303M1 40–170
40–175
70–220
3794411M91 40–50
3794472M91 40–50
3795141M1 40–90
3795142M1 40–90
3795143M1 40–90
3795530M1 40–90
3796026M7 70–175
70–180
70–185
70–190
3796027M7 70–175
70–180
70–185
70–190
3796028M2 70–175
70–180
70–185
3796110M1 70–175
70–180
70–185
3796179M2 70–175
70–180
70–185
3796211M91 40–20
3796241M94 90–65
3796260M1 70–195
70–200
70–205
70–210
3796261M1 70–210
3796262M1 70–210
3796263M1 70–210
3796264M1 70–210
3797125M1 40–115
3797129M1 70–225
3797284M1 70–190
3797361M1 40–115
3798993M1 40–30
3799466M1 70–185
3799724M1 70–175
3799725M1 70–180
3804662M1 110–40
3804663M1 110–40
3806376M1 110–55
3806614M91 110–195
3806618M91 110–185
3808023M91 10–180
3808024M2 10–180
3808462M1 10–235
10–250
3808500M2 100–35
100–40
3808550M3 100–35
100–40
3808555M2 100–35
100–40
3808558M3 100–35
100–40
3808561M3 100–35
100–40
3808567M2 100–35
100–40
3809347M1 120–10
3809661M1 70–5
3809798M1 80–10
3810017M1 10–5
3810054M1 100–35
100–40
3810912M91 110–80
3814812M1 80–40
3814902M1 10–5
3814980M1 110–85
3817055M1 70–5
3819644M1 40–50
3820729M1 10–175
3820742M1 110–105
3820743M1 110–105
3821964M1 110–65
3823621M91 10–5
10–20
3824109M1 110–70
3824482M91 70–115
385300020130 60–55
60–65
385361X1 110–40
110–55
110–100
385362X1 70–155
110–10
110–185
385365X1 40–90
40–115
40–180
60–5
60–25
3900263M91 60–15
3900383M1 110–175
110–180
390039X1 40–190
3900862M1 40–180
40–190
3900885M1 40–180
3900887M1 40–180
3901147M91 10–215
3901152M91 10–215
3901153M1 10–215
3901154M1 10–215
3901155M1 10–215
3901157M1 10–215
3901162M1 10–215
390122X1 10–180
10–210
3902090M1 110–120
110–125
3902116M1 110–40
3902121M4 110–40
3902122M1 110–40
110–45
3902128M1 110–50
3902129M1 110–50
110–55
3902130M1 110–45
3902131M1 110–45
3902133M1 110–45
3902135M92 110–55
3902136M2 110–55
3902137M1 110–55
3902140M1 110–55
3902144M1 110–45
3902145M1 110–40
110–50
110–55
3902149M1 110–45
3902150M1 110–45
3902174M91 110–165
3902175M91 110–165
3902176M91 110–165
3902320M1 110–120
110–125
3902322M1 110–120
110–125
3902327M1 110–120
110–125
3902329M2 110–120
110–125
3902331M92 110–120
110–125
3902332M1 110–120
110–125
3902334M91 110–120
110–125
3902356M91 110–40
3902365M1 110–40
110–50
110–55
110–65
3902366M1 110–40
3902367M1 110–40
110–50
3902370M91 110–40
3902372M1 110–40
3902373M93 110–45
3902411M1 110–40
3902414M1 110–40
3902415M1 110–40
3902440M1 90–30
90–35
3902455M1 110–50
110–80
3902461M1 110–155
3902462M1 110–155
3902463M1 110–155
390246X1 10–210
3902498M1 110–40
3902500M1 110–120
110–125
3902503M91 110–45
3902550M1 110–120
110–125
3902578M1 70–5
3902580M91 110–155
3902584M91 110–40
3902773M1 110–40
390287X1 110–225
3903005M91 70–20

3903032M91 110-225
3903033M1 110-225
3903034M1 110-225
3903035M1 110-225
3903036M1 110-225
3903037M91 110-225
3903039M91 110-225
3903040M1 110-225
3903042M1 110-225
3903044M1 110-225
3903045M91 110-225
3903047M91 110-225
3903049M1 110-225
3903051M91 110-225
3903052M1 110-225
3903053M1 110-225
3903054M1 110-225
3903057M91 110-225
3903059M91 110-225
3903062M1 110-225
3903065M1 110-225
3903066M1 110-225
3903067M1 110-225
3903068M1 110-225
3903106M1 110-220
110-225
3903129M91 110-225
3903130M1 110-225
3903135M91 110-225
3903136M1 110-225
3903137M91 110-225
3903138M91 110-225
3903141M91 110-225
3903164M91 110-225
3903172M91 110-225
3903180M91 110-225
3903186M1 110-40
3903187M1 110-40
3903189M1 110-50
3903255M91 10-215
3903256M91 10-215
3903258M91 10-215
3903259M91 10-215
3903314M91 40-190
3903317M91 40-180
40-190
3903452M1 90-30
90-35
3903455M1 70-210
3903456M1 70-210
3903457M1 70-210
3903458M1 70-210
3903459M1 70-210
3903460M1 70-210
3903462M1 70-210
3903463M91 70-210
3903464M1 70-210
3903465M1 70-210
3903480M1 110-225
3903504M1 110-40
3903512M2 40-170
40-175
3903520M1 40-170
40-175
3903595M1 110-220
3903603M1 110-220
3903605M1 110-220
3903607M1 110-220
3903610M1 110-220
3903611M91 110-220
3903612M1 110-220
3903616M1 110-220
3903621M91 110-220
3903622M91 110-220
3903623M1 110-220
3903626M1 110-220
3903635M91 110-220
3903761M1 10-20
3903779M1 110-220
3903780M91 110-220
3903781M1 110-220
3903783M1 110-220
3903784M91 110-220
3903785M91 110-220
3903786M1 110-220
3903787M91 110-220
3903788M1 110-220
3903789M91 110-220
3903790M91 110-220
3903791M1 110-220
3903792M91 110-220
3903793M91 110-220
3903794M1 110-220
3903795M91 110-220
3903796M1 110-220
3903798M1 110-220
3903799M91 110-220
3903800M1 110-220
3903801M1 110-220
3903804M1 110-220
3903806M1 110-220
3903814M91 110-225
3903815M1 110-225
3903816M1 110-225
3903817M91 110-225
3903818M91 110-225
3903819M91 110-225
3903820M91 110-225
3903821M91 110-225
3903822M91 110-225
3903823M1 110-225
3903824M1 110-225
3903825M1 110-225
3903827M91 110-225
3903839M1 60-10
60-15
3903840M1 60-10
3903841M1 60-10
60-15
3903843M1 110-220
3903845M1 20-20
3903856M1 70-190
3903864M91 70-190
3903869M92 70-190
3903895M1 40-180
3903896M1 130-40
3903897M1 130-40
3903898M1 130-40
3903899M1 130-40
3903900M1 130-40
3903901M1 130-40
3903902M1 130-40
3903903M1 130-40
3903946M91 40-180
3903947M91 40-40
40-180
3903948M91 40-40
40-180
3903949M1 40-40
40-180
3903954M91 40-40
3903960M1 70-175
70-180
70-185
3903961M1 110-225
3903965M1 110-220
3903967M91 110-220
3903970M1 110-220
3903972M91 70-210
3903995M1 40-20
3904087M1 110-220
110-225
390419X1 110-5
110-10
3904264M1 110-220
3904265M1 110-220
3904269M1 110-220
3904270M1 110-220
3904275M1 110-220
3904295M1 110-120
3904319M1 110-120
110-125
3904328M1 110-120
110-125
3904360M1 10-20
3904361M91 10-20
3904362M91 10-20
3904363M91 10-20
3904364M91 10-20
3904365M91 10-20
3904366M91 10-20
3904442M91 110-220
3904444M1 110-225
3904487M1 110-185
3904488M1 110-190
3904489M1 110-195
3904491M1 110-185
3904492M1 110-200
3904493M1 110-200
3904589M1 110-120
3904668M1 70-190
3904676M91 70-190
390468X1 20-20
390469X1 90-45
110-80
120-15
120-30
390538X1 40-20
390597X1 10-195
10-200
10-205
40-15
70-115
110-10
130-30
3907009M91 70-20
3907059M91 10-215
3907060M1 10-215
3907061M91 10-215
3907062M91 10-215
3907063M91 10-215
3907064M1 120-25
3907075M1 120-30
3907077M1 120-30
3907078M1 120-30
3907102M91 110-200
3907103M1 110-190
110-200
3907104M1 110-200
3907105M91 110-195
3907108M1 110-190
3907109M1 110-190
3907121M1 110-220
3907123M91 110-220
3907124M1 110-220
3907125M91 110-220
3907126M91 110-220
3907136M1 110-220
3907139M1 110-220
3907140M1 110-220
3907168M91 120-45
3907186M91 10-15
3907187M1 10-15
3907188M91 10-15
3907190M91 10-15
3907191M1 10-15
3907192M91 10-15
3907193M91 10-15
3907225M1 60-15
3907226M1 60-15
3907227M1 60-15
3907246M1 80-5
3907247M1 80-5
3907250M1 90-30
90-35
3907252M91 90-50
3907253M1 90-50
3907255M1 90-50
3907256M91 90-50
3907271M1 80-45
80-50
3907276M1 90-60
3907277M1 90-60
3907278M1 90-60
3907279M91 70-225
3907280M91 120-25
120-30
3907282M1 110-140
3907283M1 110-140
3907284M1 110-140
3907285M1 110-140
3907296M1 110-120
3907297M91 110-120
110-125
3907298M91 110-120
110-125
3907299M91 110-120
3907300M1 110-120
3907301M1 110-120
110-125
3907302M1 110-120
110-125
3907303M1 110-120
110-125
3907304M1 110-120
3907305M1 110-120
3907306M1 110-120
110-125
3907307M1 110-120
110-125
3907310M1 110-125
3907312M1 110-125
3907313M1 110-125
3907314M1 110-125
3907315M1 110-125
3907316M1 110-125

390734X1 10–180
10–195
10–200
10–205
10–235
20–15
20–20
70–5
70–120
100–15
100–20
110–185
130–30
130–35
390735X1 10–220
10–235
10–245
10–250
70–35
70–125
100–20
110–220
130–30
130–35
3907383M1 120–30
3907384M1 120–30
3907385M1 120–30
3907402M91 70–10
3907403M91 70–10
3907404M91 70–10
3907405M91 70–10
3907421M91 30–5
30–10
3907422M91 80–15
3907423M91 80–15
3907427M1 70–40
3907427M91 60–35
3907428M1 70–120
3907429M91 70–120
3907430M1 40–165
70–125
3907461M1 70–145
3907462M1 70–145
3907463M91 70–150
3907464M91 70–150
3907465M1 70–150
3907466M91 70–150
3907467M91 70–150
3907468M91 70–150
3907469M91 70–150
3907481M1 110–35
3907530M1 25–80
3907532M91 80–5
3907533M91 110–145
3907537M1 110–35
3907550M91 110–160
3907551M1 110–20
3907557M1 90–40
3907575M91 110–160
390809X1 100–20
130–30
130–35
390916X1 70–220
390971X1 10–205
10–210
10–245
10–260
20–20
30–5
30–10
40–130
70–30
70–35
70–120
70–195
70–200
70–205
90–55
90–60
90–70
100–5
100–10
100–15
100–30
110–100
110–135
120–30
120–40
390972X1 10–5
10–180
10–195
10–200
10–205
10–210
10–220
10–230
10–235
10–245
10–250
10–260
20–20
30–5
30–10
70–30
70–160
70–165
70–170
70–195
70–200
70–205
90–40
90–55
100–15
100–25
110–215
110–235
130–80
390973X1 70–5
390974X1 70–195
70–200
70–205
390992X1 80–30
391001X1 10–245
10–250
391005X1 10–235
391006X1 10–5
391025X1 110–40
110–55
391026X1 110–185
391038X1 10–5
10–185
70–40
80–40
100–5
100–10
110–40
110–75
391039X1 60–35
70–25
70–30
110–65
110–100
110–105
110–145
110–220
391053X1 110–205
110–210
391074X1 10–250
40–35
40–185
70–195
70–200
70–205
100–5
100–10
391077X1 70–35
391120X1 110–10
391130X1 70–190
391212X1 110–10
391237X1 40–75
40–85
391244X1 70–120
70–225
391245X1 10–210
391269X1 10–180
60–15
100–20
391286X1 10–260
391289X1 110–40
110–55
110–145
391290X1 20–20
40–50
70–35
391329X1 40–190
391332X1 40–85
40–95
391371X1 40–50
40–55
391549X1 60–25
391565X1 110–220
110–225
391883X1 10–260
391884X1 100–15
391889X1 100–25
130–35
391914X1 40–190
110–5
110–10
391990X1 70–35
70–195
70–200
70–205
392235X1 10–260
392310X1 20–20
392335X1 40–190
392404X1 20–20
70–35
392463X1 10–260
392882X1 10–195
10–200
10–205
392892X1 60–35
392913X1 40–125
394367X1 10–260
40–75
40–80
40–85
60–35
70–25
70–35
70–225
90–40
90–65
110–10
110–40
110–100
110–235
395100600020 70–90
395100600040 70–90
409965M1 80–80
411101090201 25–75
411301050040 20–20
4270018M1 10–240
4270022M3 60–5
4270054M1 10–210
4270055M2 10–210
4270098M1 10–170
4270162M2 80–15
4270169M1 10–170
4270172M1 10–170
4270192M1 20–20
4270193M1 20–20
4270242M2 100–15
4270255M1 25–80
4270257M3 10–245
10–250
4270273M1 110–200
4270312M2 80–20
4270313M2 80–20
4270319M1 10–210
4270451M1 70–40
4270462M1 10–170
4270484M1 110–130
4270508M1 10–255
4270509M2 10–255
4270510M1 10–255
4270512M1 40–155
4270514M1 110–80
4270515M1 90–65
4270516M1 90–65
4270517M1 90–65
4270526M1 130–20
4270570M95 70–30
4270576M2 70–30
4270577M2 70–30
4270579M1 110–235
4270581M1 110–235
4270583M1 110–235
4270599M1 70–30
4270649M1 40–70
4270650M91 40–70
4270652M1 40–70
4270709M1 110–70
4270710M1 110–70
4270711M1 110–70
4270719M3 10–255
4270720M2 70–225
4270726M1 10–250
4270738M91 100–20
4270739M91 100–20
4270755M1 80–15
4270756M2 25–85

4270768M2 70–35
4270770M4 70–30
4270773M1 70–35
4270774M1 70–30
70–40
4270811M1 40–15
4270814M1 10–260
4270844M1 80–40
4270867M92 110–95
4270886M91 110–70
4270890M91 110–95
4270894M92 110–70
4270896M91 110–70
4270898M91 110–80
4270900M93 110–80
4270902M93 110–85
4270951M1 110–70
4270970M3 25–85
4270984M1 110–80
4270986M1 110–70
110–80
4270987M1 110–80
4270988M1 110–80
4271010M91 110–235
4271027M1 110–75
4271028M1 120–40
4271063M4 70–30
4271078M1 110–5
110–10
4271109M1 40–50
40–55
4271111M1 110–75
4271112M1 110–75
4271129M1 110–115
4271130M1 110–140
4271132M1 25–80
110–140
4271133M1 110–75
4271140M1 110–135
4271145M1 110–100
4271146M1 110–100
4271147M1 110–100
4271148M1 110–100
4271161M1 110–140
4271164M1 70–20
4271167M2 25–90
4271199M1 40–135
4271217M91 40–20
4271219M91 40–20
4271221M1 40–20
4271222M1 40–20
40–25
4271223M1 40–20
40–25
4271224M1 40–20
40–25
4271225M1 40–20
40–25
4271236M1 70–30
4271289M1 20–15
4271320M1 10–260
4271327M92 90–75
4271331M1 70–15
4271337M2 80–15
4271338M2 80–15
4271342M1 80–10
4271344M1 110–155
110–160
4271345M1 110–200
4271346M1 80–15
4271347M1 80–15
4271348M2 80–15
4271349M2 80–15
4271351M2 80–15
4271353M2 80–15
4271356M1 90–10
4271358M1 80–10
4271369M2 70–225
4271408M2 25–80
80–35
4271478M2 40–155
4271479M1 40–155
4271480M91 60–15
4271481M92 110–95
4271488M1 110–95
4271499M1 110–85
4271510M93 110–95
4271512M3 110–95
4271528M1 110–235
4271554M1 120–35
4271557M1 40–20
40–25
4271558M1 80–10
4271561M1 110–10
4271564M91 40–15
4271570M92 40–115
4271572M91 40–50
4271598M2 70–35
4271601M1 40–115
4271602M1 40–50
40–55
4271640M1 90–65
4271642M2 40–180
4271645M1 40–180
4271646M1 40–180
4271648M1 90–65
4271651M1 10–10
4271654M1 10–185
4271688M1 40–55
4271689M1 40–55
4271690M1 40–55
4271691M1 40–55
4271692M1 40–55
4271693M1 40–55
4271694M1 40–55
4271695M1 40–55
4271696M1 40–55
4271697M1 40–55
4271698M1 40–55
4271699M1 40–55
4271700M1 40–55
4271703M91 40–55
4271707M93 40–55
4271708M1 40–55
4271722M1 130–15
130–25
4271723M1 130–15
4271724M1 130–25
4271725M1 130–50
4271726M1 130–60
4271729M1 130–50
4271730M1 130–60
4271731M1 10–245
4271751M91 110–170
4271759M1 25–85
80–15
4271760M1 25–85
80–15
4271798M3 10–255
4271799M1 80–25
80–40
4271800M1 80–40
120–50
4271801M1 80–25
80–30
80–40
120–50
4271802M1 80–25
80–40
4271803M1 80–40
4271809M1 20–20
4271815M91 60–35
4271819M1 40–15
4271842M1 80–30
80–40
4271865M2 110–200
4271907M1 20–20
4271912M1 110–80
4271913M1 80–40
4271914M1 80–40
4271915M1 100–45
4271916M2 80–10
4271925M1 80–15
4271987M1 20–20
4271989M1 80–40
4271990M1 80–40
4271991M1 80–40
4271992M2 80–15
80–20
4272011M1 80–40
4272050M1 110–110
110–115
4272092M1 10–210
4272110M1 70–145
70–150
4272111M1 70–155
4272115M1 70–25
4272151M3 80–95
4272163M1 10–5
4272202M1 10–210
4272208M1 110–70
4272209M1 70–15
4272346M2 40–70
4272347M2 80–95
4272431M1 80–25
80–30
80–40
120–50
4272432M1 80–40
4272523M92 110–215
110–220
110–225
4272528M1 110–230
4272529M1 110–230
4272534M1 110–175
110–180
4272566M1 120–30
4272612M92 110–215
4272615M92 70–35
4272621M1 70–35
4272627M4 70–30
4272687M2 110–85
4272688M1 110–85
4272746M1 120–15
4272772M1 110–40
4272773M2 110–40
4272774M1 110–40
110–45
4272775M1 110–40
110–45
4272777M2 10–245
10–250
4272778M1 20–20
4272781M92 120–25
120–30
4272782M91 120–25
120–30
4272783M92 120–25
120–30
4272811M2 10–5
4272835M2 110–140
4272839M92 110–105
110–120
4272840M91 110–105
110–125
4272841M1 110–115
110–130
4272846M1 80–95
4273003M92 110–10
4273141M2 10–245
4273192M1 110–70
4273193M1 110–35
4273198M1 110–35
4273244M91 120–45
4273245M91 120–45
4273260M1 80–15
4273261M1 80–15
4273311M1 120–15
4273312M1 120–15
4273315M91 110–10
4273332M92 110–10
4273333M1 10–175
4273336M1 110–10
110–20
110–30
4273355M1 10–235
4273495M92 70–5
70–10
4273509M2 25–80
4273518M1 110–45
4273519M1 110–45
4273536M92 110–75
4273542M91 110–75
4273545M92 110–140
4273546M3 110–140
4273553M93 110–140
4273612M1 80–40
4273655M1 60–35
4273677M1 110–75
4273684M1 40–190
4273685M91 40–190
4273688M1 70–120
4273689M1 70–120
4273730M1 10–235
4273760M1 120–25
120–30
4273761M2 120–25
120–30
4273764M91 40–130
4273770M1 10–5
4273771M2 110–180
4274087M1 25–80
4274202M91 70–5
4274211M1 110–70
4274219M1 130–5
130–10
130–15
130–20
130–25
130–45
130–50
130–55
130–60
4274223M1 110–5
110–10

4274225M91 110–5
110–10
4274233M1 10–5
4274249M1 70–120
4274265M1 10–180
4274275M91 100–30
4274301M1 110–30
4274333M1 120–45
4274350M1 110–10
4274354M1 10–260
4274518M1 10–195
10–200
10–205
4274519M2 10–195
10–200
10–205
4274520M1 10–195
10–200
10–205
4274545M1 70–145
4274546M91 70–145
4274547M91 70–155
4274551M1 70–25
4274558M1 70–135
4274560M1 70–145
4274562M1 70–160
70–165
70–170
70–195
70–200
70–205
4274577M1 110–10
4274585M91 70–140
4274587M91 30–5
4274610M1 110–150
4274616M91 110–65
4274618M1 110–65
4274622M1 110–50
110–65
110–160
4274627M91 110–65
4274633M91 110–65
4274634M1 110–65
4274635M1 110–65
4274636M91 110–65
4274637M91 110–65
4274638M91 110–65
4274659M1 110–65
4274714M1 100–30
4274715M1 100–30
4274718M2 100–30
4274719M1 100–30
4274735M1 110–170
4274738M3 100–20
4274740M2 100–20
4274741M94 100–20
4274742M3 100–20
4274753M2 70–30
4274755M2 80–20
4274756M1 120–10
4274757M1 120–10
4274765M1 130–80
4274829M2 70–195
70–200
70–205
4274830M1 70–220
4274831M2 70–220
4274832M1 70–170
4274833M1 70–160
70–165
70–170
4274834M1 70–160
70–165
70–170
4274835M1 70–160
70–165
70–170
4274836M1 70–160
70–165
70–170
4274837M1 70–160
70–165
70–170
4274838M1 70–160
70–165
70–170
4274839M1 70–160
70–165
70–170
4274840M1 70–160
70–165
70–170
4274903M2 30–5
30–10
4274910M3 10–225
4274911M2 100–20
4274912M2 100–20
4274917M2 100–20
4274918M1 100–20
4274927M2 110–5
4274928M1 110–5
4274946M1 10–195
10–200
10–205
4274957M1 100–20
4274968M1 110–10
4274969M1 110–10
4274970M1 110–10
4274971M1 110–10
4274972M1 70–165
70–170
4274973M1 70–165
70–170
4274974M1 70–170
4274975M1 70–160
70–165
70–170
4274976M1 70–160
70–165
70–170
4274977M1 70–195
70–200
70–205
4274980M1 70–220
4274981M1 70–130
4274982M1 70–130
4274983M1 70–130
4274984M1 70–130
4274985M1 70–45
4274986M1 70–45
4274987M1 70–160
70–165
70–170
4274990M2 70–160
70–165
70–170
4274991M1 70–170
4274992M1 70–170
4274993M1 70–170
4274995M1 70–220
4274996M1 70–45
4274997M1 70–45
4274998M1 70–45
4274999M1 70–45
4275000M1 70–45
4275001M2 10–250
4275007M1 10–205
4275025M2 10–225
4275041M1 110–80
4275043M1 120–15
4275049M1 110–160
4275050M1 110–160
4275051M1 110–160
4275053M1 110–145
4275054M1 110–145
4275055M1 110–145
4275056M1 110–145
4275057M1 110–80
4275070M3 70–115
4275085M2 20–20
4275094M1 70–40
4275095M1 70–40
4275096M2 70–40
4275097M1 70–40
4275098M1 70–40
4275099M1 20–20
4275100M1 70–40
4275106M2 10–195
10–200
10–205
4275132M1 110–105
110–110
110–115
4275137M1 110–95
4275163M1 110–65
4275168M2 100–30
4275169P1 110–100
4275226M92 110–205
4275229M2 10–185
4275232M1 100–35
100–40
100–45
4275242M91 110–40
4275243M92 110–40
4275245M1 10–225
4275285M2 100–45
4275294M1 10–5
4275439M93 100–20
4275463M93 100–25
4275483M1 70–30
4275484M1 70–30
4275485M1 70–30
4275486M1 70–30
4275488M2 10–195
10–200
4275493M92 10–180
4275495M91 10–185
4275544M1 10–205
4275545M3 10–5
10–130
4275550M1 70–165
4275551M1 70–160
4275552M1 70–165
4275553M1 70–160
4275554M1 70–165
4275555M1 70–160
4275556M1 70–200
70–205
4275557M1 70–195
70–200
4275558M1 70–125
4275559M1 70–145
4275565M2 70–45
4275566M1 40–160
4275570M1 70–155
4275571M3 70–125
4275572M91 70–145
4275573M1 70–155
4275574M1 70–145
4275575M1 70–155
4275576M1 70–145
4275577M91 70–120
4275578M1 70–120
4275579M2 70–120
4275580M1 70–195
70–200
70–205
4275582M2 10–180
4275583M2 10–180
4275585M93 100–25
4275605M1 10–180
4275620M1 110–5
110–10
4275637M2 110–205
110–210
4275653M2 10–180
4275670M1 70–40
4275671M1 70–40
4275691M2 70–115
4275692M2 70–115
4275693M2 40–160
70–115
4275698M1 80–40
4275724M2 90–60
4275771M1 10–205
4275809M91 40–25
4275810M1 40–25
4275811M91 40–25
4275812M91 110–25
4275814M91 110–20
4275824M91 110–20
4275825M91 110–20
4275839M1 110–50
120–35
4275846M1 120–35
4275847M91 40–45
4275848M91 40–45
4275874M91 110–15
4275897M1 110–10
4275903M92 80–40
4275909M1 110–20
4275910M1 110–30
4275911M1 110–20
4275914M1 110–20
4275916M1 110–20
4275921M1 110–20
4275922M1 110–20
4275937M1 110–30
4275938M1 110–30
4275939M1 110–30
4275942M1 110–25
4275943M91 110–25
4275944M1 110–25
4275947M1 110–15
110–25
4275950M1 110–15
4275951M1 110–15
4275963M1 110–15
110–20
4275966M92 110–210
4275977M1 110–25
4275985M1 110–70
110–80
110–175
110–180
4276033M1 40–190
4276062M94 110–5
4276063M94 110–5

4276068M1 90–60
4276118M1 10–230
4276119M2 10–230
4276120M1 70–155
4276121M1 70–155
4276122M1 70–155
4276123M1 70–135
4276124M1 70–25
4276125M1 70–25
4276126M3 70–25
4276127M1 70–25
4276128M1 70–145
4276129M1 70–145
4276130M1 70–135
4276131M1 40–10
4276132M1 70–120
4276133M1 70–120
4276134M1 40–10
4276135M1 40–10
4276136M1 40–10
4276137M2 40–10
4276141M2 70–115
4276142M1 70–115
4276144M2 70–115
4276146M1 60–30
4276147M1 70–125
4276148M1 70–125
4276149M1 70–125
4276150M1 70–125
4276151M1 70–125
4276152M2 70–40
4276153M1 30–5
30–10
4276154M1 70–135
4276155M1 70–40
4276156M1 70–40
4276157M1 70–40
4276158M1 70–40
4276159M1 20–20
4276160M2 40–170
40–175
4276161M2 40–170
40–175
4276166M2 70–220
4276167M1 70–220
4276168M1 40–160
4276170M1 40–10
4276186M1 10–195
10–200
10–205
4276204M1 110–235
4276222M3 10–210
4276343M2 80–20
4276375M1 10–210
4276396M1 110–20
4276397M1 110–20
4276408M1 10–195
10–200
10–205
4276409M1 10–195
10–200
10–205
4276446M1 110–40
4276447M1 110–40
4276448M1 110–40
4276449M1 110–40
4276474M1 70–30
4276478M1 70–30
4276485M1 10–230
4276502M1 110–35
4276505M91 40–110
4276513M1 10–195
10–200
10–205
4276569M91 40–180
4276570M1 40–180
4276571M1 40–180
4276572M1 40–180
4276643M1 70–205
4276644M1 70–120
4276645M1 40–165
70–125
4276648M1 70–120
4276649M1 70–195
70–200
70–205
4276652M1 70–145
4276666M1 70–120
4276668M1 70–145
4276681M1 30–5
30–10
4276716M1 110–35
4276742M3 70–115
4276743M3 70–115
4276744M3 70–115
4276745M3 70–115
4276746M3 40–170
40–175
4276747M3 40–170
40–175
4276748M3 40–170
40–175
4276749M3 40–170
40–175
4276751M1 70–115
4276754M1 70–40
4276763M92 90–70
4276766M91 80–30
4276768M91 80–30
4276769M91 80–30
4276770M92 80–70
4276770M93 80–70
4276778M91 110–105
110–110
110–115
4276810M1 40–190
4276811M3 40–190
4276813M1 110–85
4276819M1 100–30
4276825M1 80–40
4276864M2 110–85
4276867M1 110–85
4276881M3 10–5
4276935M91 40–140
4276937M1 40–140
4276938M91 40–145
4276940M1 40–145
4276942M3 10–180
4276949M1 10–180
4276956M91 110–70
4276969M1 50–35
4276982M91 30–10
4277061M91 40–90
4277104M1 110–95
4277149M4 10–245
4277182M1 70–200
4277183M1 70–195
4277192M1 70–195
70–200
70–205
4277193M1 70–220
4277197M1 70–130
4277199M1 70–155
4277200M2 70–140
4277202M1 10–220
4277205M91 80–30
4277219M93 90–40
4277254M91 80–45
4277269M91 80–50
4277271M91 80–50
4277274M1 110–100
4277275M1 110–100
4277365M91 25–90
4277366M2 80–15
4277367M2 80–15
4277370M1 25–80
4277373M1 10–175
4277411M3 70–115
4277412M2 70–40
4277422M1 70–115
4277426M1 40–160
4277427M1 40–160
4277428M2 40–165
4277434M91 80–30
4277435M91 80–40
4277436M93 90–80
4277437M93 90–15
4277438M93 90–10
4277459M93 90–40
4277461M91 90–40
4277471M1 10–180
10–185
4277474M1 90–40
4277489M2 10–245
10–250
4277490M1 10–245
10–250
4277495M1 110–145
4277496M1 110–145
4277509M1 60–35
4277510M1 60–35
4277511M1 10–185
4277512M2 10–185
4277531M91 110–25
4277532M91 110–25
4277540M2 90–55
4277640M91 90–40
4277643M1 90–40
4277644M1 90–40
4277656M1 110–70
4277658M1 10–5
4277660M1 10–5
4277662P92 10–5
4277666M91 90–40
4277707M92 10–235
4277714M1 10–180
4277715M1 10–180
4277717M1 60–35
4277720M1 10–180
4277732M91 25–90
4277733M91 25–90
4277809M91 110–110
110–115
4277810M92 110–110
110–115
4277823M1 10–175
4277850M1 80–40
4277900M1 80–35
4278049M1 100–25
4278050M1 40–180
4278051M1 10–210
4278053M1 10–210
4278077M1 20–20
4278080M2 130–80
4278095M1 100–15
4278096M1 40–170
4278098M1 40–170
4278099M1 40–170
4278100M1 40–170
40–175
4278101M1 40–170
4278174M1 100–15
4278176M93 90–25
4278184M93 80–25
4278207M2 10–235
4278222M91 10–235
10–240
4278256M93 60–5
4278257M93 60–5
4278258M92 80–55
4278258M93 80–55
4278263M1 70–155
4278264M1 70–195
70–200
70–205
4278265M1 70–195
70–200
70–205
4278267M1 70–140
4278268M1 20–10
4278269M91 70–120
4278281M1 10–225
4278304M2 10–195
10–200
10–205
4278305M2 10–195
10–200
10–205
4278306M1 10–195
10–200
10–205
4278314M1 80–65
4278318M2 40–170
40–175
4278335M1 10–185
4278347M1 40–170
40–175
4278348M1 40–170
40–175
4278351M1 10–195
10–200
10–205
4278368M1 70–140
4278403M91 80–60
4278475M1 40–170
40–175
4278476M1 40–160
4278477M1 40–160
4278478M1 40–160
4278481M1 40–160
4278482M1 40–170
40–175
4278484M1 40–165
4278550M1 100–5
4278565M1 10–240
4278566M1 10–225
4278589M1 10–250
4278631M1 10–240
4278652M1 30–5
30–10
4278661M91 90–10
90–30
4278662M91 90–10
4278663M2 25–80
4278720M1 80–30
4278721M1 90–80
4278756M2 80–75

4278756M3 80–75
4278758M1 10–195
10–200
10–205
4278782M1 10–195
10–200
10–205
4278783M1 110–10
4278784M2 110–10
4278785M2 110–10
4278791M91 90–40
4278794M91 90–40
4278827M92 110–10
4278844M1 20–20
4278849M1 70–115
4278885M1 10–250
4278886M2 10–250
4278897M1 10–250
4278937M91 80–60
4278950M91 10–260
4278965M1 10–180
10–185
4278975M91 80–75
4278975M92 80–75
4279002M1 10–180
4279012M2 10–180
4279013M92 110–10
4279014M92 110–10
4279044M1 80–15
4279046M1 80–15
4279054M1 80–15
4279099M91 110–70
4279102M91 110–70
4279105M91 110–85
4279108M91 110–85
4279111M91 110–70
4279114M91 110–80
4279117M91 110–80
4279120M91 110–80
4279123M91 110–80
4279129M91 110–80
4279238M91 100–15
4279245M3 100–15
4279248M1 40–175
4279250M1 40–175
4279253M1 40–175
4279254M1 40–170
40–175
4279293M1 70–115
4279304M91 110–70
4279533M1 110–5
110–10
4279537M2 70–225
4279547M1 10–245
10–250
4279555M1 70–115
4279556M1 70–115
4279578M2 10–180
4279582M1 10–180
4279591M1 10–180
4279592M1 10–185
4279661M1 70–115
4279690M1 110–10
4279691M1 80–30
80–95
4279786M92 25–80
4279811M2 70–115
4279812M1 70–115
4279814M1 70–115
4279816M1 70–25
4279819M1 70–115
4279820M1 70–115
4279824M2 70–115
4279847M2 10–210
4279871M91 110–80
4279872M1 90–10
4279874M1 25–80
4279877M1 25–80
4279908M1 70–130
4279909M1 70–130
4279923M91 110–35
4279924M91 110–35
4279925M1 110–40
4279927M1 25–80
4279929M1 25–80
4279936M1 10–225
4279945M1 110–10
4279957M1 40–60
4280036M1 10–195
10–200
10–205
4280067M1 10–210
4280070M1 10–235
4280072M2 10–235
4280078M91 110–235
4280079M91 110–235
4280179M1 90–40
4280199M1 25–80
4280254M1 25–80
4280256M1 25–80
4280260M1 80–60
80–65
4280288M1 40–185
40–195
4280428M2 10–190
4280429M2 10–190
4280473M1 130–35
4280475M1 130–35
4280507M1 60–30
4280513M1 40–160
4280568M1 80–65
4280575M2 10–245
10–250
4280658M2 10–5
4280659M1 10–5
4280681M1 10–225
4280784M91 60–5
4280936M1 30–5
30–10
4280988M1 100–30
4280989M1 100–30
4281078M1 10–5
4281343M1 25–80
4281389M1 100–15
4281422M1 100–15
4281425M1 60–5
4300878M1 70–210
4300879M1 70–210
5015117M1 10–225
5015252M1 10–200
5015331M1 10–175
5015565M1 60–5
5016145M2 10–220
5016166M91 10–235
5016168M92 10–235
5016190M1 10–225
5016204M1 100–35
100–40
5016264M1 100–35
100–40
5016451M1 100–20
5016517M1 100–15
5016552P93 10–5
5016579M1 100–15
5016721M1 100–15
5016744M1 100–35
100–40
5016791M1 100–15
5016796M92 100–15
5016797M1 100–15
5016798M1 100–15
5016800M1 100–15
5016813M1 100–20
5016817M1 100–20
5016819M1 10–5
5016831M1 10–5
5016887M2 120–25
120–30
5017249M1 100–15
5017257M1 100–15
5017258M1 100–15
5017406M1 10–5
5017813P91 100–15
5017829M92 100–5
5017889M1 10–5
5017890M2 10–5
5017891M1 60–5
5017892M92 100–10
5017894M2 120–5
120–10
5017895M2 120–5
120–10
5017896M1 100–10
5017897M1 100–10
5017899M3 100–5
100–10
5017902M1 100–10
5017903M1 100–10
5017908M1 100–5
100–10
5017909M1 100–5
100–10
5017921M3 100–5
100–10
5017922P3 100–5
100–10
5017930P91 110–60
5017936M1 110–65
5017937M1 110–65
5017938M1 110–65
5017951M91 110–170
5017952M1 120–50
5017953M1 110–170
5017954M1 120–50
502113D1 60–5
509816M3 130–65
130–70
514100220630 50–5
514100600080 70–90
514100600090 70–90
523784M3 110–230
524860100100 30–65
621235M1 120–15
120–20
120–40
656632M4 120–5
120–10
658081M2 60–35
70229210 10–225
70921230 120–25
120–30
70921883 70–145
70921886 70–145
70934582 90–65
70935041 100–15
100–20
71307132 100–15
716100090211 25–75
716100090270 25–75
716100090710 25–75
716100490110 70–145
716100600091 70–95
716101081020 25–65
716101081030 25–65
716150150500 30–50
716150620060 70–110
716151220210 50–10
716501120030 40–75
40–90
716501120200 40–120
716501120620 40–75
40–80
40–85
716501120630 40–75
40–80
40–85
716501900140 40–95
716860030080 30–60
716920010100 30–60
718100531020 25–60
72160887 100–15
72161441 100–20
72500822 80–30
72502409 10–5
72503125 100–35
100–40
72504363 10–220
72509365 100–10
72512965 100–15
72513270 100–15
100–20
72514724 130–15
7450100301 60–65
7450600901 60–65
7450661202 60–65
7500604201 60–55
7500604301 60–55
7500604401 60–65
7500604501 60–65
7500604601 60–65
7500604701 60–65
7500604801 60–65
7600101401 60–55
7600101501 60–60
7600170302 60–55
7600170402 60–60
7600400401 60–60
7600400501 60–60
7600401201 60–60
7600401401 60–60
7600401701 60–60
7600440004 60–60
7600450101 60–60
7600470201 60–60
7600470401 60–60
7600600601 60–65
7600600701 60–65
7600600801 60–65
7600600901 60–65
7600601001 60–65
7600601101 60–65
7600601201 60–65
7600601302 60–65
7600601401 60–65
7600601501 60–65
7600601602 60–65
7600601701 60–65
7600601801 60–65

7600645003	60-65
7600645004	60-65
7600645005	60-65
763786M1	130-65
	130-70
816500060012	40-120
	40-125
816500060022	40-120
	40-125
816500060041	40-115
816500060051	40-115
816500060070	40-125
816500060090	40-115
	40-120
	40-125
816860030040	30-60
816860030050	30-60
816860030070	30-60
816860030110	30-60
816860070011	40-35
816860070030	40-35
816860070040	40-35
816860100020	30-65
816860100032	30-65
816860100080	30-65
816860100120	30-65
816870030060	30-60
816920011031	20-10
816940010010	70-145
816960700020	50-25
822100010040	30-30
822100010060	30-30
822100010120	30-30
	60-40
822100010130	30-30
	60-40
822100010140	30-30
822100010160	30-30
822100010190	30-30
822100010200	30-30
822100010210	30-30
822100030040	30-15
822100050130	30-20
822100050140	30-20
822100070411	70-195
	70-200
	70-205
822100070451	70-100
	70-105
822100150080	30-45
822100150120	30-45
822100220040	50-5
822100220080	50-5
822100220100	50-15
822100220110	50-15
822100220120	50-5
822100220150	50-10
822100220170	50-5
822100220200	50-10
822100220210	50-10
822100220220	50-10
822100220240	50-15
822100220250	50-15
822100220260	50-15
822100220300	50-10
822100220310	50-10
822100220330	50-10
822100220340	50-5
822100220380	50-5
822100220390	50-15
822100220470	50-15
822100220510	50-5
822100220520	50-5
822100220530	50-5
822100220610	50-15
822100220620	50-15
822100220840	50-5
822100220850	50-5
822100220860	50-5
822100320060	60-35
822100600021	70-100
	70-105
822100600030	70-100
822100600051	70-100
822100600060	70-100
	70-105
822100600070	70-100
	70-105
822100620310	70-110
822100620320	70-110
822100620400	50-20
822100620450	50-20
822100620460	50-20
824100220010	50-5
824100220020	50-10
831497M1	10-220
832297M1	10-255
833059M1	20-15
835025M1	70-155
903100050021	25-5
903100050031	20-10
903100050110	25-5
903100320010	60-35
903100490010	70-55
903100490050	70-55
903100490060	70-55
903100490080	70-55
903100490100	70-60
903100490170	70-55
903101380010	60-45
903101380020	60-45
903150070010	70-45
903860030010	30-60
903860030020	30-60
903860070010	40-35
908543M1	120-40
916100030010	30-5
	30-10
916100030020	30-5
	30-10
916100050060	20-15
916100050070	20-15
916100070010	30-55
916100080181	25-20
916100090250	25-75
916100220010	50-5
916100320010	60-40
916100320040	60-40
916100320061	30-55
916100320070	60-40
916100320080	60-40
916100320110	60-40
916100320131	60-40
916100320140	60-40
916100320161	60-40
916100320170	60-40
916100320190	30-55
916100380100	60-45
916100410030	30-40
916100410040	30-40
916100410060	30-40
	60-40
916100421052	20-15
916100421100	20-15
916100430020	25-45
916100430311	25-35
916100470121	70-70
	70-75
916100470210	70-75
916100470240	70-75
916100490040	70-55
916100490131	70-65
916100490180	70-60
916100530041	25-60
916100530051	25-60
916100530060	25-60
916100530170	25-50
916100600030	70-90
916100600040	70-90
916100600050	70-90
916100600061	70-90
916100600070	70-90
916100600100	70-90
916100600201	70-95
916100600210	70-90
916100600220	70-90
916100630011	25-15
916100630020	25-15
916100630030	25-15
916101050060	25-5
916101050100	20-10
916101080070	25-20
916101090221	25-75
916101170010	10-180
	25-65
916101170020	25-65
916101320100	60-35
	60-40
916101320120	60-40
916101320151	60-40
916101410010	30-40
916101430101	25-35
916101530010	25-50
916501110031	50-25
916501110040	50-25
916501110050	50-25
916501110060	50-25
916501120030	40-120
916501120050	40-80
	40-95
916501120060	40-80
916501120070	40-95
916501120220	40-95
916970160400	25-50
920500120520	40-75
	40-80
	40-85
920501110010	50-30
920501120040	40-75
	40-85
920501120100	40-75
	40-80
	40-85
926101150060	30-45
926101150070	30-45
926101150240	30-45
926101150260	30-45
926102080130	25-20
	50-5
926102410020	30-40
926102410030	30-40
926102410040	30-40
926103080010	25-65
926103080020	25-65
926110050010	25-5
926150010010	30-50
926150010020	30-50
926150010030	30-30
926150010040	30-30
926150010050	30-30
926150010060	30-30
926150010070	30-30
926150010080	30-30
926150050013	30-20
926150050020	30-20
926150150021	30-45
926150150032	30-45
926150150040	30-45
926150150061	30-45
926150150070	30-50
926150150080	30-50
926150220020	50-10
926150220030	50-10
926150220040	50-10
926150220050	50-10
926150220060	50-10
926150220160	50-5
926150220200	50-10
926160150200	30-45
926160150220	30-45
926870030010	40-15
926870030020	40-15
926870030030	40-15
926871040010	40-105
	40-110
926871040020	40-105
	40-110
926871040030	40-105
	40-110
926871040040	40-105
	40-110
926871040050	40-60
926871040060	40-105
	40-110
926871040070	40-60
926871040080	40-60
961866M1	120-10
9X-8118	120-50
F117501901020	40-100
F117501901040	40-100
F117501901050	40-100
F117501901060	40-100
F150403090340	25-75
F279940050030	70-65
F279940050040	70-65
F284501061110	40-150
F312100600040	70-100
F312100600050	70-100
F411151600010	70-100
	70-105
F524101070140	70-50
F524101070170	30-55
F716100090010	25-70
F716100090020	25-70
F716100430010	25-45
F716100600040	70-95
F716100600080	70-95
F716100600090	70-95
F716100600100	70-95
F716150070050	70-50
F718301020290	60-65
F718301020300	60-65
F718301020520	60-65
F718501900020	40-100
F718501900030	40-100
F816500070020	40-150
F816500070030	40-150

NUMERICAL INDEX
INDEX NUMERIQUE
NUMMERN–INDEX
INDICE NUMERICO
INDICE NUMERICO

G 16

F816500070040	40–150
F816500070060	40–150
F816500070070	40–150
F816500070100	40–150
F816500070120	40–135
	40–150
F816500070130	40–135
	40–150
F816500070140	40–135
	40–150
F816500070150	40–135
	40–150
F816500070160	40–150
F816500070170	40–150
F816500070180	40–150
F816500070190	40–150
F822100070030	70–50
F822100070040	70–50
F822100070060	70–50
F822100150010	30–50
F822100150020	30–50
	30–55
F822100150030	30–50
	30–55
F822100150040	30–50
F822100480010	30–25
F903150600010	70–105
F903150600020	70–105
F903150600030	70–105
F916100070010	30–55
F916100430010	25–45
F916100490010	70–60
F916100490020	70–65
F916100600010	70–90
F916100600030	70–90
F916100600040	70–90
F916101600010	70–95
F916501120010	40–100
F916501120020	40–100
F916501120030	40–100
F916501120040	40–100
F916501120050	40–100
F916501120060	40–100
F916501120070	40–100
F916501120080	40–100
F916970160011	25–55
F924860030010	40–5
F924860030020	40–5
F924860030030	40–5
F924860030050	40–5
G001990011310	40–5
G001990100010	70–175
	70–180
	70–185
G001990200140	25–50
G001990200330	30–55
G001990200630	30–40
G001990200640	30–40
G205900900020	110–175
G312100600110	70–95
G411151600020	70–100
	70–105
G514100100060	70–45
G701100090800	110–35
G701970070015	90–65
G701970160012	25–55
G716100090971	25–70
G716100430011	25–45
G716100600122	70–95
G716150200060	70–100
	70–105
G716501120062	40–75
	40–80
	40–85
G716860100040	30–65
G716970160030	25–75
	90–65
	90–75
G718100600113	70–95
G718970020020	90–85
G816300020180	60–60
G816500071012	40–135
G816500072040	40–150
G816970020040	20–10
	90–85
G822100070380	70–50
G822100070390	70–50
G822100150020	30–30
G822100220030	50–5
G903150070100	70–50
G903150070110	70–50
G903150600100	70–105
G916100070030	30–55
G916100320010	60–40
G916100320030	30–55
G916100490011	70–60
G916100490021	70–60
G916100490030	70–65
G916100530013	25–50
G916100600020	70–90
G916100600044	70–90
G916100600142	70–95
G916100600180	70–95
G916101430020	25–45
G916101430030	25–45
G916101430050	25–35
G916101600012	70–95
G916101600020	70–95
G916501120050	40–75
	40–80
	40–85
G916501120200	40–100
G916951010010	70–145
G916951010020	70–145
G916970020014	90–85
G916970020021	20–10
G916971020033	25–65
G920501120020	40–75
	40–85
G924860030011	40–5
G926101150040	30–45
G926150010010	30–30
G926150150050	30–45
G926150220040	50–5
G926150600100	70–100
G926160150200	30–45
G930860030010	30–60
H312100200100	60–40
H312100222020	50–10
H312100360030	90–85
H312900150010	30–5
	30–10
	70–35
H411100620100	70–80
H716501900101	40–95
H716921050030	40–75
	40–80
	40–85
H718100490010	70–65
H718100531010	25–60
H816500120020	40–75
	40–80
	40–85
	40–90
	40–95
	40–100
H816860030042	30–60
H816860100022	30–65
H822100030020	30–15
H822100030030	30–15
H822100150020	30–45
H822100150040	30–45
H822100220010	50–10
H822100220070	50–5
H822100220080	50–15
H822100620300	50–20
H822100620310	50–20
H903100090310	25–75
H903100470010	70–70
H916100320010	60–40
H916100430012	25–35
H916100470100	70–70
H916100470110	70–70
H916100470121	70–70
H916100470131	70–70
H916100470200	70–75
H916100470220	70–75
H916100470230	70–75
H916100480020	30–25
H916100490010	70–60
H916100490030	70–65
H916100600010	70–95
H916100620011	70–70
H916100620061	70–85
H916100620071	70–80
H916100620101	70–80
H916100620121	70–70
	70–85
H916100620130	70–85
H916100620142	70–85
H916100620260	70–110
H916100620270	70–110
H916100620280	70–110
H916100630010	25–15
H916101170010	25–65
H916101620011	70–80
H916101620020	70–85
H916501110010	50–25
H916501110021	50–25
H916501120061	40–95
H916501120070	40–95
H916501120102	40–120
H920500120100	40–105
	40–110
	40–120
H920501120110	40–105
H926103530020	25–50
H926150030020	30–15
H926150030060	30–15
H926150150200	30–45
H926150480010	30–25
H926150620200	70–110
H926150620210	70–110
H926150620220	70–110
H926150620230	70–110
H926150620240	70–110
H926870050021	40–20
	40–25
V500050642	10–115
	10–120
	10–135
	10–140
V500050842	10–25
V500051302	20–5
V500150532	10–115
	10–120
V500150840	10–75
V500151050	10–90
	10–95
V500151302	10–70
V500950800	10–65
	10–75
V500951200	20–5
V504600502	10–95
V504600602	10–125
	10–135
	10–140
V504601000	10–90
	10–95
V504601200	20–5
V504601600	10–85
V504602002	10–130
V504800800	10–80
	10–85
	10–90
	10–95
	10–125
	10–135
	10–140
V504801000	10–55
	10–60
	10–130
V504861000	10–75
V510600802	10–25
V512861000	10–45
	10–50
V513601002	10–115
	10–120
V521601000	10–125
V528702230	20–5
V528800762	10–115
	10–120
V528801080	10–115
	10–120
V528801342	10–90
	10–95
V528801360	10–130
	10–135
	10–140
V528801362	10–25
	10–75
	10–85
V528801380	10–25
	10–30
	10–75
	10–80
	10–90
	10–110
	10–115
	10–125
V528801400	10–30
	10–115
V528801410	10–30
	10–115
	10–120
	10–125
V528801760	10–70
	10–110
V528801780	10–70
V528801800	10–60

V528801810 10–130
V528801830 10–55
10–60
V528902230 10–35
10–40
V529701880 10–75
10–130
V529701950 10–75
V529801112 10–125
V529801430 10–30
10–85
V529801460 10–80
V529801470 10–85
10–115
10–120
10–130
V529801480 10–115
10–120
V529801490 10–115
10–120
10–130
V529801510 10–115
V529801520 10–120
V529801530 10–85
10–110
10–120
10–135
V529801550 10–85
10–110
V529801562 10–130
V529801575 10–135
V529801595 10–140
V529801910 10–50
V529801920 10–45
V529902730 10–30
V529903090 10–75
V529903180 10–25
V529904330 10–75
V540801780 10–65
V540801910 10–65
V546801360 10–25
V546801400 10–25
V546801490 10–80
V546801580 10–85
V546801815 20–5
V546801840 10–30
V546801900 10–55
10–70

V546802350 20–5
V546901435 10–60
V572503372 10–95
V572504172 10–25
V581704660 10–90
V581704840 10–75
V581705030 10–110
20–5
V581705200 10–75
V581706370 20–5
V581804182 10–110
V581804570 10–30
V581804580 10–25
V581804582 10–65
V581804620 10–30
10–80
V581804630 10–25
10–65
V581804680 10–25
V581804690 10–80
V581804730 10–80
V581805050 10–75
V581805800 10–75
V588704620 10–90
10–95
V595959140 10–60
V598359850 10–30
20–5
V598359860 10–30
V602060612 10–90
10–135
10–140
V602069813 10–95
V602074608 10–110
V602075528 10–65
V602088532 10–70
V603305760 10–45
10–50
V610032060 10–130
V610060085 10–130
V610062055 10–130
V610063064 10–130
V610071079 10–30
V610072050 10–85
V614600724 10–80
V614601125 10–110
V614602030 10–80

V614602430 10–80
10–85
V614603024 10–30
V614603230 10–75
V614604958 10–85
V614606225 10–125
V614606230 10–85
V614606825 10–90
10–95
V614703247 10–85
V614707230 10–90
10–95
V614901030 10–65
10–70
V615571014 10–25
10–110
V615870610 10–95
V615870812 10–90
V615871014 10–55
10–60
10–85
V615881216 10–80
10–85
10–110
V615881418 10–85
10–90
10–95
V615881420 10–25
10–110
V615881620 10–25
10–80
10–125
V615881822 10–30
10–55
10–60
10–80
10–85
V615881824 10–25
V615881827 10–75
V615892631 10–85
V617330052 10–85
10–130
V617330068 10–130
V617330072 10–130
V617350062 10–130
V636359676 10–60
V640016016 10–25
V640016018 10–25

V640016040 10–25
V640016045 10–55
10–60
V640045126 10–85
V640255210 10–110
V640305012 10–80
10–85
10–120
V640325014 10–25
10–85
10–110
V640325018 10–30
10–55
10–80
10–85
V640325110 10–25
10–85
V640425005 10–90
V640435005 10–90
V640435006 10–90
10–95
10–110
V640435008 10–110
V640435010 10–110
V641086010 10–110
V641086012 10–125
V641176018 10–85
V644611006 10–130
V832961162 10–5
V832961163 10–5
V833961112 10–5
V833961113 10–5
V835324324 10–125
V835329746 10–65
10–135
10–140
V835331289 10–95
V835336276 10–95
V835336943 10–95
V835338121 10–140
V836007871 10–75
V836008449 10–75
V836014264 10–45
10–50
V836014334 10–25
V836015156 10–85
V836019756 10–25
V836020054 20–5

V836083428 10–135
10–140
V836114846 10–135
V836119079 10–25
10–80
V836119837 10–60
10–85
V836120989 10–130
V836122910 10–75
10–110
V836129946 10–30
V836136717 10–30
V836214478 10–25
V836308344 10–125
V836316726 10–125
V836322183 10–75
V836322190 10–80
10–85
V836322221 10–35
10–40
V836322852 10–25
V836322906 10–75
V836322909 10–75
V836324580 10–125
V836331590 10–85
V836336302 10–35
10–40
10–145
10–150
V836336934 10–90
10–95
10–110
V836338180 10–75
V836338182 10–75
V836338186 10–75
V836338188 10–75
V836338201 10–75
V836338601 10–25
V836338606 10–35
10–40
V836338637 10–75
V836338650 10–35
10–40
V836338651 10–35
10–40
V836338652 10–35
10–40

V836338653 10–35
10–40
V836338662 10–120
V836338667 10–75
V836338985 10–125
V836340948 10–35
10–40
V836355872 10–50
V836359676 10–55
V836529872 10–130
V836640752 20–5
V836640897 10–70
10–150
V836646356 10–50
10–150
V836646357 10–50
10–150
V836646380 10–50
10–150
V836646381 10–50
10–150
V836646382 10–50
10–150
V836646393 10–85
V836647419 10–30
V836647600 10–60
V836647601 10–60
V836647835 10–70
V836647936 10–60
V836647942 10–55
10–60
V836652170 10–95
V836652269 10–50
V836652323 10–25
V836655401 10–75
V836655406 10–45
10–50
V836655493 10–75
V836655866 10–50
V836655870 10–50
V836655884 10–50
V836655899 10–50
V836659103 10–65
10–70
V836659144 10–140
V836659276 10–115
10–120
V836659521 10–80

V836659522 10–80
V836659524 10–80
V836659539 10–70
V836659550 10–135
V836659697 10–75
V836659785 10–55
10–60
V836662130 10–80
V836664517 10–90
10–95
V836664518 10–90
10–95
V836664521 10–90
10–95
V836666094 10–25
V836666095 10–25
V836666302 10–55
10–60
V836666512 10–95
V836666608 10–50
V836666609 10–50
V836666610 10–50
V836666647 10–95
V836666759 10–115
10–120
V836666797 10–110
V836666801 10–70
V836666980 10–115
10–120
10–135
10–140
V836667062 10–55
V836667206 10–70
V836667243 10–70
V836667572 10–90
V836667573 10–90
V836755007 10–65
10–70
V836759434 10–140
V836840882 10–35
10–40
V836840883 10–30
V836840884 20–5
V836840887 10–35
10–40

V836840944 10–35
10–40
10–145
10–150
V836840945 10–35
10–40
10–145
10–150
V836840978 10–35
10–40
V836840979 10–35
10–40
V836840980 10–35
10–40
V836840981 10–35
10–40
V836840982 10–35
10–40
V836840983 10–35
10–40
V836840985 10–150
10–160
V836840993 10–160
V836840998 10–165
V836846231 10–25
V836847496 10–120
V836847522 10–95
V836847532 10–120
V836852459 10–25
V836852460 10–25
V836852461 10–25
V836852744 10–25
V836854791 10–95
10–105
V836854792 10–95
10–105
V836855297 10–75
V836855300 10–75
V836855347 10–50
V836855348 10–55
10–60
V836855350 10–55
10–60
V836855381 10–60
10–150
V836855400 10–75
V836855446 10–25
V836855447 10–25

V836855484 10–80
V836855517 10–80
V836855519 10–80
V836855520 10–80
V836855521 10–80
V836855525 10–35
10–40
V836855554 10–25
V836855558 10–35
10–40
V836855559 10–35
10–40
V836855568 10–45
10–50
V836855569 10–85
V836855601 10–85
V836855603 10–85
V836855625 10–85
V836855629 10–25
V836855630 10–125
V836855636 10–30
V836855637 10–35
10–40
V836855639 10–85
V836855641 10–35
10–40
V836855666 10–130
V836855672 10–85
V836855673 10–75
V836855678 10–25
V836855689 10–130
V836855690 10–35
10–40
V836855756 10–130
V836855777 10–85
V836855789 10–130
V836855934 10–130
V836855941 10–130
V836855995 10–115
10–120
V836859034 10–115
10–120
V836859104 10–60
V836859105 10–80
V836859108 10–150
V836859109 10–55
10–70

V836859110 10–55
10–70
V836859117 10–125
V836859119 10–130
V836859120 10–130
V836859121 10–130
V836859122 10–130
V836859134 10–80
V836859151 10–30
V836859152 10–30
V836859153 10–25
10–30
V836859160 10–30
V836859161 10–30
V836859162 10–30
V836859163 10–30
V836859164 10–30
V836859165 10–30
V836859170 10–85
V836859182 10–80
V836859187 10–80
V836859347 10–130
V836859348 10–130
V836859356 10–130
V836859357 10–130
V836859363 10–130
V836859364 10–130
V836859378 10–115
10–120
V836859452 10–85
V836859456 10–85
V836859458 10–85
V836859493 10–125
V836859588 10–30
V836859683 10–130
V836859684 10–130
V836859722 10–55
10–60
V836859992 10–130
V836862000 10–105
V836862001 10–105
V836862002 10–105
V836862003 10–105
V836862004 10–105
V836862005 10–105
V836862006 10–105
V836862007 10–105
V836862008 10–105

V836862009 10–105
V836862010 10–105
V836862011 10–105
V836862012 10–105
V836862013 10–105
V836862014 10–105
V836862015 10–105
V836862016 10–105
V836862017 10–105
V836862018 10–105
V836862019 10–105
V836862271 10–85
V836862440 10–150
V836862528 10–50
V836862600 10–110
V836862602 10–110
V836864056 10–80
V836864101 10–35
10–40
V836864102 10–35
10–40
V836864103 10–35
10–40
V836864105 10–35
10–40
V836864106 10–35
10–40
V836864107 10–35
10–40
V836864141 10–35
10–40
V836864288 10–35
10–40
V836864296 10–130
V836864360 10–55
10–60
10–135
10–140
V836864398 10–120
V836864609 10–90
10–95
V836864679 10–90
10–95
V836864745 10–25
10–140
V836866036 10–25
V836866069 10–25
V836866152 10–120

V836866182 10–40
10–150
V836866221 10–125
V836866229 10–85
V836866306 10–110
V836866381 10–125
V836866392 10–25
10–135
10–140
V836866418 10–110
V836866420 10–30
V836866423 10–90
10–95
V836866424 10–90
10–95
V836866426 10–95
V836866428 10–90
10–95
V836866454 10–125
V836866477 10–35
10–40
V836866481 10–110
V836866613 10–25
10–135
10–140
V836866644 10–110
V836866699 10–120
V836866713 10–135
10–140
V836866714 10–140
V836866735 10–85
V836866791 10–110
V836866827 10–120
V836866831 10–135
10–140
V836866840 10–75
V836866842 20–5
V836866955 10–135
10–140
V836866957 10–25
V836866958 10–25
V836866960 10–115
10–120
V836867046 10–25
V836867048 10–25
10–145
10–150
V836867050 10–25

V836867051 10-25
V836867052 10-25
V836867061 10-140
V836867134 10-25
V836867179 10-130
V836867230 10-110
V836867231 10-110
V836867232 10-110
V836867233 10-110
V836867234 10-80
10-145
V836867346 10-75
V836867383 10-110
V836867390 10-55
10-60
V836867391 10-55
10-60
V836867415 10-85
V836869165 10-25
10-140
V836869298 10-25
10-135
V836869300 10-25
10-135
V837062565 10-55
V837062577 10-155
V837062578 10-145
10-155
V837062579 10-145
V837062581 10-100
V837062588 10-100
V837062589 10-100
V837062590 10-100
V837062591 10-100
V837064906 10-55
V837064907 10-55
V837064908 10-55
V837064910 10-45
V837064914 10-45
V837064949 10-35
10-145
V837064951 10-90
V837064955 10-135
V837064956 10-115
V837067295 10-115
V837067322 10-90
10-100
V837067345 10-115
V837067404 10-115
V837067513 10-65
V837069001 10-55
V837069002 10-45
V837069003 10-45
V837069004 10-45
V837069005 10-45
V837069006 10-45
V837069007 10-90
V837069008 10-115
V837069009 10-115
V837069011 10-45
V837069013 10-45
V837069014 10-45
V837069015 10-45
V837069016 10-45
V837069017 10-45
V837069018 10-45
V837069019 10-45
V837069020 10-45
V837069021 10-65
V837069022 10-65
V837069023 10-45
V837069024 10-65
V837069025 10-55
V837069027 10-90
V837069029 10-65
V837069032 10-90
V837069304 10-90
10-100
V837069313 10-90
V837069314 10-90
V837070021 10-25
V837070121 10-90
V837070129 10-90
V837070130 10-135
V899901495 10-95
VHC9326 10-25
10-75
10-85
VKH7070 10-25
X304285000000 25-65
X407201401000 25-70
X407202001000 30-15
X410115601000 25-70
X410124605000 30-15
X410125801000 30-15
X412823006000 60-40
X412823106000 50-5
X413420206000 50-10
X419432887000 25-5
40-95
40-115
40-120
40-125
X419432987000 40-100
X428202239000 25-70
X428202739000 30-15
X428202805000 50-10
X428202839000 30-15
50-15
70-50
X428203203000 50-15
X428203205000 30-45
X428203239000 30-15
X428203241000 25-5
X428204005000 25-5
X428803240000 50-15
X428804040000 50-15
X430004000000 40-100
X430005803000 40-100
X434103240000 30-15
X434105040000 25-15
40-100
X450003308000 25-65
X450003908000 30-65
X450005108000 25-65
X450006308000 60-40
70-70
70-75
70-80
90-85
X450008708000 50-20
X450907508000 70-85
X453608408000 30-15
X454407508000 30-60
X477027705000 25-65
X482953200000 30-20
X483500200000 25-5
X483500600000 70-75
X483500800000 30-20
X483501600000 30-60
X483800000000 30-20
70-100
70-105
X483800401000 30-20
X483800800000 70-90
X483801200000 25-5
70-95
X483801600000 40-5
70-90
X483803200000 20-10
X483803201000 20-10
X483804801000 25-5
X483807201000 25-5
X483900000000 70-90
70-95
X483900400000 25-45
X484404001000 30-45
X485002501000 30-65
X485004405000 70-65
X485004700000 60-45
X485005305000 70-65
X485005405000 70-65
X485007301000 25-55
X485007605000 30-30
X485008606000 30-55
X485009405000 30-65
90-85
X485013105000 70-85
X485013205000 70-55
70-65
X485013305000 70-60
X485013605000 30-20
X485018905000 50-10
X485019206000 25-35
X485019801000 25-35
X486528705000 70-90
70-95
X486529005000 70-100
70-105
X486536200000 30-30
X486537601000 30-45
30-50
X486546301000 25-5
X486546505000 40-100
X486546506000 25-5
X486551000000 30-60
X486551706000 30-20
X486551800000 30-60
X486555905000 40-100
X486556000000 40-100
X487513841000 25-65
X487520041000 50-10
X487520441000 25-70
X487522341000 70-100
70-105
X487526841000 30-20
60-40
70-60
70-70
X487527305000 70-110
X487527441000 30-65
X487527741000 30-25
30-45
70-75
70-80
90-85
X487527941000 70-60
X487528105000 70-90
X487528141000 30-65
X487531301000 30-60
X487531505000 50-15
X487531541000 25-75
30-60
X487531741000 25-75
X487531941000 30-55
50-15
X487532541000 50-5
50-15
X487534001000 70-65
X487535806000 30-50
X487536041000 25-5
X487537500000 30-15
X487545141000 40-100
X487545241000 30-15
50-10
X487545441000 30-15
X487545606000 25-5
X487545902000 30-15
X487551400000 30-20
X489132106000 50-10
X489138400000 30-45
X489145701000 25-5
X489146201000 25-5
X489148906000 25-5
X490522300000 25-65
X490617400000 25-75
X493607305000 50-5
X493613105000 70-110
X493619205000 30-45
X494206000000 70-100
X494515201000 70-70
X494515300000 70-70
70-75
X499501100000 30-60
X499502495000 25-5
X500604900000 25-65
X500613146000 25-65
X500615046000 60-40
X500622300000 30-30
X500624946000 25-65
X500628246000 30-45
30-65
X500629146000 30-30
X505529200000 25-75
X505544539000 30-55
X505558539000 30-50
30-55
X505559459000 40-105
40-110
40-115
40-120
40-125
X505578900000 20-10
25-5
30-20
X505585617000 30-60
40-105
40-110
40-115
40-120
X506239300000 25-35
25-50
30-30
X520802601000 30-65
X520803901000 30-65
70-100
70-105
X520804401000 30-60
X520807801000 40-100
X521403047000 25-70
X521403947000 90-85
X521404447000 25-75
50-5
X521405047000 30-15
X521406647000 30-15
X523703900000 30-65
X530001146000 70-75
X530002746000 25-75

X530004146000 **70–60**
X530004246000 **30–15**
X530005446000 **50–5**
X530006146000 **50–10**
70–55
X530007246000 **30–60**
X530007946000 **50–10**
X530008300000 **40–5**
X530009100000 **50–10**
X530014200000 **70–70**
70–85
X530014446000 **25–65**
X530017746000 **30–40**
X530017846000 **30–40**
X530105346000 **25–50**
X530105946000 **25–65**
X530106046000 **70–55**
X530106546000 **30–45**
X530107246000 **70–55**
X530107446000 **60–40**
X530107946000 **25–35**
X530108346000 **60–40**
X530109946000 **30–30**
X530209700000 **60–40**
X530215446000 **70–60**
X530216846000 **60–40**
X530325046000 **50–10**
X531001146000 **70–80**
X531206800000 **60–40**
X532503846000 **70–55**
X533212000000 **70–55**
70–145
X533813400000 **60–40**
X534310246000 **25–75**
X534535346000 **70–75**
X534537246000 **25–75**
X534538146000 **25–50**
X534538900000 **30–40**
X534539346000 **60–35**
X534566246000 **50–10**
X534677046000 **50–5**
X534677146000 **50–5**
X534678300000 **50–10**
X534678400000 **50–10**
X534678500000 **50–10**
X534678600000 **50–10**
X534678700000 **50–10**
X534683000000 **30–30**
X534683100000 **30–30**
X534683300000 **30–30**
X534683700000 **30–30**
X534767700000 **50–5**
X534767900000 **50–5**
X534781500000 **30–45**
X534781600000 **30–45**
X534781700000 **30–45**
X540003078000 **30–20**
70–100
70–105
X540003678000 **30–20**
70–70
X540003878000 **70–95**
X540004078000 **90–85**
X540004278000 **70–90**
70–95
X540004878000 **25–5**
70–95
X540005478000 **40–5**
70–90
X540006678000 **70–100**
X540007478000 **30–45**
X540007678000 **60–55**
60–65
X540008278000 **20–10**
25–65
X540009478000 **20–10**
30–45
X540010278000 **25–5**
X540012278000 **25–5**
X540410601000 **40–5**
X542541001000 **70–85**
X547502700000 **25–60**
X547583600000 **40–5**
X547587200000 **40–5**
X548301500000 **70–100**
70–105
X548317400000 **40–5**
X548766700000 **50–15**
X548767000000 **50–15**
X548809016000 **70–95**
X548813100000 **70–95**
X548818015000 **70–70**
70–75
X548823200000 **25–50**
X548829200000 **70–90**
70–95
X548830066000 **70–110**
X548833602000 **70–75**
70–90
X548848016000 **70–65**
X548848066000 **25–65**
X548857366000 **70–90**
X548859400000 **70–105**
X548860601000 **70–65**
X548868866000 **70–90**
X548868966000 **70–65**
X548870566000 **70–90**
X548871400000 **70–90**
X548871466000 **70–90**
X548878200000 **70–60**
X548881466000 **70–90**
X548885102000 **25–35**
25–40
X548887266000 **70–155**
X548892900000 **20–15**
X548895001000 **30–25**
X548901801000 **20–15**
60–40
X548907866000 **70–145**
X548909366000 **50–5**
X548922800000 **70–145**
X548926801000 **50–15**
X548949815000 **60–40**
X548953366000 **20–15**
X548960666000 **70–90**
X548963400000 **20–15**
X548972066000 **40–5**
X548987066000 **70–60**
X548989200000 **70–145**
X548989201000 **70–60**
X548994700000 **50–10**
X548995902000 **70–65**
X548999066000 **30–45**
X549030900000 **30–45**
X549041100000 **30–50**
X549044100000 **30–50**
X550035200000 **25–50**
X550108900000 **60–40**
70–55
X550150200000 **30–50**
X550150400000 **30–60**
X550162800000 **50–10**
X560240001000 **40–5**
X560242800000 **40–5**
X560505900000 **50–5**
X560703600000 **60–40**
X560703700000 **60–40**
X560718800000 **30–30**
X562555063000 **50–25**
X566300600000 **70–95**
X584316900000 **70–110**
X591202101000 **30–15**
X591652500000 **70–75**
X592501000000 **70–70**
70–75
X592501100000 **70–80**
70–110
X592501200000 **70–110**
X592501300000 **70–65**
70–70
70–85
X592501303000 **70–70**
X592501600000 **70–90**
X592502500000 **70–80**
X593816300000 **70–65**
X596135200000 **70–95**
X600585202000 **25–45**
X600585202010 **25–45**
X605009000000 **25–75**
X605018000000 **40–5**
X605028000000 **40–5**
X605505811000 **70–55**
X605505900000 **70–55**
X605506311000 **50–5**
X605506600000 **50–10**
X605511411003 **70–55**
X606705900000 **60–40**
X606722501000 **25–50**
X607305302000 **25–50**
X607395200000 **25–75**
X619049041009 **50–10**
X619049341009 **50–10**
X619057201003 **30–40**
X619072600007 **30–40**
X620414500001 **60–40**
X620430501000 **25–35**
X622048500000 **30–30**
X622348000000 **25–35**
X624206000000 **25–65**
X638525149000 **60–40**
X662516102000 **40–135**
X662516200000 **30–15**
X668980522000 **25–55**
25–70
X699239900000 **25–50**
X830120050000 **30–5**
30–10
70–35
X903005286000 **25–55**
X903050074000 **25–5**
30–20
30–50
Z099047000000 **25–10**

10

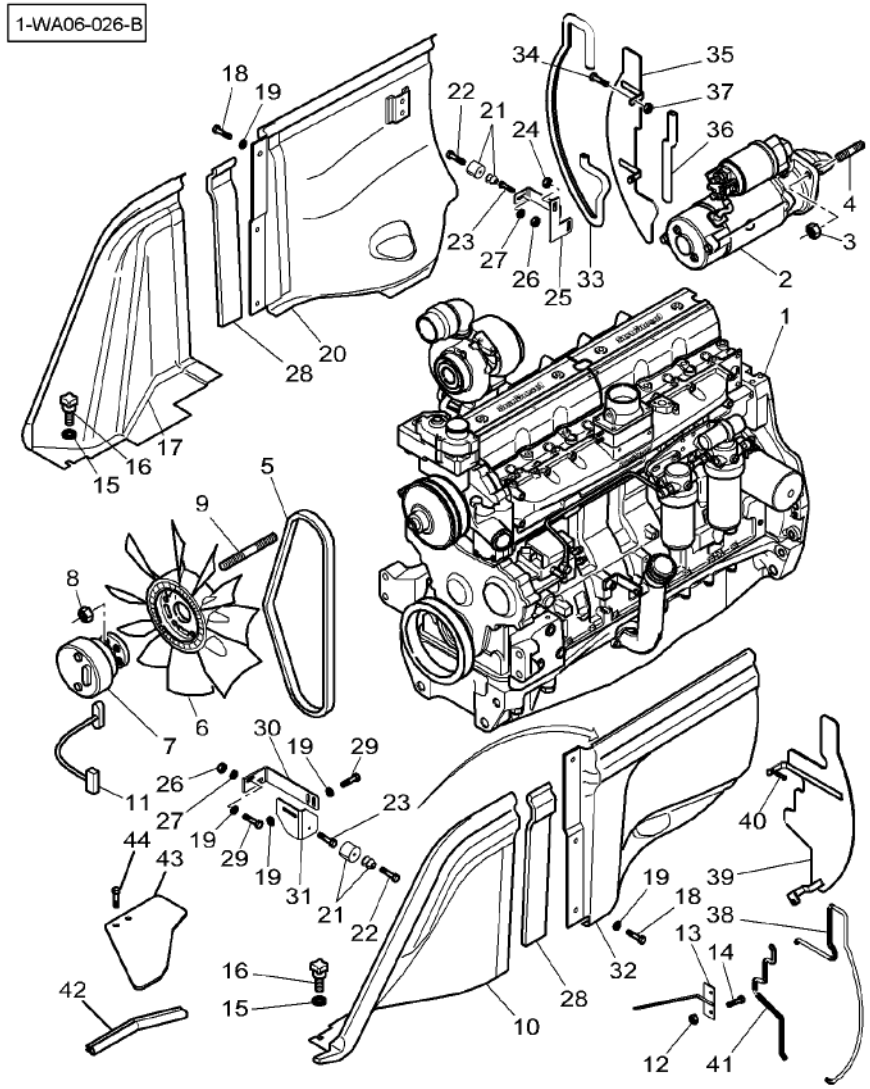

1	V833961112	US MT655B	1	ENGINE	MOTEUR MOTORE	MOTOR MOTOR
1	V833961113	US MT665B	1	ENGINE	MOTEUR MOTORE	MOTOR MOTOR
1*	V832961162	US MT655B 84 ETA	1	ENGINE	MOTEUR MOTORE	MOTOR MOTOR
1*	V832961163	US MT665B 84 ETA		ENGINE	MOTEUR MOTORE	MOTOR MOTOR
2	3823621M91	[A] 10–20 No	1	STARTERMOTOR	DEMARREUR MOTORINO AVVIAM.	ANLASSER MOTOR ARRANQUE
3	339402X1		3	NUT	ECROU DADO	MUTTER TUERCA
4	391006X1	M10X30	3	STUD	GOUJON PRIGIONIERO	STEHBOLZEN CHAVETA ROSCADO
5	***4275545M3***	◄► 1950MM	1	BELT	COURROIE CINGHIA	RIEMEN CORREA
6	4274233M1		1	FAN	VENTILATEUR VENTOLA	LUEFTER VENTILADOR
7	3789258M1		1	CLUTCH	EMBRAYAGE FRIZIONE	SCHALTKUPPLUNG EMBRAGUE
8	1441932X1		6	NUT METRIC	ECROU METRIQUE DADO METRICO	MUTTER METRISCH TUERCA METRICO
9	3011339X1	M10X22	6	STUD	GOUJON PRIGIONIERO	STEHBOLZEN CHAVETA ROSCADO
10	5017889M1	◄	1	COWL	GARANT CAPPOTTATURA	AUFSATZ CAPERUZA
11	4272811M2		1	HARNESS	FAISCEAU FASCIOCAVI	KABELBAUM MAZO CABLES
12	339030X1		2	NUT METRIC	ECROU METRIQUE DADO METRICO	MUTTER METRISCH TUERCA METRICO
13	4276881M3		1	SUPPORT	SUPPORT SUPPORTO	LAGERUNG DISPOS.DE SOSTEN
14	339560X1	M6X16	2	HEX. SOCK. SCREW	VIS TETE HEX VITE PARKER	ZYLINDERSCHRAUBE TORN.CAB.HUECA
15	5016831M1		2	WASHER	RONDELLE RONDELLA	UNTERLEGSCHEIBE ARANDELA
16	5016819M1		2	BUTTON	BOUTON BOTTONE	KNOPFTASTE BOTON
17*	5017890M2	►	1	COWL	GARANT CAPPOTTATURA	AUFSATZ CAPERUZA
18	339124X1	M8X16	1	HEX. SOCK. SCREW	VIS TETE HEX VITE PARKER	ZYLINDERSCHRAUBE TORN.CAB.HUECA
19	390972X1		12	WASHER	RONDELLE RONDELLA	UNTERLEGSCHEIBE ARANDELA
20	4277662P92	►	1	PANEL	PANNEAU PANNELLO	VERKL.BLECH PANELAJE
21	72502409		2	RUBBER	CAOUTCHOUC COTE	GUMMI CAUCHO
22	1440350X1	M8X20	2	SCREW METRIC	VIS METRIQUE VITE METRICA	SCHRAUBE METR TORNILLO METRICO
23	3009283X1	M6X30	2	SCREW	VIS VITE	SCHRAUBE TORNILLO

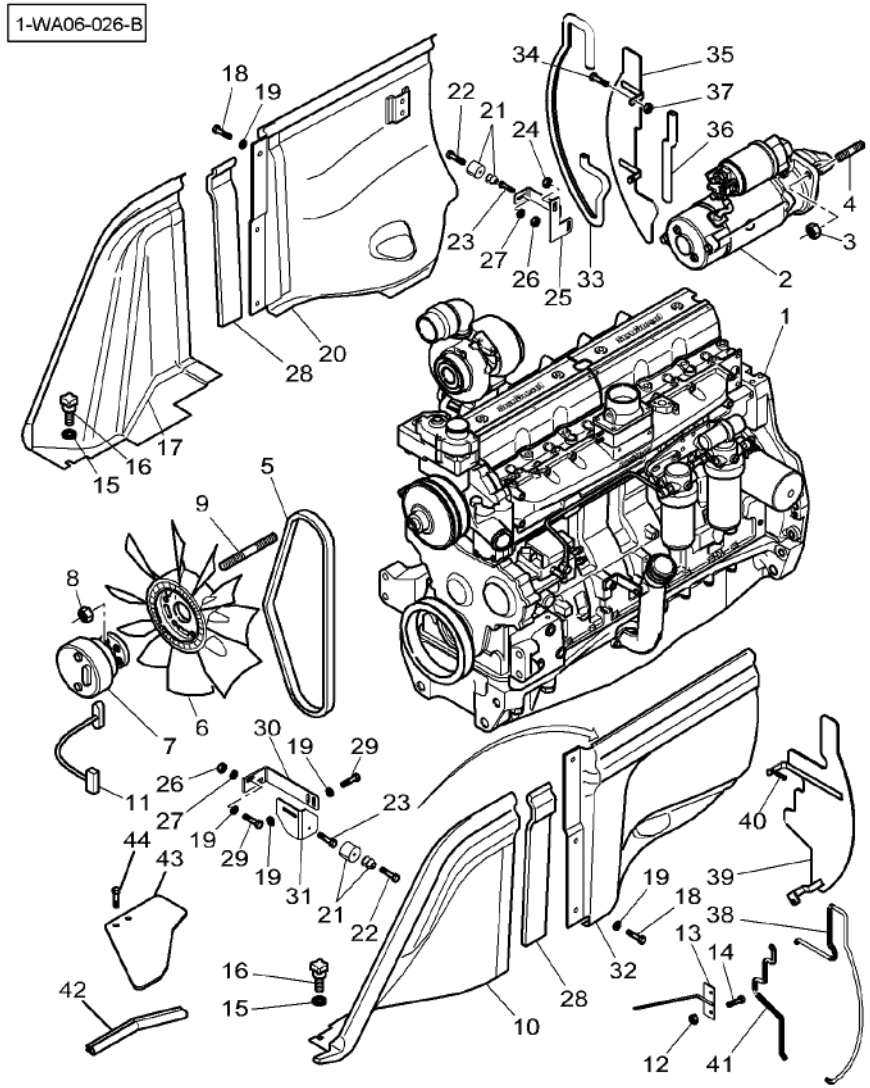

24	339402X1		1	NUT	ECROU DADO	MUTTER TUERCA
25	4277660M1	▶	1	SUPPORT	SUPPORT SUPPORTO	LAGERUNG DISPOS.DE SOSTEN
26	1441500X1		2	LOCKNUT	ECROU BLOCAGE AUTOBLOCCANTE	SICHERUNGSMUTTER CONTRATUERCA
27	391038X1		2	WASHER	RONDELLE RONDELLA	UNTERLEGSCHEIBE ARANDELA
28	5017406M1		2	GASKET	JOINT GUARNIZIONE	DICHTSCHEIBE EMPAQUETADURA.
29	339123X1	M8X20	4	HEX. SOCK. SCREW	VIS TETE HEX VITE PARKER	ZYLINDERSCHRAUBE TORN.CAB.HUECA
30	4273770M1	◀	1	SUPPORT	SUPPORT SUPPORTO	LAGERUNG DISPOS.DE SOSTEN
31	4277658M1	◀	1	SUPPORT	SUPPORT SUPPORTO	LAGERUNG DISPOS.DE SOSTEN
32	5016552P93	◀	1	PANEL	PANNEAU PANNELLO	VERKL.BLECH PANELAJE
33*	4275294M1	◀▶ 945MM EE	1	GASKET	JOINT GUARNIZIONE	DICHTSCHEIBE EMPAQUETADURA.
34*	339124X1	M8 X 16 EE	1	HEX. SOCK. SCREW	VIS TETE HEX VITE PARKER	ZYLINDERSCHRAUBE TORN.CAB.HUECA
35*	4280659M1	▶ EE	1	COWL	GARANT CAPPOTTATURA	AUFSATZ CAPERUZA
36*	3814902M1	◀▶ 210MM EE	1	PROTECTOR	PROTECTEUR PROTETTORE	SCHUTZ PROTECTOR
37*	339169X1	EE	1	NUT	ECROU DADO	MUTTER TUERCA
38*	4272163M1	◀▶ 1065MM EE	1	GASKET	JOINT GUARNIZIONE	DICHTSCHEIBE EMPAQUETADURA.
39*	4280658M2	◀ EE	1	COWL	GARANT CAPPOTTATURA	AUFSATZ CAPERUZA
40*	339123X1	M8 X 20 EE	1	HEX. SOCK. SCREW	VIS TETE HEX VITE PARKER	ZYLINDERSCHRAUBE TORN.CAB.HUECA
41*	3787366M1	◀▶ 450MM EE	1	GASKET	JOINT GUARNIZIONE	DICHTSCHEIBE EMPAQUETADURA.
42*	3810017M1	◀▶ 365MM	2	SEAL	JOINT ETANCHEITE ANELLO RACCORD	DICHTRING ARENDELA D'JUNTA
43*	4281078M1		2	COWL	GARANT CAPPOTTATURA	AUFSATZ CAPERUZA
44*	339124X1	M8 X 16	4	HEX. SOCK. SCREW	VIS TETE HEX VITE PARKER	ZYLINDERSCHRAUBE TORN.CAB.HUECA

[A] THE APPROPRIATE SAFETY DECALS MUST BE ORDERED AND FITTED TO THIS PART
CETTE PIECE DOIT ETRE IMPERATIVEMENT COMMANDEE AVEC SA DECALCOMANIE DE SECURITE
DIESES TEIL MUSS UNBEDINGT ZUSAMMEN MIT DEM SICHER HEITSHINWEISSCHILD BESTELLT WERDEN
QUESTO PEZZO DEVE ASSOLUTAMENTE ESSERE ORDINATO CON LA RELATIVA DECALCO. SULLA SICUREZZA
ESTA PIEZA SE TIENE QUE PEDIR IMPERATIVAMENTE CON SU CALCOMANIA DE SEGURIDAD

Alternator & Bracket
Alternateur Et Support
Drehstromlichtmaschine Und Support
Alternatore Cone Soporte
Alternador Y Support

10-10

1-WA10-010-A

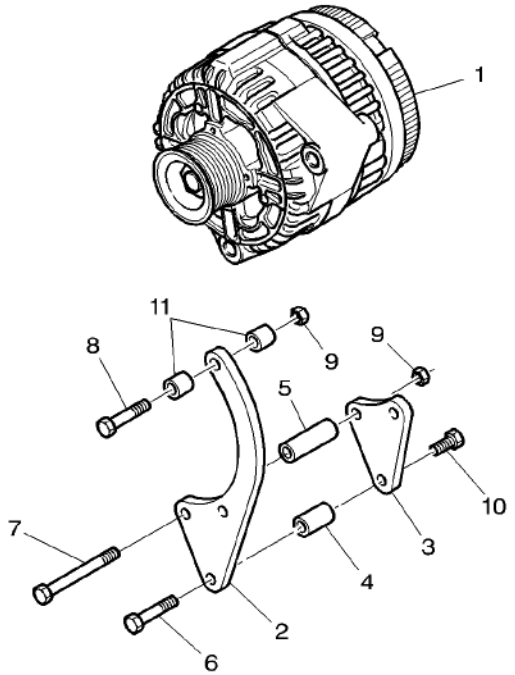

1	***3789983M91***	10–15 No 0 150 AMP	**1** ALTERNATOR	ALTERNATEUR ALTERNATORE	LICHTM.DREHSTROM ALTERNADOR
2	3789862M1		**1** SUPPORT	SUPPORT SUPPORTO	LAGERUNG DISPOS.DE SOSTEN
3	3789861M1		**1** SUPPORT	SUPPORT SUPPORTO	LAGERUNG DISPOS.DE SOSTEN
4	3789876M1	∅ 8,5–16 X 25,5	**2** SPACER	ENTRETOISE DISTANZIALE	ABSTANDSTUECK DISCO ESPACIADOR
5	4271651M1	∅ 10,5–20 X 55	**1** SPACER	ENTRETOISE DISTANZIALE	ABSTANDSTUECK DISCO ESPACIADOR
6	339168X1	M8 X 50	**2** HEX. SOCK. SCREW	VIS TETE HEX VITE PARKER	ZYLINDERSCHRAUBE TORN.CAB.HUECA
7	3002813X1	M10 X 145	**1** HEX. SOCK. SCREW	VIS TETE HEX VITE PARKER	ZYLINDERSCHRAUBE TORN.CAB.HUECA
8	3009502X1	M10 X 80	**1** HEX. SOCK. SCREW	VIS TETE HEX VITE PARKER	ZYLINDERSCHRAUBE TORN.CAB.HUECA
9	339402X1	M10	**2** NUT	ECROU DADO	MUTTER TUERCA
10	339009X1	M8 X 35	**2** HEX. SOCK. SCREW	VIS TETE HEX VITE PARKER	ZYLINDERSCHRAUBE TORN.CAB.HUECA
11	3011180X1	∅ 8,5–16 X 9,5	**2** SPACER	ENTRETOISE DISTANZIALE	ABSTANDSTUECK DISCO ESPACIADOR

Alternator
Alternateur
Drehstromlichtmaschine
Alternatore
Alternador

10-15

1-WC35-005-B

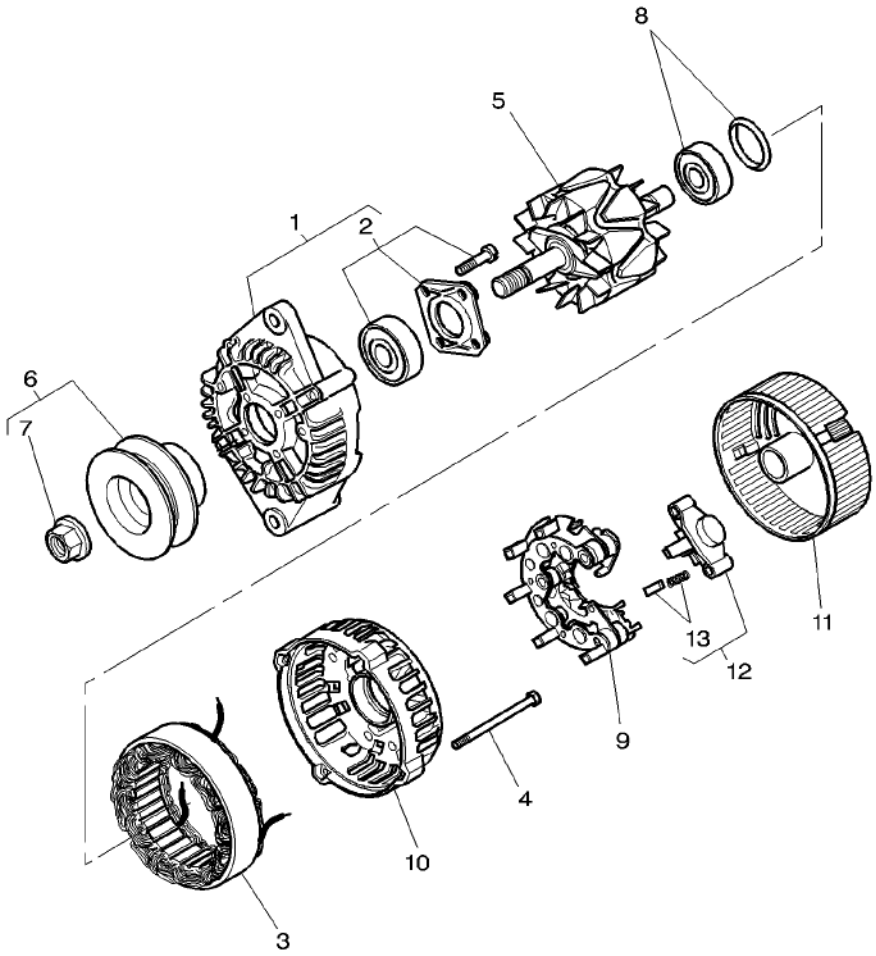

0	***3789983M91***	150 A	**1**	ALTERNATOR	ALTERNATEUR ALTERNATORE	LICHTM.DREHSTROM ALTERNADOR
1		REF. 0	**1**	KIT, DRIVE	JEU COMMANDES KIT DI GUIDA	ANTRIEBSSATZ TRANSMISION JUEG
2	3907186M91	1	**1**	KIT, BEARING	JEU COUSSINETS KIT CUSCINETTO	LAGERSATZ JUEGO COJINETES
3		REF. 0	**1**	STATOR	STATOR STATORE	STATOR ESTATOR
4	3907187M1		**1**	BOLT	BOULON BULLONE	MASCH.SCHRAUBE ESPIGA/BULON
5		REF. 0	**1**	ROTOR	ROTOR ROTORE	ROTOR ROTOR
6	3907188M91		**1**	PULLEY	POULIE PULEGGIA	RIEMENSCHEIBE POLEA
7		6 REF. 6	**1**	PARTS PACK	JEU PIECES PACCO RICAMBI	SATZ TEILE PAQUETE PIEZAS
8	3907193M91		**1**	KIT, BEARING	JEU COUSSINETS KIT CUSCINETTO	LAGERSATZ JUEGO COJINETES
9	3907190M91		**1**	RECTIFIER	REDRESSEUR RADDRIZZATORE	GLEICHRICHTER RECTIFICADOR
10		REF. 0	**1**	HOUSING	CARTER CARCASSA	GEHAEUSE ALOJAMIENTO
11	3907191M1		**1**	COVER	COUVERCLE COPERCHIO	DECKEL CUBIERTA
12	3907192M91		**1**	REGULATOR	REGULATEUR REGOLATORE	REGLER REGULADOR
13		12 REF. 12	**1**	BRUSH	BALAI SPAZZOLA	BUERSTE ESCOBILLA

Starter
Demarreur
Anlasser
Motorino Di Avviamento
Arranque

10-20

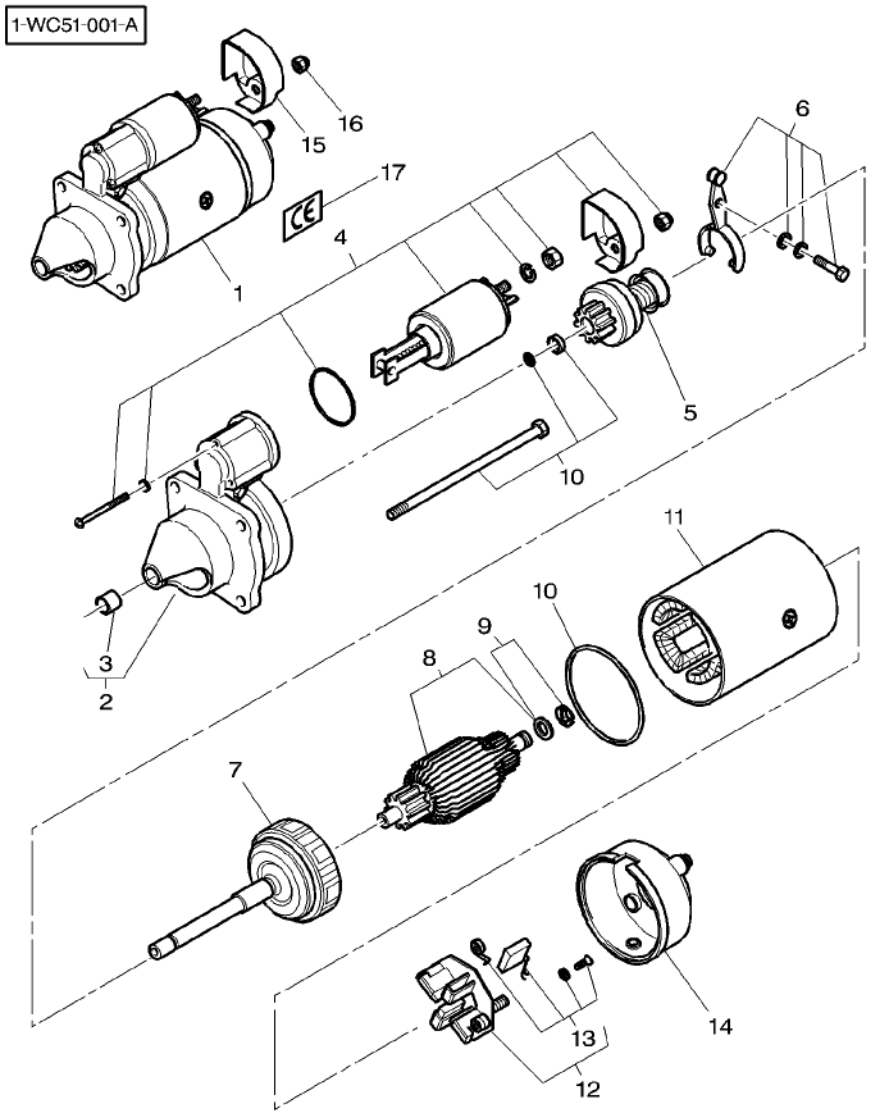

1	3823621M91	[A]	1	STARTERMOTOR	DEMARREUR MOTORINO AVVIAM.	ANLASSER MOTOR ARRANQUE
2		1 REF. 1	1	HOUSING	CARTER CARCASSA	GEHAEUSE ALOJAMIENTO
3	3903761M1	2	1	BEARING	COUSSINET CUSCINETTO	LAGER COJINETE
4	3904366M91	1	1	KIT, SOLENOID	JEU SOLENOIDE KIT SOLENOIDE	SOLENOID-SATZ JGO SOLENOIDE
5	3904360M1	1	1	DRIVE GEAR	ENGRENAGE DE CDE INGRANAGGIO TRAS	ANTRIEBSRAD PINON DE CONTROL
6	3904361M91	1	1	KIT, LEVER	JEU LEVIER KIT LEVETTA	SATZ HEBEL JUEGO, PALANCA
7		1 REF. 1	1	REDUCER	REDUCTEUR RIDUTTORE	REDUZIERSTUECK PIEZA REDUCTORA
8		1 REF. 1	1	ROTOR	ROTOR ROTORE	ROTOR ROTOR
9	3904362M91	1	1	KIT, BEARING	JEU COUSSINETS KIT CUSCINETTO	LAGERSATZ JUEGO COJINETES
10	3904363M91	1	1	PARTS PACK	JEU PIECES PACCO RICAMBI	SATZ TEILE PAQUETE PIEZAS
11		1 REF. 1	1	STATOR	STATOR STATORE	STATOR ESTATOR
12	3904364M91	1	1	HOLDER	PIECE SUPPORT SUPPORTO DI BASE	HALTER SUJETADOR
13	3904365M91	12	1	KIT, BRUSH	JEU BALAI KIT SPAZZOLA	BUERSTENSATZ ESCOBILLAS JUEGO
14		1 REF. 1	1	COVER	COUVERCLE COPERCHIO	DECKEL CUBIERTA
15	3786093M1		1	PROTECTOR	PROTECTEUR PROTETTORE	SCHUTZ PROTECTOR
16	3786092M1	M10	1	NUT	ECROU DADO	MUTTER TUERCA
17	3788193M1		1	LABEL	LABEL ETICHETTA	ETIKETT ETIQUETA

[A] THE APPROPRIATE SAFETY DECALS MUST BE ORDERED AND FITTED TO THIS PART
CETTE PIECE DOIT ETRE IMPERATIVEMENT COMMANDEE AVEC SA DECALCOMANIE DE SECURITE
DIESES TEIL MUSS UNBEDINGT ZUSAMMEN MIT DEM SICHER HEITSHINWEISSCHILD BESTELLT WERDEN
QUESTO PEZZO DEVE ASSOLUTAMENTE ESSERE ORDINATO CON LA RELATIVA DECALCO. SULLA SICUREZZA
ESTA PIEZA SE TIENE QUE PEDIR IMPERATIVAMENTE CON SU CALCOMANIA DE SEGURIDAD

Cylinder Block
Bloc–Cylindres
Zylinderblock
Monoblocco
Bloque–Cylindros

10-25

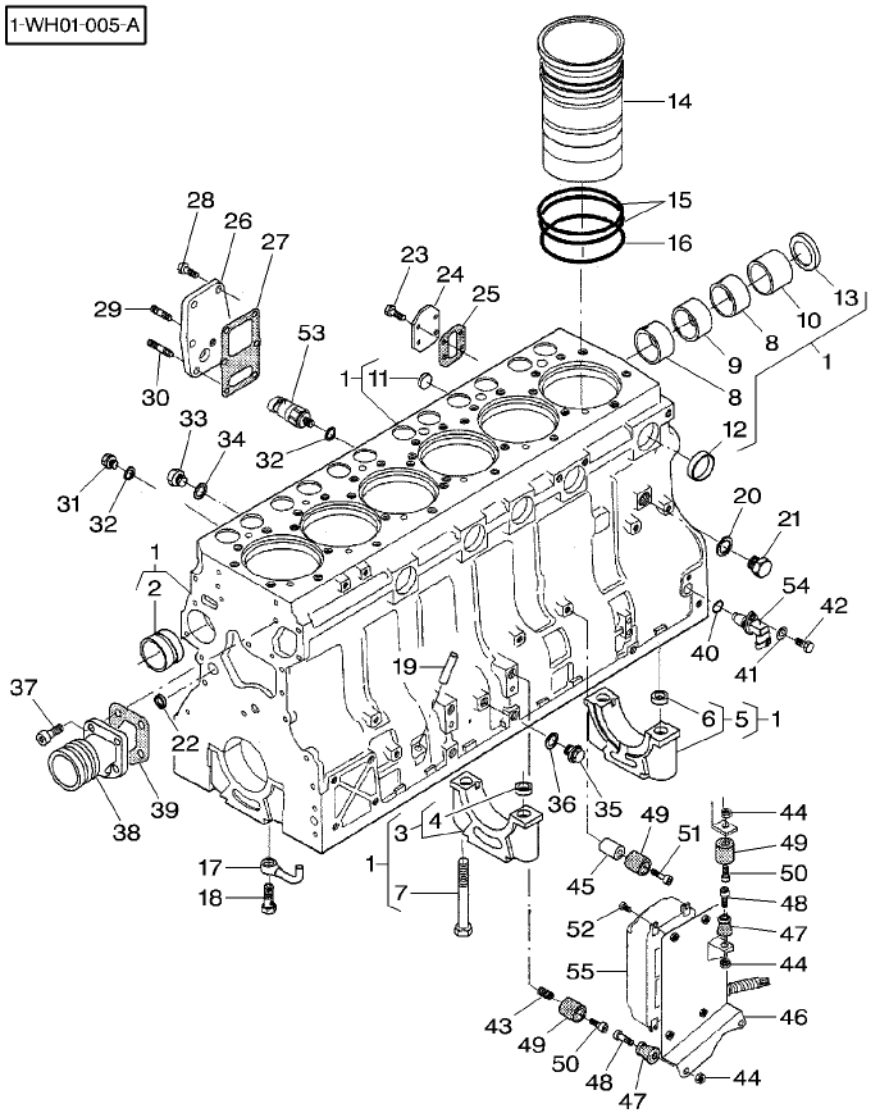

1	V836867046		1	CYLINDER BLOCK	BLOC CYLINDRES MONOBLOCCO	ZYLINDERBLOCK BLOQUE CILINDROS
2	V836866069	1	1	BUSH	BAGUE BOCCOLA	BUCHSE CASQUILLO
2	V836866036	1 ⧗ +0,4 MM	1	BUSH	BAGUE BOCCOLA	BUCHSE CASQUILLO
3		1 REF. 1	6	BEARING CARRIER	PALIER CUSCINETTO SUPP–	LAGER–GEHAEUSE TEJUELO
4	V836214478	3	12	BUSH	BAGUE BOCCOLA	BUCHSE CASQUILLO
5		1 REF. 1	1	BEARING CARRIER	PALIER CUSCINETTO SUPP–	LAGER–GEHAEUSE TEJUELO
6	V836214478	5	2	BUSH	BAGUE BOCCOLA	BUCHSE CASQUILLO
7	V529903180	1	14	SCREW	VIS VITE	SCHRAUBE TORNILLO
8	V836852460	1	2	BUSH	BAGUE BOCCOLA	BUCHSE CASQUILLO
9	V836852459	1	1	BUSH	BAGUE BOCCOLA	BUCHSE CASQUILLO
10	V836852461	1	1	BUSH	BAGUE BOCCOLA	BUCHSE CASQUILLO
11	V640016018	1	1	PLUG	BOUCHON TAPPO	VERSCHL.STOPFEN TAPON
12	V640016040	1	5	PLUG	BOUCHON TAPPO	VERSCHL.STOPFEN TAPON
13	V836852744		1	PLUG	BOUCHON TAPPO	VERSCHL.STOPFEN TAPON
14	V836867048		6	LINER	CHEMISE CAMICIA	LAUFBUCHSE CAMISA
14	V836867050	⧗ 9,08 MM	X	LINER	CHEMISE CAMICIA	LAUFBUCHSE CAMISA
14*	V836867051	⧗ 9,13 MM	X	LINER	CHEMISE CAMICIA	LAUFBUCHSE CAMISA
14*	V836867052	⧗ 9,23 MM	X	LINER	CHEMISE CAMICIA	LAUFBUCHSE CAMISA
15	V836855446		12	O RING	JOINT TORIQUE ANELLO TENUTA	O–RING ANILLO FORMA 'O'
16	V836855447		6	O RING	JOINT TORIQUE ANELLO TENUTA	O–RING ANILLO FORMA 'O'
17*	V836846231	(US)	6	PIPE	TUYAU TUBO	ROHRLEITUNG CANO
17	V837070021	(US)	6	PIPE	TUYAU TUBO	ROHRLEITUNG CANO
18	V836338601		6	VALVE.	SOUPAPE VALVOLA	VENTIL VALVULA
19	V836014334		1	PIPE	TUYAU TUBO	ROHRLEITUNG CANO
20	V615881824		1	SEAL	JOINT ETANCHEITE ANELLO RACCORD	DICHTRING ARENDELA D'JUNTA
21	V836019756		1	PLUG	BOUCHON TAPPO	VERSCHL.STOPFEN TAPON

Cylinder Block
Bloc–Cylindres
Zylinderblock
Monoblocco
Bloque–Cylindros

10-25

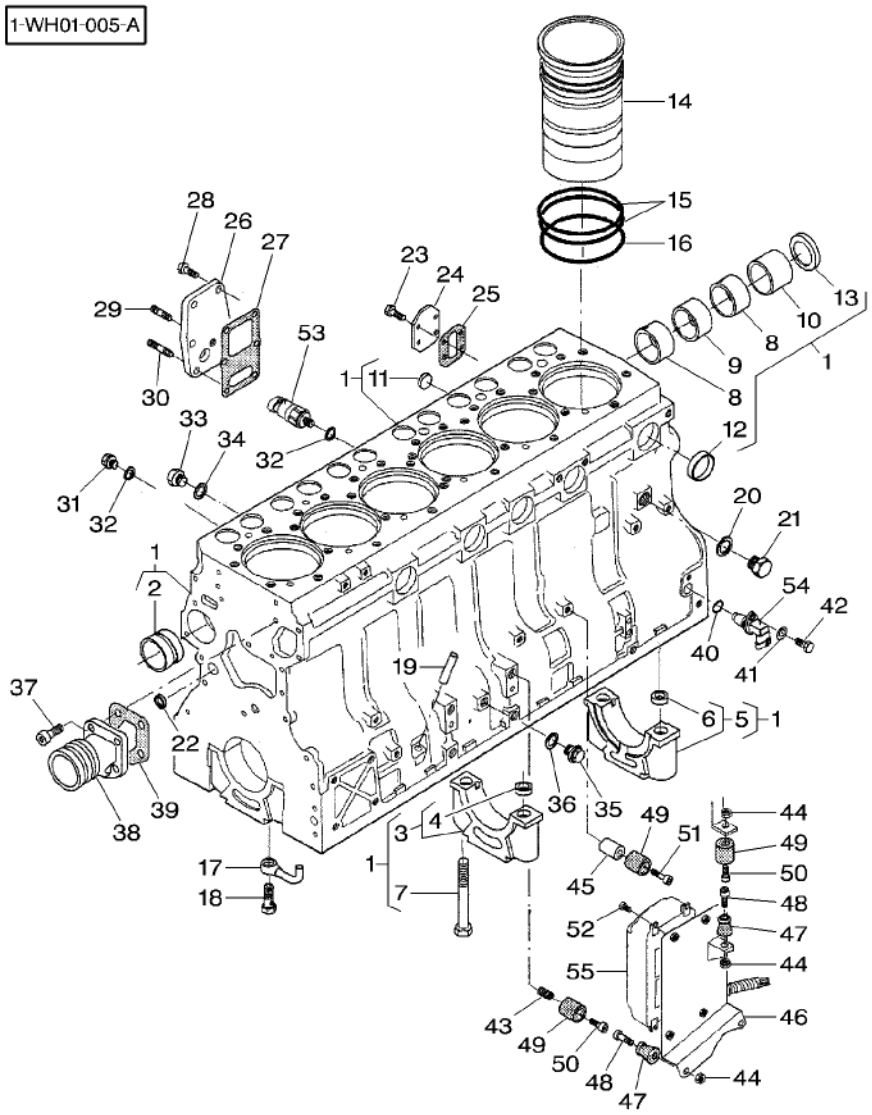

22	V640016016		4	PLUG BOUCHON TAPPO	VERSCHL.STOPFEN TAPON
23	V528801362	M8 X 16	4	SCREW VIS VITE	SCHRAUBE TORNILLO
24	V836866957		1	COVER COUVERCLE COPERCHIO	DECKEL CUBIERTA
25	V836866958		1	GASKET JOINT GUARNIZIONE	DICHTSCHEIBE EMPAQUETADURA.
26	V836855678		1	COVER COUVERCLE COPERCHIO	DECKEL CUBIERTA
27	V836322852		1	GASKET JOINT GUARNIZIONE	DICHTSCHEIBE EMPAQUETADURA.
28	V528801380	M8 X 20	5	SCREW VIS VITE	SCHRAUBE TORNILLO
29	V546801360	M8 X 16	1	BOLT BOULON BULLONE	MASCH.SCHRAUBE ESPIGA/BULON
30	V546801400	M8 X 25	1	BOLT BOULON BULLONE	MASCH.SCHRAUBE ESPIGA/BULON
31	V640325110		5	PLUG BOUCHON TAPPO	VERSCHL.STOPFEN TAPON
32	V615571014		6	SEAL JOINT ETANCHEITE ANELLO RACCORD	DICHTRING ARENDELA D'JUNTA
33	V836119079		1	PLUG BOUCHON TAPPO	VERSCHL.STOPFEN TAPON
34	V615881620		1	SEAL JOINT ETANCHEITE ANELLO RACCORD	DICHTRING ARENDELA D'JUNTA
35	V640325014		1	PLUG BOUCHON TAPPO	VERSCHL.STOPFEN TAPON
36	V615881420		1	GASKET JOINT GUARNIZIONE	DICHTSCHEIBE EMPAQUETADURA.
37★	VHC9326	M8 X 20	4	SCREW VIS VITE	SCHRAUBE TORNILLO
38	V836855629		1	SLEEVE MANCHON MANICOTTO	HUELSE MANCHA
39	V836855554		1	GASKET JOINT GUARNIZIONE	DICHTSCHEIBE EMPAQUETADURA.
40★	VKH7070		1	O RING JOINT TORIQUE ANELLO TENUTA	O–RING ANILLO FORMA 'O'
41	V500050842		1	WASHER RONDELLE RONDELLA	UNTERLEGSCHEIBE ARANDELA
42	V528801362	M8 X 16	1	SCREW VIS VITE	SCHRAUBE TORNILLO
43	V836859153		1	NIPPLE GRAISSEUR COUDE NIPPLO	NIPPEL NIPLE
44	V510600802	M8	4	NUT ECROU DADO	MUTTER TUERCA
45	V836652323		1	SLEEVE MANCHON MANICOTTO	HUELSE MANCHA
46	V836867134		1	BRACKET SUPPORT FIXATION STAFFETTA	HALTEARM SOPORTE
47	V836666095		3	KNOB POMMEAU POMELO	KNOPF POMO

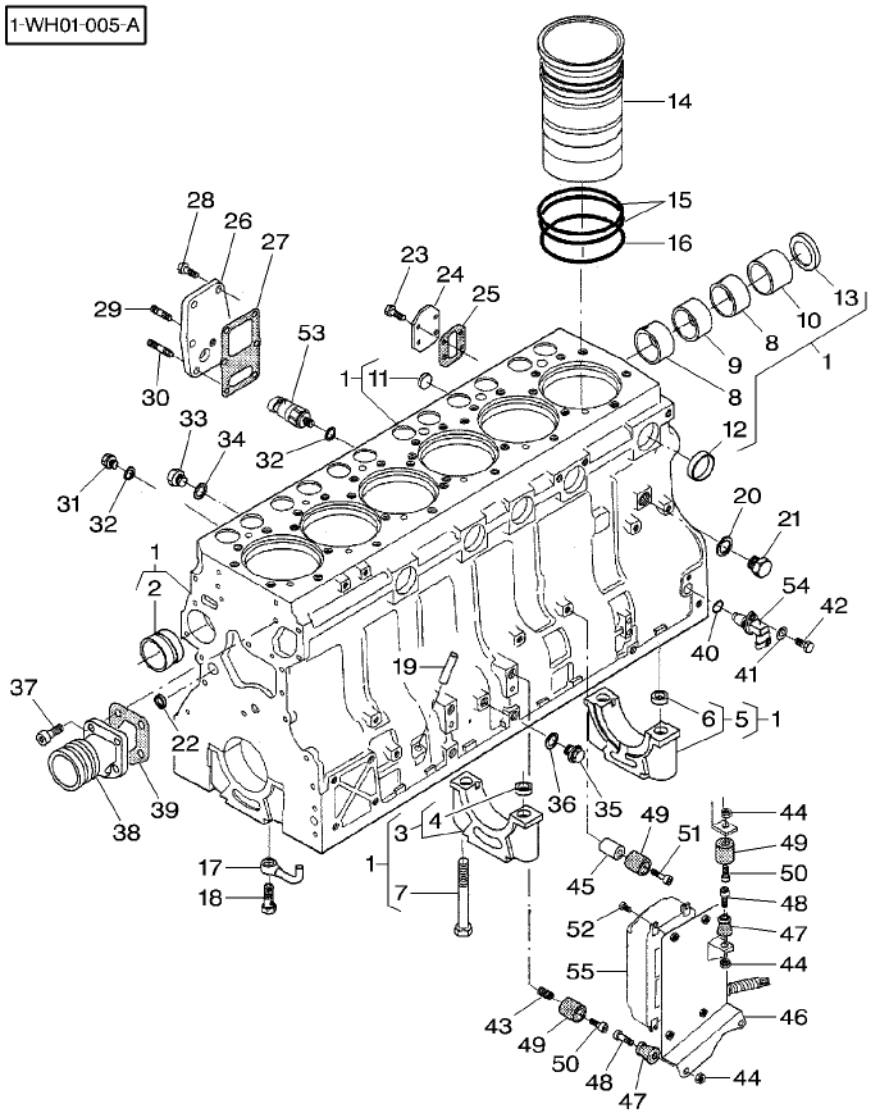

48	V581804630	M8 X 30	3	SCREW	VIS VITE	SCHRAUBE TORNILLO
49	V836666094		3	BUSH	BAGUE BOCCOLA	BUCHSE CASQUILLO
50	V581804580	M8 X 16	2	SCREW	VIS VITE	SCHRAUBE TORNILLO
51	V581804680	M8 X 55	1	SCREW	VIS VITE	SCHRAUBE TORNILLO
52	V572504172	M6 X 12	4	SCREW	VIS VITE	SCHRAUBE TORNILLO
53	***V836866613***		1	SENSOR	DETECTEUR SENSORE	EMPFANGER DETECTOR
54	***V836866392***		1	ENG.SPEED SENSOR	CAPTEUR VIT MOT SENSORE GIRIMOTO	SENSOR MOTORDREH SENSOR VEL.MOTOR
55*	V836864745	US MT 655B	1	CONTROL UNIT	UNITE DE CONTROL UNITA CONTROLLO	KONTROLEINHEIT UNIDAD CONTROL
55*	V836869165	US MT 665B	1	CONTROL UNIT	UNITE DE CONTROL UNITA CONTROLLO	KONTROLEINHEIT UNIDAD CONTROL
55	V836869300	US MT 655B	1	CONTROL UNIT	UNITE DE CONTROL UNITA CONTROLLO	KONTROLEINHEIT UNIDAD CONTROL
55	V836869298	US MT 665B	1	CONTROL UNIT	UNITE DE CONTROL UNITA CONTROLLO	KONTROLEINHEIT UNIDAD CONTROL

Timing Gear Housing
Carter Distribution
Steuergehaeuse
Carter Distribuzione
Caja De Engranajes De Distribucion

10-30

1-WH20-004-A

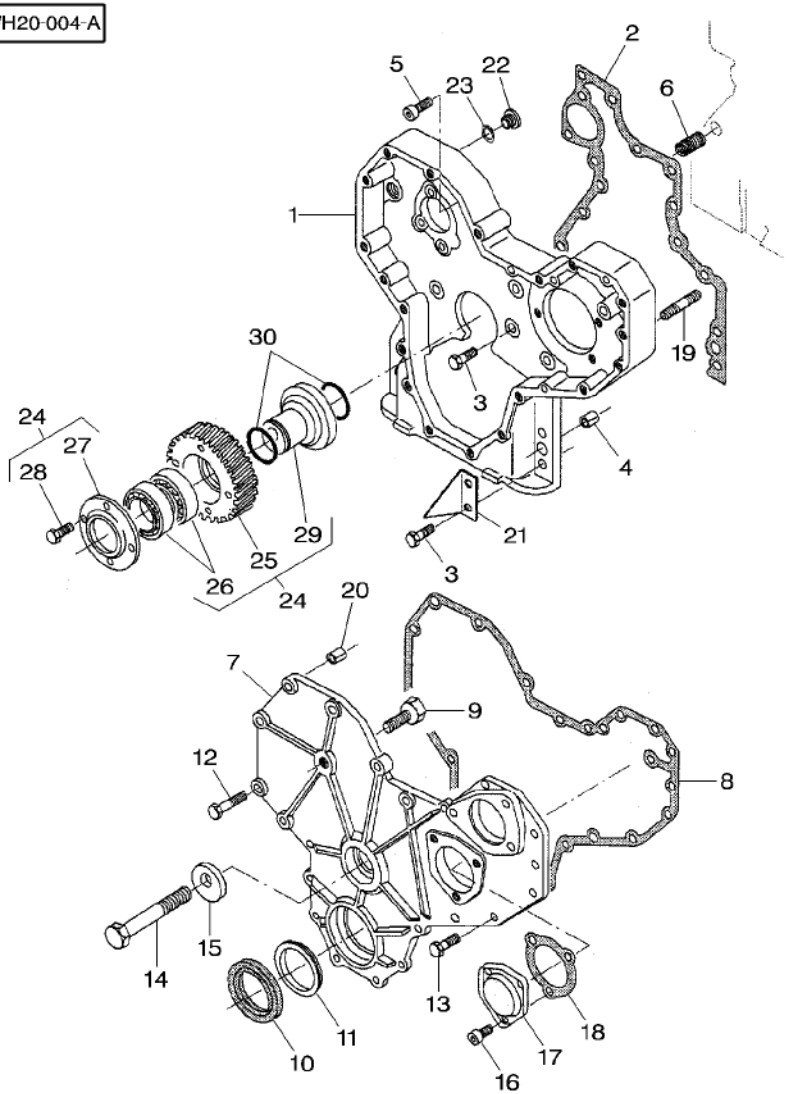

1	V836866420		1	HOUSING	CARTER CARCASSA	GEHAEUSE ALOJAMIENTO
2	V836647419		1	GASKET	JOINT GUARNIZIONE	DICHTSCHEIBE EMPAQUETADURA.
3	V528801400	M8 X 25	15	SCREW	VIS VITE	SCHRAUBE TORNILLO
4	V598359850		2	PIN	GOUPILLE PERNO	BOLZEN PASADOR
5	V581804620	M8 X 25	1	SCREW	VIS VITE	SCHRAUBE TORNILLO
6	V836859153		1	NIPPLE	GRAISSEUR COUDE NIPPLO	NIPPEL NIPLE
7	V836859151		1	COVER	COUVERCLE COPERCHIO	DECKEL CUBIERTA
8	V836859152		1	GASKET	JOINT GUARNIZIONE	DICHTSCHEIBE EMPAQUETADURA.
9	V836859160		1	RESTRICTOR	LIMITEUR LIMITATORE	SPARDUESE LIMITADOR
10	V836840883		1	OIL SEAL	BAGUE ETANCHEITE BOCCOLA PARAOLIO	OELDICHTRING BUJE RETENACEITE
11	V836855636		1	GASKET	JOINT GUARNIZIONE	DICHTSCHEIBE EMPAQUETADURA.
12	V529801430	M8 X 40	4	SCREW	VIS VITE	SCHRAUBE TORNILLO
13	V528801410	M8 X 30	13	ADJUSTING SCREW	VIS REGLAGE VITE DI REGOLAZ.	EINSTELLSCHRAUBE TORNILLO AJUSTA
14	V529902730	M14 X 90	1	SCREW	VIS VITE	SCHRAUBE TORNILLO
15	V836859161		1	BRIDLE	BRIDE BRIGLIA	SPANNBAND BRIDA
16	V581804570	M8 X 12	3	SCREW	VIS VITE	SCHRAUBE TORNILLO
17	V836136717		1	COVER	COUVERCLE COPERCHIO	DECKEL CUBIERTA
18	V836129946		1	GASKET	JOINT GUARNIZIONE	DICHTSCHEIBE EMPAQUETADURA.
19	V546801840	M10 X 45	4	BOLT	BOULON BULLONE	MASCH.SCHRAUBE ESPIGA/BULON
20	V598359860		2	PIN	GOUPILLE PERNO	BOLZEN PASADOR
21	V836859588		1	ANGLE.	EQUERRE ANGOLO	WINKEL ANGULO
22	V640325018		1	PLUG	BOUCHON TAPPO	VERSCHL.STOPFEN TAPON
23	V615881822		1	SEAL	JOINT ETANCHEITE ANELLO RACCORD	DICHTRING ARENDELA D'JUNTA
24	V836859165		1	GEAR	ENGRENAGE INGRANAGGIO	ZAHNRAD ENGRANAJE
25	V836859163	24	1	GEAR	ENGRENAGE INGRANAGGIO	ZAHNRAD ENGRANAJE
26	V610071079	24	2	BALL BEARING	ROULEMENT BILLES CUSCINETTO SFERE	KUGELLAGER COJINETE DE BOLA

Timing Gear Housing
Carter Distribution
Steuergehaeuse
Carter Distribuzione
Caja De Engranajes De Distribucion

10-30

1-WH20-004-A

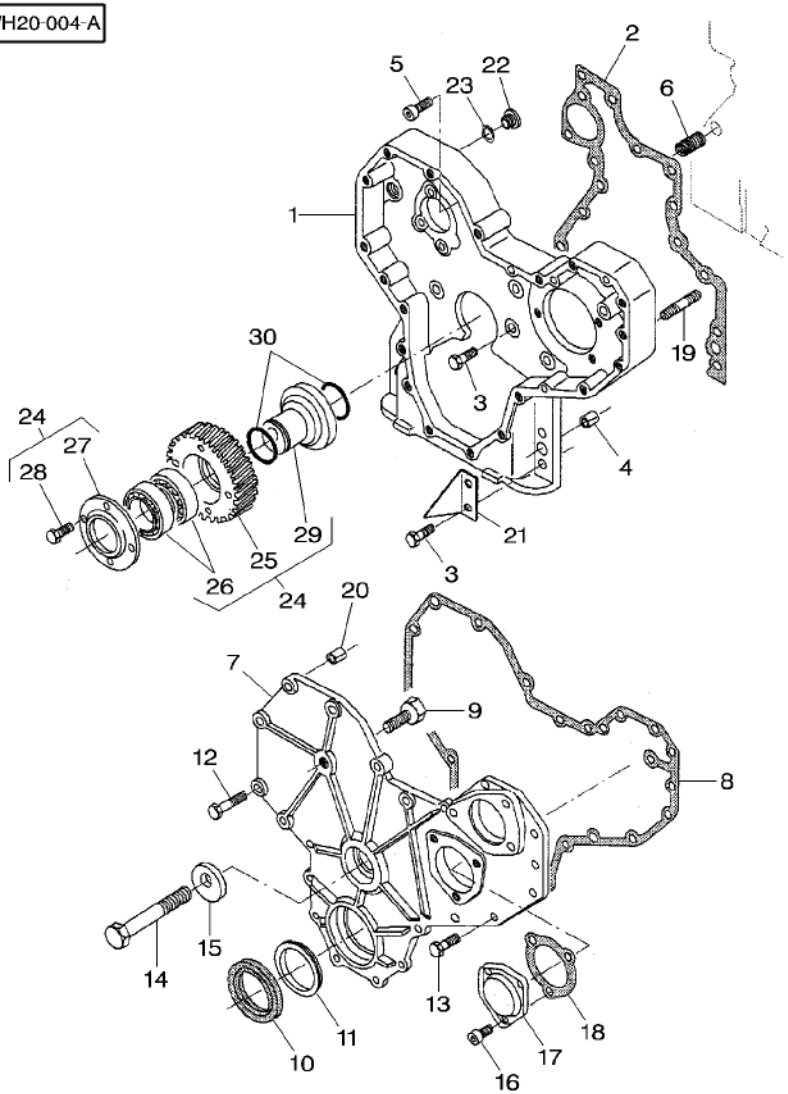

27	V836859164	24	**1** FLANGE	FLASQUE FLANGIA	FLANSCH PLETINA
28	V528801380	24 M8 X 20	**4** SCREW	VIS VITE	SCHRAUBE TORNILLO
29	V836859162	24	**1** SHAFT	ARBRE ALBERO	WELLE ARBOL
30	V614603024		**2** O RING	JOINT TORIQUE ANELLO TENUTA	O-RING ANILLO FORMA 'O'

Crankshaft, Pistons And Connecting Rods
Vilebrequin Pistons Et Bielles
Kurbelwelle, Kolben Und Pleuel
Albero Motore–Bielle E Pistoni
Ciguenal, Pistones A Bielas

10-35

US

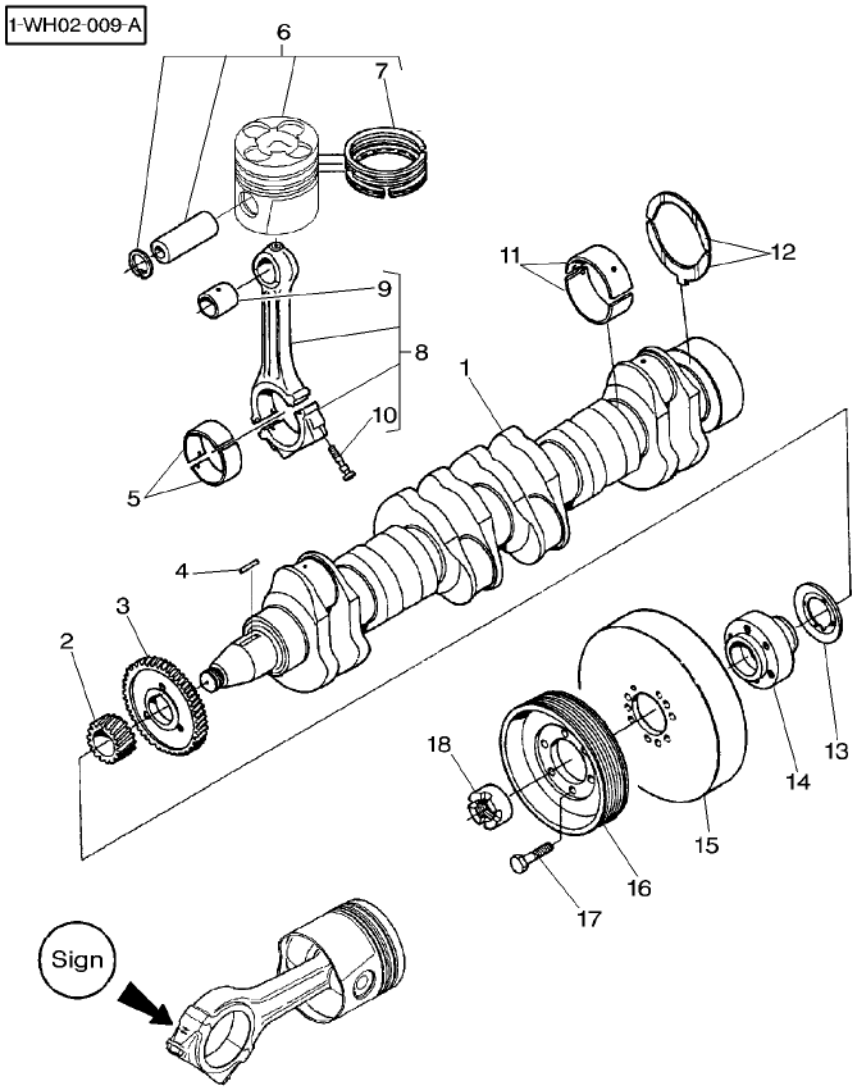

1	V836866477		1 CRANKSHAFT	VILEBREQUIN ALBERO A GOMITI	KURBELWELLE CIGUENAL
2	V836855559		1 GEAR	ENGRENAGE INGRANAGGIO	ZAHNRAD ENGRANAJE
3	V836855558		1 GEAR	ENGRENAGE INGRANAGGIO	ZAHNRAD ENGRANAJE
4	V836855525		1 KEY	CLAVETTE CHIAVETTA	PASSKEIL CLAVE
5	V836336302	STANDARD	6 BEARING	COUSSINET CUSCINETTO	LAGER COJINETE
5	V836338650	∅ 72,731 MM 72,750 MM	X BEARING	COUSSINET CUSCINETTO	LAGER COJINETE
5	V836338651	∅ 72,481 MM 72,500 MM	X BEARING	COUSSINET CUSCINETTO	LAGER COJINETE
5	V836338652	∅ 71,981 MM 72,000 MM	X BEARING	COUSSINET CUSCINETTO	LAGER COJINETE
5	V836338653	∅ 71,481 MM 71,500 MM	X BEARING	COUSSINET CUSCINETTO	LAGER COJINETE
6	V837064949		6 PISTON	PISTON PISTONE	KOLBEN PISTON
7	V836840887	6	1 KIT, PISTON RING	JEU SEGM PISTON KIT FASCIE ELAST	KOLBENRINGSATZ AROS.PIST.JUEGO
8	V836340948		X CONROD	BIELLE BIELLA	PLEUEL BIELA
8	V836864101	2230–2249g E	X CONROD	BIELLE BIELLA	PLEUEL BIELA
8	V836864102	2250–2269g F	X CONROD	BIELLE BIELLA	PLEUEL BIELA
8	V836864103	2270–2289g G	X CONROD	BIELLE BIELLA	PLEUEL BIELA
8	V836340948	2290–2309g H	X CONROD	BIELLE BIELLA	PLEUEL BIELA
8	V836864105	2310–2329g I	X CONROD	BIELLE BIELLA	PLEUEL BIELA
8	V836864106	2330–2349g J	X CONROD	BIELLE BIELLA	PLEUEL BIELA
8	V836864107	2350–2369g K	X CONROD	BIELLE BIELLA	PLEUEL BIELA
9	V836864288	8	1 BUSH	BAGUE BOCCOLA	BUCHSE CASQUILLO
9	V836338606	8 ∅ + 0,5 MM	X BUSH	BAGUE BOCCOLA	BUCHSE CASQUILLO
10	V836864141	8	2 SCREW	VIS VITE	SCHRAUBE TORNILLO
11	V836840944	STANDARD	7 MAIN BEARING	ROULEMENT PRINC BRONZINE PRINCIP	HAUPTLAGER COJINETE PRINCIP
11	V836840978	∅ 89,735 MM 89,770 MM	X MAIN BEARING	ROULEMENT PRINC BRONZINE PRINCIP	HAUPTLAGER COJINETE PRINCIP
11	V836840979	∅ 89,485 MM 89,520 MM	X MAIN BEARING	ROULEMENT PRINC BRONZINE PRINCIP	HAUPTLAGER COJINETE PRINCIP
11	V836840980	∅ 88,985 MM 89,020 MM	X MAIN BEARING	ROULEMENT PRINC BRONZINE PRINCIP	HAUPTLAGER COJINETE PRINCIP

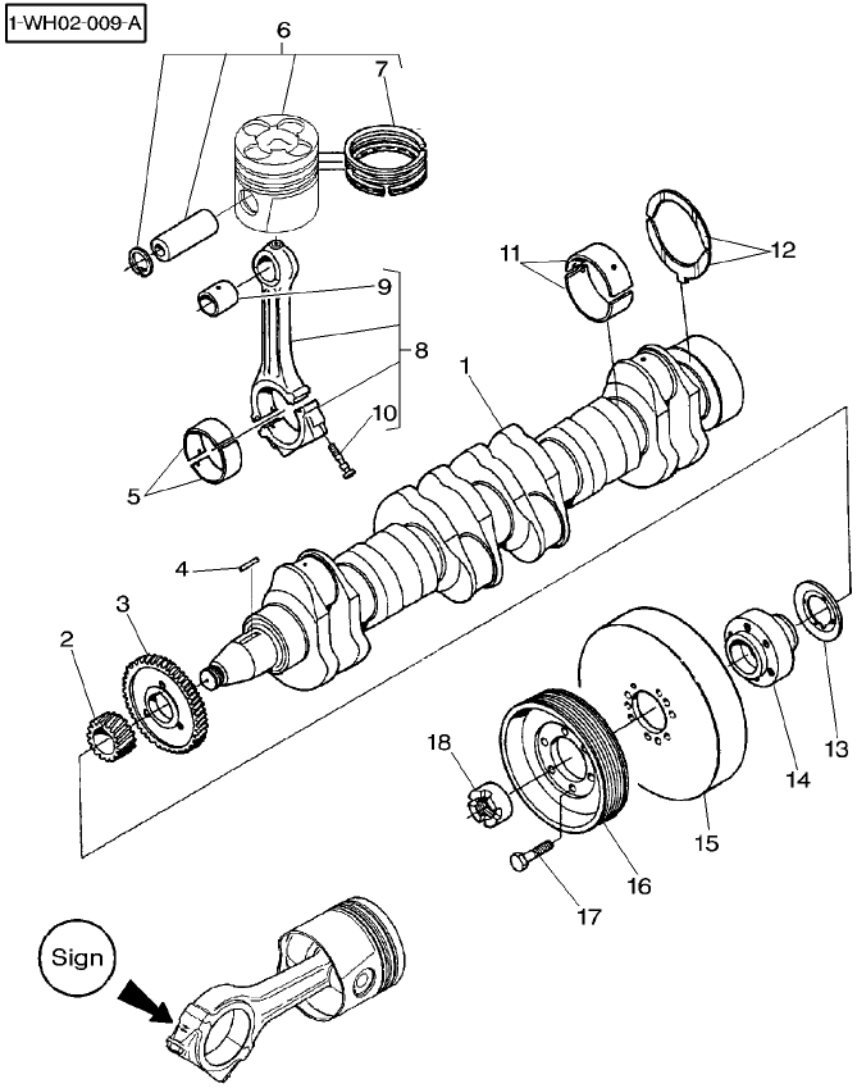

11	V836840981	∅ 88,485 MM 88,520 MM	X	MAIN BEARING	ROULEMENT PRINC BRONZINE PRINCIP	HAUPTLAGER COJINETE PRINCIP
12	V836840945	STANDARD	2	THRUST WASHER	RONDELLE BUTEE RONDELLA REGGISP	ANLAUFSCHEIBE ARANDELA ACELER
12	V836840982	0,10 MM	X	THRUST WASHER	RONDELLE BUTEE RONDELLA REGGISP	ANLAUFSCHEIBE ARANDELA ACELER
12	V836840983	0,20 MM	X	THRUST WASHER	RONDELLE BUTEE RONDELLA REGGISP	ANLAUFSCHEIBE ARANDELA ACELER
13	V836855637		1	RING	ANNEAU ANELLO	RING ARO
14	V836855641		1	HUB	MOYEU MOZZO	NABE CUBO
15	V836840882		1	SHOCK ABSORBER	AMORTISSEUR AMMORTIZZATORE*	STOSSDAEMPFER AMORTIGUADOR
16	V836855690		1	PULLEY	POULIE PULEGGIA	RIEMENSCHEIBE POLEA
17	V528902230	M12 X 40	6	SCREW	VIS VITE	SCHRAUBE TORNILLO
18	V836322221		1	NUT	ECROU DADO	MUTTER TUERCA

Crankshaft, Pistons And Connecting Rods
Vilebrequin Pistons Et Bielles
Kurbelwelle, Kolben Und Pleuel
Albero Motore–Bielle E Pistoni
Ciguenal, Pistones A Bielas

10-40

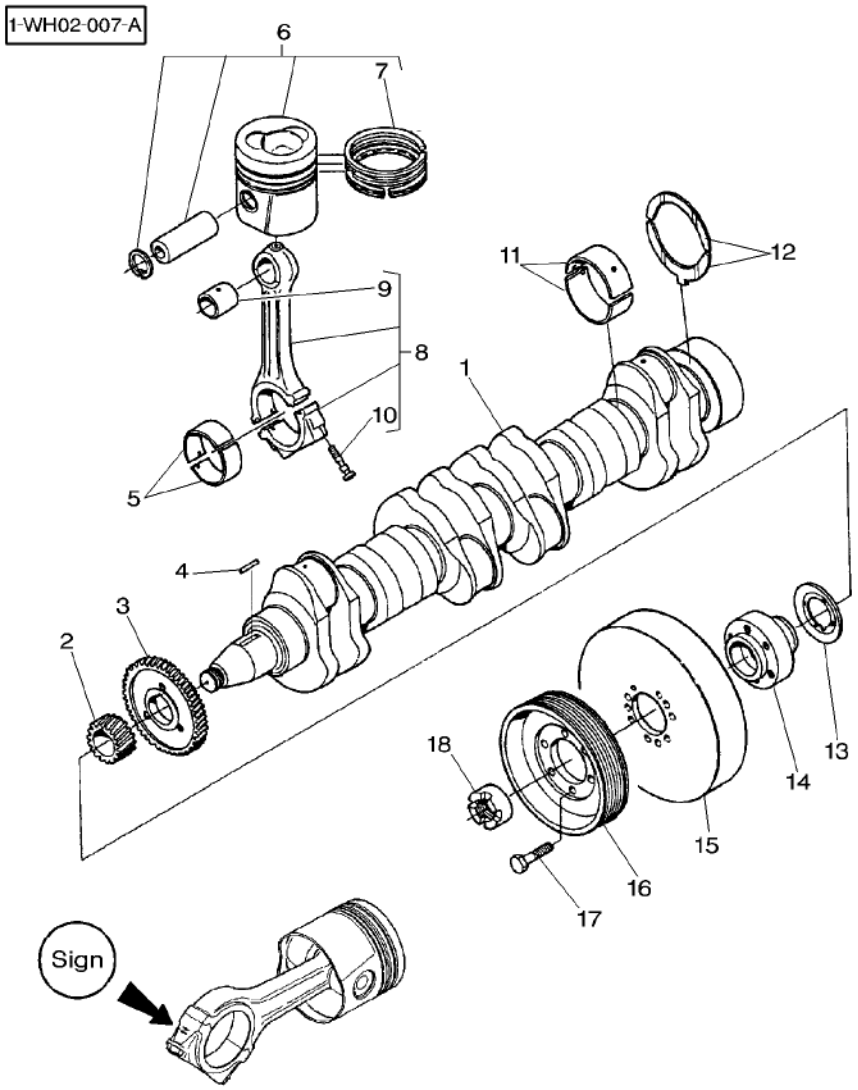

1	V836866477		1 CRANKSHAFT	VILEBREQUIN ALBERO A GOMITI	KURBELWELLE CIGUENAL
2	V836855559		1 GEAR	ENGRENAGE INGRANAGGIO	ZAHNRAD ENGRANAJE
3	V836855558		1 GEAR	ENGRENAGE INGRANAGGIO	ZAHNRAD ENGRANAJE
4	V836855525		1 KEY	CLAVETTE CHIAVETTA	PASSKEIL CLAVE
5	V836336302	STANDARD	6 BEARING	COUSSINET CUSCINETTO	LAGER COJINETE
5	V836338650	∅ 72,731 MM 72,750 MM	X BEARING	COUSSINET CUSCINETTO	LAGER COJINETE
5	V836338651	∅ 72,481 MM 72,500 MM	X BEARING	COUSSINET CUSCINETTO	LAGER COJINETE
5	V836338652	∅ 71,981 MM 72,000 MM	X BEARING	COUSSINET CUSCINETTO	LAGER COJINETE
5	V836338653	∅ 71,481 MM 71,500 MM	X BEARING	COUSSINET CUSCINETTO	LAGER COJINETE
6	V836866182		6 PISTON	PISTON PISTONE	KOLBEN PISTON
7	V836840887	6	1 KIT, PISTON RING	JEU SEGM PISTON KIT FASCIE ELAST	KOLBENRINGSATZ AROS.PIST.JUEGO
8	V836340948	⇨ V836864104	X CONROD	BIELLE BIELLA	PLEUEL BIELA
8	V836864101	2230–2249g E	X CONROD	BIELLE BIELLA	PLEUEL BIELA
8	V836864102	2250–2269g F	X CONROD	BIELLE BIELLA	PLEUEL BIELA
8	V836864103	2270–2289g G	X CONROD	BIELLE BIELLA	PLEUEL BIELA
8	V836340948	2290–2309g H ⇨ V836864104	X CONROD	BIELLE BIELLA	PLEUEL BIELA
8	V836864105	2310–2329g I	X CONROD	BIELLE BIELLA	PLEUEL BIELA
8	V836864106	2330–2349g J	X CONROD	BIELLE BIELLA	PLEUEL BIELA
8	V836864107	2350–2369g K	X CONROD	BIELLE BIELLA	PLEUEL BIELA
9	V836864288	8	1 BUSH	BAGUE BOCCOLA	BUCHSE CASQUILLO
9	V836338606	8 ∅ + 0,5 MM	X BUSH	BAGUE BOCCOLA	BUCHSE CASQUILLO
10	V836864141	8	2 SCREW	VIS VITE	SCHRAUBE TORNILLO
11	V836840944	STANDARD	7 MAIN BEARING	ROULEMENT PRINC BRONZINE PRINCIP	HAUPTLAGER COJINETE PRINCIP
11	V836840978	∅ 89,735 MM 89,770 MM	X MAIN BEARING	ROULEMENT PRINC BRONZINE PRINCIP	HAUPTLAGER COJINETE PRINCIP
11	V836840979	∅ 89,485 MM 89,520 MM	X MAIN BEARING	ROULEMENT PRINC BRONZINE PRINCIP	HAUPTLAGER COJINETE PRINCIP
11	V836840980	∅ 88,985 MM 89,020 MM	X MAIN BEARING	ROULEMENT PRINC BRONZINE PRINCIP	HAUPTLAGER COJINETE PRINCIP

Crankshaft, Pistons And Connecting Rods
Vilebrequin Pistons Et Bielles
Kurbelwelle, Kolben Und Pleuel
Albero Motore–Bielle E Pistoni
Ciguenal, Pistones A Bielas

10-40

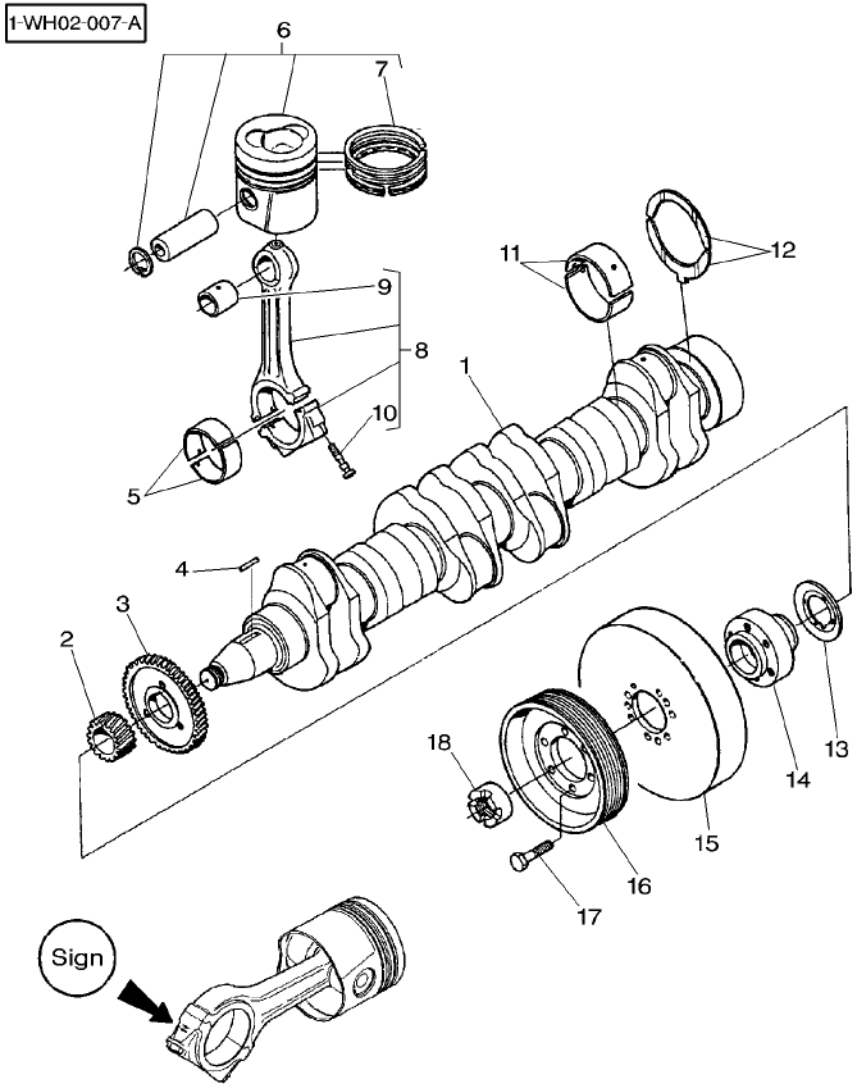

11	V836840981	∅ 88,485 MM 88,520 MM	X	MAIN BEARING	ROULEMENT PRINC BRONZINE PRINCIP	HAUPTLAGER COJINETE PRINCIP
12	V836840945	STANDARD	2	THRUST WASHER	RONDELLE BUTEE RONDELLA REGGISP	ANLAUFSCHEIBE ARANDELA ACELER
12	V836840982	0,10 MM	X	THRUST WASHER	RONDELLE BUTEE RONDELLA REGGISP	ANLAUFSCHEIBE ARANDELA ACELER
12	V836840983	0,20 MM	X	THRUST WASHER	RONDELLE BUTEE RONDELLA REGGISP	ANLAUFSCHEIBE ARANDELA ACELER
13	V836855637		1	RING	ANNEAU ANELLO	RING ARO
14	V836855641		1	HUB	MOYEU MOZZO	NABE CUBO
15	V836840882		1	SHOCK ABSORBER	AMORTISSEUR AMMORTIZZATORE*	STOSSDAEMPFER AMORTIGUADOR
16	V836855690		1	PULLEY	POULIE PULEGGIA	RIEMENSCHEIBE POLEA
17	V528902230	M12 X 40	6	SCREW	VIS VITE	SCHRAUBE TORNILLO
18	V836322221		1	NUT	ECROU DADO	MUTTER TUERCA

Valve Mechanism And Camshaft
Soupapes Et Arbre A Cames
Ventil–Anordnung Und Nockenwelle
Valvole E Albero A Camme
Mecanismo Valv. Y Arbol De Levas

10-45

US

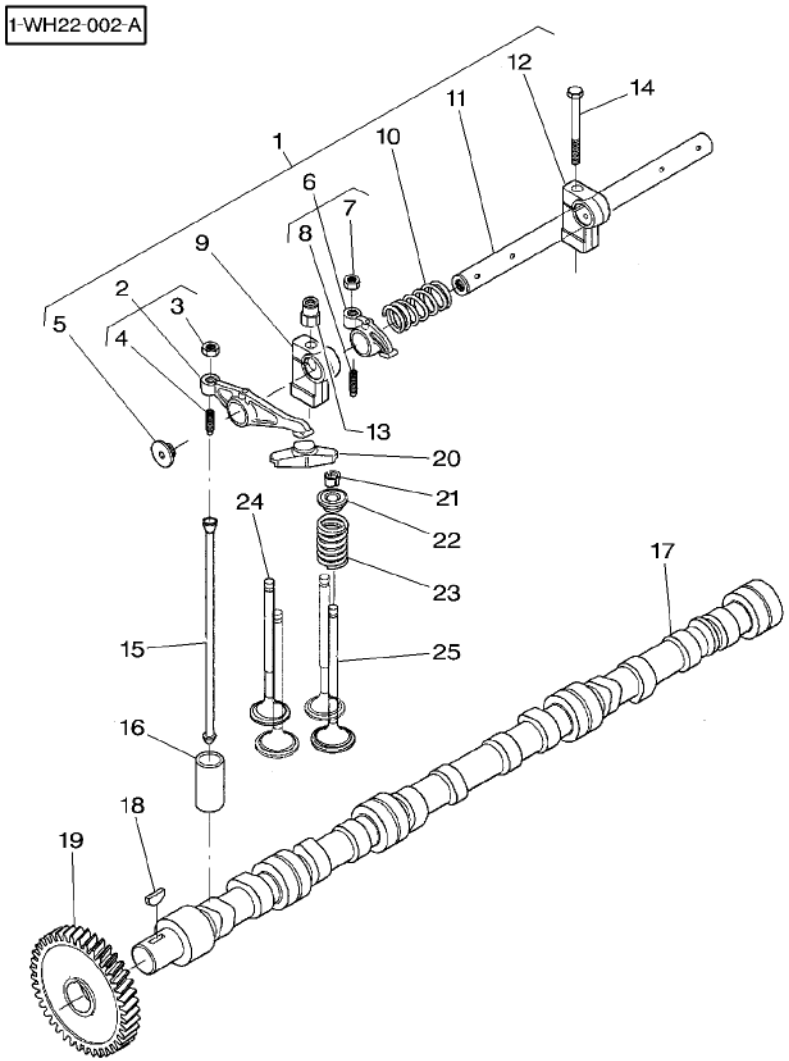

1	V837069016		2	ROCKER SHAFT	ARBRE CULBUTEURS ALBERO BILANCIER	SCHWINGH.WELLE EJE BALANCINES
2	V837069011	1	6	ROCKER	CULBUTEUR BILANCIERE	SCHWINGHEBEL BALANCIN
3	V512861000	2	6	NUT	ECROU DADO	MUTTER TUERCA
4	V837069023	2	6	SCREW	VIS VITE	SCHRAUBE TORNILLO
5	V837069020	1	4	PLUG	BOUCHON TAPPO	VERSCHL.STOPFEN TAPON
6	V837069013	1	6	ROCKER	CULBUTEUR BILANCIERE	SCHWINGHEBEL BALANCIN
7	V512861000	6	6	NUT	ECROU DADO	MUTTER TUERCA
8	V837069023	6	6	SCREW	VIS VITE	SCHRAUBE TORNILLO
9	V837069017	1	4	BRACKET	SUPPORT FIXATION STAFFETTA	HALTEARM SOPORTE
10	V837069019	1	4	SPRING	RESSORT MOLLA	FEDER RESORTE
11	V837069015	1	2	ROCKER SHAFT	ARBRE CULBUTEURS ALBERO BILANCIER	SCHWINGH.WELLE EJE BALANCINES
12	V837069018	1	2	BRACKET	SUPPORT FIXATION STAFFETTA	HALTEARM SOPORTE
13	V836655406		4	NUT	ECROU DADO	MUTTER TUERCA
14	V529801920	M10X85	2	SCREW	VIS VITE	SCHRAUBE TORNILLO
15	V837069014		12	PUSHROD	TIGE POUSSEE ASTA COMMANDO	STOESSELSTANGE. VAR. CONTRAPUNTA
16	V836014264		12	TAPPET	POUSSOIR SOUPAPE PUNTERIA	VENTILSTOESSEL TAQUET
17	V837064914		1	CAMSHAFT	ARBRE A CAMES ALBERO A CAMME	NOCKENWELLE ARBOL DE LEVAS
18	V603305760		1	KEY	CLAVETTE CHIAVETTA	PASSKEIL CLAVE
19	V836855568		1	GEAR	ENGRENAGE INGRANAGGIO	ZAHNRAD ENGRANAJE
20	V837069006		12	GUIDE	GUIDE GUIDA	FUEHRUNG GUIA
21	V837064910		48	COTTER	BICONE CONOS	SPLINT PASADOR ABIERTO
22	V837069004		24	SPRING SEAT	CUVETTE DE RESST MOLLEGGIO SEDILE	FEDERTELLER ASIENTO RESORTES
23	V837069005		24	SPRING	RESSORT MOLLA	FEDER RESORTE
24	V837069002		12	VALVE EXHAUST	SOUPAPE ECHAPP VALVOLA SCARICO	AUSLASSVENTIL VALVULA ESCAPE
25	V837069003		12	VALVE INLET	SOUPAPE ADMISS VALVOLA IMMISSI.	EINLASSVENTIL VALVULA ADMISION

Valve Mechanism And Camshaft
Soupapes Et Arbre A Cames
Ventil–Anordnung Und Nockenwelle
Valvole E Albero A Camme
Mecanismo Valv. Y Arbol De Levas

10-50

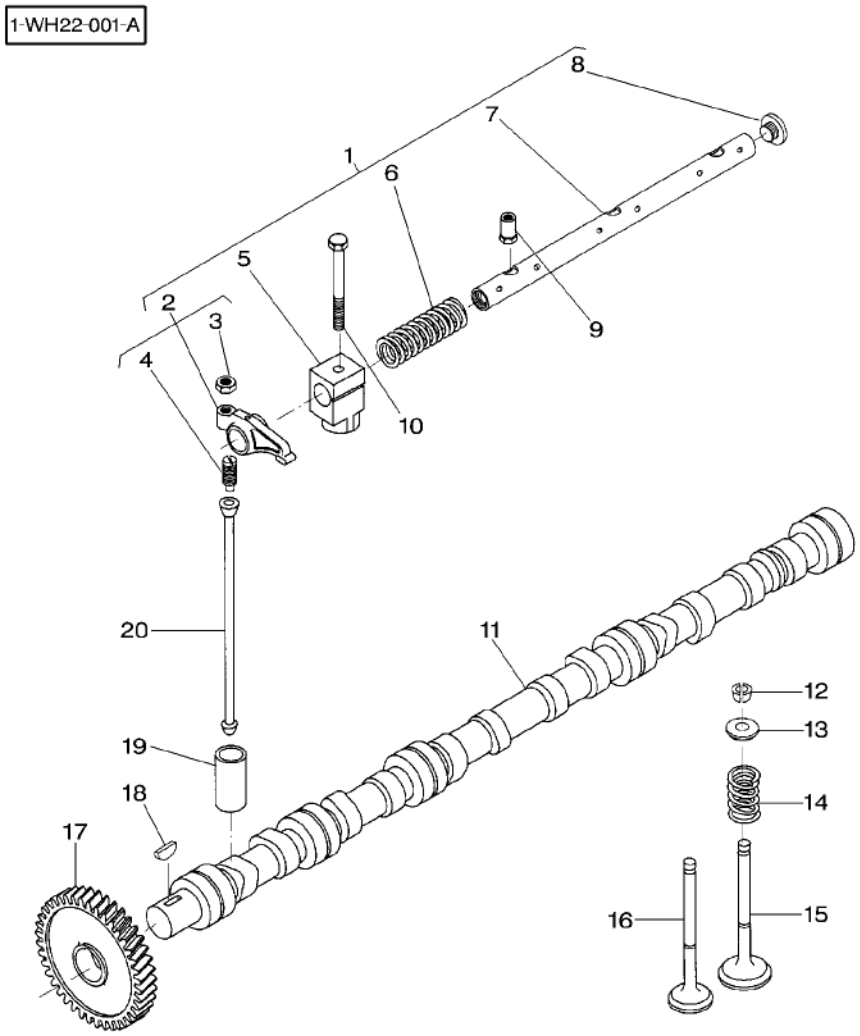

1	V836666610		⇒ V836655911	2	ROCKER SHAFT	ARBRE CULBUTEURS ALBERO BILANCIER	SCHWINGH.WELLE EJE BALANCINES
2	V836666608	1	⇒ V836655873	12	ROCKER	CULBUTEUR BILANCIERE	SCHWINGHEBEL BALANCIN
3	V512861000	2		12	NUT	ECROU DADO	MUTTER TUERCA
4	V836655866	2		12	ADJUSTING SCREW	VIS REGLAGE VITE DI REGOLAZ.	EINSTELLSCHRAUBE TORNILLO AJUSTA
5	V836666609	1		6	BRACKET	SUPPORT FIXATION STAFFETTA	HALTEARM SOPORTE
6	V836655884	1		4	SPRING	RESSORT MOLLA	FEDER RESORTE
7	V836655870	1		2	SHAFT	ARBRE ALBERO	WELLE ARBOL
8	V836655899	1		4	PLUG	BOUCHON TAPPO	VERSCHL.STOPFEN TAPON
9	V836655406			4	NUT	ECROU DADO	MUTTER TUERCA
10	V529801910	M10 X 80		2	SCREW	VIS VITE	SCHRAUBE TORNILLO
11	V836862528		⇒ V836866054	1	CAMSHAFT	ARBRE A CAMES ALBERO A CAMME	NOCKENWELLE ARBOL DE LEVAS
12	V836646382			24	COTTER	BICONE CONOS	SPLINT PASADOR ABIERTO
13	V836646381			12	CUP	COUPELLE SCODELLINO	LAUFRING CUBETA
13*	V836855347	[A] ∅ +0,2 MM		X	RING	ANNEAU ANELLO	RING ARO
13*	V836652269	[B] ∅ +0,2 MM		X	RING	ANNEAU ANELLO	RING ARO
14	V836646380			12	SPRING	RESSORT MOLLA	FEDER RESORTE
15	V836646356			6	VALVE INLET	SOUPAPE ADMISS VALVOLA IMMISSI.	EINLASSVENTIL VALVULA ADMISION
16	V836646357			6	VALVE EXHAUST	SOUPAPE ECHAPP VALVOLA SCARICO	AUSLASSVENTIL VALVULA ESCAPE
17*	V836855568			1	GEAR	ENGRENAGE INGRANAGGIO	ZAHNRAD ENGRANAJE
18	V603305760			1	KEY	CLAVETTE CHIAVETTA	PASSKEIL CLAVE
19	V836014264			12	TAPPET	POUSSOIR SOUPAPE PUNTERIA	VENTILSTOESSEL TAQUET
20*	V836355872			12	ROD	TRINGLE ASTA	STANGE VARILLA

[A] FOR VALVE INLET
POUR SOUPAPE ADMISSION
FUER EINLASSVENTIL
PER VALVOLA IMMISSI.
POR VALVULA ADMISION

1-WH22-001-A

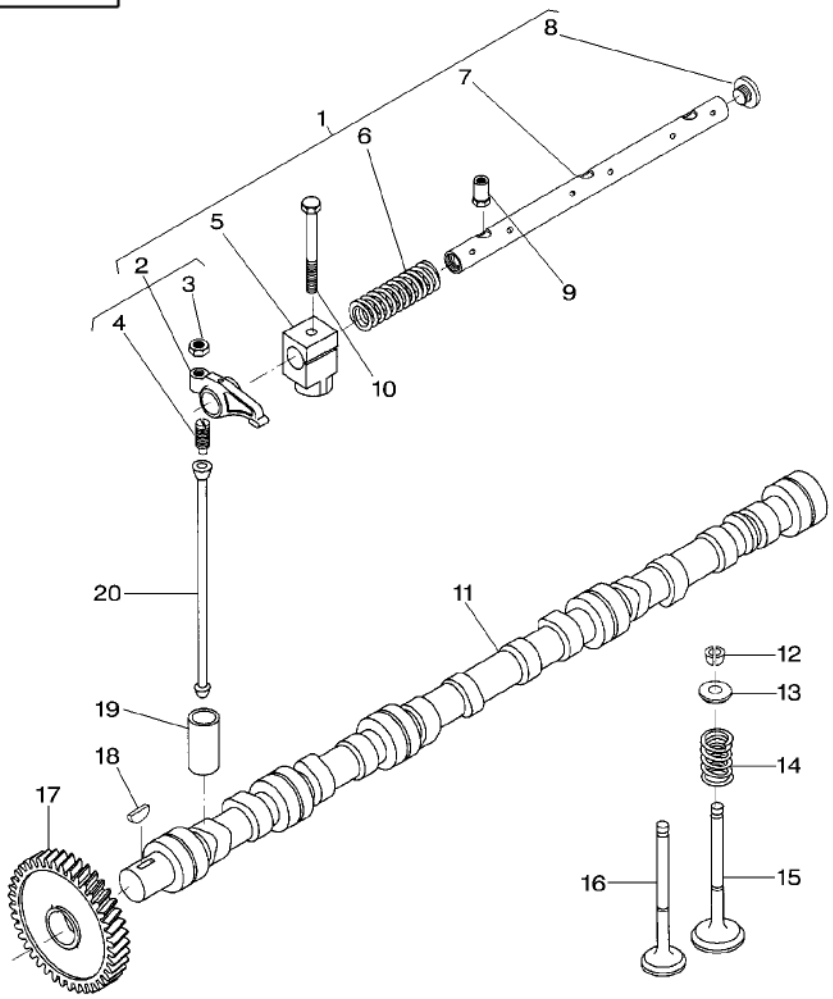

[B] FOR VALVE EXHAUST
POUR SOUPAPE ECHAPPEMENT
FUER AUSLASSVENTIL
PER VALVOLA SCARICO
POR VALVULA ESCAPE

Cylinder Head
Culasse
Zylinderkopef
Testata
Culata

10-55

US

1-WH03-007-A

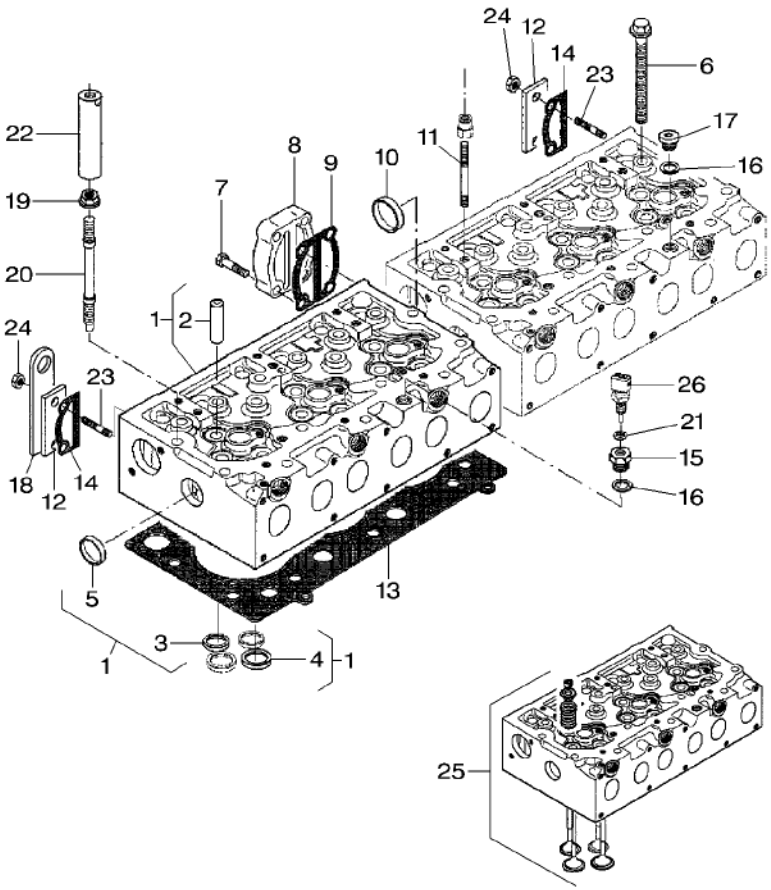

1	V837069001		2	CYLINDER HEAD	CULASSE TESTATA	ZYLINDERKOPF CULATA CILINDRO
2	V837064906	1	24	VALVE GUIDE	GUIDE DE SOUPAPE VALVE GUIDE	VENTILFUEHRUNG VALVE GUIDE
3	V837064907	1	12	VALVE SEAT	SIEGE SOUPAPE SEDE VALVOLA	VENTILSITZ ASIENTO VALVULA
4	V837064908	1	12	VALVE SEAT	SIEGE SOUPAPE SEDE VALVOLA	VENTILSITZ ASIENTO VALVULA
5	V836647942	1	4	PLUG	BOUCHON TAPPO	VERSCHL.STOPFEN TAPON
6	V837069025		32	SCREW	VIS VITE	SCHRAUBE TORNILLO
7	V528801830	M10X40	4	SCREW	VIS VITE	SCHRAUBE TORNILLO
8	V836855348		1	CONNECTOR	BORNE MORSETTO	DOPPELNIPPEL CONECTOR
9	V836867390		1	GASKET	JOINT GUARNIZIONE	DICHTSCHEIBE EMPAQUETADURA.
10	V640016045		1	PLUG	BOUCHON TAPPO	VERSCHL.STOPFEN TAPON
11	V546801900	M10X75	4	STUD	GOUJON PRIGIONIERO	STEHBOLZEN CHAVETA ROSCADO
12	V836855350		2	PLATE	PLAQUE PIASTRA	PLATTE PLATO
13	***V836666302***		2	HEAD GASKET	JOINT CULASSE GUARNIZIONETESTA	ZYL.KOPFDICHTUNG JUNTA DE CULATA
14	V836867391		2	GASKET	JOINT GUARNIZIONE	DICHTSCHEIBE EMPAQUETADURA.
15	V836359676		1	UNION	RACCORD RACCORDO	VERSCHRAUBUNG RACOR
16	V615881822		2	SEAL	JOINT ETANCHEITE ANELLO RACCORD	DICHTRING ARENDELA D'JUNTA
17	V640325018		1	PLUG	BOUCHON TAPPO	VERSCHL.STOPFEN TAPON
18	V836859722		1	PLATE	PLAQUE PIASTRA	PLATTE PLATO
19	V836859110		2	NUT	ECROU DADO	MUTTER TUERCA
20	V836859109		2	STUD	GOUJON PRIGIONIERO	STEHBOLZEN CHAVETA ROSCADO
21	V615871014		1	O RING	JOINT TORIQUE ANELLO TENUTA	O-RING ANILLO FORMA 'O'
22	V836667062		1	CYLINDER HEAD	CULASSE TESTATA	ZYLINDERKOPF CULATA CILINDRO
23	V836659785		4	STUD	GOUJON PRIGIONIERO	STEHBOLZEN CHAVETA ROSCADO
24	V504801000		4	NUT	ECROU DADO	MUTTER TUERCA
25	V837062565		2	CYLINDER HEAD	CULASSE TESTATA	ZYLINDERKOPF CULATA CILINDRO
26	***V836864360***		1	TEMP. SENSOR	SONDE TEMPERATUR TEMP. SENSOR	TEMPERATURGEBER EMISOR DEL CALOR

Cylinder Head
Culasse
Zylinderkopef
Testata
Culata

10-60

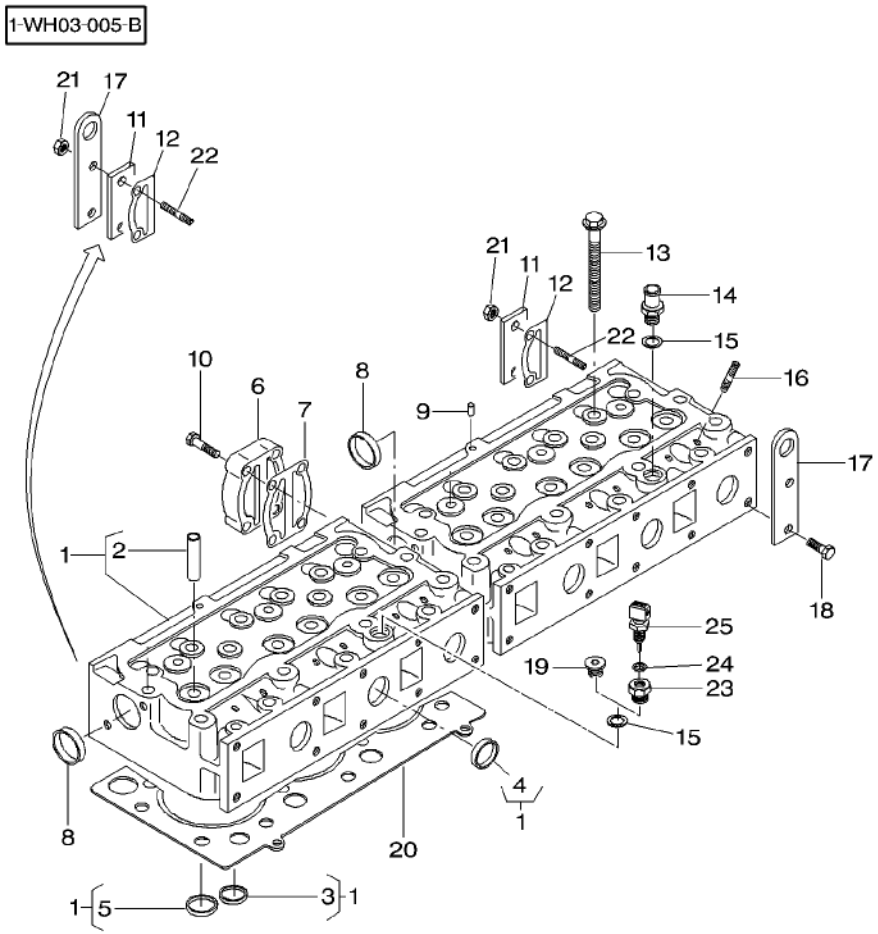

1	V836855381		2	CYLINDER HEAD	CULASSE TESTATA	ZYLINDERKOPF CULATA CILINDRO
2	V836647601	1	12	GUIDE	GUIDE GUIDA	FUEHRUNG GUIA
3	V836647600	1	6	PRESSURE VALVE	VALVE VALVOLA PRESSION	DRUCKVENTIL VALVULA PRESION
4	V836647942	1	10	PLUG	BOUCHON TAPPO	VERSCHL.STOPFEN TAPON
5	V836647936	1	6	VALVE SEAT	SIEGE SOUPAPE SEDE VALVOLA	VENTILSITZ ASIENTO VALVULA
6	V836855348		1	CONNECTOR	BORNE MORSETTO	DOPPELNIPPEL CONECTOR
7	V836867390	⇨ V836866214	1	GASKET	JOINT GUARNIZIONE	DICHTSCHEIBE EMPAQUETADURA.
8	V640016045		2	PLUG	BOUCHON TAPPO	VERSCHL.STOPFEN TAPON
9	V595959140		2	PIN	GOUPILLE PERNO	BOLZEN PASADOR
10	V528801830	M10 X 40	4	SCREW	VIS VITE	SCHRAUBE TORNILLO
11*	V836855350		2	PLATE	PLAQUE PIASTRA	PLATTE PLATO
12*	V836867391		1	GASKET	JOINT GUARNIZIONE	DICHTSCHEIBE EMPAQUETADURA.
13	V836859104		32	SCREW	VIS VITE	SCHRAUBE TORNILLO
14	V836119837		1	UNION	RACCORD RACCORDO	VERSCHRAUBUNG RACOR
15	V615881822		2	SEAL	JOINT ETANCHEITE ANELLO RACCORD	DICHTRING ARENDELA D'JUNTA
16	V546901435	M8 X 40	12	STUD	GOUJON PRIGIONIERO	STEHBOLZEN CHAVETA ROSCADO
17*	V836859722		2	PLATE	PLAQUE PIASTRA	PLATTE PLATO
18	V528801800	M10 X 25	2	SCREW	VIS VITE	SCHRAUBE TORNILLO
19*				NOT USED	NON UTILISE INUSATO	NICHT VERWENDET NO SE USA
20	***V836666302***		2	HEAD GASKET	JOINT CULASSE GUARNIZIONETESTA	ZYL.KOPFDICHTUNG JUNTA DE CULATA
21*	V504801000	M10	4	NUT	ECROU DADO	MUTTER TUERCA
22*	V836659785		4	STUD	GOUJON PRIGIONIERO	STEHBOLZEN CHAVETA ROSCADO
23*	V636359676		1	ADAPTOR	ADAPTATEUR ADATTATORE	REDUZIERNIPPEL ADAPTADOR
24*	V615871014		1	O RING	JOINT TORIQUE ANELLO TENUTA	O-RING ANILLO FORMA 'O'
25*	***V836864360***		1	TEMP. SENSOR	SONDE TEMPERATUR TEMP. SENSOR	TEMPERATURGEBER EMISOR DEL CALOR

Cylinder Head Cover
Cache Culbuteurs
Zylinderkopfdeckel
Coperchio Testata
Tapa Culata

10-65

US

1-WH23-004-A

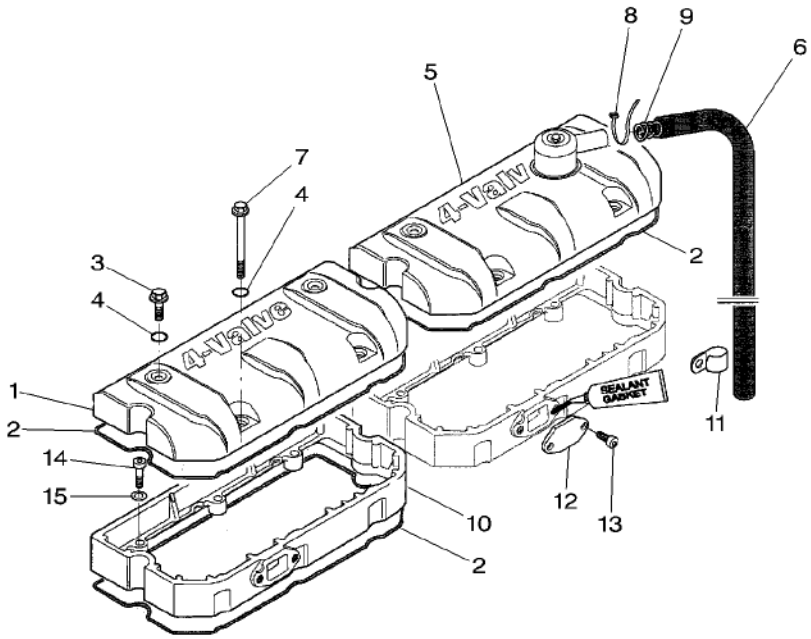

1	V837069022		**1** COVER	COUVERCLE COPERCHIO	DECKEL CUBIERTA
2	V837069024		**4** GASKET	JOINT GUARNIZIONE	DICHTSCHEIBE EMPAQUETADURA.
3	V540801780	M10X20	**4** SCREW	VIS VITE	SCHRAUBE TORNILLO
4	V614901030		**8** O RING	JOINT TORIQUE ANELLO TENUTA	O-RING ANILLO FORMA 'O'
5	V837069029		**1** COVER	COUVERCLE COPERCHIO	DECKEL CUBIERTA
6	V836755007		**1** HOSE FLEXIBLE	TUYAU FLEXIBLE MANICOTTO FLESS.	GUMMISCHLAUCH MANGUERA FLEX
7	V540801910	M10X80	**4** SCREW	VIS VITE	SCHRAUBE TORNILLO
8	V835329746		**1** CABLE TIE	ATTACHE CABLE FASCETTA CAVI	KABELBINDER APRIETACABLES
9	V836659103		**1** SPRING	RESSORT MOLLA	FEDER RESORTE
10	V837069021		**2** FRAME	BATI CORNICE	RAHMEN BASTIDOR
11	V602075528		**1** BAND	BANDE NASTRO	BAND BANDA
12	V837067513		**2** COVER	COUVERCLE COPERCHIO	DECKEL CUBIERTA
13	V581804582	M8X16	**4** SCREW	VIS VITE	SCHRAUBE TORNILLO
14	V581804630	M8X30	**6** SCREW	VIS VITE	SCHRAUBE TORNILLO
15	V500950800		**6** WASHER	RONDELLE RONDELLA	UNTERLEGSCHEIBE ARANDELA

Cylinder Head Cover
Cache Culbuteurs
Zylinderkopfdeckel
Coperchio Testata
Tapa Culata

10-70

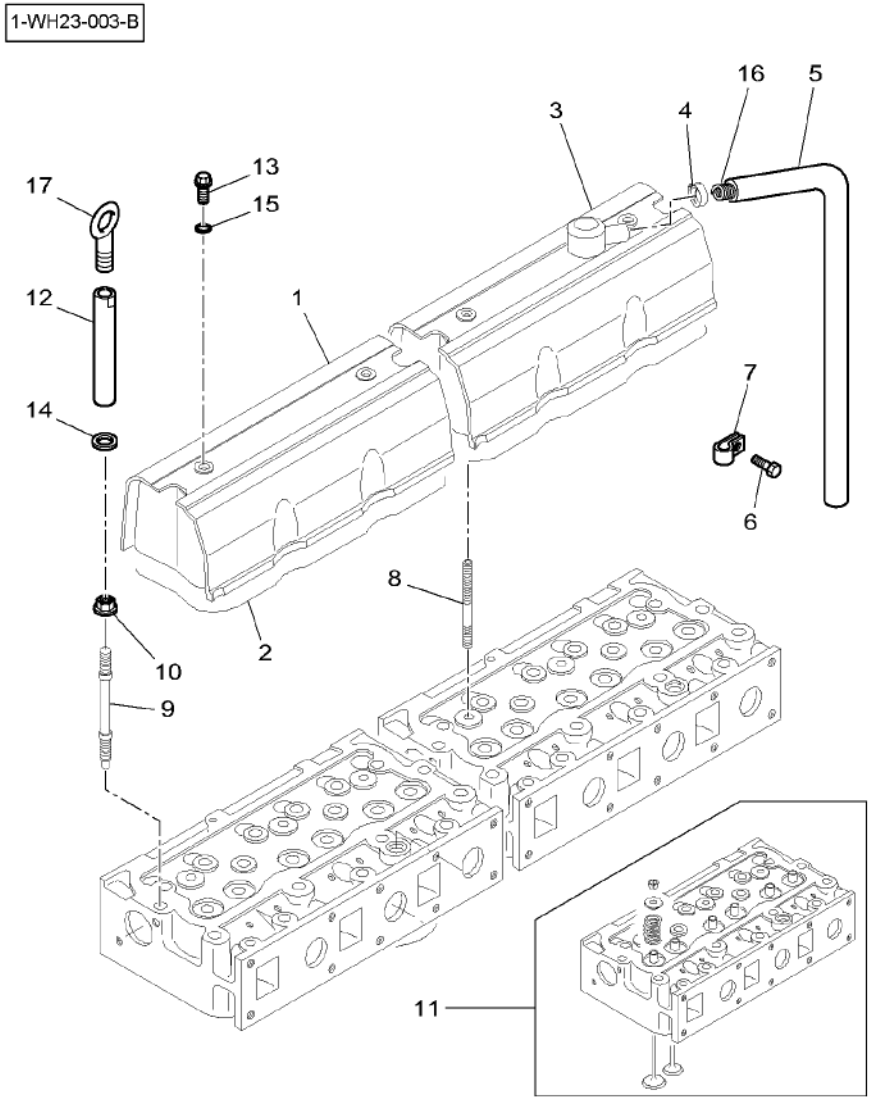

1	V836666801		1	VALVE COVER	CACHE CULBUTEURS COPERCHIO VALVOL	VENTILDECKEL CUBRE VALVULA
2*	***V836667243***		2	COVER GASKET	JOINT COUVERCLE COVER GASKET	DECKELDICHTUNG COVER GASKET
3	V836667206		1	VALVE COVER	CACHE CULBUTEURS COPERCHIO VALVOL	VENTILDECKEL CUBRE VALVULA
4	V602088532		1	BAND	BANDE NASTRO	BAND BANDA
5	V836755007		1	HOSE FLEXIBLE	TUYAU FLEXIBLE MANICOTTO FLESS.	GUMMISCHLAUCH MANGUERA FLEX
6	V528801760	M10 X 16	1	SCREW	VIS VITE	SCHRAUBE TORNILLO
7*	V836659539		1	BAND	BANDE NASTRO	BAND BANDA
8	V546801900	M10 X 75	4	STUD	GOUJON PRIGIONIERO	STEHBOLZEN CHAVETA ROSCADO
9	V836859109		2	STUD	GOUJON PRIGIONIERO	STEHBOLZEN CHAVETA ROSCADO
10	V836859110		2	NUT	ECROU DADO	MUTTER TUERCA
11	V836640897		2	CYLINDER HEAD	CULASSE TESTATA	ZYLINDERKOPF CULATA CILINDRO
12*	V836647835		1	NUT SPECIAL	ECROU SPECIAL DADO SPECIALE	SPEZIALMUTTER TUERCA ESPECIAL
13	V528801780	M10 X 20	4	SCREW	VIS VITE	SCHRAUBE TORNILLO
14*	V500151302		2	WASHER	RONDELLE RONDELLA	UNTERLEGSCHEIBE ARANDELA
15	V614901030		4	O RING	JOINT TORIQUE ANELLO TENUTA	O-RING ANILLO FORMA 'O'
16	V836659103		1	SPRING	RESSORT MOLLA	FEDER RESORTE
17*			X	NOT USED	NON UTILISE INUSATO	NICHT VERWENDET NO SE USA

Lubricating Oil Sump
Carter D'Huile
Schmieroelwanne
Coppa Olio
Carter Del Aceite Lubricante

10-75

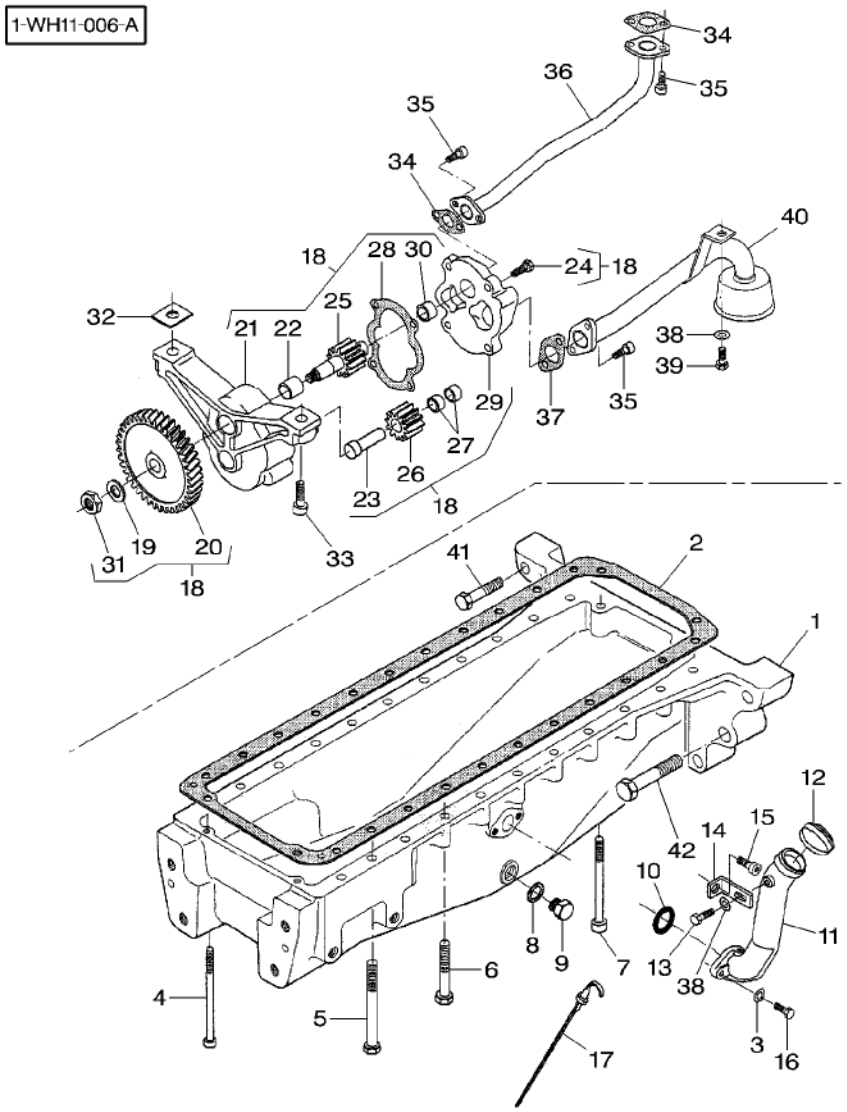

1	V836866840		1	SUMP	CARTER D HUILE SOTTOCOPPA	OELWANNE CARTER
2	V836322183		1	GASKET	JOINT GUARNIZIONE	DICHTSCHEIBE EMPAQUETADURA.
3	V500950800		2	WASHER	RONDELLE RONDELLA	UNTERLEGSCHEIBE ARANDELA
4	V581704840	M8 X 170	2	SCREW	VIS VITE	SCHRAUBE TORNILLO
5	V529701950	M10 X 100	6	SCREW	VIS VITE	SCHRAUBE TORNILLO
6	V529701880	M10 X 65	16	SCREW	VIS VITE	SCHRAUBE TORNILLO
7	V581705200	M10 X 130	2	SCREW	VIS VITE	SCHRAUBE TORNILLO
8	***V615881827***		1	SEAL	JOINT ETANCHEITE ANELLO RACCORD	DICHTRING ARENDELA D'JUNTA
9	V836655493	M18	1	PLUG	BOUCHON TAPPO	VERSCHL.STOPFEN TAPON
10	V614603230		1	O RING	JOINT TORIQUE ANELLO TENUTA	O-RING ANILLO FORMA 'O'
11	V836855400		1	BREATHER	RENIFLARD SFIATATOIO	ENTLUEFTER RESPIRADERO
12	V836659697		1	CAP	CHAPEAU CAPUCHON	KAPPE TAPA
13	V528801362	M8 X 16	1	SCREW	VIS VITE	SCHRAUBE TORNILLO
14	V836655401		1	SUPPORT	SUPPORT SUPPORTO	LAGERUNG DISPOS.DE SOSTEN
15	V581805800	M14 X 20	1	SCREW	VIS VITE	SCHRAUBE TORNILLO
16	V528801380	M8 X 20	2	SCREW	VIS VITE	SCHRAUBE TORNILLO
17	V836338637		1	DIPSTICK	JAUGE ASTA LIVELLO	MESSTAB VARILLA ACEITE
18	V836855300		1	OIL PUMP	POMPE A HUILE POMPA OLIO	OELPUMPE BOMBA DE ACEITE
19	V836122910	18	1	WASHER	RONDELLE RONDELLA	UNTERLEGSCHEIBE ARANDELA
20	V836338667	18	1	GEAR	ENGRENAGE INGRANAGGIO	ZAHNRAD ENGRANAJE
21	V836338186	18	1	FRAME	BATI CORNICE	RAHMEN BASTIDOR
22	V836322909	18	1	BUSH	BAGUE BOCCOLA	BUCHSE CASQUILLO
23	V836322906	18	1	SHAFT	ARBRE ALBERO	WELLE ARBOL
24	V528801380	18 M8 X 20	4	SCREW	VIS VITE	SCHRAUBE TORNILLO
25	V836338182	18	1	GEAR	ENGRENAGE INGRANAGGIO	ZAHNRAD ENGRANAJE
26	V836338180	18	1	GEAR	ENGRENAGE INGRANAGGIO	ZAHNRAD ENGRANAJE

Lubricating Oil Sump
Carter D'Huile
Schmieroelwanne
Coppa Olio
Carter Del Aceite Lubricante

10-75

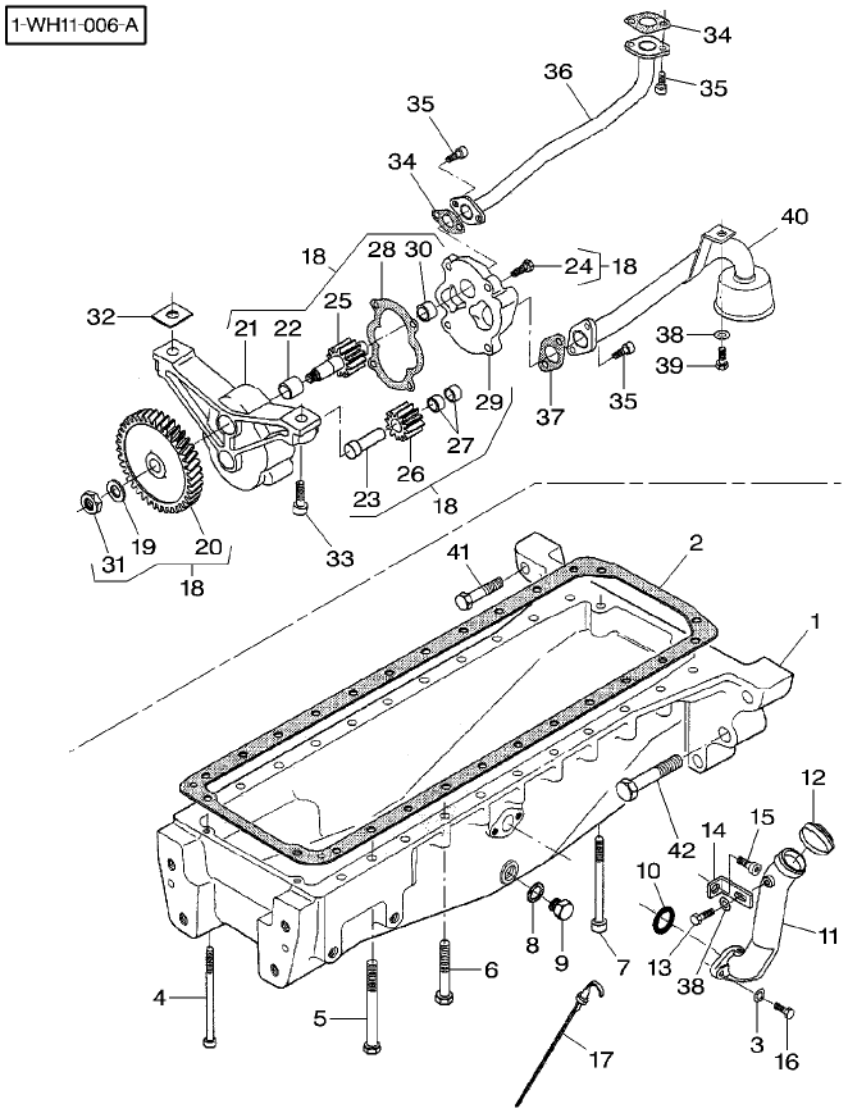

27	V836322909	18		2	BUSH	BAGUE BOCCOLA	BUCHSE CASQUILLO
28	V836338188	18		1	GASKET	JOINT GUARNIZIONE	DICHTSCHEIBE EMPAQUETADURA.
29	V836855297	18		1	COVER	COUVERCLE COPERCHIO	DECKEL CUBIERTA
30	V836322909	18		1	BUSH	BAGUE BOCCOLA	BUCHSE CASQUILLO
31	V504861000	18	M10	1	NUT	ECROU DADO	MUTTER TUERCA
32	V836007871			X	SHIM	CALE REGLAGE SPESSORE	EINSTELLBLECH CALCE
33	V581805050		M10 X 40	2	SCREW	VIS VITE	SCHRAUBE TORNILLO
34	V836008449			2	GASKET	JOINT GUARNIZIONE	DICHTSCHEIBE EMPAQUETADURA.
35*	VHC9326		M8 X 20	6	SCREW	VIS VITE	SCHRAUBE TORNILLO
36	V836855673			1	PIPE	TUYAU TUBO	ROHRLEITUNG CANO
37	V836338201			1	GASKET	JOINT GUARNIZIONE	DICHTSCHEIBE EMPAQUETADURA.
38	V500150840			2	WASHER	RONDELLE RONDELLA	UNTERLEGSCHEIBE ARANDELA
39	V528801362		M8 X 16	1	SCREW	VIS VITE	SCHRAUBE TORNILLO
40	V836867346			1	PIPE	TUYAU TUBO	ROHRLEITUNG CANO
41	V529903090		M16 X 70	6	SCREW	VIS VITE	SCHRAUBE TORNILLO
42	V529904330		M22 X 90	2	SCREW	VIS VITE	SCHRAUBE TORNILLO

Lubricating Oil Cooler And Filter
Refroidisseur D'Huile Et Filtre
Oelkuehler Und Filter
Raffreddamento Olio E Filtro
Refrigerador Y Filtro De Aceite

10-80

1-WH26-003-A

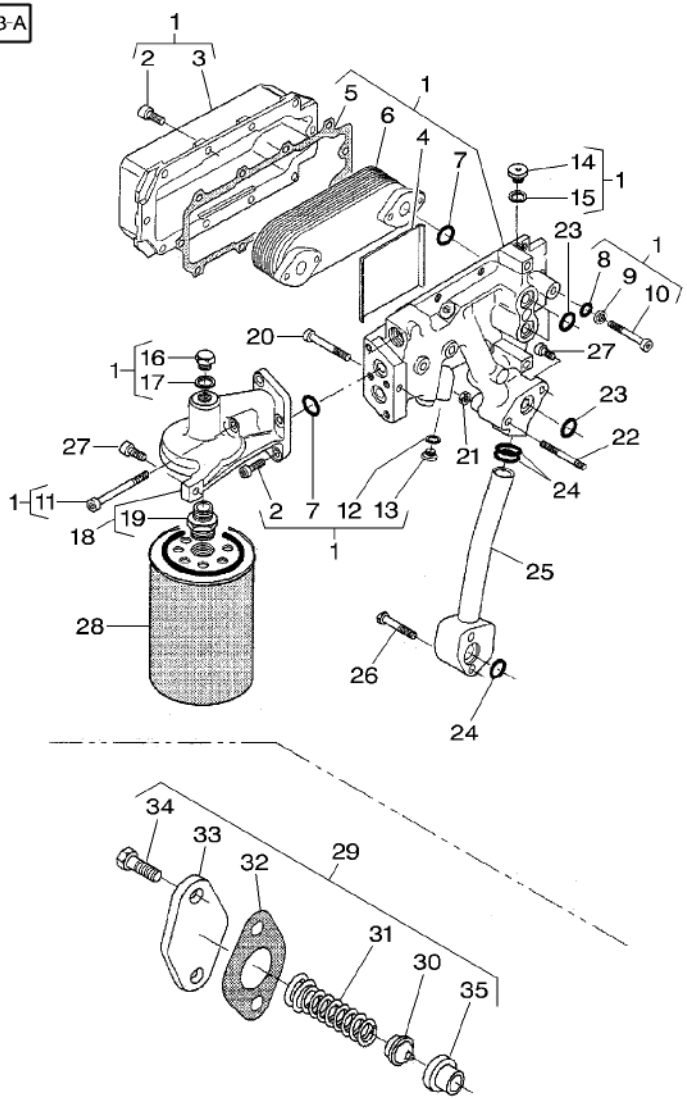

1	V836859182		1	OIL COOLER	REFROIDISS HUILE RADIATORE OLIO	OELKUEHLER REFRIG DE ACEIT
2	V581804620	1 M8 X 25	13	SCREW	VIS VITE	SCHRAUBE TORNILLO
3	V836855519	1	1	HOUSING	CARTER CARCASSA	GEHAEUSE ALOJAMIENTO
4	V836855521	1	1	GUIDE	GUIDE GUIDA	FUEHRUNG GUIA
5	V836855520	1	1	GASKET	JOINT GUARNIZIONE	DICHTSCHEIBE EMPAQUETADURA.
6	***V836855484***	1	1	ELEMENT	ELEMENT ELEMENTO	ELEMENT ELEMENTO
7	V614602030	1	4	O RING	JOINT TORIQUE ANELLO TENUTA	O-RING ANILLO FORMA 'O'
8	V614600724	1	4	O RING	JOINT TORIQUE ANELLO TENUTA	O-RING ANILLO FORMA 'O'
9	V836855517	1	4	WASHER	RONDELLE RONDELLA	UNTERLEGSCHEIBE ARANDELA
10	V581804690	1 M8 X 60	4	SCREW	VIS VITE	SCHRAUBE TORNILLO
11	V581804730	1 M8 X 80	1	SCREW	VIS VITE	SCHRAUBE TORNILLO
12	V615881216	1	1	GASKET	JOINT GUARNIZIONE	DICHTSCHEIBE EMPAQUETADURA.
13	V640305012	1	1	PLUG	BOUCHON TAPPO	VERSCHL.STOPFEN TAPON
14	V640325018	1	3	PLUG	BOUCHON TAPPO	VERSCHL.STOPFEN TAPON
15	V615881822	1	3	SEAL	JOINT ETANCHEITE ANELLO RACCORD	DICHTRING ARENDELA D'JUNTA
16	V836119079	1	1	PLUG	BOUCHON TAPPO	VERSCHL.STOPFEN TAPON
17	V615881620	1	1	SEAL	JOINT ETANCHEITE ANELLO RACCORD	DICHTRING ARENDELA D'JUNTA
18	V836859187	1	1	FILTER HEAD	TETE DE FILTRE TESTA FILTRO	FILTERKOPF CABEZA DE FILTRO
19	V836859105	18	1	NIPPLE	GRAISSEUR COUDE NIPPLO	NIPPEL NIPLE
20	V581804690	M8 X 60	2	SCREW	VIS VITE	SCHRAUBE TORNILLO
21	V504800800	M8	2	NUT	ECROU DADO	MUTTER TUERCA
22	V546801490	M8 X 70	2	BOLT	BOULON BULLONE	MASCH.SCHRAUBE ESPIGA/BULON
23	V614602030		3	O RING	JOINT TORIQUE ANELLO TENUTA	O-RING ANILLO FORMA 'O'
24	V614602430		3	O RING	JOINT TORIQUE ANELLO TENUTA	O-RING ANILLO FORMA 'O'
25	V836859134		1	PIPE	TUYAU TUBO	ROHRLEITUNG CANO
26	V529801460	M8 X 55	2	SCREW	VIS VITE	SCHRAUBE TORNILLO

Lubricating Oil Cooler And Filter
Refroidisseur D'Huile Et Filtre
Oelkuehler Und Filter
Raffreddamento Olio E Filtro
Refrigerador Y Filtro De Aceite

10-80

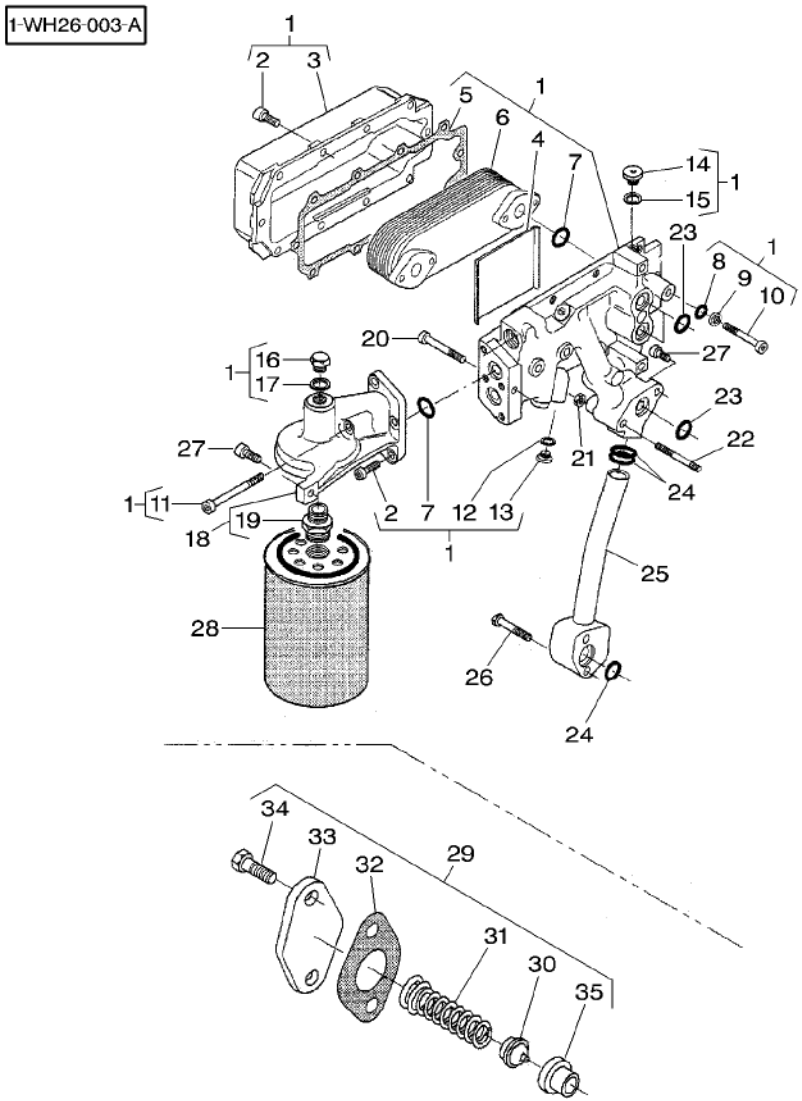

27	V581804620		M8 X 25	**2**	SCREW	VIS VITE	SCHRAUBE TORNILLO
28	***V836867234***			**1**	OIL FILTER	FILTRE HUILE FILTRO OLIO	OELFILTER FILTRO DE ACEITE
29	V836662130			**1**	CONTROL VALVE	VALVE COMMANDE DISTRIBUTORE IDR	REGELVENTIL VALVULA CONTROL
30	V836659522	29		**1**	PLATE	PLAQUE PIASTRA	PLATTE PLATO
31	V836864056	29		**1**	SPRING	RESSORT MOLLA	FEDER RESORTE
32	V836322190	29		**1**	GASKET	JOINT GUARNIZIONE	DICHTSCHEIBE EMPAQUETADURA.
33	V836659524	29		**1**	COVER	COUVERCLE COPERCHIO	DECKEL CUBIERTA
34	V528801380	29	M8 X 20	**2**	SCREW	VIS VITE	SCHRAUBE TORNILLO
35	V836659521	29		**1**	VALVE SEAT	SIEGE SOUPAPE SEDE VALVOLA	VENTILSITZ ASIENTO VALVULA

Water Pump
Pompe A Eau
Wasserpumpe
Pompa Acqua
Bomba De Agua

10-85

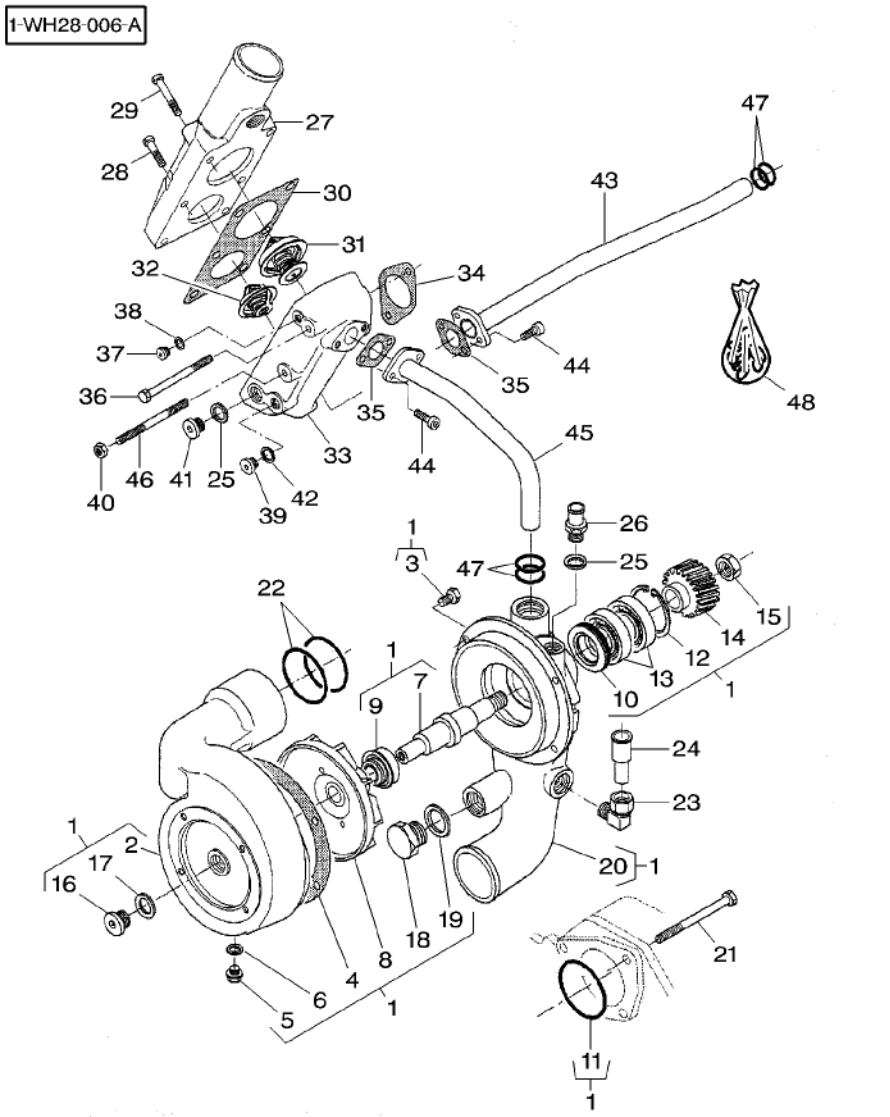

1	V836866229			1 WATER PUMP	POMPE A EAU POMPA ACQUA	WASSERPUMPE BOMBA DE AGUA
2	V836859170	1		1 HOUSING	CARTER CARCASSA	GEHAEUSE ALOJAMIENTO
3	V528801362	1	M8 X 16	4 SCREW	VIS VITE	SCHRAUBE TORNILLO
4	V836855625	1		1 GASKET	JOINT GUARNIZIONE	DICHTSCHEIBE EMPAQUETADURA.
5	V640305012	1		1 PLUG	BOUCHON TAPPO	VERSCHL.STOPFEN TAPON
6	V615881216	1		1 GASKET	JOINT GUARNIZIONE	DICHTSCHEIBE EMPAQUETADURA.
7	V836859456	1		1 SHAFT	ARBRE ALBERO	WELLE ARBOL
8	V836866735	1		1 IMPELLER	PROPULSEUR GIRANTE	FLUEGELRAD TURBINA IMPULS.
9	V836859452	1		1 GASKET	JOINT GUARNIZIONE	DICHTSCHEIBE EMPAQUETADURA.
10	V614703247	1		1 OIL SEAL	BAGUE ETANCHEITE BOCCOLA PARAOLIO	OELDICHTRING BUJE RETENACEITE
11	V614606230	1		1 O RING	JOINT TORIQUE ANELLO TENUTA	O-RING ANILLO FORMA 'O'
12	V617330052	1		1 CIRCLIP	CIRCLIP ANNELLO ELASTICO	SEEGERING GRAPA CIRCULAR
13	V610072050	1		2 BEARING ASSY	ROULEMENT CUSCINETTO COMPL	RADIALLAGER RODAMIENTO RAD
14	V836855569	1		1 GEAR	ENGRENAGE INGRANAGGIO	ZAHNRAD ENGRANAJE
15	V504601600	1		1 NUT	ECROU DADO	MUTTER TUERCA
16	V640325018	1		1 PLUG	BOUCHON TAPPO	VERSCHL.STOPFEN TAPON
17	V615881822	1		1 SEAL	JOINT ETANCHEITE ANELLO RACCORD	DICHTRING ARENDELA D'JUNTA
18	V640045126	1		1 PLUG	BOUCHON TAPPO	VERSCHL.STOPFEN TAPON
19	V615892631	1		1 SEAL	JOINT ETANCHEITE ANELLO RACCORD	DICHTRING ARENDELA D'JUNTA
20	V836859458	1		1 BODY	CORPS CORPO	RUMPF CUERPO
21	V529801530		M8 X 90	3 SCREW	VIS VITE	SCHRAUBE TORNILLO
22	V614604958			2 O RING	JOINT TORIQUE ANELLO TENUTA	O-RING ANILLO FORMA 'O'
23	V641176018			1 UNION	RACCORD RACCORDO	VERSCHRAUBUNG RACOR
24	V836867415			1 UNION	RACCORD RACCORDO	VERSCHRAUBUNG RACOR
25	V615881822			2 SEAL	JOINT ETANCHEITE ANELLO RACCORD	DICHTRING ARENDELA D'JUNTA
26	V836119837			1 UNION	RACCORD RACCORDO	VERSCHRAUBUNG RACOR

Water Pump
Pompe A Eau
Wasserpumpe
Pompa Acqua
Bomba De Agua

10-85

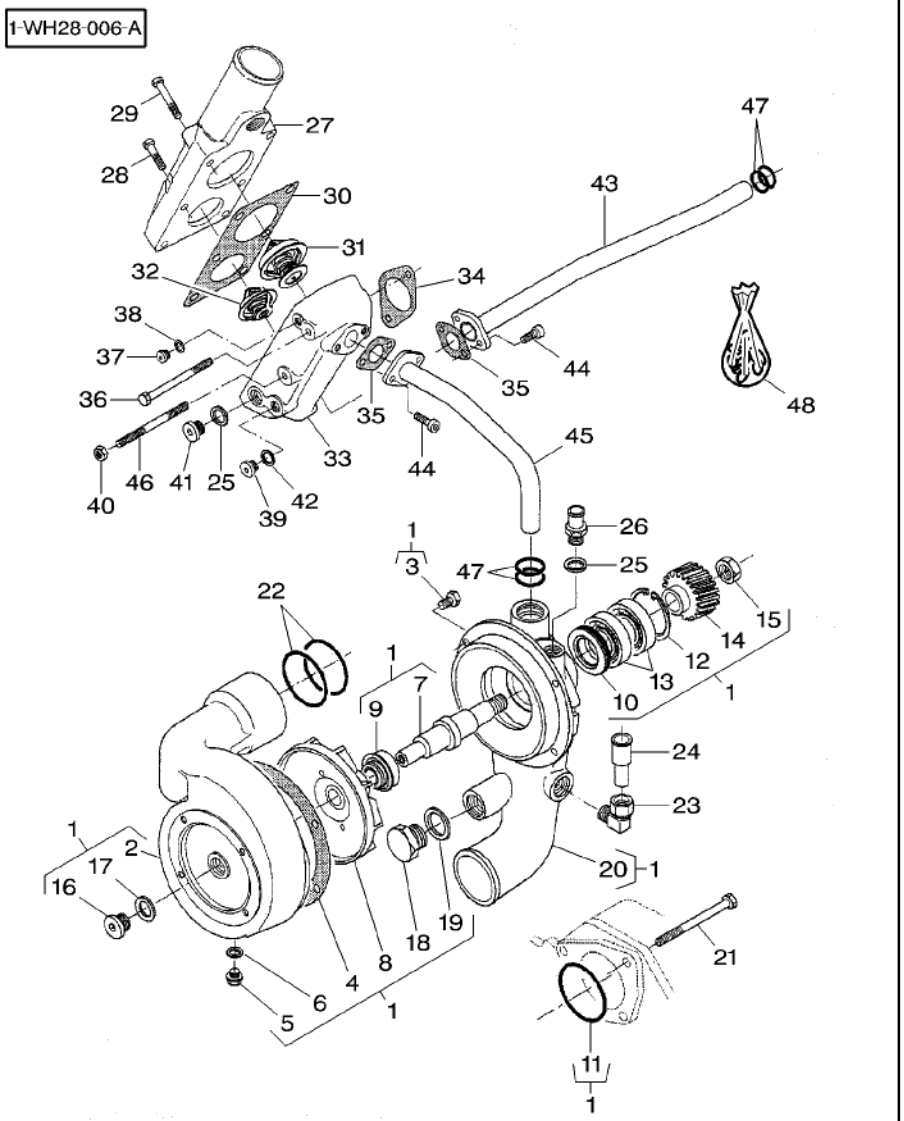

27	V836855777		1	PIPE	TUYAU TUBO	ROHRLEITUNG CANO
28	V529801430	M8 X 40	4	SCREW	VIS VITE	SCHRAUBE TORNILLO
29	V529801470	M8 X 60	2	SCREW	VIS VITE	SCHRAUBE TORNILLO
30	V836855603		1	GASKET	JOINT GUARNIZIONE	DICHTSCHEIBE EMPAQUETADURA.
31	***V836331590***		1	THERMOSTAT	THERMOSTAT TERMOSTATO	THERMOSTAT TERMOSTATO
32	***V836015156***		1	THERMOSTAT	THERMOSTAT TERMOSTATO	THERMOSTAT TERMOSTATO
33	V836855601		1	HOUSING	CARTER CARCASSA	GEHAEUSE ALOJAMIENTO
34	V836646393		1	GASKET	JOINT GUARNIZIONE	DICHTSCHEIBE EMPAQUETADURA.
35	V836322190		2	GASKET	JOINT GUARNIZIONE	DICHTSCHEIBE EMPAQUETADURA.
36	V529801550	M8 X 100	2	SCREW	VIS VITE	SCHRAUBE TORNILLO
37	V640325110		1	PLUG	BOUCHON TAPPO	VERSCHL.STOPFEN TAPON
38	V615871014		1	O RING	JOINT TORIQUE ANELLO TENUTA	O-RING ANILLO FORMA 'O'
39	V640325014		1	PLUG	BOUCHON TAPPO	VERSCHL.STOPFEN TAPON
40	V504800800	M8	1	NUT	ECROU DADO	MUTTER TUERCA
41	V640325018		1	PLUG	BOUCHON TAPPO	VERSCHL.STOPFEN TAPON
42	V615881418		1	SEAL	JOINT ETANCHEITE ANELLO RACCORD	DICHTRING ARENDELA D'JUNTA
43	V836855639		1	PIPE	TUYAU TUBO	ROHRLEITUNG CANO
44*	VHC9326	M8 X 20	4	SCREW	VIS VITE	SCHRAUBE TORNILLO
45	V836855672		1	PIPE	TUYAU TUBO	ROHRLEITUNG CANO
46	V546801580	M8 X 130	1	STUD	GOUJON PRIGIONIERO	STEHBOLZEN CHAVETA ROSCADO
47	V614602430		4	O RING	JOINT TORIQUE ANELLO TENUTA	O-RING ANILLO FORMA 'O'
48	V836862271		1	KIT, REPAIR	JEU REPARATION KIT RIPARAZIONE	REPARATURSATZ JUEGO REPARACION

Fuel Injection Equipment
Equipement D'Injection
Einspritzanlage
Impianto Iniezione Nafta
Equipo De Inyeccion Del Combustible

10-90

US

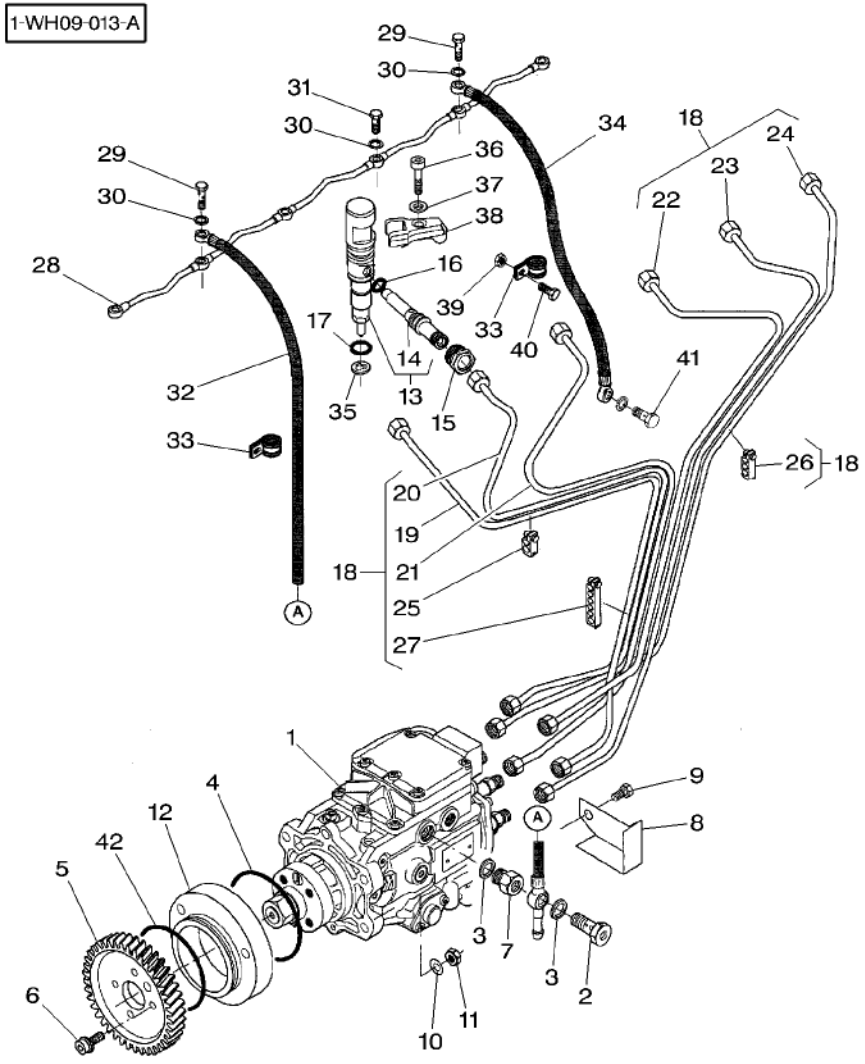

1	V836864609		1 INJECTION PUMP	POMPE INJECTION POMPA INIEZIONE	EINSPRITZPUMPE BOMBA INYECTORA
2	V836864679		1 PRESSURE VALVE	VALVE VALVOLA PRESSION	DRUCKVENTIL VALVULA PRESION
3	V615881418		3 SEAL	JOINT ETANCHEITE ANELLO RACCORD	DICHTRING ARENDELA D'JUNTA
4	V614606825		1 O RING	JOINT TORIQUE ANELLO TENUTA	O-RING ANILLO FORMA 'O'
5	V836866423		1 GEAR	ENGRENAGE INGRANAGGIO	ZAHNRAD ENGRANAJE
6	V588704620	M8X25	4 SCREW	VIS VITE	SCHRAUBE TORNILLO
7	V836336934		1 UNION	RACCORD RACCORDO	VERSCHRAUBUNG RACOR
8	V836866428		1 COVER	COUVERCLE COPERCHIO	DECKEL CUBIERTA
9	V528801342	M8X10	2 SCREW	VIS VITE	SCHRAUBE TORNILLO
10	V500151050		4 WASHER	RONDELLE RONDELLA	UNTERLEGSCHEIBE ARANDELA
11	V504601000		4 NUT	ECROU DADO	MUTTER TUERCA
12	V836866424	M10X30	1 SPACER	ENTRETOISE DISTANZIALE	ABSTANDSTUECK DISCO ESPACIADOR
13	V837067322	278 Bar 10-100 No 1	6 INJECTOR	ATOMISEUR INIETTORE COMPLT	EINSPRITZDUESE INYECTOR
14	V837069304	13	6 NOZZLE	NEZ INJECTEUR INIETTORE	DUESE TOBERA
15	V837070129		6 WASHER	RONDELLE RONDELLA	UNTERLEGSCHEIBE ARANDELA
16	V837069314		6 RING	ANNEAU ANELLO	RING ARO
17	V837069313		6 SEAL	JOINT ETANCHEITE ANELLO RACCORD	DICHTRING ARENDELA D'JUNTA
18	V837064951		1 KIT, PIPE	JEU CANALISATION KIT TUBI	ROHRLEITUNGSATZ JUEGO CANO
19		18 CYL. 1	1 INJECTION PIPE	TUYAU INJECTION TUBO INIEZIONE	EINSPRITZLEITUNG TUBO D INYECCION
20		18 CYL. 2	1 INJECTION PIPE	TUYAU INJECTION TUBO INIEZIONE	EINSPRITZLEITUNG TUBO D INYECCION
21		18 CYL. 3	1 INJECTION PIPE	TUYAU INJECTION TUBO INIEZIONE	EINSPRITZLEITUNG TUBO D INYECCION
22		18 CYL. 4	1 INJECTION PIPE	TUYAU INJECTION TUBO INIEZIONE	EINSPRITZLEITUNG TUBO D INYECCION
23		18 CYL. 5	1 INJECTION PIPE	TUYAU INJECTION TUBO INIEZIONE	EINSPRITZLEITUNG TUBO D INYECCION
24		18 CYL. 6	1 INJECTION PIPE	TUYAU INJECTION TUBO INIEZIONE	EINSPRITZLEITUNG TUBO D INYECCION
25	V836664517	18	1 CLAMP	COLLIER FASCETTA	HALTESCHELLE ABRAZADERA
26	V836664518	18	2 CLAMP	COLLIER FASCETTA	HALTESCHELLE ABRAZADERA

Fuel Injection Equipment
Equipement D'Injection
Einspritzanlage
Impianto Iniezione Nafta
Equipo De Inyeccion Del Combustible

10-90

US

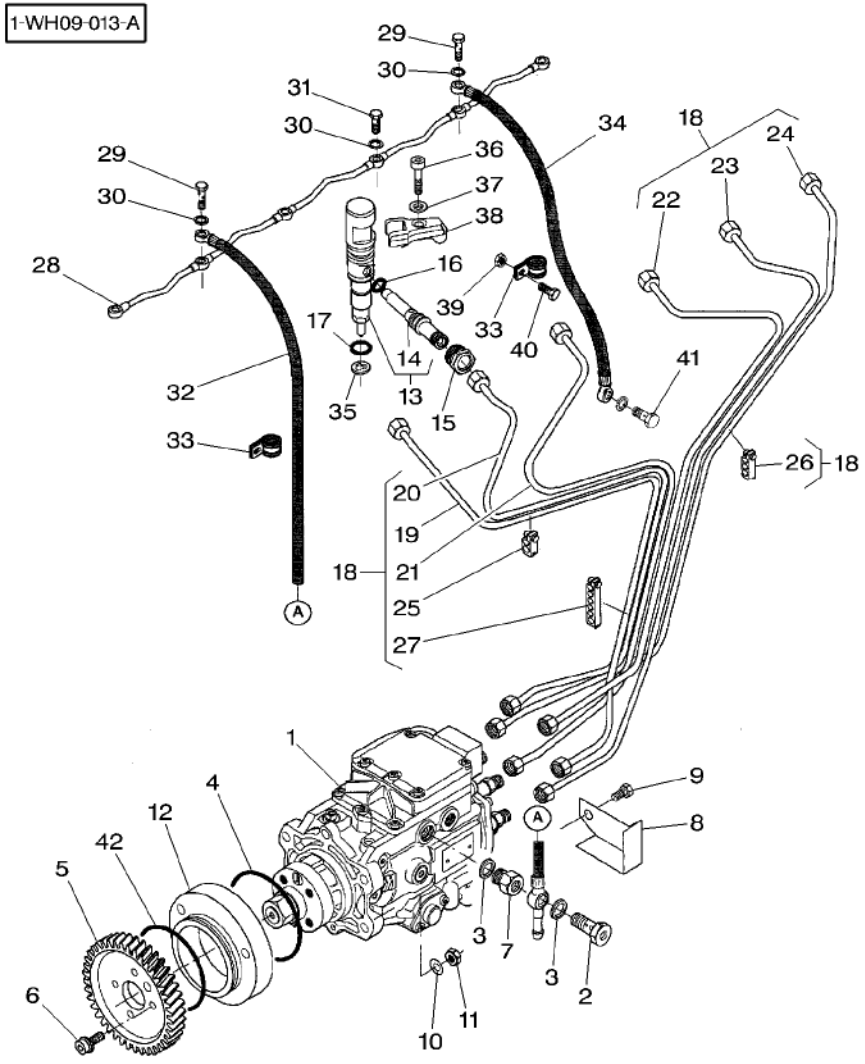

27	V836664521	18	2	CLAMP	COLLIER FASCETTA	HALTESCHELLE ABRAZADERA
28	V837069027		1	PIPE	TUYAU TUBO	ROHRLEITUNG CANO
29	V640425005		2	SCREW	VIS VITE	SCHRAUBE TORNILLO
30	V615870812		14	GASKET	JOINT GUARNIZIONE	DICHTSCHEIBE EMPAQUETADURA.
31	V640435005		4	SCREW	VIS VITE	SCHRAUBE TORNILLO
32	V836667572		1	PIPE	TUYAU TUBO	ROHRLEITUNG CANO
33	V602060612		2	FASTENER	AGRAFE LACCIO	HALTEKLAMMER CIERRE
34	V836667573		1	PIPE	TUYAU TUBO	ROHRLEITUNG CANO
35	V837069032		6	SEAL	JOINT ETANCHEITE ANELLO RACCORD	DICHTRING ARENDELA D'JUNTA
36	V581704660	M8X45	6	SCREW	VIS VITE	SCHRAUBE TORNILLO
37	V837070121		6	WASHER	RONDELLE RONDELLA	UNTERLEGSCHEIBE ARANDELA
38	V837069007		6	FASTENER	AGRAFE LACCIO	HALTEKLAMMER CIERRE
39	V504800800		1	NUT	ECROU DADO	MUTTER TUERCA
40	V528801380	M8X20	1	SCREW	VIS VITE	SCHRAUBE TORNILLO
41	V640435006	10-110 No 16	1	SCREW	VIS VITE	SCHRAUBE TORNILLO
42	V614707230		1	O RING	JOINT TORIQUE ANELLO TENUTA	O-RING ANILLO FORMA 'O'

Fuel Injection Equipment
Equipement D'Injection
Einspritzanlage
Impianto Iniezione Nafta
Equipo De Inyeccion Del Combustible

10-95

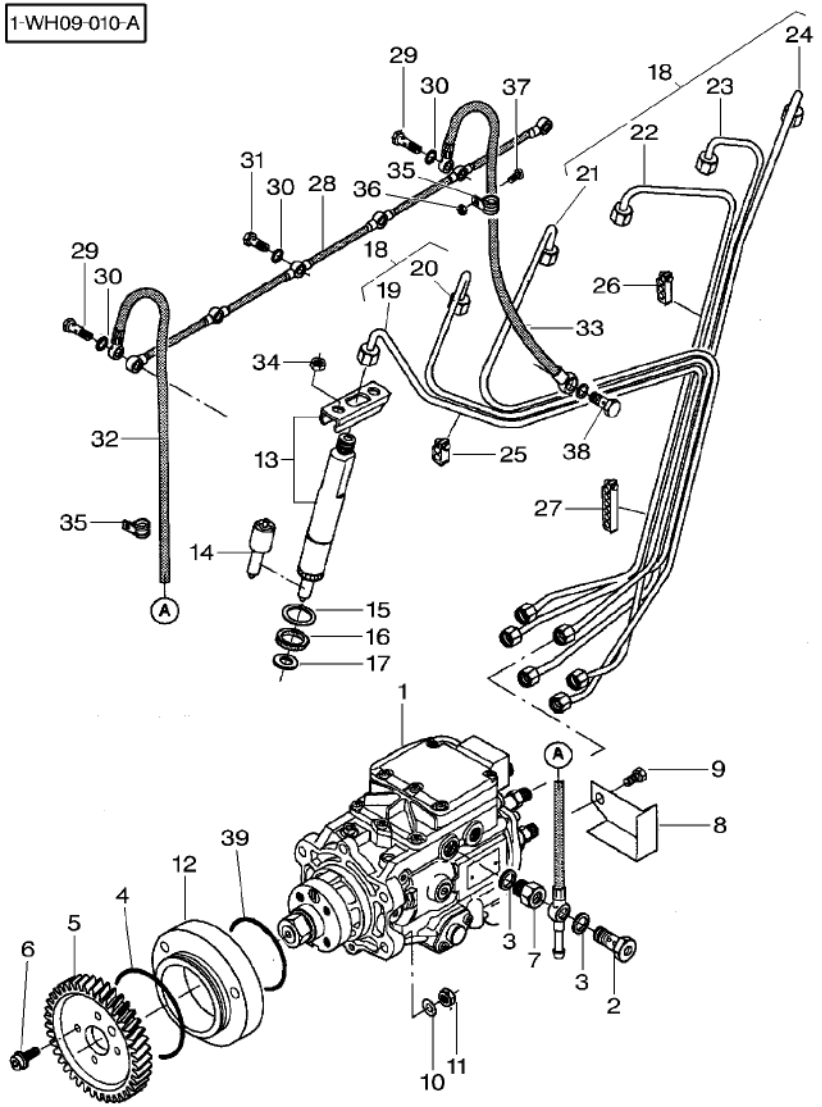

1	V836864609		1 INJECTION PUMP	POMPE INJECTION POMPA INIEZIONE	EINSPRITZPUMPE BOMBA INYECTORA
2	V836864679		1 PRESSURE VALVE	VALVE VALVOLA PRESSION	DRUCKVENTIL VALVULA PRESION
3	V615881418		3 SEAL	JOINT ETANCHEITE ANELLO RACCORD	DICHTRING ARENDELA D'JUNTA
4	V614707230		1 O RING	JOINT TORIQUE ANELLO TENUTA	O-RING ANILLO FORMA 'O'
5	V836866423		1 GEAR	ENGRENAGE INGRANAGGIO	ZAHNRAD ENGRANAJE
6	V588704620	M8 X 25	4 SCREW	VIS VITE	SCHRAUBE TORNILLO
7	V836336934		1 UNION	RACCORD RACCORDO	VERSCHRAUBUNG RACOR
8	V836866428		1 COVER	COUVERCLE COPERCHIO	DECKEL CUBIERTA
9	V528801342	M8 X 10	2 SCREW	VIS VITE	SCHRAUBE TORNILLO
10	V500151050		4 WASHER	RONDELLE RONDELLA	UNTERLEGSCHEIBE ARANDELA
11	V504601000	M10	4 NUT	ECROU DADO	MUTTER TUERCA
12	V836866424		1 SPACER	ENTRETOISE DISTANZIALE	ABSTANDSTUECK DISCO ESPACIADOR
13	V836854791		6 ATOMISER	INJECTEUR ATOMIZZATORE	ZERSTAEUBER ATOMIZADOR
14	V836854792	13 270 Bars	6 NOZZLE	NEZ INJECTEUR INIETTORE	DUESE TOBERA
15	***V836652170***		6 WASHER	RONDELLE RONDELLA	UNTERLEGSCHEIBE ARANDELA
16	***V835336276***		6 SEAL	JOINT ETANCHEITE ANELLO RACCORD	DICHTRING ARENDELA D'JUNTA
17	***V899901495***		6 WASHER	RONDELLE RONDELLA	UNTERLEGSCHEIBE ARANDELA
18	V836866426		1 KIT, PIPE	JEU CANALISATION KIT TUBI	ROHRLEITUNGSATZ JUEGO CANO
19		18 CYL. 1	1 INJECTION PIPE	TUYAU INJECTION TUBO INIEZIONE	EINSPRITZLEITUNG TUBO D INYECCION
20		18 CYL. 2	1 INJECTION PIPE	TUYAU INJECTION TUBO INIEZIONE	EINSPRITZLEITUNG TUBO D INYECCION
21		18 CYL. 3	1 INJECTION PIPE	TUYAU INJECTION TUBO INIEZIONE	EINSPRITZLEITUNG TUBO D INYECCION
22		18 CYL. 4	1 INJECTION PIPE	TUYAU INJECTION TUBO INIEZIONE	EINSPRITZLEITUNG TUBO D INYECCION
23		18 CYL. 5	1 INJECTION PIPE	TUYAU INJECTION TUBO INIEZIONE	EINSPRITZLEITUNG TUBO D INYECCION
24		18 CYL. 6	1 INJECTION PIPE	TUYAU INJECTION TUBO INIEZIONE	EINSPRITZLEITUNG TUBO D INYECCION
25	V836664517	18	1 CLAMP	COLLIER FASCETTA	HALTESCHELLE ABRAZADERA
26	V836664518	18	2 CLAMP	COLLIER FASCETTA	HALTESCHELLE ABRAZADERA

Fuel Injection Equipment
Equipement D'Injection
Einspritzanlage
Impianto Iniezione Nafta
Equipo De Inyeccion Del Combustible

10-95

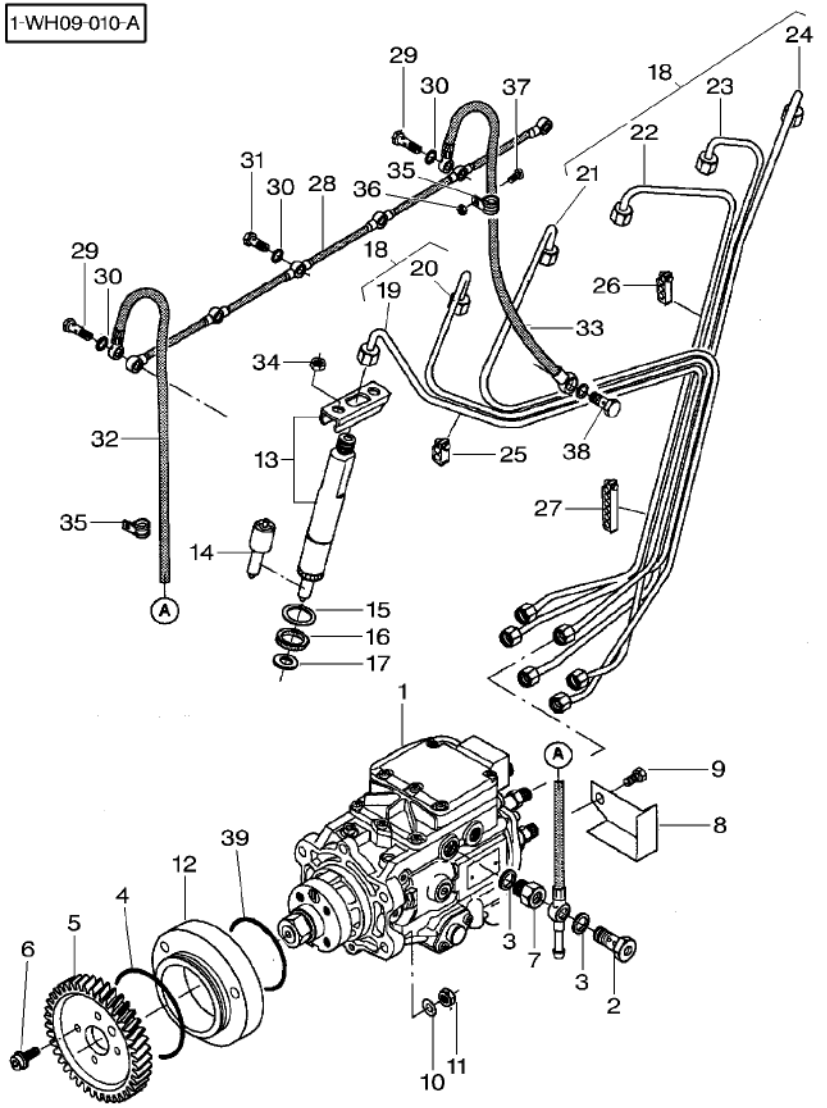

27	V836664521	18	2	CLAMP	COLLIER FASCETTA	HALTESCHELLE ABRAZADERA
28	V836847522	18	1	PIPE	TUYAU TUBO	ROHRLEITUNG CANO
29	V835336943		2	SCREW	VIS VITE	SCHRAUBE TORNILLO
30	***V615870610***		14	SEAL	JOINT ETANCHEITE ANELLO RACCORD	DICHTRING ARENDELA D'JUNTA
31	V835331289		4	SCREW	VIS VITE	SCHRAUBE TORNILLO
32	V836666647		1	PIPE	TUYAU TUBO	ROHRLEITUNG CANO
33	V836666512		1	PIPE	TUYAU TUBO	ROHRLEITUNG CANO
34	V504800800	M8	12	NUT	ECROU DADO	MUTTER TUERCA
35	V602069813		2	CLAMP	COLLIER FASCETTA	HALTESCHELLE ABRAZADERA
36	V504600502	M5	1	NUT	ECROU DADO	MUTTER TUERCA
37	V572503372	M5 X 12	1	SCREW	VIS VITE	SCHRAUBE TORNILLO
38*	V640435006	10-110 No 16	1	SCREW	VIS VITE	SCHRAUBE TORNILLO
39	V614606825		1	O RING	JOINT TORIQUE ANELLO TENUTA	O-RING ANILLO FORMA 'O'

Fuel Injection Equipment
Equipement D'Injection
Einspritzanlage
Impianto Iniezione Nafta
Equipo De Inyeccion Del Combustible

10-100 US

1-WH09-012-A

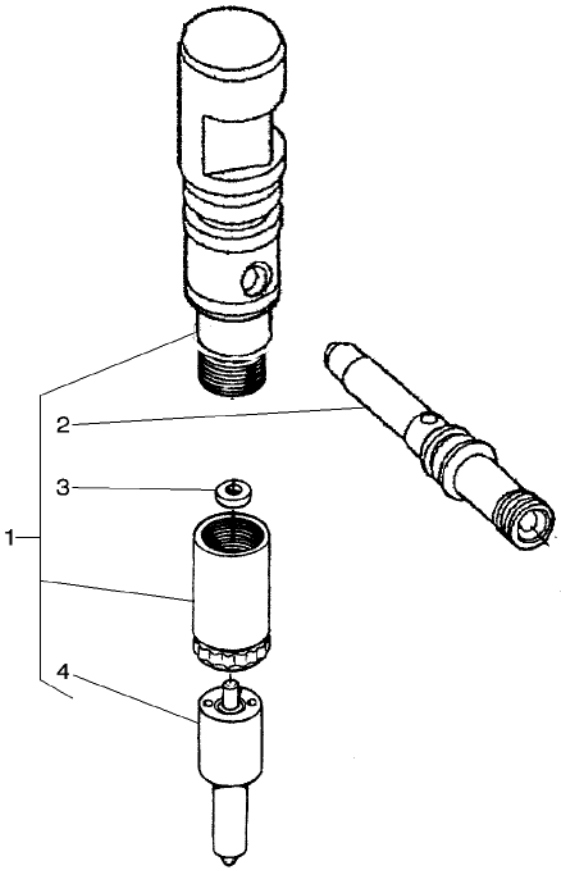

1	V837067322	278 Bar	1	INJECTOR	ATOMISEUR INIETTORE COMPLT	EINSPRITZDUESE INYECTOR
2	V837069304	1	1	NOZZLE	NEZ INJECTEUR INIETTORE	DUESE TOBERA
3	V837062588	1 ⧗ 0,10 MM	X	WASHER	RONDELLE RONDELLA	UNTERLEGSCHEIBE ARANDELA
3	V837062589	1 ⧗ 0,15 MM	X	WASHER	RONDELLE RONDELLA	UNTERLEGSCHEIBE ARANDELA
3	V837062590	1 ⧗ 0,20 MM	X	WASHER	RONDELLE RONDELLA	UNTERLEGSCHEIBE ARANDELA
3	V837062591	1 ⧗ 0,30 MM	X	WASHER	RONDELLE RONDELLA	UNTERLEGSCHEIBE ARANDELA
4	V837062581	1	1	NOZZLE	NEZ INJECTEUR INIETTORE	DUESE TOBERA

Fuel Injection Equipment
Equipement D'Injection
Einspritzanlage
Impianto Iniezione Nafta
Equipo De Inyeccion Del Combustible

10-105

1-WH09-002-A

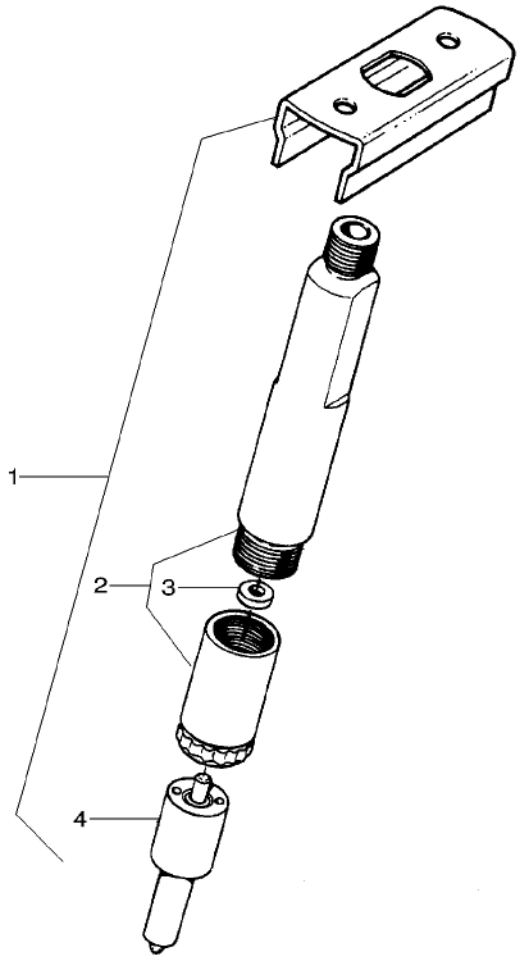

1*	V836854791		1	ATOMISER	INJECTEUR ATOMIZZATORE	ZERSTAEUBER ATOMIZADOR
2		1 REF. 1	1	BODY	CORPS CORPO	RUMPF CUERPO
3	V836862000	2 1,00 MM	X	CHOCK	CALE PASSACAVO	UNTERLEG-KEIL CALZA
3	V836862001	2 1,05 MM	X	CHOCK	CALE PASSACAVO	UNTERLEG-KEIL CALZA
3	V836862002	2 1,10 MM	X	CHOCK	CALE PASSACAVO	UNTERLEG-KEIL CALZA
3	V836862003	2 1,15 MM	X	CHOCK	CALE PASSACAVO	UNTERLEG-KEIL CALZA
3	V836862004	2 1,20 MM	X	CHOCK	CALE PASSACAVO	UNTERLEG-KEIL CALZA
3	V836862005	2 1,25 MM	X	CHOCK	CALE PASSACAVO	UNTERLEG-KEIL CALZA
3	V836862006	2 1,30 MM	X	CHOCK	CALE PASSACAVO	UNTERLEG-KEIL CALZA
3	V836862007	2 1,35 MM	X	CHOCK	CALE PASSACAVO	UNTERLEG-KEIL CALZA
3	V836862008	2 1,40 MM	X	CHOCK	CALE PASSACAVO	UNTERLEG-KEIL CALZA
3	V836862009	2 1,45 MM	X	CHOCK	CALE PASSACAVO	UNTERLEG-KEIL CALZA
3	V836862010	2 1,50 MM	X	CHOCK	CALE PASSACAVO	UNTERLEG-KEIL CALZA
3	V836862011	2 1,55 MM	X	CHOCK	CALE PASSACAVO	UNTERLEG-KEIL CALZA
3	V836862012	2 1,60 MM	X	CHOCK	CALE PASSACAVO	UNTERLEG-KEIL CALZA
3	V836862013	2 1,65 MM	X	CHOCK	CALE PASSACAVO	UNTERLEG-KEIL CALZA
3	V836862014	2 1,70 MM	X	CHOCK	CALE PASSACAVO	UNTERLEG-KEIL CALZA
3	V836862015	2 1,75 MM	X	CHOCK	CALE PASSACAVO	UNTERLEG-KEIL CALZA
3	V836862016	2 1,80 MM	X	CHOCK	CALE PASSACAVO	UNTERLEG-KEIL CALZA
3	V836862017	2 1,85 MM	X	CHOCK	CALE PASSACAVO	UNTERLEG-KEIL CALZA
3	V836862018	2 1,90 MM	X	CHOCK	CALE PASSACAVO	UNTERLEG-KEIL CALZA
3	V836862019	2 1,95 MM	X	CHOCK	CALE PASSACAVO	UNTERLEG-KEIL CALZA
4*	V836854792	1	1	NOZZLE	NEZ INJECTEUR INIETTORE	DUESE TOBERA

Low Pressure Fuel System
Circuit Carburant Basse Pression
Kraftstoff–Niederdruckanlage
Sistema Nafta A Bassa Pressione
Sistema De Combustible A Baja Presion

10-110

1-WH14-007-B

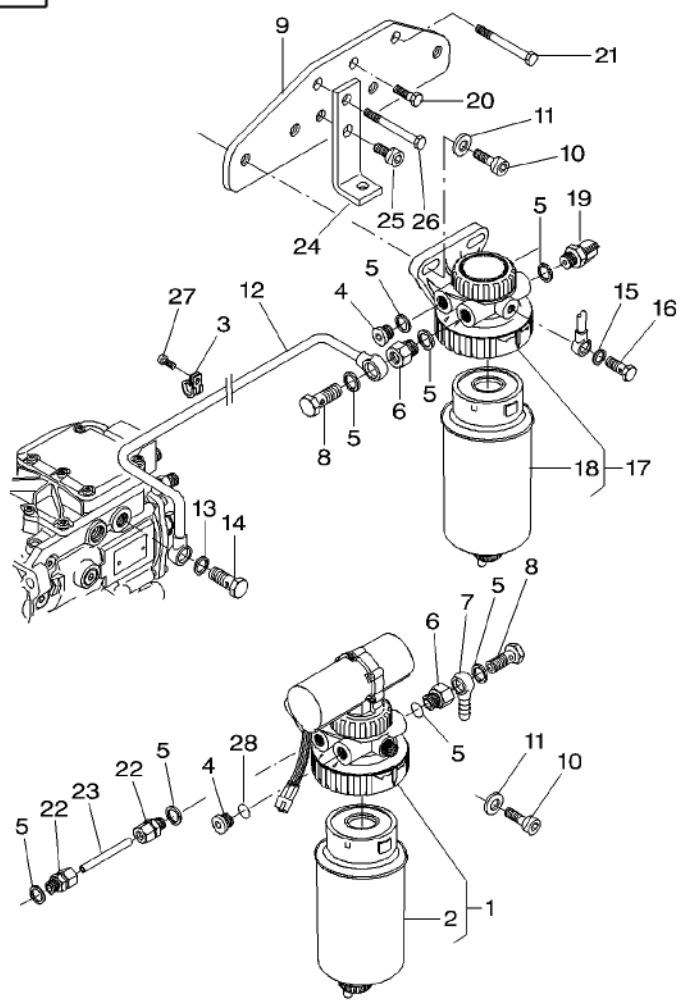

1*	V836867383	(US)	1	PRE CLEANER	PREFILTRE PREDEPURATORE	VORREINIG.SIEB PRELIMPIADOR
1*	V836867232	(US)	1	PRE CLEANER	PREFILTRE PREDEPURATORE	VORREINIG.SIEB PRELIMPIADOR
2*	***V836862600***	1 (US)	1	FUEL FILTER	FILTRE CARBURANT FILTRO NAFTA	KRAFTSTOFFILTER FILTRO GAS OIL
2*	***V836867233***	1 (US)	1	FUEL ELEMENT	ELEMENTCARBURANT ELEM.CARBURANTE	FILTEREINSATZ. ELEMENTO GASOLEO
3	V602074608		1	CLAMP	COLLIER FASCETTA	HALTESCHELLE ABRAZADERA
4	V640325014		3	PLUG	BOUCHON TAPPO	VERSCHL.STOPFEN TAPON
5	V615881420		10	GASKET	JOINT GUARNIZIONE	DICHTSCHEIBE EMPAQUETADURA.
6	V836336934		2	UNION	RACCORD RACCORDO	VERSCHRAUBUNG RACOR
7	V640255210		1	PIPE	TUYAU TUBO	ROHRLEITUNG CANO
8	V640435010		2	SCREW	VIS VITE	SCHRAUBE TORNILLO
9	V836866481		1	BRACKET	SUPPORT FIXATION STAFFETTA	HALTEARM SOPORTE
10	V581705030	M10 X 30	4	SCREW	VIS VITE	SCHRAUBE TORNILLO
11	V836122910		4	WASHER	RONDELLE RONDELLA	UNTERLEGSCHEIBE ARANDELA
12	V836866791		1	FUEL PIPE	TUYAU CARBURANT TUBO NAFTA	KRAFTST.LEITUNG TUBO COMBUSTIBLE
13	V615881216		2	GASKET	JOINT GUARNIZIONE	DICHTSCHEIBE EMPAQUETADURA.
14	V640435008		1	SCREW	VIS VITE	SCHRAUBE TORNILLO
15	V615571014		2	SEAL	JOINT ETANCHEITE ANELLO RACCORD	DICHTRING ARENDELA D'JUNTA
16	V640435006		1	SCREW	VIS VITE	SCHRAUBE TORNILLO
17*	V836866306	(US)	1	FUEL FILTER	FILTRE CARBURANT FILTRO NAFTA	KRAFTSTOFFILTER FILTRO GAS OIL
17*	V836867230	(US)	1	FUEL FILTER	FILTRE CARBURANT FILTRO NAFTA	KRAFTSTOFFILTER FILTRO GAS OIL
18*	***V836862602***	17 (US)	1	FUEL FILTER	FILTRE CARBURANT FILTRO NAFTA	KRAFTSTOFFILTER FILTRO GAS OIL
18*	***V836867231***	17 (US)	1	FUEL ELEMENT	ELEMENTCARBURANT ELEM.CARBURANTE	FILTEREINSATZ. ELEMENTO GASOLEO
19	***V836666797***	0,05–0,2 Bars	1	SENSOR	DETECTEUR SENSORE	EMPFANGER DETECTOR
20	V528801380	M8 X 20	1	SCREW	VIS VITE	SCHRAUBE TORNILLO
21	V529801530	M8 X 90	1	SCREW	VIS VITE	SCHRAUBE TORNILLO
22	V641086010		2	UNION	RACCORD RACCORDO	VERSCHRAUBUNG RACOR

Low Pressure Fuel System
Circuit Carburant Basse Pression
Kraftstoff–Niederdruckanlage
Sistema Nafta A Bassa Pressione
Sistema De Combustible A Baja Presion

10-110

1-WH14-007-B

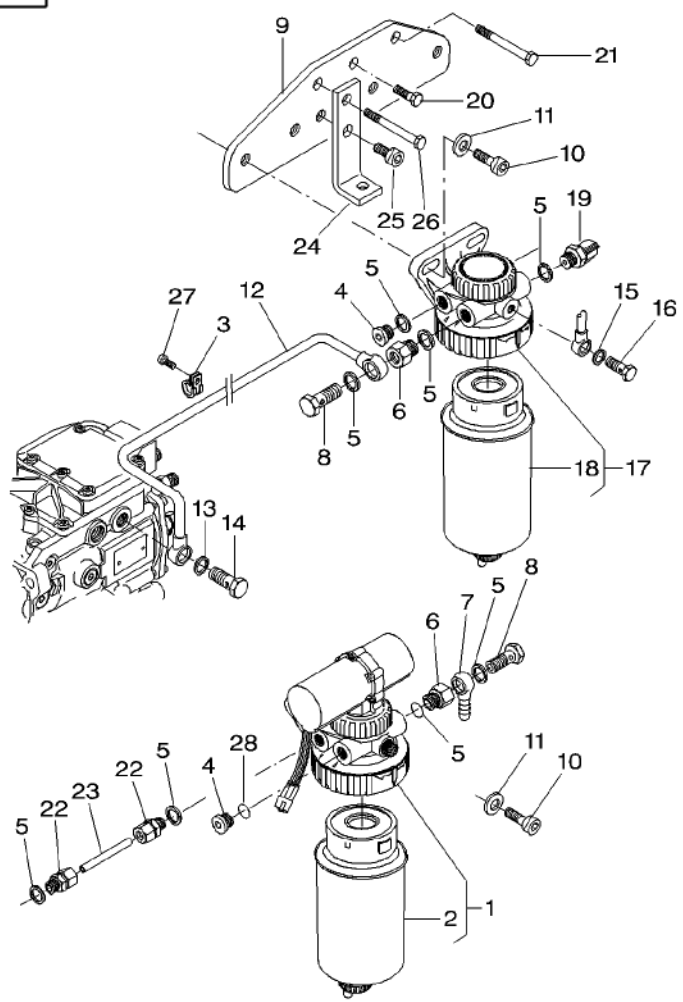

23	V836866644		1	PIPE	TUYAU TUBO	ROHRLEITUNG CANO
24	V836866418		1	SUPPORT	SUPPORT SUPPORTO	LAGERUNG DISPOS.DE SOSTEN
25	V528801760	M10 X 16	1	SCREW	VIS VITE	SCHRAUBE TORNILLO
26	V529801550	M8 X 95	1	SCREW	VIS VITE	SCHRAUBE TORNILLO
27	V581804182	M6 X 16	1	SCREW	VIS VITE	SCHRAUBE TORNILLO
28	V614601125		2	O RING	JOINT TORIQUE ANELLO TENUTA	O–RING ANILLO FORMA 'O'

Air Induction And Exhaust System
Admission D'Air Et Echappement
Luftansaugung Und Auspuff
Sistema Di Aspirazione E Sistema Di Scarico
Admision Y Escape

10-115 US

1-WH18-008-A

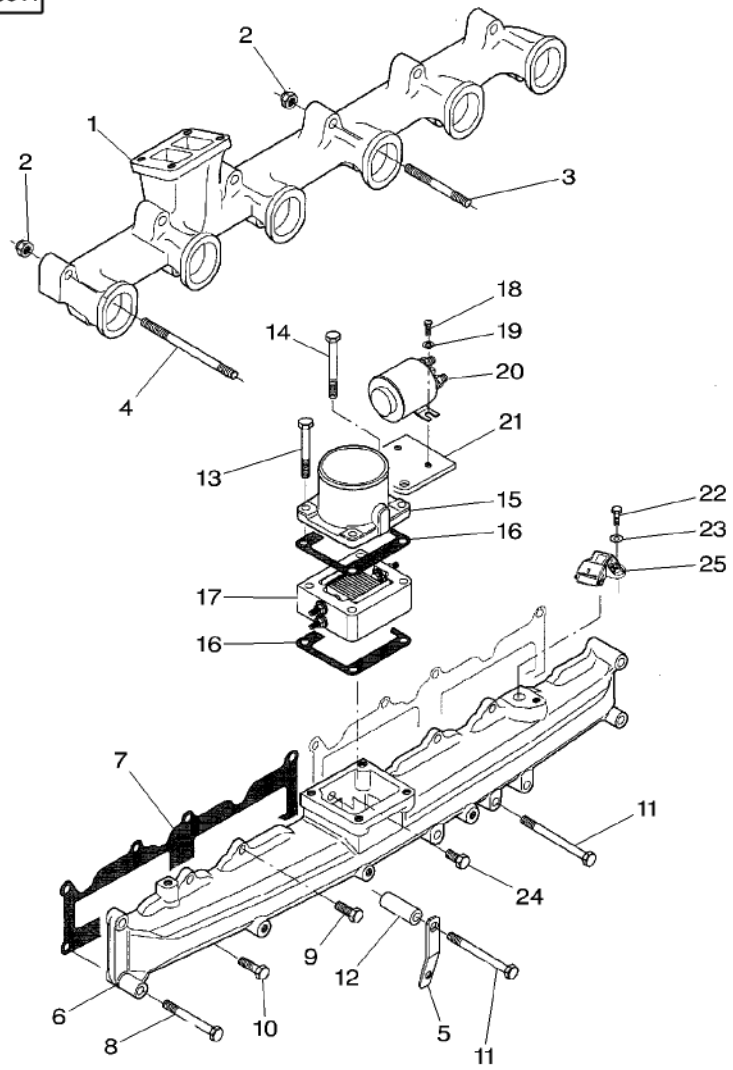

1	V836859378		1	EXHAUST MANIFOLD	COLLECTEUR ECH COLLETTORE SCAR.	AUSPUFFKRUEMMER COLECTOR ESCAPE
2	V513601002		12	NUT	ECROU DADO	MUTTER TUERCA
3	V836855995	M10X113	5	STUD	GOUJON PRIGIONIERO	STEHBOLZEN CHAVETA ROSCADO
4	V836859034	M10X130	7	STUD	GOUJON PRIGIONIERO	STEHBOLZEN CHAVETA ROSCADO
5	V836659276		1	SUPPORT	SUPPORT SUPPORTO	LAGERUNG DISPOS.DE SOSTEN
6	V837069008		1	IND.MANIFOLD	COLLECTEUR ADM COLLETTORE ASP.	ANSAUGKRUEMMER MULTPLE ADMISION
7	V837069009		2	GASKET	JOINT GUARNIZIONE	DICHTSCHEIBE EMPAQUETADURA.
8	V529801470	M8X60	3	SCREW	VIS VITE	SCHRAUBE TORNILLO
9	V528801400	M8X25	4	SCREW	VIS VITE	SCHRAUBE TORNILLO
10	V528801410	M8X30	4	ADJUSTING SCREW	VIS REGLAGE VITE DI REGOLAZ.	EINSTELLSCHRAUBE TORNILLO AJUSTA
11	V529801510	M8X80	3	SCREW	VIS VITE	SCHRAUBE TORNILLO
12	V836866960		1	DISTANCE PIECE	PIECE ENTRETOISE DISTANZIATORE	DISTANZSTUECK ESPACIADOR
13	V529801480	M8X65	2	SCREW	VIS VITE	SCHRAUBE TORNILLO
14	V529801490	M8X70	2	SCREW	VIS VITE	SCHRAUBE TORNILLO
15	V837067404		1	PIPE	TUYAU TUBO	ROHRLEITUNG CANO
16	V837067345		2	GASKET	JOINT GUARNIZIONE	DICHTSCHEIBE EMPAQUETADURA.
17	V837067295		1	HEATER	CHAUFFAGE RISCALDAMENTO	HEIZUNG CALENTADOR
18	V528800762	M5X16	2	SCREW	VIS VITE	SCHRAUBE TORNILLO
19	V500150532		2	WASHER	RONDELLE RONDELLA	UNTERLEGSCHEIBE ARANDELA
20	V836666759	12V	1	SOLENOID	SOLENOIDE SOLENOIDE	MAGNETSPULE SOLENOIDE
21	V837064956		1	BRACKET	SUPPORT FIXATION STAFFETTA	HALTEARM SOPORTE
22	V528801080	M6X20	1	SCREW	VIS VITE	SCHRAUBE TORNILLO
23	V500050642		1	WASHER	RONDELLE RONDELLA	UNTERLEGSCHEIBE ARANDELA
24	V528801380	M8X20	1	SCREW	VIS VITE	SCHRAUBE TORNILLO
25	***V836666980***		1	SENSOR	DETECTEUR SENSORE	EMPFANGER DETECTOR

Air Induction And Exhaust System
Admission D'Air Et Echappement
Luftansaugung Und Auspuff
Sistema Di Aspirazione E Sistema Di Scarico
Admision Y Escape

10-120

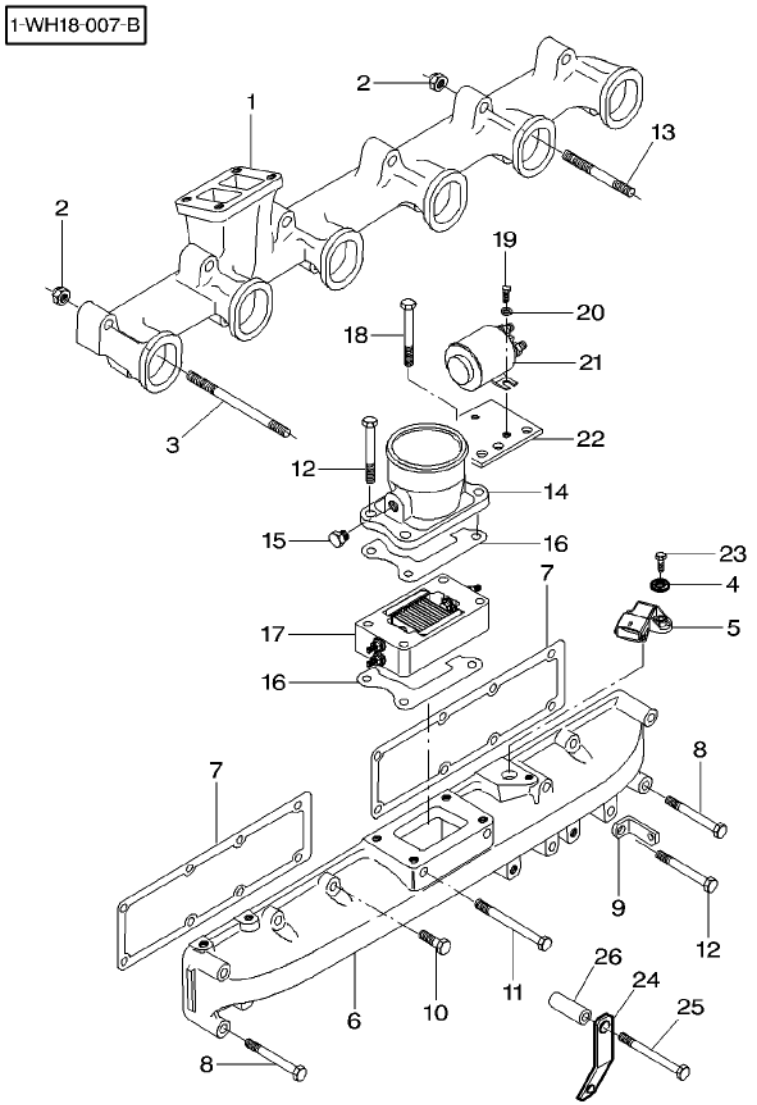

1	V836859378		1	EXHAUST MANIFOLD	COLLECTEUR ECH COLLETTORE SCAR.	AUSPUFFKRUEMMER COLECTOR ESCAPE
2	V513601002		12	NUT	ECROU DADO	MUTTER TUERCA
3	V836859034	M10 X 130	3	STUD	GOUJON PRIGIONIERO	STEHBOLZEN CHAVETA ROSCADO
4	V500050642		1	WASHER	RONDELLE RONDELLA	UNTERLEGSCHEIBE ARANDELA
5	***V836666980***	10-140 No 4	1	SENSOR	DETECTEUR SENSORE	EMPFANGER DETECTOR
6	V836866827		1	IND.MANIFOLD	COLLECTEUR ADM COLLETTORE ASP.	ANSAUGKRUEMMER MULTPLE ADMISION
7	V836847496		2	GASKET	JOINT GUARNIZIONE	DICHTSCHEIBE EMPAQUETADURA.
8	V529801470	M8 X 60	3	SCREW	VIS VITE	SCHRAUBE TORNILLO
9	V836338662		1	SUPPORT	SUPPORT SUPPORTO	LAGERUNG DISPOS.DE SOSTEN
10*	V528801410	M8 X 30	4	ADJUSTING SCREW	VIS REGLAGE VITE DI REGOLAZ.	EINSTELLSCHRAUBE TORNILLO AJUSTA
11	V529801530	M8 X 90	2	SCREW	VIS VITE	SCHRAUBE TORNILLO
12	V529801480	M8 X 65	3	SCREW	VIS VITE	SCHRAUBE TORNILLO
13	V836855995	M10 X 113	9	STUD	GOUJON PRIGIONIERO	STEHBOLZEN CHAVETA ROSCADO
14	V836866152		1	PIPE	TUYAU TUBO	ROHRLEITUNG CANO
15	V640305012		1	PLUG	BOUCHON TAPPO	VERSCHL.STOPFEN TAPON
16	V836847532		2	GASKET	JOINT GUARNIZIONE	DICHTSCHEIBE EMPAQUETADURA.
17	***V836864398***		1	HEATER	CHAUFFAGE RISCALDAMENTO	HEIZUNG CALENTADOR
18	V529801490	M8 X 70	2	SCREW	VIS VITE	SCHRAUBE TORNILLO
19	V528800762	M5 X 16	2	SCREW	VIS VITE	SCHRAUBE TORNILLO
20	V500150532		2	WASHER	RONDELLE RONDELLA	UNTERLEGSCHEIBE ARANDELA
21	V836666759	12V	1	SOLENOID	SOLENOIDE SOLENOIDE	MAGNETSPULE SOLENOIDE
22	V836866699		1	BRACKET	SUPPORT FIXATION STAFFETTA	HALTEARM SOPORTE
23	V528801080	M6 X 20	1	SCREW	VIS VITE	SCHRAUBE TORNILLO
24	V836659276		1	SUPPORT	SUPPORT SUPPORTO	LAGERUNG DISPOS.DE SOSTEN
25*	V529801520	M8 X 85	1	SCREW	VIS VITE	SCHRAUBE TORNILLO
26*	V836866960		1	DISTANCE PIECE	PIECE ENTRETOISE DISTANZIATORE	DISTANZSTUECK ESPACIADOR

Turbocharger Turbocompresseur Turbolader Turbocompressore Turbo-Soplador	Pipes Canalisations Rohre Tubo Tubos	10-125

1-WH24-003-A

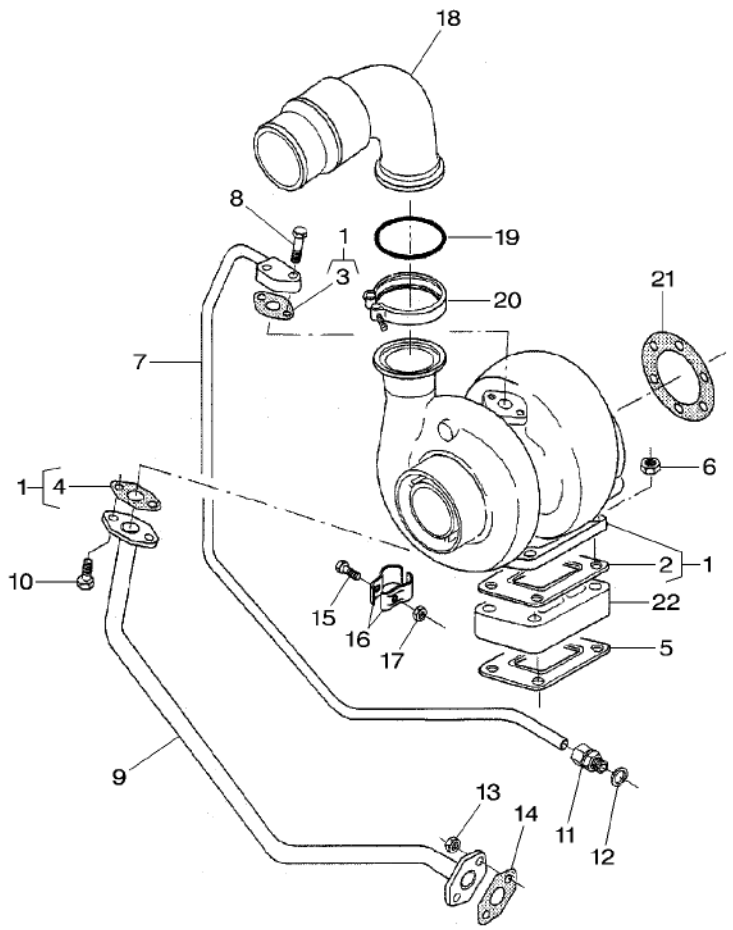

1	V836866221		1	TURBOCHARGER	TURBOCOMPRESSEUR TURBOCOMPRESSORE	TURBOLADER TURBOCOMPRESOR
2	V836316726	1	1	GASKET	JOINT GUARNIZIONE	DICHTSCHEIBE EMPAQUETADURA.
3	V836308344	1	1	JOINT.	JOINT PLAT GIUNTO	DICHTUNG JUNTA
4	V836324580	1	1	JOINT.	JOINT PLAT GIUNTO	DICHTUNG JUNTA
5	V836316726		1	GASKET	JOINT GUARNIZIONE	DICHTSCHEIBE EMPAQUETADURA.
6	V521601000	M10	4	NUT	ECROU DADO	MUTTER TUERCA
7	V836859493		1	EXHAUST PIPE	TUBE ECHAPPEMENT TUBO SCARICO	AUSPUFFROHR CONDUCTO ESCAPE
8	V528801410	M8 X 30	2	ADJUSTING SCREW	VIS REGLAGE VITE DI REGOLAZ.	EINSTELLSCHRAUBE TORNILLO AJUSTA
9	V836859117		1	TUBE	TUBE TUBO	ROHR TUBO
10	V528801380	M8 X 20	2	SCREW	VIS VITE	SCHRAUBE TORNILLO
11	V641086012		1	UNION	RACCORD RACCORDO	VERSCHRAUBUNG RACOR
12	V615881620		1	SEAL	JOINT ETANCHEITE ANELLO RACCORD	DICHTRING ARENDELA D'JUNTA
13	V504800800		2	NUT	ECROU DADO	MUTTER TUERCA
14	V836324580		1	JOINT.	JOINT PLAT GIUNTO	DICHTUNG JUNTA
15	V529801112	M6 X 30	2	SCREW	VIS VITE	SCHRAUBE TORNILLO
16	V835324324		4	BRACKET	SUPPORT FIXATION STAFFETTA	HALTEARM SOPORTE
17	V504600602	M6	2	NUT	ECROU DADO	MUTTER TUERCA
18	V836866381		1	PIPE	TUYAU TUBO	ROHRLEITUNG CANO
19	V614606225		1	O RING	JOINT TORIQUE ANELLO TENUTA	O-RING ANILLO FORMA 'O'
20	V836866454		1	CLAMP	COLLIER FASCETTA	HALTESCHELLE ABRAZADERA
21	V836338985		1	GASKET	JOINT GUARNIZIONE	DICHTSCHEIBE EMPAQUETADURA.
22	V836855630		1	BRIDLE	BRIDE BRIGLIA	SPANNBAND BRIDA

Belt Tensioner
Tendeur De Courroies
Riemenspanner
Tendicinghia
Tensor De Correa

10-130

1-WH29-001-A

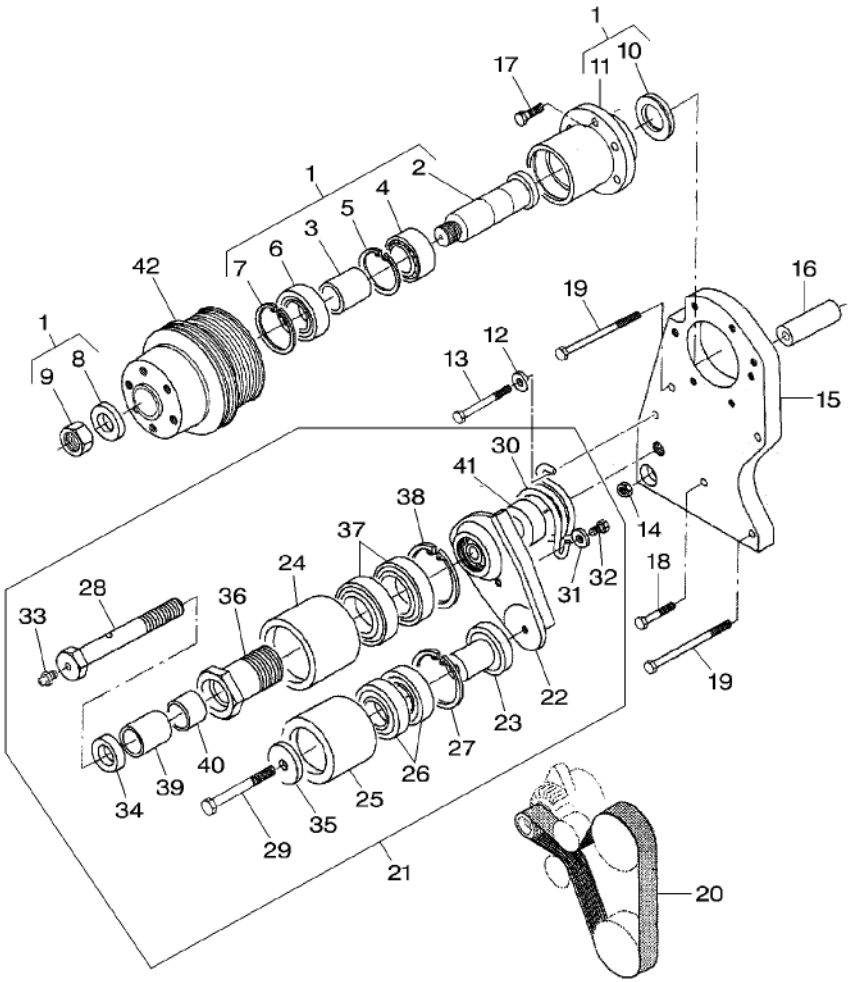

1	V836859119		1	KIT, SHAFT	JEU ARBRE KIT ALBERO	WELLEN-SATZ JUEGO DE ARBOL
2	V836859121	1	1	SHAFT	ARBRE ALBERO	WELLE ARBOL
3	V836859122	1	1	SLEEVE	MANCHON MANICOTTO	HUELSE MANCHA
4	V610032060	1	1	BEARING ASSY	ROULEMENT CUSCINETTO COMPL	RADIALLAGER RODAMIENTO RAD
5	V617350062	1	1	CIRCLIP	CIRCLIP ANNELLO ELASTICO	SEEGERING GRAPA CIRCULAR
6	V610063064	1	1	BEARING ASSY	ROULEMENT CUSCINETTO COMPL	RADIALLAGER RODAMIENTO RAD
7	V617330072	1	1	CIRCLIP	CIRCLIP ANNELLO ELASTICO	SEEGERING GRAPA CIRCULAR
8	V836855756	1	1	WASHER	RONDELLE RONDELLA	UNTERLEGSCHEIBE ARANDELA
9	V504602002	1	1	NUT	ECROU DADO	MUTTER TUERCA
10	V836529872	1	1	PLUG	BOUCHON TAPPO	VERSCHL.STOPFEN TAPON
11	V836859120	1	1	HUB	MOYEU MOZZO	NABE CUBO
12	V836120989		1	WASHER	RONDELLE RONDELLA	UNTERLEGSCHEIBE ARANDELA
13	V529801490	M8 X 70	1	SCREW	VIS VITE	SCHRAUBE TORNILLO
14	V504801000	M10	1	NUT	ECROU DADO	MUTTER TUERCA
15	V836859992		1	TENSIONER	TENDEUR TENDITORE	SPANNER TENSOR
16	V836855934		2	SLEEVE	MANCHON MANICOTTO	HUELSE MANCHA
17	V528801810	M10 X 30	6	SCREW	VIS VITE	SCHRAUBE TORNILLO
18	V529801470	M8 X 60	1	SCREW	VIS VITE	SCHRAUBE TORNILLO
19	V529801562	M8 X 110	3	SCREW	VIS VITE	SCHRAUBE TORNILLO
20★	*4275545M3*	◀▶ 1950 MM	1	BELT	COURROIE CINGHIA	RIEMEN CORREA
21	V836864296		1	TENSIONER	TENDEUR TENDITORE	SPANNER TENSOR
22	V836859347	21	1	SUPPORT	SUPPORT SUPPORTO	LAGERUNG DISPOS.DE SOSTEN
23	V836855789	21	1	SHAFT	ARBRE ALBERO	WELLE ARBOL
24	V836859683	21	1	ROLL	ROULEAU FRANGIZOLLE	WALZE RULO
25	V836855666	21	1	ROLL	ROULEAU FRANGIZOLLE	WALZE RULO
26	V610062055	21	2	BEARING ASSY	ROULEMENT CUSCINETTO COMPL	RADIALLAGER RODAMIENTO RAD

Belt Tensioner
Tendeur De Courroies
Riemenspanner
Tendicinghia
Tensor De Correa

10-130

1-WH29-001-A

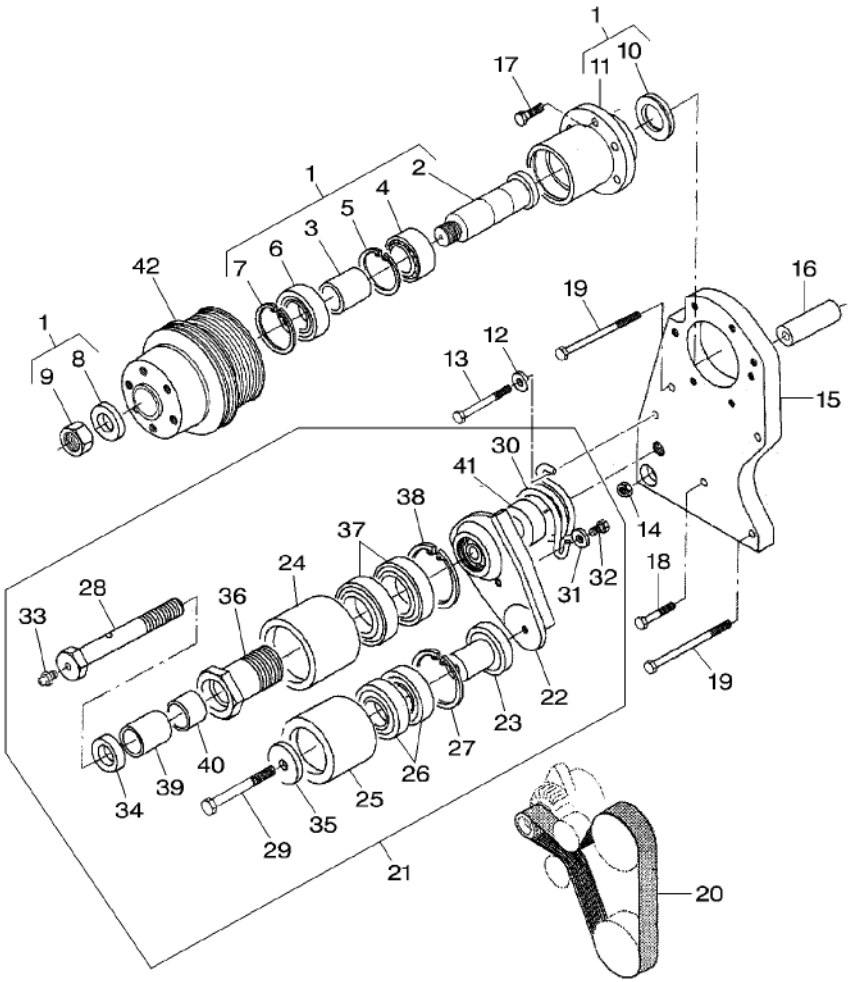

27	V617330052	21		1	CIRCLIP ANNELLO ELASTICO	CIRCLIP SEEGERING GRAPA CIRCULAR
28	V836859357	21		1	SCREW VITE	VIS SCHRAUBE TORNILLO
29	V529701880	21	M10 X 65	1	SCREW VITE	VIS SCHRAUBE TORNILLO
30	V836855689	21		1	SPRING MOLLA	RESSORT FEDER RESORTE
31	V836120989	21		1	WASHER RONDELLE RONDELLA	UNTERLEGSCHEIBE ARANDELA
32	V528801360	21	M8 X 16	1	SCREW VITE	VIS SCHRAUBE TORNILLO
33	V644611006	21		1	GREASER INGRASSATORE	GRAISSEUR FETTNIPPEL ENGRASADOR
34	V836859356	21		1	PLATE PIASTRA	PLAQUE PLATTE PLATO
35	V836855941	21		1	PLATE PIASTRA	PLAQUE PLATTE PLATO
36	V836859684	21		1	SHAFT ALBERO	ARBRE WELLE ARBOL
37	V610060085	21		2	BEARING ASSY CUSCINETTO COMPL	ROULEMENT RADIALLAGER RODAMIENTO RAD
38	V617330068	21		1	CIRCLIP ANNELLO ELASTICO	CIRCLIP SEEGERING GRAPA CIRCULAR
39	V836859364	21		1	BUSH BOCCOLA	BAGUE BUCHSE CASQUILLO
40	V836859363	21		1	BUSH BOCCOLA	BAGUE BUCHSE CASQUILLO
41	V836859348	21		1	SHAFT ALBERO	ARBRE WELLE ARBOL
42	V836867179			1	PULLEY PULEGGIA	POULIE RIEMENSCHEIBE POLEA

1-WH40-002A

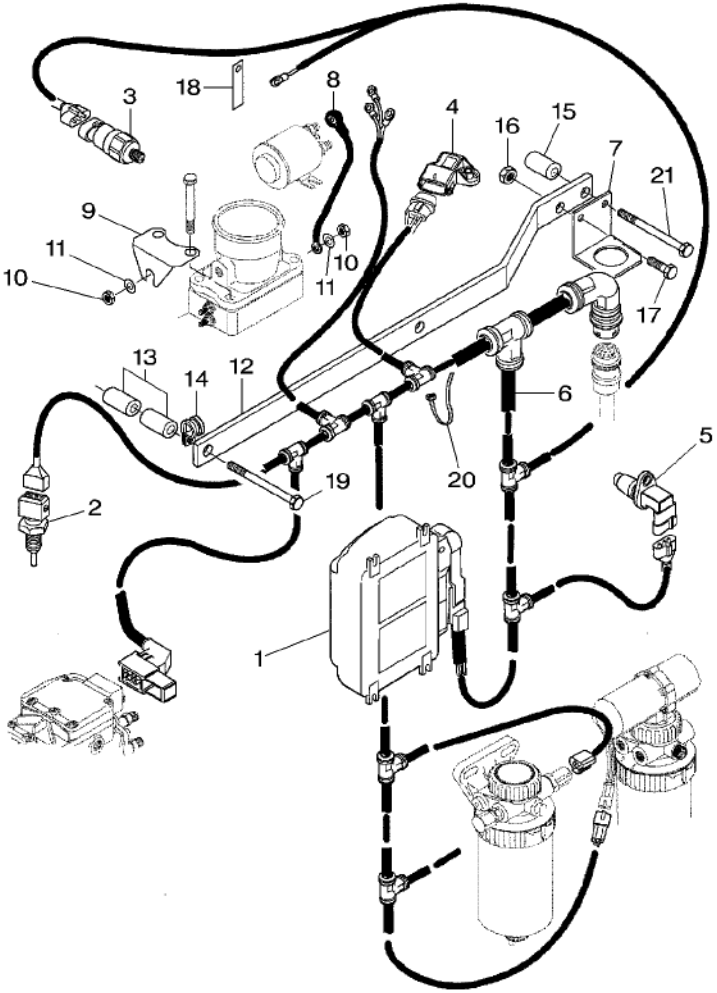

1	V836869300	MT 655B	1	CONTROL UNIT	UNITE DE CONTROL UNITA CONTROLLO KONTROLEINHEIT UNIDAD CONTROL
1	V836869298	MT 665B	1	CONTROL UNIT	UNITE DE CONTROL UNITA CONTROLLO KONTROLEINHEIT UNIDAD CONTROL
2	***V836864360***		1	TEMP. SENSOR	SONDE TEMPERATUR TEMP. SENSOR TEMPERATURGEBER EMISOR DEL CALOR
3	***V836866613***		1	SENSOR	DETECTEUR SENSORE EMPFANGER DETECTOR
4	***V836666980***		1	SENSOR	DETECTEUR SENSORE EMPFANGER DETECTOR
5	***V836866392***		1	ENG.SPEED SENSOR	CAPTEUR VIT MOT SENSORE GIRIMOTO SENSOR MOTORDREH SENSOR VEL.MOTOR
6	V836866955		1	KIT, HARNESS	JEU FAISCEAU KIT FASCIOCAVI KABELSTRANGSATZ JUEGO DE ARNES
7	V836866831		1	SUPPORT	SUPPORT SUPPORTO LAGERUNG DISPOS.DE SOSTEN
8	V836866713		1	WIRE	FIL CAVO ELETTRICO DRAHT HILO
9	V837070130		1	EARTH STRAP	FIL DE MASSE CAVO MASSA MASSELEITUNG CABLE TIERRA
10	V504600602		2	NUT	ECROU DADO MUTTER TUERCA
11	V500050642		2	WASHER	RONDELLE RONDELLA UNTERLEGSCHEIBE ARANDELA
12	V837064955		1	FASTENER	AGRAFE LACCIO HALTEKLAMMER CIERRE
13	V836659550	◄► 47MM	2	SLEEVE	MANCHON MANICOTTO HUELSE MANCHA
14	V602060612		1	FASTENER	AGRAFE LACCIO HALTEKLAMMER CIERRE
15	V836114846	◄► 22MM	1	BUSH	BAGUE BOCCOLA BUCHSE CASQUILLO
16	V504800800		1	NUT	ECROU DADO MUTTER TUERCA
17	V528801360	M8X16	1	SCREW	VIS VITE SCHRAUBE TORNILLO
18	V836083428		4	BAND	BANDE NASTRO BAND BANDA
19	V529801575	M8X125	1	SCREW	VIS VITE SCHRAUBE TORNILLO
20	V835329746		11	CABLE TIE	ATTACHE CABLE FASCETTA CAVI KABELBINDER APRIETACABLES
21	V529801530	M8X90	1	SCREW	VIS VITE SCHRAUBE TORNILLO

1-WH40-001-B

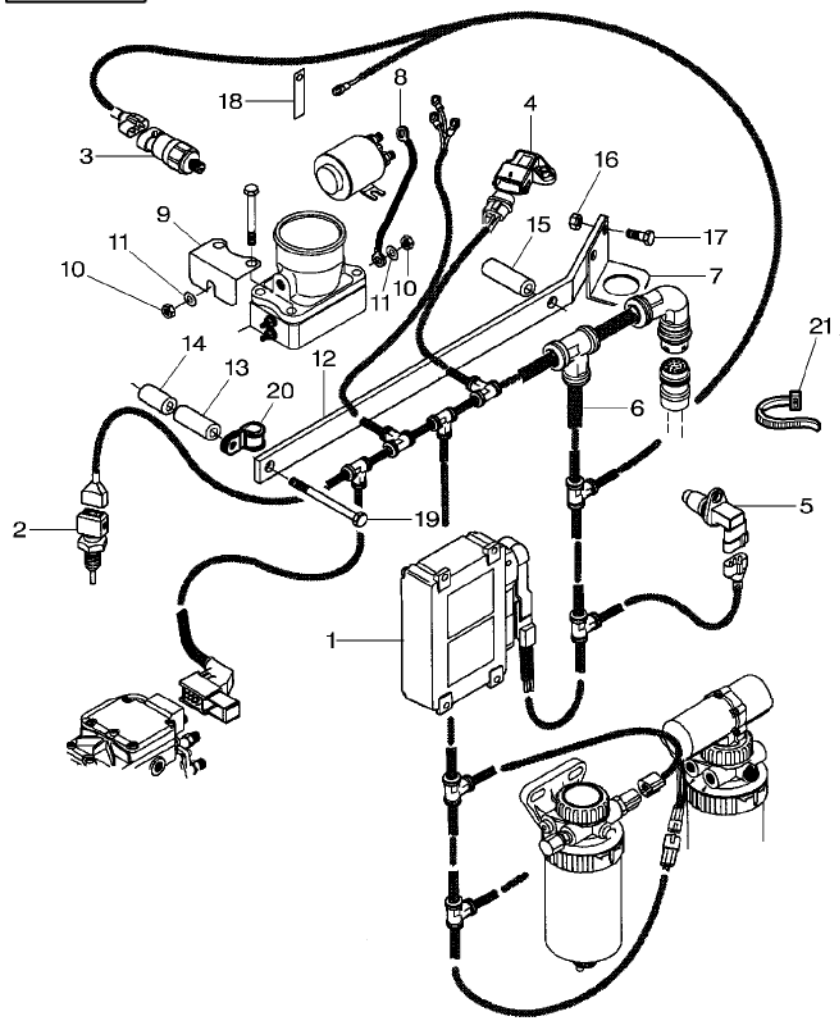

1*	V836864745	MT 655B	1	CONTROL UNIT	UNITE DE CONTROL UNITA CONTROLLO	KONTROLEINHEIT UNIDAD CONTROL
1*	V836869165	MT 665B	1	CONTROL UNIT	UNITE DE CONTROL UNITA CONTROLLO	KONTROLEINHEIT UNIDAD CONTROL
2	***V836864360***		1	TEMP. SENSOR	SONDE TEMPERATUR TEMP. SENSOR	TEMPERATURGEBER EMISOR DEL CALOR
3	***V836866613***		1	SENSOR	DETECTEUR SENSORE	EMPFANGER DETECTOR
4	***V836666980***		1	SENSOR	DETECTEUR SENSORE	EMPFANGER DETECTOR
5	***V836866392***		1	ENG.SPEED SENSOR	CAPTEUR VIT MOT SENSORE GIRIMOTO	SENSOR MOTORDREH SENSOR VEL.MOTOR
6	V836866955		1	KIT, HARNESS	JEU FAISCEAU KIT FASCIOCAVI	KABELSTRANGSATZ JUEGO DE ARNES
7	V836866831		1	SUPPORT	SUPPORT SUPPORTO	LAGERUNG DISPOS.DE SOSTEN
8	V836866713		1	WIRE	FIL CAVO ELETTRICO	DRAHT HILO
9	V836866714		1	SUPPORT	SUPPORT SUPPORTO	LAGERUNG DISPOS.DE SOSTEN
10	V504600602	M6	2	NUT	ECROU DADO	MUTTER TUERCA
11	V500050642		2	WASHER	RONDELLE RONDELLA	UNTERLEGSCHEIBE ARANDELA
12	V836867061		1	SUPPORT	SUPPORT SUPPORTO	LAGERUNG DISPOS.DE SOSTEN
13	V836659144	◄► 59 MM	1	SPACER	ENTRETOISE DISTANZIALE	ABSTANDSTUECK DISCO ESPACIADOR
14	V835338121	◄► 41,5 MM	1	SLEEVE	MANCHON MANICOTTO	HUELSE MANCHA
15	V836759434	◄► 73 MM	1	SLEEVE	MANCHON MANICOTTO	HUELSE MANCHA
16	V504800800	M8	2	NUT	ECROU DADO	MUTTER TUERCA
17	V528801360	M8 X 16	2	SCREW	VIS VITE	SCHRAUBE TORNILLO
18	V836083428		4	BAND	BANDE NASTRO	BAND BANDA
19	V529801595	M8 X 140	2	SCREW	VIS VITE	SCHRAUBE TORNILLO
20	V602060612		1	FASTENER	AGRAFE LACCIO	HALTEKLAMMER CIERRE
21	V835329746		11	CABLE TIE	ATTACHE CABLE FASCETTA CAVI	KABELBINDER APRIETACABLES

Engine Repair Kits Kits Reparation Moteur Motor – Reparatursaetze Kits Riparazione Motore Jeugos De Reparacion De Motor	Piston– Cylinder Head With Valves Pistons – Culasse Avec Soupapes Kolben, Zylinderkopf Mit Ventilen Pistoni E Testata Con Valvole Pistones–Culata Con Valvulas	10-145	US

1-WH30-002-A

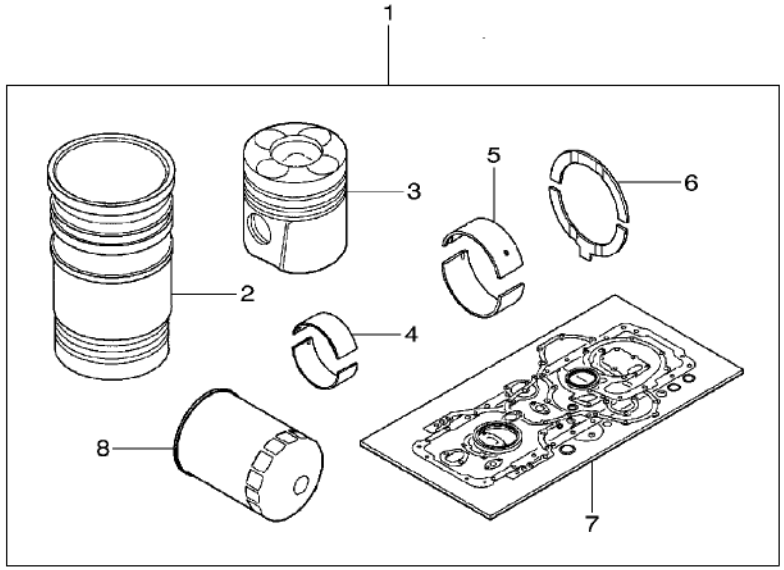

1	V837062579		**1** KIT, REPAIR	JEU REPARATION KIT RIPARAZIONE	REPARATURSATZ JUEGO REPARACION
2	V836867048	1	**6** LINER	CHEMISE CAMICIA	LAUFBUCHSE CAMISA
3	V837064949	1	**6** PISTON	PISTON PISTONE	KOLBEN PISTON
4	V836336302	1	**6** BEARING	COUSSINET CUSCINETTO	LAGER COJINETE
5	V836840944	4	**7** MAIN BEARING	ROULEMENT PRINC BRONZINE PRINCIP	HAUPTLAGER COJINETE PRINCIP
6	V836840945	1	**2** THRUST WASHER	RONDELLE BUTEE RONDELLA REGGISP	ANLAUFSCHEIBE ARANDELA ACELER
7	V837062578	1	**1** KIT, GASKET	JEU JOINTS PLATS KIT GUARNIZIONI	DICHTSCHEIB.SATZ JGO.EMPAQUETAD.
8	***V836867234***	1	**1** OIL FILTER	FILTRE HUILE FILTRO OLIO	OELFILTER FILTRO DE ACEITE

Engine Repair Kits Kits Reparation Moteur Motor – Reparatursaetze Kits Riparazione Motore Jeugos De Reparacion De Motor	Piston– Cylinder Head With Valves Pistons – Culasse Avec Soupapes Kolben, Zylinderkopf Mit Ventilen Pistoni E Testata Con Valvole Pistones–Culata Con Valvulas	10-150	US

1-WH30-001-A

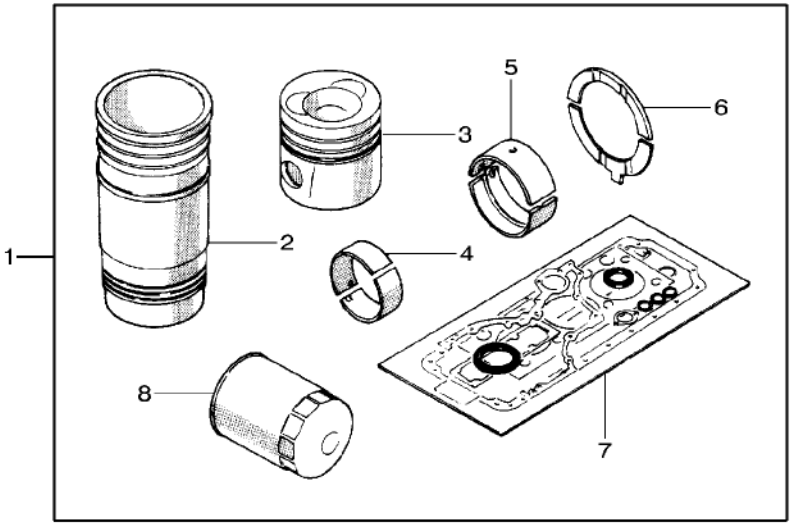

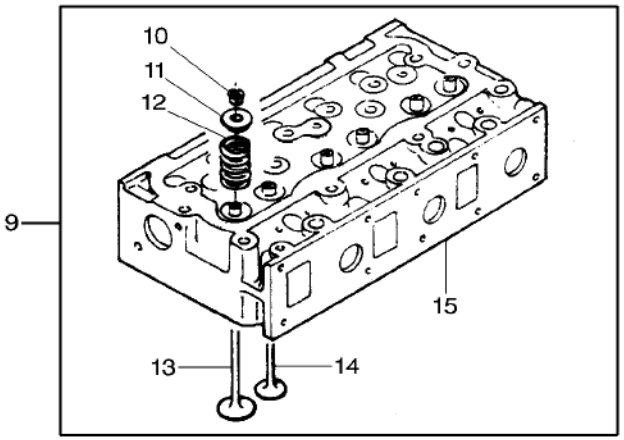

1*	V836862440		1	KIT, REPAIR	JEU REPARATION KIT RIPARAZIONE REPARATURSATZ JUEGO REPARACION
2*	V836867048	1	6	LINER	CHEMISE CAMICIA LAUFBUCHSE CAMISA
3*	V836866182	1	6	PISTON	PISTON PISTONE KOLBEN PISTON
4*	V836336302	1	6	BEARING	COUSSINET CUSCINETTO LAGER COJINETE
5*	V836840944	1	7	MAIN BEARING	ROULEMENT PRINC BRONZINE PRINCIP HAUPTLAGER COJINETE PRINCIP
6*	V836840945	1	2	THRUST WASHER	RONDELLE BUTEE RONDELLA REGGISP ANLAUFSCHEIBE ARANDELA ACELER
7*	V836840985	1	1	KIT, JOINT	JEU JOINTS KIT GIUNTO DICHTUNGSSATZ JUEGO JUNTAS
8*	***V836859108***	1	1	OIL FILTER	FILTRE HUILE FILTRO OLIO OELFILTER FILTRO DE ACEITE
9	V836640897		2	CYLINDER HEAD	CULASSE TESTATA ZYLINDERKOPF CULATA CILINDRO
10	V836646382	9	12	COTTER	BICONE CONOS SPLINT PASADOR ABIERTO
11	V836646381	9	6	CUP	COUPELLE SCODELLINO LAUFRING CUBETA
12	V836646380	9	6	SPRING	RESSORT MOLLA FEDER RESORTE
13	V836646357	9	3	VALVE EXHAUST	SOUPAPE ECHAPP VALVOLA SCARICO AUSLASSVENTIL VALVULA ESCAPE
14	V836646356	9	3	VALVE INLET	SOUPAPE ADMISS VALVOLA IMMISSI. EINLASSVENTIL VALVULA ADMISION
15	V836855381	9	1	CYLINDER HEAD	CULASSE TESTATA ZYLINDERKOPF CULATA CILINDRO

Engine Gaskets Sets
Jeux De Joints Moteur
Motor – Dichtungssaetze
Serie Guarnizioni Motore
Jeugos De Empaquetaduras De Motor

10-155 US

1-WH15-005-A

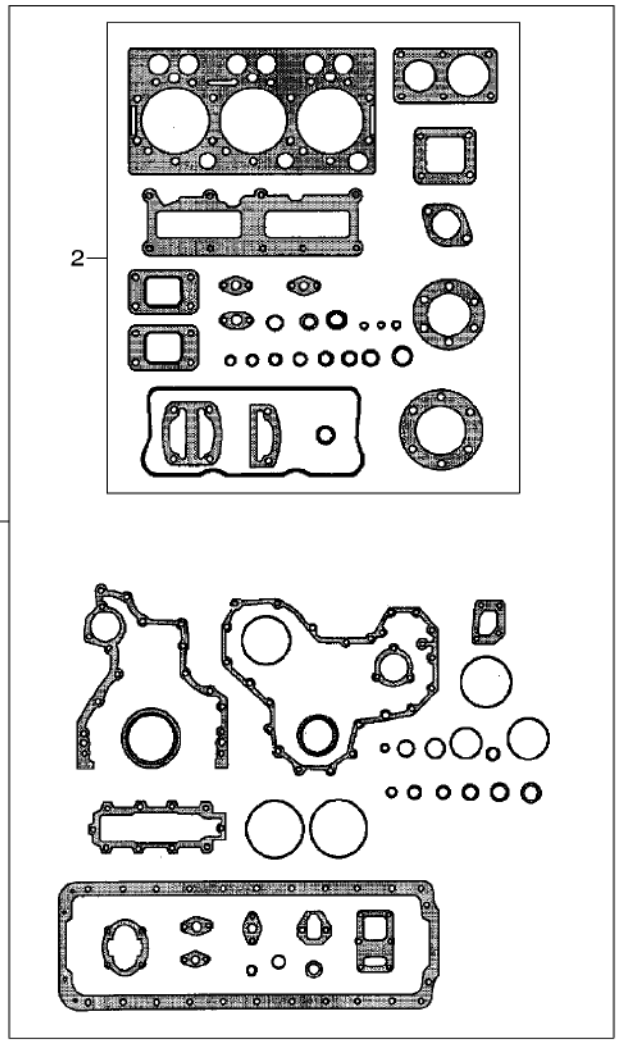

1	V837062578		1	KIT, GASKET	JEU JOINTS PLATS KIT GUARNIZIONI	DICHTSCHEIB.SATZ JGO.EMPAQUETAD.
2	V837062577	1	1	KIT, GASKET	JEU JOINTS PLATS KIT GUARNIZIONI	DICHTSCHEIB.SATZ JGO.EMPAQUETAD.

Engine Gaskets Sets
Jeux De Joints Moteur
Motor – Dichtungssaetze
Serie Guarnizioni Motore
Jeugos De Empaquetaduras De Motor

10-160

1-WH15-001-A

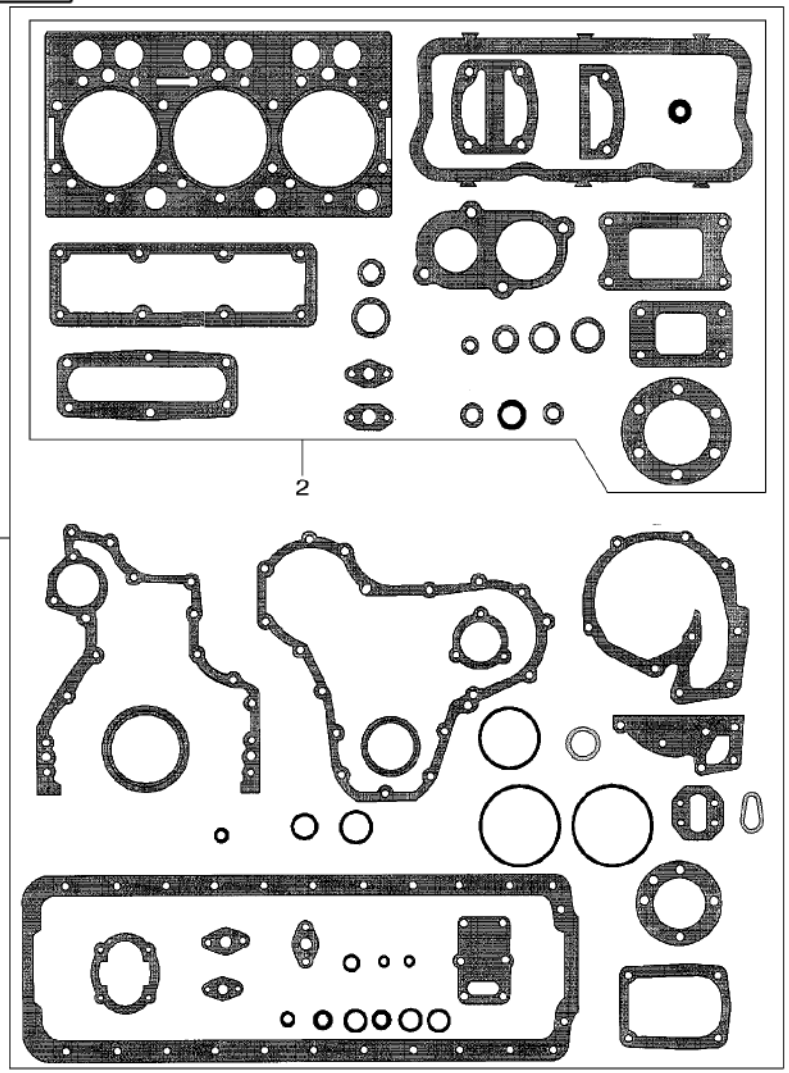

1*	V836840985		1	KIT, JOINT	JEU JOINTS KIT GIUNTO	DICHTUNGSSATZ JUEGO JUNTAS
2*	***V836840993***	1	1	KIT, JOINT	JEU JOINTS KIT GIUNTO	DICHTUNGSSATZ JUEGO JUNTAS

Heater Engine Block Rechauffeur Bloc Moteur Heizung Motor Riscaldatore Motore Calentador Motor	10-165	110 V 110 V 110 V 110 V 110 V

1-WC38-004-A

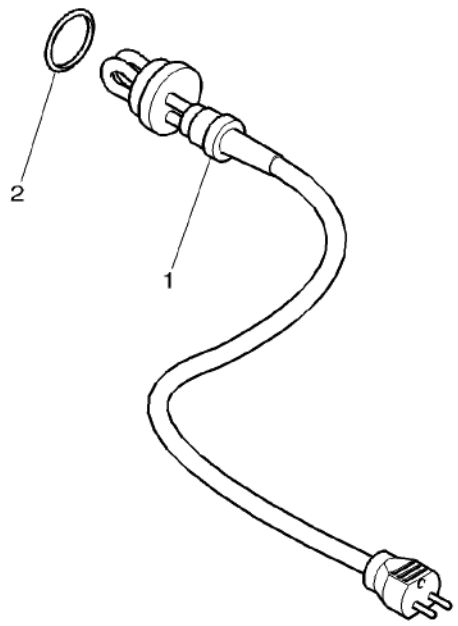

1	3780214M1	1 HEATER	CHAUFFAGE RISCALDAMENTO	HEIZUNG CALENTADOR
2	V836840998	1 O RING	JOINT TORIQUE ANELLO TENUTA	O-RING ANILLO FORMA 'O'

Heater Engine Block Rechauffeur Bloc Moteur Heizung Motor Riscaldatore Motore Calentador Motor	10-170	220 V 220 V 220 V 220 V 220 V

1-WC38-003-A

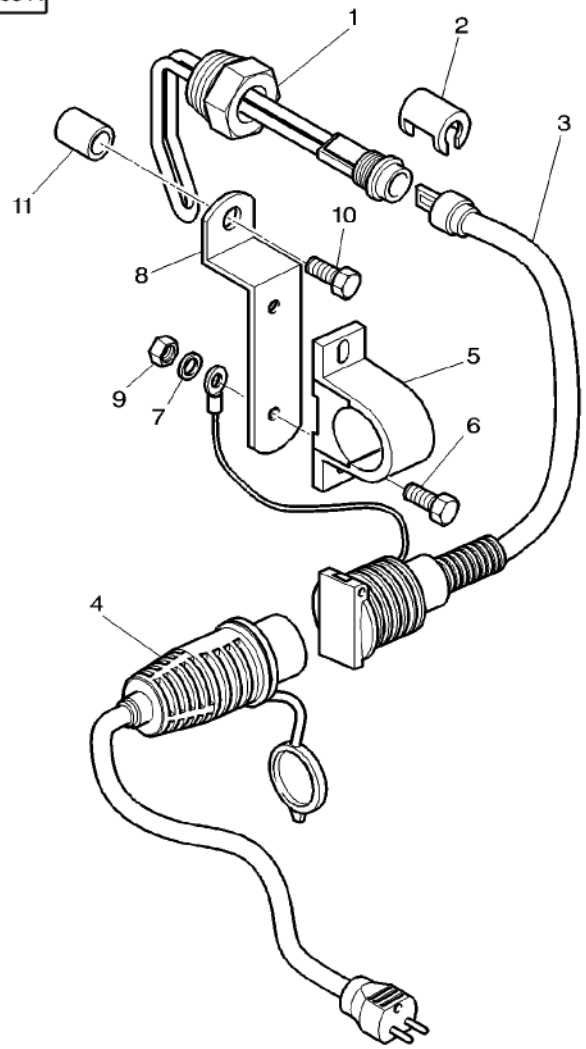

1	3615752M2		1	ELEMENT	ELEMENT ELEMENTO	ELEMENT ELEMENTO
2	3611974M1		1	CLIP	PATTE D'ATTACHE FERMAGLIO	SCHELLE CLIP
3	4270172M1		1	HARNESS	FAISCEAU FASCIOCAVI	KABELBAUM MAZO CABLES
4	4270169M1		1	LEAD	CABLE ELECTRIQUE PIOMBO	LEITUNG CONDUCTOR METAL
5	4270098M1		1	CLAMP	COLLIER FASCETTA	HALTESCHELLE ABRAZADERA
6	3010567X1	M5 X 16	2	PLOUGH BOLT	VIS A EMBASE VITE TESTA TONDA	SENKSCHLOSSSCHRB TORNILLO ALOJ C
7	339381X1		1	LOCK WASHER	RONDELLE FREIN ROSETTA DENTELL.	FEDERRING ARANDELA GROWER
8	4270462M1		1	SUPPORT	SUPPORT SUPPORTO	LAGERUNG DISPOS.DE SOSTEN
9	3010477X1	M5	2	NUT METRIC	ECROU METRIQUE DADO METRICO	MUTTER METRISCH TUERCA METRICO
10	339123X1	M8 X 20	1	HEX. SOCK. SCREW	VIS TETE HEX VITE PARKER	ZYLINDERSCHRAUBE TORN.CAB.HUECA
11	3778809M1	∅ 9–12 X 7	1	SPACER	ENTRETOISE DISTANZIALE	ABSTANDSTUECK DISCO ESPACIADOR

Cab Heating System Chauffage Cabine Kabinen–Heizungssystem Sistema Di Riscaldamento Sistema De Calefaccion De Cabina	Engine Part Partie Moteur Motor Teile Parte Motore Pieza De Motor	10-175

1-WC28-004-A

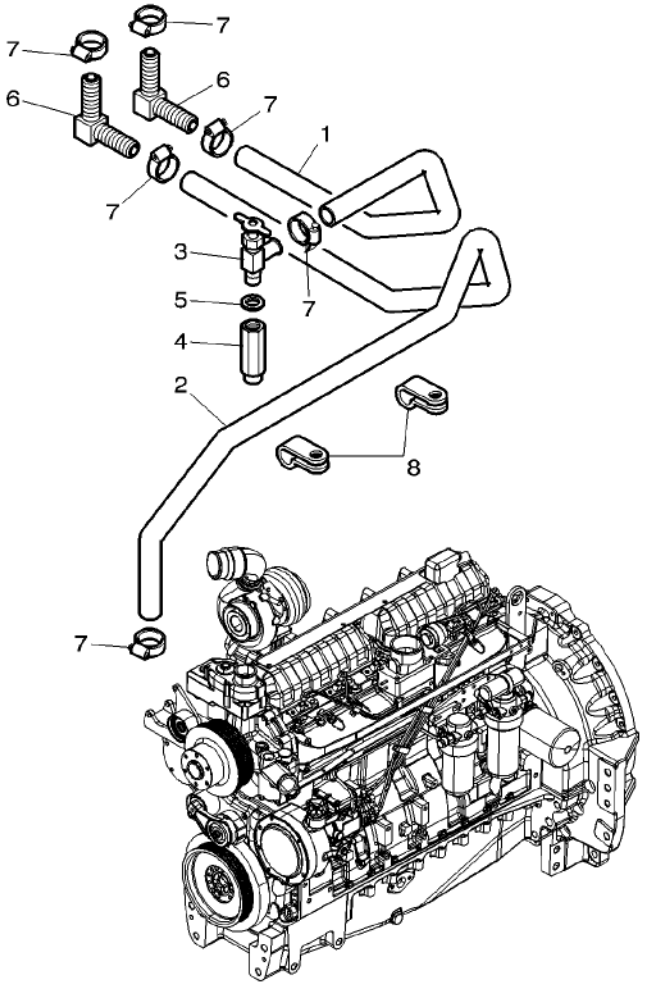

1	4277373M1	◄►	950 MM	1	HOSE	DURITE TUBO FLESSIBILE SCHLAUCH FLEXIBLE
2	4277823M1	◄►	1800 MM	1	HOSE	DURITE TUBO FLESSIBILE SCHLAUCH FLEXIBLE
3	30–3076830			1	VALVE.	SOUPAPE VALVOLA VENTIL VALVULA
4	5015331M1			1	ADAPTOR	ADAPTATEUR ADATTATORE REDUZIERNIPPEL ADAPTADOR
5	339526X1	∅	18–24 X 1,5	1	SEAL	JOINT ETANCHEITE ANELLO RACCORD DICHTRING ARENDELA D'JUNTA
6	3788222M1			2	ELBOW	COUDE GOMITO WINKELSTUECK CODO
7	3820729M1			6	HOSE CLIP	COLLIER DURITE FASCIA SCHLAUCHSCHELLE CLIP P.FLEXIBLE
8	3581424M1	∅	30 – M8	2	CLIP	PATTE D'ATTACHE FERMAGLIO SCHELLE CLIP
8*	4273333M1	∅	45 – M8	2	CLAMP	COLLIER FASCETTA HALTESCHELLE ABRAZADERA

Fuel Tank & Attachments
Reservoir A Carburant Et Fixation
Kraftstoffbehaelter Und Befestig.
Serbatoio Nafta E Fissaggio
Deposito Combustible Sujecciones

10-180

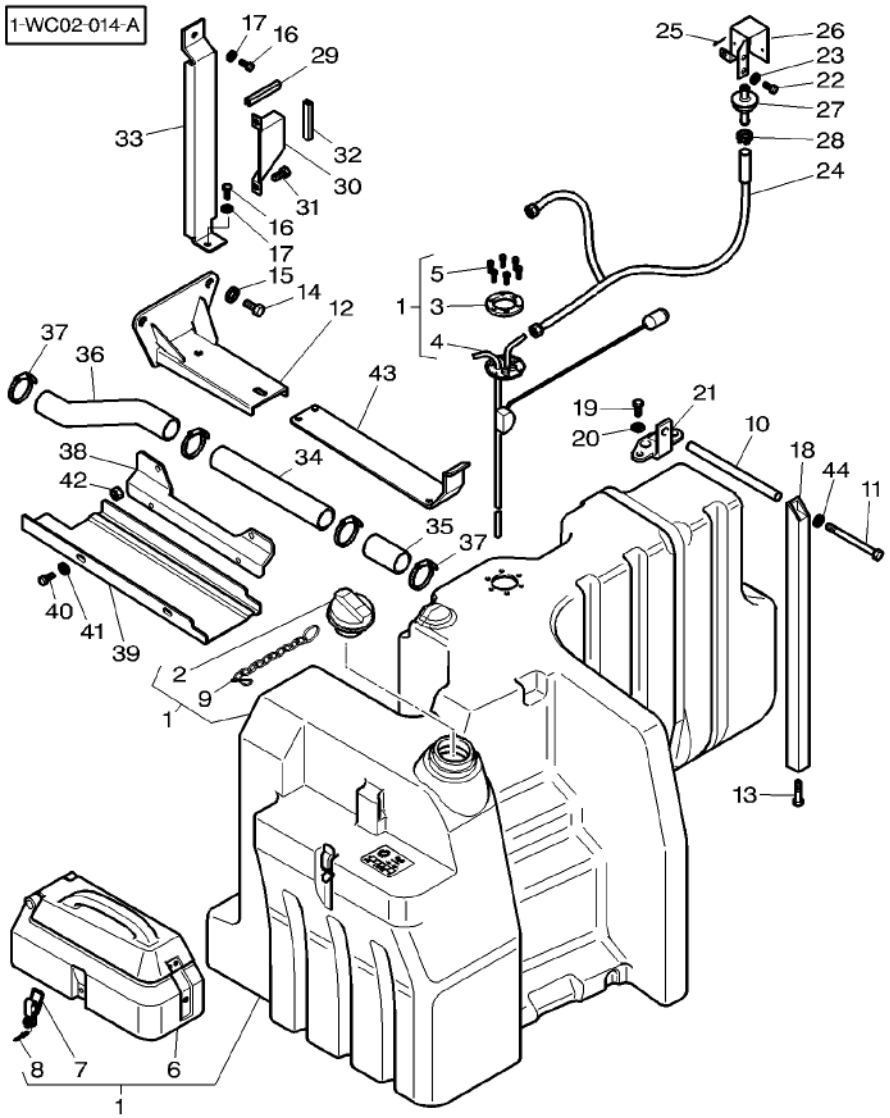

1*	4275493M92		1 TANK	RESERVOIR SERBATOIO	TANK DEPOSITO LIQUIDO
2	3786050M1	1	1 PLUG	BOUCHON TAPPO	VERSCHL.STOPFEN TAPON
3	4279002M1	1	1 GASKET	JOINT GUARNIZIONE	DICHTSCHEIBE EMPAQUETADURA.
4*	4279578M2	1	1 FUEL GAUGE	JAUGE CARBURANT INDICAT.LIVELLO	KRAFTST-MESSER INDIC.COMBUST.
5	3005728X1	1 No 10 X 16	6 SCREW	VIS VITE	SCHRAUBE TORNILLO
6	3786754M91	1	1 TOOL BOX	BOITE A OUTILS CASSETTA ATTREZZ	WERKZEUGKASTEN CAJA HERRAMIENTA
7	3786764M1	1	1 LATCH	VERROU CHIAVISTELLO	RIEGEL CERROJO
8	3005728X1	1 No 10 X 16	2 SCREW	VIS VITE	SCHRAUBE TORNILLO
9	4275605M1	1	1 CHAIN	CHAINE CATENA	KETTE CADENA
10	4279591M1	◄► 148 MM	1 TUBE	TUBE TUBO	ROHR TUBO
11	3011649X1	M10 X 180	1 SCREW	VIS VITE	SCHRAUBE TORNILLO
12	4275582M2		1 SUPPORT	SUPPORT SUPPORTO	LAGERUNG DISPOS.DE SOSTEN
13	390122X1	M10 X 80	1 HEX. SOCK. SCREW	VIS TETE HEX VITE PARKER	ZYLINDERSCHRAUBE TORN.CAB.HUECA
14	391269X1	M16 X 30	2 HEX. SOCK. SCREW	VIS TETE HEX VITE PARKER	ZYLINDERSCHRAUBE TORN.CAB.HUECA
15	1441664X1	∅ 16-30 X 3	2 WASHER	RONDELLE RONDELLA	UNTERLEGSCHEIBE ARANDELA
16	3009491X1	M10 X 20	2 HEX. SOCK. SCREW	VIS TETE HEX VITE PARKER	ZYLINDERSCHRAUBE TORN.CAB.HUECA
17	390734X1	∅ 10-21 X 2	2 WASHER	RONDELLE RONDELLA	UNTERLEGSCHEIBE ARANDELA
18	4279582M1		1 REINFORCEMENT	RENFORT RINFORZO	VERSTAERKUNG REFUERZO
19	3009491X1	M10 X 20	3 HEX. SOCK. SCREW	VIS TETE HEX VITE PARKER	ZYLINDERSCHRAUBE TORN.CAB.HUECA
20	390734X1	∅ 10-21 X 2	3 WASHER	RONDELLE RONDELLA	UNTERLEGSCHEIBE ARANDELA
21	4275583M2		1 BRIDLE	BRIDE BRIGLIA	SPANNBAND BRIDA
22	339123X1	M8 X 20	1 HEX. SOCK. SCREW	VIS TETE HEX VITE PARKER	ZYLINDERSCHRAUBE TORN.CAB.HUECA
23	390972X1	∅ 8-17 X 1,7	1 WASHER	RONDELLE RONDELLA	UNTERLEGSCHEIBE ARANDELA
24	4278965M1		1 HYDR. HOSE	FLEXIBLE TUBOFLEX IDRAUL	HYDR. SCHLAUCH TUBO HIDRAULICO
25	1442970X1	∅ 4 X 63	2 PIN	GOUPILLE PERNO	BOLZEN PASADOR
26	3808024M2		1 HOUSING	CARTER CARCASSA	GEHAEUSE ALOJAMIENTO

Fuel Tank & Attachments
Reservoir A Carburant Et Fixation
Kraftstoffbehaelter Und Befestig.
Serbatoio Nafta E Fissaggio
Deposito Combustible Sujecciones

10-180

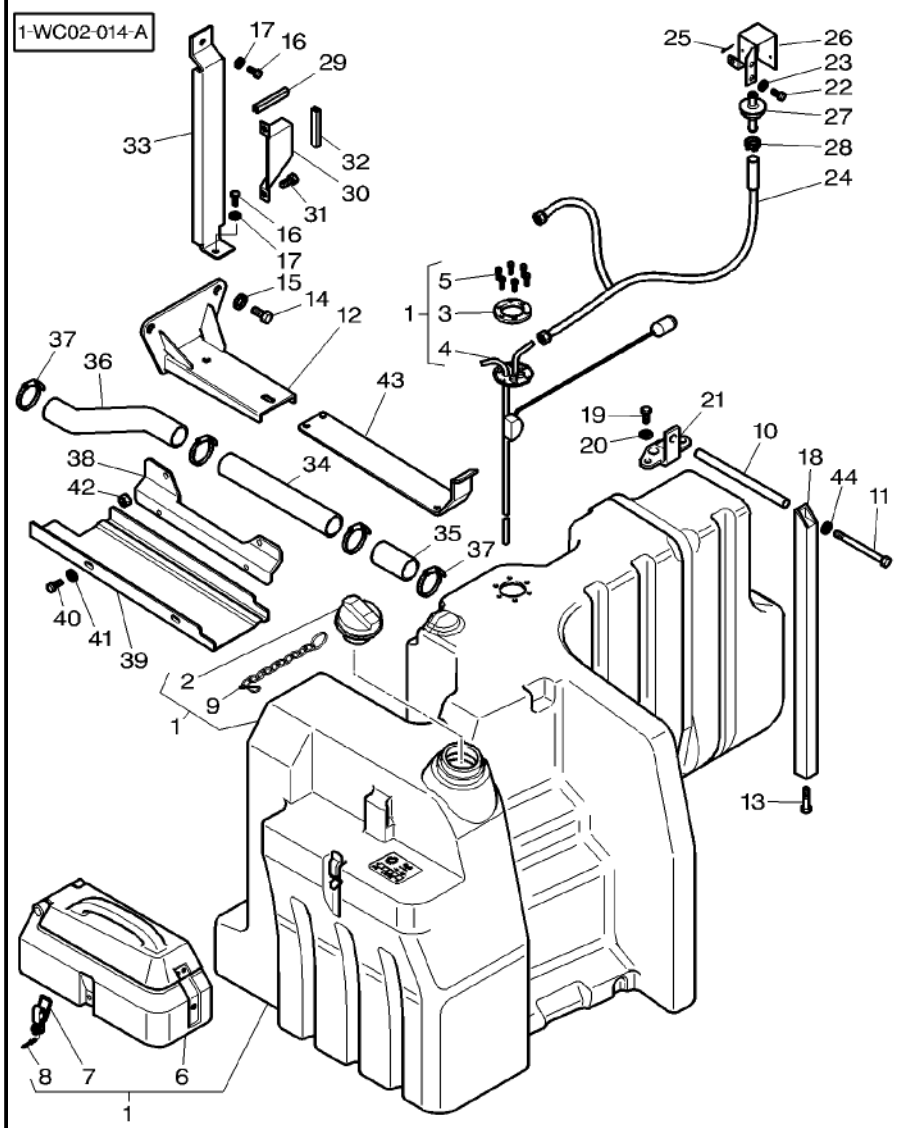

27	***3808023M91***		**1**	NON RETURN VALVE	CLAPET VALVOLA NO RITOR	RUECKSCHLAGVENT. VALV.SIN RETORNO
28	3712465M1	∅ 15 MM	**1**	HOSE CLIP	COLLIER DURITE FASCIA	SCHLAUCHSCHELLE CLIP P.FLEXIBLE
29	4277715M1	◄► 60 MM	**1**	PROTECTOR	PROTECTEUR PROTETTORE	SCHUTZ PROTECTOR
30	916101170010		**1**	PROTECTOR	PROTECTEUR PROTETTORE	SCHUTZ PROTECTOR
31	339560X1	M6 X 16	**2**	HEX. SOCK. SCREW	VIS TETE HEX VITE PARKER	ZYLINDERSCHRAUBE TORN.CAB.HUECA
32	4277714M1	[A] ◄► 45 MM	**1**	PROTECTOR	PROTECTEUR PROTETTORE	SCHUTZ PROTECTOR
33	4277720M1		**1**	STOP	BUTEE STOP	ANSCHLAG PARO
34	4275653M2		**1**	TUBE	TUBE TUBO	ROHR TUBO
35	4274265M1		**1**	HOSE	DURITE TUBO FLESSIBILE	SCHLAUCH FLEXIBLE
36	4277471M1	◄► 300 MM	**1**	HOSE	DURITE TUBO FLESSIBILE	SCHLAUCH FLEXIBLE
37	338618X1	∅ 50–70	**4**	HOSE CLIP	COLLIER DURITE FASCIA	SCHLAUCHSCHELLE CLIP P.FLEXIBLE
38	4276942M3		**1**	ANGLE.	EQUERRE ANGOLO	WINKEL ANGULO
39	4276949M1		**1**	COWL	GARANT CAPPOTTATURA	AUFSATZ CAPERUZA
40	3009491X1	M10 X 20	**2**	HEX. SOCK. SCREW	VIS TETE HEX VITE PARKER	ZYLINDERSCHRAUBE TORN.CAB.HUECA
41	390734X1	∅ 10–21 X 2	**2**	WASHER	RONDELLE RONDELLA	UNTERLEGSCHEIBE ARANDELA
42	339034X1	M16	**2**	NUT	ECROU DADO	MUTTER TUERCA
43	4279012M2		**1**	STOP	BUTEE STOP	ANSCHLAG PARO
44	390734X1		**1**	WASHER	RONDELLE RONDELLA	UNTERLEGSCHEIBE ARANDELA

[A] CUT TO REQUIRED LENGTH
COUPER A LA LONGEUR DESIREE
BENOETIGTE LAENGE ABSCHNEIDEN
TAGLIARE A LUNGHEZZA RICHIESTA
CORTAR A LA LONGITUD NECESARIA

Additional Tank
Reservoir Supplementaire
Zusastzlich Tank
Serbatoio Addizionale
Caja Supplementario

10-185

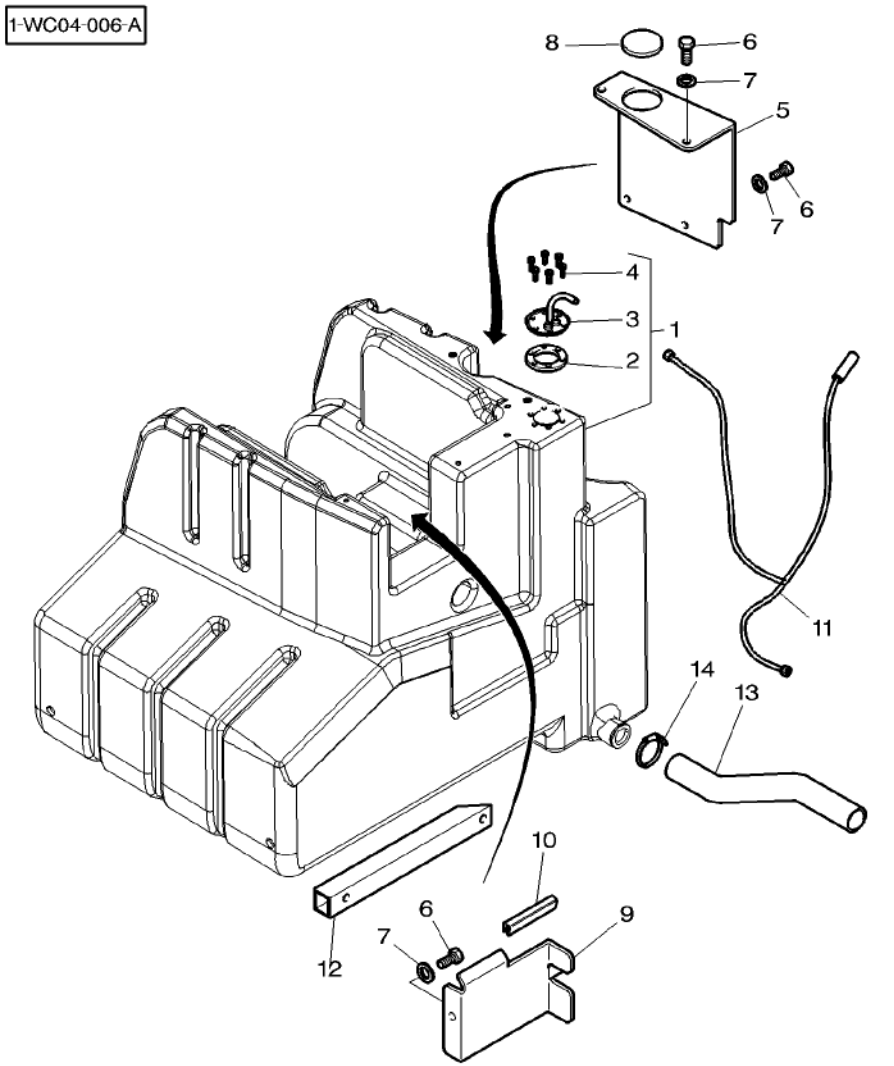

1	4275495M91		1 TANK	RESERVOIR SERBATOIO	TANK DEPOSITO LIQUIDO
2	1617869M2	1	1 GASKET	JOINT GUARNIZIONE	DICHTSCHEIBE EMPAQUETADURA.
3	4275229M2	1	1 TUBE	TUBE TUBO	ROHR TUBO
4	3005728X1	1 No 10 X 16	6 SCREW	VIS VITE	SCHRAUBE TORNILLO
5	4277512M2		1 COWL	GARANT CAPPOTTATURA	AUFSATZ CAPERUZA
6	3007934X1	CBZ M6 X 16	6 SCREW	VIS VITE	SCHRAUBE TORNILLO
7	391038X1	∅ 6-18 X 1,5	6 WASHER	RONDELLE RONDELLA	UNTERLEGSCHEIBE ARANDELA
8	4277511M1	∅ 62 MM	1 PLUG	BOUCHON TAPPO	VERSCHL.STOPFEN TAPON
9	4278335M1		1 SHIELD	TOLE RIPARO	SCHILD BLINDAJE
10	4271654M1	◄► 75 MM	1 GASKET	JOINT GUARNIZIONE	DICHTSCHEIBE EMPAQUETADURA.
11	4278965M1		1 HYDR. HOSE	FLEXIBLE TUBOFLEX IDRAUL	HYDR. SCHLAUCH TUBO HIDRAULICO
12	4279592M1		1 STOP	BUTEE STOP	ANSCHLAG PARO
13	4277471M1	◄► 300 MM	1 HOSE	DURITE TUBO FLESSIBILE	SCHLAUCH FLEXIBLE
14	338618X1	∅ 50-70	1 HOSE CLIP	COLLIER DURITE FASCIA	SCHLAUCHSCHELLE CLIP P.FLEXIBLE

Fuel Pipes
Tuyauteries A Carburant
Kraftstof Leitungen
Tubazioni A Nafta
Conducciones A Combustible

10-190

1-WH16-005-A

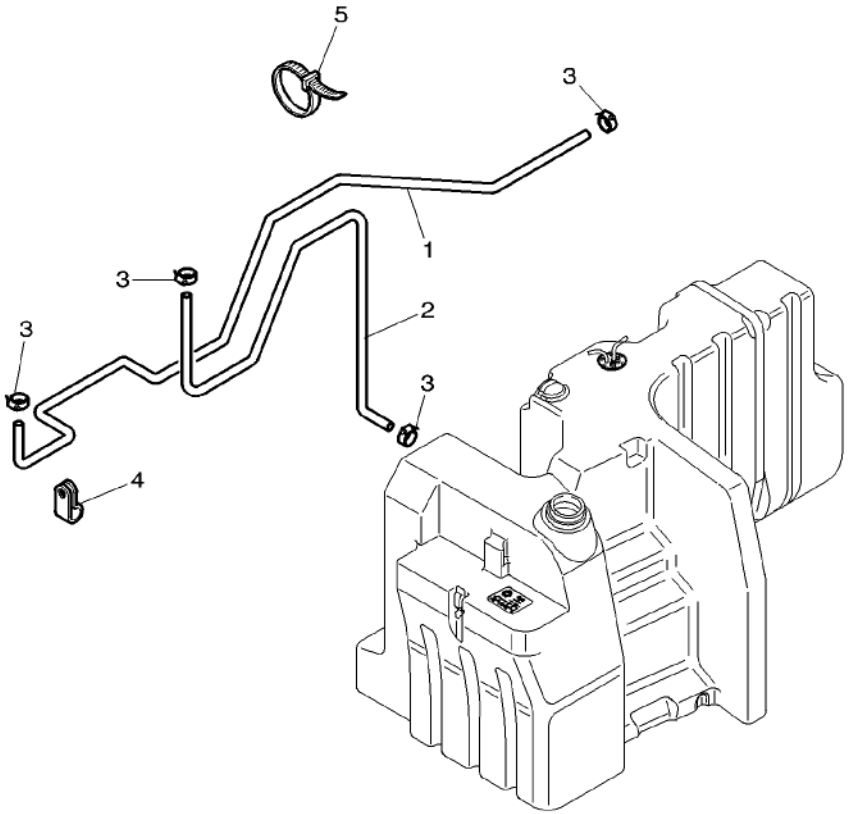

1	3785624M1	◄► 1850 MM ►I N309086	1 HYDR. HOSE	FLEXIBLE TUBOFLEX IDRAUL	HYDR. SCHLAUCH TUBO HIDRAULICO
1*	4280428M2	◄► 2100 MM ►► N309087	1 HYDR. HOSE	FLEXIBLE TUBOFLEX IDRAUL	HYDR. SCHLAUCH TUBO HIDRAULICO
2	3580971M1	◄► 2100 MM ►I N309086	1 HYDR. HOSE	FLEXIBLE TUBOFLEX IDRAUL	HYDR. SCHLAUCH TUBO HIDRAULICO
2*	4280429M2	◄► 1850 MM ►► N309087	1 HYDR. HOSE	FLEXIBLE TUBOFLEX IDRAUL	HYDR. SCHLAUCH TUBO HIDRAULICO
3	3777425M1	∅ 14 MM ►I 07-NOV-2004	4 CLAMP	COLLIER FASCETTA	HALTESCHELLE ABRAZADERA
4	3387756M1	∅ 16 – M8	1 CLIP	PATTE D'ATTACHE FERMAGLIO	SCHELLE CLIP
5	3619622M1		3 CABLE TIE	ATTACHE CABLE FASCETTA CAVI	KABELBINDER APRIETACABLES

Batteries And Cables
Batterie Et Cables
Batterie Und Kabel
Batteria A Cavo
Batterie Y Cable

10-195

Without Battery Cut-Off W/O Positive Connection
Sans Coupe Batterie Sans Borne Positive
Ohne Unterbrecher Ohne Doppel Nippel
Sin Ruttore Sin Morsetto
Senza Ruptor Senza Conector

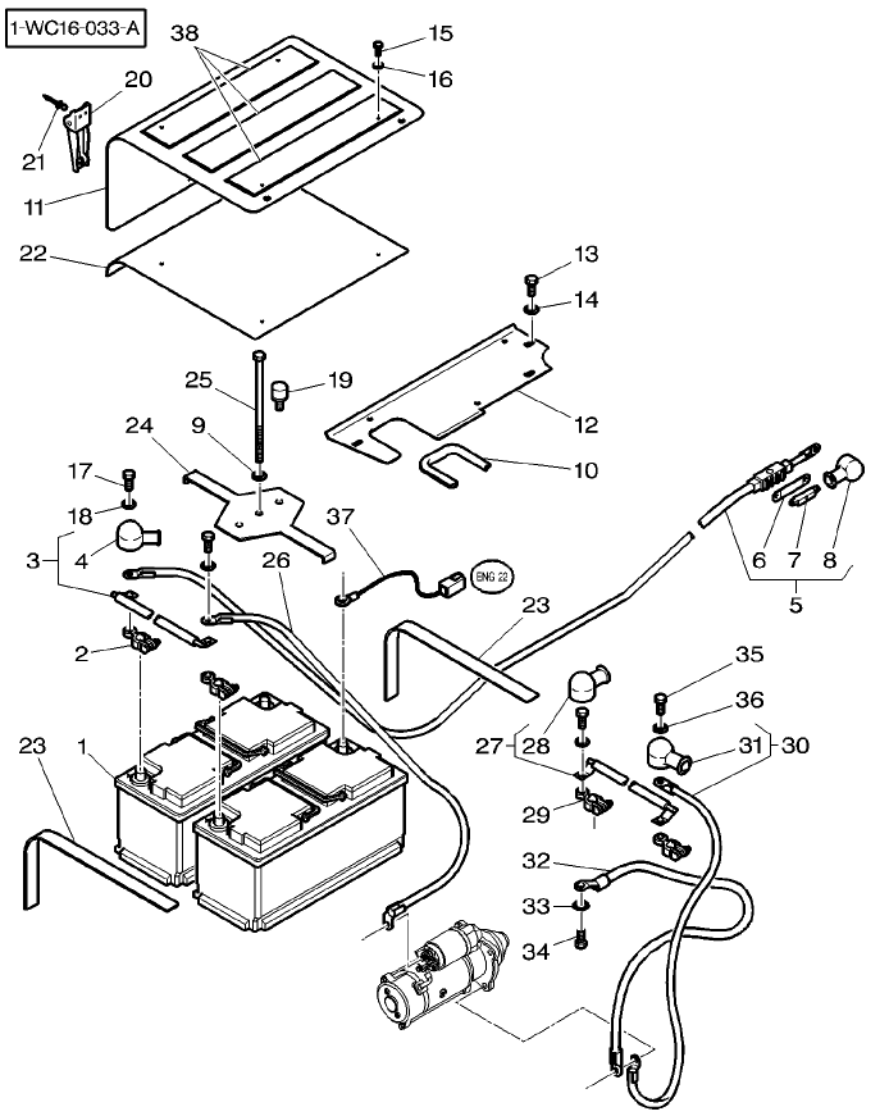

1		[AB]	2	BATTERY	BATTERIE BATTERIA	BATTERIE BATERIA
2	4276408M1	+	2	CONNECTOR	BORNE MORSETTO	DOPPELNIPPEL CONECTOR
3	4274946M1	◄► 190 MM +	1	CABLE	CABLE CAVO	KABEL CABLE
4	3784666M1	3	2	HELMET	CAPUCHON CASCO	SCHUTZHELM CASCO
5	4274519M2	◄► 1870 MM +	1	CABLE	CABLE CAVO	KABEL CABLE
6	***4276186M1***	5 150 AMP	1	FUSE	FUSIBLE VALVOLINA	SICHERUNG FUSIBLE
7	3789733M1	5	1	CASE ASSY	BOITIER CARCASSA COMPLET	GEHAEUSE KPL CAJA COMPLETA
8	3784666M1	5	1	HELMET	CAPUCHON CASCO	SCHUTZHELM CASCO
9	390597X1	∅ 10-30 X 2,5	1	WASHER	RONDELLE RONDELLA	UNTERLEGSCHEIBE ARANDELA
10	3784893M1	◄► 204 MM	1	GASKET	JOINT GUARNIZIONE	DICHTSCHEIBE EMPAQUETADURA.
11	4278304M2		1	COVER	COUVERCLE COPERCHIO	DECKEL CUBIERTA
12★	4278305M2		1	BRIDLE	BRIDE BRIGLIA	SPANNBAND BRIDA
13	339124X1	M8 X 16	4	HEX. SOCK. SCREW	VIS TETE HEX VITE PARKER	ZYLINDERSCHRAUBE TORN.CAB.HUECA
14	390972X1	∅ 8-17 X 1,7	4	WASHER	RONDELLE RONDELLA	UNTERLEGSCHEIBE ARANDELA
15	338828X1		4	RIVET	RIVET RIBATTINO	NIET REMACHE
16	3001856X1	∅ 4-12 X 1,1	4	WASHER	RONDELLE RONDELLA	UNTERLEGSCHEIBE ARANDELA
17	1440433X1	M10 X 16	2	HEX. SOCK. SCREW	VIS TETE HEX VITE PARKER	ZYLINDERSCHRAUBE TORN.CAB.HUECA
18	390734X1	∅ 10-21 X 2	2	WASHER	RONDELLE RONDELLA	UNTERLEGSCHEIBE ARANDELA
19	4278306M1		2	SHOCK ABSORBER	AMORTISSEUR AMMORTIZZATORE*	STOSSDAEMPFER AMORTIGUADOR
20	4278351M1		1	TIE	ATTACHE TRAVERSA ATTACCO	KUPPL.STANGE BARRA DE ENLACE
21	3010021X1		2	RIVET	RIVET RIBATTINO	NIET REMACHE
22	4278782M1		1	SOUND REDUCTION	INSONORISATION INSONORIZZANTE	SCHALLDAEMMUNG REDUCTOR SONIDO
23	4278758M1		1	GASKET	JOINT GUARNIZIONE	DICHTSCHEIBE EMPAQUETADURA.
24	4275106M2		1	BRIDLE	BRIDE BRIGLIA	SPANNBAND BRIDA
25	392882X1	M10 X 240	1	HEX. SOCK. SCREW	VIS TETE HEX VITE PARKER	ZYLINDERSCHRAUBE TORN.CAB.HUECA
26	4274520M1	◄► 1220 MM +	1	CABLE	CABLE CAVO	KABEL CABLE

Batteries And Cables
Batterie Et Cables
Batterie Und Kabel
Batteria A Cavo
Batterie Y Cable

10-195

Without Battery Cut-Off W/O Positive Connection
Sans Coupe Batterie Sans Borne Positive
Ohne Unterbrecher Ohne Doppel Nippel
Sin Ruttore Sin Morsetto
Senza Ruptor Senza Conector

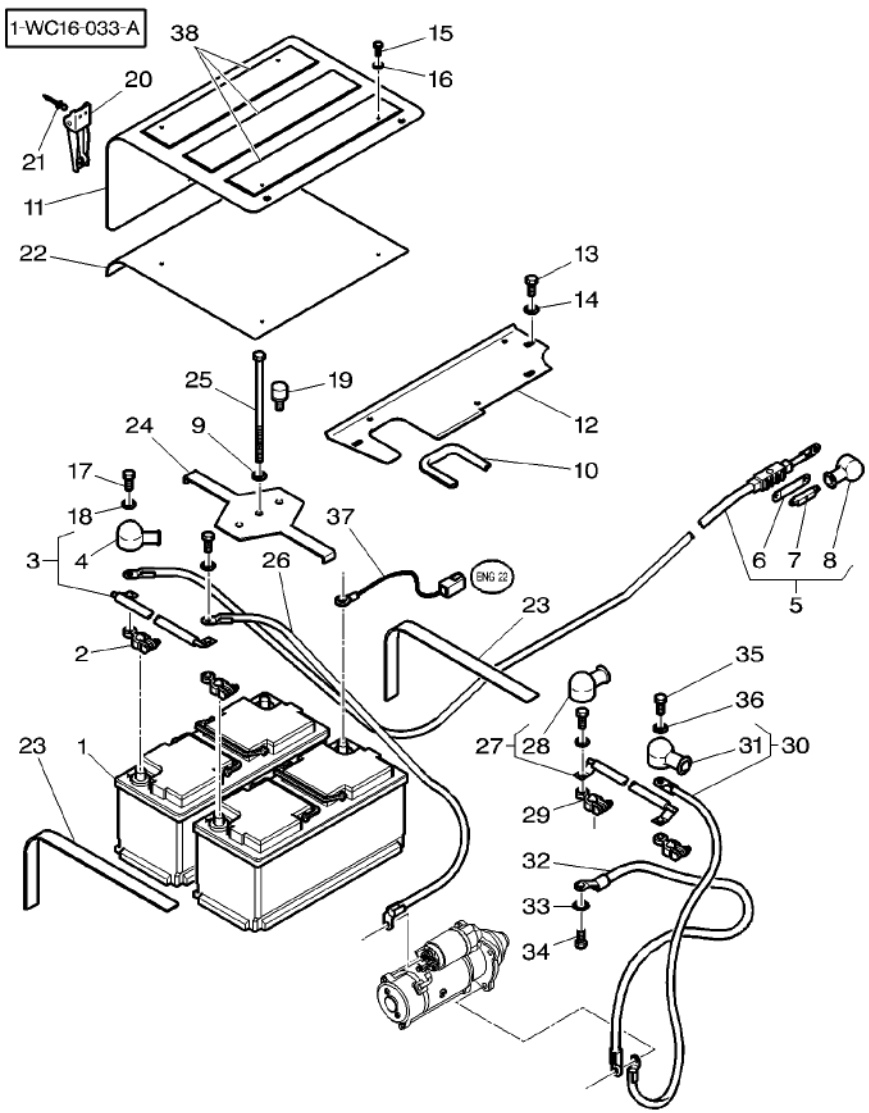

27	4274518M1	◄► 190 MM –	1	CABLE CAVO	KABEL CABLE
28	3784666M1	27	2	HELMET CASCO	SCHUTZHELM CASCO
29	4276409M1	–	2	CONNECTOR MORSETTO	DOPPELNIPPEL CONECTOR
30	4275488M2		1	CABLE CAVO	KABEL CABLE
31	3784666M1	30	1	HELMET CASCO	SCHUTZHELM CASCO
32	3788045M1	◄► 750 MM –	1	CABLE CAVO	KABEL CABLE
33	3010604X1		1	WASHER RONDELLE RONDELLA	UNTERLEGSCHEIBE ARANDELA
34	3009491X1	M10 X 20	1	HEX. SOCK. SCREW VIS TETE HEX VITE PARKER	ZYLINDERSCHRAUBE TORN.CAB.HUECA
35	339124X1	M8 X 16	2	HEX. SOCK. SCREW VIS TETE HEX VITE PARKER	ZYLINDERSCHRAUBE TORN.CAB.HUECA
36	390972X1	∅ 8-17 X 1,7	2	WASHER RONDELLE RONDELLA	UNTERLEGSCHEIBE ARANDELA
37	4276513M1	◄► 1800 MM	1	HARNESS FAISCEAU FASCIOCAVI	KABELBAUM MAZO CABLES
38	4280036M1	370 X 70	3	RUBBER STRAP BANDE CAOUTCHOUC NASTRO IN GOMMA	GUMMIBAND BANDA DE GOMA

[A] PLEASE REFER TO MARKETING CATALOG
CONSULTER LE CATALOGUE MARKETING
SIEHEN DIE MARKETING LISTE
RIFERIRSI AL LISTA MARKETING
VEASE LA LISTA MARKETING

[B] THE APPROPRIATE SAFETY DECALS MUST BE ORDERED AND FITTED TO THIS PART
CETTE PIECE DOIT ETRE IMPERATIVEMENT COMMANDEE AVEC SA DECALCOMANIE DE SECURITE
DIESES TEIL MUSS UNBEDINGT ZUSAMMEN MIT DEM SICHER HEITSHINWEISSCHILD BESTELLT WERDEN
QUESTO PEZZO DEVE ASSOLUTAMENTE ESSERE ORDINATO CON LA RELATIVA DECALCO. SULLA SICUREZZA
ESTA PIEZA SE TIENE QUE PEDIR IMPERATIVAMENTE CON SU CALCOMANIA DE SEGURIDAD

Batteries And Cables
Batterie Et Cables
Batterie Und Kabel
Batteria A Cavo
Batterie Y Cable

10-200

Without Battery Cut-Off With Positive Connection
Sans Coupe Batterie Avec Borne Positive
Ohne Unterbrecher Mit Doppelnippel
Sin Ruttore Con Morsetto
Senza Ruptor Con Conector

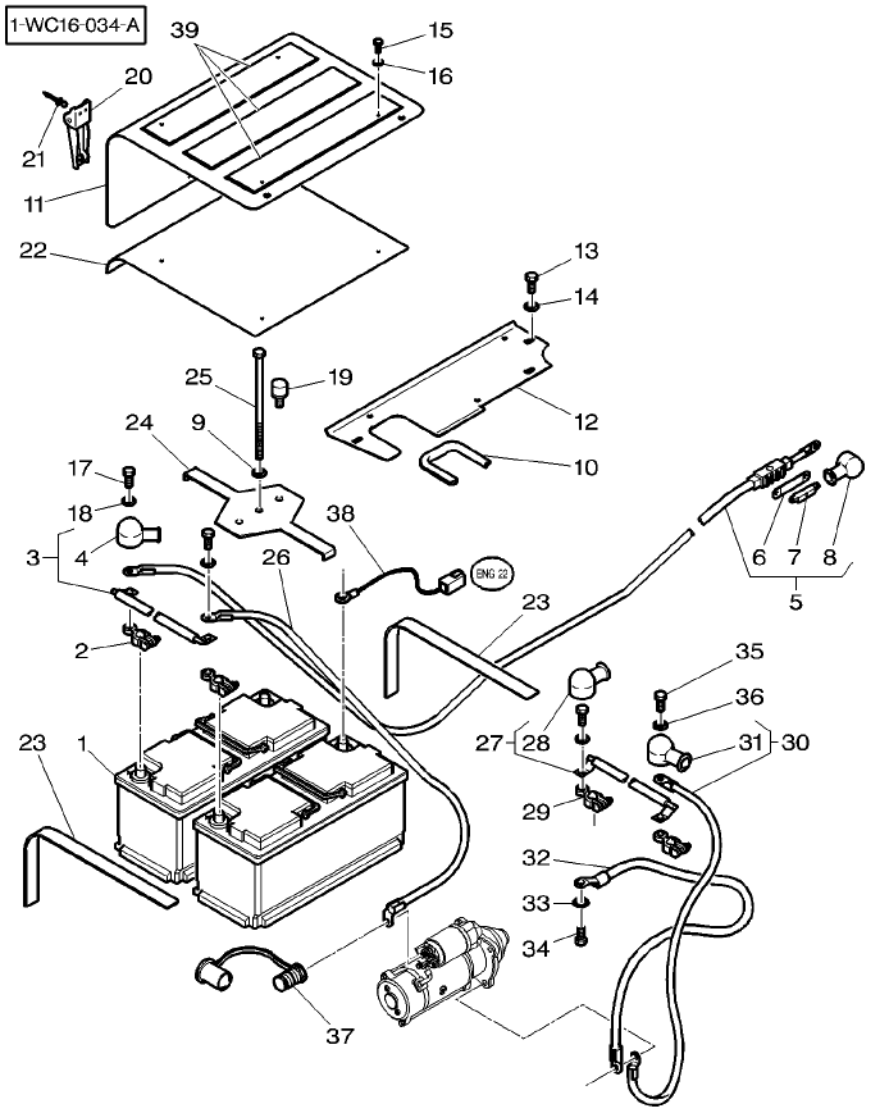

1		[AB]	2	BATTERY	BATTERIE BATTERIA	BATTERIE BATERIA
2	4276408M1	+	2	CONNECTOR	BORNE MORSETTO	DOPPELNIPPEL CONECTOR
3	4274946M1	◄► 190 MM +	1	CABLE	CABLE CAVO	KABEL CABLE
4	3784666M1	3	2	HELMET	CAPUCHON CASCO	SCHUTZHELM CASCO
5	4274519M2	◄► 1870 MM +	1	CABLE	CABLE CAVO	KABEL CABLE
6	***4276186M1***	5 150 AMP	1	FUSE	FUSIBLE VALVOLINA	SICHERUNG FUSIBLE
7	3789733M1	5	1	CASE ASSY	BOITIER CARCASSA COMPLET	GEHAEUSE KPL CAJA COMPLETA
8	3784666M1	5	1	HELMET	CAPUCHON CASCO	SCHUTZHELM CASCO
9	390597X1	∅ 10-30 X 2,5	1	WASHER	RONDELLE RONDELLA	UNTERLEGSCHEIBE ARANDELA
10	3784893M1	◄► 204 MM	1	GASKET	JOINT GUARNIZIONE	DICHTSCHEIBE EMPAQUETADURA.
11	4278304M2		1	COVER	COUVERCLE COPERCHIO	DECKEL CUBIERTA
12★	4278305M2		1	BRIDLE	BRIDE BRIGLIA	SPANNBAND BRIDA
13	339124X1	M8 X 16	4	HEX. SOCK. SCREW	VIS TETE HEX VITE PARKER	ZYLINDERSCHRAUBE TORN.CAB.HUECA
14	390972X1	∅ 8-17 X 1,7	4	WASHER	RONDELLE RONDELLA	UNTERLEGSCHEIBE ARANDELA
15	338828X1		4	RIVET	RIVET RIBATTINO	NIET REMACHE
16	3001856X1	∅ 4-12 X 1,1	4	WASHER	RONDELLE RONDELLA	UNTERLEGSCHEIBE ARANDELA
17	1440433X1	M10 X 16	2	HEX. SOCK. SCREW	VIS TETE HEX VITE PARKER	ZYLINDERSCHRAUBE TORN.CAB.HUECA
18	390734X1	∅ 10-21 X 2	2	WASHER	RONDELLE RONDELLA	UNTERLEGSCHEIBE ARANDELA
19	4278306M1		2	SHOCK ABSORBER	AMORTISSEUR AMMORTIZZATORE*	STOSSDAEMPFER AMORTIGUADOR
20	4278351M1		1	TIE	ATTACHE TRAVERSA ATTACCO	KUPPL.STANGE BARRA DE ENLACE
21	3010021X1		2	RIVET	RIVET RIBATTINO	NIET REMACHE
22	4278782M1		1	SOUND REDUCTION	INSONORISATION INSONORIZZANTE	SCHALLDAEMMUNG REDUCTOR SONIDO
23	4278758M1		1	GASKET	JOINT GUARNIZIONE	DICHTSCHEIBE EMPAQUETADURA.
24	4275106M2		1	BRIDLE	BRIDE BRIGLIA	SPANNBAND BRIDA
25	392882X1	M10 X 240	1	HEX. SOCK. SCREW	VIS TETE HEX VITE PARKER	ZYLINDERSCHRAUBE TORN.CAB.HUECA
26	4274520M1	◄► 1220 MM +	1	CABLE	CABLE CAVO	KABEL CABLE

Batteries And Cables
Batterie Et Cables
Batterie Und Kabel
Batteria A Cavo
Batterie Y Cable

10-200

Without Battery Cut-Off With Positive Connection
Sans Coupe Batterie Avec Borne Positive
Ohne Unterbrecher Mit Doppelnippel
Sin Ruttore Con Morsetto
Senza Ruptor Con Conector

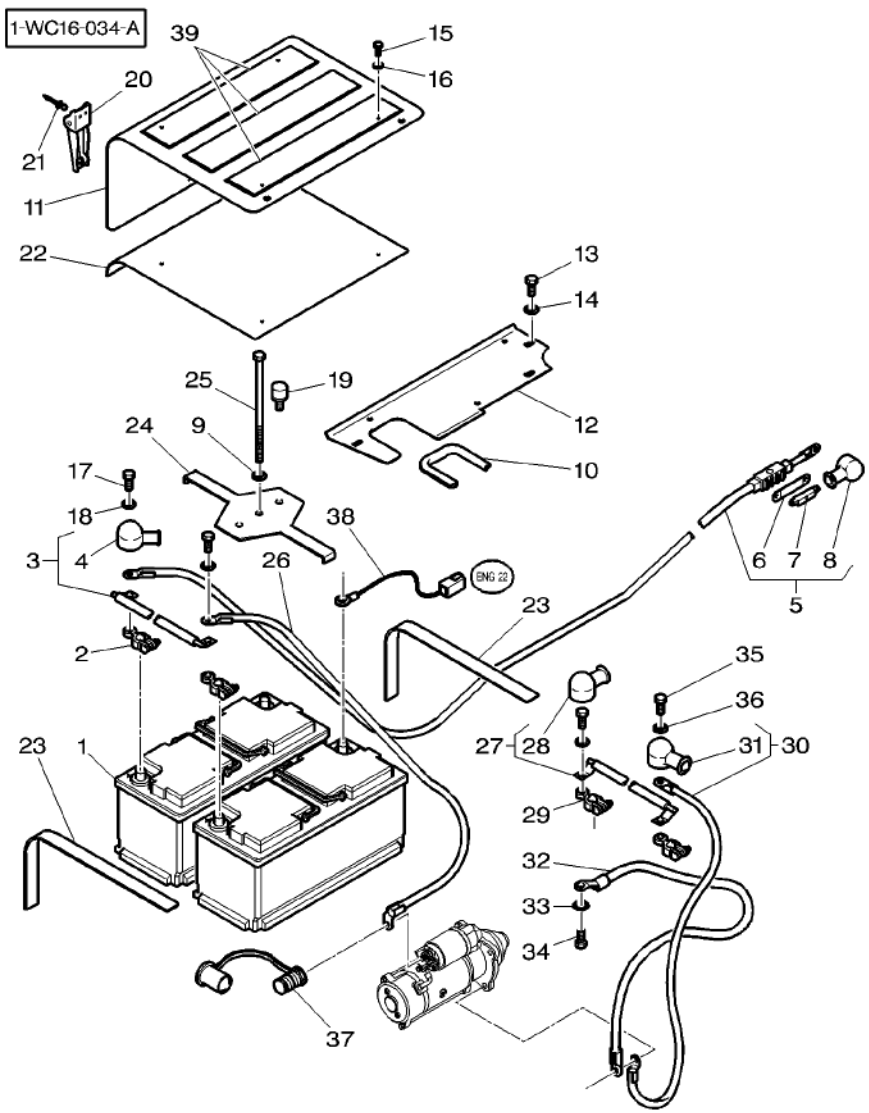

27	4274518M1	◄► 190 MM –	1	CABLE CAVO	KABEL CABLE
28	3784666M1	27	2	HELMET CASCO	SCHUTZHELM CASCO
29	4276409M1	–	2	CONNECTOR MORSETTO	BORNE DOPPELNIPPEL CONECTOR
30	4275488M2		1	CABLE CAVO	KABEL CABLE
31	3784666M1	30	1	HELMET CASCO	SCHUTZHELM CASCO
32	3788045M1	◄► 750 MM –	1	CABLE CAVO	CABLE KABEL CABLE
33	3010604X1		1	WASHER RONDELLA	RONDELLE UNTERLEGSCHEIBE ARANDELA
34	3009491X1	M10 X 20	1	HEX. SOCK. SCREW VITE PARKER	VIS TETE HEX ZYLINDERSCHRAUBE TORN.CAB.HUECA
35	339124X1	M8 X 16	2	HEX. SOCK. SCREW VITE PARKER	VIS TETE HEX ZYLINDERSCHRAUBE TORN.CAB.HUECA
36	390972X1	∅ 8-17 X 1,7	2	WASHER RONDELLA	RONDELLE UNTERLEGSCHEIBE ARANDELA
37	5015252M1		1	CONNECTOR MORSETTO	BORNE DOPPELNIPPEL CONECTOR
38	4276513M1	◄► 1800 MM	1	HARNESS FASCIOCAVI	FAISCEAU KABELBAUM MAZO CABLES
39	4280036M1	370 X 70	3	RUBBER STRAP NASTRO IN GOMMA	BANDE CAOUTCHOUC GUMMIBAND BANDA DE GOMA

[A] PLEASE REFER TO MARKETING CATALOG
CONSULTER LE CATALOGUE MARKETING
SIEHEN DIE MARKETING LISTE
RIFERIRSI AL LISTA MARKETING
VEASE LA LISTA MARKETING

[B] THE APPROPRIATE SAFETY DECALS MUST BE ORDERED AND FITTED TO THIS PART
CETTE PIECE DOIT ETRE IMPERATIVEMENT COMMANDEE AVEC SA DECALCOMANIE DE SECURITE
DIESES TEIL MUSS UNBEDINGT ZUSAMMEN MIT DEM SICHER HEITSHINWEISSCHILD BESTELLT WERDEN
QUESTO PEZZO DEVE ASSOLUTAMENTE ESSERE ORDINATO CON LA RELATIVA DECALCO. SULLA SICUREZZA
ESTA PIEZA SE TIENE QUE PEDIR IMPERATIVAMENTE CON SU CALCOMANIA DE SEGURIDAD

Batteries And Cables
Batterie Et Cables
Batterie Und Kabel
Batteria A Cavo
Batterie Y Cable

10-205

With Battery Cut-Off W/O Positive Connection
Avec Coupe Batterie Sans Borne Positive
Mit Unterbrecher Ohne Doppel Nippel
Con Ruttore Sin Morsetto
Con Ruptor Senza Conector

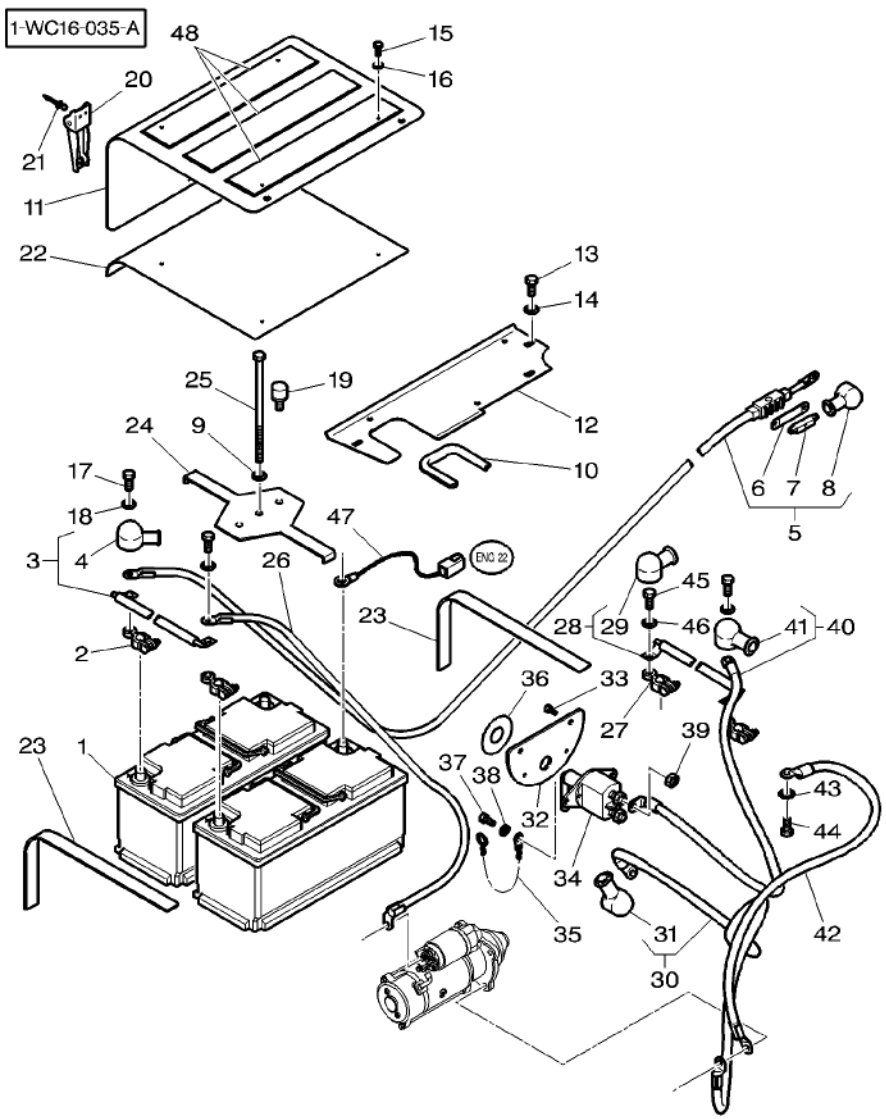

1		[AB]	2	BATTERY	BATTERIE BATTERIA	BATTERIE BATERIA
2	4276408M1	+	2	CONNECTOR	BORNE MORSETTO	DOPPELNIPPEL CONECTOR
3	4274946M1	◄► 190 MM +	1	CABLE	CABLE CAVO	KABEL CABLE
4	3784666M1	3	2	HELMET	CAPUCHON CASCO	SCHUTZHELM CASCO
5	4274519M2	◄► 1870 MM +	1	CABLE	CABLE CAVO	KABEL CABLE
6	***4276186M1***	5 150 AMP	1	FUSE	FUSIBLE VALVOLINA	SICHERUNG FUSIBLE
7	3789733M1	5	1	CASE ASSY	BOITIER CARCASSA COMPLET	GEHAEUSE KPL CAJA COMPLETA
8	3784666M1	5	1	HELMET	CAPUCHON CASCO	SCHUTZHELM CASCO
9	390597X1	∅ 10-30 X 2,5	1	WASHER	RONDELLE RONDELLA	UNTERLEGSCHEIBE ARANDELA
10	3784893M1	◄► 204 MM	1	GASKET	JOINT GUARNIZIONE	DICHTSCHEIBE EMPAQUETADURA.
11	4278304M2		1	COVER	COUVERCLE COPERCHIO	DECKEL CUBIERTA
12★	4278305M2		1	BRIDLE	BRIDE BRIGLIA	SPANNBAND BRIDA
13	339124X1	M8 X 16	4	HEX. SOCK. SCREW	VIS TETE HEX VITE PARKER	ZYLINDERSCHRAUBE TORN.CAB.HUECA
14	390972X1	∅ 8-17 X 1,7	4	WASHER	RONDELLE RONDELLA	UNTERLEGSCHEIBE ARANDELA
15	338828X1		4	RIVET	RIVET RIBATTINO	NIET REMACHE
16	3001856X1	∅ 4-12 X 1,1	4	WASHER	RONDELLE RONDELLA	UNTERLEGSCHEIBE ARANDELA
17	1440433X1	M10 X 16	2	HEX. SOCK. SCREW	VIS TETE HEX VITE PARKER	ZYLINDERSCHRAUBE TORN.CAB.HUECA
18	390734X1	∅ 10-21 X 2	2	WASHER	RONDELLE RONDELLA	UNTERLEGSCHEIBE ARANDELA
19	4278306M1		2	SHOCK ABSORBER	AMORTISSEUR AMMORTIZZATORE*	STOSSDAEMPFER AMORTIGUADOR
20	4278351M1		1	TIE	ATTACHE TRAVERSA ATTACCO	KUPPL.STANGE BARRA DE ENLACE
21	3010021X1		2	RIVET	RIVET RIBATTINO	NIET REMACHE
22	4278782M1		1	SOUND REDUCTION	INSONORISATION INSONORIZZANTE	SCHALLDAEMMUNG REDUCTOR SONIDO
23	4278758M1		1	GASKET	JOINT GUARNIZIONE	DICHTSCHEIBE EMPAQUETADURA.
24	4275106M2		1	BRIDLE	BRIDE BRIGLIA	SPANNBAND BRIDA
25	392882X1	M10 X 240	1	HEX. SOCK. SCREW	VIS TETE HEX VITE PARKER	ZYLINDERSCHRAUBE TORN.CAB.HUECA
26	4274520M1	◄► 1220 MM +	1	CABLE	CABLE CAVO	KABEL CABLE

Batteries And Cables
Batterie Et Cables
Batterie Und Kabel
Batteria A Cavo
Batterie Y Cable

10-205

With Battery Cut-Off W/O Positive Connection
Avec Coupe Batterie Sans Borne Positive
Mit Unterbrecher Ohne Doppel Nippel
Con Ruttore Sin Morsetto
Con Ruptor Senza Conector

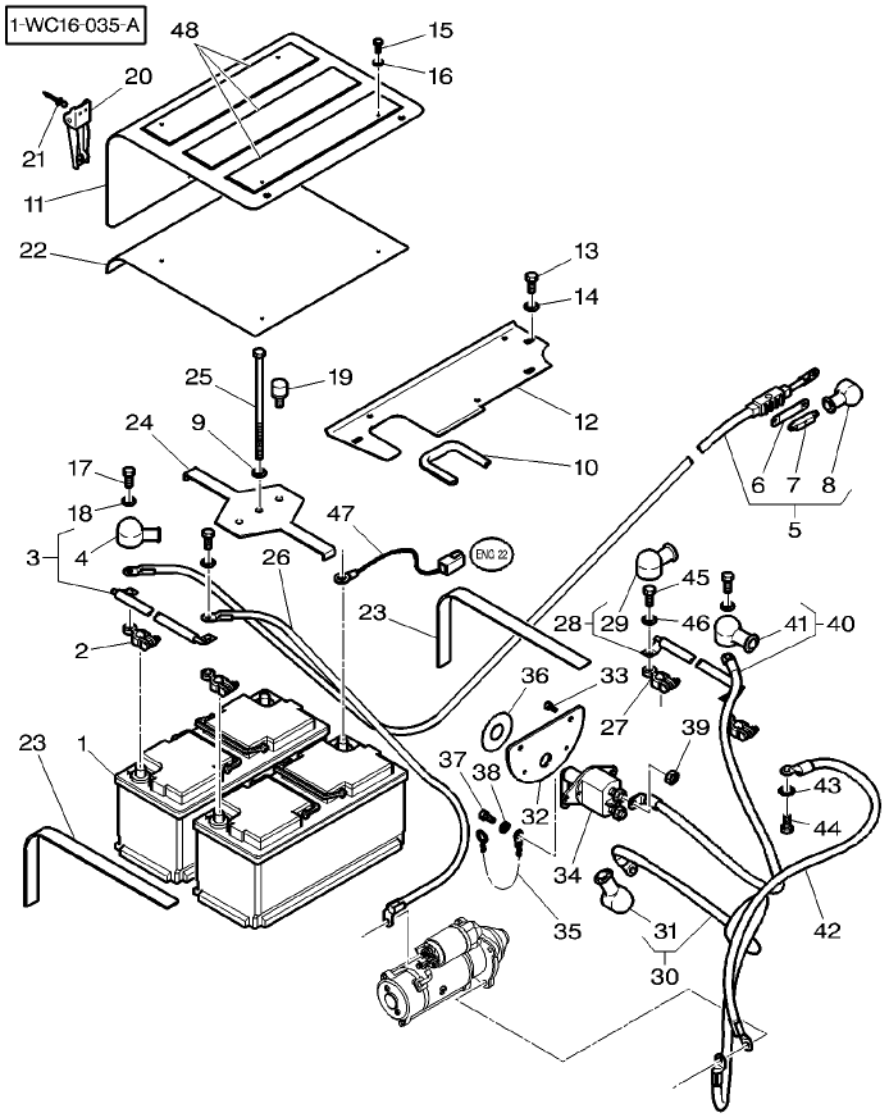

27	4276409M1	–		2	CONNECTOR	BORNE MORSETTO	DOPPELNIPPEL CONECTOR
28	4274518M1	◄► 190 MM		1	CABLE	CABLE CAVO	KABEL CABLE
29	3784666M1	– 28		2	HELMET	CAPUCHON CASCO	SCHUTZHELM CASCO
30	4275544M1	◄► 1400 MM		1	CABLE	CABLE CAVO	KABEL CABLE
31	3784666M1	– 30		1	HELMET	CAPUCHON CASCO	SCHUTZHELM CASCO
32	4275007M1			1	SUPPORT	SUPPORT SUPPORTO	LAGERUNG DISPOS.DE SOSTEN
33	339123X1	M8 X 20		2	HEX. SOCK. SCREW	VIS TETE HEX VITE PARKER	ZYLINDERSCHRAUBE TORN.CAB.HUECA
34	3613598M91			1	SWITCH	INTERRUPTEUR INTERRUTTORE	SCHALTER INTERRUPTOR
35	3613599M91			1	CHAIN	CHAINE CATENA	KETTE CADENA
36	3613600M1			1	DECAL	DECALCOMANIE DECALCOMANIA	AUFKLEBER CALCOMANIA
37	339666X1	M6 X 20		2	HEX. SOCK. SCREW	VIS TETE HEX VITE PARKER	ZYLINDERSCHRAUBE TORN.CAB.HUECA
38	390971X1	∅ 6-12 X 1,5		2	WASHER	RONDELLE RONDELLA	UNTERLEGSCHEIBE ARANDELA
39	339030X1	M6		2	NUT METRIC	ECROU METRIQUE DADO METRICO	MUTTER METRISCH TUERCA METRICO
40	4275771M1	◄► 1400 MM		1	BATTERY CABLE	CABLE BATTERIE CAVO DE BATTERIA	BATTERIE KABEL CABLE DE BATERIA
41	3784666M1	– 40		1	HELMET	CAPUCHON CASCO	SCHUTZHELM CASCO
42	3788045M1	◄► 750 MM		1	CABLE	CABLE CAVO	KABEL CABLE
43	3010604X1			1	WASHER	RONDELLE RONDELLA	UNTERLEGSCHEIBE ARANDELA
44	3009491X1	M10 X 20		1	HEX. SOCK. SCREW	VIS TETE HEX VITE PARKER	ZYLINDERSCHRAUBE TORN.CAB.HUECA
45	339124X1	M8 X 16		2	HEX. SOCK. SCREW	VIS TETE HEX VITE PARKER	ZYLINDERSCHRAUBE TORN.CAB.HUECA
46	390972X1	∅ 8-17 X 1,7		2	WASHER	RONDELLE RONDELLA	UNTERLEGSCHEIBE ARANDELA
47	4276513M1	◄► 1800 MM		1	HARNESS	FAISCEAU FASCIOCAVI	KABELBAUM MAZO CABLES
48	4280036M1	370 X 70		3	RUBBER STRAP	BANDE CAOUTCHOUC NASTRO IN GOMMA	GUMMIBAND BANDA DE GOMA

[A] PLEASE REFER TO MARKETING CATALOG
CONSULTER LE CATALOGUE MARKETING
SIEHEN DIE MARKETING LISTE
RIFERIRSI AL LISTA MARKETING
VEASE LA LISTA MARKETING

Batteries And Cables Batterie Et Cables Batterie Und Kabel Batteria A Cavo Batterie Y Cable	10-205	With Battery Cut-Off W/O Positive Connection Avec Coupe Batterie Sans Borne Positive Mit Unterbrecher Ohne Doppel Nippel Con Ruttore Sin Morsetto Con Ruptor Senza Conector

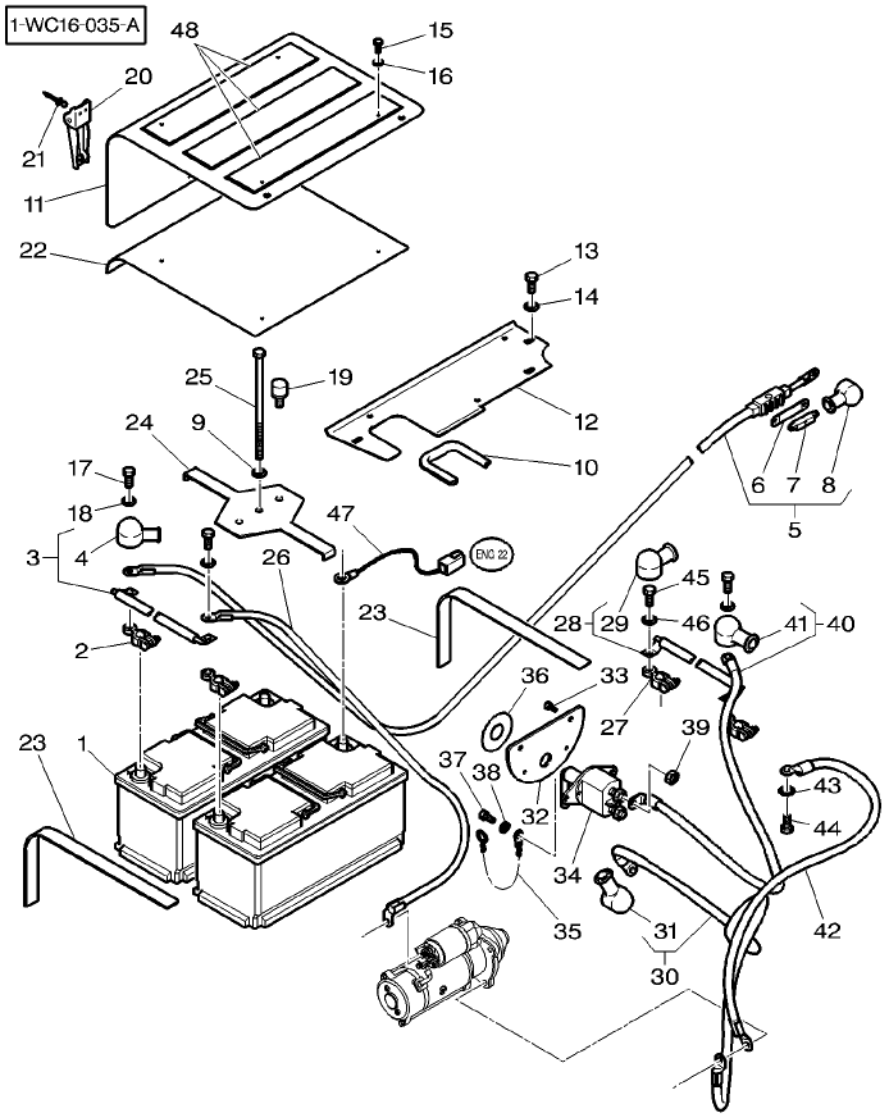

[B] THE APPROPRIATE SAFETY DECALS MUST BE ORDERED AND FITTED TO THIS PART
CETTE PIECE DOIT ETRE IMPERATIVEMENT COMMANDEE AVEC SA DECALCOMANIE DE SECURITE
DIESES TEIL MUSS UNBEDINGT ZUSAMMEN MIT DEM SICHER HEITSHINWEISSCHILD BESTELLT WERDEN
QUESTO PEZZO DEVE ASSOLUTAMENTE ESSERE ORDINATO CON LA RELATIVA DECALCO. SULLA SICUREZZA
ESTA PIEZA SE TIENE QUE PEDIR IMPERATIVAMENTE CON SU CALCOMANIA DE SEGURIDAD

Cooling System	Air Conditioned Installation
Systeme De Refroidissement	Installation Air Conditionne
Kuehlsystem	Klimaanlage–Einbau
Sistema Raffreddamento	Installazione Aria Condizionata
Sistema De Refrigeracion	Instalacion Con Aire Acondicionad

10-210

1-WC08-016-A

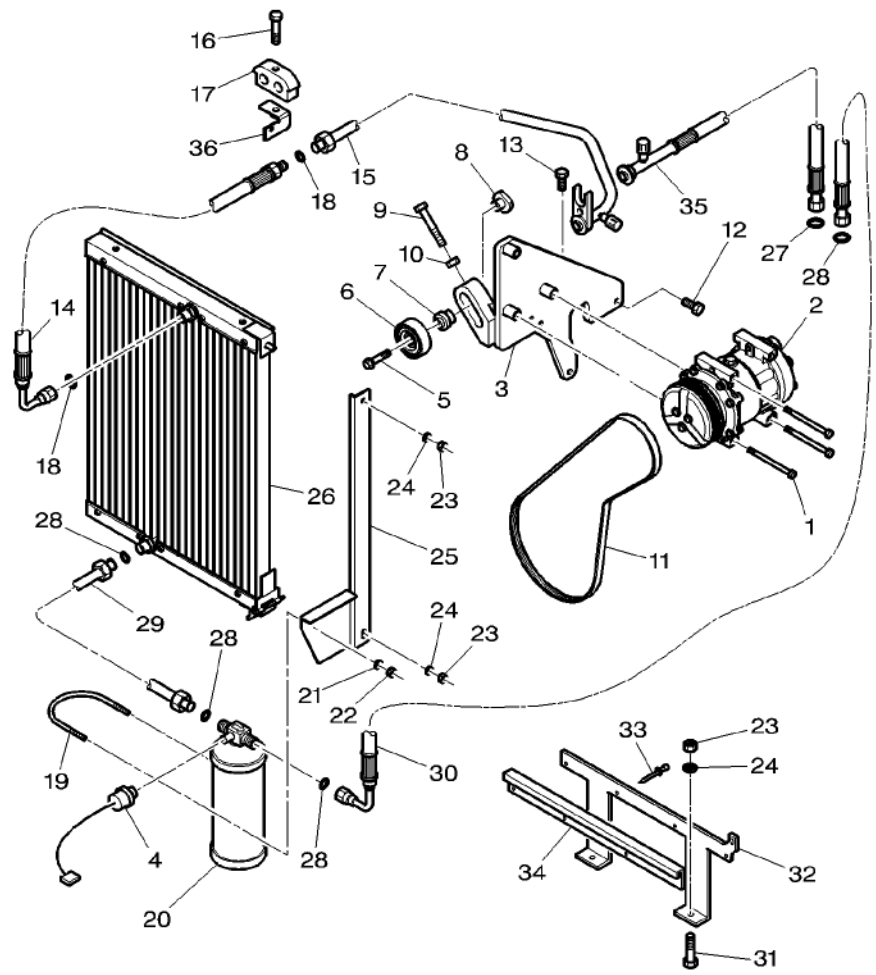

1	391245X1	M8 X 130	3	HEX. SOCK. SCREW	VIS TETE HEX VITE PARKER	ZYLINDERSCHRAUBE TORN.CAB.HUECA
2	3789035M1	👁 10–215 No 1	1	COMPRESSOR	COMPRESSEUR COMPRESSORE	KOMPRESSOR COMPRESOR
3	4279847M2		1	SUPPORT	SUPPORT SUPPORTO	LAGERUNG DISPOS.DE SOSTEN
4	***3712526M1***	M8	1	PRESSURE SWITCH	MANO CONTACT PRESSOSTATO	DRUCKSCHALTER INTERRUP PRESION
5	3010239X1	M10 X 45	1	PLOUGH BOLT	VIS A EMBASE VITE TESTA TONDA	SENKSCHLOSSSCHRB TORNILLO ALOJ C
6	4270319M1		1	ROLLER ASSY	GALET ASSEMBLE RULLO COMPLETO	ROLLE KOMPL CJTO.DE RODILLO
7	4270055M2		1	BUSH	BAGUE BOCCOLA	BUCHSE CASQUILLO
8	4270054M1	M10	1	NUT SPECIAL	ECROU SPECIAL DADO SPECIALE	SPEZIALMUTTER TUERCA ESPECIAL
9	390122X1	M10 X 80	1	HEX. SOCK. SCREW	VIS TETE HEX VITE PARKER	ZYLINDERSCHRAUBE TORN.CAB.HUECA
10	339402X1	M10	1	NUT	ECROU DADO	MUTTER TUERCA
11	***4276375M1***	◀▶ 1145 MM	1	BELT	COURROIE CINGHIA	RIEMEN CORREA
12	390246X1	M8 X 70	2	HEX. SOCK. SCREW	VIS TETE HEX VITE PARKER	ZYLINDERSCHRAUBE TORN.CAB.HUECA
13	3009492X1	M10 X 25	1	HEX. SOCK. SCREW	VIS TETE HEX VITE PARKER	ZYLINDERSCHRAUBE TORN.CAB.HUECA
14	4278051M1	◀▶ 1200 MM	1	HYDR. HOSE	FLEXIBLE TUBOFLEX IDRAUL	HYDR. SCHLAUCH TUBO HIDRAULICO
15	4278053M1		1	TUBE	TUBE TUBO	ROHR TUBO
16	339011X1	M8 X 45	1	HEX. SOCK. SCREW	VIS TETE HEX VITE PARKER	ZYLINDERSCHRAUBE TORN.CAB.HUECA
16	339010X1	M8 X 40	3	HEX. SOCK. SCREW	VIS TETE HEX VITE PARKER	ZYLINDERSCHRAUBE TORN.CAB.HUECA
17	3784654M1	∅ 10 / 12	1	BRIDLE	BRIDE BRIGLIA	SPANNBAND BRIDA
17	3789315M1	∅ 10 / 16	3	BRIDLE	BRIDE BRIGLIA	SPANNBAND BRIDA
17*	3789722M1	∅ 15 / 15	2	BRIDLE	BRIDE BRIGLIA	SPANNBAND BRIDA
18	3010472X1	∅ 10,82 MM	2	O RING	JOINT TORIQUE ANELLO TENUTA	O–RING ANILLO FORMA 'O'
19	3383977M1		1	STIRRUP	ETRIER STAFFA	BUEGEL FUACION
20	***3712495M1***		1	FILTER	FILTRE FILTRO	FILTER FILTRO
21	390971X1	∅ 6–12 X 1,5 MM	2	WASHER	RONDELLE RONDELLA	UNTERLEGSCHEIBE ARANDELA
22	339030X1	M6	2	NUT METRIC	ECROU METRIQUE DADO METRICO	MUTTER METRISCH TUERCA METRICO
23	339169X1	M8	5	NUT	ECROU DADO	MUTTER TUERCA

1-WC08-016-A

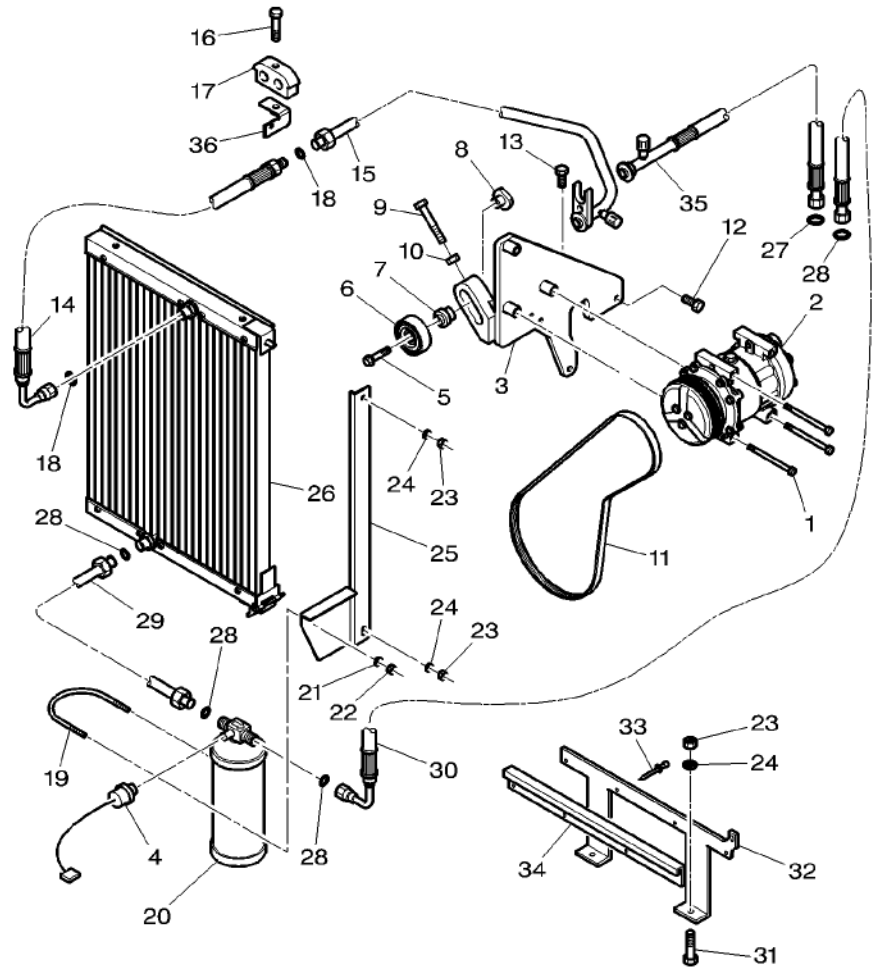

24	390972X1	∅ 8–17 X 1,7	4	WASHER	RONDELLE RONDELLA	UNTERLEGSCHEIBE ARANDELA
25	3785878M3		1	SUPPORT	SUPPORT SUPPORTO	LAGERUNG DISPOS.DE SOSTEN
26	3785702M1		1	CONDENSER	CONDENSEUR CONDENSATORE*	VERDICHTER CONDENSADOR
27	3010473X1	∅ 14 MM	1	O RING	JOINT TORIQUE ANELLO TENUTA	O–RING ANILLO FORMA 'O'
28	***3010471X1***	∅ 7,65 MM	5	O RING	JOINT TORIQUE ANELLO TENUTA	O–RING ANILLO FORMA 'O'
29	3787886M1		1	TUBE	TUBE TUBO	ROHR TUBO
30	4272202M1	◄► 3000 MM	1	HYDR. HOSE	FLEXIBLE TUBOFLEX IDRAUL	HYDR. SCHLAUCH TUBO HIDRAULICO
31	339123X1	M8 X 20	2	HEX. SOCK. SCREW	VIS TETE HEX VITE PARKER	ZYLINDERSCHRAUBE TORN.CAB.HUECA
32	4276222M3		1	PLATE	PLAQUE PIASTRA	PLATTE PLATO
33	3010021X1		4	RIVET	RIVET RIBATTINO	NIET REMACHE
34	3787634M1		1	SUPPORT	SUPPORT SUPPORTO	LAGERUNG DISPOS.DE SOSTEN
35	4272092M1	◄► 1140 MM	1	HYDR. HOSE	FLEXIBLE TUBOFLEX IDRAUL	HYDR. SCHLAUCH TUBO HIDRAULICO
36	4280067M1		1	SUPPORT	SUPPORT SUPPORTO	LAGERUNG DISPOS.DE SOSTEN

Compresser
Compresseur
Kompressor
Compressore
Compresor

10-215

1-WC49-001-A

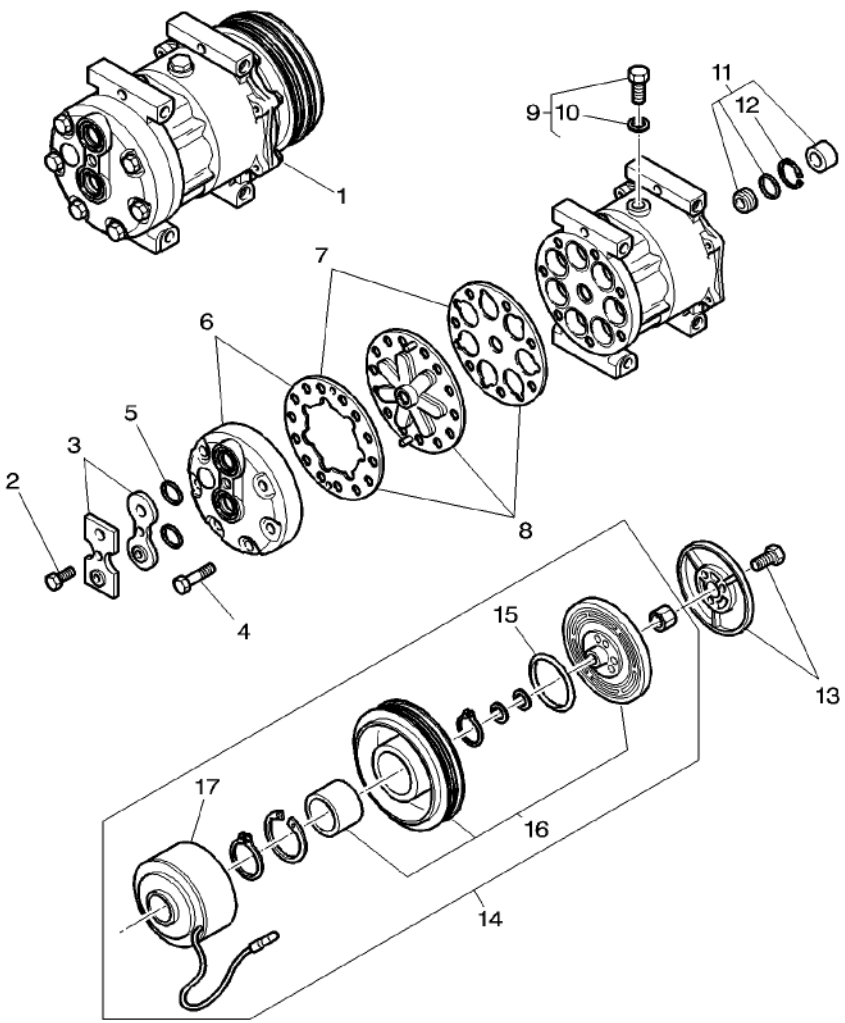

1	3789035M1		1	COMPRESSOR	COMPRESSEUR COMPRESSORE	KOMPRESSOR COMPRESOR
2	3901157M1	1	1	SCREW	VIS VITE	SCHRAUBE TORNILLO
3	3903258M91	1	1	KIT	JEU KIT	SATZ JUEGO
4	3901154M1	1	1	SCREW	VIS VITE	SCHRAUBE TORNILLO
5	3901155M1	1	1	O RING	JOINT TORIQUE ANELLO TENUTA	O-RING ANILLO FORMA 'O'
6	3901147M91	1	1	HEAD	TETE TESTA	KOPF CULATA
7	3903256M91	1	1	KIT, GASKET	JEU JOINTS PLATS KIT GUARNIZIONI	DICHTSCHEIB.SATZ JGO.EMPAQUETAD.
8	3903255M91	1	1	KIT	JEU KIT	SATZ JUEGO
9	3901152M91	1	1	PLUG	BOUCHON TAPPO	VERSCHL.STOPFEN TAPON
10*	3901153M1	9	1	O RING	JOINT TORIQUE ANELLO TENUTA	O-RING ANILLO FORMA 'O'
11	3907059M91	1	1	KIT, JOINT	JEU JOINTS KIT GIUNTO	DICHTUNGSSATZ JUEGO JUNTAS
12	3907060M1	11	1	SNAPRING	SEGMENT ARRET ANELLO SIEGER	SPRENGRING ANILLA RETENCION
13	3903259M91	1	1	KIT	JEU KIT	SATZ JUEGO
14	3907061M91	1	1	CLUTCH	EMBRAYAGE FRIZIONE	SCHALTKUPPLUNG EMBRAGUE
15	3901162M1	14	1	COVER	COUVERCLE COPERCHIO	DECKEL CUBIERTA
16	3907062M91	14	1	ROTOR	ROTOR ROTORE	ROTOR ROTOR
17	3907063M91	14	1	COIL	BOBINE BOBINA	KNICKSCHUTZFEDER BOBINA

Cooling System Systeme De Refroidissement Kuehlung Sistema Di Raffreddamento Sistema Refrigeracion	Engine Moteur Motor Motore Motor	10-220

1-WC23-021-C

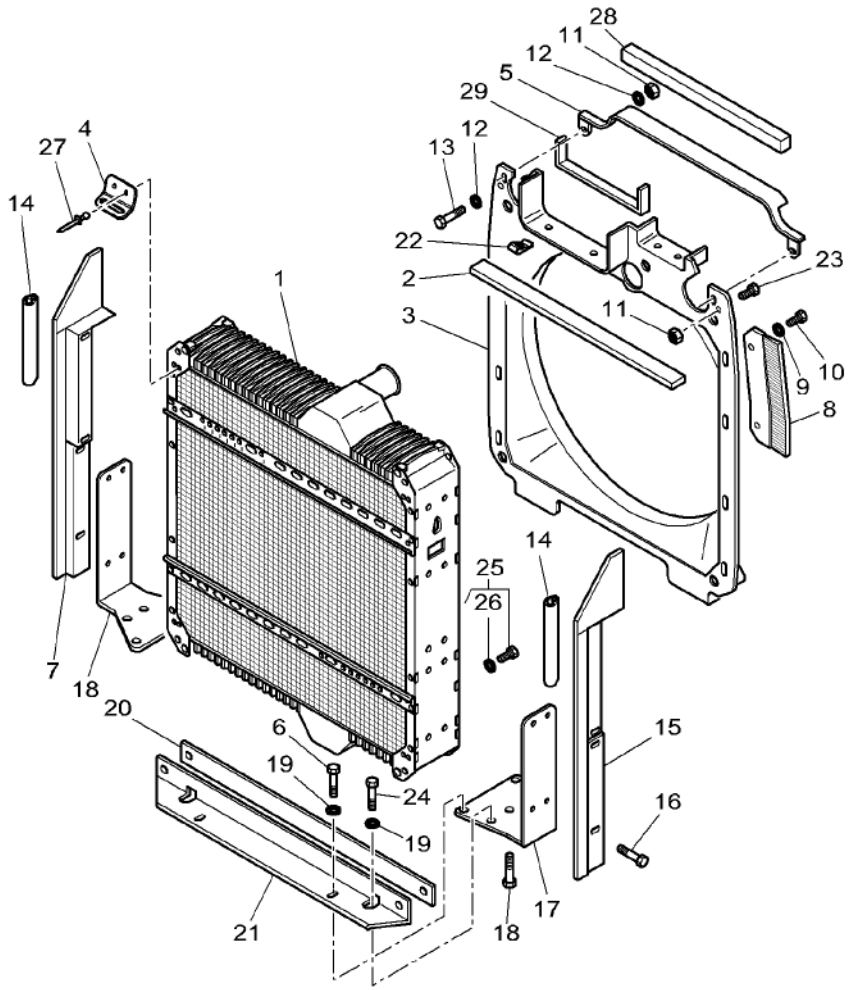

1	3788381M1	[A]	1	WATER COOLER	RADIATEUR EAU RADIATORE ACQUA	WASSERKUEHLER REFRIG DE AGUA
2	72504363	12 X 25 X 610	2	FOAM	MOUSSE GOMMAPIUMA	SCHAUMSTOFF ESPUMA
3	4277202M1		1	SHROUD	BUSE VELO	UMMANTELUNG BOVEDA
4	3789249M1		2	ANGLE.	EQUERRE ANGOLO	WINKEL ANGULO
5	3785976M2		1	SUPPORT	SUPPORT SUPPORTO	LAGERUNG DISPOS.DE SOSTEN
6	3009506X1	M12 X 30	4	HEX. SOCK. SCREW	VIS TETE HEX VITE PARKER	ZYLINDERSCHRAUBE TORN.CAB.HUECA
7*	3781630M1	▶	1	SUPPORT	SUPPORT SUPPORTO	LAGERUNG DISPOS.DE SOSTEN
8	3783099M4	▶	1	GASKET	JOINT GUARNIZIONE	DICHTSCHEIBE EMPAQUETADURA.
8	3783100M4	◀	1	GASKET	JOINT GUARNIZIONE	DICHTSCHEIBE EMPAQUETADURA.
9	390972X1	∅ 8–17 X 1,7	8	WASHER	RONDELLE RONDELLA	UNTERLEGSCHEIBE ARANDELA
10	339124X1	M8 X 16	8	HEX. SOCK. SCREW	VIS TETE HEX VITE PARKER	ZYLINDERSCHRAUBE TORN.CAB.HUECA
11	339169X1	M8	4	NUT	ECROU DADO	MUTTER TUERCA
12	390972X1	∅ 8–17 X 1,7	4	WASHER	RONDELLE RONDELLA	UNTERLEGSCHEIBE ARANDELA
13	339761X1	M8 X 25	2	HEX. SOCK. SCREW	VIS TETE HEX VITE PARKER	ZYLINDERSCHRAUBE TORN.CAB.HUECA
14	3011018X1	◀▶ 700 MM	2	SEAL	JOINT ETANCHEITE ANELLO RACCORD	DICHTRING ARENDELA D'JUNTA
15	3781629M1	◀	1	SUPPORT	SUPPORT SUPPORTO	LAGERUNG DISPOS.DE SOSTEN
16	339123X1	M8 X 20	8	HEX. SOCK. SCREW	VIS TETE HEX VITE PARKER	ZYLINDERSCHRAUBE TORN.CAB.HUECA
17	3781911M1	◀	1	SUPPORT	SUPPORT SUPPORTO	LAGERUNG DISPOS.DE SOSTEN
18	3781621M1	▶	1	SUPPORT	SUPPORT SUPPORTO	LAGERUNG DISPOS.DE SOSTEN
19	390735X1	∅ 12–24 X 2,5	6	WASHER	RONDELLE RONDELLA	UNTERLEGSCHEIBE ARANDELA
20	3783101M1	◀▶ 745 MM	1	GASKET	JOINT GUARNIZIONE	DICHTSCHEIBE EMPAQUETADURA.
21	3783046M1		1	SUPPORT	SUPPORT SUPPORTO	LAGERUNG DISPOS.DE SOSTEN
22	3010070X1	M6	2	NUT	ECROU DADO	MUTTER TUERCA
23	339123X1	M8 X 20	2	HEX. SOCK. SCREW	VIS TETE HEX VITE PARKER	ZYLINDERSCHRAUBE TORN.CAB.HUECA
24	3009505X1	M12 X 25	2	HEX. SOCK. SCREW	VIS TETE HEX VITE PARKER	ZYLINDERSCHRAUBE TORN.CAB.HUECA
25	358724X91	3/4–16	1	PLUG	BOUCHON TAPPO	VERSCHL.STOPFEN TAPON

Cooling System Systeme De Refroidissement Kuehlung Sistema Di Raffreddamento Sistema Refrigeracion	Engine Moteur Motor Motore Motor	10-220

1-WC23-021-C

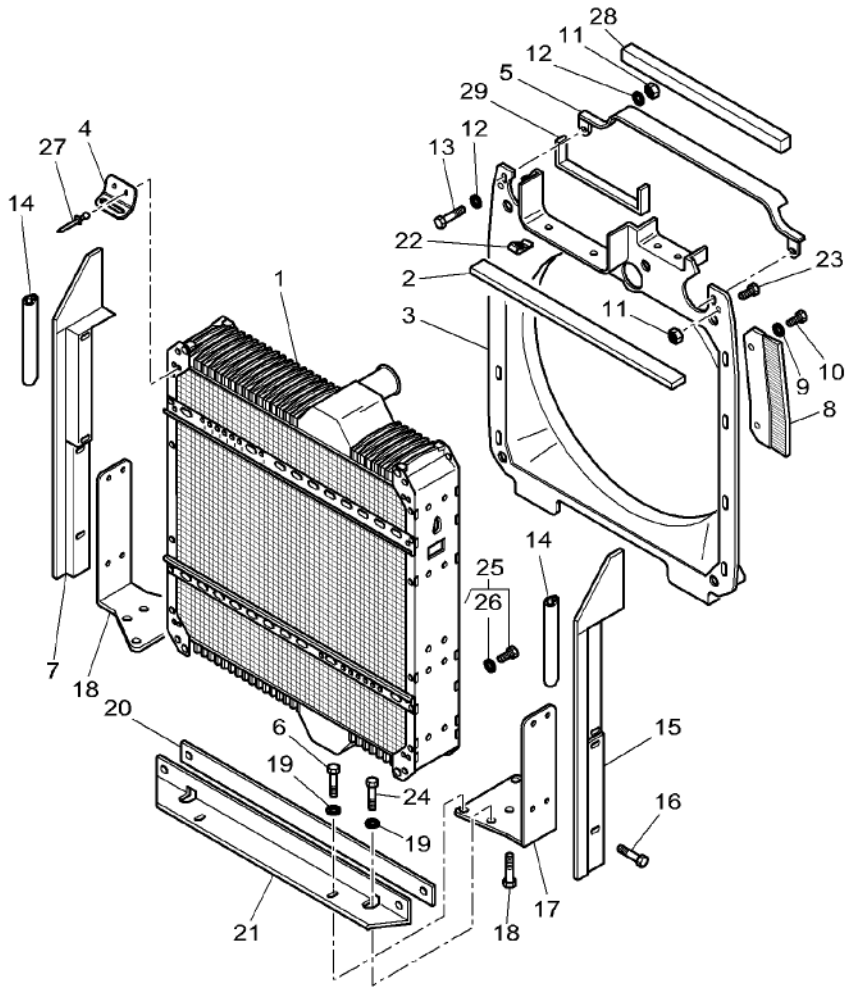

26	831497M1	25	1 O RING	JOINT TORIQUE ANELLO TENUTA	O-RING ANILLO FORMA 'O'
27	3010021X1	∅ 4.8 x 9	4 RIVET	RIVET RIBATTINO	NIET REMACHE
28*	3783670M2	16 X 50 X 750 MM	1 GASKET	JOINT GUARNIZIONE	DICHTSCHEIBE EMPAQUETADURA.
28*	3389703M1	38 X 38 X 160 MM	1 SKATE	PATIN PATTINO	SCHLITTEN-KUFE PATIN
29*	5016145M2		2 GASKET	JOINT GUARNIZIONE	DICHTSCHEIBE EMPAQUETADURA.

[A] THE APPROPRIATE SAFETY DECALS MUST BE ORDERED AND FITTED TO THIS PART
CETTE PIECE DOIT ETRE IMPERATIVEMENT COMMANDEE AVEC SA DECALCOMANIE DE SECURITE
DIESES TEIL MUSS UNBEDINGT ZUSAMMEN MIT DEM SICHER HEITSHINWEISSCHILD BESTELLT WERDEN
QUESTO PEZZO DEVE ASSOLUTAMENTE ESSERE ORDINATO CON LA RELATIVA DECALCO. SULLA SICUREZZA
ESTA PIEZA SE TIENE QUE PEDIR IMPERATIVAMENTE CON SU CALCOMANIA DE SEGURIDAD

Cooling System Systeme De Refroidissement Kuehlung Sistema Di Raffreddamento Sistema Refrigeracion	Engine Moteur Motor Motore Motor	10-225

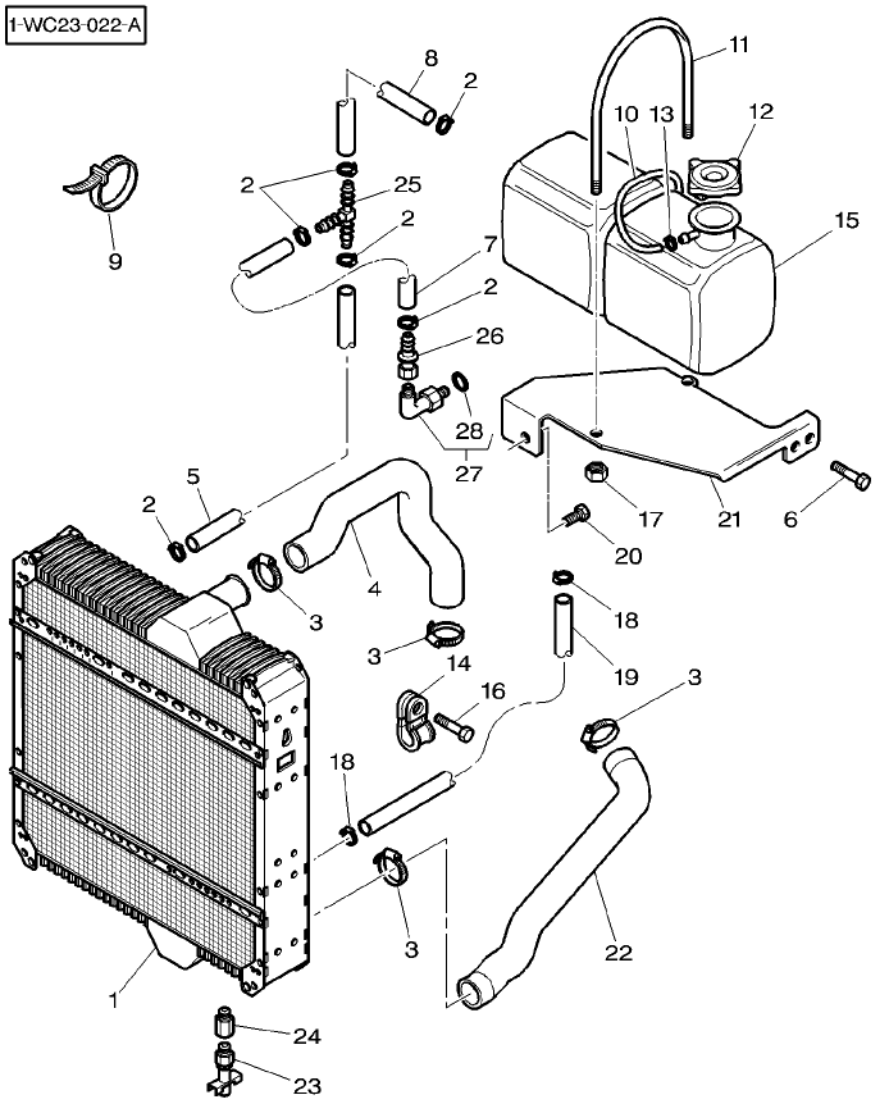

1	3788381M1	[A]	1	WATER COOLER	RADIATEUR EAU RADIATORE ACQUA	WASSERKUEHLER REFRIG DE AGUA
2	3000483X1	∅ 12–22	6	HOSE CLIP	COLLIER DURITE FASCIA	SCHLAUCHSCHELLE CLIP P.FLEXIBLE
3	338618X1	∅ 50–70	4	HOSE CLIP	COLLIER DURITE FASCIA	SCHLAUCHSCHELLE CLIP P.FLEXIBLE
4	4278281M1		1	HOSE	DURITE TUBO FLESSIBILE	SCHLAUCH FLEXIBLE
5	4278566M1	◄► 900 MM	1	HOSE	DURITE TUBO FLESSIBILE	SCHLAUCH FLEXIBLE
6	339124X1	M8 X 16	2	HEX. SOCK. SCREW	VIS TETE HEX VITE PARKER	ZYLINDERSCHRAUBE TORN.CAB.HUECA
7*	3783573M1	◄► 650 MM	1	HYDR. HOSE	FLEXIBLE TUBOFLEX IDRAUL	HYDR. SCHLAUCH TUBO HIDRAULICO
8	***3777798M1***	◄► 750 MM	1	HOSE	DURITE TUBO FLESSIBILE	SCHLAUCH FLEXIBLE
9	3619622M1		2	CABLE TIE	ATTACHE CABLE FASCETTA CAVI	KABELBINDER APRIETACABLES
10	3583427M1		1	TUBE	TUBE TUBO	ROHR TUBO
11	4275245M1	M8	1	BRIDLE	BRIDE BRIGLIA	SPANNBAND BRIDA
12	3787612M1		1	PLUG	BOUCHON TAPPO	VERSCHL.STOPFEN TAPON
13	338612X1	∅ 10–16	1	HOSE CLIP	COLLIER DURITE FASCIA	SCHLAUCHSCHELLE CLIP P.FLEXIBLE
14	3581424M1	∅ 25 MM	3	CLIP	PATTE D'ATTACHE FERMAGLIO	SCHELLE CLIP
15	4275025M2	[A] ➡| N345026	1	TANK	RESERVOIR SERBATOIO	TANK DEPOSITO LIQUIDO
15*	4280681M1	[A] ➡ N345027	1	TANK	RESERVOIR SERBATOIO	TANK DEPOSITO LIQUIDO
16	339123X1	M8 X 20	1	HEX. SOCK. SCREW	VIS TETE HEX VITE PARKER	ZYLINDERSCHRAUBE TORN.CAB.HUECA
17	339169X1	M8	2	NUT	ECROU DADO	MUTTER TUERCA
18	338614X1	∅ 20–32	2	HOSE CLIP	COLLIER DURITE FASCIA	SCHLAUCHSCHELLE CLIP P.FLEXIBLE
19	3786408M1	◄► 1700 MM	1	HOSE	DURITE TUBO FLESSIBILE	SCHLAUCH FLEXIBLE
20	3009491X1	M10 X 20	1	HEX. SOCK. SCREW	VIS TETE HEX VITE PARKER	ZYLINDERSCHRAUBE TORN.CAB.HUECA
21	4274910M3		1	SUPPORT	SUPPORT SUPPORTO	LAGERUNG DISPOS.DE SOSTEN
22	5015117M1		1	HOSE	DURITE TUBO FLESSIBILE	SCHLAUCH FLEXIBLE
23	70229210		1	COCK	ROBINET RUBINETTO	ABSPERRHAHN AGUJA INDICADORA
24	5016190M1		1	ADAPTOR	ADAPTATEUR ADATTATORE	REDUZIERNIPPEL ADAPTADOR
25	3779038M1		1	UNION	RACCORD RACCORDO	VERSCHRAUBUNG RACOR

Cooling System Systeme De Refroidissement Kuehlung Sistema Di Raffreddamento Sistema Refrigeracion	Engine Moteur Motor Motore Motor	10-225

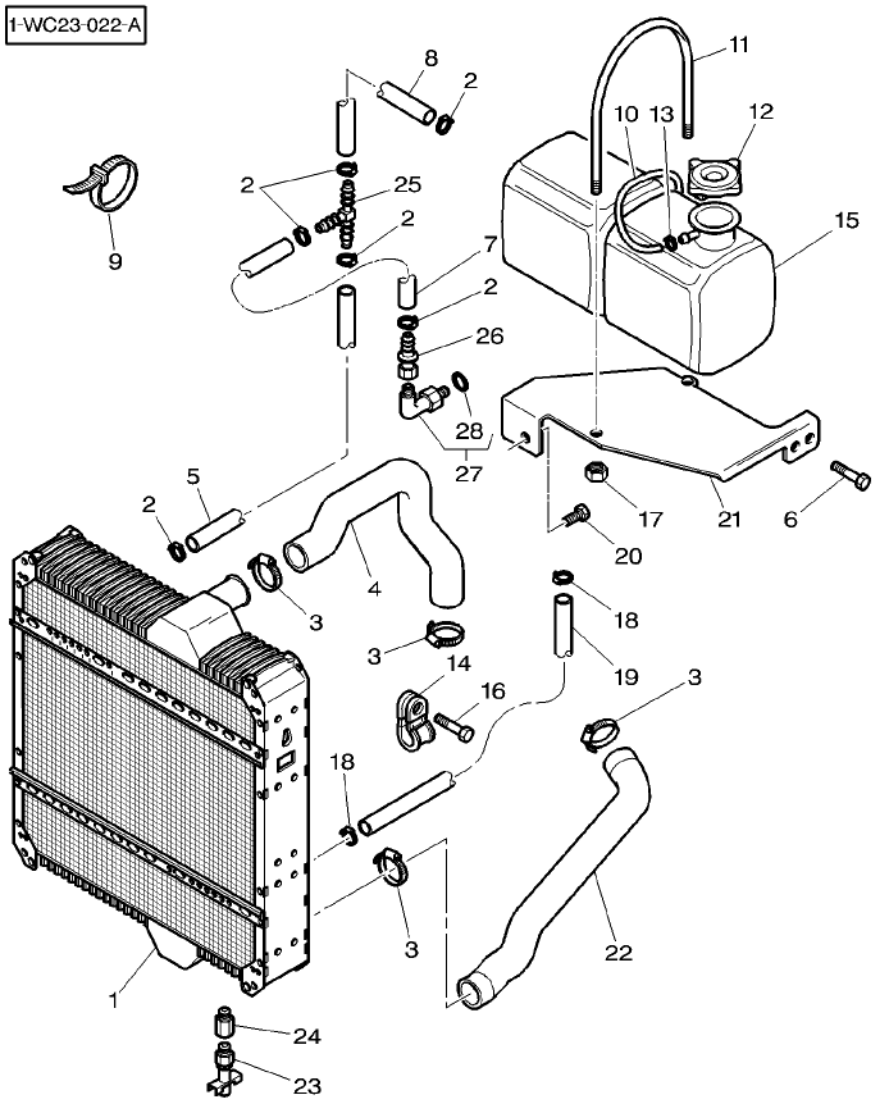

26	4279936M1		1 UNION	RACCORD RACCORDO	VERSCHRAUBUNG RACOR
27	3019302X91		1 UNION	RACCORD RACCORDO	VERSCHRAUBUNG RACOR
28	3019393X1	27	1 O RING	JOINT TORIQUE ANELLO TENUTA	O-RING ANILLO FORMA 'O'

[A] THE APPROPRIATE SAFETY DECALS MUST BE ORDERED AND FITTED TO THIS PART
CETTE PIECE DOIT ETRE IMPERATIVEMENT COMMANDEE AVEC SA DECALCOMANIE DE SECURITE
DIESES TEIL MUSS UNBEDINGT ZUSAMMEN MIT DEM SICHER HEITSHINWEISSCHILD BESTELLT WERDEN
QUESTO PEZZO DEVE ASSOLUTAMENTE ESSERE ORDINATO CON LA RELATIVA DECALCO. SULLA SICUREZZA
ESTA PIEZA SE TIENE QUE PEDIR IMPERATIVAMENTE CON SU CALCOMANIA DE SEGURIDAD

Air Cooler
Refroidisseur D'Air
Luftkuehler
Raffreddamento D'Aria
Enfriador De Aire

10-230

1-WC65-002-A

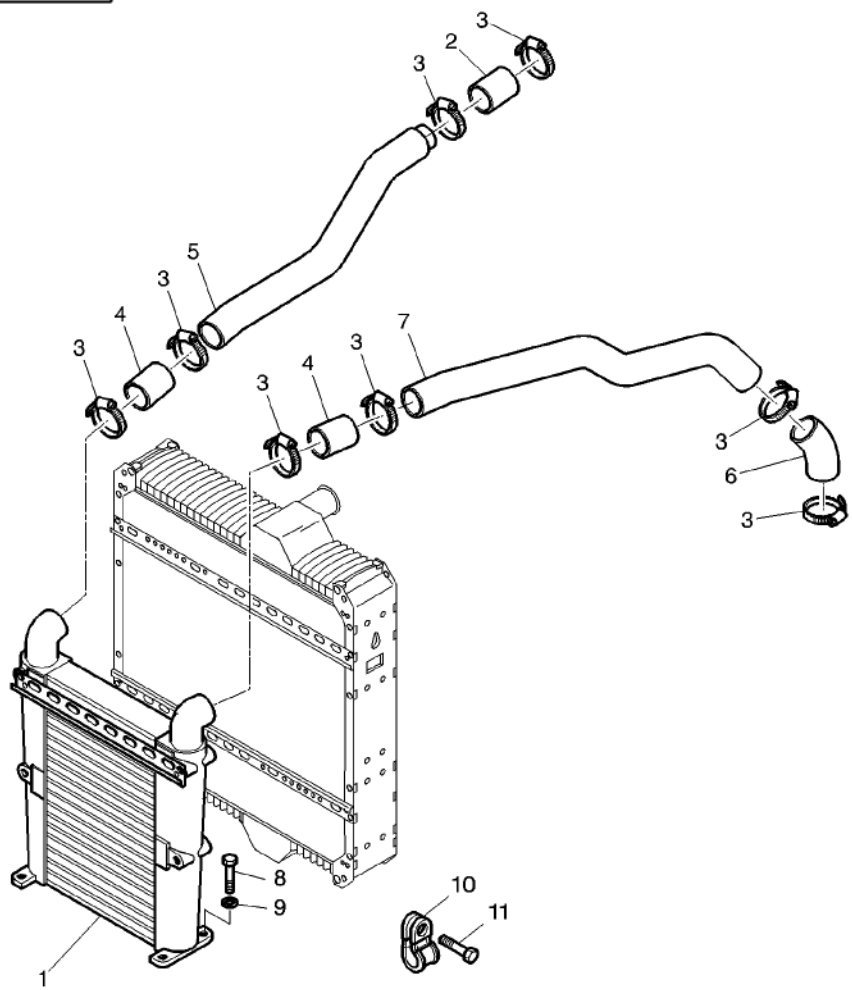

1	4276485M1		**1** COOLER	REFROIDISSEUR REFRIGERATORE	KUEHLAGGREGAT ENFRIADOR
2	3788617M1	◀	**1** HOSE	DURITE TUBO FLESSIBILE	SCHLAUCH FLEXIBLE
3	3010156X1	∅ 70–90	**8** CLAMP	COLLIER FASCETTA	HALTESCHELLE ABRAZADERA
4	3784918M1	◀▶ 100MM	**2** HOSE	DURITE TUBO FLESSIBILE	SCHLAUCH FLEXIBLE
5	4276118M1		**1** TUBE	TUBE TUBO	ROHR TUBO
6	***3780247M1***		**1** HOSE	DURITE TUBO FLESSIBILE	SCHLAUCH FLEXIBLE
7	4276119M2		**1** TUBE	TUBE TUBO	ROHR TUBO
8	339010X1	M8X40	**4** HEX. SOCK. SCREW	VIS TETE HEX VITE PARKER	ZYLINDERSCHRAUBE TORN.CAB.HUECA
9	390972X1		**4** WASHER	RONDELLE RONDELLA	UNTERLEGSCHEIBE ARANDELA
10	**3581507M1**	∅ 18MM	**2** CLIP	PATTE D'ATTACHE FERMAGLIO	SCHELLE CLIP
11	339761X1	M8 X 25	**2** HEX. SOCK. SCREW	VIS TETE HEX VITE PARKER	ZYLINDERSCHRAUBE TORN.CAB.HUECA

Air Filter Filtre A Air Luftfilter Filtro Aria Filtro Del Aire	Dry – Dual Element Sec Deux Elements Doppelter Trockenfiltereinsatz Doppio Elemento Elemento Doble Seco	10-235

1-WC20-016-B

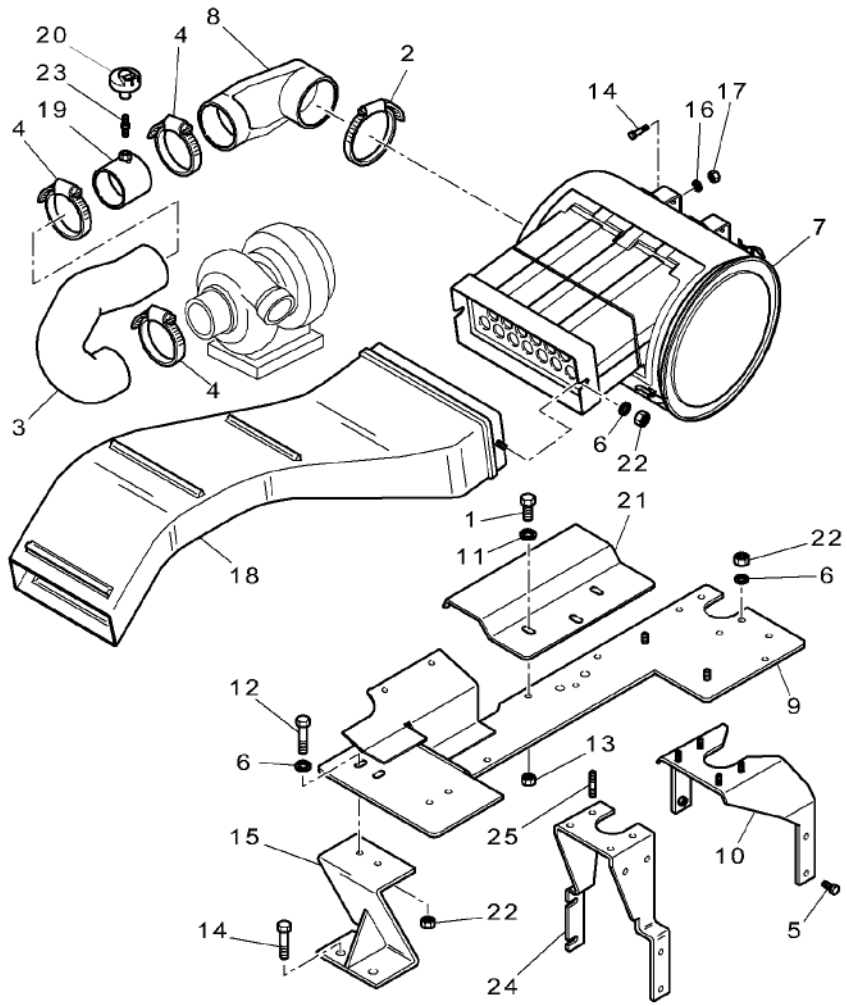

1	339123X1	M8 X 20	3	HEX. SOCK. SCREW	VIS TETE HEX VITE PARKER	ZYLINDERSCHRAUBE TORN.CAB.HUECA
2	3010162X1	∅ 130–155	1	CLAMP	COLLIER FASCETTA	HALTESCHELLE ABRAZADERA
3	4273355M1		1	HOSE	DURITE TUBO FLESSIBILE	SCHLAUCH FLEXIBLE
4	3010160X1	∅ 110–135	3	CLAMP	COLLIER FASCETTA	HALTESCHELLE ABRAZADERA
5	3009493X1	M10 X 30	4	HEX. SOCK. SCREW	VIS TETE HEX VITE PARKER	ZYLINDERSCHRAUBE TORN.CAB.HUECA
6*	390734X1		8	WASHER	RONDELLE RONDELLA	UNTERLEGSCHEIBE ARANDELA
7	4278222M91	10–240 No 1	1	AIR FILTER	FILTRE AIR FILTRO ARIA	LUFTFILTER FILTRO DE AIRE
8	3788163M1		1	TUBE	TUBE TUBO	ROHR TUBO
9	4277707M92		1	SUPPORT	SUPPORT SUPPORTO	LAGERUNG DISPOS.DE SOSTEN
10*	4280070M1	US	1	SUPPORT	SUPPORT SUPPORTO	LAGERUNG DISPOS.DE SOSTEN
11	390972X1		3	WASHER	RONDELLE RONDELLA	UNTERLEGSCHEIBE ARANDELA
12	3009492X1	M10 X 25	2	HEX. SOCK. SCREW	VIS TETE HEX VITE PARKER	ZYLINDERSCHRAUBE TORN.CAB.HUECA
13	339169X1	M8	3	NUT	ECROU DADO	MUTTER TUERCA
14	1440716X1	M12 X 30	6	HEX. SOCK. SCREW	VIS TETE HEX VITE PARKER	ZYLINDERSCHRAUBE TORN.CAB.HUECA
15	4280072M2	US	1	SUPPORT	SUPPORT SUPPORTO	LAGERUNG DISPOS.DE SOSTEN
15*	5016168M92	US		SUPPORT	SUPPORT SUPPORTO	LAGERUNG DISPOS.DE SOSTEN
16	390735X1	➡	4	WASHER	RONDELLE RONDELLA	UNTERLEGSCHEIBE ARANDELA
17	3009695X1	M12	4	NUT	ECROU DADO	MUTTER TUERCA
18	4278207M2		1	HOSE	DURITE TUBO FLESSIBILE	SCHLAUCH FLEXIBLE
19	4273730M1		1	TUBE	TUBE TUBO	ROHR TUBO
20	***3808462M1***		1	PRESSURE SWITCH	MANO CONTACT PRESSOSTATO	DRUCKSCHALTER INTERRUP PRESION
21	3789482M2		1	COWL	GARANT CAPPOTTATURA	AUFSATZ CAPERUZA
22*	339402X1	M10	8	NUT	ECROU DADO	MUTTER TUERCA
23	1028097M1		1	FILTER	FILTRE FILTRO	FILTER FILTRO
24*	5016166M91	US	1	SUPPORT	SUPPORT SUPPORTO	LAGERUNG DISPOS.DE SOSTEN
25*	**391005X1** M10 X 25	US	4	STUD	GOUJON PRIGIONIERO	STEHBOLZEN CHAVETA ROSCADO

Air Filter **Filtre A Air** **Luftfilter** **Filtro Aria** **Filtro Del Aire**	**Dry – Dual Element** **Sec Deux Elements** **Doppelter Trockenfiltereinsatz** **Doppio Elemento** **Elemento Doble Seco**	**10-240**

1-WC20-015-A

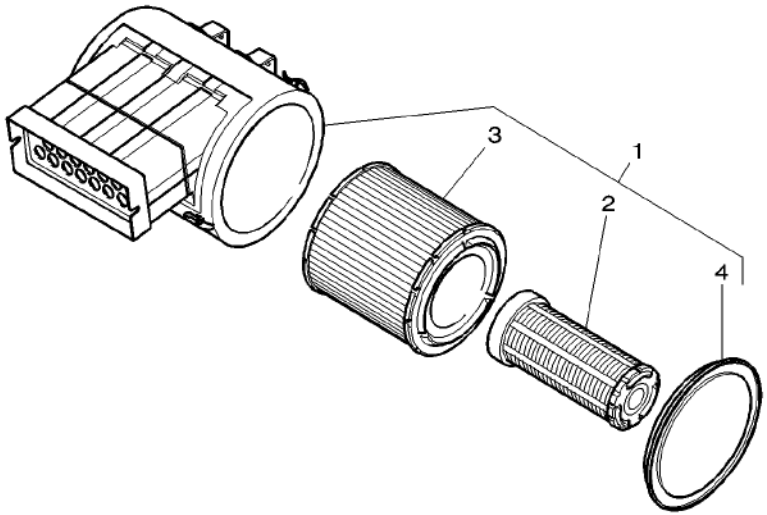

1	4278222M91		**1** AIR FILTER	FILTRE AIR FILTRO ARIA	LUFTFILTER FILTRO DE AIRE
2	***4270018M1***	1	**1** AIR FITR.ELEMENT	ELEMENTFILTREAIR ELEM.FILTRO ARIA	LUFTFILTEREINS ELEMENTO FL.AIRE
3	***4278631M1***	1	**1** AIR FITR.ELEMENT	ELEMENTFILTREAIR ELEM.FILTRO ARIA	LUFTFILTEREINS ELEMENTO FL.AIRE
4	4278565M1	1	**1** COVER	COUVERCLE COPERCHIO	DECKEL CUBIERTA

Vertical Exhaust On The Side
Echappement Vertical Lateral
Senkrechtem Seitenauspuff
Scarico Verticale Lateral
Escape Vertical Lano Lateral

10-245

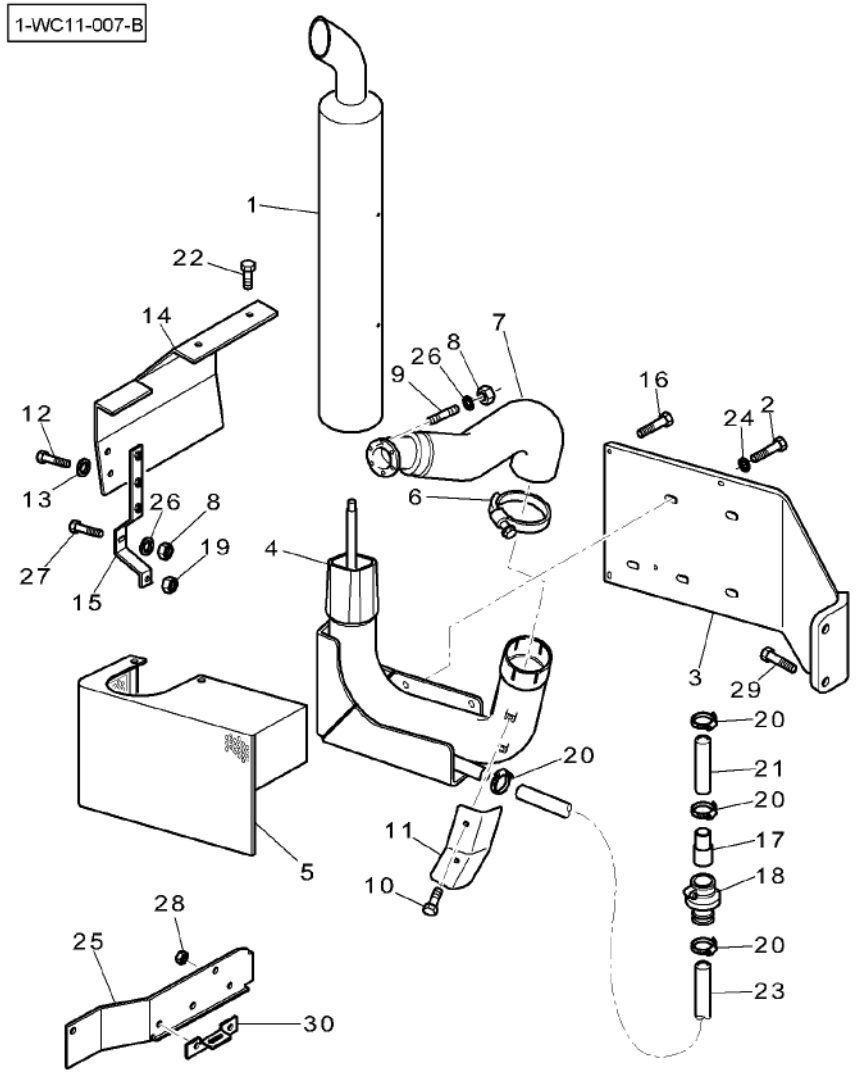

1	4272777M2	AGCO 0037	1 TUBE	TUBE TUBO	ROHR TUBO
2	3009510X1	M12 X 50	5 HEX. SOCK. SCREW	VIS TETE HEX VITE PARKER	ZYLINDERSCHRAUBE TORN.CAB.HUECA
3	4277149M4		1 SUPPORT	SUPPORT SUPPORTO	LAGERUNG DISPOS.DE SOSTEN
4	4271731M1		1 TUBE	TUBE TUBO	ROHR TUBO
5	4273141M2		1 COWL	GARANT CAPPOTTATURA	AUFSATZ CAPERUZA
6	3782608M1	∅ 119 MM	1 CLAMP	COLLIER FASCETTA	HALTESCHELLE ABRAZADERA
7	3786844M2		1 ADAPTOR	ADAPTATEUR ADATTATORE	REDUZIERNIPPEL ADAPTADOR
8	3010572X1	M8	7 NUT	ECROU DADO	MUTTER TUERCA
9	391001X1	M8 X 25	6 STUD	GOUJON PRIGIONIERO	STEHBOLZEN CHAVETA ROSCADO
10	339228X1	M8 X 12	2 HEX. SOCK. SCREW	VIS TETE HEX VITE PARKER	ZYLINDERSCHRAUBE TORN.CAB.HUECA
11	3789287M1		1 COWL	GARANT CAPPOTTATURA	AUFSATZ CAPERUZA
12	339560X1	M6 X 16	2 HEX. SOCK. SCREW	VIS TETE HEX VITE PARKER	ZYLINDERSCHRAUBE TORN.CAB.HUECA
13	390971X1	∅ 6-12 X 1,5	2 WASHER	RONDELLE RONDELLA	UNTERLEGSCHEIBE ARANDELA
14	4277489M2		1 COWL	GARANT CAPPOTTATURA	AUFSATZ CAPERUZA
15	4277490M1		1 REINFORCEMENT	RENFORT RINFORZO	VERSTAERKUNG REFUERZO
16	339010X1	M8 X 40	4 HEX. SOCK. SCREW	VIS TETE HEX VITE PARKER	ZYLINDERSCHRAUBE TORN.CAB.HUECA
17	3782356M1	∅ 32-40 MM ◄► 60 MM	1 ADAPTOR	ADAPTATEUR ADATTATORE	REDUZIERNIPPEL ADAPTADOR
18	3780483M1		1 NON RETURN VALVE	CLAPET VALVOLA NO RITOR	RUECKSCHLAGVENT. VALV.SIN RETORNO
19	339402X1	M10	1 NUT	ECROU DADO	MUTTER TUERCA
20	338615X1	∅ 25-40 MM	4 CLAMP	COLLIER FASCETTA	HALTESCHELLE ABRAZADERA
21	3386626M1	[A] ◄► 740 MM	1 SUCTION HOSE	TUYAU ASPIRATION MANICOTTO ASPIR.	ANSAUGSCHLAUCH TUBO SUCCION
22	339124X1	M8 X 16	2 HEX. SOCK. SCREW	VIS TETE HEX VITE PARKER	ZYLINDERSCHRAUBE TORN.CAB.HUECA
23	3038134M1	◄► 1270 MM	1 TUBE	TUBE TUBO	ROHR TUBO
24	390735X1	∅ 12-24 X 2,5	5 WASHER	RONDELLE RONDELLA	UNTERLEGSCHEIBE ARANDELA
25	4270257M3	➡| N356012	1 COWL	GARANT CAPPOTTATURA	AUFSATZ CAPERUZA
25*	4280575M2	|➡ N356013	1 COWL	GARANT CAPPOTTATURA	AUFSATZ CAPERUZA

Vertical Exhaust On The Side
Echappement Vertical Lateral
Senkrechtem Seitenauspuff
Scarico Verticale Lateral
Escape Vertical Lano Lateral

10-245

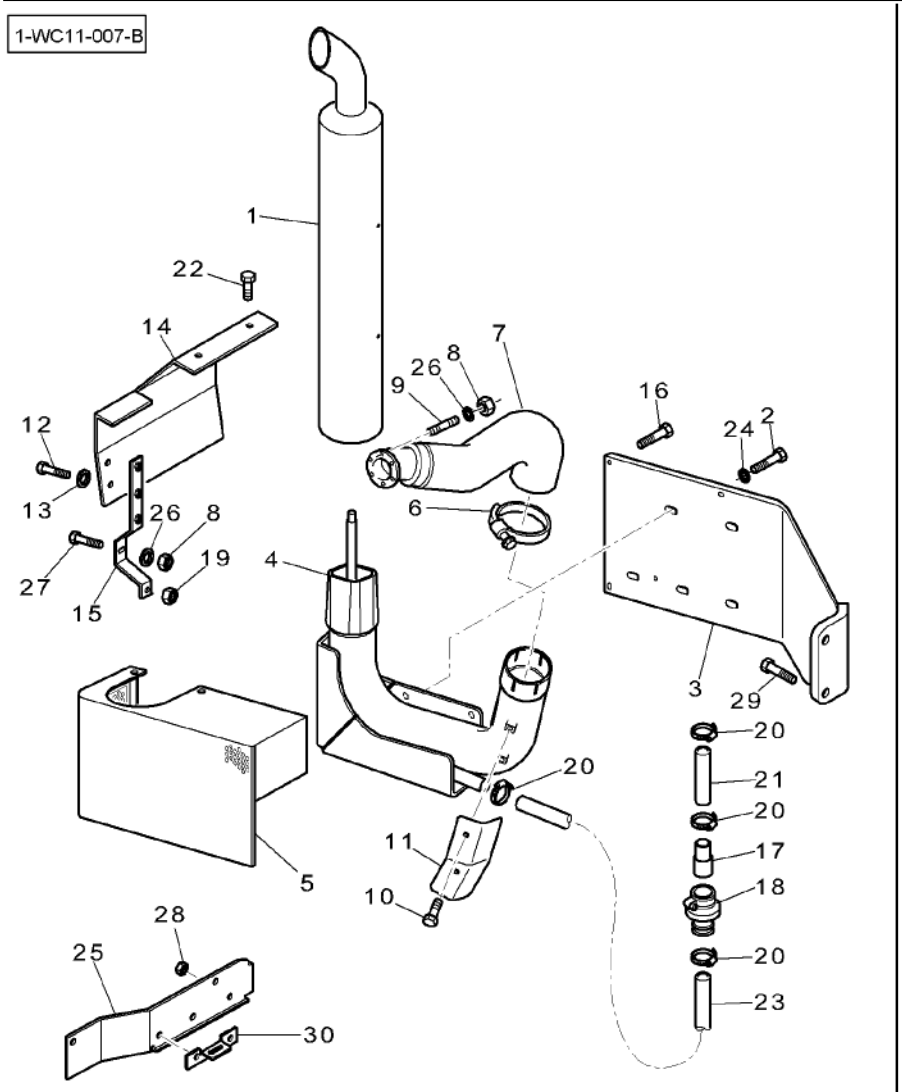

26	390972X1	∅ 8-17 X 1,7	**7** WASHER	RONDELLE RONDELLA	UNTERLEGSCHEIBE ARANDELA
27	339124X1	M8 X 16	**1** HEX. SOCK. SCREW	VIS TETE HEX VITE PARKER	ZYLINDERSCHRAUBE TORN.CAB.HUECA
28	3009695X1	M12	**3** NUT	ECROU DADO	MUTTER TUERCA
29	339881X1	M16 X 60	**2** HEX. SOCK. SCREW	VIS TETE HEX VITE PARKER	ZYLINDERSCHRAUBE TORN.CAB.HUECA
30*	4279547M1	➡ N356013	**1** SUPPORT	SUPPORT SUPPORTO	LAGERUNG DISPOS.DE SOSTEN

[A] CUT TO REQUIRED LENGTH
COUPER A LA LONGEUR DESIREE
BENOETIGTE LAENGE ABSCHNEIDEN
TAGLIARE A LUNGHEZZA RICHIESTA
CORTAR A LA LONGITUD NECESARIA

Vertical Exhaust On The Side
Echappement Vertical Lateral
Senkrechtem Seitenauspuff
Scarico Verticale Lateral
Escape Vertical Lano Lateral

10-250

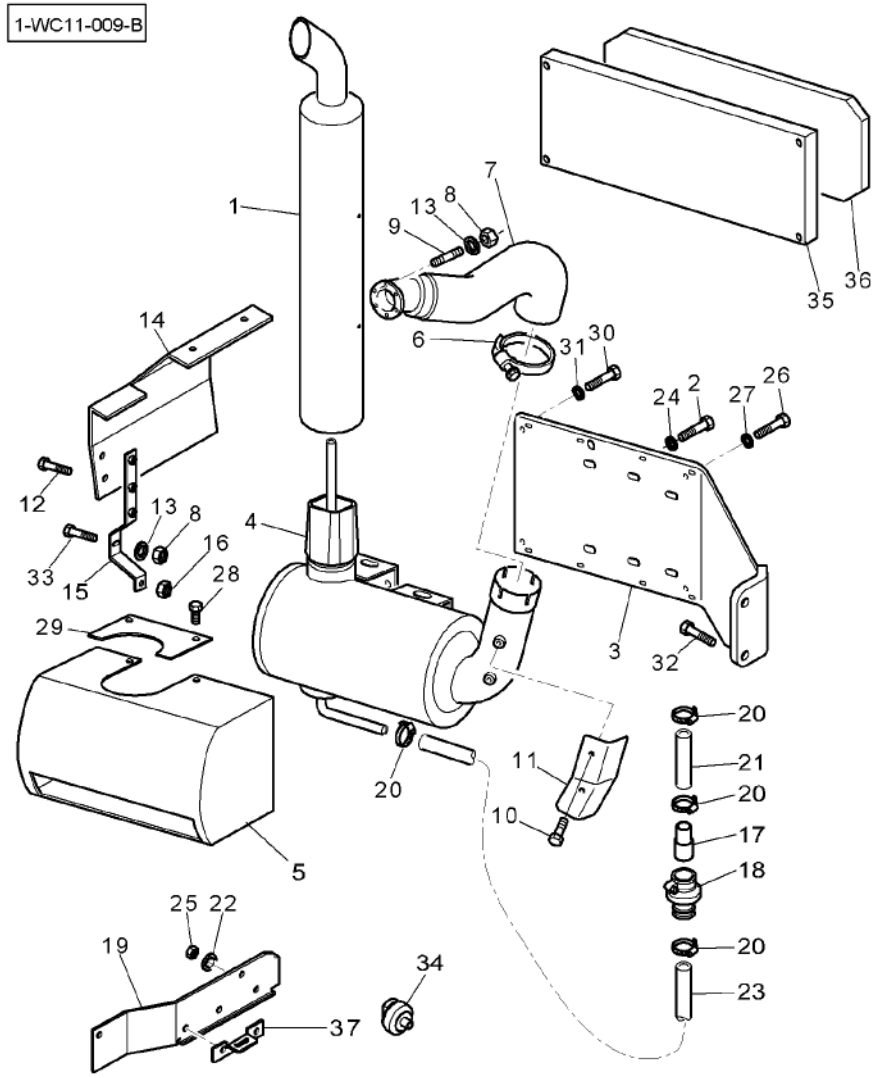

1	4272777M2	AGCO 0037	1	TUBE	TUBE TUBO ROHR TUBO
2	3009509X1	M12 X 45	6	HEX. SOCK. SCREW	VIS TETE HEX VITE PARKER ZYLINDERSCHRAUBE TORN.CAB.HUECA
3	4275001M2		1	SUPPORT	SUPPORT SUPPORTO LAGERUNG DISPOS.DE SOSTEN
4	4278589M1	AGCO 0058	1	SILENCER	SILENCIEUX SILENZIATORE SCHALLDAEMPFER SILENCIADOR
5*	4278886M2		1	COWL	GARANT CAPPOTTATURA AUFSATZ CAPERUZA
6	3782608M1	∅ 119 MM	1	CLAMP	COLLIER FASCETTA HALTESCHELLE ABRAZADERA
7*	3786844M2		1	ADAPTOR	ADAPTATEUR ADATTATORE REDUZIERNIPPEL ADAPTADOR
8	3010572X1	M8	7	NUT	ECROU DADO MUTTER TUERCA
9	391001X1	M8 X 25	6	STUD	GOUJON PRIGIONIERO STEHBOLZEN CHAVETA ROSCADO
10	339228X1	M8 X 12	3	HEX. SOCK. SCREW	VIS TETE HEX VITE PARKER ZYLINDERSCHRAUBE TORN.CAB.HUECA
11	3789287M1		1	COWL	GARANT CAPPOTTATURA AUFSATZ CAPERUZA
12	391074X1	M6 X 12	2	HEX. SOCK. SCREW	VIS TETE HEX VITE PARKER ZYLINDERSCHRAUBE TORN.CAB.HUECA
13	390972X1	∅ 8-17 X 1,7	7	WASHER	RONDELLE RONDELLA UNTERLEGSCHEIBE ARANDELA
14	4277489M2		1	COWL	GARANT CAPPOTTATURA AUFSATZ CAPERUZA
15	4277490M1		1	REINFORCEMENT	RENFORT RINFORZO VERSTAERKUNG REFUERZO
16	339402X1	M10	1	NUT	ECROU DADO MUTTER TUERCA
17	3782356M1	∅ 32-40 MM ◀▶ 60 MM	1	ADAPTOR	ADAPTATEUR ADATTATORE REDUZIERNIPPEL ADAPTADOR
18	3780483M1		1	NON RETURN VALVE	CLAPET VALVOLA NO RITOR RUECKSCHLAGVENT. VALV.SIN RETORNO
19*	4270257M3	➡| N356012	1	COWL	GARANT CAPPOTTATURA AUFSATZ CAPERUZA
19*	4280575M2	|➡ N356013	1	COWL	GARANT CAPPOTTATURA AUFSATZ CAPERUZA
20	338615X1	∅ 25-40 MM	4	CLAMP	COLLIER FASCETTA HALTESCHELLE ABRAZADERA
21	3386626M1	[A] ◀▶ 740 MM	1	SUCTION HOSE	TUYAU ASPIRATION MANICOTTO ASPIR. ANSAUGSCHLAUCH TUBO SUCCION
22	390735X1	∅ 12-24 X 2,5	3	WASHER	RONDELLE RONDELLA UNTERLEGSCHEIBE ARANDELA
23	3038134M1	◀▶ 1270 MM	1	TUBE	TUBE TUBO ROHR TUBO
24	390735X1	∅ 12-24 X 2,5	6	WASHER	RONDELLE RONDELLA UNTERLEGSCHEIBE ARANDELA
25	3009695X1	M12	3	NUT	ECROU DADO MUTTER TUERCA

Vertical Exhaust On The Side
Echappement Vertical Lateral
Senkrechtem Seitenauspuff
Scarico Verticale Lateral
Escape Vertical Lano Lateral

10-250

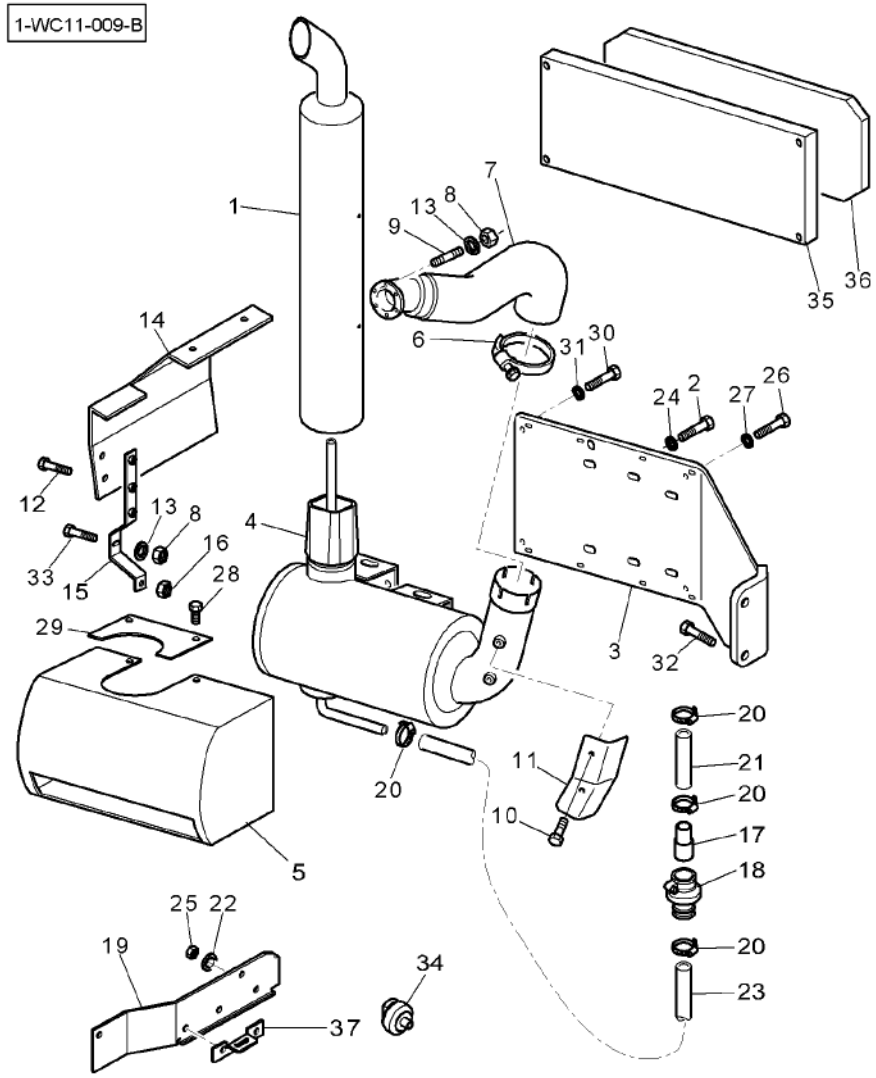

26	339009X1	M8 X 35	**8** HEX. SOCK. SCREW	VIS TETE HEX VITE PARKER	ZYLINDERSCHRAUBE TORN.CAB.HUECA
27	390972X1	∅ 8–17 X 1,7	**8** WASHER	RONDELLE RONDELLA	UNTERLEGSCHEIBE ARANDELA
28	339124X1	M8 X 16	**2** HEX. SOCK. SCREW	VIS TETE HEX VITE PARKER	ZYLINDERSCHRAUBE TORN.CAB.HUECA
29	4270726M1		**1** PLATE	PLAQUE PIASTRA	PLATTE PLATO
30	339010X1	M8 X 40	**4** HEX. SOCK. SCREW	VIS TETE HEX VITE PARKER	ZYLINDERSCHRAUBE TORN.CAB.HUECA
31	390972X1	∅ 8–17 X 1,7	**8** WASHER	RONDELLE RONDELLA	UNTERLEGSCHEIBE ARANDELA
32	339881X1	M16 X 60	**2** HEX. SOCK. SCREW	VIS TETE HEX VITE PARKER	ZYLINDERSCHRAUBE TORN.CAB.HUECA
33	339228X1	M8 X 12	**2** HEX. SOCK. SCREW	VIS TETE HEX VITE PARKER	ZYLINDERSCHRAUBE TORN.CAB.HUECA
34	***3808462M1***		**1** PRESSURE SWITCH	MANO CONTACT PRESSOSTATO	DRUCKSCHALTER INTERRUP PRESION
35	4278885M1		**1** COWL	GARANT CAPPOTTATURA	AUFSATZ CAPERUZA
36	4278897M1		**1** SOUND REDUCTION	INSONORISATION INSONORIZZANTE	SCHALLDAEMMUNG REDUCTOR SONIDO
37*	4279547M1	➡ N356013	**1** SUPPORT	SUPPORT SUPPORTO	LAGERUNG DISPOS.DE SOSTEN

[A] CUT TO REQUIRED LENGTH
COUPER A LA LONGEUR DESIREE
BENOETIGTE LAENGE ABSCHNEIDEN
TAGLIARE A LUNGHEZZA RICHIESTA
CORTAR A LA LONGITUD NECESARIA

Throttle Controls
Commande D'Acceleration
Kraftstoffregelung
Comandi Acceleratore
Mandos Acelerador

10-255

1-WC14-002-C

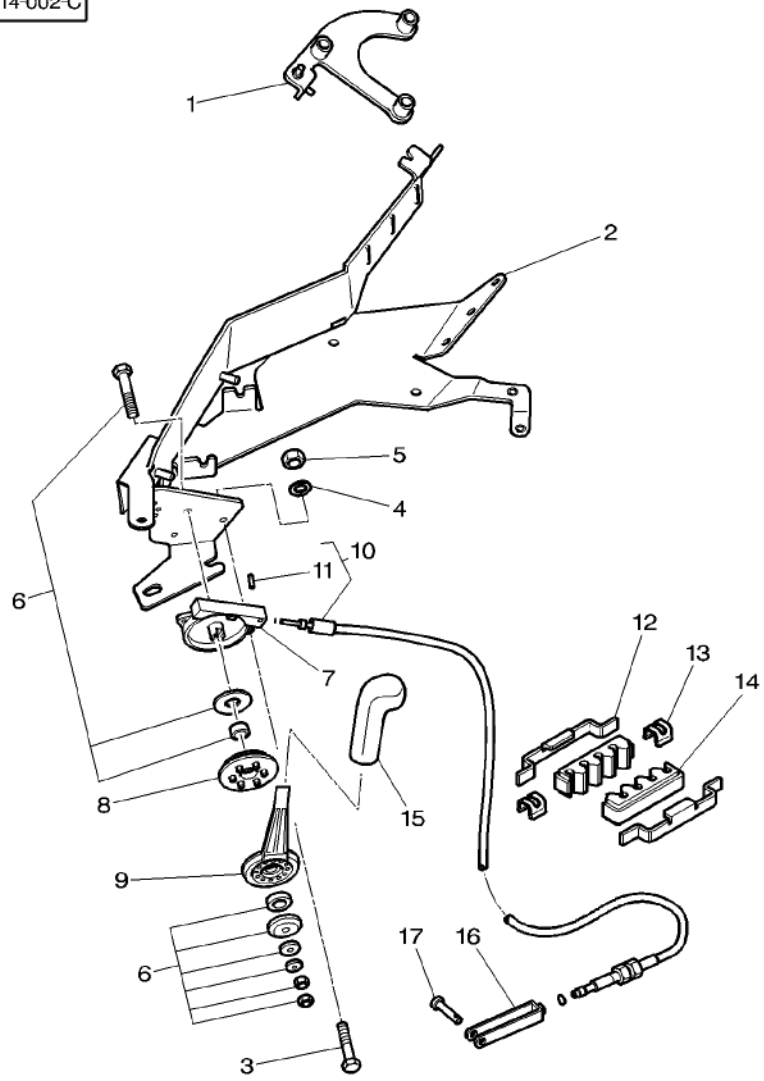

1	4270719M3		1	SUPPORT	SUPPORT SUPPORTO	LAGERUNG DISPOS.DE SOSTEN
2	3787580M93		1	SUPPORT	SUPPORT SUPPORTO	LAGERUNG DISPOS.DE SOSTEN
3	339563X1	M5 X 20	3	HEX. SOCK. SCREW	VIS TETE HEX VITE PARKER	ZYLINDERSCHRAUBE TORN.CAB.HUECA
4	3019560X1	∅ 5–15 X 1,5	3	WASHER	RONDELLE RONDELLA	UNTERLEGSCHEIBE ARANDELA
5	1441494X1	M5	3	NUT METRIC	ECROU METRIQUE DADO METRICO	MUTTER METRISCH TUERCA METRICO
6	3785336M3		1	PARTS PACK	JEU PIECES PACCO RICAMBI	SATZ TEILE PAQUETE PIEZAS
7	3786152M2		1	CASE ASSY	BOITIER CARCASSA COMPLET	GEHAEUSE KPL CAJA COMPLETA
8	3789513M1		1	FLANGE	FLASQUE FLANGIA	FLANSCH PLETINA
9	3785335M3		1	LEVER	LEVIER LEVA	HEBEL PALANCA
10	4271798M3		1	CABLE	CABLE CAVO	KABEL CABLE
11	339303X1	10	1	DOWEL	PLOT SPINA	ZYLINDERSTIFT CENTRAJE
12	4270509M2		2	SUPPORT	SUPPORT SUPPORTO	LAGERUNG DISPOS.DE SOSTEN
13	4270510M1		2	CLIP	PATTE D'ATTACHE FERMAGLIO	SCHELLE CLIP
14	4270508M1		2	BRIDLE	BRIDE BRIGLIA	SPANNBAND BRIDA
15	3785000M1		1	HANDLE	POIGNEE MANIGLIA	HANDGRIFF MANETA
16	3616399M1		1	STIRRUP	ETRIER STAFFA	BUEGEL FUACION
17	832297M1		1	CLEVIS PIN	AXE PERNO D'ATTACCO	SPLINTBOLZEN BULON CILINDRICO

Throttle Controls
Commande D'Acceleration
Kraftstoffregelung
Comandi Acceleratore
Mandos Acelerador

10-260

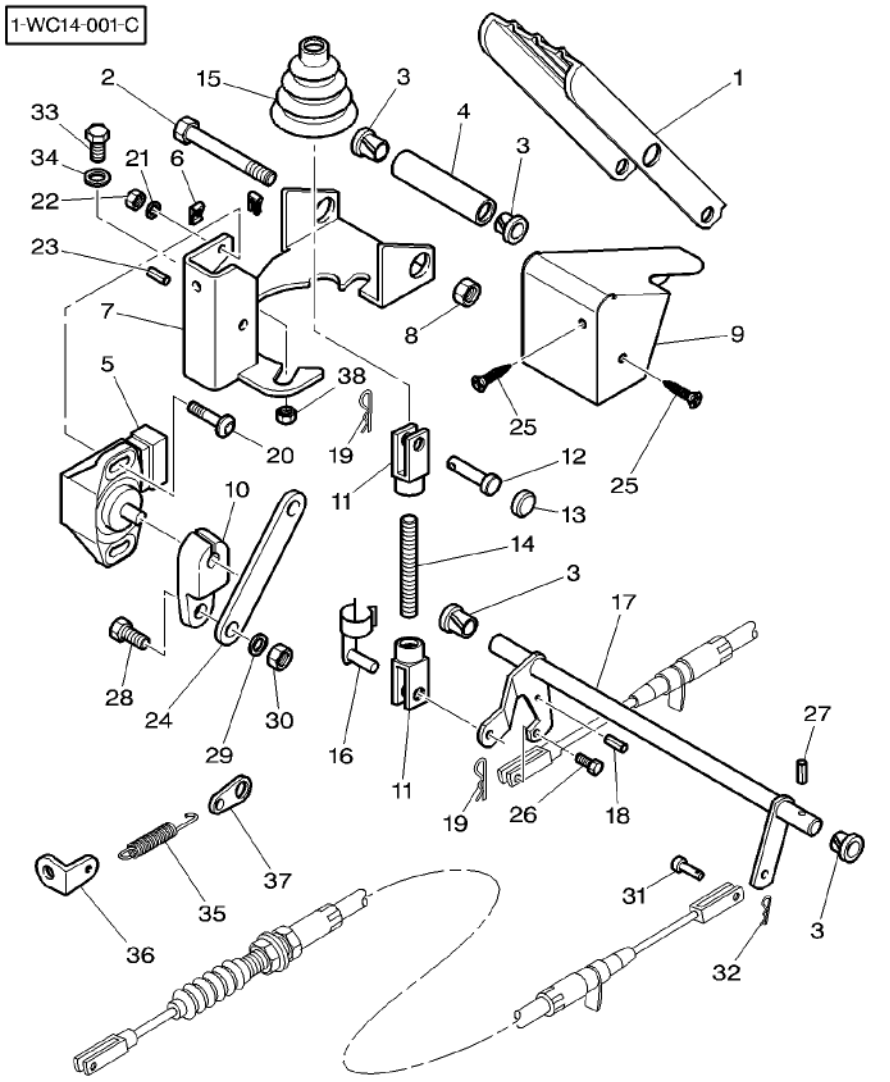

1	3712851M91		1	PEDAL	PEDALE PEDALE	PEDAL PEDAL
2	391286X1	M8 X 85	1	HEX. SOCK. SCREW	VIS TETE HEX VITE PARKER	ZYLINDERSCHRAUBE TORN.CAB.HUECA
3	3385913M2		4	BUSH	BAGUE BOCCOLA	BUCHSE CASQUILLO
4	3712867M1	∅ 9–12 X 74	1	SPACER	ENTRETOISE DISTANZIALE	ABSTANDSTUECK DISCO ESPACIADOR
5	***3784361M1***		1	TRANSDUCER	CAPTEUR TRANSDUCER	NABENTRIEB. TRANSDUCER
6	3715142M1	M5	2	NUT	ECROU DADO	MUTTER TUERCA
7	4270814M1		1	SUPPORT	SUPPORT SUPPORTO	LAGERUNG DISPOS.DE SOSTEN
8	394367X1	M8	1	LOCKNUT	ECROU BLOCAGE AUTOBLOCCANTE	SICHERUNGSMUTTER CONTRATUERCA
9	3784343M2		1	COWL	GARANT CAPPOTTATURA	AUFSATZ CAPERUZA
10	4271320M1		1	ROD LINK	BIELLETTE BISCOTTINO	VERBINDG.STANGE VARILLA ENGANCHE
11	392463X1	∅ 6 X 36	2	YOKE	CHAPE ARTICULAT FORCELLA	GELENKGABEL YUGO
12	392235X1	∅ 6 X 20	1	CLEVIS PIN	AXE PERNO D'ATTACCO	SPLINTBOLZEN BULON CILINDRICO
13	1699748M1	∅ 9,5 MM	1	PLUG	BOUCHON TAPPO	VERSCHL.STOPFEN TAPON
14	3712866M2	M6 X 70	1	STEM	TIGE STELO	STIEL VASTAGO
15	3712886M1		1	BELLOWS	SOUFFLET SOFFIETTO	FALTENBALG FUELLE
16	3713042M1		1	CLEVIS PIN	AXE PERNO D'ATTACCO	SPLINTBOLZEN BULON CILINDRICO
17*	4278950M91		1	ROD	TRINGLE ASTA	STANGE VARILLA
18	339548X1	∅ 4 X 20	1	PIN	GOUPILLE PERNO	BOLZEN PASADOR
19	357145X1		2	PIN	GOUPILLE PERNO	BOLZEN PASADOR
20	3010804X1	M4 X 16	2	SCREW	VIS VITE	SCHRAUBE TORNILLO
21	339761X1	M8 X 25	2	HEX. SOCK. SCREW	VIS TETE HEX VITE PARKER	ZYLINDERSCHRAUBE TORN.CAB.HUECA
22	3019139X1	M4	1	NUT	ECROU DADO	MUTTER TUERCA
23	1441728X1	∅ 4 X 16	1	PIN	GOUPILLE PERNO	BOLZEN PASADOR
24	3784341M2		1	ROD	TRINGLE ASTA	STANGE VARILLA
25	3010578X1	M5 X 10	2	SCREW	VIS VITE	SCHRAUBE TORNILLO
26	391883X1	M5 X 25	1	HEX. SOCK. SCREW	VIS TETE HEX VITE PARKER	ZYLINDERSCHRAUBE TORN.CAB.HUECA

Throttle Controls
Commande D'Acceleration
Kraftstoffregelung
Comandi Acceleratore
Mandos Acelerador

10-260

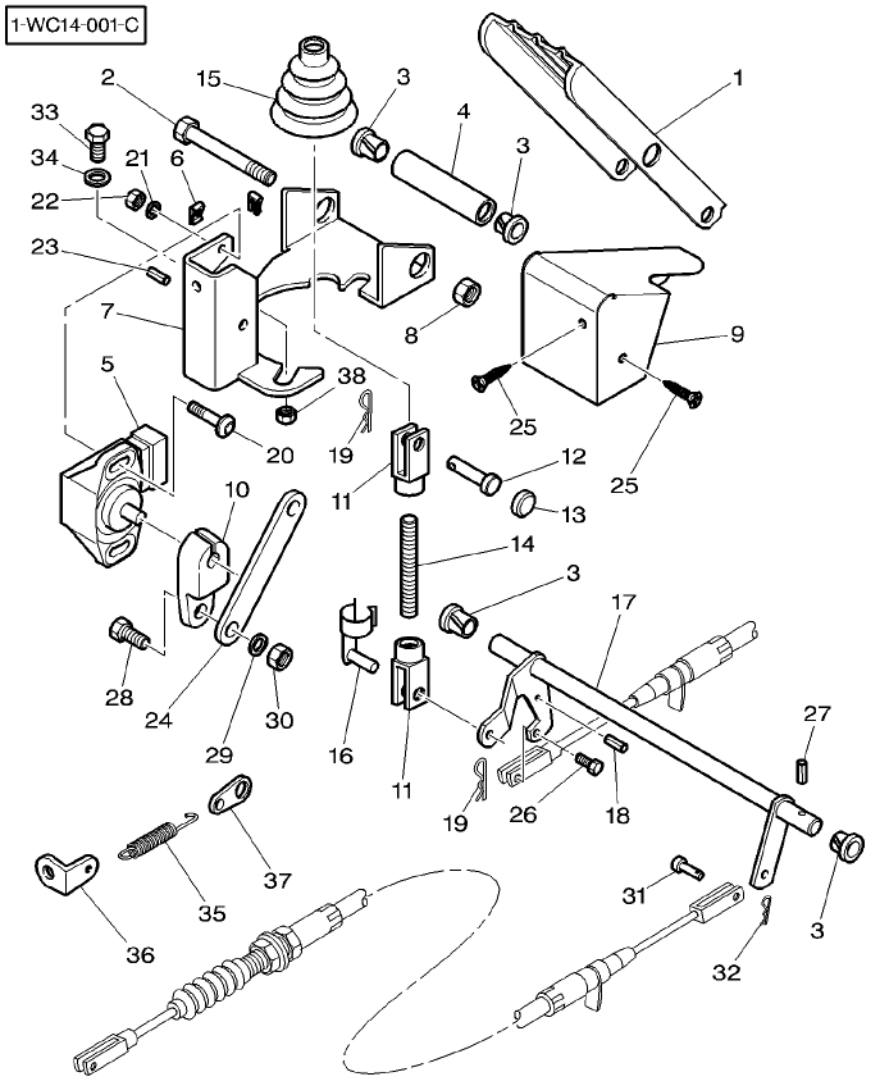

27	1442994X1	∅ 3 X 25	2	PIN	GOUPILLE PERNO
28	339560X1	M6 X 16	1	HEX. SOCK. SCREW	VIS TETE HEX VITE PARKER
29	390971X1	∅ 6–12 X 1,5	1	WASHER	RONDELLE RONDELLA
30	1441500X1	M6	2	LOCKNUT	ECROU BLOCAGE AUTOBLOCCANTE
31	3007850X1	∅ 6 X 12	2	CLEVIS PIN	AXE PERNO D'ATTACCO
32	357145X1		1	PIN	GOUPILLE PERNO
33	339123X1	M8 X 20	2	HEX. SOCK. SCREW	VIS TETE HEX VITE PARKER
34	390972X1	∅ 8–17 X 1,7	2	WASHER	RONDELLE RONDELLA
35*	3618683M1	◄► 113 MM	1	SPRING	RESSORT MOLLA
36	4274354M1		1	STRAP	PATTE CORREGGIA
37*	3785031M1		1	STRAP	PATTE CORREGGIA
38	394367X1	M8	2	LOCKNUT	ECROU BLOCAGE AUTOBLOCCANTE

BOLZEN PASADOR	ZYLINDERSCHRAUBE TORN.CAB.HUECA	27
UNTERLEGSCHEIBE ARANDELA	SICHERUNGSMUTTER CONTRATUERCA	28
SPLINTBOLZEN BULON CILINDRICO	BOLZEN PASADOR	29
ZYLINDERSCHRAUBE TORN.CAB.HUECA	UNTERLEGSCHEIBE ARANDELA	30
FEDER RESORTE	LASCHE FAJA	31
LASCHE FAJA	SICHERUNGSMUTTER CONTRATUERCA	32

20

Front Spacer
Carter Entretoise Avant
Vorderer Spacer
Distanziale Anteriore
Espaciador Delantero

20-5

1-WD02-015-A

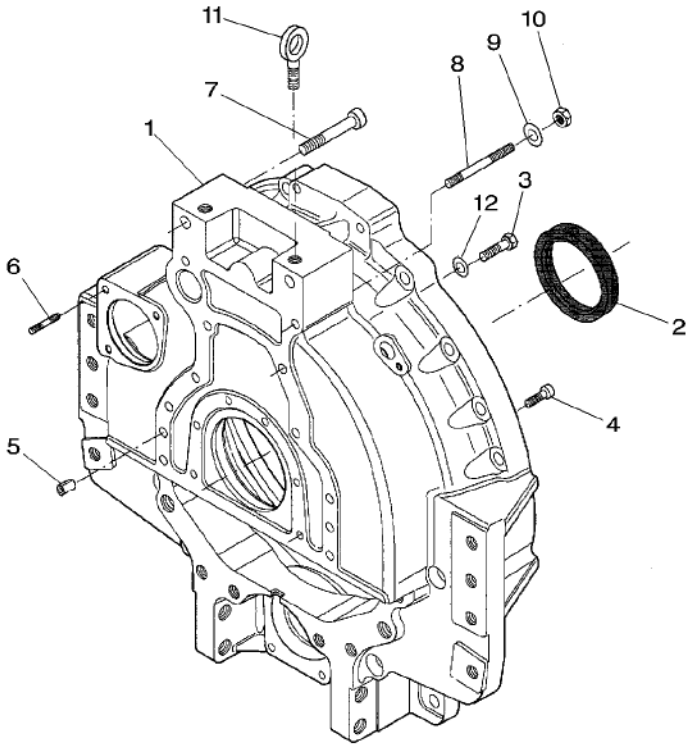

1	V836866842		1	HOUSING	CARTER CARCASSA	GEHAEUSE ALOJAMIENTO
2	V836840884		1	OIL SEAL	BAGUE ETANCHEITE BOCCOLA PARAOLIO	OELDICHTRING BUJE RETENACEITE
2	V836020054	⧗ 2MM	X	SPACER	ENTRETOISE DISTANZIALE	ABSTANDSTUECK DISCO ESPACIADOR
3	V528702230	M12X40	8	SCREW	VIS VITE	SCHRAUBE TORNILLO
4	V581705030	M10X30	6	SCREW	VIS VITE	SCHRAUBE TORNILLO
5	V598359850		2	PIN	GOUPILLE PERNO	BOLZEN PASADOR
6	V546801815	M10X30	3	STUD	GOUJON PRIGIONIERO	STEHBOLZEN CHAVETA ROSCADO
7	V581706370	M16X100	2	SCREW	VIS VITE	SCHRAUBE TORNILLO
8	V546802350	M12X100	2	STUD	GOUJON PRIGIONIERO	STEHBOLZEN CHAVETA ROSCADO
9	V500051302		2	WASHER	RONDELLE RONDELLA	UNTERLEGSCHEIBE ARANDELA
10	V504601200	M12	2	NUT	ECROU DADO	MUTTER TUERCA
11	V836640752		1	SHACKLE	MANILLE ANELLO TRAZIONE	SCHAEKEL TRABA
12	V500951200		8	WASHER	RONDELLE RONDELLA	UNTERLEGSCHEIBE ARANDELA

Front Spacer
Carter Entretoise Avant
Vorderer Spacer
Distanziale Anteriore
Espaciador Delantero

20-10

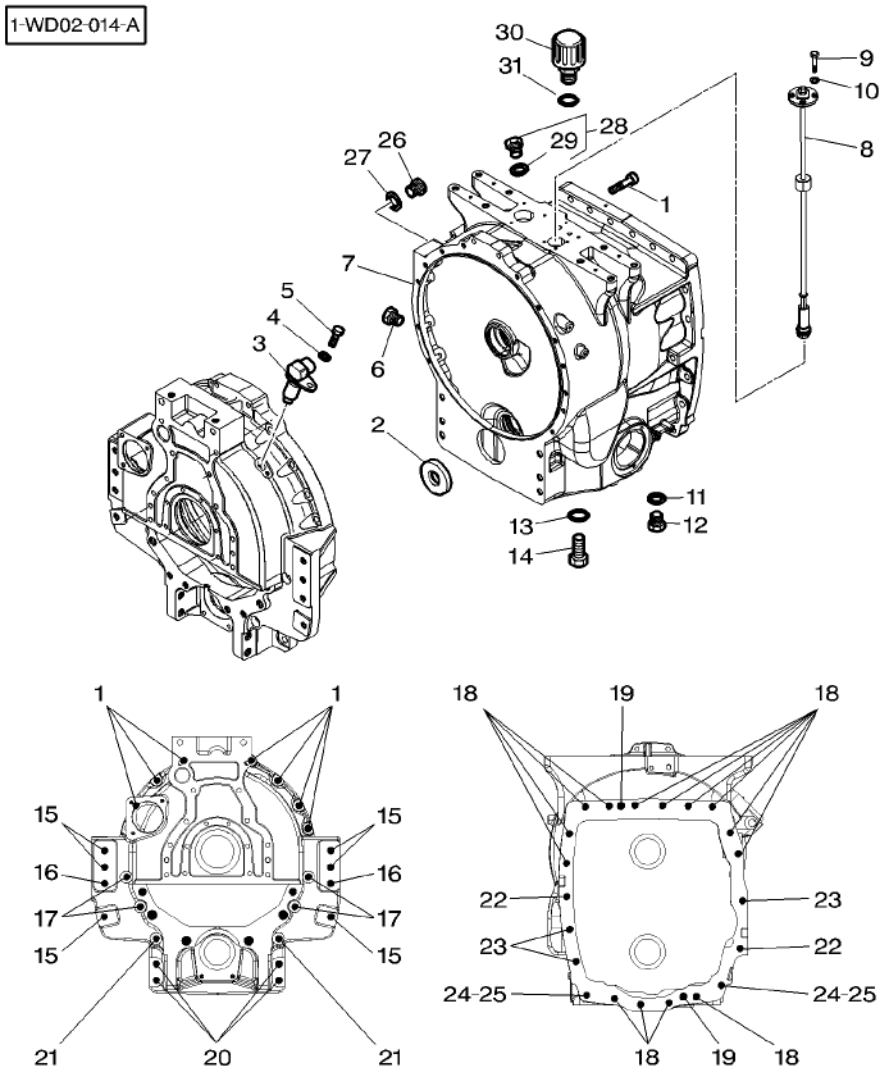

1	3011279X1	M12 X 60	9 SCREW	VIS VITE	SCHRAUBE TORNILLO
2	816920011031		1 DISC	DISQUE DISCO	SCHEIBE DISCO
3	***G816970020040***		1 HALL SENSOR	CAPTEUR DE HALL HALL SENSOR	HALL-GEBER HALL SENSOR
4	339374X1		1 LOCK WASHER	RONDELLE FREIN ROSETTA DENTELL.	FEDERRING ARANDELA GROWER
5	3009285X1	M8 X 16	1 SCREW	VIS VITE	SCHRAUBE TORNILLO
6	4278268M1		1 PLUG	BOUCHON TAPPO	VERSCHL.STOPFEN TAPON
7	903100050031		1 SPACER	ENTRETOISE DISTANZIALE	ABSTANDSTUECK DISCO ESPACIADOR
8	G916970020021		1 FUEL TRANSMITTER	CAPTEUR NIVEAU FUEL TRANSMITTER	VORRATZGEBER FUEL TRANSMITTER
9	339721X1	M5 X 16	4 HEX. SOCK. SCREW	VIS TETE HEX VITE PARKER	ZYLINDERSCHRAUBE TORN.CAB.HUECA
10	3019560X1		4 WASHER	RONDELLE RONDELLA	UNTERLEGSCHEIBE ARANDELA
11	X540008278000	26 X 31	1 RING	ANNEAU ANELLO	RING ARO
12	X483803200000	M26 X 1,5	1 PLUG	BOUCHON TAPPO	VERSCHL.STOPFEN TAPON
13	***X540009478000***	30 X 36 X 2	1 RING	ANNEAU ANELLO	RING ARO
14	916101050100	M30 X 1,5	1 SCREW	VIS VITE	SCHRAUBE TORNILLO
15	3010556X1	M20 X 70	6 SCREW METRIC	VIS METRIQUE VITE METRICA	SCHRAUBE METR TORNILLO METRICO
16	3714795M1		2 CENTRALISER	PION CENTRALIZZATORE	FUEHRUNGSKORB CENTRALIZADOR
17	3011281X1	M12 X 150	4 SCREW	VIS VITE	SCHRAUBE TORNILLO
18	3009930X1	M16 X 70	14 BOLT	BOULON BULLONE	MASCH.SCHRAUBE ESPIGA/BULON
19	X505578900000		2 DOWEL	PLOT SPINA	ZYLINDERSTIFT CENTRAJE
20	3011023X1	M18 X 65	4 SCREW	VIS VITE	SCHRAUBE TORNILLO
21	3011282X1	M18 X 150	2 SCREW	VIS VITE	SCHRAUBE TORNILLO
22	3019874X1	M16 X 115	2 SCREW METRIC	VIS METRIQUE VITE METRICA	SCHRAUBE METR TORNILLO METRICO
23	3010007X1	M16 X 60	3 SCREW METRIC	VIS METRIQUE VITE METRICA	SCHRAUBE METR TORNILLO METRICO
24	3011610X1	M16 X 70,24	2 STUD	GOUJON PRIGIONIERO	STEHBOLZEN CHAVETA ROSCADO
25	3019871X1	M16	2 NUT METRIC	ECROU METRIQUE DADO METRICO	MUTTER METRISCH TUERCA METRICO
26	X483803201000	M26X1,5	1 SCREW	VIS VITE	SCHRAUBE TORNILLO

Front Spacer
Carter Entretoise Avant
Vorderer Spacer
Distanziale Anteriore
Espaciador Delantero

20-10

1-WD02-014-A

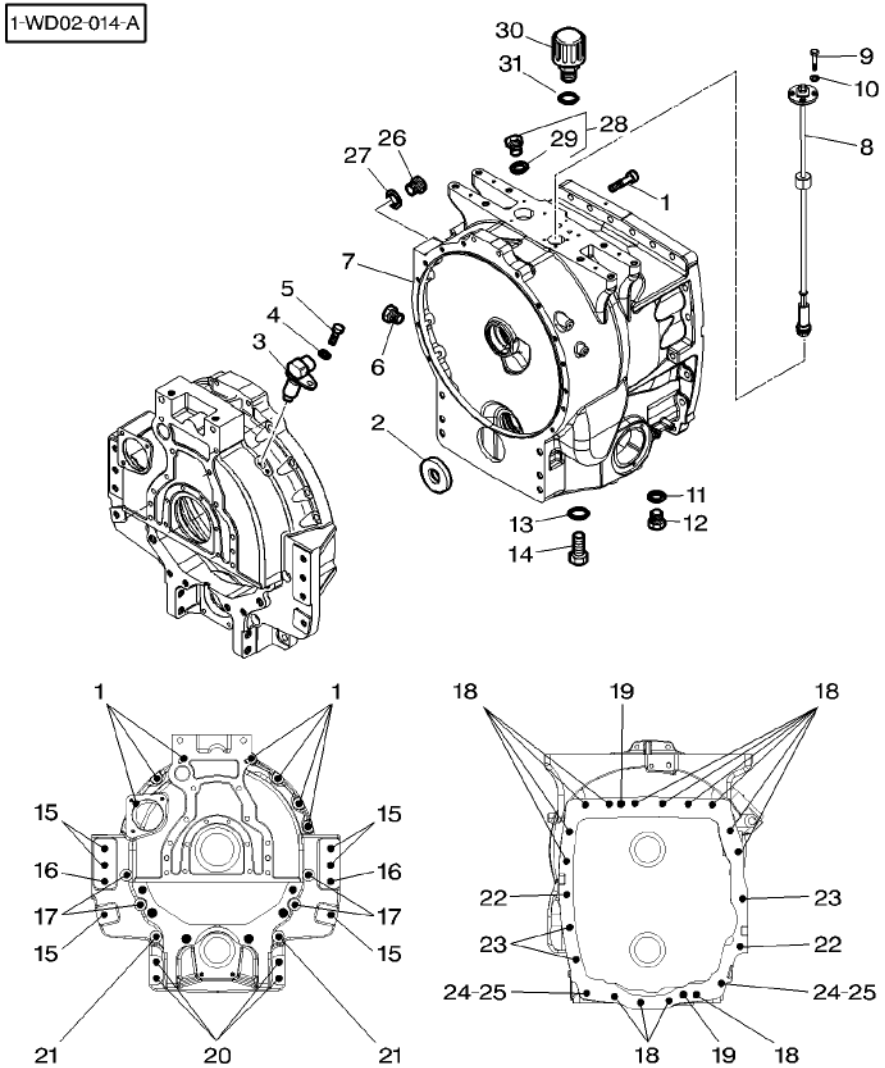

27	X540008278000	26X31	1	RING	ANNEAU ANELLO	RING ARO
28	3011105X91	M22X1,5	4	PLUG	BOUCHON TAPPO	VERSCHL.STOPFEN TAPON
29	3011036X1	28	1	SEAL	JOINT ETANCHEITE ANELLO RACCORD	DICHTRING ARENDELA D'JUNTA
30	3716934M1		1	BREATHER	RENIFLARD SFIATATOIO	ENTLUEFTER RESPIRADERO
31	3011495X1		1	BUSH	BAGUE BOCCOLA	BUCHSE CASQUILLO

Flywheel & Flywheel Housing
Volant Moteur & Carter De Volant
Schwungrad Und Schwungradgehaeuse
Volano E Carcassa Volano
Volante Y Carter Del Volante

20-15

1-WA07-016-A

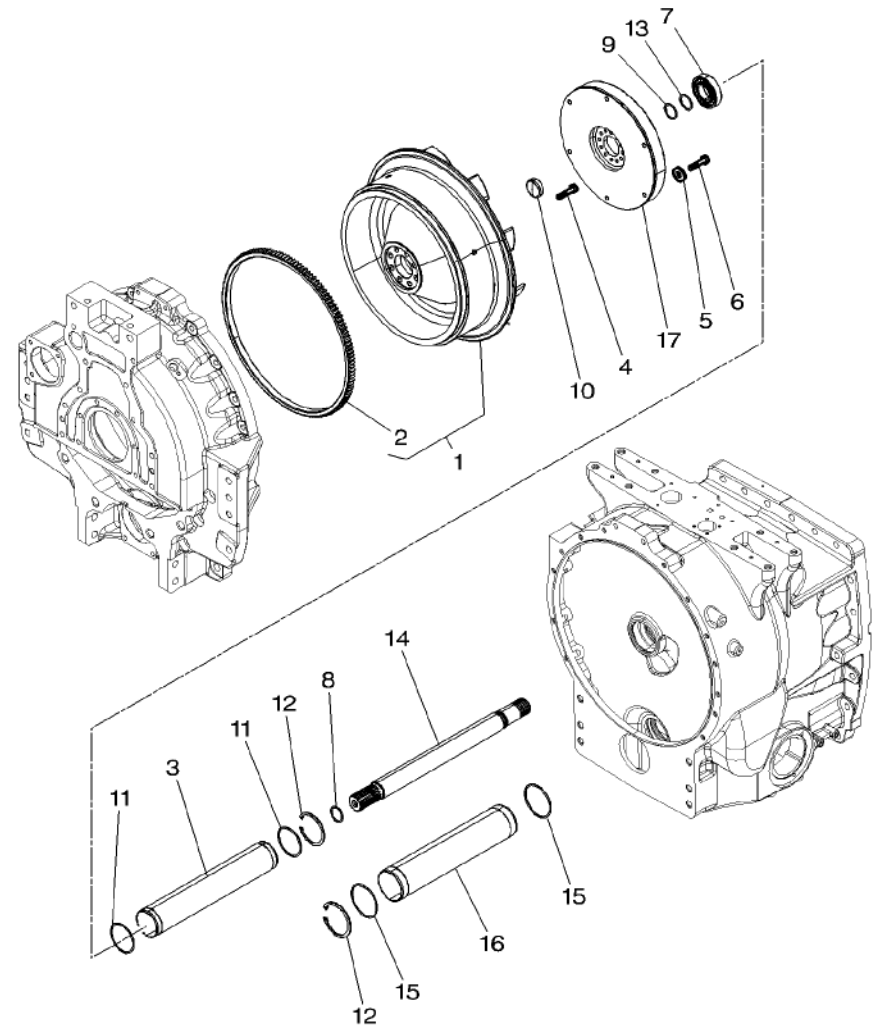

1	3789339M91		1	FLYWHEEL	VOLANT MOTEUR VOLANO MOTORE	SCHWUNGRAD VOLANTE MOTOR
2	**1619032M1**	1 132	1	CROWNWHEEL	COURONNE DENTEE CORONA	TELLERRAD CORONA DENTADA
3	916100050060	∅ 70 X 3	1	PIPE	TUYAU TUBO	ROHRLEITUNG CANO
4	3010025X1	M14 X 45	8	HEX. SOCK. SCREW	VIS TETE HEX VITE PARKER	ZYLINDERSCHRAUBE TORN.CAB.HUECA
5	390734X1		6	WASHER	RONDELLE RONDELLA	UNTERLEGSCHEIBE ARANDELA
6	3010842X1	M10 X 60	6	HEX. SOCK. SCREW	VIS TETE HEX VITE PARKER	ZYLINDERSCHRAUBE TORN.CAB.HUECA
7	833059M1		1	BEARING	COUSSINET CUSCINETTO	LAGER COJINETE
8	X548892900000		1	O RING	JOINT TORIQUE ANELLO TENUTA	O-RING ANILLO FORMA 'O'
9	X548901801000	∅ 36,2 X 3	1	O RING	JOINT TORIQUE ANELLO TENUTA	O-RING ANILLO FORMA 'O'
10	4271289M1		1	PLUG	BOUCHON TAPPO	VERSCHL.STOPFEN TAPON
11	X548953366000	∅ 69,44 X 3,53	2	O RING	JOINT TORIQUE ANELLO TENUTA	O-RING ANILLO FORMA 'O'
12	339437X1	∅ 80MM	2	CIRCLIP	CIRCLIP ANNELLO ELASTICO	SEEGERING GRAPA CIRCULAR
13	339820X1	∅ 40 X 1,5	1	CIRCLIP	CIRCLIP ANNELLO ELASTICO	SEEGERING GRAPA CIRCULAR
14	916100421100		1	DRIVE SHAFT	ARBRE DE CDE ALBERO TRASMISS.	ANTRIEBSWELLE EJE MOTRIZ
15	X548963400000	∅ 78,97 X 3,53	2	O RING	JOINT TORIQUE ANELLO TENUTA	O-RING ANILLO FORMA 'O'
16	916100050070	∅ 80 X 2,5	1	PIPE	TUYAU TUBO	ROHRLEITUNG CANO
17	916100421052		1	HYDRAU DAMPER	AMORTISSEUR HYD AMMORTIZ IDROLIC	HYDRODAMP AMORTIG HIDRAU

Clutch Control
Commande De L'Embrayage
Kupplungsbetatigung
Comando Della Frizione
Mando Del Embrague

20-20

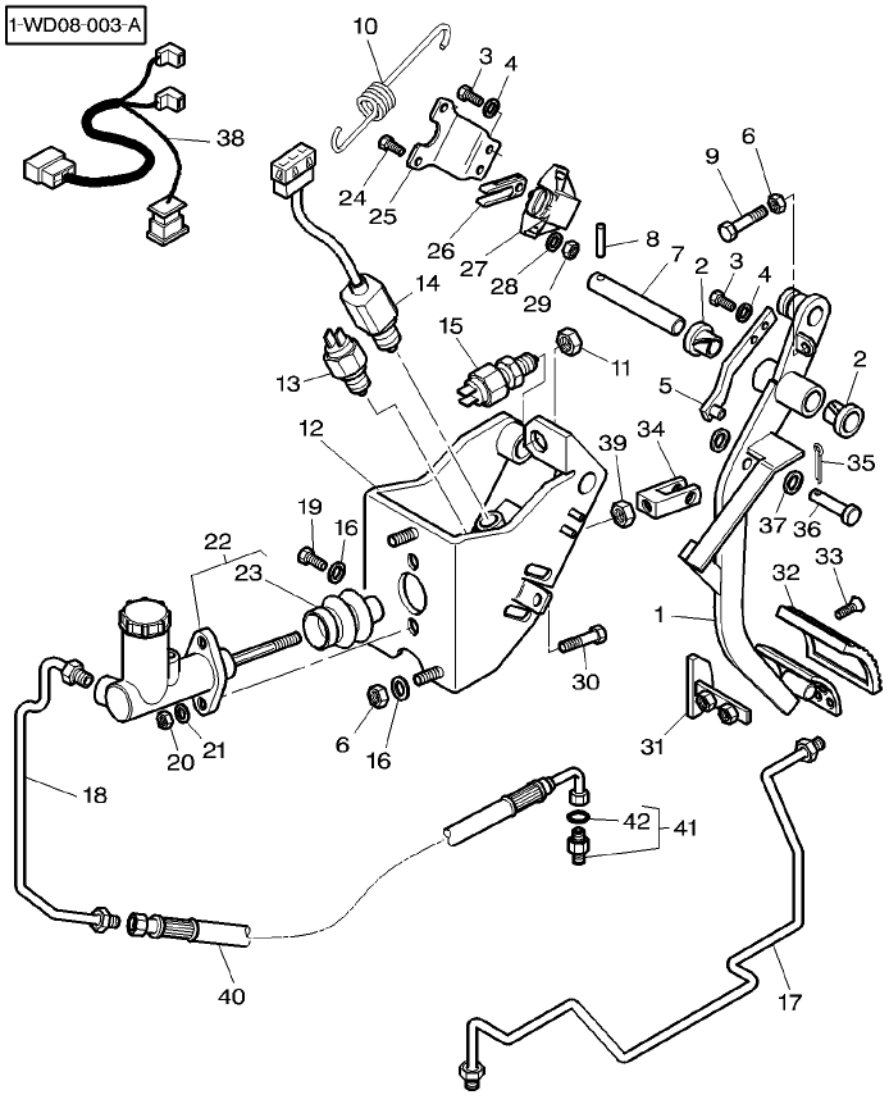

1	3785645M5		1 PEDAL	PEDALE PEDALE	PEDAL PEDAL
2	3385604M1		2 BEARING	COUSSINET CUSCINETTO	LAGER COJINETE
3	3009281X1	M6 X 16	4 SCREW	VIS VITE	SCHRAUBE TORNILLO
4	390971X1	∅ 6–12 X 1,5	4 WASHER	RONDELLE RONDELLA	UNTERLEGSCHEIBE ARANDELA
5	4270193M1		1 STRAP	PATTE CORREGGIA	LASCHE FAJA
6	339169X1	M8	3 NUT	ECROU DADO	MUTTER TUERCA
7	3780939M1	∅ 15 X 100	1 CLEVIS PIN	AXE PERNO D'ATTACCO	SPLINTBOLZEN BULON CILINDRICO
8	391290X1	∅ 5 X 30	1 PIN	GOUPILLE PERNO	BOLZEN PASADOR
9	4271907M1	M8 X 25	1 SCREW	VIS VITE	SCHRAUBE TORNILLO
10	3788068M1		1 SPRING	RESSORT MOLLA	FEDER RESORTE
11	339070X1	M14	1 NUT	ECROU DADO	MUTTER TUERCA
12	4271987M1		1 SUPPORT	SUPPORT SUPPORTO	LAGERUNG DISPOS.DE SOSTEN
13	***4272778M1***		1 SWITCH,INDIRECT	CONTACTEUR INTERRUTTORE IND	KONTAKTSCHALTER CONTACTOR
14	***3783832M2***		1 SWITCH,INDIRECT	CONTACTEUR INTERRUTTORE IND	KONTAKTSCHALTER CONTACTOR
15	***4271809M1***		1 SWITCH,INDIRECT	CONTACTEUR INTERRUTTORE IND	KONTAKTSCHALTER CONTACTOR
16	390972X1	∅ 8–17 X 1,7	3 WASHER	RONDELLE RONDELLA	UNTERLEGSCHEIBE ARANDELA
17	4275085M2		1 TUBE	TUBE TUBO	ROHR TUBO
18	4275099M1		1 TUBE	TUBE TUBO	ROHR TUBO
19	339123X1	M8 X 20	1 HEX. SOCK. SCREW	VIS TETE HEX VITE PARKER	ZYLINDERSCHRAUBE TORN.CAB.HUECA
20	339402X1	M10	2 NUT	ECROU DADO	MUTTER TUERCA
21	390734X1	∅ 10–21 X 2	2 WASHER	RONDELLE RONDELLA	UNTERLEGSCHEIBE ARANDELA
22	4278077M1		1 MAIN CYLINDER	MAITRE CYLINDRE CILINDRO PRINCIP	HAUPTZYLINDER CILINDRO PRINCIP
23	3903845M1	22	1 BELLOWS	SOUFFLET SOFFIETTO	FALTENBALG FUELLE
24	3010818X1	M4 X 20	2 SCREW METRIC	VIS METRIQUE VITE METRICA	SCHRAUBE METR TORNILLO METRICO
25	4270192M1		1 STRAP	PATTE CORREGGIA	LASCHE FAJA
26	411301050040		1 FORK	FOURCHETTE FORCA	GABEL HORQUILLA

Clutch Control
Commande De L'Embrayage
Kupplungsbetatigung
Comando Della Frizione
Mando Del Embrague

20-20

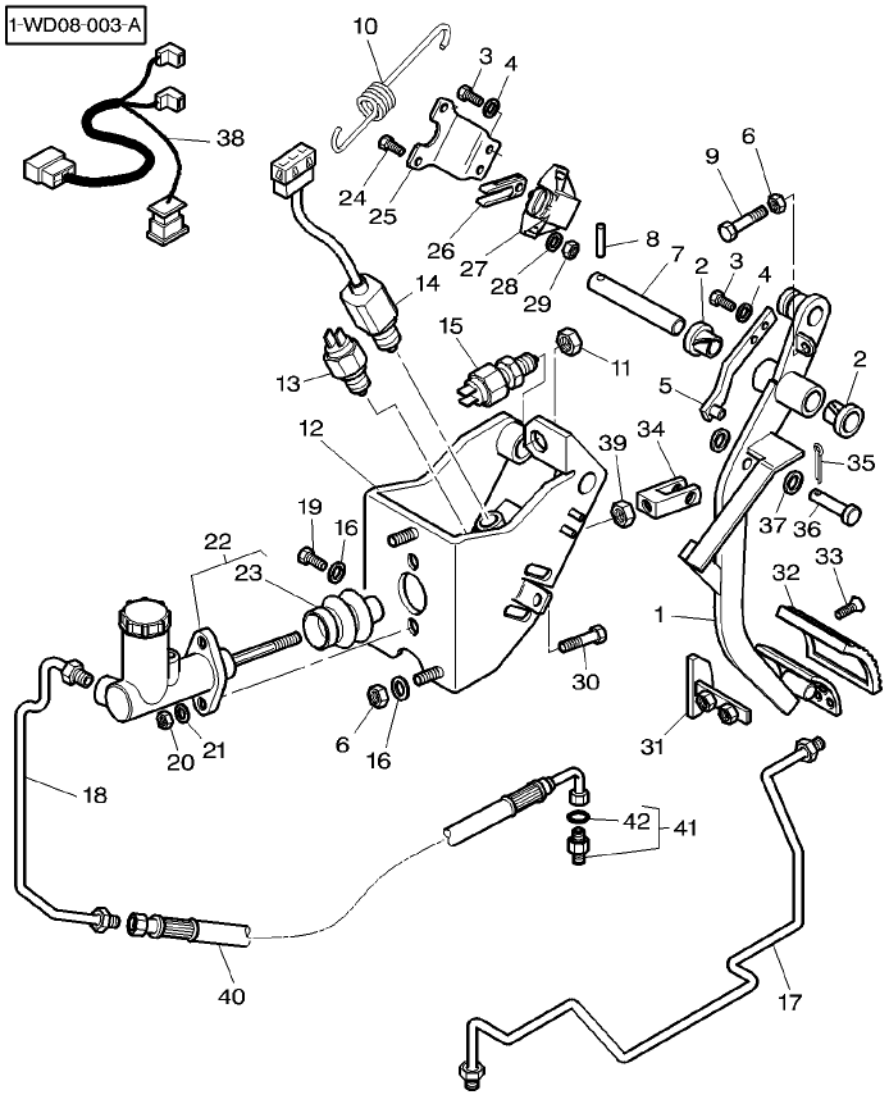

27	***3784361M1***		**1** TRANSDUCER	CAPTEUR TRANSDUCER	NABENTRIEB. TRANSDUCER
28	390468X1	∅ 4-9 X 1	**4** WASHER	RONDELLE RONDELLA	UNTERLEGSCHEIBE ARANDELA
29	3019139X1	M4	**2** NUT	ECROU DADO	MUTTER TUERCA
30	3009493X1	M10 X 30	**2** HEX. SOCK. SCREW	VIS TETE HEX VITE PARKER	ZYLINDERSCHRAUBE TORN.CAB.HUECA
31	3714488M3		**1** STOP	BUTEE STOP	ANSCHLAG PARO
32	1626321M2		**1** SKATE	PATIN PATTINO	SCHLITTEN-KUFE PATIN
33	392404X1	M5 X 16	**2** SCREW	VIS VITE	SCHRAUBE TORNILLO
34	4278844M1		**1** CLEVIS	CHAPE GANCIO D'ATTACCO	GABELSTUECK GANCHO SEGURI.
35	1442994X1	∅ 3 X 25	**1** PIN	GOUPILLE PERNO	BOLZEN PASADOR
36	3019214X1	∅ 12 X 40	**1** CLEVIS PIN	AXE PERNO D'ATTACCO	SPLINTBOLZEN BULON CILINDRICO
37	1444351X1		**2** WASHER	RONDELLE RONDELLA	UNTERLEGSCHEIBE ARANDELA
38	3783857M1		**1** HARNESS	FAISCEAU FASCIOCAVI	KABELBAUM MAZO CABLES
39	392310X1		**1** NUT	ECROU DADO	MUTTER TUERCA
40	4276159M1	◄► 1100 MM	**1** HYDR. HOSE	FLEXIBLE TUBOFLEX IDRAUL	HYDR. SCHLAUCH TUBO HIDRAULICO
41	338716X91	M12X1,5	**1** UNION	RACCORD RACCORDO	VERSCHRAUBUNG RACOR
42	338761X1	41	**1** GASKET	JOINT GUARNIZIONE	DICHTSCHEIBE EMPAQUETADURA.

25

Transmission	Housing
Boite De Vitesses	Carter
Getriebe	Gehaeuse
Trasmissione	Carcassa
Transmision	Caja

25-5

1-WE97-006-A

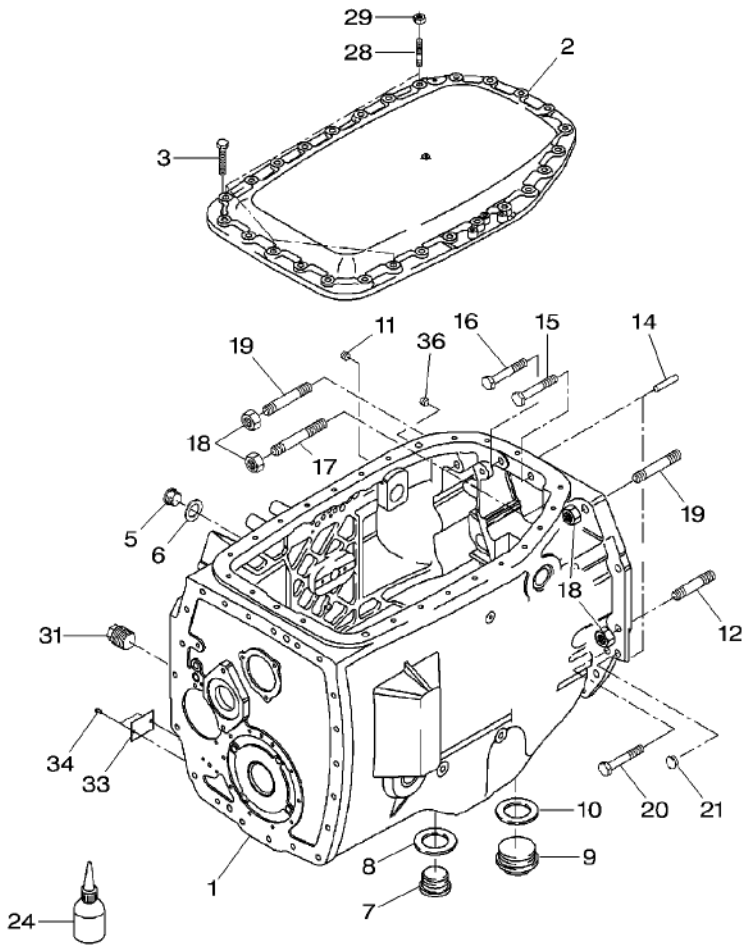

1	903100050021		1	TRANSM.HOUSING	CARTER BV CARCASSA TRASMIS	GETRIEBEGEHAEUSE CAJA TRANSMISION
2	916101050060		1	COVER	COUVERCLE COPERCHIO	DECKEL CUBIERTA
3	X487536041000	M12 X 50	23	HEX. SOCK. SCREW	VIS TETE HEX VITE PARKER	ZYLINDERSCHRAUBE TORN.CAB.HUECA
5	X483801200000	M16 X 1,5	1	SCREW	VIS VITE	SCHRAUBE TORNILLO
6	X540004878000		1	RING	ANNEAU ANELLO	RING ARO
7	X483804801000	M33 X 2	3	PLUG	BOUCHON TAPPO	VERSCHL.STOPFEN TAPON
8	X540010278000		3	RING	ANNEAU ANELLO	RING ARO
9	X483807201000	M42 X 2	2	CAPSCREW	VIS BOUCHON TAPPO A VITE	HUTSCHRAUBE TORNILLO TAPON
10	X540012278000		2	RING	ANNEAU ANELLO	RING ARO
11	X483500200000	M10	1	SCREW	VIS VITE	SCHRAUBE TORNILLO
12	X489145701000	M16 X 55	2	STUD	GOUJON PRIGIONIERO	STEHBOLZEN CHAVETA ROSCADO
14	X505578900000	M6 X 32	2	DOWEL	PLOT SPINA	ZYLINDERSTIFT CENTRAJE
15	X486546301000	M16 X 80	1	HEX. SOCK. SCREW	VIS TETE HEX VITE PARKER	ZYLINDERSCHRAUBE TORN.CAB.HUECA
16	X486546506000	M16 X 90	1	HEX. SOCK. SCREW	VIS TETE HEX VITE PARKER	ZYLINDERSCHRAUBE TORN.CAB.HUECA
17	X489148906000	M16 X 110	2	STUD	GOUJON PRIGIONIERO	STEHBOLZEN CHAVETA ROSCADO
18	X428204005000	M16	7	NUT	ECROU DADO	MUTTER TUERCA
19	X489146201000	M16 X 75	3	STUD	GOUJON PRIGIONIERO	STEHBOLZEN CHAVETA ROSCADO
20	X487545606000	M16 X 60	8	HEX. SOCK. SCREW	VIS TETE HEX VITE PARKER	ZYLINDERSCHRAUBE TORN.CAB.HUECA
21	X499502495000		3	PLUG	BOUCHON TAPPO	VERSCHL.STOPFEN TAPON
24	X903050074000		X	LOCTITE	LOCTITE LOCTITE	LOCTITE LOCTITE
28	205100150130		4	STUD	GOUJON PRIGIONIERO	STEHBOLZEN CHAVETA ROSCADO
29	X428203241000	M12	4	NUT	ECROU DADO	MUTTER TUERCA
31	926110050010		1	SCREW	VIS VITE	SCHRAUBE TORNILLO
33	903100050110		1	IDENTITY PLATE	PLAQUE DE TYPE PIASTRA IDENTIF.	TYPENSCHILD PLACA IDENTIF.
34	X419432887000		2	NAIL, NOTCHED	CLOU CRANTE CHIODO	KERBNAGEL GARRA DENTADA
36	X483500200000	M10 X 1	2	SCREW	VIS VITE	SCHRAUBE TORNILLO

Gear Box
Boite De Vitesses
Getriebe
Trasmissione
Caja Del Velocidades

25-10

1-WG89-001-A

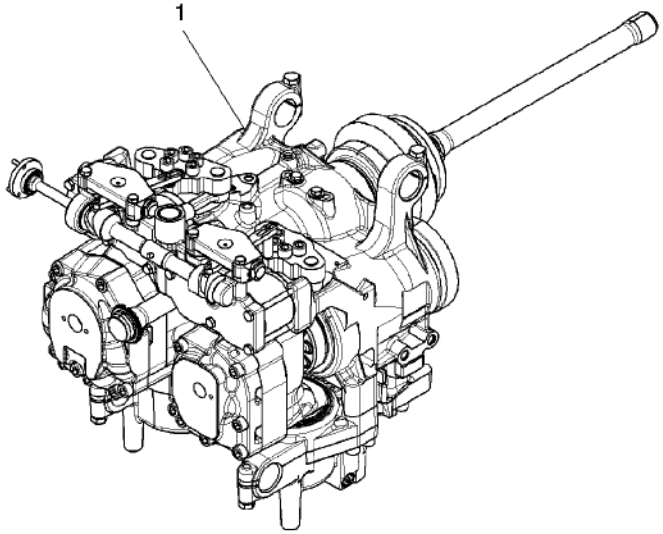

1	0099047000000		1 GEARBOX	BOITE VITESSES SCATOLA CAMBIO	ZAHNRADGETRIEBE CAJA CAMBIO
1	Z099047000000	[A]	1 GEARBOX ML 200	BOITE VIT. ML200 SCAT.CAMB. ML200	TRIEBBLOCK ML200 CAJA CAMB. ML200

[A] STANDARD EXCHANGE
ECHANGE STANDARD
STANDARD-AUSTAUSCH-VERKEHR
SCAMBIO STANDARD
INTERCAMBIO NORMAL

Inner Housing
Carter Interieur
Innengehaeuse
Scatola Interna
Carter Interior

25-15

1-WG67-002-A

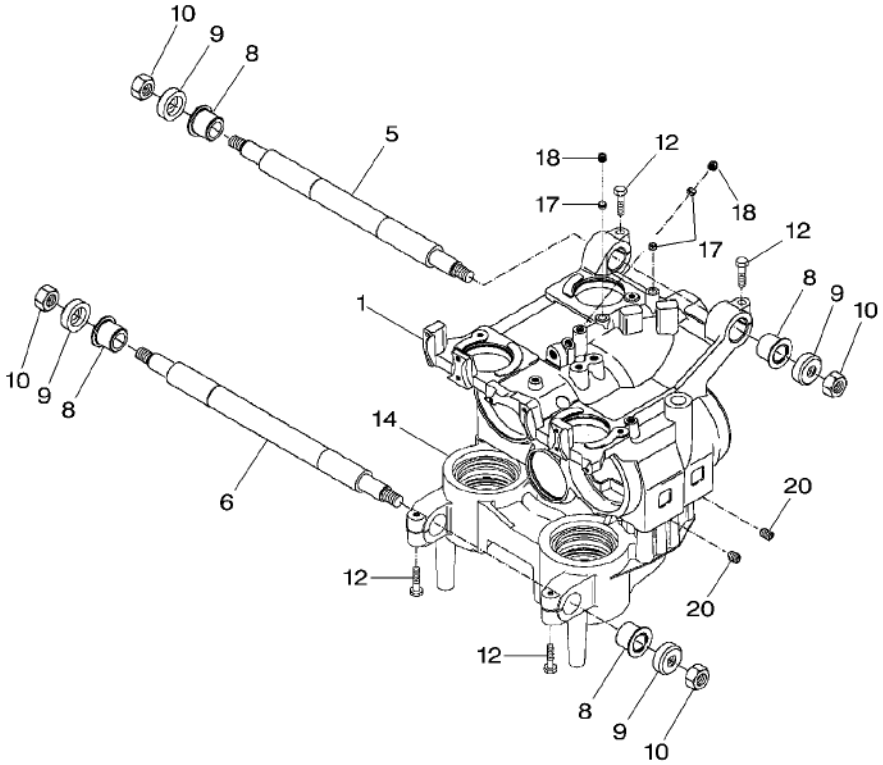

1		[A]	1	HOUSING	CARTER	GEHAEUSE
		👁 25-10 No 1			CARCASSA	ALOJAMIENTO
5	916100630011		1	SHAFT	ARBRE	WELLE
					ALBERO	ARBOL
6	916100630020		1	SHAFT	ARBRE	WELLE
					ALBERO	ARBOL
8	H916100630010		4	BUSH	BAGUE	BUCHSE
					BOCCOLA	CASQUILLO
9	916100630030		4	RING	ANNEAU	RING
					ANELLO	ARO
10	X434105040000	M20	4	NUT	ECROU	MUTTER
					DADO	TUERCA
12		[A]	4	HEX. SOCK. SCREW	VIS TETE HEX	ZYLINDERSCHRAUBE
					VITE PARKER	TORN.CAB.HUECA
14		👁 25-45 No 1	1	PLATE	PLAQUE	PLATTE
					PIASTRA	PLATO
17		[A]	3	NOZZLE	NEZ INJECTEUR	DUESE
					INIETTORE	TOBERA
18		[A]	3	PLUG	BOUCHON	VERSCHL.STOPFEN
		M12 X 1,5			TAPPO	TAPON
20		[A]	2	SCREW	VIS	SCHRAUBE
					VITE	TORNILLO

[A] NOT SUPPLIED SEPARATELY
NON FOURNI SEPAREMENT
NICHT MITGELIEFERT BESTELLEN
NON SERVITO SEPARATAMENTE
NO SUMINISTRADOSEPARADAMENTE

Planetary Drive
Train Planetaire
Planetentrieb
Riduttore Planetario
Transmision Planetaria

25-20

1-WG68-002-A

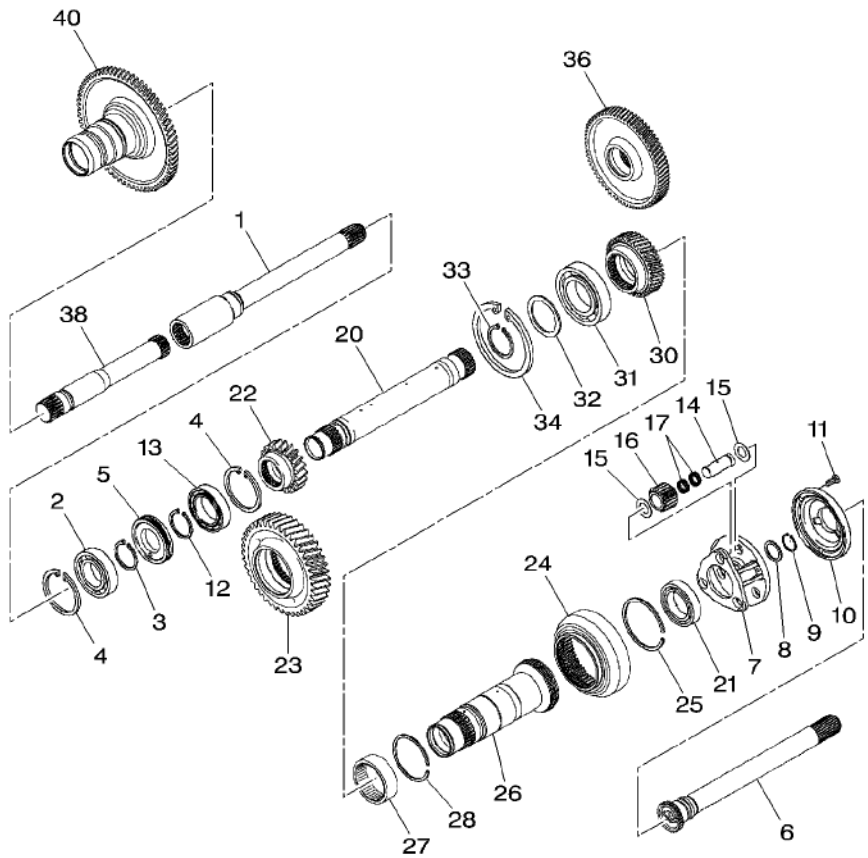

1		[A]	1	SHAFT	ARBRE ALBERO	WELLE ARBOL
2		[A]	1	BEARING ASSY	ROULEMENT CUSCINETTO COMPL	RADIALLAGER RODAMIENTO RAD
3		[A]	1	CIRCLIP	CIRCLIP ANNELLO ELASTICO	SEEGERING GRAPA CIRCULAR
4		[A]	2	CIRCLIP	CIRCLIP ANNELLO ELASTICO	SEEGERING GRAPA CIRCULAR
5		[A]	1	TUBE	TUBE TUBO	ROHR TUBO
6	926102080130	50–5 No 42	1	SHAFT	ARBRE ALBERO	WELLE ARBOL
7		[A]	1	CARRIER	PORTE SATELLITES SUPPORTO SATELL.	TRAEGER PORTADOR
8		[A]	1	CHOCK	CALE PASSACAVO	UNTERLEG–KEIL CALZA
9		[A]	1	CIRCLIP	CIRCLIP ANNELLO ELASTICO	SEEGERING GRAPA CIRCULAR
10*	916100080181		1	COVER	COUVERCLE COPERCHIO	DECKEL CUBIERTA
11		[A] M8 X 25	3	HEX. SOCK. SCREW	VIS TETE HEX VITE PARKER	ZYLINDERSCHRAUBE TORN.CAB.HUECA
12		[A]	1	KIT, CIRCLIP	JEU CIRCLIPS KIT, CIRCLIP	SICHERUNGSR.SATZ KIT, CIRCLIP
13		[A]	1	BEARING ASSY	ROULEMENT CUSCINETTO COMPL	RADIALLAGER RODAMIENTO RAD
14		[A]	3	CLEVIS PIN	AXE PERNO D'ATTACCO	SPLINTBOLZEN BULON CILINDRICO
15		[A]	6	WASHER	RONDELLE RONDELLA	UNTERLEGSCHEIBE ARANDELA
16		[A] 20	3	DIFF PINION	SATELLITE PIGNONE DIFFEREN	DIFF.KEGELRAD PINON DIFERENC
17		[A]	6	NEEDLE CAGE	CAGE A AIGUILLES PORTAGHI	NADELKAEFIG JUALA DE AGUJA
20		[A] 27	1	SHAFT	ARBRE ALBERO	WELLE ARBOL
21		[A]	1	BEARING ASSY	ROULEMENT CUSCINETTO COMPL	RADIALLAGER RODAMIENTO RAD
22		[A] 22	1	PINION	PIGNON PIGNONE	RITZEL PINON
23		25–30 No 1	1	SHAFT	ARBRE ALBERO	WELLE ARBOL
24		[A]	1	ANNULAR GEAR	COURONNE CORONA DENTATA	ZAHNKRANZ ENGRANAJE ANULAR
25		[A] ∅ 95 X 2,5	1	RING	ANNEAU ANELLO	RING ARO
26		[A]	1	SHAFT	ARBRE ALBERO	WELLE ARBOL
27		[A] ∅ 68 X 25	1	BEARING ASSY	ROULEMENT CUSCINETTO COMPL	RADIALLAGER RODAMIENTO RAD
28		[A] ∅ 82 X 2	1	RING	ANNEAU ANELLO	RING ARO

Planetary Drive
Train Planetaire
Planetentrieb
Riduttore Planetario
Transmision Planetaria

25-20

1-WG68-002-A

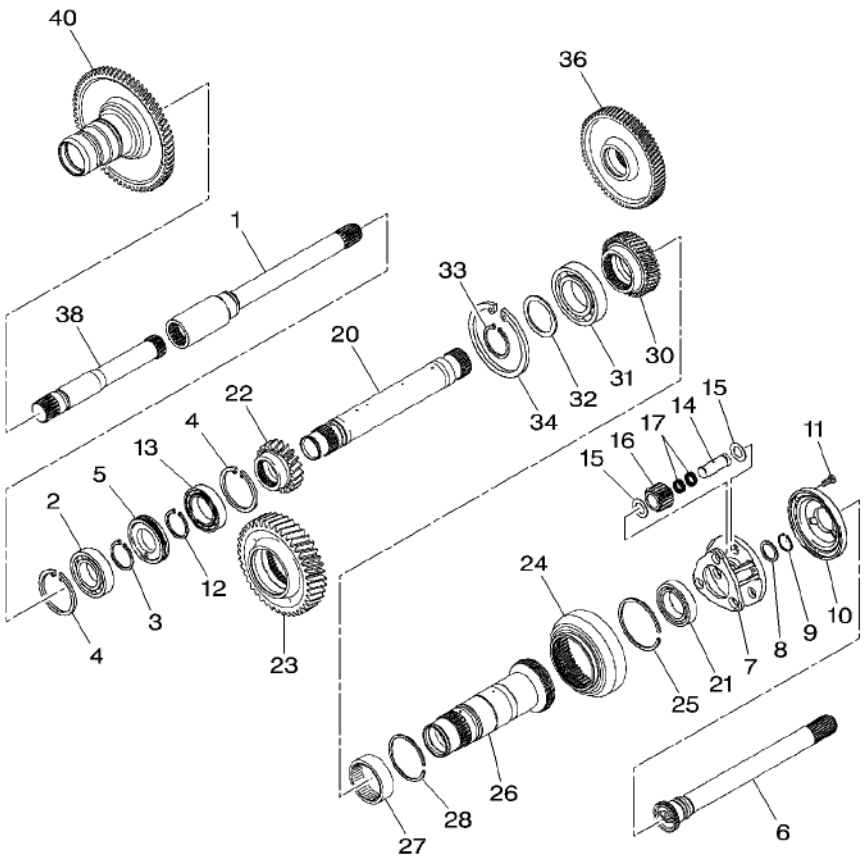

30		[A]	1	PINION	PIGNON	RITZEL
		30			PIGNONE	PINON
31		[A]	1	BEARING ASSY	ROULEMENT	RADIALLAGER
					CUSCINETTO COMPL	RODAMIENTO RAD
32		[A]	1	KIT, WASHER	JEU RONDELLES	SCHEIBENSATZ
					KIT RONDELLA	JUEGO ARANDELAS
33		[A]	1	CIRCLIP	CIRCLIP	SEEGERING
		∅ 60 X 2			ANNELLO ELASTICO	GRAPA CIRCULAR
34		[A]	1	CIRCLIP	CIRCLIP	SEEGERING
		∅ 110 X 4			ANNELLO ELASTICO	GRAPA CIRCULAR
36		25–25 No 1	1	PINION	PIGNON	RITZEL
					PIGNONE	PINON
38	916101080070		1	SHAFT	ARBRE	WELLE
					ALBERO	ARBOL
40		70–55 No 1	1	PINION	PIGNON	RITZEL
					PIGNONE	PINON

[A] NOT SUPPLIED SEPARATELY
NON FOURNI SEPAREMENT
NICHT MITGELIEFERT BESTELLEN
NON SERVITO SEPARATAMENTE
NO SUMINISTRADOSEPARADAMENTE

Pump Shaft
Arbre De Pompe
Pumpenwelle
Albero Di Pompa
Eje De Bomba

25-25

1-WG69-002-A

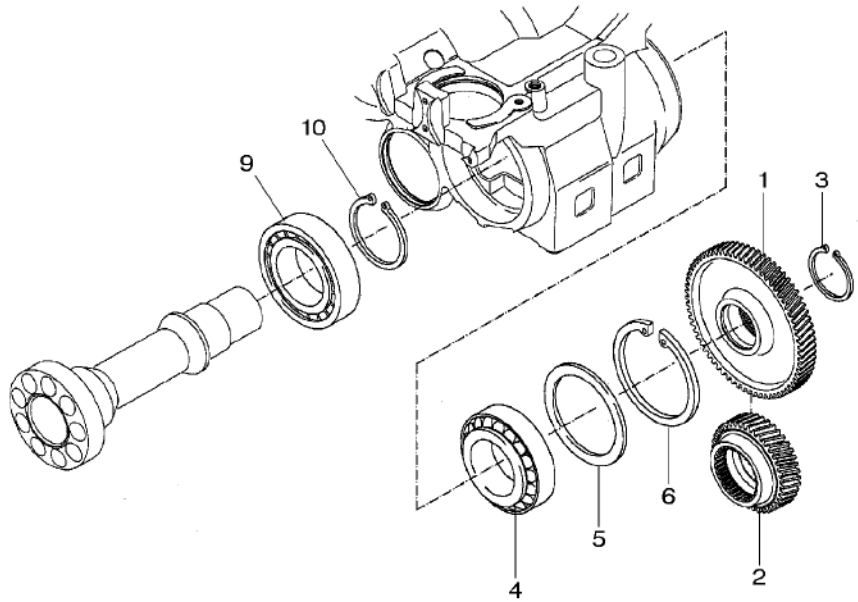

1	[A] 48	1	PINION	PIGNON PIGNONE	RITZEL PINON
2	[A] 25–20 No 30	1	PINION	PIGNON PIGNONE	RITZEL PINON
3	[A] ∅ 55 X 3	1	CIRCLIP	CIRCLIP ANNELLO ELASTICO	SEEGERING GRAPA CIRCULAR
4	[A]	1	BALL BEARING	ROULEMENT BILLES CUSCINETTO SFERE	KUGELLAGER COJINETE DE BOLA
5	[A]	1	CHOCK	CALE PASSACAVO	UNTERLEG–KEIL CALZA
6	[A] ∅ 125 X 4	1	CIRCLIP	CIRCLIP ANNELLO ELASTICO	SEEGERING GRAPA CIRCULAR
9	[A]	1	BEARING ASSY	ROULEMENT CUSCINETTO COMPL	RADIALLAGER RODAMIENTO RAD
10	[A]	1	CIRCLIP	CIRCLIP ANNELLO ELASTICO	SEEGERING GRAPA CIRCULAR

[A] NOT SUPPLIED SEPARATELY
NON FOURNI SEPAREMENT
NICHT MITGELIEFERT BESTELLEN
NON SERVITO SEPARATAMENTE
NO SUMINISTRADOSEPARADAMENTE

Accumulator Shaft
Arbre Sommateur
Summierungswelle
Albero Di Accumulo
Eje Sumatorio

25-30

1-WG70-002-A

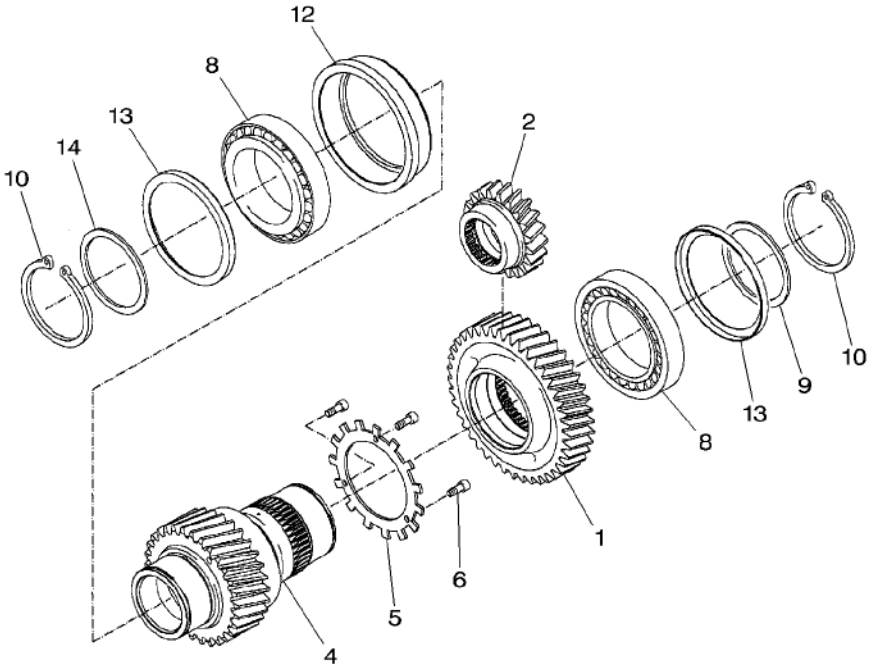

1	[A] 45	1 PINION	PIGNON PIGNONE	RITZEL PINON
2	25–20 No 22	1 PINION	PIGNON PIGNONE	RITZEL PINON
4	[A] 29	1 SHAFT	ARBRE ALBERO	WELLE ARBOL
5	[A]	1 PINION	PIGNON PIGNONE	RITZEL PINON
6	[A] M6 X 12	3 HEX. SOCK. SCREW	VIS TETE HEX VITE PARKER	ZYLINDERSCHRAUBE TORN.CAB.HUECA
8	[A]	2 BALL BEARING	ROULEMENT BILLES CUSCINETTO SFERE	KUGELLAGER COJINETE DE BOLA
9	[A]	1 SHIM	CALE REGLAGE SPESSORE	EINSTELLBLECH CALCE
10	[A]	2 CIRCLIP	CIRCLIP ANNELLO ELASTICO	SEEGERING GRAPA CIRCULAR
12	[A]	1 RING	ANNEAU ANELLO	RING ARO
13	[A]	2 SHIELD	TOLE RIPARO	SCHILD BLINDAJE
14	[A]	1 KIT, WASHER	JEU RONDELLES KIT RONDELLA	SCHEIBENSATZ JUEGO ARANDELAS

[A] NOT SUPPLIED SEPARATELY
NON FOURNI SEPAREMENT
NICHT MITGELIEFERT BESTELLEN
NON SERVITO SEPARATAMENTE
NO SUMINISTRADOSEPARADAMENTE

Hydraulic Pump
Pompe Hydraulique
Hydraulikpumpe
Pompa Idraulica
Bomba Hidraulica

25-35

1-WP32-003-A

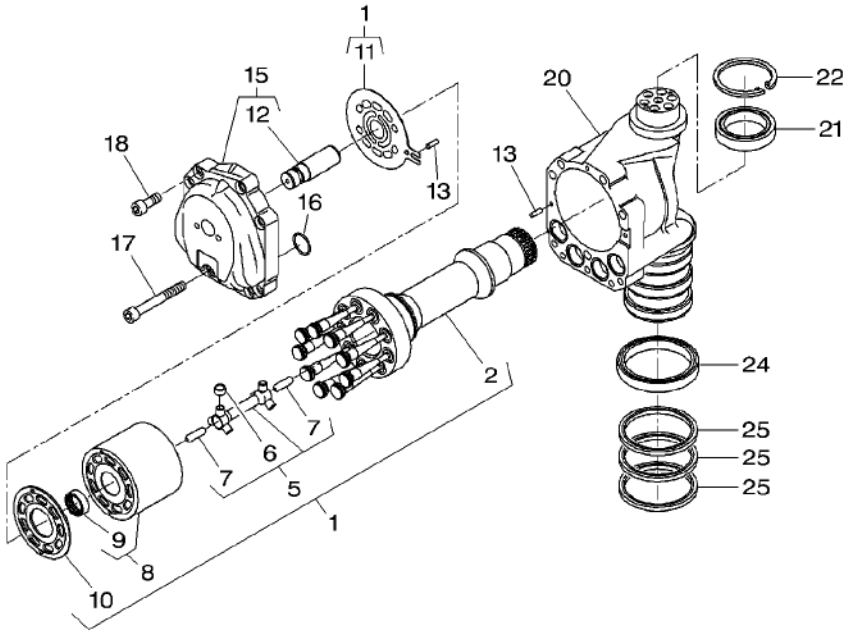

1		[A]	1	ASSEMBLY SET	JEU DE MONTAGES ASSEMBLY SET	EINBAUSATZ ASSEMBLY SET
2		1 [A]	1	SHAFT	ARBRE ALBERO	WELLE ARBOL
5		1 [A]	1	CLEVIS PIN	AXE PERNO D'ATTACCO	SPLINTBOLZEN BULON CILINDRICO
6		5 [A]	1	BUSH	BAGUE BOCCOLA	BUCHSE CASQUILLO
7		5 [A]	1	CLEVIS PIN	AXE PERNO D'ATTACCO	SPLINTBOLZEN BULON CILINDRICO
8		1 [A]	1	CYLINDER	CYLINDRE CILINDRO	ZYLINDER CILINDRO
9		8 [A]	1	BEARING ASSY	ROULEMENT CUSCINETTO COMPL	RADIALLAGER RODAMIENTO RAD
10		1 [A]	1	PLATE	PLAQUE PIASTRA	PLATTE PLATO
11	916100430311	1	1	PLATE	PLAQUE PIASTRA	PLATTE PLATO
12		15 REF. 15	1	CLEVIS PIN	AXE PERNO D'ATTACCO	SPLINTBOLZEN BULON CILINDRICO
13	X506239300000	∅ 6 X 20	2	DOWEL	PLOT SPINA	ZYLINDERSTIFT CENTRAJE
15	H916100430012		1	COVER	COUVERCLE COPERCHIO	DECKEL CUBIERTA
16	X548885102000	∅ 29,1 X 2,55	4	O RING	JOINT TORIQUE ANELLO TENUTA	O-RING ANILLO FORMA 'O'
17*	X485019801000	M12 X 80	1	HEX. SOCK. SCREW	VIS TETE HEX VITE PARKER	ZYLINDERSCHRAUBE TORN.CAB.HUECA
18	X485019206000	M12 X 50	9	HEX. SOCK. SCREW	VIS TETE HEX VITE PARKER	ZYLINDERSCHRAUBE TORN.CAB.HUECA
20*	916101430101		1	HOUSING	CARTER CARCASSA	GEHAEUSE ALOJAMIENTO
21	X620430501000	60 X 85 X 16	1	BEARING	COUSSINET CUSCINETTO	LAGER COJINETE
22	X530107946000		1	CIRCLIP	CIRCLIP ANNELLO ELASTICO	SEEGERING GRAPA CIRCULAR
24	X622348000000	95 X 115 X 15	1	BEARING ROLLER	ROULEMENT GALETS CUSCINETTO RULLI	ROLLENLAGER COJINETE RODILLO
25	G916101430050		3	GASKET	JOINT GUARNIZIONE	DICHTSCHEIBE EMPAQUETADURA.

[A] NOT SUPPLIED SEPARATELY
NON FOURNI SEPAREMENT
NICHT MITGELIEFERT BESTELLEN
NON SERVITO SEPARATAMENTE
NO SUMINISTRADOSEPARADAMENTE

Hydraulique Motor
Moteur Hydraulique
Hydromotor
Motore Idraulico
Motor Hidraulico

25-40

1-WP26-002-A

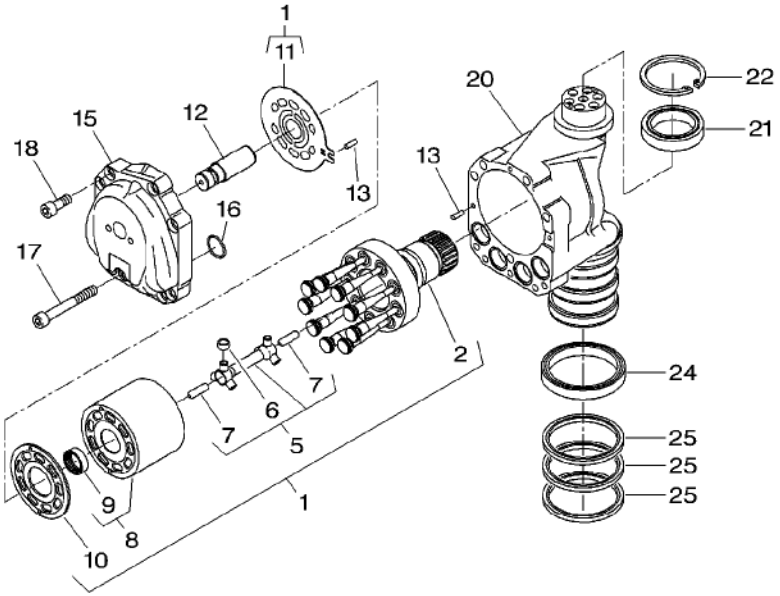

1		[A]	1	ASSEMBLY SET	JEU DE MONTAGES ASSEMBLY SET	EINBAUSATZ ASSEMBLY SET
2		1 [A]	1	SHAFT	ARBRE ALBERO	WELLE ARBOL
5		1 [A]	1	GASKET	JOINT GUARNIZIONE	DICHTSCHEIBE EMPAQUETADURA.
6		5 [A]	1	BUSH	BAGUE BOCCOLA	BUCHSE CASQUILLO
7		5 [A]	2	CLEVIS PIN	AXE PERNO D'ATTACCO	SPLINTBOLZEN BULON CILINDRICO
8		1 [A]	1	CYLINDER	CYLINDRE CILINDRO	ZYLINDER CILINDRO
9		8 [A]	1	BEARING ASSY	ROULEMENT CUSCINETTO COMPL	RADIALLAGER RODAMIENTO RAD
10		1 [A]	1	PLATE	PLAQUE PIASTRA	PLATTE PLATO
11		1 [A]	1	PLATE	PLAQUE PIASTRA	PLATTE PLATO
12		[A]	1	CLEVIS PIN	AXE PERNO D'ATTACCO	SPLINTBOLZEN BULON CILINDRICO
13		[A]	2	PIN	GOUPILLE PERNO	BOLZEN PASADOR
15		[A]	1	COVER	COUVERCLE COPERCHIO	DECKEL CUBIERTA
16	X548885102000	29,1 X 2,55	4	O RING	JOINT TORIQUE ANELLO TENUTA	O-RING ANILLO FORMA 'O'
17		[A] M12 X 80	1	SCREW	VIS VITE	SCHRAUBE TORNILLO
18		[A] M12 X 50	9	SCREW	VIS VITE	SCHRAUBE TORNILLO
20		[A]	1	HOUSING	CARTER CARCASSA	GEHAEUSE ALOJAMIENTO
21		[A] 60 X 85 X 16	1	BEARING	COUSSINET CUSCINETTO	LAGER COJINETE
22		[A]	1	CIRCLIP	CIRCLIP ANNELLO ELASTICO	SEEGERING GRAPA CIRCULAR
24		[A] 95 X 115 X 15	1	BEARING ROLLER	ROULEMENT GALETS CUSCINETTO RULLI	ROLLENLAGER COJINETE RODILLO
25		[A]	3	GASKET	JOINT GUARNIZIONE	DICHTSCHEIBE EMPAQUETADURA.

[A] NOT SUPPLIED SEPARATELY
NON FOURNI SEPAREMENT
NICHT MITGELIEFERT BESTELLEN
NON SERVITO SEPARATAMENTE
NO SUMINISTRADOSEPARADAMENTE

Duct Plate
Plaque De Conduite
Kanalplatte
Piastra Comando Idraulico
Placa Del Conducto

25-45

1-WG72-002-A

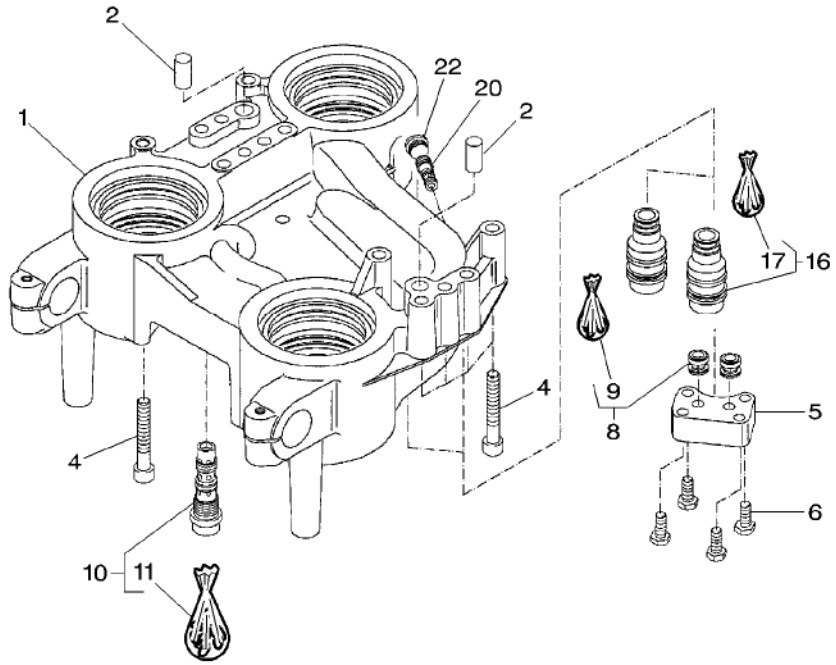

1		[A] 25-10 No 1	1	PLATE	PLAQUE PIASTRA	PLATTE PLATO
2		[A]	2	PIN	GOUPILLE PERNO	BOLZEN PASADOR
4		[A] M12 X 80	13	SCREW	VIS VITE	SCHRAUBE TORNILLO
5	916100430020		1	FLANGE	FLASQUE FLANGIA	FLANSCH PLETINA
6		[A] M10 X 40	4	SCREW	VIS VITE	SCHRAUBE TORNILLO
8	X600585202000		2	NON RETURN VALVE	CLAPET VALVOLA NO RITOR	RUECKSCHLAGVENT. VALV.SIN RETORNO
9	X600585202010	8	1	KIT, JOINT	JEU JOINTS KIT GIUNTO	DICHTUNGSSATZ JUEGO JUNTAS
10	G916101430020		1	FLUSHING VALVE	VANNE DE PURGE FLUSHING VALVE	SPUELVENTIL FLUSHING VALVE
11	F916100430010	10	1	KIT, JOINT	JEU JOINTS KIT GIUNTO	DICHTUNGSSATZ JUEGO JUNTAS
16	G716100430011	G716100430010	2	DISCHARGE VALVE	VALVE DECHARGE VALVOLA-SICUREZZ	DRUCKBEGR.VENTIL VALVULA ALIVIO
17	F716100430010	16	1	KIT, JOINT	JEU JOINTS KIT GIUNTO	DICHTUNGSSATZ JUEGO JUNTAS
20	G916101430030		1	VALVE.	SOUPAPE VALVOLA	VENTIL VALVULA
22	X483900400000	M12 X 1,5	1	SCREW	VIS VITE	SCHRAUBE TORNILLO

[A] NOT SUPPLIED SEPARATELY
NON FOURNI SEPAREMENT
NICHT MITGELIEFERT BESTELLEN
NON SERVITO SEPARATAMENTE
NO SUMINISTRADOSEPARADAMENTE

Adjusting Device
Reglage
Verstellung
Regolazione
Disposotivo Ajustable

25-50

1-WG73-003-A

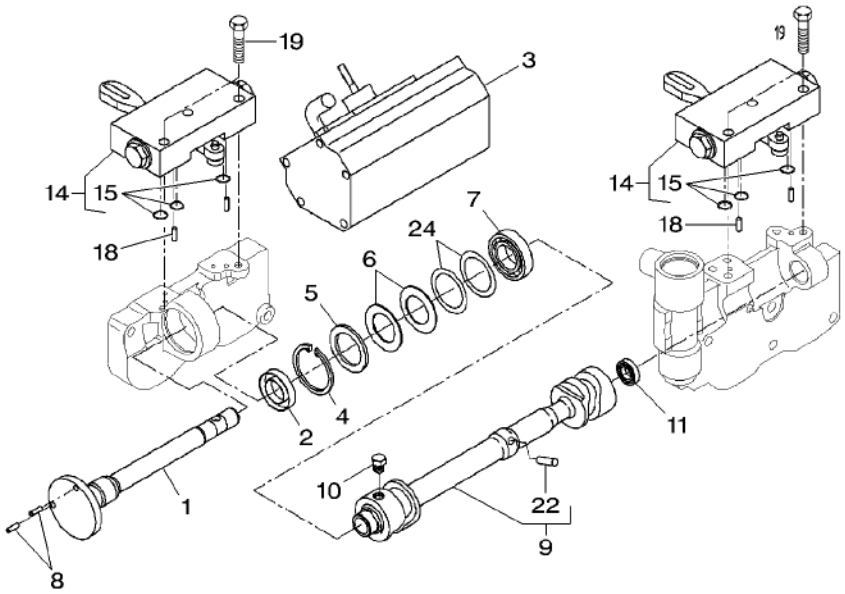

1	916101530010		1	SHAFT	ARBRE ALBERO	WELLE ARBOL
2	X550035200000	22 X 35 X 8/7	1	OIL SEAL	BAGUE ETANCHEITE BOCCOLA PARAOLIO	OELDICHTRING BUJE RETENACEITE
3		25–55 No 1	1	CONTROL	CONTROLE CONTROLLO	STEUERUNG MANDO
4	X530105346000	∅ 42 X 1,75	1	CIRCLIP	CIRCLIP ANNELLO ELASTICO	SEEGERING GRAPA CIRCULAR
5	X534538146000		2	BACKUP RING	CONTRE BAGUE ANELLO APPOGGIO	STUETZRING ANILLA SOPORTE
6	X699239900000		2	CUP SPRING	RONDELLE RESSORT MOLLA CAPPELLOTT	TELLERFEDER CUBETA DE MUELLE
7	X607305302000		1	BALL BEARING	ROULEMENT BILLES CUSCINETTO SFERE	KUGELLAGER COJINETE DE BOLA
8	916970160400		2	PEG	PORTE MANTEAU PICCHETTO	STIFT CLAVIJA
9	H926103530020		1	SHAFT	ARBRE ALBERO	WELLE ARBOL
10	916100530170		1	HEX. SOCK. SCREW	VIS TETE HEX VITE PARKER	ZYLINDERSCHRAUBE TORN.CAB.HUECA
11	X606722501000		1	BALL BEARING	ROULEMENT BILLES CUSCINETTO SFERE	KUGELLAGER COJINETE DE BOLA
14	G916100530013		2	REGULATOR	REGULATEUR REGOLATORE	REGLER REGULADOR
15	X548823200000	14 ∅ 9,25 X 1,78	3	O RING	JOINT TORIQUE ANELLO TENUTA	O–RING ANILLO FORMA 'O'
18		[A]	4	PIN	GOUPILLE PERNO	BOLZEN PASADOR
19		[A]	4	HEX. SOCK. SCREW	VIS TETE HEX VITE PARKER	ZYLINDERSCHRAUBE TORN.CAB.HUECA
22	X506239300000	M6 X 20	1	DOWEL	PLOT SPINA	ZYLINDERSTIFT CENTRAJE
24	G001990200140		1	KIT, WASHER	JEU RONDELLES KIT RONDELLA	SCHEIBENSATZ JUEGO ARANDELAS

[A] NOT SUPPLIED SEPARATELY
NON FOURNI SEPAREMENT
NICHT MITGELIEFERT BESTELLEN
NON SERVITO SEPARATAMENTE
NO SUMINISTRADOSEPARADAMENTE

Transmission Control
Commande Boite De Vitesses
Getriebe–Schaltung
Comando Trasmissione
Control De Transmision

25-55

1-WG88-001-A

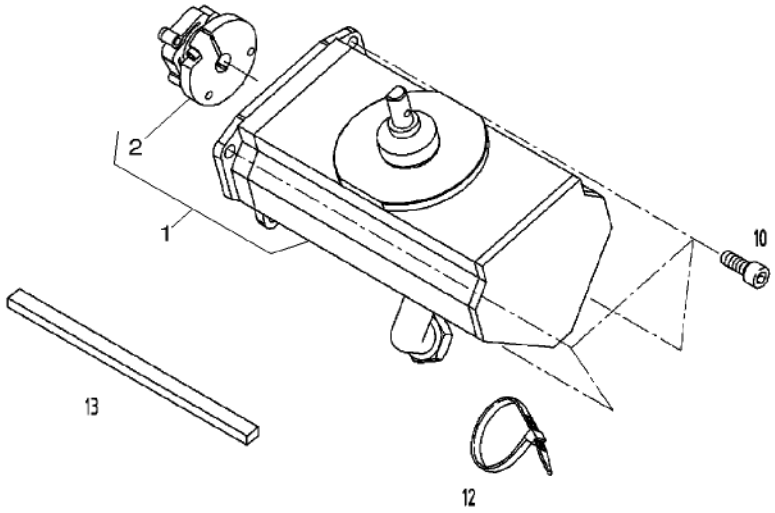

1	G701970160012		1	CONTROL	CONTROLE CONTROLLO	STEUERUNG MANDO
2	F916970160011	1	1	COUPLING	CRABOT INNESTO	KUPPLUNG ACOPLAMIENTO
10	X485007301000	M8 X 20	4	HEX. SOCK. SCREW	VIS TETE HEX VITE PARKER	ZYLINDERSCHRAUBE TORN.CAB.HUECA
12	X668980522000		2	CABLE TIE	ATTACHE CABLE FASCETTA CAVI	KABELBINDER APRIETACABLES
13	X903005286000	◄► 100 MM	X	SEALING STRIP	BANDE D'ETANCH. SEALING STRIP	DICHTUNGSBAND SEALING STRIP

Adjusting Device
Reglage
Verstellung
Regolazione
Disposotivo Ajustable

25-60

1-WG73-004-A

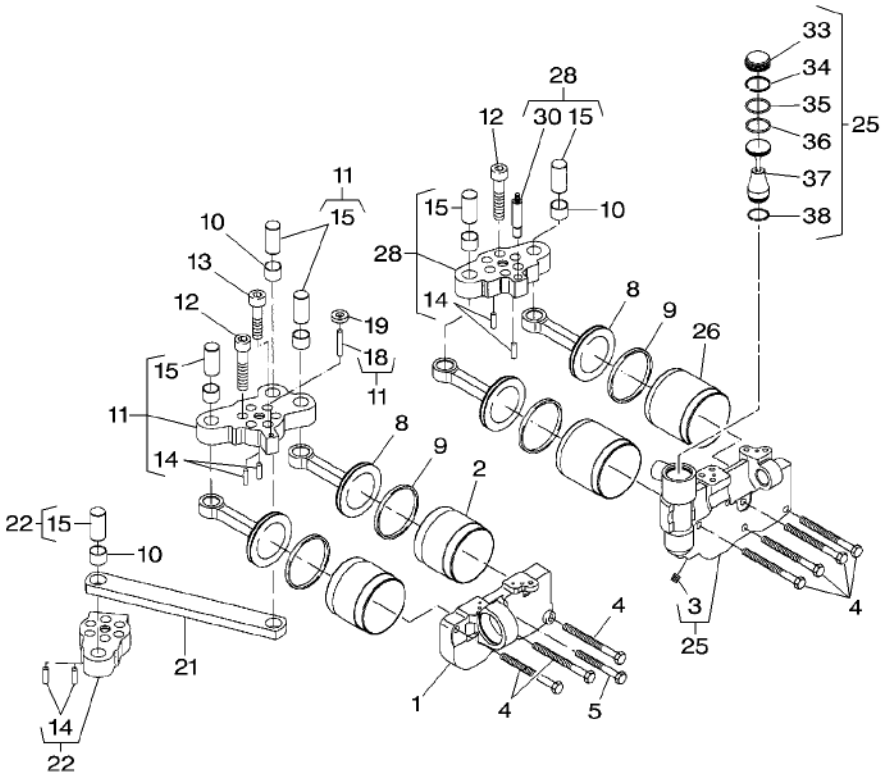

1	718100531020		1 HOUSING	CARTER CARCASSA	GEHAEUSE ALOJAMIENTO
2	916100530041		2 PIPE	TUYAU TUBO	ROHRLEITUNG CANO
3		25 M8 X 8 REF. 25	1 HEX. SOCK. SCREW	VIS TETE HEX VITE PARKER	ZYLINDERSCHRAUBE TORN.CAB.HUECA
4		[A] M8 X 90	7 HEX. SOCK. SCREW	VIS TETE HEX VITE PARKER	ZYLINDERSCHRAUBE TORN.CAB.HUECA
5		[A] M8 X 70	1 HEX. SOCK. SCREW	VIS TETE HEX VITE PARKER	ZYLINDERSCHRAUBE TORN.CAB.HUECA
8	916100530051		4 PISTON	PISTON PISTONE	KOLBEN PISTON
9	X547502700000	∅ 70 X 4,2	4 SUMP GASKET	JOINT CARTER HUI SUMP GASKET	FORMDICHTUNG JUNTA DE PERFIL
10		[A]	6 BEARING	COUSSINET CUSCINETTO	LAGER COJINETE
11		[AB]	1 LEVER	LEVIER LEVA	HEBEL PALANCA
12		[A] M12 X 50	17 SCREW	VIS VITE	SCHRAUBE TORNILLO
13		[A] M12 X 40	1 SCREW	VIS VITE	SCHRAUBE TORNILLO
14		[A]	6 PIN	GOUPILLE PERNO	BOLZEN PASADOR
15		[A]	6 CLEVIS PIN	AXE PERNO D'ATTACCO	SPLINTBOLZEN BULON CILINDRICO
18		[A]	1 PIN	GOUPILLE PERNO	BOLZEN PASADOR
19		[A]	3 WASHER	RONDELLE RONDELLA	UNTERLEGSCHEIBE ARANDELA
21		[A]	1 SHACKLE	MANILLE ANELLO TRAZIONE	SCHAEKEL TRABA
22		[AD]	1 LEVER	LEVIER LEVA	HEBEL PALANCA
25	H718100531010		1 HOUSING	CARTER CARCASSA	GEHAEUSE ALOJAMIENTO
26	916100530060		2 PIPE	TUYAU TUBO	ROHRLEITUNG CANO
28		[AC]	1 LEVER	LEVIER LEVA	HEBEL PALANCA
30		[A]	1 CLEVIS PIN	AXE PERNO D'ATTACCO	SPLINTBOLZEN BULON CILINDRICO
33		25 REF. 25	1 COVER	COUVERCLE COPERCHIO	DECKEL CUBIERTA
34		25 REF. 25	1 RING	ANNEAU ANELLO	RING ARO
35		25 REF. 25	1 GASKET	JOINT GUARNIZIONE	DICHTSCHEIBE EMPAQUETADURA.
36		25 REF. 25	1 GASKET	JOINT GUARNIZIONE	DICHTSCHEIBE EMPAQUETADURA.
37		25 REF. 25	1 CLEVIS PIN	AXE PERNO D'ATTACCO	SPLINTBOLZEN BULON CILINDRICO

Adjusting Device
Reglage
Verstellung
Regolazione
Disposotivo Ajustable

25-60

1-WG73-004-A

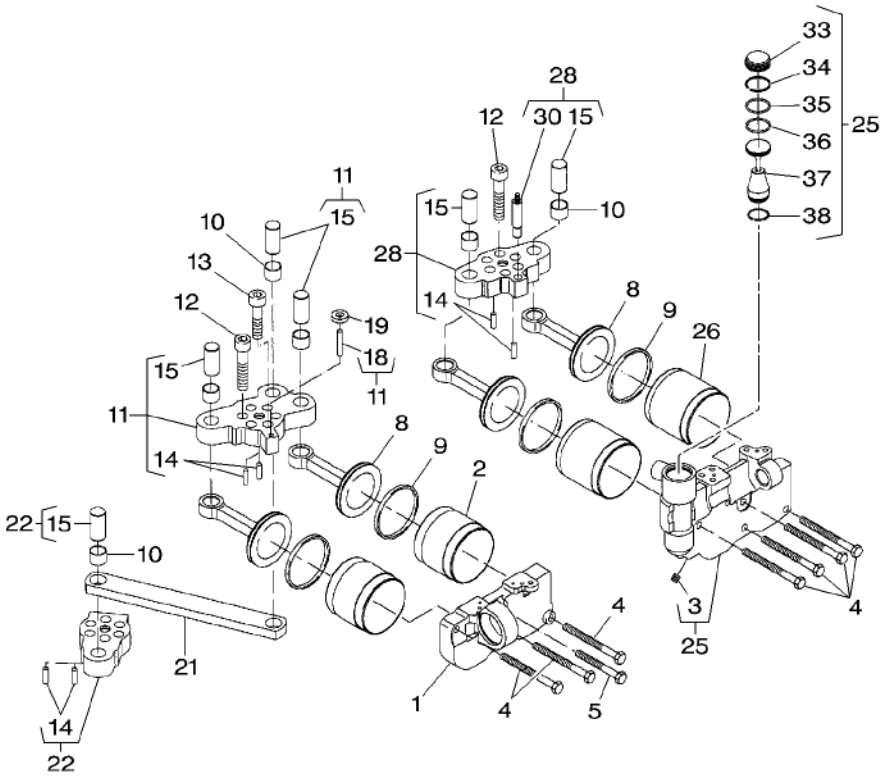

38	25 REF. 25	1 GASKET	JOINT GUARNIZIONE	DICHTSCHEIBE EMPAQUETADURA.

[A] NOT SUPPLIED SEPARATELY
NON FOURNI SEPAREMENT
NICHT MITGELIEFERT BESTELLEN
NON SERVITO SEPARATAMENTE
NO SUMINISTRADOSEPARADAMENTE

[B] INCLUDES REF. 14,15,18
COMPREND REF. 14,15,18
ENTHALTE REF. 14,15,18
COMPRENDE REF. 14,15,18
INCLUYE REF. 14,15,18

[C] INCLUDES REF. 14,15,30
COMPREND REF. 14,15,30
ENTHALTE REF. 14,15,30
COMPRENDE REF. 14,15,30
INCLUYE REF. 14,15,30

[D] INCLUDES REF. 14,15
COMPREND REF. 14,15
ENTHALTE REF. 14,15
COMPRENDE REF. 14,15
INCLUYE REF. 14,15

Group Gear Shifting
Enclenchement De Groupe
Gruppenschaltung
Cambio Di Gruppo
Cambio De Grupo

25-65

1-WG75-002-A

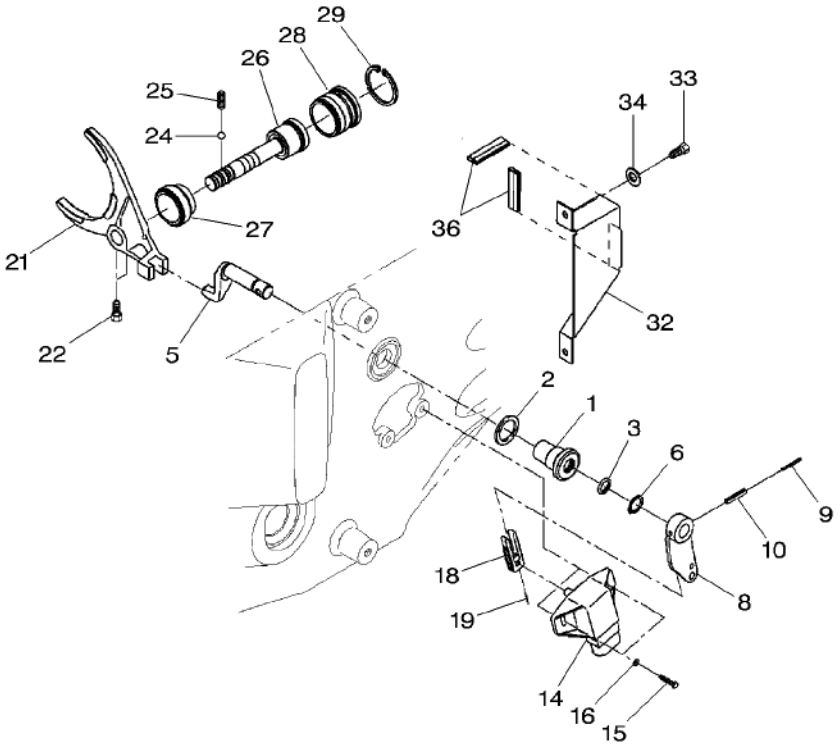

1		[A]	1	GUIDE BUSH	BAGUE GUIDE BUSSOLA GUIDA FUEHRUNGSBUCHSE CASQUILLO GUIA
2	X540008278000		1	RING	ANNEAU ANELLO RING ARO
3	X548848066000		1	O RING	JOINT TORIQUE ANELLO TENUTA O-RING ANILLO FORMA 'O'
5	205116300081		1	FINGER	DOIGT DITO FINGER DEDO
6	X530014446000		1	CIRCLIP	CIRCLIP ANNELLO ELASTICO SEEGERING GRAPA CIRCULAR
8	H916101170010		1	LEVER	LEVIER LEVA HEBEL PALANCA
9	X500613146000		1	ROLL PIN	GOUPILLE ROULEE SPINA ELASTICA SPANNHUELSE PASADOR ELASTICO
10	X500624946000		1	ROLL PIN	GOUPILLE ROULEE SPINA ELASTICA SPANNHUELSE PASADOR ELASTICO
14	***G916971020033***		1	SENSOR	DETECTEUR SENSORE EMPFANGER DETECTOR
15	X487513841000	M4 X 16	2	HEX. SOCK. SCREW	VIS TETE HEX VITE PARKER ZYLINDERSCHRAUBE TORN.CAB.HUECA
16	X450003308000		2	DISC	DISQUE DISCO SCHEIBE DISCO
18	916101170020		1	DRIVING	ENTRAINEUR CONDUCENTE MITNEHMER DE MANDO
19	X500604900000		1	ROLL PIN	GOUPILLE ROULEE SPINA ELASTICA SPANNHUELSE PASADOR ELASTICO
21	926103080020		1	SHIFT FORK	FOURCH PAS VIT FORCELLA CAMBIO SCHALTGABEL HORQ.DE CAMBIOS
22	X477027705000	M8 X 20	2	HEX. SOCK. SCREW	VIS TETE HEX VITE PARKER ZYLINDERSCHRAUBE TORN.CAB.HUECA
24	X624206000000		1	BALL	BILLE SFERA KUGEL BOLA
25	012100090080		1	SPRING	RESSORT MOLLA FEDER RESORTE
26	926103080010		1	CYLINDER ROD	TIGE DE VERIN ASTA CILINDRO KOLBENSTANGE BIELA DE CILINDR
27	716101081020		1	PISTON	PISTON PISTONE KOLBEN PISTON
28	716101081030		1	COVER	COUVERCLE COPERCHIO DECKEL CUBIERTA
29	X530105946000		1	CIRCLIP	CIRCLIP ANNELLO ELASTICO SEEGERING GRAPA CIRCULAR
32	916101170010		1	PROTECTOR	PROTECTEUR PROTETTORE SCHUTZ PROTECTOR
33	X490522300000		2	HEX. SOCK. SCREW	VIS TETE HEX VITE PARKER ZYLINDERSCHRAUBE TORN.CAB.HUECA
34	X450005108000		2	WASHER	RONDELLE RONDELLA UNTERLEGSCHEIBE ARANDELA
36	X304285000000	◄► 100 MM 1X 30 MM 1X 60 MM	1	PROTECTIVE STRIP	GAINE PROTECTION GUAINA PROTETTIV KANTENSCHUTZ BANDA PROTECTORA

Group Gear Shifting
Enclenchement De Groupe
Gruppenschaltung
Cambio Di Gruppo
Cambio De Grupo

25-65

1-WG75-002-A

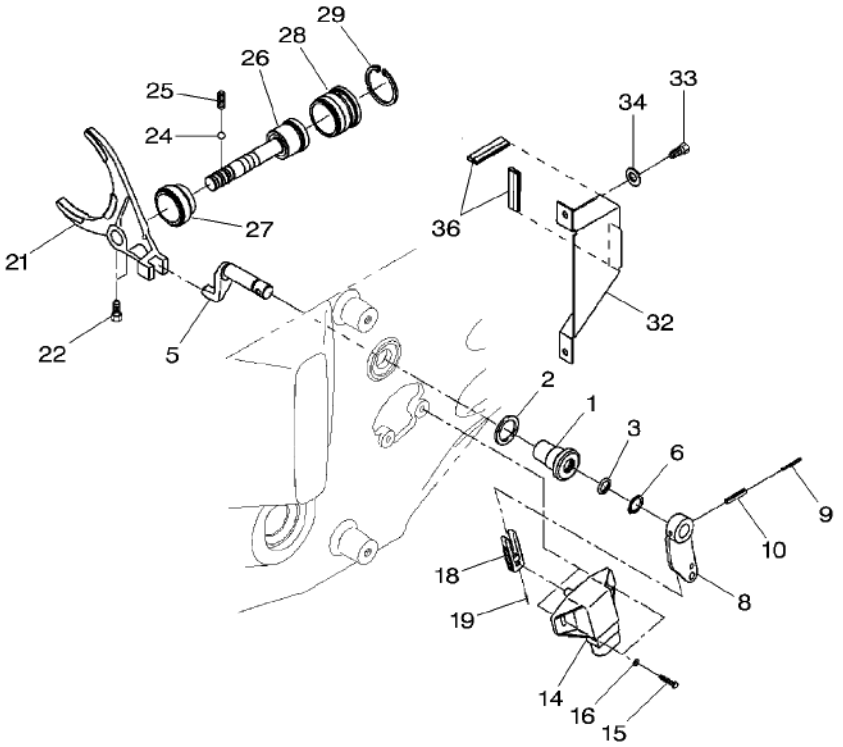

[A] NOT SUPPLIED SEPARATELY
NON FOURNI SEPAREMENT
NICHT MITGELIEFERT BESTELLEN
NON SERVITO SEPARATAMENTE
NO SUMINISTRADOSEPARADAMENTE

Transmission Control Commande De Vitesses Schaltung Comando Trasmissione Control De Transmision	Emergency Control – Drive Line Operation De Secours – Cable Hilfsbetaetigung – Fahren Commando Di Emergenza – Cavo Accionamento Emergencia – Cable	25-70

1-WG77-002-A

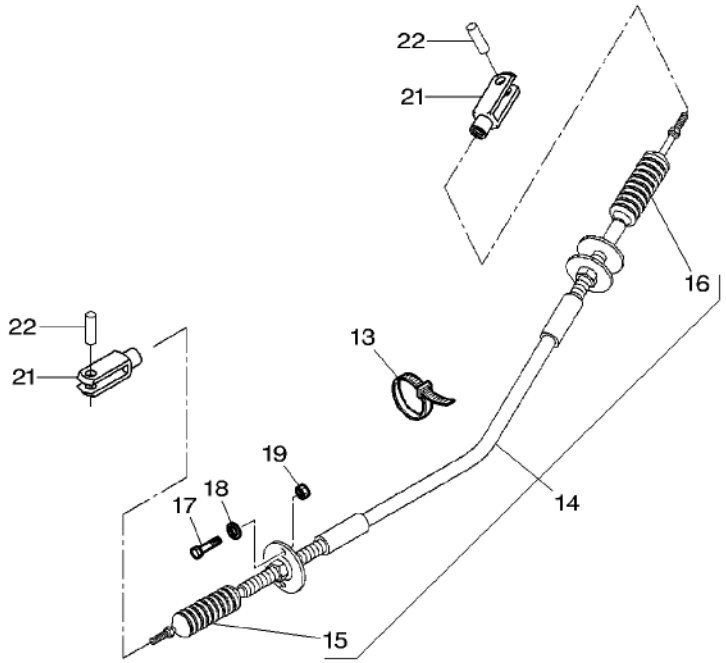

13	X668980522000		2	CABLE TIE	ATTACHE CABLE FASCETTA CAVI	KABELBINDER APRIETACABLES
14	G716100090971		1	CONTROL CABLE	CABLE DE COMANDE CAVO PRESA MOTO	BEDIENUNGSKABEL CABLE TRASMISION
15	F716100090010	14	1	BELLOWS	SOUFFLET SOFFIETTO	FALTENBALG FUELLE
16	F716100090020	14	1	BELLOWS	SOUFFLET SOFFIETTO	FALTENBALG FUELLE
17	X487520441000	M6 X 12	2	HEX. SOCK. SCREW	VIS TETE HEX VITE PARKER	ZYLINDERSCHRAUBE TORN.CAB.HUECA
18	X521403047000		2	SPRING PLATE	PLAQUE RESSORT RONDELLA ELASTIC	FEDERSCHEIBE PLETINA MUELLE
19	X428202239000	M6	2	NUT	ECROU DADO	MUTTER TUERCA
21	X410115601000		2	FORK HEAD	TETE DE FOURCHE TESTA FORCELLA	GABELKOPF CABEZA HORQUILLA
22	X407201401000		2	PIN	GOUPILLE PERNO	BOLZEN PASADOR

1-WG76-002-A

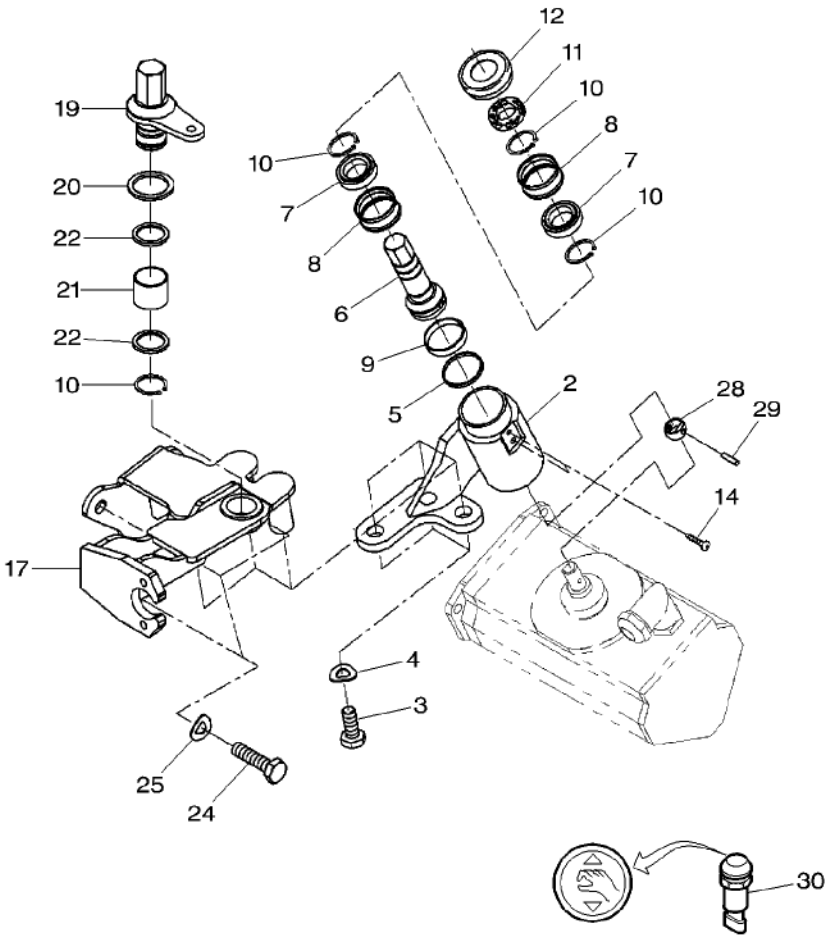

2	716100090710		1	CONSOLE	CONSOLE CONSOLE	KONSOLE CONSOLA
3	X487531541000	M10 X 25	3	HEX. SOCK. SCREW	VIS TETE HEX VITE PARKER	ZYLINDERSCHRAUBE TORN.CAB.HUECA
4	X521404447000		3	SPRING PLATE	PLAQUE RESSORT RONDELLA ELASTIC	FEDERSCHEIBE PLETINA MUELLE
5	X534310246000		1	SNAPRING	SEGMENT ARRET ANELLO SIEGER	SPRENGRING ANILLA RETENCION
6	411101090201		1	SHAFT	ARBRE ALBERO	WELLE ARBOL
7	X607395200000		2	BALL BEARING	ROULEMENT BILLES CUSCINETTO SFERE	KUGELLAGER COJINETE DE BOLA
8	916100090250		2	RING	ANNEAU ANELLO	RING ARO
9	916101090221		1	RING	ANNEAU ANELLO	RING ARO
10	X530002746000		4	CIRCLIP	CIRCLIP ANNELLO ELASTICO	SEEGERING GRAPA CIRCULAR
11	178100360050		1	RING	ANNEAU ANELLO	RING ARO
12	F150403090340		1	RING	ANNEAU ANELLO	RING ARO
14	X490617400000	M4 X 8	4	SCREW	VIS VITE	SCHRAUBE TORNILLO
17	H903100090310		1	CONSOLE	CONSOLE CONSOLE	KONSOLE CONSOLA
19*	716100090270		1	LEVER	LEVIER LEVA	HEBEL PALANCA
20	246860030130		1	GASKET	JOINT GUARNIZIONE	DICHTSCHEIBE EMPAQUETADURA.
21	X605009000000		1	BEARING BUSH	BAGUE ROULEMENT BOCCOLA CUSCINET	LAGERBUCHSE BUJE DE COJINETE
22	X534537246000		2	BACKUP RING	CONTRE BAGUE ANELLO APPOGGIO	STUETZRING ANILLA SOPORTE
24	X487531741000	M10 X 30	3	HEX. SOCK. SCREW	VIS TETE HEX VITE PARKER	ZYLINDERSCHRAUBE TORN.CAB.HUECA
25	X521404447000		3	SPRING PLATE	PLAQUE RESSORT RONDELLA ELASTIC	FEDERSCHEIBE PLETINA MUELLE
28	716100090211		1	RING	ANNEAU ANELLO	RING ARO
29	X505529200000		1	DOWEL	PLOT SPINA	ZYLINDERSTIFT CENTRAJE
30	***G716970160030***		1	PRESSURE SWITCH	MANO CONTACT PRESSOSTATO	DRUCKSCHALTER INTERRUP PRESION

Control Armrest
Accoudoir De Commande
Schaltung Armlehne
Bracciolo Di Comando
Reposa Brazos De Control

25-80

Fingertip
Fingertip
Fingertip
Fingertip
Fingertip

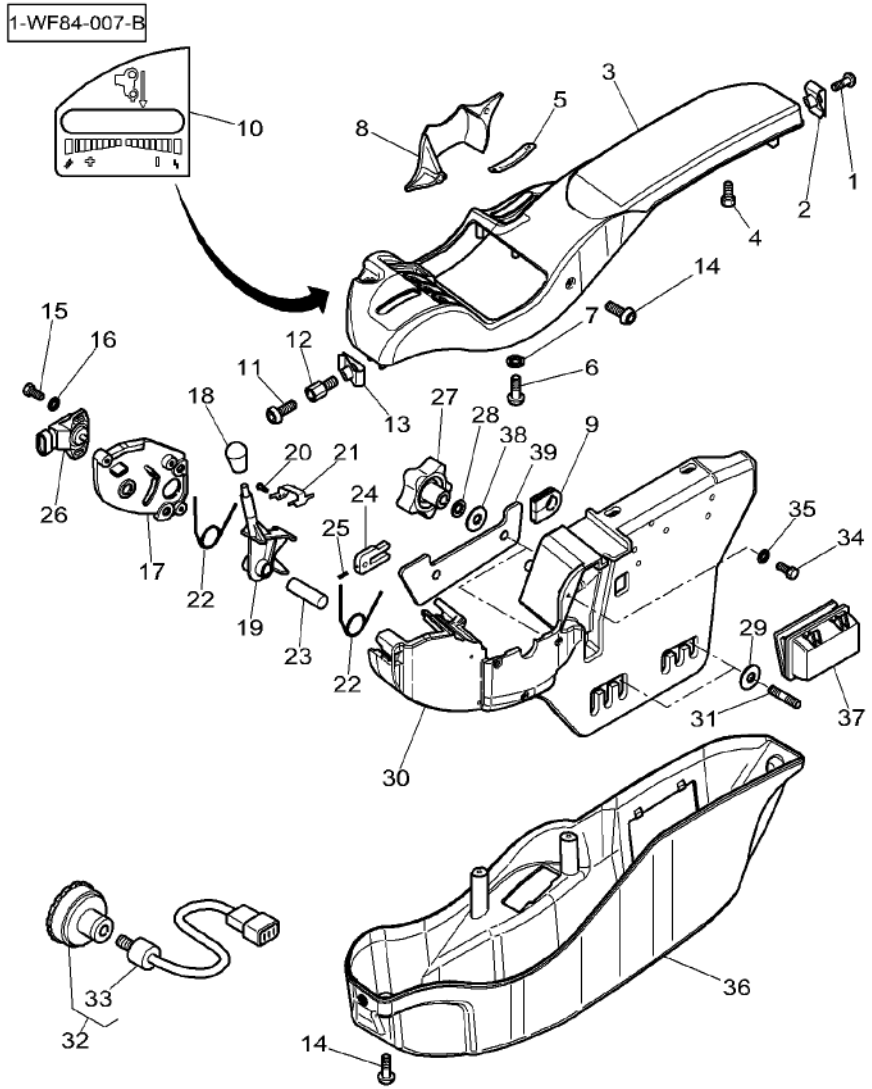

1	**3010506X1**	M5 X 16	**1** SCREW	VIS VITE	SCHRAUBE TORNILLO
2	3715143M1		**1** NUT	ECROU DADO	MUTTER TUERCA
3	4277370M1		**1** ENVELOPE	ENVELOPPE BUSTA	BEUTEL SOBRE
4	339123X1	M8 X 20	**2** HEX. SOCK. SCREW	VIS TETE HEX VITE PARKER	ZYLINDERSCHRAUBE TORN.CAB.HUECA
5	4280256M1		**1** DECAL	DECALCOMANIE DECALCOMANIA	AUFKLEBER CALCOMANIA
6	4270255M1	No 5x22	**2** SCREW	VIS VITE	SCHRAUBE TORNILLO
7	3001856X1		**2** WASHER	RONDELLE RONDELLA	UNTERLEGSCHEIBE ARANDELA
8	3784381M1		**1** MUFF	CACHE MANICOTTO DEVIAN	FLANSCHMUFFE MANGUITO ACOPLAM
9	4271408M2		**1** GROMMET	PASSE FIL ANELLO PASSACAVO	GUMMITUELLE PASACABLE
10	4280254M1		**1** DECAL	DECALCOMANIE DECALCOMANIA	AUFKLEBER CALCOMANIA
11	3011175X1	M5 X 8	**1** SCREW	VIS VITE	SCHRAUBE TORNILLO
12	3786164M1		**1** SPACER	ENTRETOISE DISTANZIALE	ABSTANDSTUECK DISCO ESPACIADOR
13	3715143M1		**1** NUT	ECROU DADO	MUTTER TUERCA
14	4271132M1	3.5 x 14	**X** SCREW	VIS VITE	SCHRAUBE TORNILLO
15	3010351X1	M4 X 12	**2** SCREW	VIS VITE	SCHRAUBE TORNILLO
16	339102X1		**2** WASHER	RONDELLE RONDELLA	UNTERLEGSCHEIBE ARANDELA
17	4279927M1		**1** PLATE	PLAQUE PIASTRA	PLATTE PLATO
18	3787495M1		**1** KNOB	POMMEAU POMELO	KNOPF POMO
19	4279874M1		**1** SUPPORT	SUPPORT SUPPORTO	LAGERUNG DISPOS.DE SOSTEN
20	3787143M1		**2** SCREW	VIS VITE	SCHRAUBE TORNILLO
21	4273509M2		**1** PLATE	PLAQUE PIASTRA	PLATTE PLATO
22	3788452M1		**2** SPRING	RESSORT MOLLA	FEDER RESORTE
23	4280199M1		**1** CLEVIS PIN	AXE PERNO D'ATTACCO	SPLINTBOLZEN BULON CILINDRICO
24	4279929M1		**1** FORK	FOURCHETTE FORCA	GABEL HORQUILLA
25	1442958X1	∅ 6 x 20	**1** SPLIT PIN	GOUPILLE FENDUE COPIGLIA	SPALTBOLZEN PASADOR HENDIDO
26	***4274087M1***		**1** POTENTIOMETER	POTENTIOMETRE POTENZIOMETRO	POTENTIOMETER REGULADOR ELECT.

Control Armrest
Accoudoir De Commande
Schaltung Armlehne
Bracciolo Di Comando
Reposa Brazos De Control

25-80

Fingertip
Fingertip
Fingertip
Fingertip
Fingertip

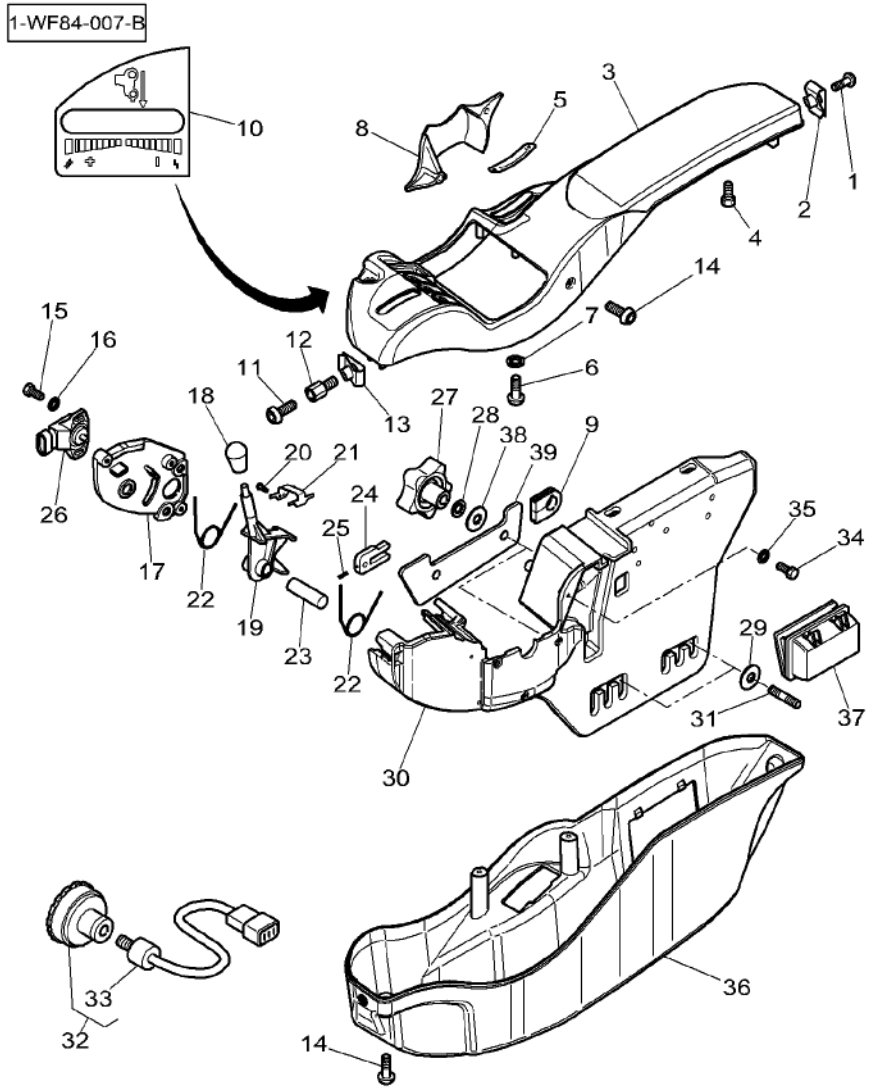

27	3786216M1		2	BUTTON	BOUTON BOTTONE	KNOPFTASTE BOTON
28	3778519M1	∅ 10–27 x 1.8	2	WASHER	RONDELLE RONDELLA	UNTERLEGSCHEIBE ARANDELA
29*	1440264X1	∅ 10.5 x 4	2	WASHER METRIC	RONDELLE METR. RONDELLA METRICO	SCHEIBE METRISCH ARANDELA METRICO
30	4279877M1		1	SUPPORT	SUPPORT SUPPORTO	LAGERUNG DISPOS.DE SOSTEN
31	3008483X1	M10 X 35	2	STUD	GOUJON PRIGIONIERO	STEHBOLZEN CHAVETA ROSCADO
32	4278663M2		1	POTENTIOMETER	POTENTIOMETRE POTENZIOMETRO	POTENTIOMETER REGULADOR ELECT.
33	3907530M1	32	1	POTENTIOMETER	POTENTIOMETRE POTENZIOMETRO	POTENTIOMETER REGULADOR ELECT.
34	3010351X1	M4 X 12	2	SCREW	VIS VITE	SCHRAUBE TORNILLO
35	339102X1		2	WASHER	RONDELLE RONDELLA	UNTERLEGSCHEIBE ARANDELA
36*	4279786M92		1	CLADDING	HABILLAGE CABINE RIVESTIMENTO CAB	VERKLEIDUNG CHAQUETA
37	3781512M1		1	ASHTRAY	CENDRIER PORTACENERE	ASCHENBECHER CENICERO
38*	1440264X1	➡| N355010	2	WASHER METRIC	RONDELLE METR. RONDELLA METRICO	SCHEIBE METRISCH ARANDELA METRICO
39*	4281343M1	➡ N355011	1	REINFORCEMENT	RENFORT RINFORZO	VERSTAERKUNG REFUERZO

Control Armrest
Accoudoir De Commande
Schaltung Armlehne
Bracciolo Di Comando
Reposa Brazos De Control

25-85

1-WF84-008-A

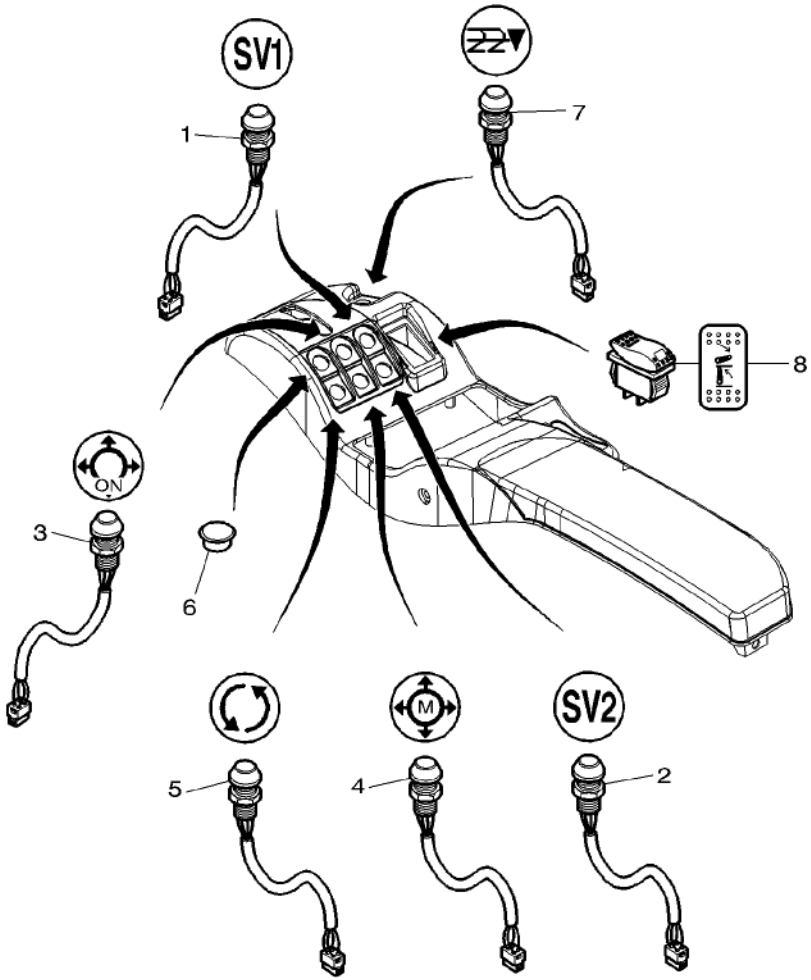

1	3787494M1	SV1	1	SWITCH,INDIRECT	CONTACTEUR INTERRUTTORE IND	KONTAKTSCHALTER CONTACTOR
2	3789802M1	SV2	1	SWITCH,INDIRECT	CONTACTEUR INTERRUTTORE IND	KONTAKTSCHALTER CONTACTOR
3	4271760M1		1	SWITCH,INDIRECT	CONTACTEUR INTERRUTTORE IND	KONTAKTSCHALTER CONTACTOR
4	4271759M1		1	SWITCH,INDIRECT	CONTACTEUR INTERRUTTORE IND	KONTAKTSCHALTER CONTACTOR
5	3789331M1		1	SWITCH	INTERRUPTEUR INTERRUTTORE	SCHALTER INTERRUPTOR
6	3784237M1		1	PLUG	BOUCHON TAPPO	VERSCHL.STOPFEN TAPON
7	***4270756M2***		1	SWITCH,INDIRECT	CONTACTEUR INTERRUTTORE IND	KONTAKTSCHALTER CONTACTOR
8	***4270970M3***		1	SWITCH,INDIRECT	CONTACTEUR INTERRUTTORE IND	KONTAKTSCHALTER CONTACTOR

Module Fingertip For Distributor With Electrodynamique	**Control**
Module Fingertip Pour Distrib. A Commande Electro –	**Hydraulique**
Model Fingertip Fur Verteiler Mit Elektrodynamischer	**Antrieb**
Modulo Fingertip Per Distributore A Comando Eletttro–	**Idraulico**
Modulo Fingertip Para Distribuidor A Mando Electro–	**Hydraulico**

25-90

1-WP17-001-A

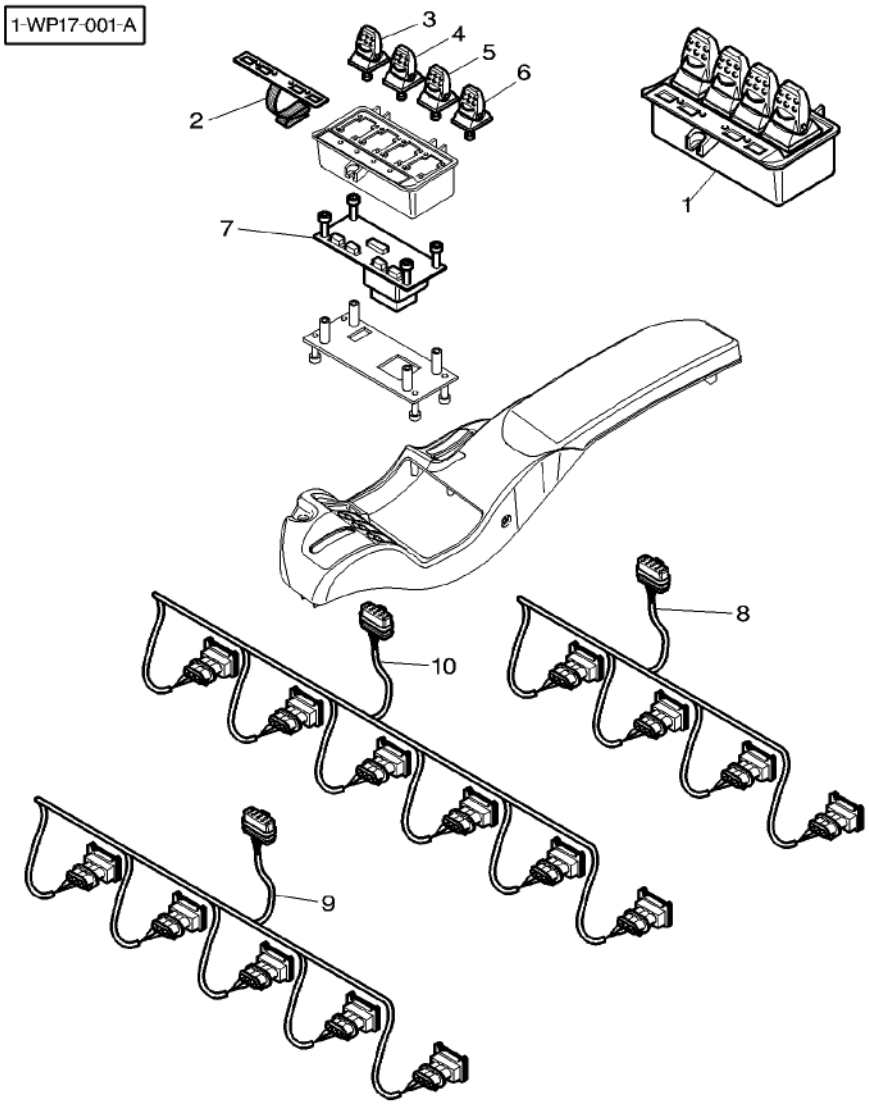

1	4277365M91		1	MODULE	MODULE MODULO	MODUL MODULO
2*		1 [D]	1	PRINTED CIRCUIT	CIRCUIT IMPRIME CIRCUITO STAMP.	GEDRUCKTESCHALTG CIRCUITO IMPRESO
3*		1 [D]	1	CONTROL KNOB	BOUTON COMMANDE CONTROL KNOB	STEUERKOPF CONTROL KNOB
4*		1 [D]	1	CONTROL KNOB	BOUTON COMMANDE CONTROL KNOB	STEUERKOPF CONTROL KNOB
5*		1 [D]	1	CONTROL KNOB	BOUTON COMMANDE CONTROL KNOB	STEUERKOPF CONTROL KNOB
6*		1 [D]	1	CONTROL KNOB	BOUTON COMMANDE CONTROL KNOB	STEUERKOPF CONTROL KNOB
7*		1 [D]	1	PRINTED CIRCUIT	CIRCUIT IMPRIME CIRCUITO STAMP.	GEDRUCKTESCHALTG CIRCUITO IMPRESO
8	4271167M2	[A]	1	HARNESS	FAISCEAU FASCIOCAVI	KABELBAUM MAZO CABLES
9	4277733M91	[B]	1	HARNESS	FAISCEAU FASCIOCAVI	KABELBAUM MAZO CABLES
10	4277732M91	[C]	1	HARNESS	FAISCEAU FASCIOCAVI	KABELBAUM MAZO CABLES

[A] 4 DISTRIBUTORS WITH ELECTRIC CONTROL
4 DISTRIBUTEURS AVEC COMMANDE ELECTRIQUE
4 VERTEILERS MIT ELEKTRISCHE SCHALTUNG
4 DISTRIBUTORES CON COMANDO ELECTRICO
4 DISTRIBUIDORS CON MANDO ELECTRICO

[B] 5 DISTRIBUTORS WITH ELECTRIC CONTROL
5 DISTRIBUTEURS AVEC COMMANDE ELECTRIQUE
5 VERTEILERS MIT ELEKTRISCHE SCHALTUNG
5 DISTRIBUTORES CON COMANDO ELECTRICO
5 DISTRIBUIDORS CON MANDO ELECTRICO

[C] 6 DISTRIBUTORS WITH ELECTRIC CONTROL
6 DISTRIBUTEURS AVEC COMMANDE ELECTRIQUE
6 VERTEILERS MIT ELEKTRISCHE SCHALTUNG
6 DISTRIBUTORES CON COMANDO ELECTRICO
6 DISTRIBUIDORS CON MANDO ELECTRICO

[D] NOT DEAILLE BY THE SUPPLIER TO ORDER THE UNIT
NON DETAILLE PAR LE FOURNISSEUR COMMANDER L'ENSEMB LE
NICHT DETAILLE DURCH DEN LIEFERANTEN DIE GESAMTHEI T ZU LEITEN
NON DETAILLE DA PARTE DEL FORNITORE COMANDARE L'IN SIEME
NO HAY DETAILLE POR EL PROVEENDOR ENCARGAR EL CONJ UNTO

30

Handbrake
Frein A Main
Handbremse
Freno A Mano
Freno De Mano

30-5

1-WG28-012-C

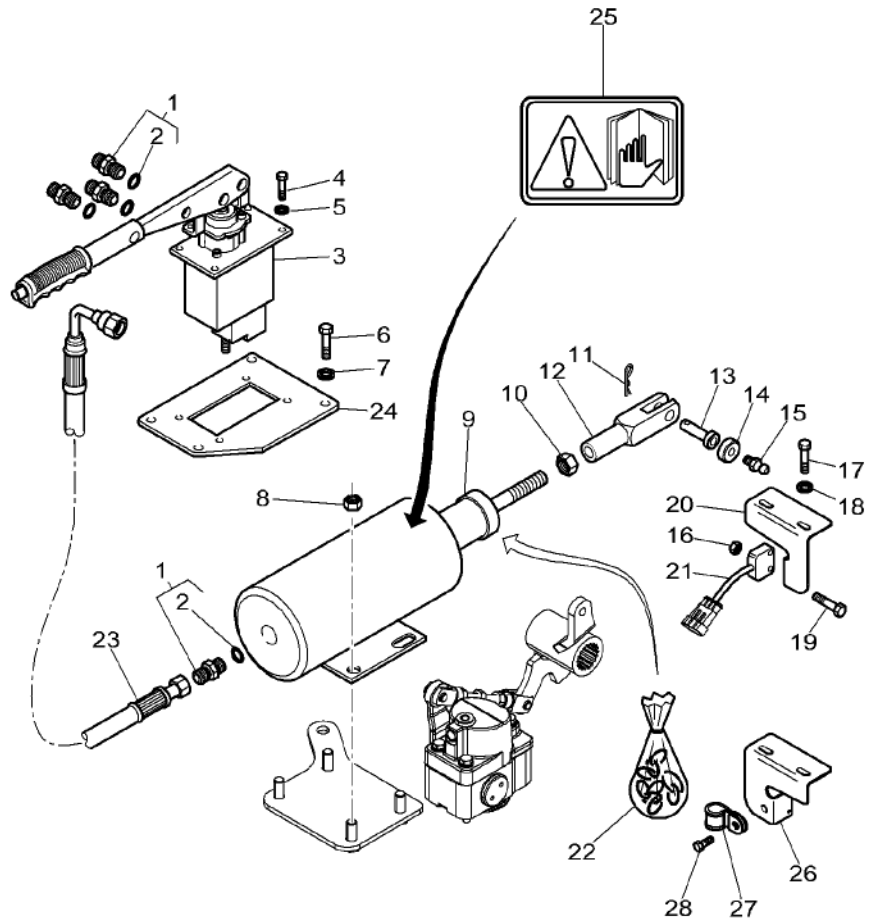

1	3011038X91		4	UNION	RACCORD RACCORDO	VERSCHRAUBUNG RACOR
2	338762X1	1	1	SEAL	JOINT ETANCHEITE ANELLO RACCORD	DICHTRING ARENDELA D'JUNTA
3	4274587M91		1	LEVER	LEVIER LEVA	HEBEL PALANCA
4	339560X1	M6 X 16	4	HEX. SOCK. SCREW	VIS TETE HEX VITE PARKER	ZYLINDERSCHRAUBE TORN.CAB.HUECA
5	3019571X1		4	WASHER	RONDELLE RONDELLA	UNTERLEGSCHEIBE ARANDELA
6	339761X1	M8 X 25	4	HEX. SOCK. SCREW	VIS TETE HEX VITE PARKER	ZYLINDERSCHRAUBE TORN.CAB.HUECA
7	390972X1		4	WASHER	RONDELLE RONDELLA	UNTERLEGSCHEIBE ARANDELA
8	339054X1		4	NUT	ECROU DADO	MUTTER TUERCA
9	3788718M1	[A]	1	RAM	VERIN CILINDRO IDRAUL.	HYDR.ZYLINDER ARIETE
10	1440231X1		1	NUT METRIC	ECROU METRIQUE DADO METRICO	MUTTER METRISCH TUERCA METRICO
11	1442034X1		1	SPLIT PIN	GOUPILLE FENDUE COPIGLIA	SPALTBOLZEN PASADOR HENDIDO
12★	4274903M2		1	CLEVIS	CHAPE GANCIO D'ATTACCO	GABELSTUECK GANCHO SEGURI.
13	916100030010		1	PIN	GOUPILLE PERNO	BOLZEN PASADOR
14	X830120050000		1	MAGNET	AIMANT MAGNETE	MAGNET IMAN
15	3019880X1	M4 X 12	1	SCREW METRIC	VIS METRIQUE VITE METRICA	SCHRAUBE METR TORNILLO METRICO
16	1443615X1		2	NUT METRIC	ECROU METRIQUE DADO METRICO	MUTTER METRISCH TUERCA METRICO
17	3011539X1	M6 X 3-13	2	SCREW	VIS VITE	SCHRAUBE TORNILLO
18	390971X1		2	WASHER	RONDELLE RONDELLA	UNTERLEGSCHEIBE ARANDELA
19	1442172X1	M4 X 16	2	HEX. SOCK. SCREW	VIS TETE HEX VITE PARKER	ZYLINDERSCHRAUBE TORN.CAB.HUECA
20	916100030020	➡| 30-JAN-2005	1	HOLDER	PIECE SUPPORT SUPPORTO DI BASE	HALTER SUJETADOR
21	***H312900150010***		1	SOLENOID SWITCH	RELAIS SOLENOIDE INTERRUTTORE SOL	MAGNETSCHALTER INTERR SOLENOIDE
22	3907421M91		1	KIT,JOINT/GASKET	JEU DE JOINTS KIT GUARN/GIUNTO	DICHTUNGS-SATZ JGO.JUNTAS/EMPAQ
23	4276153M1	◄► 550MM	1	HYDR. HOSE	FLEXIBLE TUBOFLEX IDRAUL	HYDR. SCHLAUCH TUBO HIDRAULICO
24	4276681M1		1	SUPPORT	SUPPORT SUPPORTO	LAGERUNG DISPOS.DE SOSTEN
25	4278652M1		1	DECAL	DECALCOMANIE DECALCOMANIA	AUFKLEBER CALCOMANIA
26★	4280936M1	➡| 31-JAN-2005	1	SUPPORT	SUPPORT SUPPORTO	LAGERUNG DISPOS.DE SOSTEN

Handbrake
Frein A Main
Handbremse
Freno A Mano
Freno De Mano

30-5

1-WG28-012-C

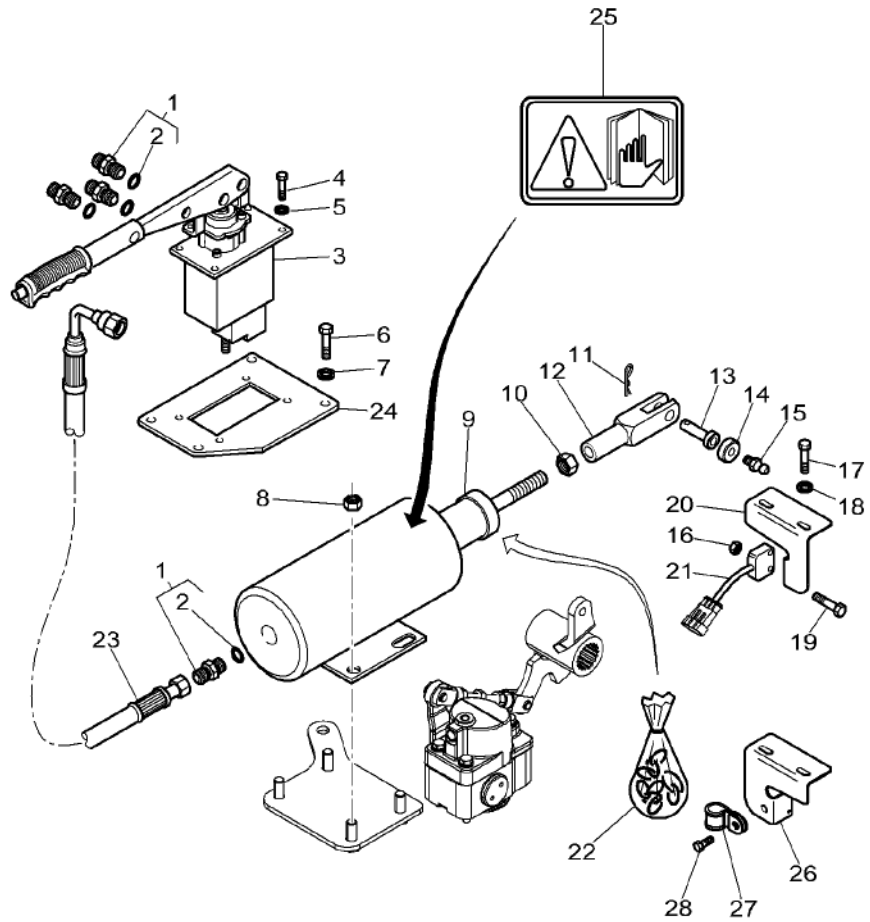

27 *	3581424M1	➡ 31-JAN-2005	1 CLIP	PATTE D'ATTACHE FERMAGLIO	SCHELLE CLIP
28 *	339228X1	M8 X 12 ➡ 31-JAN-2005	1 HEX. SOCK. SCREW	VIS TETE HEX VITE PARKER	ZYLINDERSCHRAUBE TORN.CAB.HUECA

[A] THE APPROPRIATE SAFETY DECALS MUST BE ORDERED AND FITTED TO THIS PART
CETTE PIECE DOIT ETRE IMPERATIVEMENT COMMANDEE AVEC SA DECALCOMANIE DE SECURITE
DIESES TEIL MUSS UNBEDINGT ZUSAMMEN MIT DEM SICHER HEITSHINWEISSCHILD BESTELLT WERDEN
QUESTO PEZZO DEVE ASSOLUTAMENTE ESSERE ORDINATO CON LA RELATIVA DECALCO. SULLA SICUREZZA
ESTA PIEZA SE TIENE QUE PEDIR IMPERATIVAMENTE CON SU CALCOMANIA DE SEGURIDAD

Handbrake
Frein A Main
Handbremse
Freno A Mano
Freno De Mano

30-10

Without Breake Beam
Sans Levier De Commande De Frein
Ohne Bremsansgleichhebel
Senza Leva Per Bilanciere Del Freno
Sin Balancin Del Freino

1-WG28-013-C

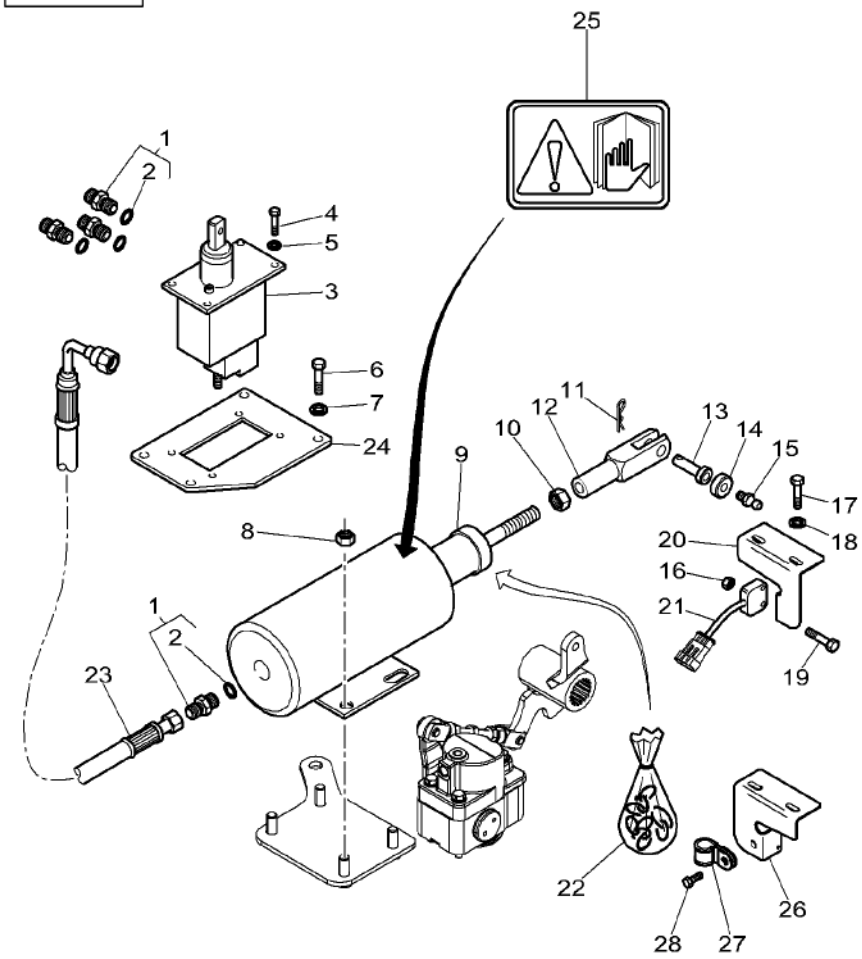

1	3011038X91		4	UNION	RACCORD RACCORDO	VERSCHRAUBUNG RACOR
2	338762X1	1	1	SEAL	JOINT ETANCHEITE ANELLO RACCORD	DICHTRING ARENDELA D'JUNTA
3	4276982M91		1	BLOCK	BLOC TASSELLO	BLOCK BLOQUE
4	339560X1	M6 X 16	4	HEX. SOCK. SCREW	VIS TETE HEX VITE PARKER	ZYLINDERSCHRAUBE TORN.CAB.HUECA
5	3019571X1		4	WASHER	RONDELLE RONDELLA	UNTERLEGSCHEIBE ARANDELA
6	339761X1	M8 X 25	4	HEX. SOCK. SCREW	VIS TETE HEX VITE PARKER	ZYLINDERSCHRAUBE TORN.CAB.HUECA
7	390972X1		4	WASHER	RONDELLE RONDELLA	UNTERLEGSCHEIBE ARANDELA
8	339054X1		4	NUT	ECROU DADO	MUTTER TUERCA
9	3788718M1	[A]	1	RAM	VERIN CILINDRO IDRAUL.	HYDR.ZYLINDER ARIETE
10	1440231X1		1	NUT METRIC	ECROU METRIQUE DADO METRICO	MUTTER METRISCH TUERCA METRICO
11	1442034X1		1	SPLIT PIN	GOUPILLE FENDUE COPIGLIA	SPALTBOLZEN PASADOR HENDIDO
12*	4274903M2		1	CLEVIS	CHAPE GANCIO D'ATTACCO	GABELSTUECK GANCHO SEGURI.
13	916100030010		1	PIN	GOUPILLE PERNO	BOLZEN PASADOR
14	X830120050000		1	MAGNET	AIMANT MAGNETE	MAGNET IMAN
15	3019880X1	M4 X 12	1	SCREW METRIC	VIS METRIQUE VITE METRICA	SCHRAUBE METR TORNILLO METRICO
16	1443615X1		2	NUT METRIC	ECROU METRIQUE DADO METRICO	MUTTER METRISCH TUERCA METRICO
17	3011539X1	M6 X 3-13	2	SCREW	VIS VITE	SCHRAUBE TORNILLO
18	390971X1		2	WASHER	RONDELLE RONDELLA	UNTERLEGSCHEIBE ARANDELA
19	1442172X1	M4 X 16	2	HEX. SOCK. SCREW	VIS TETE HEX VITE PARKER	ZYLINDERSCHRAUBE TORN.CAB.HUECA
20	916100030020	➡| 30-AVR-2005	1	HOLDER	PIECE SUPPORT SUPPORTO DI BASE	HALTER SUJETADOR
21	***H312900150010***		1	SOLENOID SWITCH	RELAIS SOLENOIDE INTERRUTTORE SOL	MAGNETSCHALTER INTERR SOLENOIDE
22	3907421M91		1	KIT,JOINT/GASKET	JEU DE JOINTS KIT GUARN/GIUNTO	DICHTUNGS-SATZ JGO.JUNTAS/EMPAQ
23	4276153M1	◄► 550MM	1	HYDR. HOSE	FLEXIBLE TUBOFLEX IDRAUL	HYDR. SCHLAUCH TUBO HIDRAULICO
24	4276681M1		1	SUPPORT	SUPPORT SUPPORTO	LAGERUNG DISPOS.DE SOSTEN
25	4278652M1		1	DECAL	DECALCOMANIE DECALCOMANIA	AUFKLEBER CALCOMANIA
26*	4280936M1	➡| 31-JAN-2005	1	SUPPORT	SUPPORT SUPPORTO	LAGERUNG DISPOS.DE SOSTEN

Handbrake Frein A Main Handbremse Freno A Mano Freno De Mano	30-10	Without Breake Beam Sans Levier De Commande De Frein Ohne Bremsansgleichhebel Senza Leva Per Bilanciere Del Freno Sin Balancin Del Freino

1-WG28-013-C

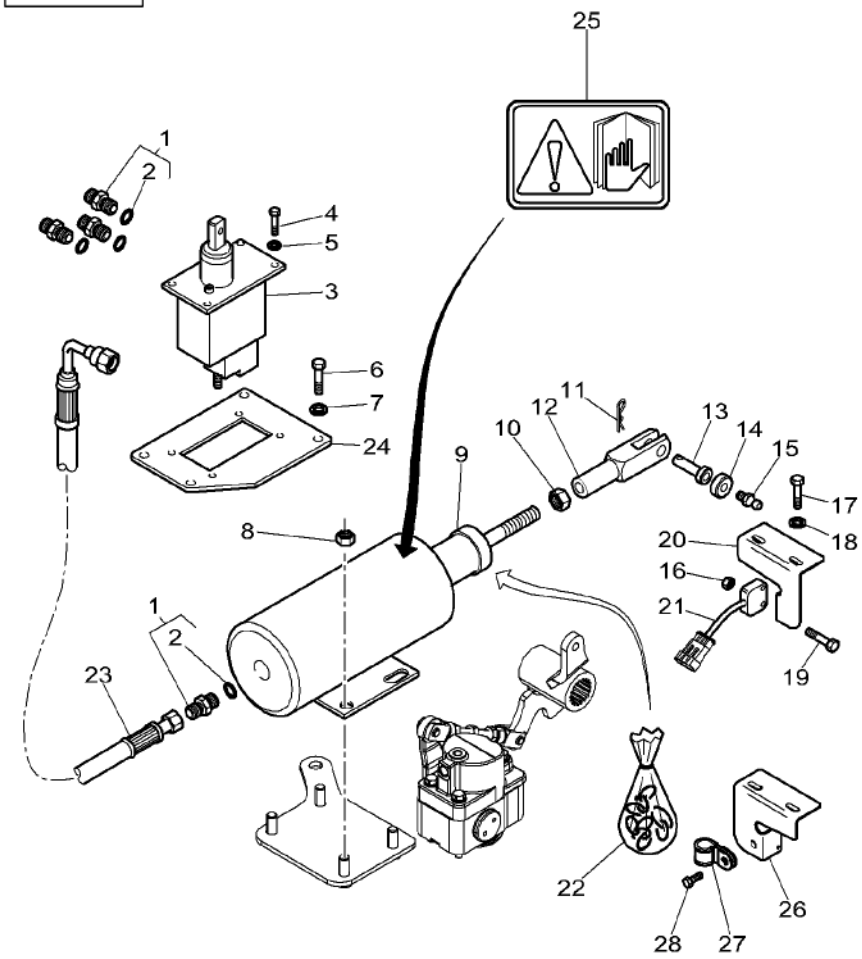

27*	3581424M1	➡ 31-JAN-2005	1 CLIP	PATTE D'ATTACHE FERMAGLIO	SCHELLE CLIP
28*	339228X1	M8 X 12 ➡ 31-JAN-2005	1 HEX. SOCK. SCREW	VIS TETE HEX VITE PARKER	ZYLINDERSCHRAUBE TORN.CAB.HUECA

[A] THE APPROPRIATE SAFETY DECALS MUST BE ORDERED AND FITTED TO THIS PART
CETTE PIECE DOIT ETRE IMPERATIVEMENT COMMANDEE AVEC SA DECALCOMANIE DE SECURITE
DIESES TEIL MUSS UNBEDINGT ZUSAMMEN MIT DEM SICHER HEITSHINWEISSCHILD BESTELLT WERDEN
QUESTO PEZZO DEVE ASSOLUTAMENTE ESSERE ORDINATO CON LA RELATIVA DECALCO. SULLA SICUREZZA
ESTA PIEZA SE TIENE QUE PEDIR IMPERATIVAMENTE CON SU CALCOMANIA DE SEGURIDAD

Handbrake Frein A Main Handbremse Freno A Mano Freno De Mano	30-15	Tie Rod Tringlerie Zugstange Tirante Brazo De Enlace

1-WG28-011-A

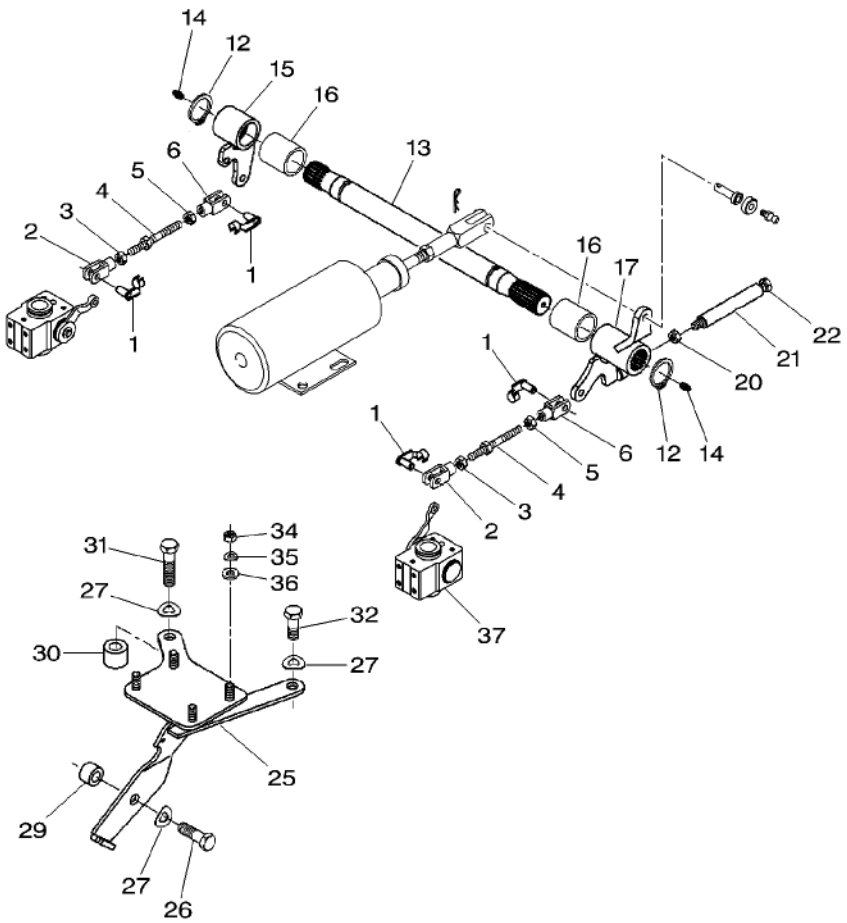

1	X407202001000		4	PIN	GOUPILLE PERNO	BOLZEN PASADOR
2	X410124605000		2	FORK HEAD	TETE DE FOURCHE TESTA FORCELLA	GABELKOPF CABEZA HORQUILLA
3	X428202839000		2	NUT	ECROU DADO	MUTTER TUERCA
4	H926150030020		2	THREADED PART	PIECE FILETEE PARTE FILETTATO	GEWINDESTUECK VARILLA ROSCADO
5	X428202739000	M10	2	NUT	ECROU DADO	MUTTER TUERCA
6	X410125801000		2	FORK HEAD	TETE DE FOURCHE TESTA FORCELLA	GABELKOPF CABEZA HORQUILLA
12	X530004246000	∅ 34 X 1,5	2	CIRCLIP	CIRCLIP ANNELLO ELASTICO	SEEGERING GRAPA CIRCULAR
13	822100030040	[A]	1	SHAFT	ARBRE ALBERO	WELLE ARBOL
14	X662516200000		2	GREASE NIPPLE	GRAISSEUR DROIT INGRASSAT.	FETT-NIPPEL ENGRASADOR
15	H822100030030		1	LEVER	LEVIER LEVA	HEBEL PALANCA
16	155302010110		2	BUSH	BAGUE BOCCOLA	BUCHSE CASQUILLO
17	H822100030020		1	LEVER	LEVIER LEVA	HEBEL PALANCA
20	X434103240000	M12	1	NUT	ECROU DADO	MUTTER TUERCA
21	X591202101000	◄► 0,10 M	1	HOSE	DURITE TUBO FLESSIBILE	SCHLAUCH FLEXIBLE
22	X487537500000	M12 X 150	1	HEX. SOCK. SCREW	VIS TETE HEX VITE PARKER	ZYLINDERSCHRAUBE TORN.CAB.HUECA
25	H926150030060		1	BEARING PLATE	PLAQUE ROULEMENT PIASTRA CUSCINET	LAGERPLATTE PLACA DE APOYO
26	X487545441000	M16 X 50	1	HEX. SOCK. SCREW	VIS TETE HEX VITE PARKER	ZYLINDERSCHRAUBE TORN.CAB.HUECA
27	X521406647000		3	SPRING PLATE	PLAQUE RESSORT RONDELLA ELASTIC	FEDERSCHEIBE PLETINA MUELLE
29	138715140010		1	DISTANCE PIECE	PIECE ENTRETOISE DISTANZIATORE	DISTANZSTUECK ESPACIADOR
30	205800580030		1	BUSH	BAGUE BOCCOLA	BUCHSE CASQUILLO
31	X487545902000	M16 X 65	1	HEX. SOCK. SCREW	VIS TETE HEX VITE PARKER	ZYLINDERSCHRAUBE TORN.CAB.HUECA
32	X487545241000	M6 X 40	1	HEX. SOCK. SCREW	VIS TETE HEX VITE PARKER	ZYLINDERSCHRAUBE TORN.CAB.HUECA
34	X428203239000	M12	4	NUT	ECROU DADO	MUTTER TUERCA
35	X521405047000		4	SPRING PLATE	PLAQUE RESSORT RONDELLA ELASTIC	FEDERSCHEIBE PLETINA MUELLE
36	X453608408000		2	DISC	DISQUE DISCO	SCHEIBE DISCO
37		👁 70-50 No 36	1	WHEEL CYLINDER	CYLINDRE ROUE CILINDRO RUOTA	RADBREMSZYLINDER CILINDRO RUEDA

Handbrake Frein A Main Handbremse Freno A Mano Freno De Mano	30-15	Tie Rod Tringlerie Zugstange Tirante Brazo De Enlace

1-WG28-011-A

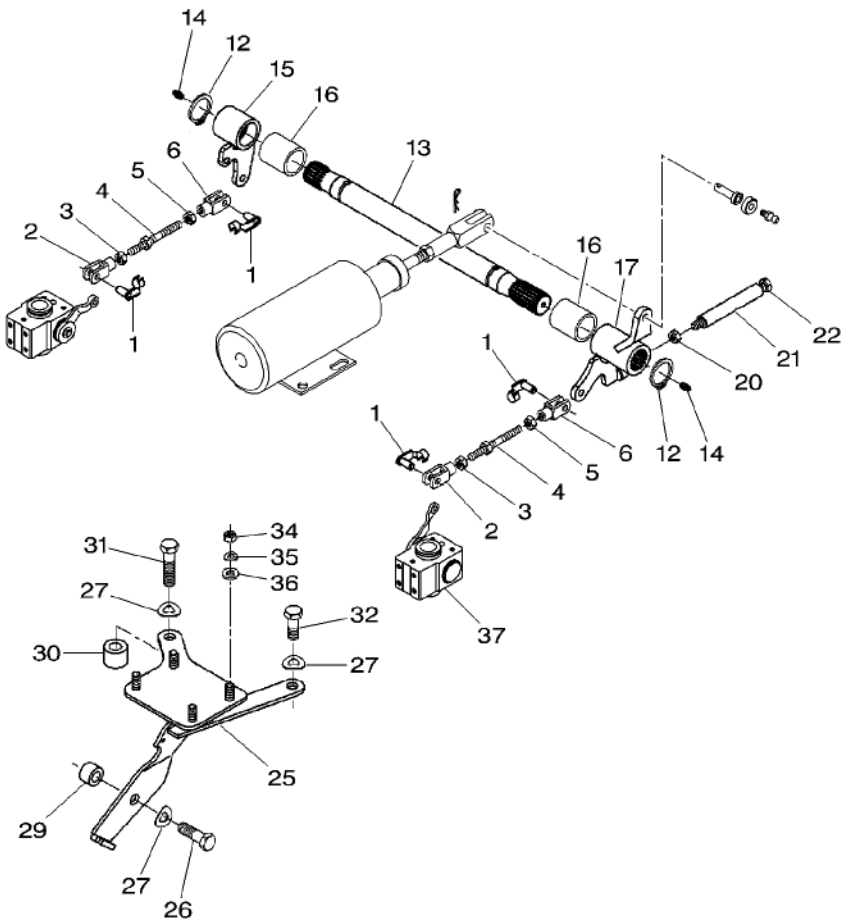

[A] ORDER + X662 516 200 000 (X2)
COMMANDER EN PLUS X662 516 200 000 (X2)
BESTELLE + X662 516 200 000 (X2)
ORDINARE + X662 516 200 000 (X2)
PEDIR + X662 516 200 000 (X2)

Wheel Shaft Housing
Carter D'Arbres De Roues
Hinterachsgehaeuse
Carcassa Di Crocera Ruota
Carter De Husillo De Rueda

30-20

1-WE70-005-A

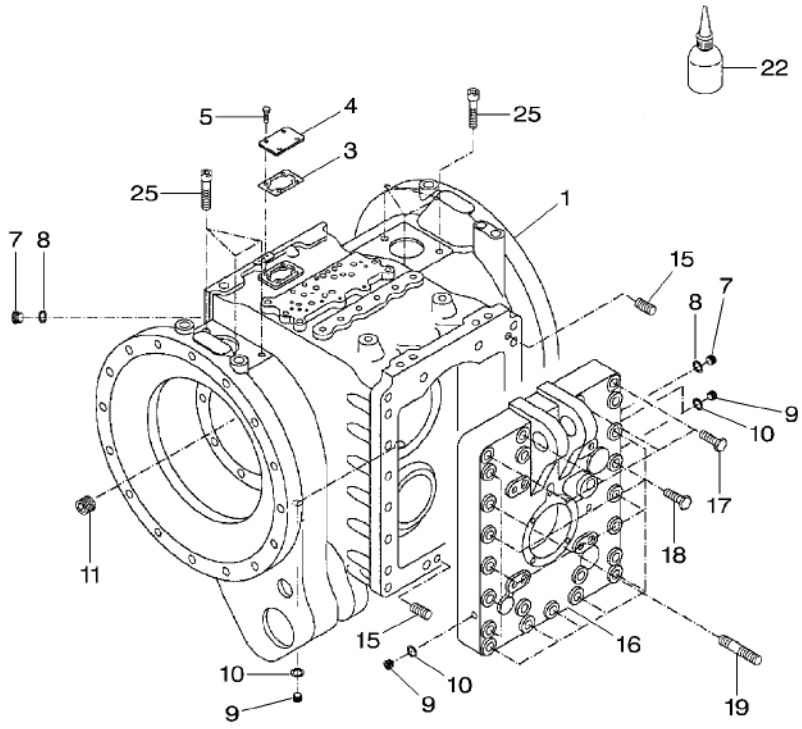

1	926150050013		1	AXLE HOUSING	TROMPETTE CARCASSA ASSALE
3	822100050140		1	GASKET	JOINT GUARNIZIONE
4	822100050130		1	COVER	COUVERCLE COPERCHIO
5	X487526841000	M8 X 16	4	HEX. SOCK. SCREW	VIS TETE HEX VITE PARKER
7	X483800401000	M12 X 1,5	2	SCREW	VIS VITE
8	X540003678000		2	RING	ANNEAU ANELLO
9	X483800000000	M10 X 1	5	SCREW	VIS VITE
10	X540003078000		5	RING	ANNEAU ANELLO
11	X483500800000	M14 X 1,5	2	SCREW	VIS VITE
15	X505578900000	M6 X 32	2	DOWEL	PLOT SPINA
16	926150050020	[A]	1	COVER	COUVERCLE COPERCHIO
17	X487551400000	M18 X 90	4	HEX. SOCK. SCREW	VIS TETE HEX VITE PARKER
18	X486551706000	M18 X 110	9	HEX. SOCK. SCREW	VIS TETE HEX VITE PARKER
19	X482953200000	M18 X 130	8	STUD	GOUJON PRIGIONIERO
22	X903050074000		X	LOCTITE	LOCTITE LOCTITE
25	X485013605000		6	HEX. SOCK. SCREW	VIS TETE HEX VITE PARKER

TROMPETTE	ACHSGEHAEUSE
CARCASSA ASSALE	CAJA DEL EJE
JOINT	DICHTSCHEIBE
GUARNIZIONE	EMPAQUETADURA.
COUVERCLE	DECKEL
COPERCHIO	CUBIERTA
VIS TETE HEX	ZYLINDERSCHRAUBE
VITE PARKER	TORN.CAB.HUECA
VIS	SCHRAUBE
VITE	TORNILLO
ANNEAU	RING
ANELLO	ARO
VIS	SCHRAUBE
VITE	TORNILLO
ANNEAU	RING
ANELLO	ARO
VIS	SCHRAUBE
VITE	TORNILLO
PLOT	ZYLINDERSTIFT
SPINA	CENTRAJE
COUVERCLE	DECKEL
COPERCHIO	CUBIERTA
VIS TETE HEX	ZYLINDERSCHRAUBE
VITE PARKER	TORN.CAB.HUECA
VIS TETE HEX	ZYLINDERSCHRAUBE
VITE PARKER	TORN.CAB.HUECA
GOUJON	STEHBOLZEN
PRIGIONIERO	CHAVETA ROSCADO
LOCTITE	LOCTITE
LOCTITE	LOCTITE
VIS TETE HEX	ZYLINDERSCHRAUBE
VITE PARKER	TORN.CAB.HUECA

[A] ORDER + X505 578 900 (X2)
COMMANDER EN PLUS X505 578 900 (X2)
BESTELLE + X505 578 900 (X2)
ORDINARE + X505 578 900 (X2)
PEDIR + X505 578 900 (X2)

Oil Level Indicator
Controle De Niveau D'Huile
Oelstandskontrolle
Control Livello Di Olio
Indicador Nivel De Aceite

30-25

1-WE71-002-A

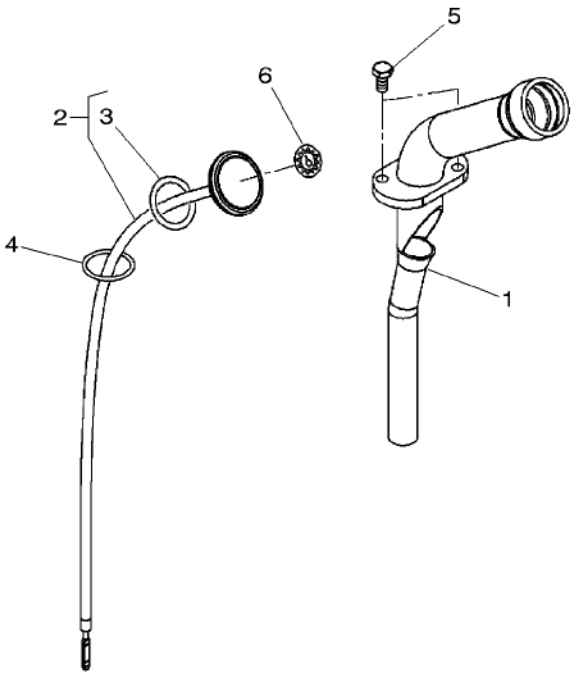

1	H926150480010		1	FILLER	REMPLISSEUR BOCCHETTONE	EINFUELLSTUTZEN RELLENADOR
2	H916100480020		1	OIL DIPSTICK	JAUGE D HUILE STECCA OLIO	OELMESSTAB VARILLA NIVEL A
3	F822100480010	2	1	JOINT.	JOINT PLAT GIUNTO	DICHTUNG JUNTA
4	X548895001000	34 X 3	1	O RING	JOINT TORIQUE ANELLO TENUTA	O-RING ANILLO FORMA 'O'
5	X487527741000	M8 X 20	2	HEX. SOCK. SCREW	VIS TETE HEX VITE PARKER	ZYLINDERSCHRAUBE TORN.CAB.HUECA
6	205100480010		1	DECAL	DECALCOMANIE DECALCOMANIA	AUFKLEBER CALCOMANIA

Differential
Differentiel
Ausgleichgetriebe
Differenziale
Differencial

30-30

1-WG60-002-A

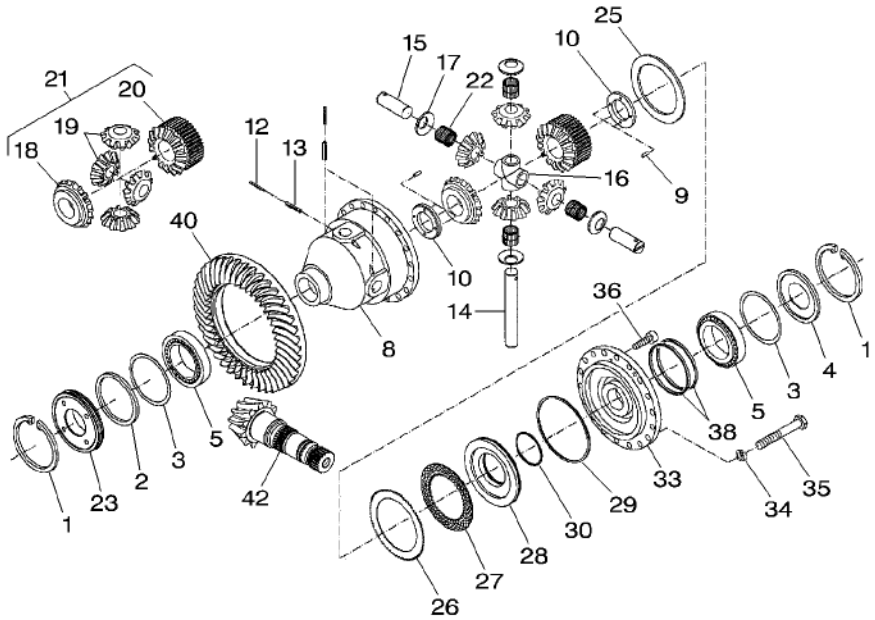

1	X530109946000		2	CIRCLIP	CIRCLIP ANNELLO ELASTICO	SEEGERING GRAPA CIRCULAR
2				NOT USED	NON UTILISE INUSATO	NICHT VERWENDET NO SE USA
3	X534683000000	⧗ 0,15 MM	X	SHIM	CALE REGLAGE SPESSORE	EINSTELLBLECH CALCE
3	X534683100000	⧗ 0,20 MM	X	SHIM	CALE REGLAGE SPESSORE	EINSTELLBLECH CALCE
3	X534683300000	⧗ 0,30 MM	X	SHIM	CALE REGLAGE SPESSORE	EINSTELLBLECH CALCE
3	X534683700000	⧗ 0,50 MM	X	SHIM	CALE REGLAGE SPESSORE	EINSTELLBLECH CALCE
4	822100010060		1	DISC	DISQUE DISCO	SCHEIBE DISCO
5	G822100150020		2	CUP AND CONE	CUVETTE ET CONE COPPA E CONO	KEGELROLLENLAGER PISTA Y CONO
8	926150010030		1	DIFF HOUSING	CARTER DIFF CARCASSA DIFFER.	DIFF.GEHAEUSE CARCASA DIFERENC
9	X506239300000	∅ 6 X 20	4	DOWEL	PLOT SPINA	ZYLINDERSTIFT CENTRAJE
10	822100010210		2	RING	ANNEAU ANELLO	RING ARO
12	X500622300000	∅ 5 X 50	3	ROLL PIN	GOUPILLE ROULEE SPINA ELASTICA	SPANNHUELSE PASADOR ELASTICO
13	X500629146000	∅ 8 X 50	3	ROLL PIN	GOUPILLE ROULEE SPINA ELASTICA	SPANNHUELSE PASADOR ELASTICO
14	926150010050		1	CLEVIS PIN	AXE PERNO D'ATTACCO	SPLINTBOLZEN BULON CILINDRICO
15	926150010060		2	CLEVIS PIN	AXE PERNO D'ATTACCO	SPLINTBOLZEN BULON CILINDRICO
16	926150010070		1	SUPPORT	SUPPORT SUPPORTO	LAGERUNG DISPOS.DE SOSTEN
17	926150010080		4	THRUST WASHER	RONDELLE BUTEE RONDELLA REGGISP	ANLAUFSCHEIBE ARANDELA ACELER
18		21 REF. 21	1	PLANET	PLANETAIRE PLANETARIO	PLANETENRAD PLANETARIO
19		21 REF. 21	4	DIFF PINION	SATELLITE PIGNONE DIFFEREN	DIFF.KEGELRAD PINON DIFERENC
20		21 REF. 21	1	PLANET	PLANETAIRE PLANETARIO	PLANETENRAD PLANETARIO
21	G926150010010		1	KIT, BEVEL GEAR	COUPLE CONIQUE KIT COPPIA CONIC	KEGELRADSATZ CORONA Y PINON
22	X622048500000		4	ROLLER CAGE	CAGE A ROULEAUX GABBIA A RULLINI	ROLLENKAEFIG JUALA RODILLO
23	926150010040		1	SPACER	ENTRETOISE DISTANZIALE	ABSTANDSTUECK DISCO ESPACIADOR
25	822100010140		1	RING	ANNEAU ANELLO	RING ARO
26	822100010130		10	EXTERNAL DISC	DISQUE EXTERIEUR DISCO ESTERNO	AUSSENLAMELLE DISCO EXTERIOR
27	822100010120		9	INTERNAL DISC	DISQUE INTERIEUR DISCO INTERNO	INNENLAMELLE DISCO INTERIOR

Differential
Differentiel
Ausgleichgetriebe
Differenziale
Differencial

30-30

1-WG60-002-A

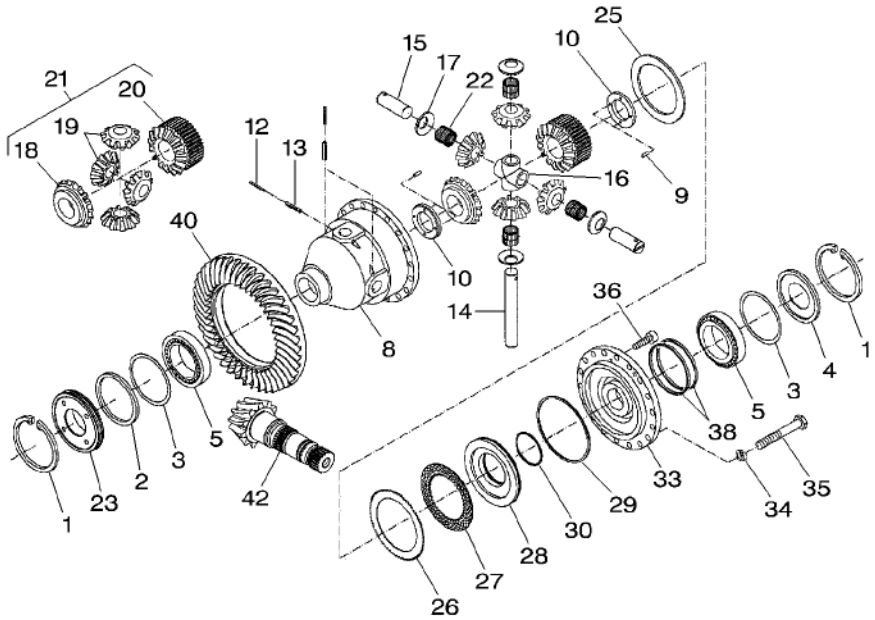

28	822100010160		1	PISTON	PISTON PISTONE	KOLBEN PISTON
29	822100010200		1	SUPPORT COVER	COUVERC. SUPPORT SUPPORT COVER	ABSTUETZDECKEL SUPPORT COVER
30	822100010190		1	SUPPORT COVER	COUVERC. SUPPORT SUPPORT COVER	ABSTUETZDECKEL SUPPORT COVER
33	822100010040		1	FLANGE	FLASQUE FLANGIA	FLANSCH PLETINA
34	345300100110		18	DISC	DISQUE DISCO	SCHEIBE DISCO
35	X486536200000	M8 X 30	18	HEX. SOCK. SCREW	VIS TETE HEX VITE PARKER	ZYLINDERSCHRAUBE TORN.CAB.HUECA
36	X485007605000	M8 X 30	2	HEX. SOCK. SCREW	VIS TETE HEX VITE PARKER	ZYLINDERSCHRAUBE TORN.CAB.HUECA
38	X560718800000	∅ 140 X 5,5	2	PLAIN COMPR.RING	SEGMENT RECTANG. PLAIN COMPR.RING	RECHTECKRING PLAIN COMPR.RING
40		30–40 No 19	1	ANNULAR GEAR	COURONNE CORONA DENTATA	ZAHNKRANZ ENGRANAJE ANULAR
42		30–40 No 18	1	PINION SHAFT	ARBRE DENTE ALBERO PIGNONE	RITZELWELLE EJE PINON

Bevel Drive
Couple Conique
Tellerradsatz
Corona E Pignone
Rueda Conica

30-35

1-WG71-004-A

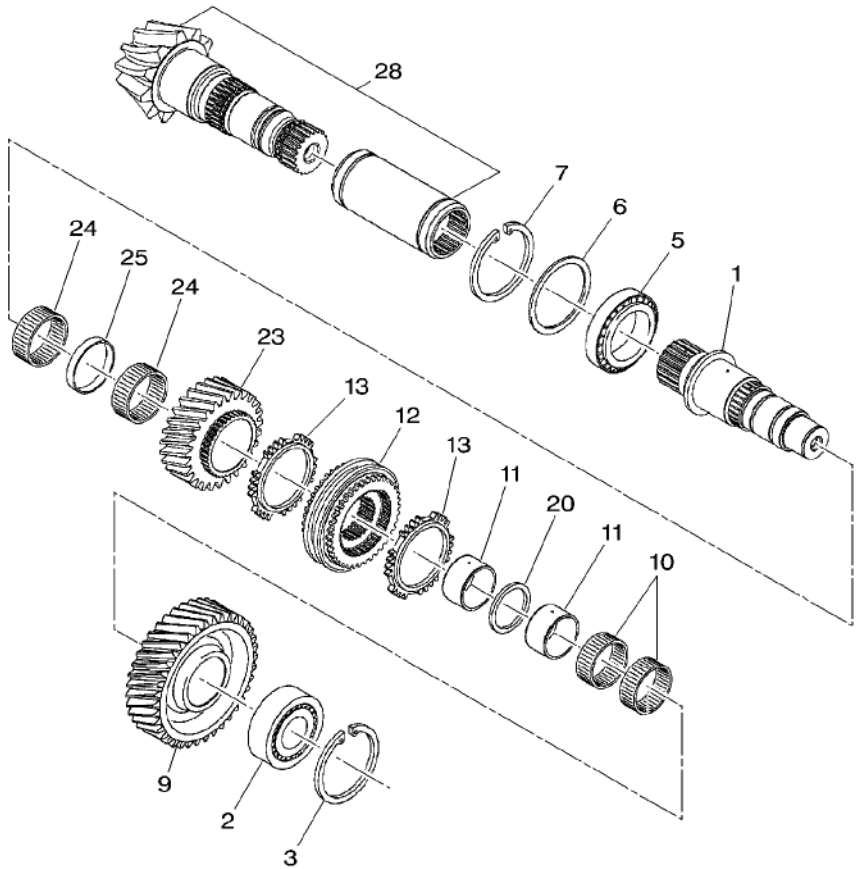

1	[A]	1	SHAFT	ARBRE ALBERO	WELLE ARBOL
2	[A]	1	BALL BEARING	ROULEMENT BILLES CUSCINETTO SFERE	KUGELLAGER COJINETE DE BOLA
3	[A]	1	CIRCLIP	CIRCLIP ANNELLO ELASTICO	SEEGERING GRAPA CIRCULAR
5	[A]	1	BALL BEARING	ROULEMENT BILLES CUSCINETTO SFERE	KUGELLAGER COJINETE DE BOLA
6	[A]	1	KIT, WASHER	JEU RONDELLES KIT RONDELLA	SCHEIBENSATZ JUEGO ARANDELAS
7	[A]	1	CIRCLIP	CIRCLIP ANNELLO ELASTICO	SEEGERING GRAPA CIRCULAR
9	[A] 40	1	PINION	PIGNON PIGNONE	RITZEL PINON
10	[A] 55 X 60 X 30	2	NEEDLE CAGE	CAGE A AIGUILLES PORTAGHI	NADELKAEFIG JUALA DE AGUJA
11	[A]	2	BUSH	BAGUE BOCCOLA	BUCHSE CASQUILLO
12	[A]	1	SYNCHRO UNIT	ENSEMBLE SYNCHRO UNITA DI SINCRON	SYNCHRONEINHEIT SINCRONIZADO
13	[A]	2	BUSH	BAGUE BOCCOLA	BUCHSE CASQUILLO
20	[A]	1	WASHER	RONDELLE RONDELLA	UNTERLEGSCHEIBE ARANDELA
23	[A] 30	1	PINION	PIGNON PIGNONE	RITZEL PINON
24	[A] 60 X 65 X 20	2	NEEDLE CAGE	CAGE A AIGUILLES PORTAGHI	NADELKAEFIG JUALA DE AGUJA
25	[A]	1	INSERT	DOUILLE INSERTO	EINSATZSTUECK INSERCION
28	30-40 No 17	1	KIT, BEVEL GEAR	COUPLE CONIQUE KIT COPPIA CONIC	KEGELRADSATZ CORONA Y PINON

[A] NOT SUPPLIED SEPARATELY
NON FOURNI SEPAREMENT
NICHT MITGELIEFERT BESTELLEN
NON SERVITO SEPARATAMENTE
NO SUMINISTRADOSEPARADAMENTE

Bevel Drive
Couple Conique
Tellerradsatz
Corona E Pignone
Rueda Conica

30-40

1-WG71-003-A

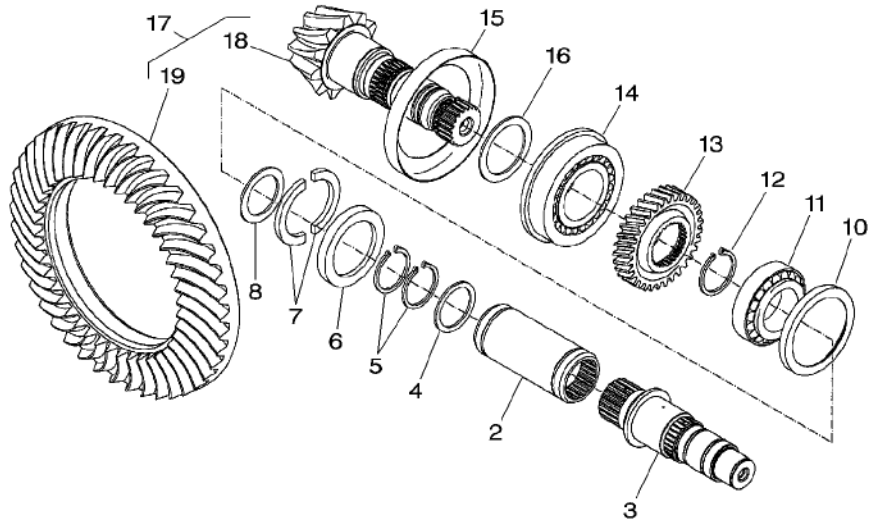

2	916101410010		1	THIMBLE	COSSE BUSSOLA	MUFFE DEDAL
3		30–35 No 1	1	SHAFT	ARBRE ALBERO	WELLE ARBOL
4	X534538900000		1	BACKUP RING	CONTRE BAGUE ANELLO APPOGGIO	STUETZRING ANILLA SOPORTE
5	X530017746000	∅ 55 X 3	2	CIRCLIP	CIRCLIP ANNELLO ELASTICO	SEEGERING GRAPA CIRCULAR
6	916100410030		1	RING	ANNEAU ANELLO	RING ARO
7	916100410040		2	RING	ANNEAU ANELLO	RING ARO
8	G001990200630		1	KIT, WASHER	JEU RONDELLES KIT RONDELLA	SCHEIBENSATZ JUEGO ARANDELAS
10	916100410060		1	SHEET METAL	CARROSSERIE CARROZZERIA	BLECH HOJA METALICA
11	X619072600007		1	CUP AND CONE	CUVETTE ET CONE COPPA E CONO	KEGELROLLENLAGER PISTA Y CONO
12	X530017846000	∅ 58 X 3	1	CIRCLIP	CIRCLIP ANNELLO ELASTICO	SEEGERING GRAPA CIRCULAR
13		60–45 No 3	1	PINION	PIGNON PIGNONE	RITZEL PINON
14	X619057201003	68 X 140 X 20	1	CUP AND CONE	CUVETTE ET CONE COPPA E CONO	KEGELROLLENLAGER PISTA Y CONO
15	926102410030		1	SHEET METAL	CARROSSERIE CARROZZERIA	BLECH HOJA METALICA
16	G001990200640		1	KIT, WASHER	JEU RONDELLES KIT RONDELLA	SCHEIBENSATZ JUEGO ARANDELAS
17		REF. 18 , 19 12 X 43	1	KIT, BEVEL GEAR	COUPLE CONIQUE KIT COPPIA CONIC	KEGELRADSATZ CORONA Y PINON
18	926102410040	17 12	1	PINION SHAFT	ARBRE DENTE ALBERO PIGNONE	RITZELWELLE EJE PINON
19	926102410020	17 43	1	CROWNWHEEL	COURONNE DENTEE CORONA	TELLERRAD CORONA DENTADA

Rear Axle Housings	Inner Final Drive Gear	30-45
Trompettes D Essieu Arriere	Couronne Reduct.Finale Interieure	
Hinterachsgehaeuse	Endantrieb Innen	
Scatole Riduttori	Corona Interna	
Cajas De Eje Trasero	Pinon Interior De Mando Final	

1-WG18-005-A

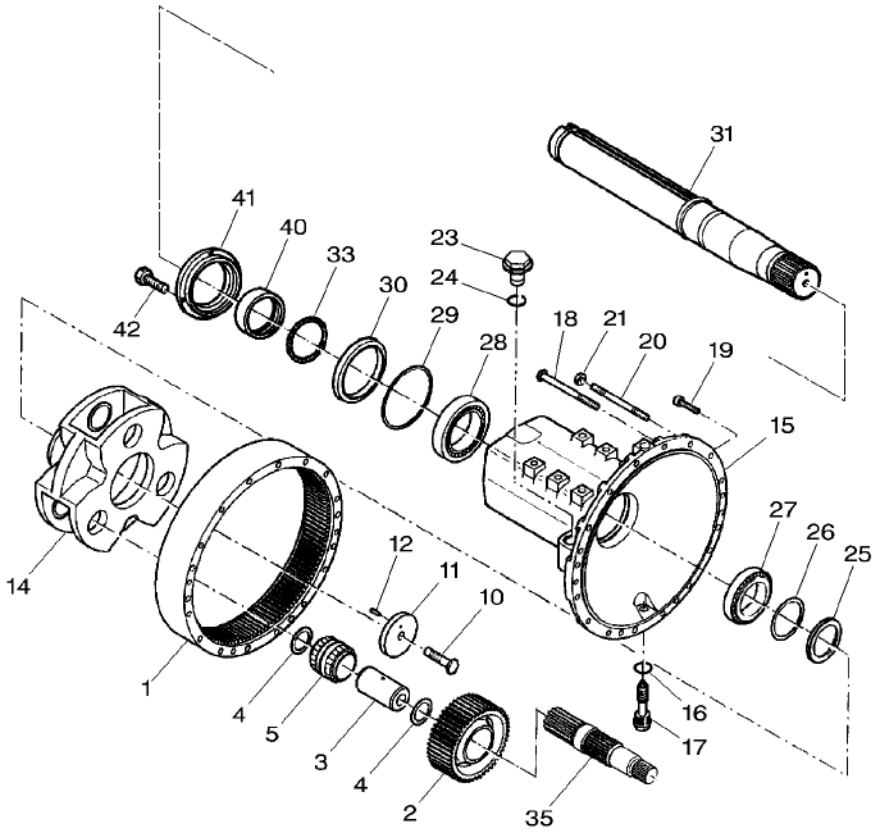

1	926150150032		2	PRESSURE PIPE	CONDUITR PRESS. PRESSURE PIPE	DRUCKLEITUNG PRESSURE PIPE
2	926150150040	[B]	6	SPUR GEAR	ENGRENAGE DROIT INGRANAGGIO DIR.	STIRNRAD RUEDA DE DIENTES
3	926150150061		6	CLEVIS PIN	AXE PERNO D'ATTACCO	SPLINTBOLZEN BULON CILINDRICO
4	X530106546000	∅ 62 X 2	12	CIRCLIP	CIRCLIP ANNELLO ELASTICO	SEEGERING GRAPA CIRCULAR
5	G926150150050		6	ROLLER CAGE	CAGE A ROULEAUX GABBIA A RULLINI	ROLLENKAEFIG JUALA RODILLO
10	822100150120		2	HEX. SOCK. SCREW	VIS TETE HEX VITE PARKER	ZYLINDERSCHRAUBE TORN.CAB.HUECA
11	822100150080		2	PLATE	PLAQUE PIASTRA	PLATTE PLATO
12	X500628246000	∅ 8 X 22	2	ROLL PIN	GOUPILLE ROULEE SPINA ELASTICA	SPANNHUELSE PASADOR ELASTICO
14	926150150021		2	PLANET CARRIER	SUPPORT PLANET PORTA SATELLITE	PLANETENTRAEGER SOPORTE PLANETAR
15	926160150200		2	AXLE HOUSING	TROMPETTE CARCASSA ASSALE	ACHSGEHAEUSE CAJA DEL EJE
16	X540007478000		2	RING	ANNEAU ANELLO	RING ARO
17	H822100150020		2	MAGNET	AIMANT MAGNETE	MAGNET IMAN
18	X486537601000	M12 X 160	40	HEX. SOCK. SCREW	VIS TETE HEX VITE PARKER	ZYLINDERSCHRAUBE TORN.CAB.HUECA
19	X493619205000	M12 X 50	4	HEX. SOCK. SCREW	VIS TETE HEX VITE PARKER	ZYLINDERSCHRAUBE TORN.CAB.HUECA
20	X489138400000	M12 X 165	8	STUD	GOUJON PRIGIONIERO	STEHBOLZEN CHAVETA ROSCADO
21	X428203205000		8	NUT	ECROU DADO	MUTTER TUERCA
23	X484404001000	M30	4	PLUG	BOUCHON TAPPO	VERSCHL.STOPFEN TAPON
24	***X540009478000***		4	RING	ANNEAU ANELLO	RING ARO
25	926101150240		4	RING	ANNEAU ANELLO	RING ARO
26	X534781500000	⧗ 0,50 MM	X	SHIM	CALE REGLAGE SPESSORE	EINSTELLBLECH CALCE
26	X534781600000	⧗ 0,60 MM	X	SHIM	CALE REGLAGE SPESSORE	EINSTELLBLECH CALCE
26	X534781700000	⧗ 0,70 MM	X	SHIM	CALE REGLAGE SPESSORE	EINSTELLBLECH CALCE
27	G926101150040		2	CUP AND CONE	CUVETTE ET CONE COPPA E CONO	KEGELROLLENLAGER PISTA Y CONO
28	G926160150200		2	CUP AND CONE	CUVETTE ET CONE COPPA E CONO	KEGELROLLENLAGER PISTA Y CONO
29	X549030900000	∅ 190,17 X 2,62	2	O RING	JOINT TORIQUE ANELLO TENUTA	O-RING ANILLO FORMA 'O'
30	H822100150040		2	OIL SEAL	BAGUE ETANCHEITE BOCCOLA PARAOLIO	OELDICHTRING BUJE RETENACEITE

Rear Axle Housings Trompettes D Essieu Arriere Hinterachsgehaeuse Scatole Riduttori Cajas De Eje Trasero	Inner Final Drive Gear Couronne Reduct.Finale Interieure Endantrieb Innen Corona Interna Pinon Interior De Mando Final	30-45

1-WG18-005-A

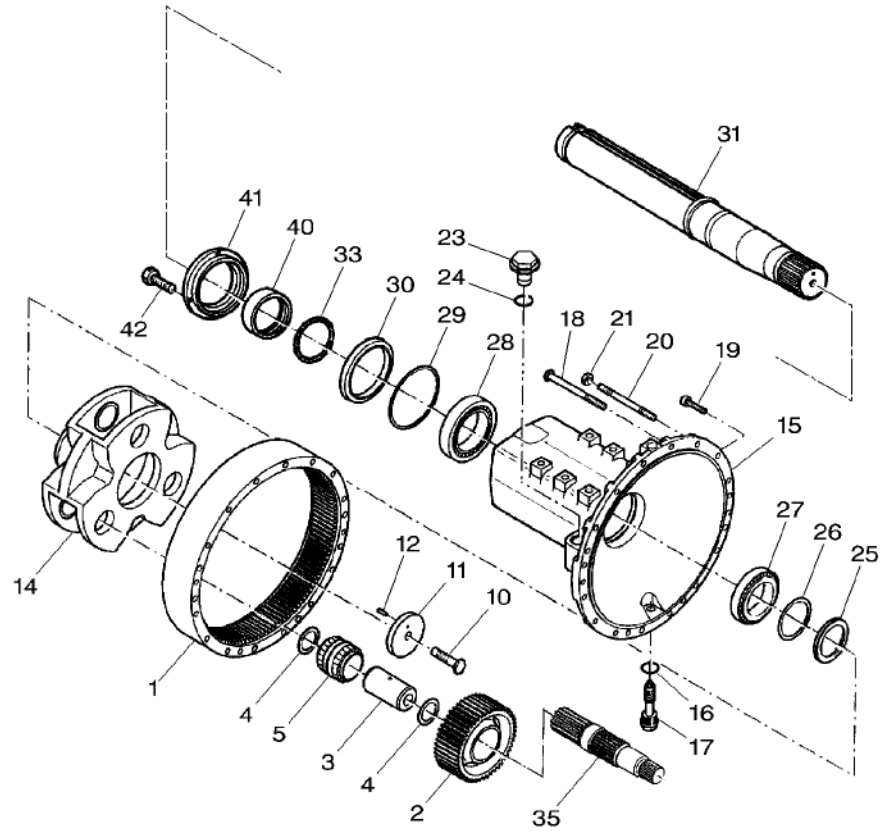

31	926101150070	29"	2 SHAFT	ARBRE ALBERO	WELLE ARBOL
31	926101150060	40"	2 SHAFT	ARBRE ALBERO	WELLE ARBOL
33	X548999066000	∅ 118 X 4	2 O RING	JOINT TORIQUE ANELLO TENUTA	O-RING ANILLO FORMA 'O'
35	H926150150200		2 SHAFT	ARBRE ALBERO	WELLE ARBOL
40	926101150260		2 SPACER	ENTRETOISE DISTANZIALE	ABSTANDSTUECK DISCO ESPACIADOR
41	926160150220		2 COVER	COUVERCLE COPERCHIO	DECKEL CUBIERTA
42	X487527741000	M8 X 20	8 HEX. SOCK. SCREW	VIS TETE HEX VITE PARKER	ZYLINDERSCHRAUBE TORN.CAB.HUECA

[B] ORDER + 926 150 150 061 + G926 150 150 050
COMMANDER EN PLUS 926 150 150 061 + G926 150 150 050
BESTELLE + 926 150 150 061 + G926 150 150 050
ORDINARE + 926 150 150 061 + G926 150 150 050
PEDIR + 926 150 150 061 + G926 150 150 050

Disc Brakes
Freins A Disques
Scheibenbremsen
Freno A Disco
Disco De Freno

30-50

1-WG14-003-A

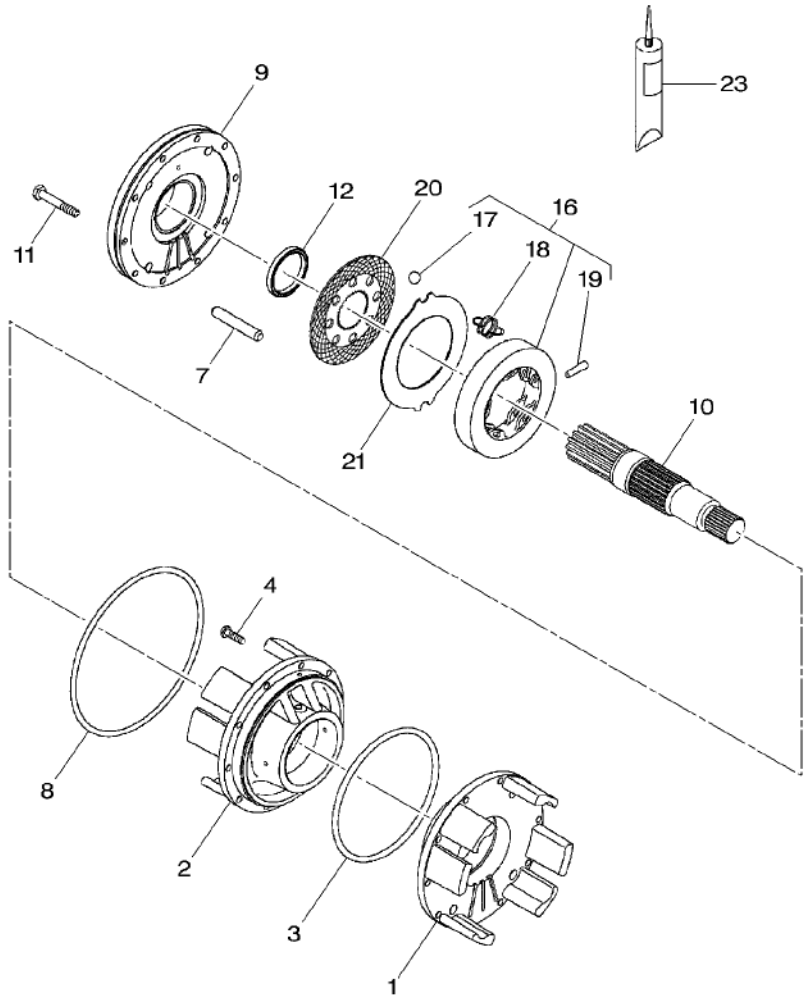

1	926150010020	▶	1	BEARING FLANGE	FLASQUE ROULT BEARING FLANGE	LAGERFLANSCH BEARING FLANGE
2	926150010010	◀	1	BEARING FLANGE	FLASQUE ROULT BEARING FLANGE	LAGERFLANSCH BEARING FLANGE
3	X549041100000	∅ 267 X 3	1	O RING	JOINT TORIQUE ANELLO TENUTA	O-RING ANILLO FORMA 'O'
4	X487535806000	M12 X 40	4	HEX. SOCK. SCREW	VIS TETE HEX VITE PARKER	ZYLINDERSCHRAUBE TORN.CAB.HUECA
7	926150150080		8	PIN	GOUPILLE PERNO	BOLZEN PASADOR
8	X549044100000	∅ 310 X 3	2	O RING	JOINT TORIQUE ANELLO TENUTA	O-RING ANILLO FORMA 'O'
9	926150150070		2	BRAKE PLATE	PLAQUETTE FREIN PIATTO FRENO	BREMSPLATTE PLATO DE FRENO
10		30-45 No 35	2	SHAFT	ARBRE ALBERO	WELLE ARBOL
11	X486537601000	M12 X 160	20	HEX. SOCK. SCREW	VIS TETE HEX VITE PARKER	ZYLINDERSCHRAUBE TORN.CAB.HUECA
12	X550150200000		2	OIL SEAL	BAGUE ETANCHEITE BOCCOLA PARAOLIO	OELDICHTRING BUJE RETENACEITE
16	F822100150010		2	DISC	DISQUE DISCO	SCHEIBE DISCO
17	F822100150020	16	5	BALL	BILLE SFERA	KUGEL BOLA
18	F822100150030	16	5	TENSION SPRING	RESSORT TRACTION MOLLA TENDITRICE	ZUGFEDER MUELLE TENSION
19	X505558539000	16	2	DOWEL	PLOT SPINA	ZYLINDERSTIFT CENTRAJE
20	F822100150040		12	BRAKE DISC	DISQUE DE FREIN DISCO FRENO	BREMSSCHEIBE DISCO DE FRENO
21	716150150500		12	EXTERNAL DISC	DISQUE EXTERIEUR DISCO ESTERNO	AUSSENLAMELLE DISCO EXTERIOR
23	X903050074000		X	LOCTITE	LOCTITE LOCTITE	LOCTITE LOCTITE

Cardan Brake
Frein A Cardan
Kardanwellenbremse
Freno Cardanico
Freno Cardan

30-55

1-WG15-002-A

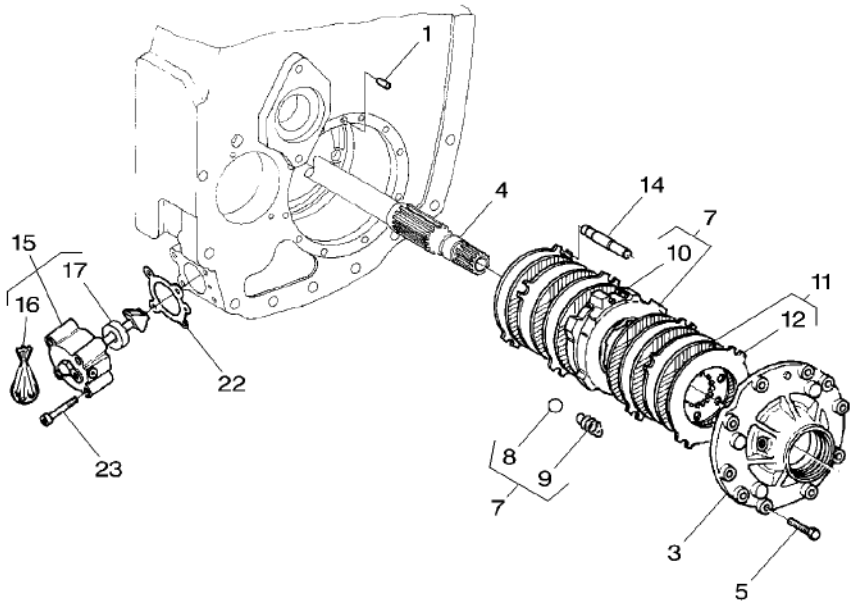

1	X505544539000	∅ 6 X 16	1 DOWEL	PLOT SPINA	ZYLINDERSTIFT CENTRAJE
3	916100320061		1 COVER	COUVERCLE COPERCHIO	DECKEL CUBIERTA
4		60–40 No 5	1 SHAFT	ARBRE ALBERO	WELLE ARBOL
5	X487531941000	M10 X 40	10 HEX. SOCK. SCREW	VIS TETE HEX VITE PARKER	ZYLINDERSCHRAUBE TORN.CAB.HUECA
7	G916100320030		1 DISC	DISQUE DISCO	SCHEIBE DISCO
8	F822100150020	7	4 BALL	BILLE SFERA	KUGEL BOLA
9	F822100150030	7	4 TENSION SPRING	RESSORT TRACTION MOLLA TENDITRICE	ZUGFEDER MUELLE TENSION
10	X505558539000	7	2 DOWEL	PLOT SPINA	ZYLINDERSTIFT CENTRAJE
11	G001990200330		1 PARTS PACK	JEU PIECES PACCO RICAMBI	SATZ TEILE PAQUETE PIEZAS
12		11 REF. 11	1 PLATE	PLAQUE PIASTRA	PLATTE PLATO
14	916100320190		4 PIN	GOUPILLE PERNO	BOLZEN PASADOR
15	G916100070030	[A]	1 CYLINDER	CYLINDRE CILINDRO	ZYLINDER CILINDRO
16	F916100070010	16	1 KIT, JOINT	JEU JOINTS KIT GIUNTO	DICHTUNGSSATZ JUEGO JUNTAS
17	F524101070170	16	1 SEAL	JOINT ETANCHEITE ANELLO RACCORD	DICHTRING ARENDELA D'JUNTA
22	916100070010		1 GASKET	JOINT GUARNIZIONE	DICHTSCHEIBE EMPAQUETADURA.
23	X485008606000	M8 X 80	4 HEX. SOCK. SCREW	VIS TETE HEX VITE PARKER	ZYLINDERSCHRAUBE TORN.CAB.HUECA

[A] ORDER + 916 100 070 010
COMMANDER EN PLUS 916 100 070 010
BESTELLE + 916 100 070 010
ORDINARE + 916 100 070 010
PEDIR + 916 100 070 010

Lift Arms
Bras De Relevage
Hubarme
Sollevamento Bracci
Brazos Elevador

30-60

1-WP74-003-A

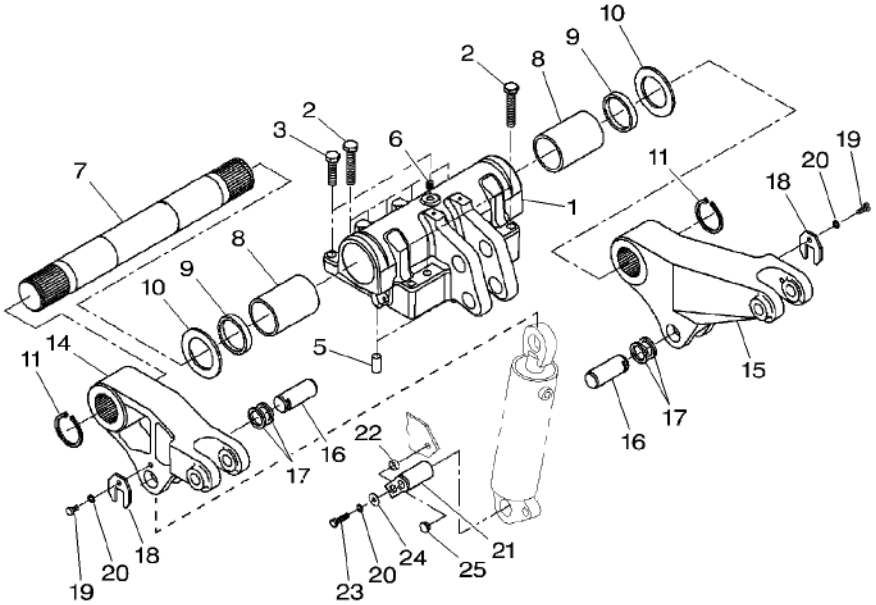

1	G930860030010		1	SUPPORT	SUPPORT SUPPORTO	LAGERUNG DISPOS.DE SOSTEN
2	X486551800000	M18 X 120	10	HEX. SOCK. SCREW	VIS TETE HEX VITE PARKER	ZYLINDERSCHRAUBE TORN.CAB.HUECA
3	X486551000000	M18 X 70	2	HEX. SOCK. SCREW	VIS TETE HEX VITE PARKER	ZYLINDERSCHRAUBE TORN.CAB.HUECA
5	X505585617000	∅ 6 X 36	2	DOWEL	PLOT SPINA	ZYLINDERSTIFT CENTRAJE
6	X483501600000	M18	1	SCREW	VIS VITE	SCHRAUBE TORNILLO
7	816860030110		1	SHAFT	ARBRE ALBERO	WELLE ARBOL
8	816860030040		2	BUSH	BAGUE BOCCOLA	BUCHSE CASQUILLO
9	X550150400000	80 X 100 X 10	2	OIL SEAL	BAGUE ETANCHEITE BOCCOLA PARAOLIO	OELDICHTRING BUJE RETENACEITE
10	816860030050		2	DISC	DISQUE DISCO	SCHEIBE DISCO
11	X530007246000		2	CIRCLIP	CIRCLIP ANNELLO ELASTICO	SEEGERING GRAPA CIRCULAR
14	903860030010		1	ARM	BRAS BRACCIO	ARM BRAZO
15	903860030020		1	ARM	BRAS BRACCIO	ARM BRAZO
16	716860030080		2	PIN	GOUPILLE PERNO	BOLZEN PASADOR
17	816860030070		4	RING	ANNEAU ANELLO	RING ARO
18	716920010100		2	LOCKING PLATE	PLAQUE BLOCAGE PIASTRA DI FERMO	SICH.BLECH PLACA DE BLOCAJE
19	X487531301000	M10 X 20	2	HEX. SOCK. SCREW	VIS TETE HEX VITE PARKER	ZYLINDERSCHRAUBE TORN.CAB.HUECA
20	X520804401000		4	LOCK WASHER	RONDELLE FREIN ROSETTA DENTELL.	FEDERRING ARANDELA GROWER
21	H816860030042		2	PIN	GOUPILLE PERNO	BOLZEN PASADOR
22	816870030060		2	BUSH	BAGUE BOCCOLA	BUCHSE CASQUILLO
23	X487531541000	M10 X 25	2	HEX. SOCK. SCREW	VIS TETE HEX VITE PARKER	ZYLINDERSCHRAUBE TORN.CAB.HUECA
24	X454407508000		2	DISC	DISQUE DISCO	SCHEIBE DISCO
25	X499501100000		2	PLUG	BOUCHON TAPPO	VERSCHL.STOPFEN TAPON

Angle Sensor
Capteur D'Angle
Winkelsensor
Sensor Di Angolo
Captador De Angulo

30-65

1-WQ20-002-A

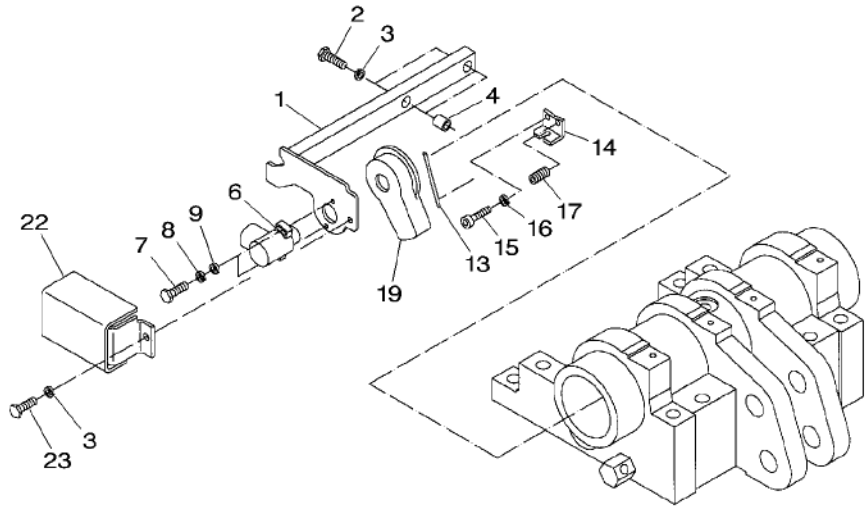

1	H816860100022		1	HOLDER	PIECE SUPPORT SUPPORTO DI BASE	HALTER SUJETADOR
2	X487528141000	M8 X 30	2	HEX. SOCK. SCREW	VIS TETE HEX VITE PARKER	ZYLINDERSCHRAUBE TORN.CAB.HUECA
3	X520803901000		3	LOCK WASHER	RONDELLE FREIN ROSETTA DENTELL.	FEDERRING ARANDELA GROWER
4	816860100120		2	BUSH	BAGUE BOCCOLA	BUCHSE CASQUILLO
6	***G716860100040***		1	TRANSDUCER	CAPTEUR TRANSDUCER	NABENTRIEB. TRANSDUCER
7	X485002501000	M5 X 12	2	HEX. SOCK. SCREW	VIS TETE HEX VITE PARKER	ZYLINDERSCHRAUBE TORN.CAB.HUECA
8	X520802601000		2	LOCK WASHER	RONDELLE FREIN ROSETTA DENTELL.	FEDERRING ARANDELA GROWER
9	X450003908000		2	DISC	DISQUE DISCO	SCHEIBE DISCO
13	816860100080		1	SPRING WIRE	FIL DE RESSORT FILO ELASTICO	FEDERDRAHT ALAMBRE MUELLE
14	816860100032		1	ANGLE.	EQUERRE ANGOLO	WINKEL ANGULO
15	X485009405000	M8 X 16	1	HEX. SOCK. SCREW	VIS TETE HEX VITE PARKER	ZYLINDERSCHRAUBE TORN.CAB.HUECA
16	X523703900000		1	LOCK WASHER	RONDELLE FREIN ROSETTA DENTELL.	FEDERRING ARANDELA GROWER
17	X500628246000	∅ 8 X 22	1	ROLL PIN	GOUPILLE ROULEE SPINA ELASTICA	SPANNHUELSE PASADOR ELASTICO
19	816860100020		1	COVER	COUVERCLE COPERCHIO	DECKEL CUBIERTA
22	524860100100		1	PROTECTOR	PROTECTEUR PROTETTORE	SCHUTZ PROTECTOR
23★	X487527441000	M8 X 12	1	HEX. SOCK. SCREW	VIS TETE HEX VITE PARKER	ZYLINDERSCHRAUBE TORN.CAB.HUECA

40

Lift Cylinders
Verins De Relevage
Druckzylinder
Cilindro Di Sollevatore
Gato Hidraulico

40-5

1-WQ17-011-A

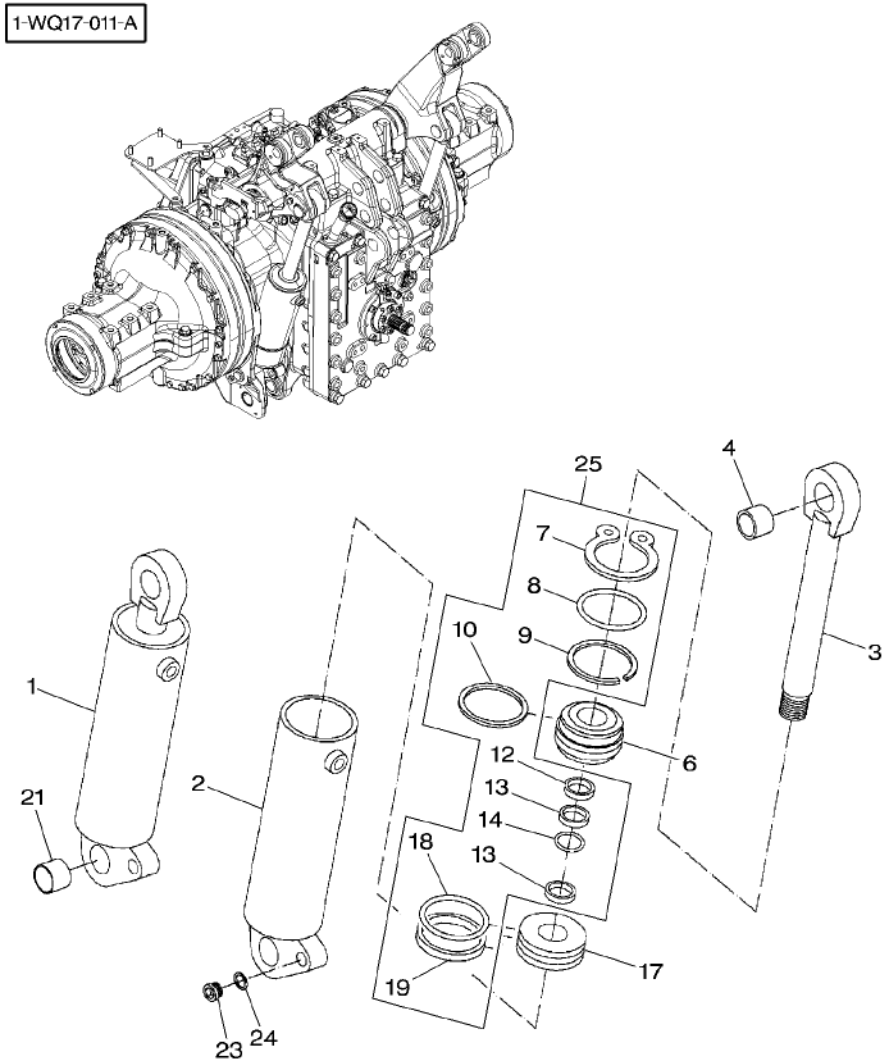

1	G924860030011	[A] 40/100;247/452	2	HYDRAULIC, CYLIN	VERIN HYDRAULI. CILINDRO IDRAULI	HYDRAULIK ZYLIND CILINDRO IDRAULI
2		1 REF. 1	1	BODY	CORPS CORPO	RUMPF CUERPO
3	F924860030030	1	1	ROD	TRINGLE ASTA	STANGE VARILLA
4	X605028000000	1	1	BEARING BUSH	BAGUE ROULEMENT BOCCOLA CUSCINET	LAGERBUCHSE BUJE DE COJINETE
6	F924860030010	1	1	GUIDE BUSH	BAGUE GUIDE BUSSOLA GUIDA	FUEHRUNGSBUCHSE CASQUILLO GUIA
7	X530008300000	1 ∅ 95 X 3	1	CIRCLIP	CIRCLIP ANNELLO ELASTICO	SEEGERING GRAPA CIRCULAR
8	X548972066000	1 ∅ 88 X 3	1	O RING	JOINT TORIQUE ANELLO TENUTA	O-RING ANILLO FORMA 'O'
9	F924860030020	1	1	SNAPRING	SEGMENT ARRET ANELLO SIEGER	SPRENGRING ANILLA RETENCION
10	X547583600000	1 93,8 X 6,9	1	SUMP GASKET	JOINT CARTER HUI SUMP GASKET	FORMDICHTUNG JUNTA DE PERFIL
12	X540410601000	1	1	STRIPPER	DEBOURREUR SPOGLIATORE	ABSTREIFER DESBARBADOR
13	X560240001000	1	2	RING	ANNEAU ANELLO	RING ARO
14	X548317400000	1 40 X 48 X 7	1	V-SEAL	BAGUE RAINURE V-SEAL	NUTRING V-SEAL
17	F924860030050	1	1	PISTON	PISTON PISTONE	KOLBEN PISTON
18	X560242800000	1	1	RING	ANNEAU ANELLO	RING ARO
19	X547587200000	1	1	SUMP GASKET	JOINT CARTER HUI SUMP GASKET	FORMDICHTUNG JUNTA DE PERFIL
21	X605018000000	1	1	BEARING BUSH	BAGUE ROULEMENT BOCCOLA CUSCINET	LAGERBUCHSE BUJE DE COJINETE
23	X483801600000	1 M18	1	SCREW	VIS VITE	SCHRAUBE TORNILLO
24	X540005478000	1	1	RING	ANNEAU ANELLO	RING ARO
25	G001990011310	[B]	1	KIT, SEAL	JEU ETANCHEITE KIT TENUTA	DICHTRINGSATZ RETENES JUEGO

[A] INCLUDE ITEMS 2 TO 24
COMPREND ITEMS 2 A 24
BEINHALTET POS NR 2 BIS 24
INCLUDE IL NUMEROS 2 A 24
INCLUYE EL NO 2 A 24

[B] INCLUDE ITEMS 7 TO 10-12 TO 14-18-19
COMPREND ITEMS 7 A 10-12 A 14-18-19
BEINHALTET POS NR 7 BIS 10-12 BIS 14-18-19
INCLUDE IL NUMEROS 7 A 10-12 A 14-18-19
INCLUYE EL NO 7 A 10-12 A 14-18-19

Lift Cylinders Feeding
Alimentation Verin De Relevage
Druckzylinderversorgung
Alimentazione Cilindro Di Sollevatore
Alimentacion Gato Hidraulico

40-10

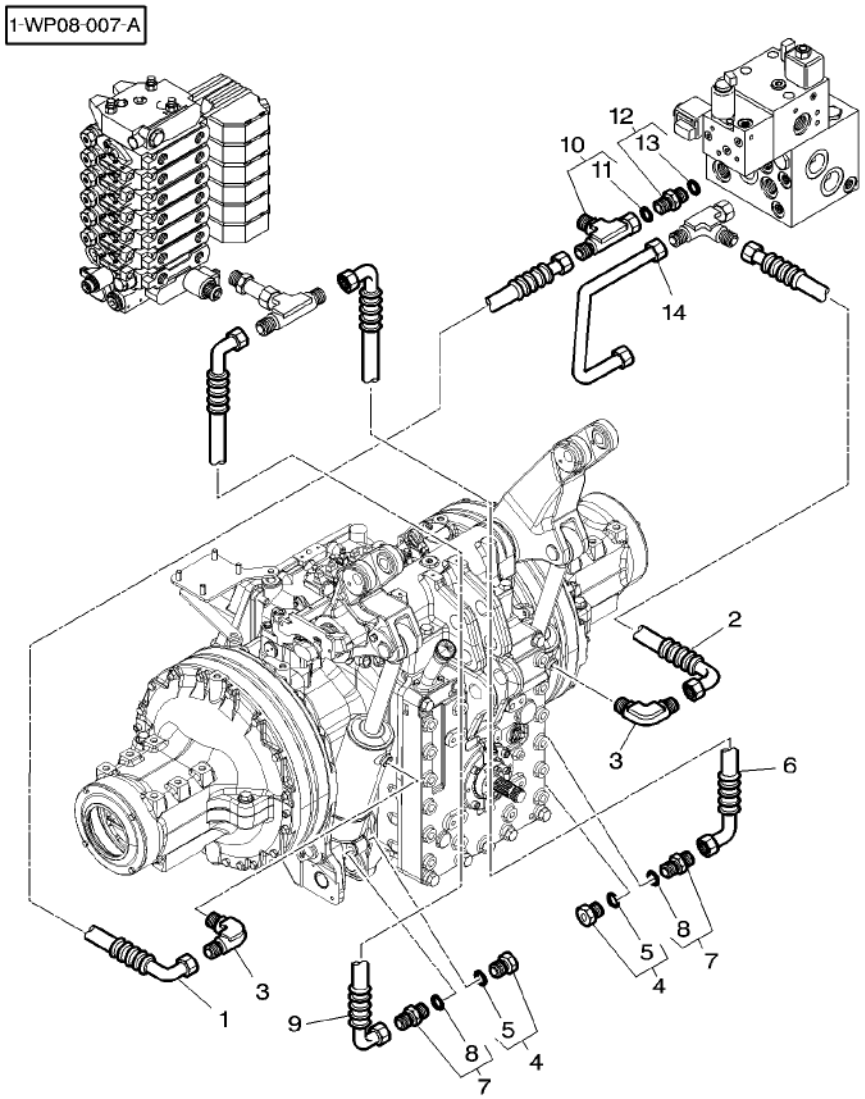

1	4276134M1	◄► 1100MM	1	HYDR. HOSE	FLEXIBLE TUBOFLEX IDRAUL	HYDR. SCHLAUCH TUBO HIDRAULICO
2	4276135M1	◄► 1050MM	1	HYDR. HOSE	FLEXIBLE TUBOFLEX IDRAUL	HYDR. SCHLAUCH TUBO HIDRAULICO
3	4276131M1		2	UNION	RACCORD RACCORDO	VERSCHRAUBUNG RACOR
4	3011103X91	M18	2	PLUG	BOUCHON TAPPO	VERSCHL.STOPFEN TAPON
5	338764X1	4	1	SEAL	JOINT ETANCHEITE ANELLO RACCORD	DICHTRING ARENDELA D'JUNTA
6	4276136M1	◄► 1400MM	1	HYDR. HOSE	FLEXIBLE TUBOFLEX IDRAUL	HYDR. SCHLAUCH TUBO HIDRAULICO
7	338717X91	M18	2	UNION	RACCORD RACCORDO	VERSCHRAUBUNG RACOR
8	338764X1	7	1	SEAL	JOINT ETANCHEITE ANELLO RACCORD	DICHTRING ARENDELA D'JUNTA
9*	4276137M2	◄► 1000MM	1	HYDR. HOSE	FLEXIBLE TUBOFLEX IDRAUL	HYDR. SCHLAUCH TUBO HIDRAULICO
10	3011089X91		2	UNION	RACCORD RACCORDO	VERSCHRAUBUNG RACOR
11	3011147X1	10	1	O RING	JOINT TORIQUE ANELLO TENUTA	O-RING ANILLO FORMA 'O'
12	3011040X91	M22X1.5	2	UNION	RACCORD RACCORDO	VERSCHRAUBUNG RACOR
13	3011036X1	12	1	SEAL	JOINT ETANCHEITE ANELLO RACCORD	DICHTRING ARENDELA D'JUNTA
14	4276170M1		1	TUBE	TUBE TUBO	ROHR TUBO

Levelling Box
Boitier De Nivellement
Verstellgehaeuse
Scatola Livello
Caja Niveladora

40-15

1-WQ32-007-A

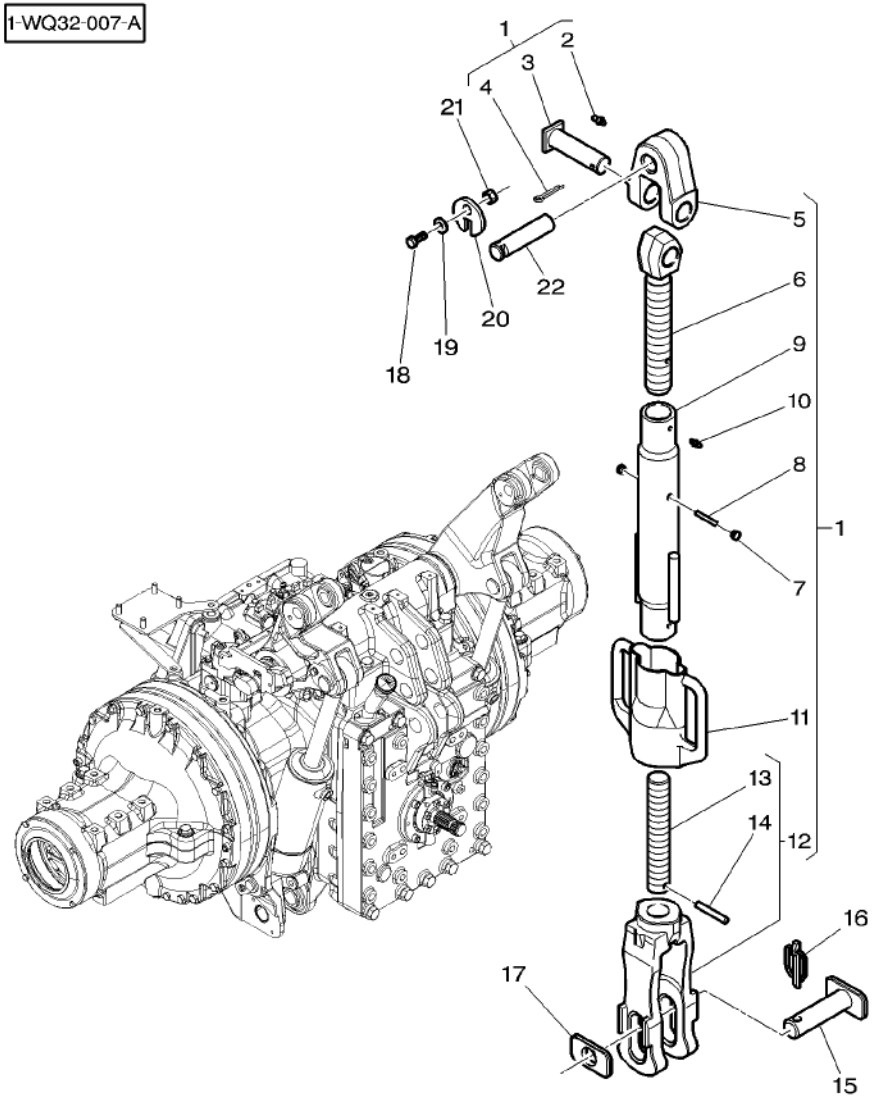

1	4271564M91			2	DRAGLINK	TIRANT MAGLIA PER DRAGA ENGANCHE DE TIRO SCHUBSTANGE
2	339608X1	1	M10	1	GREASE NIPPLE	GRAISSEUR DROIT INGRASSAT. FETT-NIPPEL ENGRASADOR
3	3715690M1	1		1	CLEVIS PIN	AXE PERNO D'ATTACCO SPLINTBOLZEN BULON CILINDRICO
4	354092X1	1		1	PIN	GOUPILLE PERNO BOLZEN PASADOR
5	4271819M1	1		1	CLEVIS	CHAPE GANCIO D'ATTACCO GABELSTUECK GANCHO SEGURI.
6	3788407M1	1		1	DRAGLINK	TIRANT MAGLIA PER DRAGA SCHUBSTANGE ENGANCHE DE TIRO
7	3789540M1	1		2	PLUG	BOUCHON TAPPO VERSCHL.STOPFEN TAPON
8	339135X1	1		1	PIN	GOUPILLE PERNO BOLZEN PASADOR
9		1	REF No 1	1	TUBE	TUBE TUBO ROHR TUBO
10	3715689M1	1	M6	2	GREASER	GRAISSEUR INGRASSATORE FETTNIPPEL ENGRASADOR
11	4270811M1	1		1	HANDLE	POIGNEE MANIGLIA HANDGRIFF MANETA
12	3788403M91	1		1	CLEVIS	CHAPE GANCIO D'ATTACCO GABELSTUECK GANCHO SEGURI.
13	3788405M1	12		1	CLEVIS PIN	AXE PERNO D'ATTACCO SPLINTBOLZEN BULON CILINDRICO
14	339307X1	12	∅ 6 X 50	1	PIN	GOUPILLE PERNO BOLZEN PASADOR
15	3788414M1			2	CLEVIS PIN	AXE PERNO D'ATTACCO SPLINTBOLZEN BULON CILINDRICO
16	3792034M1			2	PIN	GOUPILLE PERNO BOLZEN PASADOR
17	3788415M1			2	PLATE	PLAQUE PIASTRA PLATTE PLATO
18	**339451X1**		M10 X 30	2	HEX. SOCK. SCREW	VIS TETE HEX VITE PARKER ZYLINDERSCHRAUBE TORN.CAB.HUECA
19	390597X1		∅ 10-30 X 2,5	2	WASHER	RONDELLE RONDELLA UNTERLEGSCHEIBE ARANDELA
20	926870030020			2	LOCKING PLATE	PLAQUE BLOCAGE PIASTRA DI FERMO SICH.BLECH PLACA DE BLOCAJE
21	926870030030			2	BUSH	BAGUE BOCCOLA BUCHSE CASQUILLO
22	926870030010			2	PIN	GOUPILLE PERNO BOLZEN PASADOR

Top Link With Hook End
Barre De 3eme Point A Crochet
Oberlenker Mit Haken
Maglia Superior Con Ganci
Barra Enganche Con Gancho

40-20

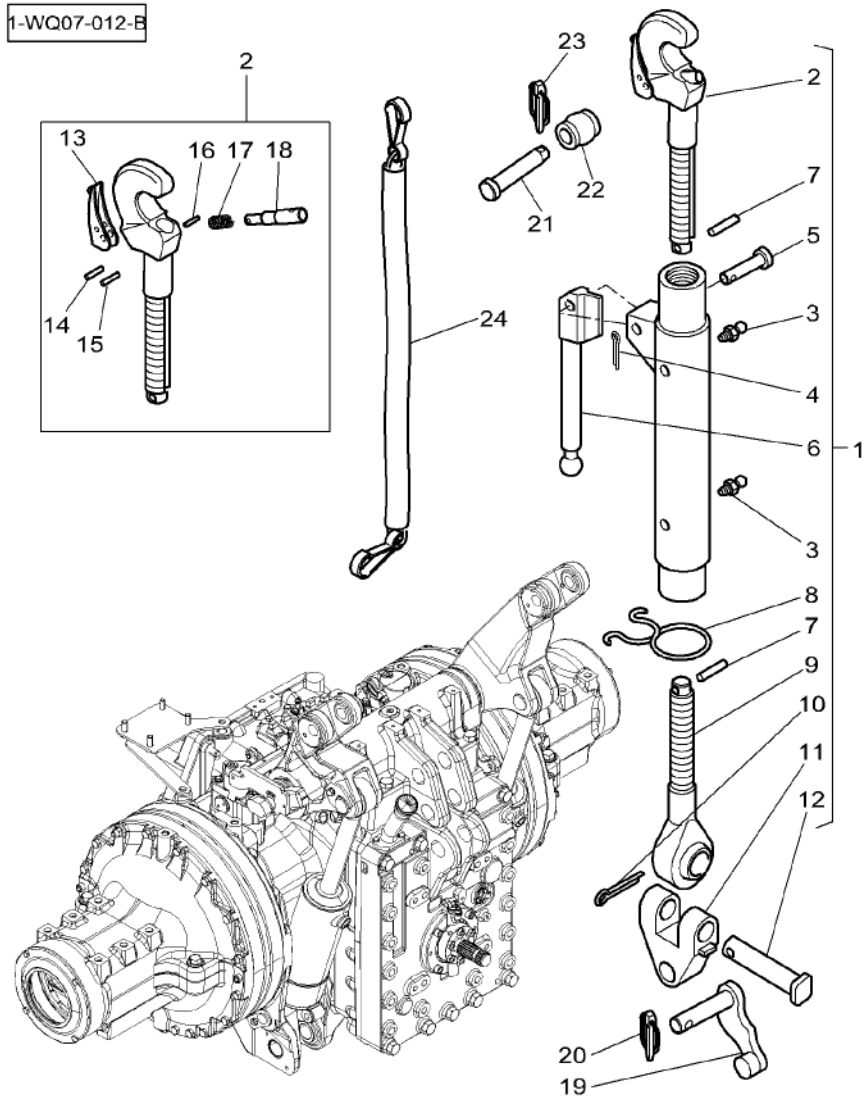

1	4271217M91	CAT 3 ◀▶ 754/974MM	1	TOP LINK	BARRE DE POUSSEE PUTONE	OBERLENKER UNION SUPERIOR
2	4271219M91	1 CAT 3	1	HOOK	CROCHET GANCIO	HAKEN GANCHO
3	339608X1	1	2	GREASE NIPPLE	GRAISSEUR DROIT INGRASSAT.	FETT-NIPPEL ENGRASADOR
4	1442967X1	1	1	PIN	GOUPILLE PERNO	BOLZEN PASADOR
5	4271225M1	1	1	PIN	GOUPILLE PERNO	BOLZEN PASADOR
6	4271224M1	1	1	HANDLE	POIGNEE MANIGLIA	HANDGRIFF MANETA
7	339192X1	1	2	PIN	GOUPILLE PERNO	BOLZEN PASADOR
8	4271557M1	1	1	SPRING	RESSORT MOLLA	FEDER RESORTE
9	4271221M1	1	1	DRAGLINK	TIRANT MAGLIA PER DRAGA	SCHUBSTANGE ENGANCHE DE TIRO
10	354092X1	1	1	PIN	GOUPILLE PERNO	BOLZEN PASADOR
11	4271222M1	1	1	CLEVIS	CHAPE GANCIO D'ATTACCO	GABELSTUECK GANCHO SEGURI.
12	4271223M1	1	1	PLATE	PLAQUE PIASTRA	PLATTE PLATO
13	3796211M91	2	1	LEVER	LEVIER LEVA	HEBEL PALANCA
14	339080X1	2 ∅ 6 X 24MM	1	ROLL PIN	GOUPILLE ROULEE SPINA ELASTICA	SPANNHUELSE PASADOR ELASTICO
15	390538X1	2 ∅ 5 X 24MM	1	PIN	GOUPILLE PERNO	BOLZEN PASADOR
16	339806X1	2	1	PIN	GOUPILLE PERNO	BOLZEN PASADOR
17	3788537M1	2	1	SPRING	RESSORT MOLLA	FEDER RESORTE
18	3715849M2	2	1	CLEVIS PIN	AXE PERNO D'ATTACCO	SPLINTBOLZEN BULON CILINDRICO
19	H926870050021		1	PIN	GOUPILLE PERNO	BOLZEN PASADOR
20	3387161M2	∅ 12 X 45MM	1	PIN	GOUPILLE PERNO	BOLZEN PASADOR
21	3582043M2	CAT 2/3	1	CLEVIS PIN	AXE PERNO D'ATTACCO	SPLINTBOLZEN BULON CILINDRICO
21	367073X1	CAT 3	1	CLEVIS PIN	AXE PERNO D'ATTACCO	SPLINTBOLZEN BULON CILINDRICO
22	***3042433M1***	CAT 2/3	1	TOGGLE	ROTULE ROTULA	GELENKZAPFEN ROTULA
22	**3042434M1**	CAT 3	1	TOGGLE	ROTULE ROTULA	GELENKZAPFEN ROTULA
23	3387161M2		1	PIN	GOUPILLE PERNO	BOLZEN PASADOR
24*	3619219M1	◀▶ 3700 MM	1	CHAIN	CHAINE CATENA	KETTE CADENA

Top Link With Hook End
Barre De 3eme Point A Crochet
Oberlenker Mit Haken
Maglia Superior Con Ganci
Barra Enganche Con Gancho

40-20

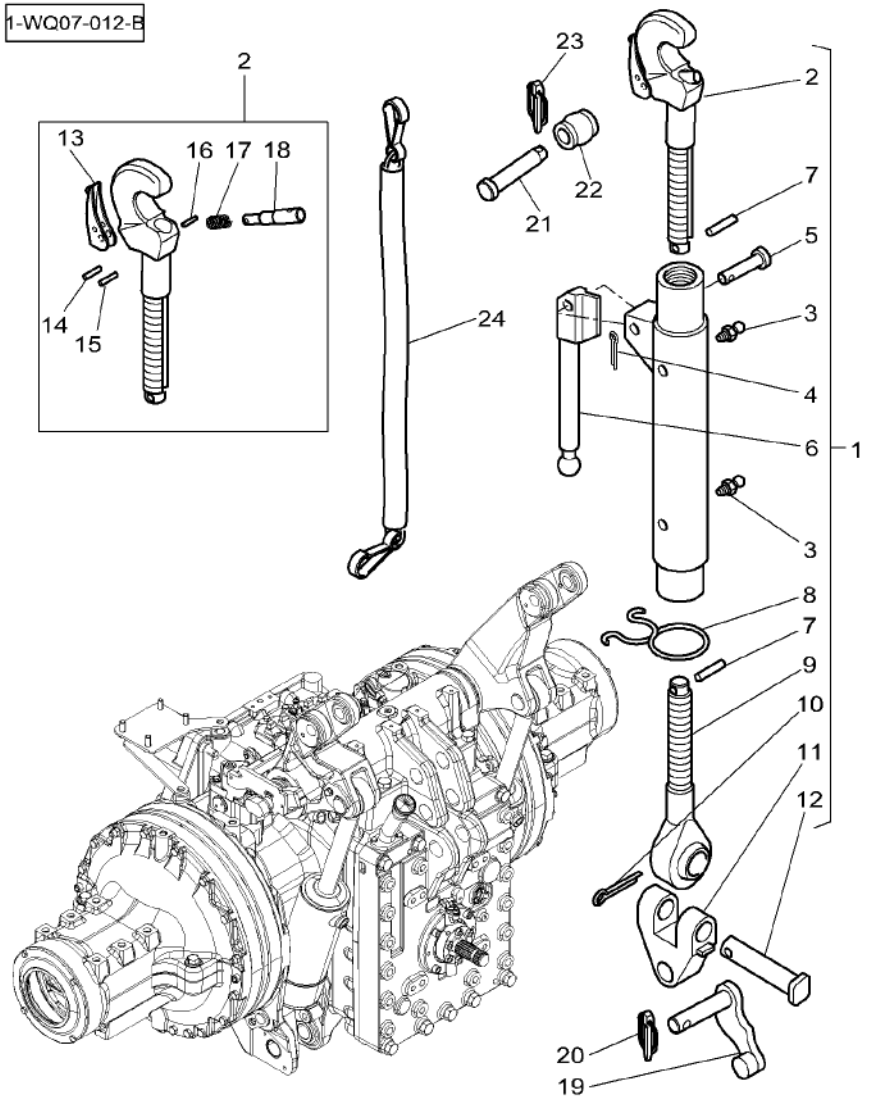

24*	3903995M1	◀▶ 1500 MM	1 CHAIN	CHAINE CATENA	KETTE CADENA

Top Link With Ball End
Barre De 3eme Point A Rotule
Oberlenker Mit Kugelgelenk
Maglia Superior Con Snodo Sferico
Barra Enganche Con Bola

40-25

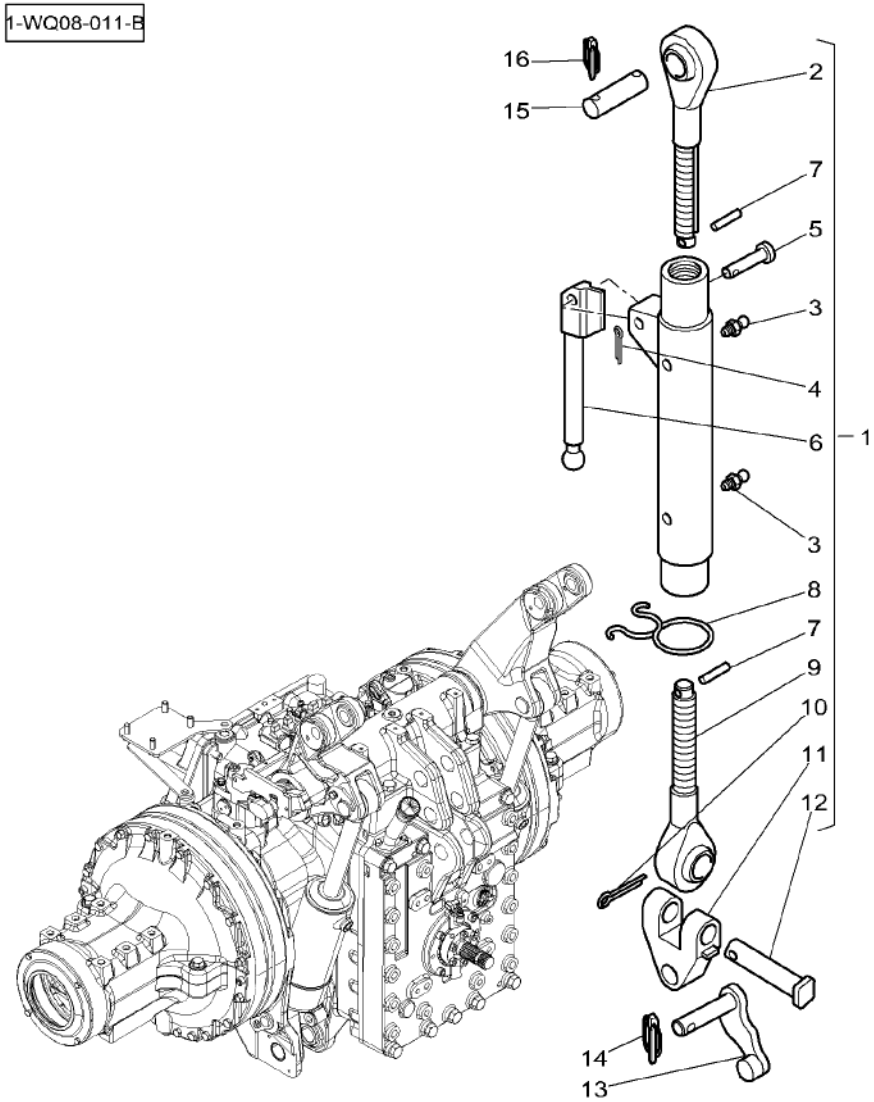

1	4275811M91	CAT 3 ◄► 754/974MM	1 TOP LINK	BARRE DE POUSSEE PUTONE	OBERLENKER UNION SUPERIOR
2	4275809M91	1 CAT 3	1 DRAGLINK	TIRANT MAGLIA PER DRAGA	SCHUBSTANGE ENGANCHE DE TIRO
3	339608X1	1	2 GREASE NIPPLE	GRAISSEUR DROIT INGRASSAT.	FETT-NIPPEL ENGRASADOR
4	1442967X1	1	1 PIN	GOUPILLE PERNO	BOLZEN PASADOR
5	4271225M1	1	1 PIN	GOUPILLE PERNO	BOLZEN PASADOR
6	4271224M1	1	1 HANDLE	POIGNEE MANIGLIA	HANDGRIFF MANETA
7	339192X1	1	2 PIN	GOUPILLE PERNO	BOLZEN PASADOR
8	4271557M1	1	1 SPRING	RESSORT MOLLA	FEDER RESORTE
9	4275810M1	1	1 DRAGLINK	TIRANT MAGLIA PER DRAGA	SCHUBSTANGE ENGANCHE DE TIRO
10	354092X1	1	1 PIN	GOUPILLE PERNO	BOLZEN PASADOR
11	4271222M1	1	1 CLEVIS	CHAPE GANCIO D'ATTACCO	GABELSTUECK GANCHO SEGURI.
12	4271223M1	1	1 PLATE	PLAQUE PIASTRA	PLATTE PLATO
13	H926870050021		1 PIN	GOUPILLE PERNO	BOLZEN PASADOR
14	3387161M2	∅ 12 X 45MM	1 PIN	GOUPILLE PERNO	BOLZEN PASADOR
15*	184870050020		1 BUSH	BAGUE BOCCOLA	BUCHSE CASQUILLO
16*	3387161M2		1 PIN	GOUPILLE PERNO	BOLZEN PASADOR

Top Link Lock
Verrouillage Barre De 3eme Point
Oberlenkerriegel
Cerrojo Barra Superior
Chiavistello Barra Superior

40-30

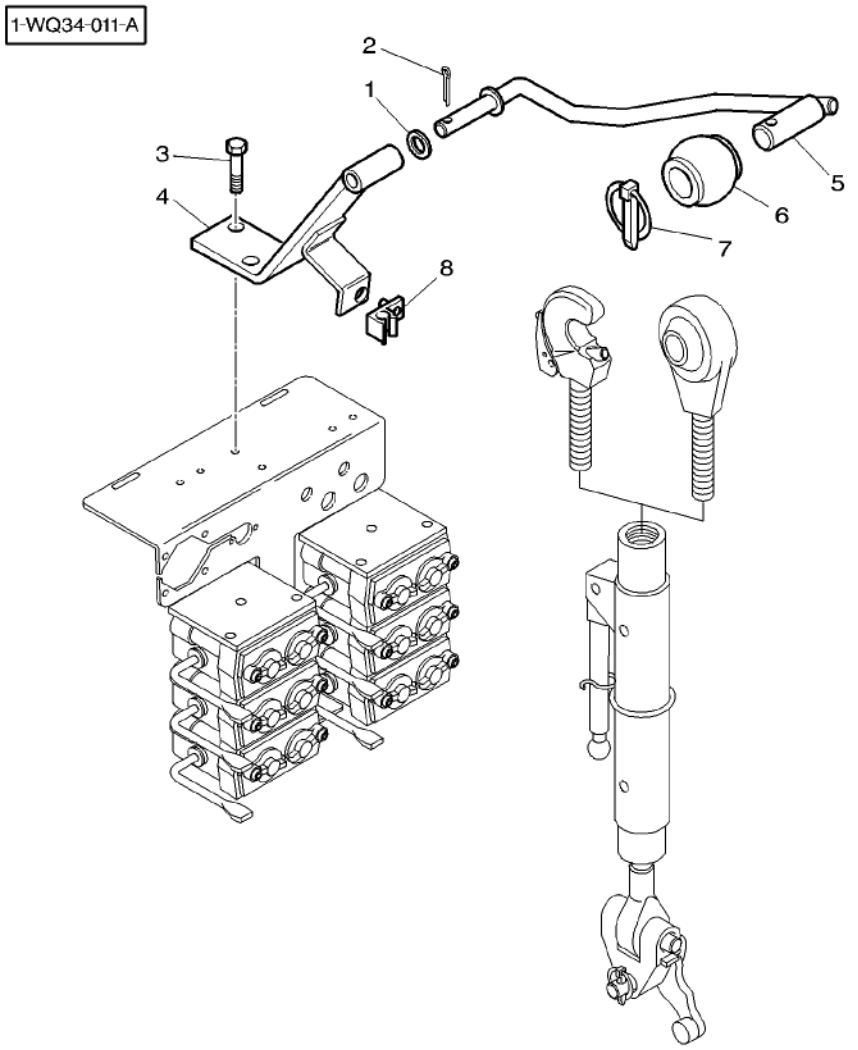

1	339615X1		1	WASHER	RONDELLE RONDELLA ARANDELA
2	354080X1		1	SPLIT PIN	GOUPILLE FENDUE COPIGLIA SPALTBOLZEN PASADOR HENDIDO
3	339761X1	M8 X 25	2	HEX. SOCK. SCREW	VIS TETE HEX VITE PARKER ZYLINDERSCHRAUBE TORN.CAB.HUECA
4	3789956M1		1	SUPPORT	SUPPORT SUPPORTO LAGERUNG DISPOS.DE SOSTEN
5	3789957M2		1	SUPPORT	SUPPORT SUPPORTO LAGERUNG DISPOS.DE SOSTEN
6	***3042433M1***		1	TOGGLE	ROTULE ROTULA GELENKZAPFEN ROTULA
7	***3011024X1***		1	PIN	GOUPILLE PERNO BOLZEN PASADOR
8	3798993M1		1	CLIP	PATTE D'ATTACHE FERMAGLIO SCHELLE CLIP

Sensing Pin
Capteur D'Effort
Anschluss
Presa
Toma

40-35

1-WQ11-007-B

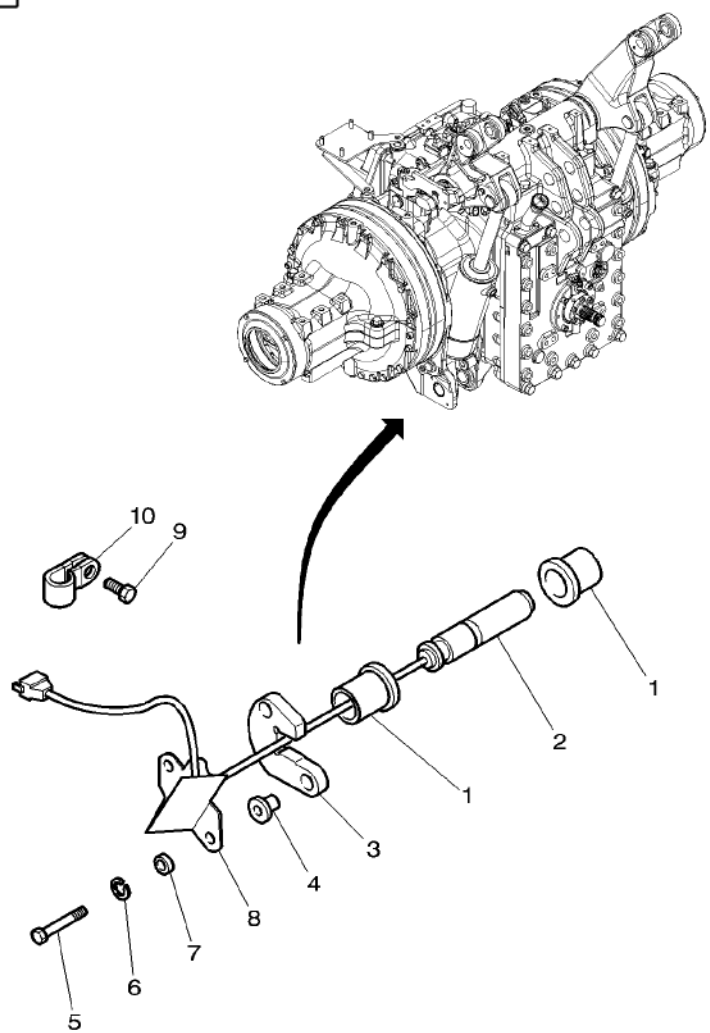

1	903860070010		4	BUSH	BAGUE BOCCOLA	BUCHSE CASQUILLO
2	***3716981M1***		2	INDUCTIVE SENSOR	CAPTEUR INDUCTIF SENSORE INDUTTIV	INDUKT EMPFANGER CAPTADOR INDUCTI
3	816860070011		2	LOCKING PLATE	PLAQUE BLOCAGE PIASTRA DI FERMO	SICH.BLECH PLACA DE BLOCAJE
4	199860070010		4	BUSH	BAGUE BOCCOLA	BUCHSE CASQUILLO
5	339019X1	M10 X 50	4	HEX. SOCK. SCREW	VIS TETE HEX VITE PARKER	ZYLINDERSCHRAUBE TORN.CAB.HUECA
6	339376X1		4	LOCK WASHER	RONDELLE FREIN ROSETTA DENTELL.	FEDERRING ARANDELA GROWER
7	281880010070		4	RING	ANNEAU ANELLO	RING ARO
8	816860070030	◀	1	PROTECTOR	PROTECTEUR PROTETTORE	SCHUTZ PROTECTOR
8	816860070040	▶	1	PROTECTOR	PROTECTEUR PROTETTORE	SCHUTZ PROTECTOR
9	391074X1		2	HEX. SOCK. SCREW	VIS TETE HEX VITE PARKER	ZYLINDERSCHRAUBE TORN.CAB.HUECA
10	3389841M1		2	CLIP	PATTE D'ATTACHE FERMAGLIO	SCHELLE CLIP

Lower Bar With Hook
Barres Inferieures A Crochet
Unterstab Mit Haken
Barra Inferiori Con Gancio
Barras Inferiores Con Gancho

40-40

1-WQ09-007-A

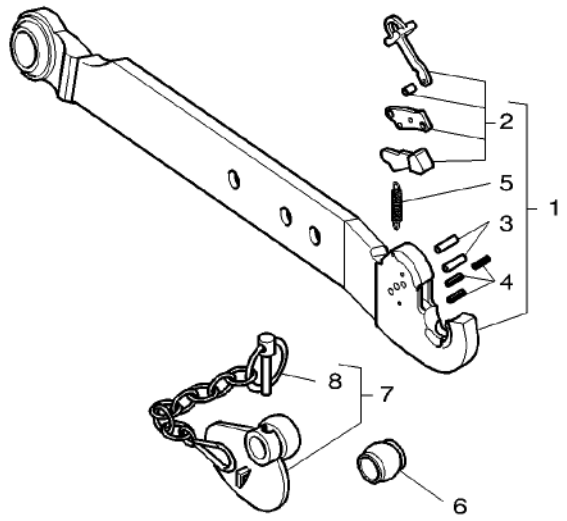

1	3789398M91	▶ CAT 3	**1** BAR	BARRE BARRA	STAB BARRA
1	3789399M91	◀ CAT 3	**1** BAR	BARRE BARRA	STAB BARRA
2	3903954M91	1	**1** KIT, LEVER	JEU LEVIER KIT LEVETTA	SATZ HEBEL JUEGO, PALANCA
3	3903948M91	1	**1** KIT, ROLL PINS	JEU GOUP ROULEES KIT PERNI	SATZ SPANNHUELSN JGO.PASAD.ELAST.
4	3903947M91	1	**1** KIT, ROLL PINS	JEU GOUP ROULEES KIT PERNI	SATZ SPANNHUELSN JGO.PASAD.ELAST.
5	3903949M1	1	**1** SPRING	RESSORT MOLLA	FEDER RESORTE
6	***3042430M1***	CAT 2/3	**2** TOGGLE	ROTULE ROTULA	GELENKZAPFEN ROTULA
6	***3042431M1***	CAT 3	**2** TOGGLE	ROTULE ROTULA	GELENKZAPFEN ROTULA
7	***3042427M1***	CAT 2/3	**2** TOGGLE	ROTULE ROTULA	GELENKZAPFEN ROTULA
7	***3042428M1***	CAT 3	**2** TOGGLE	ROTULE ROTULA	GELENKZAPFEN ROTULA
8	3102086M91	7	**1** LINCH PIN	GOUPLLE FERGUSON COPIGLIA DI FERM	VORSTECKER PASADOR PARA EJE

Lower Bar With Toogle
Barres Inferieures A Rotule
Unterstab Mit Gelenkzappen
Barra Inferiori Con Rotula
Barras Inferiores Con Perno Enganche

40-45

1-WQ06-005-A

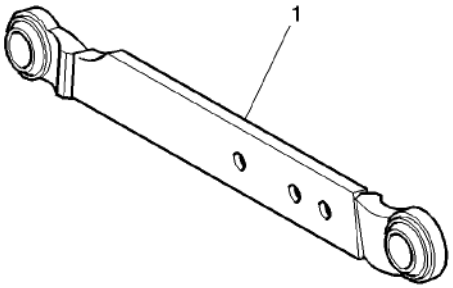

1	4275847M91	▶ CAT 3	1 BAR	BARRE BARRA	STAB BARRA
1	4275848M91	◀ CAT 3	1 BAR	BARRE BARRA	STAB BARRA

Tube Stabilizers
Stabilisateurs A Tube
Stabilisatoren
Stabilizzatore Tubo
Estabilizador Tubo

40-50

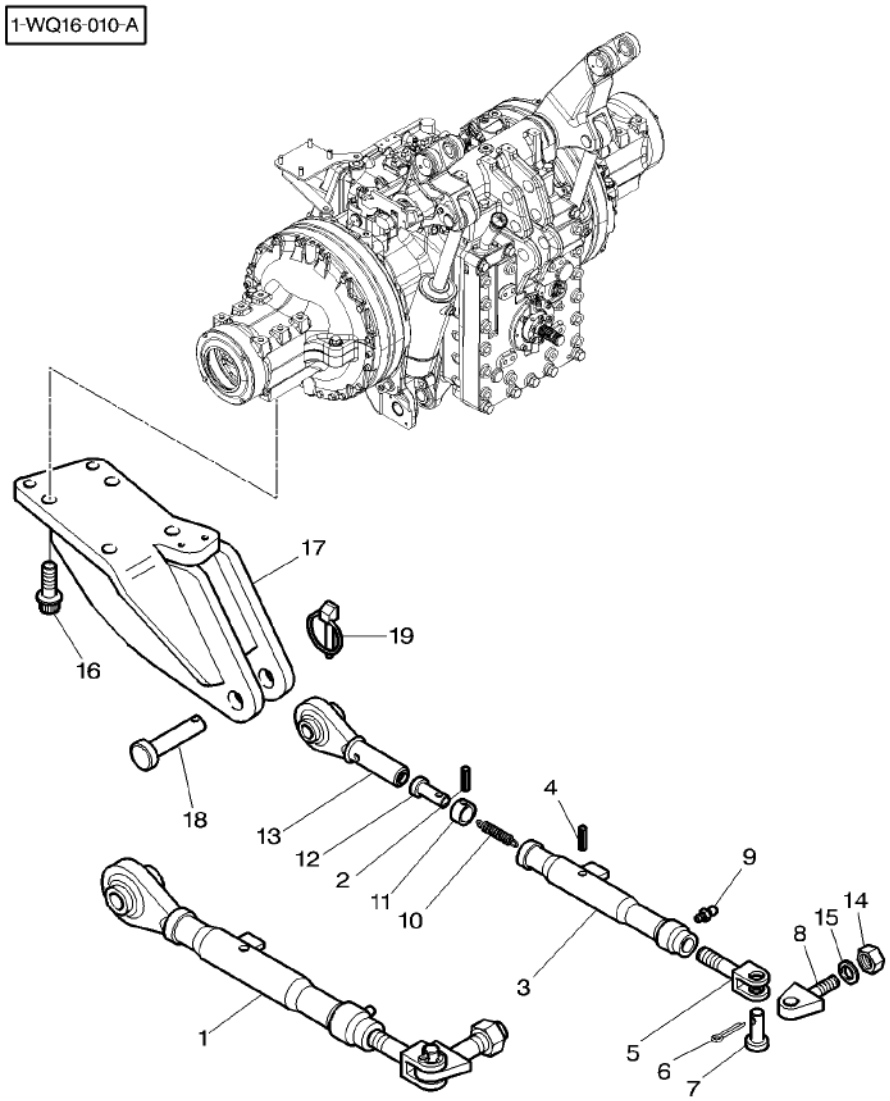

1	4271572M91	◀▶	407/502	2	STABILISER	STABILISATEUR STABILIZZATORE ESTABILIZADOR
2	391290X1	1	∅ 5 X 30	1	PIN	GOUPILLE PERNO BOLZEN PASADOR
3	3794472M91	1		1	TUBE	TUBE TUBO ROHR TUBO
4	3819644M1	1	∅ 8 X 50	1	SPIROL PIN	GOUPILLE SPIRALE SPINA ESPANSIONE SPIRALSTIFT PASADOR ESPIRAL
5	3790004M1	1		1	CLEVIS	CHAPE GANCIO D'ATTACCO GABELSTUECK GANCHO SEGURI.
6	391371X1	1	∅ 5 X 40	1	SPLIT PIN	GOUPILLE FENDUE COPIGLIA SPALTBOLZEN PASADOR HENDIDO
7	3019228X1	1		1	CLEVIS PIN	AXE PERNO D'ATTACCO SPLINTBOLZEN BULON CILINDRICO
8	4271109M1	1		1	JOURNAL	TENON ZONA APPOGGIO LAGERZAPFEN GORRON
9	339608X1	1		1	GREASE NIPPLE	GRAISSEUR DROIT INGRASSAT. FETT-NIPPEL ENGRASADOR
10	3615711M1	1		1	SPRING	RESSORT MOLLA FEDER RESORTE
11	3615709M1	1		1	SLEEVE	MANCHON MANICOTTO HUELSE MANCHA
12	3615710M1	1		1	CLEVIS PIN	AXE PERNO D'ATTACCO SPLINTBOLZEN BULON CILINDRICO
13	3794411M91	1		1	TOGGLE	ROTULE ROTULA GELENKZAPFEN ROTULA
14	3010067X1	1		1	LOCKNUT	ECROU BLOCAGE AUTOBLOCCANTE SICHERUNGSMUTTER CONTRATUERCA
15	4271602M1	1		1	WASHER	RONDELLE RONDELLA UNTERLEGSCHEIBE ARANDELA
16	3011608X1		M20 X 75	8	SCREW	VIS VITE SCHRAUBE TORNILLO
17	3789400M1		◀	1	SUPPORT	SUPPORT SUPPORTO LAGERUNG DISPOS.DE SOSTEN
17	3789401M1		▶	1	SUPPORT	SUPPORT SUPPORTO LAGERUNG DISPOS.DE SOSTEN
18	3582043M2			2	CLEVIS PIN	AXE PERNO D'ATTACCO SPLINTBOLZEN BULON CILINDRICO
19	3792034M1			2	PIN	GOUPILLE PERNO BOLZEN PASADOR

Automatic Stabilizers
Stabilisateurs Automatique
Stabilisatoren Automatisch
Stabilizzatore Automatico
Estabilizador Automatico

40-55

1-WQ19-006-A

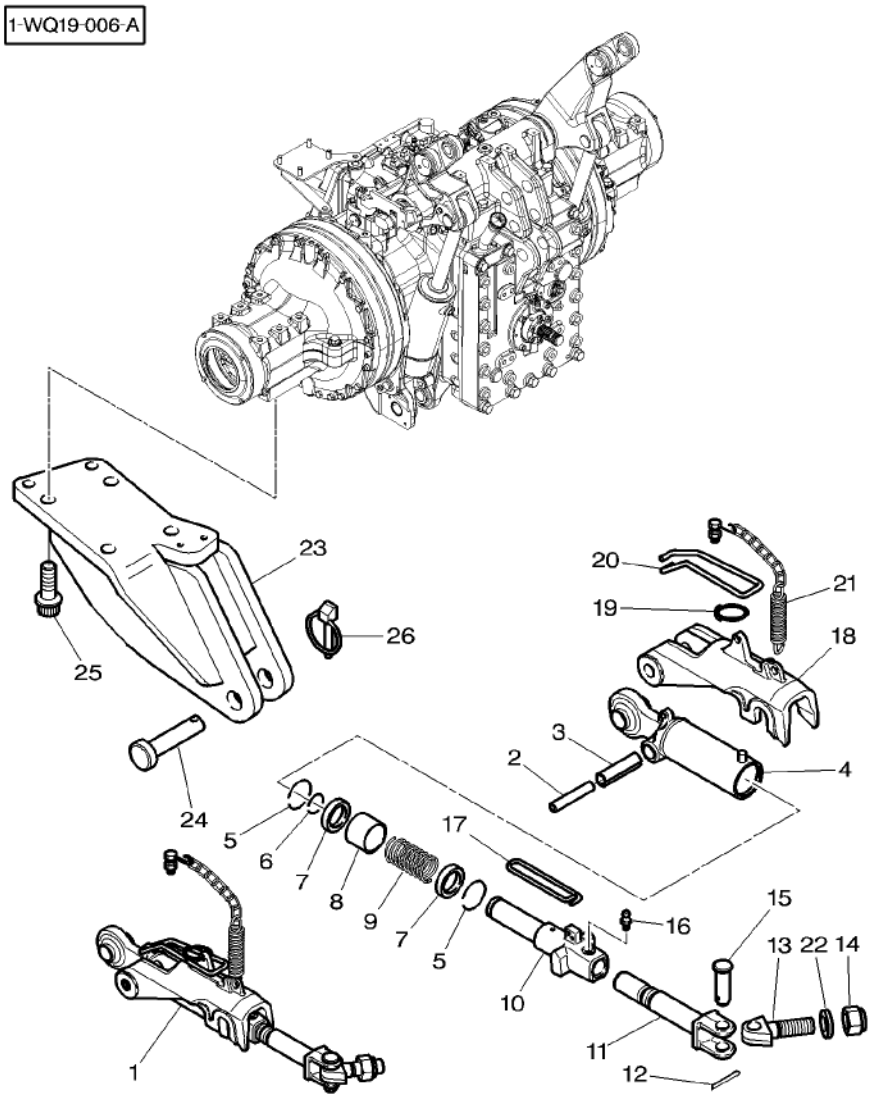

1*	4271707M93		2	STABILISER	STABILISATEUR STABILIZZATORE	STABILISATOR ESTABILIZADOR
2	4271699M1	1	1	PIN	GOUPILLE PERNO	BOLZEN PASADOR
3	4271698M1	1	1	PIN	GOUPILLE PERNO	BOLZEN PASADOR
4	4271696M1	1	1	TOGGLE	ROTULE ROTULA	GELENKZAPFEN ROTULA
5	4271690M1	1	2	BUSH	BAGUE BOCCOLA	BUCHSE CASQUILLO
6	4271694M1	1	1	BUSH	BAGUE BOCCOLA	BUCHSE CASQUILLO
7	4271691M1	1	2	SPACER	ENTRETOISE DISTANZIALE	ABSTANDSTUECK DISCO ESPACIADOR
8	4271693M1	1	1	SPACER	ENTRETOISE DISTANZIALE	ABSTANDSTUECK DISCO ESPACIADOR
9	4271692M1	1	1	SPRING	RESSORT MOLLA	FEDER RESORTE
10	4271688M1	1	1	TUBE	TUBE TUBO	ROHR TUBO
11	4271708M1	1	1	CLEVIS	CHAPE GANCIO D'ATTACCO	GABELSTUECK GANCHO SEGURI.
12	391371X1	1	1	SPLIT PIN	GOUPILLE FENDUE COPIGLIA	SPALTBOLZEN PASADOR HENDIDO
13	4271109M1	1	1	JOURNAL	TENON ZONA APPOGGIO	LAGERZAPFEN GORRON
14	3010067X1	1	1	LOCKNUT	ECROU BLOCAGE AUTOBLOCCANTE	SICHERUNGSMUTTER CONTRATUERCA
15	3019228X1	1	1	CLEVIS PIN	AXE PERNO D'ATTACCO	SPLINTBOLZEN BULON CILINDRICO
16	339608X1	1	1	GREASE NIPPLE	GRAISSEUR DROIT INGRASSAT.	FETT-NIPPEL ENGRASADOR
17	4271689M1	1	1	SPRING	RESSORT MOLLA	FEDER RESORTE
18	4271697M1	1	1	LATCH	VERROU CHIAVISTELLO	RIEGEL CERROJO
19	4271700M1	1	1	RING	ANNEAU ANELLO	RING ARO
20	4271695M1	1	1	HANDLE	POIGNEE MANIGLIA	HANDGRIFF MANETA
21	4271703M91	1	1	CHAIN	CHAINE CATENA	KETTE CADENA
22	4271602M1	1	1	WASHER	RONDELLE RONDELLA	UNTERLEGSCHEIBE ARANDELA
23	3789400M1	◀	1	SUPPORT	SUPPORT SUPPORTO	LAGERUNG DISPOS.DE SOSTEN
23	3789401M1	▶	1	SUPPORT	SUPPORT SUPPORTO	LAGERUNG DISPOS.DE SOSTEN
24	3582043M2		2	CLEVIS PIN	AXE PERNO D'ATTACCO	SPLINTBOLZEN BULON CILINDRICO
25	3011608X1	M20 X 75	8	SCREW	VIS VITE	SCHRAUBE TORNILLO

1-WQ19-006-A

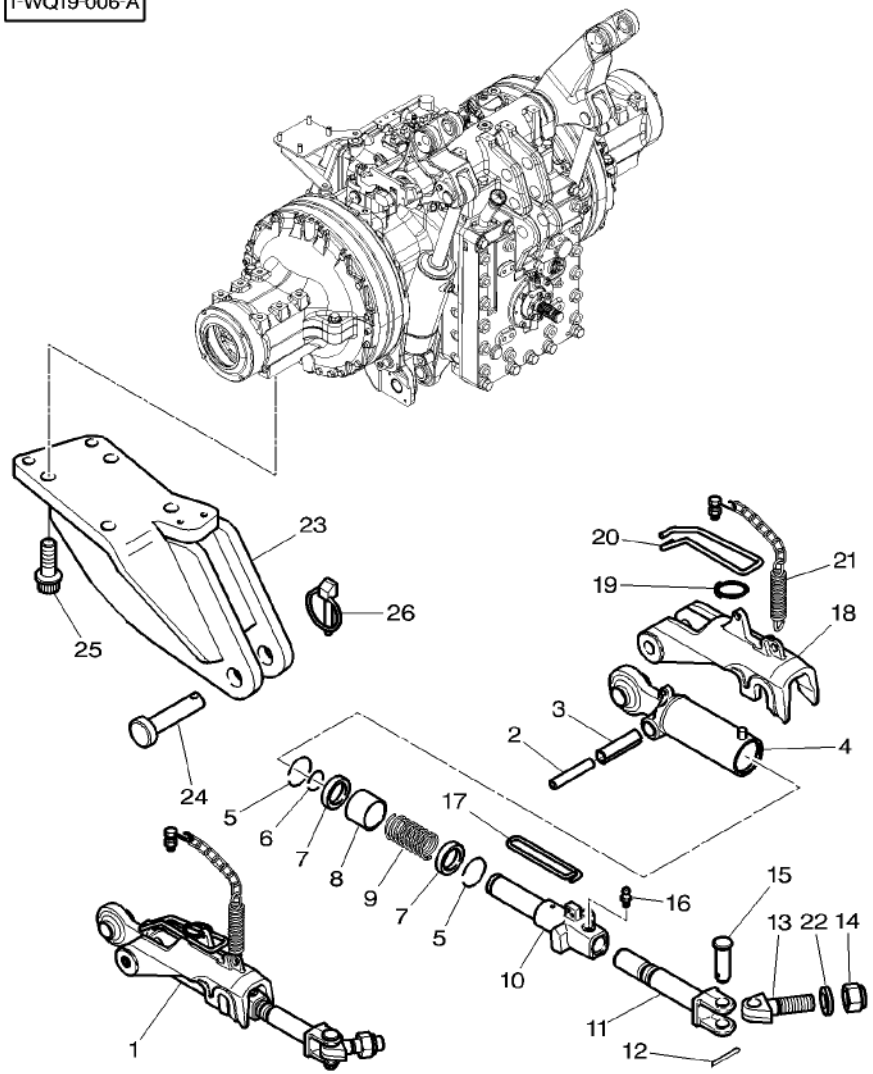

26	3792034M1	**2** PIN	GOUPILLE PERNO	BOLZEN PASADOR

Shoe Stabilizers
Stabilisateurs A Sabots
Hohenflosseschuh
Stabilizzatore Suola
Estabilizador A Zapata

40-60

1-WQ15-004-B

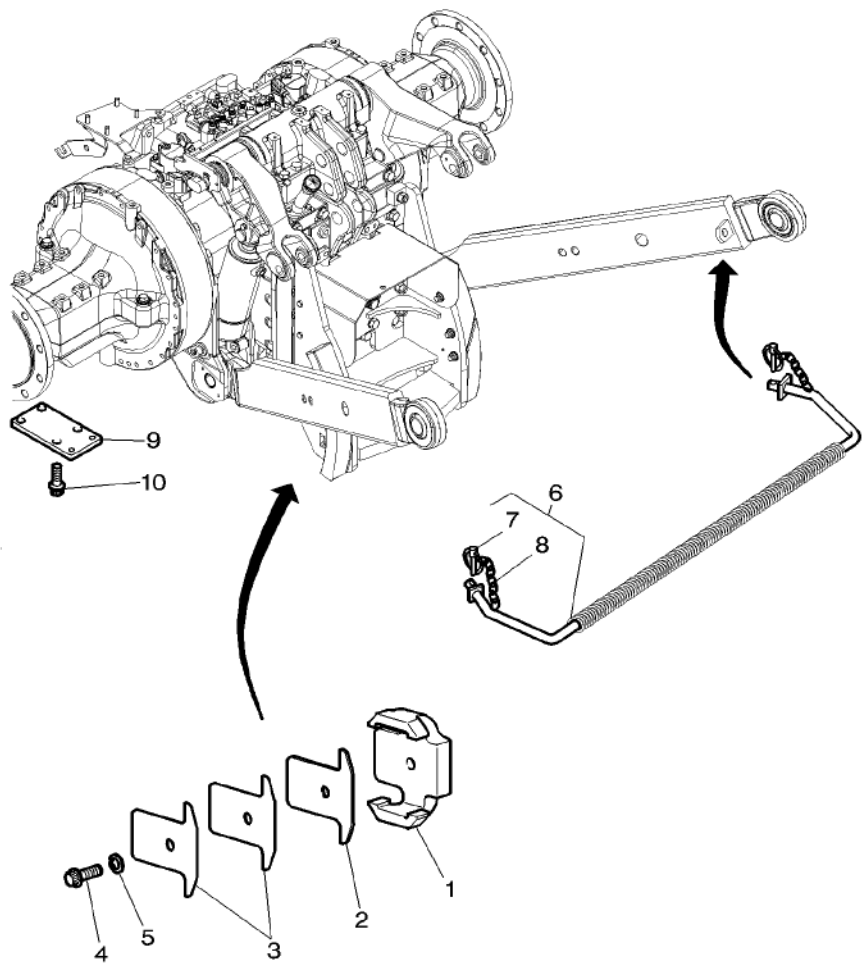

1	926871040050		2 STOP	BUTEE STOP	ANSCHLAG PARO
2	926871040070		2 BASE PLATE	PLAQUE DE BASE PIATTO APPOGGIO	GRUNDPLATTE PLATO BASE
3	926871040080		4 BASE PLATE	PLAQUE DE BASE PIATTO APPOGGIO	GRUNDPLATTE PLATO BASE
4	3009805X1	M16 X 60	2 SCREW METRIC	VIS METRIQUE VITE METRICA	SCHRAUBE METR TORNILLO METRICO
5	339377X1		2 LOCK WASHER	RONDELLE FREIN ROSETTA DENTELL.	FEDERRING ARANDELA GROWER
6	3792237M1		1 SPRING	RESSORT MOLLA	FEDER RESORTE
7	3105774M1	6	2 PIN	GOUPILLE PERNO	BOLZEN PASADOR
8	3105772M1	6	2 RING	ANNEAU ANELLO	RING ARO
9	4279957M1		2 SUPPORT	SUPPORT SUPPORTO	LAGERUNG DISPOS.DE SOSTEN
10	3011608X1	M20 X 75	8 SCREW	VIS VITE	SCHRAUBE TORNILLO

Drawbar
Barre A Trous
Ackerschiene
Barra Di Trazione
Barra De Tiro

40-65

1-WQ14-002-A

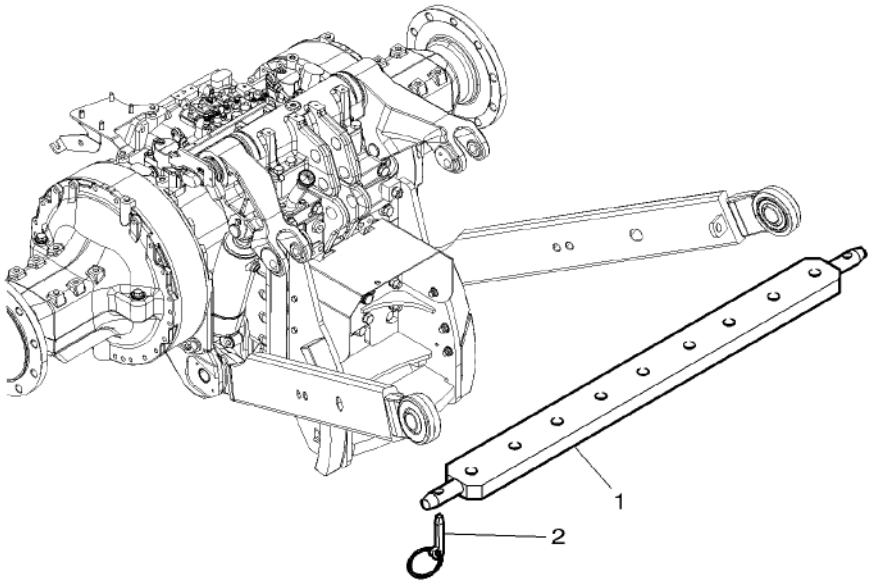

1	**3387153M1**	**1** BAR	BARRE BARRA	STAB BARRA
2	3581687M1	**2** PIN	GOUPILLE PERNO	BOLZEN PASADOR

Swinging Drawbar
Barre Oscillante
Zugpendel
Barra Trazione Orientabile
Barra De Tiro Oscilante

40-70

1-WQ12-026-A

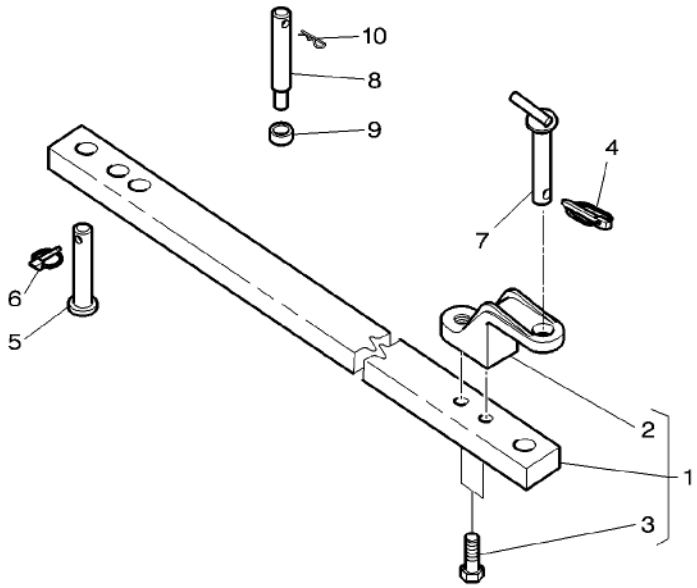

1	4270650M91	50X80X720MM	**1** BAR	BARRE BARRA	STAB BARRA
2	3793414M1	1	**1** CLEVIS	CHAPE GANCIO D'ATTACCO	GABELSTUECK GANCHO SEGURI.
3★	3011383X1	1 M20 X 80	**2** HEX. SOCK. SCREW	VIS TETE HEX VITE PARKER	ZYLINDERSCHRAUBE TORN.CAB.HUECA
4	3792034M1		**1** PIN	GOUPILLE PERNO	BOLZEN PASADOR
5	3011338X1	∅ 30MM	**1** CLEVIS PIN	AXE PERNO D'ATTACCO	SPLINTBOLZEN BULON CILINDRICO
6	3382826M1		**1** PIN	GOUPILLE PERNO	BOLZEN PASADOR
7	***4272346M2***	∅ 30X179MM	**1** PIN HITCH	BROCHE PERNO ATTACCO	KUPPLUNGSBOLZEN PASADOR ENGAN.
8	4270649M1		**2** CLEVIS PIN	AXE PERNO D'ATTACCO	SPLINTBOLZEN BULON CILINDRICO
9	4270652M1		**2** SPACER	ENTRETOISE DISTANZIALE	ABSTANDSTUECK DISCO ESPACIADOR
10	3010334X1		**2** HAIR PIN	EPINGLE FORCINA	SICHERUNGSFEDER RETENEDOR ELAST

Swinging Drawbar
Barre Oscillante
Zugpendel
Barra Trazione Orientabile
Barra De Tiro Oscilante

40-75

Iso Standard
Norme Iso
Iso Normung
Unificazione Iso
Normalizacion Iso

1-WQ12-027-A

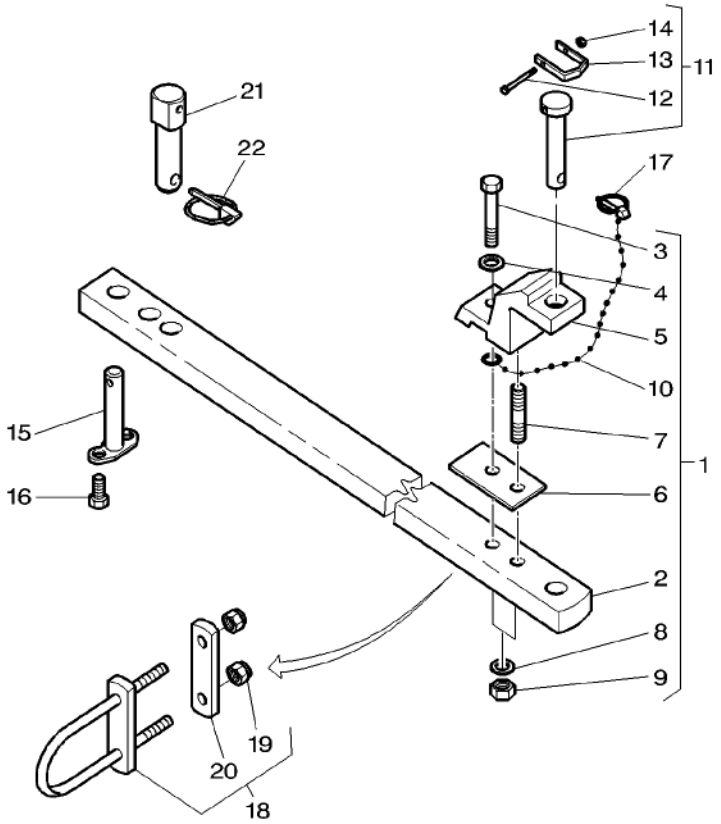

1	G716501120062			1	TIE ROD	TRINGLERIE TIRANTE	ZUGSTANGE BRAZO DE ENLACE
2	716501120630	1		1	TIE ROD	TRINGLERIE TIRANTE	ZUGSTANGE BRAZO DE ENLACE
3	3581985M1	1	M16X90	1	HEX. SOCK. SCREW	VIS TETE HEX VITE PARKER	ZYLINDERSCHRAUBE TORN.CAB.HUECA
4	339377X1	1		1	LOCK WASHER	RONDELLE FREIN ROSETTA DENTELL.	FEDERRING ARANDELA GROWER
5		1	REF NO 1	1	YOKE	CHAPE ARTICULAT FORCELLA	GELENKGABEL YUGO
6	716501120620	1		1	CHOCK	CALE PASSACAVO	UNTERLEG-KEIL CALZA
7	920501120100	1		1	STUD	GOUJON PRIGIONIERO	STEHBOLZEN CHAVETA ROSCADO
8	1440319X1	1		1	WASHER BLISTER	BLISTER RONDELLE BLISTER RONDELLE	SCHEIBENBLISTER AMPOLLA ARANDELA
9	3009746X1	1	M20	1	NUT	ECROU DADO	MUTTER TUERCA
10	H716921050030	1		1	STRING	FICELLE SPAGO	SEIL BRAMANTE
11	***G916501120050***		∅ 30MM	1	CLEVIS PIN	AXE PERNO D'ATTACCO	SPLINTBOLZEN BULON CILINDRICO
12	339132X1	11	M8X75	1	HEX. SOCK. SCREW	VIS TETE HEX VITE PARKER	ZYLINDERSCHRAUBE TORN.CAB.HUECA
13	920500120520	11		1	STIRRUP	ETRIER STAFFA	BUEGEL FUACION
14	394367X1	11		1	LOCKNUT	ECROU BLOCAGE AUTOBLOCCANTE	SICHERUNGSMUTTER CONTRATUERCA
15	H816500120020			1	PLUG.	AXE. PLUG.	ABSTECKTEIL PLUG.
16	3009492X1		M10X25	2	HEX. SOCK. SCREW	VIS TETE HEX VITE PARKER	ZYLINDERSCHRAUBE TORN.CAB.HUECA
17	3382826M1			1	PIN	GOUPILLE PERNO	BOLZEN PASADOR
18	G920501120020			1	STIRRUP	ETRIER STAFFA	BUEGEL FUACION
19	391237X1	18	M16	2	NUT METRIC	ECROU METRIQUE DADO METRICO	MUTTER METRISCH TUERCA METRICO
20	920501120040	18		1	STRAP	PATTE CORREGGIA	LASCHE FAJA
21	716501120030			2	PIN	GOUPILLE PERNO	BOLZEN PASADOR
22	3792034M1			2	PIN	GOUPILLE PERNO	BOLZEN PASADOR

Swinging Drawbar
Barre Oscillante
Zugpendel
Barra Trazione Orientabile
Barra De Tiro Oscilante

40-80

Iso Standard
Norme Iso
Iso Normung
Unificazione Iso
Normalizacion Iso

1-WQ12-028-A

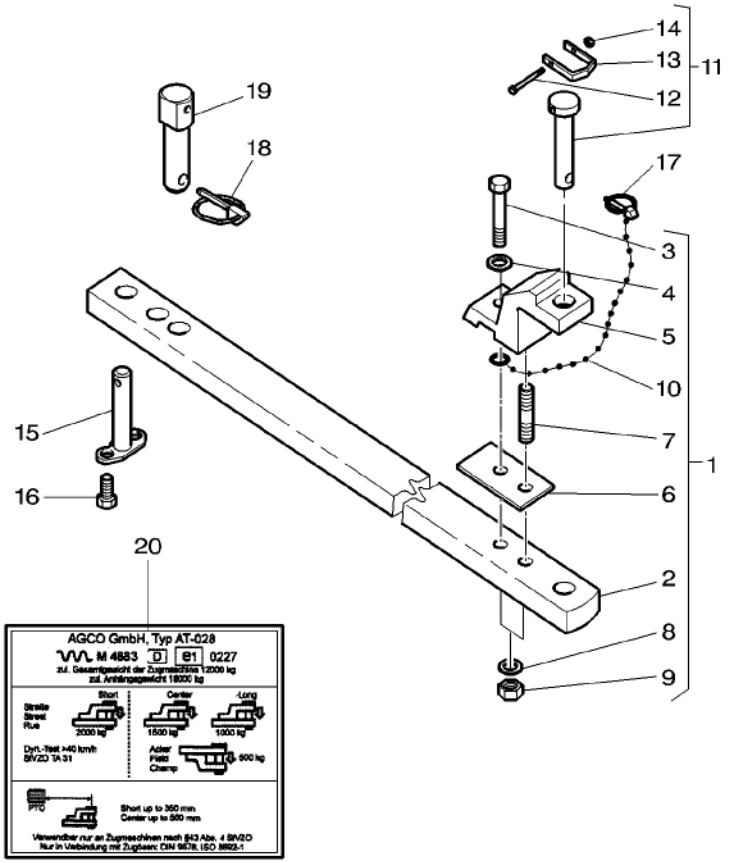

1	G716501120062			1	TIE ROD	TRINGLERIE TIRANTE	ZUGSTANGE BRAZO DE ENLACE
2	716501120630	1		1	TIE ROD	TRINGLERIE TIRANTE	ZUGSTANGE BRAZO DE ENLACE
3	3581985M1	1	M16X90	1	HEX. SOCK. SCREW	VIS TETE HEX VITE PARKER	ZYLINDERSCHRAUBE TORN.CAB.HUECA
4	339377X1	1		1	LOCK WASHER	RONDELLE FREIN ROSETTA DENTELL.	FEDERRING ARANDELA GROWER
5		1	REF NO 1	1	YOKE	CHAPE ARTICULAT FORCELLA	GELENKGABEL YUGO
6	716501120620	1		1	CHOCK	CALE PASSACAVO	UNTERLEG-KEIL CALZA
7	920501120100	1		1	STUD	GOUJON PRIGIONIERO	STEHBOLZEN CHAVETA ROSCADO
8	1440319X1	1		1	WASHER BLISTER	BLISTER RONDELLE BLISTER RONDELLE	SCHEIBENBLISTER AMPOLLA ARANDELA
9	3009746X1	1	M20	1	NUT	ECROU DADO	MUTTER TUERCA
10	H716921050030	1		1	STRING	FICELLE SPAGO	SEIL BRAMANTE
11	***G916501120050***		∅ 30MM	1	CLEVIS PIN	AXE PERNO D'ATTACCO	SPLINTBOLZEN BULON CILINDRICO
12	339132X1	11	M8X75	1	HEX. SOCK. SCREW	VIS TETE HEX VITE PARKER	ZYLINDERSCHRAUBE TORN.CAB.HUECA
13	920500120520	11		1	STIRRUP	ETRIER STAFFA	BUEGEL FUACION
14	394367X1	11		1	LOCKNUT	ECROU BLOCAGE AUTOBLOCCANTE	SICHERUNGSMUTTER CONTRATUERCA
15	H816500120020			1	PLUG.	AXE. PLUG.	ABSTECKTEIL PLUG.
16	3009492X1		M10X25	2	HEX. SOCK. SCREW	VIS TETE HEX VITE PARKER	ZYLINDERSCHRAUBE TORN.CAB.HUECA
17	3382826M1			1	PIN	GOUPILLE PERNO	BOLZEN PASADOR
18	3792034M1			2	PIN	GOUPILLE PERNO	BOLZEN PASADOR
19	916501120050			2	PIN	GOUPILLE PERNO	BOLZEN PASADOR
20	916501120060			1	DECAL	DECALCOMANIE DECALCOMANIA	AUFKLEBER CALCOMANIA

Swinging Drawbar
Barre Oscillante
Zugpendel
Barra Trazione Orientabile
Barra De Tiro Oscilante

40-85

Iso Standard – With Rollers
Norme Iso – A Galets
Iso Normung – Mit Rollen
Unificazione Iso – Con Rullos
Normalizacion Iso – Con Rodillos

1-WQ12-029-A

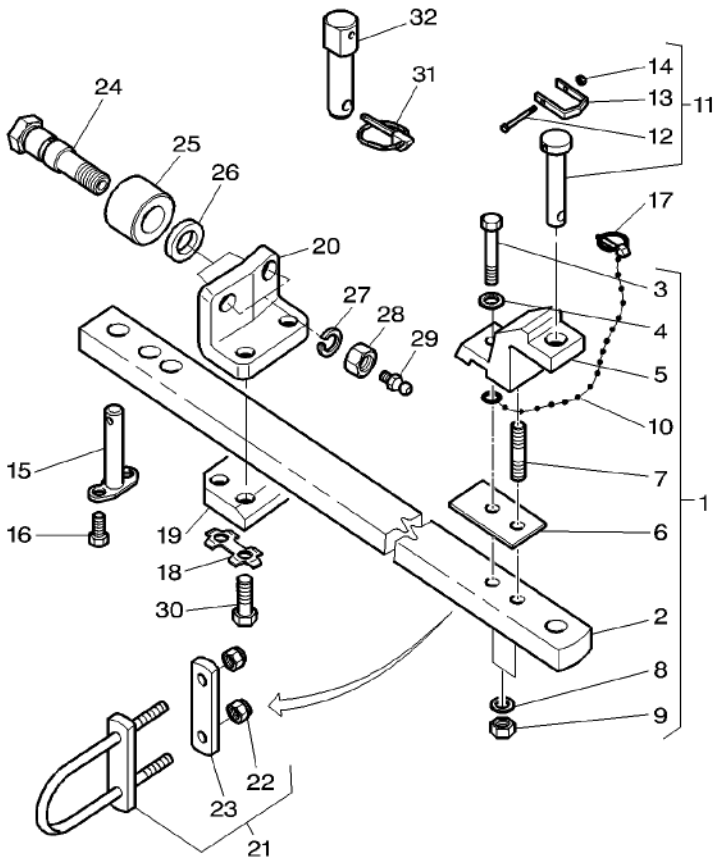

1	G716501120062			1	TIE ROD	TRINGLERIE TIRANTE ZUGSTANGE BRAZO DE ENLACE
2	716501120630	1		1	TIE ROD	TRINGLERIE TIRANTE ZUGSTANGE BRAZO DE ENLACE
3	3581985M1	1	M16X90	1	HEX. SOCK. SCREW	VIS TETE HEX VITE PARKER ZYLINDERSCHRAUBE TORN.CAB.HUECA
4	339377X1	1		1	LOCK WASHER	RONDELLE FREIN ROSETTA DENTELL. FEDERRING ARANDELA GROWER
5		1	REF NO 1	1	YOKE	CHAPE ARTICULAT FORCELLA GELENKGABEL YUGO
6	716501120620	1		1	CHOCK	CALE PASSACAVO UNTERLEG-KEIL CALZA
7	920501120100	1		1	STUD	GOUJON PRIGIONIERO STEHBOLZEN CHAVETA ROSCADO
8	1440319X1	1		1	WASHER BLISTER	BLISTER RONDELLE BLISTER RONDELLE SCHEIBENBLISTER AMPOLLA ARANDELA
9	3009746X1	1	M20	1	NUT	ECROU DADO MUTTER TUERCA
10	H716921050030	1		1	STRING	FICELLE SPAGO SEIL BRAMANTE
11	***G916501120050***		∅ 30MM	1	CLEVIS PIN	AXE PERNO D'ATTACCO SPLINTBOLZEN BULON CILINDRICO
12	339132X1	11	M8X75	1	HEX. SOCK. SCREW	VIS TETE HEX VITE PARKER ZYLINDERSCHRAUBE TORN.CAB.HUECA
13	920500120520	11		1	STIRRUP	ETRIER STAFFA BUEGEL FUACION
14	394367X1	11		1	LOCKNUT	ECROU BLOCAGE AUTOBLOCCANTE SICHERUNGSMUTTER CONTRATUERCA
15	H816500120020			1	PLUG.	AXE. PLUG. ABSTECKTEIL PLUG.
16	3009492X1		M10X25	2	HEX. SOCK. SCREW	VIS TETE HEX VITE PARKER ZYLINDERSCHRAUBE TORN.CAB.HUECA
17	3382826M1			1	PIN	GOUPILLE PERNO BOLZEN PASADOR
18	3790457M1			2	TONGUE	LANGUETTE LINGUETTA ZUNGE LENGUETA
19	3791470M1			1	COUNTERPLATE	CONTRE PLAQUE CONTROPIASTRA GEGENPLATTE CONTRAPLACA
20	3791467M2		M20X80	1	ANGLE.	EQUERRE ANGOLO WINKEL ANGULO
21	G920501120020			1	STIRRUP	ETRIER STAFFA BUEGEL FUACION
22	391237X1	21	M16	2	NUT METRIC	ECROU METRIQUE DADO METRICO MUTTER METRISCH TUERCA METRICO
23	920501120040	21		1	STRAP	PATTE CORREGGIA LASCHE FAJA
24	3791469M1			2	CLEVIS PIN	AXE PERNO D'ATTACCO SPLINTBOLZEN BULON CILINDRICO
25	3581980M1			2	ROLL	ROULEAU FRANGIZOLLE WALZE RULO
26	3791823M1			2	WASHER	RONDELLE RONDELLA UNTERLEGSCHEIBE ARANDELA

Swinging Drawbar
Barre Oscillante
Zugpendel
Barra Trazione Orientabile
Barra De Tiro Oscilante

40-85

Iso Standard – With Rollers
Norme Iso – A Galets
Iso Normung – Mit Rollen
Unificazione Iso – Con Rullos
Normalizacion Iso – Con Rodillos

1-WQ12-029-A

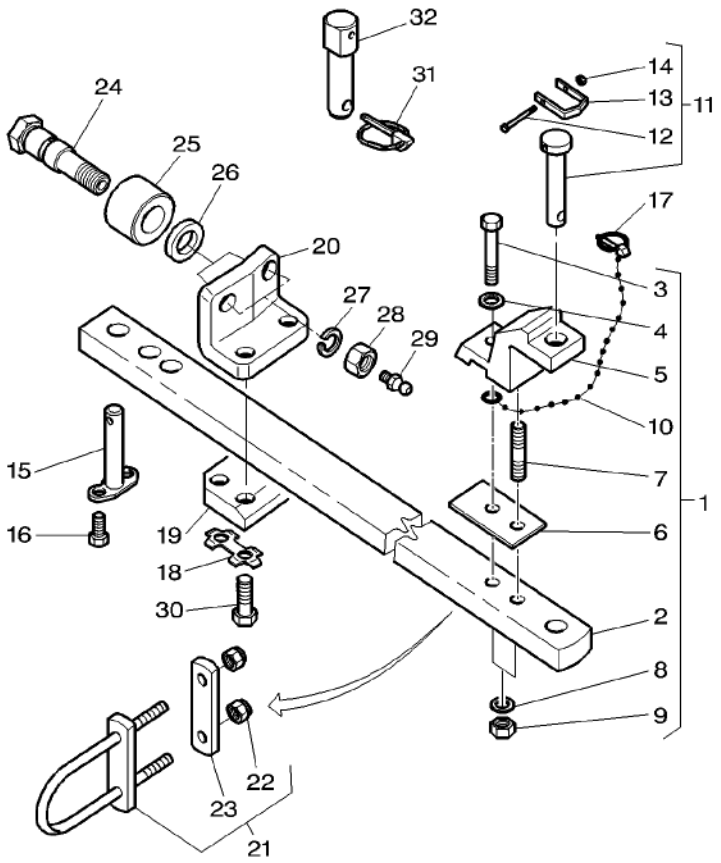

27	353443X1		2	LOCK WASHER	RONDELLE FREIN ROSETTA DENTELL.	FEDERRING ARANDELA GROWER
28	375102X1		2	NUT UNC	ECROU UNC DADO UNC	MUTTER UNC TUERCA UNC
29	364461X1		2	GREASE NIPPLE	GRAISSEUR DROIT INGRASSAT.	FETT–NIPPEL ENGRASADOR
30	391332X1	M10 X 100 MM	4	HEX. SOCK. SCREW	VIS TETE HEX VITE PARKER	ZYLINDERSCHRAUBE TORN.CAB.HUECA
31	3011352X1		2	PIN	GOUPILLE PERNO	BOLZEN PASADOR
32	3010560X1		2	CLEVIS PIN	AXE PERNO D'ATTACCO	SPLINTBOLZEN BULON CILINDRICO

Swinging Drawbar
Barre Oscillante
Zugpendel
Barra Trazione Orientabile
Barra De Tiro Oscilante

40-90

Sae Standard
Norme Sae
Sae Normung
Unificazione Sae
Normalizacion Sae

1-WQ12-030-A

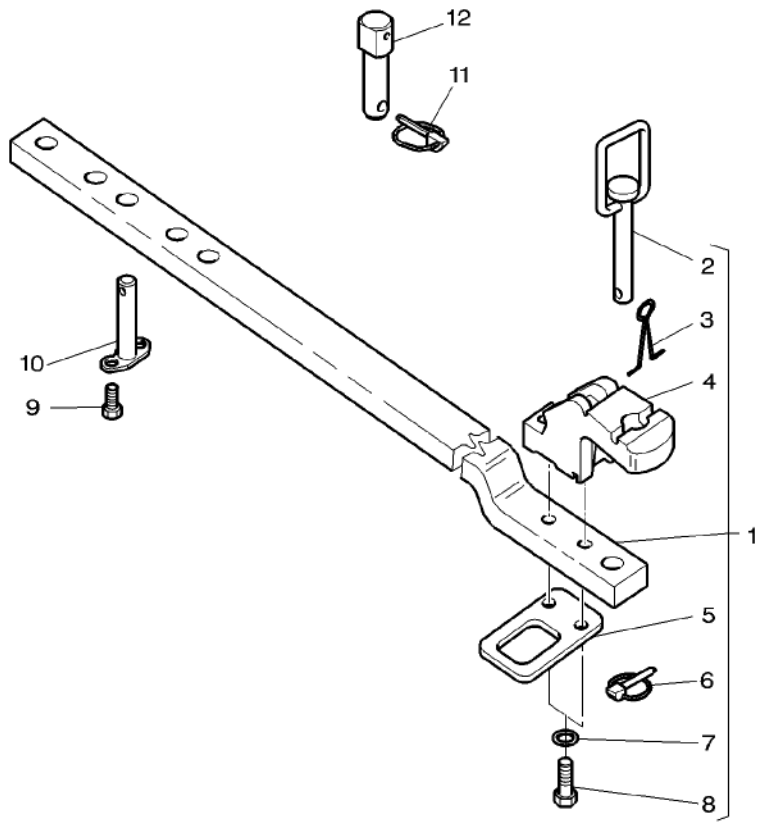

1	4277061M91		1	DRAWBAR	BARRE ATTELAGE BARRA DI TRAINO	ZUGPENDEL BARRA D'ENGANCHE
2	3795142M1	1	1	PIN HITCH	BROCHE PERNO ATTACCO	KUPPLUNGSBOLZEN PASADOR ENGAN.
3	3795143M1	1	1	SPRING	RESSORT MOLLA	FEDER RESORTE
4	3795141M1	1	1	CLEVIS	CHAPE GANCIO D'ATTACCO	GABELSTUECK GANCHO SEGURI.
5	3795530M1	1	1	SHACKLE	MANILLE ANELLO TRAZIONE	SCHAEKEL TRABA
6	3581687M1	1	1	PIN	GOUPILLE PERNO	BOLZEN PASADOR
7	385365X1	1	2	WASHER	RONDELLE RONDELLA	UNTERLEGSCHEIBE ARANDELA
8	3010945X1	1 M20 X 105	2	HEX. SOCK. SCREW	VIS TETE HEX VITE PARKER	ZYLINDERSCHRAUBE TORN.CAB.HUECA
9	3009492X1	M10 X 25	2	HEX. SOCK. SCREW	VIS TETE HEX VITE PARKER	ZYLINDERSCHRAUBE TORN.CAB.HUECA
10	H816500120020		1	PLUG.	AXE. PLUG.	ABSTECKTEIL PLUG.
11	3792034M1		2	PIN	GOUPILLE PERNO	BOLZEN PASADOR
12	716501120030		2	PIN	GOUPILLE PERNO	BOLZEN PASADOR

Swinging Drawbar	Piton Attachment	40-95
Barre Oscillante	Accrochage Par Piton	
Zugpendelschwenker	Zugbolzen Zusatzeinricht	
Barra Traino	Attacco A Occhione	
Barra De Tiro Oscilante	Aditamento De Pivote Y Tejuelo	

1-WQ25-001-A

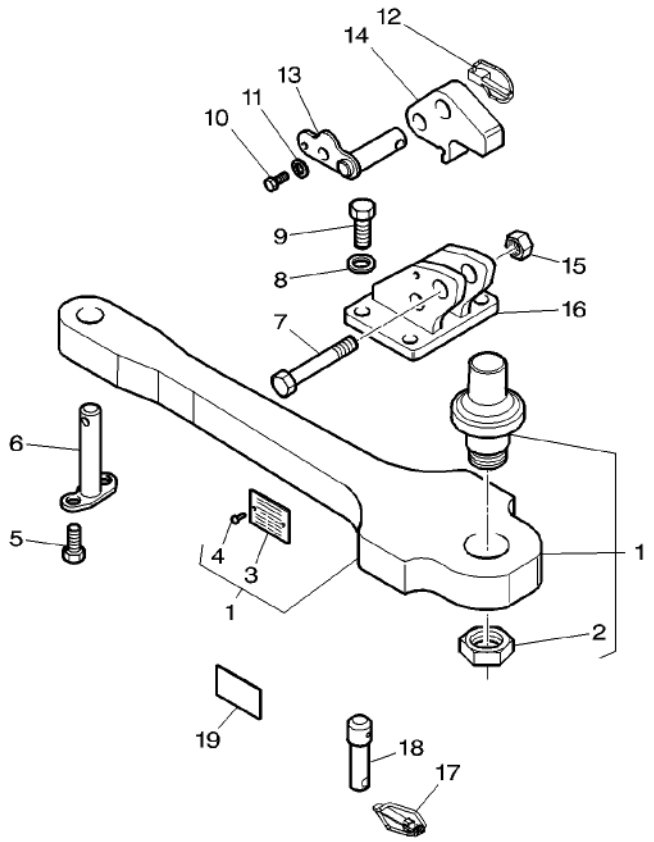

1	H716501900101		1	PITON PITON	PITON FIX PITON
2	199870030160	1	1	NUT DADO	ECROU MUTTER TUERCA
3	716501900140	1	1	IDENTITY PLATE PIASTRA IDENTIF.	PLAQUE DE TYPE TYPENSCHILD PLACA IDENTIF.
4	X419432887000	1	2	NAIL, NOTCHED CHIODO	CLOU CRANTE KERBNAGEL GARRA DENTADA
5	3009492X1	M10 X 25	2	HEX. SOCK. SCREW VITE PARKER	VIS TETE HEX ZYLINDERSCHRAUBE TORN.CAB.HUECA
6	H816500120020		1	PLUG. PLUG.	AXE. ABSTECKTEIL PLUG.
7	391332X1	M20 X 100	1	HEX. SOCK. SCREW VITE PARKER	VIS TETE HEX ZYLINDERSCHRAUBE TORN.CAB.HUECA
8	339377X1		4	LOCK WASHER ROSETTA DENTELL.	RONDELLE FREIN FEDERRING ARANDELA GROWER
9	**339275X1**	M16 X 35	4	HEX. SOCK. SCREW VITE PARKER	VIS TETE HEX ZYLINDERSCHRAUBE TORN.CAB.HUECA
10	3009285X1	M8 X 16	1	SCREW VITE	VIS SCHRAUBE TORNILLO
11	281100350040		1	BUSH BOCCOLA	BAGUE BUCHSE CASQUILLO
12	3382826M1		1	PIN PERNO	GOUPILLE BOLZEN PASADOR
13	H916501120061		1	PIN PERNO	GOUPILLE BOLZEN PASADOR
14	916501120220		1	LATCH CHIAVISTELLO	VERROU RIEGEL CERROJO
15	3009747X1		1	NUT DADO	ECROU MUTTER TUERCA
16	H916501120070		1	SUPPORT SUPPORTO	SUPPORT LAGERUNG DISPOS.DE SOSTEN
17	3792034M1		2	PIN PERNO	GOUPILLE BOLZEN PASADOR
18	916501120050		2	PIN PERNO	GOUPILLE BOLZEN PASADOR
19	916501120070		2	DECAL DECALCOMANIA	DECALCOMANIE AUFKLEBER CALCOMANIA

Swinging Drawbar Barre Oscillante Zugpendelschwenker Barra Traino Barra De Tiro Oscilante	Ball And Sscket Hitch Attelage A Rotule Gelenkkupplung Attacco A Giunto A Sfera Enganche De Rotula	40-100

1-WQ26-001-A

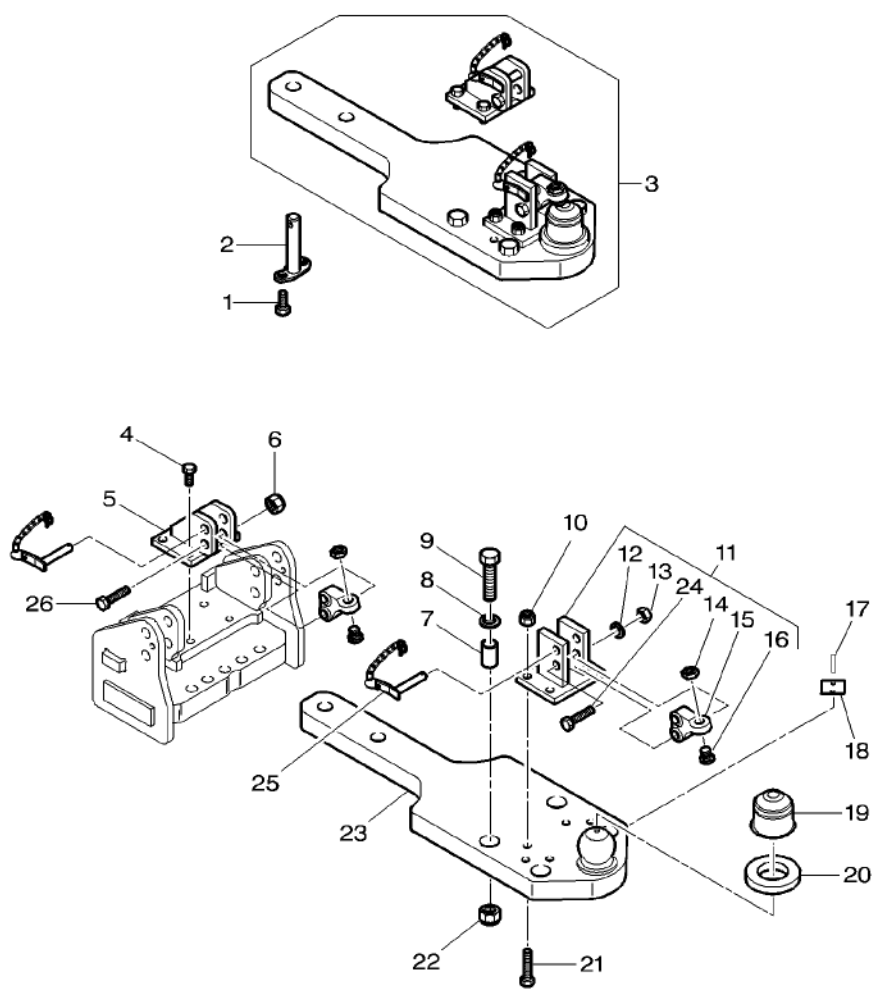

1	3009492X1	M10 X 25	2	HEX. SOCK. SCREW	VIS TETE HEX VITE PARKER	ZYLINDERSCHRAUBE TORN.CAB.HUECA
2	H816500120020		1	PLUG.	AXE. PLUG.	ABSTECKTEIL PLUG.
3	G916501120200		1	SUPPORT	SUPPORT SUPPORTO	LAGERUNG DISPOS.DE SOSTEN
4	X487545141000	3	4	HEX. SOCK. SCREW	VIS TETE HEX VITE PARKER	ZYLINDERSCHRAUBE TORN.CAB.HUECA
5	F916501120020	3	1	CONSOLE	CONSOLE CONSOLE	KONSOLE CONSOLA
6	X434105040000	3	2	NUT	ECROU DADO	MUTTER TUERCA
7	F718501900020	3	2	BUSH ASSY	BAGUE ASSEMBLEE BOCCOLA COMPLETA	BUECHSE CJTO.CASQUILLO
8	F117501901040	3	2	DISC	DISQUE DISCO	SCHEIBE DISCO
9	F718501900030	3	2	SCREW	VIS VITE	SCHRAUBE TORNILLO
10	X430004000000	3	4	NUT	ECROU DADO	MUTTER TUERCA
11	F117501901020	3	1	CONTROL LOCK	BLOCAGE COMMANDE FERMO DI CONTROL	VERRIEGELUNG BLOCADOR CONTROL
12	X520807801000	11	1	LOCK WASHER	RONDELLE FREIN ROSETTA DENTELL.	FEDERRING ARANDELA GROWER
13	F916501120080	11	1	NUT	ECROU DADO	MUTTER TUERCA
14	F916501120060	11	1	NUT	ECROU DADO	MUTTER TUERCA
15	F916501120050	11	1	TRIGGER	GACHETTE SCATTO	DRUECKER LEVA DE FRENO
16	F916501120070	11	1	ADJUSTING SCREW	VIS REGLAGE VITE DI REGOLAZ.	EINSTELLSCHRAUBE TORNILLO AJUSTA
17	X419432987000	3	2	NAIL, NOTCHED	CLOU CRANTE CHIODO	KERBNAGEL GARRA DENTADA
18	F916501120040	3	1	IDENTITY PLATE	PLAQUE DE TYPE PIASTRA IDENTIF.	TYPENSCHILD PLACA IDENTIF.
19	F117501901050	3	1	CAP	CHAPEAU CAPUCHON	KAPPE TAPA
20	F117501901060	3	1	SEAL	JOINT ETANCHEITE ANELLO RACCORD	DICHTRING ARENDELA D'JUNTA
21	X486546505000	3	4	HEX. SOCK. SCREW	VIS TETE HEX VITE PARKER	ZYLINDERSCHRAUBE TORN.CAB.HUECA
22	X430005803000	3	2	NUT	ECROU DADO	MUTTER TUERCA
23	F916501120010	3	1	FRAME	BATI CORNICE	RAHMEN BASTIDOR
24	X486556000000	3	1	HEX. SOCK. SCREW	VIS TETE HEX VITE PARKER	ZYLINDERSCHRAUBE TORN.CAB.HUECA
25	F916501120030	3	1	BOLT	BOULON BULLONE	MASCH.SCHRAUBE ESPIGA/BULON
26	X486555905000	3	1	HEX. SOCK. SCREW	VIS TETE HEX VITE PARKER	ZYLINDERSCHRAUBE TORN.CAB.HUECA

Swinging Drawbar Support
Support De Barre Oscillante
Zugstangestuetze
Support De Barra Oscillante
Support De Barra De Tiro

40-105

1-WQ36-024-A

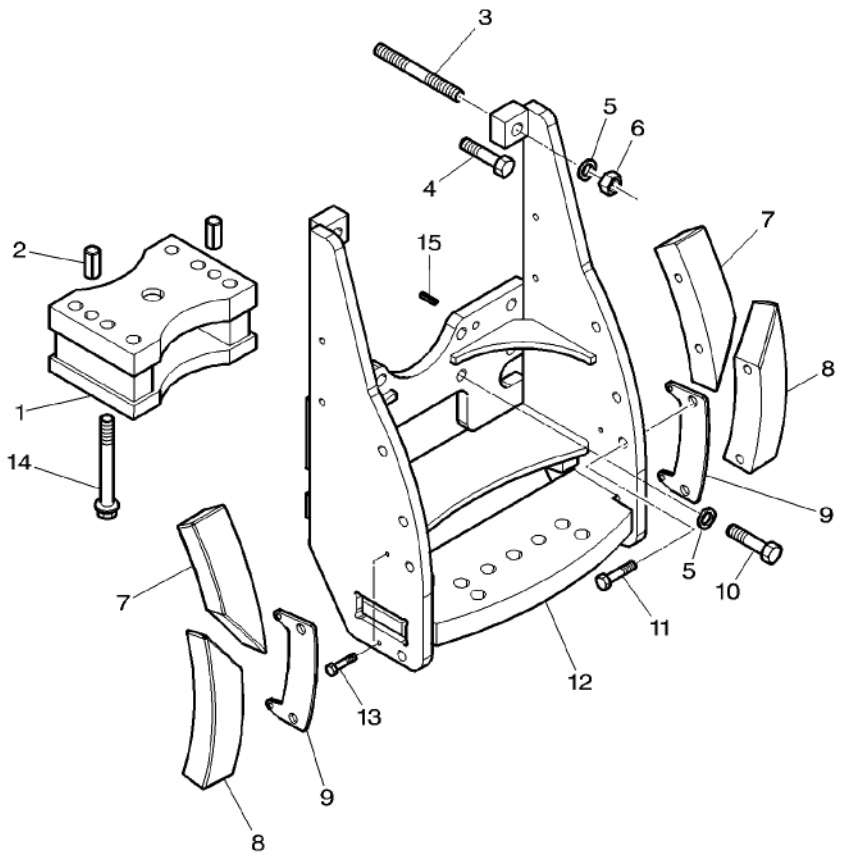

1	H920500120100		1	FULCRUM	POINT D APPUI FULCRO PUNTO DE GIRO
2	X505585617000		2	DOWEL	PLOT SPINA ZYLINDERSTIFT CENTRAJE
3	3011546X1	M18 X 135	6	STUD	GOUJON PRIGIONIERO STEHBOLZEN CHAVETA ROSCADO
4	3011545X1	M18 X 110	2	HEX. SOCK. SCREW	VIS TETE HEX VITE PARKER ZYLINDERSCHRAUBE TORN.CAB.HUECA
5	339648X1	➡| 05-DEC-2004	10	LOCK WASHER	RONDELLE FREIN ROSETTA DENTELL. FEDERRING ARANDELA GROWER
6	3011390X1		6	NUT	ECROU DADO MUTTER TUERCA
7	926871040020	▶ ▲	1	SKID	SABOT DE ROUE SCIVOLO KUFE TABLON
7	926871040010	◀ ▲	1	SKID	SABOT DE ROUE SCIVOLO KUFE TABLON
8	926871040040	▶ ▼	1	SKID	SABOT DE ROUE SCIVOLO KUFE TABLON
8	926871040030	◀ ▼	1	SKID	SABOT DE ROUE SCIVOLO KUFE TABLON
9	926871040060		2	PLATE	PLAQUE PIASTRA PLATTE PLATO
10	3011538X1	M18 X 50	4	HEX. SOCK. SCREW	VIS TETE HEX VITE PARKER ZYLINDERSCHRAUBE TORN.CAB.HUECA
11	3384131M1	M16 X 55	4	HEX. SOCK. SCREW	VIS TETE HEX VITE PARKER ZYLINDERSCHRAUBE TORN.CAB.HUECA
11	3010885X1	M16 X 45	4	HEX. SOCK. SCREW	VIS TETE HEX VITE PARKER ZYLINDERSCHRAUBE TORN.CAB.HUECA
12	H920501120110		1	FRAME	BATI CORNICE RAHMEN BASTIDOR
13	339337X1	M8 X 30	4	HEX. SOCK. SCREW	VIS TETE HEX VITE PARKER ZYLINDERSCHRAUBE TORN.CAB.HUECA
14	3011194X1	M20 X 150	6	SCREW	VIS VITE SCHRAUBE TORNILLO
15	X505559459000		2	DOWEL	PLOT SPINA ZYLINDERSTIFT CENTRAJE

Swinging Drawbar Support
Support De Barre Oscillante
Zugstangestuetze
Support De Barra Oscillante
Support De Barra De Tiro

40-110

Iso Standard – With Rollers
Norme Iso – A Galets
Iso Normung – Mit Rollen
Unificazione Iso – Con Rullos
Normalizacion Iso – Con Rodillos

1-WQ36-026-A

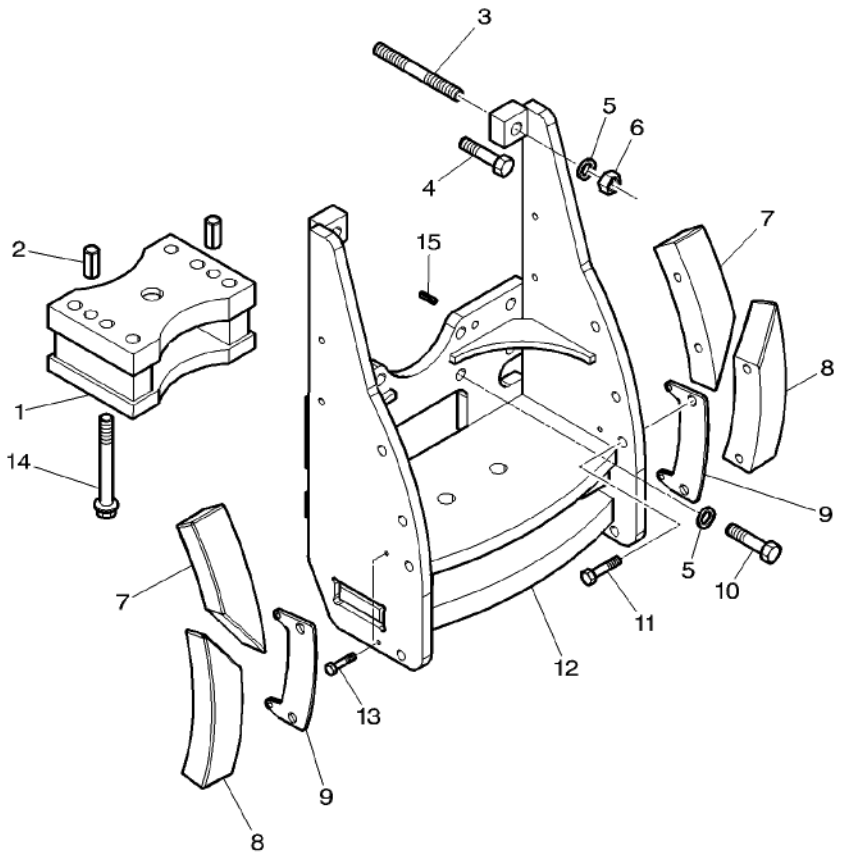

1	H920500120100		1	FULCRUM	POINT D APPUI FULCRO	STUETZBOCK PUNTO DE GIRO
2	X505585617000		2	DOWEL	PLOT SPINA	ZYLINDERSTIFT CENTRAJE
3	3011546X1	M18 X 135	6	STUD	GOUJON PRIGIONIERO	STEHBOLZEN CHAVETA ROSCADO
4	3011545X1	M18 X 110	2	HEX. SOCK. SCREW	VIS TETE HEX VITE PARKER	ZYLINDERSCHRAUBE TORN.CAB.HUECA
5	339648X1	➡ 05–DEC–2004	10	LOCK WASHER	RONDELLE FREIN ROSETTA DENTELL.	FEDERRING ARANDELA GROWER
6	3011390X1		6	NUT	ECROU DADO	MUTTER TUERCA
7	926871040020	▶ ▲	1	SKID	SABOT DE ROUE SCIVOLO	KUFE TABLON
7	926871040010	◀ ▲	1	SKID	SABOT DE ROUE SCIVOLO	KUFE TABLON
8	926871040040	▶ ▼	1	SKID	SABOT DE ROUE SCIVOLO	KUFE TABLON
8	926871040030	◀ ▼	1	SKID	SABOT DE ROUE SCIVOLO	KUFE TABLON
9	926871040060		2	PLATE	PLAQUE PIASTRA	PLATTE PLATO
10	3011538X1	M18 X 50	4	HEX. SOCK. SCREW	VIS TETE HEX VITE PARKER	ZYLINDERSCHRAUBE TORN.CAB.HUECA
11	3384131M1	M16 X 55	4	HEX. SOCK. SCREW	VIS TETE HEX VITE PARKER	ZYLINDERSCHRAUBE TORN.CAB.HUECA
11	3010885X1	M16 X 45	4	HEX. SOCK. SCREW	VIS TETE HEX VITE PARKER	ZYLINDERSCHRAUBE TORN.CAB.HUECA
12	4276505M91		1	SUPPORT	SUPPORT SUPPORTO	LAGERUNG DISPOS.DE SOSTEN
13	339337X1	M8 X 30	4	HEX. SOCK. SCREW	VIS TETE HEX VITE PARKER	ZYLINDERSCHRAUBE TORN.CAB.HUECA
14	3011194X1	M20 X 150	6	SCREW	VIS VITE	SCHRAUBE TORNILLO
15	X505559459000		2	DOWEL	PLOT SPINA	ZYLINDERSTIFT CENTRAJE

Swinging Drawbar Support
Support De Barre Oscillante
Zugstangestuetze
Support De Barra Oscillante
Support De Barra De Tiro

40-115

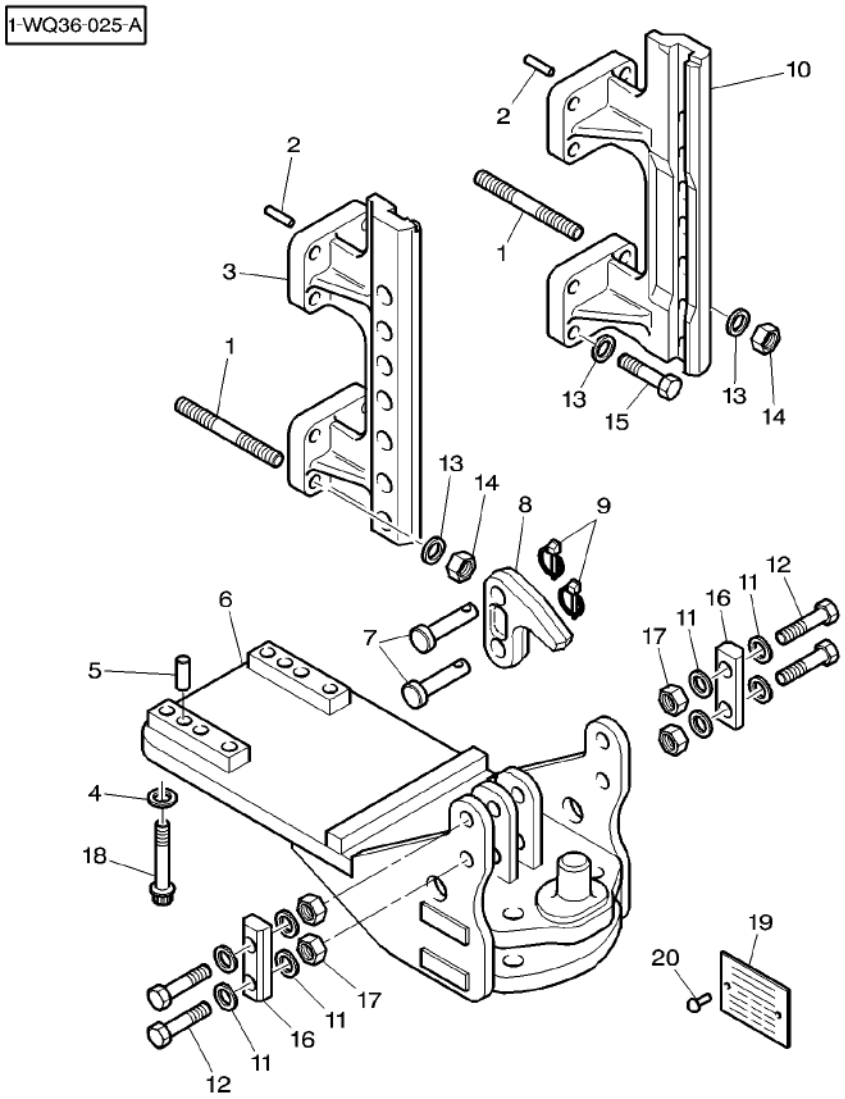

1	3011546X1	M18 X 135	8	STUD	GOUJON PRIGIONIERO	STEHBOLZEN CHAVETA ROSCADO
2	X505559459000		4	DOWEL	PLOT SPINA	ZYLINDERSTIFT CENTRAJE
3	816500060041	◀	1	SLIDE RAIL	RAIL GLISSEMENT RINGHIERA	GLEITSCHIENE CARRIL TENSOR
4	385365X1		6	WASHER	RONDELLE RONDELLA	UNTERLEGSCHEIBE ARANDELA
5	X505585617000		2	DOWEL	PLOT SPINA	ZYLINDERSTIFT CENTRAJE
6	4271570M92		1	SUPPORT	SUPPORT SUPPORTO	LAGERUNG DISPOS.DE SOSTEN
7	3797361M1		2	CLEVIS PIN	AXE PERNO D'ATTACCO	SPLINTBOLZEN BULON CILINDRICO
8	3797125M1		1	HOOK	CROCHET GANCIO	HAKEN GANCHO
9	3382824M1		2	PIN	GOUPILLE PERNO	BOLZEN PASADOR
10	816500060051	▶	1	SLIDE RAIL	RAIL GLISSEMENT RINGHIERA	GLEITSCHIENE CARRIL TENSOR
11	3010505X1		8	WASHER	RONDELLE RONDELLA	UNTERLEGSCHEIBE ARANDELA
12	3580796M1	M22 X 100	4	HEX. SOCK. SCREW	VIS TETE HEX VITE PARKER	ZYLINDERSCHRAUBE TORN.CAB.HUECA
13	339648X1		16	LOCK WASHER	RONDELLE FREIN ROSETTA DENTELL.	FEDERRING ARANDELA GROWER
14	3011390X1		8	NUT	ECROU DADO	MUTTER TUERCA
15	3011517X1	M18 X 55	8	HEX. SOCK. SCREW	VIS TETE HEX VITE PARKER	ZYLINDERSCHRAUBE TORN.CAB.HUECA
16	4271601M1		2	THRUSTER	ARRETOIR SPINGITORE	DRUCKRING PROPULSOR
17	3581642M1		4	NUT	ECROU DADO	MUTTER TUERCA
18	3010563X1	M20 X 90	6	SCREW	VIS VITE	SCHRAUBE TORNILLO
19	816500060090		1	IDENTITY PLATE	PLAQUE DE TYPE PIASTRA IDENTIF.	TYPENSCHILD PLACA IDENTIF.
20	X419432887000		2	NAIL, NOTCHED	CLOU CRANTE CHIODO	KERBNAGEL GARRA DENTADA

Swinging Drawbar Support
Support De Barre Oscillante
Zugstangestuetze
Support De Barra Oscillante
Support De Barra De Tiro

40-120

With Long Hay Ladder
Avec Echelle Longue
Mit Longladegatter
Con Lunga Guida Scala
Con Longituda Guia Scala

1-WQ36-027-A

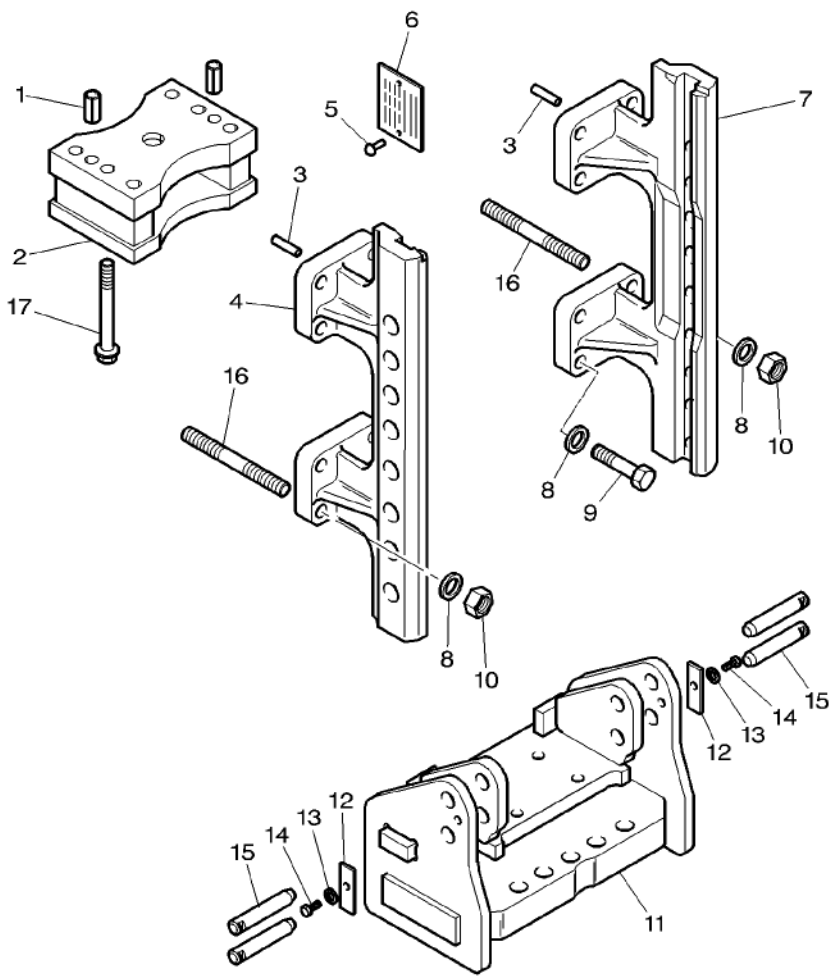

1	X505585617000		2	DOWEL	PLOT SPINA	ZYLINDERSTIFT CENTRAJE
2	H920500120100		1	FULCRUM	POINT D APPUI FULCRO	STUETZBOCK PUNTO DE GIRO
3	X505559459000		4	DOWEL	PLOT SPINA	ZYLINDERSTIFT CENTRAJE
4	816500060012	◀	1	SLIDE RAIL	RAIL GLISSEMENT RINGHIERA	GLEITSCHIENE CARRIL TENSOR
5	X419432887000		2	NAIL, NOTCHED	CLOU CRANTE CHIODO	KERBNAGEL GARRA DENTADA
6	816500060090		1	IDENTITY PLATE	PLAQUE DE TYPE PIASTRA IDENTIF.	TYPENSCHILD PLACA IDENTIF.
7	816500060022	▶	1	SLIDE RAIL	RAIL GLISSEMENT RINGHIERA	GLEITSCHIENE CARRIL TENSOR
8	339648X1	➡| 05-DEC-2004	16	LOCK WASHER	RONDELLE FREIN ROSETTA DENTELL.	FEDERRING ARANDELA GROWER
9	3011517X1	M18 X 55	8	HEX. SOCK. SCREW	VIS TETE HEX VITE PARKER	ZYLINDERSCHRAUBE TORN.CAB.HUECA
10	3011390X1		8	NUT	ECROU DADO	MUTTER TUERCA
11	H916501120102		1	FRAME	BATI CORNICE	RAHMEN BASTIDOR
12	716501120200		2	LOCKING PLATE	PLAQUE BLOCAGE PIASTRA DI FERMO	SICH.BLECH PLACA DE BLOCAJE
13	339374X1		2	LOCK WASHER	RONDELLE FREIN ROSETTA DENTELL.	FEDERRING ARANDELA GROWER
14	339123X1	M8 X 20	2	HEX. SOCK. SCREW	VIS TETE HEX VITE PARKER	ZYLINDERSCHRAUBE TORN.CAB.HUECA
15	916501120030		2	PIN	GOUPILLE PERNO	BOLZEN PASADOR
16	3011546X1	M18 X 135	8	STUD	GOUJON PRIGIONIERO	STEHBOLZEN CHAVETA ROSCADO
17	3011194X1	M20 X 150	6	SCREW	VIS VITE	SCHRAUBE TORNILLO

Long Hay Ladder
Echelle Longue
Longladegatter
Lunga Guida Scala
Longituda Guia Scala

40-125

1-WQ30-001-B

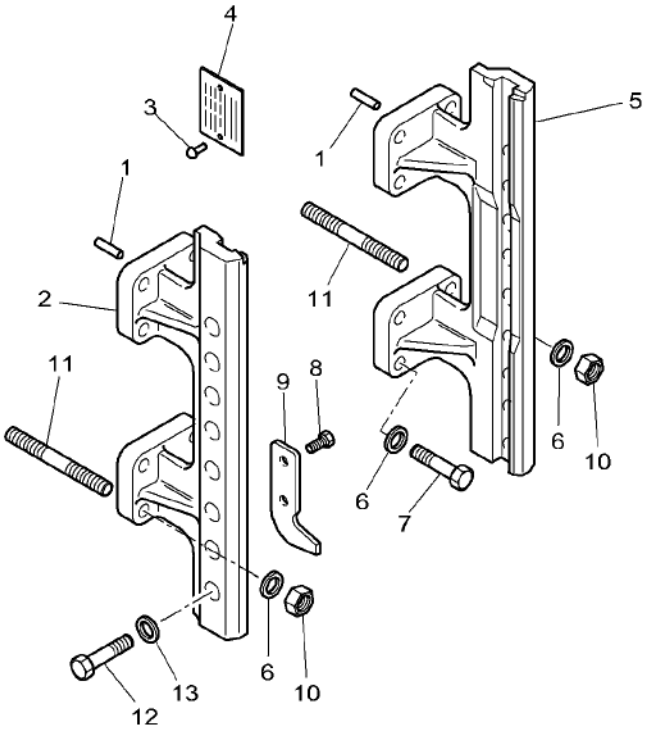

1	X505559459000		2	DOWEL	PLOT SPINA	ZYLINDERSTIFT CENTRAJE
2	816500060012	◀	1	SLIDE RAIL	RAIL GLISSEMENT RINGHIERA	GLEITSCHIENE CARRIL TENSOR
3	X419432887000		2	NAIL, NOTCHED	CLOU CRANTE CHIODO	KERBNAGEL GARRA DENTADA
4	816500060090		1	IDENTITY PLATE	PLAQUE DE TYPE PIASTRA IDENTIF.	TYPENSCHILD PLACA IDENTIF.
5	816500060022	▶	1	SLIDE RAIL	RAIL GLISSEMENT RINGHIERA	GLEITSCHIENE CARRIL TENSOR
6	339648X1	➡| 05-DEC-2004	10	LOCK WASHER	RONDELLE FREIN ROSETTA DENTELL.	FEDERRING ARANDELA GROWER
7	3011517X1	M18 X 55	8	HEX. SOCK. SCREW	VIS TETE HEX VITE PARKER	ZYLINDERSCHRAUBE TORN.CAB.HUECA
8	3009491X1	M10 X 20	2	HEX. SOCK. SCREW	VIS TETE HEX VITE PARKER	ZYLINDERSCHRAUBE TORN.CAB.HUECA
9	816500060070		1	STOP	BUTEE STOP	ANSCHLAG PARO
10	3011390X1		8	NUT	ECROU DADO	MUTTER TUERCA
11	3011546X1	M18 X 135	8	STUD	GOUJON PRIGIONIERO	STEHBOLZEN CHAVETA ROSCADO
12*	3010757X1	M22 X 70	4	HEX. SOCK. SCREW	VIS TETE HEX VITE PARKER	ZYLINDERSCHRAUBE TORN.CAB.HUECA
13*	392913X1	∅ 23-39 X 3	4	WASHER	RONDELLE RONDELLA	UNTERLEGSCHEIBE ARANDELA

Swinging Drawbar Tidying
Rangement Barre Oscillante
Zugpendelaufraumen
Ordinamento Barra Trazione Orientabile
Arreglo Barra De Tiro Oscilante

40-130

With Dromone Automatic Hook
Avec Crochet Automatique Dromone
Mit Automatish Zughagen Dromone
Con Gangio Automatico Dromone
Con Gancho Automatico Dromone

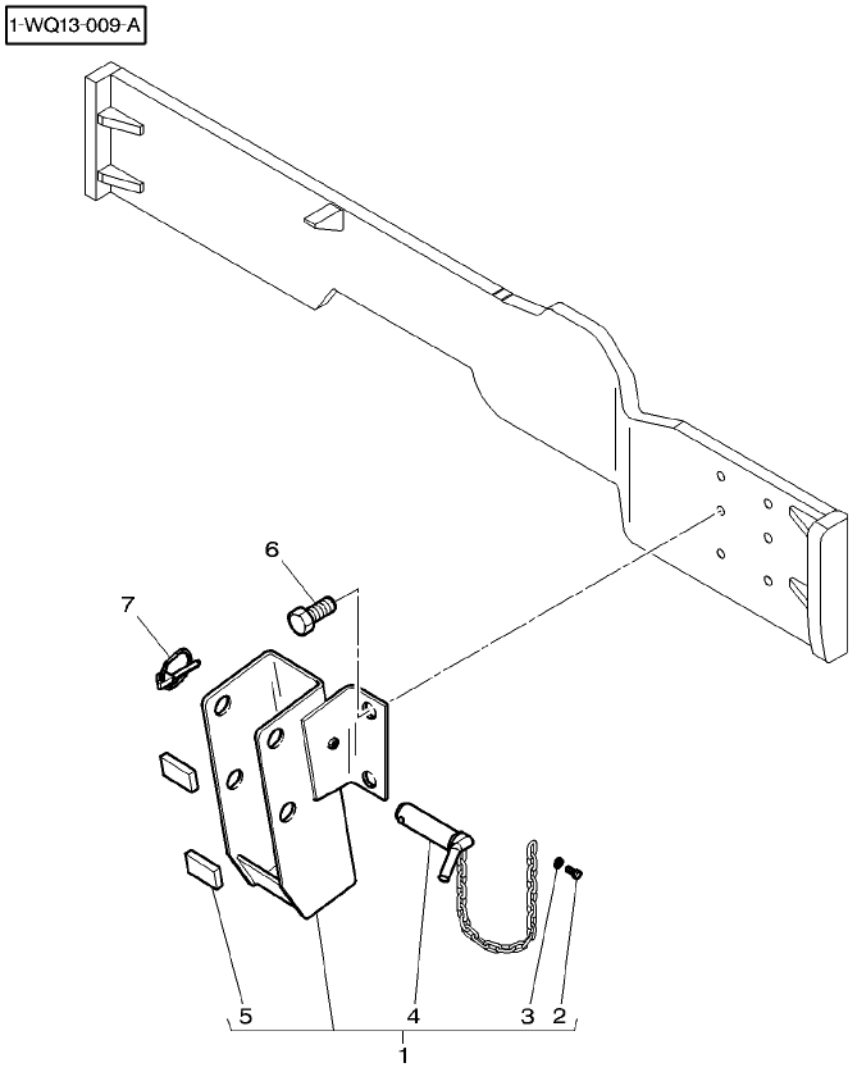

1	4273764M91		1	STUFFING BOX	BOITE RANGEMENT CONTENIT.	STOPFBUECHSE CASQUILLO
2	339560X1	1 M6 X 16	1	HEX. SOCK. SCREW	VIS TETE HEX VITE PARKER	ZYLINDERSCHRAUBE TORN.CAB.HUECA
3	390971X1	1	1	WASHER	RONDELLE RONDELLA	UNTERLEGSCHEIBE ARANDELA
4	3788588M91	1	1	CLEVIS PIN	AXE PERNO D'ATTACCO	SPLINTBOLZEN BULON CILINDRICO
5	3782881M1	1	2	GASKET	JOINT GUARNIZIONE	DICHTSCHEIBE EMPAQUETADURA.
6	1441704X1	M20 X 40	2	HEX. SOCK. SCREW	VIS TETE HEX VITE PARKER	ZYLINDERSCHRAUBE TORN.CAB.HUECA
7	3382824M1		1	PIN	GOUPILLE PERNO	BOLZEN PASADOR

Hitch
Crochet D'Attelage
Anhaengekupplung
Attacco
Enganche

40-135

1-WQ18-021-B

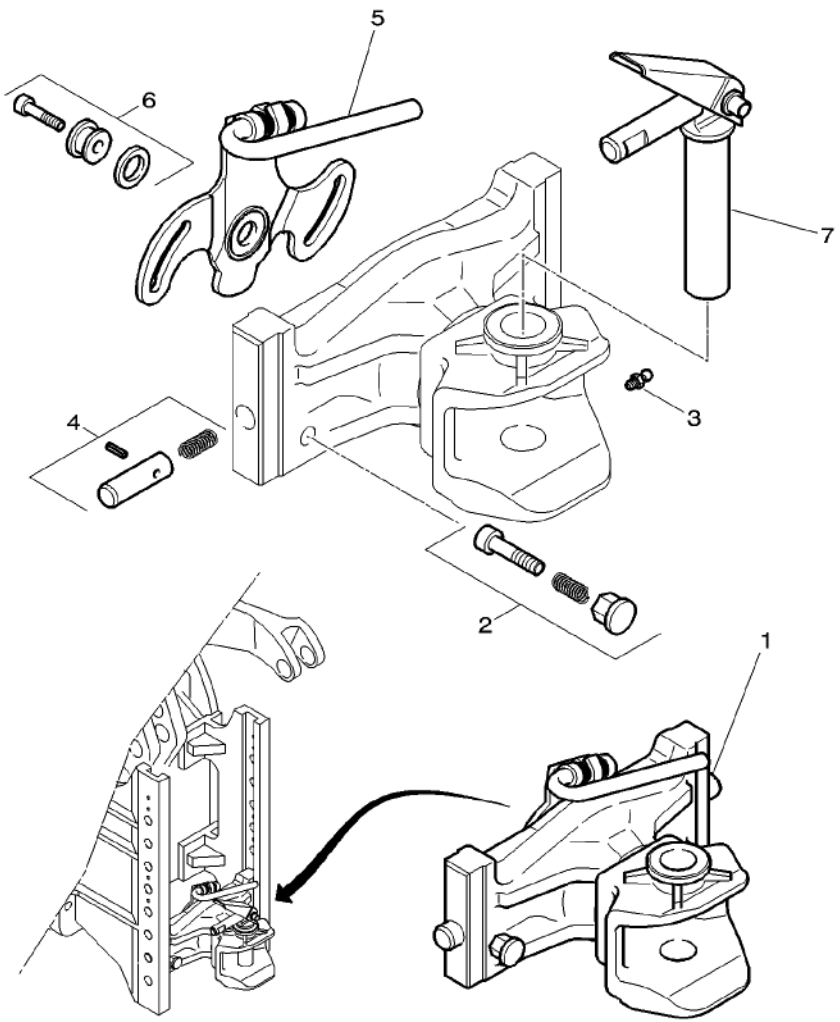

1	G816500071012		1	HITCH	ATTELAGE ATTACCO	ANHAENGEKUPPLUNG ENGANCHE
2	F816500070120	1	1	SECURING PIECE	PIECE SECURITE SECURING PIECE	SICHERUNGSTEIL SECURING PIECE
3	X662516102000	1	1	GREASE NIPPLE	GRAISSEUR DROIT INGRASSAT.	FETT-NIPPEL ENGRASADOR
4	F816500070140	1	1	PIN	GOUPILLE PERNO	BOLZEN PASADOR
5	F816500070130	1	1	DISC	DISQUE DISCO	SCHEIBE DISCO
6	F816500070150	1	1	KIT, ATTACHING.	KIT ACCESSOIRE KIT ATTACCO	ANBAUSATZ JGO.DE FIJACION
7	4271199M1		1	CLEVIS PIN	AXE PERNO D'ATTACCO	SPLINTBOLZEN BULON CILINDRICO

Hitch
Crochet D'Attelage
Anhaengekupplung
Attacco
Enganche

40-140 (I)

1-WQ18-022-A

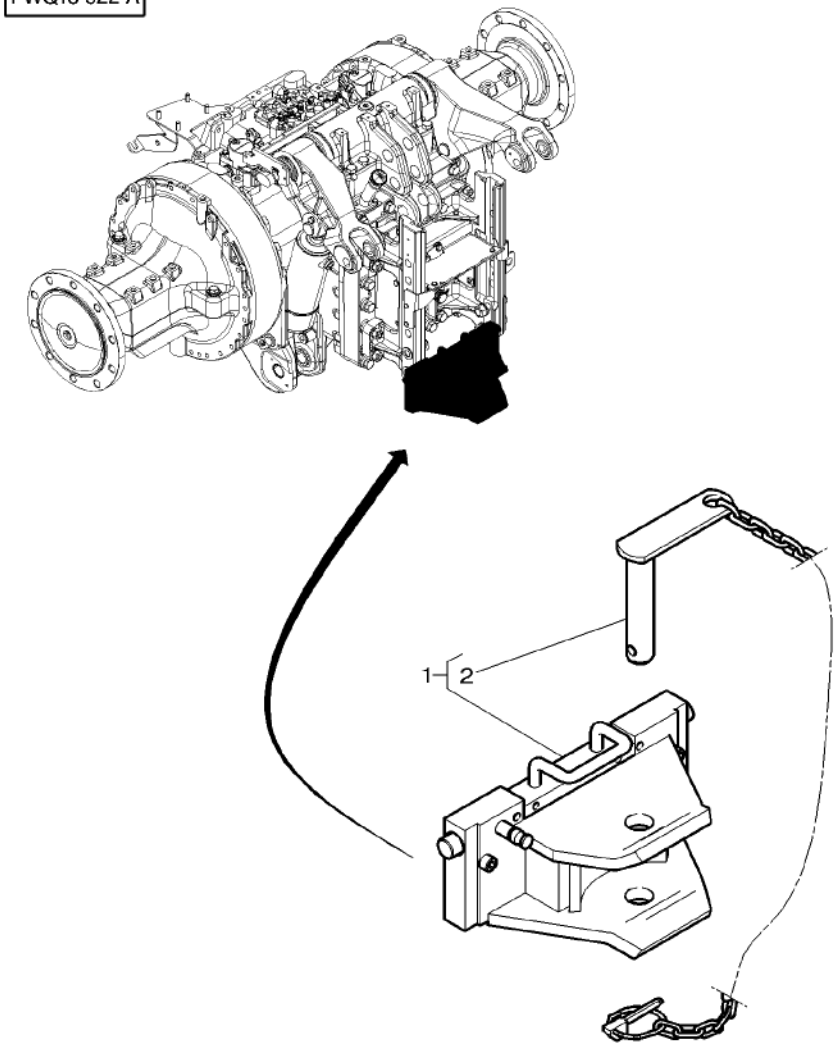

1	4276935M91	[A] 6T	1	CLEVIS	CHAPE GANCIO D'ATTACCO	GABELSTUECK GANCHO SEGURI.
2	4276937M1	1	1	PIN HITCH	BROCHE PERNO ATTACCO	KUPPLUNGSBOLZEN PASADOR ENGAN.

[A] DETAILS TO BE ADVISED
DETAIL COMMUNIQUE ULTERIEUREMENT
EINZELNE WIRD BEKANNTGEGEBEN
DA AVVISARE PER PARTICOLARI
AVISAR PARA DETAILLE

Hitch
Crochet D'Attelage
Anhaengekupplung
Attacco
Enganche

40-145 (I)

1-WQ18-023-A

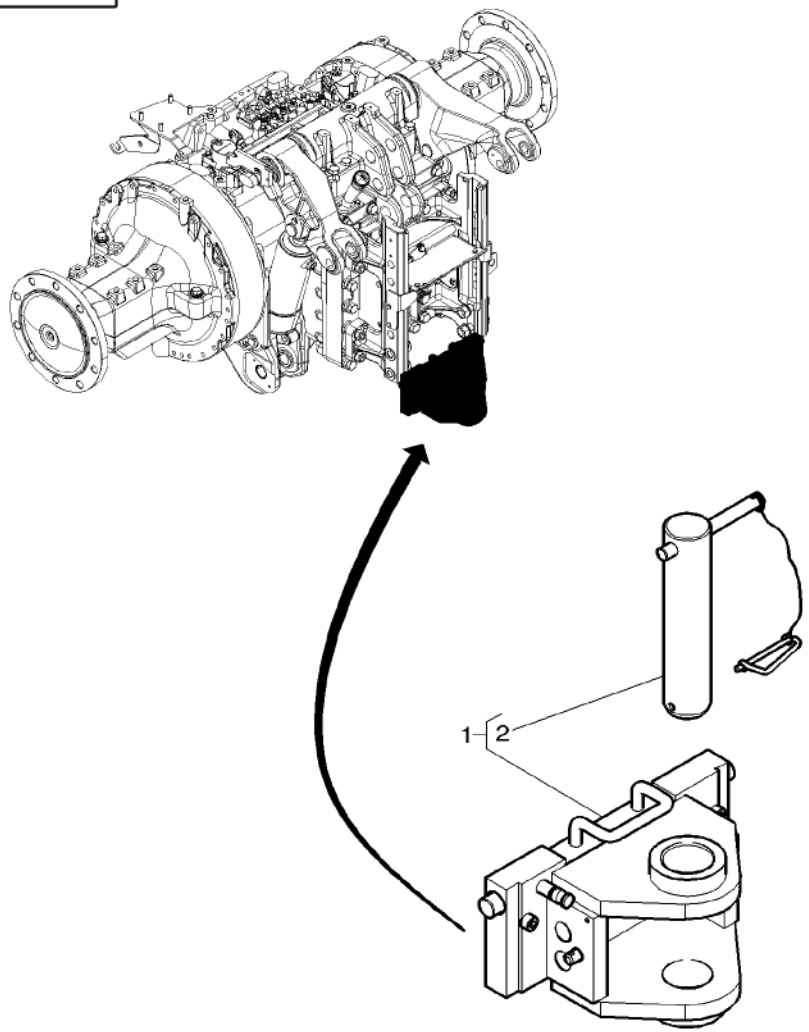

1	4276938M91	[A] 20T	1 CLEVIS	CHAPE GANCIO D'ATTACCO	GABELSTUECK GANCHO SEGURI.
2	4276940M1	1	1 PIN HITCH	BROCHE PERNO ATTACCO	KUPPLUNGSBOLZEN PASADOR ENGAN.

[A] DETAILS TO BE ADVISED
DETAIL COMMUNIQUE ULTERIEUREMENT
EINZELNE WIRD BEKANNTGEGEBEN
DA AVVISARE PER PARTICOLARI
AVISAR PARA DETAILLE

Hitch
Crochet D'Attelage
Anhaengekupplung
Attacco
Enganche

40-150 (D)

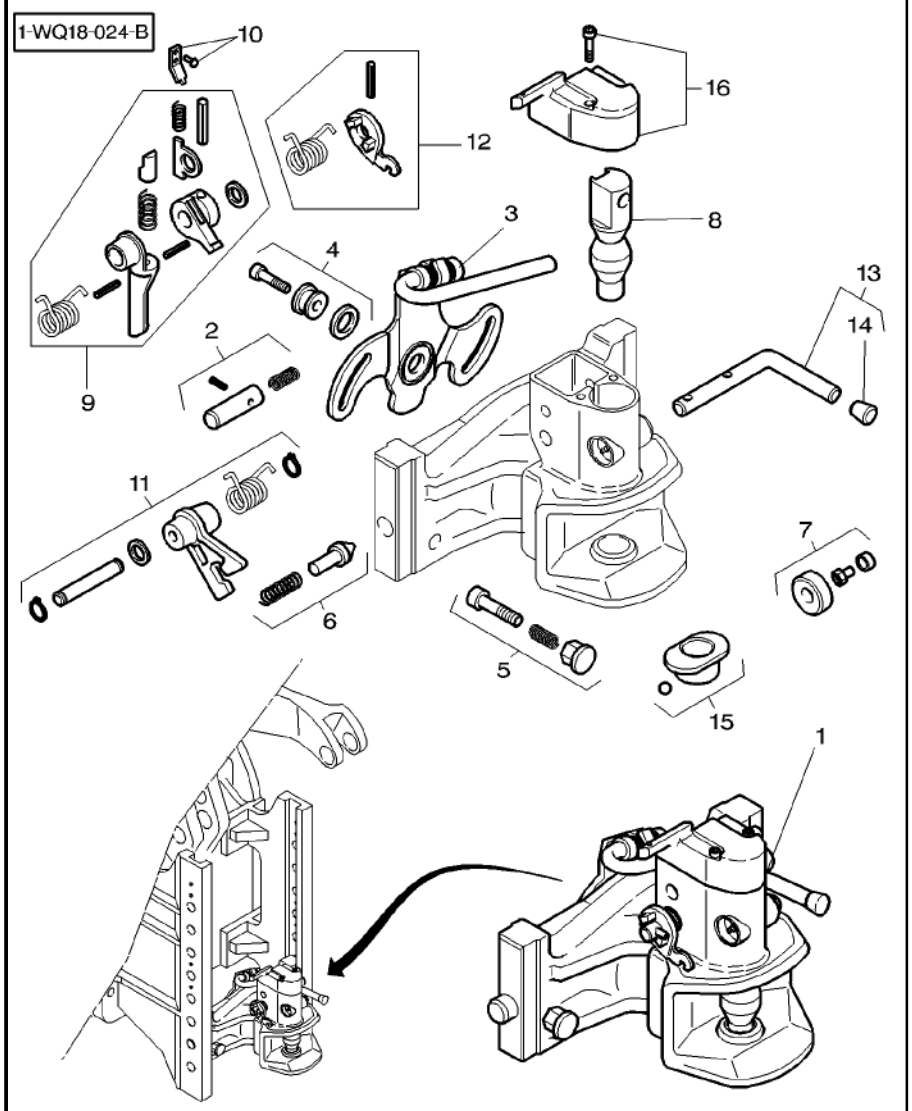

1	G816500072040		1	HITCH	ATTELAGE ATTACCO	ANHAENGEKUPPLUNG ENGANCHE
2	F816500070140	1	1	PIN	GOUPILLE PERNO	BOLZEN PASADOR
3	F816500070130	1	1	DISC	DISQUE DISCO	SCHEIBE DISCO
4	F816500070150	1	1	KIT, ATTACHING.	KIT ACCESSOIRE KIT ATTACCO	ANBAUSATZ JGO.DE FIJACION
5	F816500070120	1	1	SECURING PIECE	PIECE SECURITE SECURING PIECE	SICHERUNGSTEIL SECURING PIECE
6	F816500070180	1	1	PEG	PORTE MANTEAU PICCHETTO	STIFT CLAVIJA
7	F816500070020	1	1	COVER	COUVERCLE COPERCHIO	DECKEL CUBIERTA
8	F816500070160	1	1	PIN HITCH	BROCHE PERNO ATTACCO	KUPPLUNGSBOLZEN PASADOR ENGAN.
9	F816500070030	1	1	LEVER	LEVIER LEVA	HEBEL PALANCA
10	F816500070100	1	1	SPRING CARRIER	SUPPORT RESSORT PORTA MOLLA	FEDERTRAEGER SOPORTE DE MUELL
11	F816500070170	1	1	LEVER	LEVIER LEVA	HEBEL PALANCA
12	F816500070040	1	1	LEVER	LEVIER LEVA	HEBEL PALANCA
13	F816500070070	1	1	HAND LEVER	MANETTE LEVA A MANO	HANDHEBEL PALANCA DE MANO
14	F284501061110	13	1	GRIP	MANCHE IMPUGNATURA	GRIFF EMPUNADURA
15	F816500070190	1	1	BUSH	BAGUE BOCCOLA	BUCHSE CASQUILLO
16	F816500070060	1	1	COVER	COUVERCLE COPERCHIO	DECKEL CUBIERTA

Automatic Hitch	**With Remote Control**	**40-155**
Crochet Automatique	**Avec Commande A Distance**	
Automatische Anhaengekupplung	**Mit Fernbedienung**	
Gancio Automatico	**Con Comando**	
Enganche Automatico	**Con Control Remoto**	

1-WQ21-005-B

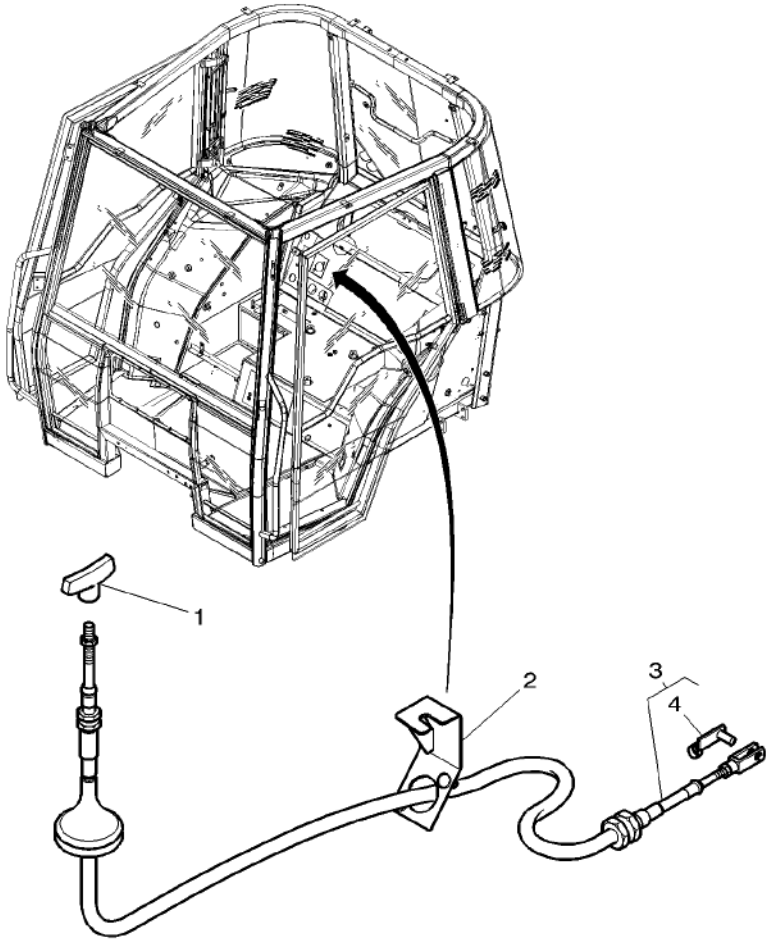

1	4271479M1		1	HANDLE	POIGNEE	HANDGRIFF
					MANIGLIA	MANETA
2	4270512M1		1	SUPPORT	SUPPORT	LAGERUNG
					SUPPORTO	DISPOS.DE SOSTEN
3	4271478M2	◄► 1800 MM	1	CABLE	CABLE	KABEL
					CAVO	CABLE
4	3600191M1	3	1	CLEVIS PIN	AXE	SPLINTBOLZEN
					PERNO D'ATTACCO	BULON CILINDRICO

Front Linkage Attelage Avant Frontkraftheber Attacco Anteriore Enganche Delantero	Hydraulic Hydraulique Hydraulik Idraulico Hydraulico	40-160

1-WQ39-018-B

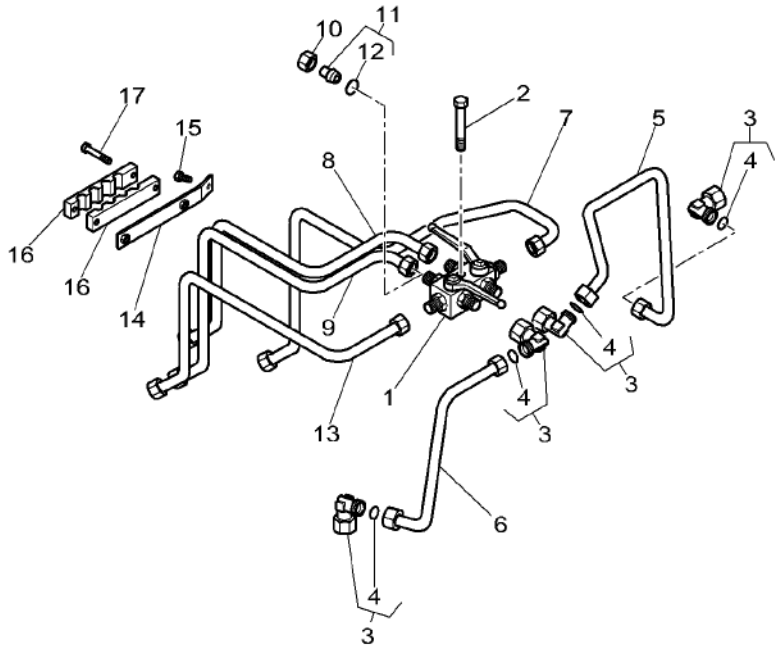

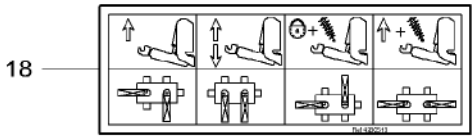

1	4275566M1		1 VANE	VANNE ALETTA	LEITFLUEGEL PALETA
2*	1441967X1	M6 X 45	2 SCREW METRIC	VIS METRIQUE VITE METRICA	SCHRAUBE METR TORNILLO METRICO
3	3011085X91	M22	3 UNION	RACCORD RACCORDO	VERSCHRAUBUNG RACOR
4	3011147X1	3	1 O RING	JOINT TORIQUE ANELLO TENUTA	O-RING ANILLO FORMA 'O'
5	4278478M1		1 TUBE	TUBE TUBO	ROHR TUBO
6	4276168M1		1 TUBE	TUBE TUBO	ROHR TUBO
7	4277427M1		1 TUBE	TUBE TUBO	ROHR TUBO
8	4278477M1		1 TUBE	TUBE TUBO	ROHR TUBO
9	4278476M1	[A]	1 TUBE	TUBE TUBO	ROHR TUBO
10	3011119X1	[B]	1 NUT	ECROU DADO	MUTTER TUERCA
11	3011136X91	[B]	1 TAP	OBTURATEUR TAPPO*	HAHN GRIFO
12	3011147X1	11 [B]	1 O RING	JOINT TORIQUE ANELLO TENUTA	O-RING ANILLO FORMA 'O'
13	4277426M1		1 TUBE	TUBE TUBO	ROHR TUBO
14	4278481M1		1 SUPPORT	SUPPORT SUPPORTO	LAGERUNG DISPOS.DE SOSTEN
15	339228X1	M8 X 12	1 HEX. SOCK. SCREW	VIS TETE HEX VITE PARKER	ZYLINDERSCHRAUBE TORN.CAB.HUECA
16	4275693M2		2 BRIDLE	BRIDE BRIGLIA	SPANNBAND BRIDA
17	339229X1	M6 X 40	2 HEX. SOCK. SCREW	VIS TETE HEX VITE PARKER	ZYLINDERSCHRAUBE TORN.CAB.HUECA
18*	4280513M1		1 DECAL	DECALCOMANIE DECALCOMANIA	AUFKLEBER CALCOMANIA

[A] WITH ACCUMULATOR
AVEC ACCUMULATEUR
MIT AKKUMULATOR
CON ACCUMULATORE
CON ACUMULADOR

[B] WITHOUT ACCUMULATOR
SANS ACCUMULATEUR
OHNE AKKUMULATOR
SENZA ACCUMULATORE
SIN ACUMULADOR

Front Linkage Attelage Avant Frontkraftheber Attacco Anteriore Enganche Delantero	Hydraulic Hydraulique Hydraulik Idraulico Hydraulico	40-165	Accumulator Accumulateur Akkumulator Accumulatore Acumulador

1-WQ39-019-A

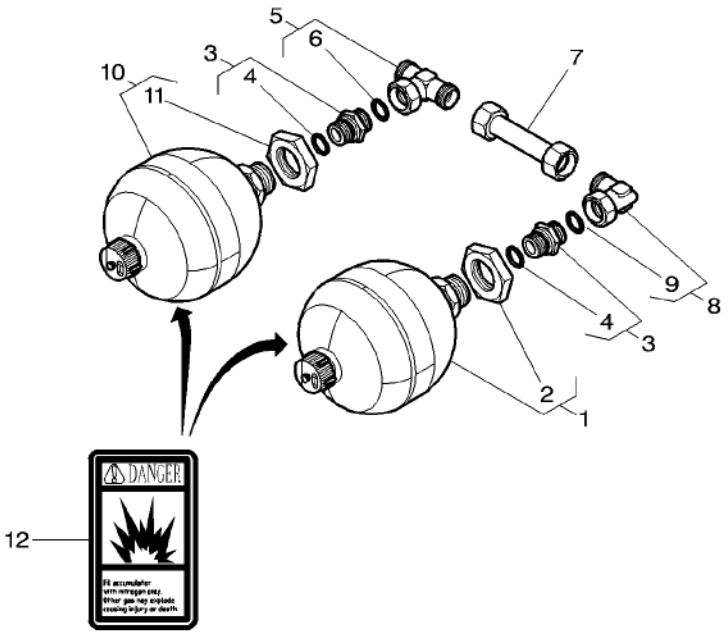

1	4276645M1	[A] 44 Bars	1	ACCUMULATOR	ACCUMULATEUR ACCUMULATORE	AKKUMULATOR ACUMULADOR
2	3907430M1	1	1	NUT	ECROU DADO	MUTTER TUERCA
3	3011548X91		2	UNION	RACCORD RACCORDO	VERSCHRAUBUNG RACOR
4	3011154X1	3	1	GASKET	JOINT GUARNIZIONE	DICHTSCHEIBE EMPAQUETADURA.
5	3011093X91	M22	1	UNION	RACCORD RACCORDO	VERSCHRAUBUNG RACOR
6	3011147X1	5	1	O RING	JOINT TORIQUE ANELLO TENUTA	O-RING ANILLO FORMA 'O'
7	4277428M2		1	TUBE	TUBE TUBO	ROHR TUBO
8	3011085X91		1	UNION	RACCORD RACCORDO	VERSCHRAUBUNG RACOR
9	3011147X1	8	1	O RING	JOINT TORIQUE ANELLO TENUTA	O-RING ANILLO FORMA 'O'
10	4278484M1	[A] 17 Bars	1	ACCUMULATOR	ACCUMULATEUR ACCUMULATORE	AKKUMULATOR ACUMULADOR
11	3907430M1	10	1	NUT	ECROU DADO	MUTTER TUERCA
12	3777021M3		1	DECAL	DECALCOMANIE DECALCOMANIA	AUFKLEBER CALCOMANIA

[A] THE APPROPRIATE SAFETY DECALS MUST BE ORDERED AND FITTED TO THIS PART
CETTE PIECE DOIT ETRE IMPERATIVEMENT COMMANDEE AVEC SA DECALCOMANIE DE SECURITE
DIESES TEIL MUSS UNBEDINGT ZUSAMMEN MIT DEM SICHER HEITSHINWEISSCHILD BESTELLT WERDEN
QUESTO PEZZO DEVE ASSOLUTAMENTE ESSERE ORDINATO CON LA RELATIVA DECALCO. SULLA SICUREZZA
ESTA PIEZA SE TIENE QUE PEDIR IMPERATIVAMENTE CON SU CALCOMANIA DE SEGURIDAD

Front Linkage **Attelage Avant** **Frontkraftheber** **Attacco Anteriore** **Enganche Delantero**	**Hydraulic** **Hydraulique** **Hydraulik** **Idraulico** **Hydraulico**	**40-170**	**With Front Linkage 35000n** **Avec Attelage Avant 35000n** **Mit Vordere Kupplung 35000n** **Con Attacco Anteriore 35000n** **Con Enganche Delantero 35000n**

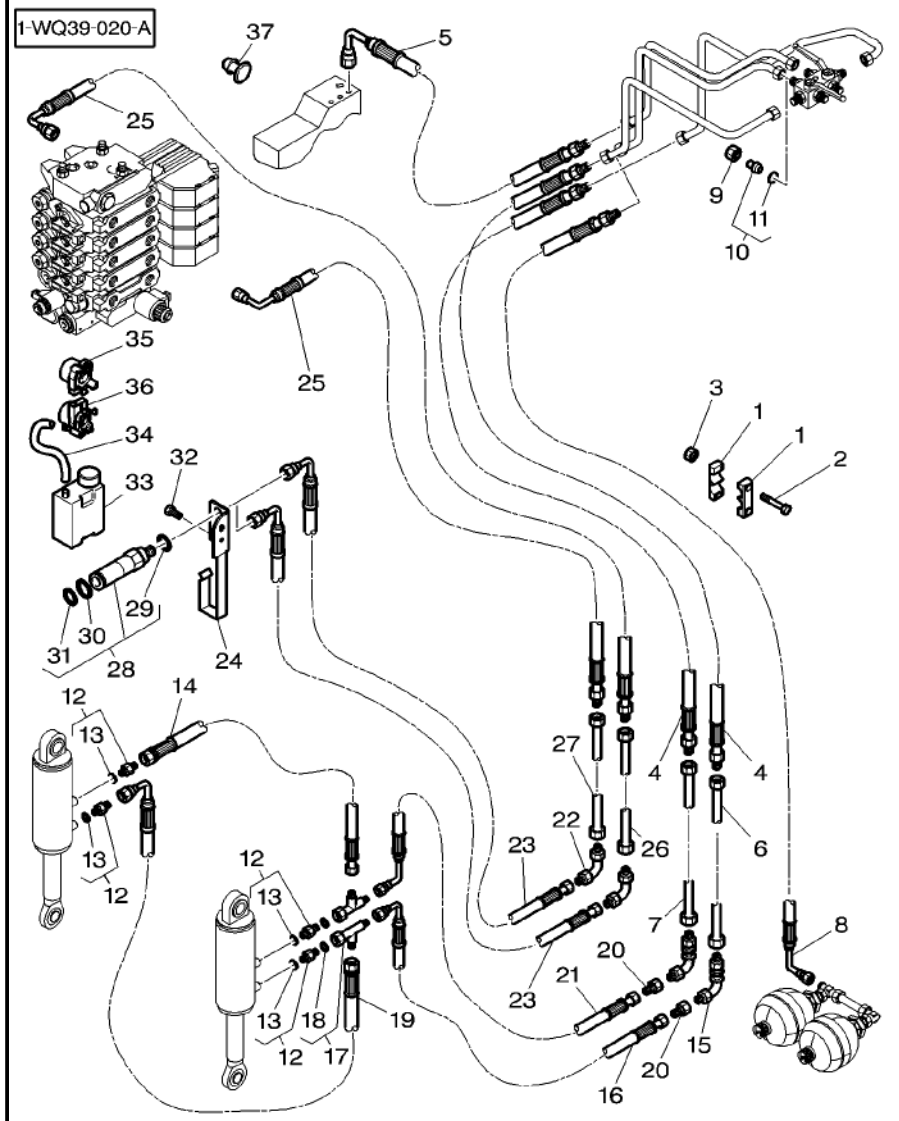

1	3786069M1		2 BRIDLE	BRIDE BRIGLIA	SPANNBAND BRIDA
2	339229X1	M6 X 40	2 HEX. SOCK. SCREW	VIS TETE HEX VITE PARKER	ZYLINDERSCHRAUBE TORN.CAB.HUECA
3	1441500X1	M6	2 LOCKNUT	ECROU BLOCAGE AUTOBLOCCANTE	SICHERUNGSMUTTER CONTRATUERCA
4	4276161M2	◀▶ 1450 MM	2 HYDR. HOSE	FLEXIBLE TUBOFLEX IDRAUL	HYDR. SCHLAUCH TUBO HIDRAULICO
5	4278482M1	◀▶ 1370 MM	1 HYDR. HOSE	FLEXIBLE TUBOFLEX IDRAUL	HYDR. SCHLAUCH TUBO HIDRAULICO
6	4276747M3		1 TUBE	TUBE TUBO	ROHR TUBO
7	4276746M3		1 TUBE	TUBE TUBO	ROHR TUBO
8	4278475M1	[A] ◀▶ 900 MM	1 HYDR. HOSE	FLEXIBLE TUBOFLEX IDRAUL	HYDR. SCHLAUCH TUBO HIDRAULICO
9	3011119X1	[B]	1 NUT	ECROU DADO	MUTTER TUERCA
10	3011136X91	[B]	1 TAP	OBTURATEUR TAPPO*	HAHN GRIFO
11	3011147X1	10 [B]	1 O RING	JOINT TORIQUE ANELLO TENUTA	O-RING ANILLO FORMA 'O'
12	3011223X91		4 UNION	RACCORD RACCORDO	VERSCHRAUBUNG RACOR
13	338923X1	23	1 GASKET	JOINT GUARNIZIONE	DICHTSCHEIBE EMPAQUETADURA.
14	4278098M1	◀▶ 640 MM	1 HYDR. HOSE	FLEXIBLE TUBOFLEX IDRAUL	HYDR. SCHLAUCH TUBO HIDRAULICO
15	3011065X1		2 UNION	RACCORD RACCORDO	VERSCHRAUBUNG RACOR
16	4278100M1	◀▶ 480 MM	1 HYDR. HOSE	FLEXIBLE TUBOFLEX IDRAUL	HYDR. SCHLAUCH TUBO HIDRAULICO
17	3011289X91		2 TEEPIECE	TE RACCORDO A T	T-STUECK PIEZA EN T
18	3011146X1	17	1 O RING	JOINT TORIQUE ANELLO TENUTA	O-RING ANILLO FORMA 'O'
19	4278099M1	◀▶ 400 MM	1 HYDR. HOSE	FLEXIBLE TUBOFLEX IDRAUL	HYDR. SCHLAUCH TUBO HIDRAULICO
20	3011071X91		2 UNION	RACCORD RACCORDO	VERSCHRAUBUNG RACOR
21	4278101M1	◀▶ 520 MM	1 HYDR. HOSE	FLEXIBLE TUBOFLEX IDRAUL	HYDR. SCHLAUCH TUBO HIDRAULICO
22	3011065X1	[C]	2 UNION	RACCORD RACCORDO	VERSCHRAUBUNG RACOR
23	4278096M1	[C] ◀▶ 580 MM	2 HYDR. HOSE	FLEXIBLE TUBOFLEX IDRAUL	HYDR. SCHLAUCH TUBO HIDRAULICO
24	4278318M2	[C]	1 STRAP	PATTE CORREGGIA	LASCHE FAJA
25	4276160M2	[C] ◀▶ 1700 MM	2 HYDR. HOSE	FLEXIBLE TUBOFLEX IDRAUL	HYDR. SCHLAUCH TUBO HIDRAULICO
26	4276749M3	[C]	1 TUBE	TUBE TUBO	ROHR TUBO

Front Linkage **Attelage Avant** **Frontkraftheber** **Attacco Anteriore** **Enganche Delantero**	**Hydraulic** **Hydraulique** **Hydraulik** **Idraulico** **Hydraulico**	**40-170**	**With Front Linkage 35000n** **Avec Attelage Avant 35000n** **Mit Vordere Kupplung 35000n** **Con Attacco Anteriore 35000n** **Con Enganche Delantero 35000n**

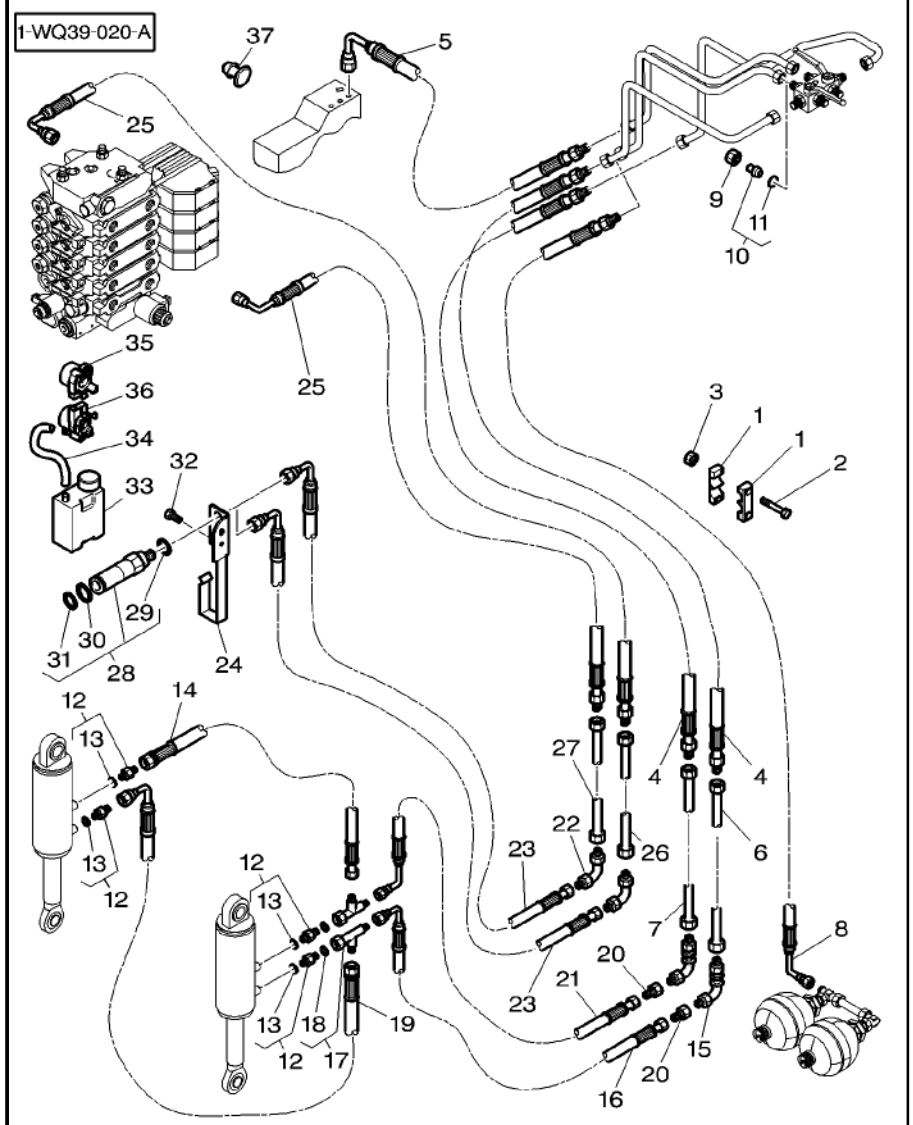

27	4276748M3	[C]	**1**	TUBE	TUBE TUBO	ROHR TUBO
28	***3785907M2***	[C]	**2**	FEMALE COUPLER	COUPLEUR FEMELLE GIUNTO FEMMINA	KUPPLST.AUSSEN ACOPLADOR HEMBRA
29	3903520M1	28 [C]	**1**	GASKET	JOINT GUARNIZIONE	DICHTSCHEIBE EMPAQUETADURA.
30	3903512M2	28 [C]	**1**	SNAPRING	SEGMENT ARRET ANELLO SIEGER	SPRENGRING ANILLA RETENCION
31	368374X1	28 [C]	**1**	O RING	JOINT TORIQUE ANELLO TENUTA	O-RING ANILLO FORMA 'O'
32	339761X1	[C] M8 X 25	**2**	HEX. SOCK. SCREW	VIS TETE HEX VITE PARKER	ZYLINDERSCHRAUBE TORN.CAB.HUECA
33	3794303M1	[C]	**1**	CAN	BIDON BIDONE	KANNE BIDON
34	4279254M1	[C] ◀▶ 100 MM	**1**	HYDR. HOSE	FLEXIBLE TUBOFLEX IDRAUL	HYDR. SCHLAUCH TUBO HIDRAULICO
35	4278347M1	[C]	**1**	BREATHER	RENIFLARD SFIATATOIO	ENTLUEFTER RESPIRADERO
36	4278348M1	[C]	**1**	BREATHER	RENIFLARD SFIATATOIO	ENTLUEFTER RESPIRADERO
37	3389680M1	[D] ∅ 25,5 MM	**2**	PLUG	BOUCHON TAPPO	VERSCHL.STOPFEN TAPON
37	3713404M1	[D] ∅ 15 MM	**2**	PLUG	BOUCHON TAPPO	VERSCHL.STOPFEN TAPON

[A] WITH ACCUMULATOR
AVEC ACCUMULATEUR
MIT AKKUMULATOR
CON ACCUMULATORE
CON ACUMULADOR

[B] WITHOUT ACCUMULATOR
SANS ACCUMULATEUR
OHNE AKKUMULATOR
SENZA ACCUMULATORE
SIN ACUMULADOR

[C] WITH HYDRAULIC COUPLING
AVEC COUPLEUR HYDRAULIQUE
MIT HYDR. - KUPPLUNG
CON GIUNTO IDRAULICO
CON ACOPLADOR HIDRAULICO

[D] WITHOUT HYDRAULIC COUPLING
SANS COUPLEUR HYDRAULIQUE
OHNE HYDR. - KUPPLUNG
SENZA GIUNTO IDRAULICO
SIN ACOPLADOR HIDRAULICO

Front Linkage Attelage Avant Frontkraftheber Attacco Anteriore Enganche Delantero	Hydraulic Hydraulique Hydraulik Idraulico Hydraulico	40-175	With Front Linkage 50000n Avec Attelage Avant 50000n Mit Vordere Kupplung 50000n Con Attacco Anteriore 50000n Con Enganche Delantero 50000n

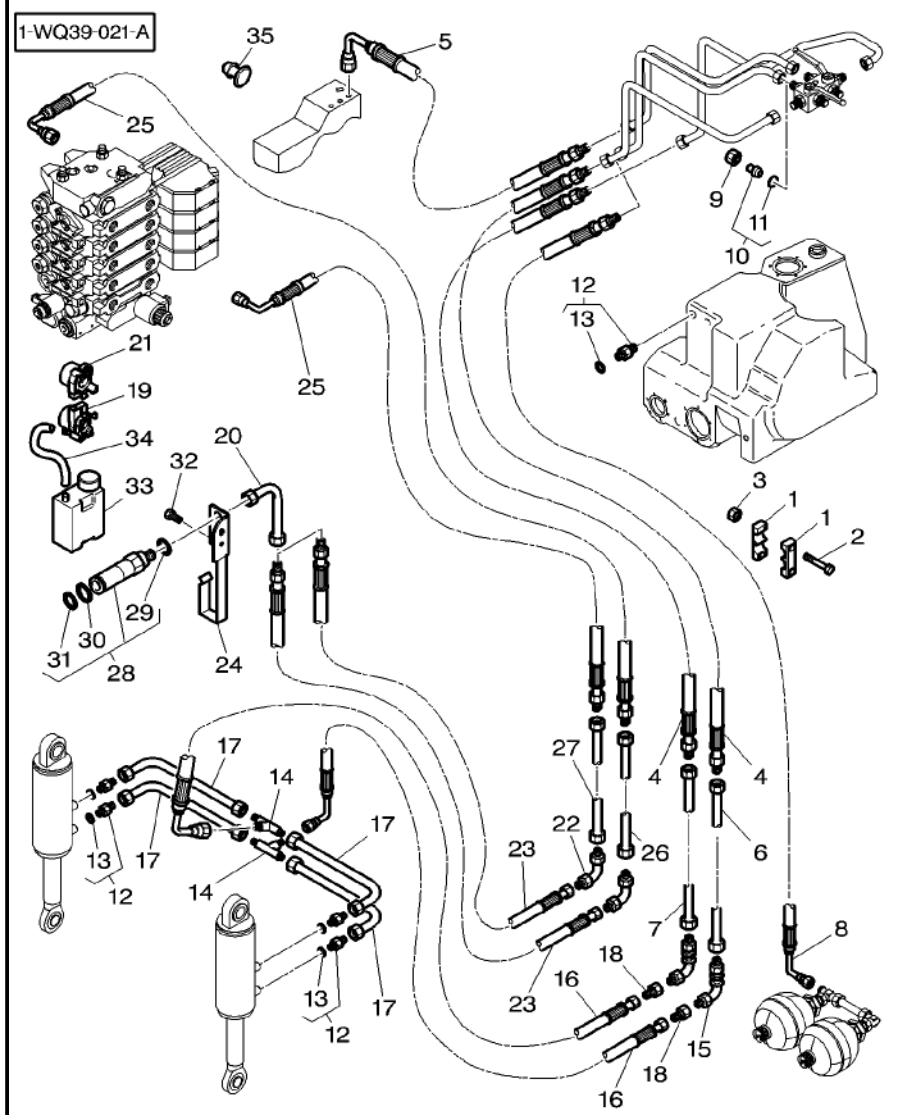

1	3786069M1		2	BRIDLE	BRIDE BRIGLIA	SPANNBAND BRIDA
2	339229X1	M6 X 40	2	HEX. SOCK. SCREW	VIS TETE HEX VITE PARKER	ZYLINDERSCHRAUBE TORN.CAB.HUECA
3	1441500X1	M6	2	LOCKNUT	ECROU BLOCAGE AUTOBLOCCANTE	SICHERUNGSMUTTER CONTRATUERCA
4	4276161M2	◄► 1450 MM	2	HYDR. HOSE	FLEXIBLE TUBOFLEX IDRAUL	HYDR. SCHLAUCH TUBO HIDRAULICO
5	4278482M1	◄► 1370 MM	1	HYDR. HOSE	FLEXIBLE TUBOFLEX IDRAUL	HYDR. SCHLAUCH TUBO HIDRAULICO
6	4276747M3		1	TUBE	TUBE TUBO	ROHR TUBO
7	4276746M3		1	TUBE	TUBE TUBO	ROHR TUBO
8	4278475M1	[A] ◄► 900 MM	1	HYDR. HOSE	FLEXIBLE TUBOFLEX IDRAUL	HYDR. SCHLAUCH TUBO HIDRAULICO
9	3011119X1	[B]	1	NUT	ECROU DADO	MUTTER TUERCA
10	3011136X91	[B]	1	TAP	OBTURATEUR TAPPO*	HAHN GRIFO
11	3011147X1	10 [B]	1	O RING	JOINT TORIQUE ANELLO TENUTA	O-RING ANILLO FORMA 'O'
12	3011223X91		4	UNION	RACCORD RACCORDO	VERSCHRAUBUNG RACOR
13	338923X1	12	1	GASKET	JOINT GUARNIZIONE	DICHTSCHEIBE EMPAQUETADURA.
14	338737X1		2	UNION	RACCORD RACCORDO	VERSCHRAUBUNG RACOR
15	3011065X1		2	UNION	RACCORD RACCORDO	VERSCHRAUBUNG RACOR
16	4278100M1	◄► 480 MM	2	HYDR. HOSE	FLEXIBLE TUBOFLEX IDRAUL	HYDR. SCHLAUCH TUBO HIDRAULICO
17	4279253M1		4	TUBE	TUBE TUBO	ROHR TUBO
18	3011071X91		2	UNION	RACCORD RACCORDO	VERSCHRAUBUNG RACOR
19	4278348M1	[C]	1	BREATHER	RENIFLARD SFIATATOIO	ENTLUEFTER RESPIRADERO
20	4279248M1	[C]	2	TUBE	TUBE TUBO	ROHR TUBO
21	4278347M1	[C]	1	BREATHER	RENIFLARD SFIATATOIO	ENTLUEFTER RESPIRADERO
22	3011065X1	[C]	2	UNION	RACCORD RACCORDO	VERSCHRAUBUNG RACOR
23	4279250M1	[C] ◄► 580 MM	2	HYDR. HOSE	FLEXIBLE TUBOFLEX IDRAUL	HYDR. SCHLAUCH TUBO HIDRAULICO
24	4278318M2	[C]	1	STRAP	PATTE CORREGGIA	LASCHE FAJA
25	4276160M2	[C] ◄► 1700 MM	2	HYDR. HOSE	FLEXIBLE TUBOFLEX IDRAUL	HYDR. SCHLAUCH TUBO HIDRAULICO
26	4276749M3	[C]	1	TUBE	TUBE TUBO	ROHR TUBO

Front Linkage **Attelage Avant** **Frontkraftheber** **Attacco Anteriore** **Enganche Delantero**	**Hydraulic** **Hydraulique** **Hydraulik** **Idraulico** **Hydraulico**	**40-175**	**With Front Linkage 50000n** **Avec Attelage Avant 50000n** **Mit Vordere Kupplung 50000n** **Con Attacco Anteriore 50000n** **Con Enganche Delantero 50000n**

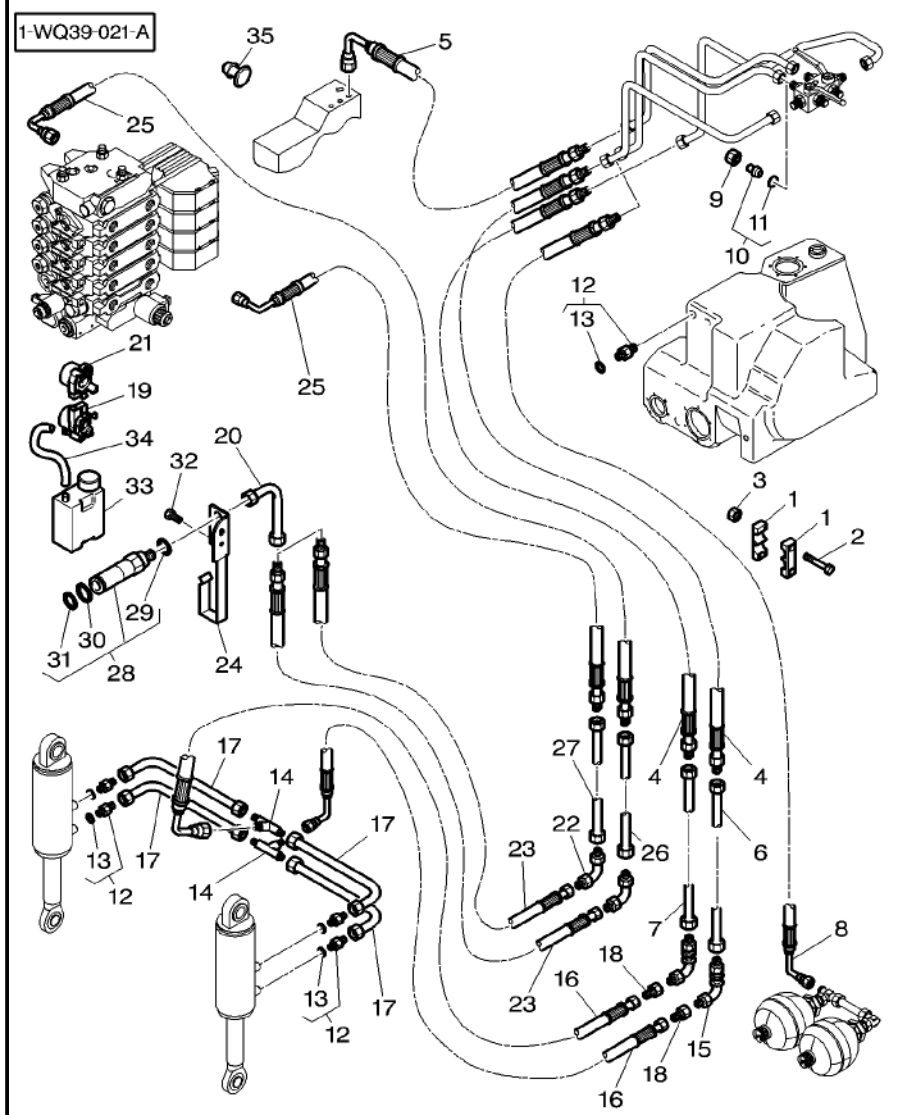

27	4276748M3	[C]	**1** TUBE	TUBE TUBO	ROHR TUBO
28	***3785907M2***	[C]	**2** FEMALE COUPLER	COUPLEUR FEMELLE GIUNTO FEMMINA	KUPPLST.AUSSEN ACOPLADOR HEMBRA
29	3903520M1	28 [C]	**1** GASKET	JOINT GUARNIZIONE	DICHTSCHEIBE EMPAQUETADURA.
30	3903512M2	28 [C]	**1** SNAPRING	SEGMENT ARRET ANELLO SIEGER	SPRENGRING ANILLA RETENCION
31	368374X1	28 [C]	**1** O RING	JOINT TORIQUE ANELLO TENUTA	O-RING ANILLO FORMA 'O'
32	339761X1	[C] M8 X 25	**2** HEX. SOCK. SCREW	VIS TETE HEX VITE PARKER	ZYLINDERSCHRAUBE TORN.CAB.HUECA
33	3794303M1	[C]	**1** CAN	BIDON BIDONE	KANNE BIDON
34	4279254M1	[C] ◀▶ 100 MM	**1** HYDR. HOSE	FLEXIBLE TUBOFLEX IDRAUL	HYDR. SCHLAUCH TUBO HIDRAULICO
35	3389680M1	[D] ∅ 25,5 MM	**2** PLUG	BOUCHON TAPPO	VERSCHL.STOPFEN TAPON
35	3713404M1	[D] ∅ 15 MM	**2** PLUG	BOUCHON TAPPO	VERSCHL.STOPFEN TAPON

[A] WITH ACCUMULATOR
AVEC ACCUMULATEUR
MIT AKKUMULATOR
CON ACCUMULATORE
CON ACUMULADOR

[B] WITHOUT ACCUMULATOR
SANS ACCUMULATEUR
OHNE AKKUMULATOR
SENZA ACCUMULATORE
SIN ACUMULADOR

[C] WITH HYDRAULIC COUPLING
AVEC COUPLEUR HYDRAULIQUE
MIT HYDR. - KUPPLUNG
CON GIUNTO IDRAULICO
CON ACOPLADOR HIDRAULICO

[D] WITHOUT HYDRAULIC COUPLING
SANS COUPLEUR HYDRAULIQUE
OHNE HYDR. - KUPPLUNG
SENZA GIUNTO IDRAULICO
SIN ACOPLADOR HIDRAULICO

Front Linkage 35000n
Attelage Avant 35000n
Frontkraftheber 35000n
Attacco Anteriore 35000n
Enganche Delantero 35000n

40-180

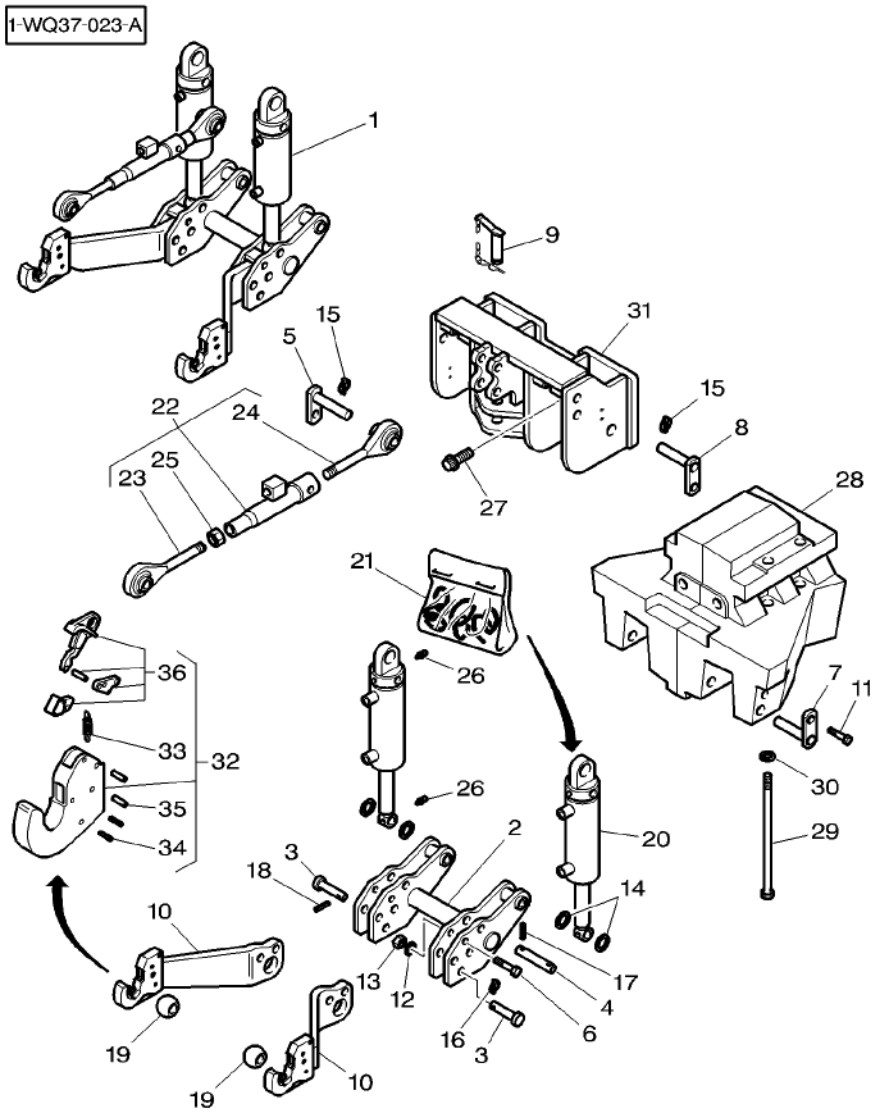

1	4276569M91		1	HITCH	ATTELAGE ATTACCO	ANHAENGEKUPPLUNG ENGANCHE
2	4276572M1	1	1	SUPPORT	SUPPORT SUPPORTO	LAGERUNG DISPOS.DE SOSTEN
3	3788596M1	1	4	CLEVIS PIN	AXE PERNO D'ATTACCO	SPLINTBOLZEN BULON CILINDRICO
4	3788597M1	1	2	CLEVIS PIN	AXE PERNO D'ATTACCO	SPLINTBOLZEN BULON CILINDRICO
5	3782680M1	1	1	CLEVIS PIN	AXE PERNO D'ATTACCO	SPLINTBOLZEN BULON CILINDRICO
6	3788599M1	1	2	CLEVIS PIN	AXE PERNO D'ATTACCO	SPLINTBOLZEN BULON CILINDRICO
7	4271645M1	1	2	CLEVIS PIN	AXE PERNO D'ATTACCO	SPLINTBOLZEN BULON CILINDRICO
8	4271646M1	1	2	CLEVIS PIN	AXE PERNO D'ATTACCO	SPLINTBOLZEN BULON CILINDRICO
9	3712122M1	1	1	CLEVIS PIN	AXE PERNO D'ATTACCO	SPLINTBOLZEN BULON CILINDRICO
10	3788600M1	1 ▶	1	ARM	BRAS BRACCIO	ARM BRAZO
10	3788601M1	1 ◀	1	ARM	BRAS BRACCIO	ARM BRAZO
11	3382952M1	1 M16 X 50	2	HEX. SOCK. SCREW	VIS TETE HEX VITE PARKER	ZYLINDERSCHRAUBE TORN.CAB.HUECA
12	1443512X1	1	2	WASHER	RONDELLE RONDELLA	UNTERLEGSCHEIBE ARANDELA
13	3788603M1	1 M24	2	LOCKNUT	ECROU BLOCAGE AUTOBLOCCANTE	SICHERUNGSMUTTER CONTRATUERCA
14	3788604M1	1 ∅ 36-50 X 4	4	WASHER	RONDELLE RONDELLA	UNTERLEGSCHEIBE ARANDELA
15	3782684M1	1 ∅ 8 MM	3	CLIP	PATTE D'ATTACHE FERMAGLIO	SCHELLE CLIP
16	3788605M1	1 ∅ 10,5 MM	2	CLIP	PATTE D'ATTACHE FERMAGLIO	SCHELLE CLIP
17	3788607M1	1 ∅ 8 X 50	2	PIN	GOUPILLE PERNO	BOLZEN PASADOR
18	3788608M1	1 ∅ 12 X 50	2	PIN	GOUPILLE PERNO	BOLZEN PASADOR
19	***3782685M1***	1 CAT 3	2	TOGGLE	ROTULE ROTULA	GELENKZAPFEN ROTULA
19	***3782686M1***	1 CAT 2-3	2	TOGGLE	ROTULE ROTULA	GELENKZAPFEN ROTULA
20	4276570M1	1 ▶ 3504846069RO	1	RAM	VERIN CILINDRO IDRAUL.	HYDR.ZYLINDER ARIETE
20	4278050M1	1 ◀ 3504846068RO	1	RAM	VERIN CILINDRO IDRAUL.	HYDR.ZYLINDER ARIETE
21	***3903317M91***	20	1	KIT, JOINT	JEU JOINTS KIT GIUNTO	DICHTUNGSSATZ JUEGO JUNTAS
22	3788609M1	1	1	BAR	BARRE BARRA	STAB BARRA
23	***3900885M1***	22	1	TOGGLE	ROTULE ROTULA	GELENKZAPFEN ROTULA

Front Linkage 35000n
Attelage Avant 35000n
Frontkraftheber 35000n
Attacco Anteriore 35000n
Enganche Delantero 35000n

40-180

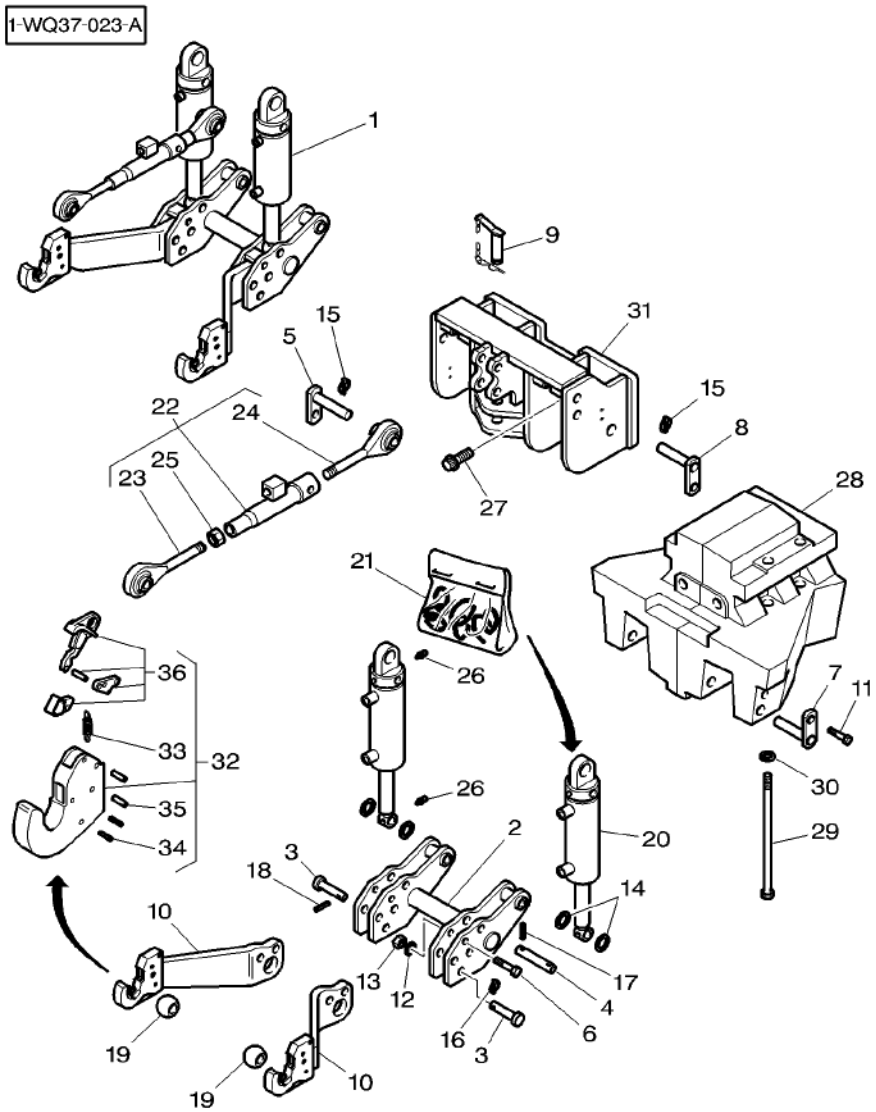

24	3903895M1	22		1	TOGGLE	ROTULE ROTULA	GELENKZAPFEN ROTULA
25	3900887M1	22	M30	1	NUT	ECROU DADO	MUTTER TUERCA
26	3900862M1	1	M6	4	GREASER	GRAISSEUR INGRASSATORE	FETTNIPPEL ENGRASADOR
27	3010563X1		M20 X 90	8	SCREW	VIS VITE	SCHRAUBE TORNILLO
28	4271642M2			1	WEIGHT	MASSE PESO	GEWICHT PESO DE CARGA
29	3010965X1		M20 X 420	4	HEX. SOCK. SCREW	VIS TETE HEX VITE PARKER	ZYLINDERSCHRAUBE TORN.CAB.HUECA
30	385365X1		∅ 20–37 X 5	4	WASHER	RONDELLE RONDELLA	UNTERLEGSCHEIBE ARANDELA
31	4276571M1			1	SUPPORT	SUPPORT SUPPORTO	LAGERUNG DISPOS.DE SOSTEN
32			CAT 3/2 REF. 10	1	HOOK	CROCHET GANCIO	HAKEN GANCHO
33	3903949M1	32		1	SPRING	RESSORT MOLLA	FEDER RESORTE
34	3903947M91	32		1	KIT, ROLL PINS	JEU GOUP ROULEES KIT PERNI	SATZ SPANNHUELSN JGO.PASAD.ELAST.
35	3903948M91	32		1	KIT, ROLL PINS	JEU GOUP ROULEES KIT PERNI	SATZ SPANNHUELSN JGO.PASAD.ELAST.
36	3903946M91	32		1	KIT, LEVER	JEU LEVIER KIT LEVETTA	SATZ HEBEL JUEGO, PALANCA

Front Linkage 35000n
Attelage Avant 35000n
Frontkraftheber 35000n
Attacco Anteriore 35000n
Enganche Delantero 35000n

40-185

1-WQ37-024-A

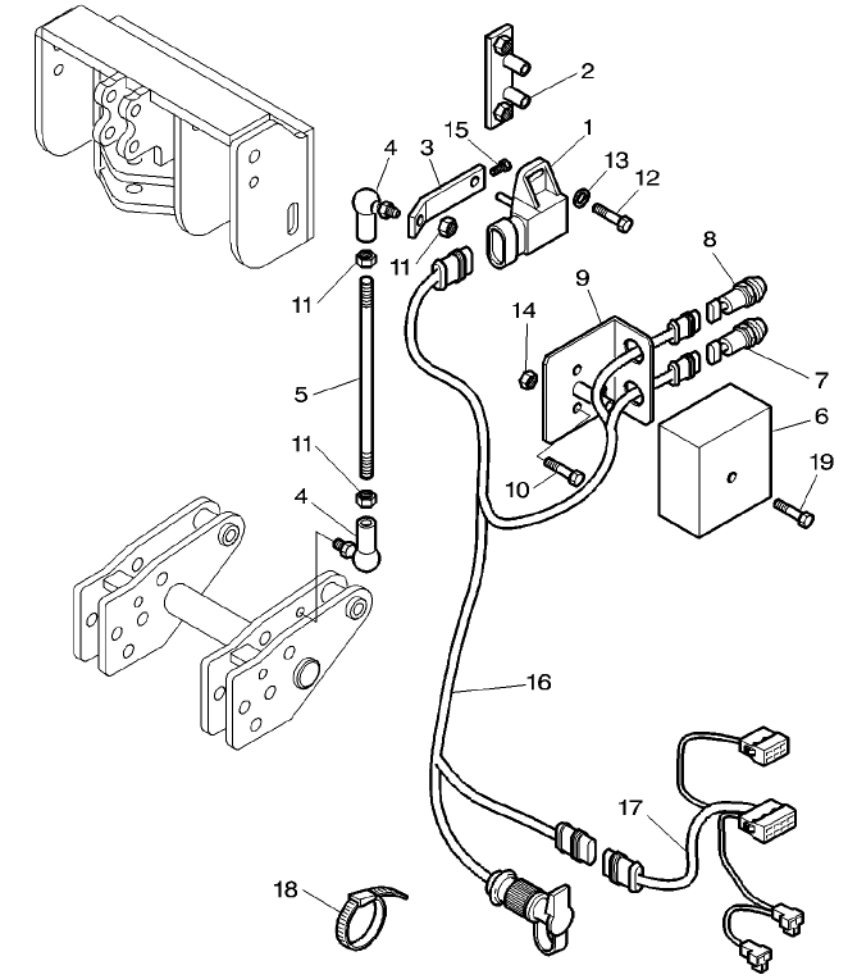

1	***3784361M1***		1	TRANSDUCER	CAPTEUR TRANSDUCER	NABENTRIEB. TRANSDUCER
2	3786146M2		1	SUPPORT	SUPPORT SUPPORTO	LAGERUNG DISPOS.DE SOSTEN
3	3786147M2	◄► 100 MM	1	ROD LINK	BIELLETTE BISCOTTINO	VERBINDG.STANGE VARILLA ENGANCHE
4	***3778648M1***	M8	2	STUB	EMBOUT CEPPO	STUMMEL SALIENTE
5	3786158M2	M8 ◄► 385 MM	1	STEM	TIGE STELO	STIEL VASTAGO
6	3786187M1		1	COVER	COUVERCLE COPERCHIO	DECKEL CUBIERTA
7	***3714137M1***	[A]	1	SWITCH,INDIRECT	CONTACTEUR INTERRUTTORE IND	KONTAKTSCHALTER CONTACTOR
8	***3714138M1***	[B]	1	SWITCH,INDIRECT	CONTACTEUR INTERRUTTORE IND	KONTAKTSCHALTER CONTACTOR
9	3786188M1		1	SUPPORT	SUPPORT SUPPORTO	LAGERUNG DISPOS.DE SOSTEN
10	339009X1	M8 X 35	2	HEX. SOCK. SCREW	VIS TETE HEX VITE PARKER	ZYLINDERSCHRAUBE TORN.CAB.HUECA
11	3011202X1	M8	3	NUT	ECROU DADO	MUTTER TUERCA
12	1442171X1	M4 X 10	2	HEX. SOCK. SCREW	VIS TETE HEX VITE PARKER	ZYLINDERSCHRAUBE TORN.CAB.HUECA
13	339102X1	∅ 4-9 X 1	2	WASHER	RONDELLE RONDELLA	UNTERLEGSCHEIBE ARANDELA
14	339169X1	M8	2	NUT	ECROU DADO	MUTTER TUERCA
15	3011203X1	M4 X 10	1	SCREW	VIS VITE	SCHRAUBE TORNILLO
16	3786263M1	➡| 26-OCT-2004	1	HARNESS	FAISCEAU FASCIOCAVI	KABELBAUM MAZO CABLES
16	4280288M1	|➡ 27-OCT-2004	1	HARNESS	FAISCEAU FASCIOCAVI	KABELBAUM MAZO CABLES
17	3786264M2	➡| 26-OCT-2004 ◄► 2150 MM	1	HARNESS	FAISCEAU FASCIOCAVI	KABELBAUM MAZO CABLES
18	3619622M1		X	CABLE TIE	ATTACHE CABLE FASCETTA CAVI	KABELBINDER APRIETACABLES
19	391074X1	M6 X 12	1	HEX. SOCK. SCREW	VIS TETE HEX VITE PARKER	ZYLINDERSCHRAUBE TORN.CAB.HUECA

[A] UP
MONTEE
GESTIEGEN
SALITA
SUBIDA

[B] DOWN
DESCENTE
HERABSTEIGEN
DISCESA
BAJADA

Front Linkage 50000n
Attelage Avant 50000n
Frontkraftheber 50000n
Attacco Anteriore 50000n
Enganche Delantero 50000n

40-190

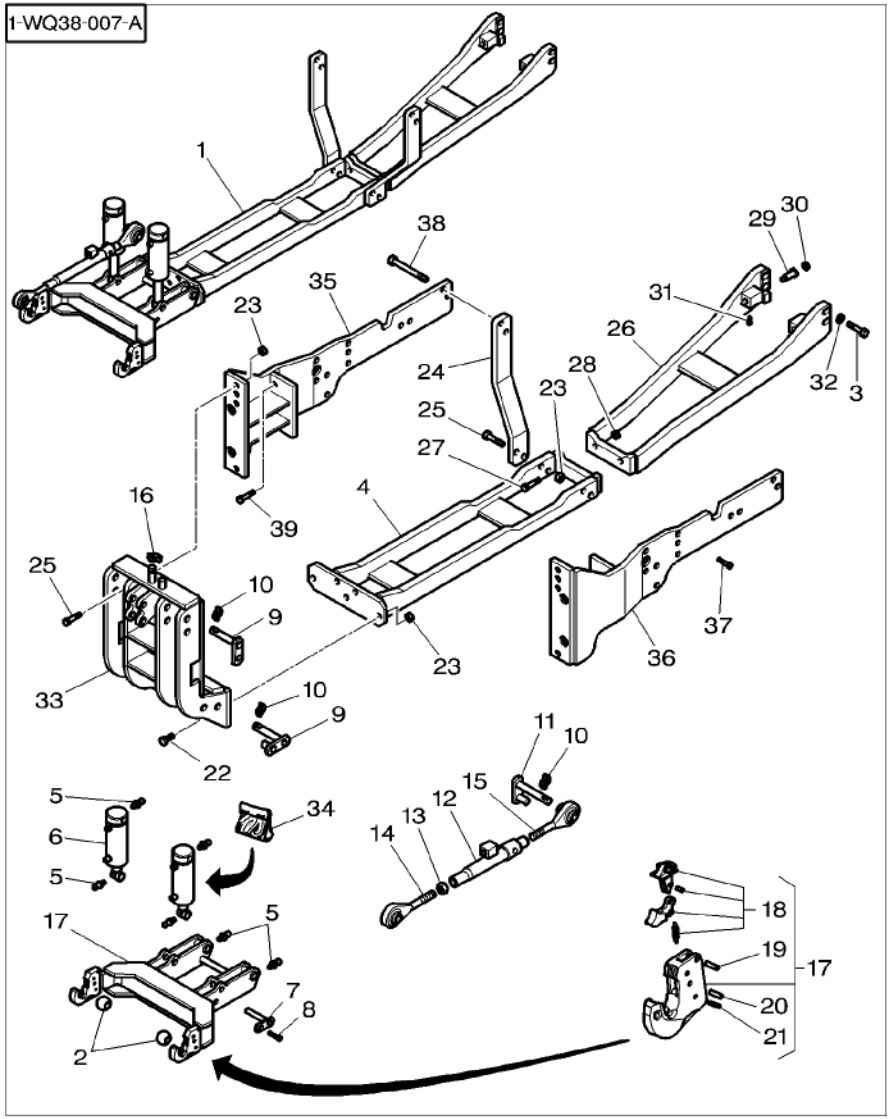

1	4273685M91		1 HITCH	ATTELAGE ATTACCO	ANHAENGEKUPPLUNG ENGANCHE
2	***3782685M1***	1 CAT 3	2 TOGGLE	ROTULE ROTULA	GELENKZAPFEN ROTULA
2	***3782686M1***	1 CAT 2–3	2 TOGGLE	ROTULE ROTULA	GELENKZAPFEN ROTULA
3	3010915X1	1 M20 X 70	4 HEX. SOCK. SCREW	VIS TETE HEX VITE PARKER	ZYLINDERSCHRAUBE TORN.CAB.HUECA
4	4276033M1	1	1 TRANSVERSE	TRAVERSE TRASVERSALE	QUERTRAEGER TRANSVERSAL
5	3900862M1	1 M6	6 GREASER	GRAISSEUR INGRASSATORE	FETTNIPPEL ENGRASADOR
6	4276810M1	1	2 RAM	VERIN CILINDRO IDRAUL.	HYDR.ZYLINDER ARIETE
7	3783023M1	1	2 CLEVIS PIN	AXE PERNO D'ATTACCO	SPLINTBOLZEN BULON CILINDRICO
8	339020X1	1 M12 X 20	2 HEX. SOCK. SCREW	VIS TETE HEX VITE PARKER	ZYLINDERSCHRAUBE TORN.CAB.HUECA
9	3783022M1	1	4 CLEVIS PIN	AXE PERNO D'ATTACCO	SPLINTBOLZEN BULON CILINDRICO
10	3782684M1	1 ∅ 8 X 45	5 CLIP	PATTE D'ATTACHE FERMAGLIO	SCHELLE CLIP
11	3783024M1	1	1 SUPPORT	SUPPORT SUPPORTO	LAGERUNG DISPOS.DE SOSTEN
12	3783027M1	1	1 BODY	CORPS CORPO	RUMPF CUERPO
13	3010927X1	1 M36	1 NUT	ECROU DADO	MUTTER TUERCA
14	***3783029M1***	1 ▶	1 TOGGLE	ROTULE ROTULA	GELENKZAPFEN ROTULA
15	***3783030M1***	1 ◀	1 TOGGLE	ROTULE ROTULA	GELENKZAPFEN ROTULA
16	3782691M1	1 ∅ 6 X 45	1 CLIP	PATTE D'ATTACHE FERMAGLIO	SCHELLE CLIP
17	3783021M2	1	1 ARM	BRAS BRACCIO	ARM BRAZO
18	3903314M91	17	1 KIT, REPAIR	JEU REPARATION KIT RIPARAZIONE	REPARATURSATZ JUEGO REPARACION
19	3006429X1	17 ∅ 10 X 36	1 PIN	GOUPILLE PERNO	BOLZEN PASADOR
20	3008317X1	17 ∅ 13 X 36	1 PIN	GOUPILLE PERNO	BOLZEN PASADOR
21	339783X1	17 ∅ 6 X 32	1 PIN	GOUPILLE PERNO	BOLZEN PASADOR
22	3001968X1	1 M20 X 60	5 HEX. SOCK. SCREW	VIS TETE HEX VITE PARKER	ZYLINDERSCHRAUBE TORN.CAB.HUECA
23	3009747X1	1 M20	17 NUT	ECROU DADO	MUTTER TUERCA
24	3783168M1	1 ▶	1 STIRRUP	ETRIER STAFFA	BUEGEL FUACION
24	3783169M1	1 ◀	1 STIRRUP	ETRIER STAFFA	BUEGEL FUACION

Front Linkage 50000n
Attelage Avant 50000n
Frontkraftheber 50000n
Attacco Anteriore 50000n
Enganche Delantero 50000n

40-190

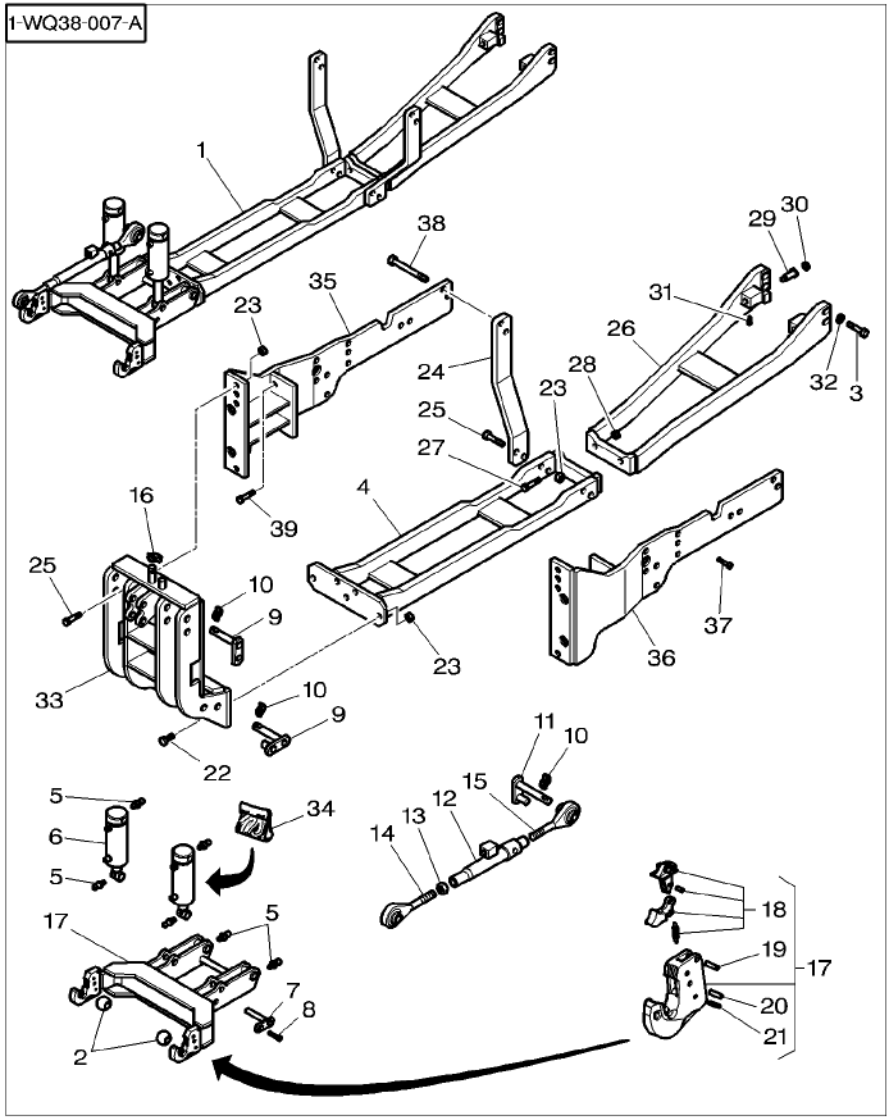

25	391329X1	1 M20 X 70	**12**	HEX. SOCK. SCREW	VIS TETE HEX VITE PARKER	ZYLINDERSCHRAUBE TORN.CAB.HUECA
26	4273684M1	1	**1**	TRANSVERSE	TRAVERSE TRASVERSALE	QUERTRAEGER TRANSVERSAL
27	3010164X1	1 M18 X 80	**2**	HEX. SOCK. SCREW	VIS TETE HEX VITE PARKER	ZYLINDERSCHRAUBE TORN.CAB.HUECA
28	392335X1	1 M18	**2**	NUT	ECROU DADO	MUTTER TUERCA
29	3619813M1	1	**2**	SCREW	VIS VITE	SCHRAUBE TORNILLO
30	3619814M1	1	**2**	WASHER	RONDELLE RONDELLA	UNTERLEGSCHEIBE ARANDELA
31	1440349X1	1 M8 X 30	**2**	SCREW	VIS VITE	SCHRAUBE TORNILLO
32	390039X1	1	**4**	WASHER	RONDELLE RONDELLA	UNTERLEGSCHEIBE ARANDELA
33	4276811M3		**1**	FRAME	BATI CORNICE	RAHMEN BASTIDOR
34	***3903317M91***		**1**	KIT, JOINT	JEU JOINTS KIT GIUNTO	DICHTUNGSSATZ JUEGO JUNTAS
35	3783633M6	▶	**1**	RUNNER	LONGERON GIRANTE*	LAEUFER RUEDA GIRATORIA
36	3783632M5	◀	**1**	RUNNER	LONGERON GIRANTE*	LAEUFER RUEDA GIRATORIA
37	3384129M1	M20 X 55	**8**	HEX. SOCK. SCREW	VIS TETE HEX VITE PARKER	ZYLINDERSCHRAUBE TORN.CAB.HUECA
37	391329X1	M20 X 70	**4**	HEX. SOCK. SCREW	VIS TETE HEX VITE PARKER	ZYLINDERSCHRAUBE TORN.CAB.HUECA
38	391914X1	M20 X 110	**4**	HEX. SOCK. SCREW	VIS TETE HEX VITE PARKER	ZYLINDERSCHRAUBE TORN.CAB.HUECA
39	3384129M1	M20 X 55	**2**	HEX. SOCK. SCREW	VIS TETE HEX VITE PARKER	ZYLINDERSCHRAUBE TORN.CAB.HUECA

Front Linkage 50000n
Attelage Avant 50000n
Frontkraftheber 50000n
Attacco Anteriore 50000n
Enganche Delantero 50000n

40-195

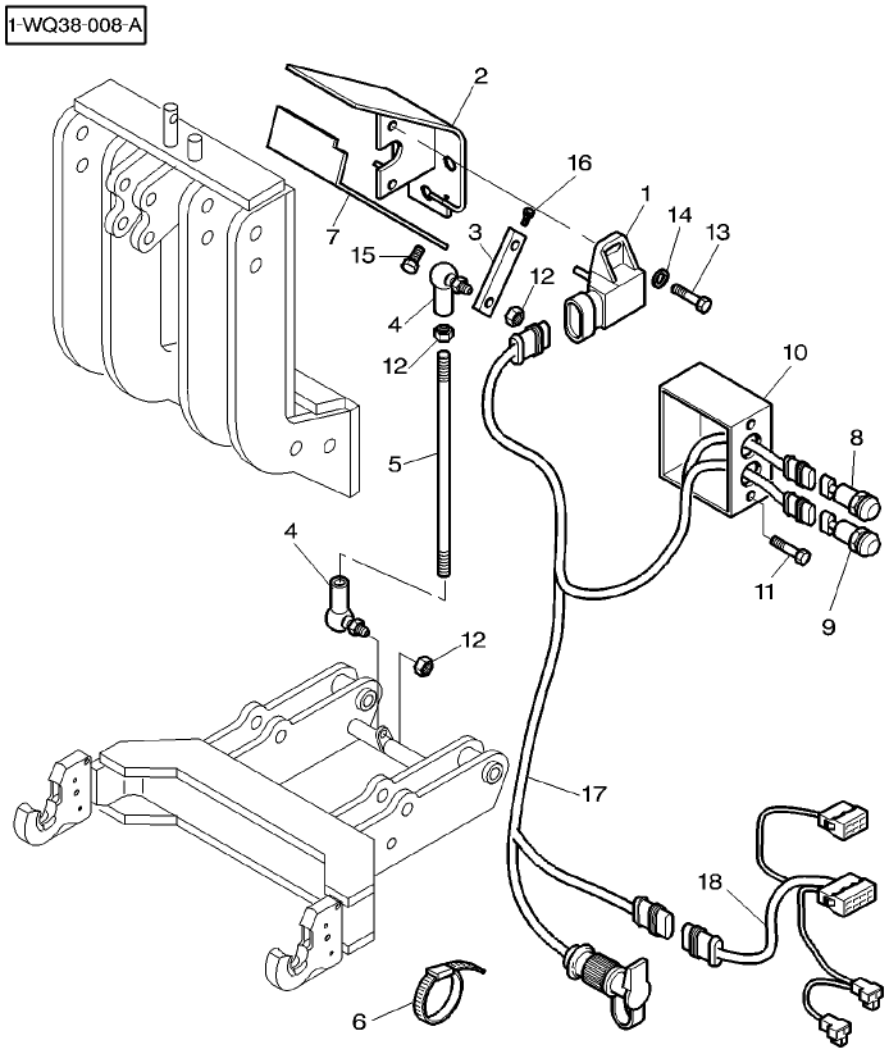

1	***3784361M1***		**1**	TRANSDUCER	CAPTEUR TRANSDUCER	NABENTRIEB. TRANSDUCER
2	3786259M1		**1**	SUPPORT	SUPPORT SUPPORTO	LAGERUNG DISPOS.DE SOSTEN
3	3786098M2	◄► 56 MM	**1**	ROD LINK	BIELLETTE BISCOTTINO	VERBINDG.STANGE VARILLA ENGANCHE
4	3782780M1	M6	**2**	STUB	EMBOUT CEPPO	STUMMEL SALIENTE
5	3786131M2	M6 ◄► 24 MM	**1**	STEM	TIGE STELO	STIEL VASTAGO
6	3619622M1		**10**	CABLE TIE	ATTACHE CABLE FASCETTA CAVI	KABELBINDER APRIETACABLES
7	3786133M2		**1**	COWL	GARANT CAPPOTTATURA	AUFSATZ CAPERUZA
8	***3714137M1***	[A]	**1**	SWITCH,INDIRECT	CONTACTEUR INTERRUTTORE IND	KONTAKTSCHALTER CONTACTOR
9	***3714138M1***	[B]	**1**	SWITCH,INDIRECT	CONTACTEUR INTERRUTTORE IND	KONTAKTSCHALTER CONTACTOR
10	3786186M2		**1**	SUPPORT	SUPPORT SUPPORTO	LAGERUNG DISPOS.DE SOSTEN
11	339009X1	M8 X 35	**2**	HEX. SOCK. SCREW	VIS TETE HEX VITE PARKER	ZYLINDERSCHRAUBE TORN.CAB.HUECA
12	3011202X1	M8	**3**	NUT	ECROU DADO	MUTTER TUERCA
13	1442171X1	M4 X 10	**2**	HEX. SOCK. SCREW	VIS TETE HEX VITE PARKER	ZYLINDERSCHRAUBE TORN.CAB.HUECA
14	339102X1	∅ 4-9 X 1	**2**	WASHER	RONDELLE RONDELLA	UNTERLEGSCHEIBE ARANDELA
15	3009491X1	M10 X 20	**2**	HEX. SOCK. SCREW	VIS TETE HEX VITE PARKER	ZYLINDERSCHRAUBE TORN.CAB.HUECA
16	3011203X1	M4 X 10	**1**	SCREW	VIS VITE	SCHRAUBE TORNILLO
17	3786263M1	➡| 26-OCT-2004	**1**	HARNESS	FAISCEAU FASCIOCAVI	KABELBAUM MAZO CABLES
17	4280288M1	|➡ 27-OCT-2004	**1**	HARNESS	FAISCEAU FASCIOCAVI	KABELBAUM MAZO CABLES
18	3786264M2	➡| 26-OCT-2004 ◄► 2150 MM	**1**	HARNESS	FAISCEAU FASCIOCAVI	KABELBAUM MAZO CABLES

[A] UP
MONTEE
GESTIEGEN
SALITA
SUBIDA

[B] DOWN
DESCENTE
HERABSTEIGEN
DISCESA
BAJADA

50

Independant Power Take Off Clutch
Embrayage De Prise De Force Independante
Ipto Kupplung
Frizione Pto Indipendente
Embrague De Toma De Fuerza Independiente

50-5

1-WG23-013-A

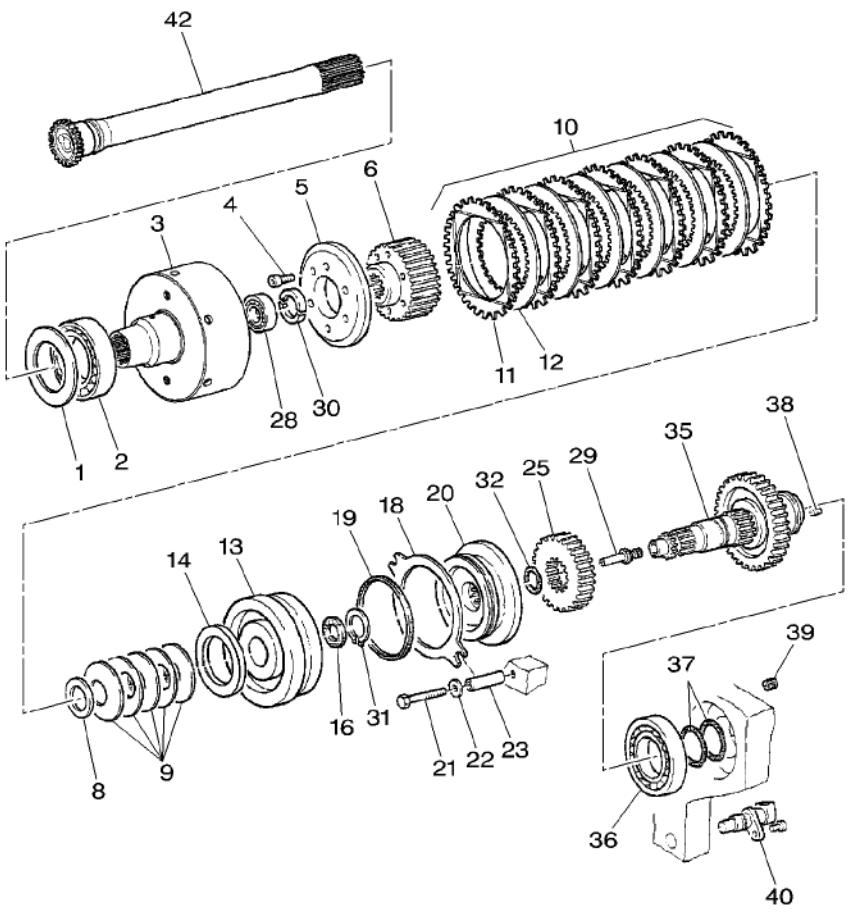

1	X534677046000	⧗ 0,10 MM	X	SHIM	CALE REGLAGE SPESSORE	EINSTELLBLECH CALCE
1	X534677146000	⧗ 0,30 MM	X	SHIM	CALE REGLAGE SPESSORE	EINSTELLBLECH CALCE
2	X605506311000		1	BALL BEARING	ROULEMENT BILLES CUSCINETTO SFERE	KUGELLAGER COJINETE DE BOLA
3	926150220160		1	CLUTCH HOUSING	COUV.CART.EMBRA. CLUTCH HOUSING	KUPPLUNGSGLOCKE CLUTCH HOUSING
4	X493607305000	M8 X 20	6	HEX. SOCK. SCREW	VIS TETE HEX VITE PARKER	ZYLINDERSCHRAUBE TORN.CAB.HUECA
5	822100220170		1	BACKUP RING	CONTRE BAGUE ANELLO APPOGGIO	STUETZRING ANILLA SOPORTE
6	822100220040		1	DISC CARRIER	PORTE DISQUE PORTADISCO	LAMELLENTRAEGER PORTALAMINAS
8	X534767700000	⧗ 0,50 MM	X	SHIM	CALE REGLAGE SPESSORE	EINSTELLBLECH CALCE
8	X534767900000	⧗ 1,00 MM	X	SHIM	CALE REGLAGE SPESSORE	EINSTELLBLECH CALCE
9	822100220510		5	CUP SPRING	RONDELLE RESSORT MOLLA CAPPELLOTT	TELLERFEDER CUBETA DE MUELLE
10	G926150220040		1	KIT, DISC	JEU DISQUE KIT, DISC	LAMELLENPAKET KIT, DISC
11		10 REF. 10	7	EXTERNAL DISC	DISQUE EXTERIEUR DISCO ESTERNO	AUSSENLAMELLE DISCO EXTERIOR
12		10 REF. 10	6	INTERNAL DISC	DISQUE INTERIEUR DISCO INTERNO	INNENLAMELLE DISCO INTERIOR
13	822100220840		1	PISTON	PISTON PISTONE	KOLBEN PISTON
14	822100220860		1	RING	ANNEAU ANELLO	RING ARO
16	822100220530		1	SUPPORT COVER	COUVERC. SUPPORT SUPPORT COVER	ABSTUETZDECKEL SUPPORT COVER
18	514100220630		1	COMPENS. SHEET	DISQUE LAMELLE COMPENS. SHEET	LAMELLE COMPENS. SHEET
19	822100220380		1	SUPPORT COVER	COUVERC. SUPPORT SUPPORT COVER	ABSTUETZDECKEL SUPPORT COVER
20	822100220850		1	BRAKE DISC	DISQUE DE FREIN DISCO FRENO	BREMSSCHEIBE DISCO DE FRENO
21	X487532541000	M10 X 70	2	HEX. SOCK. SCREW	VIS TETE HEX VITE PARKER	ZYLINDERSCHRAUBE TORN.CAB.HUECA
22	X521404447000		2	SPRING PLATE	PLAQUE RESSORT RONDELLA ELASTIC	FEDERSCHEIBE PLETINA MUELLE
23	822100220080		2	BUSH	BAGUE BOCCOLA	BUCHSE CASQUILLO
25	822100220340	US 750–1000 TR/MM 25	1	SPUR GEAR	ENGRENAGE DROIT INGRANAGGIO DIR.	STIRNRAD RUEDA DE DIENTES
25	824100220010	540–1000 TR/MM 22	1	SPUR GEAR	ENGRENAGE DROIT INGRANAGGIO DIR.	STIRNRAD RUEDA DE DIENTES
28	H822100220070		1	BALL BEARING	ROULEMENT BILLES CUSCINETTO SFERE	KUGELLAGER COJINETE DE BOLA
29	916100220010		1	NOZZLE	NEZ INJECTEUR INIETTORE	DUESE TOBERA

Independant Power Take Off Clutch
Embrayage De Prise De Force Independante
Ipto Kupplung
Frizione Pto Indipendente
Embrague De Toma De Fuerza Independiente

50-5

1-WG23-013-A

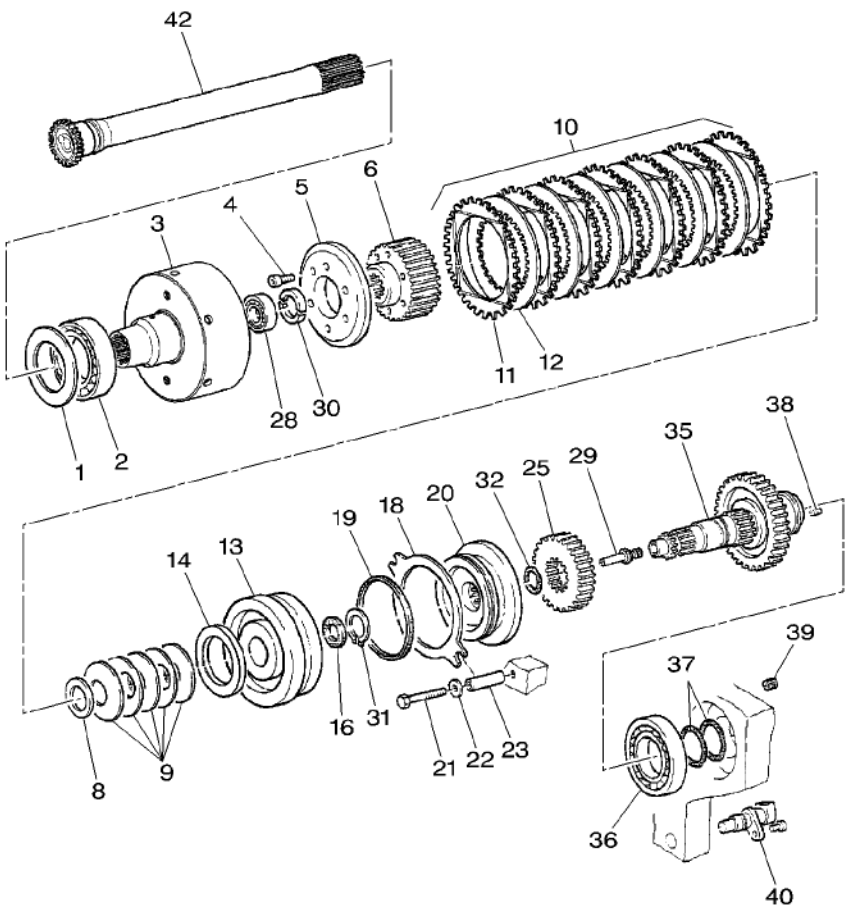

30	199100080110		2	BANJO FITTING	RACCORD BANJO FISSAGGIO RACCOR	RINGSTUECK RACOR BANJO
31	X530005446000	∅ 45 X 1,75	1	CIRCLIP	CIRCLIP ANNELLO ELASTICO	SEEGERING GRAPA CIRCULAR
32	X548909366000	∅ 40,2 X 3	1	O RING	JOINT TORIQUE ANELLO TENUTA	O-RING ANILLO FORMA 'O'
35	822100220520		1	SHAFT	ARBRE ALBERO	WELLE ARBOL
36	G822100220030		1	BEARING ROLLER	ROULEMENT GALETS CUSCINETTO RULLI	ROLLENLAGER COJINETE RODILLO
37	X560505900000		2	PLAIN COMPR.RING	SEGMENT RECTANG. PLAIN COMPR.RING	RECHTECKRING PLAIN COMPR.RING
38	X412823106000	M10 X 12	1	SCREW	VIS VITE	SCHRAUBE TORNILLO
39	822100220120		1	SHROUD	BUSE VELO	UMMANTELUNG BOVEDA
40		90-85 No 11	1	TRANSMITTER	TRANSMETTEUR TRASMETTITORE	UEBERTRAEGER TRANSMISOR
42	926102080130		1	SHAFT	ARBRE ALBERO	WELLE ARBOL

Engine P . T . O	Flange – Bridle
Prise De Force Independante	Flasque – Bride
Motorzapfwelle	Flansh – Spannband
Presa Di Forza Indipendente	Flangia – Briglia
Toma De Fuerza Independiente	Pletina – Brida

50-10

1-WG78-002-A

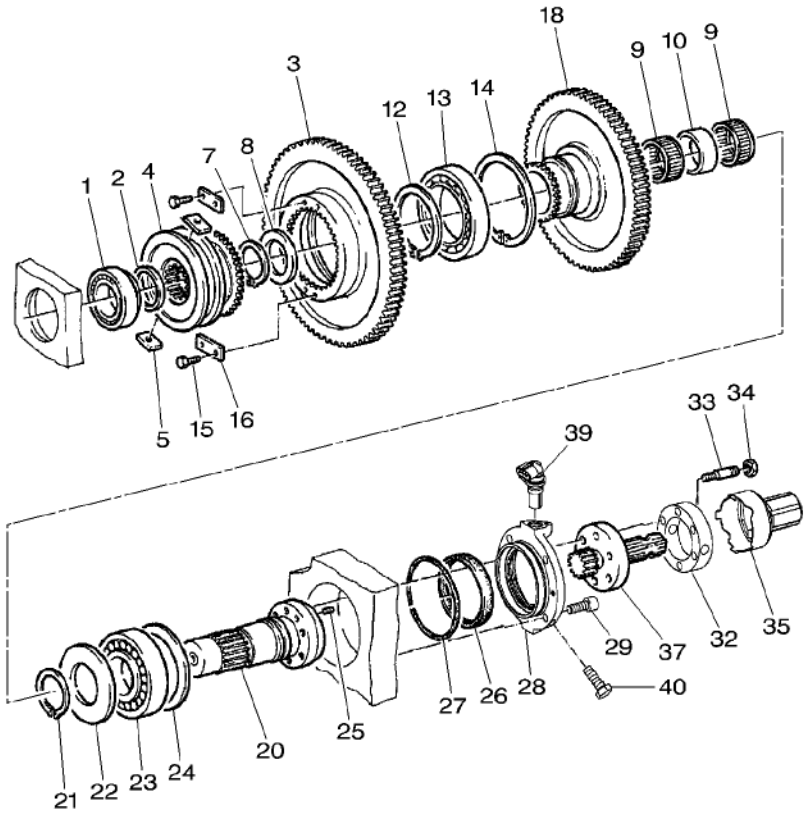

1	X619049041009		1	CUP AND CONE	CUVETTE ET CONE COPPA E CONO	KEGELROLLENLAGER PISTA Y CONO
2	X534566246000	∅ 50 X 62	1	BACKUP RING	CONTRE BAGUE ANELLO APPOGGIO	STUETZRING ANILLA SOPORTE
3	822100220310	(US) 750–1000 TR/MM 74	1	SPUR GEAR	ENGRENAGE DROIT INGRANAGGIO DIR.	STIRNRAD RUEDA DE DIENTES
3	824100220020	540–1000 TR/MM 83	1	SPUR GEAR	ENGRENAGE DROIT INGRANAGGIO DIR.	STIRNRAD RUEDA DE DIENTES
4	822100220330		1	COUPLER	ACCOUPLEMENT ACCOPPIATORE	KUPPLUNGSSTUECK ACOPLADOR
5	822100220150		2	SLIDE	COULISSE SLITTA	GLEITSTUECK CORREDERA
7	X530006146000	∅ 55 X 2	1	CIRCLIP	CIRCLIP ANNELLO ELASTICO	SEEGERING GRAPA CIRCULAR
8	822100220210		1	DISC	DISQUE DISCO	SCHEIBE DISCO
9	H312100222020		2	NEEDLE CAGE	CAGE A AIGUILLES PORTAGHI	NADELKAEFIG JUALA DE AGUJA
10	822100220220		1	SPACER	ENTRETOISE DISTANZIALE	ABSTANDSTUECK DISCO ESPACIADOR
12	X530007946000	∅ 85 X 3	1	CIRCLIP	CIRCLIP ANNELLO ELASTICO	SEEGERING GRAPA CIRCULAR
13	X605506600000		1	BALL BEARING	ROULEMENT BILLES CUSCINETTO SFERE	KUGELLAGER COJINETE DE BOLA
14	X530325046000	∅ 130 X 4	1	CIRCLIP	CIRCLIP ANNELLO ELASTICO	SEEGERING GRAPA CIRCULAR
15	X487520041000	M6 X 16	4	HEX. SOCK. SCREW	VIS TETE HEX VITE PARKER	ZYLINDERSCHRAUBE TORN.CAB.HUECA
16	822100220200		2	STOP	BUTEE STOP	ANSCHLAG PARO
18	822100220300	65	1	SPUR GEAR	ENGRENAGE DROIT INGRANAGGIO DIR.	STIRNRAD RUEDA DE DIENTES
20	H822100220010		1	SHAFT	ARBRE ALBERO	WELLE ARBOL
21	X530009100000	∅ 65 X 4	1	CIRCLIP	CIRCLIP ANNELLO ELASTICO	SEEGERING GRAPA CIRCULAR
22	716151220210		1	THRUST WASHER	RONDELLE BUTEE RONDELLA REGGISP	ANLAUFSCHEIBE ARANDELA ACELER
23	X619049341009		1	CUP AND CONE	CUVETTE ET CONE COPPA E CONO	KEGELROLLENLAGER PISTA Y CONO
24	X534678300000	⧗ 0,10 MM	X	SHIM	CALE REGLAGE SPESSORE	EINSTELLBLECH CALCE
24	X534678400000	⧗ 0,15 MM	X	SHIM	CALE REGLAGE SPESSORE	EINSTELLBLECH CALCE
24	X534678500000	⧗ 0,20 MM	X	SHIM	CALE REGLAGE SPESSORE	EINSTELLBLECH CALCE
24	X534678600000	⧗ 0,30 MM	X	SHIM	CALE REGLAGE SPESSORE	EINSTELLBLECH CALCE
24	X534678700000	⧗ 0,50 MM	X	SHIM	CALE REGLAGE SPESSORE	EINSTELLBLECH CALCE
25	X413420206000	M6 X 16	2	GRUB SCREW	VIS SANS TETE VITE SENZA TESTA	GEWINDESTIFT TORNILLO PRESOR

Engine P . T . O	Flange – Bridle
Prise De Force Independante	Flasque – Bride
Motorzapfwelle	Flansh – Spannband
Presa Di Forza Indipendente	Flangia – Briglia
Toma De Fuerza Independiente	Pletina – Brida

50-10

1-WG78-002-A

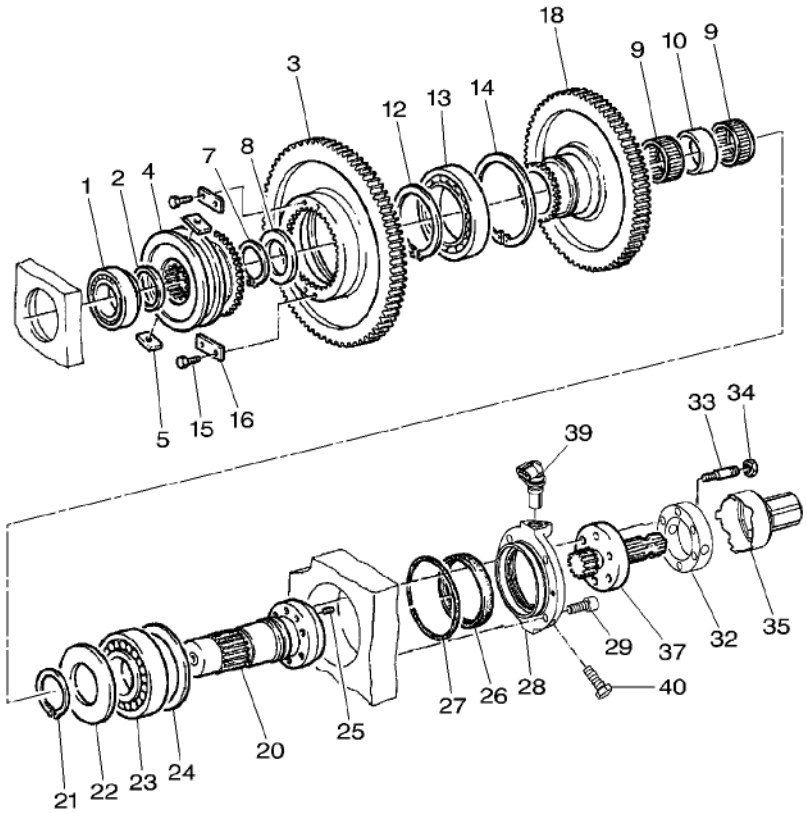

26	X550162800000	95 X 110 X 10	1	OIL SEAL	BAGUE ETANCHEITE BOCCOLA PARAOLIO	OELDICHTRING BUJE RETENACEITE
27	X548994700000	∅ 114 X 3	1	O RING	JOINT TORIQUE ANELLO TENUTA	O–RING ANILLO FORMA 'O'
28	926150220200		1	COVER	COUVERCLE COPERCHIO	DECKEL CUBIERTA
29	X485018905000	M12 X 35	4	HEX. SOCK. SCREW	VIS TETE HEX VITE PARKER	ZYLINDERSCHRAUBE TORN.CAB.HUECA
32	926150220050		1	SPACER	ENTRETOISE DISTANZIALE	ABSTANDSTUECK DISCO ESPACIADOR
33	X489132106000	M10 X 50	6	STUD	GOUJON PRIGIONIERO	STEHBOLZEN CHAVETA ROSCADO
34	X428202805000	M10	6	NUT	ECROU DADO	MUTTER TUERCA
35	926150220060		1	PTO GUARD	PTO PROTECTEUR PTO RIPARO	PTO SCHUTZ DEFENSA TDF
37	926150220040	21	1	PTO SHAFT	ARBRE PTO PTO ALBERO	PTO GELWELLE EJE TDF
37	926150220030	[A] 6	1	PTO SHAFT	ARBRE PTO PTO ALBERO	PTO GELWELLE EJE TDF
37	926150220020	20	1	PTO SHAFT	ARBRE PTO PTO ALBERO	PTO GELWELLE EJE TDF
39		90–85 No 11	1	TRANSMITTER	TRANSMETTEUR TRASMETTITORE	UEBERTRAEGER TRANSMISOR
40	X487545241000	M16 X 40	1	HEX. SOCK. SCREW	VIS TETE HEX VITE PARKER	ZYLINDERSCHRAUBE TORN.CAB.HUECA

[A] OPTION ONLY
OPTION SEULEMENT
NUR WAHL
OPZIONE SOLTANTO
OPCION SOLAMENTE

Engine P . T . O	Cylinder
Prise De Force Independante	Cylindre
Motorzapfwelle	Zylinder
Presa Di Forza Indipendente	Cilindro
Toma De Fuerza Independiente	Cilindro

50-15

1-WG90-001-A

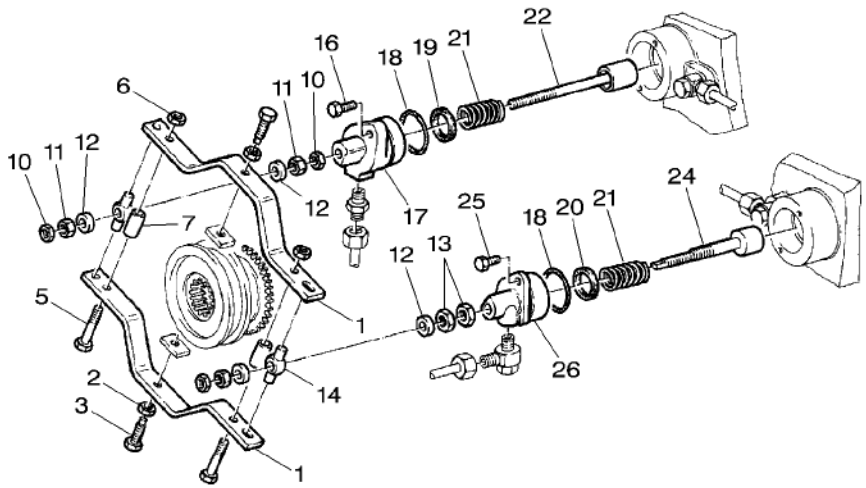

1	822100220250		2	STIRRUP	ETRIER STAFFA	BUEGEL FUACION
2	X428203203000	M12	2	NUT	ECROU DADO	MUTTER TUERCA
3	822100220390		2	STUD	GOUJON PRIGIONIERO	STEHBOLZEN CHAVETA ROSCADO
5	X487532541000	M10 X 70	2	HEX. SOCK. SCREW	VIS TETE HEX VITE PARKER	ZYLINDERSCHRAUBE TORN.CAB.HUECA
6	X428202839000	M10	2	NUT	ECROU DADO	MUTTER TUERCA
7	822100220260		2	TUBE	TUBE TUBO	ROHR TUBO
10	X428803240000	M12	3	NUT	ECROU DADO	MUTTER TUERCA
11	X428203203000	M12	3	NUT	ECROU DADO	MUTTER TUERCA
12	822100220470		4	DISC	DISQUE DISCO	SCHEIBE DISCO
13	X428804040000	M16	2	NUT	ECROU DADO	MUTTER TUERCA
14	822100220240		2	SPACER	ENTRETOISE DISTANZIALE	ABSTANDSTUECK DISCO ESPACIADOR
16	X487531941000	M10 X 40	2	HEX. SOCK. SCREW	VIS TETE HEX VITE PARKER	ZYLINDERSCHRAUBE TORN.CAB.HUECA
17	822100220100		1	CYLINDER	CYLINDRE CILINDRO	ZYLINDER CILINDRO
18	X548926801000	∅ 50 X 3	2	O RING	JOINT TORIQUE ANELLO TENUTA	O-RING ANILLO FORMA 'O'
19	X548766700000		1	SEAL SECTION	PROFIL ETANCH SEZIONE TENUTA	DICHTPROFIL PARTE DE RETEN
20	X548767000000		1	SEAL SECTION	PROFIL ETANCH SEZIONE TENUTA	DICHTPROFIL PARTE DE RETEN
21	822100220110		2	COMP.SPRING	RESSORT DE COMPR MOLLA COMPOSTA	DRUCKFEDER RESORTE DE COMP.
22	H822100220080		1	PISTON	PISTON PISTONE	KOLBEN PISTON
24	822100220610		1	PISTON	PISTON PISTONE	KOLBEN PISTON
25	X487531505000	M10 X 25	2	HEX. SOCK. SCREW	VIS TETE HEX VITE PARKER	ZYLINDERSCHRAUBE TORN.CAB.HUECA
26	822100220620		1	CYLINDER	CYLINDRE CILINDRO	ZYLINDER CILINDRO

Engine P . T . O Prise De Force Independante Motorzapfwelle Presa Di Forza Indipendente Toma De Fuerza Independiente	Pipes Tuyauteries Rohrleitung Tubatura Tuberias	50-20

1-WG29-003-A

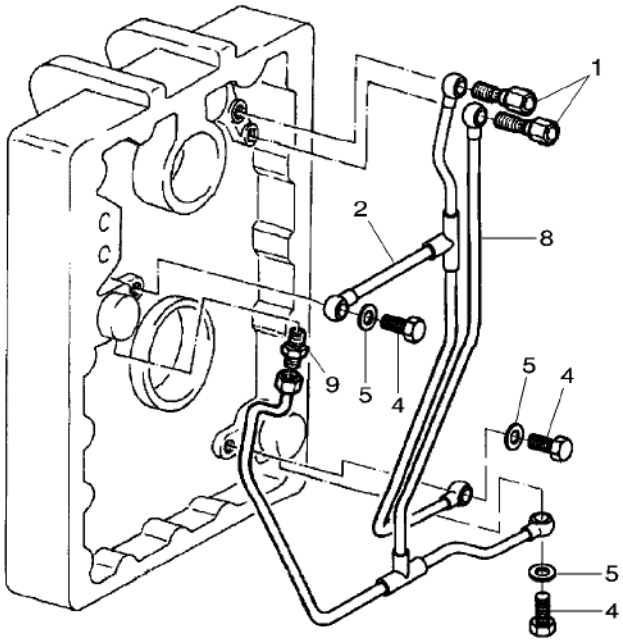

1	822100620400	2 CENTER PIECE	PIECE INTERME CENTER PIECE	MITTELSTUECK PIEZA INTERMEDIA
2	H822100620310	1 PIPE	TUYAU TUBO	ROHRLEITUNG CANO
4	822100620460	3 UNION	RACCORD RACCORDO	VERSCHRAUBUNG RACOR
5	X450008708000	3 WASHER	RONDELLE RONDELLA	UNTERLEGSCHEIBE ARANDELA
8	H822100620300	1 PIPE	TUYAU TUBO	ROHRLEITUNG CANO
9	822100620450	1 THREAD. PART	PIECE A VISSER THREAD. PART	SCHRAUBSTUECK PIEZA ROSCADO

Guard Garant Schutzbleche Difesa Proteccion	Pto Prise De Force Zapfwelle Presa Di Forza Toma De Fuerza	50-25	With Clevis Quick Adjustment Avec Chape A Reglage Rapide Mit Gabelstueck Schnelleinstellung Con Gancio D'Attacco Aggiustatore Rapido Con Dispositivo De Sosten A Ajuste Rapido

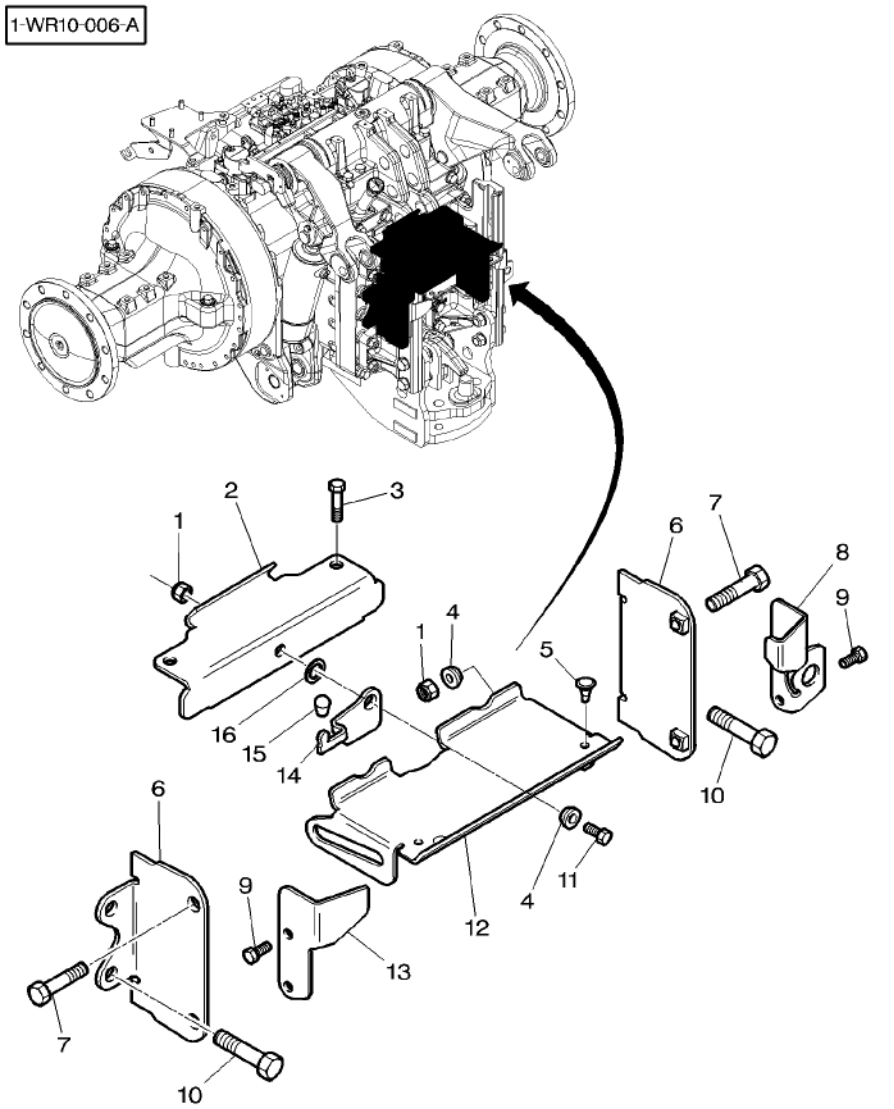

1	1440329X1		3	LOCKNUT	ECROU BLOCAGE AUTOBLOCCANTE	SICHERUNGSMUTTER CONTRATUERCA
2	H916501110010		1	HOLDER	PIECE SUPPORT SUPPORTO DI BASE	HALTER SUJETADOR
3	339337X1	M8 X 30	2	HEX. SOCK. SCREW	VIS TETE HEX VITE PARKER	ZYLINDERSCHRAUBE TORN.CAB.HUECA
4	816960700020		3	BUSH	BAGUE BOCCOLA	BUCHSE CASQUILLO
5	205900163040		2	PLUG	BOUCHON TAPPO	VERSCHL.STOPFEN TAPON
6	H916501110021		2	PROTECTOR	PROTECTEUR PROTETTORE	SCHUTZ PROTECTOR
7	3009494X1	M10 X 35	2	HEX. SOCK. SCREW	VIS TETE HEX VITE PARKER	ZYLINDERSCHRAUBE TORN.CAB.HUECA
8	916501110060	▶	1	STAND	BEQUILLE CAVALLETTO	STUETZE CABALLETE
9	339123X1	M8 X 20	4	HEX. SOCK. SCREW	VIS TETE HEX VITE PARKER	ZYLINDERSCHRAUBE TORN.CAB.HUECA
10	3011545X1	M18 X 110	4	HEX. SOCK. SCREW	VIS TETE HEX VITE PARKER	ZYLINDERSCHRAUBE TORN.CAB.HUECA
11	3009492X1	M10 X 25	1	HEX. SOCK. SCREW	VIS TETE HEX VITE PARKER	ZYLINDERSCHRAUBE TORN.CAB.HUECA
12	916501110031		1	FLAP	BATTANT PIANO	KLAPPE ALETILLA
13	916501110050	◀	1	STAND	BEQUILLE CAVALLETTO	STUETZE CABALLETE
14	916501110040		1	LEVER	LEVIER LEVA	HEBEL PALANCA
15	X562555063000		1	CAP	CHAPEAU CAPUCHON	KAPPE TAPA
16	311200020050		1	DISC	DISQUE DISCO	SCHEIBE DISCO

Guard **Garant** **Schutzbleche** **Difesa** **Proteccion**	**Pto** **Prise De Force** **Zapfwelle** **Presa Di Forza** **Toma De Fuerza**	**50-30**

1-WR10-007-A

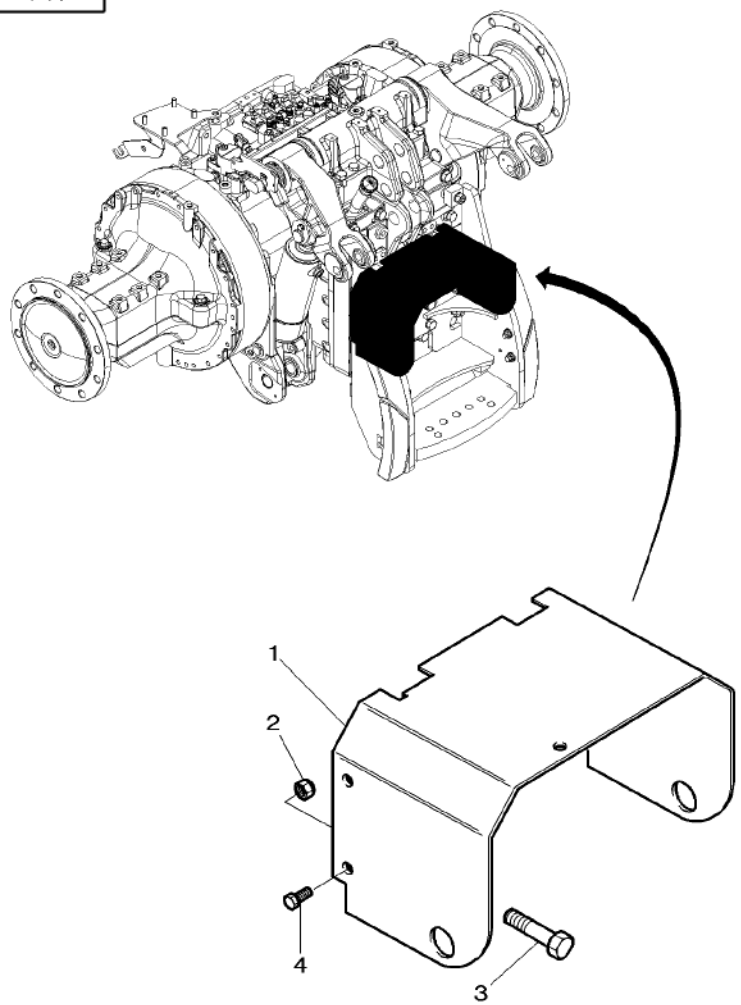

1	920501110010		**1**	PTO GUARD	PTO PROTECTEUR PTO RIPARO PTO SCHUTZ DEFENSA TDF
2	339402X1		**4**	NUT	ECROU DADO MUTTER TUERCA
3	3011545X1	M18 X 110	**4**	HEX. SOCK. SCREW	VIS TETE HEX VITE PARKER ZYLINDERSCHRAUBE TORN.CAB.HUECA
4	3009494X1	M10 X 35	**4**	HEX. SOCK. SCREW	VIS TETE HEX VITE PARKER ZYLINDERSCHRAUBE TORN.CAB.HUECA

Guard **Garant** **Schutzbleche** **Difesa** **Proteccion**	**Pto** **Prise De Force** **Zapfwelle** **Presa Di Forza** **Toma De Fuerza**	**50-35**

1-WR10-008-A

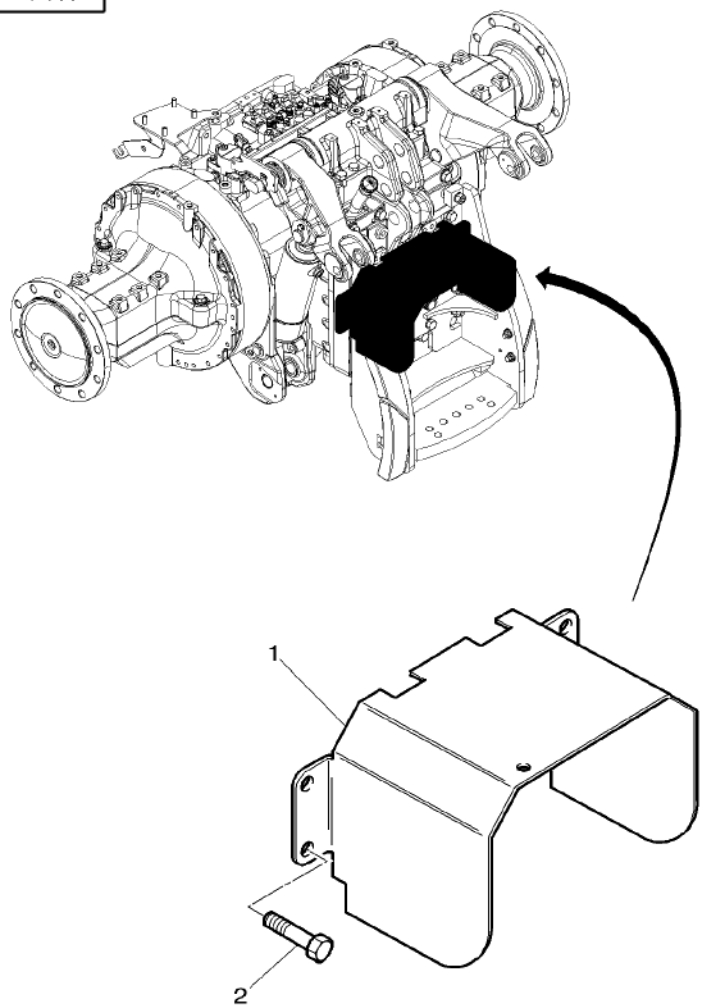

1	4276969M1		**1** COWL	GARANT CAPPOTTATURA	AUFSATZ CAPERUZA
2	3011545X1	M18 X 110	**4** HEX. SOCK. SCREW	VIS TETE HEX VITE PARKER	ZYLINDERSCHRAUBE TORN.CAB.HUECA

60

Weight Frame And Tow Pin
Support De Masses Et Broche
Gewichtrahmen Und Kupplungsbolzen
Telaio Pesante E Perno Di Rimorchio
Bastidor Para Pesas Y Perno De Remolque

60-5

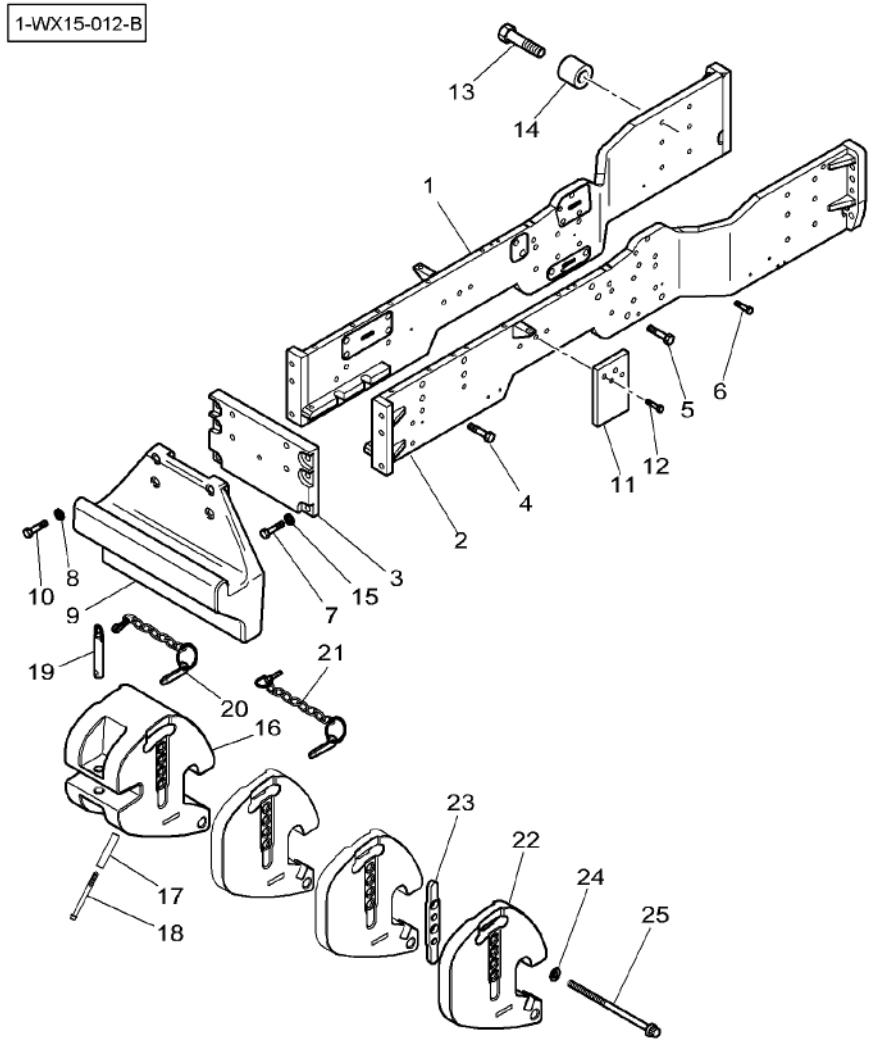

1*	4278257M93	▶	1	RUNNER	LONGERON GIRANTE* RUEDA GIRATORIA
2*	4278256M93	◀	1	RUNNER	LONGERON GIRANTE* RUEDA GIRATORIA
3	4270022M3		1	PLATE	PLAQUE PIASTRA PLATO
4	3581527M1	M20 X 75	12	HEX. SOCK. SCREW	VIS TETE HEX VITE PARKER ZYLINDERSCHRAUBE TORN.CAB.HUECA
5	3010915X1	M20 X 70	4	HEX. SOCK. SCREW	VIS TETE HEX VITE PARKER ZYLINDERSCHRAUBE TORN.CAB.HUECA
6	3019852X1	M12 X 55	8	HEX. SOCK. SCREW	VIS TETE HEX VITE PARKER ZYLINDERSCHRAUBE TORN.CAB.HUECA
7	3386216M1	M20 X 60	6	HEX. SOCK. SCREW	VIS TETE HEX VITE PARKER ZYLINDERSCHRAUBE TORN.CAB.HUECA
8*	385365X1	➡ ∅ 20–37 X 5	4	WASHER	RONDELLE RONDELLA UNTERLEGSCHEIBE ARANDELA
9	5017891M1		1	FRAME	BATI CORNICE RAHMEN BASTIDOR
10*	3010434X1	M20 X 80	4	SCREW METRIC	VIS METRIQUE VITE METRICA SCHRAUBE METR TORNILLO METRICO
11	5015565M1		2	PLATE	PLAQUE PIASTRA PLATTE PLATO
12	3010894X1	M20 X 50	4	HEX. SOCK. SCREW	VIS TETE HEX VITE PARKER ZYLINDERSCHRAUBE TORN.CAB.HUECA
12	3010915X1	[A] M20 X 70	4	HEX. SOCK. SCREW	VIS TETE HEX VITE PARKER ZYLINDERSCHRAUBE TORN.CAB.HUECA
13*	3001968X1	M20 X 60	1	HEX. SOCK. SCREW	VIS TETE HEX VITE PARKER ZYLINDERSCHRAUBE TORN.CAB.HUECA
14*	3011675X1	∅ 21–28.5 X 30	1	SPACER	ENTRETOISE DISTANZIALE ABSTANDSTUECK DISCO ESPACIADOR
15*	385365X1	∅ 20 – 37 X 5	6	WASHER	RONDELLE RONDELLA UNTERLEGSCHEIBE ARANDELA
16*	502113D1	220 KG	1	WEIGHT	MASSE PESO GEWICHT PESO DE CARGA
17*	3011704X1	∅ 16.5 X 28 X	1	SPACER	ENTRETOISE DISTANZIALE ABSTANDSTUECK DISCO ESPACIADOR
18*	4281425M1	M16 X 170	1	SCREW	VIS VITE SCHRAUBE TORNILLO
19*	***3387270M92***	∅ 30 MM ◀▶ 171,5 MM	1	PIN HITCH	BROCHE PERNO ATTACCO KUPPLUNGSBOLZEN PASADOR ENGAN.
19*	***3790349M92***	∅ 30 MM ◀▶ 191 MM	1	PIN HITCH	BROCHE PERNO ATTACCO KUPPLUNGSBOLZEN PASADOR ENGAN.
20*	4280784M91		1	CHAIN	CHAINE CATENA KETTE CADENA
21*	3382812M91		1	PIN	GOUPILLE PERNO BOLZEN PASADOR
22*	***202-9220***	45 KG	6	WEIGHT	MASSE PESO GEWICHT PESO DE CARGA
23*	***202-9223***		2	PLATE	PLAQUE PIASTRA PLATTE PLATO
24*	3011679X1	∅ 17 X 45 X 6 MM	2	SPACER	ENTRETOISE DISTANZIALE ABSTANDSTUECK DISCO ESPACIADOR

Weight Frame And Tow Pin
Support De Masses Et Broche
Gewichtrahmen Und Kupplungsbolzen
Telaio Pesante E Perno Di Rimorchio
Bastidor Para Pesas Y Perno De Remolque

60-5

1-WX15-012-B

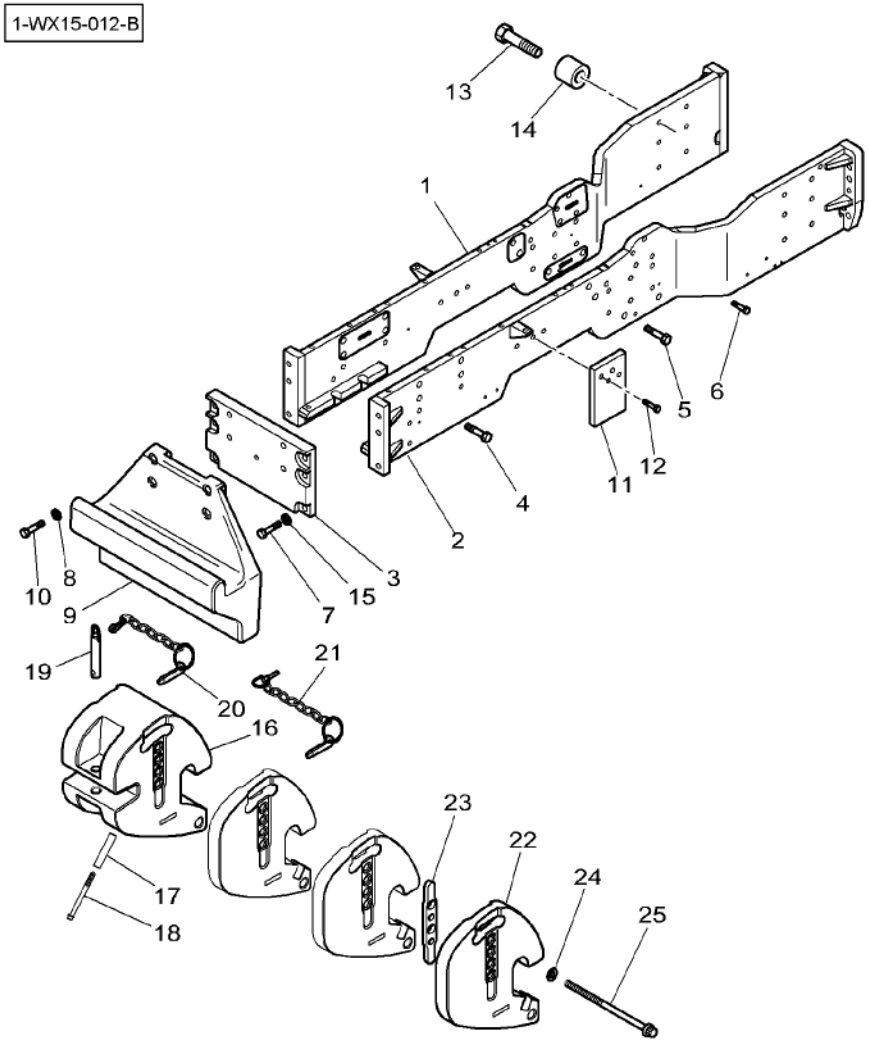

25*	3011705X1	M16 X 410 MM	**2** SCREW	VIS VITE	SCHRAUBE TORNILLO

[A] WITH FRONT LINKAGE 50000N
AVEC ATTELAGE AVANT 50000N
MIT VORDERE KUPPLUNG 50000N
CON ATTACCO ANTERIORE 50000N
CON ENGANCHE DELANTERO 50000N

Weight Frame And Tow Pin Support De Masses Et Broche Gewichtrahmen Und Kupplungsbolzen Telaio Pesante E Perno Di Rimorchio Bastidor Para Pesas Y Perno De Remolque	60-10	With Front Lift Avec Relevage Avant Mit Vorne Kraftheber Con Sollevamento Anterior Con Levante Delante

1-WX15-003-A

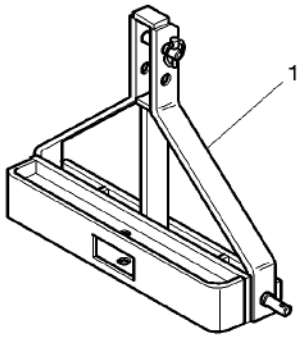

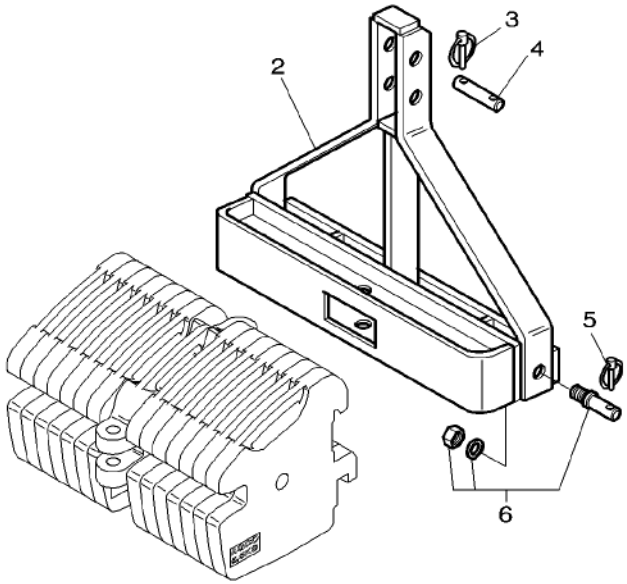

1	3786462M91		1	SUPPORT	SUPPORT SUPPORTO	LAGERUNG DISPOS.DE SOSTEN
2		1 REF. 1	1	SUPPORT	SUPPORT SUPPORTO	LAGERUNG DISPOS.DE SOSTEN
3	3782684M1	1	1	CLIP	PATTE D'ATTACHE FERMAGLIO	SCHELLE CLIP
4	3903839M1	1	1	CLEVIS PIN	AXE PERNO D'ATTACCO	SPLINTBOLZEN BULON CILINDRICO
5	3903841M1	1	1	CLIP	PATTE D'ATTACHE FERMAGLIO	SCHELLE CLIP
6	3903840M1	1	1	PITON	PITON FIX PITON	PITON FIX PITON

Weight Frame And Tow Pin
Support De Masses Et Broche
Gewichtrahmen Und Kupplungsbolzen
Telaio Pesante E Perno Di Rimorchio
Bastidor Para Pesas Y Perno De Remolque

60-15

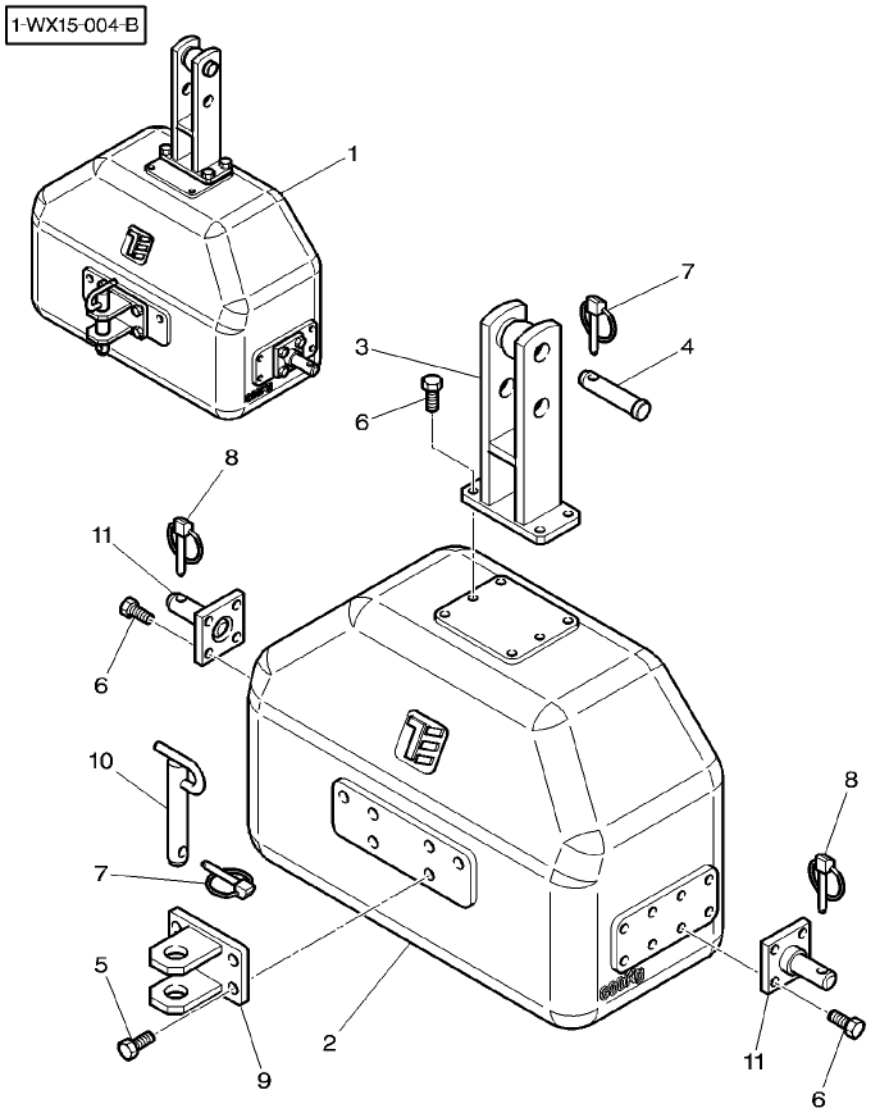

1	4271480M91	800KG	1	WEIGHT	MASSE PESO	GEWICHT PESO DE CARGA
2		1 REF. 1	1	WEIGHT	MASSE PESO	GEWICHT PESO DE CARGA
3	3907226M1	1	1	SUPPORT	SUPPORT SUPPORTO	LAGERUNG DISPOS.DE SOSTEN
4	3903839M1	1	1	CLEVIS PIN	AXE PERNO D'ATTACCO	SPLINTBOLZEN BULON CILINDRICO
5	391269X1	1 M16 X 30	4	HEX. SOCK. SCREW	VIS TETE HEX VITE PARKER	ZYLINDERSCHRAUBE TORN.CAB.HUECA
6	3011611X1	1 M16 X 45	12	HEX. SOCK. SCREW	VIS TETE HEX VITE PARKER	ZYLINDERSCHRAUBE TORN.CAB.HUECA
7	3782684M1	1 ∅ 8 MM	2	CLIP	PATTE D'ATTACHE FERMAGLIO	SCHELLE CLIP
8	3903841M1	1 ∅ 11 MM	2	CLIP	PATTE D'ATTACHE FERMAGLIO	SCHELLE CLIP
9	3907227M1	1	1	CLEVIS	CHAPE GANCIO D'ATTACCO	GABELSTUECK GANCHO SEGURI.
10	3900263M91	1	1	PIN	GOUPILLE PERNO	BOLZEN PASADOR
11	3907225M1	1	2	PITON	PITON FIX PITON	PITON FIX PITON

Belly Weight
Masse Ventrale
Grundgewicht
Zavorra Ventrale
Pesa Central

60-20

1-WJ07-008-A

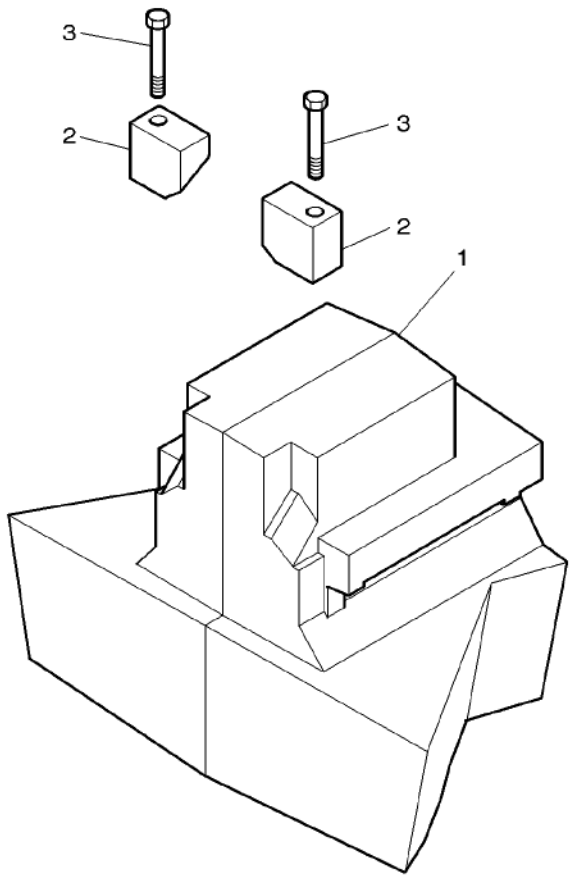

1	3779507M6	500 KG	**1**	WEIGHT	MASSE PESO	GEWICHT PESO DE CARGA
2	3779514M2	▶	**1**	BRIDLE	BRIDE BRIGLIA	SPANNBAND BRIDA
2	3779515M2	◀	**1**	BRIDLE	BRIDE BRIGLIA	SPANNBAND BRIDA
3	3011422X1	M16 X 175	**2**	SCREW	VIS VITE	SCHRAUBE TORNILLO

Front Axle 4 Wheel Drive Essieu Avant 4 Roues Motrices Vorderachse 4 Rad Antrieb Assale Anteriore 4 Ruedas Motriz Eje Delantero 4 Ruedas Motriz	Bracket Support Halter Supporto Soporte	60-25

1-WJ05-006-B

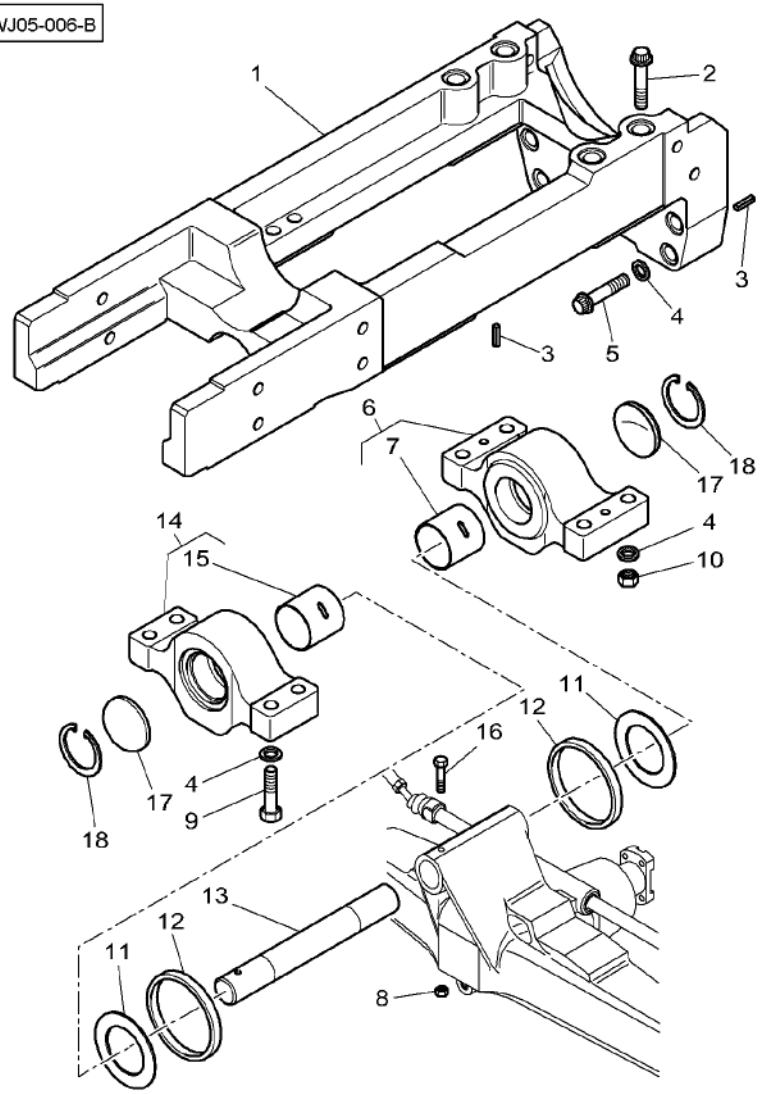

1	3780872M3		1	AXLE HOLDER	SUPPORT D ESSIEU PORTA ASSALE	ACHSHALTER EJE DE APOYO
2	3010850X1	M20 X 170	1	SCREW	VIS VITE	SCHRAUBE TORNILLO
2	3010852X1	M20 X 200	3	SCREW METRIC	VIS METRIQUE VITE METRICA	SCHRAUBE METR TORNILLO METRICO
3	372081X1		4	LOCATOR	PION DE CENTRAGE LOCALIZZATORE	ARRETIERUNG INDIC POSICION
4	385365X1		12	WASHER	RONDELLE RONDELLA	UNTERLEGSCHEIBE ARANDELA
5	3010557X1	M20 X 100	4	SCREW METRIC	VIS METRIQUE VITE METRICA	SCHRAUBE METR TORNILLO METRICO
6	3787719M11		1	BEARING CARRIER	PALIER CUSCINETTO SUPP-	LAGER-GEHAEUSE TEJUELO
7	3787722M2	6 ∅ 70 MM	1	BUSH	BAGUE BOCCOLA	BUCHSE CASQUILLO
8	339034X1	M16	1	NUT	ECROU DADO	MUTTER TUERCA
9	3010563X1	M20 X 90	4	SCREW	VIS VITE	SCHRAUBE TORNILLO
10	3009746X1	M20	4	NUT	ECROU DADO	MUTTER TUERCA
11	3785075M1	∅ 70-115 X 4	2	THRUST WASHER	RONDELLE BUTEE RONDELLA REGGISP	ANLAUFSCHEIBE ARANDELA ACELER
12	3788079M1	∅ 120 X 8	2	GASKET	JOINT GUARNIZIONE	DICHTSCHEIBE EMPAQUETADURA.
13	3787723M1		1	CLEVIS PIN	AXE PERNO D'ATTACCO	SPLINTBOLZEN BULON CILINDRICO
14	3787717M11		1	BEARING CARRIER	PALIER CUSCINETTO SUPP-	LAGER-GEHAEUSE TEJUELO
15	3787722M2	14	1	BUSH	BAGUE BOCCOLA	BUCHSE CASQUILLO
16	3384132M1	M16 X 150	1	HEX. SOCK. SCREW	VIS TETE HEX VITE PARKER	ZYLINDERSCHRAUBE TORN.CAB.HUECA
17*	391549X1		2	PLUG	BOUCHON TAPPO	VERSCHL.STOPFEN TAPON
18*	339437X1		2	CIRCLIP	CIRCLIP ANNELLO ELASTICO	SEEGERING GRAPA CIRCULAR

Front Axle 4 Wheel Drive	Differential Lock Mechanism	60-30
Essieu Avant 4 Roues Motrices	Blocage De Differentiel	
Vorderachse-4wd	Diff -Sperre	
Assale Anteriore 4 Ruote Motrici	Comando Bloccaggio Differenziale	
Doble Traccion De Eje Frontal	Mecanismo Bloqueo Diferencial	

1-WK12-003-B

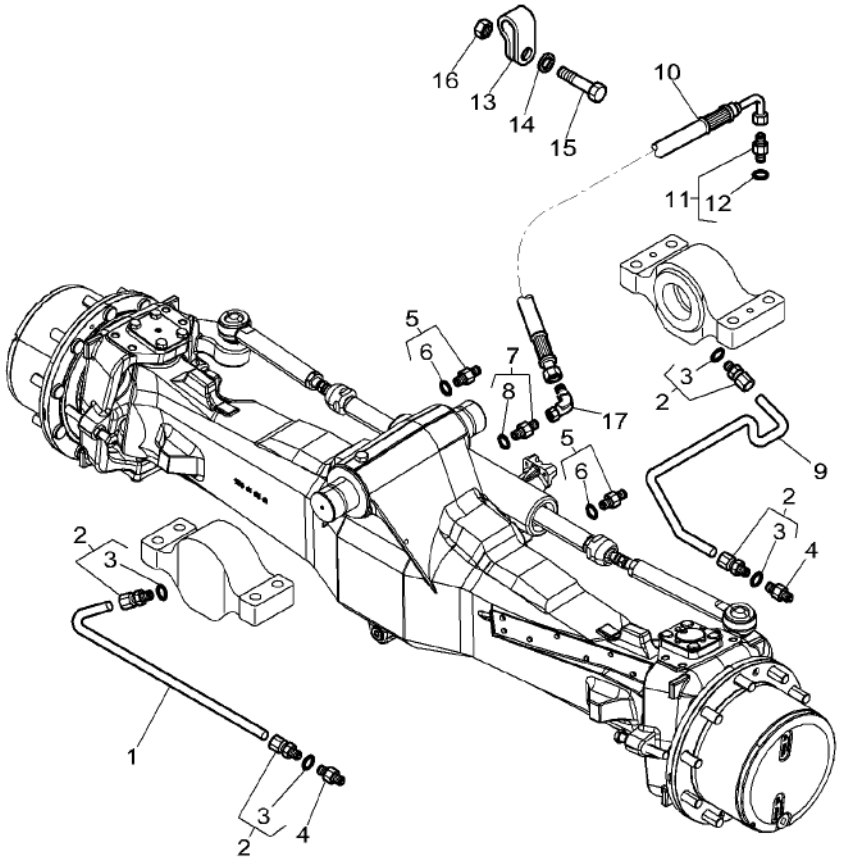

1	3788783M1		1	TUBE	TUBE TUBO	ROHR TUBO
2	3002070X91		4	CONNECTOR	BORNE MORSETTO	DOPPELNIPPEL CONECTOR
3	338760X1	2	1	O RING	JOINT TORIQUE ANELLO TENUTA	O-RING ANILLO FORMA 'O'
4	339608X1	M10	2	GREASE NIPPLE	GRAISSEUR DROIT INGRASSAT.	FETT-NIPPEL ENGRASADOR
5	3011246X91		2	UNION	RACCORD RACCORDO	VERSCHRAUBUNG RACOR
6	3015163X1	5	1	O RING	JOINT TORIQUE ANELLO TENUTA	O-RING ANILLO FORMA 'O'
7	338795X91	M14 X 1,5	1	UNION	RACCORD RACCORDO	VERSCHRAUBUNG RACOR
8	338762X1	7	1	SEAL	JOINT ETANCHEITE ANELLO RACCORD	DICHTRING ARENDELA D'JUNTA
9	3788784M1		1	TUBE	TUBE TUBO	ROHR TUBO
10	4276146M1	◄► 3700MM	1	HYDR. HOSE	FLEXIBLE TUBOFLEX IDRAUL	HYDR. SCHLAUCH TUBO HIDRAULICO
11	3011619X91		1	UNION	RACCORD RACCORDO	VERSCHRAUBUNG RACOR
12	338762X1	11	1	SEAL	JOINT ETANCHEITE ANELLO RACCORD	DICHTRING ARENDELA D'JUNTA
13	3387756M1		1	CLIP	PATTE D'ATTACHE FERMAGLIO	SCHELLE CLIP
14	3714197M1		1	WASHER	RONDELLE RONDELLA	UNTERLEGSCHEIBE ARANDELA
15	339337X1	M8 X 30	1	HEX. SOCK. SCREW	VIS TETE HEX VITE PARKER	ZYLINDERSCHRAUBE TORN.CAB.HUECA
16	339169X1	M8	1	NUT	ECROU DADO	MUTTER TUERCA
17*	4280507M1	➡	1	UNION	RACCORD RACCORDO	VERSCHRAUBUNG RACOR

Guard And Transmission Shaft
Garant Et Arbre De Transmission
Schutz Und Allradantriebswelle
Riparo E Albero Trasmissione
Defensa Y Arbol De Transmision

60-35

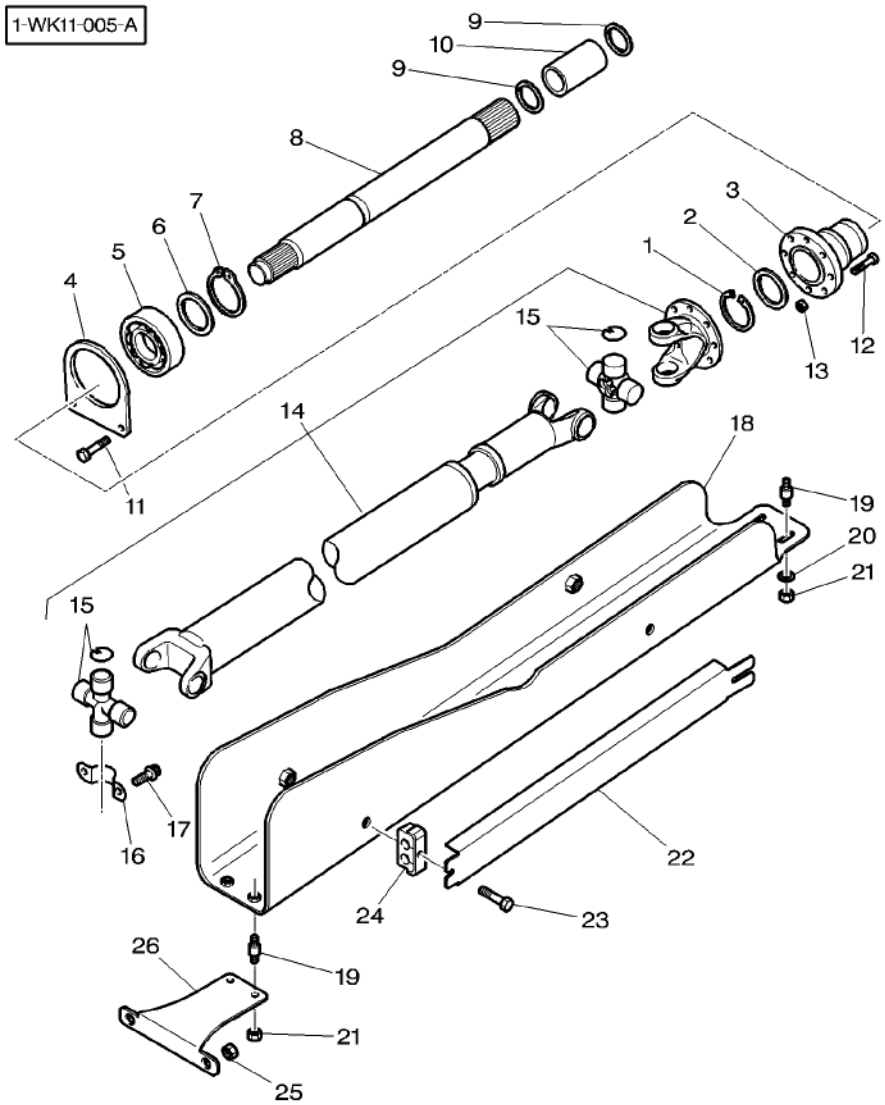

1	1441786X1		1	CIRCLIP	CIRCLIP ANNELLO ELASTICO	SEEGERING GRAPA CIRCULAR
2	822100320060		1	RING	ANNEAU ANELLO	RING ARO
3	3788813M1		1	SLEEVE	MANCHON MANICOTTO	HUELSE MANCHA
4	3789032M1		1	BRIDLE	BRIDE BRIGLIA	SPANNBAND BRIDA
5	339602X1		1	BEAR. 6212 2RS	RLT 6212 2RS CUSC. 6212 2RS	LAGER 6212 2RS RODA. 6212 2RS
6	X534539346000		1	BACKUP RING	CONTRE BAGUE ANELLO APPOGGIO	STUETZRING ANILLA SOPORTE
7	339605X1	∅ 57MM	1	CIRCLIP	CIRCLIP ANNELLO ELASTICO	SEEGERING GRAPA CIRCULAR
8	903100320010	◄► 551,5MM	1	SHAFT	ARBRE ALBERO	WELLE ARBOL
9	***3008359X1***	∅ 36,5 X 3	2	O RING	JOINT TORIQUE ANELLO TENUTA	O-RING ANILLO FORMA 'O'
10	916101320100		1	BUSH	BAGUE BOCCOLA	BUCHSE CASQUILLO
11	392892X1	M10 X 35	2	HEX. SOCK. SCREW	VIS TETE HEX VITE PARKER	ZYLINDERSCHRAUBE TORN.CAB.HUECA
12	3010749X1	M10 X 30	8	SCREW METRIC	VIS METRIQUE VITE METRICA	SCHRAUBE METR TORNILLO METRICO
13	1441932X1	M10	8	NUT METRIC	ECROU METRIQUE DADO METRICO	MUTTER METRISCH TUERCA METRICO
14	4271815M91		1	UNIVERSAL JOINT	CARDAN GIUNTO UNIVERSAL	KARDANGELENK JUNTA UNIVERSAL
15	3907427M91	14	2	CROSSPIECE	CROISILLON TRAVERSA	KREUZSTUECK PIEZA TRANSVERSA
16	4277510M1		2	BRIDLE	BRIDE BRIGLIA	SPANNBAND BRIDA
17	4277509M1		4	SCREW	VIS VITE	SCHRAUBE TORNILLO
18	4273655M1		1	COWL	GARANT CAPPOTTATURA	AUFSATZ CAPERUZA
19	**658081M2**		4	DAMPER	DAMPER S POULIE AMMORTIZZATORE	DAEMPFER VALV.REGULADORA
20	391039X1		2	WASHER METRIC	RONDELLE METR. RONDELLA METRICO	SCHEIBE METRISCH ARANDELA METRICO
21	394367X1	M8	4	LOCKNUT	ECROU BLOCAGE AUTOBLOCCANTE	SICHERUNGSMUTTER CONTRATUERCA
22	3789475M1		2	COWL	GARANT CAPPOTTATURA	AUFSATZ CAPERUZA
23	339010X1	M8 X 40	4	HEX. SOCK. SCREW	VIS TETE HEX VITE PARKER	ZYLINDERSCHRAUBE TORN.CAB.HUECA
24	3789441M1		4	BRIDLE	BRIDE BRIGLIA	SPANNBAND BRIDA
25	3010349X1	M14	2	NUT	ECROU DADO	MUTTER TUERCA
26	4277717M1		1	SUPPORT	SUPPORT SUPPORTO	LAGERUNG DISPOS.DE SOSTEN

Front Axle 4 Wheel Drive Essieu Avant 4 Roues Motrices Allradantrieb Vorderachse Assale Anteriore Eje Delantero 4 Ruedas Motrices	Clutch Embrayage Kupplung Frizione Embrague	60-40

1-WK15-011-A

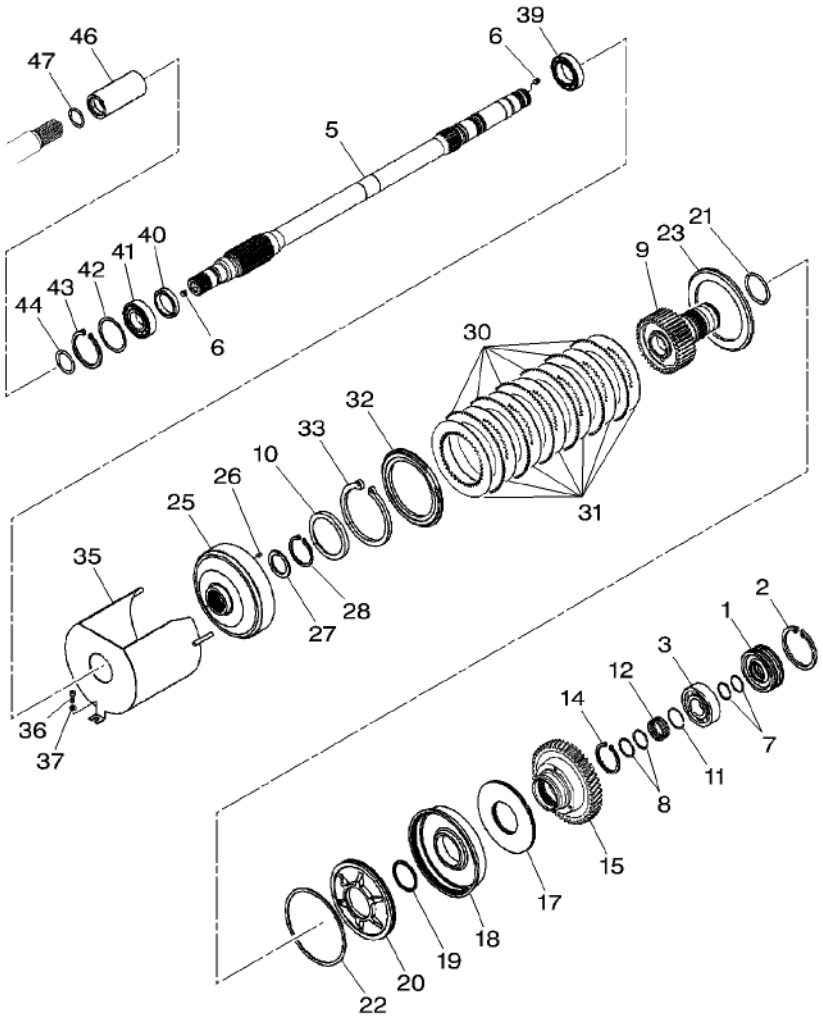

1	916100320080		1	COVER	COUVERCLE COPERCHIO	DECKEL CUBIERTA
2	X530108346000		1	CIRCLIP	CIRCLIP ANNELLO ELASTICO	SEEGERING GRAPA CIRCULAR
3	X620414500001		1	BEARING ROLLER	ROULEMENT GALETS CUSCINETTO RULLI	ROLLENLAGER COJINETE RODILLO
5	916100320070		1	SHAFT	ARBRE ALBERO	WELLE ARBOL
6	X412823006000	M10 X 10	2	GRUB SCREW	VIS SANS TETE VITE SENZA TESTA	GEWINDESTIFT TORNILLO PRESOR
7	X560703600000		2	PLAIN COMPR.RING	SEGMENT RECTANG. PLAIN COMPR.RING	RECHTECKRING PLAIN COMPR.RING
8	X560703700000		2	PLAIN COMPR.RING	SEGMENT RECTANG. PLAIN COMPR.RING	RECHTECKRING PLAIN COMPR.RING
9	916101320151		1	DISC CARRIER	PORTE DISQUE PORTADISCO	LAMELLENTRAEGER PORTALAMINAS
10	916100410060		1	SHEET METAL	CARROSSERIE CARROZZERIA	BLECH HOJA METALICA
11	X533813400000	∅ 47 X 1,5	1	SNAPRING	SEGMENT ARRET ANELLO SIEGER	SPRENGRING ANILLA RETENCION
12	X638525149000	42 X 47 X 17	1	NEEDLE CAGE	CAGE A AIGUILLES PORTAGHI	NADELKAEFIG JUALA DE AGUJA
14	X530216846000	∅ 63 X 3	1	CIRCLIP	CIRCLIP ANNELLO ELASTICO	SEEGERING GRAPA CIRCULAR
15		👁 60-45 No 4	1	PINION	PIGNON PIGNONE	RITZEL PINON
17	G916100320010		1	KIT, SPRING	JEU RESSORTS KIT MOLLA	FEDERNSATZ MUELLES JUEGO
18	916100320161		1	PISTON	PISTON PISTONE	KOLBEN PISTON
19	916100320170		1	SUPPORT COVER	COUVERC. SUPPORT SUPPORT COVER	ABSTUETZDECKEL SUPPORT COVER
20	916101320120		1	DISC	DISQUE DISCO	SCHEIBE DISCO
21	X548949815000	∅ 67 X 2,5	1	O RING	JOINT TORIQUE ANELLO TENUTA	O-RING ANILLO FORMA 'O'
22	916100320110		1	SUPPORT COVER	COUVERC. SUPPORT SUPPORT COVER	ABSTUETZDECKEL SUPPORT COVER
23	916100320131		1	PLATE	PLAQUE PIASTRA	PLATTE PLATO
25	916100320010		1	CLUTCH HOUSING	COUV.CART.EMBRA. CLUTCH HOUSING	KUPPLUNGSGLOCKE CLUTCH HOUSING
26	X500615046000	4 X 10	1	ROLL PIN	GOUPILLE ROULEE SPINA ELASTICA	SPANNHUELSE PASADOR ELASTICO
27	916100320040		1	DISC	DISQUE DISCO	SCHEIBE DISCO
28	X531206800000	∅ 65 X 2,5	1	CIRCLIP	CIRCLIP ANNELLO ELASTICO	SEEGERING GRAPA CIRCULAR
30	822100010130		6	EXTERNAL DISC	DISQUE EXTERIEUR DISCO ESTERNO	AUSSENLAMELLE DISCO EXTERIOR
31	822100010120		7	INTERNAL DISC	DISQUE INTERIEUR DISCO INTERNO	INNENLAMELLE DISCO INTERIOR

Front Axle 4 Wheel Drive Essieu Avant 4 Roues Motrices Allradantrieb Vorderachse Assale Anteriore Eje Delantero 4 Ruedas Motrices	Clutch Embrayage Kupplung Frizione Embrague	60-40

1-WK15-011-A

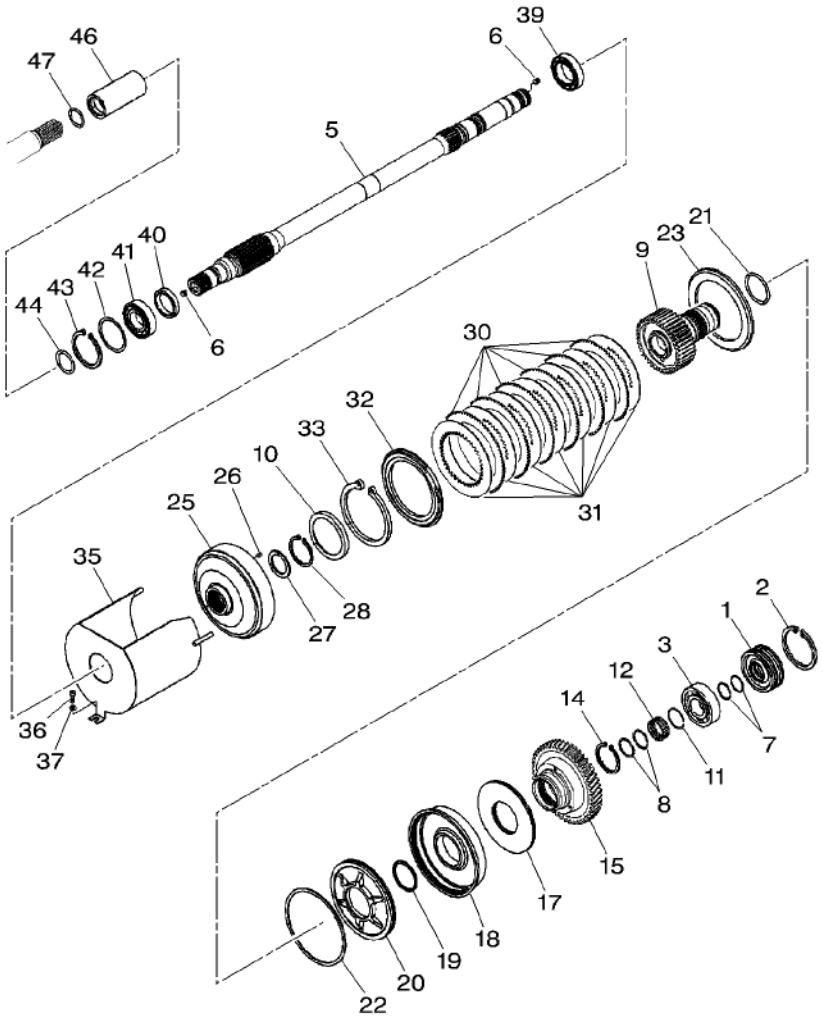

32	916100320140		1	PLATE	PLAQUE PIASTRA	PLATTE PLATO
33	X530209700000	∅ 130 X 4	1	CIRCLIP	CIRCLIP ANNELLO ELASTICO	SEEGERING GRAPA CIRCULAR
35	H916100320010		1	PROTECTOR	PROTECTEUR PROTETTORE	SCHUTZ PROTECTOR
36	X487526841000	M8 X 16	1	HEX. SOCK. SCREW	VIS TETE HEX VITE PARKER	ZYLINDERSCHRAUBE TORN.CAB.HUECA
37	X450006308000		1	WASHER	RONDELLE RONDELLA	UNTERLEGSCHEIBE ARANDELA
39	X606705900000		1	BALL BEARING	ROULEMENT BILLES CUSCINETTO SFERE	KUGELLAGER COJINETE DE BOLA
40	X550108900000	50 X 65 X 8	1	SHAFT SEAL	ETANCHEITE ARBRE TENUTA ALBERO	WELLENDICHTRING SELLO DE EJE
41	H312100200100		1	BALL BEARING	ROULEMENT BILLES CUSCINETTO SFERE	KUGELLAGER COJINETE DE BOLA
42	015149020035	⧗ 1,00 MM	1	SHIM	CALE REGLAGE SPESSORE	EINSTELLBLECH CALCE
42	015149020030	⧗ 0,10 MM	X	SHIM	CALE REGLAGE SPESSORE	EINSTELLBLECH CALCE
42	015149020036	⧗ 0,15 MM	X	SHIM	CALE REGLAGE SPESSORE	EINSTELLBLECH CALCE
42	015149020031	⧗ 0,20 MM	X	SHIM	CALE REGLAGE SPESSORE	EINSTELLBLECH CALCE
42	015149020032	⧗ 0,40 MM	X	SHIM	CALE REGLAGE SPESSORE	EINSTELLBLECH CALCE
43	X530107446000	∅ 80 X 2,5	1	CIRCLIP	CIRCLIP ANNELLO ELASTICO	SEEGERING GRAPA CIRCULAR
44	X548901801000	∅ 36,2 X 3	1	O RING	JOINT TORIQUE ANELLO TENUTA	O-RING ANILLO FORMA 'O'
46	916101320100		1	BUSH	BAGUE BOCCOLA	BUCHSE CASQUILLO
47	X548901801000	∅ 36,2 X 3	1	O RING	JOINT TORIQUE ANELLO TENUTA	O-RING ANILLO FORMA 'O'

Front Axle 4 Wheel Drive Essieu Avant 4 Roues Motrices Allradantrieb Vorderachse Assale Anteriore Eje Delantero 4 Ruedas Motrices	Clutch Embrayage Kupplung Frizione Embrague	60-45

1-WK15-012-A

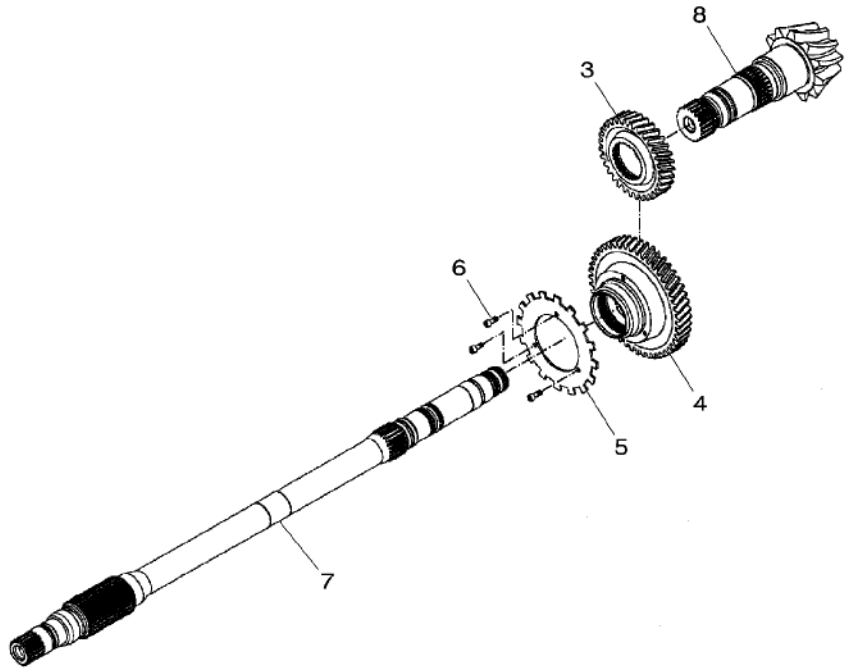

3	903101380010		1	SPUR GEAR	ENGRENAGE DROIT INGRANAGGIO DIR.	STIRNRAD RUEDA DE DIENTES
4	903101380020		1	SPUR GEAR	ENGRENAGE DROIT INGRANAGGIO DIR.	STIRNRAD RUEDA DE DIENTES
5	916100380100		1	GEAR	ENGRENAGE INGRANAGGIO	ZAHNRAD ENGRANAJE
6	X485004700000	M16 X 10	3	HEX. SOCK. SCREW	VIS TETE HEX VITE PARKER	ZYLINDERSCHRAUBE TORN.CAB.HUECA
7		60-40 No 5	1	SHAFT	ARBRE ALBERO	WELLE ARBOL
8		30-40 No 18	1	PINION SHAFT	ARBRE DENTE ALBERO PIGNONE	RITZELWELLE EJE PINON

Front Axle 4 Wheel Drive
Essieu Avant 4 Roues Motrices
Vorderachse Allradantrieb
Assale Anteriore 4 Ruote Motrici
Eje Delantero 4 Ruedas Motrices

60-50

1-WK01-006-A

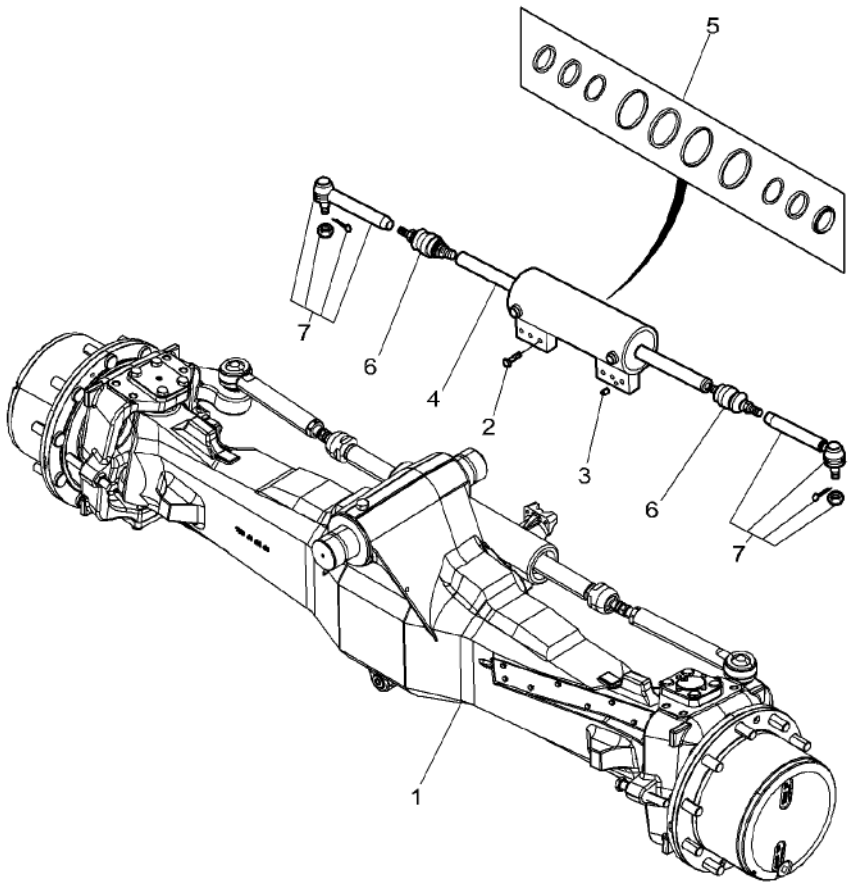

1	3766280M91	TYPE AG 280	**1**	FRONT LIVE AXLE	PONT AVANT	ALLRADACHSE VORN
					ASSALE-ANTERIORE	EJE MANDO DELANT
2*	3765902M1		**6**	SCREW	VIS	SCHRAUBE
					VITE	TORNILLO
3*	3764700M1		**1**	DOWEL	PLOT	ZYLINDERSTIFT
					SPINA	CENTRAJE
4*	3765844M91		**1**	STEERING CYL	VERIN DIRECTION	LENKZYLINDER
					CILINDRO STERZO	CILINDRO DIRECC
5*	3765904M91	4	**1**	KIT, SEAL	JEU ETANCHEITE	DICHTRINGSATZ
					KIT TENUTA	RETENES JUEGO
6*	3765843M91		**2**	BALL JOINT	ROTULE SPHERIQUE	KUGELGELENK
					SNODO A SFERA	UNION ROTULA
7*	3765842M91		**2**	TOGGLE	ROTULE	GELENKZAPFEN
					ROTULA	ROTULA

Front Axle 4 Wheel Drive Essieu Avant 4 Roues Motrices Vorderachse Allradantrieb Assale Anteriore 4 Ruote Motrici Eje Delantero 4 Ruedas Motrices	Housing Carter Gehaeuse Carcassa Carter	60-55

1-WK03-006-A

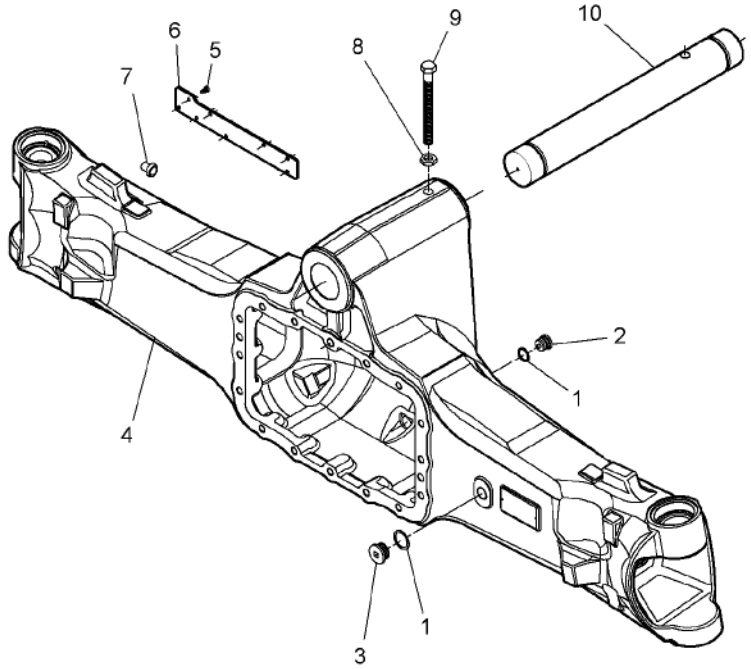

1 *	X540007678000	TYPE AG 210	2	RING	ANNEAU ANELLO	RING ARO
2 *	385300020130		1	MAGNET	AIMANT MAGNETE	MAGNET IMAN
3 *	000065060		1	PLUG	BOUCHON TAPPO	VERSCHL.STOPFEN TAPON
4 *	7600170302		1	HOUSING	CARTER CARCASSA	GEHAEUSE ALOJAMIENTO
5 *	000054058		8	SCREW	VIS VITE	SCHRAUBE TORNILLO
6 *	7500604201		1	FENCE	PROTECTION RECINTO	GITTER CERCA
7 *	7500604301		1	BUSH	BAGUE BOCCOLA	BUCHSE CASQUILLO
8 *	006033208		1	NUT	ECROU DADO	MUTTER TUERCA
9 *	016033621		1	SCREW	VIS VITE	SCHRAUBE TORNILLO
10 *	7600101401		1	CLEVIS PIN	AXE PERNO D'ATTACCO	SPLINTBOLZEN BULON CILINDRICO

Front Axle 4 Wheel Drive	**Differential**	**60-60**
Essieu Avant 4 Roues Motrices	**Differentiel**	
Vorderachse Allradantrieb	**Differential**	
Assale Anteriore 4 Ruote Motrici	**Differenziale**	
Eje Delantero 4 Ruedas Motrices	**Diferencial**	

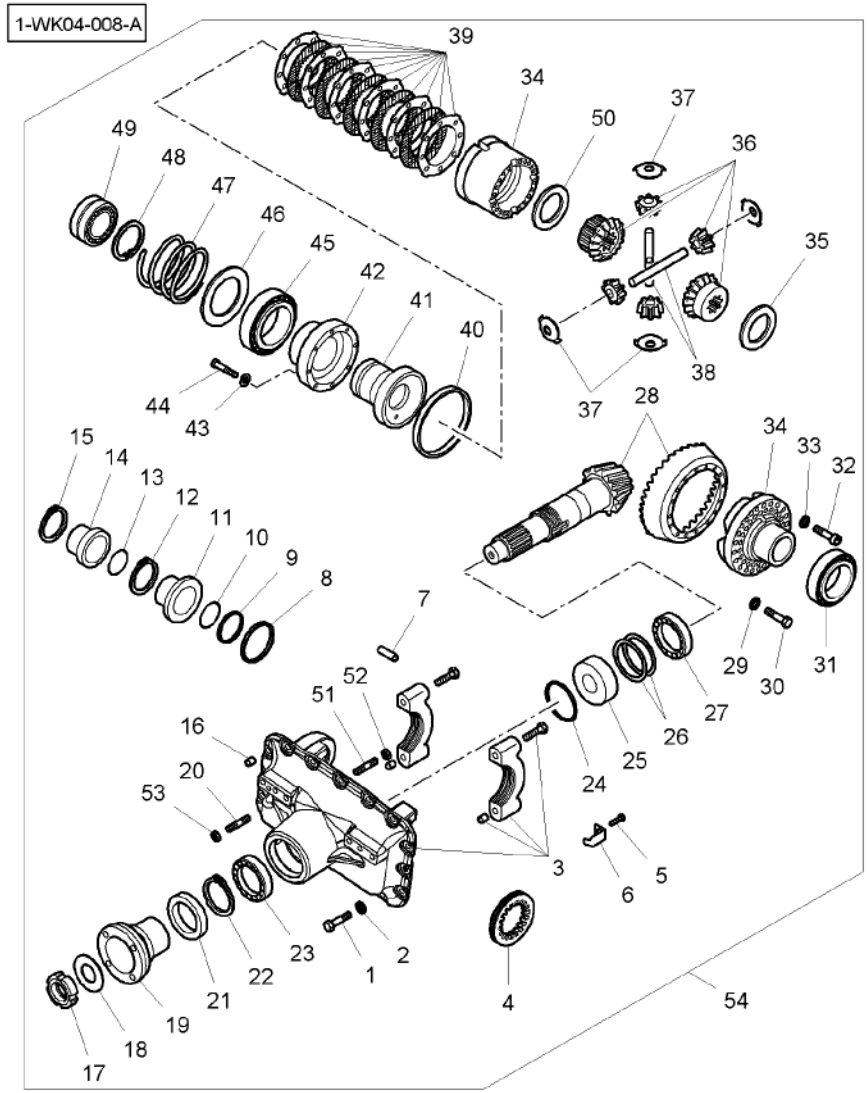

1 *	3764012M1		13	FORK	FOURCHETTE FORCA	GABEL HORQUILLA
2 *	011053790		16	WASHER	RONDELLE RONDELLA	UNTERLEGSCHEIBE ARANDELA
3 *	7600170402		1	SUPPORT	SUPPORT SUPPORTO	LAGERUNG DISPOS.DE SOSTEN
4 *	3765787M1		1	NUT	ECROU DADO	MUTTER TUERCA
5 *	1444071X1		1	HEX. SOCK. SCREW	VIS TETE HEX VITE PARKER	ZYLINDERSCHRAUBE TORN.CAB.HUECA
6 *	3765786M1		1	LOCKING PLATE	PLAQUE BLOCAGE PIASTRA DI FERMO	SICH.BLECH PLACA DE BLOCAJE
7 *	014010327		1	DOWEL	PLOT SPINA	ZYLINDERSTIFT CENTRAJE
8 *	001423359		1	SEAL	JOINT ETANCHEITE ANELLO RACCORD	DICHTRING ARENDELA D'JUNTA
9 *	001423360		1	SEAL	JOINT ETANCHEITE ANELLO RACCORD	DICHTRING ARENDELA D'JUNTA
10 *	3766055M1		1	O RING	JOINT TORIQUE ANELLO TENUTA	O-RING ANILLO FORMA 'O'
11 *	3766054M1		1	BUSH	BAGUE BOCCOLA	BUCHSE CASQUILLO
12 *	3766056M1		1	CIRCLIP	CIRCLIP ANNELLO ELASTICO	SEEGERING GRAPA CIRCULAR
13 *	001051564		1	BUSH	BAGUE BOCCOLA	BUCHSE CASQUILLO
14 *	3765836M1		1	PISTON	PISTON PISTONE	KOLBEN PISTON
15 *	3765837M1		1	RING	ANNEAU ANELLO	RING ARO
16 *	014013773		2	DOWEL	PLOT SPINA	ZYLINDERSTIFT CENTRAJE
17 *	3765039M1		1	NUT	ECROU DADO	MUTTER TUERCA
18 *	7600401701		1	BUSH	BAGUE BOCCOLA	BUCHSE CASQUILLO
19 *	7600470401		1	BRIDLE	BRIDE BRIGLIA	SPANNBAND BRIDA
20 *	017023490		2	STUD	GOUJON PRIGIONIERO	STEHBOLZEN CHAVETA ROSCADO
21 *	7600401201		1	SEAL	JOINT ETANCHEITE ANELLO RACCORD	DICHTRING ARENDELA D'JUNTA
22 *	002021812		1	SNAPRING	SEGMENT ARRET ANELLO SIEGER	SPRENGRING ANILLA RETENCION
23 *	000137100		1	BEARING ASSY	ROULEMENT CUSCINETTO COMPL	RADIALLAGER RODAMIENTO RAD
24 *	3765901M1		1	O RING	JOINT TORIQUE ANELLO TENUTA	O-RING ANILLO FORMA 'O'
25	3765873M1	⧗ 5,80 MM	X	SPACER	ENTRETOISE DISTANZIALE	ABSTANDSTUECK DISCO ESPACIADOR
25	3765874M1	⧗ 5,83 MM	X	SPACER	ENTRETOISE DISTANZIALE	ABSTANDSTUECK DISCO ESPACIADOR

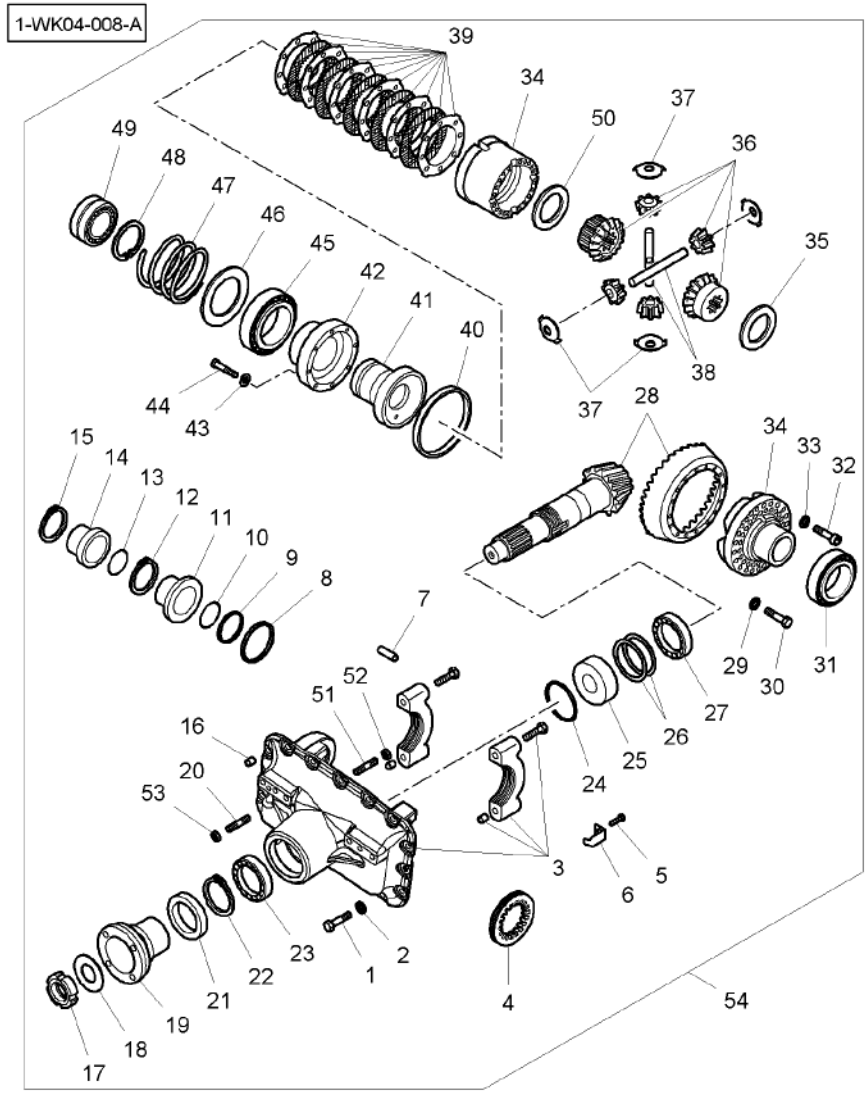

25	3765875M1	⧗	5,86 MM	X	SPACER	ENTRETOISE DISTANZIALE ABSTANDSTUECK DISCO ESPACIADOR
25	3765876M1	⧗	5,89 MM	X	SPACER	ENTRETOISE DISTANZIALE ABSTANDSTUECK DISCO ESPACIADOR
25	3765877M1	⧗	5,92 MM	X	SPACER	ENTRETOISE DISTANZIALE ABSTANDSTUECK DISCO ESPACIADOR
25	3765878M1	⧗	5,95 MM	X	SPACER	ENTRETOISE DISTANZIALE ABSTANDSTUECK DISCO ESPACIADOR
25	3765879M1	⧗	5,98 MM	X	SPACER	ENTRETOISE DISTANZIALE ABSTANDSTUECK DISCO ESPACIADOR
25	3765880M1	⧗	6,01 MM	X	SPACER	ENTRETOISE DISTANZIALE ABSTANDSTUECK DISCO ESPACIADOR
25	3765881M1	⧗	6,04 MM	X	SPACER	ENTRETOISE DISTANZIALE ABSTANDSTUECK DISCO ESPACIADOR
25	3765882M1	⧗	6,07 MM	X	SPACER	ENTRETOISE DISTANZIALE ABSTANDSTUECK DISCO ESPACIADOR
25	3765883M1	⧗	6,10 MM	X	SPACER	ENTRETOISE DISTANZIALE ABSTANDSTUECK DISCO ESPACIADOR
25	3765884M1	⧗	6,13 MM	X	SPACER	ENTRETOISE DISTANZIALE ABSTANDSTUECK DISCO ESPACIADOR
25	3765885M1	⧗	6,16 MM	X	SPACER	ENTRETOISE DISTANZIALE ABSTANDSTUECK DISCO ESPACIADOR
25	3765886M1	⧗	6,19 MM	X	SPACER	ENTRETOISE DISTANZIALE ABSTANDSTUECK DISCO ESPACIADOR
25	3765887M1	⧗	6,22 MM	X	SPACER	ENTRETOISE DISTANZIALE ABSTANDSTUECK DISCO ESPACIADOR
25	3765888M1	⧗	6,25 MM	X	SPACER	ENTRETOISE DISTANZIALE ABSTANDSTUECK DISCO ESPACIADOR
25	3765889M1	⧗	6,28 MM	X	SPACER	ENTRETOISE DISTANZIALE ABSTANDSTUECK DISCO ESPACIADOR
25	3765890M1	⧗	6,31 MM	X	SPACER	ENTRETOISE DISTANZIALE ABSTANDSTUECK DISCO ESPACIADOR
25	3765891M1	⧗	6,34 MM	X	SPACER	ENTRETOISE DISTANZIALE ABSTANDSTUECK DISCO ESPACIADOR
25	3765892M1	⧗	6,37 MM	X	SPACER	ENTRETOISE DISTANZIALE ABSTANDSTUECK DISCO ESPACIADOR
25	3765893M1	⧗	6,40 MM	X	SPACER	ENTRETOISE DISTANZIALE ABSTANDSTUECK DISCO ESPACIADOR
25	3765894M1	⧗	6,43 MM	X	SPACER	ENTRETOISE DISTANZIALE ABSTANDSTUECK DISCO ESPACIADOR
25	3765895M1	⧗	6,46 MM	X	SPACER	ENTRETOISE DISTANZIALE ABSTANDSTUECK DISCO ESPACIADOR
25	3765896M1	⧗	6,49 MM	X	SPACER	ENTRETOISE DISTANZIALE ABSTANDSTUECK DISCO ESPACIADOR
25	3765897M1	⧗	6,52 MM	X	SPACER	ENTRETOISE DISTANZIALE ABSTANDSTUECK DISCO ESPACIADOR
25	3765898M1	⧗	6,55 MM	X	SPACER	ENTRETOISE DISTANZIALE ABSTANDSTUECK DISCO ESPACIADOR
25	3765899M1	⧗	6,58 MM	X	SPACER	ENTRETOISE DISTANZIALE ABSTANDSTUECK DISCO ESPACIADOR
25	3765900M1	⧗	7,00 MM	X	SPACER	ENTRETOISE DISTANZIALE ABSTANDSTUECK DISCO ESPACIADOR

Front Axle 4 Wheel Drive	**Differential**	**60-60**
Essieu Avant 4 Roues Motrices	**Differentiel**	
Vorderachse Allradantrieb	**Differential**	
Assale Anteriore 4 Ruote Motrici	**Differenziale**	
Eje Delantero 4 Ruedas Motrices	**Diferencial**	

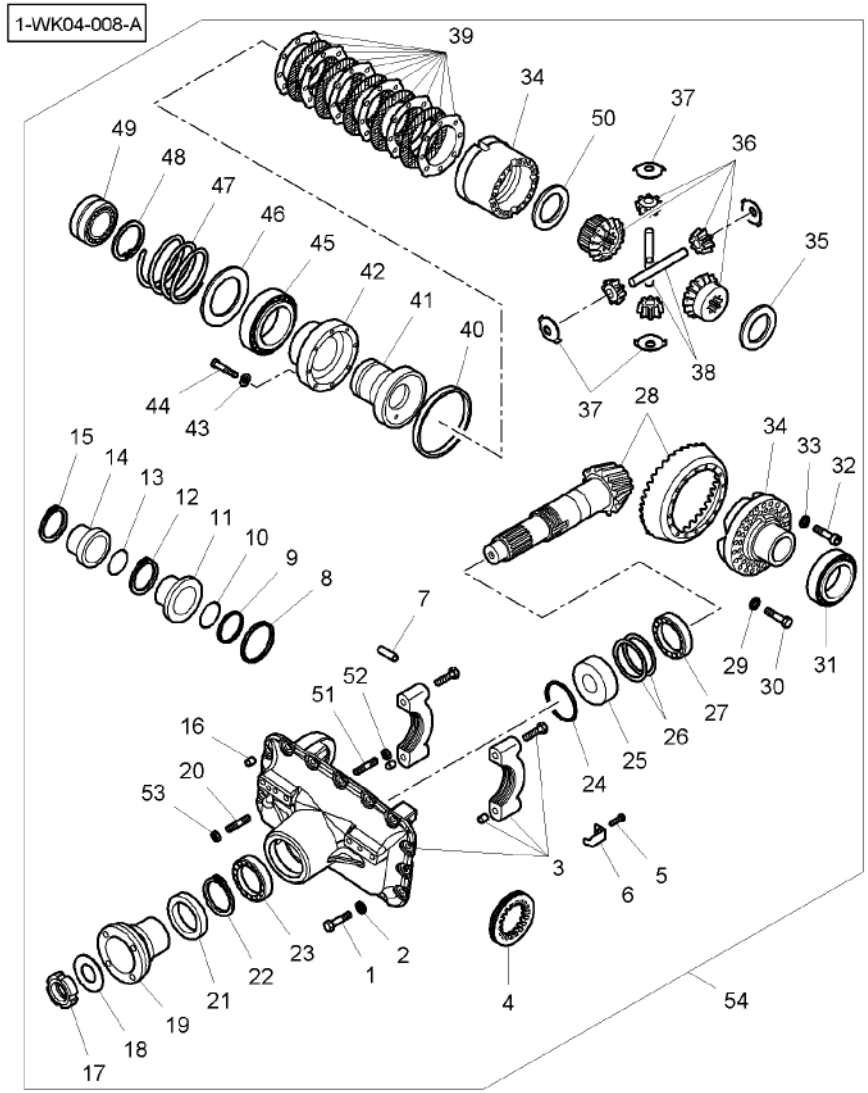

26★000245025A	⧗	0.10 MM	X	CHOCK PASSACAVO	CALE CALZA	UNTERLEG-KEIL
26★000245027A	⧗	0.30 MM	X	CHOCK PASSACAVO	CALE CALZA	UNTERLEG-KEIL
26★000245028A	⧗	0.50 MM	X	CHOCK PASSACAVO	CALE CALZA	UNTERLEG-KEIL
27★005093366			1	BEARING ASSY CUSCINETTO COMPL	ROULEMENT RODAMIENTO RAD	RADIALLAGER
28★7600450101			1	KIT, BEVEL GEAR KIT COPPIA CONIC	COUPLE CONIQUE CORONA Y PINON	KEGELRADSATZ
29★011141455			18	WASHER RONDELLA	RONDELLE ARANDELA	UNTERLEGSCHEIBE
30★016010786			18	SCREW VITE	VIS TORNILLO	SCHRAUBE
31★005103365			1	BEARING ASSY CUSCINETTO COMPL	ROULEMENT RODAMIENTO RAD	RADIALLAGER
32★000057970			12	SCREW VITE	VIS TORNILLO	SCHRAUBE
33★011041318			12	WASHER RONDELLA	RONDELLE ARANDELA	UNTERLEGSCHEIBE
34★3766061M91			1	HOUSING CARCASSA	CARTER ALOJAMIENTO	GEHAEUSE
35★000245680			1	WASHER RONDELLA	RONDELLE ARANDELA	UNTERLEGSCHEIBE
36★7600470201			1	GEAR INGRANAGGIO	ENGRENAGE ENGRANAJE	ZAHNRAD
37★7600401401			4	WASHER RONDELLA	RONDELLE ARANDELA	UNTERLEGSCHEIBE
38★000215040A			2	CLEVIS PIN PERNO D'ATTACCO	AXE BULON CILINDRICO	SPLINTBOLZEN
39★000727512A			1	CLUTCH DISC DISCO FRIZIONE	DISQUE EMBRAYAGE DISCO DE EMBRAGU	KUPPLUNGSSCHEIBE
40★000139339			1	BUSH BOCCOLA	BAGUE CASQUILLO	BUCHSE
41★7600400401			1	BRIDLE BRIGLIA	BRIDE BRIDA	SPANNBAND
42★3766063M1			1	COVER COPERCHIO	COUVERCLE CUBIERTA	DECKEL
43★011043431			18	WASHER RONDELLA	RONDELLE ARANDELA	UNTERLEGSCHEIBE
44★3766065M1			18	SCREW VITE	VIS TORNILLO	SCHRAUBE
45★G816300020180			1	CUP AND CONE COPPA E CONO	CUVETTE ET CONE PISTA Y CONO	KEGELROLLENLAGER
46★000345621	⧗	0.50 MM	3	CHOCK PASSACAVO	CALE CALZA	UNTERLEG-KEIL
46★000345622	⧗	0.20 MM	1	CHOCK PASSACAVO	CALE CALZA	UNTERLEG-KEIL
46★000345623A	⧗	0.10 MM	1	CHOCK PASSACAVO	CALE CALZA	UNTERLEG-KEIL
47★7600400501			1	SPRING MOLLA	RESSORT RESORTE	FEDER

Front Axle 4 Wheel Drive	**Differential**	**60-60**
Essieu Avant 4 Roues Motrices	**Differentiel**	
Vorderachse Allradantrieb	**Differential**	
Assale Anteriore 4 Ruote Motrici	**Differenziale**	
Eje Delantero 4 Ruedas Motrices	**Diferencial**	

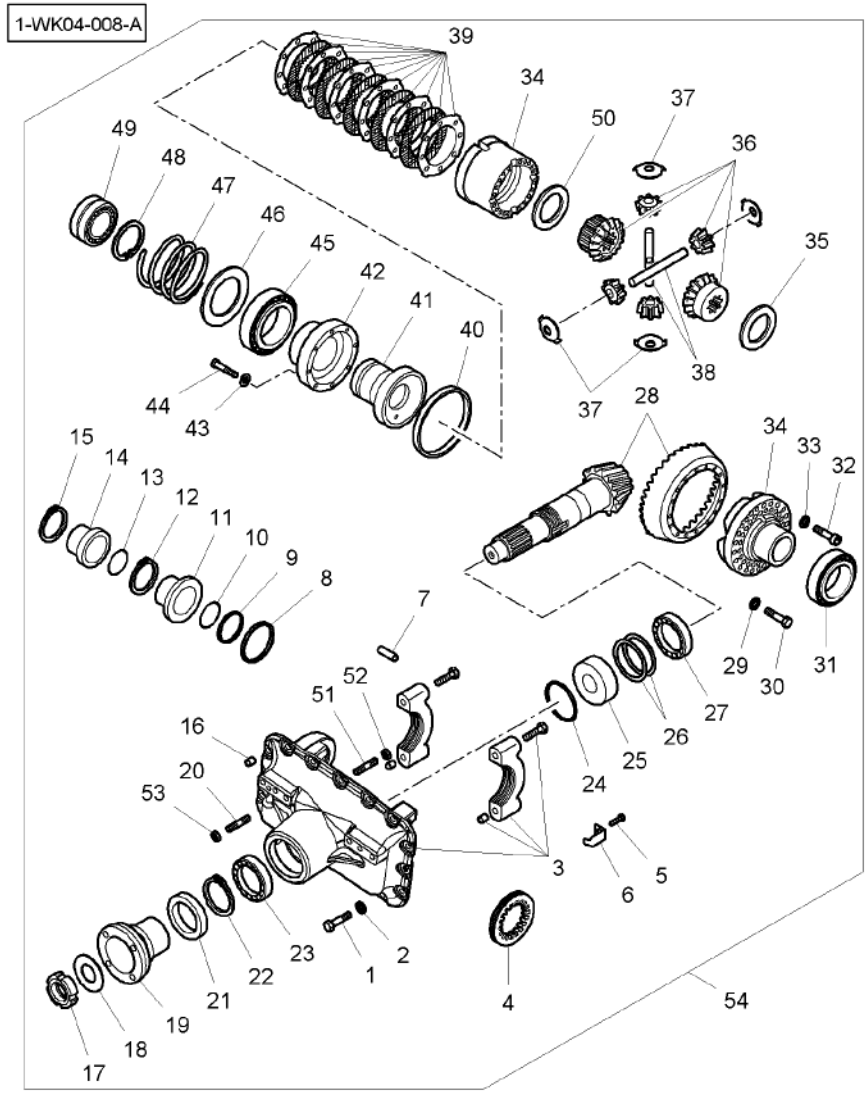

48*	002011794	1	SNAPRING	SEGMENT ARRET ANELLO SIEGER	SPRENGRING ANILLA RETENCION
49*	005733367	1	STOP	BUTEE STOP	ANSCHLAG PARO
50*	000245837	1	WASHER	RONDELLE RONDELLA	UNTERLEGSCHEIBE ARANDELA
51*	7600101501	1	STUD	GOUJON PRIGIONIERO	STEHBOLZEN CHAVETA ROSCADO
52*	006053774	1	NUT	ECROU DADO	MUTTER TUERCA
53*	006011489	2	NUT	ECROU DADO	MUTTER TUERCA
54*	7600440004	1	KIT,DIFFERENTIAL	JEU DIFFERENTIEL KIT DIFFERENZIAL	SATZDIFFERENTIAL JGO.DIFERENCIAL.

Front Axle 4 Wheel Drive Essieu Avant 4 Roues Motrices Vorderachse Allradantrieb Assale Anteriore 4 Ruote Motrici Eje Delantero 4 Ruedas Motrices	Final Drive Reduction Finale Endantrieb Riduzione Finale Accionamiento Final	60-65

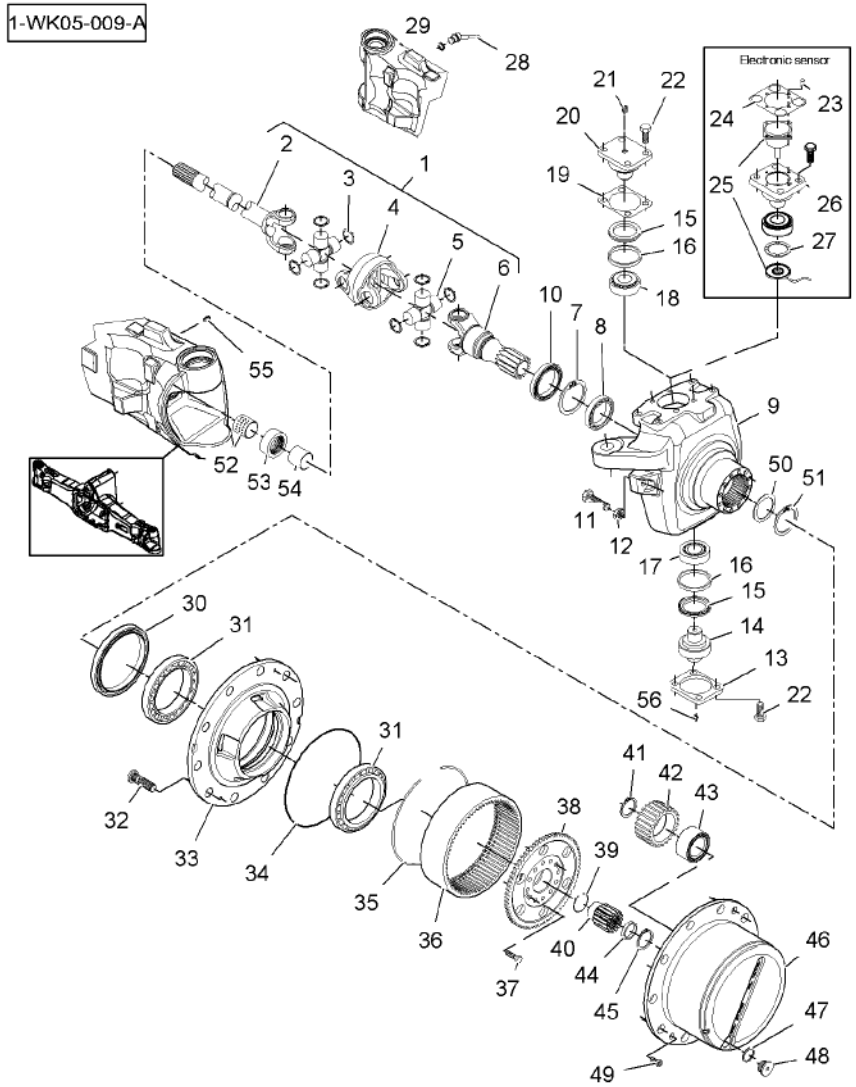

1	3766060M91		▶	1	UNIVERSAL JOINT	CARDAN GIUNTO UNIVERSAL KARDANGELENK JUNTA UNIVERSAL
1	3766059M91		◀	1	UNIVERSAL JOINT	CARDAN GIUNTO UNIVERSAL KARDANGELENK JUNTA UNIVERSAL
2	7600645003	1	▶	1	SHAFT	ARBRE ALBERO WELLE ARBOL
2	7600645005	1	◀	1	SHAFT	ARBRE ALBERO WELLE ARBOL
3	002020903	1		8	SNAPRING	SEGMENT ARRET ANELLO SIEGER SPRENGRING ANILLA RETENCION
4	3766169M91	1		1	KNUCKLE	NOIX ARTICOLAZIONE GELENK CHARNELA
5	000513236	1		2	CROSSPIECE	CROISILLON TRAVERSA KREUZSTUECK PIEZA TRANSVERSA
6	7600645004	1		1	SHAFT	ARBRE ALBERO WELLE ARBOL
7	002023410			2	SNAPRING	SEGMENT ARRET ANELLO SIEGER SPRENGRING ANILLA RETENCION
8	005013296			2	BEARING ASSY	ROULEMENT CUSCINETTO COMPL RADIALLAGER RODAMIENTO RAD
9	7600601801		◀	1	HOUSING	CARTER CARCASSA GEHAEUSE ALOJAMIENTO
9	7600601701		▶	1	HOUSING	CARTER CARCASSA GEHAEUSE ALOJAMIENTO
10	7600601602			2	SEAL	JOINT ETANCHEITE ANELLO RACCORD DICHTRING ARENDELA D'JUNTA
11	7600601501			4	SCREW	VIS VITE SCHRAUBE TORNILLO
12	000058321			4	NUT	ECROU DADO MUTTER TUERCA
13	000145120			2	SUPPORT	SUPPORT SUPPORTO LAGERUNG DISPOS.DE SOSTEN
14	3766058M1			2	PIN	GOUPILLE PERNO BOLZEN PASADOR
15	7500604601			4	SEAL	JOINT ETANCHEITE ANELLO RACCORD DICHTRING ARENDELA D'JUNTA
16	7500604701			4	SPACER	ENTRETOISE DISTANZIALE ABSTANDSTUECK DISCO ESPACIADOR
17	3766050M1			2	BEARING ASSY	ROULEMENT CUSCINETTO COMPL RADIALLAGER RODAMIENTO RAD
18	005100497			2	BEARING ASSY	ROULEMENT CUSCINETTO COMPL RADIALLAGER RODAMIENTO RAD
19	F718301020290		⧗ 0.2 MM	1	DISC	DISQUE DISCO SCHEIBE DISCO
19	F718301020300		⧗ 0.5 MM	1	DISC	DISQUE DISCO SCHEIBE DISCO
20	7500604401			1	PIVOT	PIVOT CARDINE DREHZAPFEN PIVOTE
21	016083444			1	SCREW	VIS VITE SCHRAUBE TORNILLO
22	016010786			20	SCREW	VIS VITE SCHRAUBE TORNILLO

Front Axle 4 Wheel Drive Essieu Avant 4 Roues Motrices Vorderachse Allradantrieb Assale Anteriore 4 Ruote Motrici Eje Delantero 4 Ruedas Motrices	Final Drive Reduction Finale Endantrieb Riduzione Finale Accionamiento Final	60-65

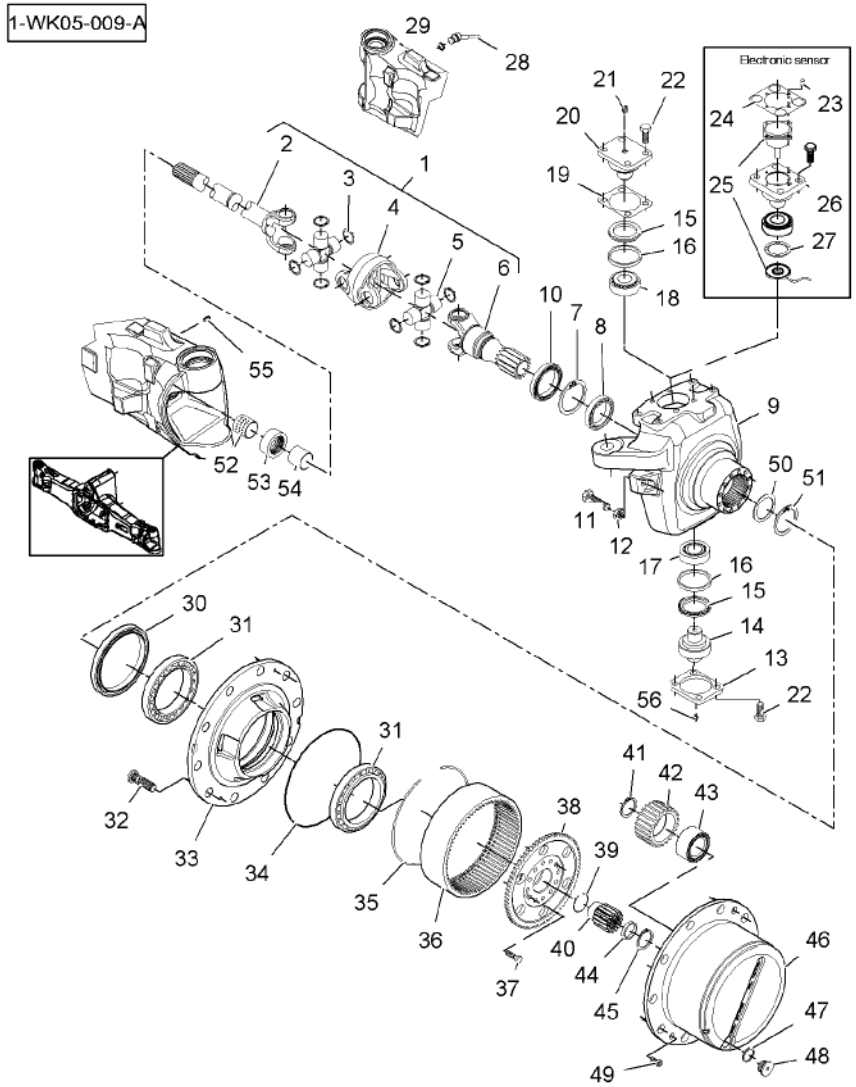

23*	016010367	4	SCREW VIS VITE	SCHRAUBE TORNILLO
24*	7450600901	1	COVER COUVERCLE COPERCHIO	DECKEL CUBIERTA
25*	7450661202	1	TRANSDUCER CAPTEUR TRANSDUCER	NABENTRIEB. TRANSDUCER
26*	7500604501	1	PIVOT PIVOT CARDINE	DREHZAPFEN PIVOTE
27*	7500604801	1	WASHER RONDELLE RONDELLA	UNTERLEGSCHEIBE ARANDELA
28*	7450100301	1	CONNECTORS CONNECTEUR MORSETTI	KABELVERBINDER CONECTADORES
29*	001051577	1	O RING JOINT TORIQUE ANELLO TENUTA	O-RING ANILLO FORMA 'O'
30*	000051867	2	SEAL JOINT ETANCHEITE ANELLO RACCORD	DICHTRING ARENDELA D'JUNTA
31*	005101427	4	BEARING ASSY ROULEMENT CUSCINETTO COMPL	RADIALLAGER RODAMIENTO RAD
32*	000057061	24	STUD GOUJON PRIGIONIERO	STEHBOLZEN CHAVETA ROSCADO
33*	7600600601	2	IMPELLER HUB MOYEU ROUE MOZZO GIRANTE	FLUEGELRADNABE CUBO DE IMPULSOR
34*	001053338	2	O RING JOINT TORIQUE ANELLO TENUTA	O-RING ANILLO FORMA 'O'
35*	7600601401	2	SNAPRING SEGMENT ARRET ANELLO SIEGER	SPRENGRING ANILLA RETENCION
36*	7600600801	2	ANNULAR GEAR COURONNE CORONA DENTATA	ZAHNKRANZ ENGRANAJE ANULAR
37*	3764103M1	24	SCREW VIS VITE	SCHRAUBE TORNILLO
38*	7600600901	2	SUPPORT SUPPORT SUPPORTO	LAGERUNG DISPOS.DE SOSTEN
39*	002072756	2	SNAPRING SEGMENT ARRET ANELLO SIEGER	SPRENGRING ANILLA RETENCION
40*	7600601001	2	PLANET PLANETAIRE PLANETARIO	PLANETENRAD PLANETARIO
41*	002143202	8	SEAL JOINT ETANCHEITE ANELLO RACCORD	DICHTRING ARENDELA D'JUNTA
42*	7600601101	8	GEAR ENGRENAGE INGRANAGGIO	ZAHNRAD ENGRANAJE
43*	7600601201	8	BEARING ASSY ROULEMENT CUSCINETTO COMPL	RADIALLAGER RODAMIENTO RAD
44*	7600601302	2	BUSH BAGUE BOCCOLA	BUCHSE CASQUILLO
45*	002011260	2	BUSH BAGUE BOCCOLA	BUCHSE CASQUILLO
46*	7600600701	2	CARRIER PORTE SATELLITES SUPPORTO SATELL.	TRAEGER PORTADOR
47*	X540007678000	2	RING ANNEAU ANELLO	RING ARO
48*	385300020130	2	MAGNET AIMANT MAGNETE	MAGNET IMAN

Front Axle 4 Wheel Drive Essieu Avant 4 Roues Motrices Vorderachse Allradantrieb Assale Anteriore 4 Ruote Motrici Eje Delantero 4 Ruedas Motrices	Final Drive Reduction Finale Endantrieb Riduzione Finale Accionamiento Final	60-65

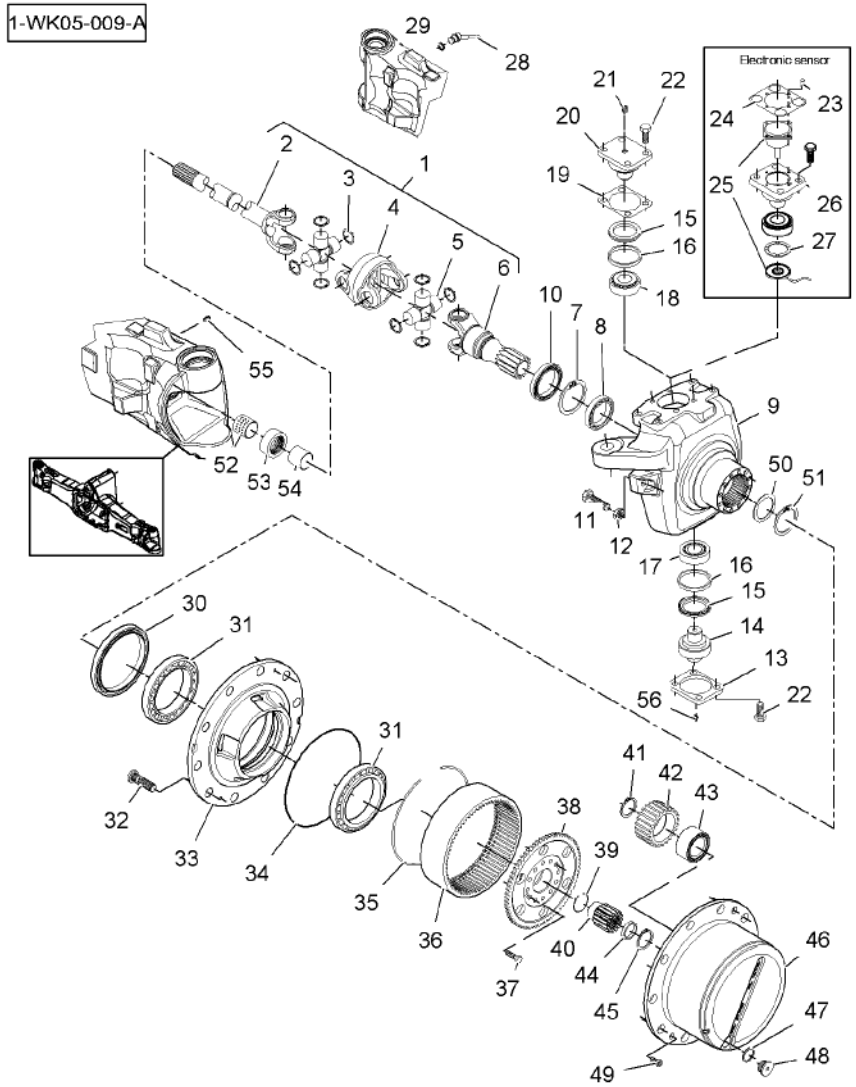

49*	000057073	4 SCREW	VIS VITE	SCHRAUBE TORNILLO
50*	000245560B	2 WASHER	RONDELLE RONDELLA	UNTERLEGSCHEIBE ARANDELA
51*	002013405	2 SNAPRING	SEGMENT ARRET ANELLO SIEGER	SPRENGRING ANILLA RETENCION
52*	339040X1	2 PIN	GOUPILLE PERNO	BOLZEN PASADOR
53*	3765756M1	2 OIL SEAL	BAGUE ETANCHEITE BOCCOLA PARAOLIO	OELDICHTRING BUJE RETENACEITE
54*	F718301020520	2 CUP	COUPELLE SCODELLINO	LAUFRING CUBETA
55*	339004X1	2 GREASER	GRAISSEUR INGRASSATORE	FETTNIPPEL ENGRASADOR
56*	339003X1	2 GREASER	GRAISSEUR INGRASSATORE	FETTNIPPEL ENGRASADOR

70

Steering Wheel And Telescopic Column
Volant De Direction Et Colonne Telescopique
Lenkrad Und Saeuleteleskopisch
Volante E Colonna Telescopico
Volante Direccion Y Columna Telescopico

70-5

1-WN04-001-A

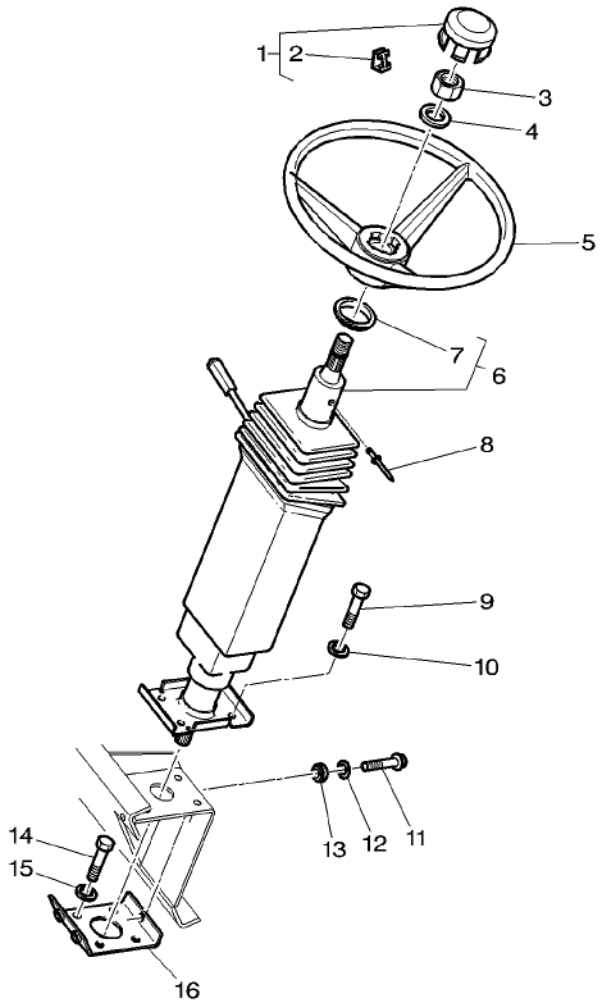

1*	4274202M91		1	CAP	CHAPEAU CAPUCHON	KAPPE TAPA
2	3817055M1	1	2	CLIP	PATTE D'ATTACHE FERMAGLIO	SCHELLE CLIP
3	339070X1	M14	1	NUT	ECROU DADO	MUTTER TUERCA
4	390973X1	∅ 15–28 X 2,5	1	WASHER METRIC	RONDELLE METR. RONDELLA METRICO	SCHEIBE METRISCH ARANDELA METRICO
5	3809661M1		1	STEERING WHEEL	VOLANT DIRECTION VOLANTE STERZO	LENKRAD VOLANT DIRECCION
6*	4273495M92	70–10 No 1	1	STEERING COLUMN	COLONNE DIRECT COLONNINA STERZO	LENKSAEULE ARBOL DIRECCION
7	3902578M1	6	1	GASKET	JOINT GUARNIZIONE	DICHTSCHEIBE EMPAQUETADURA.
8	3011268X1	4 X 7,5 MM	1	RIVET	RIVET RIBATTINO	NIET REMACHE
9	339124X1	M8 X 16	4	HEX. SOCK. SCREW	VIS TETE HEX VITE PARKER	ZYLINDERSCHRAUBE TORN.CAB.HUECA
10	1440921X1	∅ 8–22 X 2	4	WASHER METRIC	RONDELLE METR. RONDELLA METRICO	SCHEIBE METRISCH ARANDELA METRICO
11	3009778X1	M10 X 35	3	SCREW	VIS VITE	SCHRAUBE TORNILLO
12	3389958M1	∅ 10,5–28 X 2	6	WASHER	RONDELLE RONDELLA	UNTERLEGSCHEIBE ARANDELA
13	**1619912M1**		3	VIBRATION MOUNT	SILENT BLOC ANTIVIBRANTE	METALLGUM.PUFFER MONTAJE ANTI–VIB
14	339282X1	M10 X 16	4	HEX. SOCK. SCREW	VIS TETE HEX VITE PARKER	ZYLINDERSCHRAUBE TORN.CAB.HUECA
15	390734X1	∅ 10–21 X 2	4	WASHER	RONDELLE RONDELLA	UNTERLEGSCHEIBE ARANDELA
16	3388920M94		1	SUPPORT	SUPPORT SUPPORTO	LAGERUNG DISPOS.DE SOSTEN

Steering Wheel And Telescopic Column
Volant De Direction Et Colonne Telescopique
Lenkrad Und Saeuleteleskopisch
Volante E Colonna Telescopico
Volante Direccion Y Columna Telescopico

70-10

1-WN04-003-B

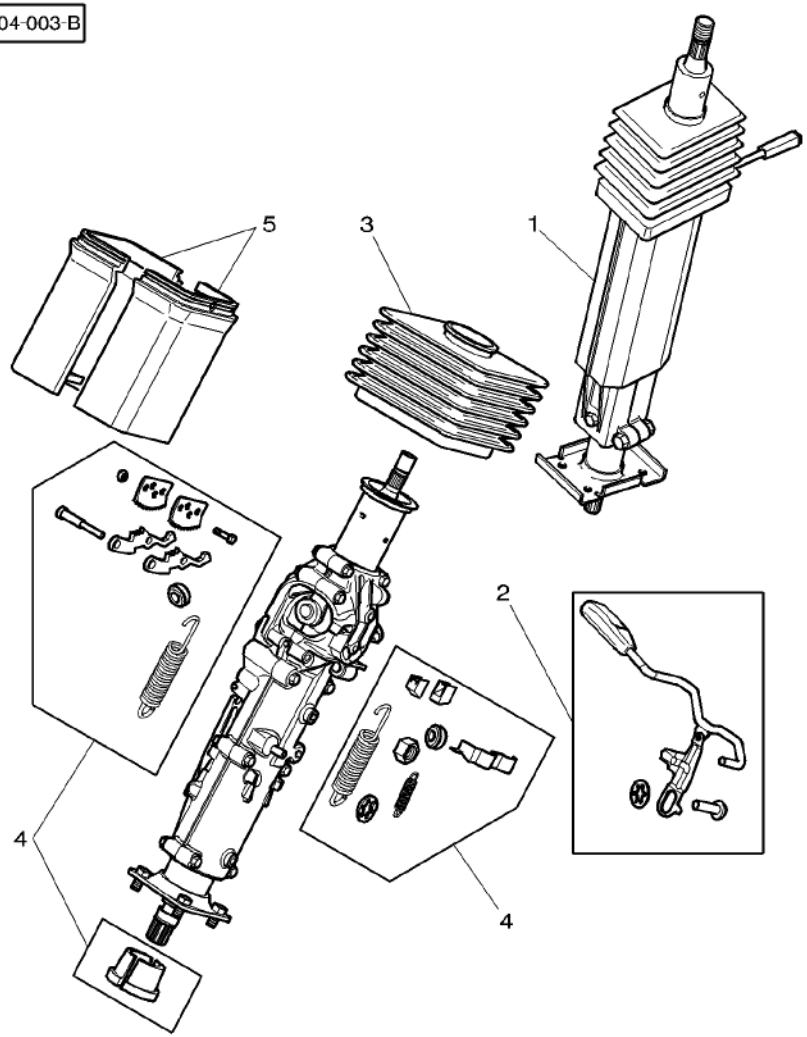

1	4273495M92		1 STEERING COLUMN	COLONNE DIRECT COLONNINA STERZO	LENKSAEULE ARBOL DIRECCION
2	3907403M91	1 [A]	1 KIT, LEVER	JEU LEVIER KIT LEVETTA	SATZ HEBEL JUEGO, PALANCA
3	3907405M91	1	1 BELLOWS	SOUFFLET SOFFIETTO	FALTENBALG FUELLE
4	3907402M91	1 [A]	1 KIT, REPAIR	JEU REPARATION KIT RIPARAZIONE	REPARATURSATZ JUEGO REPARACION
5	3907404M91	1 [A]	1 CASE ASSY	BOITIER CARCASSA COMPLET	GEHAEUSE KPL CAJA COMPLETA

[A] NOT DETAILLED
PAS DETAILLE
NICHT VERKAUFT
PASSO DETTAGLIATO
NO DETALLADO

Lighting Power Shuttle Drive
Commande Eclairage Et Inverseur Sous Couple
Beleuchtung Unter Drehmoment Schaltung
Comando Illuminazione E Sotto Coppia
Mando Alumbrado Y Inversor Sub Par

70-15

1-WN14-001-B

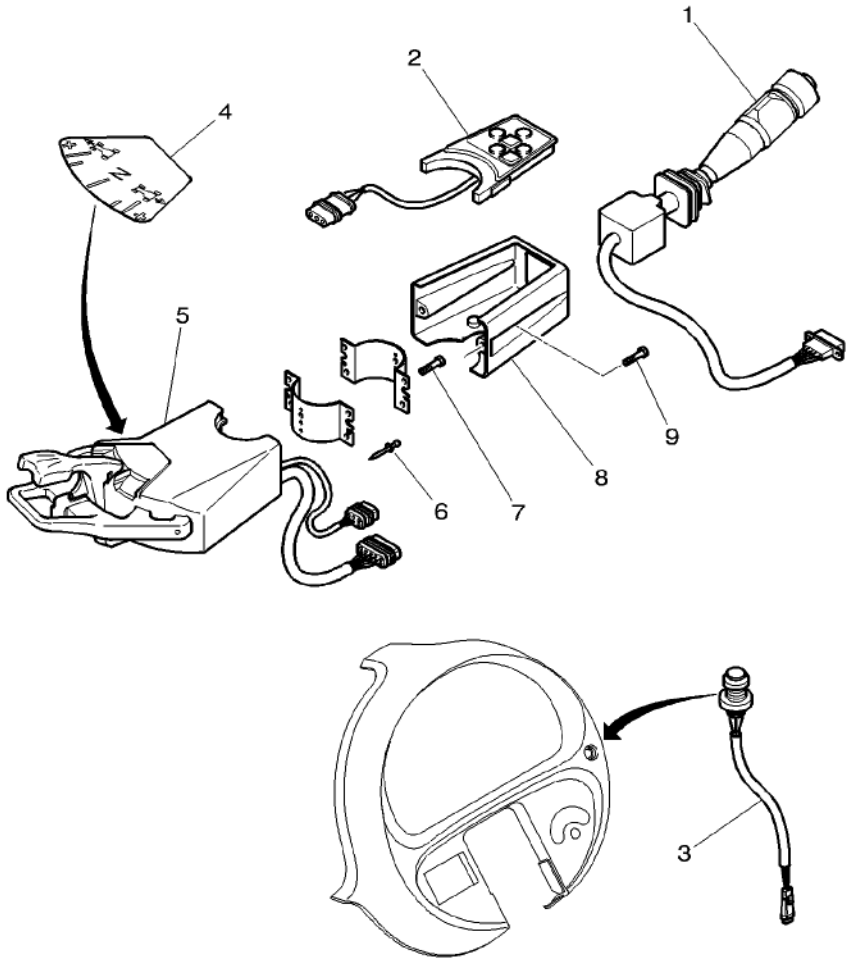

1	3713669M3		1	SWITCH,INDIRECT	CONTACTEUR INTERRUTTORE IND	KONTAKTSCHALTER CONTACTOR
2	3787415M1		1	WOBBLE DRIVE	BOITIER COMMANDE GUIDA OSCILLANTE	TAUMELANTRIEB MANDO OSCILANTE
3	3789331M1		1	SWITCH	INTERRUPTEUR INTERRUTTORE	SCHALTER INTERRUPTOR
4	4272209M1		1	DECAL	DECALCOMANIE DECALCOMANIA	AUFKLEBER CALCOMANIA
5	3787500M92	[A]	1	WOBBLE DRIVE	BOITIER COMMANDE GUIDA OSCILLANTE	TAUMELANTRIEB MANDO OSCILANTE
6	3011268X1		1	RIVET	RIVET RIBATTINO	NIET REMACHE
7	3713785M1	M4 X 16	4	SCREW	VIS VITE	SCHRAUBE TORNILLO
8	4271331M1		1	CASE ASSY	BOITIER CARCASSA COMPLET	GEHAEUSE KPL CAJA COMPLETA
9	3010895X1	M4 X 35	1	SCREW METRIC	VIS METRIQUE VITE METRICA	SCHRAUBE METR TORNILLO METRICO
9	3010818X1	M4 X 20	1	SCREW METRIC	VIS METRIQUE VITE METRICA	SCHRAUBE METR TORNILLO METRICO

[A] WITH PARKING BRAKE
AVEC FREIN DE PARKING
MIT FESTSTELLBREMSE
CON FRENO DI PARCHEGGIO
CON CONTROLES DE FRENOS

Steering Pump
Pompe De Direction
Lenkhilfepumpe
Pompa Di Sterzo
Bomba Direccion

70-20

1-WN07-001-A

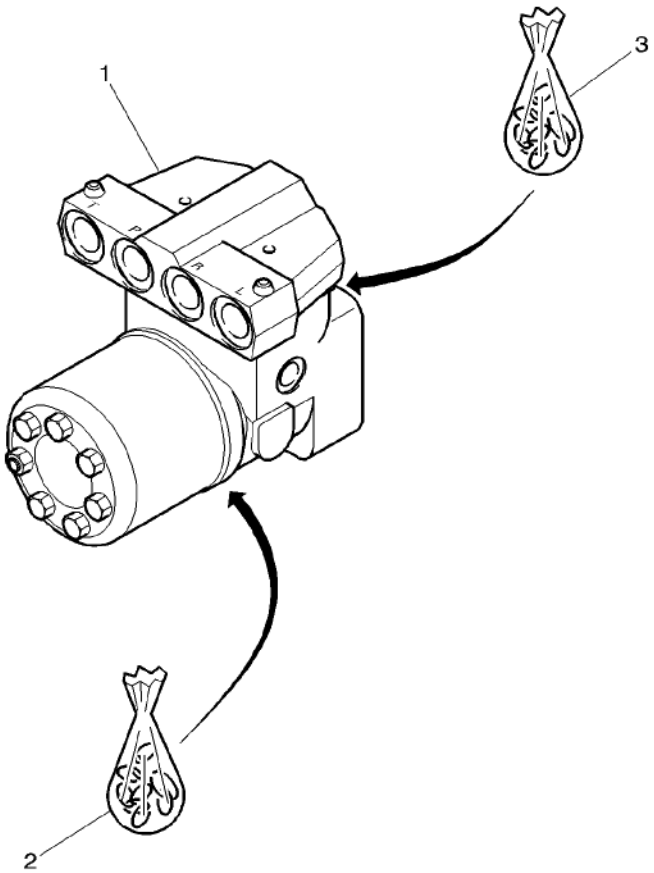

1	4271164M1	[Z]	**1** DISTRIBUTOR	DISTRIBUTEUR DISTRIBUTORE	VERTEILER DISTRIBUIDOR
2 *	3903005M91		**1** PARTS PACK	JEU PIECES PACCO RICAMBI	SATZ TEILE PAQUETE PIEZAS
3	3907009M91		**1** KIT,JOINT/GASKET	JEU DE JOINTS KIT GUARN/GIUNTO	DICHTUNGS-SATZ JGO.JUNTAS/EMPAQ

[Z] NOT DETAILLED
PAS DETAILLE
NICHT VERKAUFT
PASSO DETTAGLIATO
NO DETALLADO

Steering Hydraulic Lines
Tuyauteries Hydrauliques De Direction
Hydraulikleitungen Lenkung
Tubazioni Idrauliche Di Sterzo
Instalacion Hidraulica De Direccion

70-25

1-WN06-026-B

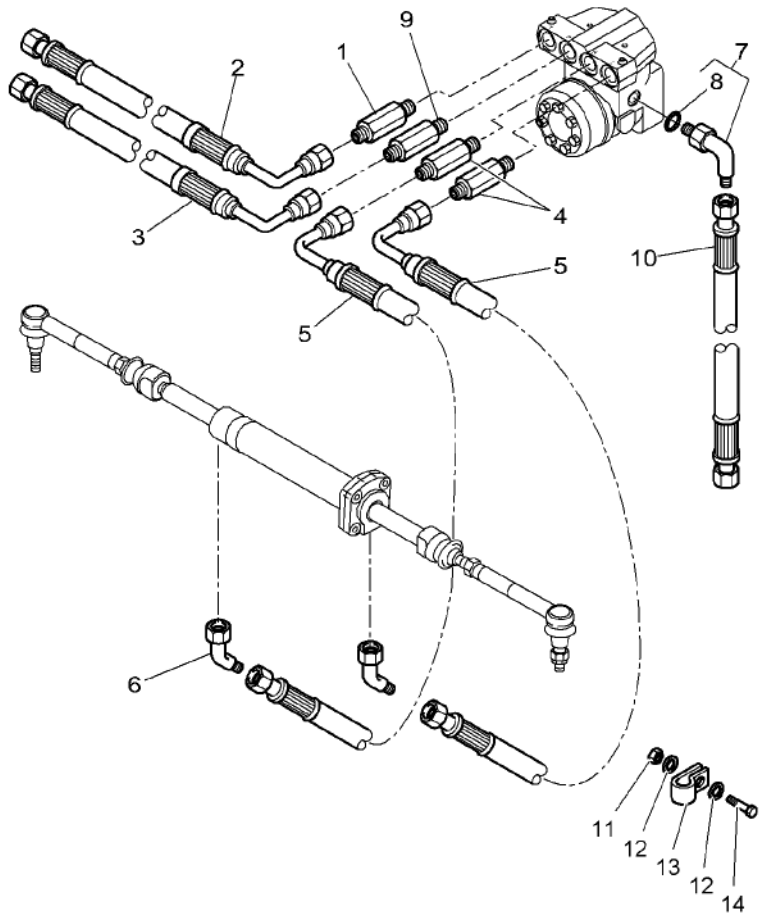

1	3789721M1		1	UNION	RACCORD RACCORDO	VERSCHRAUBUNG RACOR
2	4276126M3		1	HYDR. HOSE	FLEXIBLE TUBOFLEX IDRAUL	HYDR. SCHLAUCH TUBO HIDRAULICO
3	4276125M1		1	HYDR. HOSE	FLEXIBLE TUBOFLEX IDRAUL	HYDR. SCHLAUCH TUBO HIDRAULICO
4	4272115M1		2	UNION	RACCORD RACCORDO	VERSCHRAUBUNG RACOR
5	4276127M1		2	HYDR. HOSE	FLEXIBLE TUBOFLEX IDRAUL	HYDR. SCHLAUCH TUBO HIDRAULICO
6	3787918M1		2	UNION	RACCORD RACCORDO	VERSCHRAUBUNG RACOR
7	4279816M1	M12 / M14	1	UNION	RACCORD RACCORDO	VERSCHRAUBUNG RACOR
8	3011061X1	7	1	O RING	JOINT TORIQUE ANELLO TENUTA	O-RING ANILLO FORMA 'O'
9	4274551M1		1	UNION	RACCORD RACCORDO	VERSCHRAUBUNG RACOR
10	4276124M1		1	HYDR. HOSE	FLEXIBLE TUBOFLEX IDRAUL	HYDR. SCHLAUCH TUBO HIDRAULICO
11*	394367X1		1	LOCKNUT	ECROU BLOCAGE AUTOBLOCCANTE	SICHERUNGSMUTTER CONTRATUERCA
12*	391039X1		2	WASHER METRIC	RONDELLE METR. RONDELLA METRICO	SCHEIBE METRISCH ARANDELA METRICO
13*	3581131M1	∅ 20 – M8	1	CLIP	PATTE D'ATTACHE FERMAGLIO	SCHELLE CLIP
14*	339168X1	M8 X 50	1	HEX. SOCK. SCREW	VIS TETE HEX VITE PARKER	ZYLINDERSCHRAUBE TORN.CAB.HUECA

Brackets Pedal
Supports Pedales
Halteren Pedal
Suporti Pedale
Soportes Pedales

70-30

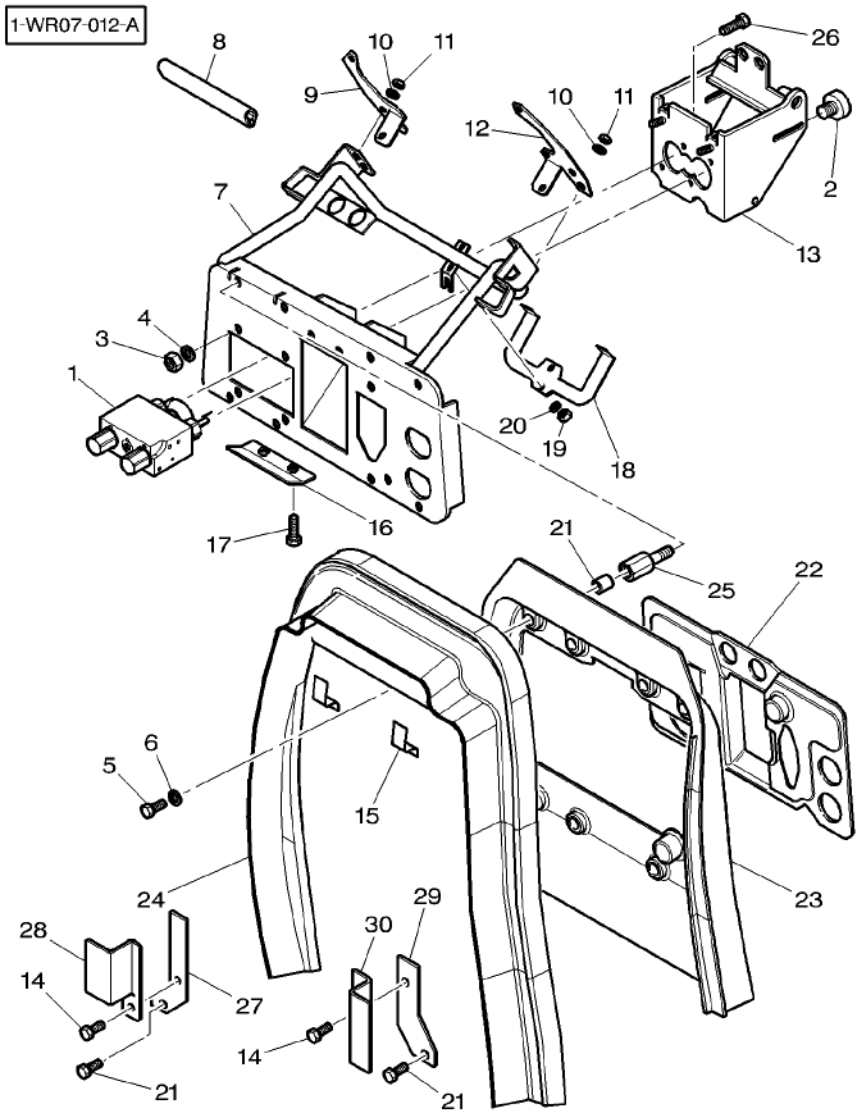

1	4270774M1		1	PRESSURE VALVE	VALVE VALVOLA PRESSION	DRUCKVENTIL VALVULA PRESION
2*	4270770M4		1	BUTTON	BOUTON BOTTONE	KNOPFTASTE BOTON
3	339169X1	M8	2	NUT	ECROU DADO	MUTTER TUERCA
4	390972X1	∅ 8–17 X 1,7	4	WASHER	RONDELLE RONDELLA	UNTERLEGSCHEIBE ARANDELA
5	339124X1	M8 X 16	8	HEX. SOCK. SCREW	VIS TETE HEX VITE PARKER	ZYLINDERSCHRAUBE TORN.CAB.HUECA
5	339761X1	M8 X 25	2	HEX. SOCK. SCREW	VIS TETE HEX VITE PARKER	ZYLINDERSCHRAUBE TORN.CAB.HUECA
6	391039X1	∅ 8–24 X 2	8	WASHER METRIC	RONDELLE METR. RONDELLA METRICO	SCHEIBE METRISCH ARANDELA METRICO
7	4270570M95		1	SUPPORT	SUPPORT SUPPORTO	LAGERUNG DISPOS.DE SOSTEN
8	3580695M1	[A] ◄► 1600 MM	1	GASKET	JOINT GUARNIZIONE	DICHTSCHEIBE EMPAQUETADURA.
9	4270577M2	►	1	PLATE CLAMPING	PLATINE PIASTRA APPOGGIO	KLEMMPLATTE PLACA DE ABRAZO
10	390971X1	∅ 6–12 X 1,5	4	WASHER	RONDELLE RONDELLA	UNTERLEGSCHEIBE ARANDELA
11	1441462X1	M6	4	LOCKNUT	ECROU BLOCAGE AUTOBLOCCANTE	SICHERUNGSMUTTER CONTRATUERCA
12	4270576M2	◄	1	PLATE CLAMPING	PLATINE PIASTRA APPOGGIO	KLEMMPLATTE PLACA DE ABRAZO
13	4270599M1		1	SUPPORT	SUPPORT SUPPORTO	LAGERUNG DISPOS.DE SOSTEN
14	339666X1	M6 X 20	2	HEX. SOCK. SCREW	VIS TETE HEX VITE PARKER	ZYLINDERSCHRAUBE TORN.CAB.HUECA
15	4276478M1		2	STRAP	PATTE CORREGGIA	LASCHE FAJA
16	3785650M1		1	STOP	BUTEE STOP	ANSCHLAG PARO
17	339666X1	M6 X 20	2	HEX. SOCK. SCREW	VIS TETE HEX VITE PARKER	ZYLINDERSCHRAUBE TORN.CAB.HUECA
18	4271236M1		1	STRAP	PATTE CORREGGIA	LASCHE FAJA
19	1441462X1	M6	2	LOCKNUT	ECROU BLOCAGE AUTOBLOCCANTE	SICHERUNGSMUTTER CONTRATUERCA
20	390971X1	∅ 6–12 X 1,5	2	WASHER	RONDELLE RONDELLA	UNTERLEGSCHEIBE ARANDELA
21	339123X1	M8 X 20	2	HEX. SOCK. SCREW	VIS TETE HEX VITE PARKER	ZYLINDERSCHRAUBE TORN.CAB.HUECA
22	4272627M4		1	CASE ASSY	BOITIER CARCASSA COMPLET	GEHAEUSE KPL CAJA COMPLETA
23	4271063M4		1	BULKHEAD	SEPARATION PARATIA	TRENNBLECH MAMPARO
24	4276474M1		1	PROTECTOR	PROTECTEUR PROTETTORE	SCHUTZ PROTECTOR
25	4274753M2	M8 X 50	8	STUD	GOUJON PRIGIONIERO	STEHBOLZEN CHAVETA ROSCADO

Brackets Pedal
Supports Pedales
Halteren Pedal
Suporti Pedale
Soportes Pedales

70-30

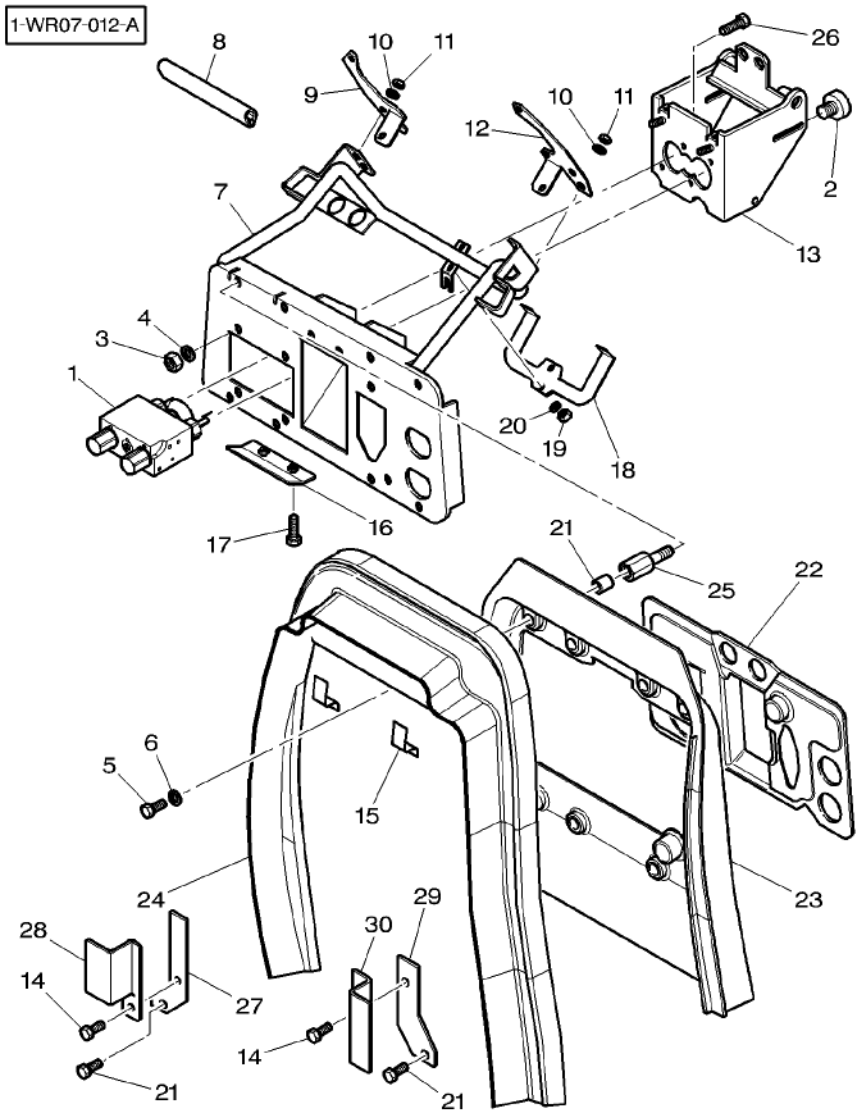

26	339666X1	M6 X 20	4	HEX. SOCK. SCREW	VIS TETE HEX VITE PARKER	ZYLINDERSCHRAUBE TORN.CAB.HUECA
27	4275483M1		1	STRAP	PATTE CORREGGIA	LASCHE FAJA
28	4275484M1		1	STRAP	PATTE CORREGGIA	LASCHE FAJA
29	4275485M1		1	STRAP	PATTE CORREGGIA	LASCHE FAJA
30	4275486M1		1	STRAP	PATTE CORREGGIA	LASCHE FAJA

[A] CUT TO REQUIRED LENGTH
COUPER A LA LONGEUR DESIREE
BENOETIGTE LAENGE ABSCHNEIDEN
TAGLIARE A LUNGHEZZA RICHIESTA
CORTAR A LA LONGITUD NECESARIA

Brake Pedals
Pedales De Frein
Bremspedal
Pedali Freni
Pedals Del Freno

70-35

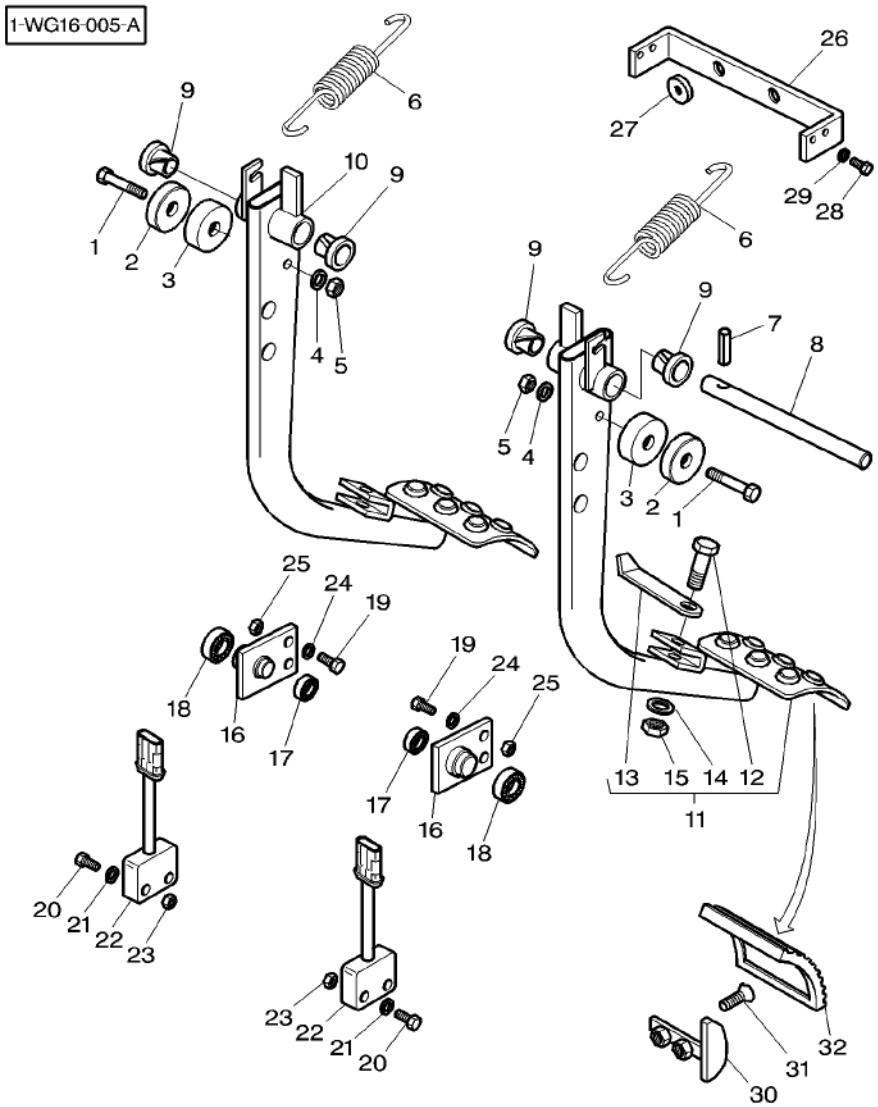

1	3010895X1	M4 X 35	2	SCREW METRIC	VIS METRIQUE VITE METRICA	SCHRAUBE METR TORNILLO METRICO
2	X830120050000		2	MAGNET	AIMANT MAGNETE	MAGNET IMAN
3	3788754M1	∅ 26 X 14	2	SPACER	ENTRETOISE DISTANZIALE	ABSTANDSTUECK DISCO ESPACIADOR
4	339102X1	∅ 4–9 X 1	2	WASHER	RONDELLE RONDELLA	UNTERLEGSCHEIBE ARANDELA
5	3019139X1	M4	2	NUT	ECROU DADO	MUTTER TUERCA
6	3785651M1		2	SPRING	RESSORT MOLLA	FEDER RESORTE
7	391290X1	∅ 5 X 30	1	PIN	GOUPILLE PERNO	BOLZEN PASADOR
8	3785652M2	∅ 15 X 154	1	CLEVIS PIN	AXE PERNO D'ATTACCO	SPLINTBOLZEN BULON CILINDRICO
9	3385604M1		4	BEARING	COUSSINET CUSCINETTO	LAGER COJINETE
10	4271598M2	▶	1	BRAKE PAD	PEDALE DE FREIN PASTIGLIA FRENO	BREMSKLOTZ PASTILLA D FRENO
11	4272615M92	◀	1	BRAKE PAD	PEDALE DE FREIN PASTIGLIA FRENO	BREMSKLOTZ PASTILLA D FRENO
12	391990X1	11 M8 X 25	1	SCREW	VIS VITE	SCHRAUBE TORNILLO
13	4272621M1	11	1	LATCH	VERROU CHIAVISTELLO	RIEGEL CERROJO
14	1441782X1	11	1	SPRING	RESSORT MOLLA	FEDER RESORTE
15	394367X1	11 M8	1	LOCKNUT	ECROU BLOCAGE AUTOBLOCCANTE	SICHERUNGSMUTTER CONTRATUERCA
16	4270768M2		2	SUPPORT	SUPPORT SUPPORTO	LAGERUNG DISPOS.DE SOSTEN
17	**391077X1**	∅ 47–25	2	BEAR. 6005 2RS	RLT 6005 2RS CUSC. 6005 2RS	LAGER 6005 2RS RODA. 6005 2RS
18	339800X1	∅ 62–35	2	BEAR. 6007 2RS	RLT 6007 2RS CUSC. 6007 2RS	LAGER 6007 2RS RODA. 6007 2RS
19	3009508X1	M12 X 40	4	HEX. SOCK. SCREW	VIS TETE HEX VITE PARKER	ZYLINDERSCHRAUBE TORN.CAB.HUECA
20	3010818X1	M4 X 20	4	SCREW METRIC	VIS METRIQUE VITE METRICA	SCHRAUBE METR TORNILLO METRICO
21	339102X1	∅ 4–9 X 1	4	WASHER	RONDELLE RONDELLA	UNTERLEGSCHEIBE ARANDELA
22	***H312900150010***		2	SOLENOID SWITCH	RELAIS SOLENOIDE INTERRUTTORE SOL	MAGNETSCHALTER INTERR SOLENOIDE
23	1443615X1	M4	4	NUT METRIC	ECROU METRIQUE DADO METRICO	MUTTER METRISCH TUERCA METRICO
24	390735X1	∅ 12–24 X 2,5	4	WASHER	RONDELLE RONDELLA	UNTERLEGSCHEIBE ARANDELA
25	1440330X1	M12	4	LOCKNUT	ECROU BLOCAGE AUTOBLOCCANTE	SICHERUNGSMUTTER CONTRATUERCA
26	4270773M1		1	STOP	BUTEE STOP	ANSCHLAG PARO

Brake Pedals
Pedales De Frein
Bremspedal
Pedali Freni
Pedals Del Freno

70-35

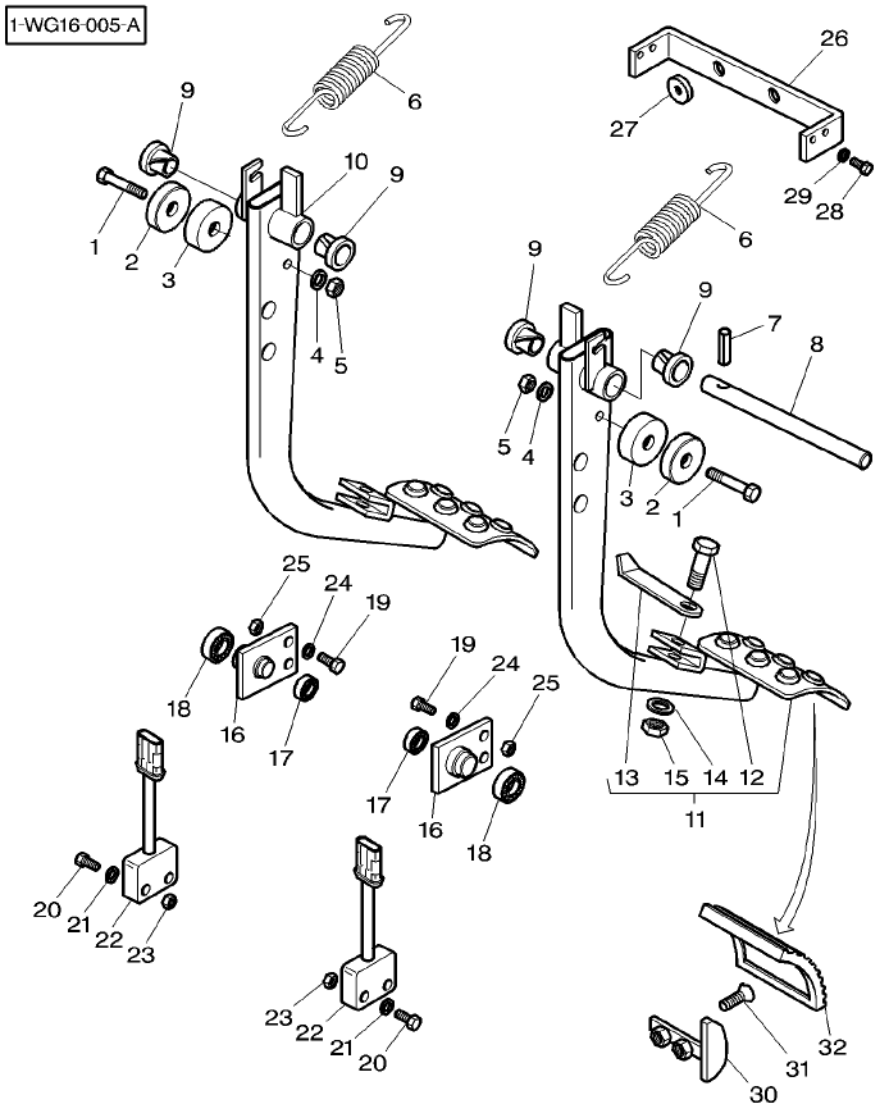

27	3713404M1	∅ 15	**2** PLUG	BOUCHON TAPPO	VERSCHL.STOPFEN TAPON
28	3009280X1	M6 X 12	**4** SCREW	VIS VITE	SCHRAUBE TORNILLO
29	390971X1	∅ 6-12 X 1,5	**4** WASHER	RONDELLE RONDELLA	UNTERLEGSCHEIBE ARANDELA
30	3714488M3		**1** STOP	BUTEE STOP	ANSCHLAG PARO
31	392404X1	M5 X 12	**2** SCREW	VIS VITE	SCHRAUBE TORNILLO
32	1626321M2		**2** SKATE	PATIN PATTINO	SCHLITTEN-KUFE PATIN

Brakes Freins Bremsen Freni Frenos	Hydraulic Pipes Tuyauterie Hydraulique Hydraulik Leitungen Tubi Idraulica Tubos Hidraulica	70-40

1-WG17-003-A

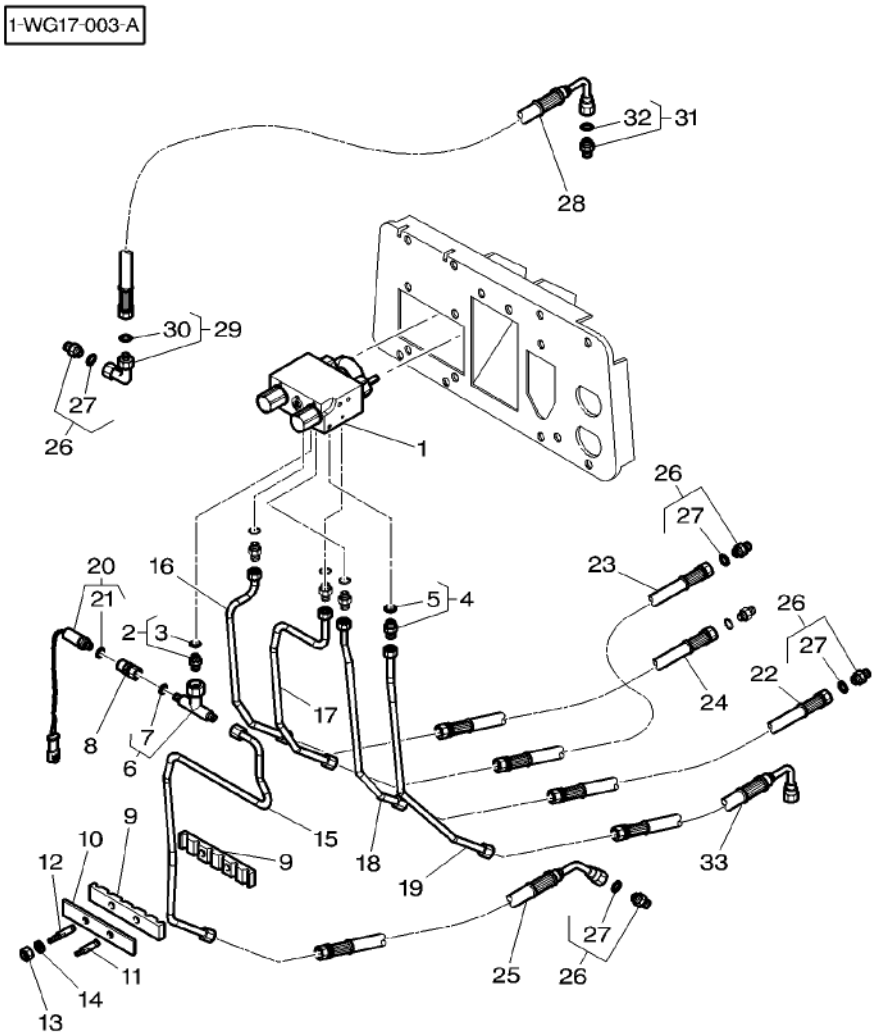

1	4270774M1		1	PRESSURE VALVE VALVE VALVOLA PRESSION	DRUCKVENTIL VALVULA PRESION
2	3011554X91	M12X1.5	1	UNION RACCORD RACCORDO	VERSCHRAUBUNG RACOR
3	338761X1	2	1	GASKET JOINT GUARNIZIONE	DICHTSCHEIBE EMPAQUETADURA.
4	3011038X91	M14X1.5	4	UNION RACCORD RACCORDO	VERSCHRAUBUNG RACOR
5	338762X1	4	1	SEAL JOINT ETANCHEITE ANELLO RACCORD	DICHTRING ARENDELA D'JUNTA
6	3011553X91	M16x1.5	1	TEEPIECE TE RACCORDO A T	T-STUECK PIEZA EN T
7	3011144X1	6	1	O RING JOINT TORIQUE ANELLO TENUTA	O-RING ANILLO FORMA 'O'
8	4276754M1		1	UNION RACCORD RACCORDO	VERSCHRAUBUNG RACOR
9	4275100M1		2	BRIDLE BRIDE BRIGLIA	SPANNBAND BRIDA
10	4275670M1		1	PLATE PLAQUE PIASTRA	PLATTE PLATO
11	3778279M1	M8 X 28	1	STUD GOUJON PRIGIONIERO	STEHBOLZEN CHAVETA ROSCADO
12	4270451M1	M8 / M6	1	STUD GOUJON PRIGIONIERO	STEHBOLZEN CHAVETA ROSCADO
13	1441500X1	M6	1	LOCKNUT ECROU BLOCAGE AUTOBLOCCANTE	SICHERUNGSMUTTER CONTRATUERCA
14	391038X1	∅ 6-18 X 1,5	3	WASHER RONDELLE RONDELLA	UNTERLEGSCHEIBE ARANDELA
15	4275096M2		1	TUBE TUBE TUBO	ROHR TUBO
16	4275094M1		1	TUBE TUBE TUBO	ROHR TUBO
17	4275095M1		1	TUBE TUBE TUBO	ROHR TUBO
18	4275097M1		1	TUBE TUBE TUBO	ROHR TUBO
19	4275098M1		1	TUBE TUBE TUBO	ROHR TUBO
20	***4275671M1***		1	TRANSDUCER CAPTEUR TRANSDUCER	NABENTRIEB. TRANSDUCER
21	3907427M1	20	1	GASKET JOINT GUARNIZIONE	DICHTSCHEIBE EMPAQUETADURA.
22	4276152M2	◀▶ 1450 MM	1	HYDR. HOSE FLEXIBLE TUBOFLEX IDRAUL	HYDR. SCHLAUCH TUBO HIDRAULICO
23	4276156M1	◀▶ 2100 MM	1	HYDR. HOSE FLEXIBLE TUBOFLEX IDRAUL	HYDR. SCHLAUCH TUBO HIDRAULICO
24	4276155M1	◀▶ 1700 MM	1	HYDR. HOSE FLEXIBLE TUBOFLEX IDRAUL	HYDR. SCHLAUCH TUBO HIDRAULICO
25	4277412M2	◀▶ 1700 MM	1	HYDR. HOSE FLEXIBLE TUBOFLEX IDRAUL	HYDR. SCHLAUCH TUBO HIDRAULICO
26	3011038X91	M14X1.5	4	UNION RACCORD RACCORDO	VERSCHRAUBUNG RACOR

1-WG17-003-A

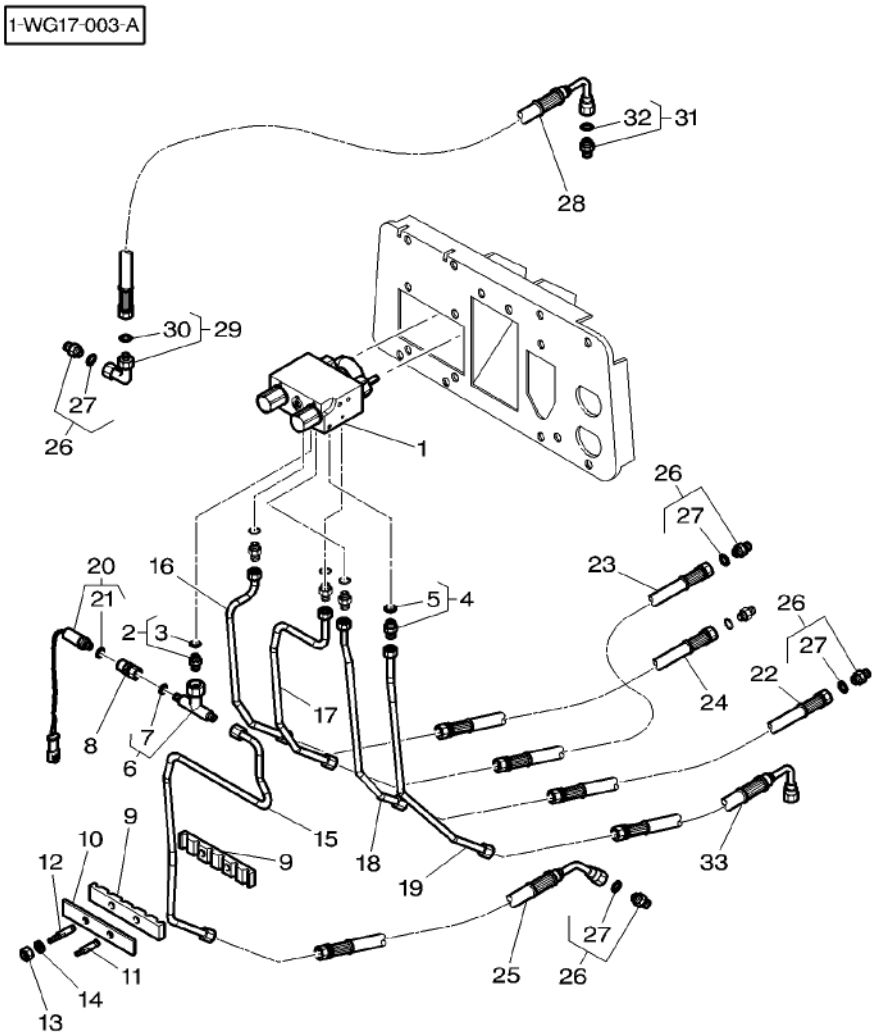

27	338762X1	26		1	SEAL	JOINT ETANCHEITE ANELLO RACCORD DICHTRING ARENDELA D'JUNTA
28	4276158M1	◄► 1700 MM		1	HYDR. HOSE	FLEXIBLE TUBOFLEX IDRAUL HYDR. SCHLAUCH TUBO HIDRAULICO
29	3011543X91	M16X1.5		1	UNION	RACCORD RACCORDO VERSCHRAUBUNG RACOR
30	3011144X1	29		1	O RING	JOINT TORIQUE ANELLO TENUTA O-RING ANILLO FORMA 'O'
31	3011547X91	M16X1.5		1	UNION	RACCORD RACCORDO VERSCHRAUBUNG RACOR
32	338763X1	31		1	SEAL	JOINT ETANCHEITE ANELLO RACCORD DICHTRING ARENDELA D'JUNTA
33	4276157M1	◄► 400 MM		1	HYDR. HOSE	FLEXIBLE TUBOFLEX IDRAUL HYDR. SCHLAUCH TUBO HIDRAULICO

Brakes Freins Bremsen Freni Frenos	Hydraulic Pipes Tuyauterie Hydraulique Hydraulik Leitungen Tubi Idraulica Tubos Hidraulica	70-45

1-WG17-004-A

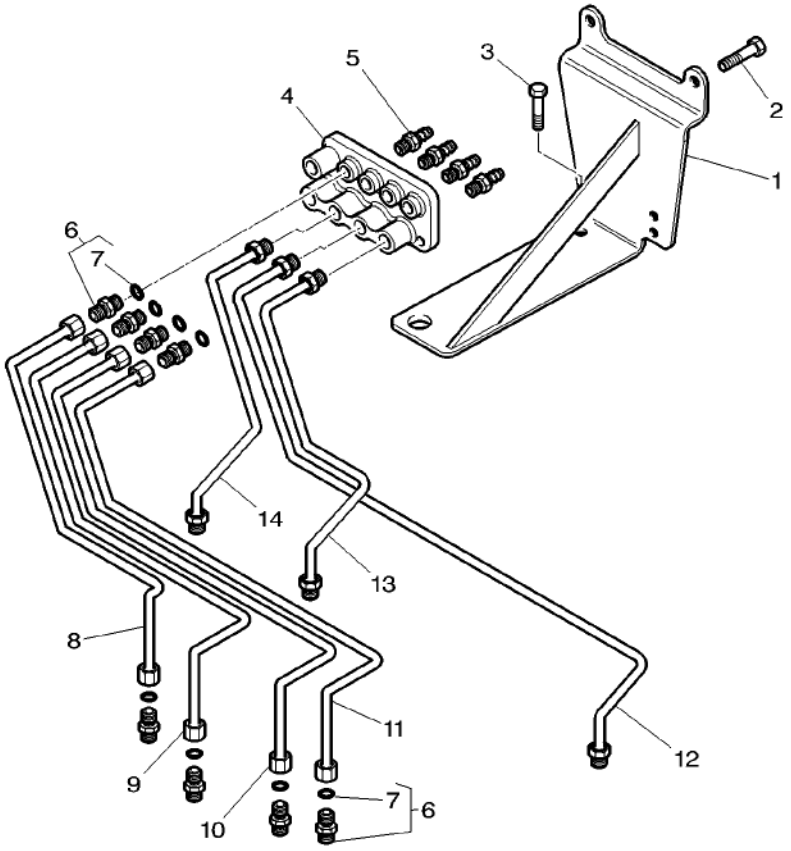

1	4275565M2		1	SUPPORT	SUPPORT SUPPORTO	LAGERUNG DISPOS.DE SOSTEN
2	339123X1	M8 X 20	2	HEX. SOCK. SCREW	VIS TETE HEX VITE PARKER	ZYLINDERSCHRAUBE TORN.CAB.HUECA
3	3009493X1	M10 X 30	1	HEX. SOCK. SCREW	VIS TETE HEX VITE PARKER	ZYLINDERSCHRAUBE TORN.CAB.HUECA
4	903150070010		1	CENTER PIECE	PIECE INTERME CENTER PIECE	MITTELSTUECK PIEZA INTERMEDIA
5	G514100100060		4	BREATHER VALVE	VALVE D EVENT VALVOLA SFIATO	ENTLUEFT.VENTIL VALVULA DESAHOGO
6	338906X91		8	UNION	RACCORD RACCORDO	VERSCHRAUBUNG RACOR
7	338760X1	6	1	O RING	JOINT TORIQUE ANELLO TENUTA	O-RING ANILLO FORMA 'O'
8	4274999M1		1	TUBE	TUBE TUBO	ROHR TUBO
9	4274998M1		1	TUBE	TUBE TUBO	ROHR TUBO
10	4274997M1		1	TUBE	TUBE TUBO	ROHR TUBO
11	4274996M1		1	TUBE	TUBE TUBO	ROHR TUBO
12	4274986M1		1	TUBE	TUBE TUBO	ROHR TUBO
13	4275000M1		1	TUBE	TUBE TUBO	ROHR TUBO
14	4274985M1		1	TUBE	TUBE TUBO	ROHR TUBO

Hydraulic Brake Assy
Freinage Hydraulique
Hydraulische Bremse
Freno Idraulico
Freno Hidraulica

70-50

1-WA12-002-A

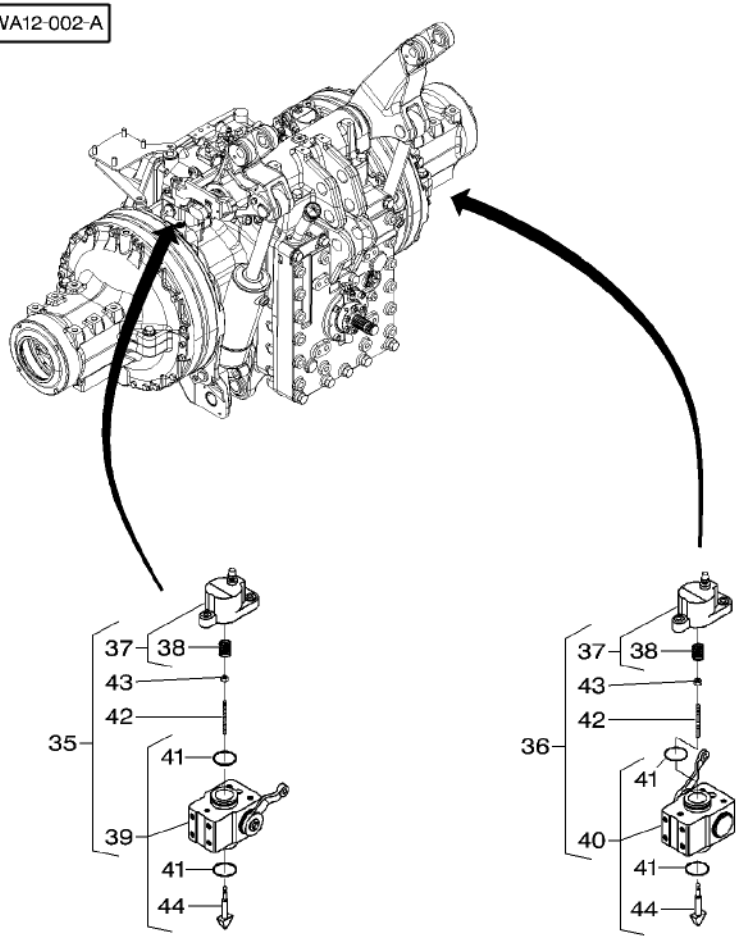

35	G903150070100	[A]	1	CYLINDER	CYLINDRE CILINDRO	ZYLINDER CILINDRO
36	G903150070110	[B]	1	CYLINDER	CYLINDRE CILINDRO	ZYLINDER CILINDRO
37	F716150070050		1	CYL HEAD PART	PIECE SUPER CYL. CYL HEAD PART	ZYLINDEROBERTEIL CYL HEAD PART
38	F822100070060	37	1	COMP.SPRING	RESSORT DE COMPR MOLLA COMPOSTA	DRUCKFEDER RESORTE DE COMP.
39	G822100070380	[C]	1	WHEEL CYLINDER	CYLINDRE ROUE CILINDRO RUOTA	RADBREMSZYLINDER CILINDRO RUEDA
40	G822100070390	[C]	1	WHEEL CYLINDER	CYLINDRE ROUE CILINDRO RUOTA	RADBREMSZYLINDER CILINDRO RUEDA
41	F822100070040		2	O RING	JOINT TORIQUE ANELLO TENUTA	O-RING ANILLO FORMA 'O'
42	F524101070140		1	GRUB SCREW	VIS SANS TETE VITE SENZA TESTA	GEWINDESTIFT TORNILLO PRESOR
43	X428202839000	M10	1	NUT	ECROU DADO	MUTTER TUERCA
44	F822100070030		1	WEDGE	POIDS ZEPPA	KEIL CUNA

[A] INCLUDES REF : 37 TO 39-41 TO 44
COMPREND REF : 37 A 39-41 A 44
ENTHALTE REF : 37 BIS 39-41 BIS 44
COMPRENDE REF : 37 A 39-41 A 44
INCLUYE REF : 37 A 39-41 A 44

[B] INCLUDES REF : 37-38-40 TO 44
COMPREND REF : 37-38-40 A 44
ENTHALTE REF : 37-38-40 BIS 44
COMPRENDE REF : 37-38-40 A 44
INCLUYE REF : 37-38-40 A 44

[C] INCLUDES REF : 41-44
COMPREND REF : 41-44
ENTHALTE REF : 41-44
COMPRENDE REF : 41-44
INCLUYE REF : 41-44

Pump Drive
Commande Pompe
Pumpenantrieb
Comando Pompa
Mando De Bomba

70-55

1-WG80-002-A

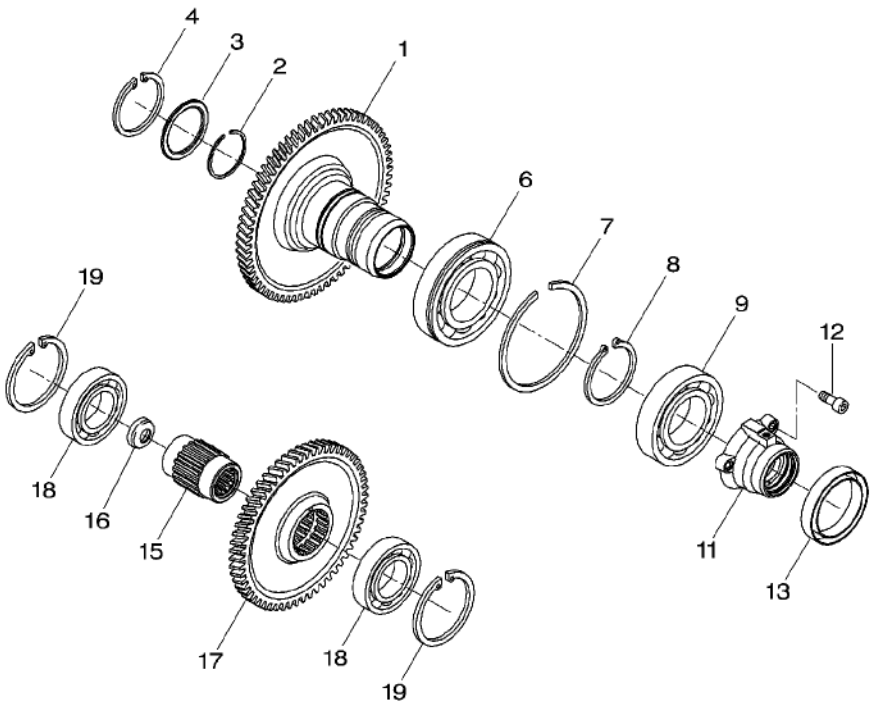

1	903100490050		1 SPUR GEAR	ENGRENAGE DROIT INGRANAGGIO DIR.	STIRNRAD RUEDA DE DIENTES
2	X533212000000		1 SNAPRING	SEGMENT ARRET ANELLO SIEGER	SPRENGRING ANILLA RETENCION
3	916100490040		1 DISC	DISQUE DISCO	SCHEIBE DISCO
4	***X530106046000***	∅ 52 X 2	1 CIRCLIP	CIRCLIP ANNELLO ELASTICO	SEEGERING GRAPA CIRCULAR
6	X605511411003		1 BALL BEARING	ROULEMENT BILLES CUSCINETTO SFERE	KUGELLAGER COJINETE DE BOLA
7	X532503846000		1 SNAPRING	SEGMENT ARRET ANELLO SIEGER	SPRENGRING ANILLA RETENCION
8	X530006146000	∅ 55 X 2	1 CIRCLIP	CIRCLIP ANNELLO ELASTICO	SEEGERING GRAPA CIRCULAR
9	X605505900000		1 BALL BEARING	ROULEMENT BILLES CUSCINETTO SFERE	KUGELLAGER COJINETE DE BOLA
11	903100490010		1 HOUSING	CARTER CARCASSA	GEHAEUSE ALOJAMIENTO
12	X485013205000	M10 X 30	3 HEX. SOCK. SCREW	VIS TETE HEX VITE PARKER	ZYLINDERSCHRAUBE TORN.CAB.HUECA
13	X550108900000	50 X 65 X 8	1 SHAFT SEAL	ETANCHEITE ARBRE TENUTA ALBERO	WELLENDICHTRING SELLO DE EJE
15	903100490080		1 SHAFT	ARBRE ALBERO	WELLE ARBOL
16	903100490170		1 COVER	COUVERCLE COPERCHIO	DECKEL CUBIERTA
17	903100490060		1 SPUR GEAR	ENGRENAGE DROIT INGRANAGGIO DIR.	STIRNRAD RUEDA DE DIENTES
18	X605505811000		2 BALL BEARING	ROULEMENT BILLES CUSCINETTO SFERE	KUGELLAGER COJINETE DE BOLA
19	X530107246000	∅ 75 X 2,5	2 CIRCLIP	CIRCLIP ANNELLO ELASTICO	SEEGERING GRAPA CIRCULAR

Lube Oil Pump	Filter	70-60
Pompe A Huile	Filtre	
Schmieroelpumpe	Filter	
Pompa Per Lubrificazione	Filtro	
Bomba De Aceite Lubrificacion	Filtro	

1-WG82-002-A

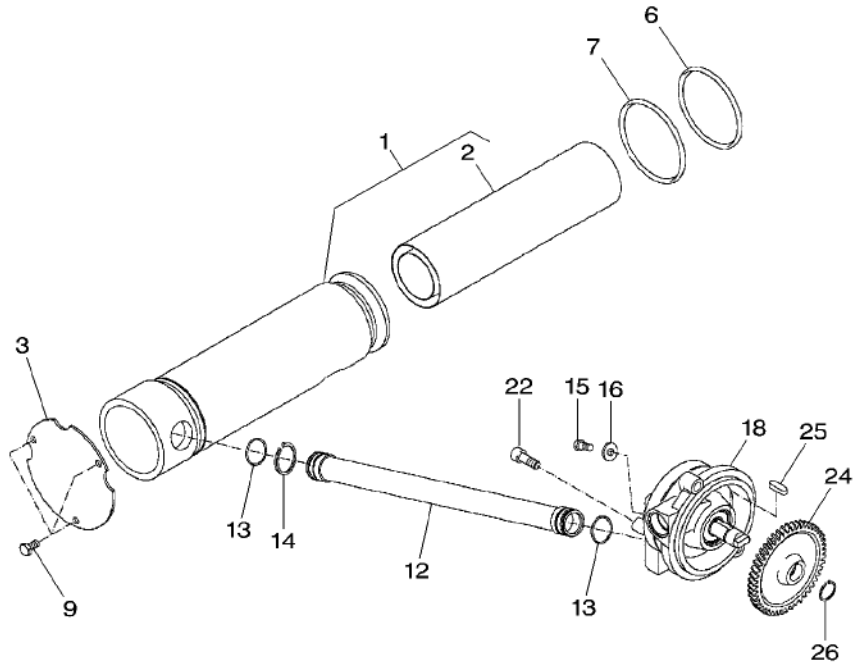

1	G916100490021		1	SUCTION FILTER	FILTRE ASPIRATIO SUCTION FILTER	SAUGFILTER FILTRO D'SUCCION
2	***F916100490010***	1	1	FILTER	FILTRE FILTRO	FILTER FILTRO
3	916100490180		1	COVER	COUVERCLE COPERCHIO	DECKEL CUBIERTA
6	***X548987066000***	∅ 105 X 3	1	O RING	JOINT TORIQUE ANELLO TENUTA	O-RING ANILLO FORMA 'O'
7	***X548989201000***	∅ 108 X 3	1	O RING	JOINT TORIQUE ANELLO TENUTA	O-RING ANILLO FORMA 'O'
9	X487527941000	M8 X 25	3	HEX. SOCK. SCREW	VIS TETE HEX VITE PARKER	ZYLINDERSCHRAUBE TORN.CAB.HUECA
12	H916100490010		1	PIPE	TUYAU TUBO	ROHRLEITUNG CANO
13	X548878200000	∅ 27 X 3	2	O RING	JOINT TORIQUE ANELLO TENUTA	O-RING ANILLO FORMA 'O'
14	X530004146000	∅ 32 X 1,5	1	CIRCLIP	CIRCLIP ANNELLO ELASTICO	SEEGERING GRAPA CIRCULAR
15	X487526841000	M8 X 16	1	HEX. SOCK. SCREW	VIS TETE HEX VITE PARKER	ZYLINDERSCHRAUBE TORN.CAB.HUECA
16	178810030450		1	DISC	DISQUE DISCO	SCHEIBE DISCO
18	G916100490011		1	OIL PUMP	POMPE A HUILE POMPA OLIO	OELPUMPE BOMBA DE ACEITE
22	X485013305000	M10 X 35	2	HEX. SOCK. SCREW	VIS TETE HEX VITE PARKER	ZYLINDERSCHRAUBE TORN.CAB.HUECA
24	903100490100		1	SPUR GEAR	ENGRENAGE DROIT INGRANAGGIO DIR.	STIRNRAD RUEDA DE DIENTES
25	178107080030		1	KEY PARALLEL	CLAVETTE PARALEL CHIAVETTA PIANA	PASSFEDER CHAVETA PLANA
26	X530215446000	∅ 20 X 1,5	1	CIRCLIP	CIRCLIP ANNELLO ELASTICO	SEEGERING GRAPA CIRCULAR

Feed Pump Pompe D' Alimentation Foerderpumpe Pompa Alimentazione Bomba Alimentadora	System Comfort Systeme Confort Komfortbetaet Comandi Conforto Comando De Comodidad	70-65

1-WG92-001-A

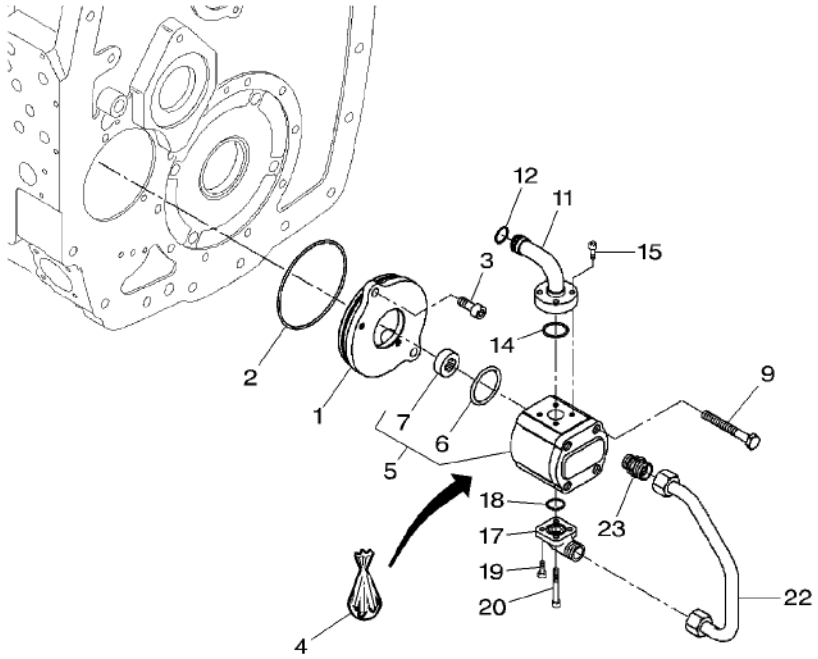

1	916100490131		1	COVER	COUVERCLE COPERCHIO	DECKEL CUBIERTA
2	X548995902000	∅ 115 X 2,5	1	O RING	JOINT TORIQUE ANELLO TENUTA	O-RING ANILLO FORMA 'O'
3	X485013205000	M10 X 30	2	HEX. SOCK. SCREW	VIS TETE HEX VITE PARKER	ZYLINDERSCHRAUBE TORN.CAB.HUECA
4	F279940050040		1	KIT, JOINT	JEU JOINTS KIT GIUNTO	DICHTUNGSSATZ JUEGO JUNTAS
5	G916100490030		1	GEAR PUMP	POMPE ENGRENAGES INGRANAGGIO POM.	ZAHNRADPUMPE BOMBA ENGRANAJES
6	F916100490020	5	1	O RING	JOINT TORIQUE ANELLO TENUTA	O-RING ANILLO FORMA 'O'
7	F279940050030	5	1	DRIVING	ENTRAINEUR CONDUCENTE	MITNEHMER DE MANDO
9	X487534001000	M10 X 105	2	HEX. SOCK. SCREW	VIS TETE HEX VITE PARKER	ZYLINDERSCHRAUBE TORN.CAB.HUECA
11	H718100490010		1	UNION	RACCORD RACCORDO	VERSCHRAUBUNG RACOR
12	X548848016000	∅ 16 X 3	1	O RING	JOINT TORIQUE ANELLO TENUTA	O-RING ANILLO FORMA 'O'
14	X548868966000	∅ 22,3 X 2,4	1	O RING	JOINT TORIQUE ANELLO TENUTA	O-RING ANILLO FORMA 'O'
15	X485005305000	M6 X 25	4	HEX. SOCK. SCREW	VIS TETE HEX VITE PARKER	ZYLINDERSCHRAUBE TORN.CAB.HUECA
17	X593816300000		1	FLANGED SOCKET	TUBULURE REBORD FLANGED SOCKET	FLANSCHSTUTZEN FLANGED SOCKET
18	X548860601000	∅ 20 X 2,5	1	O RING	JOINT TORIQUE ANELLO TENUTA	O-RING ANILLO FORMA 'O'
19	X485004405000	M16 X 16	2	HEX. SOCK. SCREW	VIS TETE HEX VITE PARKER	ZYLINDERSCHRAUBE TORN.CAB.HUECA
20	X485005405000	M16 X 30	2	HEX. SOCK. SCREW	VIS TETE HEX VITE PARKER	ZYLINDERSCHRAUBE TORN.CAB.HUECA
22	H916100490030		1	TUBE	TUBE TUBO	ROHR TUBO
23	X592501300000		1	THREAD. PART	PIECE A VISSER THREAD. PART	SCHRAUBSTUECK PIEZA ROSCADO

Gear Box Lubrication
Lubrification Boite De Vitesses
Getriebeschmierung
Lubrificazione Scatola Cambio
Lubrificacion Caja De Velocidades

70-70

1-WG83-002-A

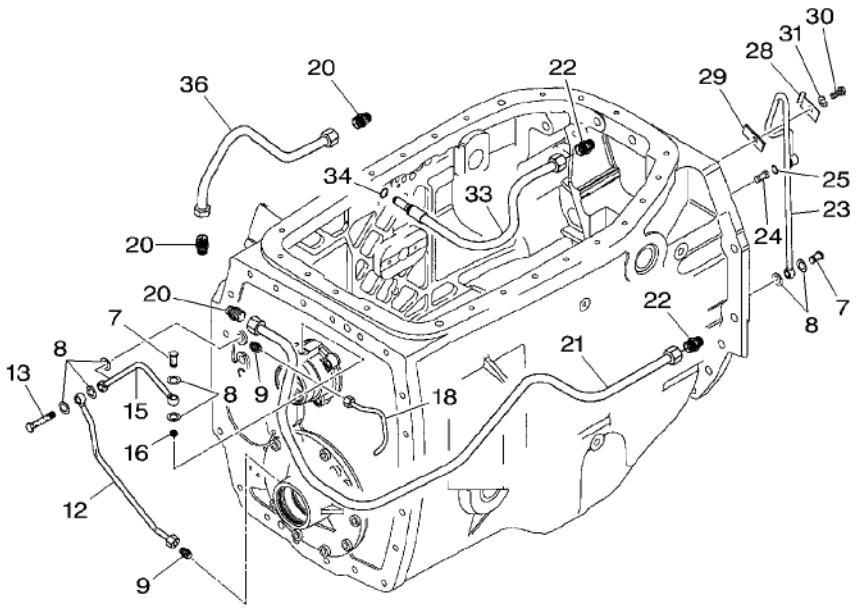

7	X494515300000		2	BANJO BOLT	VIS BANJO BULLONE BANJO HOHLSCHRAUBE TORNILLO HUECO
8	X540003678000		7	RING	ANNEAU ANELLO RING ARO
9	X592501000000		2	THREAD. PART	PIECE A VISSER THREAD. PART SCHRAUBSTUECK PIEZA ROSCADO
12	H903100470010	[F]	1	PIPE	TUYAU TUBO ROHRLEITUNG CANO
13	X494515201000		1	BANJO BOLT	VIS BANJO BULLONE BANJO HOHLSCHRAUBE TORNILLO HUECO
15	H916100470131	[D]	1	PIPE	TUYAU TUBO ROHRLEITUNG CANO
16	916100470121		1	NOZZLE	NEZ INJECTEUR INIETTORE DUESE TOBERA
18	H916100470110	[A]	1	PIPE	TUYAU TUBO ROHRLEITUNG CANO
20	X592501300000		3	THREAD. PART	PIECE A VISSER THREAD. PART SCHRAUBSTUECK PIEZA ROSCADO
21	H916100470121	[C]	1	PIPE	TUYAU TUBO ROHRLEITUNG CANO
22	X592501303000	M16 X 1,5	2	THREAD. PART	PIECE A VISSER THREAD. PART SCHRAUBSTUECK PIEZA ROSCADO
23	H916100470100	[B]	1	PIPE	TUYAU TUBO ROHRLEITUNG CANO
24	198100080520		1	LUB.OIL PIPE	TUYAU HUILE LUB TUBAZIONE OLIO SCHMIEROELLEITG. TUBO ACEITE LUB
25	X548818015000	∅ 8 X 2,5	1	O RING	JOINT TORIQUE ANELLO TENUTA O-RING ANILLO FORMA 'O'
28	268600130110		1	CLIP	PATTE D'ATTACHE FERMAGLIO SCHELLE CLIP
29	025840020110		1	PLATE	PLAQUE PIASTRA PLATTE PLATO
30	X487526841000	M8 X 16	1	HEX. SOCK. SCREW	VIS TETE HEX VITE PARKER ZYLINDERSCHRAUBE TORN.CAB.HUECA
31	X450006308000		1	WASHER	RONDELLE RONDELLA UNTERLEGSCHEIBE ARANDELA
33	H916100620121	[C]	1	PRESSURE HOSE	FLEXIBLE HTE PR TUBO PRESSIONE DRUCKSCHLAUCH TUBO DE PRESION
34	X530014200000	∅ 16 X 1,2	1	CIRCLIP	CIRCLIP ANNELLO ELASTICO SEEGERING GRAPA CIRCULAR
36	H916100620011	[E]	1	PIPE	TUYAU TUBO ROHRLEITUNG CANO

[A] CONTROL PUMP
COMMANDE DE POMPE
PUMPE SCHALTUNG
COMANDO DI POMPA
MANDO DE BOMBA

Gear Box Lubrication
Lubrification Boite De Vitesses
Getriebeschmierung
Lubrificazione Scatola Cambio
Lubrificacion Caja De Velocidades

70-70

1-WG83-002-A

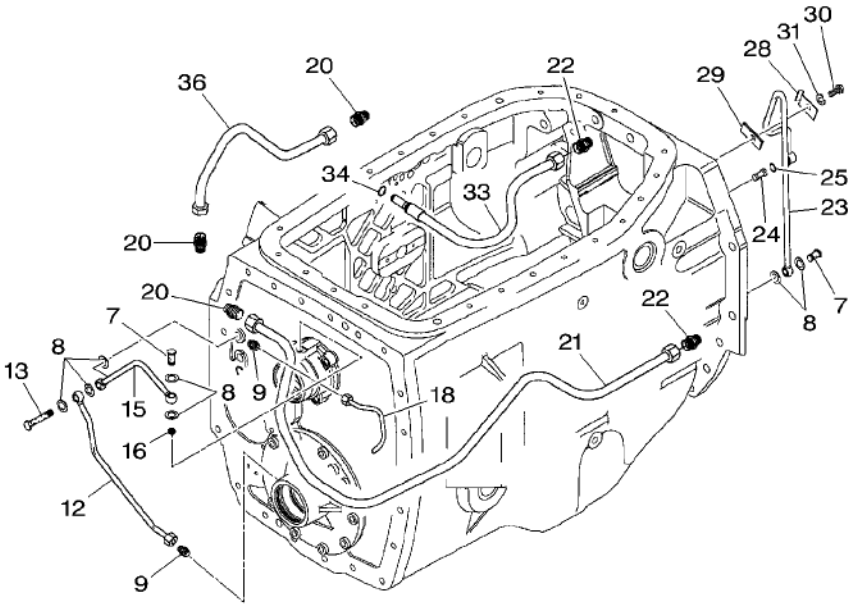

[B] BEVEL GEAR LUBRICATION
LUBRIFICATION DU COUPLE CONIQUE
KEGELRADSATZ SCHMIERUNGSSYSTEM
SISTEMA DI LUBRIFICAZIONE DE COPPIA CONIC
SISTEMA DE ENGRASE DE CORONA Y PINON

[C] REAR AXLE
ESSIEU ARRIERE
HINTERACHSE
ASSALE POSTERIORE
EJE TRASERO

[D] INPUTSHAFT
ARBRE D'ENTREE
ANTRIEBSWELLE
ALBERO ENTRATA
EJE PRIMARIO

[E] DISTRIBUTOR
DISTRIBUTEUR
STEUERVENTIL
DISTRIBUTORE
DISTRIBUIDOR

[F] BRAKE TRANSMISSION SHAFT
FREIN SUR ARBRE DE TRANSMISSION
ALLRADANTRIEBSWELLE BREMSE
FRENO SOPRA ALBERO TRASMISSIONE
FRENO SOBRE ARBOL DE TRANSMISION

Gear Box Lubrication	**Interior**	**70-75**
Lubrification Boite De Vitesses	**Interieur**	
Getriebeschmierung	**Innen**	
Lubrificazione Scatola Cambio	**Interni**	
Lubrificacion Caja De Velocidades	**Internas**	

1-WG84-002-A

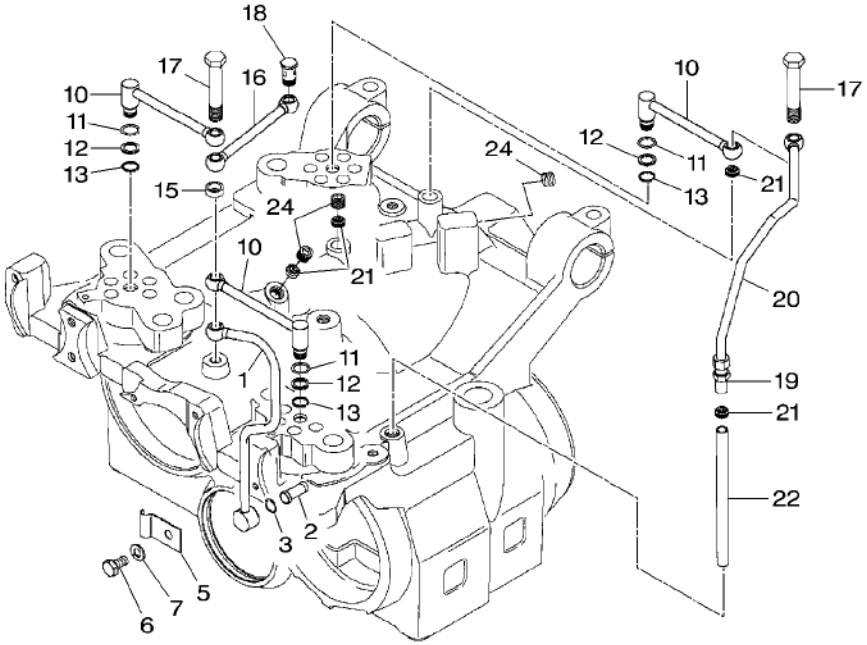

1	H916100470230	[A]	**1** PIPE	TUYAU TUBO	ROHRLEITUNG CANO
2	198100080520		**1** LUB.OIL PIPE	TUYAU HUILE LUB TUBAZIONE OLIO	SCHMIEROELLEITG. TUBO ACEITE LUB
3	X548818015000	∅ 8 X 2,5	**1** O RING	JOINT TORIQUE ANELLO TENUTA	O-RING ANILLO FORMA 'O'
5	268600130110		**1** CLIP	PATTE D'ATTACHE FERMAGLIO	SCHELLE CLIP
6	X487527741000	M8 X 20	**1** HEX. SOCK. SCREW	VIS TETE HEX VITE PARKER	ZYLINDERSCHRAUBE TORN.CAB.HUECA
7	X450006308000		**1** WASHER	RONDELLE RONDELLA	UNTERLEGSCHEIBE ARANDELA
10	H916100470200		**3** PIPE	TUYAU TUBO	ROHRLEITUNG CANO
11	X548833602000	∅ 12,3 X 2,4	**3** O RING	JOINT TORIQUE ANELLO TENUTA	O-RING ANILLO FORMA 'O'
12	X534535346000		**3** BACKUP RING	CONTRE BAGUE ANELLO APPOGGIO	STUETZRING ANILLA SOPORTE
13	X530001146000	∅ 12 X 1	**3** CIRCLIP	CIRCLIP ANNELLO ELASTICO	SEEGERING GRAPA CIRCULAR
15	225100100160		**1** SLEEVE	MANCHON MANICOTTO	HUELSE MANCHA
16	H916100470220		**1** PIPE	TUYAU TUBO	ROHRLEITUNG CANO
17	916100470210		**2** BANJO BOLT	VIS BANJO BULLONE BANJO	HOHLSCHRAUBE TORNILLO HUECO
18	X494515300000		**1** BANJO BOLT	VIS BANJO BULLONE BANJO	HOHLSCHRAUBE TORNILLO HUECO
19	X592501000000		**1** THREAD. PART	PIECE A VISSER THREAD. PART	SCHRAUBSTUECK PIEZA ROSCADO
20	X591652500000		**1** PRESSURE HOSE	FLEXIBLE HTE PR TUBO PRESSIONE	DRUCKSCHLAUCH TUBO DE PRESION
21	916100470121		**4** NOZZLE	NEZ INJECTEUR INIETTORE	DUESE TOBERA
22	916100470240		**1** PIPE	TUYAU TUBO	ROHRLEITUNG CANO
24	X483500600000	M12 X 1,5	**3** PLUG	BOUCHON TAPPO	VERSCHL.STOPFEN TAPON

[A] MAIN SHAFT
ARBRE PRINCIPAL
HAUPTWELLE
ALBERO PRINCIPALE
EJE PRINCIPAL

Hydraulic Circuit	**Transmission**	**70-80**
Circuit Hydraulique	**Transmission**	
Flussigkeitsumlauf	**Getriebe**	
Circuito Idraulico	**Trasmissione**	
Circuito Hidraulico	**Transmision**	

1-WG94-001-A

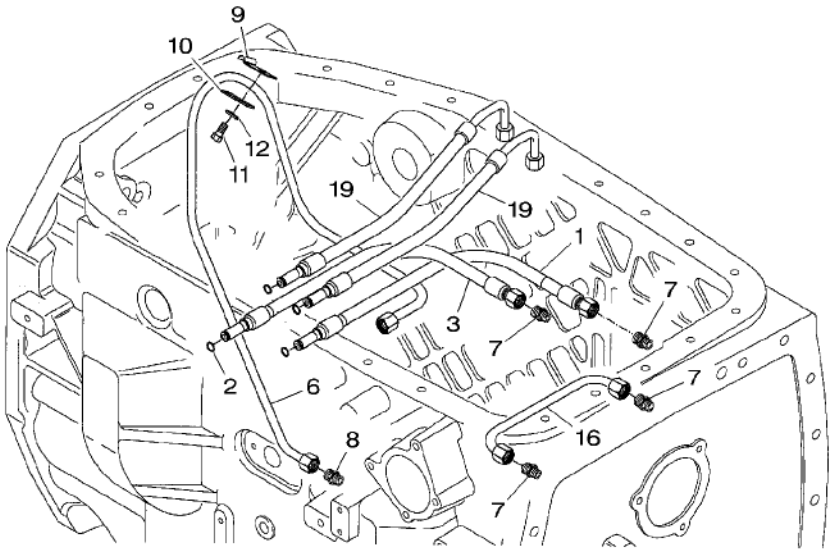

1	H916100620101	[A]	1	PRESSURE HOSE	FLEXIBLE HTE PR TUBO PRESSIONE	DRUCKSCHLAUCH TUBO DE PRESION
2	X531001146000	∅ 12 X 1,0	5	CIRCLIP	CIRCLIP ANNELLO ELASTICO	SEEGERING GRAPA CIRCULAR
3	H916100620101	[D]	1	PRESSURE HOSE	FLEXIBLE HTE PR TUBO PRESSIONE	DRUCKSCHLAUCH TUBO DE PRESION
6	H916101620011	[C]	1	PIPE	TUYAU TUBO	ROHRLEITUNG CANO
7	X592501100000		4	THREAD. PART	PIECE A VISSER THREAD. PART	SCHRAUBSTUECK PIEZA ROSCADO
8	X592502500000		1	THREAD. PART	PIECE A VISSER THREAD. PART	SCHRAUBSTUECK PIEZA ROSCADO
9	268600130110		1	CLIP	PATTE D'ATTACHE FERMAGLIO	SCHELLE CLIP
10	025840020110		1	PLATE	PLAQUE PIASTRA	PLATTE PLATO
11	X487527741000	M8 X 20	1	HEX. SOCK. SCREW	VIS TETE HEX VITE PARKER	ZYLINDERSCHRAUBE TORN.CAB.HUECA
12	X450006308000		1	WASHER	RONDELLE RONDELLA	UNTERLEGSCHEIBE ARANDELA
16	H916100620071	[A]	1	PIPE	TUYAU TUBO	ROHRLEITUNG CANO
19	H411100620100	[B]	2	PRESSURE HOSE	FLEXIBLE HTE PR TUBO PRESSIONE	DRUCKSCHLAUCH TUBO DE PRESION

[A] REGULATOR
REGULATEUR
REGLER
REGOLATORE
REGULADOR

[B] SELECTOR RAM
VERIN DE SELECTION
SCHALTZYLINDER
CILINDRO DI SELETIONE
CILINDRO DE SELECION

[C] CONTROL
CONTROLE
STEUERUNG
CONTROLLO
MANDO

[D] SPEED RESTRICTOR
LIMITEUR DE VITESSE
GANGSPARDUESE
LIMITATORE VELOCITA
LIMITADOR DE VELOCIDAD

Hydraulic Circuit **Circuit Hydraulique** **Flussigkeitsumlauf** **Circuito Idraulico** **Circuito Hidraulico**	**Transmission** **Transmission** **Getriebe** **Trasmissione** **Transmision**	**70-85**

Hydraulic Valve Block
Bloc Valve Hydraulique
Hydraulik Ventilblock
Blocco Valvole Idraulico
Bloque Valvulas Hydraulico

1-WG94-002-A

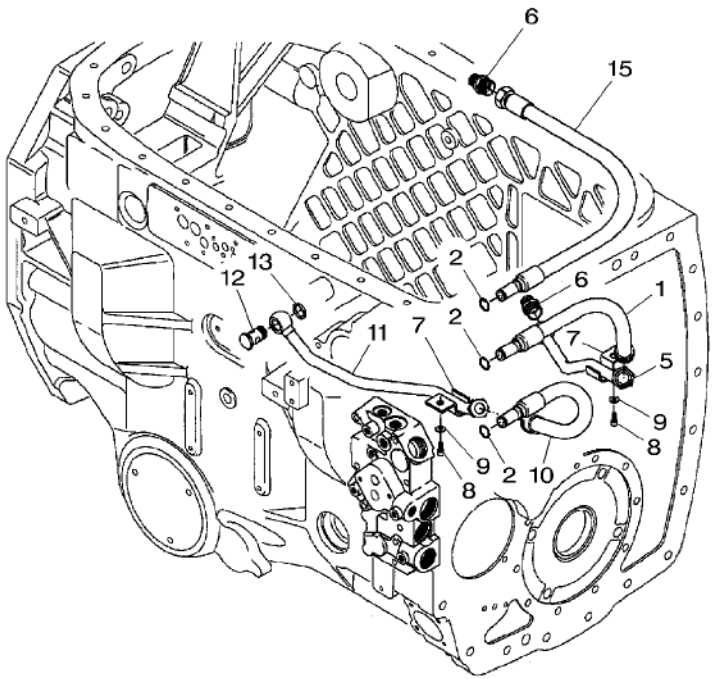

1	H916100620130	[A]	**1**	PRESSURE HOSE TUBO PRESSIONE	FLEXIBLE HTE PR TUBO PRESION	DRUCKSCHLAUCH TUBO DE PRESION
2	X530014200000	∅ 16 X 1,2	**3**	CIRCLIP ANNELLO ELASTICO	CIRCLIP GRAPA CIRCULAR	SEEGERING
5	H916101620020	[A]	**1**	PIPE TUBO	TUYAU CANO	ROHRLEITUNG
6	X592501300000		**2**	THREAD. PART THREAD. PART	PIECE A VISSER PIEZA ROSCADO	SCHRAUBSTUECK
7	238950010010		**2**	CLIP FERMAGLIO	PATTE D'ATTACHE CLIP	SCHELLE
8	X485013105000	M10 X 25	**2**	HEX. SOCK. SCREW VITE PARKER	VIS TETE HEX TORN.CAB.HUECA	ZYLINDERSCHRAUBE
9	X450907508000		**2**	DISC DISCO	DISQUE DISCO	SCHEIBE
10	H916100620142	[B]	**1**	PRESSURE HOSE TUBO PRESSIONE	FLEXIBLE HTE PR TUBO DE PRESION	DRUCKSCHLAUCH
11	H916100620061	[B]	**1**	PIPE TUBO	TUYAU CANO	ROHRLEITUNG
12	205950010340		**1**	BANJO BOLT BULLONE BANJO	VIS BANJO TORNILLO HUECO	HOHLSCHRAUBE
13	X542541001000		**1**	SEAL ANELLO RACCORD	JOINT ETANCHEITE ARENDELA D'JUNTA	DICHTRING
15	H916100620121	[C]	**1**	PRESSURE HOSE TUBO PRESSIONE	FLEXIBLE HTE PR TUBO DE PRESION	DRUCKSCHLAUCH

[A] FEED SUPPLY
ALIMENTATION
ERNAHRUNG
ALIMENTAZIONE
ALIMENTACION

[B] OUTPUT
SORTIE
AUSTRITT
USCITA
SALIDA

[C] HOUSING
CARTER INT.
GEHAEUSE
CARCASSA
ALOJAMIENTO

Hydraulic Valve Block	Pressure Filter	70-90
Bloc Valve Hydraulique	Filtre Pression	
Hydraulik Ventilblock	Druckfilter	
Blocco Valvole Idraulico	Filtro A Pressione	
Bloque Valvulas Hydraulico	Filtro Presion	

1-WG85-002-A

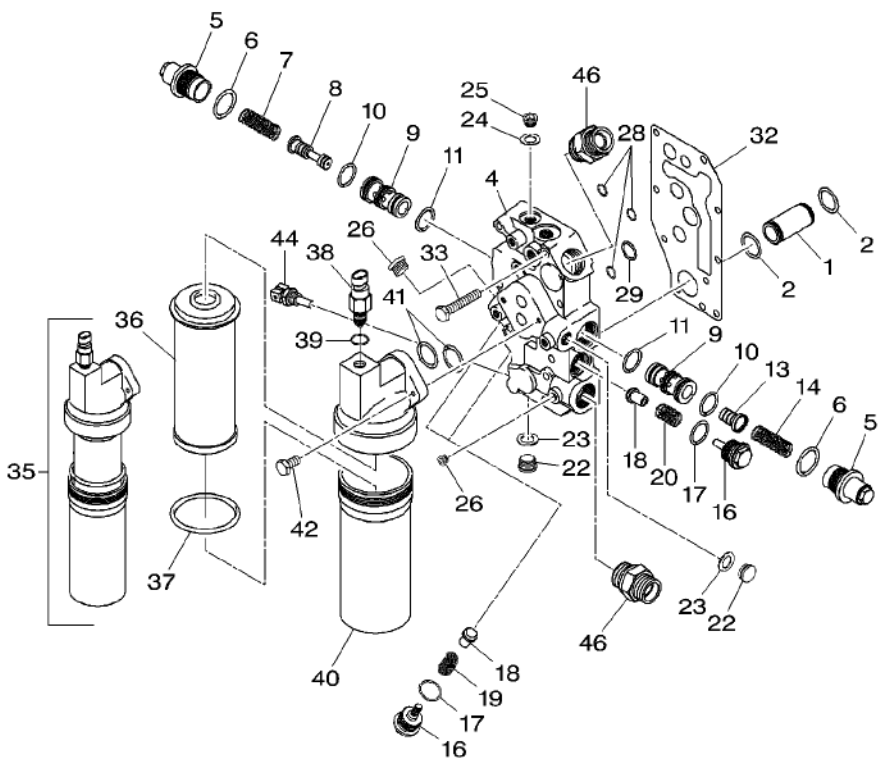

1	916100600220		1	PIPE	TUYAU TUBO	ROHRLEITUNG CANO
2	X548871400000	∅ 24 X 2,5	2	O RING	JOINT TORIQUE ANELLO TENUTA	O-RING ANILLO FORMA 'O'
4	G916100600020	[A]	1	VALVE BLOCK	BLOC VALVE BLOCCO VALVOLE	VENTILBLOCK BLOQUE VALVULAS
5	395100600040	4	2	SLEEVE	MANCHON MANICOTTO	HUELSE MANCHA
6	X548881466000	4 ∅ 28 X 3	2	O RING	JOINT TORIQUE ANELLO TENUTA	O-RING ANILLO FORMA 'O'
7	916100600030	4	1	COMP.SPRING	RESSORT DE COMPR MOLLA COMPOSTA	DRUCKFEDER RESORTE DE COMP.
8	916100600061	4	1	PISTON	PISTON PISTONE	KOLBEN PISTON
9	395100600020	4	2	CARTRIDGE	CARTOUCHE CARTUCCIA	PATRONE ELEMENTO FILTRO
10	X548871466000	4 ∅ 24 X 2,5	2	O RING	JOINT TORIQUE ANELLO TENUTA	O-RING ANILLO FORMA 'O'
11	X548870566000	4 ∅ 23,3 X 2,4	2	O RING	JOINT TORIQUE ANELLO TENUTA	O-RING ANILLO FORMA 'O'
13	916100600070	4	1	PISTON	PISTON PISTONE	KOLBEN PISTON
14	916100600040	4	1	COMP.SPRING	RESSORT DE COMPR MOLLA COMPOSTA	DRUCKFEDER RESORTE DE COMP.
16	916100600100	4	3	SCREW	VIS VITE	SCHRAUBE TORNILLO
17	X548868866000	4 ∅ 22,2 X 3	3	O RING	JOINT TORIQUE ANELLO TENUTA	O-RING ANILLO FORMA 'O'
18	514100600080	4	3	CONE	CONE CONO	KONUS CONO
19	916100600050	4	3	COMP.SPRING	RESSORT DE COMPR MOLLA COMPOSTA	DRUCKFEDER RESORTE DE COMP.
20	514100600090	4	1	COMP.SPRING	RESSORT DE COMPR MOLLA COMPOSTA	DRUCKFEDER RESORTE DE COMP.
22	X483801600000	4 M18	2	SCREW	VIS VITE	SCHRAUBE TORNILLO
23	X540005478000	4 ∅ 18 X 22	2	RING	ANNEAU ANELLO	RING ARO
24	X540004278000	4 ∅ 14 X 20	1	RING	ANNEAU ANELLO	RING ARO
25	X483800800000	4 M14	1	PLUG	BOUCHON TAPPO	VERSCHL.STOPFEN TAPON
26	X483900000000	4 M10	6	SCREW	VIS VITE	SCHRAUBE TORNILLO
28	X548829200000	4 ∅ 11 X 3	3	O RING	JOINT TORIQUE ANELLO TENUTA	O-RING ANILLO FORMA 'O'
29	X548857366000	4 ∅ 18,72 X 2,62	1	O RING	JOINT TORIQUE ANELLO TENUTA	O-RING ANILLO FORMA 'O'
32	916100600210		1	GASKET	JOINT GUARNIZIONE	DICHTSCHEIBE EMPAQUETADURA.
33	X486528705000	M8 X 60	8	HEX. SOCK. SCREW	VIS TETE HEX VITE PARKER	ZYLINDERSCHRAUBE TORN.CAB.HUECA

Hydraulic Valve Block	Pressure Filter
Bloc Valve Hydraulique	Filtre Pression
Hydraulik Ventilblock	Druckfilter
Blocco Valvole Idraulico	Filtro A Pressione
Bloque Valvulas Hydraulico	Filtro Presion

70-90

1-WG85-002-A

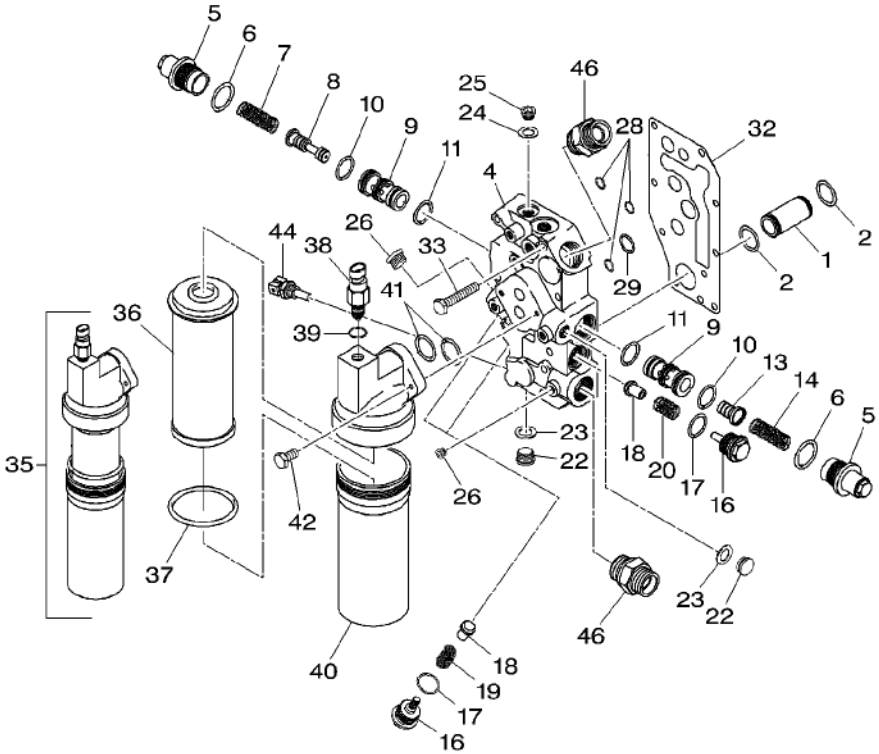

35	G916100600044		1	FILTER	FILTRE FILTRO	FILTER FILTRO
36	***F916100600010***	35	1	FILTER INSERT	ELEMENT FILTRANT ELEMENTO FILTRAN	FILTEREINSATZ SUPLEMENT FILTRO
37	***X548960666000***	35 ∅ 76 X 2,5	1	O RING	JOINT TORIQUE ANELLO TENUTA	O-RING ANILLO FORMA 'O'
38	***F916100600040***	35	1	SWITCH	INTERRUPTEUR INTERRUTTORE	SCHALTER INTERRUPTOR
39	X548833602000	35 ∅ 12,3 X 2,4	1	O RING	JOINT TORIQUE ANELLO TENUTA	O-RING ANILLO FORMA 'O'
40	F916100600030	35	1	HOUSING	CARTER CARCASSA	GEHAEUSE ALOJAMIENTO
41	X548881466000	∅ 28 X 3	2	O RING	JOINT TORIQUE ANELLO TENUTA	O-RING ANILLO FORMA 'O'
42	X487528105000	M8 X 30	2	HEX. SOCK. SCREW	VIS TETE HEX VITE PARKER	ZYLINDERSCHRAUBE TORN.CAB.HUECA
44		90-85 No 38	1	TEMP. SENSOR	SONDE TEMPERATUR TEMP. SENSOR	TEMPERATURGEBER EMISOR DEL CALOR
46	X592501600000		2	THREAD. PART	PIECE A VISSER THREAD. PART	SCHRAUBSTUECK PIEZA ROSCADO

[A] ORDER + 916 100 600 210
COMMANDER EN PLUS 916 100 600 210
BESTELLE + 916 100 600 210
ORDINARE + 916 100 600 210
PEDIR + 916 100 600 210

Hydraulic Valve Block
Bloc Valve Hydraulique
Hydraulik Ventilblock
Blocco Valvole Idraulico
Bloque Valvulas Hydraulico

70-95

1-WG86-002-A

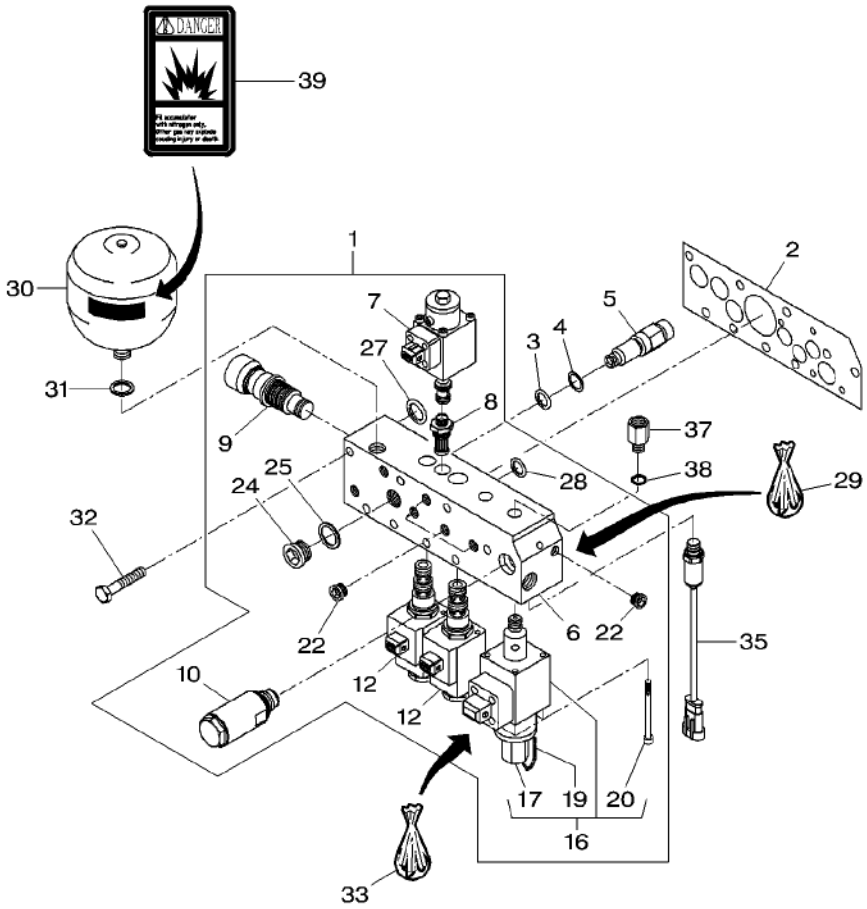

1*	G916101600012	[E]	1	VALVE BLOCK	BLOC VALVE BLOCCO VALVOLE	VENTILBLOCK BLOQUE VALVULAS
2	916100600201		1	GASKET	JOINT GUARNIZIONE	DICHTSCHEIBE EMPAQUETADURA.
3	X548809016000	∅ 5,3 X 2,4	1	O RING	JOINT TORIQUE ANELLO TENUTA	O-RING ANILLO FORMA 'O'
4	X566300600000	∅ 10 X 5,9 X 1	1	BACKUP RING	CONTRE BAGUE ANELLO APPOGGIO	STUETZRING ANILLA SOPORTE
5	716100600091		1	UNION	RACCORD RACCORDO	VERSCHRAUBUNG RACOR
6		1 REF. 1	1	BODY	CORPS CORPO	RUMPF CUERPO
7	***G916100600142***	1 [B]	1	SOLENOID VALVE	VALVE SOLENOIDE VALVOLASOLENOIDE	MAGNETVENTIL VALVULA SOLENOID
8	G916100600180	1	1	INSERT ELEMENT	EMPIECEMENT INSERT ELEMENT	EINSATZ INSERT ELEMENT
9	G916101600020	1	1	DISCHARGE VALVE	VALVE DECHARGE VALVOLA-SICUREZZ	DRUCKBEGR.VENTIL VALVULA ALIVIO
10*	G718100600113	1	1	SLAVE CYLINDER	CYLINDRE RECEPT. SLAVE CYLINDER	KUPPL.NEHMERZYL. SLAVE CYLINDER
12	***G312100600110***	1 [C]	2	DIRECTIONAL VALV	VANNE COMMANDE DIRECTIONAL VALV	WEGEVENTIL DIRECTIONAL VALV
16*	***G716100600122***	1 [A]	1	DISCHARGE VALVE	VALVE DECHARGE VALVOLA-SICUREZZ	DRUCKBEGR.VENTIL VALVULA ALIVIO
17	F716100600080	16	1	CAP NUT	ECROU BORGNE DADO A CAPPELLO	HUTMUTTER TUERCA DE TAPA
19	F716100600090	16	1	CHAINE	CHAINE CATENA	KETTE CADENA
20	F716100600040	16	4	HEX. SOCK. SCREW	VIS TETE HEX VITE PARKER	ZYLINDERSCHRAUBE TORN.CAB.HUECA
22	X483900000000	1 M10	5	SCREW	VIS VITE	SCHRAUBE TORNILLO
24	X483801200000	1 M16	1	SCREW	VIS VITE	SCHRAUBE TORNILLO
25	X540004878000	1 ∅ 16 X 22	1	RING	ANNEAU ANELLO	RING ARO
27	X548829200000	1 ∅ 11 X 3	1	O RING	JOINT TORIQUE ANELLO TENUTA	O-RING ANILLO FORMA 'O'
28	X548813100000	1 ∅ 6,5 X 3	4	O RING	JOINT TORIQUE ANELLO TENUTA	O-RING ANILLO FORMA 'O'
29	F916101600010		1	KIT, JOINT	JEU JOINTS KIT GIUNTO	DICHTUNGSSATZ JUEGO JUNTAS
30	H916100600010	[F]	1	PRESSURE TANK	ACCUMULATEUR PR SERBATOIO PRESS.	DRUCKSPEICHER DEPOSITO PRESION
31	X540004278000	∅ 14 X 20	1	RING	ANNEAU ANELLO	RING ARO
32	X486528705000	M8 X 60	7	HEX. SOCK. SCREW	VIS TETE HEX VITE PARKER	ZYLINDERSCHRAUBE TORN.CAB.HUECA
33	F716100600100		1	KIT, JOINT	JEU JOINTS KIT GIUNTO	DICHTUNGSSATZ JUEGO JUNTAS
35		90-85 No 25	1	TRANSMITTER	TRANSMETTEUR TRASMETTITORE	UEBERTRAEGER TRANSMISOR

Hydraulic Valve Block
Bloc Valve Hydraulique
Hydraulik Ventilblock
Blocco Valvole Idraulico
Bloque Valvulas Hydraulico

70-95

1-WG86-002-A

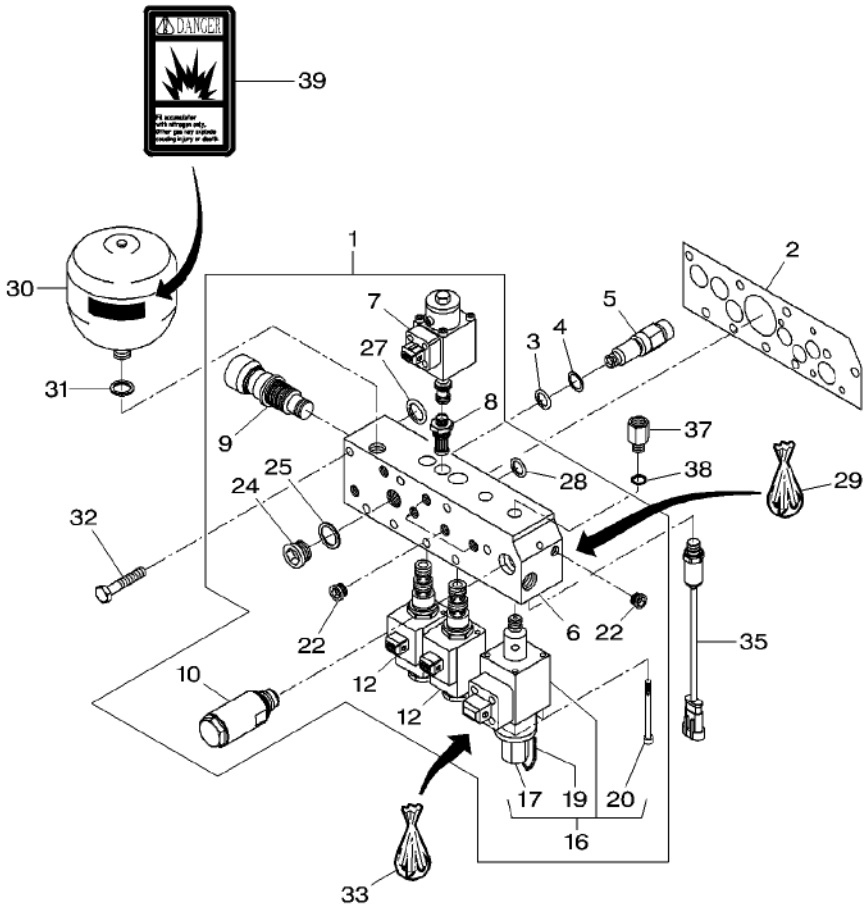

37	X596135200000		1	THREAD. PART	PIECE A VISSER THREAD. PART
38	X540003878000	∅ 12 X 18	1	RING	ANNEAU ANELLO
39	3777021M3		1	DECAL	DECALCOMANIE DECALCOMANIA

SCHRAUBSTUECK
PIEZA ROSCADO
RING
ARO
AUFKLEBER
CALCOMANIA

[A] CLUTCH
EMBRAYAGE
KUPPLUNG
FRIZIONE
EMBRAGUE

[B] EMERGENCY CONTROL
CONTROL DE SECOURS
NOTBETRIEB
CONTROLLO DI EMERGENCIA
CONTROLE DE EMERGENCIA

[C] GROUP GEAR SHIFTING
ENCLENCHEMENT DE GROUPE
GRUPPENSCHALTUNG
CAMBIO DI GRUPPO
CAMBIO DE GRUPO

[E] ORDER + 916 100 600 201
COMMANDER EN PLUS 916 100 600 201
BESTELLE + 916 100 600 201
ORDINARE + 916 100 600 201
PEDIR + 916 100 600 201

[F] THE APPROPRIATE SAFETY DECALS MUST BE ORDERED AND FITTED TO THIS PART
CETTE PIECE DOIT ETRE IMPERATIVEMENT COMMANDEE AVEC SA DECALCOMANIE DE SECURITE
DIESES TEIL MUSS UNBEDINGT ZUSAMMEN MIT DEM SICHER HEITSHINWEISSCHILD BESTELLT WERDEN
QUESTO PEZZO DEVE ASSOLUTAMENTE ESSERE ORDINATO CON LA RELATIVA DECALCO. SULLA SICUREZZA
ESTA PIEZA SE TIENE QUE PEDIR IMPERATIVAMENTE CON SU CALCOMANIA DE SEGURIDAD

Hydraulic Valve Block	Solenoid Valve	70-100	➡ 903/0104
Bloc Valve Hydraulique	Valve Solenoide		
Hydraulik Ventilblock	Magnetventil		
Blocco Valvole Idraulico	Valvolasolenoide		
Bloque Valvulas Hydraulico	Valvula Solenoid		

1-WG91-002-A

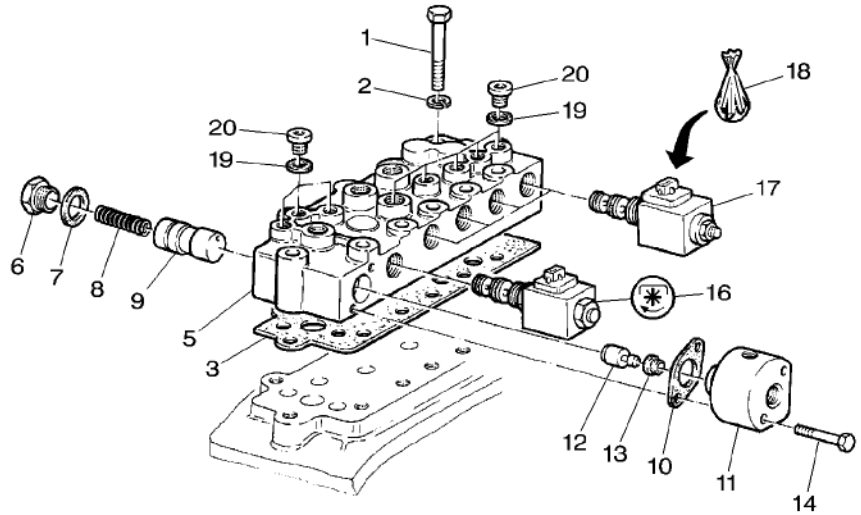

1	X486529005000		M8 X 70	12	HEX. SOCK. SCREW	VIS TETE HEX VITE PARKER	ZYLINDERSCHRAUBE TORN.CAB.HUECA
2	X520803901000			12	LOCK WASHER	RONDELLE FREIN ROSETTA DENTELL.	FEDERRING ARANDELA GROWER
3	822100600021			1	GASKET	JOINT GUARNIZIONE	DICHTSCHEIBE EMPAQUETADURA.
5	G926150600100		[A] ●○ G916100600030	1	VALVE BLOCK	BLOC VALVE BLOCCO VALVOLE	VENTILBLOCK BLOQUE VALVULAS
6	X494206000000	5	M22	1	SCREW	VIS VITE	SCHRAUBE TORNILLO
7	X540006678000	5		1	RING	ANNEAU ANELLO	RING ARO
8	822100600060	5		1	COMP.SPRING	RESSORT DE COMPR MOLLA COMPOSTA	DRUCKFEDER RESORTE DE COMP.
9	822100600030	5		1	PISTON	PISTON PISTONE	KOLBEN PISTON
10	822100600070	5		1	GASKET	JOINT GUARNIZIONE	DICHTSCHEIBE EMPAQUETADURA.
11	822100600051	5		1	TIMING GEAR CASE	CARTER DISTRIBUT CARCASSA DISTRIB	STEUERGEHAEUSE CARTER ENGRANAJE
12	822100070451	5		1	PISTON	PISTON PISTONE	KOLBEN PISTON
13	X548301500000	5		1	V-SEAL	BAGUE RAINURE V-SEAL	NUTRING V-SEAL
14	X487522341000	5	M6 X 50	2	HEX. SOCK. SCREW	VIS TETE HEX VITE PARKER	ZYLINDERSCHRAUBE TORN.CAB.HUECA
16	***G716150200060***	5		1	VALVE.	SOUPAPE VALVOLA	VENTIL VALVULA
17	***G411151600020***	5	[BCDEF]	4	DIRECTIONAL VALV	VANNE COMMANDE DIRECTIONAL VALV	WEGEVENTIL DIRECTIONAL VALV
18	F411151600010	17	ARGO-HYTOS	1	KIT, JOINT	JEU JOINTS KIT GIUNTO	DICHTUNGSSATZ JUEGO JUNTAS
18	F312100600040	17	BOSCH	1	KIT, JOINT	JEU JOINTS KIT GIUNTO	DICHTUNGSSATZ JUEGO JUNTAS
18	F312100600050	17	HYDAC	1	KIT, JOINT	JEU JOINTS KIT GIUNTO	DICHTUNGSSATZ JUEGO JUNTAS
19	X540003078000	5		8	RING	ANNEAU ANELLO	RING ARO
20	X483800000000	5	M10	8	SCREW	VIS VITE	SCHRAUBE TORNILLO

[A] ORDER + 822 100 600 021
COMMANDER EN PLUS 822 100 600 021
BESTELLE + 822 100 600 021
ORDINARE + 822 100 600 021
PEDIR + 822 100 600 021

[B] DIFFERENTIAL LOCK
BLOCAGE DE DIFFERENTIEL
VORDIFFERENTIALSPERRE
FERMO DIFFERENZIALE
BLOQUEO DIFERENCIAL

Hydraulic Valve Block **Bloc Valve Hydraulique** **Hydraulik Ventilblock** **Blocco Valvole Idraulico** **Bloque Valvulas Hydraulico**	**Solenoid Valve** **Valve Solenoide** **Magnetventil** **Valvolasolenoide** **Valvula Solenoid**	**70-100**

903/0104

1-WG91-002-A

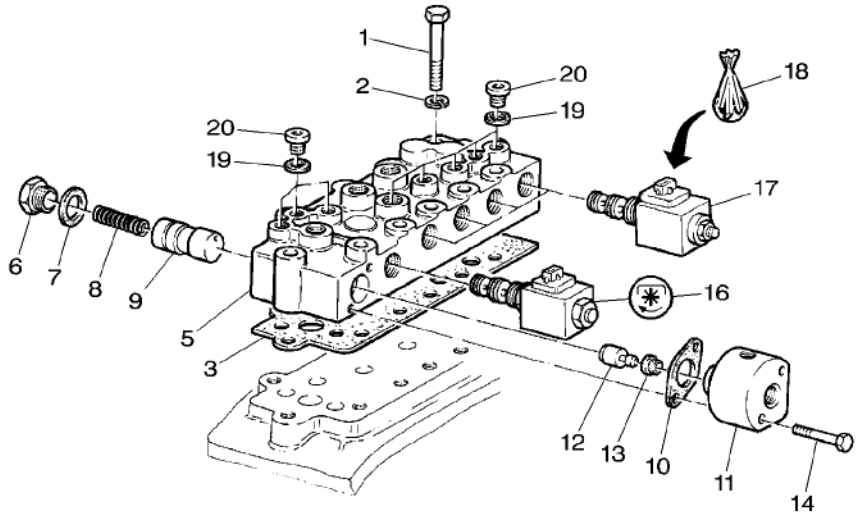

[C] POWER TAKE OFF 750 TR/MM
PRISE DE FORCE 750 TR/MM
ZAPFWELLE 750 TR/MM
PRESA DI FORZA 750 TR/MM
TOMA DE FUERZA 750 TR/MM

[D] POWER TAKE OFF 1000
PRISE DE FORCE 1000 TR/MM
ZAPFWELLE 1000
PRESA DI FORZA 1000
TOMA DE FUERZA 1000

[E] 4 WHEEL DRIVE
4 ROUES MOTRICES
ALLRADANTRIEB
4 ROUTE MOTRICI
4 RUEDAS MOTRICES

[F] PTO BRAKES
FREIN DE PTO
PTO BREMSE
FRENI PTO
FRENO TDF

Hydraulic Valve Block	Solenoid Valve
Bloc Valve Hydraulique	Valve Solenoide
Hydraulik Ventilblock	Magnetventil
Blocco Valvole Idraulico	Valvolasolenoide
Bloque Valvulas Hydraulico	Valvula Solenoid

70-105 ➡ **903/0201**

1-WG91-001-A

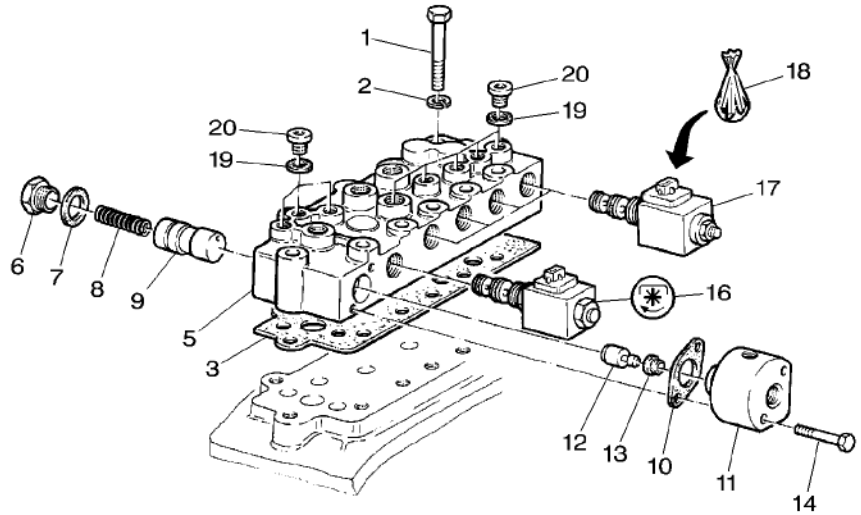

1	X486529005000		M8 X 70	12	HEX. SOCK. SCREW	VIS TETE HEX VITE PARKER	ZYLINDERSCHRAUBE TORN.CAB.HUECA
2	X520803901000			12	LOCK WASHER	RONDELLE FREIN ROSETTA DENTELL.	FEDERRING ARANDELA GROWER
3	822100600021			1	GASKET	JOINT GUARNIZIONE	DICHTSCHEIBE EMPAQUETADURA.
5	G903150600100		[A]	1	VALVE BLOCK	BLOC VALVE BLOCCO VALVOLE	VENTILBLOCK BLOQUE VALVULAS
6	F903150600030	5		1	SCREW	VIS VITE	SCHRAUBE TORNILLO
7	X548859400000	5	∅ 19,4 X 2,1	1	O RING	JOINT TORIQUE ANELLO TENUTA	O-RING ANILLO FORMA 'O'
8	822100600060	5		1	COMP.SPRING	RESSORT DE COMPR MOLLA COMPOSTA	DRUCKFEDER RESORTE DE COMP.
9	F903150600010	5		1	PISTON	PISTON PISTONE	KOLBEN PISTON
10	822100600070	5		1	GASKET	JOINT GUARNIZIONE	DICHTSCHEIBE EMPAQUETADURA.
11	F903150600020	5		1	TIMING GEAR CASE	CARTER DISTRIBUT CARCASSA DISTRIB	STEUERGEHAEUSE CARTER ENGRANAJE
12	822100070451	5		1	PISTON	PISTON PISTONE	KOLBEN PISTON
13	X548301500000	5		1	V-SEAL	BAGUE RAINURE V-SEAL	NUTRING V-SEAL
14	X487522341000	5	M6 X 50	2	HEX. SOCK. SCREW	VIS TETE HEX VITE PARKER	ZYLINDERSCHRAUBE TORN.CAB.HUECA
16	***G716150200060***	5		1	VALVE.	SOUPAPE VALVOLA	VENTIL VALVULA
17	***G411151600020***	5	[BCDEF]	4	DIRECTIONAL VALV	VANNE COMMANDE DIRECTIONAL VALV	WEGEVENTIL DIRECTIONAL VALV
18	F411151600010	17		1	KIT, JOINT	JEU JOINTS KIT GIUNTO	DICHTUNGSSATZ JUEGO JUNTAS
19	X540003078000	5		8	RING	ANNEAU ANELLO	RING ARO
20	X483800000000	5	M10	8	SCREW	VIS VITE	SCHRAUBE TORNILLO

[A] ORDER + 822 100 600 021
COMMANDER EN PLUS 822 100 600 021
BESTELLE + 822 100 600 021
ORDINARE + 822 100 600 021
PEDIR + 822 100 600 021

[B] DIFFERENTIAL LOCK
BLOCAGE DE DIFFERENTIEL
VORDIFFERENTIALSPERRE
FERMO DIFFERENZIALE
BLOQUEO DIFERENCIAL

Hydraulic Valve Block **Bloc Valve Hydraulique** **Hydraulik Ventilblock** **Blocco Valvole Idraulico** **Bloque Valvulas Hydraulico**	**Solenoid Valve** **Valve Solenoide** **Magnetventil** **Valvolasolenoide** **Valvula Solenoid**	**70-105**

903/0201

1-WG91-001-A

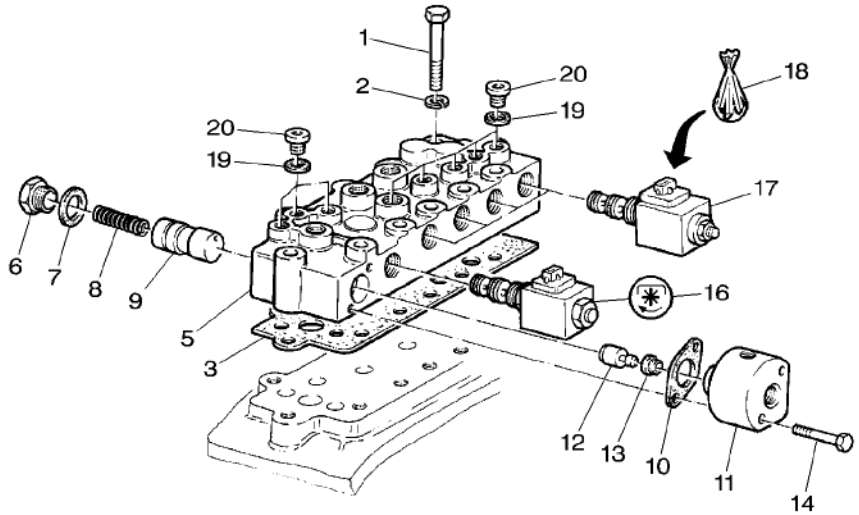

[C] POWER TAKE OFF 750 TR/MM
PRISE DE FORCE 750 TR/MM
ZAPFWELLE 750 TR/MM
PRESA DI FORZA 750 TR/MM
TOMA DE FUERZA 750 TR/MM

[D] POWER TAKE OFF 1000
PRISE DE FORCE 1000 TR/MM
ZAPFWELLE 1000
PRESA DI FORZA 1000
TOMA DE FUERZA 1000

[E] 4 WHEEL DRIVE
4 ROUES MOTRICES
ALLRADANTRIEB
4 ROUTE MOTRICI
4 RUEDAS MOTRICES

[F] PTO BRAKES
FREIN DE PTO
PTO BREMSE
FRENI PTO
FRENO TDF

Hydraulic Valve Block **Bloc Valve Hydraulique** **Hydraulik Ventilblock** **Blocco Valvole Idraulico** **Bloque Valvulas Hydraulico**	**Hydraulic Lines** **Tuyauteries** **Leitungen** **Tubazioni** **Circuito**	**70-110**

1-WG93-001-A

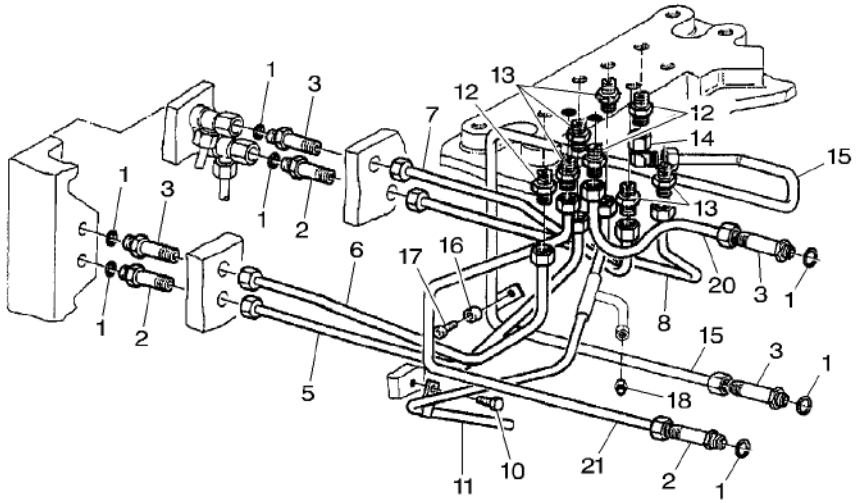

1	X548830066000	∅ 11,3 X 2,4	**7** O RING	JOINT TORIQUE ANELLO TENUTA	O-RING ANILLO FORMA 'O'
2	716150620060		**4** UNION	RACCORD RACCORDO	VERSCHRAUBUNG RACOR
3	822100620310		**3** UNION	RACCORD RACCORDO	VERSCHRAUBUNG RACOR
5	H926150620220		**1** TUBE	TUBE TUBO	ROHR TUBO
6	H926150620210		**1** TUBE	TUBE TUBO	ROHR TUBO
7	H926150620240		**1** TUBE	TUBE TUBO	ROHR TUBO
8	H926150620230		**1** TUBE	TUBE TUBO	ROHR TUBO
10	X487527305000	M8 X 10	**1** HEX. SOCK. SCREW	VIS TETE HEX VITE PARKER	ZYLINDERSCHRAUBE TORN.CAB.HUECA
11	H926150620200		**1** TUBE	TUBE TUBO	ROHR TUBO
12	X592501200000		**3** THREAD. PART	PIECE A VISSER THREAD. PART	SCHRAUBSTUECK PIEZA ROSCADO
13	X592501100000		**5** THREAD. PART	PIECE A VISSER THREAD. PART	SCHRAUBSTUECK PIEZA ROSCADO
14	X584316900000		**1** UNION	RACCORD RACCORDO	VERSCHRAUBUNG RACOR
15	H916100620260		**1** TUBE	TUBE TUBO	ROHR TUBO
16	822100620320		**1** BUSH	BAGUE BOCCOLA	BUCHSE CASQUILLO
17	X493613105000	M10 X 25	**1** HEX. SOCK. SCREW	VIS TETE HEX VITE PARKER	ZYLINDERSCHRAUBE TORN.CAB.HUECA
18	X592501100000		**1** THREAD. PART	PIECE A VISSER THREAD. PART	SCHRAUBSTUECK PIEZA ROSCADO
20	H916100620270		**1** TUBE	TUBE TUBO	ROHR TUBO
21	H916100620280		**1** TUBE	TUBE TUBO	ROHR TUBO

Oil Cooler
Refroidisseur D'Huile
Oelkuehler
Radiatore Olio
Enfriador El Aciete

70-115

Transmission Hydraulic
Hydraulique De Transmission
Hydraulikschutzvorr
Idraulico Di Trasmissione
Hydraulico De Transmision

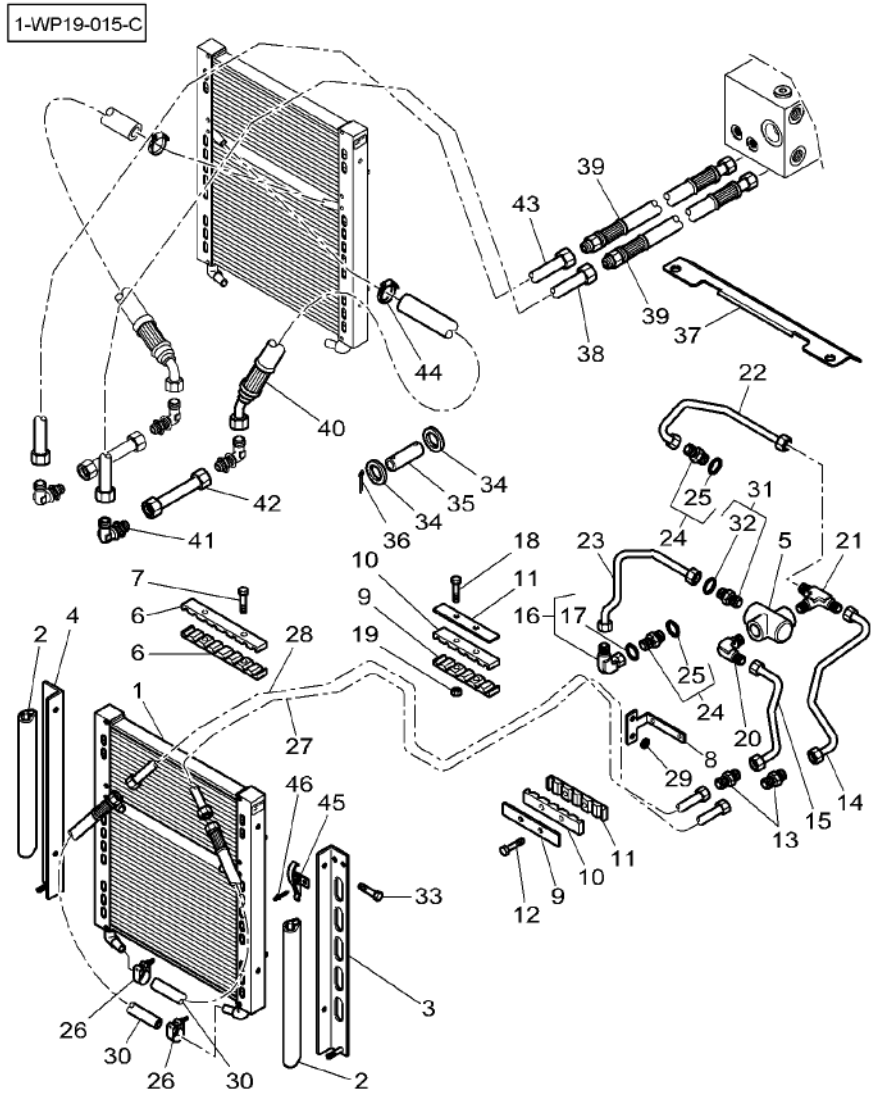

1	4279293M1		1	OIL COOLER	REFROIDISS HUILE RADIATORE OLIO	OELKUEHLER REFRIG DE ACEIT
2	3782344M1	◀▶ 475MM	3	GASKET	JOINT GUARNIZIONE	DICHTSCHEIBE EMPAQUETADURA.
3	4279556M1	◀	1	BAFFLE	CHICANE VARIANTE	LEITBLECH DESVIADOR
4	4279555M1	▶	1	BAFFLE	CHICANE VARIANTE	LEITBLECH DESVIADOR
5	4278849M1		1	VANE	VANNE ALETTA	LEITFLUEGEL PALETA
6	4275070M3		2	BRIDLE	BRIDE BRIGLIA	SPANNBAND BRIDA
7	3009257X1	M6 X 35	2	SCREW	VIS VITE	SCHRAUBE TORNILLO
8	4277411M3		1	SUPPORT	SUPPORT SUPPORTO	LAGERUNG DISPOS.DE SOSTEN
9	4275691M2		2	BRIDLE	BRIDE BRIGLIA	SPANNBAND BRIDA
10	4275692M2		2	BRIDLE	BRIDE BRIGLIA	SPANNBAND BRIDA
11	4275693M2		2	BRIDLE	BRIDE BRIGLIA	SPANNBAND BRIDA
12	3015134X1	M6 X 65	2	HEX. SOCK. SCREW	VIS TETE HEX VITE PARKER	ZYLINDERSCHRAUBE TORN.CAB.HUECA
13★	3011222X1		2	UNION	RACCORD RACCORDO	VERSCHRAUBUNG RACOR
14	4279819M1		1	TUBE	TUBE TUBO	ROHR TUBO
15	4279814M1		1	TUBE	TUBE TUBO	ROHR TUBO
16	3011593X91	M30 X 2	1	UNION	RACCORD RACCORDO	VERSCHRAUBUNG RACOR
17	3011063X1	16	1	O RING	JOINT TORIQUE ANELLO TENUTA	O-RING ANILLO FORMA 'O'
18	1440922X1	M6 X 60	2	HEX. SOCK. SCREW	VIS TETE HEX VITE PARKER	ZYLINDERSCHRAUBE TORN.CAB.HUECA
19	1441500X1	M6	2	LOCKNUT	ECROU BLOCAGE AUTOBLOCCANTE	SICHERUNGSMUTTER CONTRATUERCA
20	4279661M1		1	UNION	RACCORD RACCORDO	VERSCHRAUBUNG RACOR
21	4279820M1		1	UNION	RACCORD RACCORDO	VERSCHRAUBUNG RACOR
22	4279812M1		1	TUBE	TUBE TUBO	ROHR TUBO
23★	4279811M2		1	TUBE	TUBE TUBO	ROHR TUBO
24	3011533X91	M33	2	UNION	RACCORD RACCORDO	VERSCHRAUBUNG RACOR
25	3011037X1	24	1	SEAL	JOINT ETANCHEITE ANELLO RACCORD	DICHTRING ARENDELA D'JUNTA
26	3788734M1	∅ 27/29	2	CLAMP	COLLIER FASCETTA	HALTESCHELLE ABRAZADERA

Oil Cooler
Refroidisseur D'Huile
Oelkuehler
Radiatore Olio
Enfriador El Aciete

70-115

Transmission Hydraulic
Hydraulique De Transmission
Hydraulikschutzvorr
Idraulico Di Trasmissione
Hydraulico De Transmision

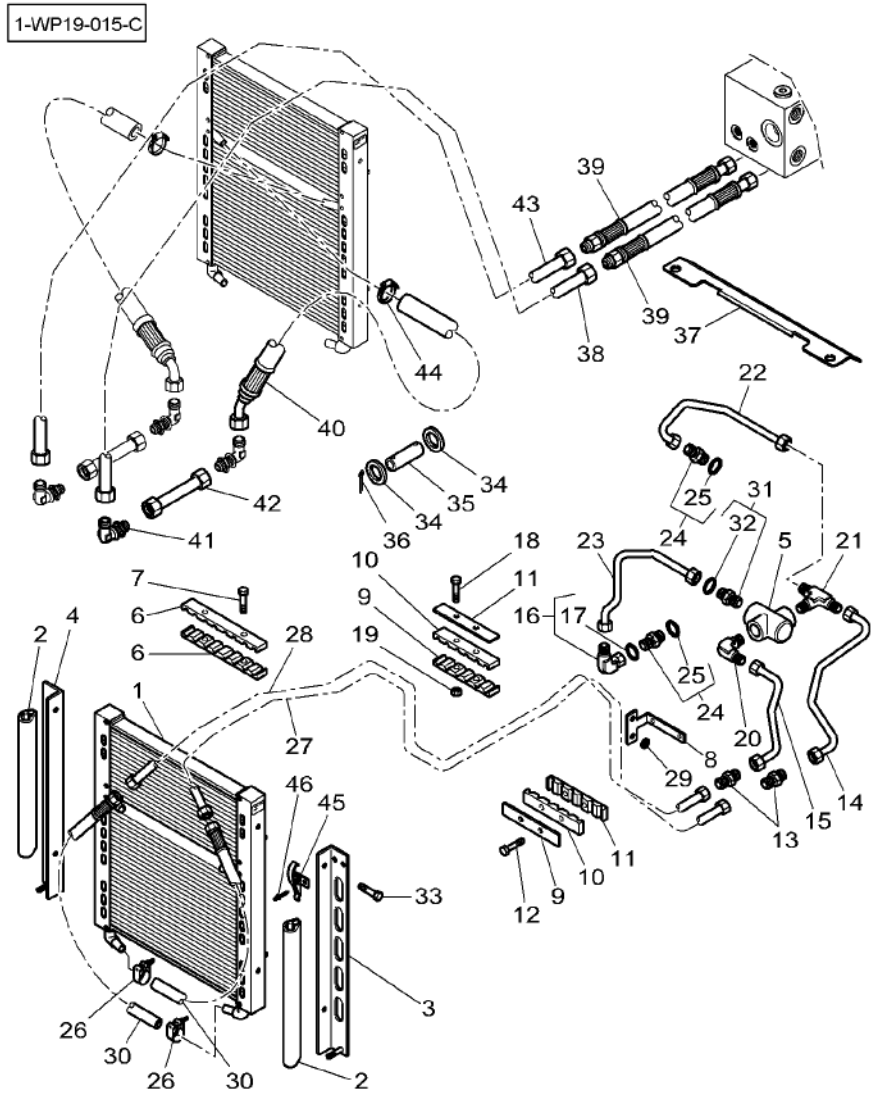

27	4276743M3		1	TUBE	TUBE TUBO	ROHR TUBO
28	4276742M3		1	TUBE	TUBE TUBO	ROHR TUBO
29	390597X1	∅ 10-30 X 2,5	2	WASHER	RONDELLE RONDELLA	UNTERLEGSCHEIBE ARANDELA
30	4276141M2	◄► 1150 MM	2	HYDR. HOSE	FLEXIBLE TUBOFLEX IDRAUL	HYDR. SCHLAUCH TUBO HIDRAULICO
31	3011639X91		1	UNION	RACCORD RACCORDO	VERSCHRAUBUNG RACOR
32	3011037X1	31	1	SEAL	JOINT ETANCHEITE ANELLO RACCORD	DICHTRING ARENDELA D'JUNTA
33	339560X1	M6 X 16	4	HEX. SOCK. SCREW	VIS TETE HEX VITE PARKER	ZYLINDERSCHRAUBE TORN.CAB.HUECA
34				NOT USED	NON UTILISE INUSATO	NICHT VERWENDET NO SE USA
35				NOT USED	NON UTILISE INUSATO	NICHT VERWENDET NO SE USA
36				NOT USED	NON UTILISE INUSATO	NICHT VERWENDET NO SE USA
37	4279824M2		1	SPACER	ENTRETOISE DISTANZIALE	ABSTANDSTUECK DISCO ESPACIADOR
38	4276744M3		1	TUBE	TUBE TUBO	ROHR TUBO
39	4276142M1	◄► 1400 MM	2	HYDR. HOSE	FLEXIBLE TUBOFLEX IDRAUL	HYDR. SCHLAUCH TUBO HIDRAULICO
40	4276144M2	◄► 950 MM	2	HYDR. HOSE	FLEXIBLE TUBOFLEX IDRAUL	HYDR. SCHLAUCH TUBO HIDRAULICO
41	3011594X1		4	UNION	RACCORD RACCORDO	VERSCHRAUBUNG RACOR
42	4276751M1		2	TUBE	TUBE TUBO	ROHR TUBO
43	4276745M3		1	TUBE	TUBE TUBO	ROHR TUBO
44	4277422M1	∅ 23-25	2	CLAMP	COLLIER FASCETTA	HALTESCHELLE ABRAZADERA
45*	3783272M1	➡| 29-AUG-2004	2	LATCH	VERROU CHIAVISTELLO	RIEGEL CERROJO
45	3824482M91	➡ 30-AUG-2004	2	KIT, FITTING	JEU MONTAGE KIT, FISSAGGIO	ANBAU-SATZ JUEGO DE MONTAJE
46	3010021X1		4	RIVET	RIVET RIBATTINO	NIET REMACHE

Auxiliary Hydraulics
Hydraulique Auxiliaire
Zusatzhydraulik
Idraulica Ausiliare
Sistema Hidraulico Auxiliar

70-120

Tank
Reservoir
Behalter
Serbatoio
Deposito

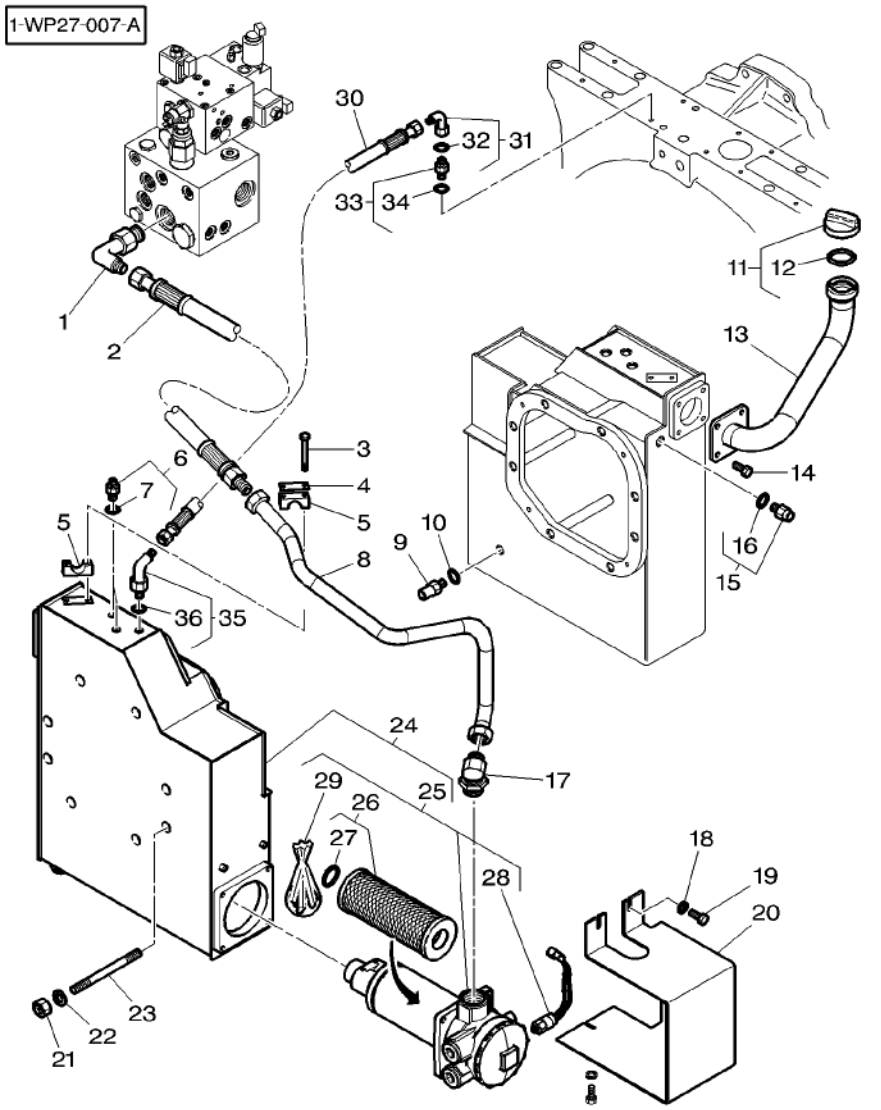

1	3787911M1	M33X2	1	UNION	RACCORD RACCORDO VERSCHRAUBUNG RACOR
2	4276132M1	◄► 800MM	1	HYDR. HOSE	FLEXIBLE TUBOFLEX IDRAUL HYDR. SCHLAUCH TUBO HIDRAULICO
3	391244X1	M6X45	2	HEX. SOCK. SCREW	VIS TETE HEX VITE PARKER ZYLINDERSCHRAUBE TORN.CAB.HUECA
4	4273689M1		1	PLATE	PLAQUE PIASTRA PLATTE PLATO
5	4273688M1		2	BRIDLE	BRIDE BRIGLIA SPANNBAND BRIDA
6	338717X91	M18X1.5	2	UNION	RACCORD RACCORDO VERSCHRAUBUNG RACOR
7	338764X1	6	1	SEAL	JOINT ETANCHEITE ANELLO RACCORD DICHTRING ARENDELA D'JUNTA
8	4275578M1		1	TUBE	TUBE TUBO ROHR TUBO
9	***3618249M1***		1	INDUCTIVE SENSOR	CAPTEUR INDUCTIF SENSORE INDUTTIV INDUKT EMPFANGER CAPTADOR INDUCTI
10	1440012X1	∅ 14-20X1,5	1	GASKET	JOINT GUARNIZIONE DICHTSCHEIBE EMPAQUETADURA.
11	3011107X91	M33X2	1	PLUG	BOUCHON TAPPO VERSCHL.STOPFEN TAPON
12	3011037X1	11	1	SEAL	JOINT ETANCHEITE ANELLO RACCORD DICHTRING ARENDELA D'JUNTA
13	4274249M1		1	TUBE	TUBE TUBO ROHR TUBO
14	339124X1	M8X16	4	HEX. SOCK. SCREW	VIS TETE HEX VITE PARKER ZYLINDERSCHRAUBE TORN.CAB.HUECA
15	3001345X91	M16X1.5	1	UNION	RACCORD RACCORDO VERSCHRAUBUNG RACOR
16	338763X1	15	1	SEAL	JOINT ETANCHEITE ANELLO RACCORD DICHTRING ARENDELA D'JUNTA
17	4276644M1		1	UNION	RACCORD RACCORDO VERSCHRAUBUNG RACOR
18	390971X1		3	WASHER	RONDELLE RONDELLA UNTERLEGSCHEIBE ARANDELA
19	339230X1	M6X10	3	HEX. SOCK. SCREW	VIS TETE HEX VITE PARKER ZYLINDERSCHRAUBE TORN.CAB.HUECA
20	4275579M2		1	COWL	GARANT CAPPOTTATURA AUFSATZ CAPERUZA
21	339402X1	M10	8	NUT	ECROU DADO MUTTER TUERCA
22	390734X1		8	WASHER	RONDELLE RONDELLA UNTERLEGSCHEIBE ARANDELA
23	3010684X1	M10X212	8	STUD	GOUJON PRIGIONIERO STEHBOLZEN CHAVETA ROSCADO
24	4278269M91		1	HYDRAULIC TANK	RESERVOIR HYDR SERBATOIO IDRAUL HYDRAULIKTANK DEPOSITO HIDRAU
25	4275577M91	24	1	FILTER	FILTRE FILTRO FILTER FILTRO
26	***4276648M1***	25	1	FILTER INSERT	ELEMENT FILTRANT ELEMENTO FILTRAN FILTEREINSATZ SUPLEMENT FILTRO

Auxiliary Hydraulics
Hydraulique Auxiliaire
Zusatzhydraulik
Idraulica Ausiliare
Sistema Hidraulico Auxiliar

70-120

Tank
Reservoir
Behalter
Serbatoio
Deposito

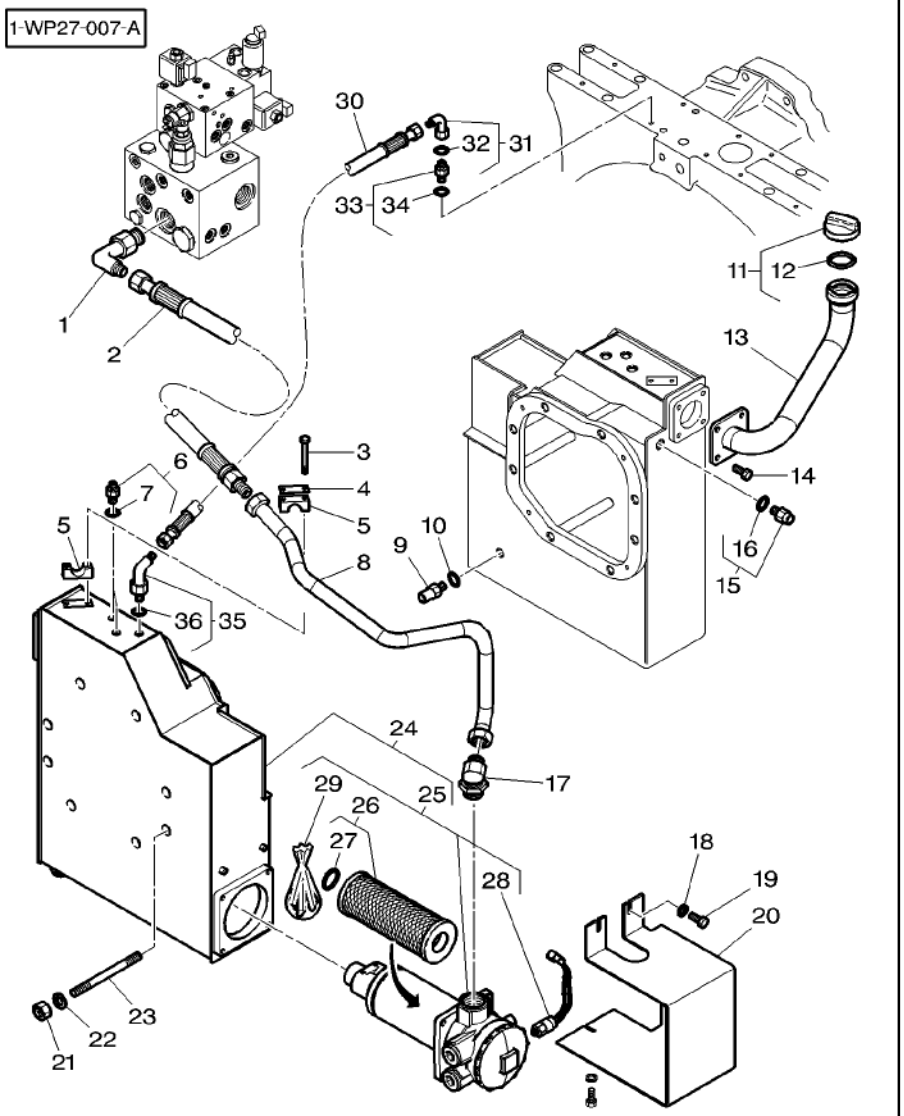

27	***3907428M1***	26		**1**	O RING	JOINT TORIQUE ANELLO TENUTA
28	***3789379M1***	25		**1**	INDICATOR	INDICATEUR INDICATORE
29	3907429M91	25		**1**	KIT, JOINT	JEU JOINTS KIT GIUNTO
30	4276666M1		◄► 650MM	**1**	HYDR. HOSE	FLEXIBLE TUBOFLEX IDRAUL
31	3011082X91			**1**	ELBOW	COUDE GOMITO
32	3011144X1	31		**1**	O RING	JOINT TORIQUE ANELLO TENUTA
33	338716X91		M12X1.5	**1**	UNION	RACCORD RACCORDO
34	338761X1	33		**1**	GASKET	JOINT GUARNIZIONE
35	4276133M1		M16X1.5	**1**	UNION	RACCORD RACCORDO
36	338763X1	35		**1**	SEAL	JOINT ETANCHEITE ANELLO RACCORD

O-RING
ANILLO FORMA 'O'
ANZEIGER
INDICADOR
DICHTUNGSSATZ
JUEGO JUNTAS
HYDR. SCHLAUCH
TUBO HIDRAULICO
WINKELSTUECK
CODO
O-RING
ANILLO FORMA 'O'
VERSCHRAUBUNG
RACOR
DICHTSCHEIBE
EMPAQUETADURA.
VERSCHRAUBUNG
RACOR
DICHTRING
ARENDELA D'JUNTA

Auxiliary Hydraulics
Hydraulique Auxiliaire
Zusatzhydraulik
Idraulica Ausiliare
Sistema Hidraulico Auxiliar

70-125

Accumulator
Accumulateur
Akkumulator
Accumulatore
Acumulador

1-WP27-006-A

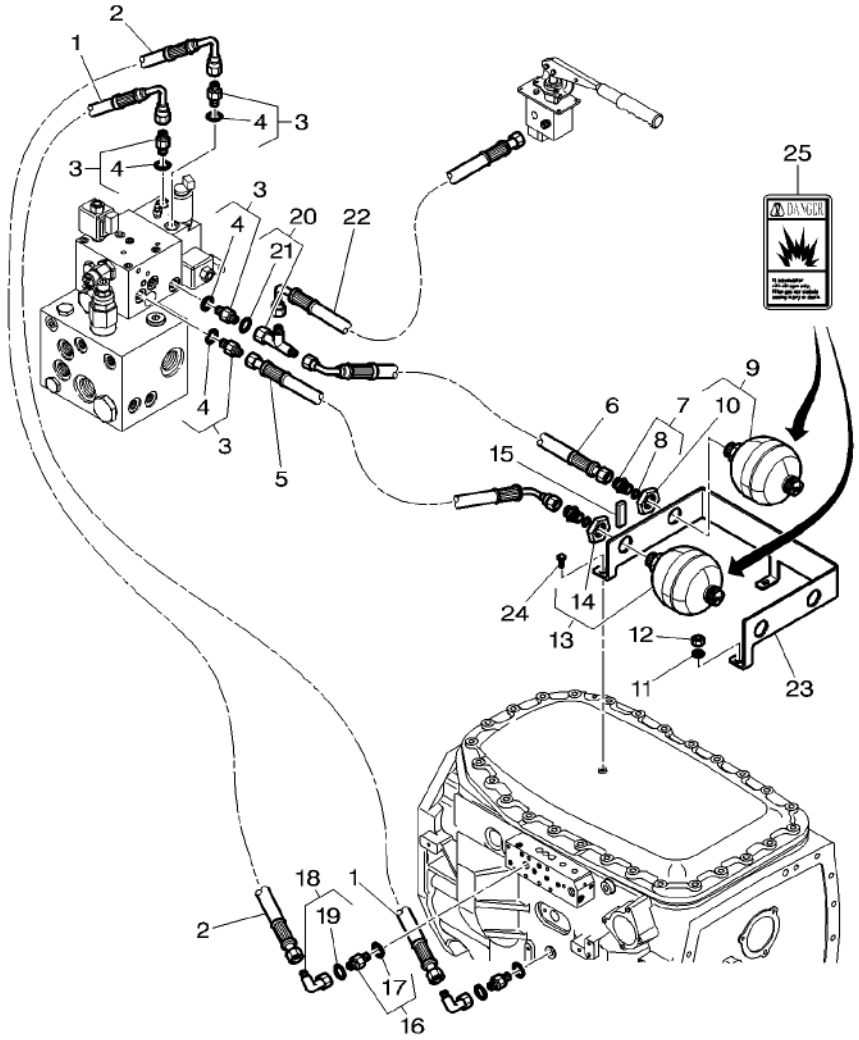

1	4276148M1	[C] 18B ◀▶ 1080MM	1	HYDR. HOSE	FLEXIBLE TUBOFLEX IDRAUL	HYDR. SCHLAUCH TUBO HIDRAULICO
2	4276147M1	[B] 18B ◀▶ 750MM	1	HYDR. HOSE	FLEXIBLE TUBOFLEX IDRAUL	HYDR. SCHLAUCH TUBO HIDRAULICO
3	3011038X91	M14X1.5	4	UNION	RACCORD RACCORDO	VERSCHRAUBUNG RACOR
4	338762X1	3	1	SEAL	JOINT ETANCHEITE ANELLO RACCORD	DICHTRING ARENDELA D'JUNTA
5	4276151M1	◀▶ 550MM	1	HYDR. HOSE	FLEXIBLE TUBOFLEX IDRAUL	HYDR. SCHLAUCH TUBO HIDRAULICO
6	4276149M1	◀▶ 500MM	1	HYDR. HOSE	FLEXIBLE TUBOFLEX IDRAUL	HYDR. SCHLAUCH TUBO HIDRAULICO
7	3011550X91	1/2	2	UNION	RACCORD RACCORDO	VERSCHRAUBUNG RACOR
8	3011154X1	7	1	GASKET	JOINT GUARNIZIONE	DICHTSCHEIBE EMPAQUETADURA.
9	4275558M1	[A] 108B	1	ACCUMULATOR	ACCUMULATEUR ACCUMULATORE	AKKUMULATOR ACUMULADOR
10	3907430M1	9	1	NUT	ECROU DADO	MUTTER TUERCA
11	390735X1		2	WASHER	RONDELLE RONDELLA	UNTERLEGSCHEIBE ARANDELA
12	3019862X1	M12	2	NUT METRIC	ECROU METRIQUE DADO METRICO	MUTTER METRISCH TUERCA METRICO
13	4276645M1	[A] 44B	1	ACCUMULATOR	ACCUMULATEUR ACCUMULATORE	AKKUMULATOR ACUMULADOR
14	3907430M1	13	1	NUT	ECROU DADO	MUTTER TUERCA
15	3580695M1	◀▶ 80MM	1	GASKET	JOINT GUARNIZIONE	DICHTSCHEIBE EMPAQUETADURA.
16	3011547X91	M16X1.5	2	UNION	RACCORD RACCORDO	VERSCHRAUBUNG RACOR
17	338763X1	16	1	SEAL	JOINT ETANCHEITE ANELLO RACCORD	DICHTRING ARENDELA D'JUNTA
18	3011543X91	M16X1.5	2	UNION	RACCORD RACCORDO	VERSCHRAUBUNG RACOR
19	3011144X1	18	1	O RING	JOINT TORIQUE ANELLO TENUTA	O-RING ANILLO FORMA 'O'
20	3011544X91	M16X1,5	1	UNION	RACCORD RACCORDO	VERSCHRAUBUNG RACOR
21	3011144X1	20	1	O RING	JOINT TORIQUE ANELLO TENUTA	O-RING ANILLO FORMA 'O'
22	4276150M1	◀▶ 650MM	1	HYDR. HOSE	FLEXIBLE TUBOFLEX IDRAUL	HYDR. SCHLAUCH TUBO HIDRAULICO
23	4275571M3		1	SUPPORT	SUPPORT SUPPORTO	LAGERUNG DISPOS.DE SOSTEN
24	339282X1	M10X16	1	HEX. SOCK. SCREW	VIS TETE HEX VITE PARKER	ZYLINDERSCHRAUBE TORN.CAB.HUECA
25	3777021M3		1	DECAL	DECALCOMANIE DECALCOMANIA	AUFKLEBER CALCOMANIA

Auxiliary Hydraulics Hydraulique Auxiliaire Zusatzhydraulik Idraulica Ausiliare Sistema Hidraulico Auxiliar	70-125	Accumulator Accumulateur Akkumulator Accumulatore Acumulador

1-WP27-006-A

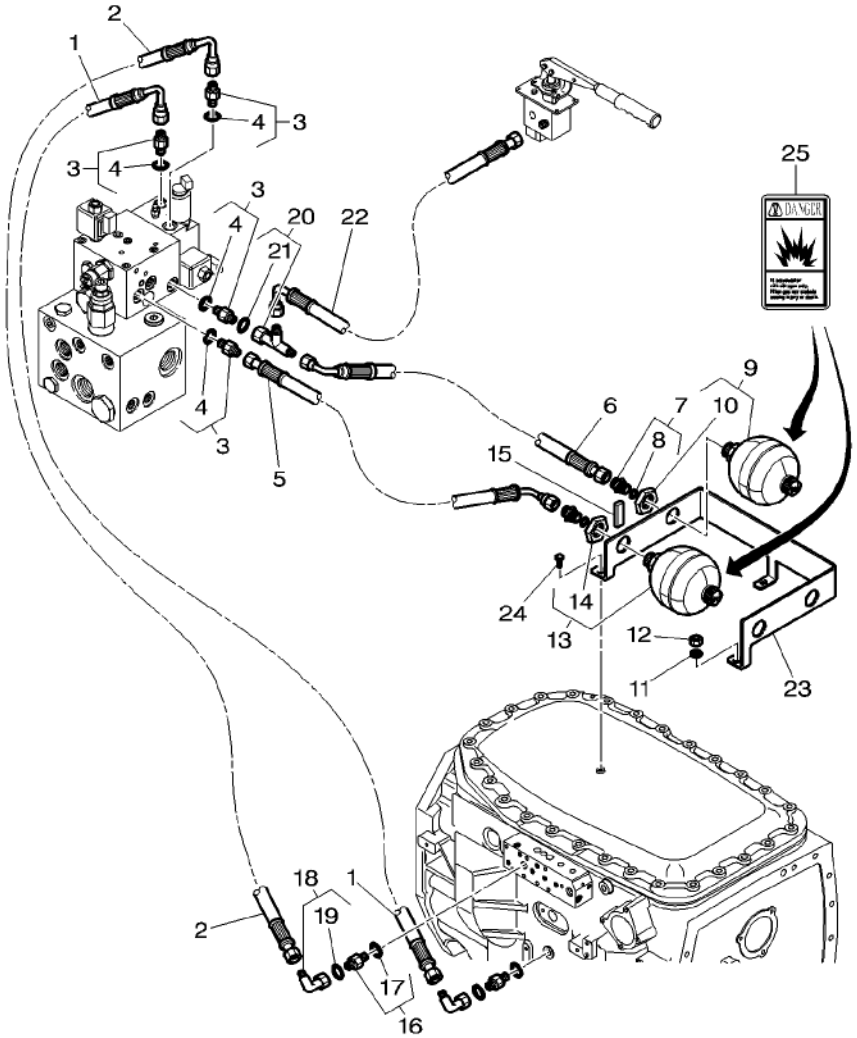

[A] THE APPROPRIATE SAFETY DECALS MUST BE ORDERED AND FITTED TO THIS PART
CETTE PIECE DOIT ETRE IMPERATIVEMENT COMMANDEE AVEC SA DECALCOMANIE DE SECURITE
DIESES TEIL MUSS UNBEDINGT ZUSAMMEN MIT DEM SICHER HEITSHINWEISSCHILD BESTELLT WERDEN
QUESTO PEZZO DEVE ASSOLUTAMENTE ESSERE ORDINATO CON LA RELATIVA DECALCO. SULLA SICUREZZA
ESTA PIEZA SE TIENE QUE PEDIR IMPERATIVAMENTE CON SU CALCOMANIA DE SEGURIDAD

[B] FEED SUPPLY
ALIMENTATION
ERNAHRUNG
ALIMENTAZIONE
ALIMENTACION

[C] RETURN
RETOUR
RUECKSTROEMUNG
RITORNO
RETORNO

Auxiliary Hydraulics
Hydraulique Auxiliaire
Zusatzhydraulik
Idraulica Ausiliare
Sistema Hidraulico Auxiliar

70-130

Trailer Braking
Freinage De Remorque
Anhaengerbremsung
Frenatura Di Rimorchio
Frenado De Remolque

1-WP27-008-B

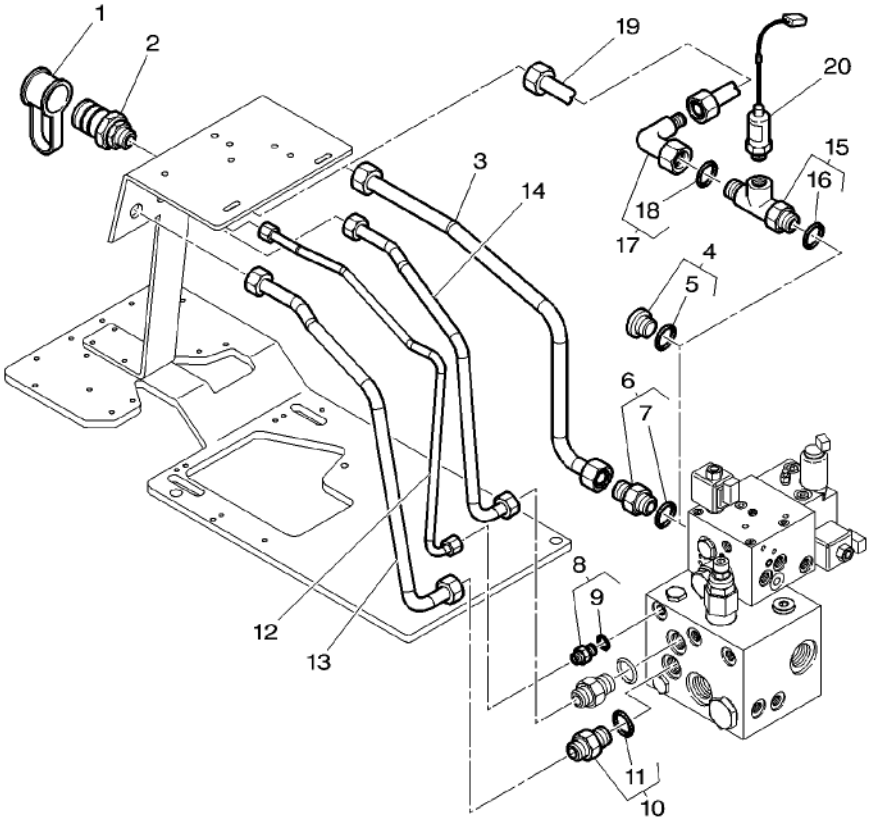

1	4277197M1	[A]	1	HELMET	CAPUCHON CASCO	SCHUTZHELM CASCO
2	***3786820M2***	[A]	1	FEMALE COUPLER	COUPLEUR FEMELLE GIUNTO FEMMINA	KUPPLST.AUSSEN ACOPLADOR HEMBRA
3	4274984M1	[A]	1	TUBE	TUBE TUBO	ROHR TUBO
4	3011105X91	[B] M22X1.5	1	PLUG	BOUCHON TAPPO	VERSCHL.STOPFEN TAPON
5	3011036X1	4	1	SEAL	JOINT ETANCHEITE ANELLO RACCORD	DICHTRING ARENDELA D'JUNTA
6	3011040X91	[A] M22X1.5	1	UNION	RACCORD RACCORDO	VERSCHRAUBUNG RACOR
7	3011036X1	6	1	SEAL	JOINT ETANCHEITE ANELLO RACCORD	DICHTRING ARENDELA D'JUNTA
8	338795X91	M14X1.5	1	UNION	RACCORD RACCORDO	VERSCHRAUBUNG RACOR
9	338762X1	8	1	SEAL	JOINT ETANCHEITE ANELLO RACCORD	DICHTRING ARENDELA D'JUNTA
10	3011041X91	M22X1.5	2	UNION	RACCORD RACCORDO	VERSCHRAUBUNG RACOR
11	3011036X1	10	1	SEAL	JOINT ETANCHEITE ANELLO RACCORD	DICHTRING ARENDELA D'JUNTA
12	4274983M1		1	TUBE	TUBE TUBO	ROHR TUBO
13	4274982M1		1	TUBE	TUBE TUBO	ROHR TUBO
14	4274981M1		1	TUBE	TUBE TUBO	ROHR TUBO
15	4279909M1	(I)	1	UNION	RACCORD RACCORDO	VERSCHRAUBUNG RACOR
16	3019398X1	15	1	O RING	JOINT TORIQUE ANELLO TENUTA	O-RING ANILLO FORMA 'O'
17	3011085X91	(I)	1	UNION	RACCORD RACCORDO	VERSCHRAUBUNG RACOR
18	3011147X1	17	1	O RING	JOINT TORIQUE ANELLO TENUTA	O-RING ANILLO FORMA 'O'
19	4279908M1	(I)	1	TUBE	TUBE TUBO	ROHR TUBO
20*		[C]	1	HARNESS	FAISCEAU FASCIOCAVI	KABELBAUM MAZO CABLES

[A] WITH TRAILOR BRAKING
AVEC FREINAGE DE REMORQUE
MIT ANHAENGERBREMSUNG
CON FRENATURA DI RIMORCHIO
CON TRAILOR BRAKING

[B] WITHOUT TRAILOR BRAKE
SANS FREINAGE DE REMORQUE
OHNE ANHAENGEBREMS
SENZA FRENO RIMORCHIO
SIN FRENO REMOLQUE

Auxiliary Hydraulics Hydraulique Auxiliaire Zusatzhydraulik Idraulica Ausiliare Sistema Hidraulico Auxiliar	70-130	Trailer Braking Freinage De Remorque Anhaengerbremsung Frenatura Di Rimorchio Frenado De Remolque

1-WP27-008-B

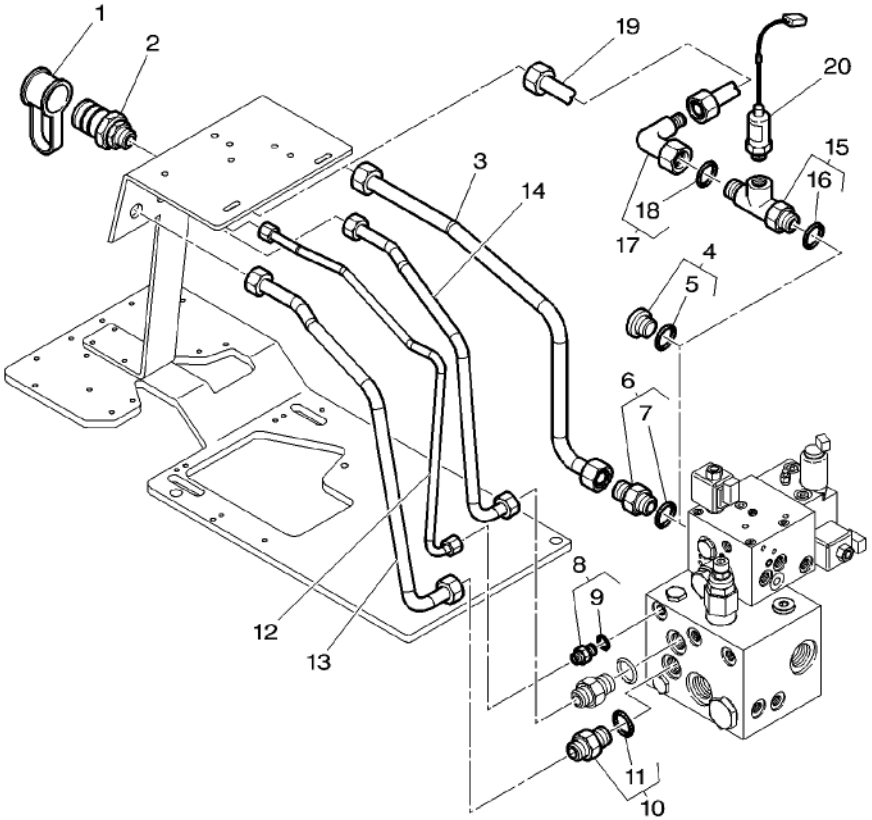

[C] NUMBER TO BE ADVISED
NUMERO COMMUNIQUE ULTERIEUREMENT
NUMMER WIRD BEKANNTGEGEBEN
NUMERO DA AVUISARE
NUMERO AVISAR

Auxiliary Hydraulics
Hydraulique Auxiliaire
Zusatzhydraulik
Idraulica Ausiliare
Sistema Hidraulico Auxiliar

70-135

1-WP27-011-A

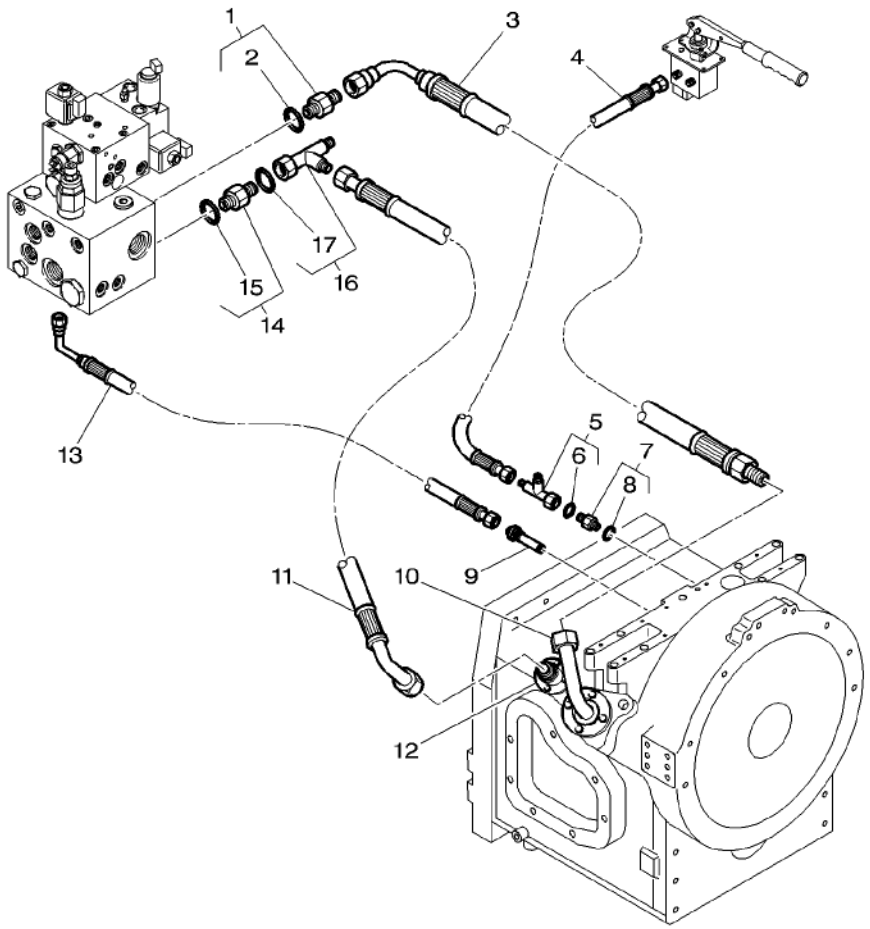

1	3011043X91	M33X2	1	UNION	RACCORD RACCORDO	VERSCHRAUBUNG RACOR
2	3011037X1	1	1	SEAL	JOINT ETANCHEITE ANELLO RACCORD	DICHTRING ARENDELA D'JUNTA
3	4274558M1	◀▶ 1050MM	1	HYDR. HOSE	FLEXIBLE TUBOFLEX IDRAUL	HYDR. SCHLAUCH TUBO HIDRAULICO
4	4276154M1	◀▶ 1100MM	1	HYDR. HOSE	FLEXIBLE TUBOFLEX IDRAUL	HYDR. SCHLAUCH TUBO HIDRAULICO
5	3011544X91		1	UNION	RACCORD RACCORDO	VERSCHRAUBUNG RACOR
6	3011144X1	5	1	O RING	JOINT TORIQUE ANELLO TENUTA	O-RING ANILLO FORMA 'O'
7	3011554X91	M12X1.5	1	UNION	RACCORD RACCORDO	VERSCHRAUBUNG RACOR
8	338761X1	7	1	GASKET	JOINT GUARNIZIONE	DICHTSCHEIBE EMPAQUETADURA.
9		70-145 No 30	1	UNION	RACCORD RACCORDO	VERSCHRAUBUNG RACOR
10		70-145 No 4	1	TUBE	TUBE TUBO	ROHR TUBO
11	4276123M1	◀▶ 1000MM	1	HYDR. HOSE	FLEXIBLE TUBOFLEX IDRAUL	HYDR. SCHLAUCH TUBO HIDRAULICO
12		70-155 No 18	1	UNION	RACCORD RACCORDO	VERSCHRAUBUNG RACOR
13	4276130M1	◀▶ 1100MM	1	HYDR. HOSE	FLEXIBLE TUBOFLEX IDRAUL	HYDR. SCHLAUCH TUBO HIDRAULICO
14	3011040X91	M22X1.5	1	UNION	RACCORD RACCORDO	VERSCHRAUBUNG RACOR
15	3011036X1	14	1	SEAL	JOINT ETANCHEITE ANELLO RACCORD	DICHTRING ARENDELA D'JUNTA
16	3011089X91	M22X1.5	1	UNION	RACCORD RACCORDO	VERSCHRAUBUNG RACOR
17	3011147X1	16	1	O RING	JOINT TORIQUE ANELLO TENUTA	O-RING ANILLO FORMA 'O'

Hydraulique Manifold
Repartiteur Hydraulique
Hydraulik Verteilerdose
Ripartitore Di Idraulica
Valvula Distribuidora De Hidraulica

70-140

1-WP25-003-A

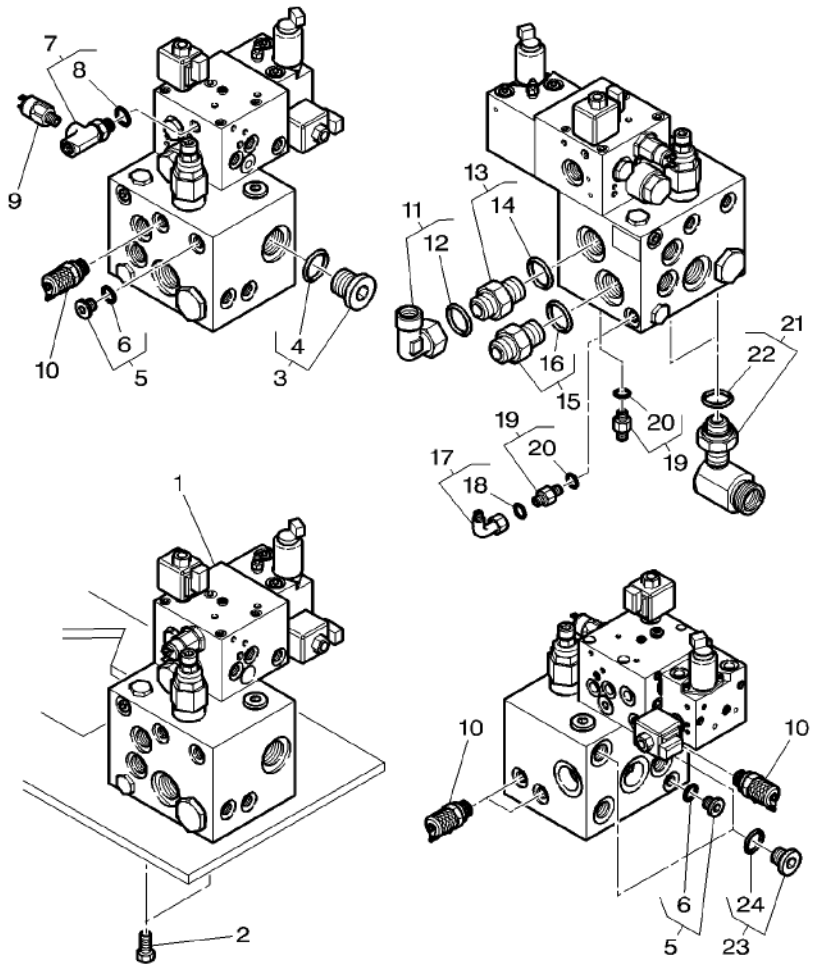

1	4274585M91	[A]	1	PRESSURE VALVE	VALVE VALVOLA PRESSION	DRUCKVENTIL VALVULA PRESION
2	3009505X1	M12X25	2	HEX. SOCK. SCREW	VIS TETE HEX VITE PARKER	ZYLINDERSCHRAUBE TORN.CAB.HUECA
3	3011107X91	M33X2	1	PLUG	BOUCHON TAPPO	VERSCHL.STOPFEN TAPON
4	3011037X1	3	1	SEAL	JOINT ETANCHEITE ANELLO RACCORD	DICHTRING ARENDELA D'JUNTA
5	3011099X91	M14X1.5	2	PLUG	BOUCHON TAPPO	VERSCHL.STOPFEN TAPON
6	338762X1	5	1	SEAL	JOINT ETANCHEITE ANELLO RACCORD	DICHTRING ARENDELA D'JUNTA
7	4278267M1		1	UNION	RACCORD RACCORDO	VERSCHRAUBUNG RACOR
8	195562M1	7	1	O RING	JOINT TORIQUE ANELLO TENUTA	O-RING ANILLO FORMA 'O'
9	***4278368M1***	105 B	1	PRESSURE SWITCH	MANO CONTACT PRESSOSTATO	DRUCKSCHALTER INTERRUP PRESION
10	***3785665M1***		4	PRESSURE INTAKE	PRISE PRESSION PRESA PRESSIONE	ANSAUGDRUCK ENTRADA PRESION
11	3011088X91	M36X2	1	ELBOW NIPPLE	RACCORD COUDE NIPPLO GOMITO	WINKELSTUTZEN CODO DE UNION
12	3011150X1	11	1	O RING	JOINT TORIQUE ANELLO TENUTA	O-RING ANILLO FORMA 'O'
13	3011043X91	M33X2	1	UNION	RACCORD RACCORDO	VERSCHRAUBUNG RACOR
14	3011037X1	13	1	SEAL	JOINT ETANCHEITE ANELLO RACCORD	DICHTRING ARENDELA D'JUNTA
15	3011042X91	M33X2	1	UNION	RACCORD RACCORDO	VERSCHRAUBUNG RACOR
16	3011037X1	15	1	SEAL	JOINT ETANCHEITE ANELLO RACCORD	DICHTRING ARENDELA D'JUNTA
17	3011543X91	M16X1.5	1	UNION	RACCORD RACCORDO	VERSCHRAUBUNG RACOR
18	3011144X1	17	1	O RING	JOINT TORIQUE ANELLO TENUTA	O-RING ANILLO FORMA 'O'
19	3011038X91	M14X1.5	2	UNION	RACCORD RACCORDO	VERSCHRAUBUNG RACOR
20	338762X1	19	1	SEAL	JOINT ETANCHEITE ANELLO RACCORD	DICHTRING ARENDELA D'JUNTA
21*	4277200M2	M22X1.5	2	UNION	RACCORD RACCORDO	VERSCHRAUBUNG RACOR
22	1442477X1	21	1	GASKET	JOINT GUARNIZIONE	DICHTSCHEIBE EMPAQUETADURA.
23	3011105X91	M22X1.5	2	PLUG	BOUCHON TAPPO	VERSCHL.STOPFEN TAPON
24	3011036X1	23	1	SEAL	JOINT ETANCHEITE ANELLO RACCORD	DICHTRING ARENDELA D'JUNTA

Hydraulique Manifold
Repartiteur Hydraulique
Hydraulik Verteilerdose
Ripartitore Di Idraulica
Valvula Distribuidora De Hidraulica

70-140

1-WP25-003-A

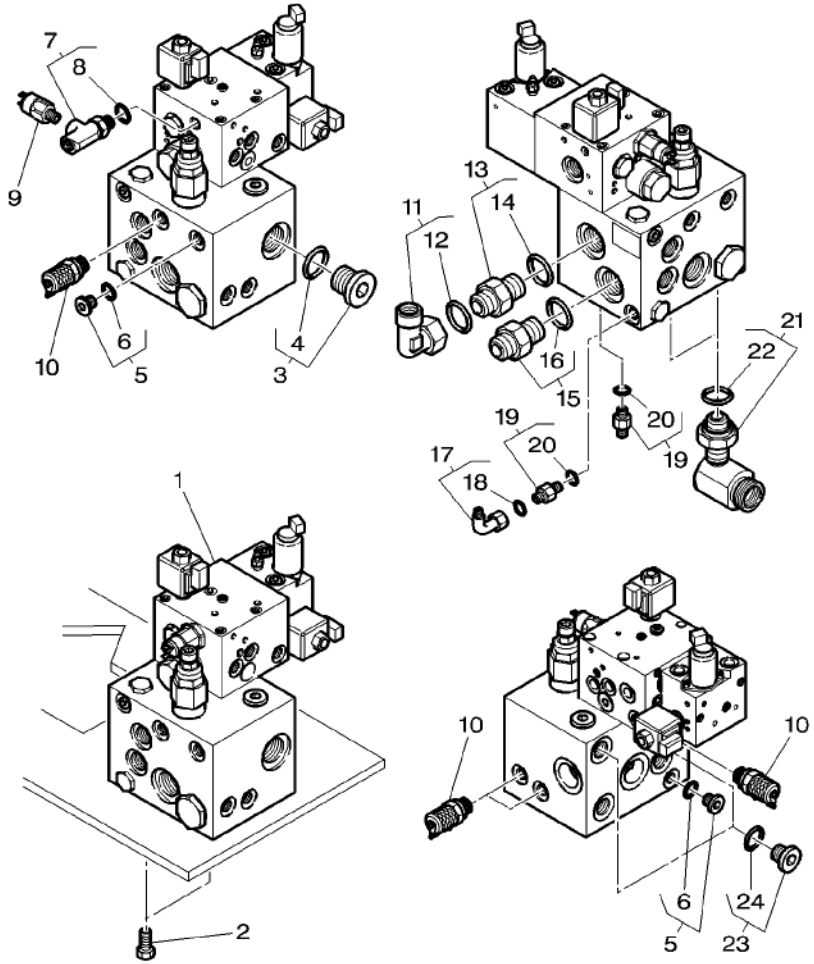

[A] DETAIL TO BE ADVISED
SERA DETAILLE ULTERIEUREMENT
EINZELHANDEL MITGETEILT SPATER
MINUTO COMMUNICATO ULTERIORMENTE
MENOR COMMUNICADO ULTERIORAMENTE

Auxiliary Hydraulics
Hydraulique Auxiliaire
Zusatzhydraulik
Idraulica Ausiliare
Sistema Hidraulico Auxiliar

70-145

Pump Filter Suction
Aspiration Filtre Pompe
Ansaugung Pumpenfilter
Aspirazione Filtro Pompa
Aspiracion Filtro Bomba

1-WP27-009-A

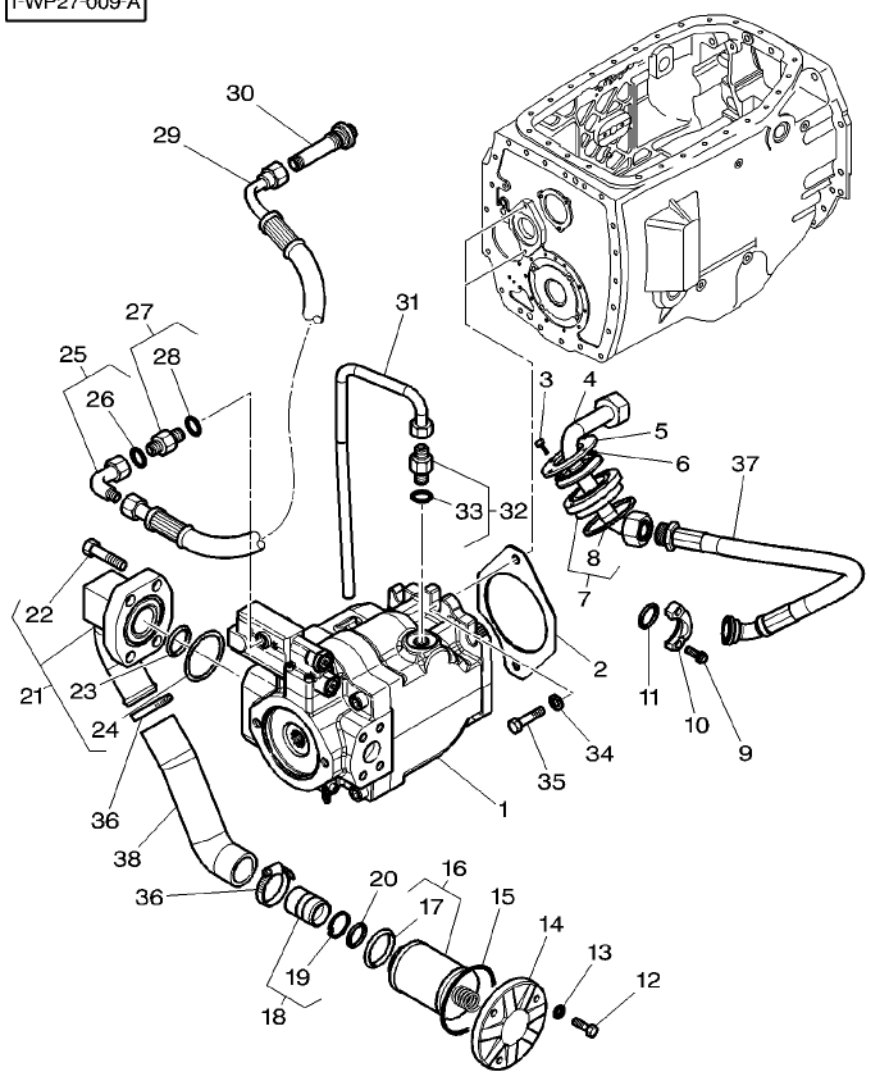

1	4272110M1	70–150 No 1	1	HYDRAULIC PUMP	POMPEHYDRAULIQUE POMPA IDRAULICA	HYDROPUMPE BOMBA HIDRAULICA
2	816940010010		1	SUMP GASKET	JOINT CARTER HUI SUMP GASKET	FORMDICHTUNG JUNTA DE PERFIL
3	339560X1	M6X16	4	HEX. SOCK. SCREW	VIS TETE HEX VITE PARKER	ZYLINDERSCHRAUBE TORN.CAB.HUECA
4	4274546M91		1	TUBE	TUBE TUBO	ROHR TUBO
5	4275574M1		1	WASHER	RONDELLE RONDELLA	UNTERLEGSCHEIBE ARANDELA
6	4274560M1	∅ 69,45X3,53	1	O RING	JOINT TORIQUE ANELLO TENUTA	O–RING ANILLO FORMA 'O'
7	4275572M91		1	PLUG	BOUCHON TAPPO	VERSCHL.STOPFEN TAPON
8	4276652M1	7	1	JOINT.	JOINT PLAT GIUNTO	DICHTUNG JUNTA
9	367788X1	3/8	4	SCREW	VIS VITE	SCHRAUBE TORNILLO
10	3787910M1		2	BRIDLE	BRIDE BRIGLIA	SPANNBAND BRIDA
11	359305X1		1	O RING	JOINT TORIQUE ANELLO TENUTA	O–RING ANILLO FORMA 'O'
12	339010X1	M8X40	3	HEX. SOCK. SCREW	VIS TETE HEX VITE PARKER	ZYLINDERSCHRAUBE TORN.CAB.HUECA
13	339374X1		3	LOCK WASHER	RONDELLE FREIN ROSETTA DENTELL.	FEDERRING ARANDELA GROWER
14	716100490110		1	COVER	COUVERCLE COPERCHIO	DECKEL CUBIERTA
15	X548989200000		1	O RING	JOINT TORIQUE ANELLO TENUTA	O–RING ANILLO FORMA 'O'
16	***G916951010010***		1	SUCTION FILTER	FILTRE ASPIRATIO SUCTION FILTER	SAUGFILTER FILTRO D'SUCCION
17	X548922800000	16	1	O RING	JOINT TORIQUE ANELLO TENUTA	O–RING ANILLO FORMA 'O'
18	G916951010020		1	INTAKE STACK	PRISE D AIR RACCORDO ASPIRAZ	ANSAUGSTUTZEN PASAJE ENTRADA
19	X533212000000	18	1	SNAPRING	SEGMENT ARRET ANELLO SIEGER	SPRENGRING ANILLA RETENCION
20	X548907866000		1	O RING	JOINT TORIQUE ANELLO TENUTA	O–RING ANILLO FORMA 'O'
21	4274545M1		1	BRIDLE	BRIDE BRIGLIA	SPANNBAND BRIDA
22	358176X1	21	4	SCREW	VIS VITE	SCHRAUBE TORNILLO
23	3907461M1	21 ∅ 37,69X3,53	1	O RING	JOINT TORIQUE ANELLO TENUTA	O–RING ANILLO FORMA 'O'
24	3907462M1	21 ∅ 56,74X3,53	1	O RING	JOINT TORIQUE ANELLO TENUTA	O–RING ANILLO FORMA 'O'
25	3011082X91		1	ELBOW	COUDE GOMITO	WINKELSTUECK CODO
26	3011144X1	25	1	O RING	JOINT TORIQUE ANELLO TENUTA	O–RING ANILLO FORMA 'O'

Auxiliary Hydraulics
Hydraulique Auxiliaire
Zusatzhydraulik
Idraulica Ausiliare
Sistema Hidraulico Auxiliar

70-145

Pump Filter Suction
Aspiration Filtre Pompe
Ansaugung Pumpenfilter
Aspirazione Filtro Pompa
Aspiracion Filtro Bomba

1-WP27-009-A

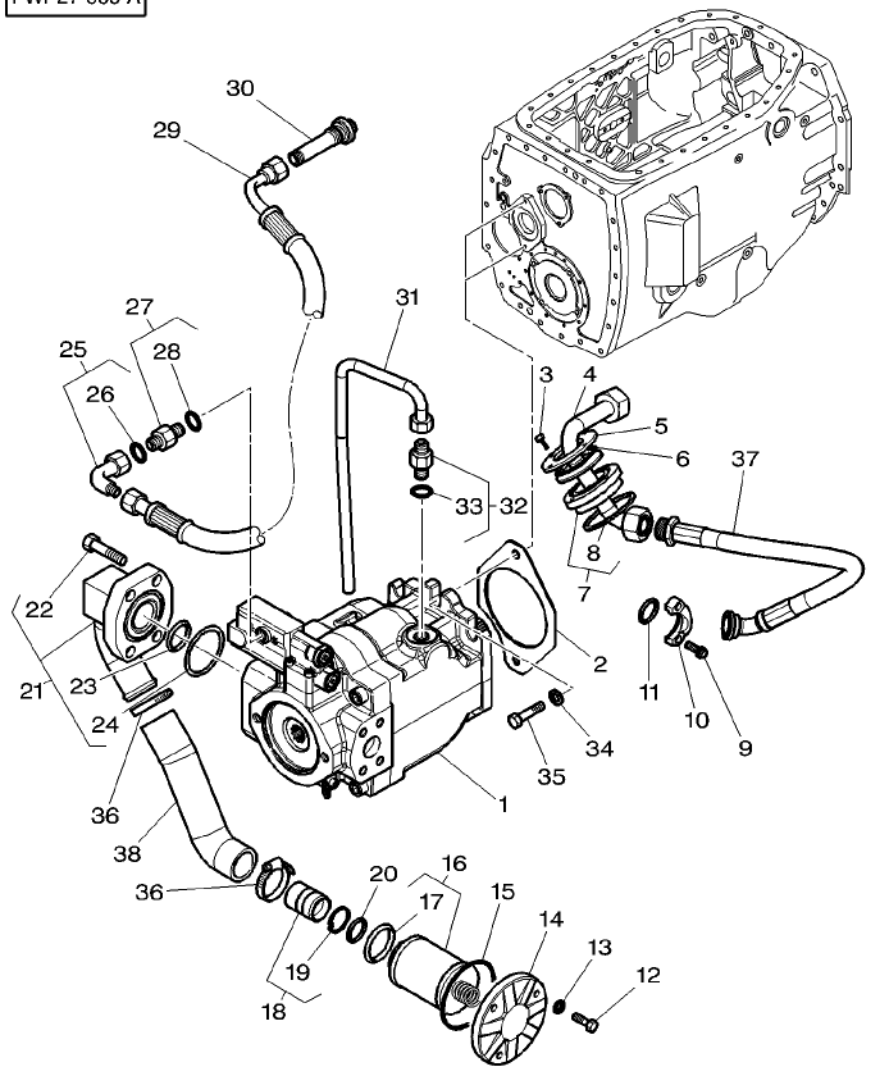

27	3011314X91		1	UNION	RACCORD RACCORDO
28	70921883	27	1	O RING	JOINT TORIQUE ANELLO TENUTA
29	4276128M1	◄► 450MM	1	HYDR. HOSE	FLEXIBLE TUBOFLEX IDRAUL
30	4275576M1	M18X1.5	1	UNION	RACCORD RACCORDO
31	4276668M1		1	TUBE	TUBE TUBO
32	3011059X91	7/8	1	UNION	RACCORD RACCORDO
33	70921886	32	1	O RING	JOINT TORIQUE ANELLO TENUTA
34	338686X1		2	WASHER	RONDELLE RONDELLA
35	3019863X1	M12X35	2	HEX. SOCK. SCREW	VIS TETE HEX VITE PARKER
36	338617X1	∅ 40– 60	2	HOSE CLIP	COLLIER DURITE FASCIA
37	4276129M1	◄► 700MM	1	HYDR. HOSE	FLEXIBLE TUBOFLEX IDRAUL
38	4275559M1		1	HOSE	DURITE TUBO FLESSIBILE

				VERSCHRAUBUNG RACOR	
				O–RING ANILLO FORMA 'O'	
				HYDR. SCHLAUCH TUBO HIDRAULICO	
				VERSCHRAUBUNG RACOR	
				ROHR TUBO	
				VERSCHRAUBUNG RACOR	
				O–RING ANILLO FORMA 'O'	
				UNTERLEGSCHEIBE ARANDELA	
				ZYLINDERSCHRAUBE TORN.CAB.HUECA	
				SCHLAUCHSCHELLE CLIP P.FLEXIBLE	
				HYDR. SCHLAUCH TUBO HIDRAULICO	
				SCHLAUCH FLEXIBLE	

Hydraulic Pump
Pompe Hydraulique
Hydraulikpumpe
Pompa Idraulica
Bomba Hidraulica

70-150

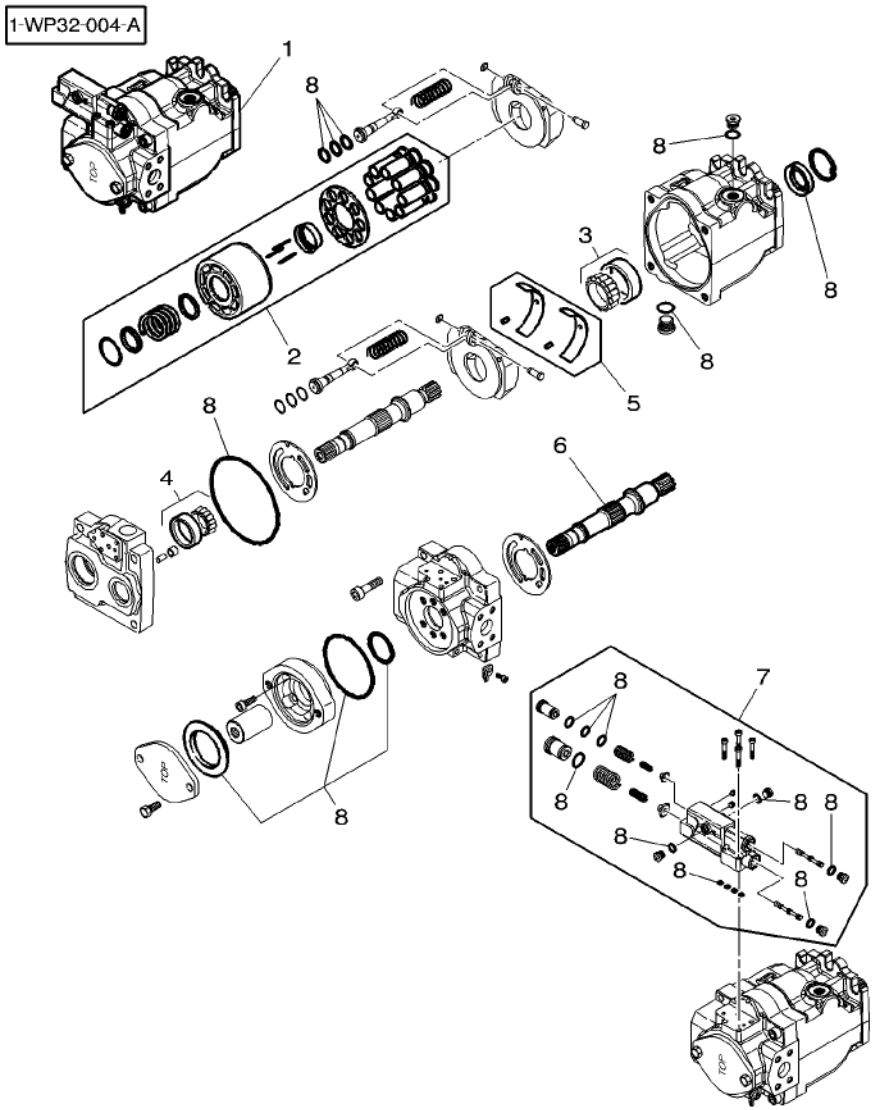

1	4272110M1			1 HYDRAULIC PUMP	POMPEHYDRAULIQUE POMPA IDRAULICA	HYDROPUMPE BOMBA HIDRAULICA
2	3907469M91	1		1 KIT, PISTON	JEU PISTON KIT PISTONE	KOLBENSATZ JUEGO DE PISTON
3	3907466M91	1		1 BEARING ASSY	ROULEMENT CUSCINETTO COMPL	RADIALLAGER RODAMIENTO RAD
4	3907467M91	1		1 BEARING ASSY	ROULEMENT CUSCINETTO COMPL	RADIALLAGER RODAMIENTO RAD
5	3907468M91	1		1 PARTS PACK	JEU PIECES PACCO RICAMBI	SATZ TEILE PAQUETE PIEZAS
6	3907465M1	1	14	1 SHAFT	ARBRE ALBERO	WELLE ARBOL
7	3907464M91	1		1 DRIVE	COMMANDE PRESA DI MOTO	ANTRIEB TRASMISION
8	3907463M91	1		1 KIT, JOINT	JEU JOINTS KIT GIUNTO	DICHTUNGSSATZ JUEGO JUNTAS

Auxiliary Hydraulics
Hydraulique Auxiliaire
Zusatzhydraulik
Idraulica Ausiliare
Sistema Hidraulico Auxiliar

70-155

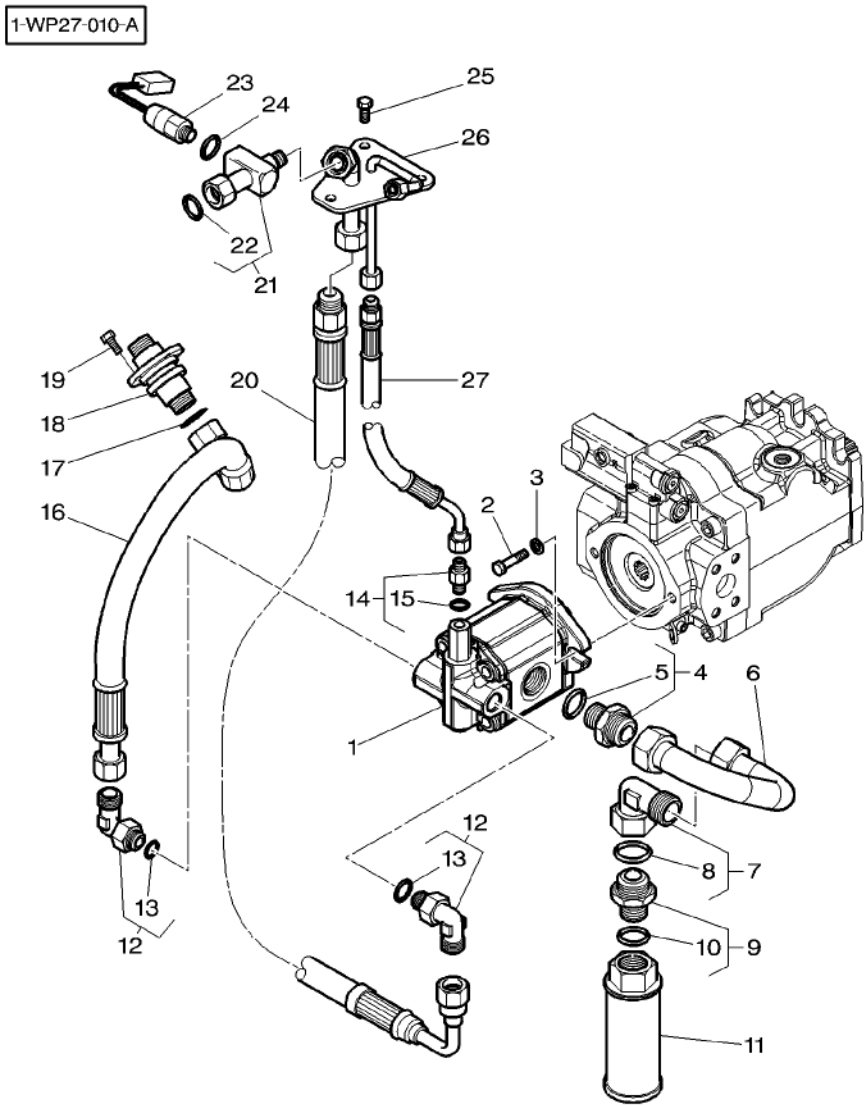

1	4272111M1		1	GEAR PUMP	POMPE ENGRENAGES INGRANAGGIO POM.	ZAHNRADPUMPE BOMBA ENGRANAJES
2	357740X1	3/8	2	SCREW UNC	VIS UNC VITE UNC	SCHRAUBE UNC TORNILLO UNC
3	385362X1		2	WASHER	RONDELLE RONDELLA	UNTERLEGSCHEIBE ARANDELA
4	3011582X91		1	UNION	RACCORD RACCORDO	VERSCHRAUBUNG RACOR
5	835025M1	4	4	O RING	JOINT TORIQUE ANELLO TENUTA	O-RING ANILLO FORMA 'O'
6	4275570M1		1	TUBE	TUBE TUBO	ROHR TUBO
7	3011087X91		1	UNION	RACCORD RACCORDO	VERSCHRAUBUNG RACOR
8	3011149X1	7	1	O RING	JOINT TORIQUE ANELLO TENUTA	O-RING ANILLO FORMA 'O'
9	3011044X91		1	UNION	RACCORD RACCORDO	VERSCHRAUBUNG RACOR
10	3011037X1	9	1	SEAL	JOINT ETANCHEITE ANELLO RACCORD	DICHTRING ARENDELA D'JUNTA
11	***3787655M2***		1	STRAINER	CREPINE COLINO	FILTERSIEB COLADOR
12	4275573M1		2	UNION	RACCORD RACCORDO	VERSCHRAUBUNG RACOR
13	3019397X1	12	1	O RING	JOINT TORIQUE ANELLO TENUTA	O-RING ANILLO FORMA 'O'
14	3011618X91	M10	1	UNION	RACCORD RACCORDO	VERSCHRAUBUNG RACOR
15	338760X1	14	1	O RING	JOINT TORIQUE ANELLO TENUTA	O-RING ANILLO FORMA 'O'
16	4276120M1	◄► 430MM	1	HYDR. HOSE	FLEXIBLE TUBOFLEX IDRAUL	HYDR. SCHLAUCH TUBO HIDRAULICO
17	X548887266000		1	O RING	JOINT TORIQUE ANELLO TENUTA	O-RING ANILLO FORMA 'O'
18	4275575M1		1	UNION	RACCORD RACCORDO	VERSCHRAUBUNG RACOR
19	339160X1	M5X10	4	HEX. SOCK. SCREW	VIS TETE HEX VITE PARKER	ZYLINDERSCHRAUBE TORN.CAB.HUECA
20	4276122M1	◄► 650MM	1	HYDR. HOSE	FLEXIBLE TUBOFLEX IDRAUL	HYDR. SCHLAUCH TUBO HIDRAULICO
21	4277199M1		1	UNION	RACCORD RACCORDO	VERSCHRAUBUNG RACOR
22	3011147X1	21	1	O RING	JOINT TORIQUE ANELLO TENUTA	O-RING ANILLO FORMA 'O'
23	***4278263M1***	8 BARS	1	TRANSDUCER	CAPTEUR TRANSDUCER	NABENTRIEB. TRANSDUCER
24	1440012X1		1	GASKET	JOINT GUARNIZIONE	DICHTSCHEIBE EMPAQUETADURA.
25	339124X1	M8X16	3	HEX. SOCK. SCREW	VIS TETE HEX VITE PARKER	ZYLINDERSCHRAUBE TORN.CAB.HUECA
26	4274547M91		1	TUBE	TUBE TUBO	ROHR TUBO

1-WP27-010-A

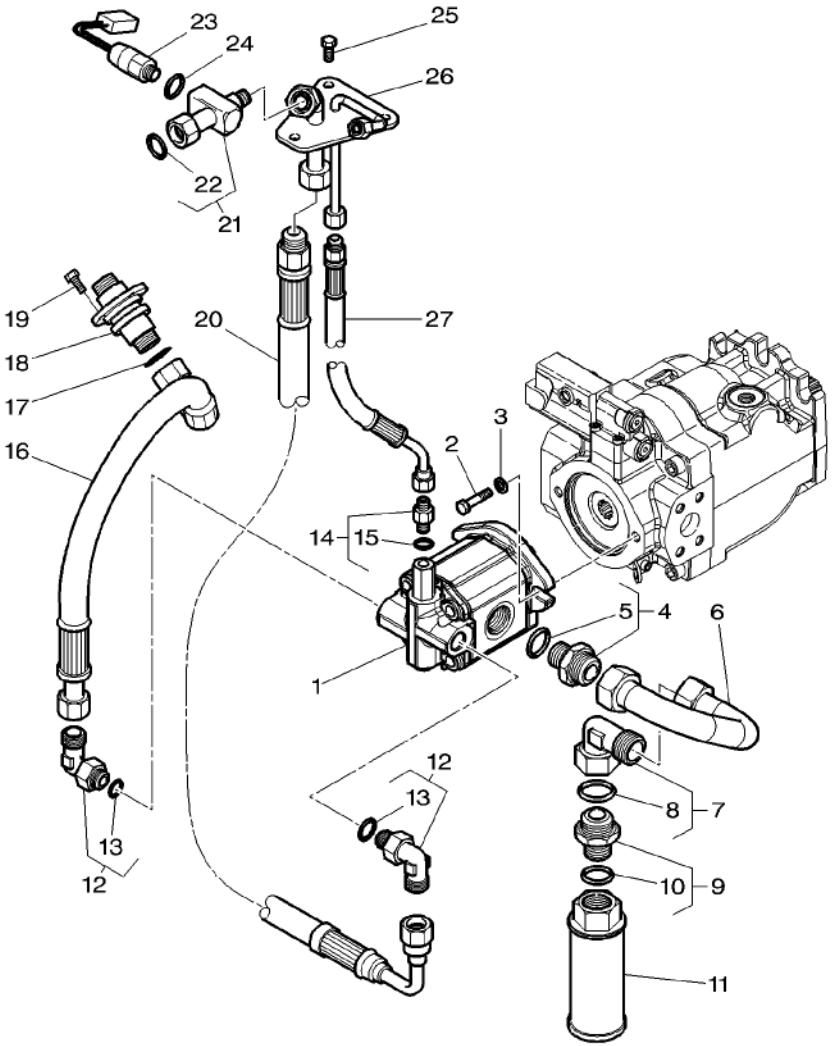

27	4276121M1	◀▶ 220MM	1 HYDR. HOSE	FLEXIBLE TUBOFLEX IDRAUL	HYDR. SCHLAUCH TUBO HIDRAULICO

Auxiliary Distributors Installation
Montage Distributeurs Auxiliaires
Zuzatzeinbausverteilers
Intallazione Distributori Ausiliari
Instalacion Distribuidores Auxiliares

70-160

Hydraulic Lines With 4 Distributors
Tuyauteries Avec 4 Distributeurs
Leitungen Mit 4 Verteilers
Tubazioni Con 4 Distributori
Circuito Con 4 Distribuidores

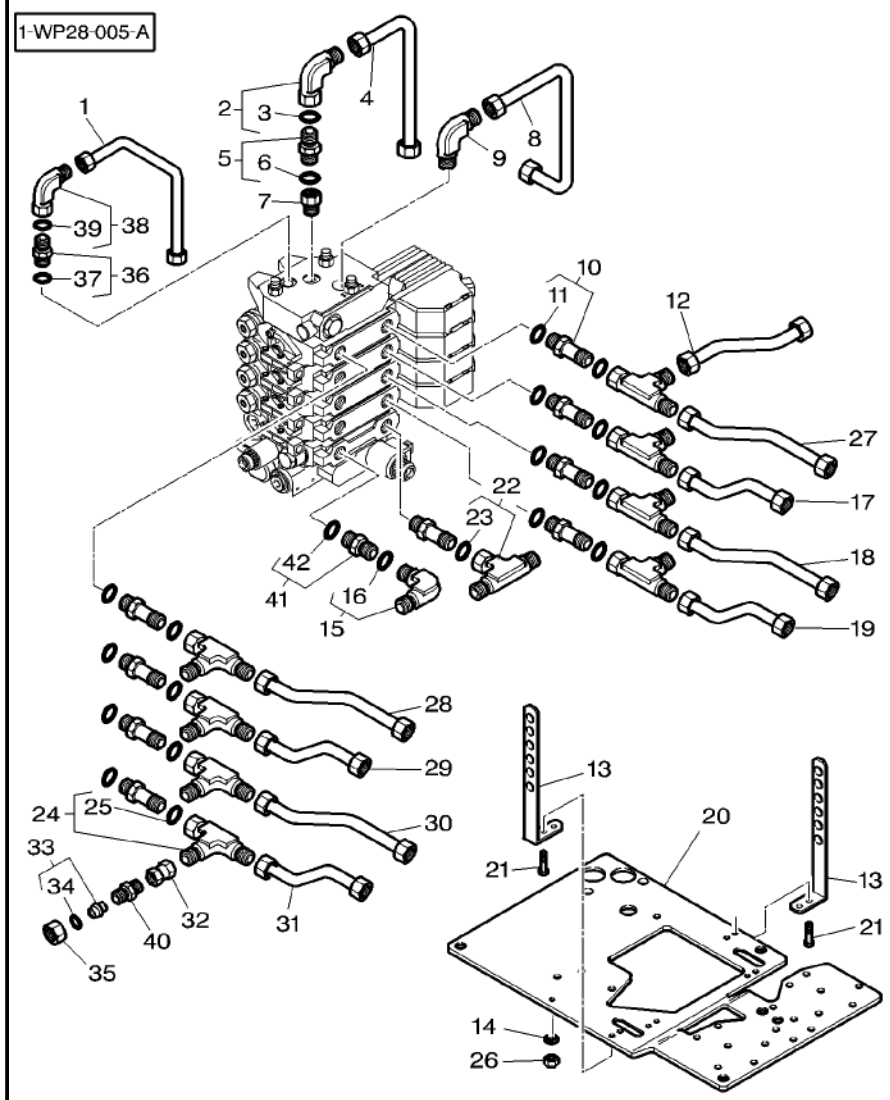

1	4275551M1		1 TUBE	TUBE TUBO	ROHR TUBO
2	3011082X91		1 ELBOW	COUDE GOMITO	WINKELSTUECK CODO
3	3011144X1	2	1 O RING	JOINT TORIQUE ANELLO TENUTA	O-RING ANILLO FORMA 'O'
4	4275555M1		1 TUBE	TUBE TUBO	ROHR TUBO
5	3011045X91	M12	1 UNION	RACCORD RACCORDO	VERSCHRAUBUNG RACOR
6	3011061X1	5	1 O RING	JOINT TORIQUE ANELLO TENUTA	O-RING ANILLO FORMA 'O'
7	3793729M1		1 REDUCER	REDUCTEUR RIDUTTORE	REDUZIERSTUECK PIEZA REDUCTORA
8	4275553M1		1 TUBE	TUBE TUBO	ROHR TUBO
9	3787920M1		1 UNION	RACCORD RACCORDO	VERSCHRAUBUNG RACOR
10*	4274990M2	M22	9 UNION	RACCORD RACCORDO	VERSCHRAUBUNG RACOR
11	3019398X1	10	1 O RING	JOINT TORIQUE ANELLO TENUTA	O-RING ANILLO FORMA 'O'
12	4274975M1		4 TUBE	TUBE TUBO	ROHR TUBO
13	4274987M1		2 SUPPORT	SUPPORT SUPPORTO	LAGERUNG DISPOS.DE SOSTEN
14	390972X1		3 WASHER	RONDELLE RONDELLA	UNTERLEGSCHEIBE ARANDELA
15	3011085X91		1 UNION	RACCORD RACCORDO	VERSCHRAUBUNG RACOR
16	3011147X1	15	1 O RING	JOINT TORIQUE ANELLO TENUTA	O-RING ANILLO FORMA 'O'
17	4274838M1		1 TUBE	TUBE TUBO	ROHR TUBO
18	4274836M1		1 TUBE	TUBE TUBO	ROHR TUBO
19	4274834M1		1 TUBE	TUBE TUBO	ROHR TUBO
20	4274562M1		1 SUPPORT	SUPPORT SUPPORTO	LAGERUNG DISPOS.DE SOSTEN
21	339230X1	M6 X 10	4 HEX. SOCK. SCREW	VIS TETE HEX VITE PARKER	ZYLINDERSCHRAUBE TORN.CAB.HUECA
22	3011093X91		1 UNION	RACCORD RACCORDO	VERSCHRAUBUNG RACOR
23	3011147X1	22	1 O RING	JOINT TORIQUE ANELLO TENUTA	O-RING ANILLO FORMA 'O'
24	3011089X91		8 UNION	RACCORD RACCORDO	VERSCHRAUBUNG RACOR
25	3011147X1	24	1 O RING	JOINT TORIQUE ANELLO TENUTA	O-RING ANILLO FORMA 'O'
26	339169X1	M8	3 NUT	ECROU DADO	MUTTER TUERCA

Auxiliary Distributors Installation
Montage Distributeurs Auxiliaires
Zuzatzeinbausverteilers
Intallazione Distributori Ausiliari
Instalacion Distribuidores Auxiliares

70-160

Hydraulic Lines With 4 Distributors
Tuyauteries Avec 4 Distributeurs
Leitungen Mit 4 Verteilers
Tubazioni Con 4 Distributori
Circuito Con 4 Distribuidores

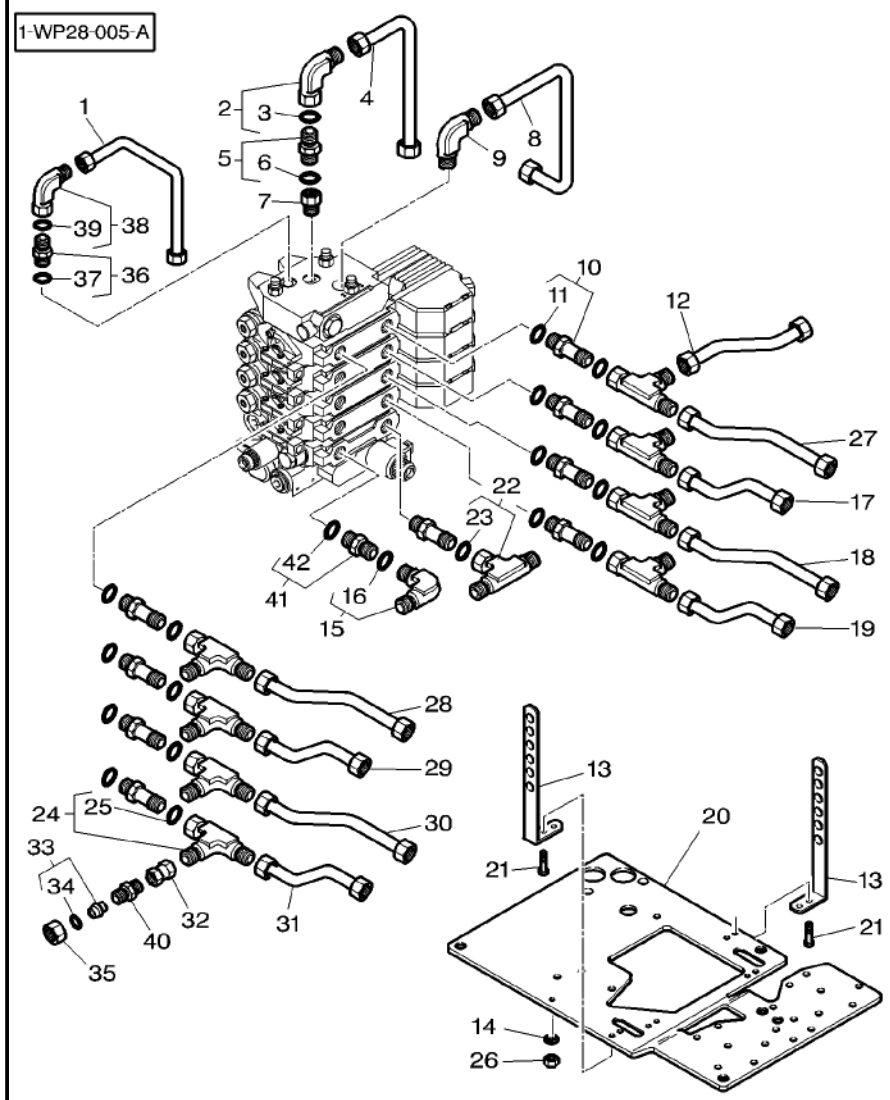

27	4274840M1		1	TUBE	TUBE TUBO	ROHR TUBO
28	4274839M1		1	TUBE	TUBE TUBO	ROHR TUBO
29	4274837M1		1	TUBE	TUBE TUBO	ROHR TUBO
30	4274835M1		1	TUBE	TUBE TUBO	ROHR TUBO
31	4274833M1		1	TUBE	TUBE TUBO	ROHR TUBO
32	4274976M1		4	TUBE	TUBE TUBO	ROHR TUBO
33	3011136X91		8	TAP	OBTURATEUR TAPPO*	HAHN GRIFO
34	3011147X1	33	1	O RING	JOINT TORIQUE ANELLO TENUTA	O-RING ANILLO FORMA 'O'
35	3011119X1		8	NUT	ECROU DADO	MUTTER TUERCA
36	3011055X91	M33	1	UNION	RACCORD RACCORDO	VERSCHRAUBUNG RACOR
37	3011062X1	36	1	O RING	JOINT TORIQUE ANELLO TENUTA	O-RING ANILLO FORMA 'O'
38	3011088X91		1	ELBOW NIPPLE	RACCORD COUDE NIPPLO GOMITO	WINKELSTUTZEN CODO DE UNION
39	3011150X1	38	1	O RING	JOINT TORIQUE ANELLO TENUTA	O-RING ANILLO FORMA 'O'
40	338725X1		8	UNION	RACCORD RACCORDO	VERSCHRAUBUNG RACOR
41	3011534X91		1	UNION	RACCORD RACCORDO	VERSCHRAUBUNG RACOR
42	3019398X1	41	1	O RING	JOINT TORIQUE ANELLO TENUTA	O-RING ANILLO FORMA 'O'

Auxiliary Distributors Installation
Montage Distributeurs Auxiliaires
Zuzatzeinbausverteilers
Intallazione Distributori Ausiliari
Instalacion Distribuidores Auxiliares

70-165

Hydraulic Lines With 5 Distributors
Tuyauteries Avec 5 Distributeurs
Leitungen Mit 5 Verteilers
Tubazioni Con 5 Distributori
Circuito Con 5 Distribuidores

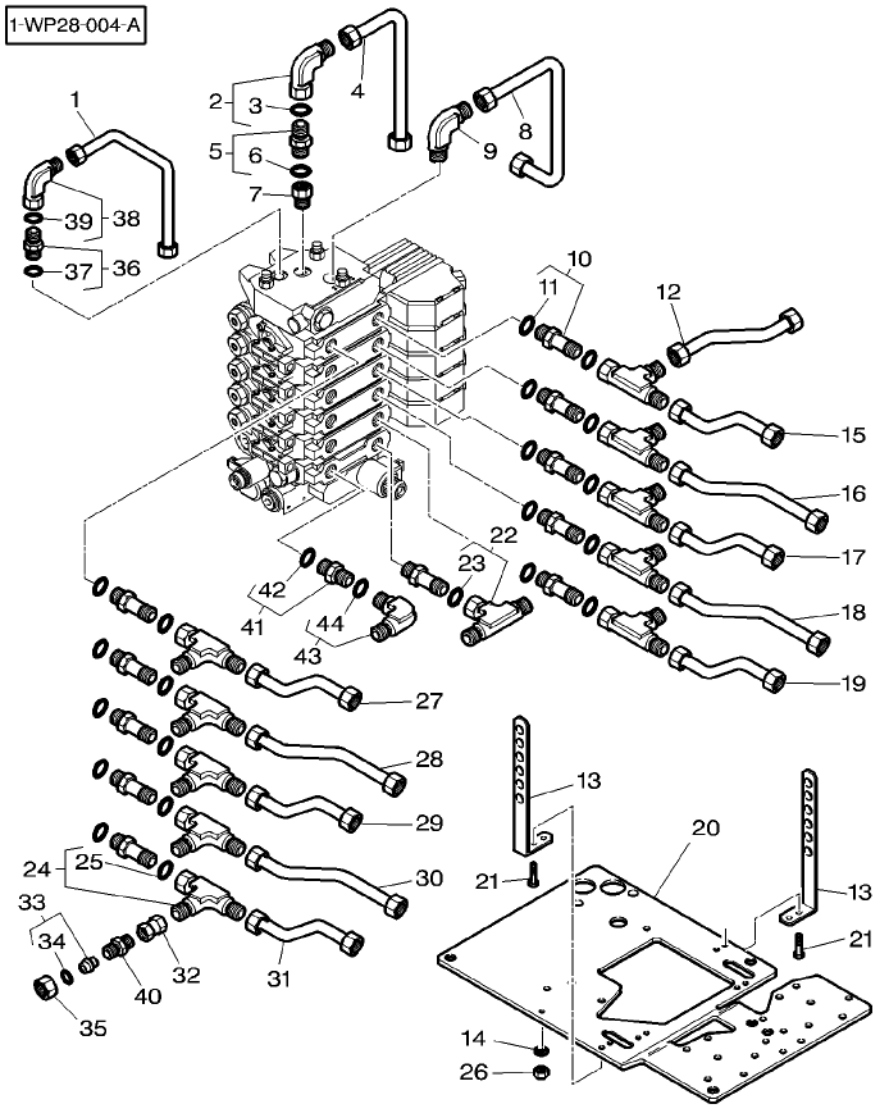

1	4275550M1		1	TUBE TUBO	ROHR TUBO
2	3011082X91		1	ELBOW GOMITO	COUDE WINKELSTUECK CODO
3	3011144X1	2	1	O RING ANELLO TENUTA	JOINT TORIQUE O-RING ANILLO FORMA 'O'
4	4275554M1		1	TUBE TUBO	TUBE ROHR TUBO
5	3011045X91	M12	1	UNION RACCORDO	RACCORD VERSCHRAUBUNG RACOR
6	3011061X1	5	1	O RING ANELLO TENUTA	JOINT TORIQUE O-RING ANILLO FORMA 'O'
7	3793729M1		1	REDUCER RIDUTTORE	REDUCTEUR REDUZIERSTUECK PIEZA REDUCTORA
8	4275552M1		1	TUBE TUBO	TUBE ROHR TUBO
9	3787920M1		1	UNION RACCORDO	RACCORD VERSCHRAUBUNG RACOR
10*	4274990M2	M22	11	UNION RACCORDO	RACCORD VERSCHRAUBUNG RACOR
11	3019398X1	10	1	O RING ANELLO TENUTA	JOINT TORIQUE O-RING ANILLO FORMA 'O'
12	4274975M1		5	TUBE TUBO	TUBE ROHR TUBO
13	4274987M1		2	SUPPORT SUPPORTO	SUPPORT LAGERUNG DISPOS.DE SOSTEN
14	390972X1		3	WASHER RONDELLA	RONDELLE UNTERLEGSCHEIBE ARANDELA
15	4274973M1		1	TUBE TUBO	TUBE ROHR TUBO
16	4274840M1		1	TUBE TUBO	TUBE ROHR TUBO
17	4274838M1		1	TUBE TUBO	TUBE ROHR TUBO
18	4274836M1		1	TUBE TUBO	TUBE ROHR TUBO
19	4274834M1		1	TUBE TUBO	TUBE ROHR TUBO
20	4274562M1		1	SUPPORT SUPPORTO	SUPPORT LAGERUNG DISPOS.DE SOSTEN
21	339230X1	M6 X 10	4	HEX. SOCK. SCREW	VIS TETE HEX ZYLINDERSCHRAUBE VITE PARKER TORN.CAB.HUECA
22	3011093X91		1	UNION RACCORDO	RACCORD VERSCHRAUBUNG RACOR
23	3011147X1	22	1	O RING ANELLO TENUTA	JOINT TORIQUE O-RING ANILLO FORMA 'O'
24	3011089X91		10	UNION RACCORDO	RACCORD VERSCHRAUBUNG RACOR
25	3011147X1	24	1	O RING ANELLO TENUTA	JOINT TORIQUE O-RING ANILLO FORMA 'O'
26	339169X1	M8	3	NUT DADO	ECROU MUTTER TUERCA

Auxiliary Distributors Installation
Montage Distributeurs Auxiliaires
Zuzatzeinbausverteilers
Intallazione Distributori Ausiliari
Instalacion Distribuidores Auxiliares

70-165

Hydraulic Lines With 5 Distributors
Tuyauteries Avec 5 Distributeurs
Leitungen Mit 5 Verteilers
Tubazioni Con 5 Distributori
Circuito Con 5 Distribuidores

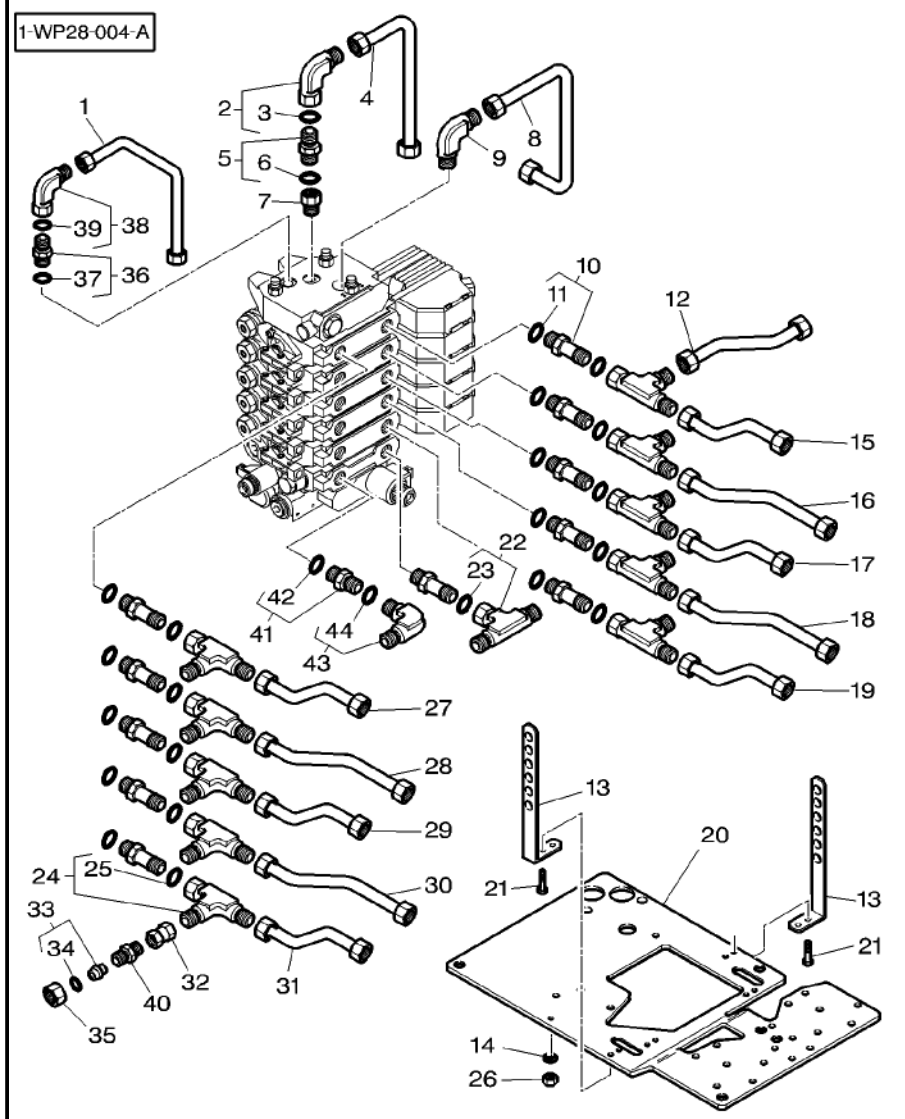

27	4274972M1		1	TUBE	TUBE TUBO	ROHR TUBO
28	4274839M1		1	TUBE	TUBE TUBO	ROHR TUBO
29	4274837M1		1	TUBE	TUBE TUBO	ROHR TUBO
30	4274835M1		1	TUBE	TUBE TUBO	ROHR TUBO
31	4274833M1		1	TUBE	TUBE TUBO	ROHR TUBO
32	4274976M1		5	TUBE	TUBE TUBO	ROHR TUBO
33	3011136X91		10	TAP	OBTURATEUR TAPPO*	HAHN GRIFO
34	3011147X1	33	1	O RING	JOINT TORIQUE ANELLO TENUTA	O-RING ANILLO FORMA 'O'
35	3011119X1		10	NUT	ECROU DADO	MUTTER TUERCA
36	3011055X91	M33	1	UNION	RACCORD RACCORDO	VERSCHRAUBUNG RACOR
37	3011062X1	36	1	O RING	JOINT TORIQUE ANELLO TENUTA	O-RING ANILLO FORMA 'O'
38	3011088X91		1	ELBOW NIPPLE	RACCORD COUDE NIPPLO GOMITO	WINKELSTUTZEN CODO DE UNION
39	3011150X1	38	1	O RING	JOINT TORIQUE ANELLO TENUTA	O-RING ANILLO FORMA 'O'
40	338725X1		10	UNION	RACCORD RACCORDO	VERSCHRAUBUNG RACOR
41	3011534X91		1	UNION	RACCORD RACCORDO	VERSCHRAUBUNG RACOR
42	3019398X1	41	1	O RING	JOINT TORIQUE ANELLO TENUTA	O-RING ANILLO FORMA 'O'
43	3011085X91		1	UNION	RACCORD RACCORDO	VERSCHRAUBUNG RACOR
44	3011147X1	43	1	O RING	JOINT TORIQUE ANELLO TENUTA	O-RING ANILLO FORMA 'O'

Auxiliary Distributors Installation
Montage Distributeurs Auxiliaires
Zuzatzeinbausverteilers
Intallazione Distributori Ausiliari
Instalacion Distribuidores Auxiliares

70-170

Hydraulic Lines With 6 Distributors
Tuyauteries Avec 6 Distributeurs
Leitungen Mit 6 Verteilers
Tubazioni Con 6 Distributori
Circuito Con 6 Distribuidores

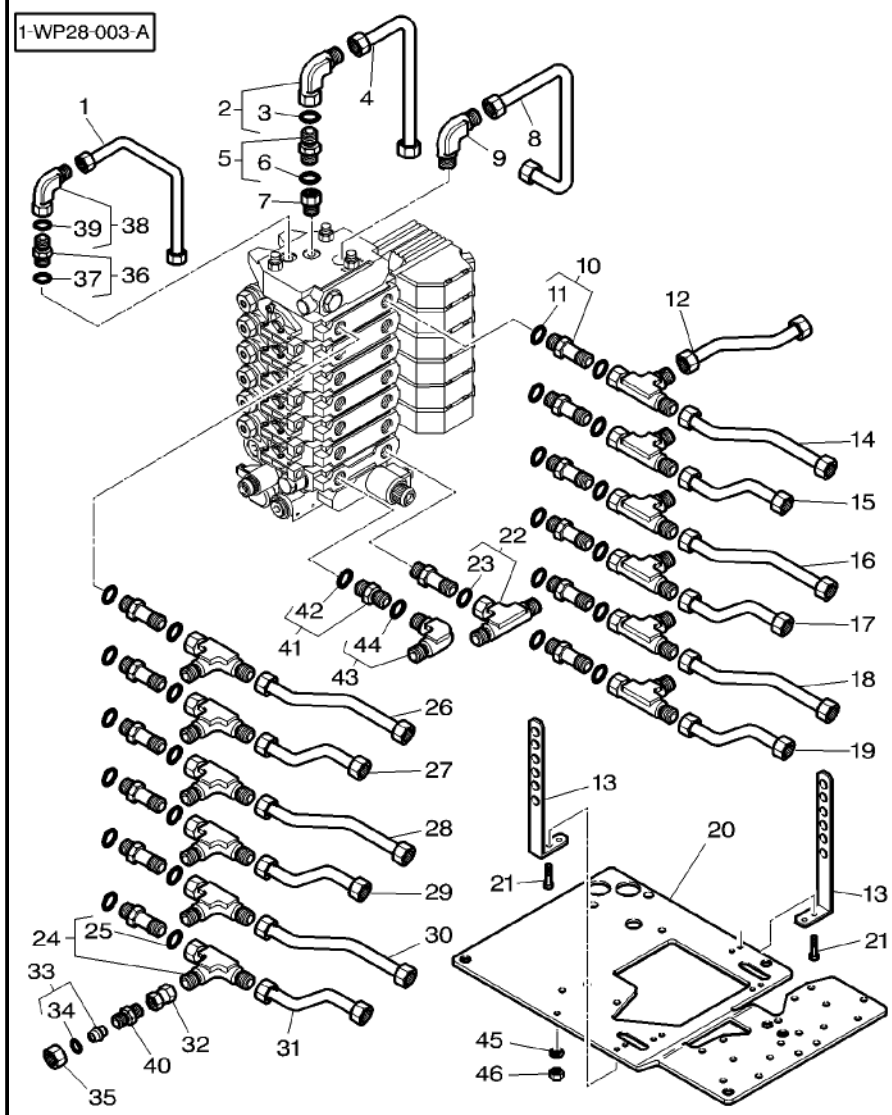

1	4274991M1		1	TUBE	TUBE TUBO	ROHR TUBO
2	3011082X91		1	ELBOW	COUDE GOMITO	WINKELSTUECK CODO
3	3011144X1	2	1	O RING	JOINT TORIQUE ANELLO TENUTA	O-RING ANILLO FORMA 'O'
4	4274993M1		1	TUBE	TUBE TUBO	ROHR TUBO
5	3011045X91	M12	1	UNION	RACCORD RACCORDO	VERSCHRAUBUNG RACOR
6	3011061X1	5	1	O RING	JOINT TORIQUE ANELLO TENUTA	O-RING ANILLO FORMA 'O'
7	3793729M1		1	REDUCER	REDUCTEUR RIDUTTORE	REDUZIERSTUECK PIEZA REDUCTORA
8	4274992M1		1	TUBE	TUBE TUBO	ROHR TUBO
9	3787920M1		1	UNION	RACCORD RACCORDO	VERSCHRAUBUNG RACOR
10*	4274990M2	M22	13	UNION	RACCORD RACCORDO	VERSCHRAUBUNG RACOR
11	3019398X1	10	1	O RING	JOINT TORIQUE ANELLO TENUTA	O-RING ANILLO FORMA 'O'
12	4274975M1		6	TUBE	TUBE TUBO	ROHR TUBO
13	4274987M1		2	SUPPORT	SUPPORT SUPPORTO	LAGERUNG DISPOS.DE SOSTEN
14	4274832M1		1	TUBE	TUBE TUBO	ROHR TUBO
15	4274973M1		1	TUBE	TUBE TUBO	ROHR TUBO
16	4274840M1		1	TUBE	TUBE TUBO	ROHR TUBO
17	4274838M1		1	TUBE	TUBE TUBO	ROHR TUBO
18	4274836M1		1	TUBE	TUBE TUBO	ROHR TUBO
19	4274834M1		1	TUBE	TUBE TUBO	ROHR TUBO
20	4274562M1		1	SUPPORT	SUPPORT SUPPORTO	LAGERUNG DISPOS.DE SOSTEN
21	339230X1	M6 X 10	4	HEX. SOCK. SCREW	VIS TETE HEX VITE PARKER	ZYLINDERSCHRAUBE TORN.CAB.HUECA
22	3011093X91		1	UNION	RACCORD RACCORDO	VERSCHRAUBUNG RACOR
23	3011147X1	22	1	O RING	JOINT TORIQUE ANELLO TENUTA	O-RING ANILLO FORMA 'O'
24	3011089X91		12	UNION	RACCORD RACCORDO	VERSCHRAUBUNG RACOR
25	3011147X1	24	1	O RING	JOINT TORIQUE ANELLO TENUTA	O-RING ANILLO FORMA 'O'
26	4274974M1		1	TUBE	TUBE TUBO	ROHR TUBO

Auxiliary Distributors Installation
Montage Distributeurs Auxiliaires
Zuzatzeinbausverteilers
Intallazione Distributori Ausiliari
Instalacion Distribuidores Auxiliares

70-170

Hydraulic Lines With 6 Distributors
Tuyauteries Avec 6 Distributeurs
Leitungen Mit 6 Verteilers
Tubazioni Con 6 Distributori
Circuito Con 6 Distribuidores

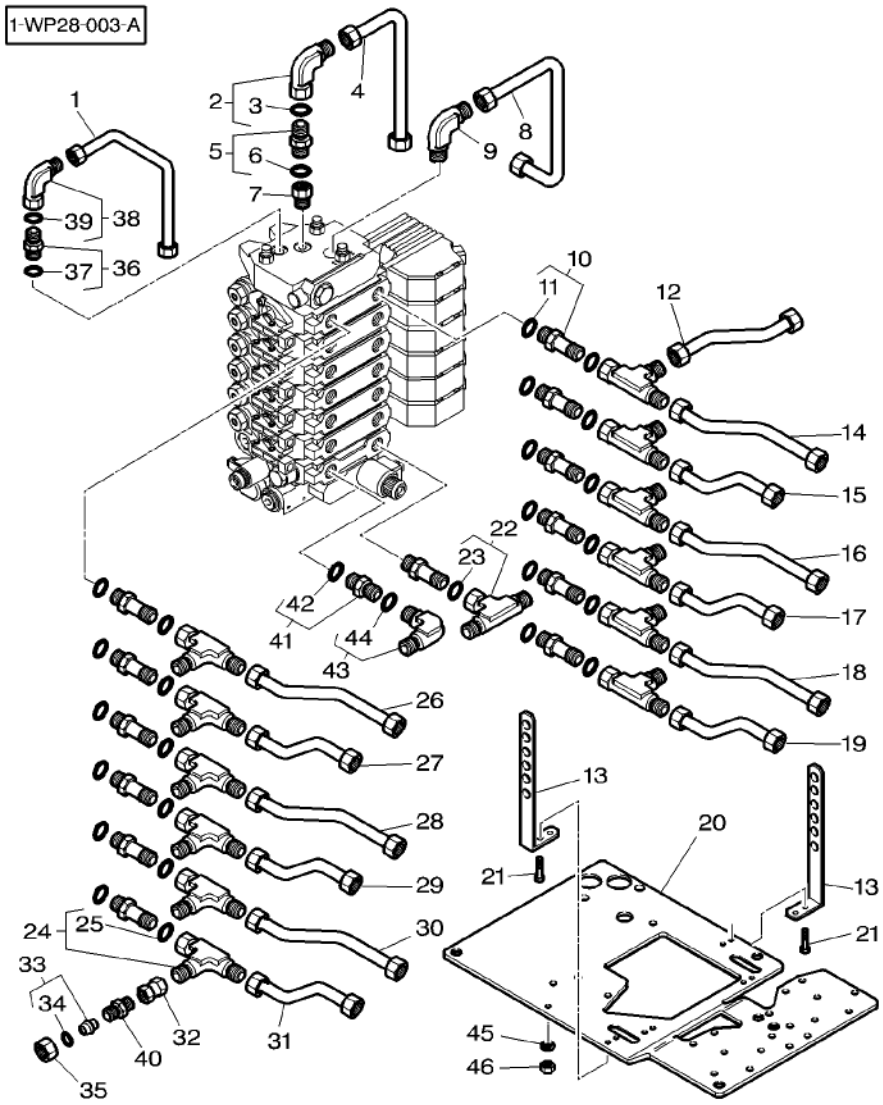

27	4274972M1		1	TUBE	TUBE TUBO	ROHR TUBO
28	4274839M1		1	TUBE	TUBE TUBO	ROHR TUBO
29	4274837M1		1	TUBE	TUBE TUBO	ROHR TUBO
30	4274835M1		1	TUBE	TUBE TUBO	ROHR TUBO
31	4274833M1		1	TUBE	TUBE TUBO	ROHR TUBO
32	4274976M1		6	TUBE	TUBE TUBO	ROHR TUBO
33	3011136X91		12	TAP	OBTURATEUR TAPPO*	HAHN GRIFO
34	3011147X1	33	1	O RING	JOINT TORIQUE ANELLO TENUTA	O-RING ANILLO FORMA 'O'
35	3011119X1		12	NUT	ECROU DADO	MUTTER TUERCA
36	3011055X91	M33	1	UNION	RACCORD RACCORDO	VERSCHRAUBUNG RACOR
37	3011062X1	36	1	O RING	JOINT TORIQUE ANELLO TENUTA	O-RING ANILLO FORMA 'O'
38	3011088X91		1	ELBOW NIPPLE	RACCORD COUDE NIPPLO GOMITO	WINKELSTUTZEN CODO DE UNION
39	3011150X1	38	1	O RING	JOINT TORIQUE ANELLO TENUTA	O-RING ANILLO FORMA 'O'
40	338725X1		12	UNION	RACCORD RACCORDO	VERSCHRAUBUNG RACOR
41	3011534X91		1	UNION	RACCORD RACCORDO	VERSCHRAUBUNG RACOR
42	3019398X1	41	1	O RING	JOINT TORIQUE ANELLO TENUTA	O-RING ANILLO FORMA 'O'
43	3011085X91		1	UNION	RACCORD RACCORDO	VERSCHRAUBUNG RACOR
44	3011147X1	43	1	O RING	JOINT TORIQUE ANELLO TENUTA	O-RING ANILLO FORMA 'O'
45	390972X1		3	WASHER	RONDELLE RONDELLA	UNTERLEGSCHEIBE ARANDELA
46	339169X1	M8	3	NUT	ECROU DADO	MUTTER TUERCA

Auxiliary Distributor Distributeur Auxiliaire Zuzatzverteiler Distributore Auxiliarie Distribuidor Auxiliar	70-175	4 Distributors Electrodynamique 4 Distributeurs Electro–Hydraulique 4 Verteilers Elektrodynamischer 4 Distributors Elettroidraulico 4 Distribuidors Electro–Hidraulico

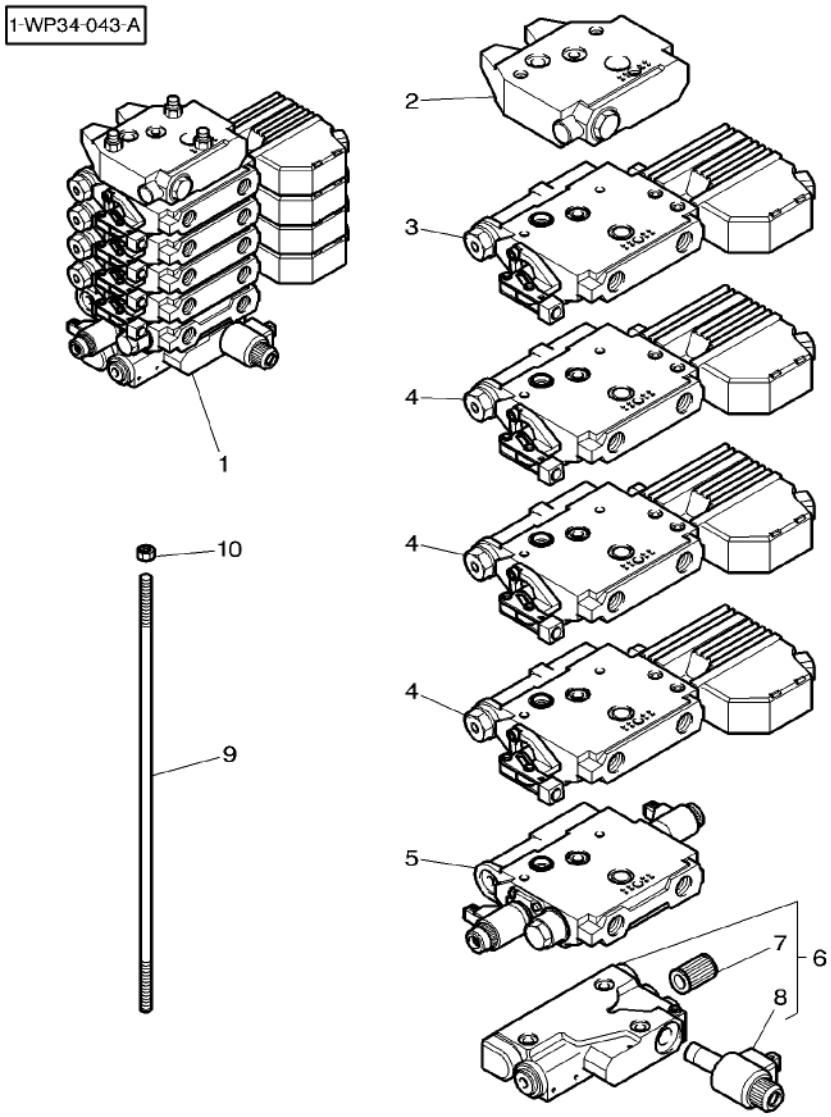

1		[E]	1	DISTRIBUTOR	DISTRIBUTEUR DISTRIBUTORE	VERTEILER DISTRIBUIDOR
2	3796110M1	1	1	ELEMENT	ELEMENT ELEMENTO	ELEMENT ELEMENTO
3	3796026M7	1 [ABC]	1	DISTRIBUTOR	DISTRIBUTEUR DISTRIBUTORE	VERTEILER DISTRIBUIDOR
4	3796027M7	1 [AB]	3	DISTRIBUTOR	DISTRIBUTEUR DISTRIBUTORE	VERTEILER DISTRIBUIDOR
5	3796179M2	1 [DF]	1	CONTROL VALVE	VALVE COMMANDE DISTRIBUTORE IDR	REGELVENTIL VALVULA CONTROL
6	3796028M2	1	1	ELEMENT	ELEMENT ELEMENTO	ELEMENT ELEMENTO
7	***G001990100010***	6	1	KIT, FILTER	JEU FILTRE KIT FILTRO	FILTERSATZ JUEGO FILTRO
8	***3903960M1***	6	1	ELECTROVALVE	ELECTROVANNE ELETTROVALVOLA	ELECTRON.VENTIL ELECTROVALVULA
9	*3799724M1	1 M8 X 306	3	STUD	GOUJON PRIGIONIERO	STEHBOLZEN CHAVETA ROSCADO
10	339169X1	1 M8	3	NUT	ECROU DADO	MUTTER TUERCA

[A] DISTRIBUTOR WITH ELECTRIC CONTROL
DISTRIBUTEUR AVEC COMMANDE ELECTRIQUE
VERTEILER MIT ELEKTRISCHE SCHALTUNG
DISTRIBUTORE CON COMANDO ELECTRICO
DISTRIBUIDOR CON MANDO ELECTRICO

[B] DIST 4 POSITIONS,FLOW ADJUST,DOUBLE ACTION,ZERO LE AK
DIST 4 POSITIONS,DEBIT REGLABLE,DOUBLE EFFET,FUITE ZERO
VERTEILER 4 POSITIONEN,DURCH.EINSTELLUNG,DOPPELTWI RKENDSPERRVENTIL FUER NULLECKAGE
DIST A 4 POSIZIONI,REGOLATORE DI FLUSSO,DOPPIOEFFE ETTO,ZERO FUGA
DIST A 4 POSICION,DEBITO REGULABLE,DOBLE EFECTO,ZE RO FUGA

[C] WITH TIGHTENESS BALLS
AVEC ETANCHEITE A BILLES
MIT DICHTIGKEIT KUGEL
CON IMPERMEABILITA A SFERAS
CON IMPERMEABILIDAD A BOLAS

[D] HYDRAULIC LIFT VALVE
VALVE HYDRAULIQUE DE RELEVAGE
HYDR. HUBVENTIL
DISTRIBUTORE SOLLEVATORE
VALVULA DE LEVANTE HIDRAULICO

[E] ORDER DETAIL
COMMANDER DETAIL
BESTELLE EINZELN
ORDINARE AL MINUTO
PEDIR DETALLE

Auxiliary Distributor **Distributeur Auxiliaire** **Zuzatzverteiler** **Distributore Auxiliarie** **Distribuidor Auxiliar**	**70-175**	**4 Distributors Electrodynamique** **4 Distributeurs Electro-Hydraulique** **4 Verteilers Elektrodynamischer** **4 Distributors Elettroidraulico** **4 Distribuidors Electro-Hidraulico**

1-WP34-043-A

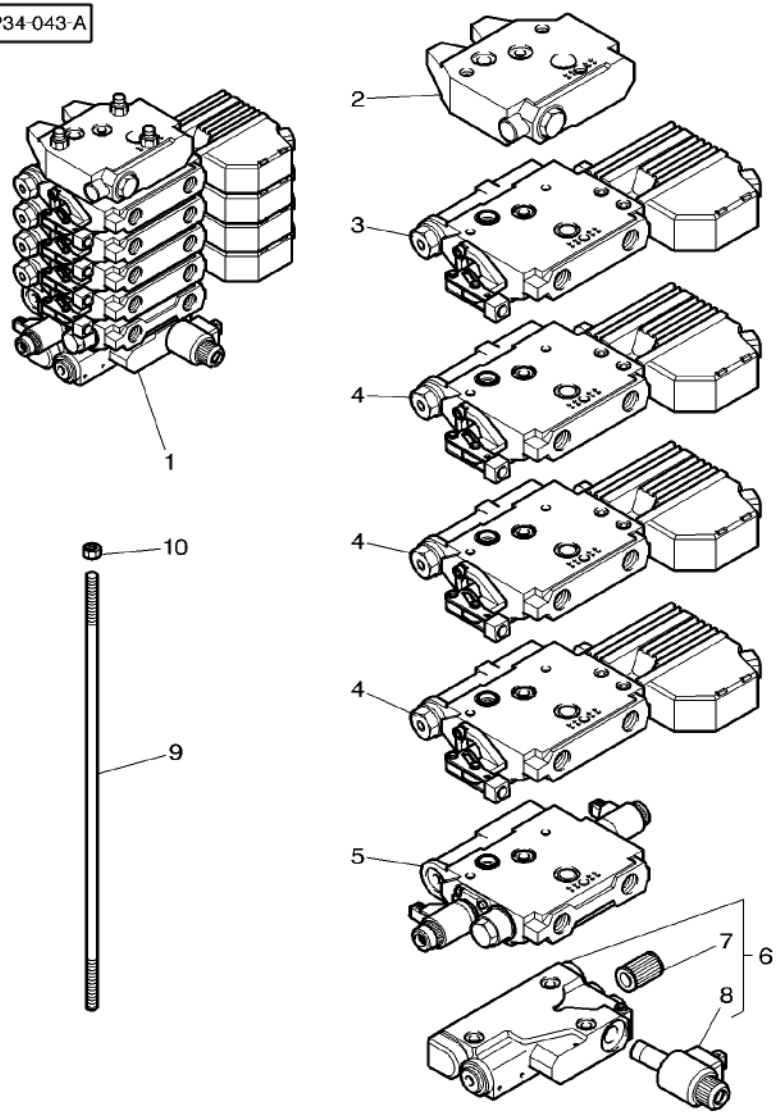

[F] DETAILS TO BE ADVISED
DETAIL COMMUNIQUE ULTERIEUREMENT
EINZELNE WIRD BEKANNTGEGEBEN
DA AVVISARE PER PARTICOLARI
AVISAR PARA DETAILLE

Auxiliary Distributor
Distributeur Auxiliaire
Zuzatzverteiler
Distributore Auxiliarie
Distribuidor Auxiliar

70-180

5 Distributors Electrodynamique
5 Distributeurs Electro–Hydraulique
5 Verteilers Elektrodynamischer
5 Distributors Elettroidraulico
5 Distribuidors Electro–Hidraulico

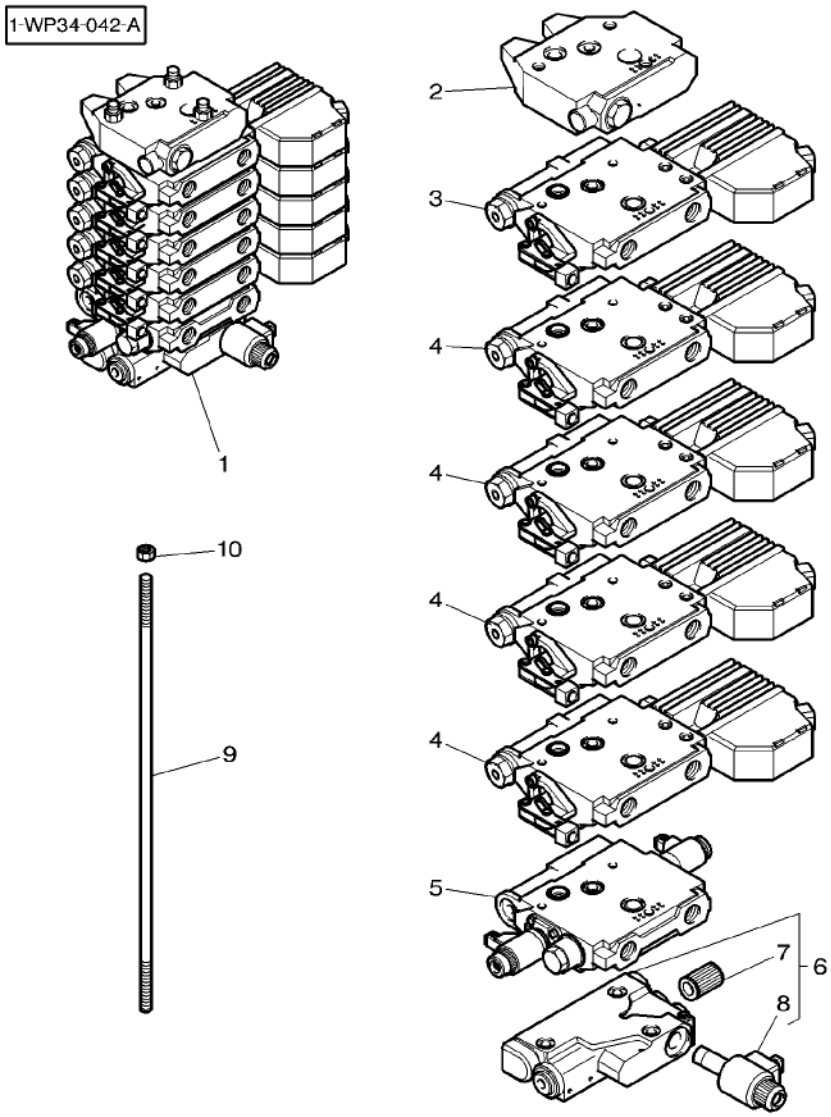

1		[E]	**1**	DISTRIBUTOR	DISTRIBUTEUR DISTRIBUTORE	VERTEILER DISTRIBUIDOR
2	3796110M1	1	**1**	ELEMENT	ELEMENT ELEMENTO	ELEMENT ELEMENTO
3	3796026M7	1 [ABC]	**1**	DISTRIBUTOR	DISTRIBUTEUR DISTRIBUTORE	VERTEILER DISTRIBUIDOR
4	3796027M7	1 [AB]	**4**	DISTRIBUTOR	DISTRIBUTEUR DISTRIBUTORE	VERTEILER DISTRIBUIDOR
5	3796179M2	1 [DF]	**1**	CONTROL VALVE	VALVE COMMANDE DISTRIBUTORE IDR	REGELVENTIL VALVULA CONTROL
6	3796028M2	1	**1**	ELEMENT	ELEMENT ELEMENTO	ELEMENT ELEMENTO
7	***G001990100010***	6	**1**	KIT, FILTER	JEU FILTRE KIT FILTRO	FILTERSATZ JUEGO FILTRO
8	***3903960M1***	6	**1**	ELECTROVALVE	ELECTROVANNE ELETTROVALVOLA	ELECTRON.VENTIL ELECTROVALVULA
9	3799725M1	1 M8 X 346	**3**	STUD	GOUJON PRIGIONIERO	STEHBOLZEN CHAVETA ROSCADO
10	339169X1	1 M8	**3**	NUT	ECROU DADO	MUTTER TUERCA

[A] DISTRIBUTOR WITH ELECTRIC CONTROL
DISTRIBUTEUR AVEC COMMANDE ELECTRIQUE
VERTEILER MIT ELEKTRISCHE SCHALTUNG
DISTRIBUTORE CON COMANDO ELECTRICO
DISTRIBUIDOR CON MANDO ELECTRICO

[B] DIST 4 POSITIONS,FLOW ADJUST,DOUBLE ACTION,ZERO LE AK
DIST 4 POSITIONS,DEBIT REGLABLE,DOUBLE EFFET,FUITE ZERO
VERTEILER 4 POSITIONEN,DURCH.EINSTELLUNG,DOPPELTWI RKENDSPERRVENTIL FUER NULLECKAGE
DIST A 4 POSIZIONI,REGOLATORE DI FLUSSO,DOPPIOEFFE ETTO,ZERO FUGA
DIST A 4 POSICION,DEBITO REGULABLE,DOBLE EFECTO,ZE RO FUGA

[C] WITH TIGHTENESS BALLS
AVEC ETANCHEITE A BILLES
MIT DICHTIGKEIT KUGEL
CON IMPERMEABILITA A SFERAS
CON IMPERMEABILIDAD A BOLAS

[D] HYDRAULIC LIFT VALVE
VALVE HYDRAULIQUE DE RELEVAGE
HYDR. HUBVENTIL
DISTRIBUTORE SOLLEVATORE
VALVULA DE LEVANTE HIDRAULICO

[E] ORDER DETAIL
COMMANDER DETAIL
BESTELLE EINZELN
ORDINARE AL MINUTO
PEDIR DETALLE

Auxiliary Distributor **Distributeur Auxiliaire** **Zuzatzverteiler** **Distributore Auxiliarie** **Distribuidor Auxiliar**	**70-180**	**5 Distributors Electrodynamique** **5 Distributeurs Electro-Hydraulique** **5 Verteilers Elektrodynamischer** **5 Distributors Elettroidraulico** **5 Distribuidors Electro-Hidraulico**

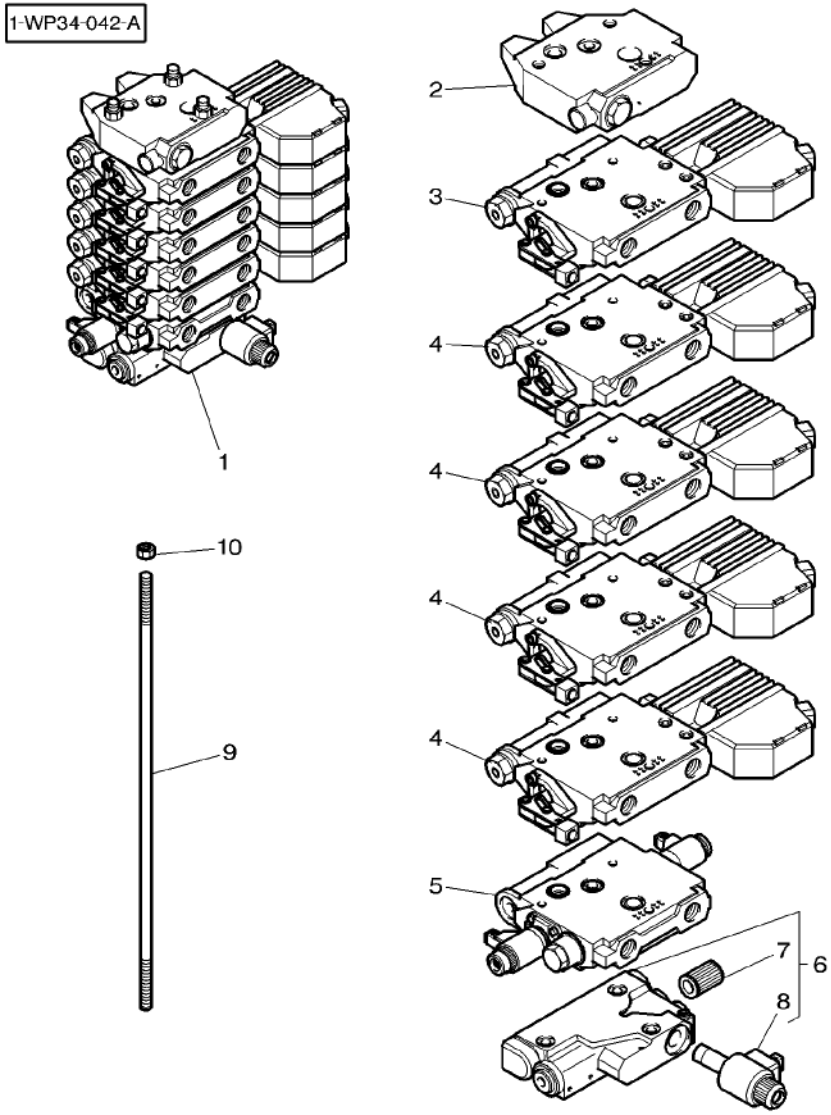

[F] DETAILS TO BE ADVISED
DETAIL COMMUNIQUE ULTERIEUREMENT
EINZELNE WIRD BEKANNTGEGEBEN
DA AVVISARE PER PARTICOLARI
AVISAR PARA DETAILLE

Auxiliary Distributor
Distributeur Auxiliaire
Zuzatzverteiler
Distributore Auxiliarie
Distribuidor Auxiliar

70-185

6 Distributors Electrodynamique
6 Distributeurs Electro–Hydraulique
6 Verteilers Elektrodynamischer
6 Distributors Elettroidraulico
6 Distribuidors Electro–Hidraulico

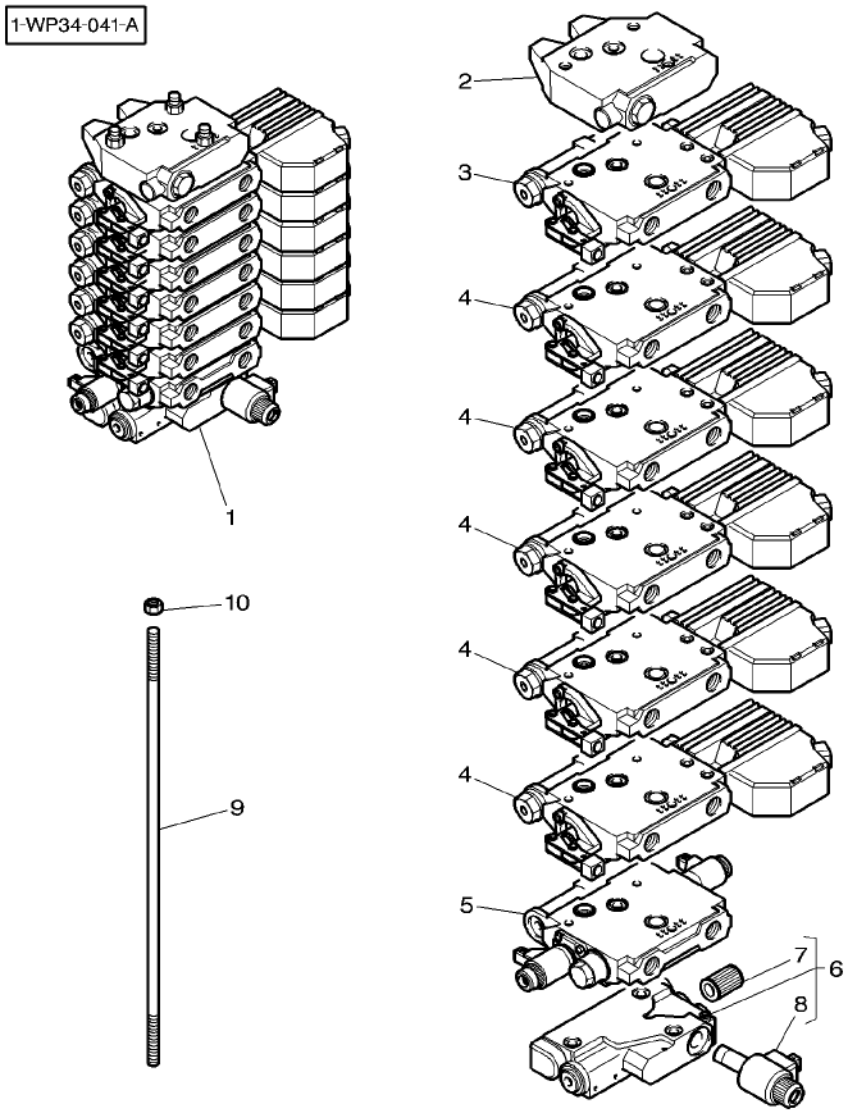

1		[E]	**1**	DISTRIBUTOR	DISTRIBUTEUR DISTRIBUTORE	VERTEILER DISTRIBUIDOR
2	3796110M1	1	**1**	ELEMENT	ELEMENT ELEMENTO	ELEMENT ELEMENTO
3	3796026M7	1 [ABC]	**1**	DISTRIBUTOR	DISTRIBUTEUR DISTRIBUTORE	VERTEILER DISTRIBUIDOR
4	3796027M7	1 [AB]	**5**	DISTRIBUTOR	DISTRIBUTEUR DISTRIBUTORE	VERTEILER DISTRIBUIDOR
5	3796179M2	1 [DF]	**1**	CONTROL VALVE	VALVE COMMANDE DISTRIBUTORE IDR	REGELVENTIL VALVULA CONTROL
6	3796028M2	1	**1**	ELEMENT	ELEMENT ELEMENTO	ELEMENT ELEMENTO
7	***G001990100010***	6	**1**	KIT, FILTER	JEU FILTRE KIT FILTRO	FILTERSATZ JUEGO FILTRO
8	***3903960M1***	6	**1**	ELECTROVALVE	ELECTROVANNE ELETTROVALVOLA	ELECTRON.VENTIL ELECTROVALVULA
9	3799466M1	1 M8 X 386	**3**	STUD	GOUJON PRIGIONIERO	STEHBOLZEN CHAVETA ROSCADO
10	339169X1	1 M8	**3**	NUT	ECROU DADO	MUTTER TUERCA

[A] DISTRIBUTOR WITH ELECTRIC CONTROL
DISTRIBUTEUR AVEC COMMANDE ELECTRIQUE
VERTEILER MIT ELEKTRISCHE SCHALTUNG
DISTRIBUTORE CON COMANDO ELECTRICO
DISTRIBUIDOR CON MANDO ELECTRICO

[B] DIST 4 POSITIONS,FLOW ADJUST,DOUBLE ACTION,ZERO LE AK
DIST 4 POSITIONS,DEBIT REGLABLE,DOUBLE EFFET,FUITE ZERO
VERTEILER 4 POSITIONEN,DURCH.EINSTELLUNG,DOPPELTWI RKENDSPERRVENTIL FUER NULLECKAGE
DIST A 4 POSIZIONI,REGOLATORE DI FLUSSO,DOPPIOEFFE ETTO,ZERO FUGA
DIST A 4 POSICION,DEBITO REGULABLE,DOBLE EFECTO,ZE RO FUGA

[C] WITH TIGHTENESS BALLS
AVEC ETANCHEITE A BILLES
MIT DICHTIGKEIT KUGEL
CON IMPERMEABILITA A SFERAS
CON IMPERMEABILIDAD A BOLAS

[D] HYDRAULIC LIFT VALVE
VALVE HYDRAULIQUE DE RELEVAGE
HYDR. HUBVENTIL
DISTRIBUTORE SOLLEVATORE
VALVULA DE LEVANTE HIDRAULICO

[E] ORDER DETAIL
COMMANDER DETAIL
BESTELLE EINZELN
ORDINARE AL MINUTO
PEDIR DETALLE

Auxiliary Distributor Distributeur Auxiliaire Zuzatzverteiler Distributore Auxiliarie Distribuidor Auxiliar	70-185	6 Distributors Electrodynamique 6 Distributeurs Electro-Hydraulique 6 Verteilers Elektrodynamischer 6 Distributors Elettroidraulico 6 Distribuidors Electro-Hidraulico

1-WP34-041-A

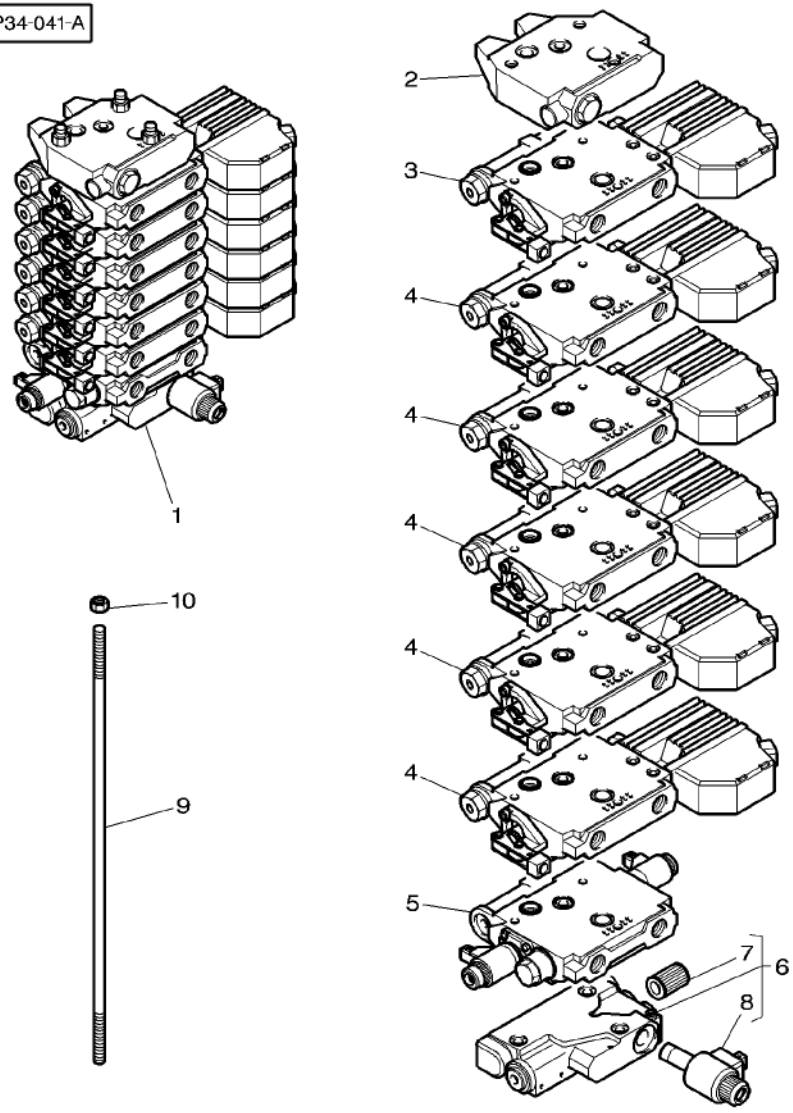

[F] DETAILS TO BE ADVISED
DETAIL COMMUNIQUE ULTERIEUREMENT
EINZELNE WIRD BEKANNTGEGEBEN
DA AVVISARE PER PARTICOLARI
AVISAR PARA DETAILLE

Auxiliary Distributor
Distributeur Auxiliaire
Zuzatzverteiler
Distributore Auxiliarie
Distribuidor Auxiliar

70-190

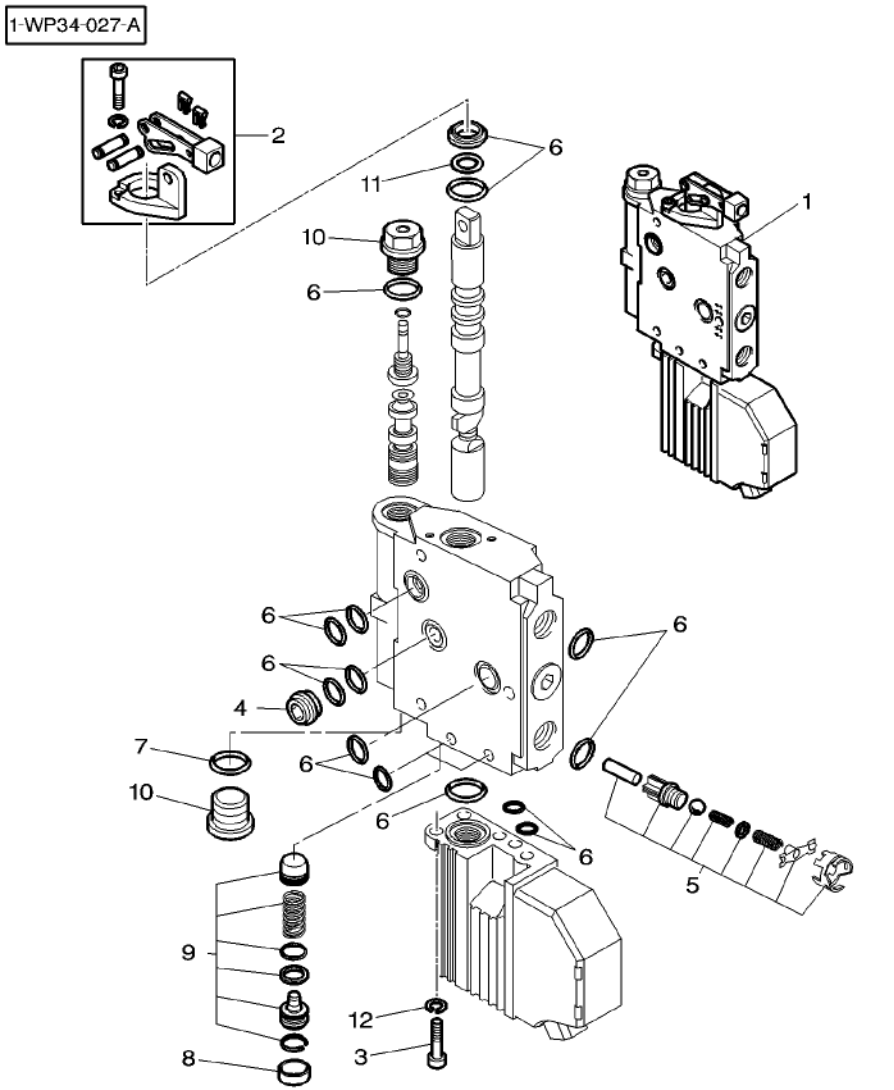

1	3796026M7		[AB]	1	DISTRIBUTOR	DISTRIBUTEUR DISTRIBUTORE	VERTEILER DISTRIBUIDOR
1	3796027M7		[A]	1	DISTRIBUTOR	DISTRIBUTEUR DISTRIBUTORE	VERTEILER DISTRIBUIDOR
2	3797284M1	1		1	DRIVE	COMMANDE PRESA DI MOTO	ANTRIEB TRASMISION
3	3009281X1	1	M6 X 16	3	SCREW	VIS VITE	SCHRAUBE TORNILLO
4	3108248M1	1		1	BYPASS	BYPASS BIPASSO	LECKOELLEITUNG DERIVACION
5	3903864M91	1		1	PARTS PACK	JEU PIECES PACCO RICAMBI	SATZ TEILE PAQUETE PIEZAS
6	3903869M92	1		1	KIT,JOINT/GASKET	JEU DE JOINTS KIT GUARN/GIUNTO	DICHTUNGS-SATZ JGO.JUNTAS/EMPAQ
7	3108243M1	1		1	WASHER	RONDELLE RONDELLA	UNTERLEGSCHEIBE ARANDELA
8	3903856M1	1		1	PLUG	BOUCHON TAPPO	VERSCHL.STOPFEN TAPON
9	3904676M91	1		1	PARTS PACK	JEU PIECES PACCO RICAMBI	SATZ TEILE PAQUETE PIEZAS
10	3108244M1	1		2	PLUG	BOUCHON TAPPO	VERSCHL.STOPFEN TAPON
11	3904668M1	1		1	WASHER	RONDELLE RONDELLA	UNTERLEGSCHEIBE ARANDELA
12	391130X1	1		3	LOCK WASHER	RONDELLE FREIN ROSETTA DENTELL.	FEDERRING ARANDELA GROWER

[A] DIST 4 POSITIONS,FLOW ADJUST,DOUBLE ACTION,ZERO LE AK
DIST 4 POSITIONS,DEBIT REGLABLE,DOUBLE EFFET,FUITE ZERO
VERTEILER 4 POSITIONEN,DURCH.EINSTELLUNG,DOPPELTWI RKENDSPERRVENTIL FUER NULLECKAGE
DIST A 4 POSIZIONI,REGOLATORE DI FLUSSO,DOPPIOEFFE ETTO,ZERO FUGA
DIST A 4 POSICION,DEBITO REGULABLE,DOBLE EFECTO,ZE RO FUGA

[B] WITH TIGHTENESS BALLS
AVEC ETANCHEITE A BILLES
MIT DICHTIGKEIT KUGEL
CON IMPERMEABILITA A SFERAS
CON IMPERMEABILIDAD A BOLAS

Hydraulic Coupling
Coupleur Hydraulique
Hydr. – Kupplung
Giunto Idraulico
Acoplador Hidraulico

70-195

4 Distributors Electrodynamique
4 Distributeurs Electro–Hydraulique
4 Verteilers Elektrodynamischer
4 Distributors Elettroidraulico
4 Distribuidors Electro–Hidraulico

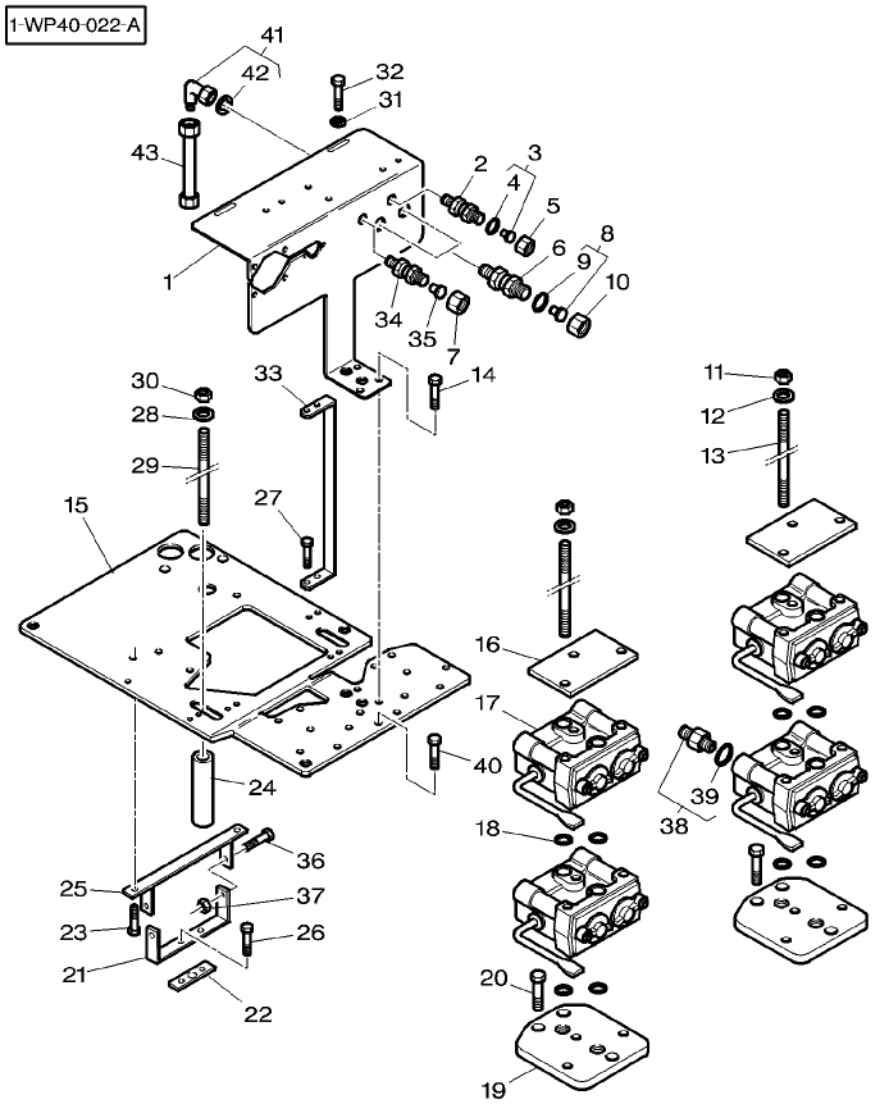

1	4277183M1		1	SUPPORT	SUPPORT SUPPORTO	LAGERUNG DISPOS.DE SOSTEN
2	3001317X1		1	UNION	RACCORD RACCORDO	VERSCHRAUBUNG RACOR
3	3011132X91		1	TAP	OBTURATEUR TAPPO*	HAHN GRIFO
4	3011145X1	3	1	O RING	JOINT TORIQUE ANELLO TENUTA	O–RING ANILLO FORMA 'O'
5	3011117X1		1	NUT	ECROU DADO	MUTTER TUERCA
6	3011404X91		2	UNION	RACCORD RACCORDO	VERSCHRAUBUNG RACOR
7	3011118X1		1	NUT	ECROU DADO	MUTTER TUERCA
8	3011138X91		2	TAP	OBTURATEUR TAPPO*	HAHN GRIFO
9	3011148X1	8	1	O RING	JOINT TORIQUE ANELLO TENUTA	O–RING ANILLO FORMA 'O'
10	3011120X1		2	NUT	ECROU DADO	MUTTER TUERCA
11	3005908X1		6	CAP NUT	ECROU BORGNE DADO A CAPPELLO	HUTMUTTER TUERCA DE TAPA
12	390972X1		6	WASHER	RONDELLE RONDELLA	UNTERLEGSCHEIBE ARANDELA
13	4275557M1	M8 X 175MM	6	STEM	TIGE STELO	STIEL VASTAGO
14	339228X1	M8 X 12	2	HEX. SOCK. SCREW	VIS TETE HEX VITE PARKER	ZYLINDERSCHRAUBE TORN.CAB.HUECA
15	4274562M1		1	SUPPORT	SUPPORT SUPPORTO	LAGERUNG DISPOS.DE SOSTEN
16	3792734M1		2	PLATE	PLAQUE PIASTRA	PLATTE PLATO
17	3796260M1	70–210 No 1	4	FEMALE COUPLER	COUPLEUR FEMELLE GIUNTO FEMMINA	KUPPLST.AUSSEN ACOPLADOR HEMBRA
18	3007432X1		12	O RING	JOINT TORIQUE ANELLO TENUTA	O–RING ANILLO FORMA 'O'
19	4274829M2		2	SUPPORT	SUPPORT SUPPORTO	LAGERUNG DISPOS.DE SOSTEN
20	3009285X1	M8 X 16	6	SCREW	VIS VITE	SCHRAUBE TORNILLO
21	4278264M1		1	SUPPORT	SUPPORT SUPPORTO	LAGERUNG DISPOS.DE SOSTEN
22	822100070411		1	GASKET	JOINT GUARNIZIONE	DICHTSCHEIBE EMPAQUETADURA.
23	339282X1	M10 X 16	2	HEX. SOCK. SCREW	VIS TETE HEX VITE PARKER	ZYLINDERSCHRAUBE TORN.CAB.HUECA
24	4274977M1		2	SPACER	ENTRETOISE DISTANZIALE	ABSTANDSTUECK DISCO ESPACIADOR
25	4278265M1		1	SUPPORT	SUPPORT SUPPORTO	LAGERUNG DISPOS.DE SOSTEN
26	339124X1	M8 X 16	2	HEX. SOCK. SCREW	VIS TETE HEX VITE PARKER	ZYLINDERSCHRAUBE TORN.CAB.HUECA

Hydraulic Coupling
Coupleur Hydraulique
Hydr. – Kupplung
Giunto Idraulico
Acoplador Hidraulico

70-195

4 Distributors Electrodynamique
4 Distributeurs Electro–Hydraulique
4 Verteilers Elektrodynamischer
4 Distributors Elettroidraulico
4 Distribuidors Electro–Hidraulico

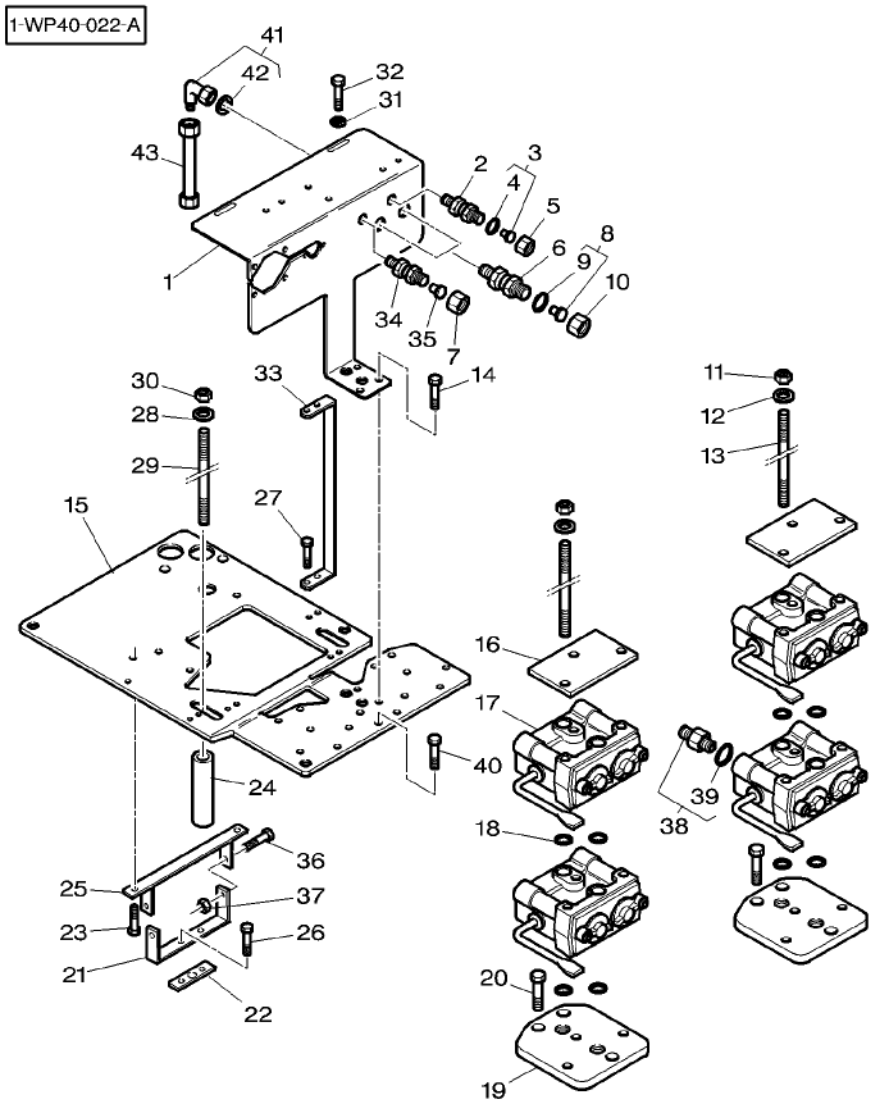

27	391074X1		M6 X 12	**4**	HEX. SOCK. SCREW	VIS TETE HEX VITE PARKER	ZYLINDERSCHRAUBE TORN.CAB.HUECA
28	390974X1			**2**	WASHER METRIC	RONDELLE METR. RONDELLA METRICO	SCHEIBE METRISCH ARANDELA METRICO
29	4276649M1			**2**	STEM	TIGE STELO	STIEL VASTAGO
30	3011390X1			**2**	NUT	ECROU DADO	MUTTER TUERCA
31	390971X1			**4**	WASHER	RONDELLE RONDELLA	UNTERLEGSCHEIBE ARANDELA
32	339230X1		M6 X 10	**4**	HEX. SOCK. SCREW	VIS TETE HEX VITE PARKER	ZYLINDERSCHRAUBE TORN.CAB.HUECA
33	4275580M1			**2**	SUPPORT	SUPPORT SUPPORTO	LAGERUNG DISPOS.DE SOSTEN
34	1442332X91			**1**	UNION	RACCORD RACCORDO	VERSCHRAUBUNG RACOR
35	3011134X91			**1**	TAP	OBTURATEUR TAPPO*	HAHN GRIFO
36	3009494X1		M10 X 35	**2**	HEX. SOCK. SCREW	VIS TETE HEX VITE PARKER	ZYLINDERSCHRAUBE TORN.CAB.HUECA
37	1441932X1		M10	**2**	NUT METRIC	ECROU METRIQUE DADO METRICO	MUTTER METRISCH TUERCA METRICO
38	3011534X91		M22	**8**	UNION	RACCORD RACCORDO	VERSCHRAUBUNG RACOR
39	3019398X1	38		**1**	O RING	JOINT TORIQUE ANELLO TENUTA	O–RING ANILLO FORMA 'O'
40	391990X1		M8 X 25	**2**	SCREW	VIS VITE	SCHRAUBE TORNILLO
41	3011084X91			**1**	UNION	RACCORD RACCORDO	VERSCHRAUBUNG RACOR
42	3011146X1	41		**1**	O RING	JOINT TORIQUE ANELLO TENUTA	O–RING ANILLO FORMA 'O'
43	4277192M1			**1**	TUBE	TUBE TUBO	ROHR TUBO

Hydraulic Coupling
Coupleur Hydraulique
Hydr. – Kupplung
Giunto Idraulico
Acoplador Hidraulico

70-200

5 Distributors Electrodynamique
5 Distributeurs Electro–Hydraulique
5 Verteilers Elektrodynamischer
5 Distributors Elettroidraulico
5 Distribuidors Electro–Hidraulico

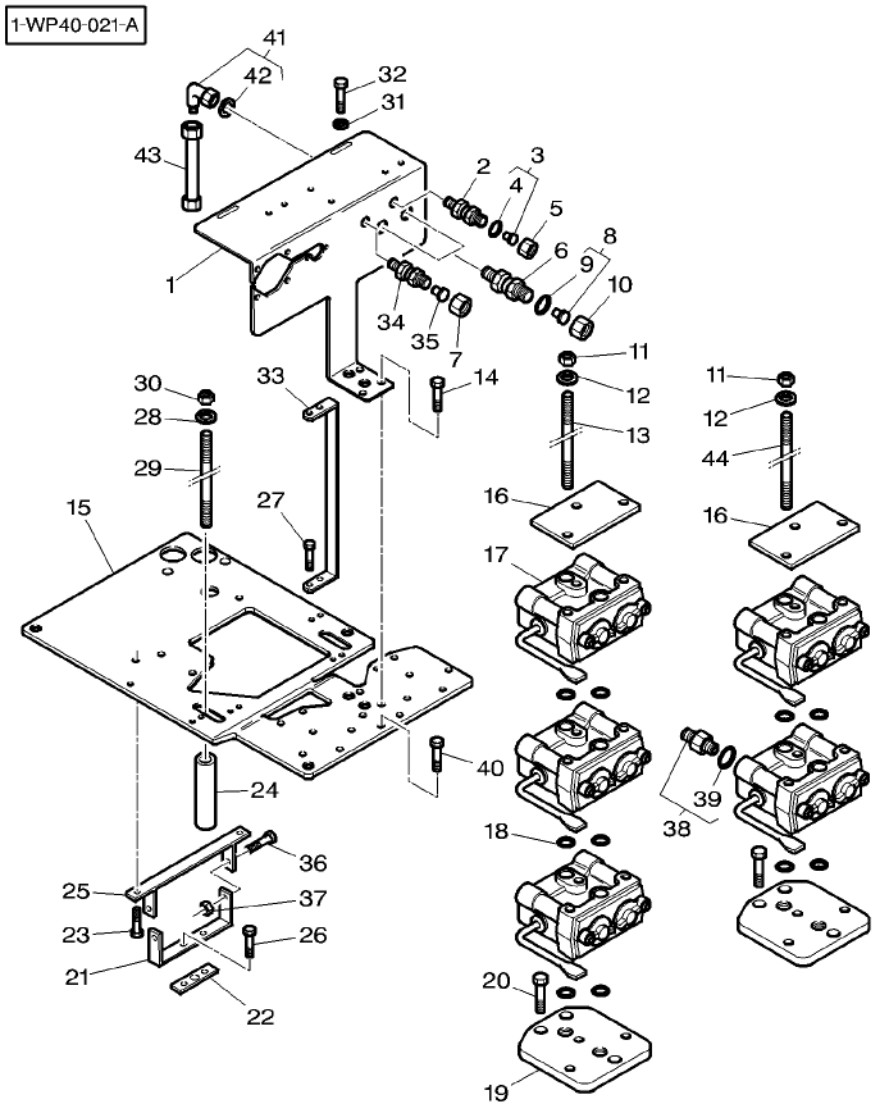

1	4277182M1		1	SUPPORT	SUPPORT SUPPORTO	LAGERUNG DISPOS.DE SOSTEN
2	3001317X1		1	UNION	RACCORD RACCORDO	VERSCHRAUBUNG RACOR
3	3011132X91		1	TAP	OBTURATEUR TAPPO*	HAHN GRIFO
4	3011145X1	3	1	O RING	JOINT TORIQUE ANELLO TENUTA	O–RING ANILLO FORMA 'O'
5	3011117X1		1	NUT	ECROU DADO	MUTTER TUERCA
6	3011404X91		2	UNION	RACCORD RACCORDO	VERSCHRAUBUNG RACOR
7	3011118X1		1	NUT	ECROU DADO	MUTTER TUERCA
8	3011138X91		2	TAP	OBTURATEUR TAPPO*	HAHN GRIFO
9	3011148X1	8	1	O RING	JOINT TORIQUE ANELLO TENUTA	O–RING ANILLO FORMA 'O'
10	3011120X1		2	NUT	ECROU DADO	MUTTER TUERCA
11	3005908X1		6	CAP NUT	ECROU BORGNE DADO A CAPPELLO	HUTMUTTER TUERCA DE TAPA
12	390972X1		6	WASHER	RONDELLE RONDELLA	UNTERLEGSCHEIBE ARANDELA
13	4275556M1	M8 X 245	3	STEM	TIGE STELO	STIEL VASTAGO
14	339228X1	M8 X 12	2	HEX. SOCK. SCREW	VIS TETE HEX VITE PARKER	ZYLINDERSCHRAUBE TORN.CAB.HUECA
15	4274562M1		1	SUPPORT	SUPPORT SUPPORTO	LAGERUNG DISPOS.DE SOSTEN
16	3792734M1		2	PLATE	PLAQUE PIASTRA	PLATTE PLATO
17	3796260M1	70–210 No 1	5	FEMALE COUPLER	COUPLEUR FEMELLE GIUNTO FEMMINA	KUPPLST.AUSSEN ACOPLADOR HEMBRA
18	3007432X1		14	O RING	JOINT TORIQUE ANELLO TENUTA	O–RING ANILLO FORMA 'O'
19	4274829M2		2	SUPPORT	SUPPORT SUPPORTO	LAGERUNG DISPOS.DE SOSTEN
20	3009285X1	M8 X 16	6	SCREW	VIS VITE	SCHRAUBE TORNILLO
21	4278264M1		1	SUPPORT	SUPPORT SUPPORTO	LAGERUNG DISPOS.DE SOSTEN
22	822100070411		1	GASKET	JOINT GUARNIZIONE	DICHTSCHEIBE EMPAQUETADURA.
23	339282X1	M10 X 16	2	HEX. SOCK. SCREW	VIS TETE HEX VITE PARKER	ZYLINDERSCHRAUBE TORN.CAB.HUECA
24	4274977M1		2	SPACER	ENTRETOISE DISTANZIALE	ABSTANDSTUECK DISCO ESPACIADOR
25	4278265M1		1	SUPPORT	SUPPORT SUPPORTO	LAGERUNG DISPOS.DE SOSTEN
26	339124X1	M8 X 16	2	HEX. SOCK. SCREW	VIS TETE HEX VITE PARKER	ZYLINDERSCHRAUBE TORN.CAB.HUECA

Hydraulic Coupling
Coupleur Hydraulique
Hydr. – Kupplung
Giunto Idraulico
Acoplador Hidraulico

70-200

5 Distributors Electrodynamique
5 Distributeurs Electro–Hydraulique
5 Verteilers Elektrodynamischer
5 Distributors Elettroidraulico
5 Distribuidors Electro–Hidraulico

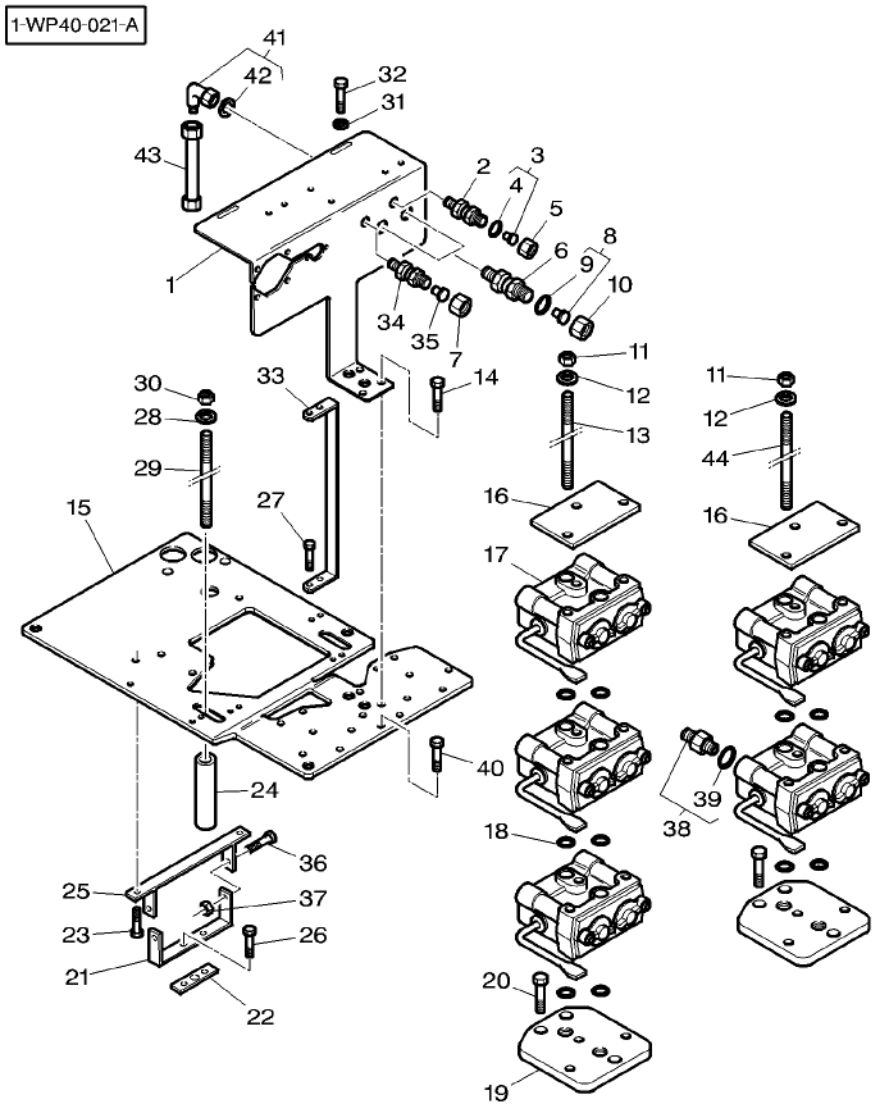

27	391074X1	M6 X 12	4	HEX. SOCK. SCREW	VIS TETE HEX VITE PARKER	ZYLINDERSCHRAUBE TORN.CAB.HUECA
28	390974X1		2	WASHER METRIC	RONDELLE METR. RONDELLA METRICO	SCHEIBE METRISCH ARANDELA METRICO
29	4276649M1		2	STEM	TIGE STELO	STIEL VASTAGO
30	3011390X1		2	NUT	ECROU DADO	MUTTER TUERCA
31	390971X1		4	WASHER	RONDELLE RONDELLA	UNTERLEGSCHEIBE ARANDELA
32	339230X1	M6 X 10	4	HEX. SOCK. SCREW	VIS TETE HEX VITE PARKER	ZYLINDERSCHRAUBE TORN.CAB.HUECA
33	4275580M1		2	SUPPORT	SUPPORT SUPPORTO	LAGERUNG DISPOS.DE SOSTEN
34	1442332X91		1	UNION	RACCORD RACCORDO	VERSCHRAUBUNG RACOR
35	3011134X91		1	TAP	OBTURATEUR TAPPO*	HAHN GRIFO
36	3009494X1	M10 X 35	2	HEX. SOCK. SCREW	VIS TETE HEX VITE PARKER	ZYLINDERSCHRAUBE TORN.CAB.HUECA
37	1441932X1	M10	2	NUT METRIC	ECROU METRIQUE DADO METRICO	MUTTER METRISCH TUERCA METRICO
38	3011534X91	M22	10	UNION	RACCORD RACCORDO	VERSCHRAUBUNG RACOR
39	3019398X1	38	1	O RING	JOINT TORIQUE ANELLO TENUTA	O–RING ANILLO FORMA 'O'
40	391990X1	M8 X 25	2	SCREW	VIS VITE	SCHRAUBE TORNILLO
41	3011084X91		1	UNION	RACCORD RACCORDO	VERSCHRAUBUNG RACOR
42	3011146X1	41	1	O RING	JOINT TORIQUE ANELLO TENUTA	O–RING ANILLO FORMA 'O'
43	4277192M1		1	TUBE	TUBE TUBO	ROHR TUBO
44	4275557M1	M8 X 175MM	3	STEM	TIGE STELO	STIEL VASTAGO

Hydraulic Coupling
Coupleur Hydraulique
Hydr. – Kupplung
Giunto Idraulico
Acoplador Hidraulico

70-205

6 Distributors Electrodynamique
6 Distributeurs Electro–Hydraulique
6 Verteilers Elektrodynamischer
6 Distributors Elettroidraulico
6 Distribuidors Electro–Hidraulico

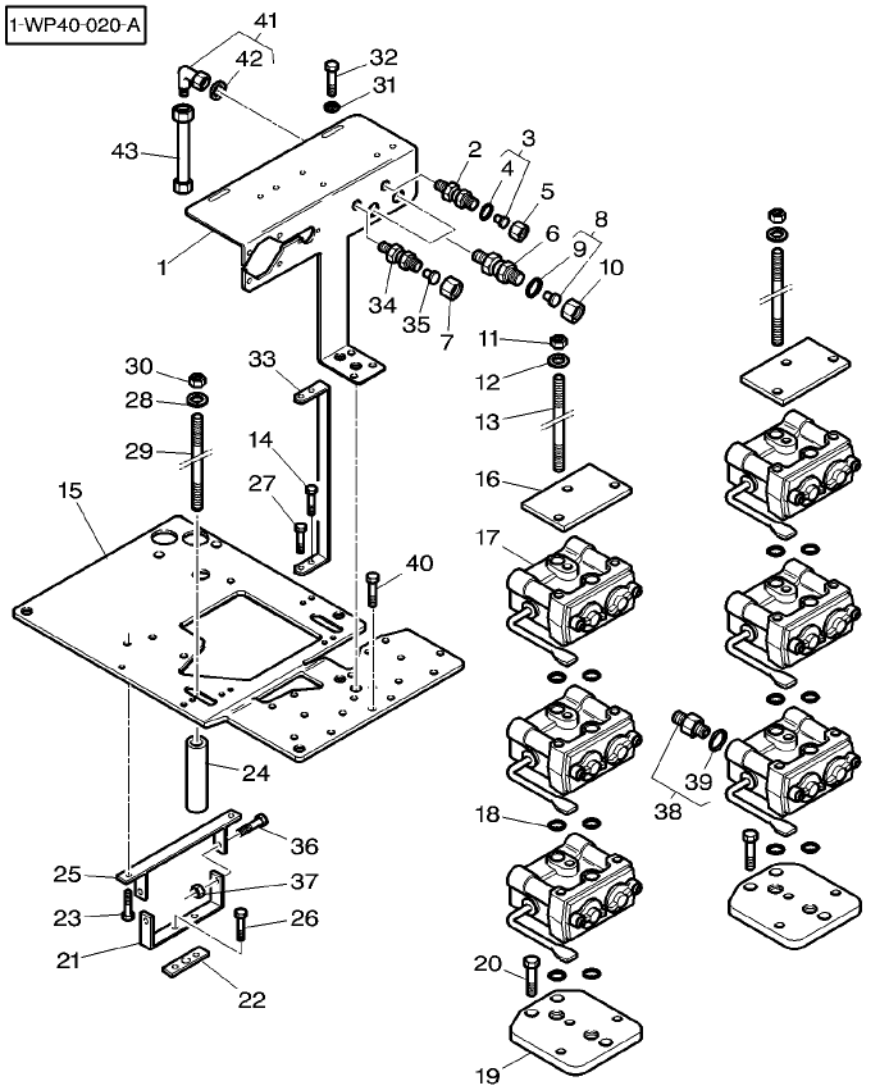

1	4276643M1		1	SUPPORT	SUPPORT SUPPORTO	LAGERUNG DISPOS.DE SOSTEN
2	3001317X1		1	UNION	RACCORD RACCORDO	VERSCHRAUBUNG RACOR
3	3011132X91		1	TAP	OBTURATEUR TAPPO*	HAHN GRIFO
4	3011145X1	3	1	O RING	JOINT TORIQUE ANELLO TENUTA	O–RING ANILLO FORMA 'O'
5	3011117X1		1	NUT	ECROU DADO	MUTTER TUERCA
6	3011404X91		2	UNION	RACCORD RACCORDO	VERSCHRAUBUNG RACOR
7	3011118X1		1	NUT	ECROU DADO	MUTTER TUERCA
8	3011138X91		2	TAP	OBTURATEUR TAPPO*	HAHN GRIFO
9	3011148X1	8	1	O RING	JOINT TORIQUE ANELLO TENUTA	O–RING ANILLO FORMA 'O'
10	3011120X1		2	NUT	ECROU DADO	MUTTER TUERCA
11	3005908X1		6	CAP NUT	ECROU BORGNE DADO A CAPPELLO	HUTMUTTER TUERCA DE TAPA
12	390972X1		6	WASHER	RONDELLE RONDELLA	UNTERLEGSCHEIBE ARANDELA
13	4275556M1	M8 X 245	6	STEM	TIGE STELO	STIEL VASTAGO
14	339228X1	M8 X 12	2	HEX. SOCK. SCREW	VIS TETE HEX VITE PARKER	ZYLINDERSCHRAUBE TORN.CAB.HUECA
15	4274562M1		1	SUPPORT	SUPPORT SUPPORTO	LAGERUNG DISPOS.DE SOSTEN
16	3792734M1		2	PLATE	PLAQUE PIASTRA	PLATTE PLATO
17	3796260M1	70–210 No 1	6	FEMALE COUPLER	COUPLEUR FEMELLE GIUNTO FEMMINA	KUPPLST.AUSSEN ACOPLADOR HEMBRA
18	3007432X1		16	O RING	JOINT TORIQUE ANELLO TENUTA	O–RING ANILLO FORMA 'O'
19	4274829M2		2	SUPPORT	SUPPORT SUPPORTO	LAGERUNG DISPOS.DE SOSTEN
20	3009285X1	M8 X 16	6	SCREW	VIS VITE	SCHRAUBE TORNILLO
21	4278264M1		1	SUPPORT	SUPPORT SUPPORTO	LAGERUNG DISPOS.DE SOSTEN
22	822100070411		1	GASKET	JOINT GUARNIZIONE	DICHTSCHEIBE EMPAQUETADURA.
23	339282X1	M10 X 16	2	HEX. SOCK. SCREW	VIS TETE HEX VITE PARKER	ZYLINDERSCHRAUBE TORN.CAB.HUECA
24	4274977M1		2	SPACER	ENTRETOISE DISTANZIALE	ABSTANDSTUECK DISCO ESPACIADOR
25	4278265M1		1	SUPPORT	SUPPORT SUPPORTO	LAGERUNG DISPOS.DE SOSTEN
26	339124X1	M8 X 16	2	HEX. SOCK. SCREW	VIS TETE HEX VITE PARKER	ZYLINDERSCHRAUBE TORN.CAB.HUECA

Hydraulic Coupling
Coupleur Hydraulique
Hydr. – Kupplung
Giunto Idraulico
Acoplador Hidraulico

70-205

6 Distributors Electrodynamique
6 Distributeurs Electro–Hydraulique
6 Verteilers Elektrodynamischer
6 Distributors Elettroidraulico
6 Distribuidors Electro–Hidraulico

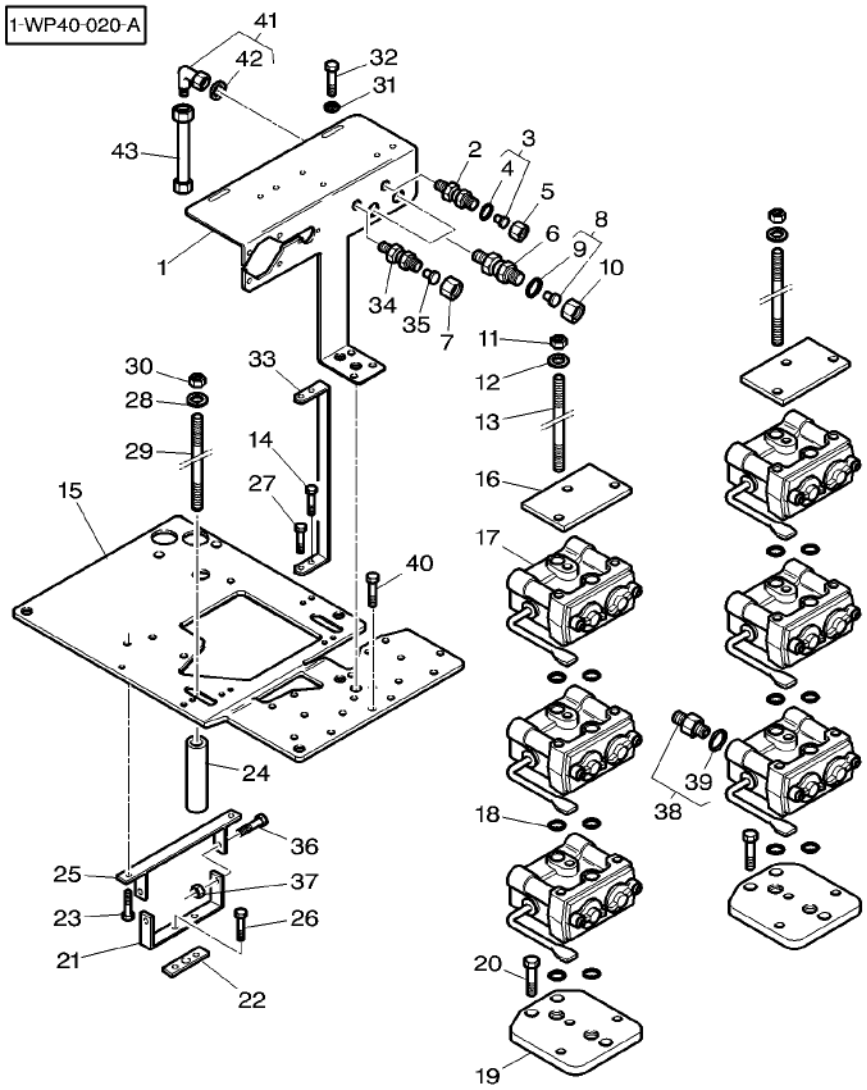

27	391074X1	M6 X 12	4	HEX. SOCK. SCREW	VIS TETE HEX VITE PARKER	ZYLINDERSCHRAUBE TORN.CAB.HUECA
28	390974X1		2	WASHER METRIC	RONDELLE METR. RONDELLA METRICO	SCHEIBE METRISCH ARANDELA METRICO
29	4276649M1		2	STEM	TIGE STELO	STIEL VASTAGO
30	3011390X1		2	NUT	ECROU DADO	MUTTER TUERCA
31	390971X1		4	WASHER	RONDELLE RONDELLA	UNTERLEGSCHEIBE ARANDELA
32	339230X1	M6 X 10	4	HEX. SOCK. SCREW	VIS TETE HEX VITE PARKER	ZYLINDERSCHRAUBE TORN.CAB.HUECA
33	4275580M1		2	SUPPORT	SUPPORT SUPPORTO	LAGERUNG DISPOS.DE SOSTEN
34	1442332X91		1	UNION	RACCORD RACCORDO	VERSCHRAUBUNG RACOR
35	3011134X91		1	TAP	OBTURATEUR TAPPO*	HAHN GRIFO
36	3009494X1	M10 X 35	2	HEX. SOCK. SCREW	VIS TETE HEX VITE PARKER	ZYLINDERSCHRAUBE TORN.CAB.HUECA
37	1441932X1	M10	2	NUT METRIC	ECROU METRIQUE DADO METRICO	MUTTER METRISCH TUERCA METRICO
38	3011534X91	M22	12	UNION	RACCORD RACCORDO	VERSCHRAUBUNG RACOR
39	3019398X1	38	1	O RING	JOINT TORIQUE ANELLO TENUTA	O–RING ANILLO FORMA 'O'
40	391990X1	M8 X 25	2	SCREW	VIS VITE	SCHRAUBE TORNILLO
41	3011084X91		1	UNION	RACCORD RACCORDO	VERSCHRAUBUNG RACOR
42	3011146X1	41	1	O RING	JOINT TORIQUE ANELLO TENUTA	O–RING ANILLO FORMA 'O'
43	4277192M1		1	TUBE	TUBE TUBO	ROHR TUBO

Hydraulic Coupling
Coupleur Hydraulique
Hydr. – Kupplung
Giunto Idraulico
Acoplador Hidraulico

70-210

1-WP40-015-A

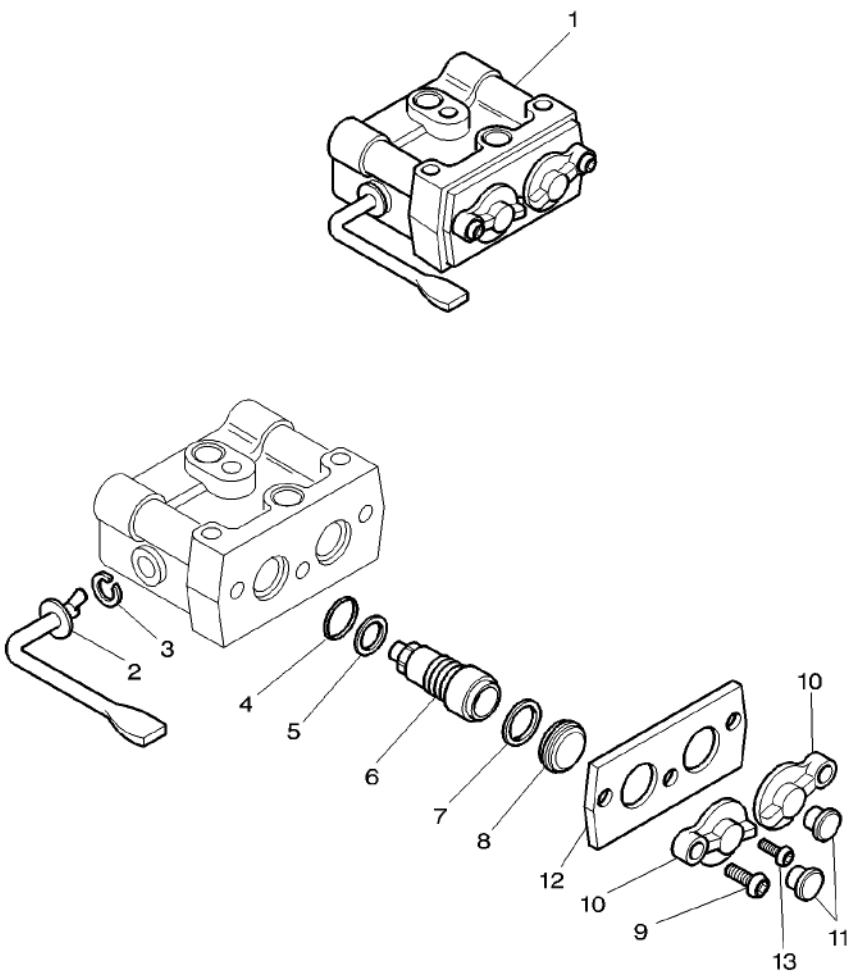

1	3796260M1		1	FEMALE COUPLER	COUPLEUR FEMELLE GIUNTO FEMMINA	KUPPLST.AUSSEN ACOPLADOR HEMBRA
2	3903463M91	1	1	LEVER	LEVIER LEVA	HEBEL PALANCA
3	3903462M1	1	1	CIRCLIP	CIRCLIP ANNELLO ELASTICO	SEEGERING GRAPA CIRCULAR
4	3903465M1	1	2	GASKET	JOINT GUARNIZIONE	DICHTSCHEIBE EMPAQUETADURA.
5	3903464M1	1	2	GASKET	JOINT GUARNIZIONE	DICHTSCHEIBE EMPAQUETADURA.
6	3903972M91	1 ⇨ 3903461M91	2	KIT, CARTRIDGE	JEU CARTOUCHES KIT CARTUCCIA	SATZ VENTILEINS JUEGO DE FILTROS
7	3903460M1	1	2	CLIP	PATTE D'ATTACHE FERMAGLIO	SCHELLE CLIP
8	3903459M1	1	2	SEAL	JOINT ETANCHEITE ANELLO RACCORD	DICHTRING ARENDELA D'JUNTA
9	3903455M1	1	2	SCREW	VIS VITE	SCHRAUBE TORNILLO
10	3903456M1	1	2	TAP	OBTURATEUR TAPPO*	HAHN GRIFO
11	3796263M1	[A]	2	PLUG	BOUCHON TAPPO	VERSCHL.STOPFEN TAPON
11	3796264M1	[B]	2	PLUG	BOUCHON TAPPO	VERSCHL.STOPFEN TAPON
11	3796262M1	[C]	2	PLUG	BOUCHON TAPPO	VERSCHL.STOPFEN TAPON
11	3796261M1	[D]	2	PLUG	BOUCHON TAPPO	VERSCHL.STOPFEN TAPON
11	4300879M1	[E]	2	PLUG	BOUCHON TAPPO	VERSCHL.STOPFEN TAPON
11	4300878M1	[F]	2	PLUG	BOUCHON TAPPO	VERSCHL.STOPFEN TAPON
12	3903458M1	1	1	PLATE	PLAQUE PIASTRA	PLATTE PLATO
13	3903457M1	1	1	SCREW	VIS VITE	SCHRAUBE TORNILLO

[A] BLACK
NOIR
SCHWARZ
NERO
NEGRO

[B] RED
ROUGE
ROT
ROSSO
ROJO

Hydraulic Coupling
Coupleur Hydraulique
Hydr. – Kupplung
Giunto Idraulico
Acoplador Hidraulico

70-210

1-WP40-015-A

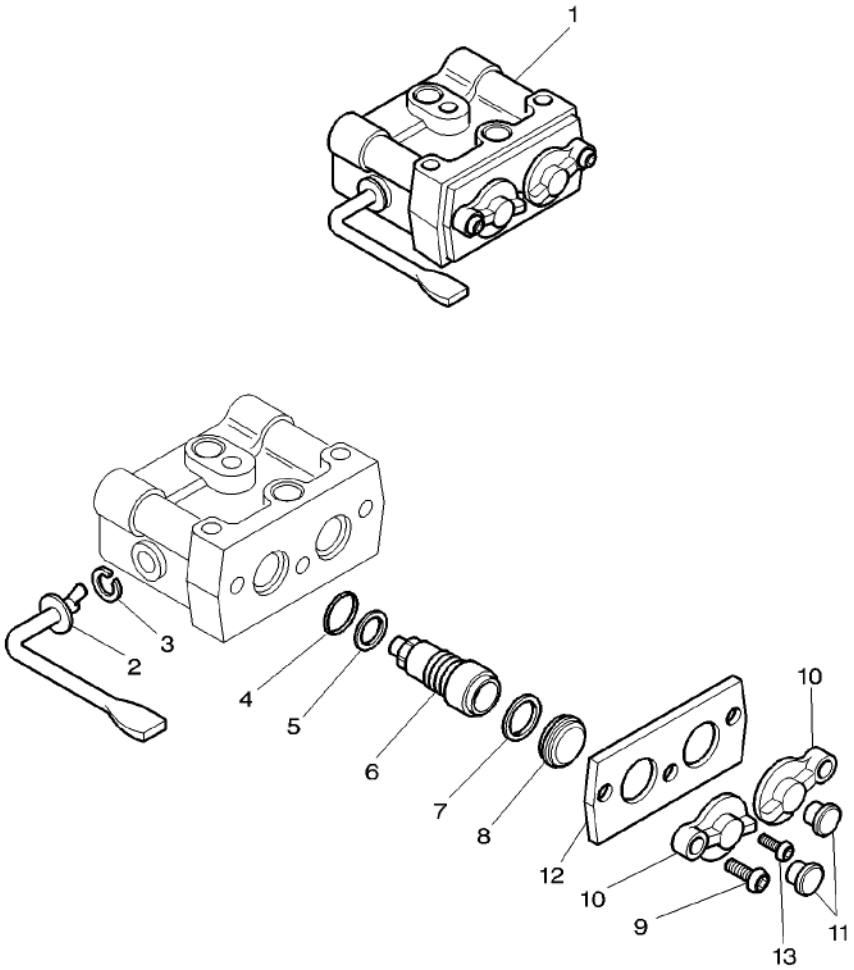

[C] GREEN
VERT
GRUEN
VERDE
VERDE

[D] YELLOW
JAUNE
GELB
GIALLO
AMARILLO

[E] BLUE
BLEU
BLAU
AZZURRO
AZUL

[F] BROWN
MARRON
BRAUN
MARRONE
MARON

Male Coupler
Coupleur Male
Kuppist.Innen
Guinto Maschio
Acoplador.Macho

70-215

1-WP43-001-A

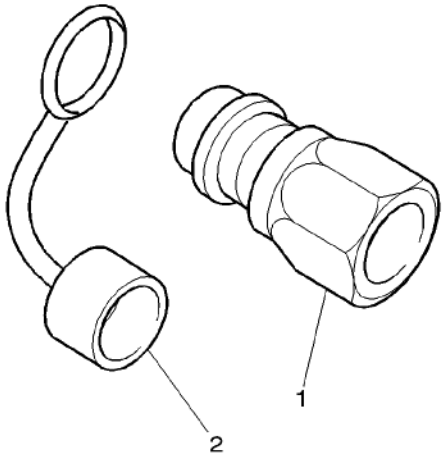

1	***3583932M1***	M18X1,5	X	MALE COUPLER	COUPLEUR MALE GIUNTO MASCHIO	KUPPLST.INNEN ACOPLADOR MACHO
1	***1026700M91***	3/4"	X	MALE COUPLER	COUPLEUR MALE GIUNTO MASCHIO	KUPPLST.INNEN ACOPLADOR MACHO
2	3615822M1		X	CAP	CHAPEAU CAPUCHON	KAPPE TAPA

Oil Recovery
Recuperation D'Huile
Olruckgewinnung
Recupero D'Olio
Recuperacion Del Aceite

70-220

1-WP41-019-A

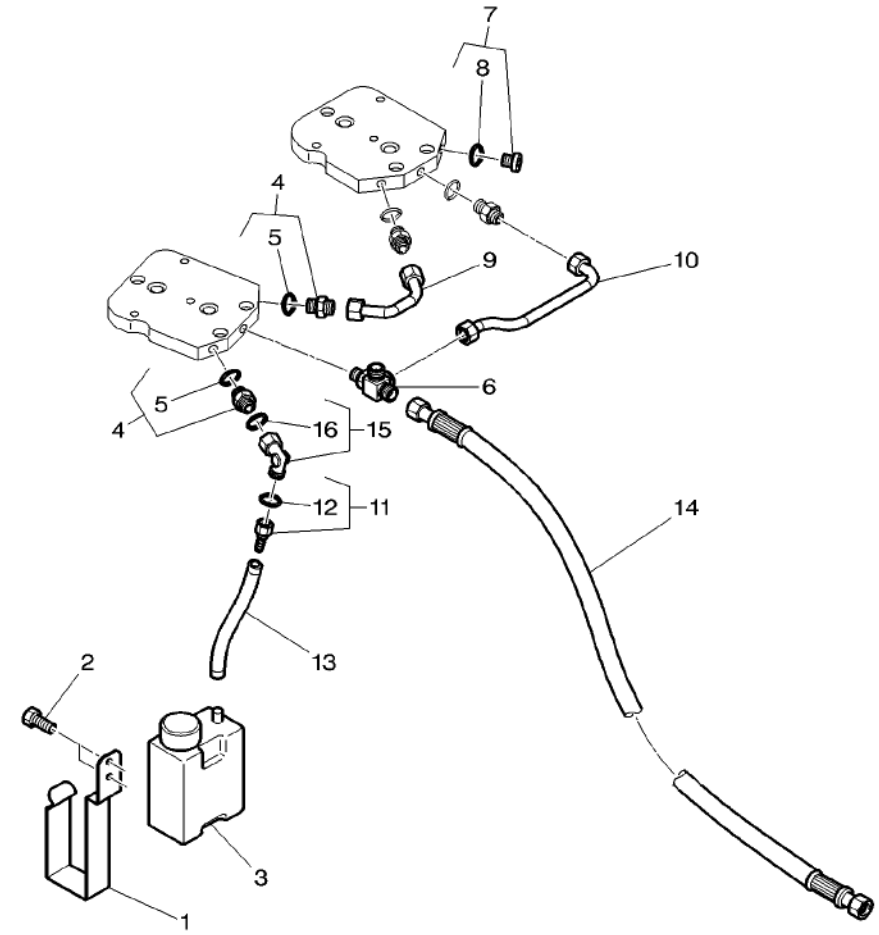

1	4274980M1		1	SUPPORT	SUPPORT SUPPORTO	LAGERUNG DISPOS.DE SOSTEN
2	390916X1	M6 X 8	2	HEX. SOCK. SCREW	VIS TETE HEX VITE PARKER	ZYLINDERSCHRAUBE TORN.CAB.HUECA
3	3794303M1		1	CAN	BIDON BIDONE	KANNE BIDON
4	338795X91	M14	4	UNION	RACCORD RACCORDO	VERSCHRAUBUNG RACOR
5	338762X1	4	1	SEAL	JOINT ETANCHEITE ANELLO RACCORD	DICHTRING ARENDELA D'JUNTA
6	4277193M1	M14	1	UNION	RACCORD RACCORDO	VERSCHRAUBUNG RACOR
7	3011099X91	M14X1,5	1	PLUG	BOUCHON TAPPO	VERSCHL.STOPFEN TAPON
8	338762X1	7	1	SEAL	JOINT ETANCHEITE ANELLO RACCORD	DICHTRING ARENDELA D'JUNTA
9	4274830M1		1	TUBE	TUBE TUBO	ROHR TUBO
10	4274831M2		1	TUBE	TUBE TUBO	ROHR TUBO
11	4274995M1		1	UNION	RACCORD RACCORDO	VERSCHRAUBUNG RACOR
12	**1441121X1**	11	1	O RING	JOINT TORIQUE ANELLO TENUTA	O-RING ANILLO FORMA 'O'
13*	4276166M2	◄► 210 MM	1	HYDR. HOSE	FLEXIBLE TUBOFLEX IDRAUL	HYDR. SCHLAUCH TUBO HIDRAULICO
14	4276167M1		1	HYDR. HOSE	FLEXIBLE TUBOFLEX IDRAUL	HYDR. SCHLAUCH TUBO HIDRAULICO
15	3011083X91	M16X1,5	1	UNION	RACCORD RACCORDO	VERSCHRAUBUNG RACOR
16	3011145X1	15	1	O RING	JOINT TORIQUE ANELLO TENUTA	O-RING ANILLO FORMA 'O'

Control With 5-6 Distributors Electrodynamique	**Module Fingertip**	**70-225**
Commande Avec 5-6 Distributeurs Electro -Hydraulique	**Module Fingertip**	
Antrieb Mit 5-6 Verteilers Elektrodynamischer	**Model Fingertip**	
Comandi Con 5-6 Distributors Eletttro-Idraulico	**Modulo Fingertip**	
Mando Con 5-6 Distribuidors Electro-Hydraulico	**Modulo Fingertip**	

1-WP67-001-A

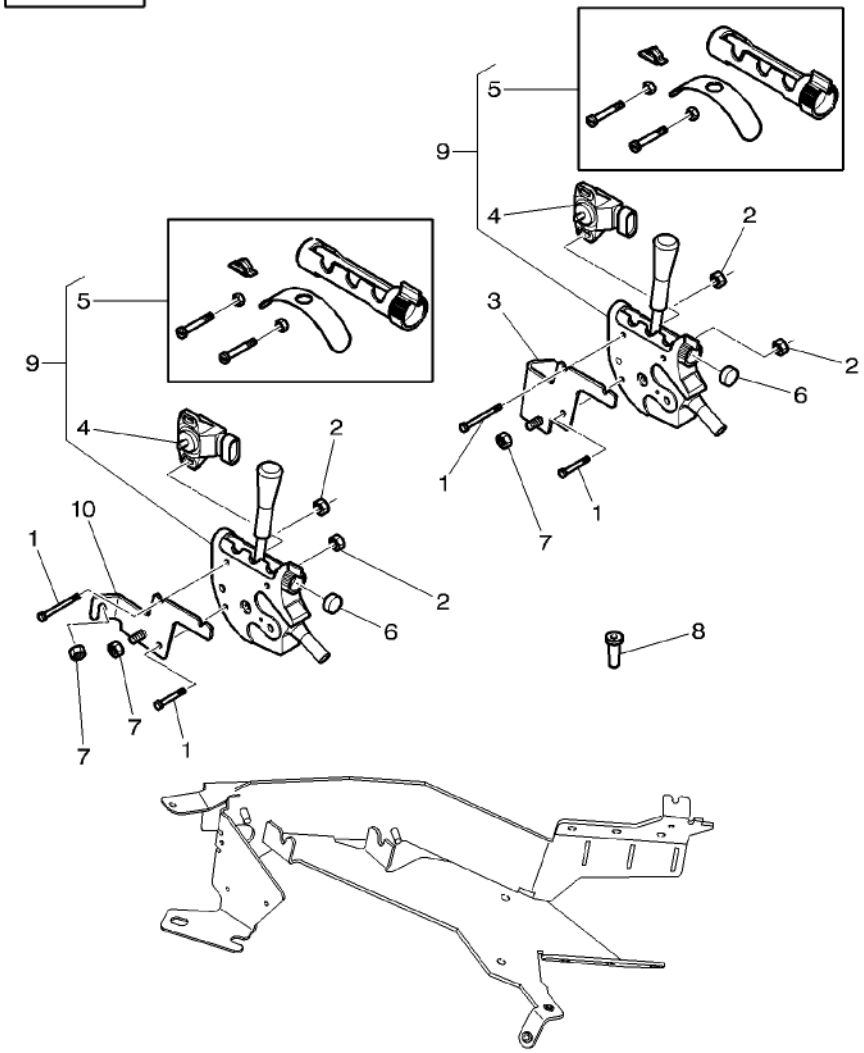

1	391244X1	M6 X 45	3	HEX. SOCK. SCREW	VIS TETE HEX VITE PARKER ZYLINDERSCHRAUBE TORN.CAB.HUECA
2	1441500X1	M6	3	LOCKNUT	ECROU BLOCAGE AUTOBLOCCANTE SICHERUNGSMUTTER CONTRATUERCA
3	4270720M2		1	PLATE CLAMPING	PLATINE PIASTRA APPOGGIO KLEMMPLATTE PLACA DE ABRAZO
4	***3797129M1***	9	1	POSITION SENSOR	CAPTEUR POSITION SENSORE DI POSIZ SENSOR SENSOR
5	3907279M91	9	1	PARTS PACK	JEU PIECES PACCO RICAMBI SATZ TEILE PAQUETE PIEZAS
6*	4279537M2	[B]	1	PADDING	PASTILLE IMBOTTITURA ABFEDERUNG RELLENO
6	3787600M2	[A]	1	PADDING	PASTILLE IMBOTTITURA ABFEDERUNG RELLENO
6	3787597M2	[C]	1	PADDING	PASTILLE IMBOTTITURA ABFEDERUNG RELLENO
6	3787596M2	[D]	1	PADDING	PASTILLE IMBOTTITURA ABFEDERUNG RELLENO
7	394367X1	M8	4	LOCKNUT	ECROU BLOCAGE AUTOBLOCCANTE SICHERUNGSMUTTER CONTRATUERCA
8	3787578M1		4	PLUG	BOUCHON TAPPO VERSCHL.STOPFEN TAPON
9	3787595M91		X	WOBBLE DRIVE	BOITIER COMMANDE GUIDA OSCILLANTE TAUMELANTRIEB MANDO OSCILANTE
10	4271369M2		1	PLATE CLAMPING	PLATINE PIASTRA APPOGGIO KLEMMPLATTE PLACA DE ABRAZO

[A] BLUE
BLEU
BLAU
AZZURRO
AZUL

[B] BROWN
MARRON
BRAUN
MARRONE
MARON

[C] BLACK
NOIR
SCHWARZ
NERO
NEGRO

[D] YELLOW
JAUNE
GELB
GIALLO
AMARILLO

80

Instrument Panel And Instruments Tableau De Bord Et Instruments Armaturenbrett Und Armaturen Pannello Strumenti E Strumenti Panel De Instrumentos Con Indicapores	80-5	With Dot Matrix Avec Dot Matrix Mit Dot Matrix Con Dot Matrix Con Dot Matrix

1-WC15-001-C

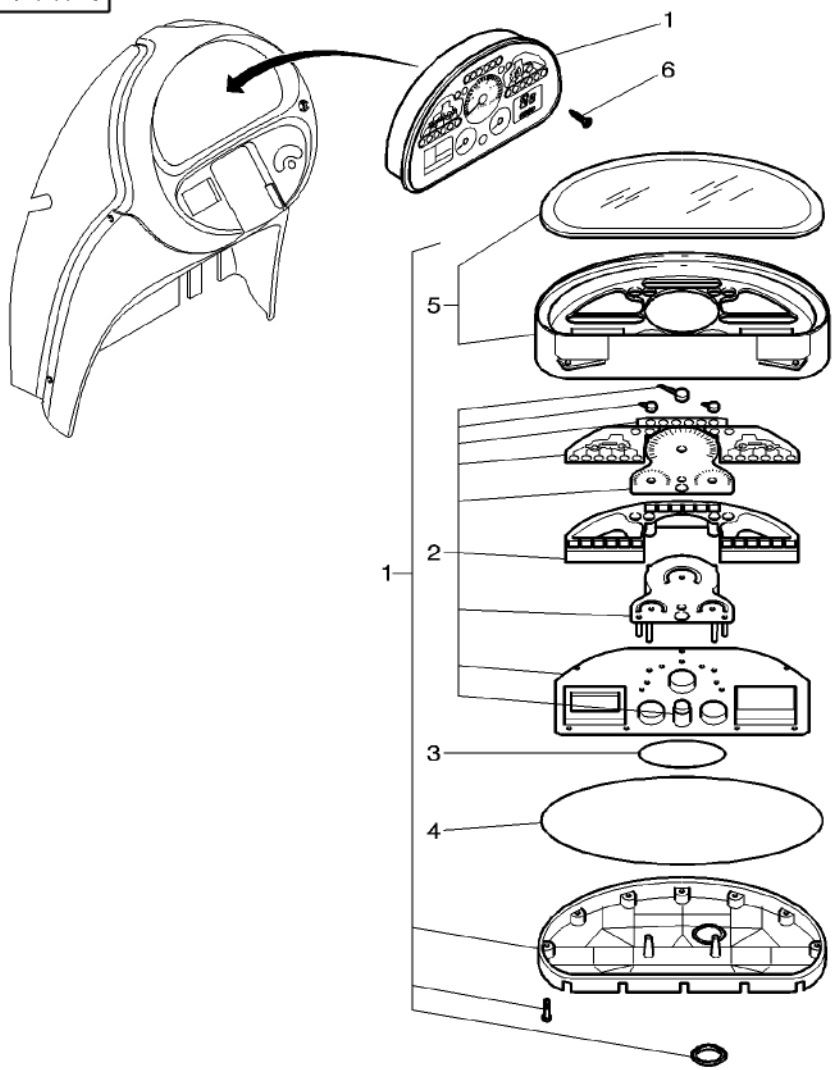

1	3787409M93		1	INSTRUMENT PANEL	TABLEAU DE BORD PANNELLO STRUMEN	ARMATURENBRETT PANEL INSTRUMENT
2		1 REF. 1	1	PRINTED CIRCUIT	CIRCUIT IMPRIME CIRCUITO STAMP.	GEDRUCKTESCHALTG CIRCUITO IMPRESO
3	3907246M1	1	1	GASKET	JOINT GUARNIZIONE	DICHTSCHEIBE EMPAQUETADURA.
4	3907247M1	1	1	GASKET	JOINT GUARNIZIONE	DICHTSCHEIBE EMPAQUETADURA.
5*	3907532M91	1	1	PANEL	PANNEAU PANNELLO	VERKL.BLECH PANELAJE
6	3010791X1	M4 X 20	4	SCREW	VIS VITE	SCHRAUBE TORNILLO

Electric Equipment & Instrument Panel
Equipement Electrique Et Tableau De Bord
Elektr.-Anlage Und Instr.-Breh
Impianto Elettrico E Cruscotto
Equipo Electrico Y Tablero De Instrumentos

80-10

1-WU21-001-B

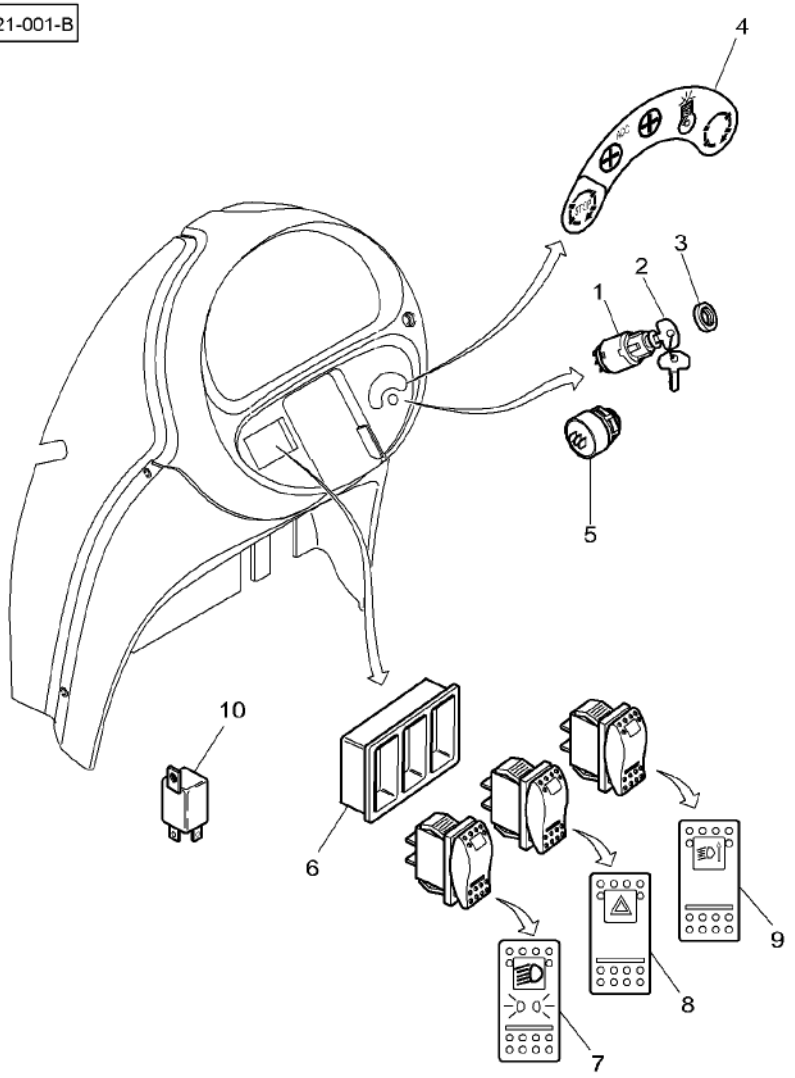

1	3779699M1	1	SWITCH,INDIRECT	CONTACTEUR INTERRUTTORE IND	KONTAKTSCHALTER CONTACTOR
2*	***4271358M1***	1	IGNITION KEY	CLE DE CONTACT CHIAVE CONTATTO	ZUENDSCHLUESSEL LLAVE CONTACTO
3	1694534M1	1	NUT	ECROU DADO	MUTTER TUERCA
4	4271558M1	1	DECAL	DECALCOMANIE DECALCOMANIA	AUFKLEBER CALCOMANIA
5	**3713367M1**	1	HORN	AVERTISSEUR AVVISATORE ACUST	HUPE BOCINA
6	3809798M1	1	HOUSING	CARTER CARCASSA	GEHAEUSE ALOJAMIENTO
7	***4271342M1***	1	SWITCH,INDIRECT	CONTACTEUR INTERRUTTORE IND	KONTAKTSCHALTER CONTACTOR
8	***4271916M2***	1	SWITCH,INDIRECT	CONTACTEUR INTERRUTTORE IND	KONTAKTSCHALTER CONTACTOR
9*		X	NOT USED	NON UTILISE INUSATO	NICHT VERWENDET NO SE USA
10*		X	NOT USED	NON UTILISE INUSATO	NICHT VERWENDET NO SE USA

Side Console Switches
Interrupteurs Console Laterale
Seitenkonsole Schalter
Interrupttores De La Pannello Laterale
Interruptores Del Consola Lateral

80-15

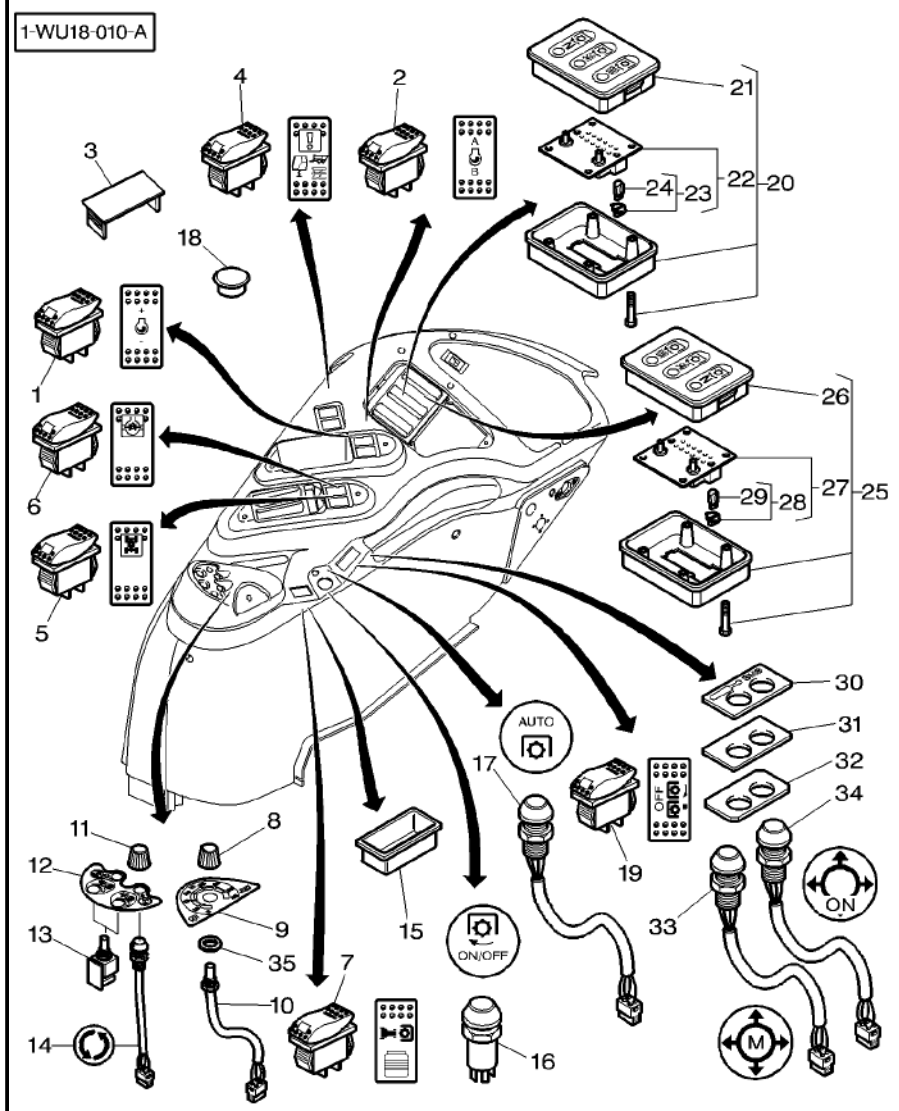

1	***4271346M1***	+/–	**1**	SWITCH,INDIRECT	CONTACTEUR INTERRUTTORE IND	KONTAKTSCHALTER CONTACTOR
2	***4271347M1***	A/B	**1**	SWITCH,INDIRECT	CONTACTEUR INTERRUTTORE IND	KONTAKTSCHALTER CONTACTOR
3	3713151M1		**X**	TAP	OBTURATEUR TAPPO*	HAHN GRIFO
4	***4271351M2***		**1**	SWITCH,INDIRECT	CONTACTEUR INTERRUTTORE IND	KONTAKTSCHALTER CONTACTOR
5	***4271349M2***		**1**	SWITCH,INDIRECT	CONTACTEUR INTERRUTTORE IND	KONTAKTSCHALTER CONTACTOR
6	***4271348M2***		**1**	SWITCH,INDIRECT	CONTACTEUR INTERRUTTORE IND	KONTAKTSCHALTER CONTACTOR
7	***3783086M1***		**1**	SWITCH,INDIRECT	CONTACTEUR INTERRUTTORE IND	KONTAKTSCHALTER CONTACTOR
8	4273261M1		**1**	BUTTON	BOUTON BOTTONE	KNOPFTASTE BOTON
9	4271338M2		**1**	DECAL	DECALCOMANIE DECALCOMANIA	AUFKLEBER CALCOMANIA
10	4270162M2		**1**	POTENTIOMETER	POTENTIOMETRE POTENZIOMETRO	POTENTIOMETER REGULADOR ELECT.
11	4273260M1		**2**	BUTTON	BOUTON BOTTONE	KNOPFTASTE BOTON
12	4271337M2		**1**	DECAL	DECALCOMANIE DECALCOMANIA	AUFKLEBER CALCOMANIA
13	3788160M2		**2**	METER	COMPTEUR METRO	MESSINSTRUMENT MEDIDOR
14	3789331M1		**2**	SWITCH	INTERRUPTEUR INTERRUTTORE	SCHALTER INTERRUPTOR
15	4271925M1		**1**	SUPPORT	SUPPORT SUPPORTO	LAGERUNG DISPOS.DE SOSTEN
16	***4271992M2***		**1**	SWITCH,INDIRECT	CONTACTEUR INTERRUTTORE IND	KONTAKTSCHALTER CONTACTOR
17	***4270755M1***		**1**	SWITCH,INDIRECT	CONTACTEUR INTERRUTTORE IND	KONTAKTSCHALTER CONTACTOR
18	3784237M1		**1**	PLUG	BOUCHON TAPPO	VERSCHL.STOPFEN TAPON
19*	***4271353M2***		**1**	SWITCH,INDIRECT	CONTACTEUR INTERRUTTORE IND	KONTAKTSCHALTER CONTACTOR
20	4277367M2	750/1000 RPM	**1**	CONSOLE	CONSOLE CONSOLE	KONSOLE CONSOLA
21	3907423M91	20	**1**	CASE ASSY	BOITIER CARCASSA COMPLET	GEHAEUSE KPL CAJA COMPLETA
22		20 REF. 20	**1**	PRINTED CIRCUIT	CIRCUIT IMPRIME CIRCUITO STAMP.	GEDRUCKTESCHALTG CIRCUITO IMPRESO
23	3713385M1	22	**2**	LAMP SOCKET	PORTE LAMPE PORTA LAMPADA	LAMPENFASSUNG PORTA LAMPARA
24	***3405185M1***	23	**1**	BULB 12V 1.2W	AMPOULE 12V 1.2W BULBO 12V 1,2W	GLUEHL 12V 1.2W BOMBILLA 12V1,2W
25*	4277366M2	540/1000 RPM	**1**	CONSOLE	CONSOLE CONSOLE	KONSOLE CONSOLA
26	3907422M91	25	**1**	CASE ASSY	BOITIER CARCASSA COMPLET	GEHAEUSE KPL CAJA COMPLETA

Side Console Switches
Interrupteurs Console Laterale
Seitenkonsole Schalter
Interrupttores De La Pannello Laterale
Interruptores Del Consola Lateral

80-15

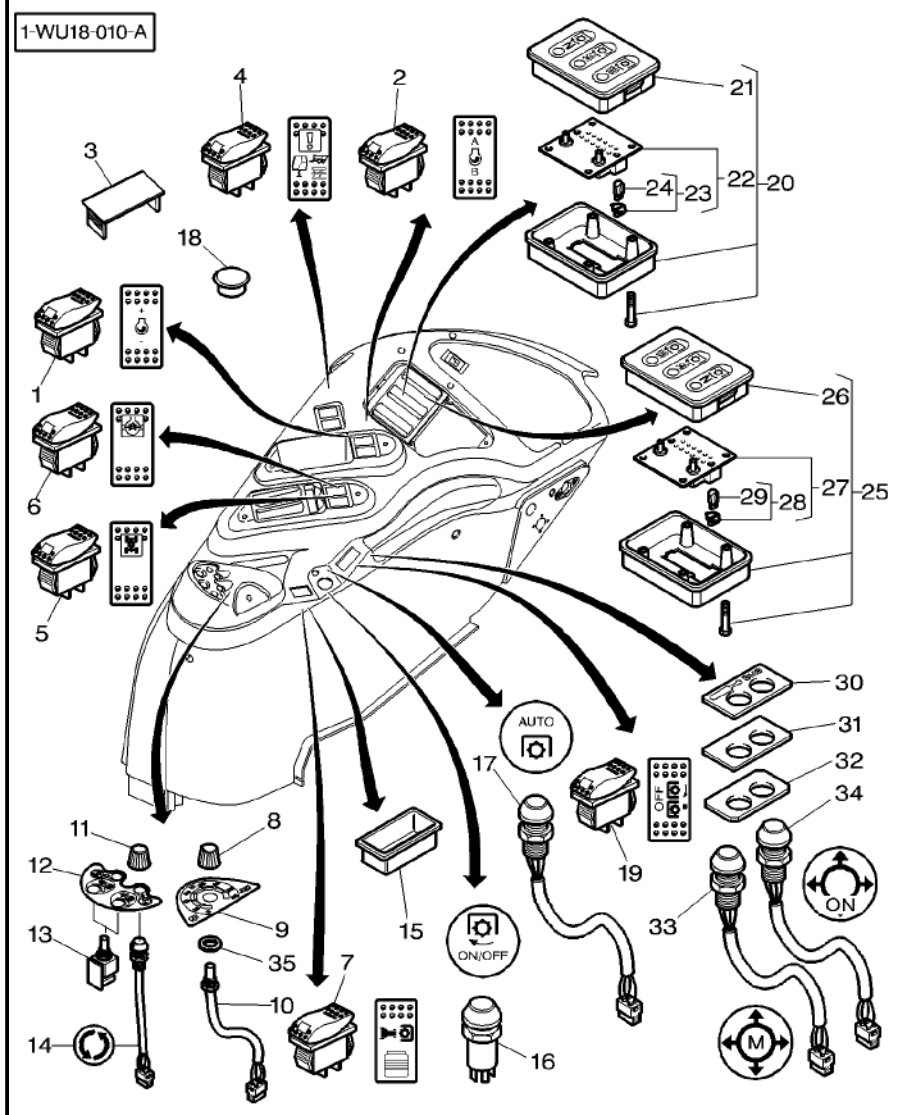

27		25	REF. 25	1	PRINTED CIRCUIT	CIRCUIT IMPRIME CIRCUITO STAMP.	GEDRUCKTESCHALTG CIRCUITO IMPRESO
28	3713385M1	27		2	LAMP SOCKET	PORTE LAMPE PORTA LAMPADA	LAMPENFASSUNG PORTA LAMPARA
29	***3405185M1***	28		1	BULB 12V 1.2W	AMPOULE 12V 1.2W BULBO 12V 1,2W	GLUEHL 12V 1.2W BOMBILLA 12V1,2W
30	4279054M1			1	DECAL	DECALCOMANIE DECALCOMANIA	AUFKLEBER CALCOMANIA
31	4279044M1			1	PLATE	PLAQUE PIASTRA	PLATTE PLATO
32	4279046M1			1	SUPPORT	SUPPORT SUPPORTO	LAGERUNG DISPOS.DE SOSTEN
33	4271759M1			1	SWITCH,INDIRECT	CONTACTEUR INTERRUTTORE IND	KONTAKTSCHALTER CONTACTOR
34	4271760M1			1	SWITCH,INDIRECT	CONTACTEUR INTERRUTTORE IND	KONTAKTSCHALTER CONTACTOR
35	**3619096M1**		∅ 10,5 X 32	1	WASHER	RONDELLE RONDELLA	UNTERLEGSCHEIBE ARANDELA

External Controls Fitted On The Rear Fenders
Commandes Externes Montee Sur Les Ailes Arrieres
Aussenschaltung Auf Die Kotfluegel
Commando Esterno Sopra Il Parafangos
Mando Externo Sobre El Guadabarros

80-20

1-WU22-001-C

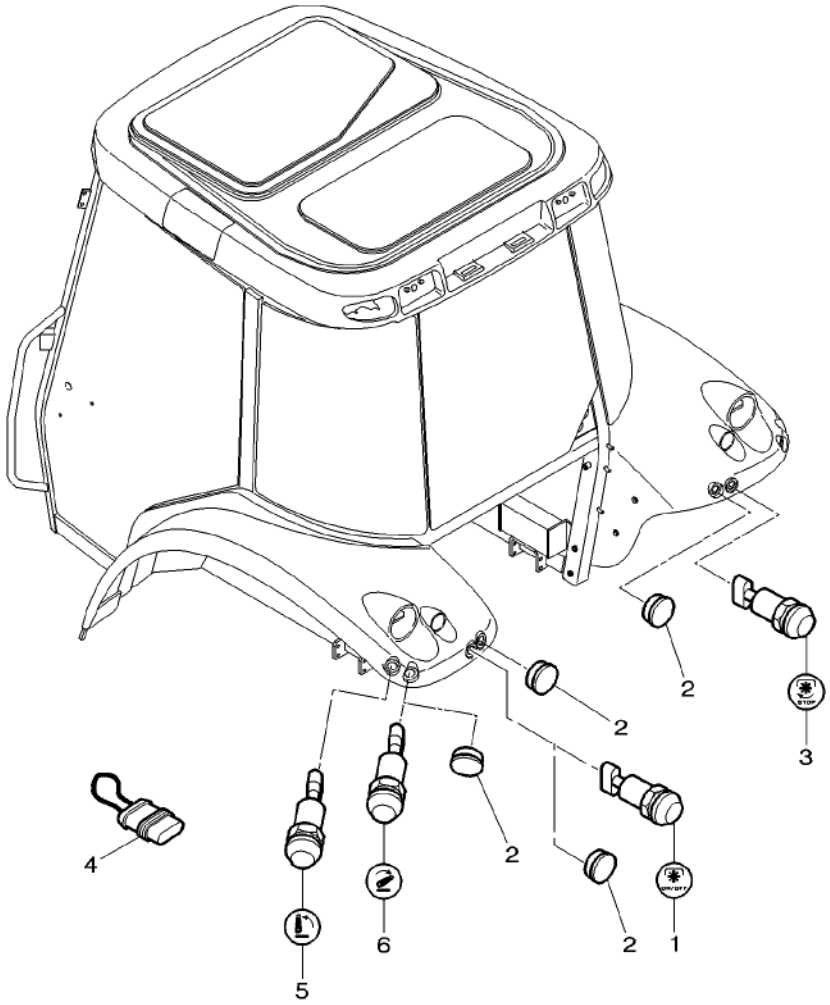

1	***4271992M2***		X	SWITCH,INDIRECT	CONTACTEUR INTERRUTTORE IND	KONTAKTSCHALTER CONTACTOR
2	4274755M2	∅ 31 MM	X	PLUG	BOUCHON TAPPO	VERSCHL.STOPFEN TAPON
3	4276343M2	US	1	SWITCH,INDIRECT	CONTACTEUR INTERRUTTORE IND	KONTAKTSCHALTER CONTACTOR
4	3782172M1		1	WIRE	FIL CAVO ELETTRICO	DRAHT HILO
5	***4270313M2***	[A]	2	SWITCH,INDIRECT	CONTACTEUR INTERRUTTORE IND	KONTAKTSCHALTER CONTACTOR
6	***4270312M2***	[B]	2	SWITCH,INDIRECT	CONTACTEUR INTERRUTTORE IND	KONTAKTSCHALTER CONTACTOR

[A] UP
MONTEE
GESTIEGEN
SALITA
SUBIDA

[B] DOWN
DESCENTE
HERABSTEIGEN
DISCESA
BAJADA

Engine Harness
Faisceau Moteur
Kabelnezt Motor
Fasciocavi Di Motore
Haz De Hilos De Motor

80-25

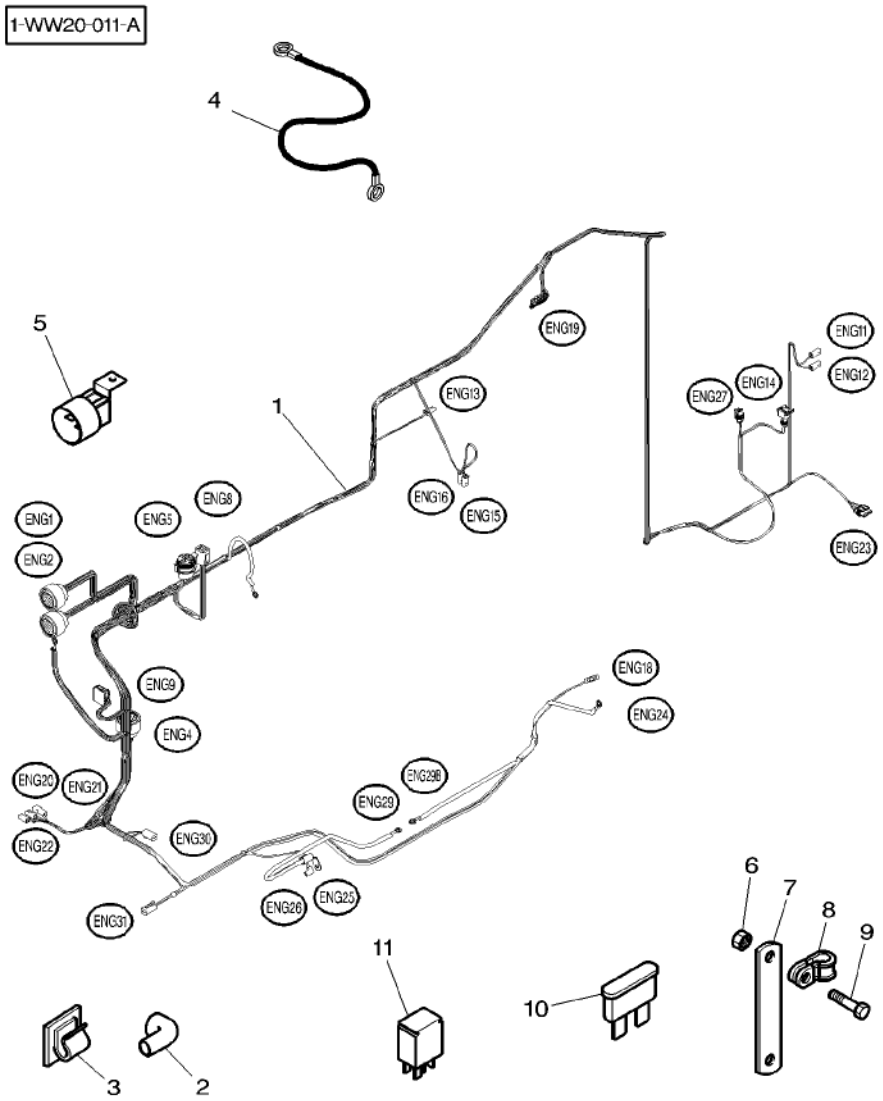

1	4278184M93		1 HARNESS	FAISCEAU FASCIOCAVI	KABELBAUM MAZO CABLES
2	3784666M1		1 HELMET	CAPUCHON CASCO	SCHUTZHELM CASCO
3	3582094M1		24 TIE	ATTACHE TRAVERSA ATTACCO	KUPPL.STANGE BARRA DE ENLACE
4	3712175M2	◄► 400 MM	1 WIRE	FIL CAVO ELETTRICO	DRAHT HILO
5	***3779879M1***	12V – 50A	2 RELAY	RELAIS RELE	RELAIS RELE
6	339169X1	M8	1 NUT	ECROU DADO	MUTTER TUERCA
7	3778841M2		1 STRAP	PATTE CORREGGIA	LASCHE FAJA
8	3010808X1	∅ 40 – M8	1 CLIP	PATTE D'ATTACHE FERMAGLIO	SCHELLE CLIP
9	339123X1	M8 X 20	1 HEX. SOCK. SCREW	VIS TETE HEX VITE PARKER	ZYLINDERSCHRAUBE TORN.CAB.HUECA
10	***4271799M1***	5 AMP	3 FUSE	FUSIBLE VALVOLINA	SICHERUNG FUSIBLE
10	***4271801M1***	10 AMP	2 FUSE	FUSIBLE VALVOLINA	SICHERUNG FUSIBLE
10	***4271802M1***	15 AMP	2 FUSE	FUSIBLE VALVOLINA	SICHERUNG FUSIBLE
11	***4272431M1***	12V – 10/20A 4RD 007 814–01	4 RELAY	RELAIS RELE	RELAIS RELE

Instrument Panel Harness
Faisceau Tableau De Bord
Kabelnezt Instrumentenbrett
Fasciocavi Di Cruscoto
Haz De Hilos Panel De Instrumentos

80-30

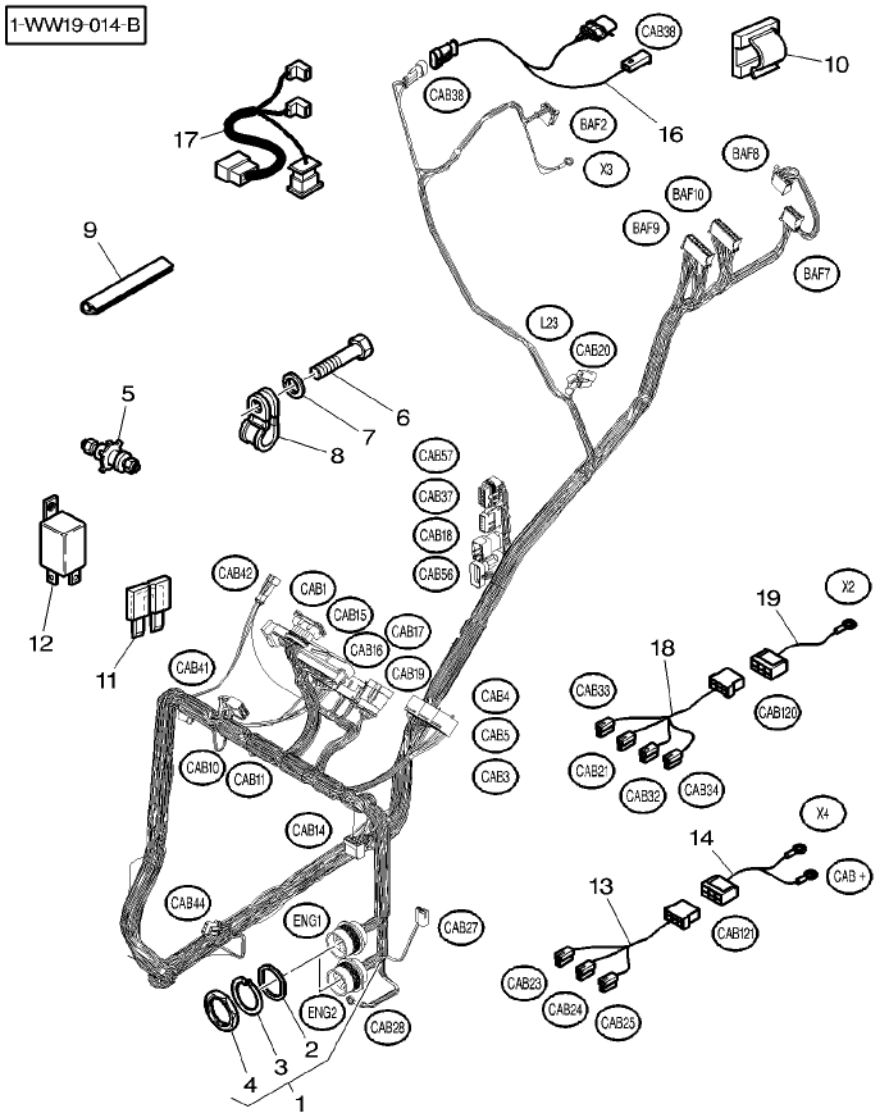

1	4276766M91		1	HARNESS	FAISCEAU FASCIOCAVI KABELBAUM MAZO CABLES
2	3013355X1	1	1	SEAL	JOINT ETANCHEITE ANELLO RACCORD DICHTRING ARENDELA D'JUNTA
3	3013354X1	1	1	WASHER	RONDELLE RONDELLA UNTERLEGSCHEIBE ARANDELA
4	3013353X1	1	1	NUT	ECROU DADO MUTTER TUERCA
5	72500822		1	TERMINAL	TERMINAL. TERMINALE TERMINAL TERMINAL
6	390992X1	M8 X 50	1	HEX. SOCK. SCREW	VIS TETE HEX VITE PARKER ZYLINDERSCHRAUBE TORN.CAB.HUECA
7	22428X		1	LOCK WASHER	RONDELLE FREIN ROSETTA DENTELL. FEDERRING ARANDELA GROWER
8	3581424M1	∅ 25 MM	1	CLIP	PATTE D'ATTACHE FERMAGLIO SCHELLE CLIP
9	3580695M1	[A] ◄► 1600 MM	1	GASKET	JOINT GUARNIZIONE DICHTSCHEIBE EMPAQUETADURA.
10	3760697M1		1	TIE	ATTACHE TRAVERSA ATTACCO KUPPL.STANGE BARRA DE ENLACE
11	***4271801M1***	10 AMP	1	FUSE	FUSIBLE VALVOLINA SICHERUNG FUSIBLE
11	***4271842M1***	40 AMP	1	FUSE	FUSIBLE VALVOLINA SICHERUNG FUSIBLE
12	***4272431M1***	12V – 10/20A 4RD 007 814–01	1	RELAY	RELAIS RELE RELAIS RELE
13	4276768M91		1	HARNESS	FAISCEAU FASCIOCAVI KABELBAUM MAZO CABLES
14	4277434M91		1	HARNESS	FAISCEAU FASCIOCAVI KABELBAUM MAZO CABLES
15	4278720M1	[B]	14	TIE	ATTACHE TRAVERSA ATTACCO KUPPL.STANGE BARRA DE ENLACE
16	4279691M1	[C]	1	HARNESS	FAISCEAU FASCIOCAVI KABELBAUM MAZO CABLES
17	3783857M1		1	HARNESS	FAISCEAU FASCIOCAVI KABELBAUM MAZO CABLES
18	4276769M91		1	HARNESS	FAISCEAU FASCIOCAVI KABELBAUM MAZO CABLES
19	4277205M91	◄► 630 MM	1	HARNESS	FAISCEAU FASCIOCAVI KABELBAUM MAZO CABLES

[A] CUT TO REQUIRED LENGTH
COUPER A LA LONGEUR DESIREE
BENOETIGTE LAENGE ABSCHNEIDEN
TAGLIARE A LUNGHEZZA RICHIESTA
CORTAR A LA LONGITUD NECESARIA

[B] NOT ILLUSTRATED
NON ILLUSTRE
NICHT ABGEBILDET
NO ILLUSTRADO
NO ILLUSTRADED

Instrument Panel Harness
Faisceau Tableau De Bord
Kabelnezt Instrumentenbrett
Fasciocavi Di Cruscoto
Haz De Hilos Panel De Instrumentos

80-30

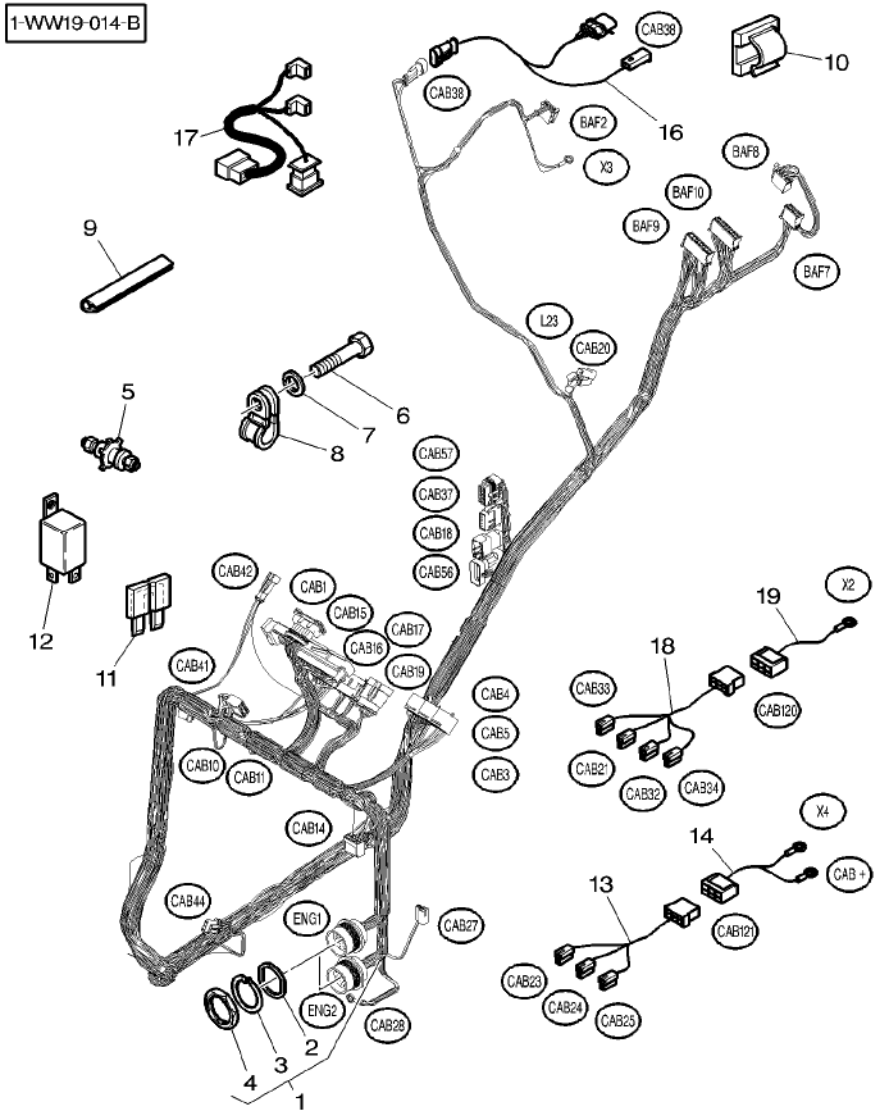

[C] AUTOMATIC AIR CONDITIONER
CLIMATISEUR AUTOMATIQUE
AUTOMATISCH KLIMAANLAGE
CONDIZIONATORE DI ARIA AUTOMATICO
ACONDICIONADOR DE AIRE AUTOMATICO

Instrument Panel Harness	**Armrest**	**80-35**	**Fingertip**
Faisceau Tableau De Bord	**Accoudoir**		**Fingertip**
Kabelnezt Instrumentenbrett	**Armlehne**		**Fingertip**
Fasciocavi Di Cruscoto	**Bracciolo**		**Fingertip**
Haz De Hilos Panel De Instrumentos	**Reposa Brazos**		**Fingertip**

1-WW18-004-A

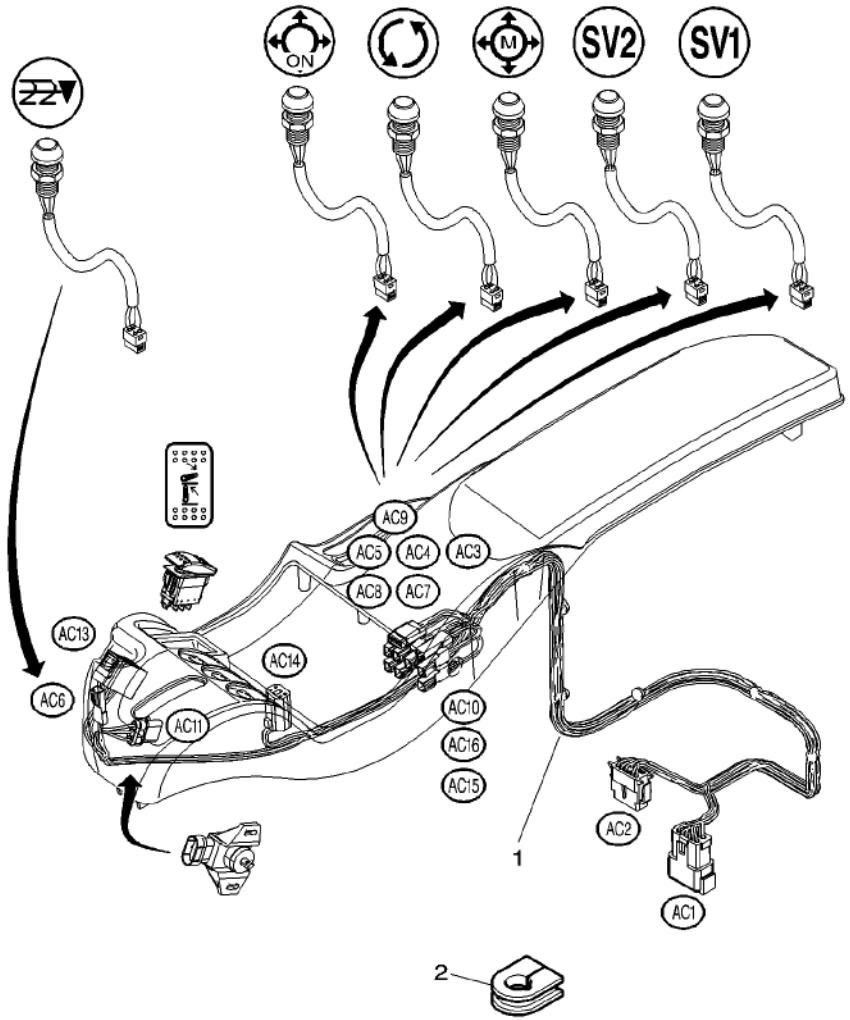

1	4277900M1		**1** HARNESS	FAISCEAU FASCIOCAVI	KABELBAUM MAZO CABLES
2	4271408M2	∅ 19MM	**1** GROMMET	PASSE FIL ANELLO PASSACAVO	GUMMITUELLE PASACABLE

Plate Relay & Fuse Holder
Platine Porte Fusibles & Relais
Relais & Sicherung Halter Platte
Placa Porta Rele & Fusibile
Placa Porta Rele & Fusibile

80-40

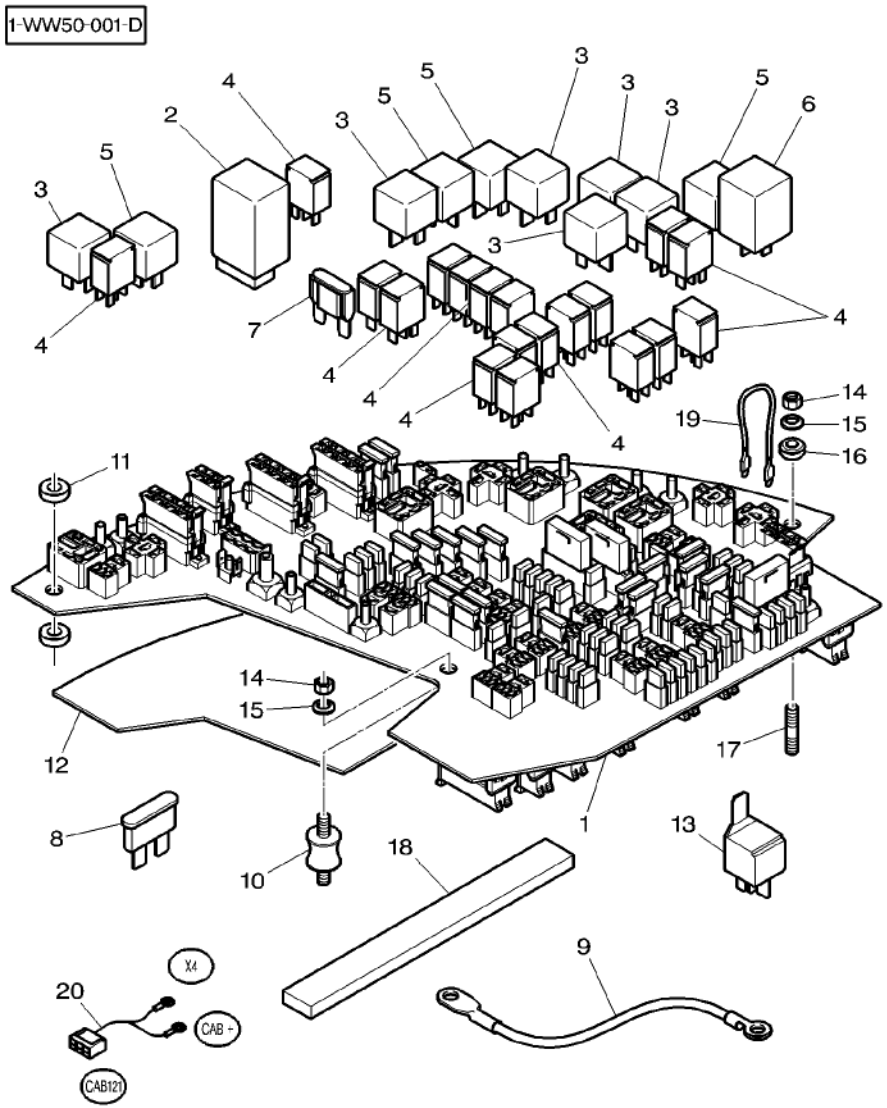

1*	4275903M92	[D]	1	PLATE CLAMPING	PLATINE PIASTRA APPOGGIO KLEMMPLATTE PLACA DE ABRAZO
2	***4271990M1***		1	BLINKER	CENTRALE CLIGNOT LAMPEGGIATORE BLINKGERAET INTERMITENTE
2*	***4271989M1***	(US)	1	BLINKER	CENTRALE CLIGNOT LAMPEGGIATORE BLINKGERAET INTERMITENTE
3	***4270844M1***	[E] 12V 4RA 007 793-03	X	RELAY	RELAIS RELE RELAIS RELE
4	***4272431M1***	[E] 12V 10/20A 4RD 007 814-01	X	RELAY	RELAIS RELE RELAIS RELE
5	***4272432M1***	[E] 12V 4RD 007 794-02	X	RELAY	RELAIS RELE RELAIS RELE
6	***4271991M1***		1	RELAY	RELAIS RELE RELAIS RELE
7	***4271803M1***	[E] 50 AMP ◀▶ 29,2MM	1	FUSE	FUSIBLE VALVOLINA SICHERUNG FUSIBLE
8	***4271799M1***	[E] 5 AMP ◀▶ 11,2MM	X	FUSE	FUSIBLE VALVOLINA SICHERUNG FUSIBLE
8	***4271800M1***	[E] 7.5 AMP ◀▶ 11,2MM	X	FUSE	FUSIBLE VALVOLINA SICHERUNG FUSIBLE
8	***4271801M1***	[E] 10 AMP ◀▶ 11,2MM	X	FUSE	FUSIBLE VALVOLINA SICHERUNG FUSIBLE
8	***4271802M1***	15 AMP ◀▶ 11,2MM	X	FUSE	FUSIBLE VALVOLINA SICHERUNG FUSIBLE
8	***3580868M1***	[E] 3 AMP ◀▶ 19,5 MM	X	FUSE	FUSIBLE VALVOLINA SICHERUNG FUSIBLE
8	3387321M1	15 AMP ◀▶ 19,5 MM	X	FUSE	FUSIBLE VALVOLINA SICHERUNG FUSIBLE
8	***3780003M1***	[E] 20 AMP ◀▶ 19MM	X	FUSE	FUSIBLE VALVOLINA SICHERUNG FUSIBLE
8	***3387322M1***	[E] 25 AMP ◀▶ 19MM	X	FUSE	FUSIBLE VALVOLINA SICHERUNG FUSIBLE
8	***3712661M1***	[E] 30 AMP ◀▶ 19MM	X	FUSE	FUSIBLE VALVOLINA SICHERUNG FUSIBLE
8	***4271842M1***	40 AMP ◀▶ 29,2MM	X	FUSE	FUSIBLE VALVOLINA SICHERUNG FUSIBLE
9*	4272011M1	[A] ◀▶ 580 MM ∅ 10 + 8	1	HARNESS	FAISCEAU FASCIOCAVI KABELBAUM MAZO CABLES

Plate Relay & Fuse Holder
Platine Porte Fusibles & Relais
Relais & Sicherung Halter Platte
Placa Porta Rele & Fusibile
Placa Porta Rele & Fusibile

80-40

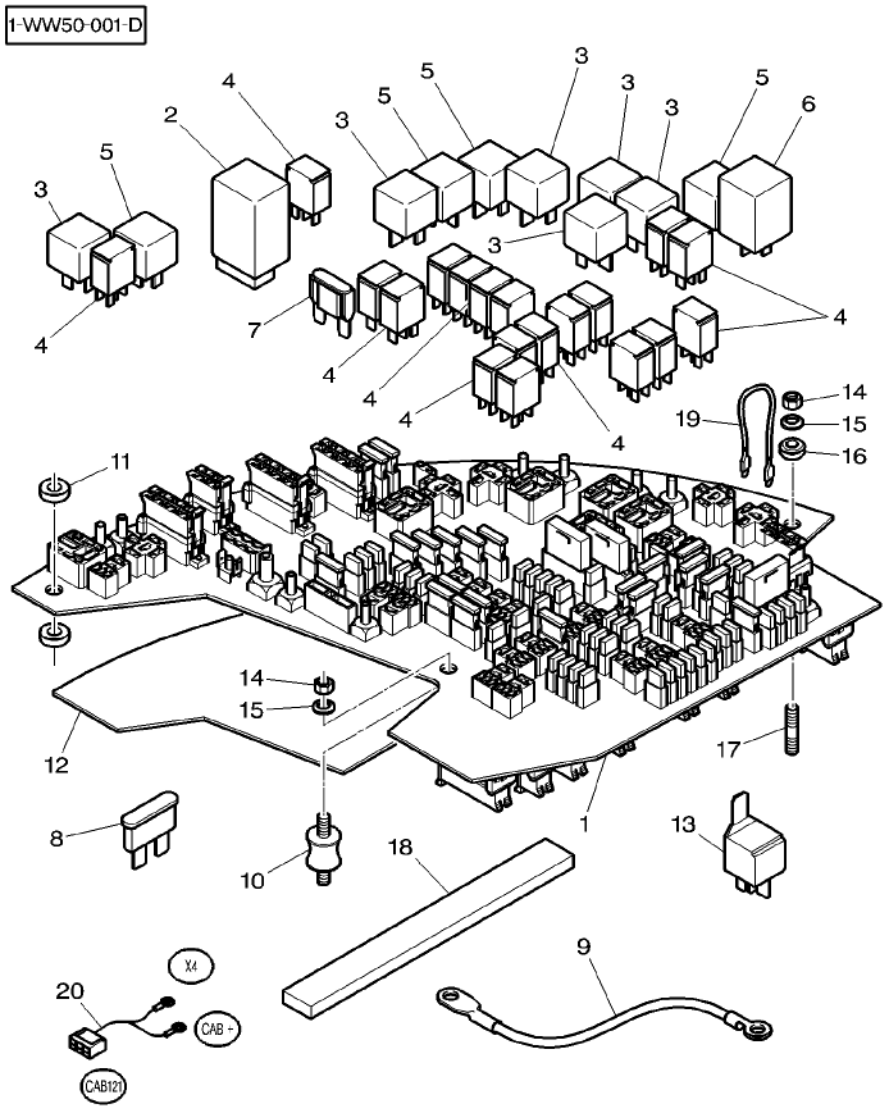

9*	3787520M2	[B] ◀▶ 610 MM ∅ 10 + 10	1 HARNESS	FAISCEAU FASCIOCAVI	KABELBAUM MAZO CABLES
9	4275698M1	[A] ◀▶ 2000 MM ∅ 8 + 8	1 CABLE	CABLE CAVO	KABEL CABLE
9	4277435M91	[A] ◀▶ 390 MM ∅ 10 + 8	1 HARNESS	FAISCEAU FASCIOCAVI	KABELBAUM MAZO CABLES
10	4271913M1		1 DOWEL	PLOT SPINA	ZYLINDERSTIFT CENTRAJE
11*	4271914M1		1 WASHER	RONDELLE RONDELLA	UNTERLEGSCHEIBE ARANDELA
12	4273612M1		1 FOAM	MOUSSE GOMMAPIUMA	SCHAUMSTOFF ESPUMA
13	***3387326M2***	12V–50A 4RA 007 793–04	1 RELAY	RELAIS RELE	RELAIS RELE
14*	339030X1	M6	3 NUT METRIC	ECROU METRIQUE DADO METRICO	MUTTER METRISCH TUERCA METRICO
14	1441500X1	[C] M6	1 LOCKNUT	ECROU BLOCAGE AUTOBLOCCANTE	SICHERUNGSMUTTER CONTRATUERCA
15*	391038X1		3 WASHER	RONDELLE RONDELLA	UNTERLEGSCHEIBE ARANDELA
16*	3814812M1		2 GROMMET	PASSE FIL ANELLO PASSACAVO	GUMMITUELLE PASACABLE
17*	3019057X1	M6 X 30	1 STUD	GOUJON PRIGIONIERO	STEHBOLZEN CHAVETA ROSCADO
17*	3019056X1	M6 X 25	1 STUD	GOUJON PRIGIONIERO	STEHBOLZEN CHAVETA ROSCADO
18	4277850M1	◀▶ 865 X 7 X 4	1 GASKET	JOINT GUARNIZIONE	DICHTSCHEIBE EMPAQUETADURA.
19*	4276825M1	◀▶ 100 MM ➡| N051053	1 WIRE	FIL CAVO ELETTRICO	DRAHT HILO
20*			1 NOT USED	NON UTILISE INUSATO	NICHT VERWENDET NO SE USA

[A] BLACK
NOIR
SCHWARTZ
NERO
NEGRO

[B] RED
ROUGE
ROT
ROSSO
ROJA

[C] CHECK NUT
ECROU AUTOFREINE
MUTTER SELBST BREMST
DADO AUTOFREINAR
TUERCA AUTOFREINAR

Plate Relay & Fuse Holder
Platine Porte Fusibles & Relais
Relais & Sicherung Halter Platte
Placa Porta Rele & Fusibile
Placa Porta Rele & Fusibile

80-40

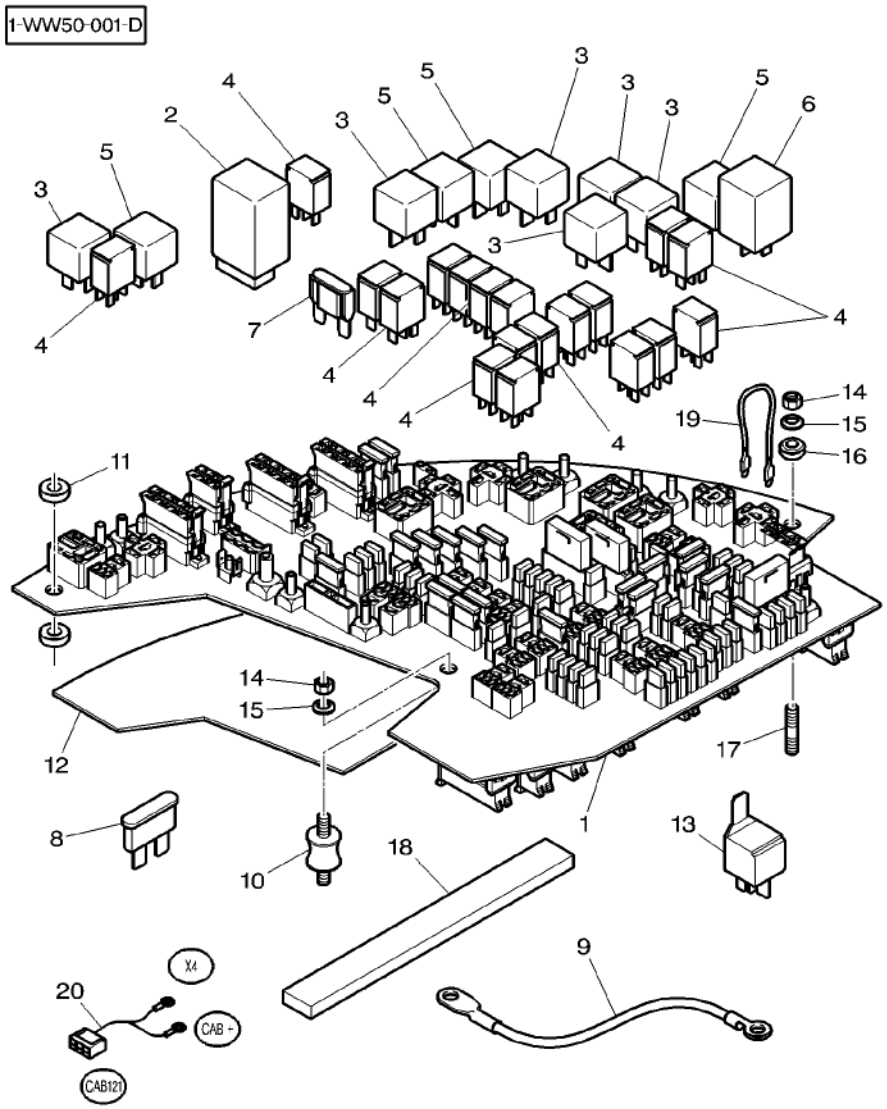

[D] PREEQUIPED PLATE CLAMPING
PLATINE PRE-EQUIPEE
VORKAUSRUEST KLEMMPLATTE
PIASTRA APPOGGIO PREEQUIP
PLACA DE ABRAZO PREEQUIP

[E] BELONGS TO ASSEMBLY 4275903M91
COMPRIS DANS L'ENSEMBLE 4275903M91
GEHOERT ZUR MONTAGEGRUPPE 4275903M91
APPARTENENTI AL COMPLESSIVO 4275903M91
APARTENECE AL GRUPO MONTAJE 4275903M91

Roof Harness
Faisceau Plafond
Kabelnezt Dach
Fasciocavi Di Tetto
Haz De Hilos De Techo

80-45

N344027

1-WW22-006-C

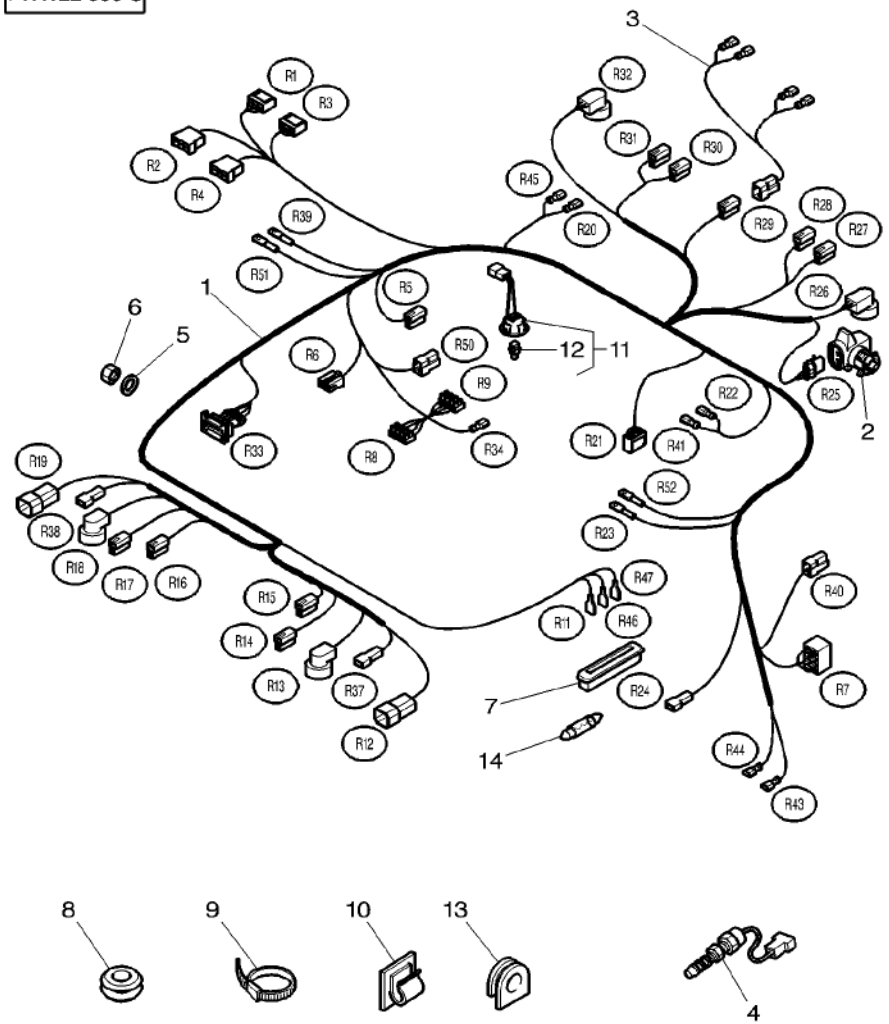

1	4277254M91		1	HARNESS	FAISCEAU FASCIOCAVI
2	3714264M1	[A]	1	TRANSMITTER	TRANSMETTEUR TRASMETTITORE
3	3787513M91		1	HARNESS	FAISCEAU FASCIOCAVI
4	***3780395M2***		1	SWITCH,INDIRECT	CONTACTEUR INTERRUTTORE IND
5	3001856X1	∅ 4–12 X 1,1	X	WASHER	RONDELLE RONDELLA
6	3019139X1	M4	X	NUT	ECROU DADO
7	3385820M1		1	ROOF LIGHT	PLAFONNIER PLAFONIERA
8	367439X1	∅ 15–25	1	GROMMET	PASSE FIL ANELLO PASSACAVO
8	3714694M1	∅ 7–21	1	GROMMET	PASSE FIL ANELLO PASSACAVO
9	3619622M1		X	CABLE TIE	ATTACHE CABLE FASCETTA CAVI
10	1677803M1		3	CLIP	PATTE D'ATTACHE FERMAGLIO
11	3786673M1	[B]	1	ROOF LIGHT	PLAFONNIER PLAFONIERA
12	***3907271M1***	11	1	BULB 12V 5W	AMPOULE 12V 5W BULBO 12V 5W
13	3387555M1	∅ 11 MM	1	GROMMET	PASSE FIL ANELLO PASSACAVO
14	***3385821M1***		1	BULB 12V 10W	AMPOULE 12V 10W BULBO 12V 10W

KABELBAUM MAZO CABLES		
UEBERTRAEGER TRANSMISOR		
KABELBAUM MAZO CABLES		
KONTAKTSCHALTER CONTACTOR		
UNTERLEGSCHEIBE ARANDELA		
MUTTER TUERCA		
DECKENLEUCHTE LUZ INTERIOR		
GUMMITUELLE PASACABLE		
GUMMITUELLE PASACABLE		
KABELBINDER APRIETACABLES		
SCHELLE CLIP		
DECKENLEUCHTE LUZ INTERIOR		
GLUEHL 12V 5W BOMBILLA 12V 5W		
GUMMITUELLE PASACABLE		
GLUEHL 12V 10W BOMBILLA 12V 10W		

[A] TEMPERATURE SENSOR
SONDE DE TEMPERATURE
TEMPERATURSENSOR
SENSORE DI TEMPERATURA
CAPTADOR DETEMPERATURA

[B] CONSOLE READING LAMP
ECLAIREUR DE CONSOLE
BELEUCHTUNG KONSOLE
ILLUMINAZIONE MENSOLA
ALUMBRADO CONSOLA

Roof Harness
Faisceau Plafond
Kabelnezt Dach
Fasciocavi Di Tetto
Haz De Hilos De Techo

80-50

N344028

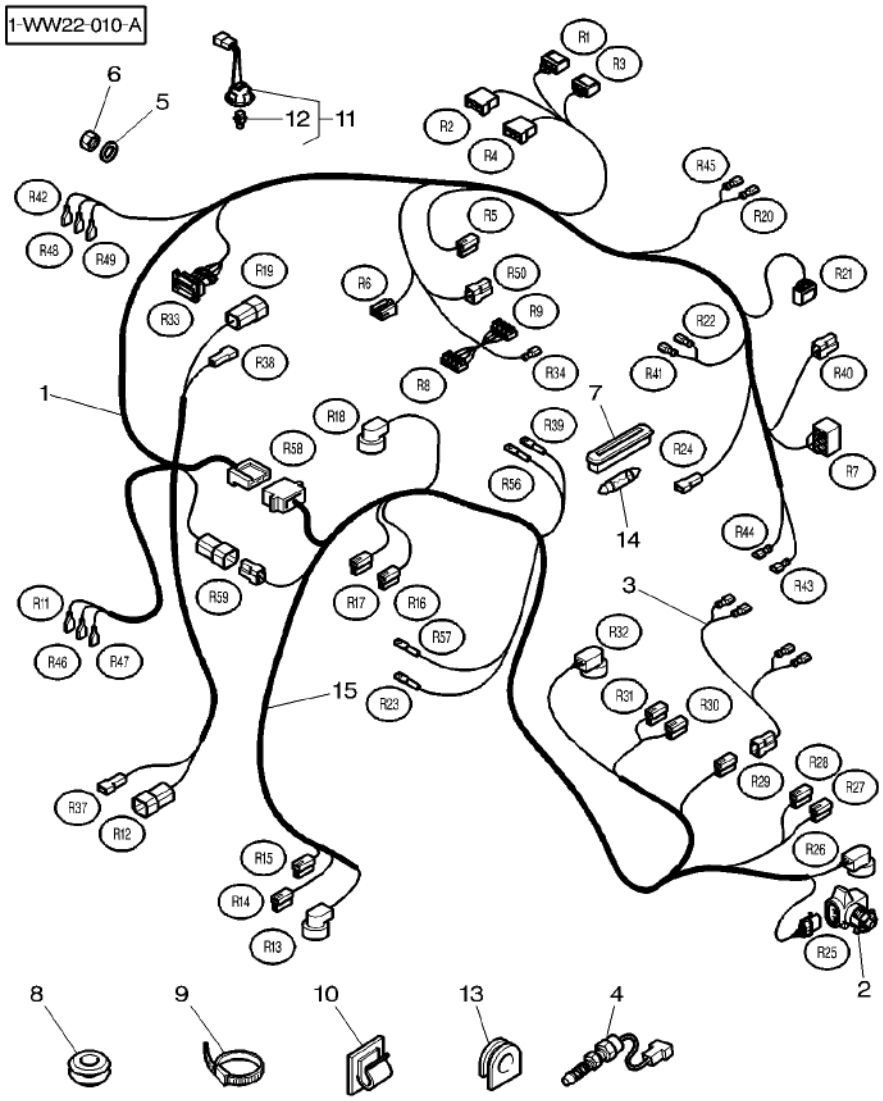

1	4277269M91		1	HARNESS	FAISCEAU FASCIOCAVI
2	3714264M1	[A]	1	TRANSMITTER	TRANSMETTEUR TRASMETTITORE
3	3787513M91		1	HARNESS	FAISCEAU FASCIOCAVI
4	***3780395M2***		1	SWITCH,INDIRECT	CONTACTEUR INTERRUTTORE IND
5	3001856X1	∅ 4–12 X 1,1	X	WASHER	RONDELLE RONDELLA
6	3019139X1	M4	X	NUT	ECROU DADO
7	3385820M1		1	ROOF LIGHT	PLAFONNIER PLAFONIERA
8	367439X1	∅ 15–25	1	GROMMET	PASSE FIL ANELLO PASSACAVO
8	3714694M1	∅ 7–21	1	GROMMET	PASSE FIL ANELLO PASSACAVO
9	3619622M1		X	CABLE TIE	ATTACHE CABLE FASCETTA CAVI
10	1677803M1		3	CLIP	PATTE D'ATTACHE FERMAGLIO
11	3786673M1	[B]	1	ROOF LIGHT	PLAFONNIER PLAFONIERA
12	***3907271M1***	11	1	BULB 12V 5W	AMPOULE 12V 5W BULBO 12V 5W
13	3387555M1	∅ 11 MM	1	GROMMET	PASSE FIL ANELLO PASSACAVO
14	***3385821M1***		1	BULB 12V 10W	AMPOULE 12V 10W BULBO 12V 10W
15	4277271M91		1	HARNESS	FAISCEAU FASCIOCAVI

		KABELBAUM MAZO CABLES	
		UEBERTRAEGER TRANSMISOR	
		KABELBAUM MAZO CABLES	
		KONTAKTSCHALTER CONTACTOR	
		UNTERLEGSCHEIBE ARANDELA	
		MUTTER TUERCA	
		DECKENLEUCHTE LUZ INTERIOR	
		GUMMITUELLE PASACABLE	
		GUMMITUELLE PASACABLE	
		KABELBINDER APRIETACABLES	
		SCHELLE CLIP	
		DECKENLEUCHTE LUZ INTERIOR	
		GLUEHL 12V 5W BOMBILLA 12V 5W	
		GUMMITUELLE PASACABLE	
		GLUEHL 12V 10W BOMBILLA 12V 10W	
		KABELBAUM MAZO CABLES	

[A] TEMPERATURE SENSOR
SONDE DE TEMPERATURE
TEMPERATURSENSOR
SENSORE DI TEMPERATURA
CAPTADOR DETEMPERATURA

[B] CONSOLE READING LAMP
ECLAIREUR DE CONSOLE
BELEUCHTUNG KONSOLE
ILLUMINAZIONE MENSOLA
ALUMBRADO CONSOLA

Pillar Harness
Faisceau De Pilier
Kabelnezt Der Kabinesaeule
Fasciocavi Di Montante
Haz De Hilos De Montante

80-55

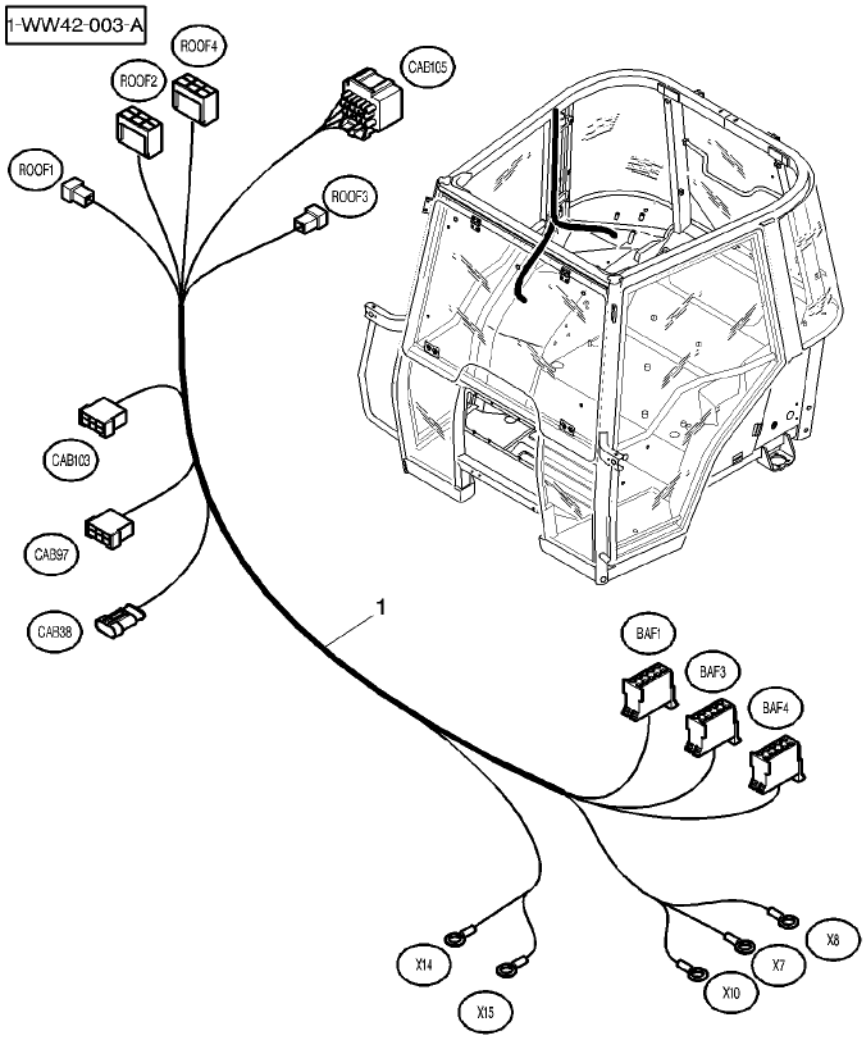

1 * 4278258M92	➡ N328016	1 HARNESS	FAISCEAU FASCIOCAVI	KABELBAUM MAZO CABLES
1 * 4278258M93	➡ N328017	1 HARNESS	FAISCEAU FASCIOCAVI	KABELBAUM MAZO CABLES
1 * 4278258M92	US ➡ P004002	1 HARNESS	FAISCEAU FASCIOCAVI	KABELBAUM MAZO CABLES
1 * 4278258M93	US ➡ P004003	1 HARNESS	FAISCEAU FASCIOCAVI	KABELBAUM MAZO CABLES

Front Lightning Harness
Faisceau Eclairage Avant
Vorne Kabelnezt Beleuchtung
Fasciocavi Anteriore Di Illuminazione
Haz De Hilos Delantero De Iluminacion

80-60

US

1-WW44-003-A

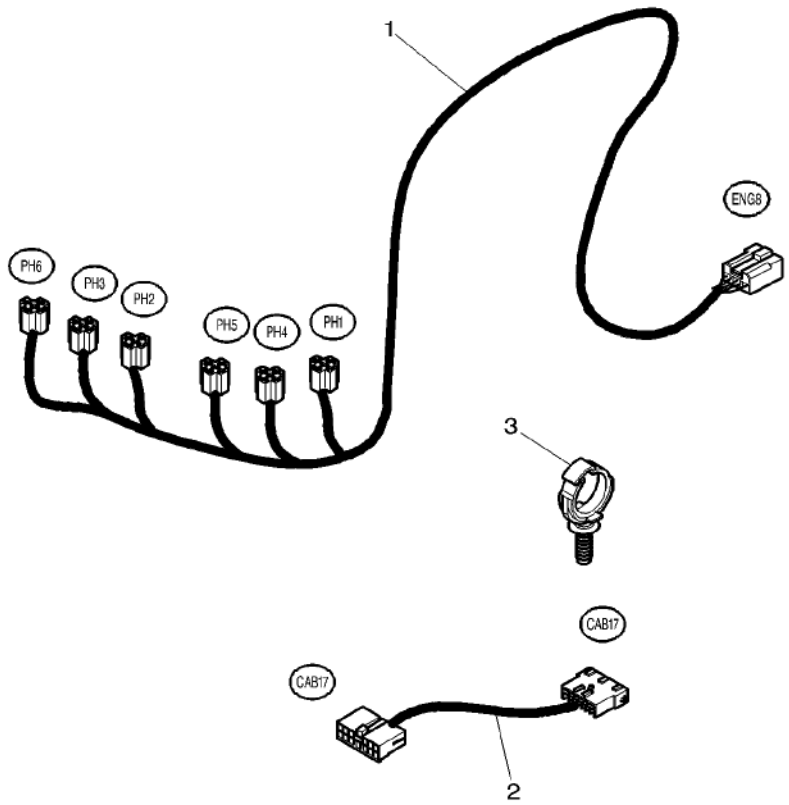

1	4278403M91		1 HARNESS	FAISCEAU FASCIOCAVI	KABELBAUM MAZO CABLES
2	4278937M91	◀▶ 150 MM	1 WIRE	FIL CAVO ELETTRICO	DRAHT HILO
3	4280260M1		5 TIE	ATTACHE TRAVERSA ATTACCO	KUPPL.STANGE BARRA DE ENLACE

Front Lightning Harness
Faisceau Eclairage Avant
Vorne Kabelnezt Beleuchtung
Fasciocavi Anteriore Di Illuminazione
Haz De Hilos Delantero De Iluminacion

80-65

EE

1-WW44-004-A

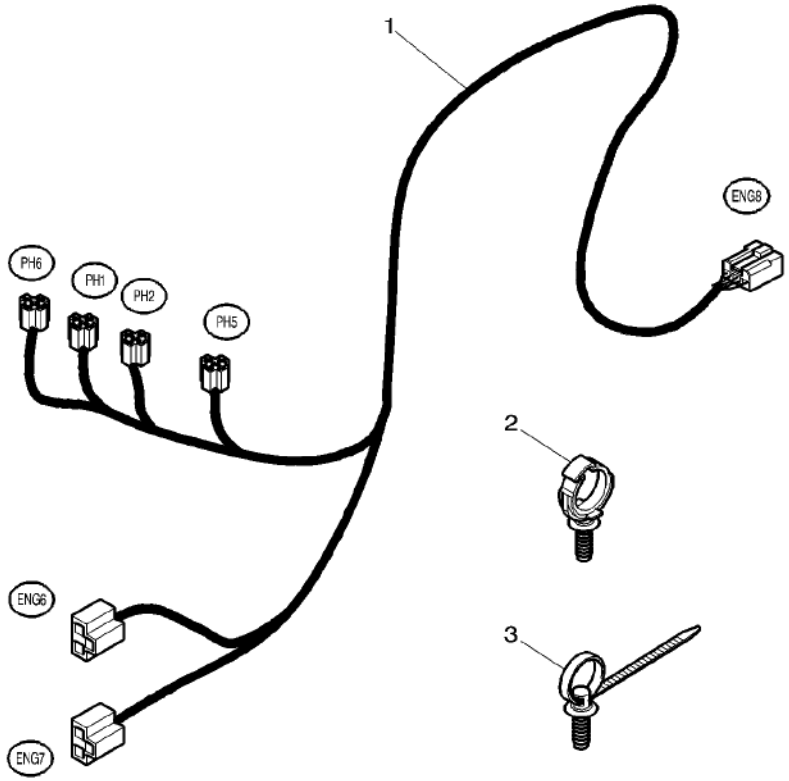

1	4280568M1	1	HARNESS	FAISCEAU FASCIOCAVI KABELBAUM MAZO CABLES
2	4280260M1	5	TIE	ATTACHE TRAVERSA ATTACCO KUPPL.STANGE BARRA DE ENLACE
3	4278314M1	2	CLAMP	COLLIER FASCETTA HALTESCHELLE ABRAZADERA

Rear Lightning Harness
Faisceau Eclairage Arriere
Hinten Kabelnezt Beleuchtung
Fasciocavi Posteriore Di Illuminazione
Haz De Hilos Trasero De Iluminacion

80-70

US

1-WW43-007-B

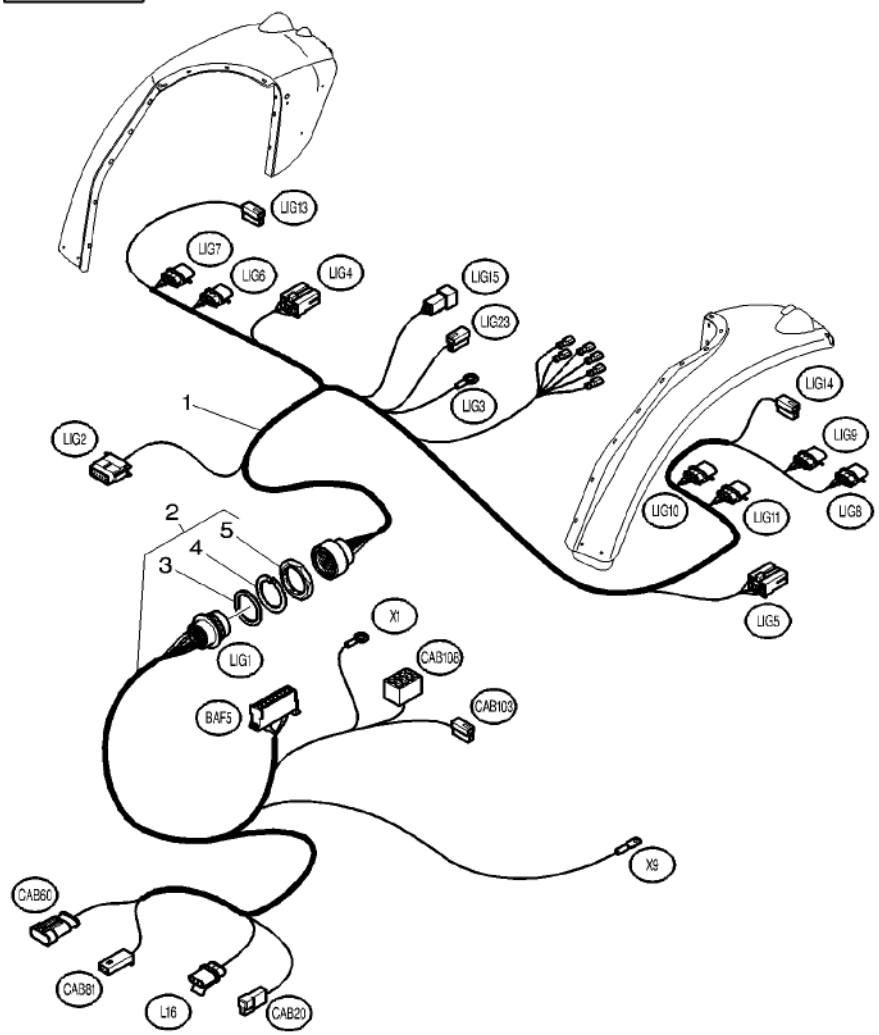

1*	3787528M93	➡		N328016	1	HARNESS	FAISCEAU FASCIOCAVI	KABELBAUM MAZO CABLES
1*	3787528M94	➡		N328017	1	HARNESS	FAISCEAU FASCIOCAVI	KABELBAUM MAZO CABLES
2*	4276770M92	➡		N328016	1	HARNESS	FAISCEAU FASCIOCAVI	KABELBAUM MAZO CABLES
2*	4276770M93	➡		N328017	1	HARNESS	FAISCEAU FASCIOCAVI	KABELBAUM MAZO CABLES
3	3013355X1	2			1	SEAL	JOINT ETANCHEITE ANELLO RACCORD	DICHTRING ARENDELA D'JUNTA
4	3013354X1	2			1	WASHER	RONDELLE RONDELLA	UNTERLEGSCHEIBE ARANDELA
5	3013353X1	2			1	NUT	ECROU DADO	MUTTER TUERCA

Rear Lightning Harness
Faisceau Eclairage Arriere
Hinten Kabelnezt Beleuchtung
Fasciocavi Posteriore Di Illuminazione
Haz De Hilos Trasero De Iluminacion

80-75 US

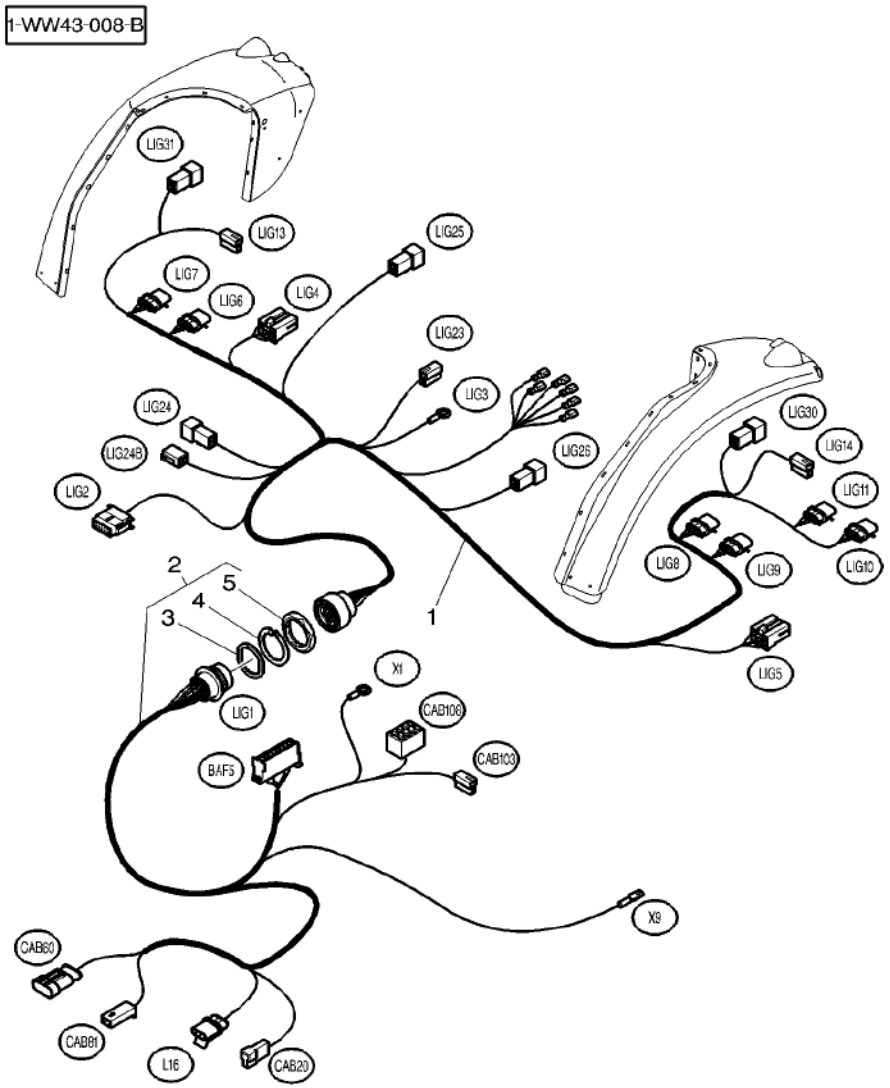

1	4278756M2	➡| P004002	1	HARNESS	FAISCEAU FASCIOCAVI	KABELBAUM MAZO CABLES
1*	4278756M3	➡ P004003	1	HARNESS	FAISCEAU FASCIOCAVI	KABELBAUM MAZO CABLES
2	4278975M91	➡| P004002	1	HARNESS	FAISCEAU FASCIOCAVI	KABELBAUM MAZO CABLES
2*	4278975M92	➡ P004003	1	HARNESS	FAISCEAU FASCIOCAVI	KABELBAUM MAZO CABLES
3	3013355X1	2	1	SEAL	JOINT ETANCHEITE ANELLO RACCORD	DICHTRING ARENDELA D'JUNTA
4	3013354X1	2	1	WASHER	RONDELLE RONDELLA	UNTERLEGSCHEIBE ARANDELA
5	3013353X1	2	1	NUT	ECROU DADO	MUTTER TUERCA

Trailor Electric Socket
Prise Electrique De Remorque
Steckeranhaenger
Presaellectric Di Rimorchio
Tomacorriente De Remolque

80-80

1-WW39-008-A

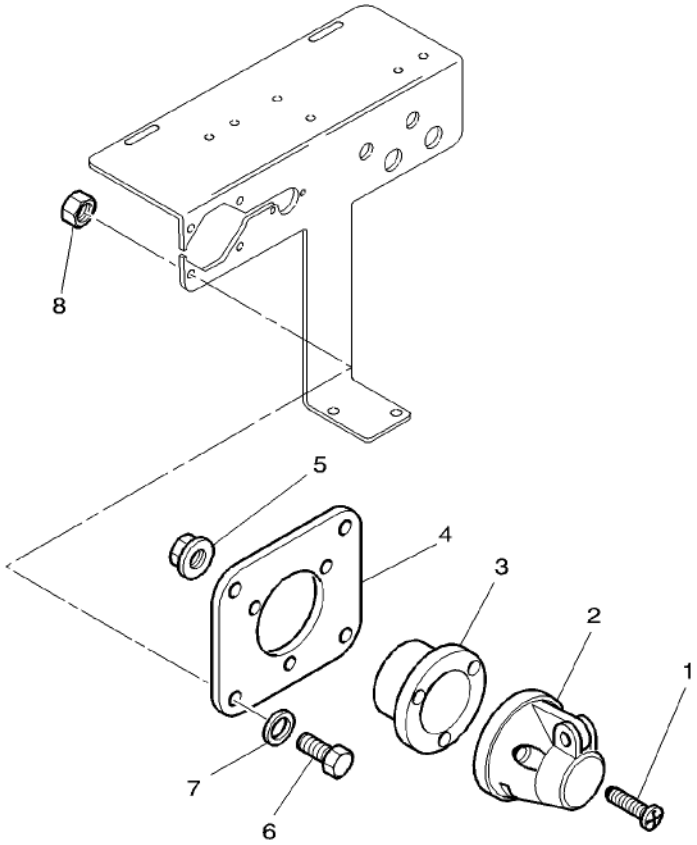

1	3009538X1	M5 X 35	**3**	SCREW	VIS VITE	SCHRAUBE TORNILLO
2	**409965M1**		**1**	SOCKET 7 PIN SUP	PRISE 7 BROCHES PRESA DA 7 SUPER	MEHRZW-SCHAUFEL ENCH.7ESPIG SUP
3	3041656M2		**1**	PLATE	PLAQUE PIASTRA	PLATTE PLATO
4	3785913M1		**1**	SUPPORT	SUPPORT SUPPORTO	LAGERUNG DISPOS.DE SOSTEN
5	3010477X1	M5	**3**	NUT METRIC	ECROU METRIQUE DADO METRICO	MUTTER METRISCH TUERCA METRICO
6	339560X1	M6 X 16	**4**	HEX. SOCK. SCREW	VIS TETE HEX VITE PARKER	ZYLINDERSCHRAUBE TORN.CAB.HUECA
7	339375X1		**4**	LOCK WASHER	RONDELLE FREIN ROSETTA DENTELL.	FEDERRING ARANDELA GROWER
8	339030X1	M6	**4**	NUT METRIC	ECROU METRIQUE DADO METRICO	MUTTER METRISCH TUERCA METRICO

Trailor Electric Socket
Prise Electrique De Remorque
Steckeranhaenger
Presaellectric Di Rimorchio
Tomacorriente De Remolque

80-85

US

1-WW39-009-A

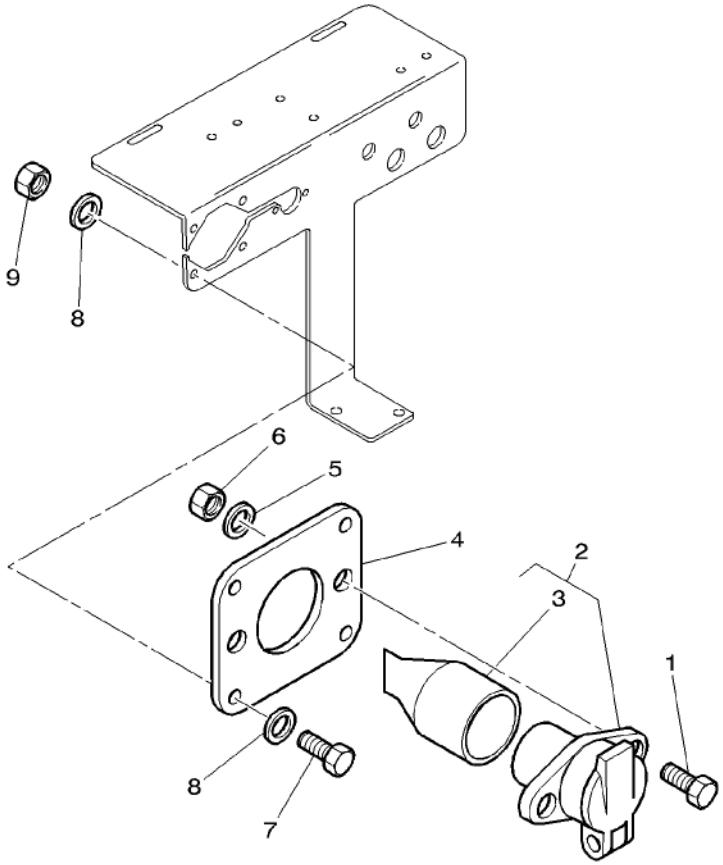

1	339123X1	M8 X 20	2 HEX. SOCK. SCREW	VIS TETE HEX VITE PARKER	ZYLINDERSCHRAUBE TORN.CAB.HUECA
2	3715923M91		1 INTAKE	PRISE ASPIRAZIONE	SAUGROHR ENTRADA
3	3715925M1	2	1 HELMET	CAPUCHON CASCO	SCHUTZHELM CASCO
4	3785914M1		1 SUPPORT	SUPPORT SUPPORTO	LAGERUNG DISPOS.DE SOSTEN
5	339374X1		2 LOCK WASHER	RONDELLE FREIN ROSETTA DENTELL.	FEDERRING ARANDELA GROWER
6	339169X1	M8	2 NUT	ECROU DADO	MUTTER TUERCA
7	339560X1	M6 X 16	4 HEX. SOCK. SCREW	VIS TETE HEX VITE PARKER	ZYLINDERSCHRAUBE TORN.CAB.HUECA
8	339375X1		4 LOCK WASHER	RONDELLE FREIN ROSETTA DENTELL.	FEDERRING ARANDELA GROWER
9	339030X1	M6	4 NUT METRIC	ECROU METRIQUE DADO METRICO	MUTTER METRISCH TUERCA METRICO

Field Lights Harness Faisceau Phares De Travail Kabelnezt Arbeitsscheinwerfer Fasciacavi Di Luce Illuminazione Campo Haz De Hilos Del Luces De Campo	80-90	Handold Rambarde Gelaender Passamano Pasamanos

1-WW28-004-B

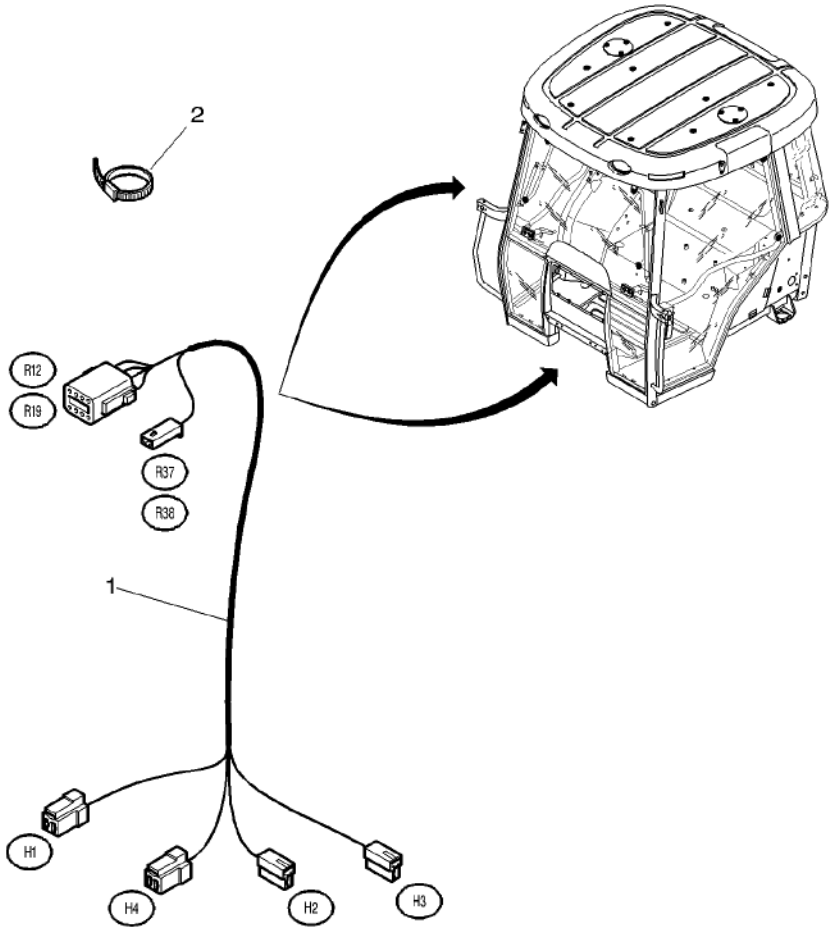

1	3787512M91	2	HARNESS	FAISCEAU FASCIOCAVI	KABELBAUM MAZO CABLES
2	3619622M1	X	CABLE TIE	ATTACHE CABLE FASCETTA CAVI	KABELBINDER APRIETACABLES

Automatic Air Conditioner Harness & Sensors
Faisceau Climatiseur Automatique & Capteurs
Automatisch Klimaanlage Kabelnezt Und Sensoren
Fasciocavi Di Condizionatore Di Aria Automatico E Sensori
Haz De Hilos Del Acondicionator De Aire Automatico Y Sensores

80-95

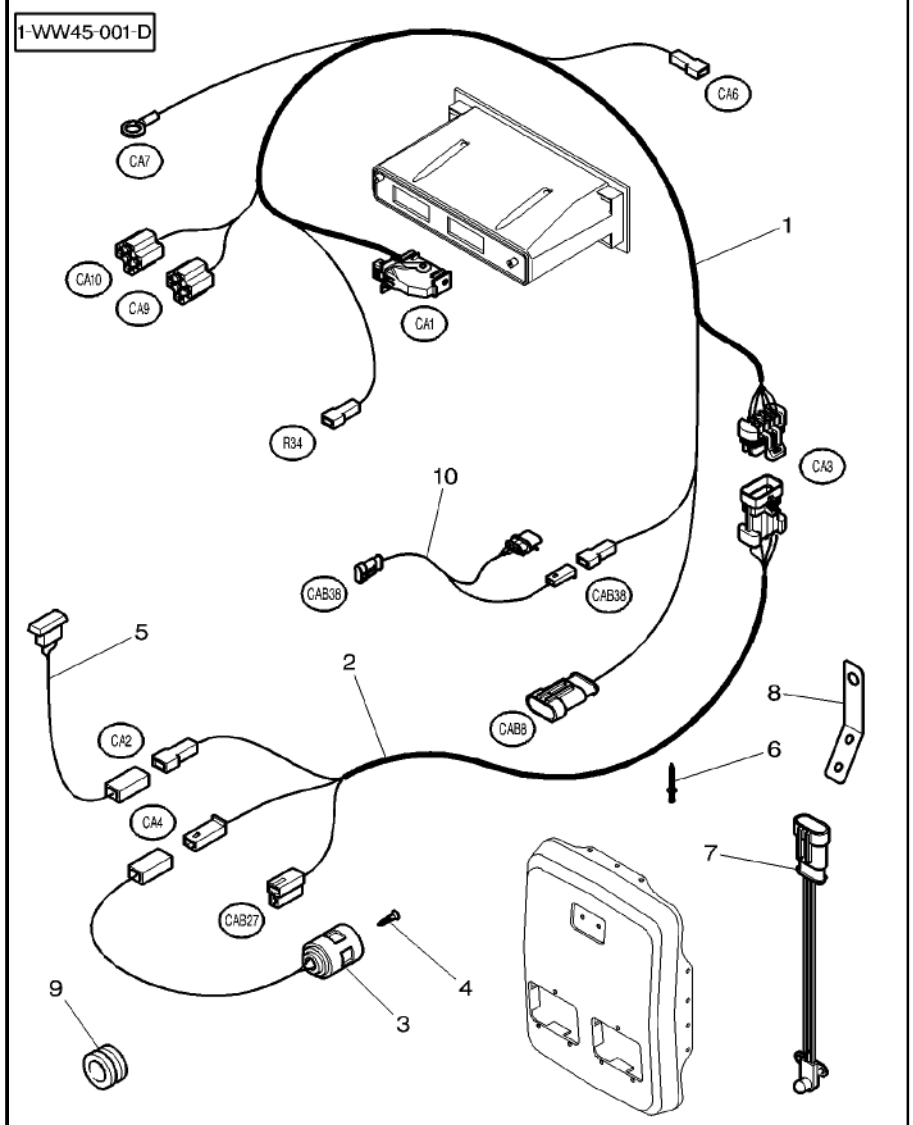

1	4272347M2		1 HARNESS	FAISCEAU FASCIOCAVI	KABELBAUM MAZO CABLES
2	4272151M3		1 HARNESS	FAISCEAU FASCIOCAVI	KABELBAUM MAZO CABLES
3	3787192M1	[A]	1 TEMP. SENSOR	SONDE TEMPERATUR TEMP. SENSOR	TEMPERATURGEBER EMISOR DEL CALOR
4	3787143M1		2 SCREW	VIS VITE	SCHRAUBE TORNILLO
5	3787185M1	[C]	1 TRANSDUCER	CAPTEUR TRANSDUCER	NABENTRIEB. TRANSDUCER
6	338662X1	∅ 2,4 MM	2 RIVET	RIVET RIBATTINO	NIET REMACHE
7	3787184M1	[B]	1 TEMP. SENSOR	SONDE TEMPERATUR TEMP. SENSOR	TEMPERATURGEBER EMISOR DEL CALOR
8	4272846M1		1 SUPPORT	SUPPORT SUPPORTO	LAGERUNG DISPOS.DE SOSTEN
9	3783677M1	∅ 7–21	1 GROMMET	PASSE FIL ANELLO PASSACAVO	GUMMITUELLE PASACABLE
10*	4279691M1		1 HARNESS	FAISCEAU FASCIOCAVI	KABELBAUM MAZO CABLES

[A] INSIDE TEMPERATURE SENSOR
SONDE DE TEMPERATURE INTERIEURE
RAUMTEMPERATURSENSOR
SENSORE DI TEMPERATURA INTERIORE
CAPTADOR DETEMPERATURA INTERIOR

[B] OUTSIDE TEMPERATURE SENSOR
SONDE DE TEMPERATURE EXTERIEURE
AUSSENTEMPERATURSENSOR
SENSORE DI TEMPERATURA ESTERIORE
CAPTADOR DETEMPERATURA EXTERIOR

[C] SOLAR SENSOR
CAPTEUR SOLAIRE
SONNEN SENSOR
SENSORE SOLARE
SENSOR SOLAR

90

Electrical Wiring Cablage Electrique Kabelausruestung Equipaggiamento Elettrico Cableado Electrico	90-5	Without Electronic Lift Sans Relevage Electronique Ohne Electronische Kraftheber Senza Sollevamento Elettronico Sin Levante Electronico

1-WW04-001-A

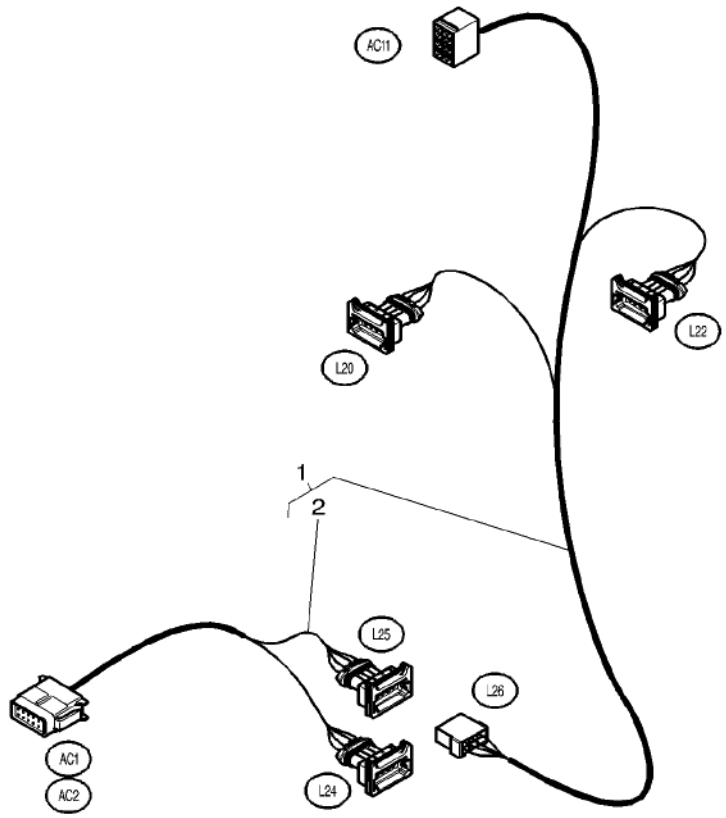

1	3788426M1		1 HARNESS	FAISCEAU FASCIOCAVI	KABELBAUM MAZO CABLES
2		1 REF. 1	1 HARNESS	FAISCEAU FASCIOCAVI	KABELBAUM MAZO CABLES

Electronic Lift Relevage Electronique Electron Aushebg Sollevatore Elettronico Levante Hidraulico	Main Harness Faisceau Principal Hauplkabelbaum Cavi Principali Arnes Principal	90-10	Cab Cabine Kabine Cabina Cabina

1-WP33-017-B

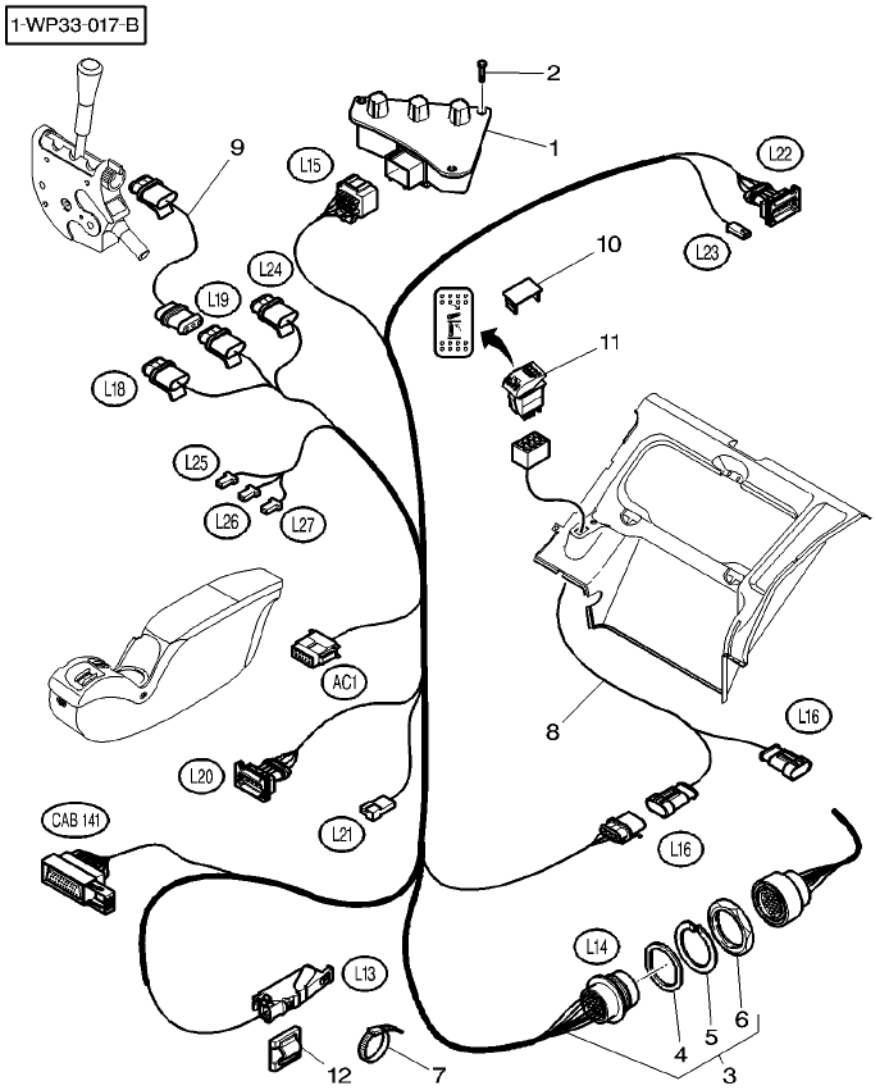

1	4278661M91	[B] 90-30 No 1	1	ELECTRON CONSOLE	CONSOLE ELECTRON CONSOLLE ELETT.	ELECTRON-KONSOLE CONSOLA ELECTRON
1	4278662M91	[A] 90-35 No 1	1	ELECTRON CONSOLE	CONSOLE ELECTRON CONSOLLE ELETT.	ELECTRON-KONSOLE CONSOLA ELECTRON
2	**3010506X1**	M5 X 16	4	SCREW	VIS VITE	SCHRAUBE TORNILLO
2	3010804X1	M4 X 16	4	SCREW	VIS VITE	SCHRAUBE TORNILLO
3	4277438M93		1	HARNESS	FAISCEAU FASCIOCAVI	KABELBAUM MAZO CABLES
4	3013355X1	3	1	SEAL	JOINT ETANCHEITE ANELLO RACCORD	DICHTRING ARENDELA D'JUNTA
5	3013354X1	3	1	WASHER	RONDELLE RONDELLA	UNTERLEGSCHEIBE ARANDELA
6	3013353X1	3	1	NUT	ECROU DADO	MUTTER TUERCA
7	3619622M1		X	CABLE TIE	ATTACHE CABLE FASCETTA CAVI	KABELBINDER APRIETACABLES
8	3787437M1		1	HARNESS	FAISCEAU FASCIOCAVI	KABELBAUM MAZO CABLES
9	4279872M1	◀▶ 150 MM	1	HARNESS	FAISCEAU FASCIOCAVI	KABELBAUM MAZO CABLES
10	3713151M1		1	TAP	OBTURATEUR TAPPO*	HAHN GRIFO
11	***4271356M1***		1	SWITCH,INDIRECT	CONTACTEUR INTERRUTTORE IND	KONTAKTSCHALTER CONTACTOR
12	3582094M1		2	TIE	ATTACHE TRAVERSA ATTACCO	KUPPL.STANGE BARRA DE ENLACE

[A] WITH RADAR
AVEC RADAR
MIT RADAR
CON RADAR
CON RADAR

[B] WITHOUT RADAR
SANS RADAR
OHNE RADAR
SIN RADAR
SENZA RADAR

Electronic Lift **Relevage Electronique** **Electron Aushebg** **Sollevatore Elettronico** **Levante Hidraulico**	**Main Harness** **Faisceau Principal** **Hauplkabelbaum** **Cavi Principali** **Arnes Principal**	**90-15**	**With Dual Control** **Avec Dual Control** **Mit Dual Control** **Con Dual Control** **Con Dual Control**

1-WP33-016-A

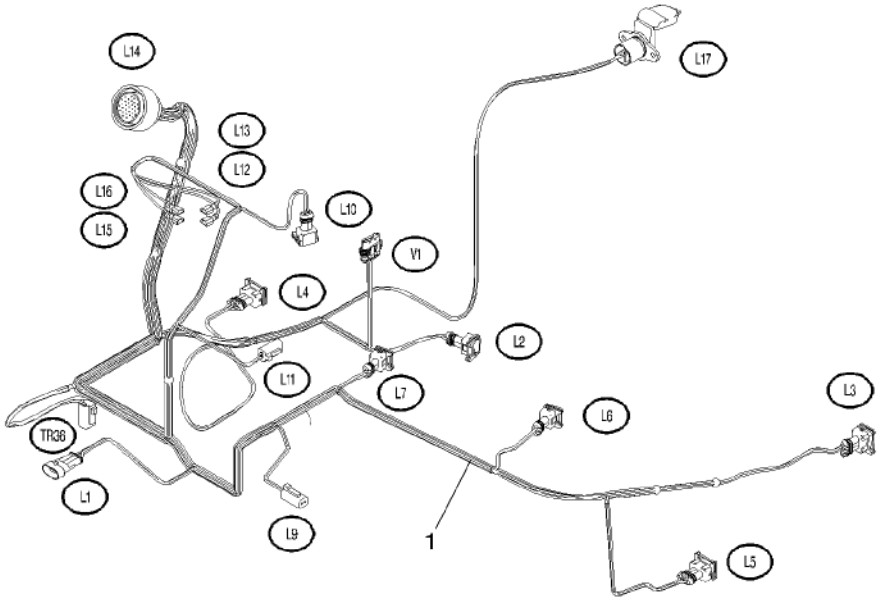

1	4277437M93	**1** HARNESS	FAISCEAU FASCIOCAVI	KABELBAUM MAZO CABLES

Sensor Harness Dual Control
Faisceau Capteur Dual Control
Sensor Kabel Dual Control
Sensore Cavi Dual Control
Captore De Arnes Dual Control

90-20

1-WF85-001-A

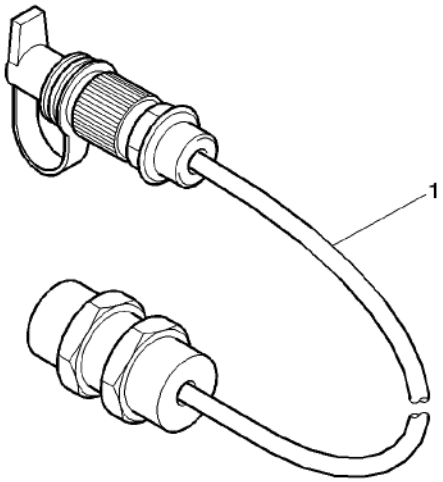

1	3784995M91	1	HARNESS	FAISCEAU FASCIOCAVI	KABELBAUM MAZO CABLES

Electronic Lift **Relevage Electronique** **Electron Aushebg** **Sollevatore Elettronico** **Levante Hidraulico**	**Main Harness** **Faisceau Principal** **Hauplkabelbaum** **Cavi Principali** **Arnes Principal**	**90-25**	**Without Dual Control** **Sans Dual Control** **Ohne Dual Control** **Senza Dual Contole** **Sin Dual Control**

1-WP33-015-A

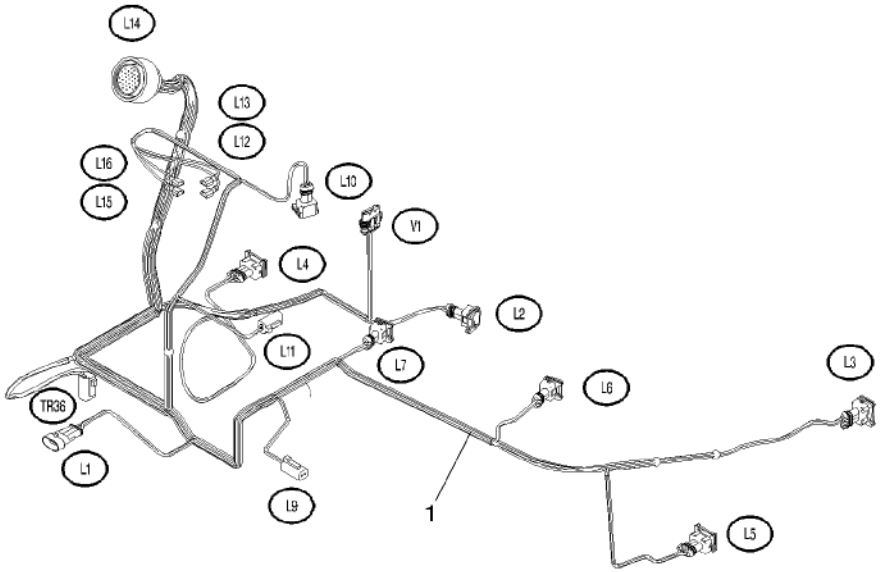

1	4278176M93	**1** HARNESS	FAISCEAU FASCIOCAVI	KABELBAUM MAZO CABLES

Electronic Lift	**Console**	
Relevage Electronique	**Console**	
Elektron–Aushbg	**Konsole**	**90-30**
Sollevatore Elettronico	**Pannello**	
Levante Electronico	**Consola**	

Without Radar
Sans Radar
Ohne Radar
Senza Radar
Sin Radar

1-WP10-005-A

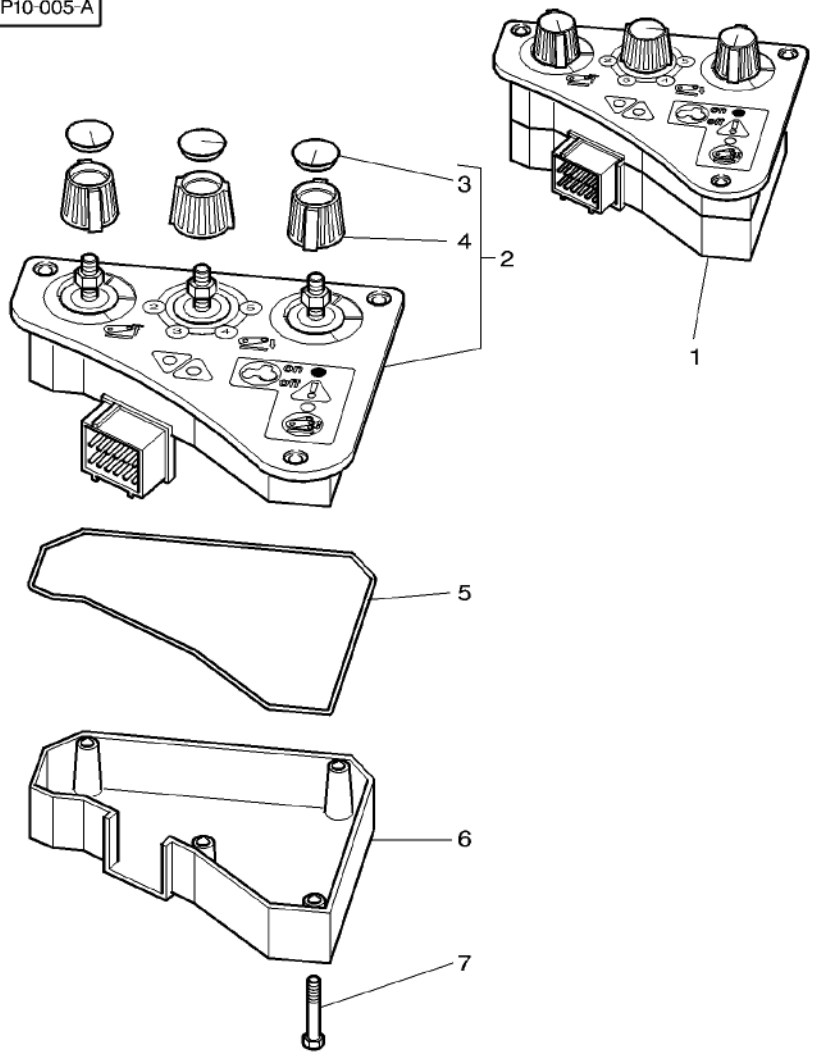

1	4278661M91		**1** ELECTRON CONSOLE	CONSOLE ELECTRON CONSOLLE ELETT.	ELECTRON–KONSOLE CONSOLA ELECTRON
2		1 REF. 1	**1** CASE ASSY	BOITIER CARCASSA COMPLET	GEHAEUSE KPL CAJA COMPLETA
3*	3902440M1	2	**3** HELMET	CAPUCHON CASCO	SCHUTZHELM CASCO
4*	3903452M1	2	**3** BUTTON	BOUTON BOTTONE	KNOPFTASTE BOTON
5*	3907250M1	1	**1** SEAL	JOINT ETANCHEITE ANELLO RACCORD	DICHTRING ARENDELA D'JUNTA
6*		1 REF. 1	**1** CASE ASSY	BOITIER CARCASSA COMPLET	GEHAEUSE KPL CAJA COMPLETA
7*		1 [A]	**4** SCREW	VIS VITE	SCHRAUBE TORNILLO

[A] NOT DETAILLED
PAS DETAILLE
NICHT VERKAUFT
PASSO DETTAGLIATO
NO DETALLADO

Electronic Lift	**Console**	**90-35**	**With Radar**
Relevage Electronique	**Console**		**Avec Radar**
Elektron-Aushbg	**Konsole**		**Mit Radar**
Sollevatore Elettronico	**Pannello**		**Con Radar**
Levante Electronico	**Consola**		**Con Radar**

1-WP10-006-A

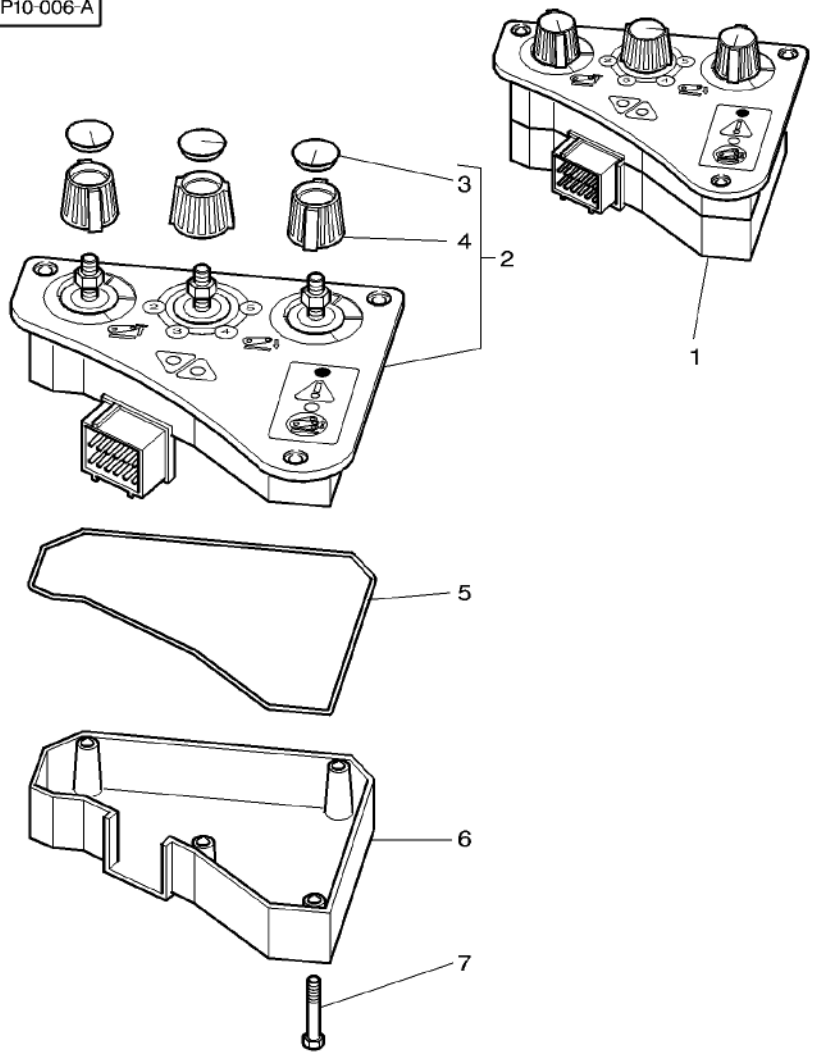

1	3787429M1		**1**	ELECTRON CONSOLE	CONSOLE ELECTRON CONSOLLE ELETT.	ELECTRON-KONSOLE CONSOLA ELECTRON
2		1 REF. 1	**1**	CASE ASSY	BOITIER CARCASSA COMPLET	GEHAEUSE KPL CAJA COMPLETA
3	3902440M1	2	**3**	HELMET	CAPUCHON CASCO	SCHUTZHELM CASCO
4	3903452M1	2	**3**	BUTTON	BOUTON BOTTONE	KNOPFTASTE BOTON
5	3907250M1	1	**1**	SEAL	JOINT ETANCHEITE ANELLO RACCORD	DICHTRING ARENDELA D'JUNTA
6		1 REF. 1	**1**	CASE ASSY	BOITIER CARCASSA COMPLET	GEHAEUSE KPL CAJA COMPLETA
7		1 [A]	**4**	SCREW	VIS VITE	SCHRAUBE TORNILLO

[A] NOT DETAILLED
PAS DETAILLE
NICHT VERKAUFT
PASSO DETTAGLIATO
NO DETALLADO

Aboard Computer And Plate Lighting Equipement
Ordinateur De Bord & Platine D'Eclairage
Bord. Computer Und Beleuchtungsanlage Plate
Panello Computer I Placa Equipaggiamento Illuminazione
Computador A Bordo Y Placa Equipo Alumbrado

90-40

1-WU31-003-C

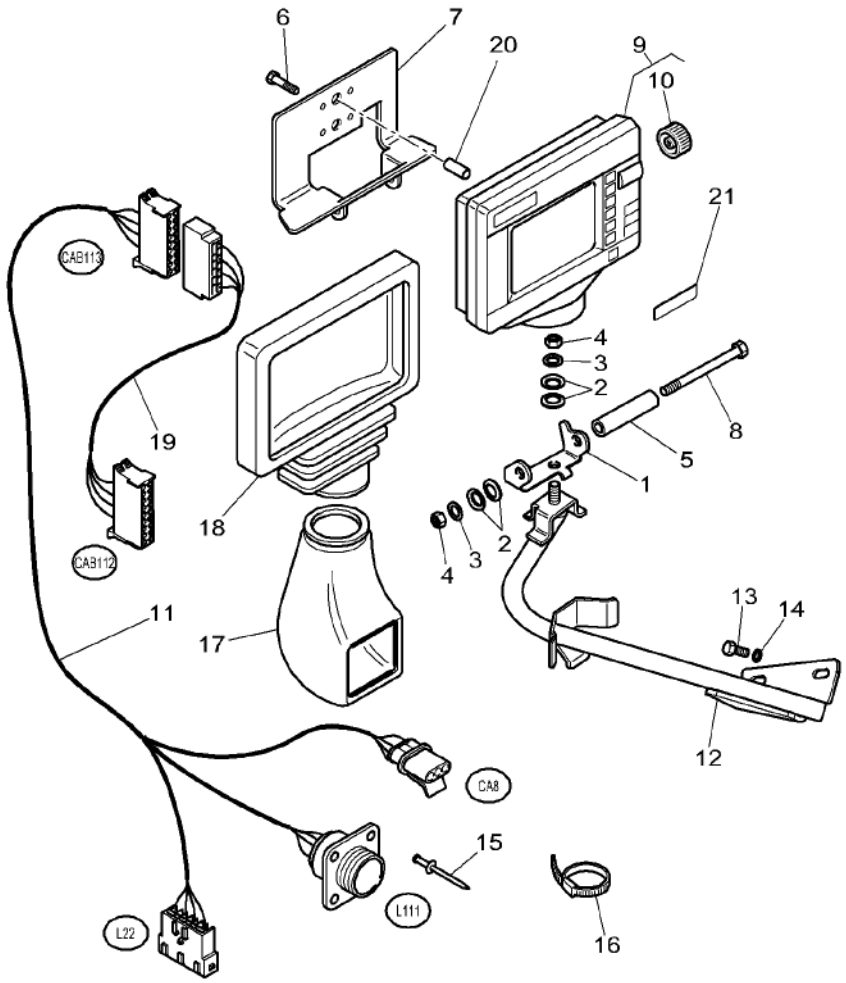

1	4277643M1		1	SUPPORT	SUPPORT SUPPORTO	LAGERUNG DISPOS.DE SOSTEN
2	3386192M1	∅ 8-26	4	WASHER	RONDELLE RONDELLA	UNTERLEGSCHEIBE ARANDELA
3	3010467X1	∅ 9-30 X 2	2	WASHER	RONDELLE RONDELLA	UNTERLEGSCHEIBE ARANDELA
4	394367X1	M8	2	LOCKNUT	ECROU BLOCAGE AUTOBLOCCANTE	SICHERUNGSMUTTER CONTRATUERCA
5	3712867M1	∅ 9-12 X 74	1	SPACER	ENTRETOISE DISTANZIALE	ABSTANDSTUECK DISCO ESPACIADOR
6	339721X1	M5 X 16	4	HEX. SOCK. SCREW	VIS TETE HEX VITE PARKER	ZYLINDERSCHRAUBE TORN.CAB.HUECA
7	4277644M1		1	SUPPORT	SUPPORT SUPPORTO	LAGERUNG DISPOS.DE SOSTEN
8	339013X1	M8 X 110	1	HEX. SOCK. SCREW	VIS TETE HEX VITE PARKER	ZYLINDERSCHRAUBE TORN.CAB.HUECA
9*	4277666M91	[A]	1	ONBOARD COMPUTOR	ORDINATEURDEBORD COMPUT.DI BORDO	BORDCOMPUTER ORDENADOR A BORD
9*	4277459M93	[B]	1	ONBOARD COMPUTOR	ORDINATEURDEBORD COMPUT.DI BORDO	BORDCOMPUTER ORDENADOR A BORD
9	4277461M91	[C]	1	ONBOARD COMPUTOR	ORDINATEURDEBORD COMPUT.DI BORDO	BORDCOMPUTER ORDENADOR A BORD
10*	3907557M1	9	1	BUTTON	BOUTON BOTTONE	KNOPFTASTE BOTON
11	4280179M1		1	HARNESS	FAISCEAU FASCIOCAVI	KABELBAUM MAZO CABLES
12	4277640M91		1	TUBE	TUBE TUBO	ROHR TUBO
13	339123X1	M8 X 20	2	HEX. SOCK. SCREW	VIS TETE HEX VITE PARKER	ZYLINDERSCHRAUBE TORN.CAB.HUECA
14	390972X1	∅ 8-17 X 1,7	2	WASHER	RONDELLE RONDELLA	UNTERLEGSCHEIBE ARANDELA
15	3011214X1		4	RIVET	RIVET RIBATTINO	NIET REMACHE
16	3619622M1		10	CABLE TIE	ATTACHE CABLE FASCETTA CAVI	KABELBINDER APRIETACABLES
17	4278794M91		1	BELLOWS	SOUFFLET SOFFIETTO	FALTENBALG FUELLE
18	4278791M91		1	BELLOWS	SOUFFLET SOFFIETTO	FALTENBALG FUELLE
19	4277219M93		1	HARNESS	FAISCEAU FASCIOCAVI	KABELBAUM MAZO CABLES
20*	3011600X1	∅ 7-10,5 MM	4	SPACER	ENTRETOISE DISTANZIALE	ABSTANDSTUECK DISCO ESPACIADOR
21	4277474M1		1	DECAL	DECALCOMANIE DECALCOMANIA	AUFKLEBER CALCOMANIA

[A] BLACK AND WHITE SCREEN
ECRAN NOIR ET BLANC
SCHWARZER UND WEIBER BILDSCHIRM
SCHERMO NERO E BIANCO
PANTALLA BLANCA Y NEGRA

Aboard Computer And Plate Lighting Equipement
Ordinateur De Bord & Platine D'Eclairage
Bord. Computer Und Beleuchtungsanlage Plate
Panello Computer I Placa Equipaggiamento Illuminazione
Computador A Bordo Y Placa Equipo Alumbrado

90-40

1-WU31-003-C

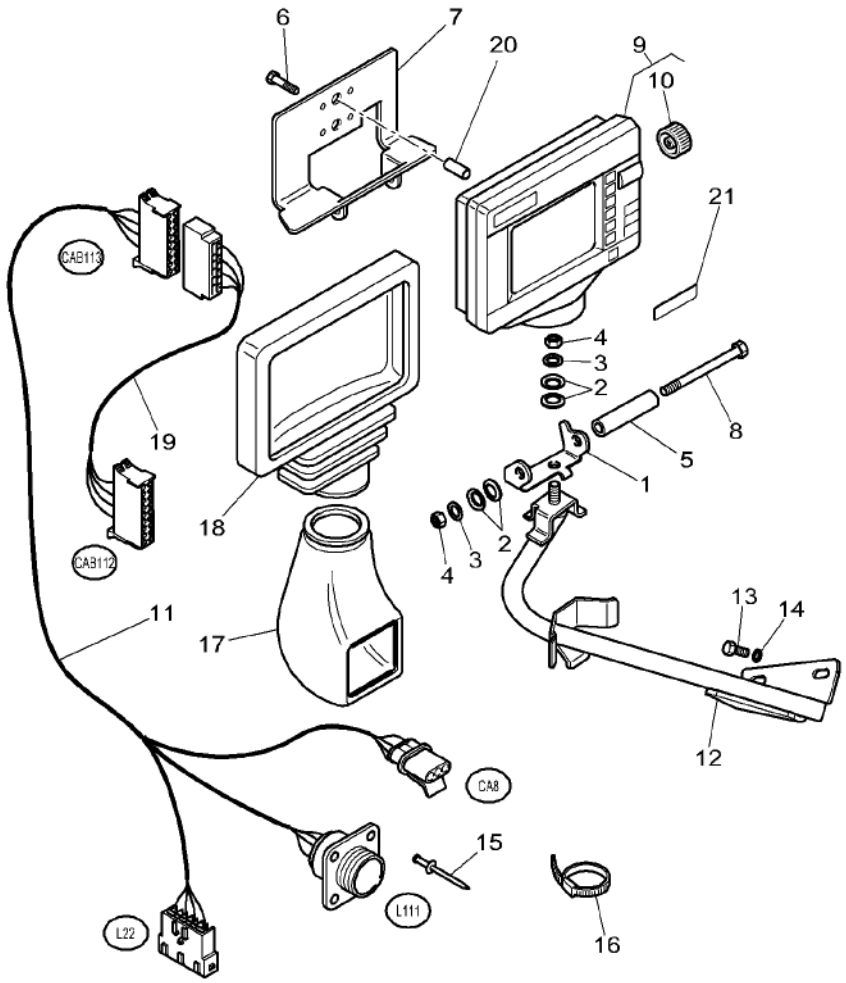

[B] COLOR SCREEN
ECRAN COULEUR
FARBBILDSCHIRM
SCHERMO COLORE
PANTALLA COLOR

[C] VIDEO COLOR SCREEN AND ENTREE
ECRAN COULEUR ET ENTREE VIDEO
FARBBILDSCHIRM HINEINGEGANGENE VIDEOFARBE UND
SCHERMO COLORE ED ENTRATO VIDEO
PANTALLA COLOR Y ENTRADO VIDEO

Aboard Computer And Plate Lighting Equipement
Ordinateur De Bord & Platine D'Eclairage
Bord. Computer Und Beleuchtungsanlage Plate
Panello Computer I Placa Equipaggiamento Illuminazione
Computador A Bordo Y Placa Equipo Alumbrado

90-45

1-WU31-004-A

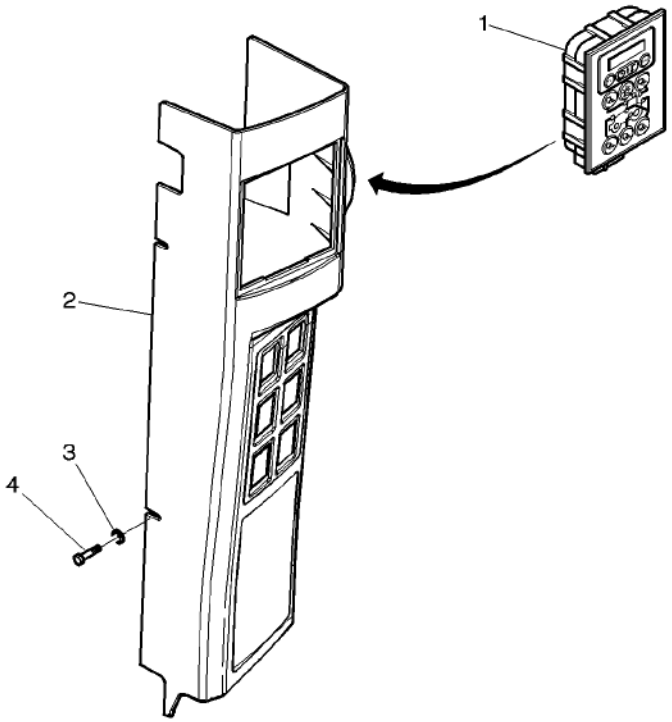

1	3786382M3	90–50 No 1	1 MODULE	MODULE MODULO	MODUL MODULO
1*	3786383M3	90–50 No 1 US	1 MODULE	MODULE MODULO	MODUL MODULO
2*		110–70 No 14	1 MOUNTING	MONTANT SUPPORTO MONTAGG	HALTERUNG MONTANTE
3	390469X1	∅ 5–10 X 1,5	4 WASHER	RONDELLE RONDELLA	UNTERLEGSCHEIBE ARANDELA
4	3010578X1	M5 X 10	4 SCREW	VIS VITE	SCHRAUBE TORNILLO

Aboard Computer And Plate Lighting Equipement
Ordinateur De Bord & Platine D'Eclairage
Bord. Computer Und Beleuchtungsanlage Plate
Panello Computer I Placa Equipaggiamento Illuminazione
Computador A Bordo Y Placa Equipo Alumbrado

90-50

1-WU31-002-A

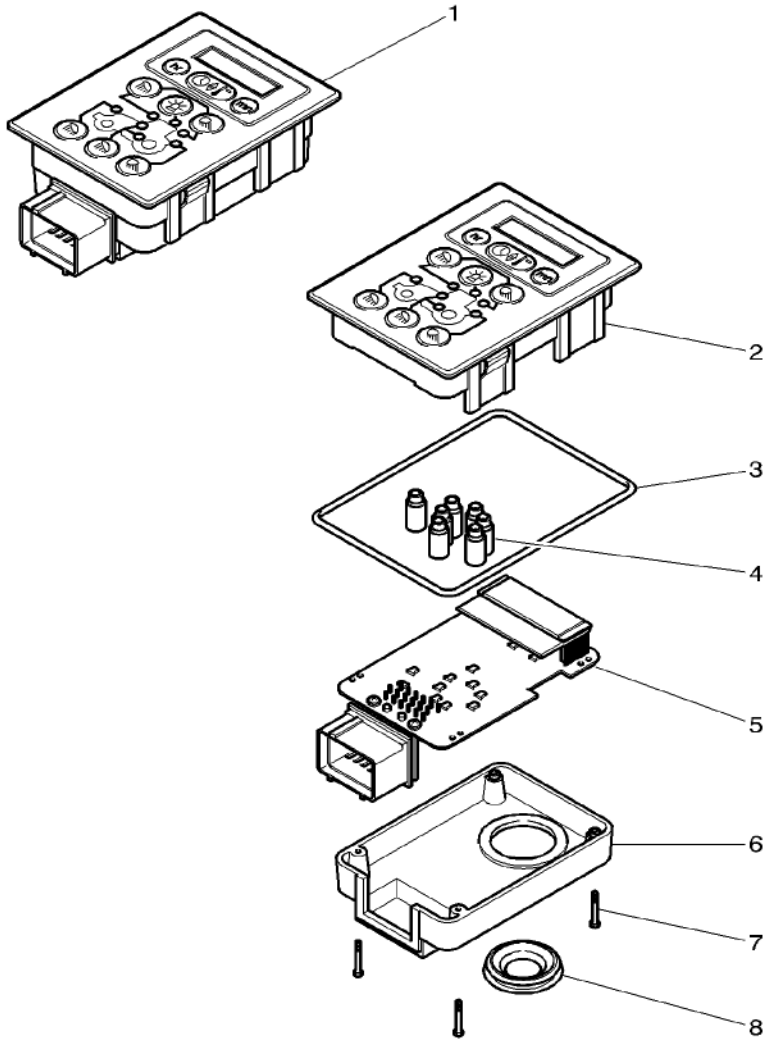

1*	3786382M3		1	MODULE	MODULE MODULO	MODUL MODULO
1*	3786383M3	US	1	MODULE	MODULE MODULO	MODUL MODULO
2*	3907252M91	1 US	1	CASE ASSY	BOITIER CARCASSA COMPLET	GEHAEUSE KPL CAJA COMPLETA
2*	3907256M91	1	1	CASE ASSY	BOITIER CARCASSA COMPLET	GEHAEUSE KPL CAJA COMPLETA
3	3907253M1	1	1	SEAL	JOINT ETANCHEITE ANELLO RACCORD	DICHTRING ARENDELA D'JUNTA
4		1 [A] REF. 1	7	GUIDE	GUIDE GUIDA	FUEHRUNG GUIA
5		1 REF. 1	1	PRINTED CIRCUIT	CIRCUIT IMPRIME CIRCUITO STAMP.	GEDRUCKTESCHALTG CIRCUITO IMPRESO
6		1 [A]	1	CASE ASSY	BOITIER CARCASSA COMPLET	GEHAEUSE KPL CAJA COMPLETA
7		1 [A]	4	SCREW	VIS VITE	SCHRAUBE TORNILLO
8	3907255M1	1	1	HELMET	CAPUCHON CASCO	SCHUTZHELM CASCO

[A] NOT DETAILLED
PAS DETAILLE
NICHT VERKAUFT
PASSO DETTAGLIATO
NO DETALLADO

Radar
Radar
Radar
Radar
Radar

90-55

1-WU34-004-A

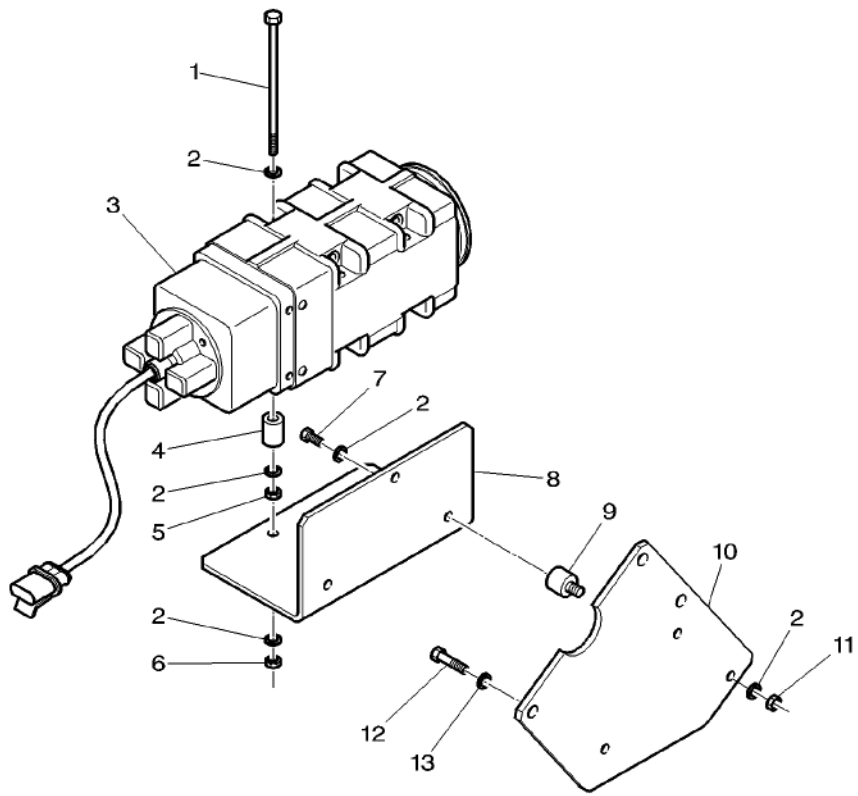

1	3019894X1	M6 X 100	4	HEX. SOCK. SCREW	VIS TETE HEX VITE PARKER	ZYLINDERSCHRAUBE TORN.CAB.HUECA
2	390971X1	∅ 6–12 X 1,5	18	WASHER	RONDELLE RONDELLA	UNTERLEGSCHEIBE ARANDELA
3	3714290M2	[A] GHZ 24.300 GB	1	SPEED DETECTOR	DETECTEURVITESSE RILEV.VELOCITA'	GESCHW.–ANZEIGER DETECTOR VELOC.
3	3714291M2	[A] GHZ 24.125	1	SPEED DETECTOR	DETECTEURVITESSE RILEV.VELOCITA'	GESCHW.–ANZEIGER DETECTOR VELOC.
4	3582802M1	∅ 8–16 X 22	4	SPACER	ENTRETOISE DISTANZIALE	ABSTANDSTUECK DISCO ESPACIADOR
5	1440207X1	M6	4	NUT METRIC	ECROU METRIQUE DADO METRICO	MUTTER METRISCH TUERCA METRICO
6	339030X1	M6	4	NUT METRIC	ECROU METRIQUE DADO METRICO	MUTTER METRISCH TUERCA METRICO
7	339230X1	M6 X 10	3	HEX. SOCK. SCREW	VIS TETE HEX VITE PARKER	ZYLINDERSCHRAUBE TORN.CAB.HUECA
8	3781310M1		1	SUPPORT	SUPPORT SUPPORTO	LAGERUNG DISPOS.DE SOSTEN
9	3583548M1		3	DOWEL	PLOT SPINA	ZYLINDERSTIFT CENTRAJE
10	4277540M2		1	SUPPORT	SUPPORT SUPPORTO	LAGERUNG DISPOS.DE SOSTEN
11	339030X1	M6	3	NUT METRIC	ECROU METRIQUE DADO METRICO	MUTTER METRISCH TUERCA METRICO
12	339123X1	M8 X 20	3	HEX. SOCK. SCREW	VIS TETE HEX VITE PARKER	ZYLINDERSCHRAUBE TORN.CAB.HUECA
13	390972X1	∅ 8–17 X 1,7	3	WASHER	RONDELLE RONDELLA	UNTERLEGSCHEIBE ARANDELA

[A] THE APPROPRIATE SAFETY DECALS MUST BE ORDERED AND FITTED TO THIS PART
CETTE PIECE DOIT ETRE IMPERATIVEMENT COMMANDEE AVEC SA DECALCOMANIE DE SECURITE
DIESES TEIL MUSS UNBEDINGT ZUSAMMEN MIT DEM SICHER HEITSHINWEISSCHILD BESTELLT WERDEN
QUESTO PEZZO DEVE ASSOLUTAMENTE ESSERE ORDINATO CON LA RELATIVA DECALCO. SULLA SICUREZZA
ESTA PIEZA SE TIENE QUE PEDIR IMPERATIVAMENTE CON SU CALCOMANIA DE SEGURIDAD

1-WU38-001-A

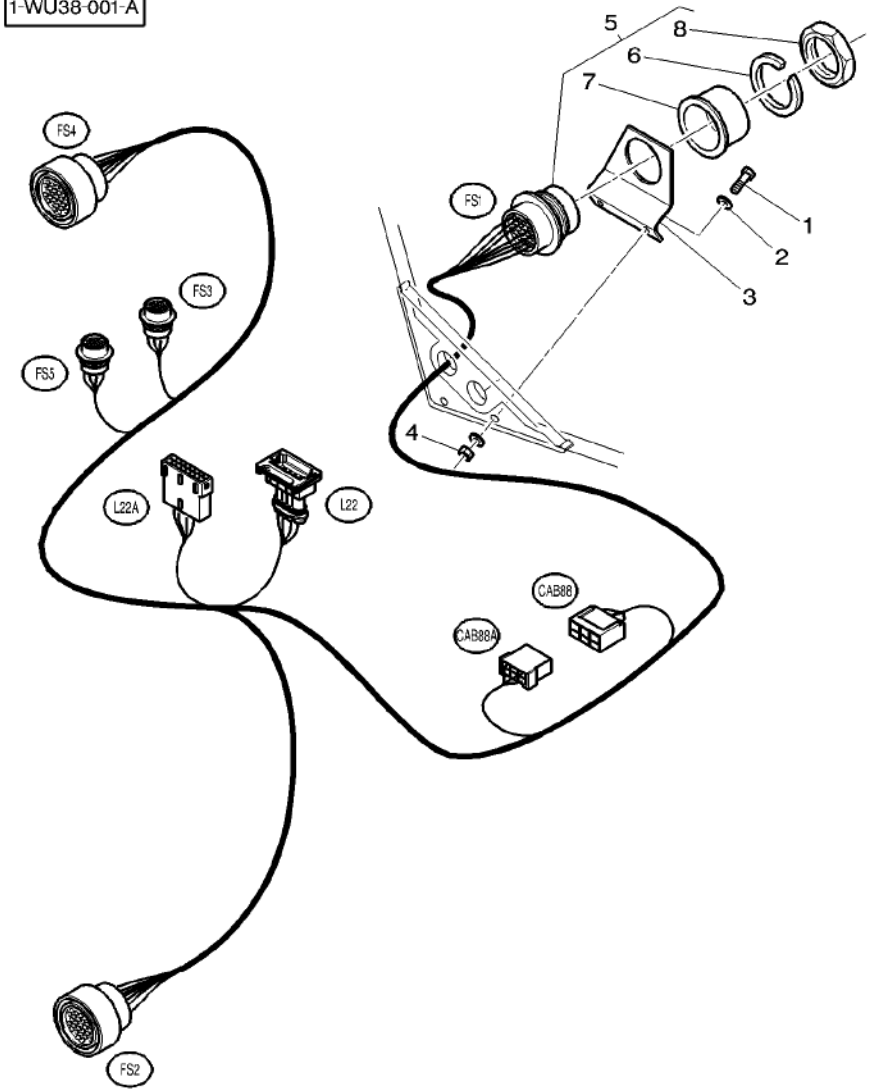

1	339666X1	M6 X 20	2	HEX. SOCK. SCREW	VIS TETE HEX VITE PARKER ZYLINDERSCHRAUBE TORN.CAB.HUECA
2	390971X1	∅ 6-12 X 1,5	4	WASHER	RONDELLE RONDELLA UNTERLEGSCHEIBE ARANDELA
3	4276068M1		1	SUPPORT	SUPPORT SUPPORTO LAGERUNG DISPOS.DE SOSTEN
4	339030X1	M6	2	NUT METRIC	ECROU METRIQUE DADO METRICO MUTTER METRISCH TUERCA METRICO
5	4275724M2		1	HARNESS	FAISCEAU FASCIOCAVI KABELBAUM MAZO CABLES
6	3907278M1	5	1	WASHER	RONDELLE RONDELLA UNTERLEGSCHEIBE ARANDELA
7	3907276M1	5	1	PLUG	BOUCHON TAPPO VERSCHL.STOPFEN TAPON
8	3907277M1	5	1	NUT	ECROU DADO MUTTER TUERCA

Control Box	**Cab**	**90-65**
Boite De Controle	**Cabine**	
Steuergeraet	**Kabine**	
Scatola Controllo	**Cabina**	
Caja De Control	**Cabina**	

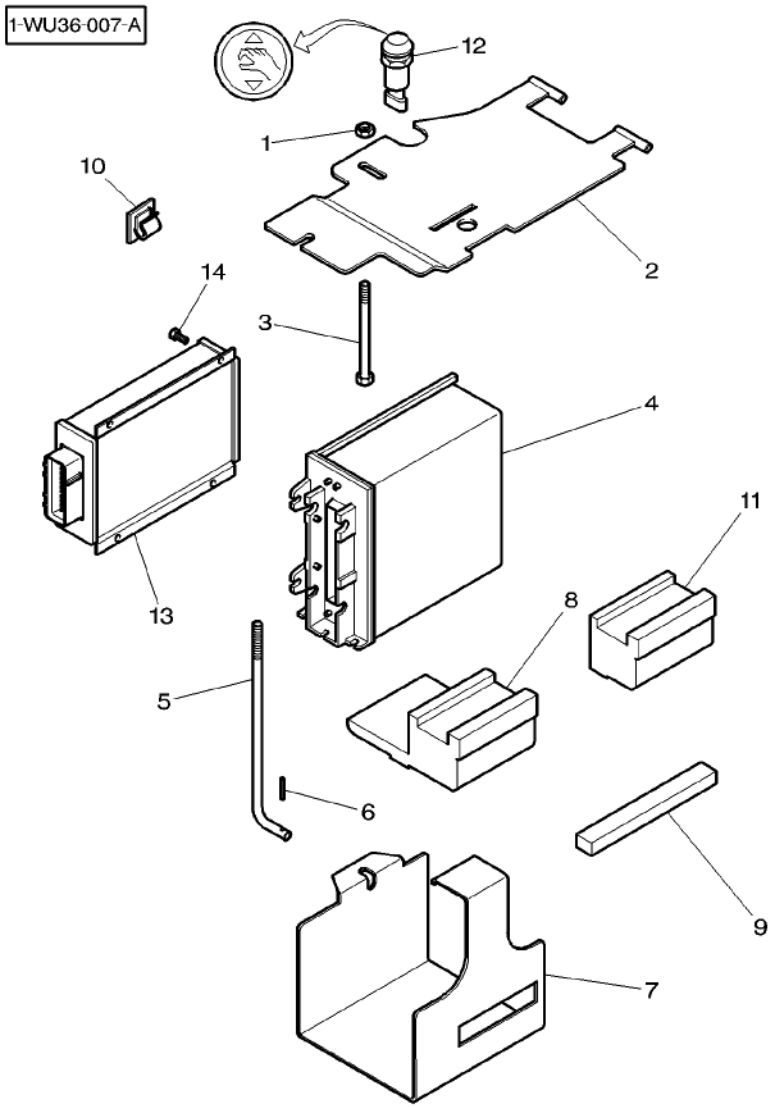

1	394367X1	M8	**1** LOCKNUT	ECROU BLOCAGE AUTOBLOCCANTE	SICHERUNGSMUTTER CONTRATUERCA
2	4270515M1		**1** PLATE	PLAQUE PIASTRA	PLATTE PLATO
3*	339136X1	M8 X 90	**1** HEX. SOCK. SCREW	VIS TETE HEX VITE PARKER	ZYLINDERSCHRAUBE TORN.CAB.HUECA
4	G701970070015	⇒ G701970070013	**1** ELECTRONIC BOX	BOITE ELECTRONIC UNITA ELETTRONIC	ELECTRONIKBOX CAJA ELECTRONICA
5	4270516M1	M8	**1** STEM	TIGE STELO	STIEL VASTAGO
6	70934582	∅ 3 X 26	**1** PIN	GOUPILLE PERNO	BOLZEN PASADOR
7	4270517M1		**1** SUPPORT	SUPPORT SUPPORTO	LAGERUNG DISPOS.DE SOSTEN
8	4271648M1		**1** CHOCK	CALE PASSACAVO	UNTERLEG-KEIL CALZA
9	3778749M1	25 X 15 X 80	**2** FOAM	MOUSSE GOMMAPIUMA	SCHAUMSTOFF ESPUMA
9	3580639M1	13 X 6 X 200	**1** GASKET	JOINT GUARNIZIONE	DICHTSCHEIBE EMPAQUETADURA.
10	3582094M1		**4** TIE	ATTACHE TRAVERSA ATTACCO	KUPPL.STANGE BARRA DE ENLACE
11	4271640M1		**1** CHOCK	CALE PASSACAVO	UNTERLEG-KEIL CALZA
12	***G716970160030***		**1** PRESSURE SWITCH	MANO CONTACT PRESSOSTATO	DRUCKSCHALTER INTERRUP PRESION
13	3796241M94		**1** SWITCH BOX	BOITE CDE ELECTR SCATOLA INTERRUT	SCHALTKASTEN CAJA DE INTERRUP
14	3010804X1	M4 X 16	**4** SCREW	VIS VITE	SCHRAUBE TORNILLO
14	**3010506X1**	M5 X 16	**4** SCREW	VIS VITE	SCHRAUBE TORNILLO

Control Box Harness & Cab Controls
Faisceau Boite De Controle & Commandes Cabine
Steuergeraet Kabel Und Kabineantriebe
Cavi Scatola Controllo E Commando De La Cabina
Mazo Cables Caja De Control Y Mando Del Cabina

90-70

1-WW09-003-B

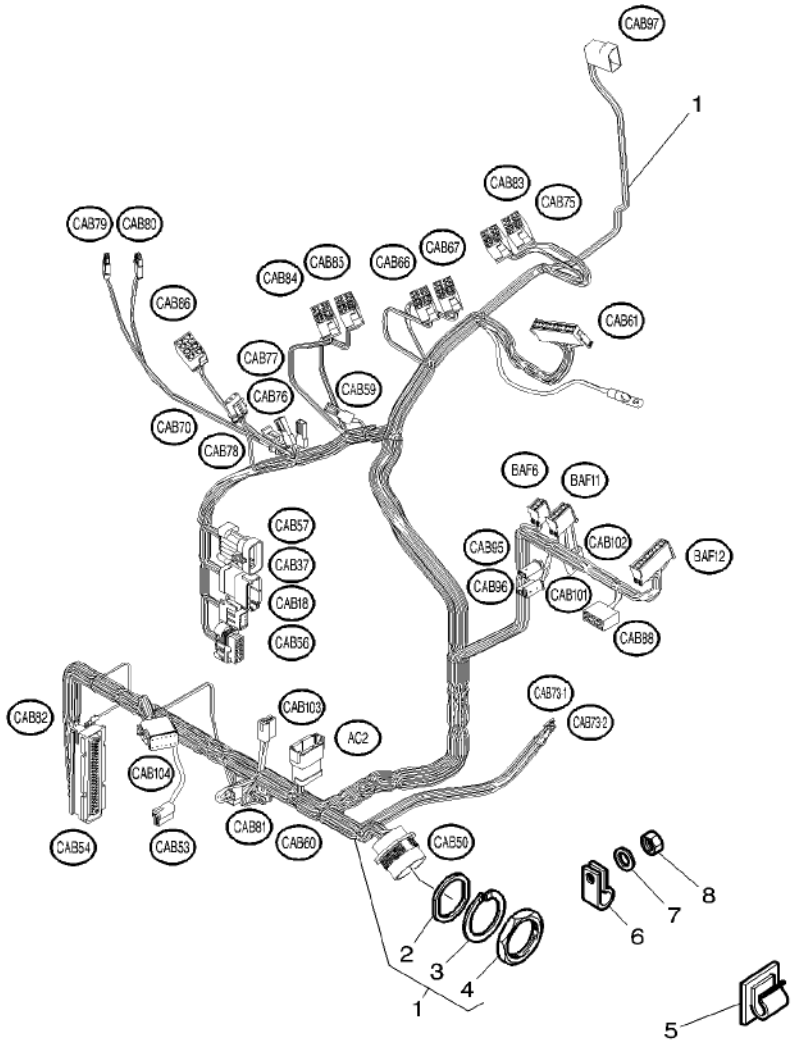

1	4276763M92		1 HARNESS	FAISCEAU FASCIOCAVI	KABELBAUM MAZO CABLES
2	3013355X1	1	1 SEAL	JOINT ETANCHEITE ANELLO RACCORD	DICHTRING ARENDELA D'JUNTA
3	3013354X1	1	1 WASHER	RONDELLE RONDELLA	UNTERLEGSCHEIBE ARANDELA
4	3013353X1	1	1 NUT	ECROU DADO	MUTTER TUERCA
5	3582094M1		2 TIE	ATTACHE TRAVERSA ATTACCO	KUPPL.STANGE BARRA DE ENLACE
6	3389841M1	∅ 12 – M6	1 CLIP	PATTE D'ATTACHE FERMAGLIO	SCHELLE CLIP
7	390971X1	∅ 6–12 X 1,5	1 WASHER	RONDELLE RONDELLA	UNTERLEGSCHEIBE ARANDELA
8	339030X1	M6	1 NUT METRIC	ECROU METRIQUE DADO METRICO	MUTTER METRISCH TUERCA METRICO

Side Console Harness	**Cab**	**90-75**
Faisceau De Console Laterale	**Cabine**	
Seiten Konsole Kabel	**Kabine**	
Fascio Mensola Latarale	**Cabina**	
Mazo Cables Consola Lateral	**Cabina**	

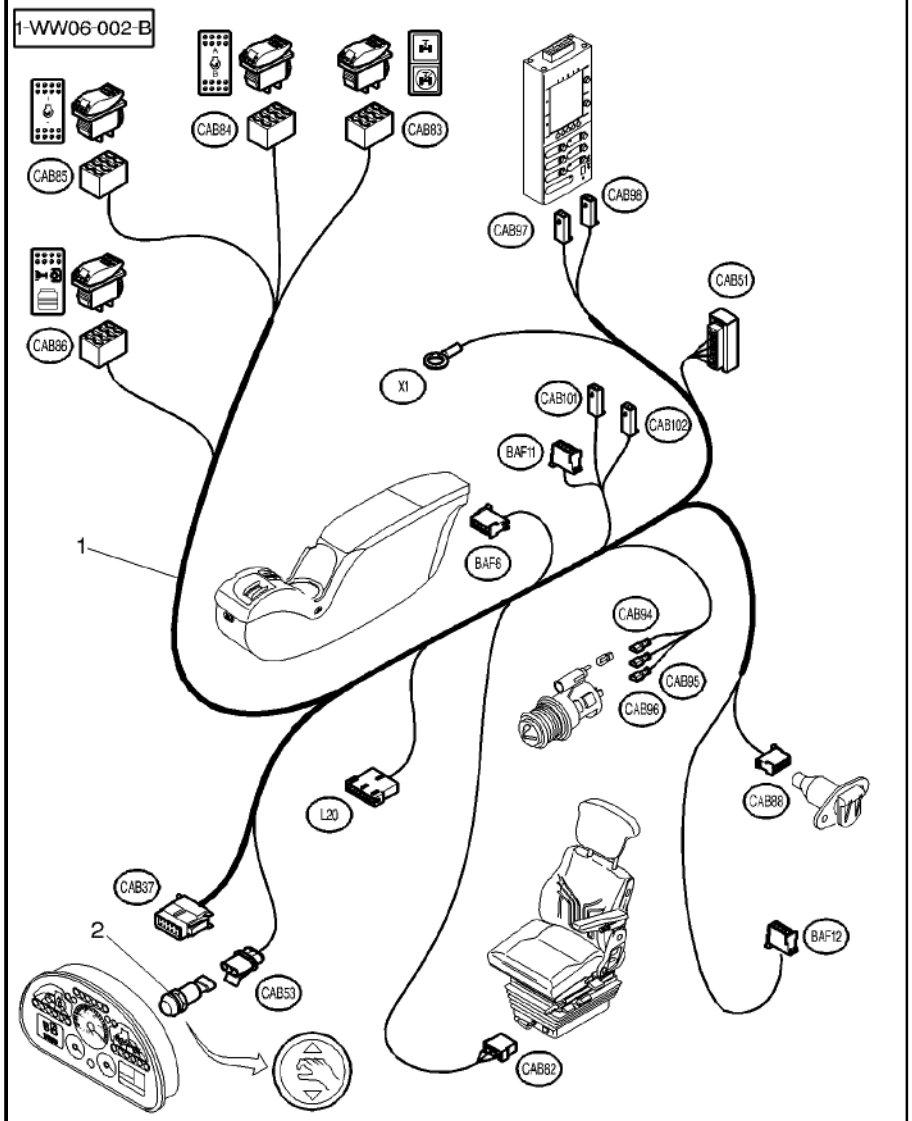

1	4271327M92	**1** HARNESS	FAISCEAU FASCIOCAVI	KABELBAUM MAZO CABLES
2	***G716970160030***	**1** PRESSURE SWITCH	MANO CONTACT PRESSOSTATO	DRUCKSCHALTER INTERRUP PRESION

Transmission Main Harness
Faisceau Transmission Principal
Kraftubertragung Hauptkabelbaum
Cavo Principale De Transmissione
Mazo Cables Principale Ttransmission

90-80

1-WW08-013-A

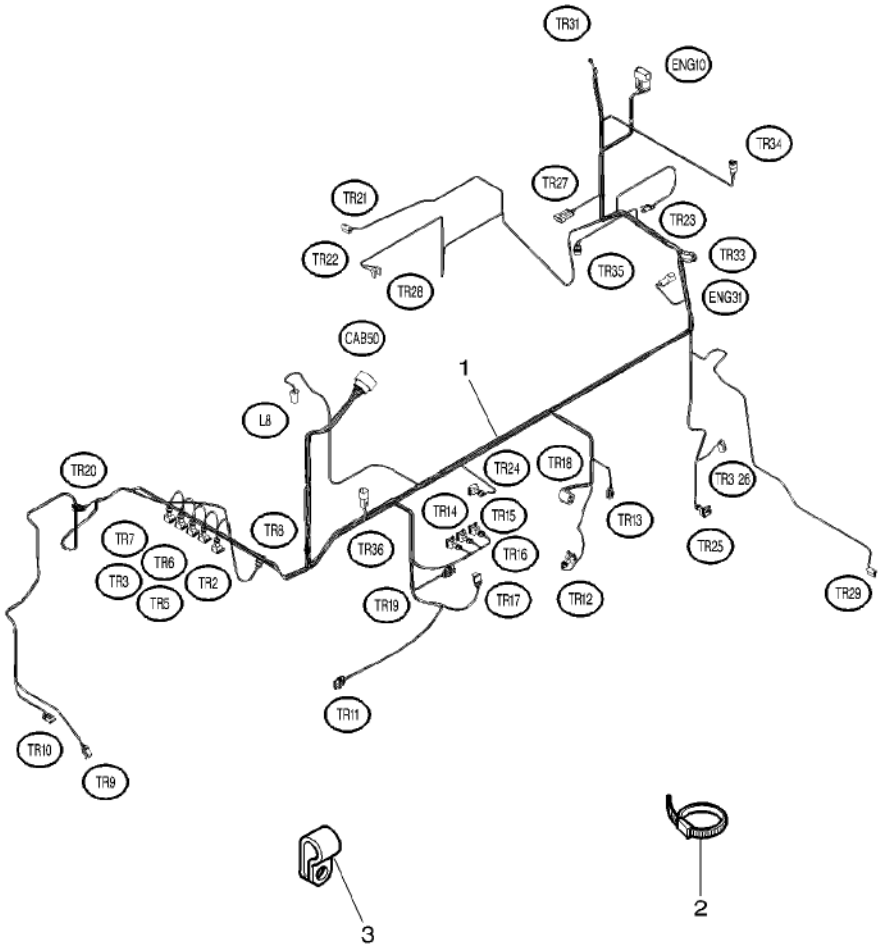

1	4277436M93		1 HARNESS	FAISCEAU FASCIOCAVI	KABELBAUM MAZO CABLES
2	3619622M1		X CABLE TIE	ATTACHE CABLE FASCETTA CAVI	KABELBINDER APRIETACABLES
3	4278721M1	∅ 22 – M12	2 CLAMP	COLLIER FASCETTA	HALTESCHELLE ABRAZADERA

Electronic Equipment	Sensors	90-85
Equipement Electronique	Capteurs	
Elektron Ausrstg	Sensoren	
Equipaggiamento Elettronico	Senori	
Equipo Electronico	Sensores	

1-WU37-006-A

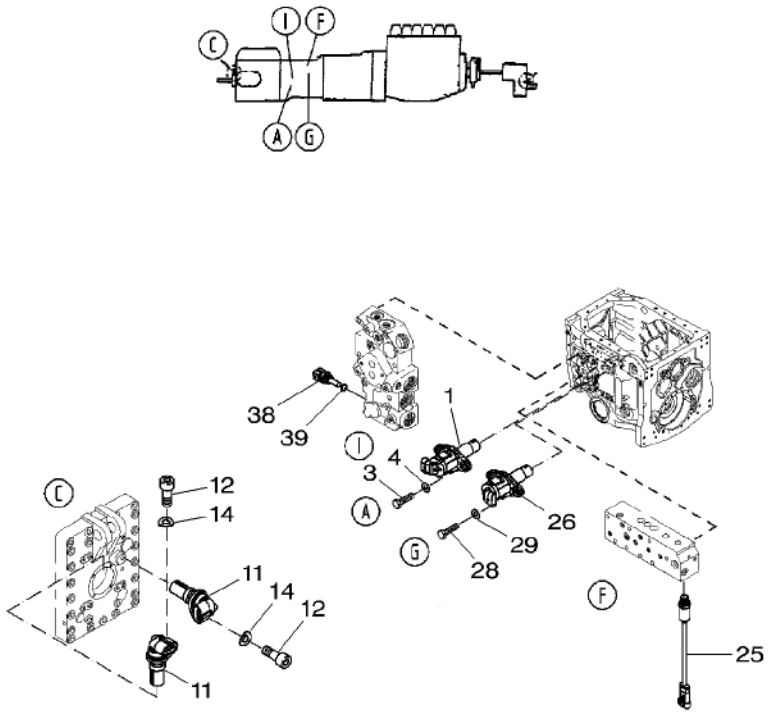

1	***G916970020014***	[A]	**1**	SENSOR	DETECTEUR SENSORE	EMPFANGER DETECTOR
3	X487527741000	M8 X 20	**2**	HEX. SOCK. SCREW	VIS TETE HEX VITE PARKER	ZYLINDERSCHRAUBE TORN.CAB.HUECA
4	X450006308000		**2**	WASHER	RONDELLE RONDELLA	UNTERLEGSCHEIBE ARANDELA
11	***G816970020040***	[B]	**2**	HALL SENSOR	CAPTEUR DE HALL HALL SENSOR	HALL-GEBER HALL SENSOR
12	X485009405000	M8 X 16	**2**	HEX. SOCK. SCREW	VIS TETE HEX VITE PARKER	ZYLINDERSCHRAUBE TORN.CAB.HUECA
14	X521403947000		**2**	SPRING PLATE	PLAQUE RESSORT RONDELLA ELASTIC	FEDERSCHEIBE PLETINA MUELLE
25	***G718970020020***	[C]	**1**	PRESS.TRANSDUCER	CAPTEUR PRESSION PRESS.TRANSDUCER	DRUCKGEBER PRESS.TRANSDUCER
26	***G916970020014***	[D]	**1**	SENSOR	DETECTEUR SENSORE	EMPFANGER DETECTOR
28	X487527741000	M8 X 20	**2**	HEX. SOCK. SCREW	VIS TETE HEX VITE PARKER	ZYLINDERSCHRAUBE TORN.CAB.HUECA
29	X450006308000		**2**	WASHER	RONDELLE RONDELLA	UNTERLEGSCHEIBE ARANDELA
38	***H312100360030***	[E]	**1**	TEMP. SENSOR	SONDE TEMPERATUR TEMP. SENSOR	TEMPERATURGEBER EMISOR DEL CALOR
39	***X540004078000***		**1**	RING	ANNEAU ANELLO	RING ARO

[A] TRANSMITTER DRIVING-SPEED "A"
TRANSMETTEUR VITESSE D'AVANCEMENT "A"
GEBER FAHRGESCHWINDIGKEIT "A"
SENSORE VELOCITA DI MARCIA "A"
EMISOR VELOCIDAD DE MARCHA "A"

[B] TRANSMITTER P.T.O RPM REAR "C" 40MM
TRANSMETTEUR REGIME PRISE DE FORCE AR "C" 40MM
GEBER ZAPFW.DREHZAHL HINTEN "C" 40MM
SENSORE GIRI P.T.O. POSTERIORE "C" 40MM
EMISOR REVOL.EJE DE T.D.F. DETRAS "C" 40MM

[C] TRANSMISSION "F"
TRANSMISSION "F"
GETRIEBE "F"
CAMBIO "F"
CAJA DE CAMBIOS "F"

[D] GEARBOX SPEED SENSOR "G"
CAPTEUR VITESSE ROTATION BOITE "G"
GEBER GETRIEBEDREHZAHL "G"
SENSORE GIRI CAMBIO "G"
EMISOR REVOLUCIONES CAJA DE CAMBIOS "G"

[E] OIL TEMPERATURE TRANMISSION "I"
TEMPERATURE D'HUILE TRANSMISSION "I"
OELTEMPERATUR GETRIEB "I"
TEMPERATURA OLIO CAMBIO "I"
TEMPERATURA DEL ACEITE CAJA DE CAMBIOS "I"

100

Sheet Metal	Grille
Carrosserie	Calandre
Verkleidung	Kuehlergrill
Carrozzeria	Griglia
Emplanchados	Griglia

100-5

US

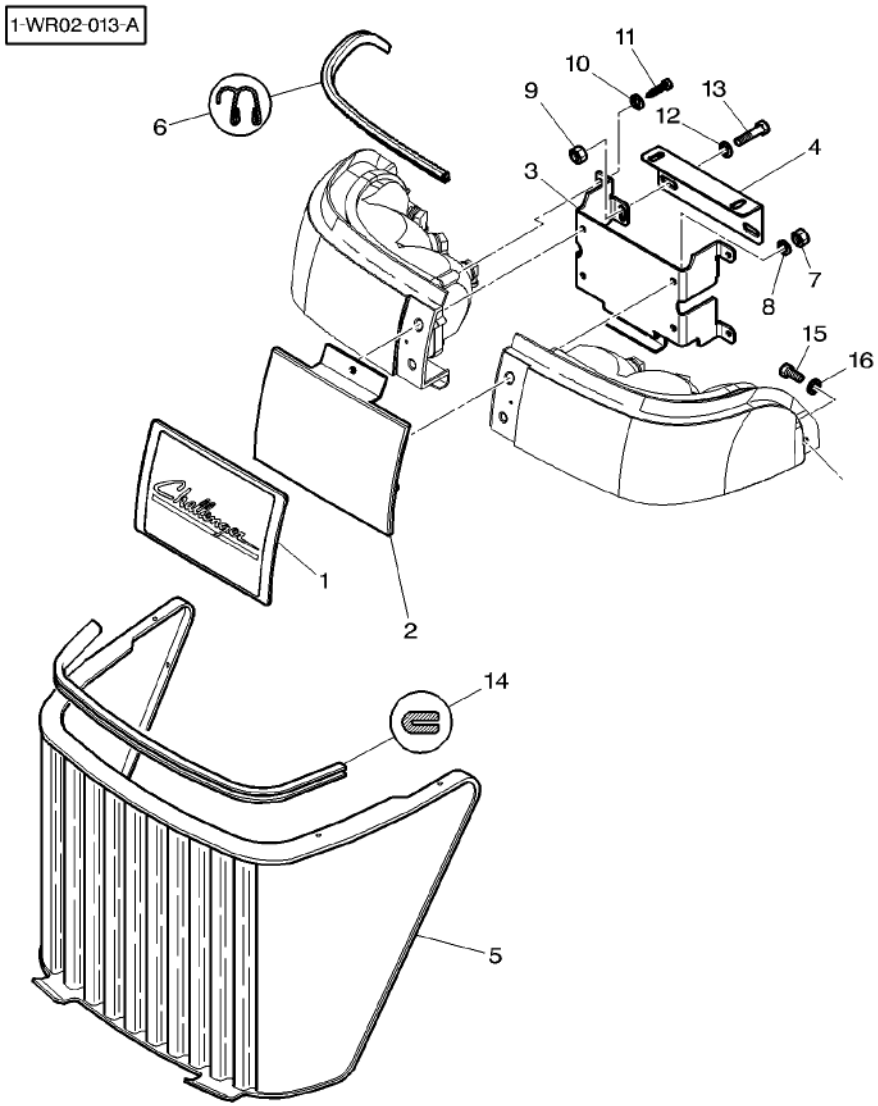

1	*5017921M3		1	EMBLEM	EMBLEME EMBLEMA	EMBLEM EMBLEMA
2	*5017922P3		1	SUPPORT	SUPPORT SUPPORTO	LAGERUNG DISPOS.DE SOSTEN
3	*5017899M3		1	PLATE	PLAQUE PIASTRA	PLATTE PLATO
4	4278550M1		1	SUPPORT	SUPPORT SUPPORTO	LAGERUNG DISPOS.DE SOSTEN
5	*5017829M92		1	GRILLE	GRILLE GRIGLIA	GRILL REJILLA
6	5017908M1	◄► 1190MM	1	GASKET	JOINT GUARNIZIONE	DICHTSCHEIBE EMPAQUETADURA.
7	1441500X1		4	LOCKNUT	ECROU BLOCAGE AUTOBLOCCANTE	SICHERUNGSMUTTER CONTRATUERCA
8	390971X1		4	WASHER	RONDELLE RONDELLA	UNTERLEGSCHEIBE ARANDELA
9	339169X1		2	NUT	ECROU DADO	MUTTER TUERCA
10	3019560X1	M10	4	WASHER	RONDELLE RONDELLA	UNTERLEGSCHEIBE ARANDELA
11	3580117M1		4	SELF TAP SCREWS	VIS AUTO TARAUD KITAUTOBLOCCANTE	SCHNEIDSCHRAUBEN TORNILLO CHAPA
12			4	WASHER	RONDELLE RONDELLA	UNTERLEGSCHEIBE ARANDELA
13	339124X1	M8X16	4	HEX. SOCK. SCREW	VIS TETE HEX VITE PARKER	ZYLINDERSCHRAUBE TORN.CAB.HUECA
14	5017909M1	◄► 1100MM	1	GASKET	JOINT GUARNIZIONE	DICHTSCHEIBE EMPAQUETADURA.
15	391074X1	M6X12	2	HEX. SOCK. SCREW	VIS TETE HEX VITE PARKER	ZYLINDERSCHRAUBE TORN.CAB.HUECA
16	391038X1		2	WASHER	RONDELLE RONDELLA	UNTERLEGSCHEIBE ARANDELA

Sheet Metal Carrosserie Verkleidung Carrozzeria Emplanchados	Grille Calandre Kuehlergrill Griglia Griglia	100-10	US

1-WR02-014-B

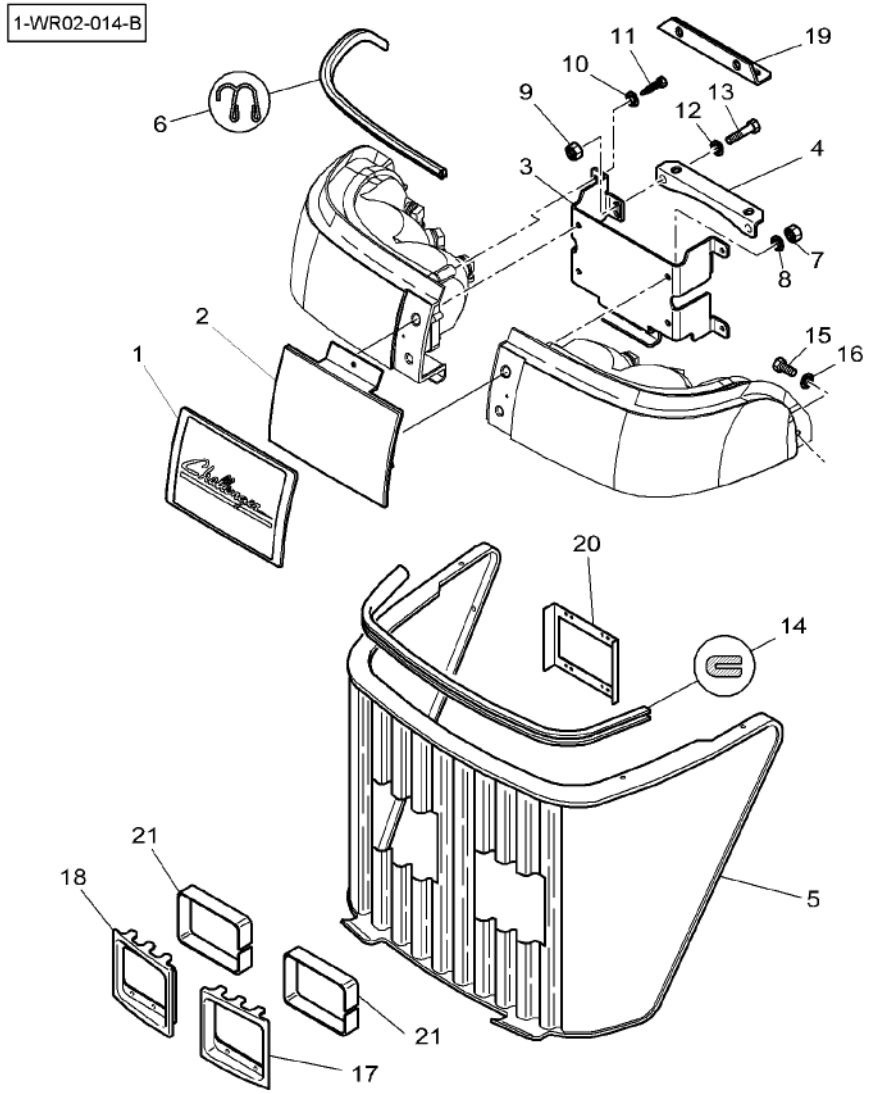

1	★5017921M3		1	EMBLEM	EMBLEME EMBLEMA	EMBLEM EMBLEMA
2	★5017922P3		1	SUPPORT	SUPPORT SUPPORTO	LAGERUNG DISPOS.DE SOSTEN
3	★5017899M3		1	PLATE	PLAQUE PIASTRA	PLATTE PLATO
4	5017902M1		1	SUPPORT	SUPPORT SUPPORTO	LAGERUNG DISPOS.DE SOSTEN
5	★5017892M92		1	GRILLE	GRILLE GRIGLIA	GRILL REJILLA
6	5017908M1	◀▶ 1190MM	1	GASKET	JOINT GUARNIZIONE	DICHTSCHEIBE EMPAQUETADURA.
7	1441500X1		4	LOCKNUT	ECROU BLOCAGE AUTOBLOCCANTE	SICHERUNGSMUTTER CONTRATUERCA
8	390971X1		4	WASHER	RONDELLE RONDELLA	UNTERLEGSCHEIBE ARANDELA
9	339169X1		2	NUT	ECROU DADO	MUTTER TUERCA
10	3019560X1	M10	4	WASHER	RONDELLE RONDELLA	UNTERLEGSCHEIBE ARANDELA
11	3580117M1		4	SELF TAP SCREWS	VIS AUTO TARAUD KITAUTOBLOCCANTE	SCHNEIDSCHRAUBEN TORNILLO CHAPA
12			4	WASHER	RONDELLE RONDELLA	UNTERLEGSCHEIBE ARANDELA
13	339124X1	M8X16	4	HEX. SOCK. SCREW	VIS TETE HEX VITE PARKER	ZYLINDERSCHRAUBE TORN.CAB.HUECA
14	5017909M1	◀▶ 1100MM	1	GASKET	JOINT GUARNIZIONE	DICHTSCHEIBE EMPAQUETADURA.
15	391074X1	M6X12	2	HEX. SOCK. SCREW	VIS TETE HEX VITE PARKER	ZYLINDERSCHRAUBE TORN.CAB.HUECA
16	391038X1		2	WASHER	RONDELLE RONDELLA	UNTERLEGSCHEIBE ARANDELA
17	5017897M1	◀	1	TRIM	ENJOLIVEUR FINITURA	ZIERLEISTE TAPIZADO
18	5017896M1	▶	1	TRIM	ENJOLIVEUR FINITURA	ZIERLEISTE TAPIZADO
19	5017903M1		1	SUPPORT	SUPPORT SUPPORTO	LAGERUNG DISPOS.DE SOSTEN
20	★3783273M2		2	PLATE	PLAQUE PIASTRA	PLATTE PLATO
21	★72509365	6X19X638MM	6	GASKET	JOINT GUARNIZIONE	DICHTSCHEIBE EMPAQUETADURA.

Sheet Metal Carrosserie Verkleidung Carrozzeria Emplanchados	Hood Capot Motorhaube Cofano Capo	100-15

1-WR03-018-B

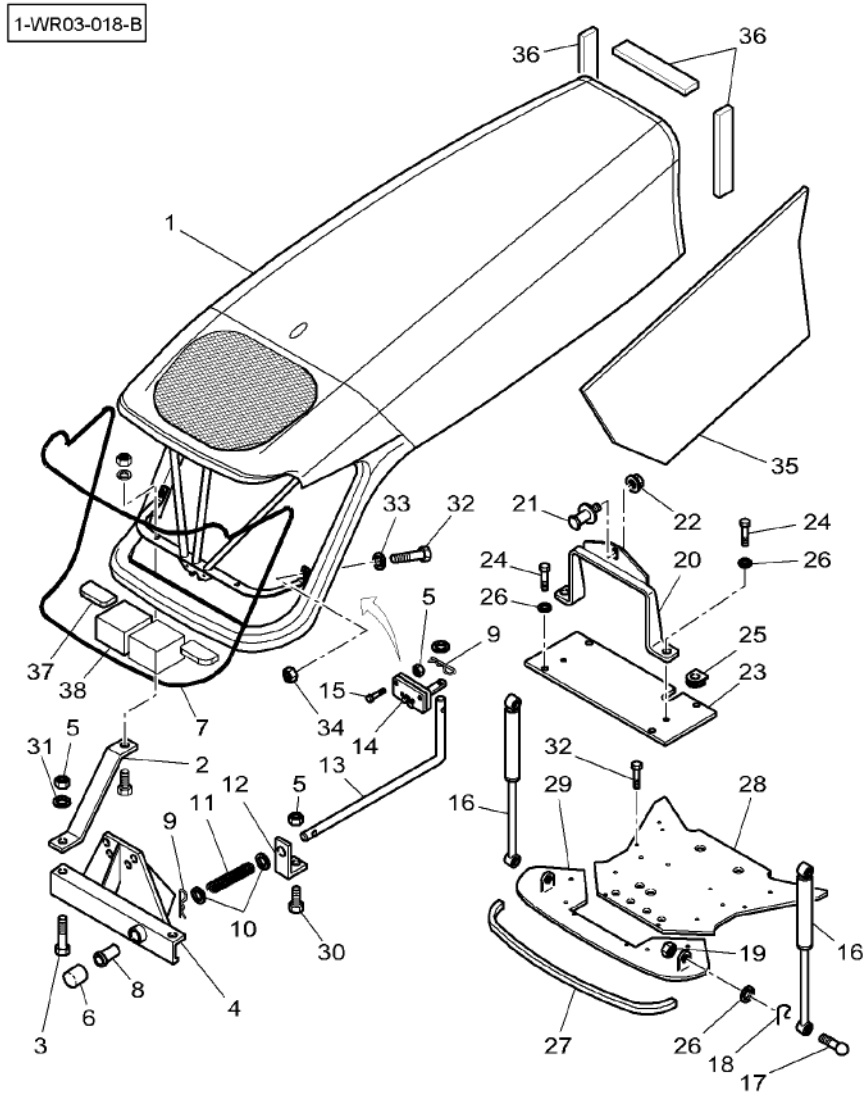

1	5017813P91		1	BONNET.	CAPOT COFANO	MOTORHAUBE CAPOT
2	5016800M1		2	TIE	ATTACHE TRAVERSA ATTACCO	KUPPL.STANGE BARRA DE ENLACE
3	339560X1	M6 X 20	4	HEX. SOCK. SCREW	VIS TETE HEX VITE PARKER	ZYLINDERSCHRAUBE TORN.CAB.HUECA
4	5016796M92		1	SUPPORT	SUPPORT SUPPORTO	LAGERUNG DISPOS.DE SOSTEN
5	339030X1	M6	10	NUT METRIC	ECROU METRIQUE DADO METRICO	MUTTER METRISCH TUERCA METRICO
6	5016517M1		1	BUTTON	BOUTON BOTTONE	KNOPFTASTE BOTON
7	4270242M2	➡| 01-MAR-2005 20X3X4000	1	GASKET	JOINT GUARNIZIONE	DICHTSCHEIBE EMPAQUETADURA.
7*	4281389M1	|➡ 02-MAR-2005 20X10X4000	1	GASKET	JOINT GUARNIZIONE	DICHTSCHEIBE EMPAQUETADURA.
8	72160887		1	BUSH	BAGUE BOCCOLA	BUCHSE CASQUILLO
9	1442967X1		1	PIN	GOUPILLE PERNO	BOLZEN PASADOR
10	390734X1		2	WASHER	RONDELLE RONDELLA	UNTERLEGSCHEIBE ARANDELA
11	5017249M1		1	SPRING	RESSORT MOLLA	FEDER RESORTE
12	5016798M1		1	STRAP	PATTE CORREGGIA	LASCHE FAJA
13	5016797M1		1	STEM	TIGE STELO	STIEL VASTAGO
14	5016791M1		1	LATCH	VERROU CHIAVISTELLO	RIEGEL CERROJO
15	391884X1	M6 X 50	4	HEX. SOCK. SCREW	VIS TETE HEX VITE PARKER	ZYLINDERSCHRAUBE TORN.CAB.HUECA
16	5016579M1		2	RAM	VERIN CILINDRO IDRAUL.	HYDR.ZYLINDER ARIETE
17	***3778880M1***		4	TOGGLE	ROTULE ROTULA	GELENKZAPFEN ROTULA
18	71307132		4	CLIP	PATTE D'ATTACHE FERMAGLIO	SCHELLE CLIP
19	339169X1	M8	4	NUT	ECROU DADO	MUTTER TUERCA
20	4278174M1		1	SUPPORT	SUPPORT SUPPORTO	LAGERUNG DISPOS.DE SOSTEN
21	72513270		1	LATCH	VERROU CHIAVISTELLO	RIEGEL CERROJO
22	70935041		1	NUT	ECROU DADO	MUTTER TUERCA
23	4278095M1		1	TRAP	TRAPPE TRAPPOLA	FANGKLAPPE PURGADOR
24	339124X1	M8 X 16	6	HEX. SOCK. SCREW	VIS TETE HEX VITE PARKER	ZYLINDERSCHRAUBE TORN.CAB.HUECA
25	3387555M1		1	GROMMET	PASSE FIL ANELLO PASSACAVO	GUMMITUELLE PASACABLE

Sheet Metal Carrosserie Verkleidung Carrozzeria Emplanchados	Hood Capot Motorhaube Cofano Capo	100-15

1-WR03-018-B

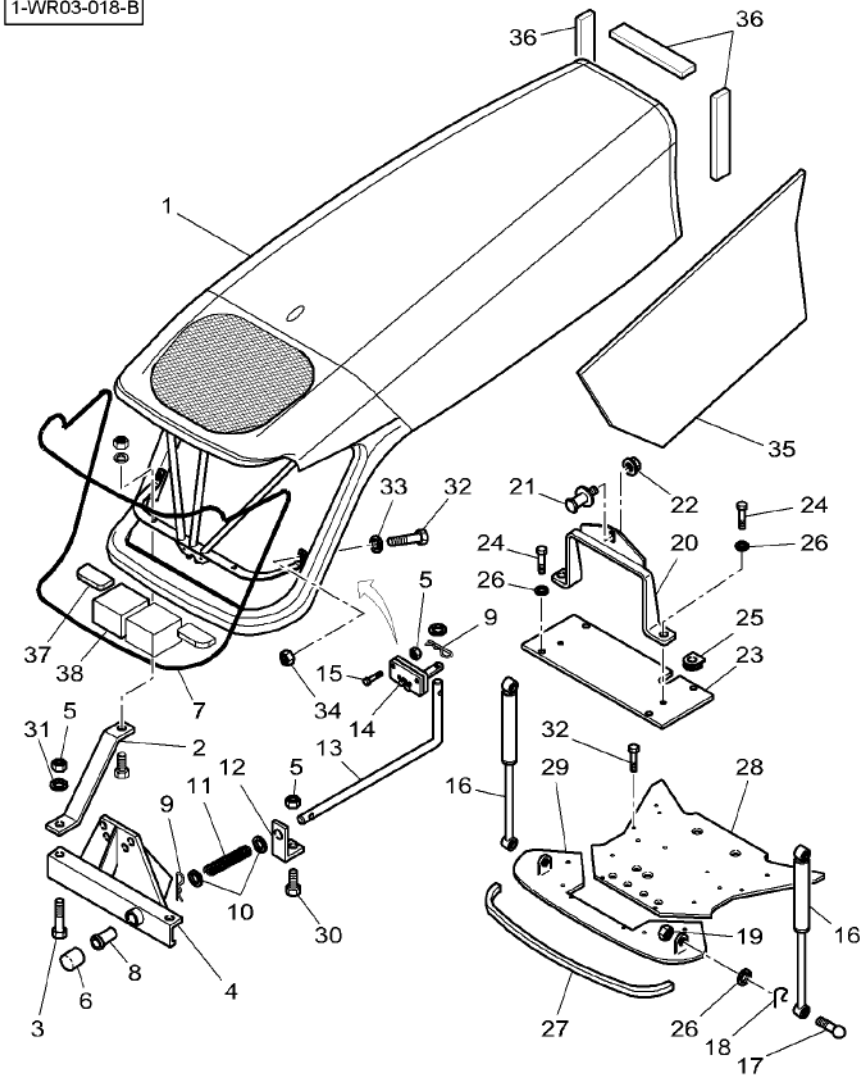

26	390972X1		10 WASHER	RONDELLE RONDELLA	UNTERLEGSCHEIBE ARANDELA
27	5017257M1	6X19X965	1 GASKET	JOINT GUARNIZIONE	DICHTSCHEIBE EMPAQUETADURA.
28*	4279245M3		1 SHIELD	TOLE RIPARO	SCHILD BLINDAJE
29	4279238M91		2 SHIELD	TOLE RIPARO	SCHILD BLINDAJE
30	339560X1	M6X16	1 HEX. SOCK. SCREW	VIS TETE HEX VITE PARKER	ZYLINDERSCHRAUBE TORN.CAB.HUECA
31	390971X1		4 WASHER	RONDELLE RONDELLA	UNTERLEGSCHEIBE ARANDELA
32	3009493X1	M10X30	8 HEX. SOCK. SCREW	VIS TETE HEX VITE PARKER	ZYLINDERSCHRAUBE TORN.CAB.HUECA
33	390734X1		2 WASHER	RONDELLE RONDELLA	UNTERLEGSCHEIBE ARANDELA
34	339402X1		2 NUT	ECROU DADO	MUTTER TUERCA
35*	72512965		1 PROTECTOR	PROTECTEUR PROTETTORE	SCHUTZ PROTECTOR
36*	5016721M1	311x50x9.5	3 GASKET	JOINT GUARNIZIONE	DICHTSCHEIBE EMPAQUETADURA.
37*	5017258M1		2 GASKET	JOINT GUARNIZIONE	DICHTSCHEIBE EMPAQUETADURA.
38*	4281422M1	85x60x85	2 GASKET	JOINT GUARNIZIONE	DICHTSCHEIBE EMPAQUETADURA.

Sheet Metal Carrosserie Verkleidung Carrozzeria Emplanchados	Hood Frame Armature Capot Motorhaube Armatur Armatura Cofano Armadura Capo	100-20

1-WR25-005-A

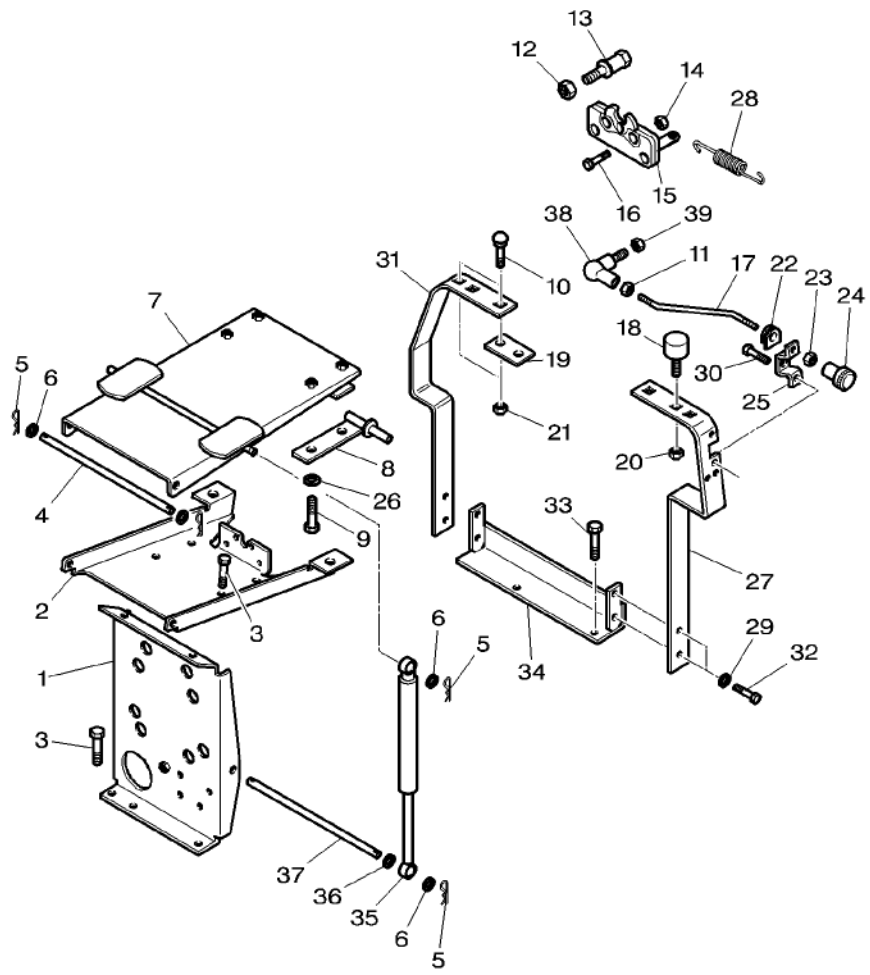

1	4274917M2		1	PLATE	PLAQUE PIASTRA	PLATTE PLATO
2	4274740M2		1	PLATE	PLAQUE PIASTRA	PLATTE PLATO
3	3009493X1	M10 X 30	4	HEX. SOCK. SCREW	VIS TETE HEX VITE PARKER	ZYLINDERSCHRAUBE TORN.CAB.HUECA
4	5016813M1	◄► 279,4 MM	1	CLEVIS PIN	AXE PERNO D'ATTACCO	SPLINTBOLZEN BULON CILINDRICO
5*	1442962X1		6	SPLIT PIN	GOUPILLE FENDUE COPIGLIA	SPALTBOLZEN PASADOR HENDIDO
6	390734X1	∅ 10-21 X 2	6	WASHER	RONDELLE RONDELLA	UNTERLEGSCHEIBE ARANDELA
7	4274741M94		1	PLATE	PLAQUE PIASTRA	PLATTE PLATO
8	4270738M91	►	1	PIVOT	PIVOT CARDINE	DREHZAPFEN PIVOTE
8	4270739M91	◄	1	PIVOT	PIVOT CARDINE	DREHZAPFEN PIVOTE
9*	3011372X1	M12 X 20	4	PLOUGH BOLT	VIS A EMBASE VITE TESTA TONDA	SENKSCHLOSSSCHRB TORNILLO ALOJ C
10	**390809X1**	M10 X 25	4	SCREW SPECIAL	VIS SPECIALE VITE SPECIALE	SPEZIALSCHRAUBE TORNILLO ESPEC.
11	339030X1	M6	1	NUT METRIC	ECROU METRIQUE DADO METRICO	MUTTER METRISCH TUERCA METRICO
12	70935041		1	NUT	ECROU DADO	MUTTER TUERCA
13	72513270		1	LATCH	VERROU CHIAVISTELLO	RIEGEL CERROJO
14	339030X1	M6	4	NUT METRIC	ECROU METRIQUE DADO METRICO	MUTTER METRISCH TUERCA METRICO
15	72161441		1	LATCH	VERROU CHIAVISTELLO	RIEGEL CERROJO
16	339262X1	M6 X 30	4	HEX. SOCK. SCREW	VIS TETE HEX VITE PARKER	ZYLINDERSCHRAUBE TORN.CAB.HUECA
17	4274912M2		1	STEM	TIGE STELO	STIEL VASTAGO
18	4274918M1		2	STOP	BUTEE STOP	ANSCHLAG PARO
19	4274957M1		1	CHOCK	CALE PASSACAVO	UNTERLEG-KEIL CALZA
20	339169X1	M8	2	NUT	ECROU DADO	MUTTER TUERCA
21	339402X1	M10	4	NUT	ECROU DADO	MUTTER TUERCA
22	3387555M1		1	GROMMET	PASSE FIL ANELLO PASSACAVO	GUMMITUELLE PASACABLE
23	339030X1	M6	1	NUT METRIC	ECROU METRIQUE DADO METRICO	MUTTER METRISCH TUERCA METRICO
24	3783419M1		1	BUTTON	BOUTON BOTTONE	KNOPFTASTE BOTON
25	4274911M2		1	SUPPORT	SUPPORT SUPPORTO	LAGERUNG DISPOS.DE SOSTEN

Sheet Metal Carrosserie Verkleidung Carrozzeria Emplanchados	Hood Frame Armature Capot Motorhaube Armatur Armatura Cofano Armadura Capo	100-20

1-WR25-005-A

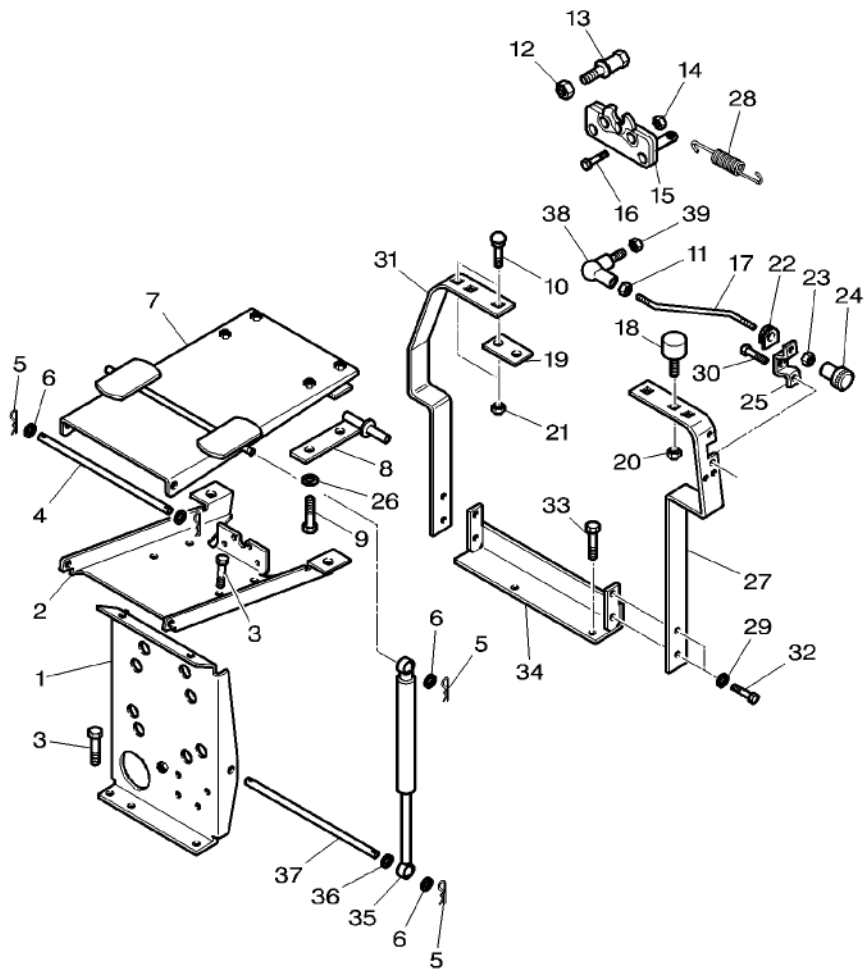

26	390735X1	∅ 12–24 X 2,5	4	WASHER	RONDELLE RONDELLA	UNTERLEGSCHEIBE ARANDELA
27	4274738M3	◀	1	SUPPORT	SUPPORT SUPPORTO	LAGERUNG DISPOS.DE SOSTEN
28	3580581M1	◀▶ 128 MM	1	SPRING	RESSORT MOLLA	FEDER RESORTE
29	390734X1		2	WASHER	RONDELLE RONDELLA	UNTERLEGSCHEIBE ARANDELA
30	339721X1	M5 X 16	2	HEX. SOCK. SCREW	VIS TETE HEX VITE PARKER	ZYLINDERSCHRAUBE TORN.CAB.HUECA
31	4274742M3	▶	1	SUPPORT	SUPPORT SUPPORTO	LAGERUNG DISPOS.DE SOSTEN
32	3009493X1	M10 X 30	4	HEX. SOCK. SCREW	VIS TETE HEX VITE PARKER	ZYLINDERSCHRAUBE TORN.CAB.HUECA
33	391269X1	M16 X 30	2	HEX. SOCK. SCREW	VIS TETE HEX VITE PARKER	ZYLINDERSCHRAUBE TORN.CAB.HUECA
34	4275439M93		1	SUPPORT	SUPPORT SUPPORTO	LAGERUNG DISPOS.DE SOSTEN
35	3783428M2		2	RAM	VERIN CILINDRO IDRAUL.	HYDR.ZYLINDER ARIETE
36	5016817M1		2	SPACER	ENTRETOISE DISTANZIALE	ABSTANDSTUECK DISCO ESPACIADOR
37	5016451M1	◀▶ 321,8 MM	1	BRACKET	SUPPORT FIXATION STAFFETTA	HALTEARM SOPORTE
38	3782780M1		1	STUB	EMBOUT CEPPO	STUMMEL SALIENTE
39	1441500X1		1	LOCKNUT	ECROU BLOCAGE AUTOBLOCCANTE	SICHERUNGSMUTTER CONTRATUERCA

Footstep
Marchepieds
Trittberetter
Pedana
Estribos

100-25

1-WS02-012-B

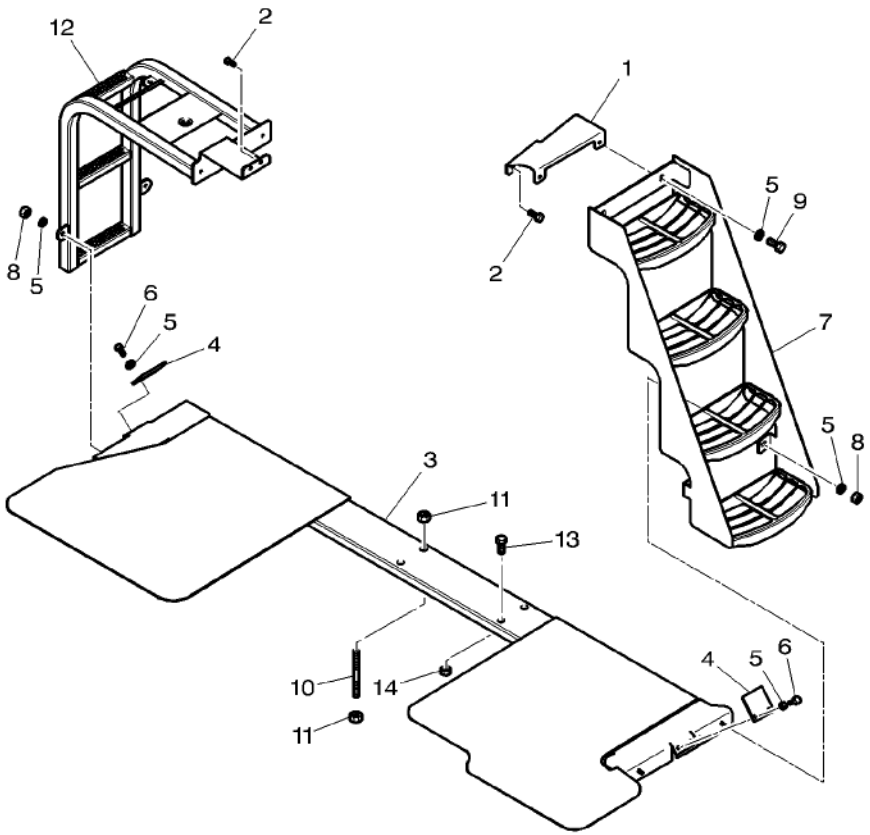

1	4278049M1	◀	1	SUPPORT	SUPPORT SUPPORTO LAGERUNG DISPOS.DE SOSTEN
2	3009492X1	M10 X 25	4	HEX. SOCK. SCREW	VIS TETE HEX VITE PARKER ZYLINDERSCHRAUBE TORN.CAB.HUECA
3	4275585M93		1	SUPPORT	SUPPORT SUPPORTO LAGERUNG DISPOS.DE SOSTEN
4	3786299M1		2	BRIDLE	BRIDE BRIGLIA SPANNBAND BRIDA
5	390972X1	∅ 8-17 X 1,7	10	WASHER	RONDELLE RONDELLA UNTERLEGSCHEIBE ARANDELA
6	339124X1	M8 X 16	4	HEX. SOCK. SCREW	VIS TETE HEX VITE PARKER ZYLINDERSCHRAUBE TORN.CAB.HUECA
7	3787215M91	◀	1	STEP	MARCHEPIED GRADINO TRITTBRETT PELDA-O
8	339169X1	M8	4	NUT	ECROU DADO MUTTER TUERCA
9	339761X1	M8 X 25	2	HEX. SOCK. SCREW	VIS TETE HEX VITE PARKER ZYLINDERSCHRAUBE TORN.CAB.HUECA
10	3011610X1	M16 X 70	2	STUD	GOUJON PRIGIONIERO STEHBOLZEN CHAVETA ROSCADO
11	339034X1	M16	4	NUT	ECROU DADO MUTTER TUERCA
12	4275463M93	▶	1	STEP	MARCHEPIED GRADINO TRITTBRETT PELDA-O
13	391889X1	M16 X 70	2	HEX. SOCK. SCREW	VIS TETE HEX VITE PARKER ZYLINDERSCHRAUBE TORN.CAB.HUECA
14	339034X1	M16	2	NUT	ECROU DADO MUTTER TUERCA

Emblems
Emblemes
Firmenzeichen
Emblemi
Emblemas

100-30

1-WR05-026-B

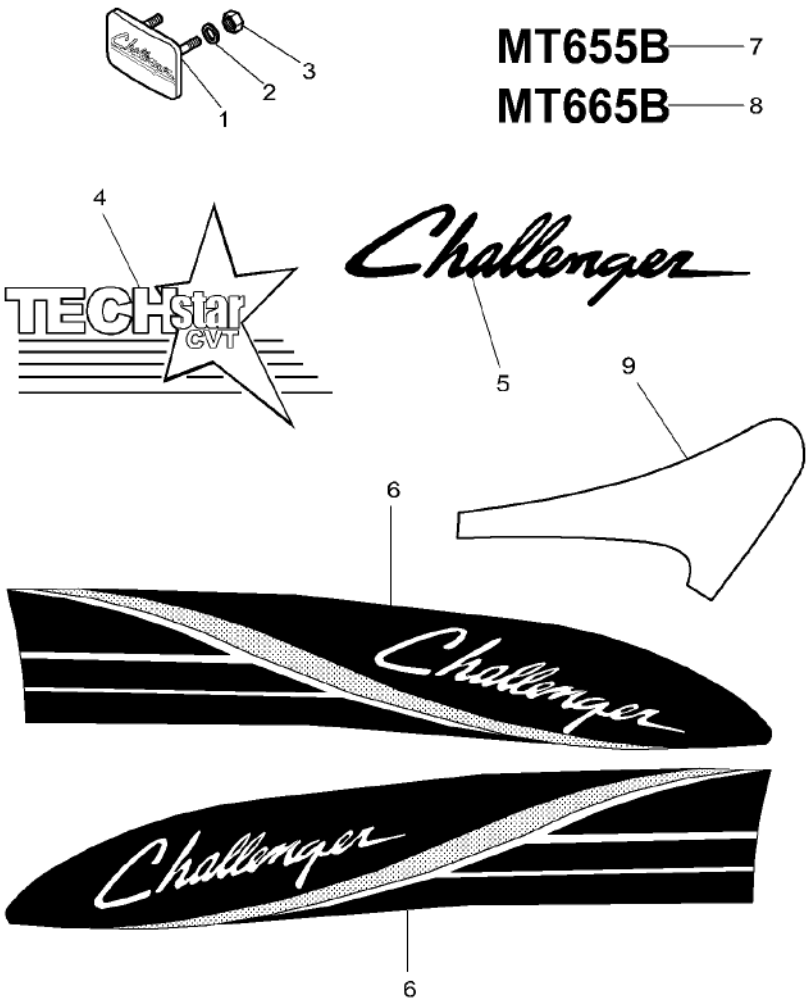

1	4274275M91		1	BADGE	BADGE DISTINTIVO	ABZEICHEN DIVISA
2	390971X1	∅ 6-12 X 1,5 MM	2	WASHER	RONDELLE RONDELLA	UNTERLEGSCHEIBE ARANDELA
3	1441500X1	M6	2	LOCKNUT	ECROU BLOCAGE AUTOBLOCCANTE	SICHERUNGSMUTTER CONTRATUERCA
4	4276819M1		2	DECAL	DECALCOMANIE DECALCOMANIA	AUFKLEBER CALCOMANIA
5	4275168M2		2	DECAL	DECALCOMANIE DECALCOMANIA	AUFKLEBER CALCOMANIA
6	4274714M1	◀	1	DECAL	DECALCOMANIE DECALCOMANIA	AUFKLEBER CALCOMANIA
6	4274715M1	▶	1	DECAL	DECALCOMANIE DECALCOMANIA	AUFKLEBER CALCOMANIA
7	4274718M2	MT 655B	2	DECAL	DECALCOMANIE DECALCOMANIA	AUFKLEBER CALCOMANIA
8	4274719M1	MT 665B	2	DECAL	DECALCOMANIE DECALCOMANIA	AUFKLEBER CALCOMANIA
9*	4280989M1	◀	1	DECAL	DECALCOMANIE DECALCOMANIA	AUFKLEBER CALCOMANIA
9*	4280988M1	▶	1	DECAL	DECALCOMANIE DECALCOMANIA	AUFKLEBER CALCOMANIA

Decals Decalcomanies Abziehbilder Decalcomanie Calcomanias	Safety Securite Sicherheit Sicurezza Seguridad	100-35

United States Only – See Next Page For Decal Location
Etats Unis Seulement – Voir Page Suivante Pour L Emplacement Des Decalcomanies
Vereinigten Staaten – Ehen Naechste Seite Fuer Die Aufkleber Lage
Stati Uniti – Veder Pagina Seguente Per La Posizione Dei Decalcomanies
Estados Unidos – Ver Pagina Siguiente Por La Posicion De Las Calcomanias

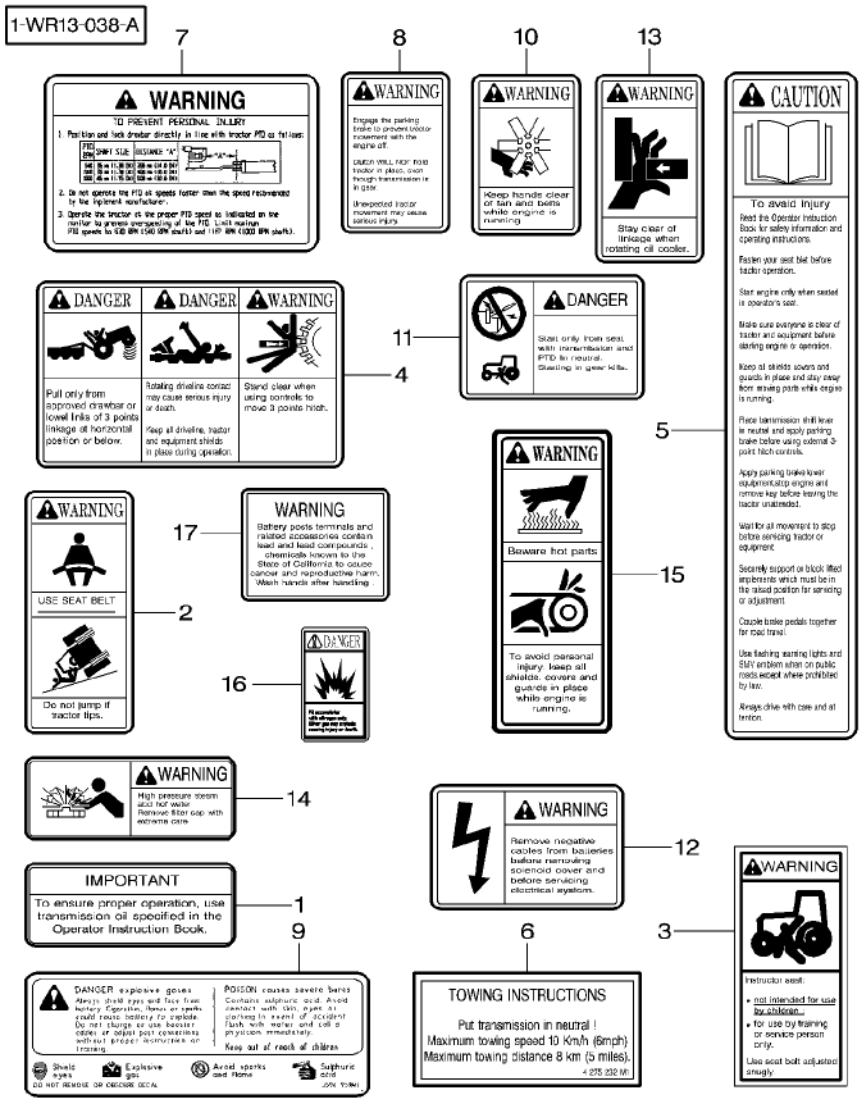

1	3777020M1	1 DECAL	DECALCOMANIE DECALCOMANIA	AUFKLEBER CALCOMANIA
2	3808567M2	1 DECAL	DECALCOMANIE DECALCOMANIA	AUFKLEBER CALCOMANIA
3	3787683M1	1 DECAL	DECALCOMANIE DECALCOMANIA	AUFKLEBER CALCOMANIA
4	3808558M3	1 DECAL	DECALCOMANIE DECALCOMANIA	AUFKLEBER CALCOMANIA
5	3808550M3	1 DECAL	DECALCOMANIE DECALCOMANIA	AUFKLEBER CALCOMANIA
6	4275232M1	1 DECAL	DECALCOMANIE DECALCOMANIA	AUFKLEBER CALCOMANIA
7	72503125	1 DECAL	DECALCOMANIE DECALCOMANIA	AUFKLEBER CALCOMANIA
8	3777017M2	1 DECAL	DECALCOMANIE DECALCOMANIA	AUFKLEBER CALCOMANIA
9	3810054M1	2 DECAL	DECALCOMANIE DECALCOMANIA	AUFKLEBER CALCOMANIA
10	3808500M2	2 DECAL	DECALCOMANIE DECALCOMANIA	AUFKLEBER CALCOMANIA
11	5016264M1	1 DECAL	DECALCOMANIE DECALCOMANIA	AUFKLEBER CALCOMANIA
12	5016204M1	1 DECAL	DECALCOMANIE DECALCOMANIA	AUFKLEBER CALCOMANIA
13	5016744M1	2 DECAL	DECALCOMANIE DECALCOMANIA	AUFKLEBER CALCOMANIA
14	3808561M3	1 DECAL	DECALCOMANIE DECALCOMANIA	AUFKLEBER CALCOMANIA
15	3808555M2	2 DECAL	DECALCOMANIE DECALCOMANIA	AUFKLEBER CALCOMANIA
16	3777021M3	1 DECAL	DECALCOMANIE DECALCOMANIA	AUFKLEBER CALCOMANIA
17	3786812M1	2 DECAL	DECALCOMANIE DECALCOMANIA	AUFKLEBER CALCOMANIA

Decals Decalcomanies Abziehbilder Decalcomanie Calcomanias	Safety Securite Sicherheit Sicurezza Seguridad	100-40	US

1-WR13-039-A

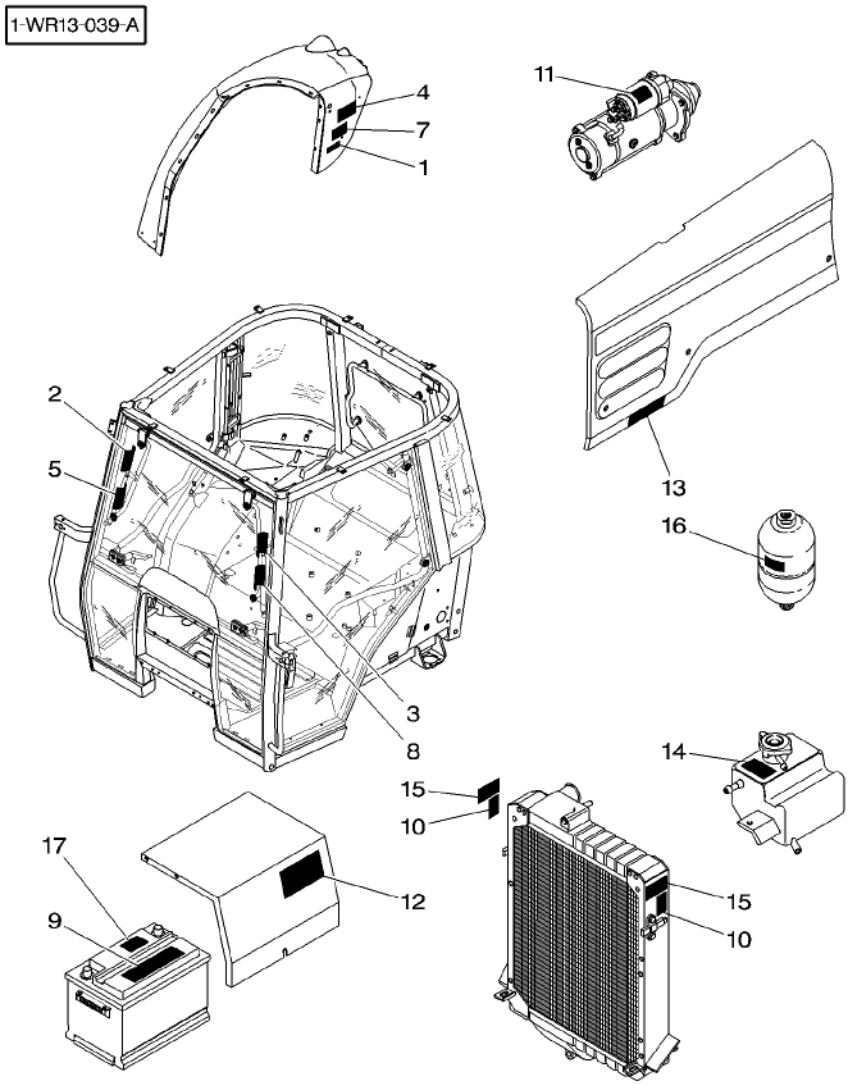

1	3777020M1		1	DECAL	DECALCOMANIE DECALCOMANIA	AUFKLEBER CALCOMANIA
2	3808567M2		1	DECAL	DECALCOMANIE DECALCOMANIA	AUFKLEBER CALCOMANIA
3	3787683M1		1	DECAL	DECALCOMANIE DECALCOMANIA	AUFKLEBER CALCOMANIA
4	3808558M3		1	DECAL	DECALCOMANIE DECALCOMANIA	AUFKLEBER CALCOMANIA
5	3808550M3		1	DECAL	DECALCOMANIE DECALCOMANIA	AUFKLEBER CALCOMANIA
6	4275232M1	[A]	1	DECAL	DECALCOMANIE DECALCOMANIA	AUFKLEBER CALCOMANIA
7	72503125		1	DECAL	DECALCOMANIE DECALCOMANIA	AUFKLEBER CALCOMANIA
8	3777017M2		1	DECAL	DECALCOMANIE DECALCOMANIA	AUFKLEBER CALCOMANIA
9	3810054M1		2	DECAL	DECALCOMANIE DECALCOMANIA	AUFKLEBER CALCOMANIA
10	3808500M2		2	DECAL	DECALCOMANIE DECALCOMANIA	AUFKLEBER CALCOMANIA
11	5016264M1		1	DECAL	DECALCOMANIE DECALCOMANIA	AUFKLEBER CALCOMANIA
12	5016204M1		1	DECAL	DECALCOMANIE DECALCOMANIA	AUFKLEBER CALCOMANIA
13	5016744M1		2	DECAL	DECALCOMANIE DECALCOMANIA	AUFKLEBER CALCOMANIA
14	3808561M3		1	DECAL	DECALCOMANIE DECALCOMANIA	AUFKLEBER CALCOMANIA
15	3808555M2		2	DECAL	DECALCOMANIE DECALCOMANIA	AUFKLEBER CALCOMANIA
16	3777021M3		1	DECAL	DECALCOMANIE DECALCOMANIA	AUFKLEBER CALCOMANIA
17	3786812M1		2	DECAL	DECALCOMANIE DECALCOMANIA	AUFKLEBER CALCOMANIA

[A] NOT ILLUSTRATED
NON ILLUSTRE
NICHT ABGEBILDET
NO ILLUSTRADO
NO ILLUSTRADED

Decals Decalcomanies Abziehbilder Decalcomanie Calcomanias	Safety Securite Sicherheit Sicurezza Seguridad	100-45	GB

1-WR13-031-A

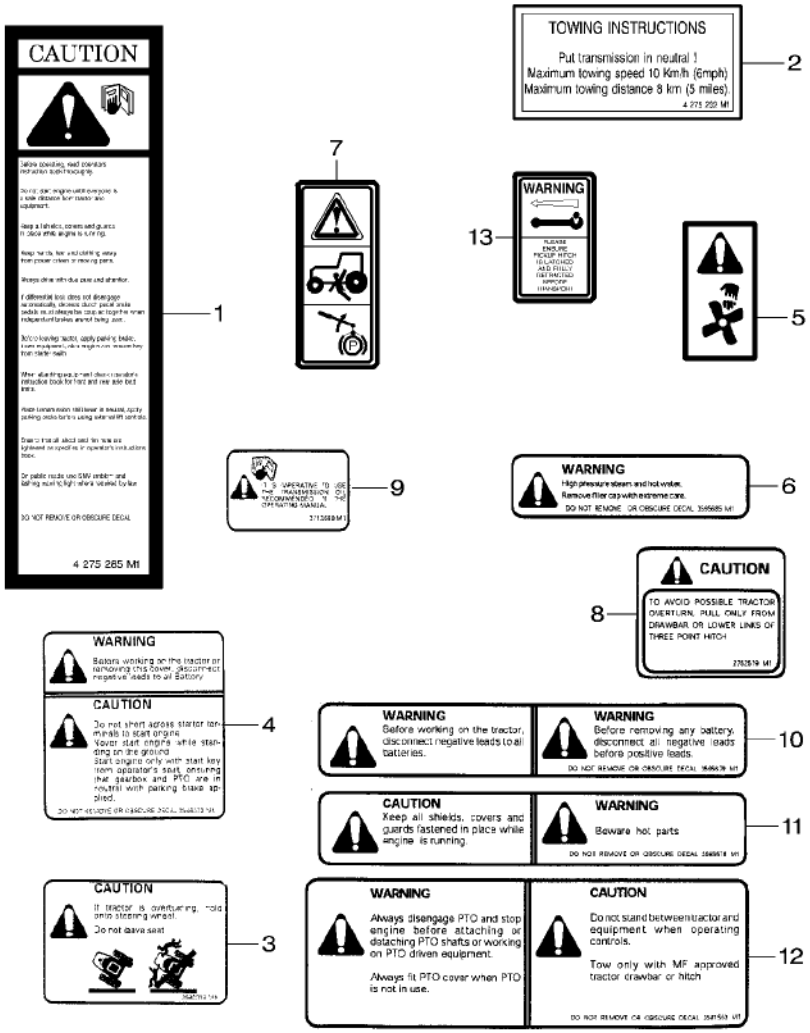

1	4275285M2	1	DECAL	DECALCOMANIE DECALCOMANIA	AUFKLEBER CALCOMANIA
2	4275232M1	1	DECAL	DECALCOMANIE DECALCOMANIA	AUFKLEBER CALCOMANIA
3	3580315M1	1	DECAL	DECALCOMANIE DECALCOMANIA	AUFKLEBER CALCOMANIA
4	3596432M1	1	DECAL	DECALCOMANIE DECALCOMANIA	AUFKLEBER CALCOMANIA
5	4271915M1	1	DECAL	DECALCOMANIE DECALCOMANIA	AUFKLEBER CALCOMANIA
6	3595685M1	1	DECAL	DECALCOMANIE DECALCOMANIA	AUFKLEBER CALCOMANIA
7	3782489M1	1	DECAL	DECALCOMANIE DECALCOMANIA	AUFKLEBER CALCOMANIA
8	2752579M1	1	DECAL	DECALCOMANIE DECALCOMANIA	AUFKLEBER CALCOMANIA
9	3713699M1	1	DECAL	DECALCOMANIE DECALCOMANIA	AUFKLEBER CALCOMANIA
10	3595679M1	1	DECAL	DECALCOMANIE DECALCOMANIA	AUFKLEBER CALCOMANIA
11	3595678M1	1	DECAL	DECALCOMANIE DECALCOMANIA	AUFKLEBER CALCOMANIA
12	3581563M1	1	DECAL	DECALCOMANIE DECALCOMANIA	AUFKLEBER CALCOMANIA
13*			NOT USED	NON UTILISE INUSATO	NICHT VERWENDET NO SE USA

Literature
Litterature
Literatur
Letteratura
Literatura

100-50

1-WR06-011-A

1 *	3378704M1	US	1	INSTRUCTION BOOK	GUIDEUTILISATION MANUALE ISTRUZI.	BETRIEBSANLEITG. MANUAL SERVICIO
1 *	3378701M1	EE	1	INSTRUCTION BOOK	GUIDEUTILISATION MANUALE ISTRUZI.	BETRIEBSANLEITG. MANUAL SERVICIO

110

Cab Mountings
Fixation Cabine
Kabinenbefestigung
Montaggio Cabina
Monturas De Cabina

110-5

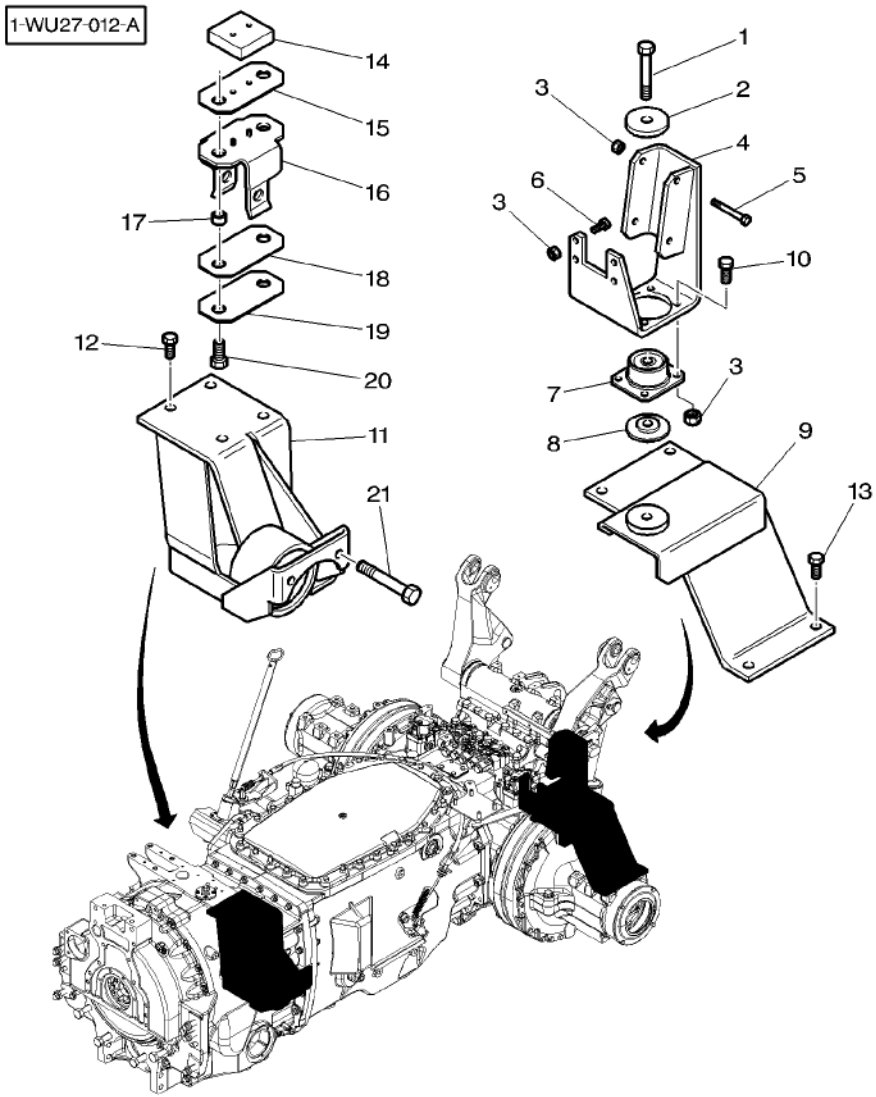

1	339182X1	M16 X 90	**2** HEX. SOCK. SCREW	VIS TETE HEX VITE PARKER	ZYLINDERSCHRAUBE TORN.CAB.HUECA
2	3712809M2	∅ 17–72 X 8	**2** SPACER	ENTRETOISE DISTANZIALE	ABSTANDSTUECK DISCO ESPACIADOR
3	339402X1	M10	**20** NUT	ECROU DADO	MUTTER TUERCA
4	3786991M3	◀	**1** FOOT	PIED PIEDE	FUSS PIE
4	3786992M3	▶	**1** FOOT	PIED PIEDE	FUSS PIE
5	339234X1	M10 X 120	**4** HEX. SOCK. SCREW	VIS TETE HEX VITE PARKER	ZYLINDERSCHRAUBE TORN.CAB.HUECA
6	3009493X1	M10 X 30	**8** HEX. SOCK. SCREW	VIS TETE HEX VITE PARKER	ZYLINDERSCHRAUBE TORN.CAB.HUECA
7	3712693M1	2000N	**2** VIBRATION MOUNT	SILENT BLOC ANTIVIBRANTE	METALLGUM.PUFFER MONTAJE ANTI–VIB
8	3388272M1	∅ 17–38–75	**2** WASHER	RONDELLE RONDELLA	UNTERLEGSCHEIBE ARANDELA
9	4274927M2	◀	**1** SUPPORT	SUPPORT SUPPORTO	LAGERUNG DISPOS.DE SOSTEN
9	4274928M1	▶	**1** SUPPORT	SUPPORT SUPPORTO	LAGERUNG DISPOS.DE SOSTEN
10	3009492X1	M10 X 25	**8** HEX. SOCK. SCREW	VIS TETE HEX VITE PARKER	ZYLINDERSCHRAUBE TORN.CAB.HUECA
11*	4276062M94	◀	**1** SUPPORT	SUPPORT SUPPORTO	LAGERUNG DISPOS.DE SOSTEN
11*	4276063M94	▶	**1** SUPPORT	SUPPORT SUPPORTO	LAGERUNG DISPOS.DE SOSTEN
12	**339275X1**	M16 X 35	**8** HEX. SOCK. SCREW	VIS TETE HEX VITE PARKER	ZYLINDERSCHRAUBE TORN.CAB.HUECA
13	3009132X1	M16 X 50	**4** HEX. SOCK. SCREW	VIS TETE HEX VITE PARKER	ZYLINDERSCHRAUBE TORN.CAB.HUECA
14	4271078M1		**2** PLATE	PLAQUE PIASTRA	PLATTE PLATO
15	4274223M1	⧗ 3 MM	**2** PLATE	PLAQUE PIASTRA	PLATTE PLATO
16	3787080M4		**2** SUPPORT	SUPPORT SUPPORTO	LAGERUNG DISPOS.DE SOSTEN
17	4274225M91		**4** SPACER	ENTRETOISE DISTANZIALE	ABSTANDSTUECK DISCO ESPACIADOR
18	4275620M1	⧗ 4 MM	**2** PLATE	PLAQUE PIASTRA	PLATTE PLATO
19	4279533M1	⧗ 5 MM	**2** PLATE	PLAQUE PIASTRA	PLATTE PLATO
20	390419X1	M16 X 40	**4** HEX. SOCK. SCREW	VIS TETE HEX VITE PARKER	ZYLINDERSCHRAUBE TORN.CAB.HUECA
21	391914X1	M20 X 110	**2** HEX. SOCK. SCREW	VIS TETE HEX VITE PARKER	ZYLINDERSCHRAUBE TORN.CAB.HUECA

Cab Mountings Fixation Cabine Kabinenbefestigung Montaggio Cabina Monturas De Cabina	With Suspension Avec Suspension Mit Federung Con Sospensione Con Suspension	110-10

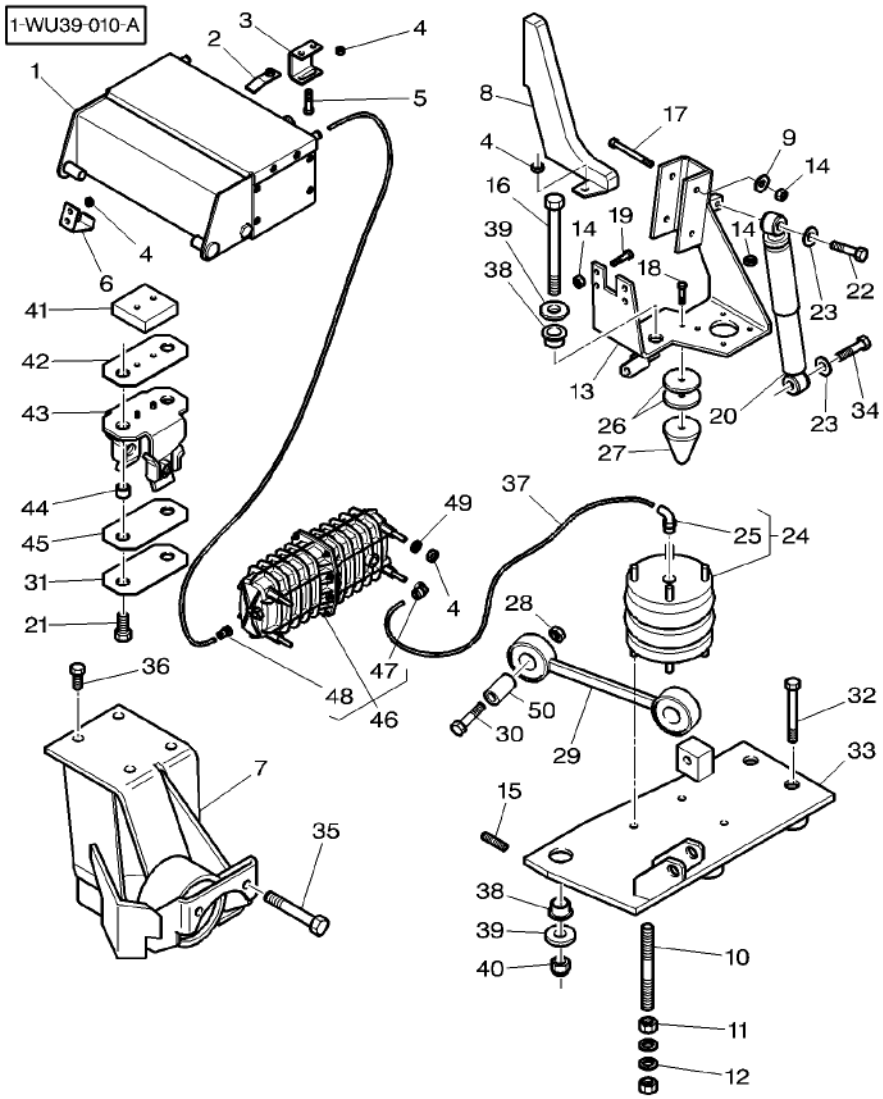

1	3787065M92	110–15 No	1	CONTROL BOX	BOITE COMMANDE CENTRALINA ELET.	SPANNUNGSREGLER CAJA DE CONTROL
2	3789906M2		1	SUPPORT	SUPPORT SUPPORTO	LAGERUNG DISPOS.DE SOSTEN
3	3789905M2		1	SUPPORT	SUPPORT SUPPORTO	LAGERUNG DISPOS.DE SOSTEN
4	339169X1	M8	12	NUT	ECROU DADO	MUTTER TUERCA
4	394367X1	[A] M8	X	LOCKNUT	ECROU BLOCAGE AUTOBLOCCANTE	SICHERUNGSMUTTER CONTRATUERCA
5	339123X1	M8 X 20	7	HEX. SOCK. SCREW	VIS TETE HEX VITE PARKER	ZYLINDERSCHRAUBE TORN.CAB.HUECA
6	3789904M1		2	HINGE	CHARNIERE CERNIERA	SCHARNIER BISAGRA
7*	4279013M92	◀	1	SUPPORT	SUPPORT SUPPORTO	LAGERUNG DISPOS.DE SOSTEN
7*	4279014M92	▶	1	SUPPORT	SUPPORT SUPPORTO	LAGERUNG DISPOS.DE SOSTEN
8	4278784M2	▶	1	COWL	GARANT CAPPOTTATURA	AUFSATZ CAPERUZA
8	4278785M2	◀	1	COWL	GARANT CAPPOTTATURA	AUFSATZ CAPERUZA
9	385362X1		8	WASHER	RONDELLE RONDELLA	UNTERLEGSCHEIBE ARANDELA
10	3786267M1	M16 X 300	2	STEM	TIGE STELO	STIEL VASTAGO
11	339034X1	M16	4	NUT	ECROU DADO	MUTTER TUERCA
12	3010875X1	∅ 16–30 X 5	4	WASHER	RONDELLE RONDELLA	UNTERLEGSCHEIBE ARANDELA
13	4274968M1	◀	1	FOOT	PIED PIEDE	FUSS PIE
13	4274969M1	▶	1	FOOT	PIED PIEDE	FUSS PIE
14	339402X1	M10	8	NUT	ECROU DADO	MUTTER TUERCA
15	4279690M1	M16 X 55	2	STEM	TIGE STELO	STIEL VASTAGO
16	3010613X1	M20 X 280	2	HEX. SOCK. SCREW	VIS TETE HEX VITE PARKER	ZYLINDERSCHRAUBE TORN.CAB.HUECA
17	339234X1	M10 X 120	4	HEX. SOCK. SCREW	VIS TETE HEX VITE PARKER	ZYLINDERSCHRAUBE TORN.CAB.HUECA
18	339291X1	M8 X 55	2	HEX. SOCK. SCREW	VIS TETE HEX VITE PARKER	ZYLINDERSCHRAUBE TORN.CAB.HUECA
19	3009493X1	M10 X 30	8	HEX. SOCK. SCREW	VIS TETE HEX VITE PARKER	ZYLINDERSCHRAUBE TORN.CAB.HUECA
20	4279945M1		2	SHOCK ABSORBER	AMORTISSEUR AMMORTIZZATORE*	STOSSDAEMPFER AMORTIGUADOR
21	391120X1	M16 X 45	4	HEX. SOCK. SCREW	VIS TETE HEX VITE PARKER	ZYLINDERSCHRAUBE TORN.CAB.HUECA
22	3009515X1	M12 X 80	2	HEX. SOCK. SCREW	VIS TETE HEX VITE PARKER	ZYLINDERSCHRAUBE TORN.CAB.HUECA

Cab Mountings Fixation Cabine Kabinenbefestigung Montaggio Cabina Monturas De Cabina	With Suspension Avec Suspension Mit Federung Con Sospensione Con Suspension	110-10

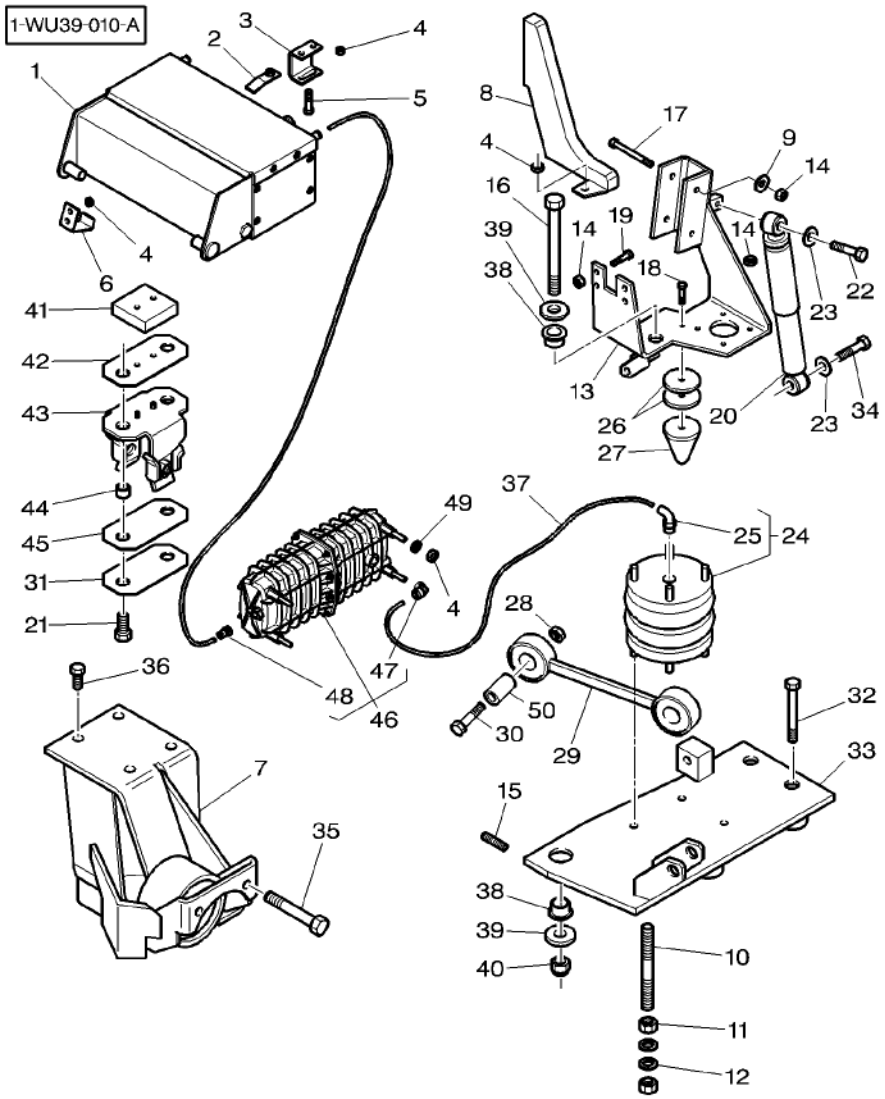

23	391212X1	∅ 13–37 X 3	4	WASHER	RONDELLE RONDELLA	UNTERLEGSCHEIBE ARANDELA
24	***4273315M91***		2	SHOCK ABSORBER	AMORTISSEUR AMMORTIZZATORE*	STOSSDAEMPFER AMORTIGUADOR
25	4271561M1	24	1	UNION	RACCORD RACCORDO	VERSCHRAUBUNG RACOR
26	3787081M1		4	CHOCK	CALE PASSACAVO	UNTERLEG–KEIL CALZA
27	4274350M1		2	STOP	BUTEE STOP	ANSCHLAG PARO
28*	339034X1	M16	4	NUT	ECROU DADO	MUTTER TUERCA
29	4273003M92		2	LINKAGE	ARTICULATION TIRANTERIA	GESTAENGE VARILLAJE
30	3019865X1	M16 X 75	4	HEX. SOCK. SCREW	VIS TETE HEX VITE PARKER	ZYLINDERSCHRAUBE TORN.CAB.HUECA
31	4279533M1	⧗ 5 MM	2	PLATE	PLAQUE PIASTRA	PLATTE PLATO
32	339182X1	M16 X 90	4	HEX. SOCK. SCREW	VIS TETE HEX VITE PARKER	ZYLINDERSCHRAUBE TORN.CAB.HUECA
33	4274970M1	◀	1	SUPPORT	SUPPORT SUPPORTO	LAGERUNG DISPOS.DE SOSTEN
33	4274971M1	▶	1	SUPPORT	SUPPORT SUPPORTO	LAGERUNG DISPOS.DE SOSTEN
34	3009512X1	M12 X 60	2	HEX. SOCK. SCREW	VIS TETE HEX VITE PARKER	ZYLINDERSCHRAUBE TORN.CAB.HUECA
35	391914X1	M20 X 110	2	HEX. SOCK. SCREW	VIS TETE HEX VITE PARKER	ZYLINDERSCHRAUBE TORN.CAB.HUECA
36	390419X1	M16 X 40	8	HEX. SOCK. SCREW	VIS TETE HEX VITE PARKER	ZYLINDERSCHRAUBE TORN.CAB.HUECA
37	4278783M1		2	HYDR. HOSE	FLEXIBLE TUBOFLEX IDRAUL	HYDR. SCHLAUCH TUBO HIDRAULICO
38	3787068M1		4	BEARING CARRIER	PALIER CUSCINETTO SUPP–	LAGER–GEHAEUSE TEJUELO
39	3787069M1		4	THRUST WASHER	RONDELLE BUTEE RONDELLA REGGISP	ANLAUFSCHEIBE ARANDELA ACELER
40	3010067X1	M20	2	LOCKNUT	ECROU BLOCAGE AUTOBLOCCANTE	SICHERUNGSMUTTER CONTRATUERCA
41	4271078M1		2	PLATE	PLAQUE PIASTRA	PLATTE PLATO
42	4274223M1	⧗ 3 MM	2	PLATE	PLAQUE PIASTRA	PLATTE PLATO
43	4278827M92		2	SUPPORT	SUPPORT SUPPORTO	LAGERUNG DISPOS.DE SOSTEN
44	4274225M91		4	SPACER	ENTRETOISE DISTANZIALE	ABSTANDSTUECK DISCO ESPACIADOR
45	4275620M1	⧗ 4 MM	2	PLATE	PLAQUE PIASTRA	PLATTE PLATO
46	4273332M92	2 L	2	ACCUMULATOR	ACCUMULATEUR ACCUMULATORE	AKKUMULATOR ACUMULADOR
47	4274577M1	46	1	UNION	RACCORD RACCORDO	VERSCHRAUBUNG RACOR

Cab Mountings Fixation Cabine Kabinenbefestigung Montaggio Cabina Monturas De Cabina	With Suspension Avec Suspension Mit Federung Con Sospensione Con Suspension	110-10

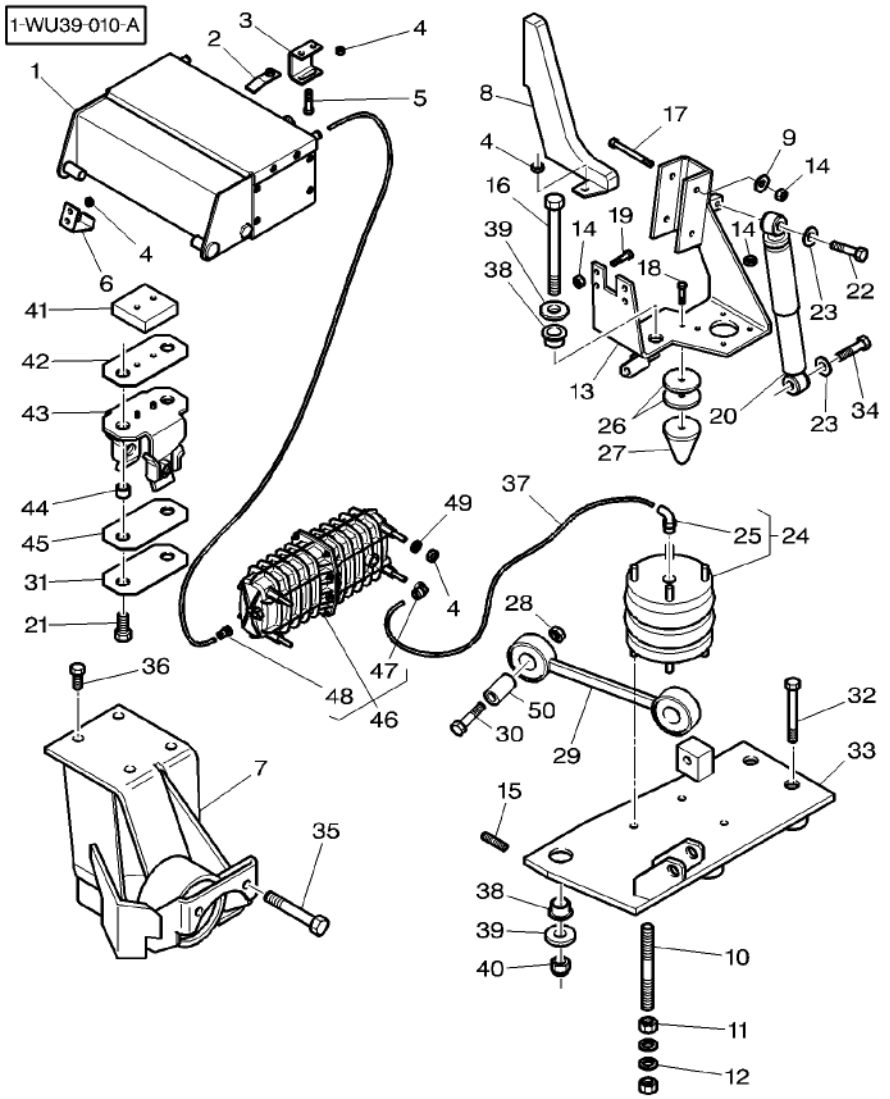

48	4273336M1	46		1	UNION	RACCORD RACCORDO RACOR
49	390597X1	∅ 10–30 X 2,5		6	WASHER	RONDELLE RONDELLA UNTERLEGSCHEIBE ARANDELA
50	4275897M1			4	SPACER	ENTRETOISE DISTANZIALE ABSTANDSTUECK DISCO ESPACIADOR

[A] CHECK NUT
ECROU AUTOFREINE
MUTTER SELBST BREMST
DADO AUTOFREINAR
TUERCA AUTOFREINAR

Suspended Cab Control Unit
Boite De Commande Cabine Suspendue
Steuereinheit Aufgehangtes Fahrerhaus
Centralina Di Comando Cabina Sospesa
Caja De Mando Cabina Suspendida

110-15

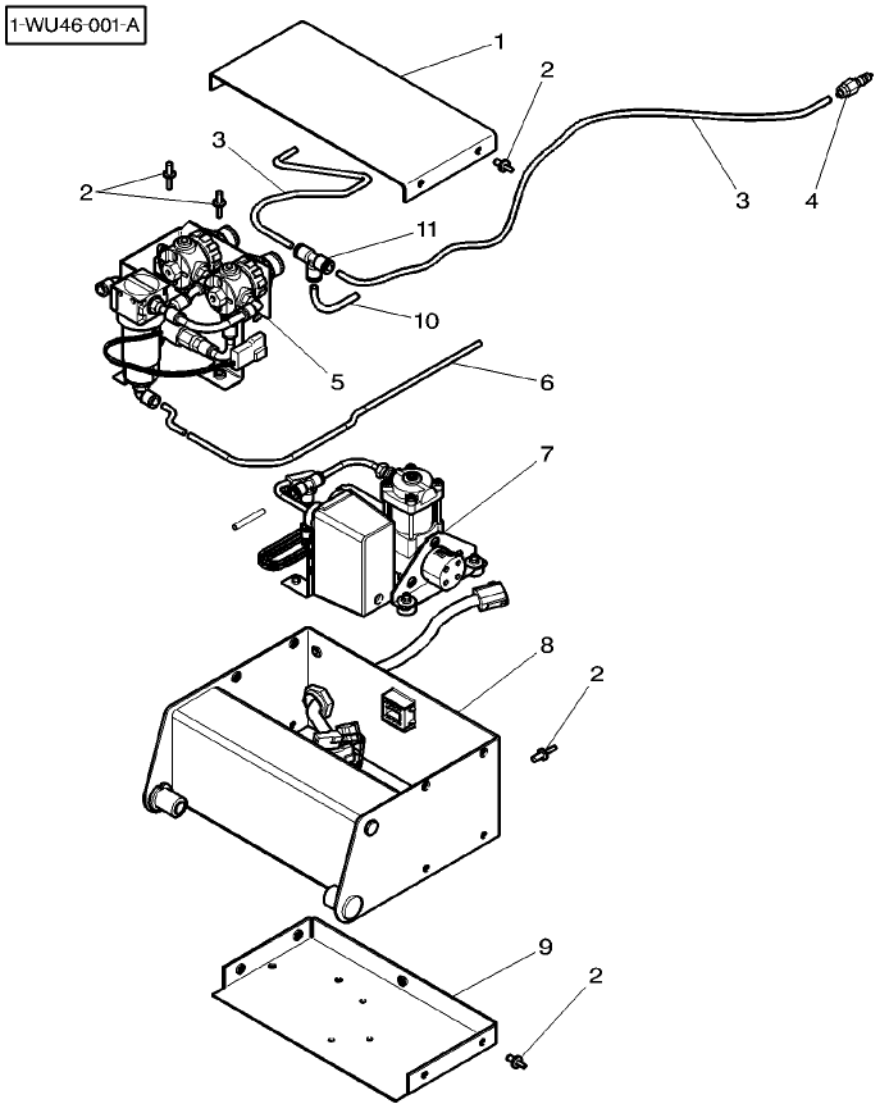

1	4275950M1		1	COVER	COUVERCLE COPERCHIO	DECKEL CUBIERTA
2	3007920X1	M6 X 12	11	SCREW	VIS VITE	SCHRAUBE TORNILLO
3		REF. 6	2	TUBE	TUBE TUBO	ROHR TUBO
4	4275874M91		1	BLOW OFF VALVE	VALVE DE PURGE VALVOLA COMPRESS	UEBERDRUCKVENTIL VALVULA DESCARGA
5*		110–20 No	1	KIT, AIR CLEANER	JEU FILTRE A AIR KIT FILTRO ARIA	LUFTFILTER–SATZ JUEGO FILT.AIRE.
6	4275963M1		1	PIPE	TUYAU TUBO	ROHRLEITUNG CANO
7		110–25 No	1	COMPRESSOR	COMPRESSEUR COMPRESSORE	KOMPRESSOR COMPRESOR
8		110–30 No	1	AIR TANK	RESERVOIR D'AIR SERBATOIO ARIA	LUFTBEHAELTER DEPOSITO DE AIRE
9	4275951M1		1	PLATE	PLAQUE PIASTRA	PLATTE PLATO
10		REF. 6	1	EXHAUST PIPE	TUBE ECHAPPEMENT TUBO SCARICO	AUSPUFFROHR CONDUCTO ESCAPE
11	4275947M1		1	UNION	RACCORD RACCORDO	VERSCHRAUBUNG RACOR

Suspended Cab Control Unit
Boite De Commande Cabine Suspendue
Steuereinheit Aufgehangtes Fahrerhaus
Centralina Di Comando Cabina Sospesa
Caja De Mando Cabina Suspendida

110-20

Pressue Regulator And Filter
Regulateur De Pression Et Filtre
Druckregler Regelventil Und Filter
Regolatore Di Pressione I Filtro
Regulador De Presion Y Filtro

1-WU46-005-A

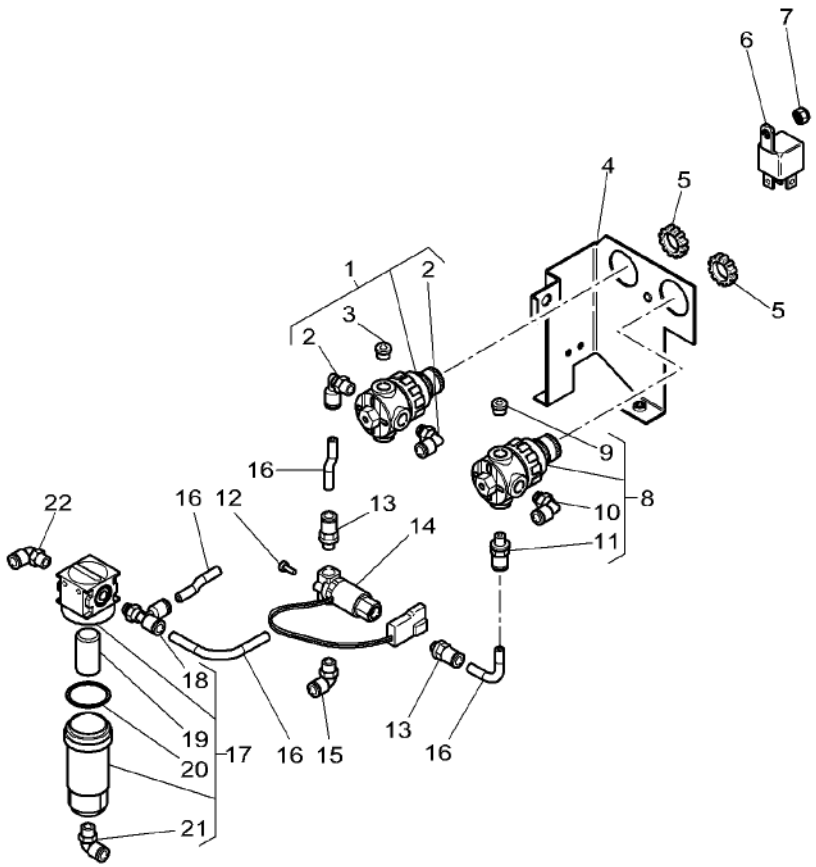

1	4275825M91	2,65 BAR	1	REGULATOR	REGULATEUR REGOLATORE	REGLER REGULADOR
2	4275911M1	1 1/8"– 6/4	2	UNION	RACCORD RACCORDO	VERSCHRAUBUNG RACOR
3	4275909M1	1 1/8"	1	PLUG	BOUCHON TAPPO	VERSCHL.STOPFEN TAPON
4	4275921M1		1	PLATE	PLAQUE PIASTRA	PLATTE PLATO
5*	3907551M1		2	NUT	ECROU DADO	MUTTER TUERCA
6	4275922M1		1	RELAY	RELAIS RELE	RELAIS RELE
7	3019139X1		1	NUT	ECROU DADO	MUTTER TUERCA
8	4275824M91	2,10 BAR	1	REGULATOR	REGULATEUR REGOLATORE	REGLER REGULADOR
9	4275909M1	8 1/8"	1	PLUG	BOUCHON TAPPO	VERSCHL.STOPFEN TAPON
10	4275911M1	8 1/8"– 6/4	1	UNION	RACCORD RACCORDO	VERSCHRAUBUNG RACOR
11	4273336M1	8 1/8"– 6/4	1	UNION	RACCORD RACCORDO	VERSCHRAUBUNG RACOR
12	3019880X1	M4 X 12	2	SCREW METRIC	VIS METRIQUE VITE METRICA	SCHRAUBE METR TORNILLO METRICO
13	4273336M1		2	UNION	RACCORD RACCORDO	VERSCHRAUBUNG RACOR
14	4275916M1		1	ELECTROVALVE	ELECTROVANNE ELETTROVALVOLA	ELECTRON.VENTIL ELECTROVALVULA
15	4275911M1		1	UNION	RACCORD RACCORDO	VERSCHRAUBUNG RACOR
16	4275963M1	[A] ◄► 1135MM	X	PIPE	TUYAU TUBO	ROHRLEITUNG CANO
17	4275814M91		1	FILTER	FILTRE FILTRO	FILTER FILTRO
18	4275914M1	17	1	TEEPIECE	TE RACCORDO A T	T–STUECK PIEZA EN T
19	4276397M1	17	1	FILTER INSERT	ELEMENT FILTRANT ELEMENTO FILTRAN	FILTEREINSATZ SUPLEMENT FILTRO
20	4276396M1	17	1	O RING	JOINT TORIQUE ANELLO TENUTA	O–RING ANILLO FORMA 'O'
21	4275911M1	17	1	UNION	RACCORD RACCORDO	VERSCHRAUBUNG RACOR
22	4275911M1		1	UNION	RACCORD RACCORDO	VERSCHRAUBUNG RACOR

[A] CUT TO REQUIRED LENGTH
COUPER A LA LONGEUR DESIREE
BENOETIGTE LAENGE ABSCHNEIDEN
TAGLIARE A LUNGHEZZA RICHIESTA
CORTAR A LA LONGITUD NECESARIA

Suspended Cab Control Unit Boite De Commande Cabine Suspendue Steuereinheit Aufgehangtes Fahrerhaus Centralina Di Comando Cabina Sospesa Caja De Mando Cabina Suspendida	110-25	Compressor Compresseur Kompressor Compressore Compresor

1-WU46-003-B

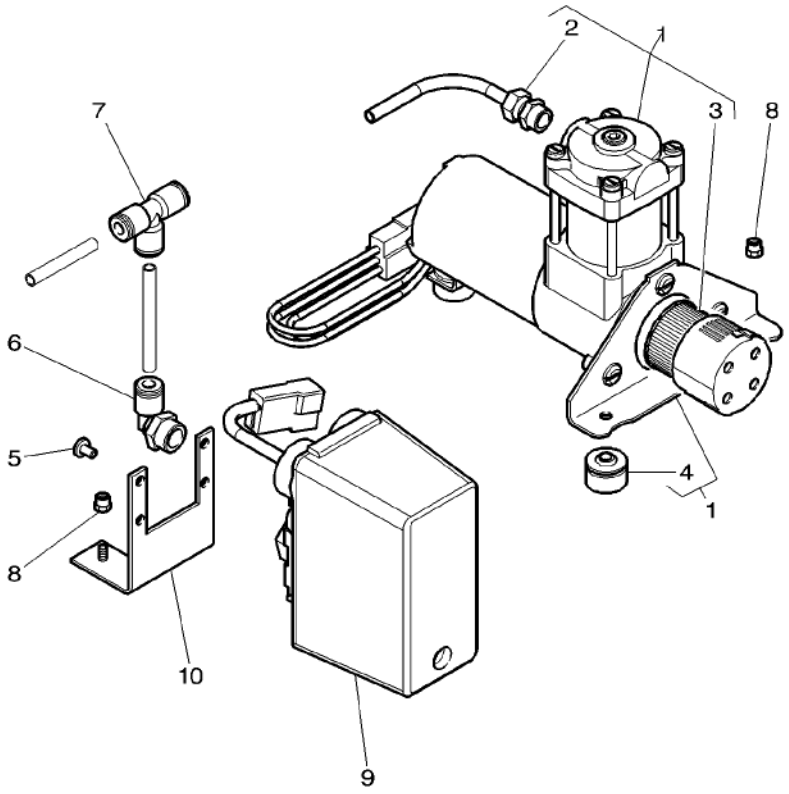

1	4275812M91		1	COMPRESSOR	COMPRESSEUR COMPRESSORE	KOMPRESSOR COMPRESOR
2	4277531M91	1	1	TUBE	TUBE TUBO	ROHR TUBO
3	4277532M91	1	1	FILTER	FILTRE FILTRO	FILTER FILTRO
4	4275977M1	1	2	VIBRATION MOUNT	SILENT BLOC ANTIVIBRANTE	METALLGUM.PUFFER MONTAJE ANTI-VIB
5	3009530X1		2	SCREW	VIS VITE	SCHRAUBE TORNILLO
6	4275942M1		1	UNION	RACCORD RACCORDO	VERSCHRAUBUNG RACOR
7	4275947M1		1	UNION	RACCORD RACCORDO	VERSCHRAUBUNG RACOR
8	3019139X1		5	NUT	ECROU DADO	MUTTER TUERCA
9	4275943M91		1	REGULATOR	REGULATEUR REGOLATORE	REGLER REGULADOR
10	4275944M1		1	ANGLE.	EQUERRE ANGOLO	WINKEL ANGULO

Suspended Cab Control Unit Boite De Commande Cabine Suspendue Steuereinheit Aufgehangtes Fahrerhaus Centralina Di Comando Cabina Sospesa Caja De Mando Cabina Suspendida	110-30	Air Tank Reservoir D'Air Lufttank Serbatoio Di Aria Deposito De Aire

1-WU46-004-A

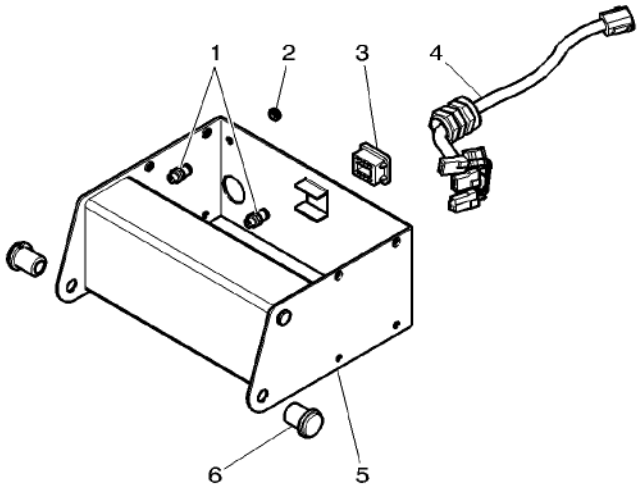

1	4273336M1	2	UNION	RACCORD RACCORDO	VERSCHRAUBUNG RACOR
2	4275937M1	3	GROMMET	PASSE FIL ANELLO PASSACAVO	GUMMITUELLE PASACABLE
3	4275939M1	1	LATCH	VERROU CHIAVISTELLO	RIEGEL CERROJO
4	4275910M1	1	HARNESS	FAISCEAU FASCIOCAVI	KABELBAUM MAZO CABLES
5	4274301M1	1	BOX	BOITE SCATOLA	DOSE CAJA
6	4275938M1	2	SLEEVE	MANCHON MANICOTTO	HUELSE MANCHA

Tractor Cab
Cabine Tracteur
Schlepperkabine
Cabina Trattore
Cabina Tractor

110-35

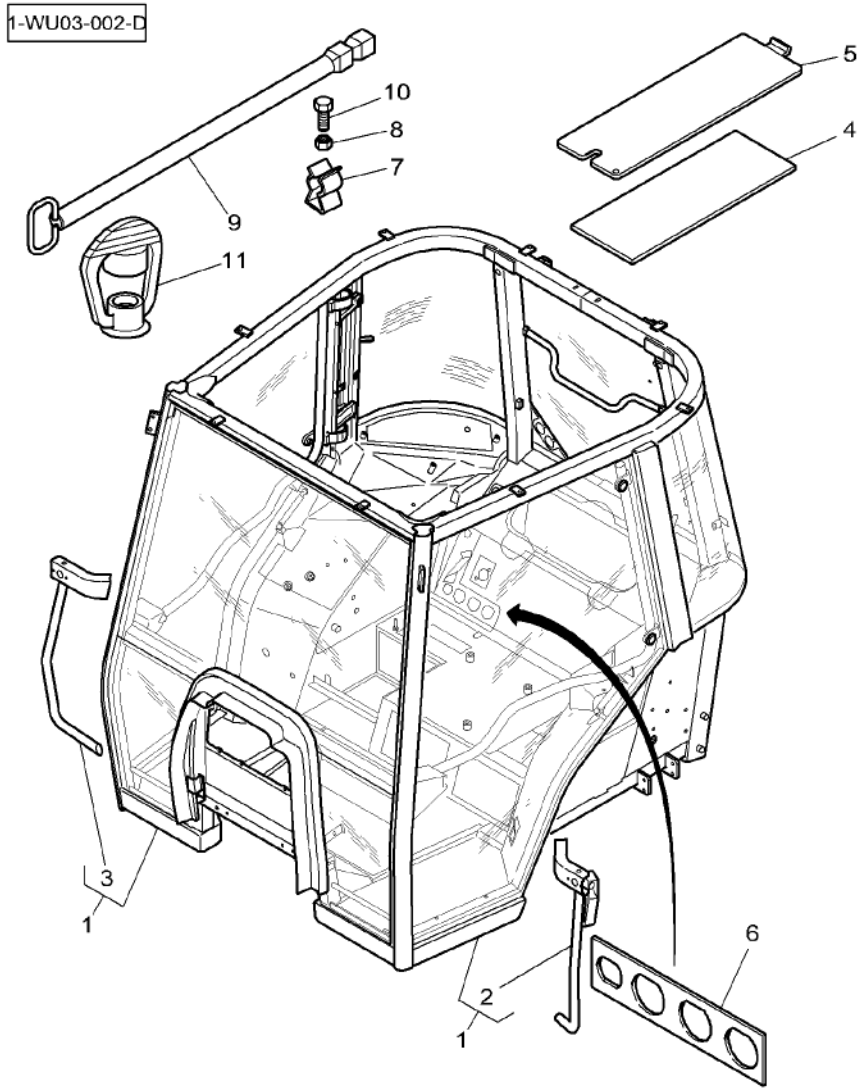

1	4279923M91	[B]	1	CAB	CABINE CABINA	KABINE CABINA
1	4279924M91	[C]	1	CAB	CABINE CABINA	KABINE CABINA
2*	3907537M1	1 ◀	1	GUIDEWAY	RAMBARDE ROTAIA	FUEHRUNGSSCHIENE RIEL DE GUIA
3*	3907481M1	1 ▶	1	GUIDEWAY	RAMBARDE ROTAIA	FUEHRUNGSSCHIENE RIEL DE GUIA
4	4273198M1		1	FOAM	MOUSSE GOMMAPIUMA	SCHAUMSTOFF ESPUMA
5	4273193M1		1	TRAP	TRAPPE TRAPPOLA	FANGKLAPPE PURGADOR
6	4276716M1	➡|	1	SHIELD	TOLE RIPARO	SCHILD BLINDAJE
7*	4276502M1		2	CLIP	PATTE D'ATTACHE FERMAGLIO	SCHELLE CLIP
8	339169X1	➡| 03-2005 M8	2	NUT	ECROU DADO	MUTTER TUERCA
9	G701100090800		1	TOOL	OUTIL ATTREZZO	WERKZEUG HERRAMIENTA
10*	3009285X1	➡ 03-2005 M8 X 16	2	SCREW	VIS VITE	SCHRAUBE TORNILLO
11*	3617859M1	➡ 03-2005	1	HELMET	CAPUCHON CASCO	SCHUTZHELM CASCO

[B] WITH FRONT SCREEN 5MM
AVEC PARE BRISE 5MM
MIT WINDSCHUTZSCHEIB 5MM
CON PARABREZZA 5MM
CON PARABRISAS 5MM

[C] WITH FRONT SCREEN 6MM
AVEC PARE BRISE 6MM
MIT WINDSCHUTZSCHEIB 6MM
CON PARABREZZA 6MM
CON PARABRISAS 6MM

Doors
Portes
Tuer
Porta
Puerta

110-40

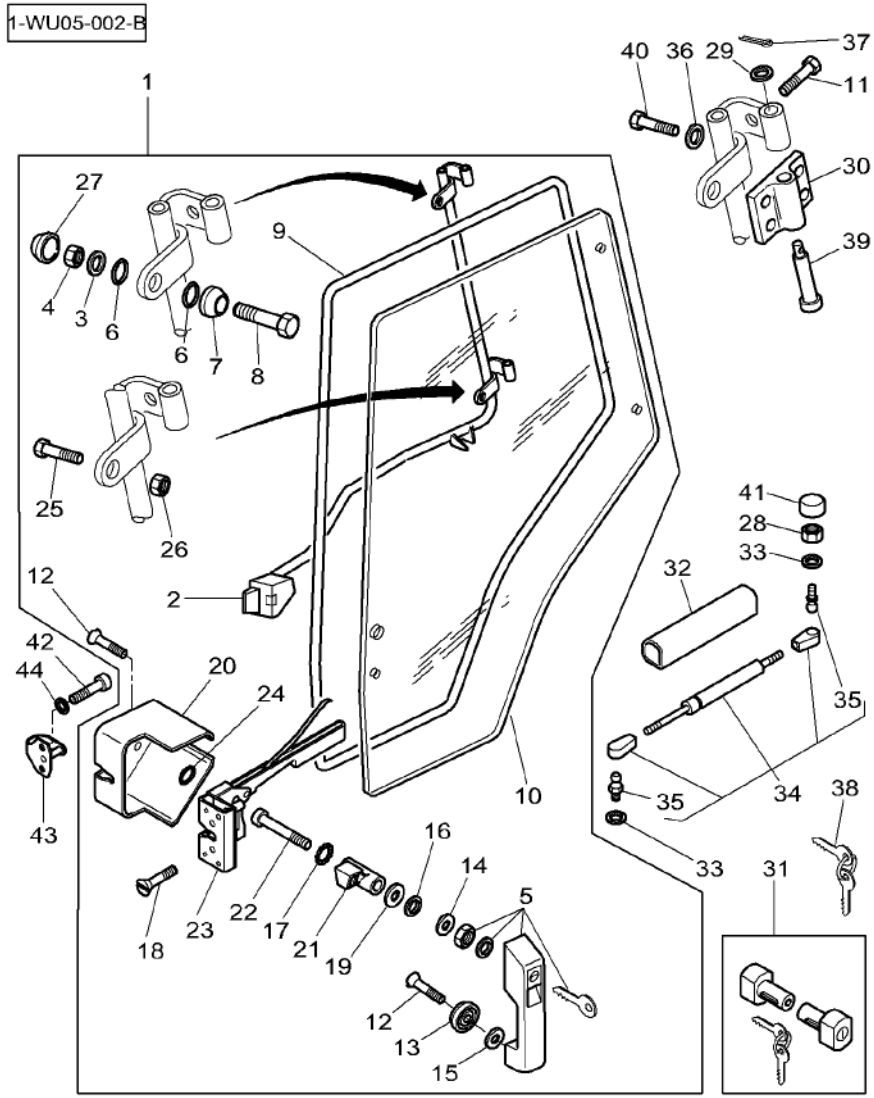

1	4275243M92		▶	1 GATE	PORTE CANCELLO	TOR PORTILLO
1	4275242M91		◀	1 GATE	PORTE CANCELLO	TOR PORTILLO
2	4272772M1	1	◀	1 GUIDEWAY	RAMBARDE ROTAIA	FUEHRUNGSSCHIENE RIEL DE GUIA
2	4272773M2	1	▶	1 GUIDEWAY	RAMBARDE ROTAIA	FUEHRUNGSSCHIENE RIEL DE GUIA
3	385361X1	1	∅ 9-17 X 3,2	2 WASHER	RONDELLE RONDELLA	UNTERLEGSCHEIBE ARANDELA
4	394367X1	1	M8	2 LOCKNUT	ECROU BLOCAGE AUTOBLOCCANTE	SICHERUNGSMUTTER CONTRATUERCA
5	**3902356M91**	1	[A] No 610	1 HANDLE	POIGNEE MANIGLIA	HANDGRIFF MANETA
6	3902365M1	1	∅ 8-30 X 3	2 WASHER	RONDELLE RONDELLA	UNTERLEGSCHEIBE ARANDELA
7	4276449M1	1		2 PEDESTAL	SOCLE PIEDISTALLO	SOCKEL PEDESTAL
8*	3009444X1	1	M8 X 40	2 SCREW	VIS VITE	SCHRAUBE TORNILLO
9	3902122M1	1		1 SEAL	JOINT ETANCHEITE ANELLO RACCORD	DICHTRING ARENDELA D'JUNTA
10	4272775M1	1	▶	1 WINDOW	GLACE FINESTRINO	FENSTER VENTANA
10	4272774M1	1	◀	1 WINDOW	GLACE FINESTRINO	FENSTER VENTANA
11	1442900X1	1	M8 X 55 ⇨ 3008857X1	1 SCREW	VIS VITE	SCHRAUBE TORNILLO
12	3902411M1	1	M6 X 16	2 SCREW	VIS VITE	SCHRAUBE TORNILLO
13	3902145M1	1		1 SKATE	PATIN PATTINO	SCHLITTEN-KUFE PATIN
14	3902366M1	1	∅ 28-42 X 2	1 WASHER	RONDELLE RONDELLA	UNTERLEGSCHEIBE ARANDELA
15	3902367M1	1	∅ 5-18 X 1	1 WASHER	RONDELLE RONDELLA	UNTERLEGSCHEIBE ARANDELA
16	3011035X1	1	∅ 6-12 X 1,5	1 WASHER	RONDELLE RONDELLA	UNTERLEGSCHEIBE ARANDELA
17	391289X1	1		1 LOCK WASHER	RONDELLE FREIN ROSETTA DENTELL.	FEDERRING ARANDELA GROWER
18	3902498M1	1	M6 X 25	2 SCREW METRIC	VIS METRIQUE VITE METRICA	SCHRAUBE METR TORNILLO METRICO
19	391038X1	1	∅ 6-18 X 1,5	1 WASHER	RONDELLE RONDELLA	UNTERLEGSCHEIBE ARANDELA
20	4276448M1	1	▶	1 MUFF	CACHE MANICOTTO DEVIAN	FLANSCHMUFFE MANGUITO ACOPLAM
20	4276447M1	1	◀	1 MUFF	CACHE MANICOTTO DEVIAN	FLANSCHMUFFE MANGUITO ACOPLAM
21	3903504M1	1		1 LATCH	VERROU CHIAVISTELLO	RIEGEL CERROJO
22	3001757X1	1	M6 X 40	1 BOLT	BOULON BULLONE	MASCH.SCHRAUBE ESPIGA/BULON

Doors
Portes
Tuer
Porta
Puerta

110-40

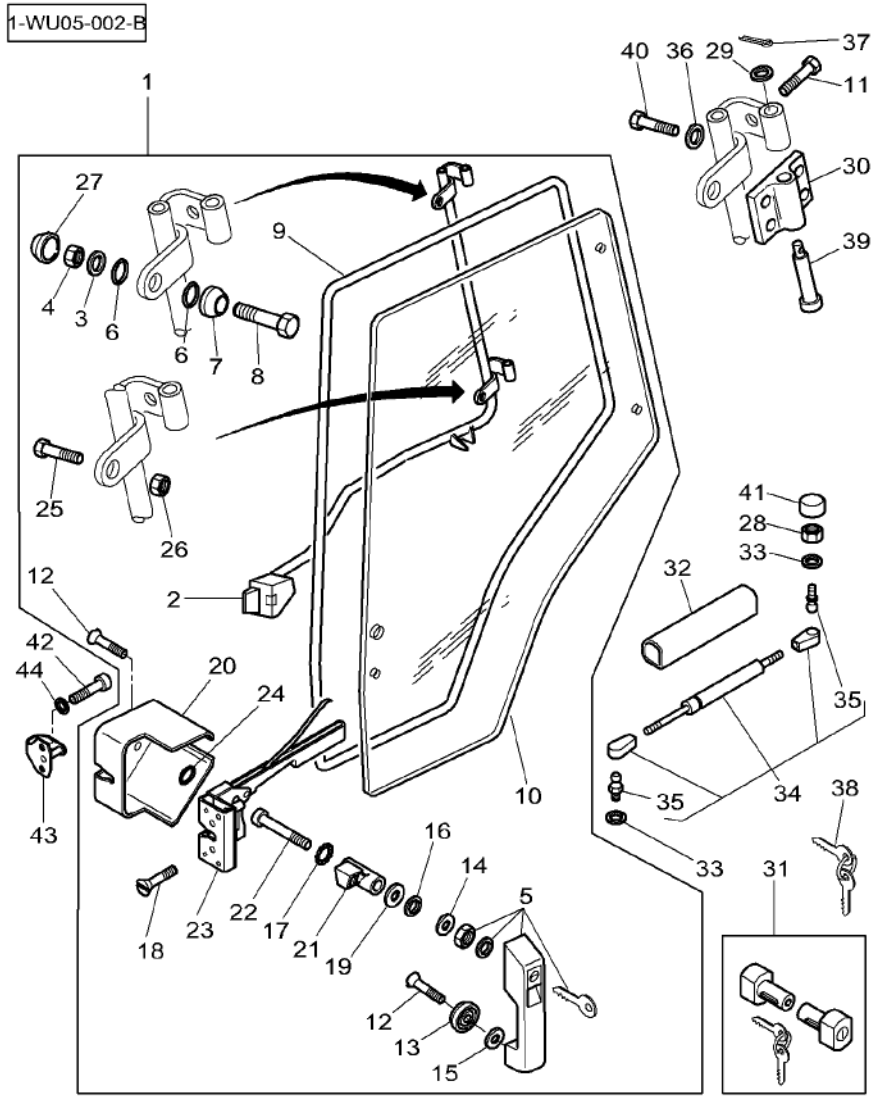

23	3804663M1	1 ◀	1	LATCH	VERROU CHIAVISTELLO	RIEGEL CERROJO
23	3804662M1	1 ▶	1	LATCH	VERROU CHIAVISTELLO	RIEGEL CERROJO
24	4276446M1	1 ∅ 14–28 X 3	1	WASHER	RONDELLE RONDELLA	UNTERLEGSCHEIBE ARANDELA
25	339091X1	1 M8 X 45	1	HEX. SOCK. SCREW	VIS TETE HEX VITE PARKER	ZYLINDERSCHRAUBE TORN.CAB.HUECA
26	339169X1	1 M8	1	NUT	ECROU DADO	MUTTER TUERCA
27	3616277M1	1	2	HELMET	CAPUCHON CASCO	SCHUTZHELM CASCO
28	339169X1	M8	2	NUT	ECROU DADO	MUTTER TUERCA
29	3903187M1	∅ 12–22 X 1,2	4	WASHER	RONDELLE RONDELLA	UNTERLEGSCHEIBE ARANDELA
30	3902116M1		4	HINGE	CHARNIERE CERNIERA	SCHARNIER BISAGRA
31	**3902370M91**	No 610	1	PARTS PACK	JEU PIECES PACCO RICAMBI	SATZ TEILE PAQUETE PIEZAS
32	3902415M1		2	PROTECTOR	PROTECTEUR PROTETTORE	SCHUTZ PROTECTOR
33	391025X1		4	LOCK WASHER	RONDELLE FREIN ROSETTA DENTELL.	FEDERRING ARANDELA GROWER
34	***3902121M4***	◀	1	RAM	VERIN CILINDRO IDRAUL.	HYDR.ZYLINDER ARIETE
34	4279925M1	▶	1	RAM	VERIN CILINDRO IDRAUL.	HYDR.ZYLINDER ARIETE
35	3902773M1	34	2	TOGGLE	ROTULE ROTULA	GELENKZAPFEN ROTULA
36	385361X1	∅ 9–17 X 3,2	16	WASHER	RONDELLE RONDELLA	UNTERLEGSCHEIBE ARANDELA
37	1442963X1	∅ 2,5 X 32	4	SPLIT PIN	GOUPILLE FENDUE COPIGLIA	SPALTBOLZEN PASADOR HENDIDO
38	***3902584M91***		1	KIT, SPANNER	JEU CLES KIT CHIAVE	SCHLUESSEL-SATZ JUEGO ALICATES
39	3903186M1		4	CLEVIS PIN	AXE PERNO D'ATTACCO	SPLINTBOLZEN BULON CILINDRICO
40	3902414M1	M8 X 20	16	SCREW	VIS VITE	SCHRAUBE TORNILLO
41	3616277M1		2	HELMET	CAPUCHON CASCO	SCHUTZHELM CASCO
42	3010775X1	M6 X 25	4	SCREW	VIS VITE	SCHRAUBE TORNILLO
43	3902372M1		2	LATCH	VERROU CHIAVISTELLO	RIEGEL CERROJO
44	391038X1	∅ 6–18 X 1,5	4	WASHER	RONDELLE RONDELLA	UNTERLEGSCHEIBE ARANDELA

1-WU05-002-B

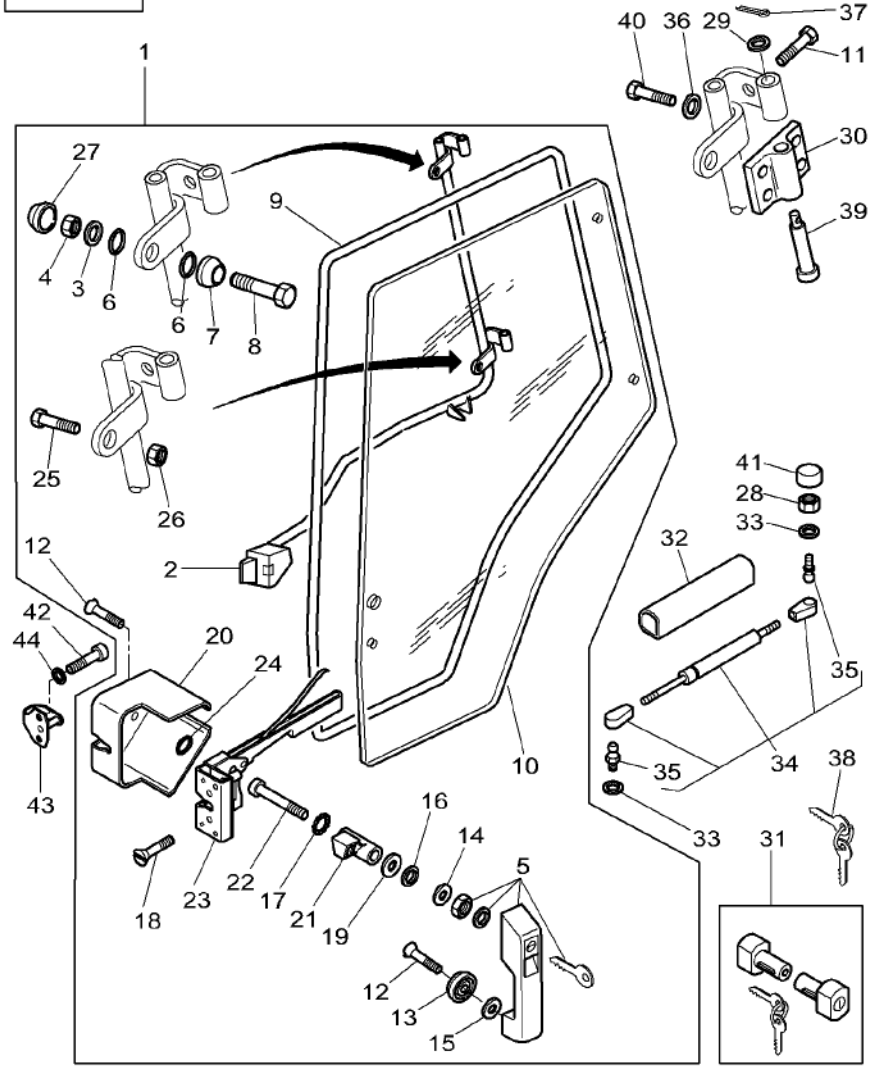

[A] NUMBER STAMPED ON THE LOCK
NUMERO GRAVE SUR LA SERRURE
NUMMER RITZT AUF DER SCHLOSS
NUMERO SOPRA LA TOPPA
NUMERO GRABAR EN EL SERRADURA

Glass
Vitres
Scheiben
Vetro
Cristal

110-45

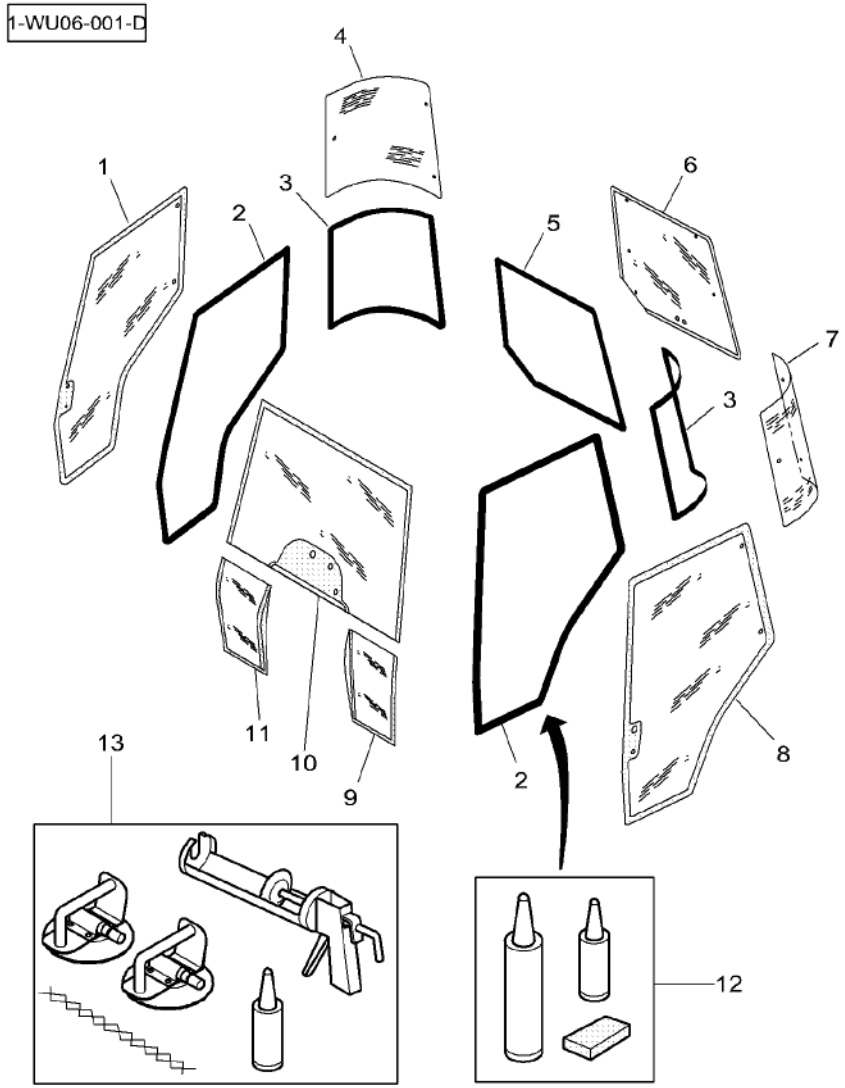

1*	4272775M1	▶		1	WINDOW	GLACE FINESTRINO VENTANA
2	3902122M1			2	SEAL	JOINT ETANCHEITE ANELLO RACCORD DICHTRING ARENDELA D'JUNTA
3	3902133M1			2	SEAL	JOINT ETANCHEITE ANELLO RACCORD DICHTRING ARENDELA D'JUNTA
4	3902131M1	▶		1	WINDOW	GLACE FINESTRINO FENSTER VENTANA
5	3902144M1			1	SEAL	JOINT ETANCHEITE ANELLO RACCORD DICHTRING ARENDELA D'JUNTA
6	3715438M1			1	WINDOW	GLACE FINESTRINO FENSTER VENTANA
7	3902130M1	◀		1	WINDOW	GLACE FINESTRINO FENSTER VENTANA
8*	4272774M1	◀		1	WINDOW	GLACE FINESTRINO FENSTER VENTANA
9	3902149M1	◀		1	WINDOW	GLACE FINESTRINO FENSTER VENTANA
10	4273518M1	⧗	6 MM	1	WINDSCREEN	PARE BRISE PARABREZZA WINDSCHUTZSCHEIB PARABRISAS
10	4273519M1	⧗	5 MM	1	WINDSCREEN	PARE BRISE PARABREZZA WINDSCHUTZSCHEIB PARABRISAS
11	3902150M1	▶		1	WINDOW	GLACE FINESTRINO FENSTER VENTANA
12	3902373M93			1	GLAZING KIT	COLLAGE VITRE GLAZING KIT FENST.ZUSAKLEBEN GLAZING KIT
13	3902503M91			1	PARTS PACK	JEU PIECES PACCO RICAMBI SATZ TEILE PAQUETE PIEZAS

Side Window Mechanism
Mecanisme De Glace Laterale
Seitenfenster Ausstellvor
Comando Finestra Laterale
Mecanismo De Ventana Lateral

110-50

1-WU85-001-C

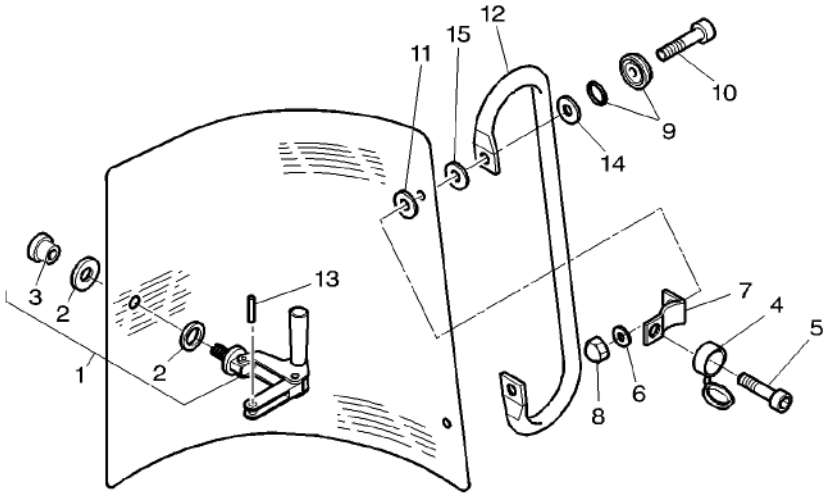

1	3476132M91	▶	1 STAY	HAUBAN BUSTO	STREBE TIRANTE
1	**3476133M91**	◀	1 STAY	HAUBAN BUSTO	STREBE TIRANTE
2*	3478052M1	1	2 WASHER	RONDELLE RONDELLA	UNTERLEGSCHEIBE ARANDELA
3*	3478051M1	1	2 NUT	ECROU DADO	MUTTER TUERCA
4	3902129M1		4 MUFF	CACHE MANICOTTO DEVIAN	FLANSCHMUFFE MANGUITO ACOPLAM
5	3010775X1	M6 X 25	4 SCREW	VIS VITE	SCHRAUBE TORNILLO
6*	3011035X1	∅ 6-12 X 1,5	4 WASHER	RONDELLE RONDELLA	UNTERLEGSCHEIBE ARANDELA
7	3902128M1		4 HINGE	CHARNIERE CERNIERA	SCHARNIER BISAGRA
8	3902455M1	M6	4 CAP NUT	ECROU BORGNE DADO A CAPPELLO	HUTMUTTER TUERCA DE TAPA
9	3902145M1		4 SKATE	PATIN PATTINO	SCHLITTEN-KUFE PATIN
10*	4275839M1	M6 X 35	4 SCREW	VIS VITE	SCHRAUBE TORNILLO
11	3903189M1	∅ 10,9-30 X 2	4 WASHER	RONDELLE RONDELLA	UNTERLEGSCHEIBE ARANDELA
11	3902365M1	∅ 8-30 X 3	4 WASHER	RONDELLE RONDELLA	UNTERLEGSCHEIBE ARANDELA
12	3783201M1	[A]	2 GUIDEWAY	RAMBARDE ROTAIA	FUEHRUNGSSCHIENE RIEL DE GUIA
13	1440396X1	5 X 12	2 DOWEL	PLOT SPINA	ZYLINDERSTIFT CENTRAJE
14	3902367M1	∅ 5-18 X 1	2 WASHER	RONDELLE RONDELLA	UNTERLEGSCHEIBE ARANDELA
15	4274622M1	∅ 8-20 X 3	4 WASHER	RONDELLE RONDELLA	UNTERLEGSCHEIBE ARANDELA

[A] CAB WITH FLAT BOTTOM
CABINE AVEC FOND PLAT
KABINEN MIT PLATT BODEN
CABINA CON INFERIORE PIANE
CABINA CON FONDO PLANE

Rear Window Mechanism
Mecanisme De Glace Arriere
Heckfenster Ausstellvor
Comando Portello Posteriore
Mecanismo De Ventana Trasera

110-55

1-WU84-001-B

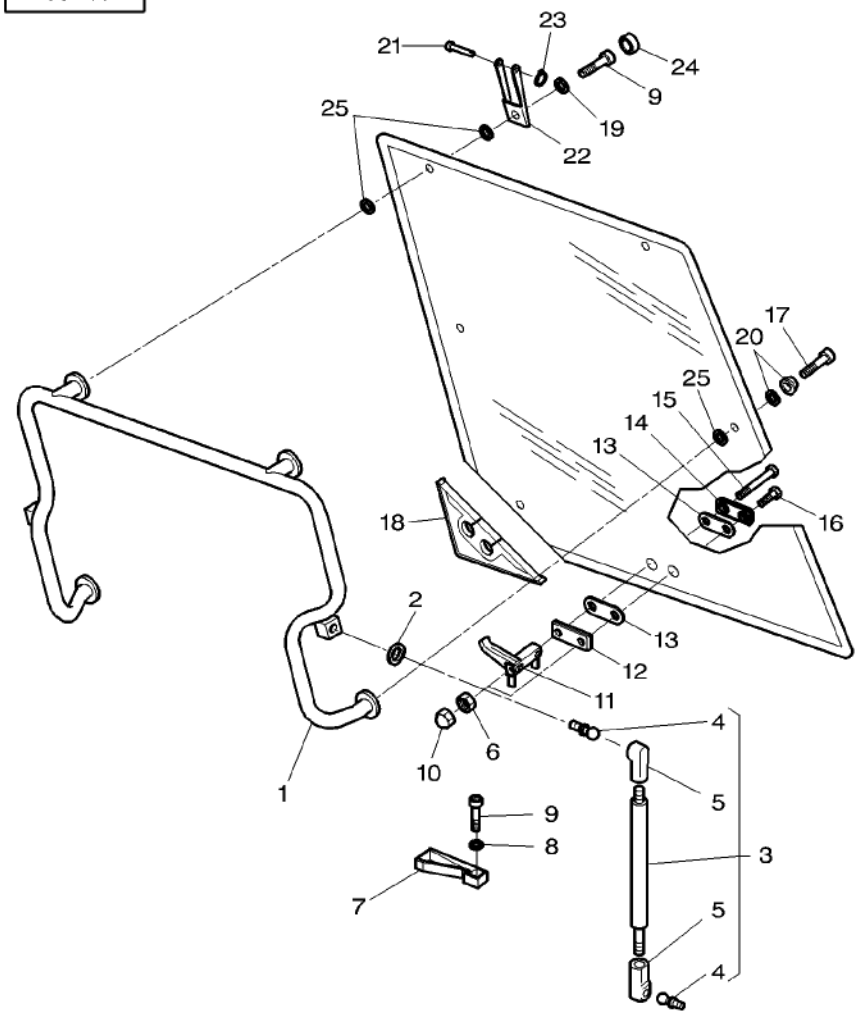

1	3902135M92		1 SUPPORT	SUPPORT SUPPORTO	LAGERUNG DISPOS.DE SOSTEN
2	391025X1		4 LOCK WASHER	RONDELLE FREIN ROSETTA DENTELL.	FEDERRING ARANDELA GROWER
3	3902140M1		2 RAM	VERIN CILINDRO IDRAUL.	HYDR.ZYLINDER ARIETE
4		3 REF. 3	2 TOGGLE	ROTULE ROTULA	GELENKZAPFEN ROTULA
5		3 REF. 3	2 TOGGLE	ROTULE ROTULA	GELENKZAPFEN ROTULA
6	1440329X1	M10	2 LOCKNUT	ECROU BLOCAGE AUTOBLOCCANTE	SICHERUNGSMUTTER CONTRATUERCA
7	3619610M1		1 THRUSTER	ARRETOIR SPINGITORE	DRUCKRING PROPULSOR
8	391289X1		2 LOCK WASHER	RONDELLE FREIN ROSETTA DENTELL.	FEDERRING ARANDELA GROWER
9	3010775X1	M6 X 25	4 SCREW	VIS VITE	SCHRAUBE TORNILLO
10	3619609M1	M10	2 HELMET	CAPUCHON CASCO	SCHUTZHELM CASCO
11	3619605M1		1 HANDLE	POIGNEE MANIGLIA	HANDGRIFF MANETA
12	3619604M1		1 PLATE	PLAQUE PIASTRA	PLATTE PLATO
13	3619906M1		2 GASKET	JOINT GUARNIZIONE	DICHTSCHEIBE EMPAQUETADURA.
14	3619603M1		1 PLATE	PLAQUE PIASTRA	PLATTE PLATO
15	3619907M1	M10 X 130	1 SCREW	VIS VITE	SCHRAUBE TORNILLO
16	3619908M1	M10 X 35	1 SCREW	VIS VITE	SCHRAUBE TORNILLO
17	3010775X1	M6 X 25	2 SCREW	VIS VITE	SCHRAUBE TORNILLO
18	3806376M1		1 SEAL	JOINT ETANCHEITE ANELLO RACCORD	DICHTRING ARENDELA D'JUNTA
19	385361X1		2 WASHER	RONDELLE RONDELLA	UNTERLEGSCHEIBE ARANDELA
20	3902145M1		2 SKATE	PATIN PATTINO	SCHLITTEN-KUFE PATIN
21	3902137M1		2 CLEVIS PIN	AXE PERNO D'ATTACCO	SPLINTBOLZEN BULON CILINDRICO
22	3902136M2		2 CLEVIS	CHAPE GANCIO D'ATTACCO	GABELSTUECK GANCHO SEGURI.
23	1440988X1		2 CIRCLIP	CIRCLIP ANNELLO ELASTICO	SEEGERING GRAPA CIRCULAR
24	3902129M1		2 MUFF	CACHE MANICOTTO DEVIAN	FLANSCHMUFFE MANGUITO ACOPLAM
25	3902365M1	∅ 8-30 X 3 MM	6 WASHER	RONDELLE RONDELLA	UNTERLEGSCHEIBE ARANDELA

Roof
Toit
Dach
Tetto
Tejado

110-60

1-WU02-002-A

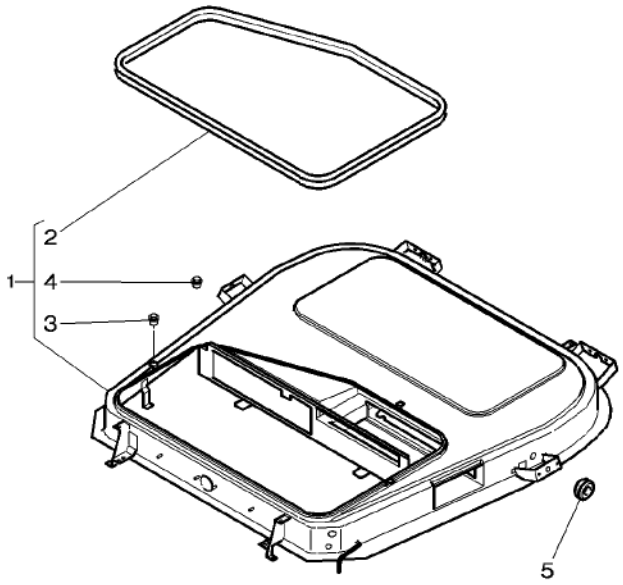

1	5017930P91	[A]		**1** ROOF	TOIT TETTO	DACH TECHO
2	3786637M1	1		**1** GASKET	JOINT GUARNIZIONE	DICHTSCHEIBE EMPAQUETADURA.
3	3580774M1	1	M6	**2** NUT	ECROU DADO	MUTTER TUERCA
4	3713803M1	1	M4	**4** NUT	ECROU DADO	MUTTER TUERCA
5	3714694M1			**2** GROMMET	PASSE FIL ANELLO PASSACAVO	GUMMITUELLE PASACABLE

[A] WITHOUT ROOF HATCH
SANS TRAPPE DE TOIT
OHNE DACHLUKE
SENZA TRAPOLA
SIN PURGADOR

Tractor Cab Cabine Tracteur Schlepper–Cabine Cabina Cabina De Tractor	Cladding Habillage Verkleidung Leggera Revestimiento	110-65

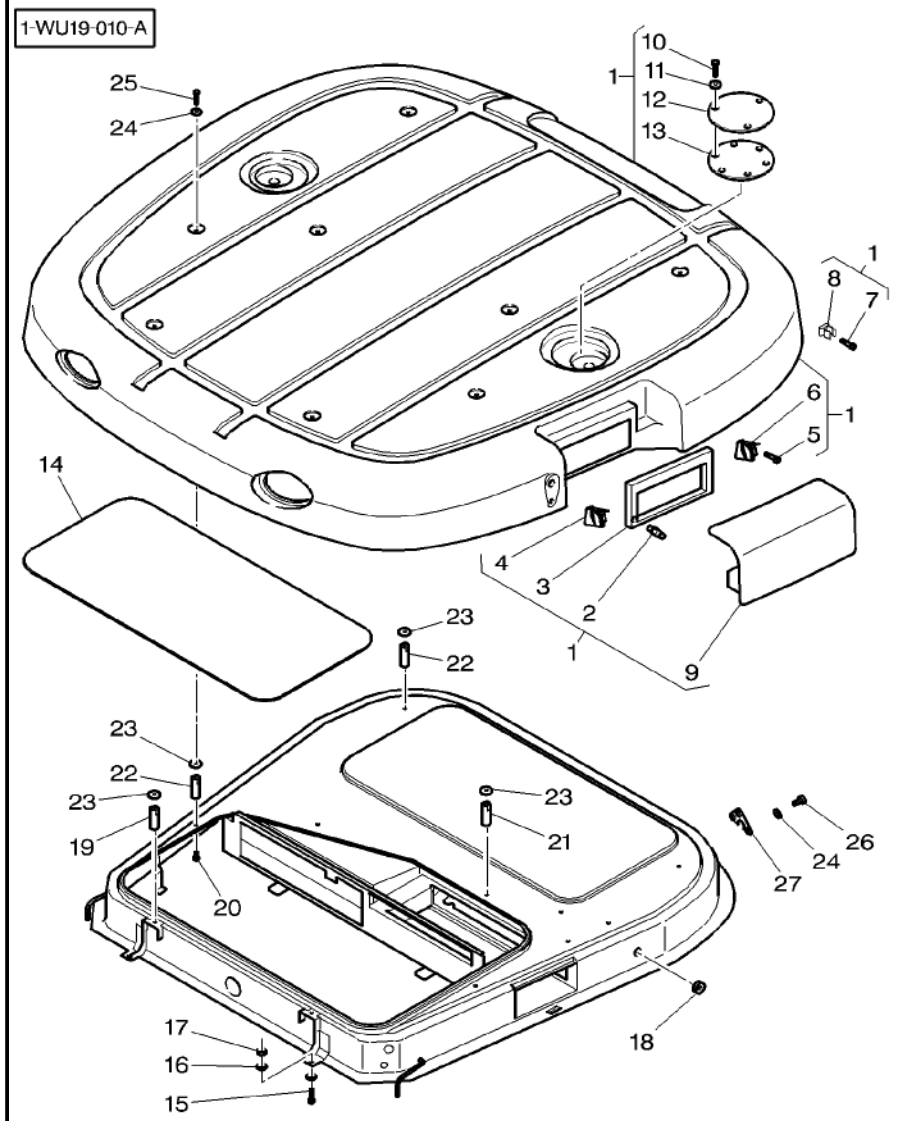

1	4274638M91		1	VISOR	VISIERE PARASOLE	SONNENBLENDE VISERA
1*	4274616M91	US	1	VISOR	VISIERE PARASOLE	SONNENBLENDE VISERA
2	4274618M1	1	2	CLEVIS PIN	AXE PERNO D'ATTACCO	SPLINTBOLZEN BULON CILINDRICO
3	4274635M1	1	1	GASKET	JOINT GUARNIZIONE	DICHTSCHEIBE EMPAQUETADURA.
4	4274636M91	1 ◀	1	HINGE	CHARNIERE CERNIERA	SCHARNIER BISAGRA
5	338317X1	1 ▶	12	RIVET	RIVET RIBATTINO	NIET REMACHE
6	4274637M91	1	1	HINGE	CHARNIERE CERNIERA	SCHARNIER BISAGRA
7	4274659M1	1	1	CLIP	PATTE D'ATTACHE FERMAGLIO	SCHELLE CLIP
8	365909X1	1	1	SELF TAP SCREWS	VIS AUTO TARAUD KITAUTOBLOCCANTE	SCHNEIDSCHRAUBEN TORNILLO CHAPA
9	4274627M91	1	1	TRAP	TRAPPE TRAPPOLA	FANGKLAPPE PURGADOR
10	3009193X1	1	6	PLOUGH BOLT	VIS A EMBASE VITE TESTA TONDA	SENKSCHLOSSSCHRB TORNILLO ALOJ C
11	4274622M1	1	6	WASHER	RONDELLE RONDELLA	UNTERLEGSCHEIBE ARANDELA
12	4274633M91	1	2	COVER	COUVERCLE COPERCHIO	DECKEL CUBIERTA
13	4274634M1	1	2	SEAL	JOINT ETANCHEITE ANELLO RACCORD	DICHTRING ARENDELA D'JUNTA
14	3788932M1		1	SOUND REDUCTION	INSONORISATION INSONORIZZANTE	SCHALLDAEMMUNG REDUCTOR SONIDO
15	339761X1	M8 X 25	4	HEX. SOCK. SCREW	VIS TETE HEX VITE PARKER	ZYLINDERSCHRAUBE TORN.CAB.HUECA
16	3010597X1	∅ 8–22	8	TAB WASHER	RONDELLE EVENT PIASTRINA SICUR	SICHERUNGSBLECH ARANDELA ALETA
17	339169X1	M8	4	NUT	ECROU DADO	MUTTER TUERCA
18	3821964M1	∅ 15–20 MM	1	PLUG	BOUCHON TAPPO	VERSCHL.STOPFEN TAPON
19	5017936M1	◀▶ 45 MM	2	SPACER	ENTRETOISE DISTANZIALE	ABSTANDSTUECK DISCO ESPACIADOR
20	3010181X1	M8 X 16	8	HEX. SOCK. SCREW	VIS TETE HEX VITE PARKER	ZYLINDERSCHRAUBE TORN.CAB.HUECA
21	5017938M1	◀▶ 76 MM	2	SPACER	ENTRETOISE DISTANZIALE	ABSTANDSTUECK DISCO ESPACIADOR
22	5017937M1	◀▶ 62 MM	4	SPACER	ENTRETOISE DISTANZIALE	ABSTANDSTUECK DISCO ESPACIADOR
23	3902365M1	∅ 8–30	8	WASHER	RONDELLE RONDELLA	UNTERLEGSCHEIBE ARANDELA
24	391039X1	∅ 8–24 X 2	14	WASHER METRIC	RONDELLE METR. RONDELLA METRICO	SCHEIBE METRISCH ARANDELA METRICO
25	339761X1	M8 X 25	8	HEX. SOCK. SCREW	VIS TETE HEX VITE PARKER	ZYLINDERSCHRAUBE TORN.CAB.HUECA

Tractor Cab Cabine Tracteur Schlepper–Cabine Cabina Cabina De Tractor	Cladding Habillage Verkleidung Leggera Revestimiento	110-65

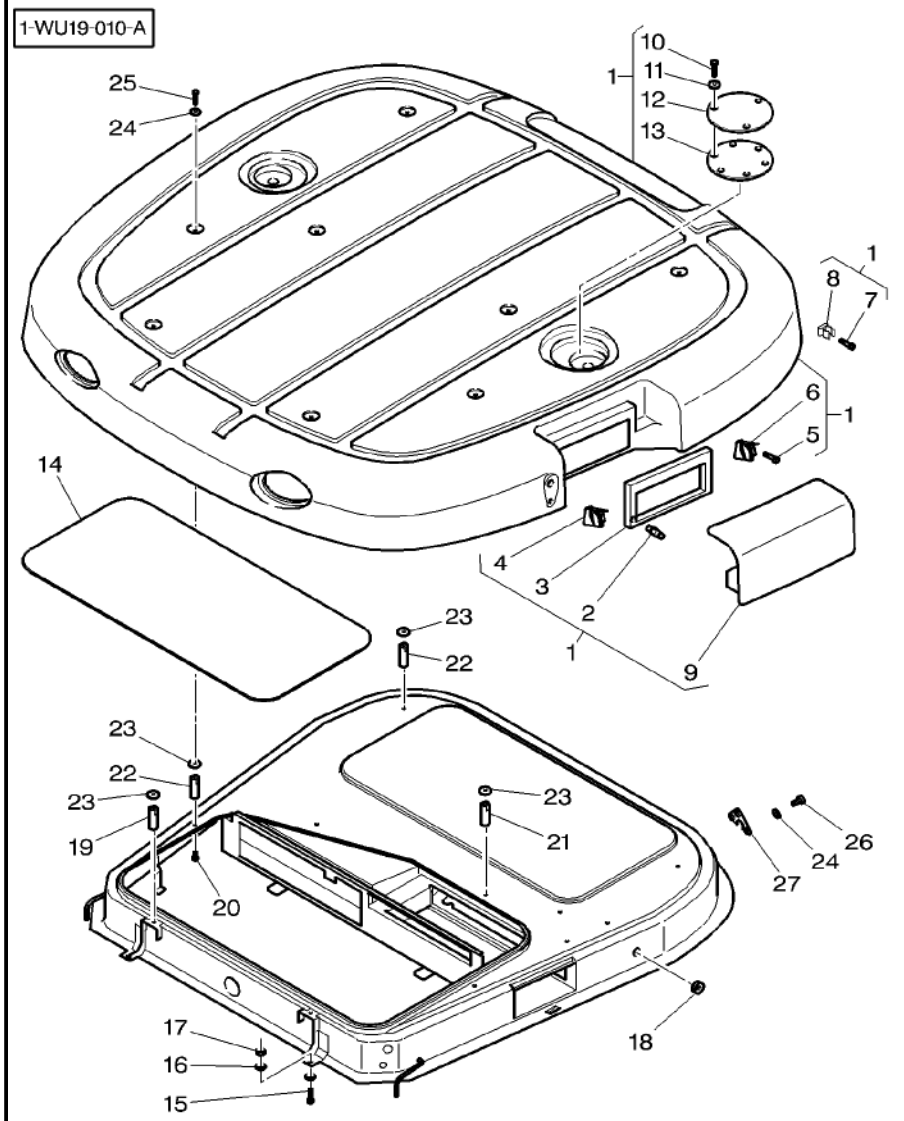

26	339761X1	M8 X 25	6	HEX. SOCK. SCREW	VIS TETE HEX VITE PARKER	ZYLINDERSCHRAUBE TORN.CAB.HUECA
27	4275163M1		2	PLATE	PLAQUE PIASTRA	PLATTE PLATO

Tractor Cab Cabine Tracteur Schlepper–Cabine Cabina Cabina De Tractor	Cladding Habillage Verkleidung Leggera Revestimiento	110-70

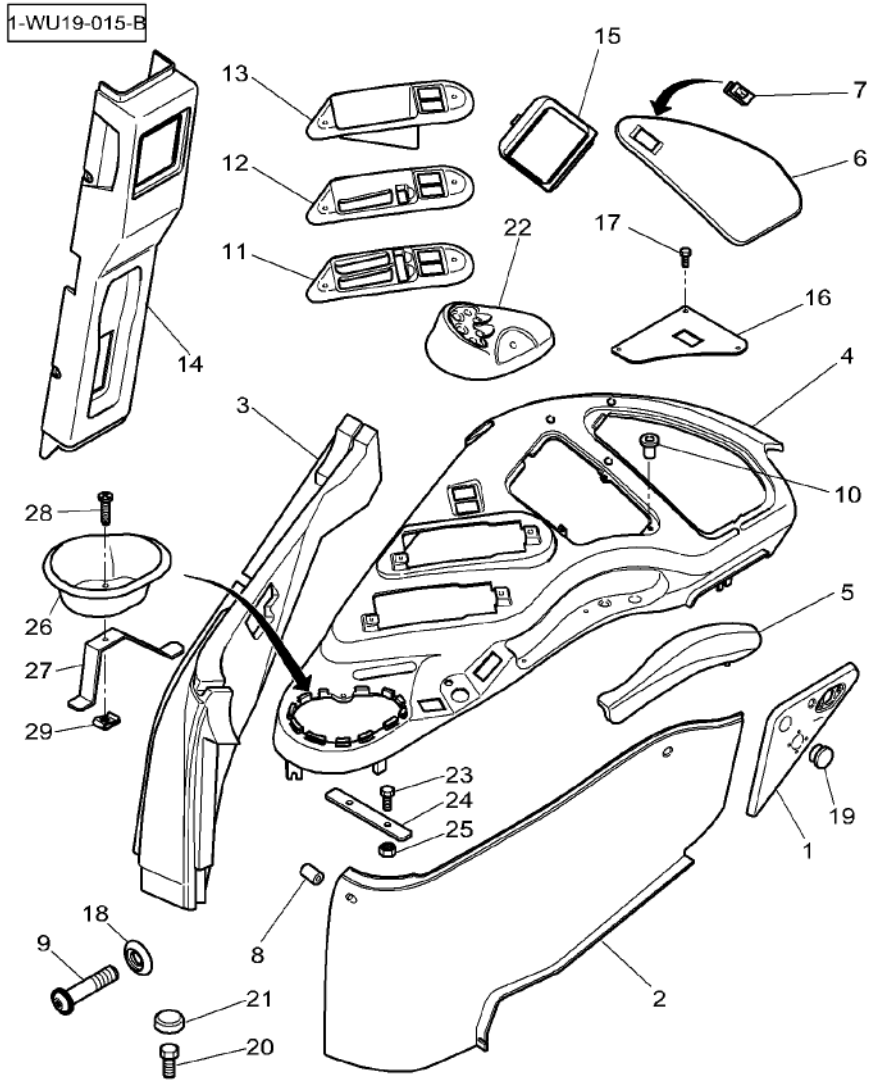

1*	4279102M91		1 TRIANGLE	TRIANGLE TRIANGOLO	DREIECK TRIANGULO
2*	4279099M91		1 PANEL	PANNEAU PANNELLO	VERKL.BLECH PANELAJE
3*	4279111M91		1 ENVELOPE	ENVELOPPE BUSTA	BEUTEL SOBRE
3	4279304M91	[A]	1 CLADDING	HABILLAGE CABINE RIVESTIMENTO CAB	VERKLEIDUNG CHAQUETA
4*	4270894M92		1 PLATE CLAMPING	PLATINE PIASTRA APPOGGIO	KLEMMPLATTE PLACA DE ABRAZO
5	3789486M1		1 ARMREST	ACCOUDOIR BRACCIOLO	ARMLEHNE APOYABRAZOS
6*	4270896M91		1 COVER	COUVERCLE COPERCHIO	DECKEL CUBIERTA
7	4270986M1		1 HASP	LOQUET LUCCHETTO	DREHRIEGEL ALDABA
8	4272208M1	∅ 7–13 X 14,8	1 SPACER	ENTRETOISE DISTANZIALE	ABSTANDSTUECK DISCO ESPACIADOR
9	3010578X1	M5 X 10	X SCREW	VIS VITE	SCHRAUBE TORNILLO
9	**3010506X1**	M5 X 16	X SCREW	VIS VITE	SCHRAUBE TORNILLO
9	3011434X1	M5 X 30	X SCREW	VIS VITE	SCHRAUBE TORNILLO
10	4277656M1	M4	3 INSERT	DOUILLE INSERTO	EINSATZSTUECK INSERCION
11	3787570M1		1 COVER	COUVERCLE COPERCHIO	DECKEL CUBIERTA
12	4270711M1		1 COVER	COUVERCLE COPERCHIO	DECKEL CUBIERTA
13*	4270709M1		1 COVER	COUVERCLE COPERCHIO	DECKEL CUBIERTA
14	4276956M91	▶	1 MOUNTING	MONTANT SUPPORTO MONTAGG	HALTERUNG MONTANTE
15	4270710M1		1 GRILLE	GRILLE GRIGLIA	GRILL REJILLA
16*	3788427M1	[B]	1 BLANKING PLATE	PLAQUE OBTURA. PIAST DI CHIUSUR	VERSCHL.PLATTE PLACA DRENAJE
17	**3010506X1**	M5 X 16	3 SCREW	VIS VITE	SCHRAUBE TORNILLO
18	1427000M1	∅ 5,2–16 X 4	X WASHER	RONDELLE RONDELLA	UNTERLEGSCHEIBE ARANDELA
19	4275985M1	[C] ∅ 32 MM	3 TAP	OBTURATEUR TAPPO*	HAHN GRIFO
20	3009491X1	M10 X 20	3 HEX. SOCK. SCREW	VIS TETE HEX VITE PARKER	ZYLINDERSCHRAUBE TORN.CAB.HUECA
21	3824109M1		3 CAP	CHAPEAU CAPUCHON	KAPPE TAPA
22*	4270886M91		1 CONSOLE	CONSOLE CONSOLE	KONSOLE CONSOLA
23	1440922X1	M6 X 60	2 HEX. SOCK. SCREW	VIS TETE HEX VITE PARKER	ZYLINDERSCHRAUBE TORN.CAB.HUECA

Tractor Cab Cabine Tracteur Schlepper-Cabine Cabina Cabina De Tractor	Cladding Habillage Verkleidung Leggera Revestimiento	110-70

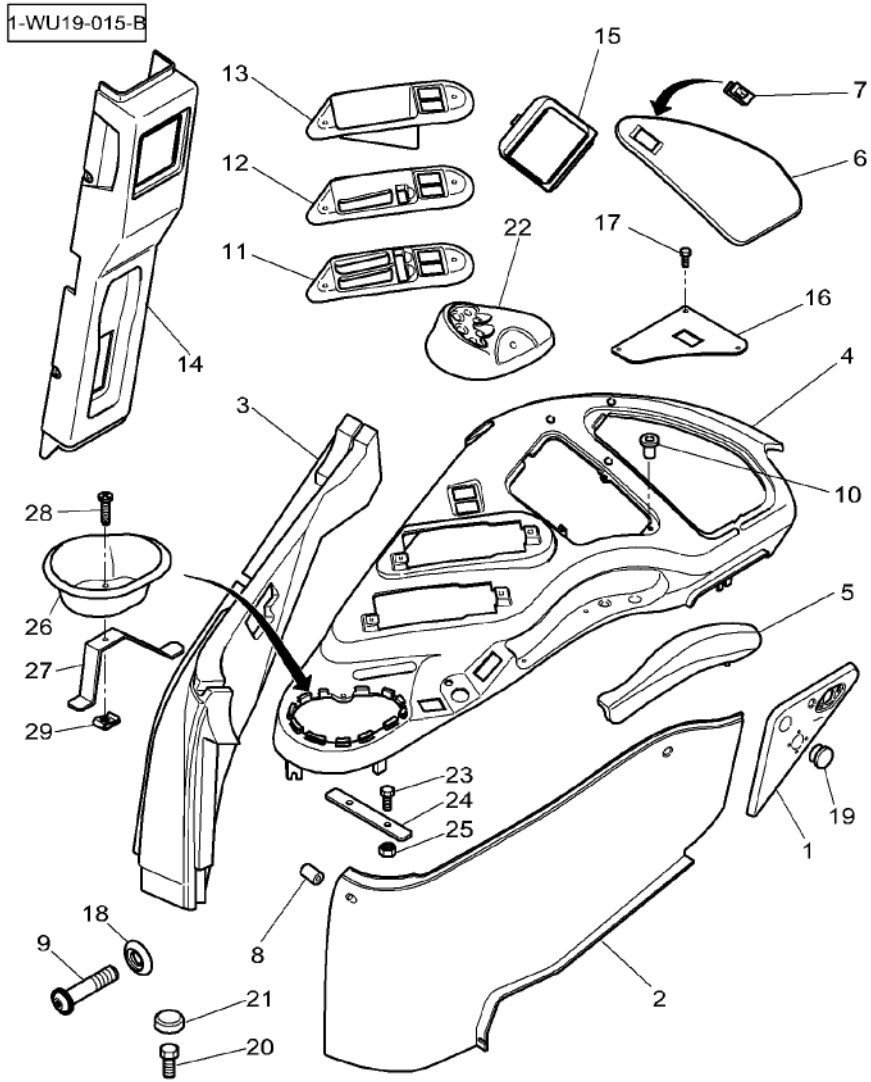

24	4273192M1		1	PLATE	PLAQUE PIASTRA	PLATTE PLATO
25	3019123X1	M6	2	NUT	ECROU DADO	MUTTER TUERCA
26*	4270951M1	US	1	POCHE	POCHE SACCA	TASCHE BOLSA
27*	4274211M1	US	1	STRAP	PATTE CORREGGIA	LASCHE FAJA
28*	**3010506X1**	US M5 X 16	1	SCREW	VIS VITE	SCHRAUBE TORNILLO
29*	3715143M1	US	1	NUT	ECROU DADO	MUTTER TUERCA

[A] WITH DATATRONIC
AVEC DATATRONIC
MIT DATATRONIC
CON DATATRONIC
CON DATATRONIC

[B] WITHOUT HYDRAULIC LIFT
SANS RELEVAGE
OHNE HYDRAULIK KRAFTHEBER
SENZA SOLLEVATORE IDRAULICO
SIN ELEVADOR HIDRAULICO

[C] WITHOUT ELECTRICAL PLUG
SANS PRISE DE COURANT
OHNE STECKDOSE
SENZA PRESA DI CORRENTE
SIN ENCHUFE HEMBRA

Tractor Cab Cabine Tracteur Schlepper–Cabine Cabina Cabina De Tractor	Cladding Habillage Verkleidung Leggera Revestimiento	110-75	Dressing Roof Habillage Toit Dressieren Dach Dressing Tetto Preparacion Techo

1-WU19-016-A

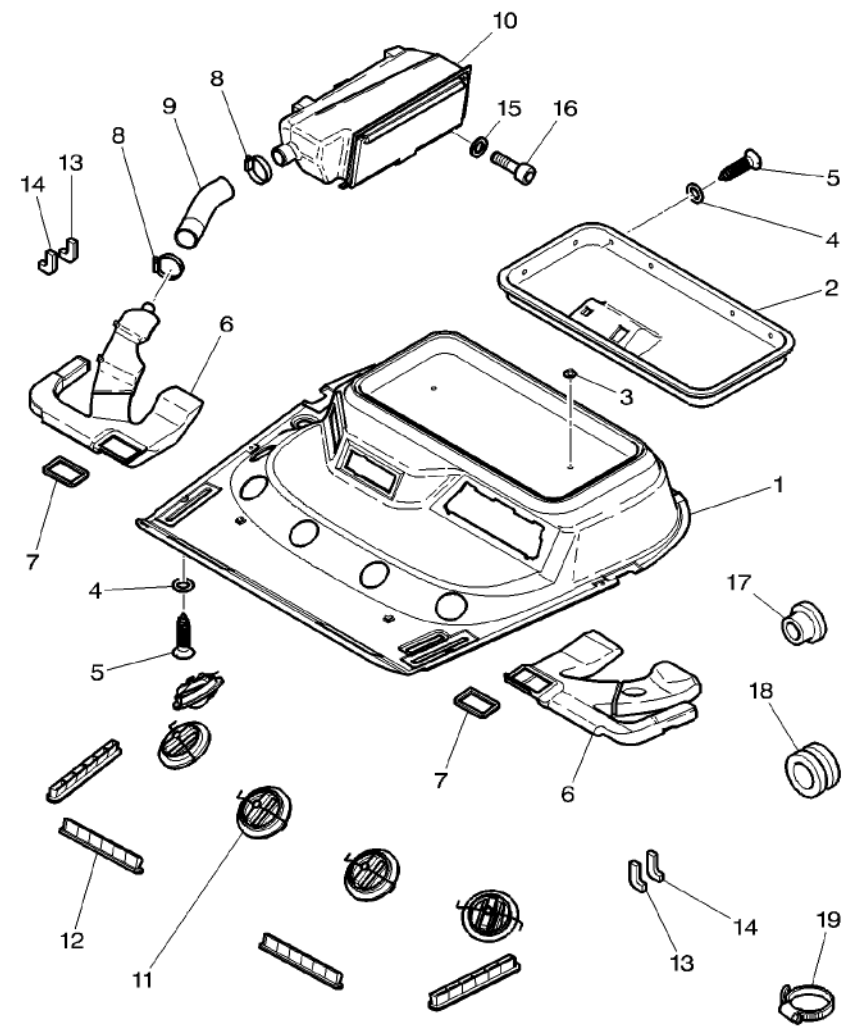

1	4273536M92	[A]	1	CLADDING	HABILLAGE CABINE RIVESTIMENTO CAB	VERKLEIDUNG CHAQUETA
2				NOT USED	NON UTILISE INUSATO	NICHT VERWENDET NO SE USA
3	4271027M1	[A] M8	2	NUT	ECROU DADO	MUTTER TUERCA
4	1427000M1	∅ 5,2–16 X 4 MM	X	WASHER	RONDELLE RONDELLA	UNTERLEGSCHEIBE ARANDELA
5	**3010506X1**	M5 X 16	X	SCREW	VIS VITE	SCHRAUBE TORNILLO
6	3786684M1	◀	1	PIPE	TUYAU TUBO	ROHRLEITUNG CANO
6	3786672M1	▶	1	PIPE	TUYAU TUBO	ROHRLEITUNG CANO
7	3615352M1		2	GASKET	JOINT GUARNIZIONE	DICHTSCHEIBE EMPAQUETADURA.
8	338617X1	∅ 40–60	2	HOSE CLIP	COLLIER DURITE FASCIA	SCHLAUCHSCHELLE CLIP P.FLEXIBLE
9	4271111M1		1	SHEATH	GAINE GUAINA	HUELLE FUNDA
10	4273542M91		1	HOLDER	PIECE SUPPORT SUPPORTO DI BASE	HALTER SUJETADOR
11	3786678M1		5	VENT	EVENT SFIATO	VENTILATION TOMA DE AIRE
12	4273677M1		4	VENTILATOR	AERATEUR VENTILATORE	VENTILATOR RULO DE SACO
13	4271133M1	▶	2	GASKET	JOINT GUARNIZIONE	DICHTSCHEIBE EMPAQUETADURA.
14	4271112M1	◀	2	GASKET	JOINT GUARNIZIONE	DICHTSCHEIBE EMPAQUETADURA.
15	391038X1	∅ 6–18 X 1,5	3	WASHER	RONDELLE RONDELLA	UNTERLEGSCHEIBE ARANDELA
16	1440350X1	M6 X 20	3	SCREW METRIC	VIS METRIQUE VITE METRICA	SCHRAUBE METR TORNILLO METRICO
17	3580599M1	∅ 22 MM	1	PLUG	BOUCHON TAPPO	VERSCHL.STOPFEN TAPON
18	3783677M1	∅ 7–17–21	1	GROMMET	PASSE FIL ANELLO PASSACAVO	GUMMITUELLE PASACABLE
19	3619622M1		2	CABLE TIE	ATTACHE CABLE FASCETTA CAVI	KABELBINDER APRIETACABLES

[A] WITHOUT ROOF HATCH
SANS TRAPPE DE TOIT
OHNE DACHLUKE
SENZA TRAPOLA
SIN PURGADOR

Tractor Cab Cabine Tracteur Schlepper–Cabine Cabina Cabina De Tractor	Cladding Habillage Verkleidung Leggera Revestimiento	110-80

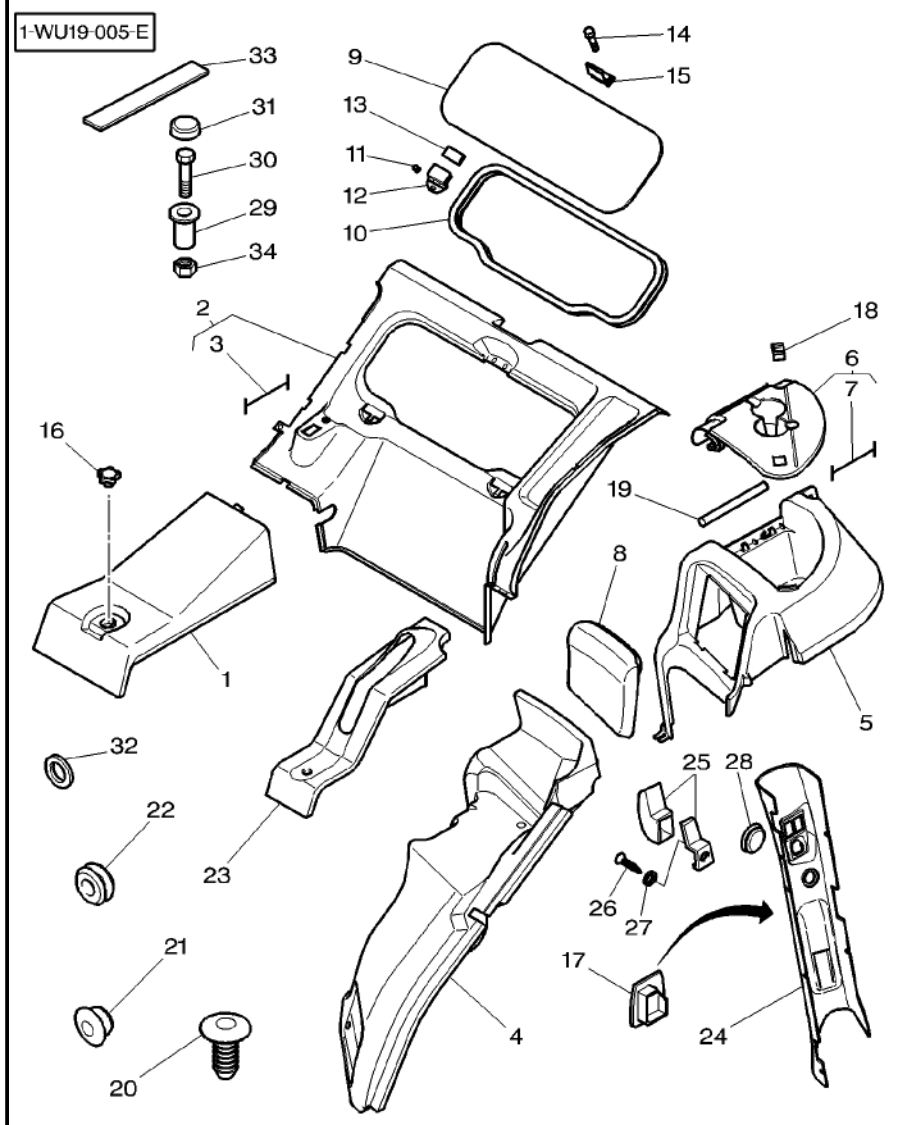

1*	4279114M91		1	COVER	COUVERCLE COPERCHIO	DECKEL CUBIERTA
2*	4279117M91		1	REAR WINDOW	LUNETTE FINESTRINO POST.	RUECKFENSTER VENTANA TRASERA
3	4270988M1	2 ◄► 110 MM	1	TIE	ATTACHE TRAVERSA ATTACCO	KUPPL.STANGE BARRA DE ENLACE
4*	4279123M91		1	ENVELOPE	ENVELOPPE BUSTA	BEUTEL SOBRE
5*	4279120M91		1	LOCKER	CAISSON CASSETTO	FACH CAJON
6*	4270900M93		1	COVER	COUVERCLE COPERCHIO	DECKEL CUBIERTA
7	4270987M1	6 ◄► 450 MM	1	TIE	ATTACHE TRAVERSA ATTACCO	KUPPL.STANGE BARRA DE ENLACE
8*	4279129M91		1	BACK REST	DOSSIER SCHIENALE	RUECKENLEHNE RESPALDO
9	3714482M1		1	WINDOW	GLACE FINESTRINO	FENSTER VENTANA
10	3786411M1	◄► 1385 MM	1	GASKET	JOINT GUARNIZIONE	DICHTSCHEIBE EMPAQUETADURA.
11	3902455M1	M6	2	CAP NUT	ECROU BORGNE DADO A CAPPELLO	HUTMUTTER TUERCA DE TAPA
12	3784336M1		2	HINGE	CHARNIERE CERNIERA	SCHARNIER BISAGRA
13	3784894M1	◄► 50 MM	2	GASKET	JOINT GUARNIZIONE	DICHTSCHEIBE EMPAQUETADURA.
14	**3010506X1**	M5 X 16	2	SCREW	VIS VITE	SCHRAUBE TORNILLO
15	3784337M1		1	LATCH	VERROU CHIAVISTELLO	RIEGEL CERROJO
16	4270514M1		1	BUTTON	BOUTON BOTTONE	KNOPFTASTE BOTON
17	4271912M1	[A]	1	MUFF	CACHE MANICOTTO DEVIAN	FLANSCHMUFFE MANGUITO ACOPLAM
18	4270986M1		1	HASP	LOQUET LUCCHETTO	DREHRIEGEL ALDABA
19	4270984M1		1	CLEVIS PIN	AXE PERNO D'ATTACCO	SPLINTBOLZEN BULON CILINDRICO
20	4275041M1	∅ 10 MM	X	BUTTON	BOUTON BOTTONE	KNOPFTASTE BOTON
20	4275057M1	∅ 7 MM	X	BUTTON	BOUTON BOTTONE	KNOPFTASTE BOTON
21	3713587M1	∅ 22 MM	1	PLUG	BOUCHON TAPPO	VERSCHL.STOPFEN TAPON
21	3041932M1	[B] ∅ 13 – 19 MM	1	PLUG	BOUCHON TAPPO	VERSCHL.STOPFEN TAPON
22	1803494M1	∅ 15–10–3	1	GROMMET	PASSE FIL ANELLO PASSACAVO	GUMMITUELLE PASACABLE
23	4279871M91		1	MUFF	CACHE MANICOTTO DEVIAN	FLANSCHMUFFE MANGUITO ACOPLAM
24*	4270898M91		1	MOUNTING	MONTANT SUPPORTO MONTAGG	HALTERUNG MONTANTE

Tractor Cab Cabine Tracteur Schlepper–Cabine Cabina Cabina De Tractor	Cladding Habillage Verkleidung Leggera Revestimiento	110-80

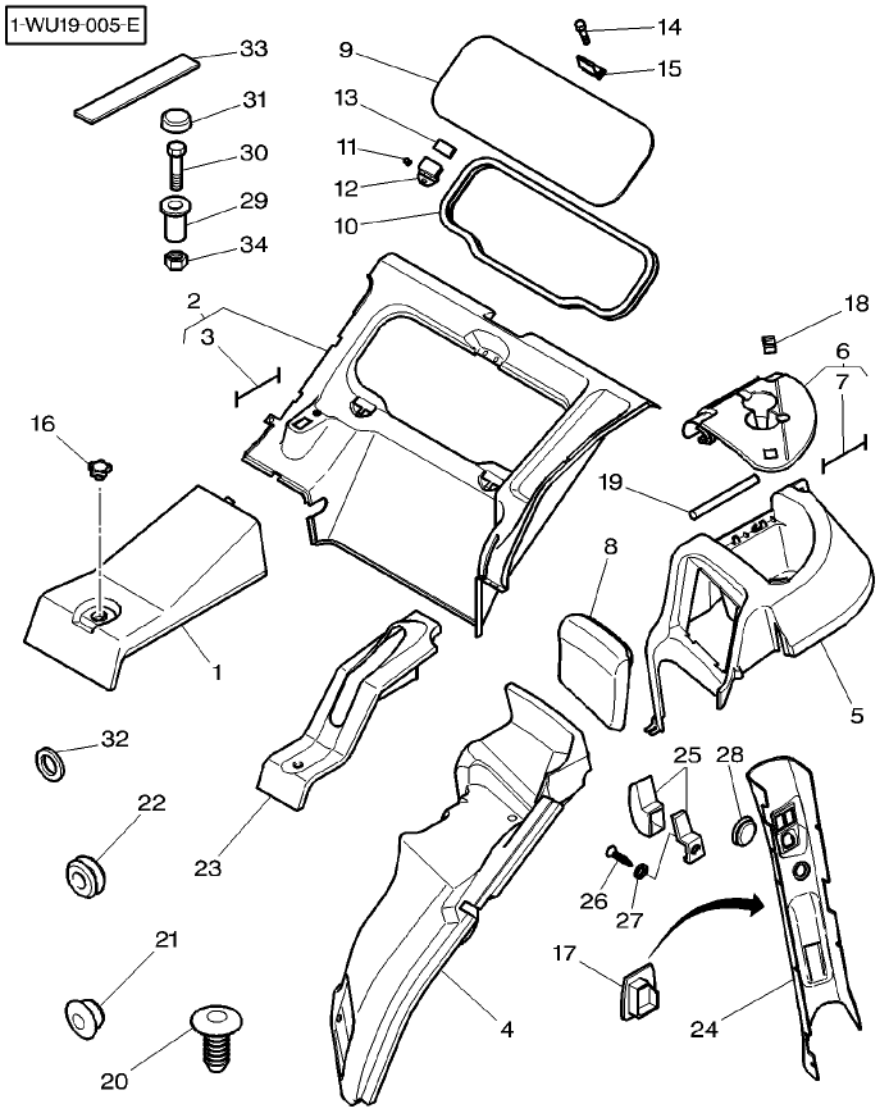

25	3810912M91		1	HOOK	CROCHET GANCIO	HAKEN GANCHO
26	3010578X1	M5 X 10	1	SCREW	VIS VITE	SCHRAUBE TORNILLO
27	390469X1	∅ 5–10 X 1,5	1	WASHER	RONDELLE RONDELLA	UNTERLEGSCHEIBE ARANDELA
28	4275985M1	∅ 32 MM	1	TAP	OBTURATEUR TAPPO*	HAHN GRIFO
29	3715991M1	∅ 8,5–11,4	1	SPACER	ENTRETOISE DISTANZIALE	ABSTANDSTUECK DISCO ESPACIADOR
30	339337X1	M8 X 30	1	HEX. SOCK. SCREW	VIS TETE HEX VITE PARKER	ZYLINDERSCHRAUBE TORN.CAB.HUECA
30	339009X1	M8 X 35	2	HEX. SOCK. SCREW	VIS TETE HEX VITE PARKER	ZYLINDERSCHRAUBE TORN.CAB.HUECA
31	3616277M1		3	HELMET	CAPUCHON CASCO	SCHUTZHELM CASCO
32	1427000M1	∅ 5,2–16 X 4	9	WASHER	RONDELLE RONDELLA	UNTERLEGSCHEIBE ARANDELA
33	3778749M1	25 X 15 X 80	2	FOAM	MOUSSE GOMMAPIUMA	SCHAUMSTOFF ESPUMA
34	339169X1	M8	2	NUT	ECROU DADO	MUTTER TUERCA

[A] WITH OUT ELECTRIC CONTROL REAR REFLECTING MIROR
SANS RETROVISEUR A COMMANDE ELECTRIQUE
OHNE RUCKSPIEGEL MIT ELEKTRISCHE SCHALTUNG
SENZA RETROVISORE A COMANDO ELETTRICO
SIN RETROVISOR CON MANDO ELECTRICO

[B] WITHOUT AUTOMATIC HITCH
SANS CROCHET AUTOMATIQUE
OHNE AUTOMATISCHE ANHAENGEKUPPLUNG
SENZA GANCIO AUTOMATICO
SIN ENGANCHE AUTOMATICO

Instrument Panel Cladding
Habillage Tableau De Bord
Einfassung Fuer Instr.–Brett
Cruscotto Cabina
Revestimiento Panel Instrumentos

110-85

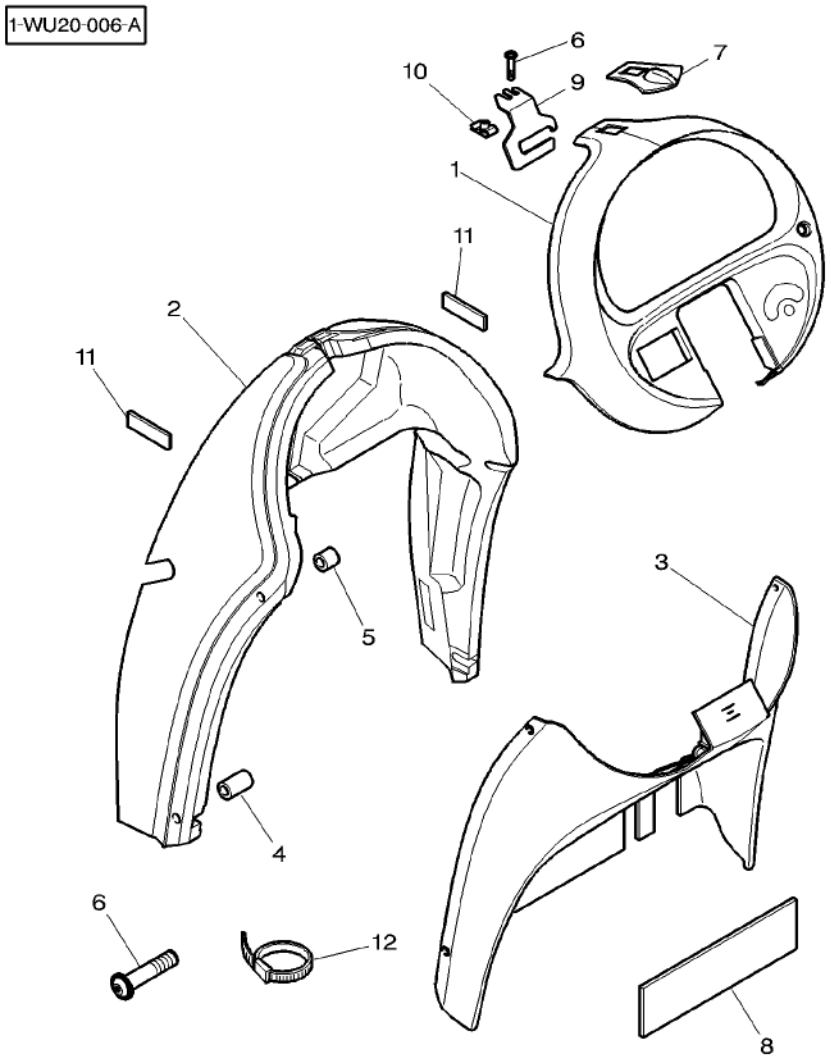

1	4270902M93		1	PLATE CLAMPING	PLATINE PIASTRA APPOGGIO	KLEMMPLATTE PLACA DE ABRAZO
2	4279108M91		1	ENVELOPE	ENVELOPPE BUSTA	BEUTEL SOBRE
3	4279105M91		1	PANEL	PANNEAU PANNELLO	VERKL.BLECH PANELAJE
4	4272688M1	∅ 15–M5 X 25	2	SPACER	ENTRETOISE DISTANZIALE	ABSTANDSTUECK DISCO ESPACIADOR
5	4272687M2	∅ 15–M5 X 11	2	SPACER	ENTRETOISE DISTANZIALE	ABSTANDSTUECK DISCO ESPACIADOR
6	3010578X1	M5 X 10	X	SCREW	VIS VITE	SCHRAUBE TORNILLO
6	**3010506X1**	M5 X 16	X	SCREW	VIS VITE	SCHRAUBE TORNILLO
6	3011434X1	M5 X 30	X	SCREW	VIS VITE	SCHRAUBE TORNILLO
7	4276813M1	[B]	1	FLANGE	FLASQUE FLANGIA	FLANSCH PLETINA
7	4276867M1	[C]	1	FLANGE	FLASQUE FLANGIA	FLANSCH PLETINA
8	4271499M1	520 X 150	1	TRIM	ENJOLIVEUR FINITURA	ZIERLEISTE TAPIZADO
9*	4276864M2		1	SUPPORT	SUPPORT SUPPORTO	LAGERUNG DISPOS.DE SOSTEN
10	3715143M1	M5	X	NUT	ECROU DADO	MUTTER TUERCA
11	3814980M1		4	PAD	TAMPON TAMPONE	KLOTZ ALMOHADILLA
12	3619622M1		X	CABLE TIE	ATTACHE CABLE FASCETTA CAVI	KABELBINDER APRIETACABLES

[B] AUTOMATIC AIR CONDITIONER
CLIMATISEUR AUTOMATIQUE
AUTOMATISCH KLIMAANLAGE
CONDIZIONATORE DI ARIA AUTOMATICO
ACONDICIONADOR DE AIRE AUTOMATICO

[C] MANUAL AIR CONDITIONER
CLIMATISEUR MANUEL
HAND KLIMAANLAGE
CONDIZIONATORE DI ARIA MANUAL
ACONDICIONADOR DE AIRE MANUALE

Tractor Cab Cabine Tracteur Schlepperkabine Cabina Trattore Cabina Tractor	Cab Insulation Insonorisation Isolierung Isolante Cabina Aislamiento	110-90

1-WU11-005-A

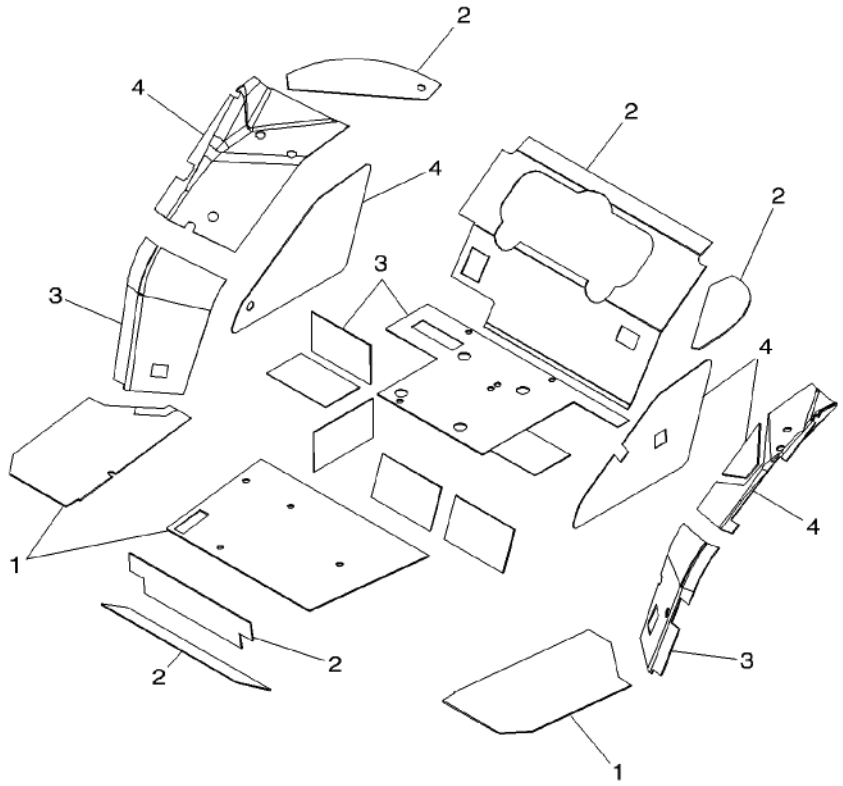

1	3789928M92	1	SOUND REDUCTION	INSONORISATION INSONORIZZANTE	SCHALLDAEMMUNG REDUCTOR SONIDO
2	3789926M96	1	SOUND REDUCTION	INSONORISATION INSONORIZZANTE	SCHALLDAEMMUNG REDUCTOR SONIDO
3	3789925M96	1	SOUND REDUCTION	INSONORISATION INSONORIZZANTE	SCHALLDAEMMUNG REDUCTOR SONIDO
4	3789927M95	1	SOUND REDUCTION	INSONORISATION INSONORIZZANTE	SCHALLDAEMMUNG REDUCTOR SONIDO

Tractor Cab Cabine Tracteur Schlepperkabine Cabina Trattore Cabina Tractor	Cab Insulation Insonorisation Isolierung Isolante Cabina Aislamiento	110-95

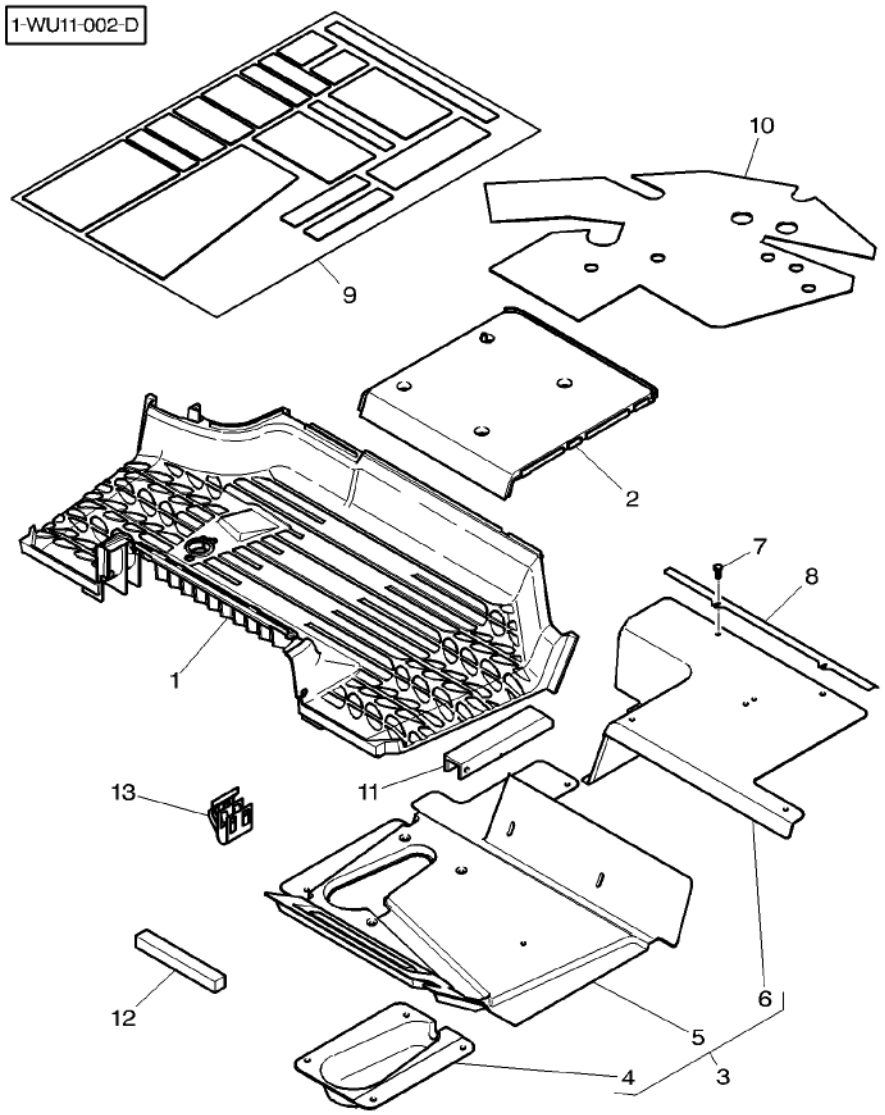

1*	4270867M92		1	MAT	TAPIS STOINO	MATTE ALFOMBRA
2*	4270890M91		1	MAT	TAPIS STOINO	MATTE ALFOMBRA
3	4271510M93		1	FENCE	PROTECTION RECINTO	GITTER CERCA
4		3 REF. 3	1	FENCE	PROTECTION RECINTO	GITTER CERCA
5		3 REF. 3	1	FENCE	PROTECTION RECINTO	GITTER CERCA
6		3 REF. 3	1	FENCE	PROTECTION RECINTO	GITTER CERCA
7	**3010506X1**	M5 X 16	X	SCREW	VIS VITE	SCHRAUBE TORNILLO
8	4271488M1		1	STRAP	PATTE CORREGGIA	LASCHE FAJA
9	4271481M92		1	SOUND REDUCTION	INSONORISATION INSONORIZZANTE	SCHALLDAEMMUNG REDUCTOR SONIDO
10*	4271512M3	▶	1	FOAM	MOUSSE GOMMAPIUMA	SCHAUMSTOFF ESPUMA
11*	4277104M1		1	CHOCK	CALE PASSACAVO	UNTERLEG-KEIL CALZA
12	3778749M1	25 X 15 X 80	2	FOAM	MOUSSE GOMMAPIUMA	SCHAUMSTOFF ESPUMA
13	4275137M1		1	CLIP	PATTE D'ATTACHE FERMAGLIO	SCHELLE CLIP

Tractor Cab Cabine Tracteur Schlepperkabine Cabina Trattore Cabina Tractor	Fenders Ailes Kotfluegel Parafango Guardabarros	110-100

1-WU07-002-C

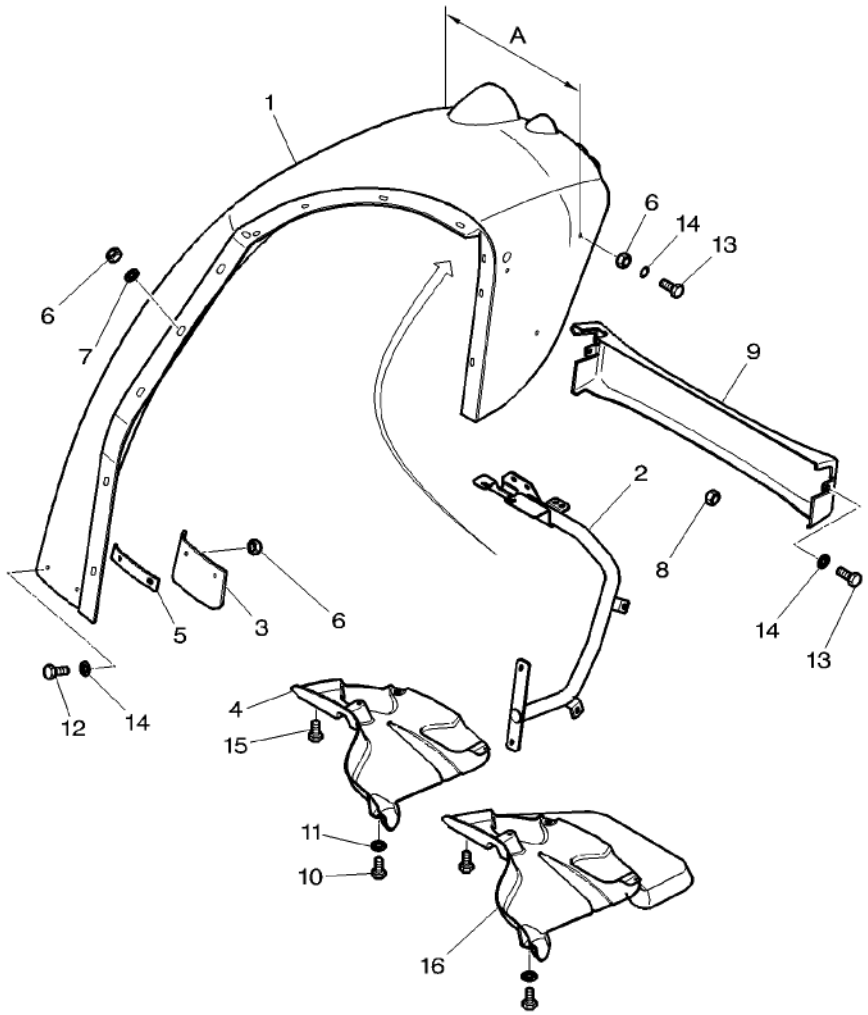

1 *	3786915P1	[BC] ◀ A = 578 MM	1	FENDER	AILE PARAFANGO	KOTFLUEGEL GUARDABARRO
1	3786913P1	[BD] ◀ A = 721 MM	1	FENDER	AILE PARAFANGO	KOTFLUEGEL GUARDABARRO
1 *	3786919P1	[BE] ◀ A = 843 MM	1	FENDER	AILE PARAFANGO	KOTFLUEGEL GUARDABARRO
1 *	3786916P1	[BC] ▶ A = 578 MM	1	FENDER	AILE PARAFANGO	KOTFLUEGEL GUARDABARRO
1	3786914P1	[BD] ▶ A = 721 MM	1	FENDER	AILE PARAFANGO	KOTFLUEGEL GUARDABARRO
1 *	3786920P1	[BE] ▶ A = 843 MM	1	FENDER	AILE PARAFANGO	KOTFLUEGEL GUARDABARRO
2 *	3787111M1	[C] ◀	1	SUPPORT	SUPPORT SUPPORTO	LAGERUNG DISPOS.DE SOSTEN
2	3787113M1	[D] ◀	1	SUPPORT	SUPPORT SUPPORTO	LAGERUNG DISPOS.DE SOSTEN
2 *	3787115M1	[E] ◀	1	SUPPORT	SUPPORT SUPPORTO	LAGERUNG DISPOS.DE SOSTEN
2 *	3787112M1	[C] ▶	1	SUPPORT	SUPPORT SUPPORTO	LAGERUNG DISPOS.DE SOSTEN
2	3787114M1	[D] ▶	1	SUPPORT	SUPPORT SUPPORTO	LAGERUNG DISPOS.DE SOSTEN
2 *	3787116M1	[E] ▶	1	SUPPORT	SUPPORT SUPPORTO	LAGERUNG DISPOS.DE SOSTEN
3	3787129M1	[C] ◀	1	EXTENSION	RALLONGE PROLUNGA	VERLAENGERUNG ENSANCHE
3	4277275M1	[C] ▶	1	EXTENSION	RALLONGE PROLUNGA	VERLAENGERUNG ENSANCHE
3	3787130M1	[DE] ▶	1	EXTENSION	RALLONGE PROLUNGA	VERLAENGERUNG ENSANCHE
3	4277274M1	[DE] ◀	1	EXTENSION	RALLONGE PROLUNGA	VERLAENGERUNG ENSANCHE
4 *	3787123M1	[C] ◀	1	PROTECTOR	PROTECTEUR PROTETTORE	SCHUTZ PROTECTOR
4 *	3787125M1	[D] ◀	1	PROTECTOR	PROTECTEUR PROTETTORE	SCHUTZ PROTECTOR
4 *	3787127M1	[E] ◀	1	PROTECTOR	PROTECTEUR PROTETTORE	SCHUTZ PROTECTOR
4	3787124M1	[C] ▶	1	PROTECTOR	PROTECTEUR PROTETTORE	SCHUTZ PROTECTOR
4 *	3787126M1	[D] ▶	1	PROTECTOR	PROTECTEUR PROTETTORE	SCHUTZ PROTECTOR
4 *	3787128M1	[E] ▶	1	PROTECTOR	PROTECTEUR PROTETTORE	SCHUTZ PROTECTOR
5	3787195M1	[C]	2	SUPPORT	SUPPORT SUPPORTO	LAGERUNG DISPOS.DE SOSTEN
5	3787196M1	[DE]	2	SUPPORT	SUPPORT SUPPORTO	LAGERUNG DISPOS.DE SOSTEN
6	394367X1	M8	34	LOCKNUT	ECROU BLOCAGE AUTOBLOCCANTE	SICHERUNGSMUTTER CONTRATUERCA

1-WU07-002-C

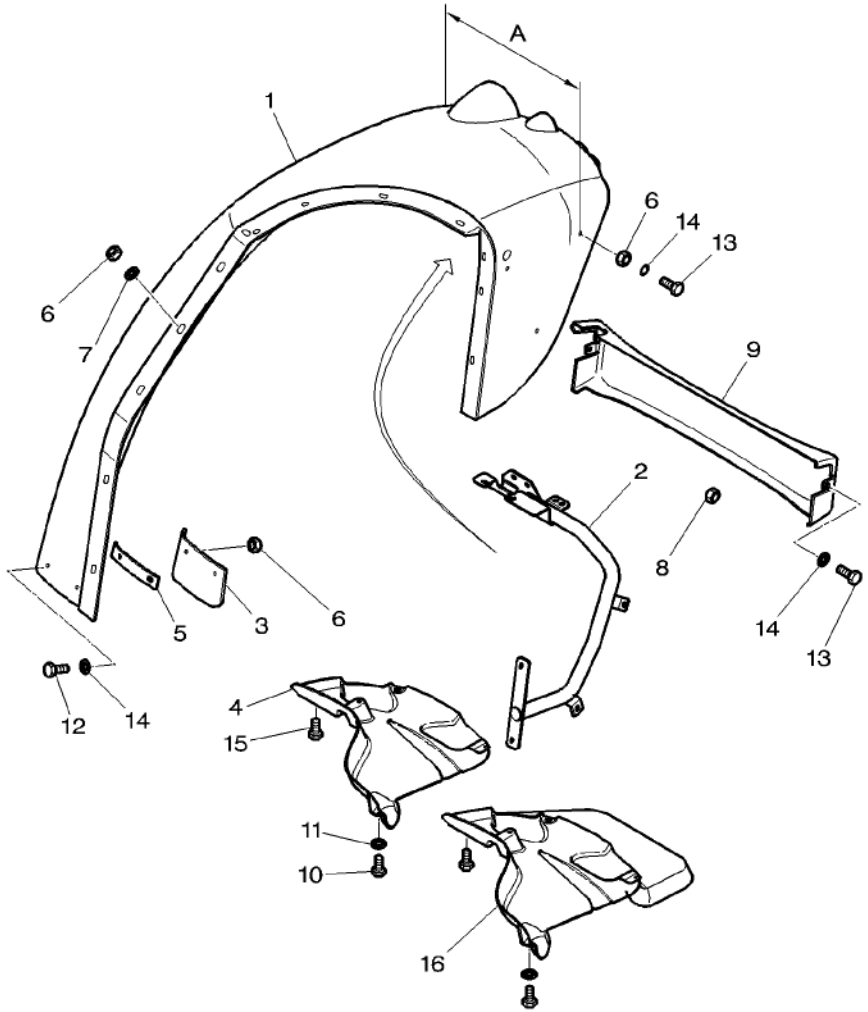

7	391039X1	∅ 8–24 X 2	**24** WASHER METRIC	RONDELLE METR. RONDELLA METRICO	SCHEIBE METRISCH ARANDELA METRICO
8	**1427024M1**	M8	**2** NUT	ECROU DADO	MUTTER TUERCA
9	4275169P1	[B]	**1** BAND	BANDE NASTRO	BAND BANDA
10	3009280X1	M6 X 12	**6** SCREW	VIS VITE	SCHRAUBE TORNILLO
11	390971X1	∅ 6–12 X 1,5	**10** WASHER	RONDELLE RONDELLA	UNTERLEGSCHEIBE ARANDELA
12	3010910X1	M8 X 25	**4** SCREW	VIS VITE	SCHRAUBE TORNILLO
13	339761X1	M8 X 25	**6** HEX. SOCK. SCREW	VIS TETE HEX VITE PARKER	ZYLINDERSCHRAUBE TORN.CAB.HUECA
14	385361X1	∅ 9–17 X 3,2	**14** WASHER	RONDELLE RONDELLA	UNTERLEGSCHEIBE ARANDELA
15	3009280X1	M6 X 12	**4** SCREW	VIS VITE	SCHRAUBE TORNILLO
16	4271145M1	[DA] ◀	**1** EXTENSION	RALLONGE PROLUNGA	VERLAENGERUNG ENSANCHE
16	4271147M1	[EA] ◀	**1** EXTENSION	RALLONGE PROLUNGA	VERLAENGERUNG ENSANCHE
16	4271146M1	[DA] ▶	**1** EXTENSION	RALLONGE PROLUNGA	VERLAENGERUNG ENSANCHE
16	4271148M1	[EA] ▶	**1** EXTENSION	RALLONGE PROLUNGA	VERLAENGERUNG ENSANCHE

[A] USED WITH EXTENSION FENDERS
UTILISE AVEC EXTENSION D'AILE
VERWENDEN MIT AUSDEHNUNG KOTFLUEGEL
UTILIZZARE CON EXTENSION DI PARAFANGHI
UTILIZAR CON ESTENSIONE DE GUARDABARRO

[B] THE APPROPRIATE SAFETY DECALS MUST BE ORDERED AND FITTED TO THIS PART
CETTE PIECE DOIT ETRE IMPERATIVEMENT COMMANDEE AVEC SA DECALCOMANIE DE SECURITE
DIESES TEIL MUSS UNBEDINGT ZUSAMMEN MIT DEM SICHER HEITSHINWEISSCHILD BESTELLT WERDEN
QUESTO PEZZO DEVE ASSOLUTAMENTE ESSERE ORDINATO CON LA RELATIVA DECALCO. SULLA SICUREZZA
ESTA PIEZA SE TIENE QUE PEDIR IMPERATIVAMENTE CON SU CALCOMANIA DE SEGURIDAD

[C] FOR WHEELBASE 2,00 M
POUR EMPATTEMENT 2,00 M
FUR RADSTAND 2,00 M
PER PASSO 2,00 M
POR BATALLA 2,00 M

[D] FOR WHEELBASE 2,30 M
POUR EMPATTEMENT 2,30 M
FUR RADSTAND 2,30 M
PER PASSO 2,30 M
POR BATALLA 2,30 M

1-WU07-002-C

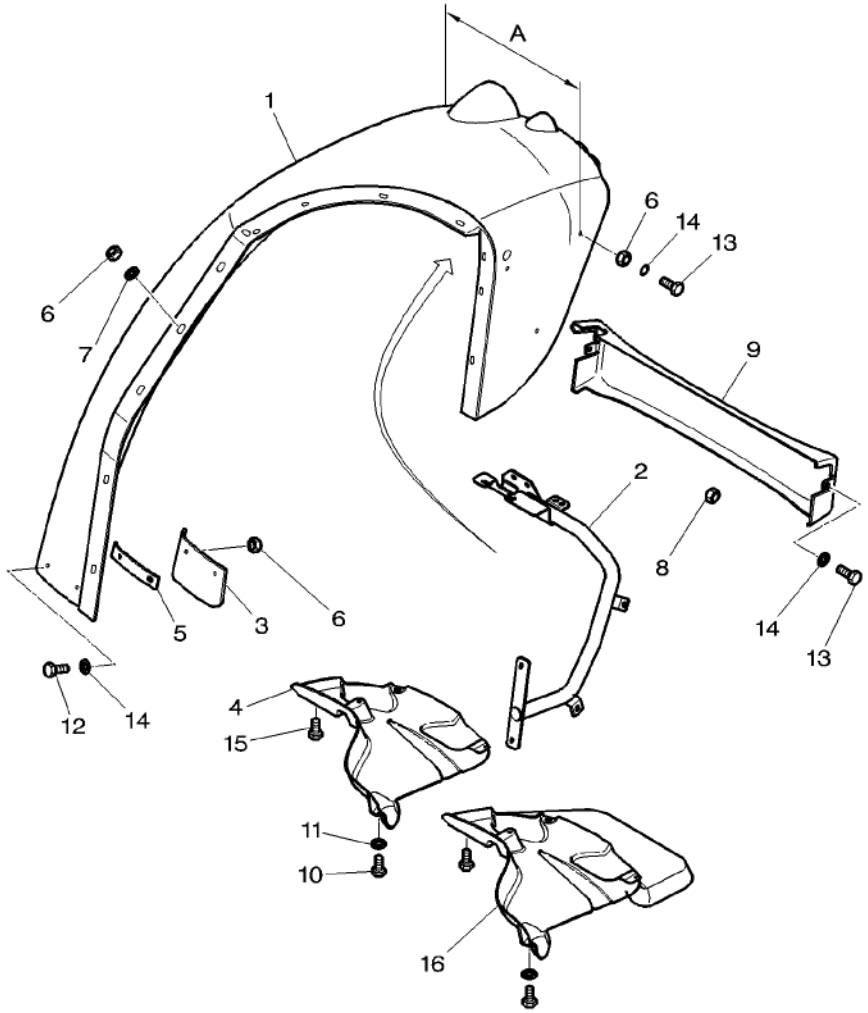

[E] FOR WHEELBASE 2,55 M
POUR EMPATTEMENT 2,55 M
FUR RADSTAND 2,55 M
PER PASSO 2,55 M
POR BATALLA 2,55 M

Air Conditioner Air Conditionne Klimaanlage Aria Condizionata Aire Acondicionado	Hose Durite Schlauch Tubo Flexible	110-105

1-WU45-011-A

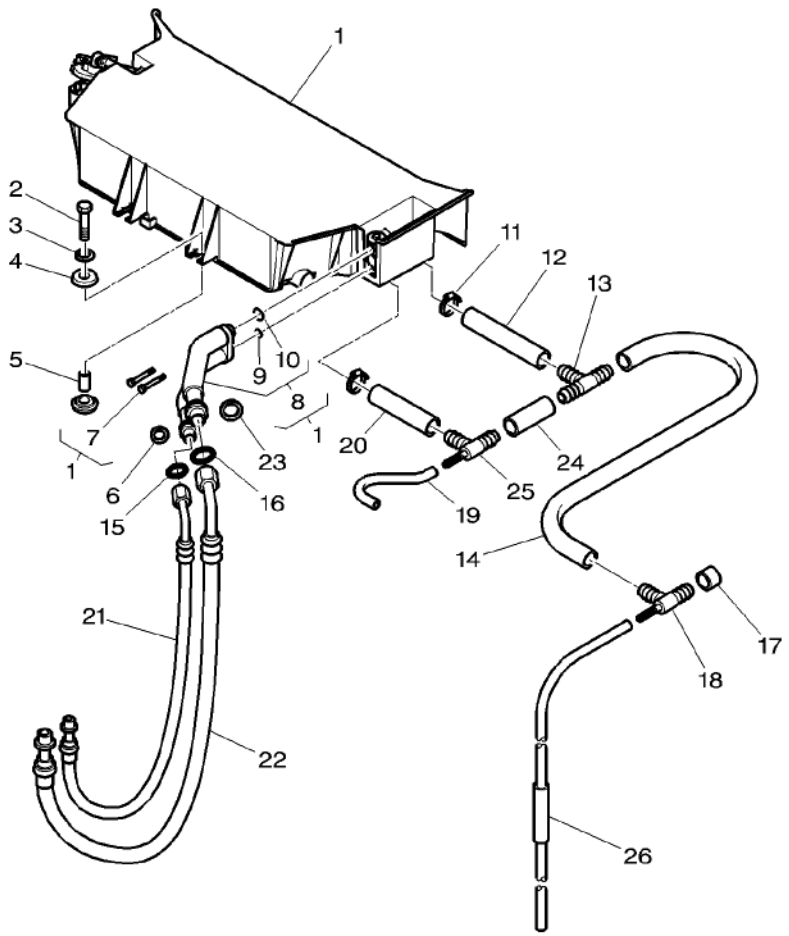

1*	4272839M92	[A] 110–120 No 1	1	AIR CONDITIONER	CONDITIONNEUR CONDIZIONATORE	KLIMAANLAGE ACONDIC.DE AIRE
1*	4272840M91	[B] 110–125 No 1	1	AIR CONDITIONER	CONDITIONNEUR CONDIZIONATORE	KLIMAANLAGE ACONDIC.DE AIRE
2	339337X1	M8 X 30	4	HEX. SOCK. SCREW	VIS TETE HEX VITE PARKER	ZYLINDERSCHRAUBE TORN.CAB.HUECA
3	391039X1	∅ 8–24 X 2	4	WASHER METRIC	RONDELLE METR. RONDELLA METRICO	SCHEIBE METRISCH ARANDELA METRICO
4	3387512M1		8	BUFFER	BUTOIR RESPINGENTE	PUFFER PARACHOQUES
5	3387513M1	∅ 9–11 X 16	4	SPACER	ENTRETOISE DISTANZIALE	ABSTANDSTUECK DISCO ESPACIADOR
6	3011495X1	∅ 16 MM	1	BUSH	BAGUE BOCCOLA	BUCHSE CASQUILLO
7	3001758X1	1 M6 X 50	2	SCREW METRIC	VIS METRIQUE VITE METRICA	SCHRAUBE METR TORNILLO METRICO
8	3786651M91	1	1	TUBE ASSY	ENSEMBLE TUBE TUBO COMPL.	ROHR KPL CONJ.DE TUBO
9	3820743M1	8 ∅ 6,7 X 1,8	1	O RING	JOINT TORIQUE ANELLO TENUTA	O–RING ANILLO FORMA 'O'
10	3820742M1	8 ∅ 13,4 X 2,4	1	O RING	JOINT TORIQUE ANELLO TENUTA	O–RING ANILLO FORMA 'O'
11	3019564X1	∅ 16–25	2	HOSE CLIP	COLLIER DURITE FASCIA	SCHLAUCHSCHELLE CLIP P.FLEXIBLE
12	3777617M1	◄► 218 MM	1	HOSE	DURITE TUBO FLESSIBILE	SCHLAUCH FLEXIBLE
13	3010683X1		1	TEEPIECE	TE RACCORDO A T	T–STUECK PIEZA EN T
14	3778361M1	◄► 529 MM	1	WATER HOSE	DURITE EAU TUBOFLEX ACQUA	WASSERSCHLAUCH MANGUERA P.AGUA
15	***3010471X1***	∅ 7,65 MM	1	O RING	JOINT TORIQUE ANELLO TENUTA	O–RING ANILLO FORMA 'O'
16	3010473X1	∅ 14 MM	1	O RING	JOINT TORIQUE ANELLO TENUTA	O–RING ANILLO FORMA 'O'
17	3777737M1		1	PLUG	BOUCHON TAPPO	VERSCHL.STOPFEN TAPON
18	3388779M1		1	UNION	RACCORD RACCORDO	VERSCHRAUBUNG RACOR
19	4275132M1	◄► 100 MM	1	HOSE	DURITE TUBO FLESSIBILE	SCHLAUCH FLEXIBLE
20	3777615M1	◄► 179 MM	1	HOSE	DURITE TUBO FLESSIBILE	SCHLAUCH FLEXIBLE
21*	3786653M2	◄► 2230 MM	1	HYDR. HOSE	FLEXIBLE TUBOFLEX IDRAUL	HYDR. SCHLAUCH TUBO HIDRAULICO
22*	3786654M2	◄► 2280 MM	1	HYDR. HOSE	FLEXIBLE TUBOFLEX IDRAUL	HYDR. SCHLAUCH TUBO HIDRAULICO
23	3011496X1	∅ 22 MM	1	BUSH	BAGUE BOCCOLA	BUCHSE CASQUILLO
24	3777613M1	◄► 60 MM	1	HOSE	DURITE TUBO FLESSIBILE	SCHLAUCH FLEXIBLE
25	3388779M1		1	UNION	RACCORD RACCORDO	VERSCHRAUBUNG RACOR

Air Conditioner Air Conditionne Klimaanlage Aria Condizionata Aire Acondicionado	Hose Durite Schlauch Tubo Flexible	110-105

1-WU45-011-A

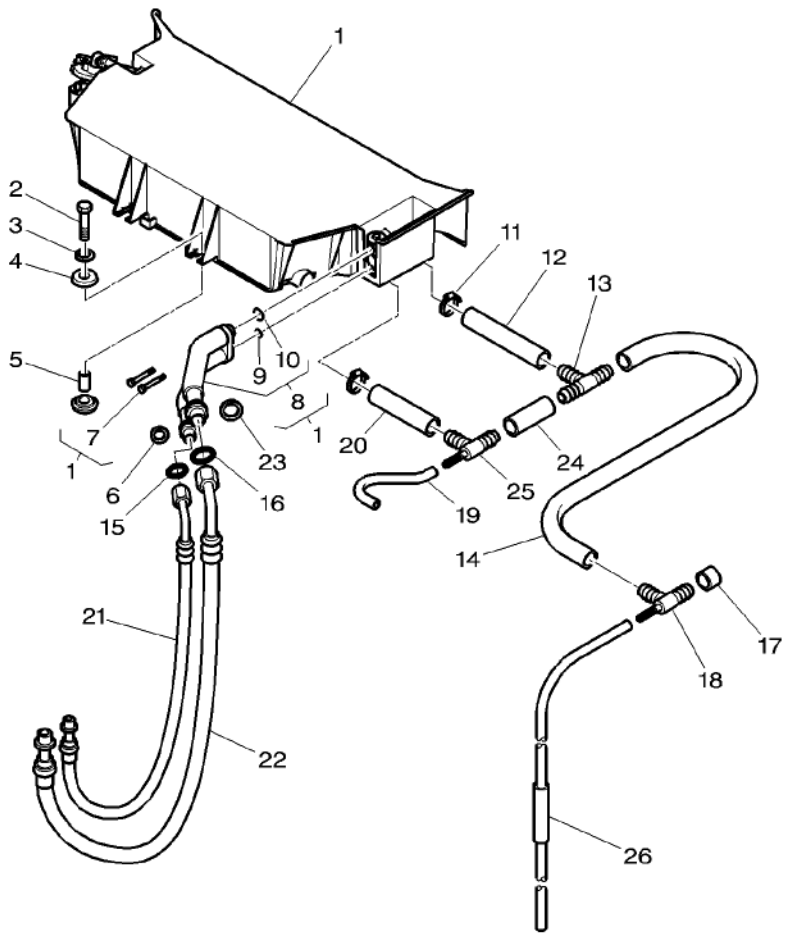

26	4276778M91	◀▶ 850 MM	1 TUBE ASSY	ENSEMBLE TUBE TUBO COMPL.	ROHR KPL CONJ.DE TUBO

[A] MANUAL AIR CONDITIONER
CLIMATISEUR MANUEL
HAND KLIMAANLAGE
CONDIZIONATORE DI ARIA MANUAL
ACONDICIONADOR DE AIRE MANUALE

[B] AUTOMATIC AIR CONDITIONER
CLIMATISEUR AUTOMATIQUE
AUTOMATISCH KLIMAANLAGE
CONDIZIONATORE DI ARIA AUTOMATICO
ACONDICIONADOR DE AIRE AUTOMATICO

Air Conditioner Air Conditionne Klimaanlage Aria Condizionata Aire Acondicionado	Hose Durite Schlauch Tubo Flexible	110-110	Standard Roof – Manual Air Conditioner Toit Standard – Climatiseur Manuel Standard Dach – Hand Klimaanlage Tetto Standard – Condizionatore Di Aria Manual Tejado Standard – Acondicionador De Aire Manuale

1-WU45-012-A

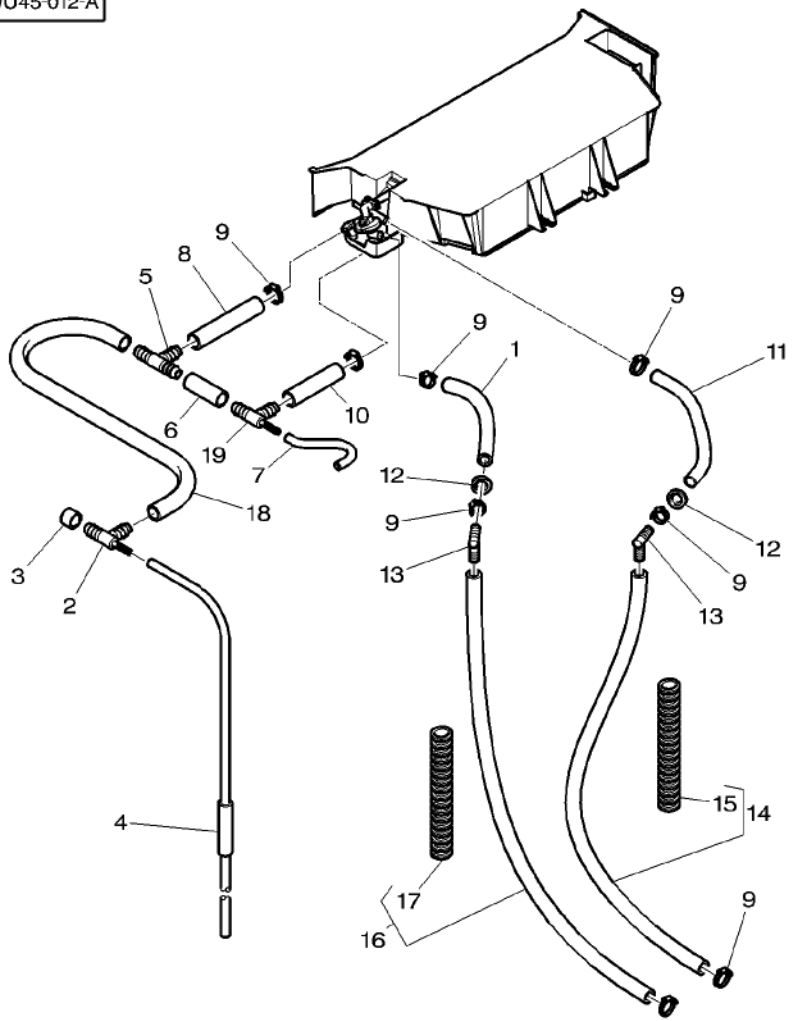

1	3787186M1	◀▶ 200 MM	1	HOSE	DURITE TUBO FLESSIBILE	SCHLAUCH FLEXIBLE
2	3388779M1		1	UNION	RACCORD RACCORDO	VERSCHRAUBUNG RACOR
3	3777737M1		1	PLUG	BOUCHON TAPPO	VERSCHL.STOPFEN TAPON
4	4276778M91	◀▶ 850 MM	1	TUBE ASSY	ENSEMBLE TUBE TUBO COMPL.	ROHR KPL CONJ.DE TUBO
5	3010683X1		1	TEEPIECE	TE RACCORDO A T	T–STUECK PIEZA EN T
6	3777613M1	◀▶ 60 MM	1	HOSE	DURITE TUBO FLESSIBILE	SCHLAUCH FLEXIBLE
7	4275132M1	◀▶ 100 MM	1	HOSE	DURITE TUBO FLESSIBILE	SCHLAUCH FLEXIBLE
8	3777617M1	◀▶ 218 MM	1	HOSE	DURITE TUBO FLESSIBILE	SCHLAUCH FLEXIBLE
9	3019564X1	∅ 16–25	8	HOSE CLIP	COLLIER DURITE FASCIA	SCHLAUCHSCHELLE CLIP P.FLEXIBLE
10	3777615M1	◀▶ 179 MM	1	HOSE	DURITE TUBO FLESSIBILE	SCHLAUCH FLEXIBLE
11	3787187M1	◀▶ 330 MM	1	HOSE	DURITE TUBO FLESSIBILE	SCHLAUCH FLEXIBLE
12	3788224M1		2	GROMMET	PASSE FIL ANELLO PASSACAVO	GUMMITUELLE PASACABLE
13	3788222M1		2	ELBOW	COUDE GOMITO	WINKELSTUECK CODO
14	4277810M92	◀▶ 1720 MM	1	HOSE	DURITE TUBO FLESSIBILE	SCHLAUCH FLEXIBLE
15	4272050M1	14 ◀▶ 400 MM	1	SHEATH	GAINE GUAINA	HUELLE FUNDA
16	4277809M91	◀▶ 1740 MM	1	HOSE	DURITE TUBO FLESSIBILE	SCHLAUCH FLEXIBLE
17	4272050M1	16 ◀▶ 400 MM	1	SHEATH	GAINE GUAINA	HUELLE FUNDA
18	3778361M1	◀▶ 529 MM	1	WATER HOSE	DURITE EAU TUBOFLEX ACQUA	WASSERSCHLAUCH MANGUERA P.AGUA
19	3388779M1		1	UNION	RACCORD RACCORDO	VERSCHRAUBUNG RACOR

Air Conditioner	Hose	110-115	Standard Roof – Automatic Air Conditioner
Air Conditionne	Durite		Toit Standard – Climatiseur Automatique
Klimaanlage	Schlauch		Standard Dach – Automatisch Klimaanlage
Aria Condizionata	Tubo		Tetto Standard – Condizionatore Di Aria Automatico
Aire Acondicionado	Flexible		Tejado Standard – Acondicionador De Aire Automatic

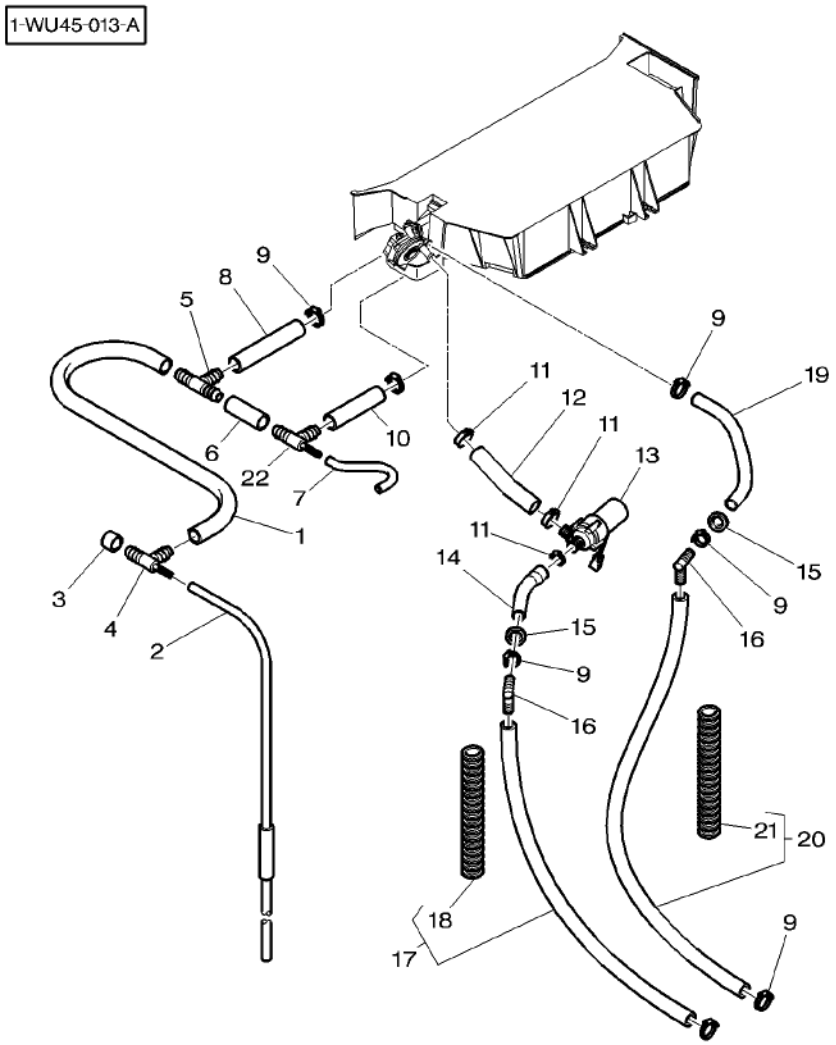

1	3778361M1	◀▶ 529 MM	1	WATER HOSE	DURITE EAU TUBOFLEX ACQUA	WASSERSCHLAUCH MANGUERA P.AGUA
2	4276778M91		1	TUBE ASSY	ENSEMBLE TUBE TUBO COMPL.	ROHR KPL CONJ.DE TUBO
3	3777737M1		1	PLUG	BOUCHON TAPPO	VERSCHL.STOPFEN TAPON
4	3388779M1		1	UNION	RACCORD RACCORDO	VERSCHRAUBUNG RACOR
5	3010683X1		1	TEEPIECE	TE RACCORDO A T	T–STUECK PIEZA EN T
6	3777613M1	◀▶ 60 MM	1	HOSE	DURITE TUBO FLESSIBILE	SCHLAUCH FLEXIBLE
7	4275132M1	◀▶ 100 MM	1	HOSE	DURITE TUBO FLESSIBILE	SCHLAUCH FLEXIBLE
8	3777617M1	◀▶ 218 MM	1	HOSE	DURITE TUBO FLESSIBILE	SCHLAUCH FLEXIBLE
9	3019564X1	∅ 16–25	8	HOSE CLIP	COLLIER DURITE FASCIA	SCHLAUCHSCHELLE CLIP P.FLEXIBLE
10	3777615M1	◀▶ 179 MM	1	HOSE	DURITE TUBO FLESSIBILE	SCHLAUCH FLEXIBLE
11	338614X1	∅ 20–32	3	HOSE CLIP	COLLIER DURITE FASCIA	SCHLAUCHSCHELLE CLIP P.FLEXIBLE
12	4271129M1	◀▶ 145 MM	1	HOSE	DURITE TUBO FLESSIBILE	SCHLAUCH FLEXIBLE
13	3712744M1		1	WATER PUMP	POMPE A EAU POMPA ACQUA	WASSERPUMPE BOMBA DE AGUA
14	4272841M1	◀▶ 150 MM	1	HOSE	DURITE TUBO FLESSIBILE	SCHLAUCH FLEXIBLE
15	3788224M1		2	GROMMET	PASSE FIL ANELLO PASSACAVO	GUMMITUELLE PASACABLE
16	3788222M1		2	ELBOW	COUDE GOMITO	WINKELSTUECK CODO
17	4277809M91	◀▶ 1740 MM	1	HOSE	DURITE TUBO FLESSIBILE	SCHLAUCH FLEXIBLE
18	4272050M1	17 ◀▶ 400 MM	1	SHEATH	GAINE GUAINA	HUELLE FUNDA
19	3787187M1	◀▶ 330 MM	1	HOSE	DURITE TUBO FLESSIBILE	SCHLAUCH FLEXIBLE
20	4277810M92	∅ 1720 MM	1	HOSE	DURITE TUBO FLESSIBILE	SCHLAUCH FLEXIBLE
21	4272050M1	20 ◀▶ 400 MM	1	SHEATH	GAINE GUAINA	HUELLE FUNDA
22	3388779M1		1	UNION	RACCORD RACCORDO	VERSCHRAUBUNG RACOR

Air Conditioner
Air Conditionne
Klimaanlage
Aria Condizionata
Aire Acondicionado

110-120

Standard Roof – Manual Air Conditioner
Toit Standard – Climatiseur Manuel
Standard Dach – Hand Klimaanlage
Tetto Standard – Condizionatore Di Aria Manual
Tejado Standard – Acondicionador De Aire Manuale

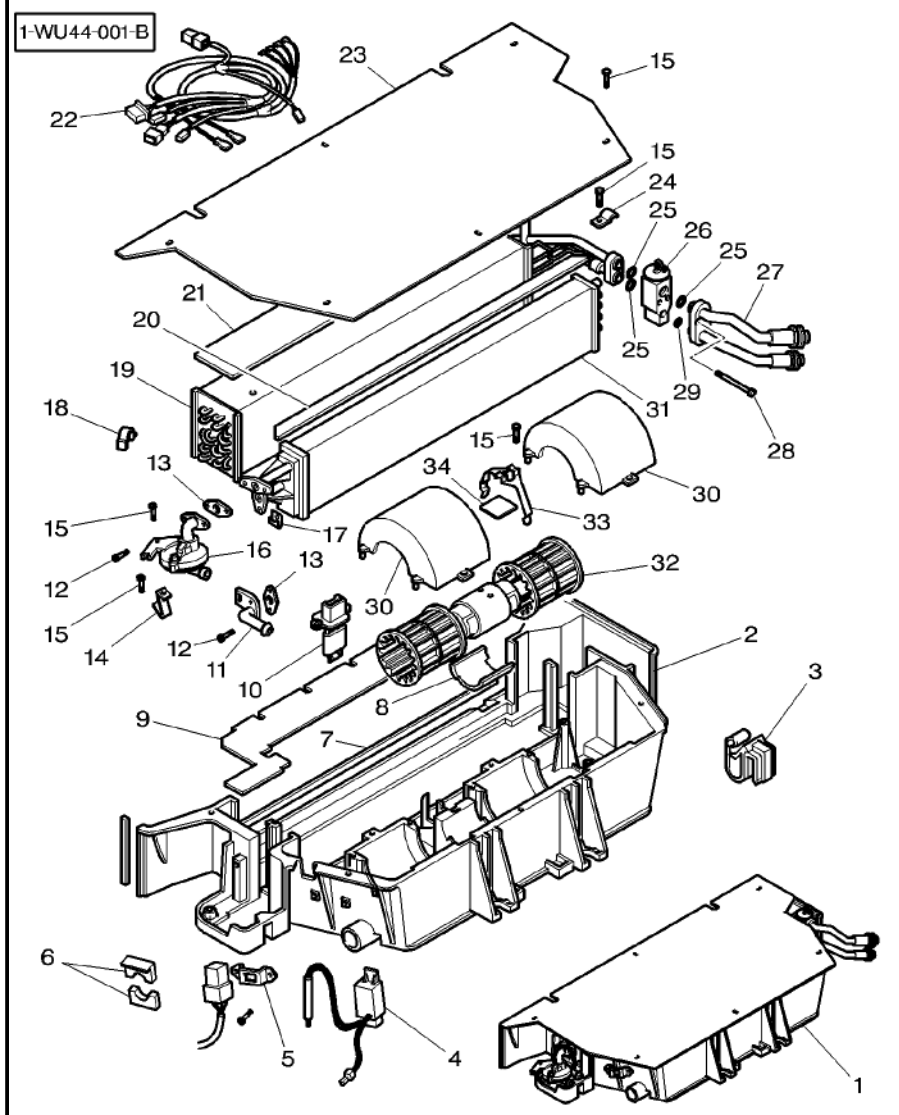

1	4272839M92	[A]		1	AIR CONDITIONER	CONDITIONNEUR CONDIZIONATORE KLIMAANLAGE ACONDIC.DE AIRE
2	3907307M1	1		1	HOUSING	CARTER CARCASSA GEHAEUSE ALOJAMIENTO
3	3907306M1	1		1	CLIP	PATTE D'ATTACHE FERMAGLIO SCHELLE CLIP
4	3907305M1	1		1	THERMOSTAT	THERMOSTAT TERMOSTATO THERMOSTAT TERMOSTATO
5	3907304M1	1		1	STRAP	PATTE CORREGGIA LASCHE FAJA
6	3907303M1	1		1	FOAM	MOUSSE GOMMAPIUMA SCHAUMSTOFF ESPUMA
7	3902322M1	1		1	FOAM	MOUSSE GOMMAPIUMA SCHAUMSTOFF ESPUMA
8	3907302M1	1		1	PROTECTOR	PROTECTEUR PROTETTORE SCHUTZ PROTECTOR
9	3902329M2	1		1	PLATE	PLAQUE PIASTRA PLATTE PLATO
10*	3904295M1	1		1	RESISTOR	RESISTANCE RESISTORE WIDERSTAND RESISTENCIA
11	3907301M1	1		1	ELBOW	COUDE GOMITO WINKELSTUECK CODO
12	3904319M1	1	4,8X19	4	SCREW	VIS VITE SCHRAUBE TORNILLO
13	3902327M1	1		2	GASKET	JOINT GUARNIZIONE DICHTSCHEIBE EMPAQUETADURA.
14	3907296M1	1		1	STRAP	PATTE CORREGGIA LASCHE FAJA
15	365916X1	1	4X12	13	SELF TAP SCREWS	VIS AUTO TARAUD KITAUTOBLOCCANTE SCHNEIDSCHRAUBEN TORNILLO CHAPA
16	3907300M1	1		1	COCK	ROBINET RUBINETTO ABSPERRHAHN AGUJA INDICADORA
17	3902090M1	1		4	NUT	ECROU DADO MUTTER TUERCA
18	3904589M1	1		1	CLIP	PATTE D'ATTACHE FERMAGLIO SCHELLE CLIP
19	3902331M92	1		1	EVAPORATOR	EVAPORATEUR EVAPORATORE VERDUNSTER EVAPORADOR
20	3310849M1	1		1	FOAM	MOUSSE GOMMAPIUMA SCHAUMSTOFF ESPUMA
21	3902332M1	1		1	FOAM	MOUSSE GOMMAPIUMA SCHAUMSTOFF ESPUMA
22	3907299M91	1		1	HARNESS	FAISCEAU FASCIOCAVI KABELBAUM MAZO CABLES
23	3310839M1	1		1	PLATE	PLAQUE PIASTRA PLATTE PLATO
24	3310836M1	1		1	STRAP	PATTE CORREGGIA LASCHE FAJA
25	3902500M1	1		3	GASKET	JOINT GUARNIZIONE DICHTSCHEIBE EMPAQUETADURA.
26	3902334M91	1		1	REGULATOR	REGULATEUR REGOLATORE REGLER REGULADOR

Air Conditioner Air Conditionne Klimaanlage Aria Condizionata Aire Acondicionado	110-120	Standard Roof – Manual Air Conditioner Toit Standard – Climatiseur Manuel Standard Dach – Hand Klimaanlage Tetto Standard – Condizionatore Di Aria Manual Tejado Standard – Acondicionador De Aire Manuale

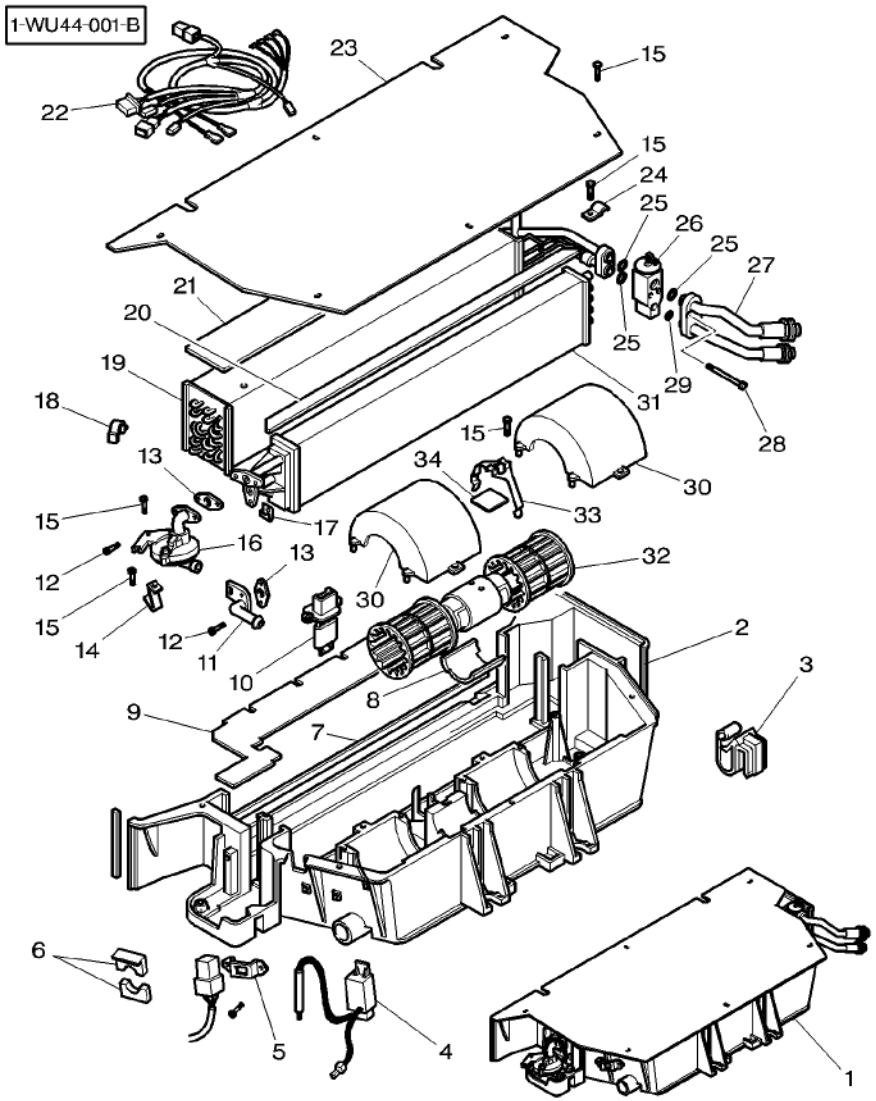

27	3907298M91	1		1	TUBING	TUBULURE TUBATURA	ROHRSTUTZEN TUBERIA
28	3904328M1	1	M6X50	2	SCREW	VIS VITE	SCHRAUBE TORNILLO
29	3902550M1	1		1	O RING	JOINT TORIQUE ANELLO TENUTA	O-RING ANILLO FORMA 'O'
30	3310833M1	1		2	COVER	COUVERCLE COPERCHIO	DECKEL CUBIERTA
31	3310827M92	1		1	RADIATOR	RADIATEUR RADIATORE	KUEHLER RADIADOR
32	3907297M91	1		1	ENGINE	MOTEUR MOTORE	MOTOR MOTOR
33	3902320M1	1		1	STRAP	PATTE CORREGGIA	LASCHE FAJA
34		1	[B]	1	PLATE	PLAQUE PIASTRA	PLATTE PLATO

[A] MANUAL AIR CONDITIONER
CLIMATISEUR MANUEL
HAND KLIMAANLAGE
CONDIZIONATORE DI ARIA MANUAL
ACONDICIONADOR DE AIRE MANUALE

[B] NOT DETAILLED
PAS DETAILLE
NICHT VERKAUFT
PASSO DETTAGLIATO
NO DETALLADO

Air Conditioner
Air Conditionne
Klimaanlage
Aria Condizionata
Aire Acondicionado

110-125

Standard Roof – Automatic Air Conditioner
Toit Standard – Climatiseur Automatique
Standard Dach – Automatisch Klimaanlage
Tetto Standard – Condizionatore Di Aria Automatico
Tejado Standard – Acondicionador De Aire Automatic

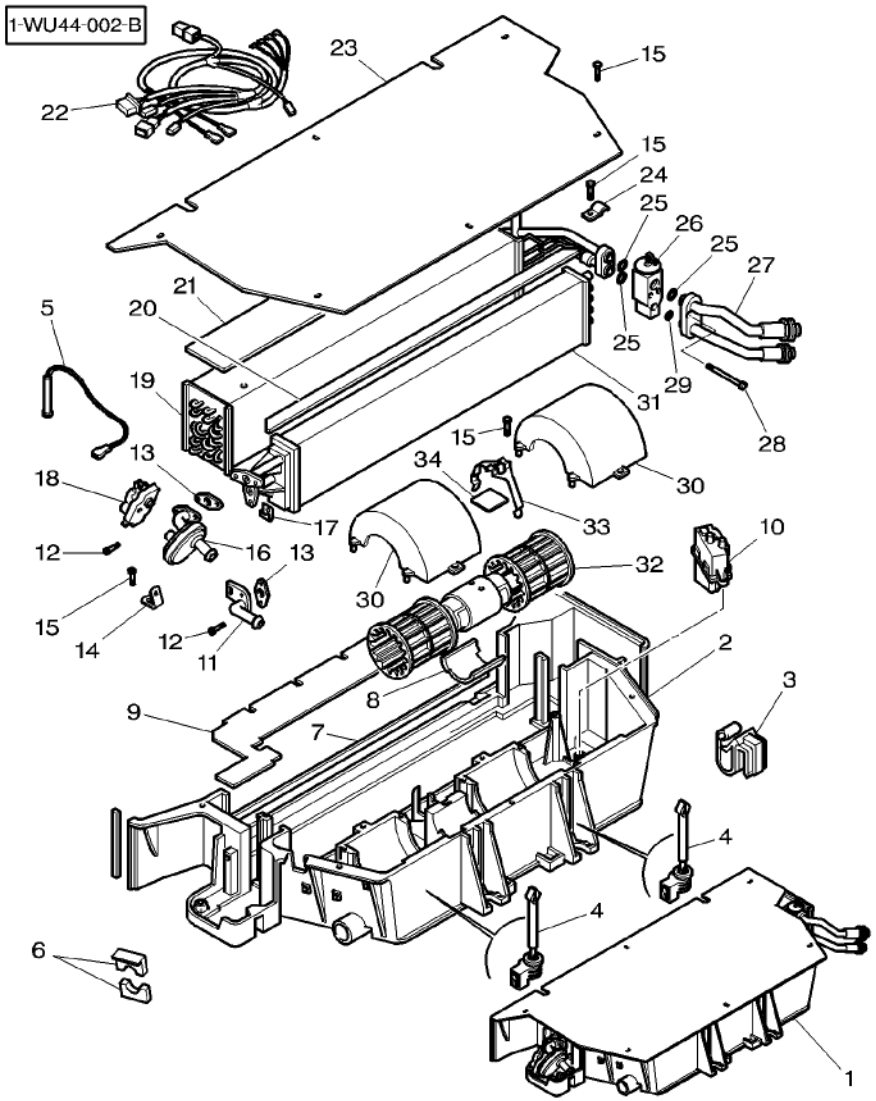

1	4272840M91	[A]		1	AIR CONDITIONER	CONDITIONNEUR CONDIZIONATORE KLIMAANLAGE ACONDIC.DE AIRE
2	3907307M1	1		1	HOUSING	CARTER CARCASSA GEHAEUSE ALOJAMIENTO
3	3907306M1	1		1	CLIP	PATTE D'ATTACHE FERMAGLIO SCHELLE CLIP
4	3907313M1	1		2	SENSOR	DETECTEUR SENSORE EMPFANGER DETECTOR
5	3907316M1	1		1	SENDER	EMETTEUR EMITTENTE GEBER EMISOR
6	3907303M1	1		2	FOAM	MOUSSE GOMMAPIUMA SCHAUMSTOFF ESPUMA
7	3902322M1	1		1	FOAM	MOUSSE GOMMAPIUMA SCHAUMSTOFF ESPUMA
8	3907302M1	1		1	PROTECTOR	PROTECTEUR PROTETTORE SCHUTZ PROTECTOR
9	3902329M2	1		1	PLATE	PLAQUE PIASTRA PLATTE PLATO
10	3907310M1	1		1	REGULATOR	REGULATEUR REGOLATORE REGLER REGULADOR
11	3907301M1	1		1	ELBOW	COUDE GOMITO WINKELSTUECK CODO
12	3904319M1	1	4,8 X 19	4	SCREW	VIS VITE SCHRAUBE TORNILLO
13	3902327M1	1		2	GASKET	JOINT GUARNIZIONE DICHTSCHEIBE EMPAQUETADURA.
14	3907314M1	1		1	STRAP	PATTE CORREGGIA LASCHE FAJA
15	365916X1	1	4 X 12	15	SELF TAP SCREWS	VIS AUTO TARAUD KITAUTOBLOCCANTE SCHNEIDSCHRAUBEN TORNILLO CHAPA
16	3907312M1	1		1	COCK	ROBINET RUBINETTO ABSPERRHAHN AGUJA INDICADORA
17	3902090M1	1		4	NUT	ECROU DADO MUTTER TUERCA
18		1	REF. 16	1	ENGINE	MOTEUR MOTORE MOTOR MOTOR
19	3902331M92	1		1	EVAPORATOR	EVAPORATEUR EVAPORATORE VERDUNSTER EVAPORADOR
20	3310849M1	1		1	FOAM	MOUSSE GOMMAPIUMA SCHAUMSTOFF ESPUMA
21	3902332M1	1		1	FOAM	MOUSSE GOMMAPIUMA SCHAUMSTOFF ESPUMA
22	3907315M1	1		1	HARNESS	FAISCEAU FASCIOCAVI KABELBAUM MAZO CABLES
23	3310839M1	1		1	PLATE	PLAQUE PIASTRA PLATTE PLATO
24	3310836M1	1		1	STRAP	PATTE CORREGGIA LASCHE FAJA
25	3902500M1	1		3	GASKET	JOINT GUARNIZIONE DICHTSCHEIBE EMPAQUETADURA.
26	3902334M91	1		1	REGULATOR	REGULATEUR REGOLATORE REGLER REGULADOR

Air Conditioner Air Conditionne Klimaanlage Aria Condizionata Aire Acondicionado	110-125	Standard Roof – Automatic Air Conditioner Toit Standard – Climatiseur Automatique Standard Dach – Automatisch Klimaanlage Tetto Standard – Condizionatore Di Aria Automatico Tejado Standard – Acondicionador De Aire Automatic

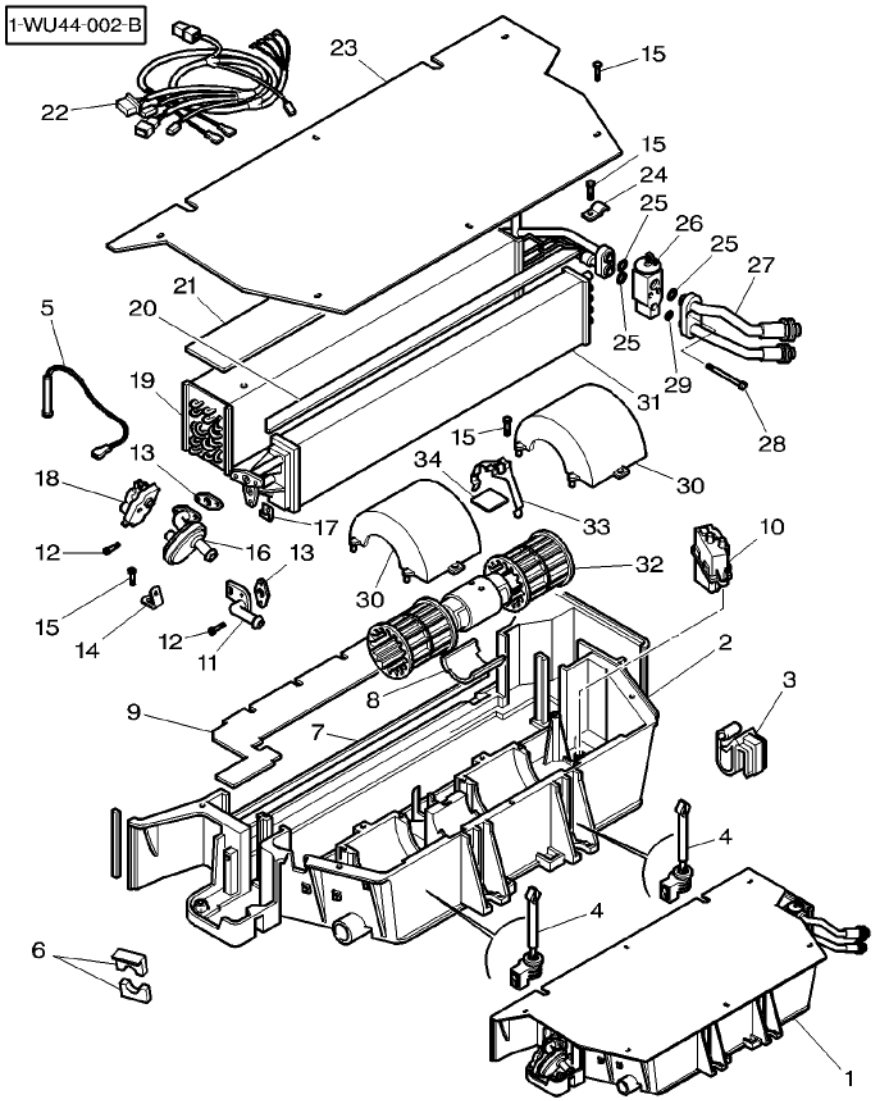

27	3907298M91	1	1 TUBING	TUBULURE TUBATURA	ROHRSTUTZEN TUBERIA
28	3904328M1	1	2 SCREW	VIS VITE	SCHRAUBE TORNILLO
29	3902550M1	1	1 O RING	JOINT TORIQUE ANELLO TENUTA	O–RING ANILLO FORMA 'O'
30	3310833M1	1	1 COVER	COUVERCLE COPERCHIO	DECKEL CUBIERTA
31	3310827M92	1	1 RADIATOR	RADIATEUR RADIATORE	KUEHLER RADIADOR
32	3907297M91	1	1 ENGINE	MOTEUR MOTORE	MOTOR MOTOR
33	3902320M1	1	1 STRAP	PATTE CORREGGIA	LASCHE FAJA
34		1 [B]	1 PLATE	PLAQUE PIASTRA	PLATTE PLATO

[A] AUTOMATIC AIR CONDITIONER
CLIMATISEUR AUTOMATIQUE
AUTOMATISCH KLIMAANLAGE
CONDIZIONATORE DI ARIA AUTOMATICO
ACONDICIONADOR DE AIRE AUTOMATICO

[B] NOT DETAILLED
PAS DETAILLE
NICHT VERKAUFT
PASSO DETTAGLIATO
NO DETALLADO

Heater Chauffage Heizung Riscaldatore Riscaldatore	High Cold Grand Froid Grosskalte Grand Freddo Gran Freo	110-130

1-WU49-001-C

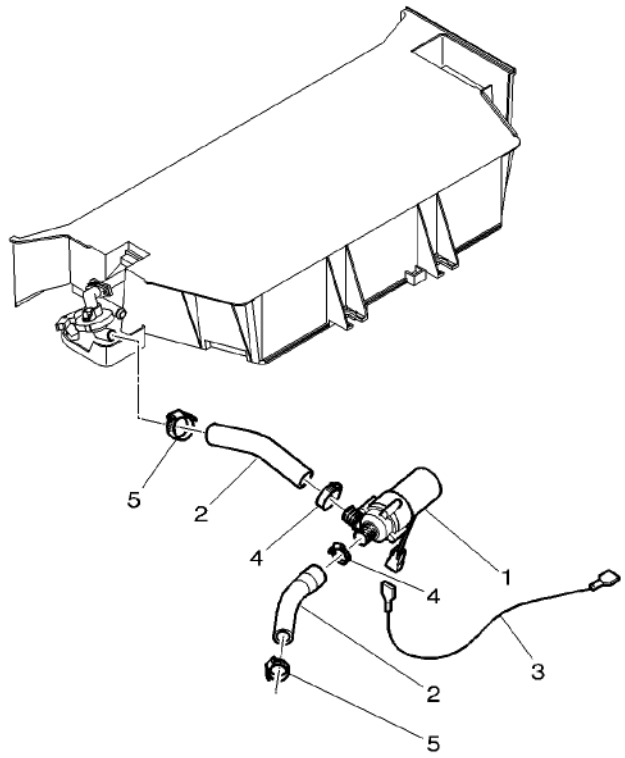

1	3712744M1		1 WATER PUMP	POMPE A EAU POMPA ACQUA	WASSERPUMPE BOMBA DE AGUA
2	4272841M1	◀▶ 150 MM	2 HOSE	DURITE TUBO FLESSIBILE	SCHLAUCH FLEXIBLE
3	4270484M1		1 SWITCH,INDIRECT	CONTACTEUR INTERRUTTORE IND	KONTAKTSCHALTER CONTACTOR
4	338614X1	∅ 20–32	2 HOSE CLIP	COLLIER DURITE FASCIA	SCHLAUCHSCHELLE CLIP P.FLEXIBLE
5	3019564X1	∅ 16–25	2 HOSE CLIP	COLLIER DURITE FASCIA	SCHLAUCHSCHELLE CLIP P.FLEXIBLE

Cab Filter
Filtre De Cabine
Filter Die Kabine
Filtro Di Cabina
Filtro De Cabina

110-135

1-WU48-001-A

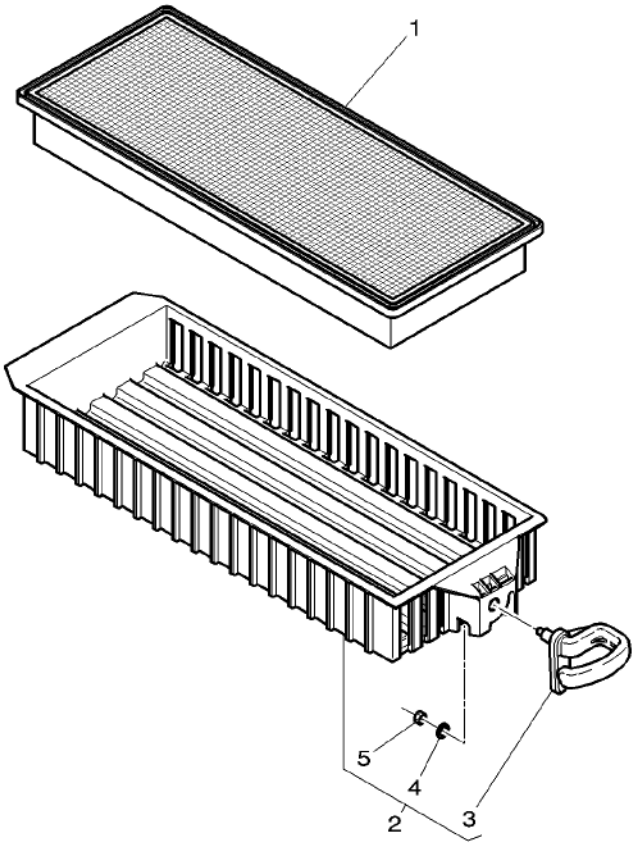

1	***3786649M1***	200 X 500	**1**	CAB FILTER	FILTRE CABINE FILTRO CABINA	KABINE FILTER FILTRO CABINA
1	4271140M1	[A]	**1**	CAB FILTER	FILTRE CABINE FILTRO CABINA	KABINE FILTER FILTRO CABINA
2	3786650M91		**1**	FRAME ASSY	CADRE TELAIO COMPLETO	RAHMEN KPL CJTO.BASTIDOR
3	3788950M91	2	**1**	HANDLE	POIGNEE MANIGLIA	HANDGRIFF MANETA
4	390971X1	2 ∅ 6-12 X 1,5	**1**	WASHER	RONDELLE RONDELLA	UNTERLEGSCHEIBE ARANDELA
5	1441462X1	2 M6	**1**	LOCKNUT	ECROU BLOCAGE AUTOBLOCCANTE	SICHERUNGSMUTTER CONTRATUERCA

[A] CARBON FILTER
FILTRE A CHARBON
KOHLEFILTER
FILTRO CARBOME
FILTRO CARBON

Heater Control
Commande De Chauffage
Heizung Schaltung
Comando De Riscaldamento
Mando De Calefaccoin

110-140

1-WU40-004-C

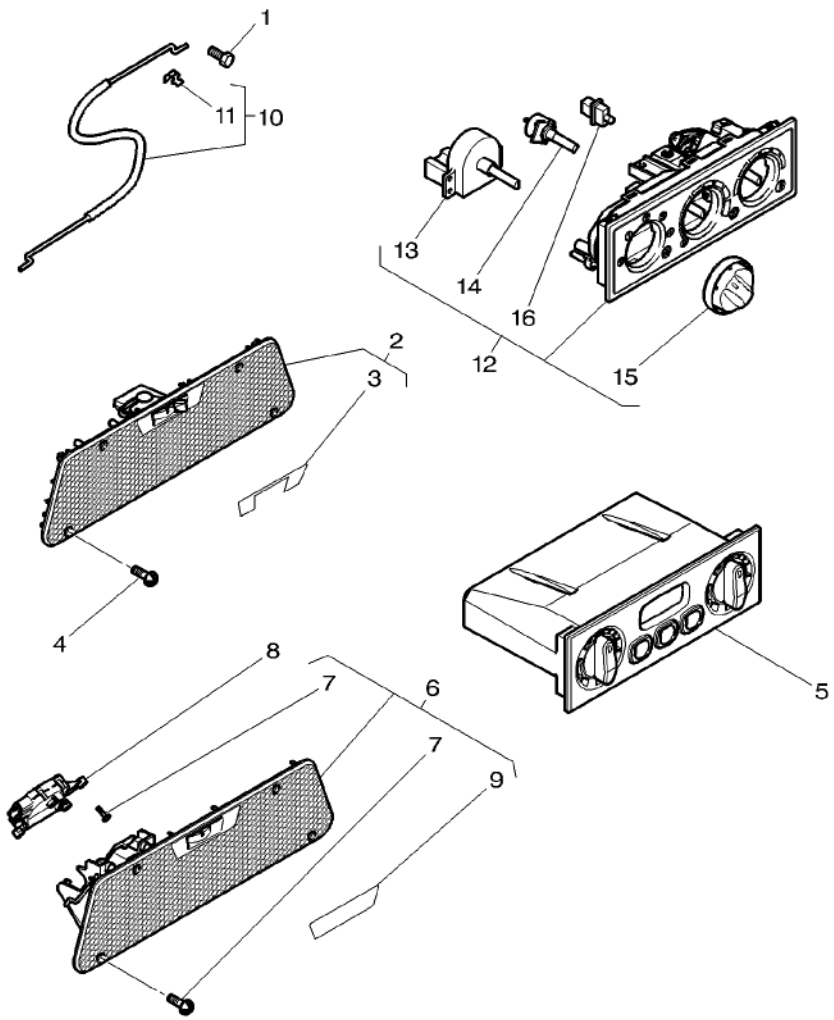

1	1442171X1	[AC] M4 X 10	1	HEX. SOCK. SCREW	VIS TETE HEX VITE PARKER	ZYLINDERSCHRAUBE TORN.CAB.HUECA
2	4273553M93	[A]	1	VENTILATOR	AERATEUR VENTILATORE	VENTILATOR RULO DE SACO
3	4273546M3	2	1	DECAL	DECALCOMANIE DECALCOMANIA	AUFKLEBER CALCOMANIA
4	3010804X1	M4 X 16	4	SCREW	VIS VITE	SCHRAUBE TORNILLO
5	3786660M95	[BD]	1	PLATE CONTROL	PLATINE DE CDE PIASTRA APPOGIO	KLEMMPLATTE. PLACA DE ABRAZO.
6	4273545M92	[B]	1	VENTILATOR	AERATEUR VENTILATORE	VENTILATOR RULO DE SACO
7	4271132M1	6 [B] M3,5 X 14	7	SCREW	VIS VITE	SCHRAUBE TORNILLO
8	4271130M1	[B]	1	ENGINE	MOTEUR MOTORE	MOTOR MOTOR
9	4272835M2	6 [B]	1	DECAL	DECALCOMANIE DECALCOMANIA	AUFKLEBER CALCOMANIA
10	4271161M1	[A]	1	CABLE	CABLE CAVO	KABEL CABLE
11	1696477M1	10 [A]	1	CLIP	PATTE D'ATTACHE FERMAGLIO	SCHELLE CLIP
12	3786659M2	[A]	1	PLATE CONTROL	PLATINE DE CDE PIASTRA APPOGIO	KLEMMPLATTE. PLACA DE ABRAZO.
13	3907283M1	12	1	CONNECTORS	CONNECTEUR MORSETTI	KABELVERBINDER CONECTADORES
14	3907282M1	12	1	POTENTIOMETER	POTENTIOMETRE POTENZIOMETRO	POTENTIOMETER REGULADOR ELECT.
15	3907285M1	12	3	KNOB	POMMEAU POMELO	KNOPF POMO
16	***3907284M1***	12	1	DIODE	DIODE DIODO	DIODE DIODO

[A] MANUAL AIR CONDITIONER
CLIMATISEUR MANUEL
HAND KLIMAANLAGE
CONDIZIONATORE DI ARIA MANUAL
ACONDICIONADOR DE AIRE MANUALE

[B] AUTOMATIC AIR CONDITIONER
CLIMATISEUR AUTOMATIQUE
AUTOMATISCH KLIMAANLAGE
CONDIZIONATORE DI ARIA AUTOMATICO
ACONDICIONADOR DE AIRE AUTOMATICO

[C] HEATER
CHAUFFAGE
HEIZUNG
RISCALDATORE
CALEFACTOR

Heater Control
Commande De Chauffage
Heizung Schaltung
Comando De Riscaldamento
Mando De Calefaccoin

110-140

1-WU40-004-C

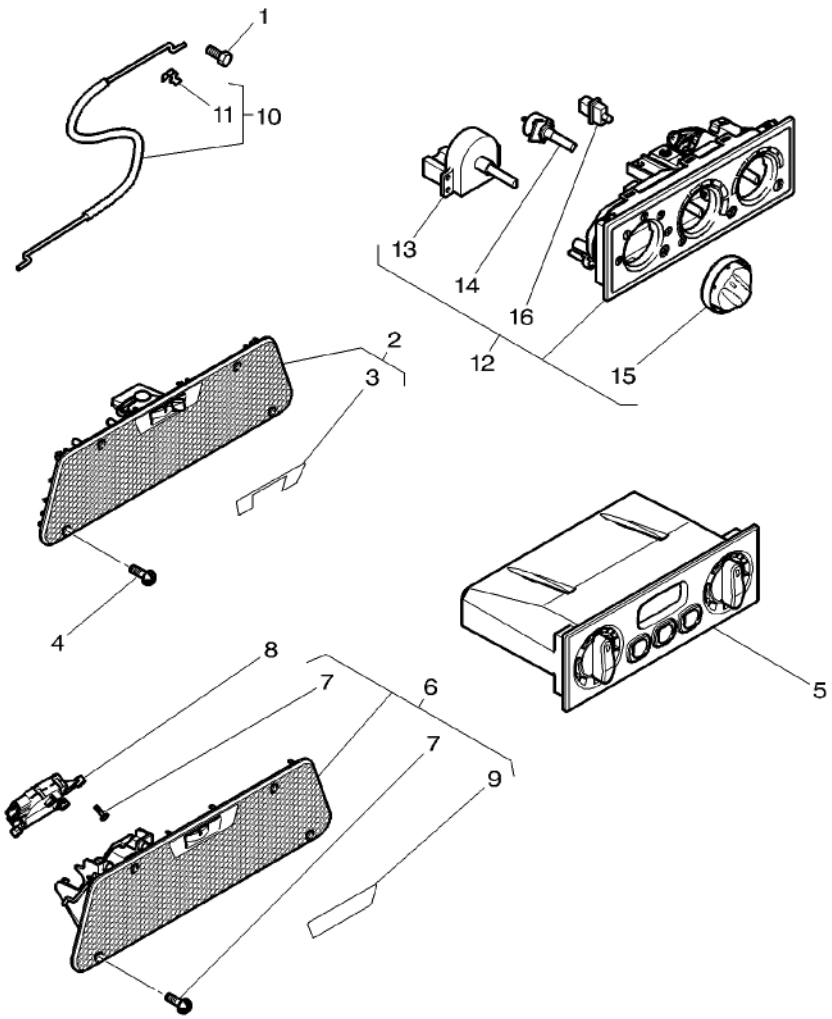

[D] NOT DETAILLED
PAS DETAILLE
NICHT VERKAUFT
PASSO DETTAGLIATO
NO DETALLADO

Front Windscreen Wiper
Essuie Glace Avant
Scheibenwischer Vorderteil
Tergicristallo Anteriore
Varillaje De Limpiaparabrisas Delantero

110-145

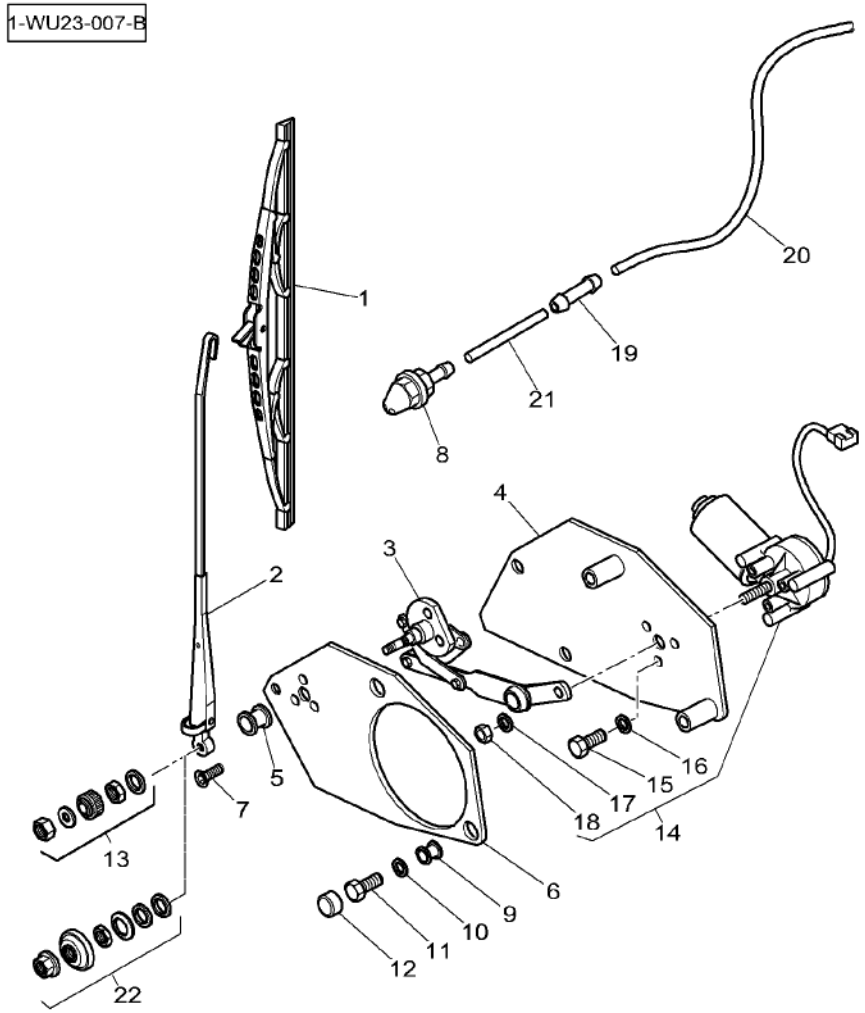

1	*3777648M1*	➡| N268072 ◀▶ 500 MM	1	WIPER BLADE	BALAI ESSUIE GL SPAZZOLA TERGICR	WISCHERBLATT ESCOBILLA L P BR
1*	*4275053M1*	➡ N268073 ◀▶ 500 MM	1	WIPER BLADE	BALAI ESSUIE GL SPAZZOLA TERGICR	WISCHERBLATT ESCOBILLA L P BR
2	3777649M1	➡| N268072 ◀▶ 375 MM	1	WIPER ARM	BRAS ESSUIE GL BRACCIO TERGICR.	WISCHERARM BRAZO L P BRISA
2*	4275054M1	➡ N268073 ◀▶ 375 MM	1	WIPER ARM	BRAS ESSUIE GL BRACCIO TERGICR.	WISCHERARM BRAZO L P BRISA
3*	4275056M1		1	TIE ROD	TRINGLERIE TIRANTE	ZUGSTANGE BRAZO DE ENLACE
4	3777699M2		1	SUPPORT	SUPPORT SUPPORTO	LAGERUNG DISPOS.DE SOSTEN
5*	4277495M1	∅ 28 MM	1	GROMMET	PASSE FIL ANELLO PASSACAVO	GUMMITUELLE PASACABLE
6	3777700M2		1	SUPPORT	SUPPORT SUPPORTO	LAGERUNG DISPOS.DE SOSTEN
7	3010762X1	M5 X 10	3	SCREW	VIS VITE	SCHRAUBE TORNILLO
8	3389664M1		2	JET	GICLEUR GETTO	SPRITZDUESE SURTIDOR
9*	4277496M1	∅ 16 MM	2	GROMMET	PASSE FIL ANELLO PASSACAVO	GUMMITUELLE PASACABLE
10	391039X1	∅ 8-24 X 2 MM	2	WASHER METRIC	RONDELLE METR. RONDELLA METRICO	SCHEIBE METRISCH ARANDELA METRICO
11	339337X1	M8 X 30	2	HEX. SOCK. SCREW	VIS TETE HEX VITE PARKER	ZYLINDERSCHRAUBE TORN.CAB.HUECA
12	3616277M1	M8	2	HELMET	CAPUCHON CASCO	SCHUTZHELM CASCO
13	3778258M1	➡| N268072	1	PARTS PACK	JEU PIECES PACCO RICAMBI	SATZ TEILE PAQUETE PIEZAS
14	3777698M92	➡| N268072	1	WIPER MOTOR	MOTEUR ESSUIE GL MOTORINO TERGICR	WISCHERMOTOR MOTOR L PARABRIS
14*	4275055M1	➡ N268073	1	WIPER MOTOR	MOTEUR ESSUIE GL MOTORINO TERGICR	WISCHERMOTOR MOTOR L PARABRIS
15	339560X1	14 M6 X 16	3	HEX. SOCK. SCREW	VIS TETE HEX VITE PARKER	ZYLINDERSCHRAUBE TORN.CAB.HUECA
16	391289X1	14 ➡| N268072	3	LOCK WASHER	RONDELLE FREIN ROSETTA DENTELL.	FEDERRING ARANDELA GROWER
17	3008914X1	14	1	TAB WASHER	RONDELLE EVENT PIASTRINA SICUR	SICHERUNGSBLECH ARANDELA ALETA
18	339169X1	14 M8	1	NUT	ECROU DADO	MUTTER TUERCA
19	3715074M1		1	UNION	RACCORD RACCORDO	VERSCHRAUBUNG RACOR
20	3786778M1	[B] ◀▶ 1840 MM	1	HOSE FLEXIBLE	TUYAU FLEXIBLE MANICOTTO FLESS.	GUMMISCHLAUCH MANGUERA FLEX
20	3786780M1	◀▶ 1550 MM	1	HOSE FLEXIBLE	TUYAU FLEXIBLE MANICOTTO FLESS.	GUMMISCHLAUCH MANGUERA FLEX
21	3778372M1	370MM	1	TUBE	TUBE TUBO	ROHR TUBO
22*	3907533M91	➡ N268073	1	KIT, HARDWARE	JEUQUINCAILLERIE KIT BULLONERIA	NORMTEILESATZ BULONERIA JUEGO

Front Windscreen Wiper
Essuie Glace Avant
Scheibenwischer Vorderteil
Tergicristallo Anteriore
Varillaje De Limpiaparabrisas Delantero

110-145

1-WU23-007-B

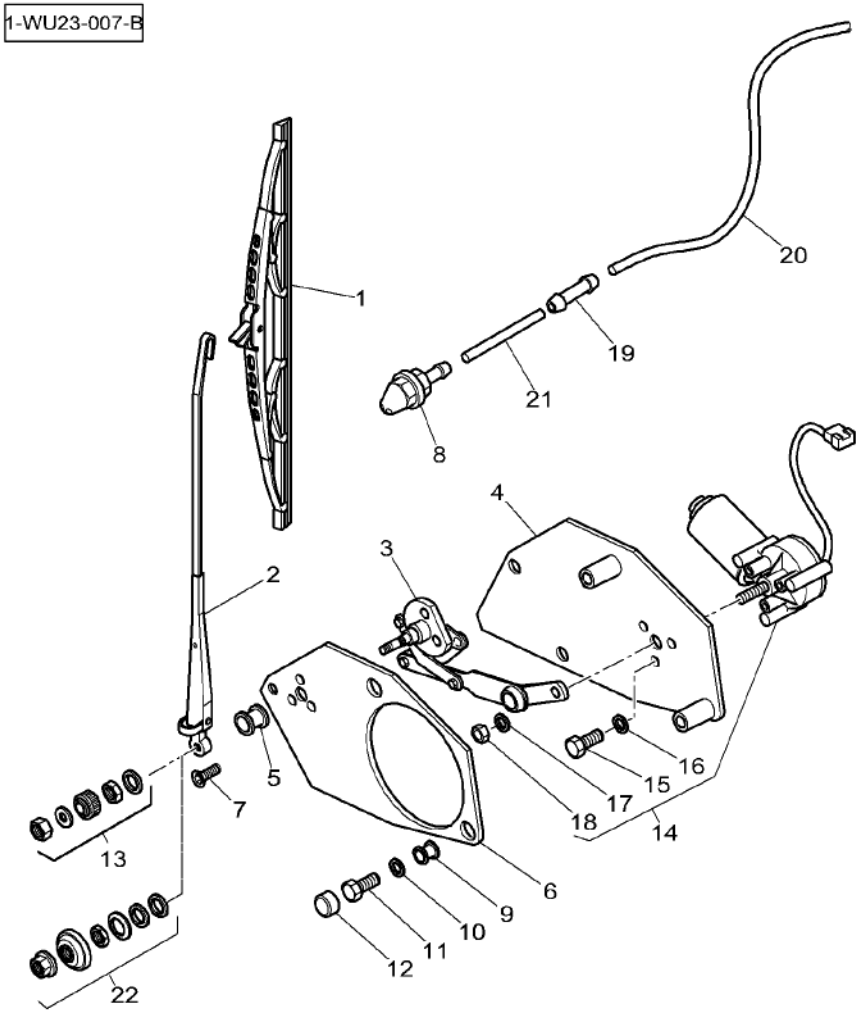

[B] WITHOUT REAR WIPER AND WASHER WINDSCREEN
SANS ESSUIE GLACE ET LAVE GLACE ARRIERE
OHNE SCHEIBENWISCHER UND SCHEIBENWASCHANLAGE HINT
SENZA TERGICRISTALLO E LAVAGGIO CRISTALLO POSTERIO RE
SIN LIMPIA Y LAVA VENTANA TRASERA

Windscreen Washer
Lave Glace
Scheibenwascher
Lavacristallo
Lavaparabrisas

110-150

1-WU24-001-C

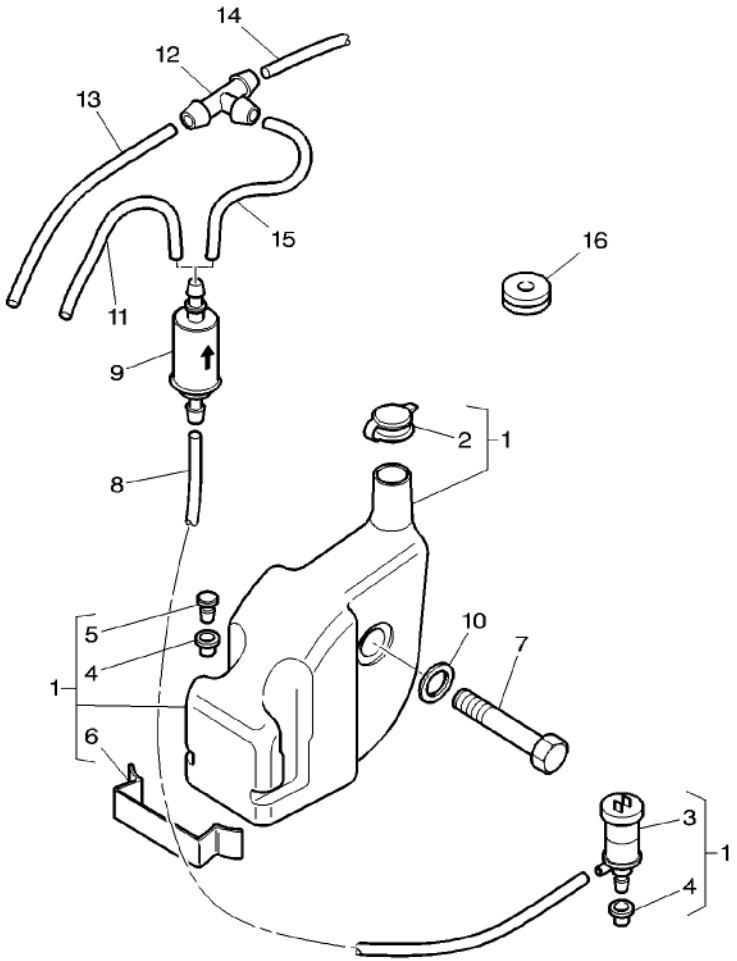

1	3786775M91		1	TANK	RESERVOIR SERBATOIO	TANK DEPOSITO LIQUIDO
2	3786800M1	1	1	TANK CAP	BOUCHON RESERV CUFFIA SERBATOIO	TANKVERSCHLUSS TAPA DE DEPOSITO
3	3582441M1	1	1	WATER PUMP	POMPE A EAU POMPA ACQUA	WASSERPUMPE BOMBA DE AGUA
4	3582443M1	1	2	GASKET	JOINT GUARNIZIONE	DICHTSCHEIBE EMPAQUETADURA.
5	3582442M1	1	1	PLUG	BOUCHON TAPPO	VERSCHL.STOPFEN TAPON
6	4274610M1	1	1	CLIP	PATTE D'ATTACHE FERMAGLIO	SCHELLE CLIP
7	339368X1	M8 X 60	1	HEX. SOCK. SCREW	VIS TETE HEX VITE PARKER	ZYLINDERSCHRAUBE TORN.CAB.HUECA
8	3786779M1	◀▶ 1330 MM	1	HOSE FLEXIBLE	TUYAU FLEXIBLE MANICOTTO FLESS.	GUMMISCHLAUCH MANGUERA FLEX
9	3583086M1		1	PRESSURE VALVE	VALVE VALVOLA PRESSION	DRUCKVENTIL VALVULA PRESION
10	3010467X1	∅ 8-30 X 2 MM	1	WASHER	RONDELLE RONDELLA	UNTERLEGSCHEIBE ARANDELA
11*	3786778M1	[A] ◀▶ 1840 MM	1	HOSE FLEXIBLE	TUYAU FLEXIBLE MANICOTTO FLESS.	GUMMISCHLAUCH MANGUERA FLEX
12	3583069M1		1	TEEPIECE	TE RACCORDO A T	T-STUECK PIEZA EN T
13	3786780M1	◀▶ 1550 MM	1	HOSE FLEXIBLE	TUYAU FLEXIBLE MANICOTTO FLESS.	GUMMISCHLAUCH MANGUERA FLEX
14	3786782M1	◀▶ 1580 MM	1	HOSE FLEXIBLE	TUYAU FLEXIBLE MANICOTTO FLESS.	GUMMISCHLAUCH MANGUERA FLEX
15	3786781M1	◀▶ 300 MM	1	HOSE FLEXIBLE	TUYAU FLEXIBLE MANICOTTO FLESS.	GUMMISCHLAUCH MANGUERA FLEX
16	3714694M1	∅ 7-21	1	GROMMET	PASSE FIL ANELLO PASSACAVO	GUMMITUELLE PASACABLE

[A] WITHOUT REAR WIPER AND WASHER WINDSCREEN
SANS ESSUIE GLACE ET LAVE GLACE ARRIERE
OHNE SCHEIBENWISCHER UND SCHEIBENWASCHANLAGE HINT
SENZA TERGICRISTALLO E LAVAGGIO CRISTALLO POSTERIO RE
SIN LIMPIA Y LAVA VENTANA TRASERA

Rear Window Wiper
Essuie Glace Arriere
Hinterscheibenwischer
Tergicristallo Parte Posteriore
Limpiaparabrisas Parte Trasera

110-155 ➡ **N271049**

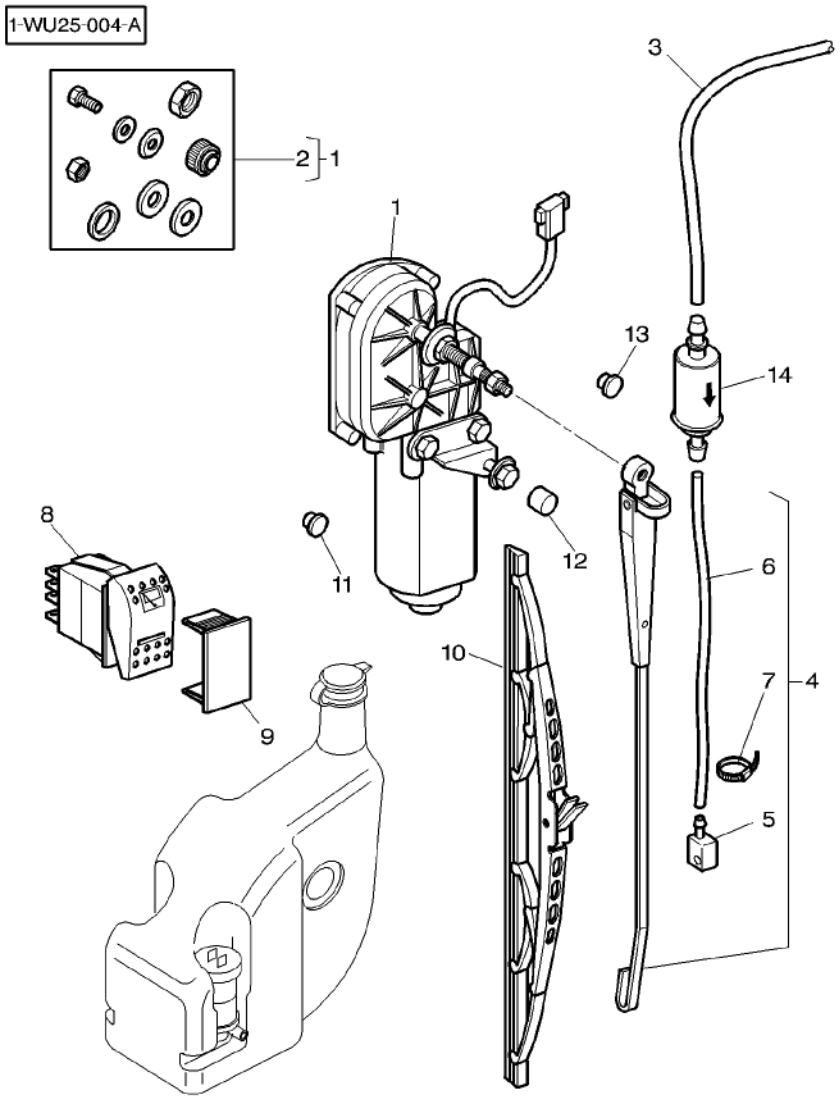

1	3715610M2		1	WIPER MOTOR	MOTEUR ESSUIE GL MOTORINO TERGICR	WISCHERMOTOR MOTOR L PARABRIS
2	3902580M91	1	1	PARTS PACK	JEU PIECES PACCO RICAMBI	SATZ TEILE PAQUETE PIEZAS
3	3786782M1	◀▶ 1580 MM	1	HOSE FLEXIBLE	TUYAU FLEXIBLE MANICOTTO FLESS.	GUMMISCHLAUCH MANGUERA FLEX
4	3713196M2	◀▶ 372 MM	1	WIPER ARM	BRAS ESSUIE GL BRACCIO TERGICR.	WISCHERARM BRAZO L P BRISA
5	3902461M1	4	1	JET	GICLEUR GETTO	SPRITZDUESE SURTIDOR
6	3902462M1	4	1	TUBE	TUBE TUBO	ROHR TUBO
7	3902463M1	4	1	CLAMP	COLLIER FASCETTA	HALTESCHELLE ABRAZADERA
8	***4271344M1***		1	SWITCH,INDIRECT	CONTACTEUR INTERRUTTORE IND	KONTAKTSCHALTER CONTACTOR
9	3713151M1	[A]	1	TAP	OBTURATEUR TAPPO*	HAHN GRIFO
10	***3713195M1***	◀▶ 450 MM	1	WIPER BLADE	BALAI ESSUIE GL SPAZZOLA TERGICR	WISCHERBLATT ESCOBILLA L P BR
11	3713742M1	[A] ∅ 9,5 MM	1	PLUG	BOUCHON TAPPO	VERSCHL.STOPFEN TAPON
12	3616277M1		X	HELMET	CAPUCHON CASCO	SCHUTZHELM CASCO
13	3713741M1	[A] ∅ 17,5 MM	1	PLUG	BOUCHON TAPPO	VERSCHL.STOPFEN TAPON
14	3583086M1		1	PRESSURE VALVE	VALVE VALVOLA PRESSION	DRUCKVENTIL VALVULA PRESION

[A] WITHOUT REAR WIPER AND WASHER WINDSCREEN
SANS ESSUIE GLACE ET LAVE GLACE ARRIERE
OHNE SCHEIBENWISCHER UND SCHEIBENWASCHANLAGE HINT
SENZA TERGICRISTALLO E LAVAGGIO CRISTALLO POSTERIO RE
SIN LIMPIA Y LAVA VENTANA TRASERA

Rear Window Wiper
Essuie Glace Arriere
Hinterscheibenwischer
Tergicristallo Parte Posteriore
Limpiaparabrisas Parte Trasera

110-160 ➡ **N271050**

1-WU25-008-A

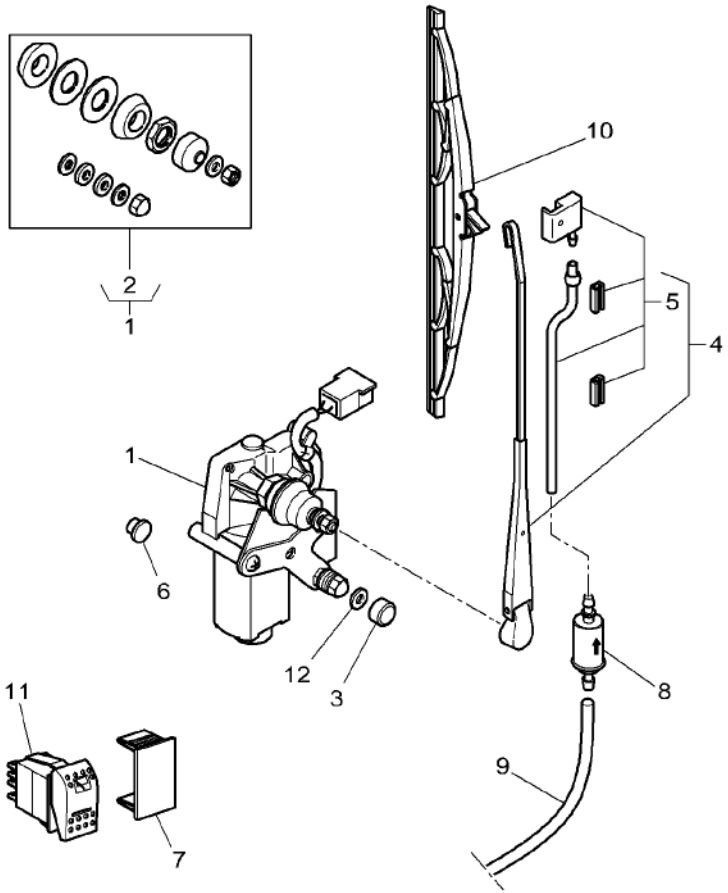

1	✱4275051M1			1	WIPER MOTOR	MOTEUR ESSUIE GL MOTORINO TERGICR	WISCHERMOTOR MOTOR L PARABRIS
2	✱3907550M91	1		1	PARTS PACK	JEU PIECES PACCO RICAMBI	SATZ TEILE PAQUETE PIEZAS
3	✱3616277M1			1	HELMET	CAPUCHON CASCO	SCHUTZHELM CASCO
4	✱4275050M1		◀▶ 372 MM	1	WIPER ARM	BRAS ESSUIE GL BRACCIO TERGICR.	WISCHERARM BRAZO L P BRISA
5	✱3907575M91	4		1	PARTS PACK	JEU PIECES PACCO RICAMBI	SATZ TEILE PAQUETE PIEZAS
6	✱3713742M1	[B]	∅ 9,5 MM	1	PLUG	BOUCHON TAPPO	VERSCHL.STOPFEN TAPON
6	✱3713741M1	[B]	∅ 17,5 MM	1	PLUG	BOUCHON TAPPO	VERSCHL.STOPFEN TAPON
7	✱3713151M1	[B]		1	TAP	OBTURATEUR TAPPO*	HAHN GRIFO
8	✱3583086M1			1	PRESSURE VALVE	VALVE VALVOLA PRESSION	DRUCKVENTIL VALVULA PRESION
9	✱3786782M1		∅ 1580 MM	1	HOSE FLEXIBLE	TUYAU FLEXIBLE MANICOTTO FLESS.	GUMMISCHLAUCH MANGUERA FLEX
10	✱***4275049M1***		◀▶ 450 MM	1	WIPER BLADE	BALAI ESSUIE GL SPAZZOLA TERGICR	WISCHERBLATT ESCOBILLA L P BR
11	✱***4271344M1***			1	SWITCH,INDIRECT	CONTACTEUR INTERRUTTORE IND	KONTAKTSCHALTER CONTACTOR
12	✱4274622M1	[C]	∅ 8 – 20 X 3 MM	1	WASHER	RONDELLE RONDELLA	UNTERLEGSCHEIBE ARANDELA

[B] WITHOUT REAR WIPER AND WASHER WINDSCREEN
SANS ESSUIE GLACE ET LAVE GLACE ARRIERE
OHNE SCHEIBENWISCHER UND SCHEIBENWASCHANLAGE HINT
SENZA TERGICRISTALLO E LAVAGGIO CRISTALLO POSTERIO RE
SIN LIMPIA Y LAVA VENTANA TRASERA

[C] RUBBER
CAOUTCHOUC
GUMMI
GOMMA
CAUCHO

Canopy Pare Soleil Vordach Tettuccio Dosel	110-165	Standard Roof Toit Standard Standard Dach Tetto Standard Tejado Standard

1-WU28-001-B

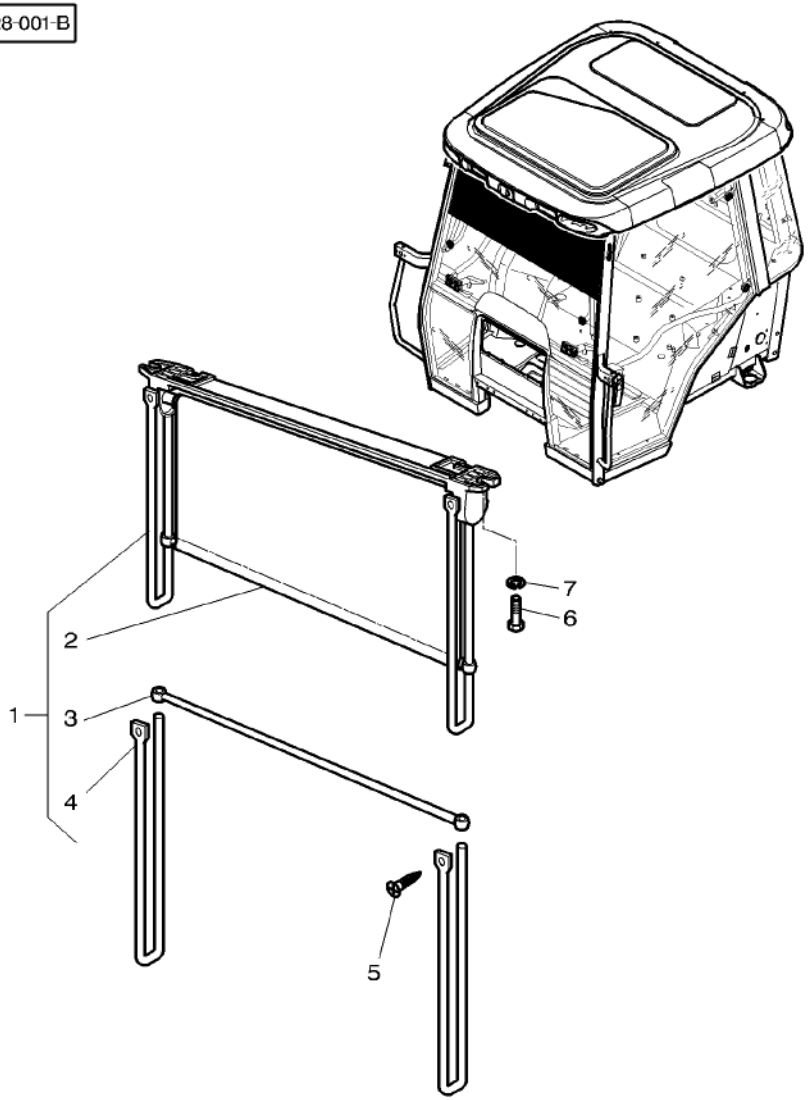

1	**3714072M91**			**1**	CANOPY	PARE SOLEIL TETTUCCIO VORDACH DOSEL
2	3902176M91	1		**1**	PANEL	PANNEAU PANNELLO VERKL.BLECH PANELAJE
3	3902175M91	1		**1**	BAR	BARRE BARRA STAB BARRA
4	3902174M91	1		**2**	ROD	TRINGLE ASTA STANGE VARILLA
5	365924X1	1	CBZ N10 X 16	**2**	SCREW	VIS VITE SCHRAUBE TORNILLO
6	1440350X1		M6 X 20	**2**	SCREW METRIC	VIS METRIQUE VITE METRICA SCHRAUBE METR TORNILLO METRICO
7	339375X1			**2**	LOCK WASHER	RONDELLE FREIN ROSETTA DENTELL. FEDERRING ARANDELA GROWER

Radio Installation
Montage Radio
Rundfunk Anbau
Radio Installazione
Radio Instalacion

110-170

1-WU26-004-B

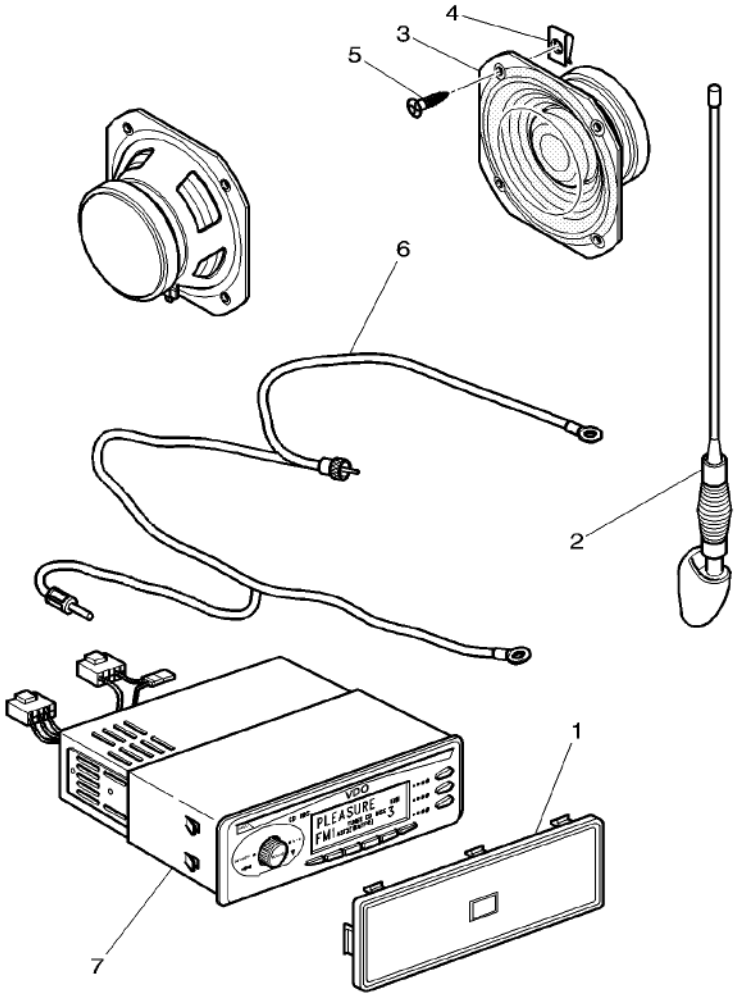

1	3580173M1	[A]	**1**	PLATE	PLAQUE PIASTRA	PLATTE PLATO
2	5017951M91		**1**	ANTENNA	ANTENNE. ANTENNA.	ANTENNE ANTENA
3	4274735M1	●○ 3808855M1	**2**	SPEAKER	HAUT PARLEUR ALTOPARLANTE.	LAUTSPRECHER ALTOVOZ
4	3715142M1	M5	**8**	NUT	ECROU DADO	MUTTER TUERCA
5	**3010506X1**	M5 X 16	**8**	SCREW	VIS VITE	SCHRAUBE TORNILLO
6	5017953M1		**1**	CABLE	CABLE CAVO	KABEL CABLE
7	4271751M91	[B]	**1**	RADIO CAS PUSH B	RADIO CAS TOUCHE RADIOCASSETTA*	DRTRADIORECORDER RAD CAS MANUAL
7	3788235M91	[C]	**1**	RADIO PUSH BUTT.	RADIO A TOUCHES AUORADIO AUTOM.	DR T MONORADIO RADIO A BOTONES
7	3788236M91	[D]	**1**	RADIO PUSH BUTT.	RADIO A TOUCHES AUORADIO AUTOM.	DR T MONORADIO RADIO A BOTONES

[A] WITHOUT RADIO
SANS RADIO
OHNE RUNDFUNK
SENZA RADIO
SIN RADIO

[B] WITH RADIO CASSETTE
AVEC RADIO CASSETTE
MIT KASETTEN-RADIO
CON RADIO MANGIANASTRI
CON RADIO/CASETE

[C] WITH RADIO CD
AVEC RADIO CD
MIT CD-RADIO
CON RADIO CD
CON RADIO CD

[D] WITH RADIO CD + PHONE INTAKE
AVEC RADIO CD + PRISE TELEPHONE
MIT CD-RADIO + TELEFON STECKDOSE
CON RADIO CD + PRESA TELEFONO
CON RADIO CD + ENCHUFE TELEFONO

Electrical Plug And Cigar Lighter Prise De Courant Et Allume Cigare Elektr. Stecker Und Zigarrenanzuender Spina Elettrica E Accedisigari Toma Electrica Y Encendor De Cigarillos	110-175	Iso Standard Norme Iso Iso Normung Unificazione Iso Normalizacion Iso

1-WU33-002-D

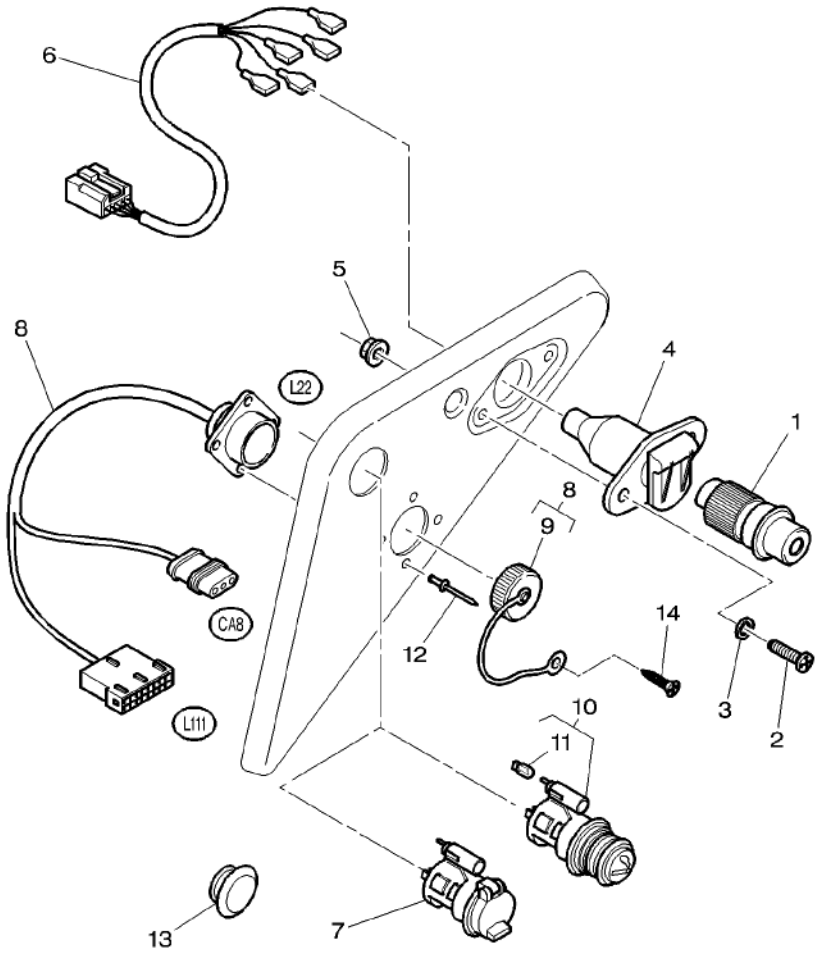

1*	*G205900900020*		1	ELECTRICAL PLUG	PRISE ELECT MALE PRESAELETTRICI M	STECKER TOMACORRIENTE M
2	3010804X1	M4 X 16	2	SCREW	VIS VITE	SCHRAUBE TORNILLO
3	3001856X1	∅ 4–12 X 1,1	2	WASHER	RONDELLE RONDELLA	UNTERLEGSCHEIBE ARANDELA
4*	3713127M1	⇒ 3760033M1	1	ELECTRIC SOCKET	PRISE ELEC FEMEL PRESAELETTRIC F	STECKDOSE TOMACORRIENTE F
5	1443615X1	M4	2	NUT METRIC	ECROU METRIQUE DADO METRICO	MUTTER METRISCH TUERCA METRICO
6	3714516M2		1	HARNESS	FAISCEAU FASCIOCAVI	KABELBAUM MAZO CABLES
7*	4272534M1	[B]	1	INTAKE	PRISE ASPIRAZIONE	SAUGROHR ENTRADA
8	3778708M2	[A]	1	HARNESS	FAISCEAU FASCIOCAVI	KABELBAUM MAZO CABLES
9	3900383M1	8	1	PLUG	BOUCHON TAPPO	VERSCHL.STOPFEN TAPON
10*	3617848M91		1	LIGHTER	ALLUME CIGARE ACCENDISIGARO	ZIG.ANZUENDER ENCENDEDOR
11*	*3302213M1*	10	1	BULB 12V 1.2W	AMPOULE 12V 1.2W BULBO 12V 1,2W	GLUEHL 12V 1.2W BOMBILLA 12V1,2W
12	3011214X1	∅ 3,2 MM	4	RIVET	RIVET RIBATTINO	NIET REMACHE
13	4275985M1	∅ 25,4	1	TAP	OBTURATEUR TAPPO*	HAHN GRIFO
14	3580257M1	M5X20	1	SCREW	VIS VITE	SCHRAUBE TORNILLO

[A] WITHOUT DATATRONIC
SANS DATATRONIC
OHNE DATATRONIC
SENZA DATATRONIC
SIN DATATRONIC

[B] PHONE INTAKE
PRISE TELEPHONE
TELEFON STECKDOSE
PRESA TELEFONO
ENCHUFE TELEFONO

Electrical Plug And Cigar Lighter Prise De Courant Et Allume Cigare Elektr. Stecker Und Zigarrenanzuender Spina Elettrica E Accedisigari Toma Electrica Y Encendor De Cigarillos	110-180	Sae Standard Norme Sae Sae Normung Unificazione Sae Normalizacion Sae

1-WU33-001-D

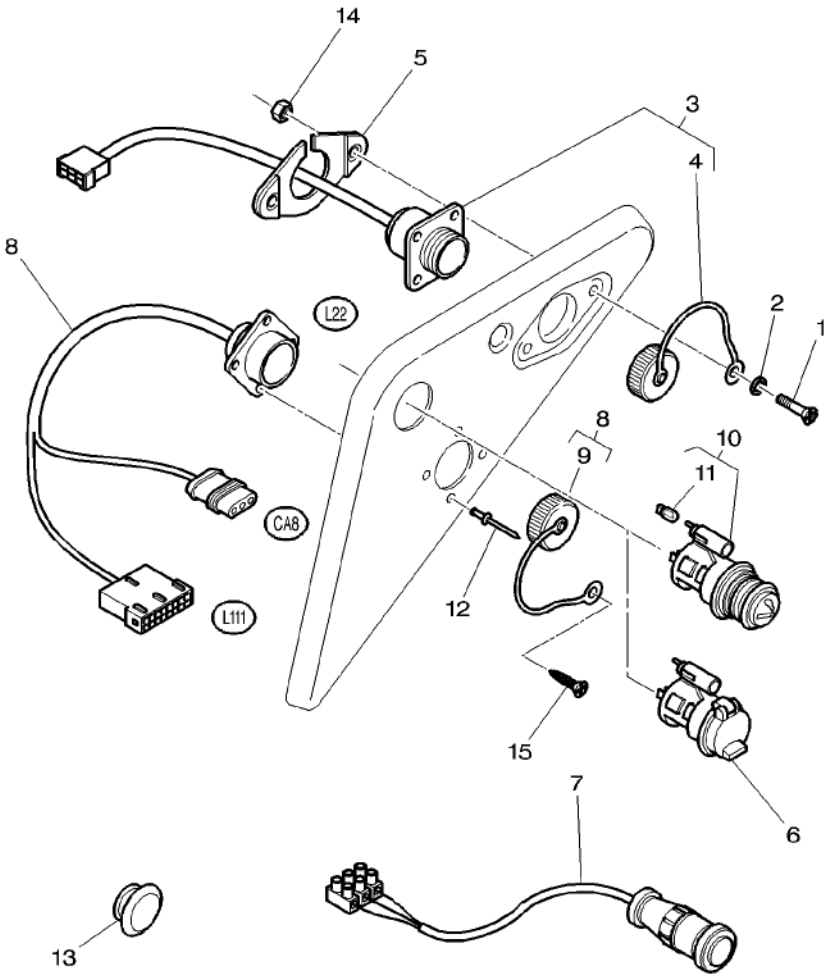

1	3010804X1	M4 X 16	2	SCREW	VIS VITE	SCHRAUBE TORNILLO
2	3001856X1	∅ 4–12 X 1,1	2	WASHER	RONDELLE RONDELLA	UNTERLEGSCHEIBE ARANDELA
3	3786495M2		1	INTAKE	PRISE ASPIRAZIONE	SAUGROHR ENTRADA
4	3900383M1	3	1	PLUG	BOUCHON TAPPO	VERSCHL.STOPFEN TAPON
5	4273771M2		1	PLATE	PLAQUE PIASTRA	PLATTE PLATO
6	4272534M1	[B]	1	INTAKE	PRISE ASPIRAZIONE	SAUGROHR ENTRADA
7	3779786M2		1	PLUG 7 PIN MALE	PRISE MALE MASCHIO DA 7	STECKER 7 POLIG ENCHUFE 7 ESPIGA
8	3778708M2	[A]	1	HARNESS	FAISCEAU FASCIOCAVI	KABELBAUM MAZO CABLES
9	3900383M1	8	1	PLUG	BOUCHON TAPPO	VERSCHL.STOPFEN TAPON
10*	3617848M91		1	LIGHTER	ALLUME CIGARE ACCENDISIGARO	ZIG.ANZUENDER ENCENDEDOR
11*	***3302213M1***	10	1	BULB 12V 1.2W	AMPOULE 12V 1.2W BULBO 12V 1,2W	GLUEHL 12V 1.2W BOMBILLA 12V1,2W
12	3011214X1	∅ 3,2 MM	4	RIVET	RIVET RIBATTINO	NIET REMACHE
13	4275985M1	∅ 25,4–32MM	1	TAP	OBTURATEUR TAPPO*	HAHN GRIFO
14	1443615X1	M4	2	NUT METRIC	ECROU METRIQUE DADO METRICO	MUTTER METRISCH TUERCA METRICO
15	3580257M1	M5X20	1	SCREW	VIS VITE	SCHRAUBE TORNILLO

[A] WITHOUT DATATRONIC
SANS DATATRONIC
OHNE DATATRONIK
SIN DATATRONIC
SENZA DATATRONIC

[B] PHONE INTAKE
PRISE TELEPHONE
TELEFON STECKDOSE
PRESA TELEFONO
ENCHUFE TELEFONO

Internal Mirrors
Retroviseurs Interieurs
Innerruckspiegel
Retrovisore Interior
Retrovisor Interior

110-185

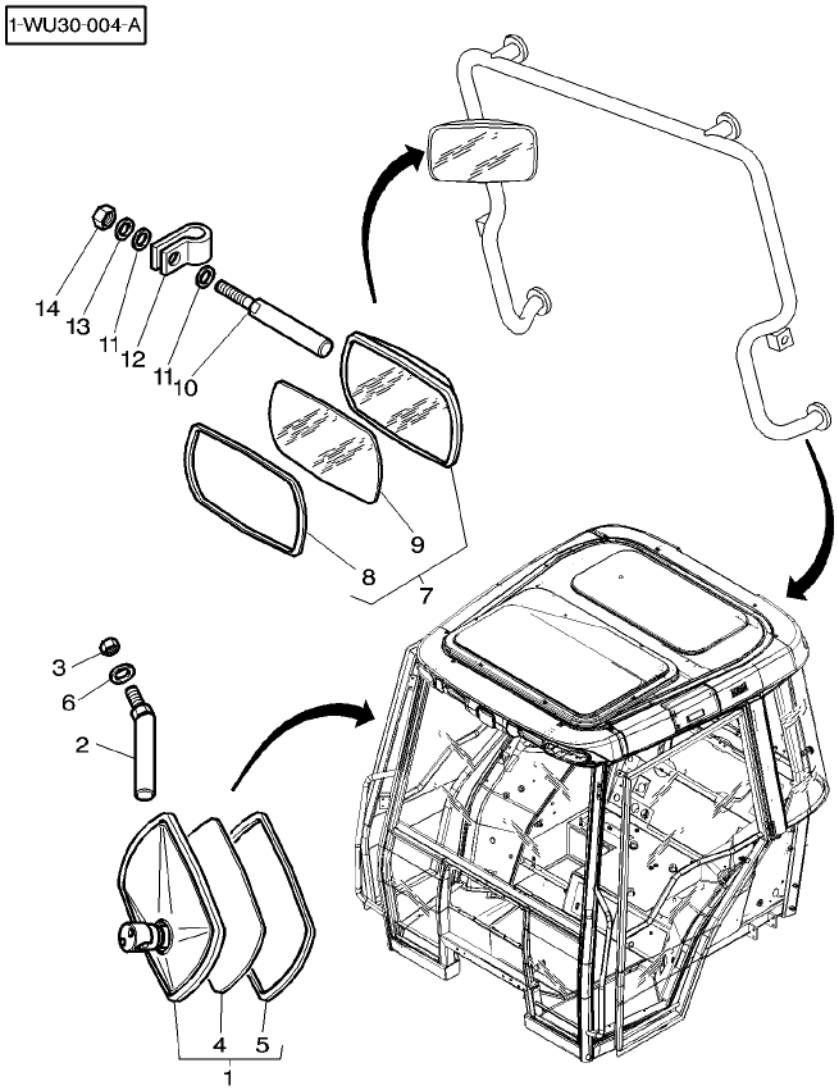

1	3806618M91		1	MIRROR	RETROVISEUR SPECCHIETTO	RUECKSPIEGEL ESPEJO
2	3778091M1		1	CLEVIS PIN	AXE PERNO D'ATTACCO	SPLINTBOLZEN BULON CILINDRICO
3	339402X1	M10	1	NUT	ECROU DADO	MUTTER TUERCA
4	3904487M1	1	1	MIRROR GLASS	GLACE RETRO VETRO SPECCHIO	SPIEGELGLAS LUNA DE ESPEJO
5	3904491M1	1	1	GASKET	JOINT GUARNIZIONE	DICHTSCHEIBE EMPAQUETADURA.
6	390734X1		1	WASHER	RONDELLE RONDELLA	UNTERLEGSCHEIBE ARANDELA
7	3806618M91		1	MIRROR	RETROVISEUR SPECCHIETTO	RUECKSPIEGEL ESPEJO
8	3904491M1	7	1	GASKET	JOINT GUARNIZIONE	DICHTSCHEIBE EMPAQUETADURA.
9	3904487M1	7	1	MIRROR GLASS	GLACE RETRO VETRO SPECCHIO	SPIEGELGLAS LUNA DE ESPEJO
10	3581239M1		1	CLEVIS PIN	AXE PERNO D'ATTACCO	SPLINTBOLZEN BULON CILINDRICO
11	385362X1	∅ 10–20 X 3	2	WASHER	RONDELLE RONDELLA	UNTERLEGSCHEIBE ARANDELA
12	**3581507M1**	∅ 18 – M10	1	CLIP	PATTE D'ATTACHE FERMAGLIO	SCHELLE CLIP
13	391026X1	∅ 10–18	1	LOCK WASHER	RONDELLE FREIN ROSETTA DENTELL.	FEDERRING ARANDELA GROWER
14	339402X1	M10	1	NUT	ECROU DADO	MUTTER TUERCA

External Mirrors
Retroviseurs Exterieurs
Asserruckspiegel
Retrovisore
Retrovisor

110-190

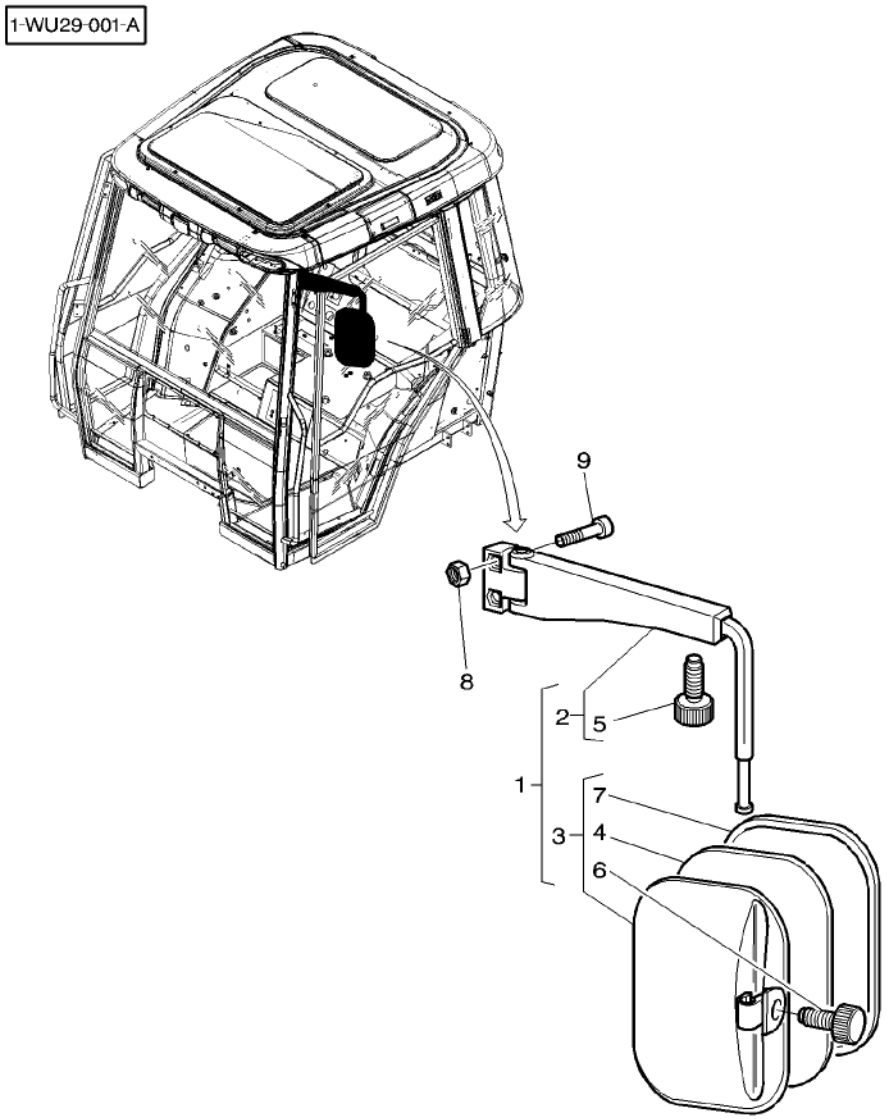

1	3787146M91	◀	1	MIRROR	RETROVISEUR SPECCHIETTO	RUECKSPIEGEL ESPEJO
1	3787147M91	▶	1	MIRROR	RETROVISEUR SPECCHIETTO	RUECKSPIEGEL ESPEJO
2	3787145M91	1	1	ARM	BRAS BRACCIO	ARM BRAZO
3	3787152M1	1	1	MIRROR	RETROVISEUR SPECCHIETTO	RUECKSPIEGEL ESPEJO
4	3904488M1	3	1	MIRROR GLASS	GLACE RETRO VETRO SPECCHIO	SPIEGELGLAS LUNA DE ESPEJO
5	3907103M1	2	1	SETSCREW	VIS DE BLOCAGE INSIEME VITI	STELLSCHRAUBE SET SCREW
6	3907108M1	3	1	SETSCREW	VIS DE BLOCAGE INSIEME VITI	STELLSCHRAUBE SET SCREW
7	3907109M1	3	1	GASKET	JOINT GUARNIZIONE	DICHTSCHEIBE EMPAQUETADURA.
8	1440329X1	M10	4	LOCKNUT	ECROU BLOCAGE AUTOBLOCCANTE	SICHERUNGSMUTTER CONTRATUERCA
9	3011368X1	M10 X 30	4	SCREW	VIS VITE	SCHRAUBE TORNILLO

External Mirrors
Retroviseurs Exterieurs
Asserruckspiegel
Retrovisore
Retrovisor

110-195

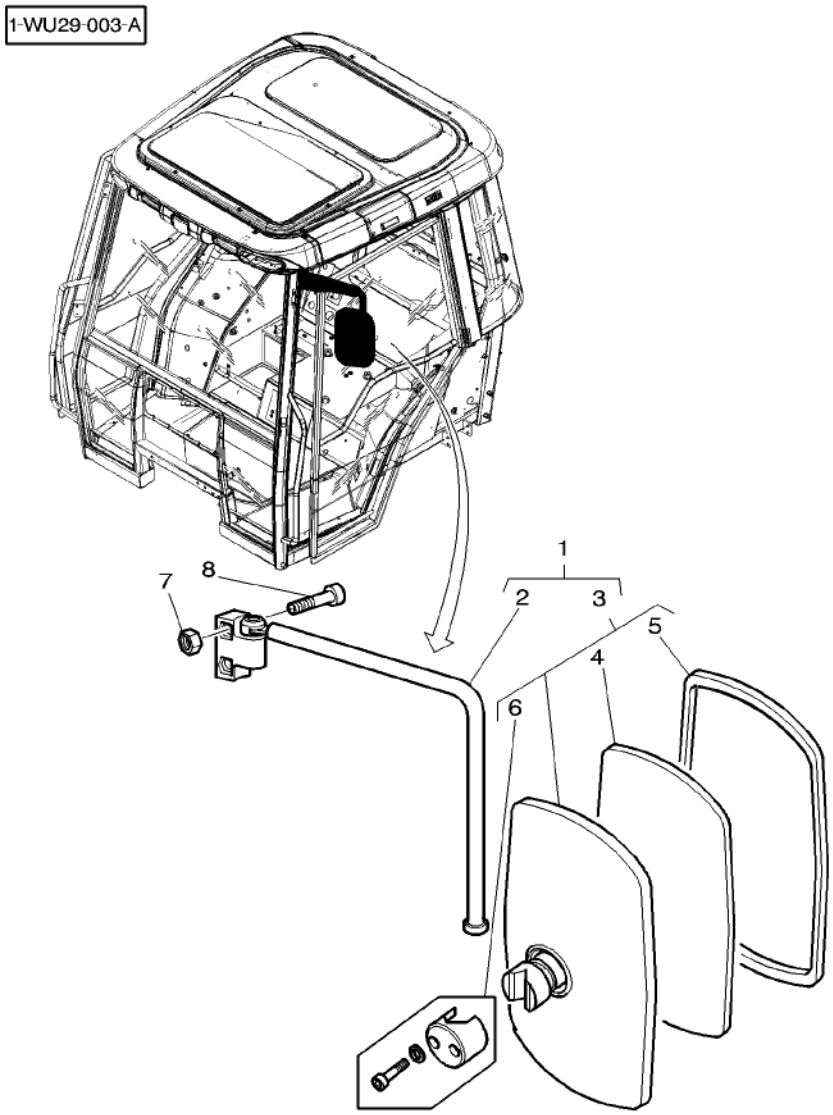

1	3787148M91	◀	1	MIRROR	RETROVISEUR SPECCHIETTO	RUECKSPIEGEL ESPEJO
1	3787149M91	▶	1	MIRROR	RETROVISEUR SPECCHIETTO	RUECKSPIEGEL ESPEJO
2	3787144M91	1	1	ARM	BRAS BRACCIO	ARM BRAZO
3	3806614M91	1	1	MIRROR	RETROVISEUR SPECCHIETTO	RUECKSPIEGEL ESPEJO
4	1894397M1	3 172 X 280 MM	1	MIRROR GLASS	GLACE RETRO VETRO SPECCHIO	SPIEGELGLAS LUNA DE ESPEJO
5	3904489M1	3	1	GASKET	JOINT GUARNIZIONE	DICHTSCHEIBE EMPAQUETADURA.
6	3907105M91	3	1	PARTS PACK	JEU PIECES PACCO RICAMBI	SATZ TEILE PAQUETE PIEZAS
7	1440329X1	M10	4	LOCKNUT	ECROU BLOCAGE AUTOBLOCCANTE	SICHERUNGSMUTTER CONTRATUERCA
8	3011368X1	M10 X 30	4	SCREW	VIS VITE	SCHRAUBE TORNILLO

Electric Control Rear Reflecting Miror
Retroviseur A Commande Electrique
Ruckspiegel Mit Elektrische Schaltung
Retrovisore A Comando Elettrico
Retrovisor Con Mando Electrico

110-200

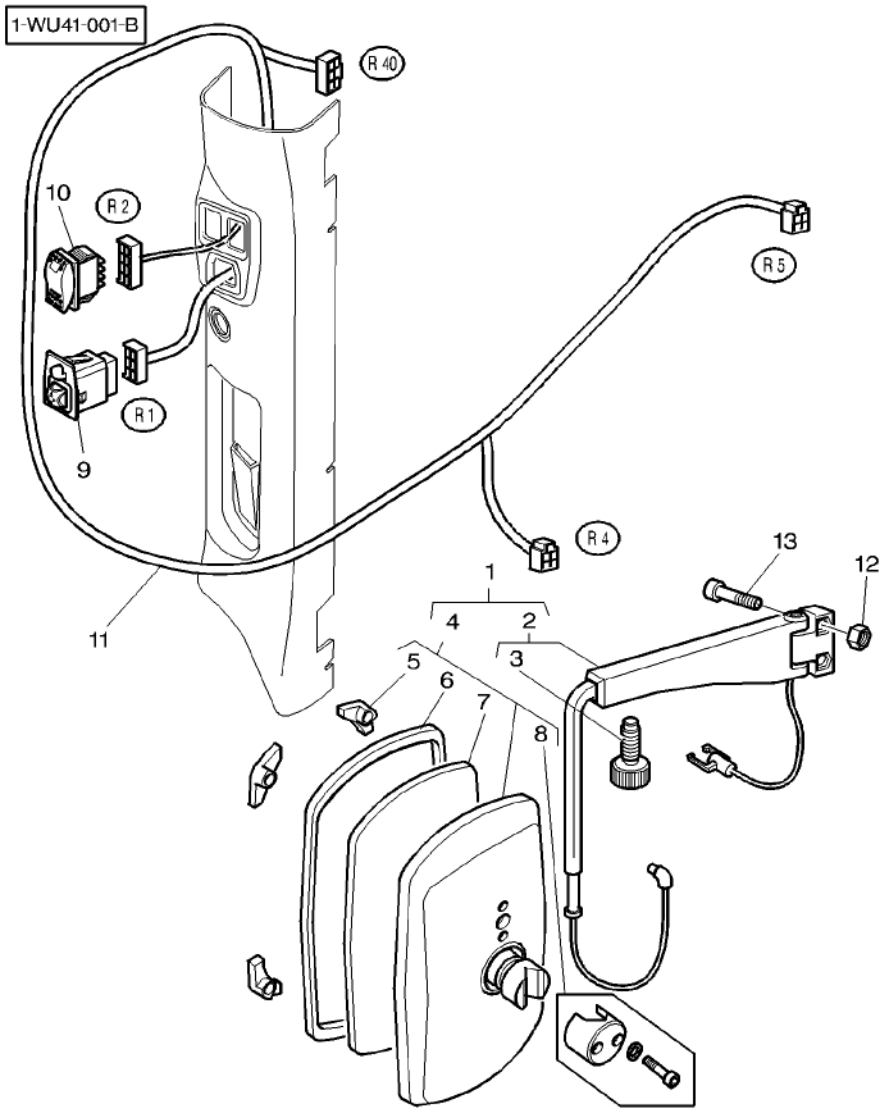

1	3787154M91	◀	1	MIRROR	RETROVISEUR SPECCHIETTO	RUECKSPIEGEL ESPEJO
1	3787155M91	▶	1	MIRROR	RETROVISEUR SPECCHIETTO	RUECKSPIEGEL ESPEJO
2	3787156M91	1	1	ARM	BRAS BRACCIO	ARM BRAZO
3	3907103M1	2	1	SETSCREW	VIS DE BLOCAGE INSIEME VITI	STELLSCHRAUBE SET SCREW
4	3787157M1	1	1	MIRROR	RETROVISEUR SPECCHIETTO	RUECKSPIEGEL ESPEJO
5	3904493M1	4	4	GUSSET	GOUSSET FAZZOLETTO	KNOTENBLECH CARTELA
6	3904492M1	4	1	GASKET	JOINT GUARNIZIONE	DICHTSCHEIBE EMPAQUETADURA.
7	3907104M1	4	1	MIRROR GLASS	GLACE RETRO VETRO SPECCHIO	SPIEGELGLAS LUNA DE ESPEJO
8	3907102M91	4	1	PARTS PACK	JEU PIECES PACCO RICAMBI	SATZ TEILE PAQUETE PIEZAS
9	4270273M1		1	DRIVE	COMMANDE PRESA DI MOTO	ANTRIEB TRASMISION
10	4271345M1		1	SWITCH,INDIRECT	CONTACTEUR INTERRUTTORE IND	KONTAKTSCHALTER CONTACTOR
11	4271865M2		1	HARNESS	FAISCEAU FASCIOCAVI	KABELBAUM MAZO CABLES
12	1440329X1	M10	4	LOCKNUT	ECROU BLOCAGE AUTOBLOCCANTE	SICHERUNGSMUTTER CONTRATUERCA
13	3011368X1	M10 X 30	4	SCREW	VIS VITE	SCHRAUBE TORNILLO

Seat
Siege
Fahrersitz
Sedile
Asiento

110-205

1-WV01-023-A

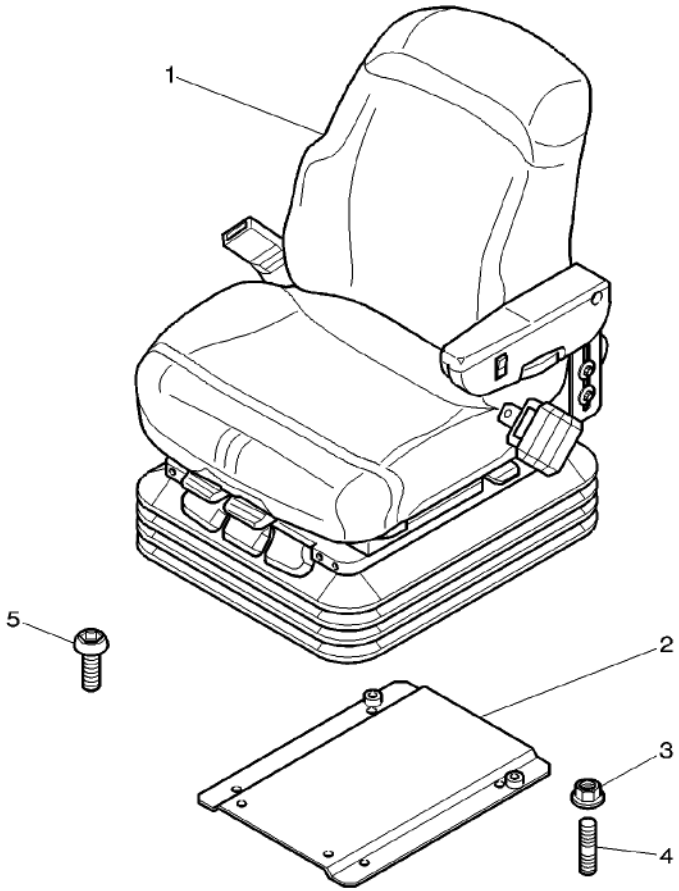

1	4275226M92		**1** SEAT	SIEGE SEDILE	SITZ ASIENTO
2	4275637M2		**1** PLATE	PLAQUE PIASTRA	PLATTE PLATO
3	3019124X1		**2** NUT	ECROU DADO	MUTTER TUERCA
4	391053X1	M8X16	**2** STUD	GOUJON PRIGIONIERO	STEHBOLZEN CHAVETA ROSCADO
5	3010872X1	M8X16	**2** SCREW	VIS VITE	SCHRAUBE TORNILLO
5	3010909X1	M8X20	**4** SCREW	VIS VITE	SCHRAUBE TORNILLO

Seat
Siege
Fahrersitz
Sedile
Asiento

110-210

1-WV01-024-A

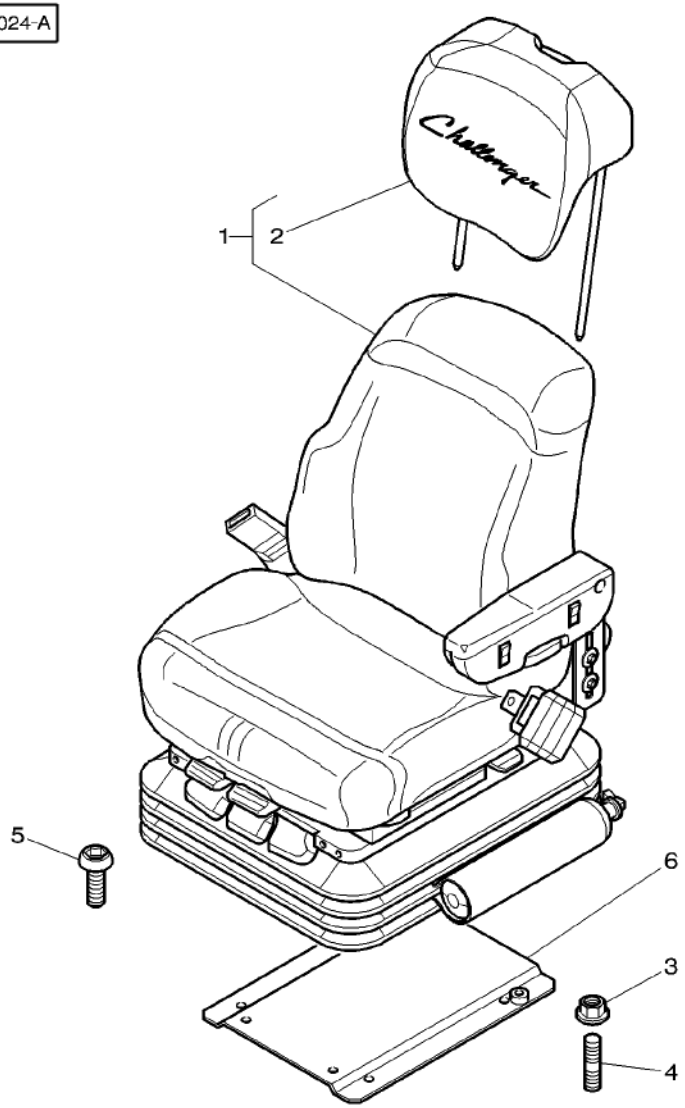

1	4275966M92		**1** SEAT	SIEGE SEDILE	SITZ ASIENTO
2		1 [A]	**1** HEAD REST	APPUI-TETE POGGIA TESTA	KOPFSTUETZE APOYA CABEZA
3	3019124X1		**2** NUT	ECROU DADO	MUTTER TUERCA
4	391053X1	M8X16	**2** STUD	GOUJON PRIGIONIERO	STEHBOLZEN CHAVETA ROSCADO
5	3010872X1	M8X16	**2** SCREW	VIS VITE	SCHRAUBE TORNILLO
5	3010909X1	M8X20	**4** SCREW	VIS VITE	SCHRAUBE TORNILLO
6	4275637M2		**1** PLATE	PLAQUE PIASTRA	PLATTE PLATO

[A] NUMBER TO BE ADVISED
NUMERO COMMUNIQUE ULTERIEUREMENT
NUMMER WIRD BEKANNTGEGEBEN
NUMERO DA AVUISARE
NUMERO AVISAR

Seat
Siege
Fahrersitz
Sedile
Asiento

110-215

1-WV01-002-B

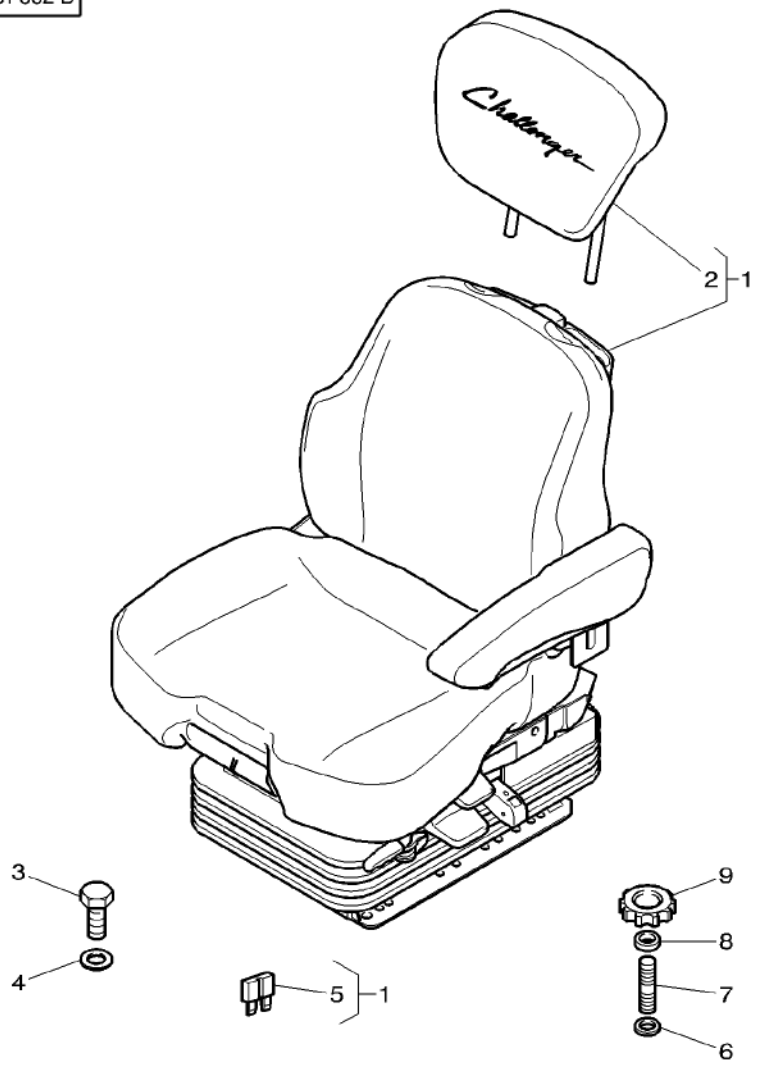

1*	4272523M92	[A] 110–220 No 110–225 No	**1** SEAT	SIEGE SEDILE	SITZ ASIENTO
2	4272612M92	1	**1** HEAD REST	APPUI–TETE POGGIA TESTA	KOPFSTUETZE APOYA CABEZA
3	3009285X1	M8X16	**4** SCREW	VIS VITE	SCHRAUBE TORNILLO
4	390972X1		**4** WASHER	RONDELLE RONDELLA	UNTERLEGSCHEIBE ARANDELA
5	***3387322M1***	1 [A] 25 AMP.	**1** FUSE	FUSIBLE VALVOLINA	SICHERUNG FUSIBLE
6	3778519M1	∅ 10–27X1,8	**2** WASHER	RONDELLE RONDELLA	UNTERLEGSCHEIBE ARANDELA
7	3008483X1	M10X35	**2** STUD	GOUJON PRIGIONIERO	STEHBOLZEN CHAVETA ROSCADO
8	**3619096M1**	∅ 10,5–35X5	**2** WASHER	RONDELLE RONDELLA	UNTERLEGSCHEIBE ARANDELA
9	3786216M1		**2** BUTTON	BOUTON BOTTONE	KNOPFTASTE BOTON

[A] AIR PRESSURE SEAT WITH AUTOMATIC ADJUSTMENT – LUXUY
SIEGE PNEUMATIQUE AVEC REGLAGE AUTOMATIQUE – DE LUXE
LUFTPOLSTERUNGSITZ MIT AUTOMATISCHEINSTELLUNG – LUXUS
SEDILE PNEUMATICO CON AGGIUSTATORE AUTOMATICO – LUSSO
ASIENTO PNEUMATICO CON AJUSTE AUTOMATICO – LUJO

Seat
Siege
Fahrersitz
Sedile
Asiento

110-220

Air Pressure Seat With Automatic Adjustment – Luxuy
Siege Pneumatique Avec Reglage Automatique – De Luxe
Luftpolsterungsitz Mit Automatischeinstellung – Luxus
Sedile Pneumatico Con Aggiustatore Automatico – Lusso
Asiento Pneumatico Con Ajuste Automatico – Lujo

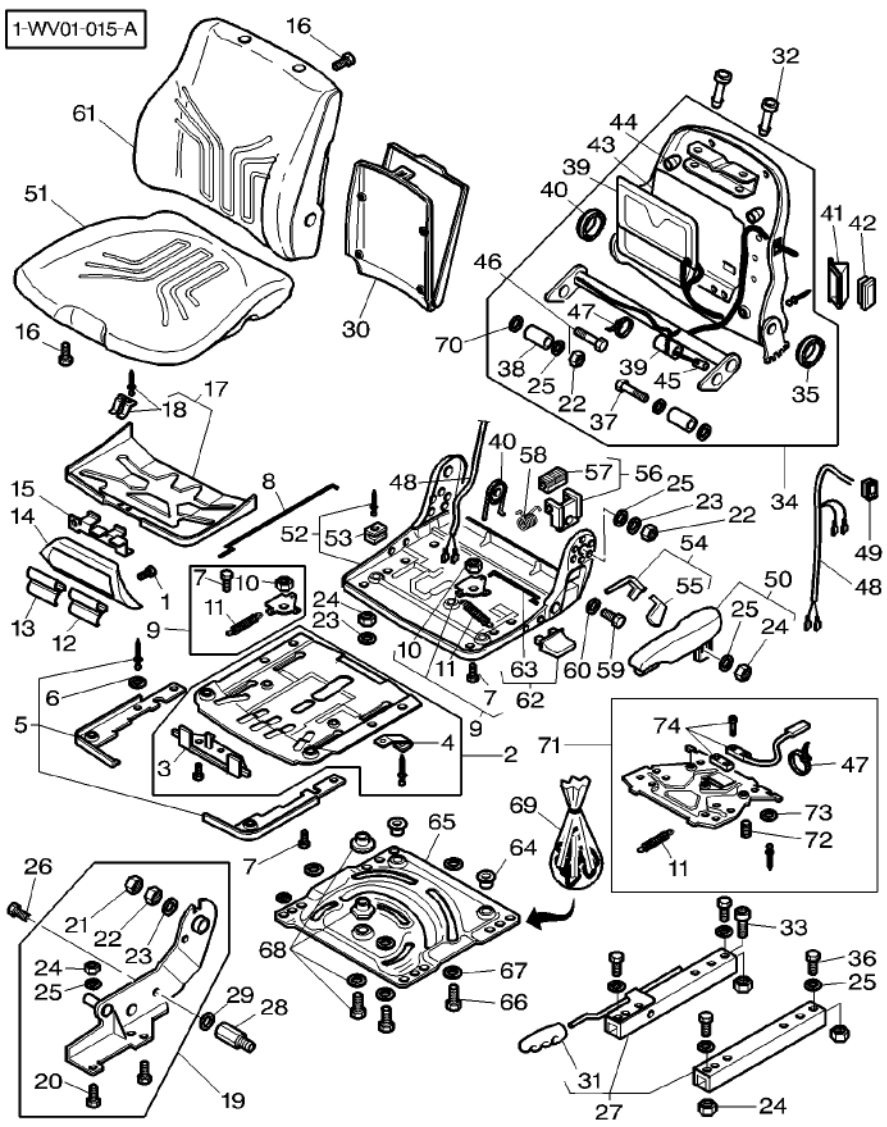

0*	4272523M92		1	SEAT	SIEGE SEDILE	SITZ ASIENTO
1	3904087M1	5x16	2	BOLT	BOULON BULLONE	MASCH.SCHRAUBE ESPIGA/BULON
2	3903780M91		1	FRAME	BATI CORNICE	RAHMEN BASTIDOR
3	3903785M91		1	ADJUSTER	REGLEUR CILINDRO SOLLEV.	EINSTELLVORR AJUSTADOR
4	3903781M1		1	SHIELD	TOLE RIPARO	SCHILD BLINDAJE
5	3903784M91		1	HOUSING	CARTER CARCASSA	GEHAEUSE ALOJAMIENTO
6	339362X1		2	WASHER	RONDELLE RONDELLA	UNTERLEGSCHEIBE ARANDELA
7	339228X1	M8x12	2	HEX. SOCK. SCREW	VIS TETE HEX VITE PARKER	ZYLINDERSCHRAUBE TORN.CAB.HUECA
8	3903783M1		1	ROD	TRINGLE ASTA	STANGE VARILLA
9	3903635M91		2	LEVER	LEVIER LEVA	HEBEL PALANCA
10	3903623M1		2	INSERT	DOUILLE INSERTO	EINSATZSTUECK INSERCION
11	3104902M1		2	SPRING	RESSORT MOLLA	FEDER RESORTE
12	3903794M1		1	MUFF	CACHE MANICOTTO DEVIAN	FLANSCHMUFFE MANGUITO ACOPLAM
13	3903793M91		1	HANDLE	POIGNEE MANIGLIA	HANDGRIFF MANETA
14	3903792M91		1	HOUSING	CARTER CARCASSA	GEHAEUSE ALOJAMIENTO
15	3903791M1		1	LEVER	LEVIER LEVA	HEBEL PALANCA
16	3903965M1	M5x25	8	SCREW	VIS VITE	SCHRAUBE TORNILLO
17	3903789M91		1	POSITIONER	REGLEUR POSITION POSIZIONATORE	FESTSTELLER POSICIONADOR
18	3903790M91		1	SHIELD	TOLE RIPARO	SCHILD BLINDAJE
19	3907123M91		1	SUPPORT	SUPPORT SUPPORTO	LAGERUNG DISPOS.DE SOSTEN
20	3009439X1	M8x16	4	SCREW	VIS VITE	SCHRAUBE TORNILLO
21	3903607M1		1	CLEVIS	CHAPE GANCIO D'ATTACCO	GABELSTUECK GANCHO SEGURI.
22	3000193X1	M8	2	NUT	ECROU DADO	MUTTER TUERCA
23	391565X1		9	WASHER METRIC	RONDELLE METR. RONDELLA METRICO	SCHEIBE METRISCH ARANDELA METRICO
24	339169X1	M8	10	NUT	ECROU DADO	MUTTER TUERCA
25	391039X1		9	WASHER METRIC	RONDELLE METR. RONDELLA METRICO	SCHEIBE METRISCH ARANDELA METRICO

Seat
Siege
Fahrersitz
Sedile
Asiento

110-220

Air Pressure Seat With Automatic Adjustment – Luxuy
Siege Pneumatique Avec Reglage Automatique – De Luxe
Luftpolsterungsitz Mit Automatischeinstellung – Luxus
Sedile Pneumatico Con Aggiustatore Automatico – Lusso
Asiento Pneumatico Con Ajuste Automatico – Lujo

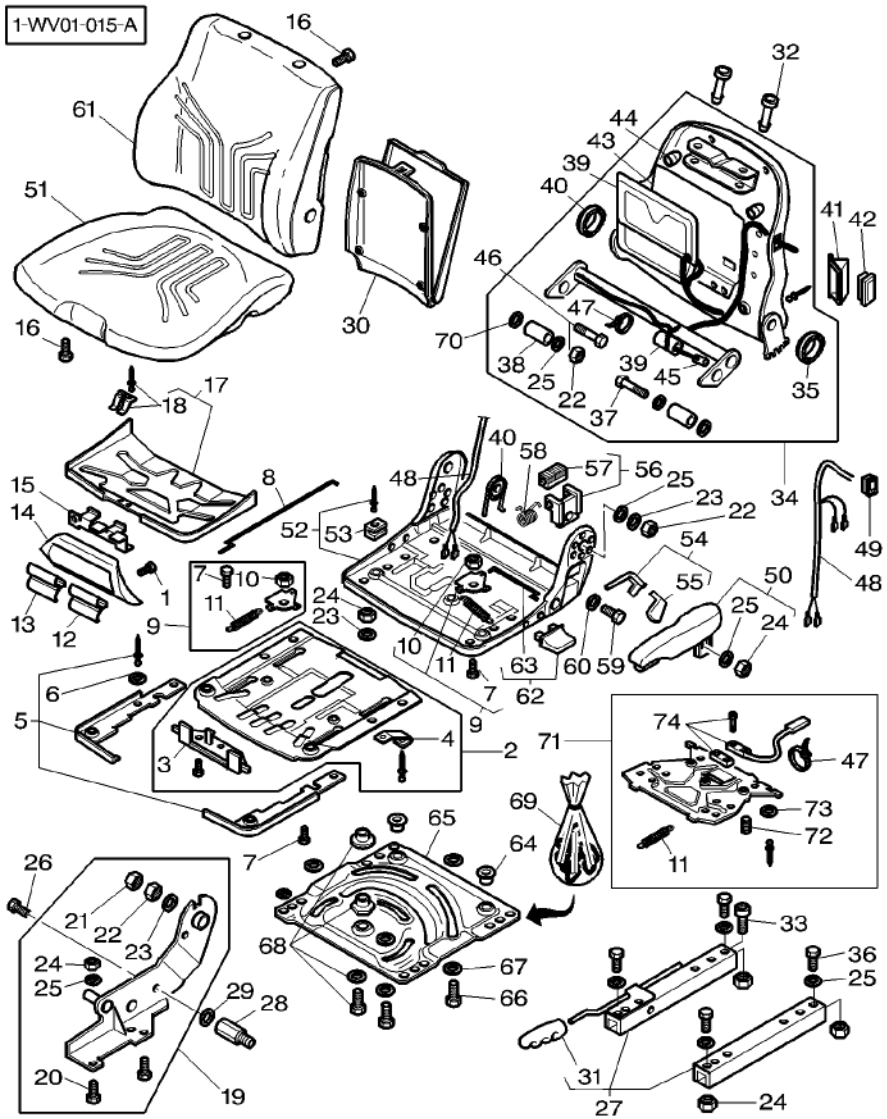

26	353557X1	7/16–20x20	1	BOLT UNF	BOULON UNF BULLONE UNF	MASCH.SCHRB.UNF PERNO UNF
27	3903621M91		1	KIT, SLIDER	JEU GLISSIERES KIT, SLIDER	VERST.SCHIENENS. KIT, SLIDER
28	3907121M1		1	BOLT	BOULON BULLONE	MASCH.SCHRAUBE ESPIGA/BULON
29	3903605M1		1	INSERT	DOUILLE INSERTO	EINSATZSTUECK INSERCION
30	3903603M1		1	POCKET	POCHE SACCA	TASCHE BOLSA
31	3903595M1		1	HANDLE	POIGNEE MANIGLIA	HANDGRIFF MANETA
32	3903626M1		2	INSERT	DOUILLE INSERTO	EINSATZSTUECK INSERCION
33	3009285X1	M8x16 ⇨ 1441000X1	4	SCREW	VIS VITE	SCHRAUBE TORNILLO
34	3903795M91		1	BACK REST	DOSSIER SCHIENALE	RUECKENLEHNE RESPALDO
35	3907136M1		1	WASHER	RONDELLE RONDELLA	UNTERLEGSCHEIBE ARANDELA
36	339124X1	M8x16	4	HEX. SOCK. SCREW	VIS TETE HEX VITE PARKER	ZYLINDERSCHRAUBE TORN.CAB.HUECA
37	339168X1	M8x50	2	HEX. SOCK. SCREW	VIS TETE HEX VITE PARKER	ZYLINDERSCHRAUBE TORN.CAB.HUECA
38	3903796M1		2	TUBE	TUBE TUBO	ROHR TUBO
39	3903800M1		1	SUPPORT	SUPPORT SUPPORTO	LAGERUNG DISPOS.DE SOSTEN
40	3903779M1		1	SPRING	RESSORT MOLLA	FEDER RESORTE
41	3903798M1		1	COVER	COUVERCLE COPERCHIO	DECKEL CUBIERTA
42	3903843M1		1	SWITCH	INTERRUPTEUR INTERRUTTORE	SCHALTER INTERRUPTOR
43	3903799M91		1	PLATE	PLAQUE PIASTRA	PLATTE PLATO
44	1719867M1		2	PROTECTOR	PROTECTEUR PROTETTORE	SCHUTZ PROTECTOR
45	3903970M1		3	SPRING	RESSORT MOLLA	FEDER RESORTE
46	3903806M1	M8x60	1	SCREW	VIS VITE	SCHRAUBE TORNILLO
47	3903106M1		9	TIE	ATTACHE TRAVERSA ATTACCO	KUPPL.STANGE BARRA DE ENLACE
48	3903801M1		1	HARNESS	FAISCEAU FASCIOCAVI	KABELBAUM MAZO CABLES
49	3903804M1	[A]	1	SWITCH	INTERRUPTEUR INTERRUTTORE	SCHALTER INTERRUPTOR
50	3904442M91		1	ARMREST	ACCOUDOIR BRACCIOLO	ARMLEHNE APOYABRAZOS
51*	3907140M1		1	CUSHION	COUSSIN CUSCINO	POLSTER COJIN

Seat
Siege
Fahrersitz
Sedile
Asiento

110-220

Air Pressure Seat With Automatic Adjustment – Luxuy
Siege Pneumatique Avec Reglage Automatique – De Luxe
Luftpolsterungsitz Mit Automatischeinstellung – Luxus
Sedile Pneumatico Con Aggiustatore Automatico – Lusso
Asiento Pneumatico Con Ajuste Automatico – Lujo

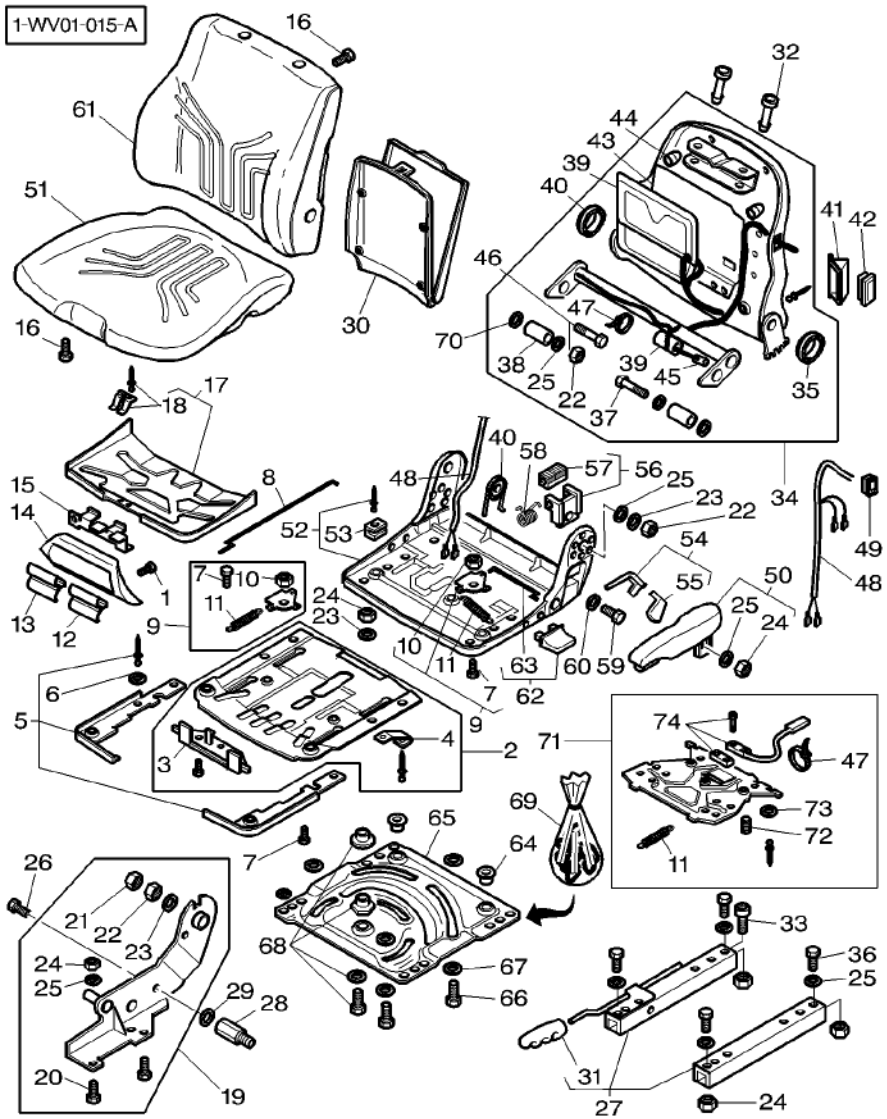

52	3903787M91		1	FRAME	BATI CORNICE	RAHMEN BASTIDOR
53	3903786M1		1	SKATE	PATIN PATTINO	SCHLITTEN–KUFE PATIN
54	3904264M1		1	LEVER	LEVIER LEVA	HEBEL PALANCA
55	3904265M1		1	HANDLE	POIGNEE MANIGLIA	HANDGRIFF MANETA
56	3904270M1		1	SUPPORT	SUPPORT SUPPORTO	LAGERUNG DISPOS.DE SOSTEN
57	3904269M1		1	STOP	BUTEE STOP	ANSCHLAG PARO
58	3903788M1		1	SPRING	RESSORT MOLLA	FEDER RESORTE
59	353562X1	7/16–20X35	1	BOLT UNF	BOULON UNF BULLONE UNF	MASCH.SCHRB.UNF PERNO UNF
60	353428X1	7/16–20	1	NUT UNF	ECROU UNF DADO UNF	MUTTER UNF TUERCA UNF
61*	3907139M1		1	CUSHION	COUSSIN CUSCINO	POLSTER COJIN
62	3903611M91		1	HANDLE	POIGNEE MANIGLIA	HANDGRIFF MANETA
63	3903612M1	62	1	ROD	TRINGLE ASTA	STANGE VARILLA
64	3903616M1		2	BEARING	COUSSINET CUSCINETTO	LAGER COJINETE
65	3903622M91		1	PLATE	PLAQUE PIASTRA	PLATTE PLATO
66	3903610M1		4	BOLT	BOULON BULLONE	MASCH.SCHRAUBE ESPIGA/BULON
67	390735X1		8	WASHER	RONDELLE RONDELLA	UNTERLEGSCHEIBE ARANDELA
68	3903967M91		1	PARTS PACK	JEU PIECES PACCO RICAMBI	SATZ TEILE PAQUETE PIEZAS
69	3904275M1		1	PARTS PACK	JEU PIECES PACCO RICAMBI	SATZ TEILE PAQUETE PIEZAS
70	1444351X1		2	WASHER	RONDELLE RONDELLA	UNTERLEGSCHEIBE ARANDELA
71	3907126M91		1	TIMING DEVICE	SYSTEME REGLAGE SINCRONIZZATORE.	EINST.–HINWEIS DISPOS DISTRIB
72	3907124M1		3	SPRING	RESSORT MOLLA	FEDER RESORTE
73	3105034M1		2	SHOCK ABSORBER	AMORTISSEUR AMMORTIZZATORE*	STOSSDAEMPFER AMORTIGUADOR
74	3907125M91		1	SWITCH	INTERRUPTEUR INTERRUTTORE	SCHALTER INTERRUPTOR

[A] HEATER
CHAUFFAGE
HEIZUNG
RISCALDATORE
CALEFACTOR

Seat
Siege
Fahrersitz
Sedile
Asiento

110-225

Air Pressure Seat With Automatic Adjustment – Luxuy
Siege Pneumatique Avec Reglage Automatique – De Luxe
Luftpolsterungsitz Mit Automatischeinstellung – Luxus
Sedile Pneumatico Con Aggiustatore Automatico – Lusso
Asiento Pneumatico Con Ajuste Automatico – Lujo

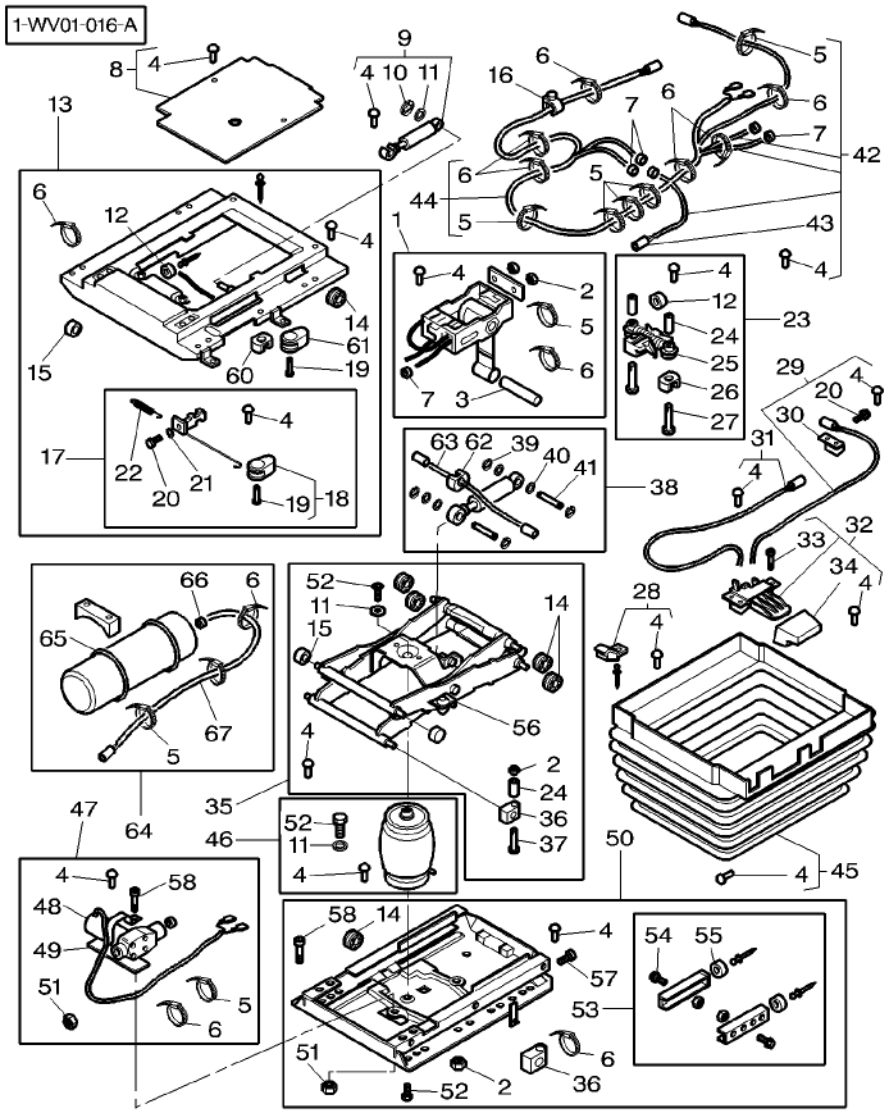

0*	4272523M92		1	SEAT	SIEGE SEDILE	SITZ ASIENTO
1	3903129M91		1	LEVER	LEVIER LEVA	HEBEL PALANCA
2	3000193X1	M8	5	NUT	ECROU DADO	MUTTER TUERCA
3	3903130M1		1	CLEVIS PIN	AXE PERNO D'ATTACCO	SPLINTBOLZEN BULON CILINDRICO
4	1719896M1		24	PLUG	BOUCHON TAPPO	VERSCHL.STOPFEN TAPON
5	3903068M1	4,7x204 MM	4	TIE	ATTACHE TRAVERSA ATTACCO	KUPPL.STANGE BARRA DE ENLACE
6	3903106M1	2,5x102 MM	5	TIE	ATTACHE TRAVERSA ATTACCO	KUPPL.STANGE BARRA DE ENLACE
7	3903052M1		4	OLIVE	OLIVE OLIVA	SCHNEIDRING OLIVA
8	3903037M91		1	HOUSING	CARTER CARCASSA	GEHAEUSE ALOJAMIENTO
9	3903039M91		1	SHOCK ABSORBER	AMORTISSEUR AMMORTIZZATORE*	STOSSDAEMPFER AMORTIGUADOR
10	1441206X1	∅ 6 MM	1	LOCK WASHER	RONDELLE FREIN ROSETTA DENTELL.	FEDERRING ARANDELA GROWER
11	391565X1	∅ 8.4 MM	2	WASHER METRIC	RONDELLE METR. RONDELLA METRICO	SCHEIBE METRISCH ARANDELA METRICO
12	3903040M1		1	BUFFER	BUTOIR RESPINGENTE	PUFFER PARACHOQUES
13	3903814M91		1	FIT PLATE SEAT	PLAQUE MONT SIEG FISSAGGIO SEDILE	SITZMONT.PLATTE PLACA FIJ.ASIENT
14	3903816M1		4	ROLLER	GALET RULLO	ROLLE RODILLO
15	3903815M1		2	PULLEY	POULIE PULEGGIA	RIEMENSCHEIBE POLEA
16	3903823M1		1	CABLE CLAMP	SERRE CABLE SERRA CAVO	KABELSCHELLE ABRAZADERA CABLE
17	3903045M91		1	ROD LINK	BIELLETTE BISCOTTINO	VERBINDG.STANGE VARILLA ENGANCHE
18	3903180M91		1	HANDLE	POIGNEE MANIGLIA	HANDGRIFF MANETA
19	3903065M1	4x14	1	SCREW	VIS VITE	SCHRAUBE TORNILLO
20	3904444M1	3.5x12MM	2	SCREW	VIS VITE	SCHRAUBE TORNILLO
21	339362X1	∅ 4,3 MM	1	WASHER	RONDELLE RONDELLA	UNTERLEGSCHEIBE ARANDELA
22	3903044M1		2	SPRING	RESSORT MOLLA	FEDER RESORTE
23	3903032M91	1	1	SHOCK ABSORBER	AMORTISSEUR AMMORTIZZATORE*	STOSSDAEMPFER AMORTIGUADOR
24	3105404M1	1	4	TUBE	TUBE TUBO	ROHR TUBO
25	3903033M1		2	INSERT	DOUILLE INSERTO	EINSATZSTUECK INSERCION

Seat
Siege
Fahrersitz
Sedile
Asiento

110-225

Air Pressure Seat With Automatic Adjustment – Luxuy
Siege Pneumatique Avec Reglage Automatique – De Luxe
Luftpolsterungsitz Mit Automatischeinstellung – Luxus
Sedile Pneumatico Con Aggiustatore Automatico – Lusso
Asiento Pneumatico Con Ajuste Automatico – Lujo

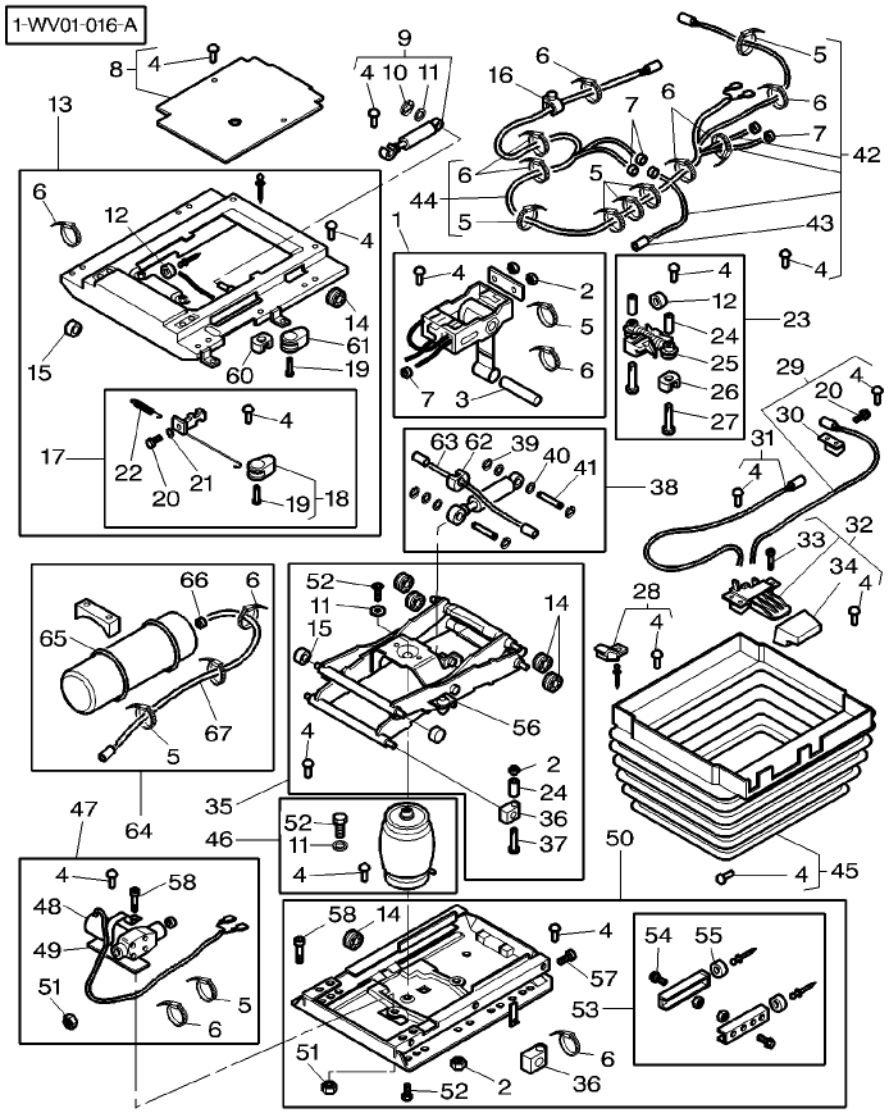

26	3903034M1		2	BUFFER	BUTOIR RESPINGENTE	PUFFER PARACHOQUES
27	339287X1	M8x35	2	HEX. SOCK. SCREW	VIS TETE HEX VITE PARKER	ZYLINDERSCHRAUBE TORN.CAB.HUECA
28	3903036M1		2	STOP	BUTEE STOP	ANSCHLAG PARO
29	3903138M91		1	CABLE	CABLE CAVO	KABEL CABLE
30	3903136M1		1	SUPPORT	SUPPORT SUPPORTO	LAGERUNG DISPOS.DE SOSTEN
31	3903137M91		1	CABLE	CABLE CAVO	KABEL CABLE
32	3903164M91	⇔ 3903043M91	1	SELECTOR	SELECTEUR SELETTORE	SELEKTOR SELECTOR
33	3904087M1	M5X16	3	BOLT	BOULON BULLONE	MASCH.SCHRAUBE ESPIGA/BULON
34	3903042M1		1	HANDLE	POIGNEE MANIGLIA	HANDGRIFF MANETA
35	3903047M91		1	SUSPENSION	SUSPENSION SOSPENSIONE	AUFHAENGUNG SUSPENSION
36	3903049M1		2	BEARING CARRIER	PALIER CUSCINETTO SUPP-	LAGER-GEHAEUSE TEJUELO
37	3903066M1		2	SCREW	VIS VITE	SCHRAUBE TORNILLO
38	3903822M91		1	SHOCK ABSORBER	AMORTISSEUR AMMORTIZZATORE*	STOSSDAEMPFER AMORTIGUADOR
39	390287X1		4	LOCK WASHER	RONDELLE FREIN ROSETTA DENTELL.	FEDERRING ARANDELA GROWER
40	3101663M1		4	WASHER	RONDELLE RONDELLA	UNTERLEGSCHEIBE ARANDELA
41	3903035M1		2	CLEVIS PIN	AXE PERNO D'ATTACCO	SPLINTBOLZEN BULON CILINDRICO
42	3903141M91		1	HYDR. HOSE	FLEXIBLE TUBOFLEX IDRAUL	HYDR. SCHLAUCH TUBO HIDRAULICO
43	3105395M1		2	HOSE CLIP	COLLIER DURITE FASCIA	SCHLAUCHSCHELLE CLIP P.FLEXIBLE
44	3903817M91		1	CABLE	CABLE CAVO	KABEL CABLE
45	3903172M91		1	BELLOWS	SOUFFLET SOFFIETTO	FALTENBALG FUELLE
46	3903051M91		1	ACCUMULATOR	ACCUMULATEUR ACCUMULATORE	AKKUMULATOR ACUMULADOR
47	3903057M91		1	COMPRESSOR	COMPRESSEUR COMPRESSORE	KOMPRESSOR COMPRESOR
48	3903053M1		1	CLAMP	COLLIER FASCETTA	HALTESCHELLE ABRAZADERA
49	3903054M1		1	PLATE	PLAQUE PIASTRA	PLATTE PLATO
50	3903059M91		1	FIT PLATE SEAT	PLAQUE MONT SIEG FISSAGGIO SEDILE	SITZMONT.PLATTE PLACA FIJ.ASIENT
51	3000193X1	M8	1	NUT	ECROU DADO	MUTTER TUERCA

Seat
Siege
Fahrersitz
Sedile
Asiento

110-225

Air Pressure Seat With Automatic Adjustment – Luxuy
Siege Pneumatique Avec Reglage Automatique – De Luxe
Luftpolsterungsitz Mit Automatischeinstellung – Luxus
Sedile Pneumatico Con Aggiustatore Automatico – Lusso
Asiento Pneumatico Con Ajuste Automatico – Lujo

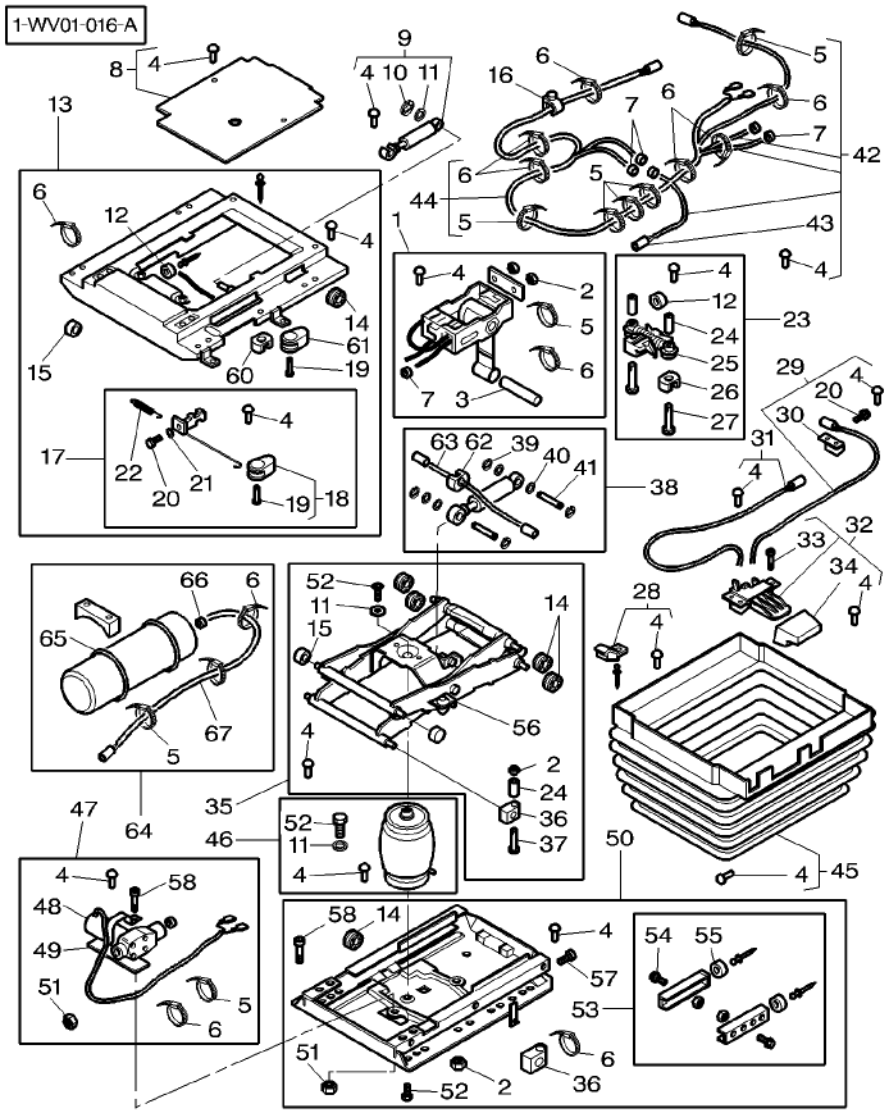

52	3903067M1	M8x20	2	SCREW	VIS VITE	SCHRAUBE TORNILLO
53	3903062M1		1	STOP	BUTEE STOP	ANSCHLAG PARO
54	3101996M1	M8x16	2	SCREW SPECIAL	VIS SPECIALE VITE SPECIALE	SPEZIALSCHRAUBE TORNILLO ESPEC.
55	3102401M1		2	BUFFER	BUTOIR RESPINGENTE	PUFFER PARACHOQUES
56	1719867M1		2	PROTECTOR	PROTECTEUR PROTETTORE	SCHUTZ PROTECTOR
57	3000926X1	M5x10	1	SCREW	VIS VITE	SCHRAUBE TORNILLO
58	3903480M1	M8x12	1	SCREW	VIS VITE	SCHRAUBE TORNILLO
59	3903135M91	[AB]	1	KIT, REPAIR	JEU REPARATION KIT RIPARAZIONE	REPARATURSATZ JUEGO REPARACION
60	3903819M91		1	GUIDE	GUIDE GUIDA	FUEHRUNG GUIA
61	3903818M91		1	HANDLE	POIGNEE MANIGLIA	HANDGRIFF MANETA
62	3903820M91		1	BEARING CARRIER	PALIER CUSCINETTO SUPP-	LAGER-GEHAEUSE TEJUELO
63	3903821M91		1	CABLE	CABLE CAVO	KABEL CABLE
64	3903827M91		1	ACCUMULATOR	ACCUMULATEUR ACCUMULATORE	AKKUMULATOR ACUMULADOR
65	3903961M1	7.6x387	2	CABLE CLAMP	SERRE CABLE SERRA CAVO	KABELSCHELLE ABRAZADERA CABLE
66	3903824M1		2	CLAMP	COLLIER FASCETTA	HALTESCHELLE ABRAZADERA
67	3903825M1		1	FACING	GARNITURE RIVESTIMENTO	VERBLENDUNG PARAMENTO

[A] INCLUDE ITEM 2/4/5/6/11/12/14/15/24/25/ 26/36/51/52/53/56/58
COMPREND L'ITEM 2/4/5/6/11/12/14/15/24/25/ 26/36/51/52/53/56/58
BEINHALTET POS NR. 2/4/5/6/11/12/14/15/24/25/ 26/36/51/52/53/56/58
INCLUDE IL NUMERO 2/4/5/6/11/12/14/15/24/25/ 26/36/51/52/53/56/58
INCLUYE EL NO 2/4/5/6/11/12/14/15/24/25/ 26/36/51/52/53/56/58

[B] NOT ILLUSTRATED
NON ILLUSTRE
NICHT ABGEBILDET
NO ILLUSTRADO
NO ILLUSTRADED

Seat Belt
Ceinture De Securite
Sicherheitsgurt
Cintura Sicurezza
Cinturon De Seguridad

110-230

1-WZ02-001-A

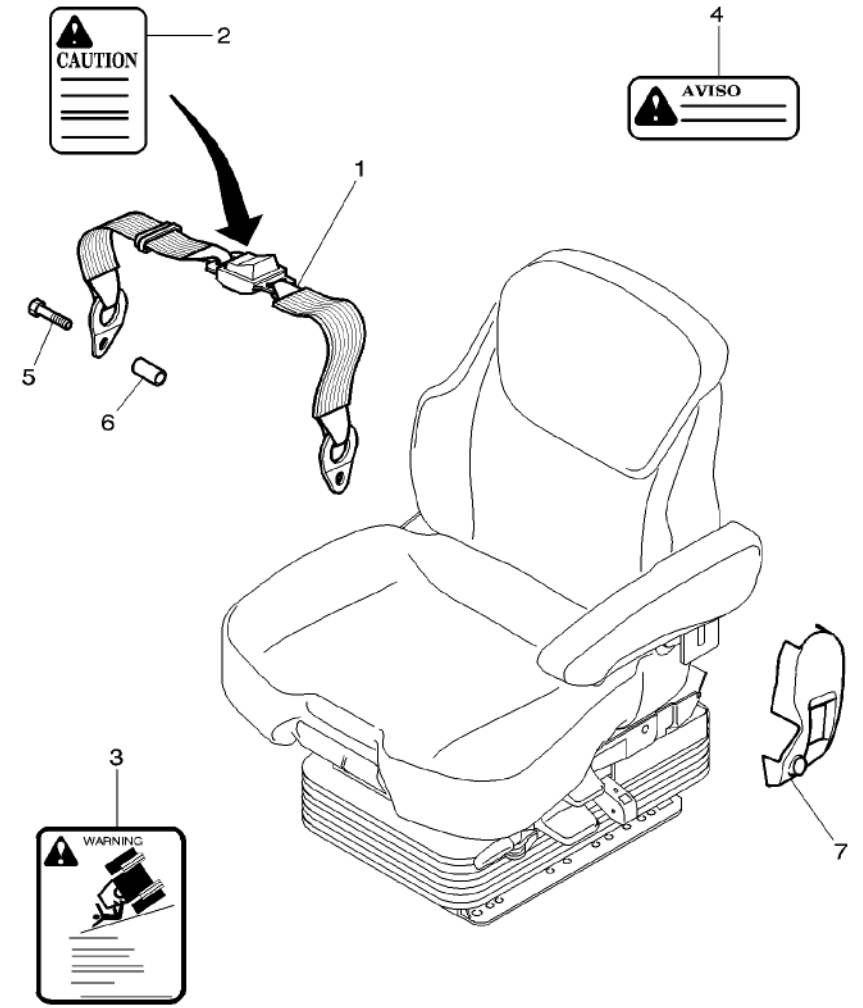

1	3785693M91		1 SAFETY BELT	CEINTURE DE PROT CINTURA DI SOST.	SICHERHEITSGURT CINTURON
2	523784M3	GB	1 DECAL	DECALCOMANIE DECALCOMANIA	AUFKLEBER CALCOMANIA
2*	3597445M1	[A]	1 DECAL	DECALCOMANIE DECALCOMANIA	AUFKLEBER CALCOMANIA
3	3760678M1	GB	1 DECAL	DECALCOMANIE DECALCOMANIA	AUFKLEBER CALCOMANIA
3*	3760733M1	F	1 DECAL	DECALCOMANIE DECALCOMANIA	AUFKLEBER CALCOMANIA
4*	3597454M1	[A]	1 DECAL	DECALCOMANIE DECALCOMANIA	AUFKLEBER CALCOMANIA
5	361530X1		2 BOLT UNF	BOULON UNF BULLONE UNF	MASCH.SCHRB.UNF PERNO UNF
6	3011445X1		2 SPACER	ENTRETOISE DISTANZIALE	ABSTANDSTUECK DISCO ESPACIADOR
7	4272529M1		1 COVER	COUVERCLE COPERCHIO	DECKEL CUBIERTA
7	4272528M1	[B]	1 COVER	COUVERCLE COPERCHIO	DECKEL CUBIERTA

[A] SPANISH
ESPAGNOL
SPANISCHE
SPAGNOLO
ESPANOL

[B] WITHOUT SEAT BELT
SANS CEINTURE DE SECURITE
OHNE SICHERHEITSQURT
SENSA CINTURA SICUREZZA
SIN CINTURON DE SEGURIDAD

Secondary Seat
Siege Secondaire
Beifahrersitz
Sedile Secondario
Asiento

110-235

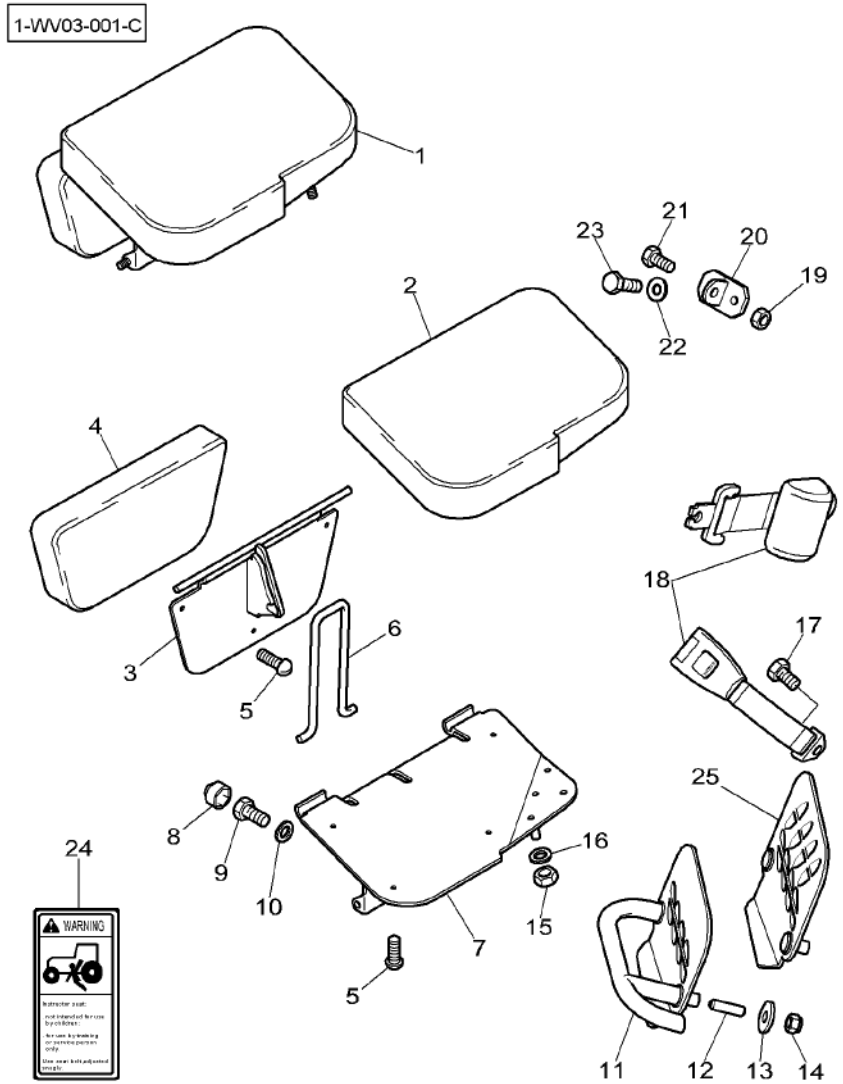

1*	4280078M91		1 SEAT	SIEGE SEDILE	SITZ ASIENTO
2*	4271010M91	1	1 CUSHION	COUSSIN CUSCINO	POLSTER COJIN
3*	4270581M1	1	1 SUPPORT	SUPPORT SUPPORTO	LAGERUNG DISPOS.DE SOSTEN
4*	4280079M91	1	1 CUSHION	COUSSIN CUSCINO	POLSTER COJIN
5	3713140M1	1	9 SCREW	VIS VITE	SCHRAUBE TORNILLO
6	4270583M1	1	1 STAND	BEQUILLE CAVALLETTO	STUETZE CABALLETE
7	4270579M1	1	1 SUPPORT	SUPPORT SUPPORTO	LAGERUNG DISPOS.DE SOSTEN
8	3616277M1		1 HELMET	CAPUCHON CASCO	SCHUTZHELM CASCO
9	339123X1	M8 X 20	1 HEX. SOCK. SCREW	VIS TETE HEX VITE PARKER	ZYLINDERSCHRAUBE TORN.CAB.HUECA
10	390972X1	∅ 8–17 X 1,7 MM	1 WASHER	RONDELLE RONDELLA	UNTERLEGSCHEIBE ARANDELA
11	4271528M1		1 FOOT REST	REPOSE PIED SUPPORTO PIEDE	FUSSTUETZE REPOSAPIES
12	1440022X1	M8 X 20	2 STUD	GOUJON PRIGIONIERO	STEHBOLZEN CHAVETA ROSCADO
13	3010467X1	∅ 8–30 X 2 MM	2 WASHER	RONDELLE RONDELLA	UNTERLEGSCHEIBE ARANDELA
14	394367X1	M8	2 LOCKNUT	ECROU BLOCAGE AUTOBLOCCANTE	SICHERUNGSMUTTER CONTRATUERCA
15	394367X1	M8	2 LOCKNUT	ECROU BLOCAGE AUTOBLOCCANTE	SICHERUNGSMUTTER CONTRATUERCA
16	390972X1	∅ 8–17 X 1,7 MM	2 WASHER	RONDELLE RONDELLA	UNTERLEGSCHEIBE ARANDELA
17	353558X1	7/16–20 X 16	2 BOLT UNF	BOULON UNF BULLONE UNF	MASCH.SCHRB.UNF PERNO UNF
18	3789236M1		1 SAFETY BELT	CEINTURE DE PROT CINTURA DI SOST.	SICHERHEITSGURT CINTURON
19	338600X1	7/16–20	1 NUT UNF	ECROU UNF DADO UNF	MUTTER UNF TUERCA UNF
20	3715118M1		1 SUPPORT	SUPPORT SUPPORTO	LAGERUNG DISPOS.DE SOSTEN
21	353558X1	7/16–20 X 16	1 BOLT UNF	BOULON UNF BULLONE UNF	MASCH.SCHRB.UNF PERNO UNF
22	390972X1	∅ 8–17 X 1,7 MM	2 WASHER	RONDELLE RONDELLA	UNTERLEGSCHEIBE ARANDELA
23	339123X1	M8 X 20	2 HEX. SOCK. SCREW	VIS TETE HEX VITE PARKER	ZYLINDERSCHRAUBE TORN.CAB.HUECA
23	339124X1	[A] M8 X 16	2 HEX. SOCK. SCREW	VIS TETE HEX VITE PARKER	ZYLINDERSCHRAUBE TORN.CAB.HUECA
24	3787683M1	US	1 DECAL	DECALCOMANIE DECALCOMANIA	AUFKLEBER CALCOMANIA
25*	4276204M1		1 PLATE	PLAQUE PIASTRA	PLATTE PLATO

Secondary Seat
Siege Secondaire
Beifahrersitz
Sedile Secondario
Asiento

110-235

1-WV03-001-C

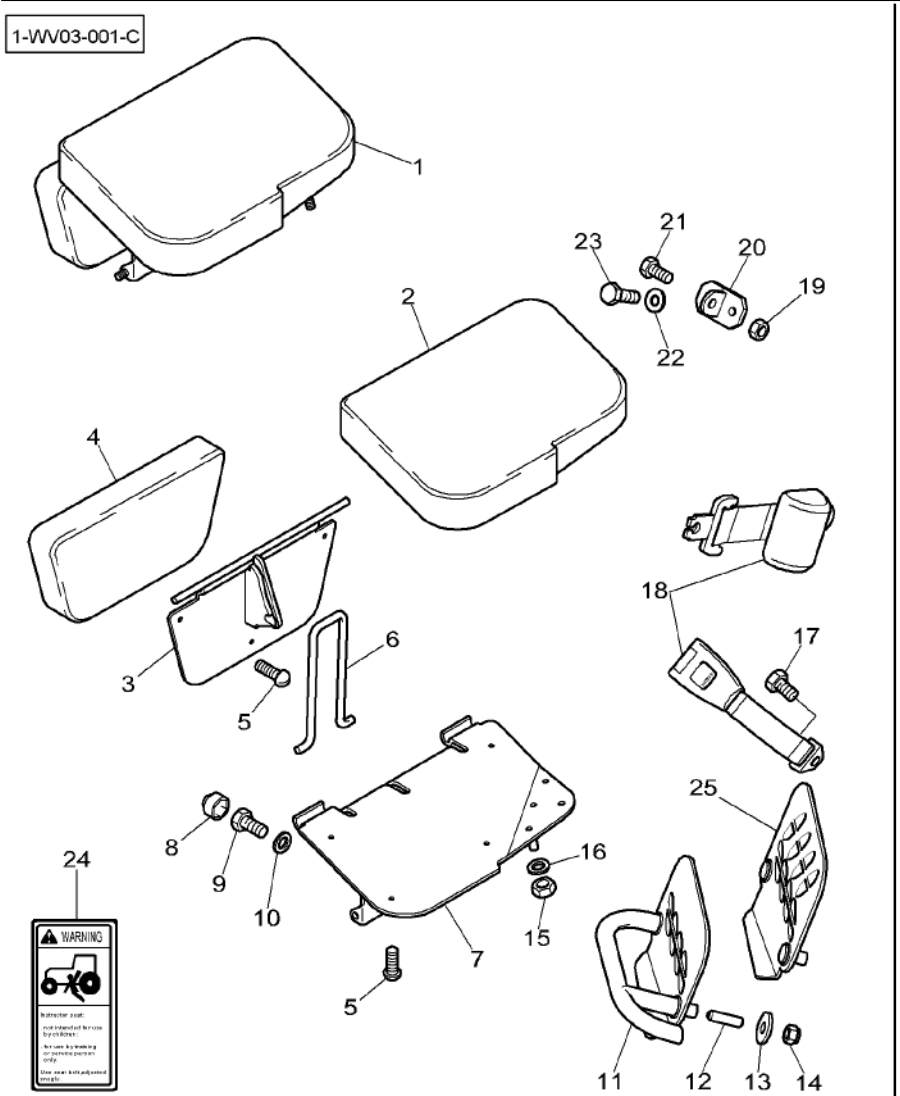

[A] WITHOUT SEAT BELT
SANS CEINTURE DE SECURITE
OHNE SICHERHEITSQURT
SENSA CINTURA SICUREZZA
SIN CINTURON DE SEGURIDAD

120

Lighting Equipment **Eclairage** **Beleuchtungsanlage** **Equipaggiamento Illuminazione** **Equipo Alumbrado**	**Front** **Avant** **Vorderseite** **Frontale** **Frontal**	**120-5**

North America Only
Amerique Du Nord Seulement
Nur Fuer Nordamerika
Solo Per Nord America
Norte America Solamente

1-WW02-017-A

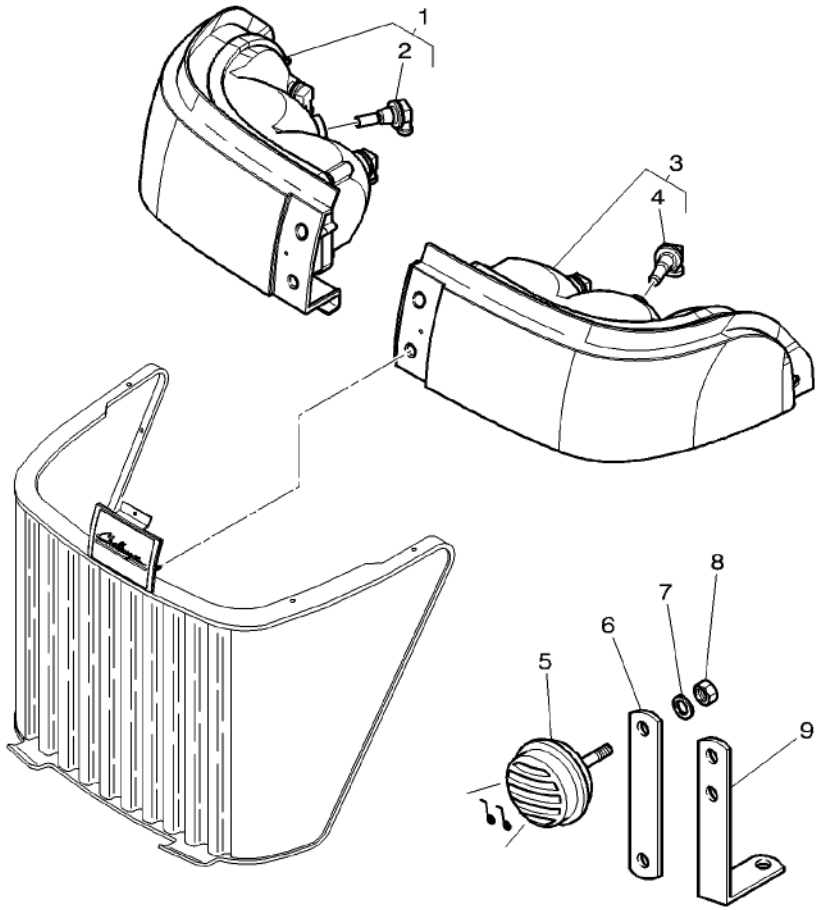

1	5017894M2	▶	**1** LAMP	PHARE LAMPADINA	SCHEINWERFER FARO
2	***175-1323***	1 12V 55W	**3** BULB	AMPOULE BULBO	GLUEHLAMPE BOMBILLA
3	5017895M2	◀	**1** LAMP	PHARE LAMPADINA	SCHEINWERFER FARO
4	***175-1323***	3 12V 55W	**3** BULB	AMPOULE BULBO	GLUEHLAMPE BOMBILLA
5	1678404M1		**1** HORN	AVERTISSEUR AVVISATORE ACUST	HUPE BOCINA
6	3778841M2		**1** STRAP	PATTE CORREGGIA	LASCHE FAJA
7	339374X1		**1** LOCK WASHER	RONDELLE FREIN ROSETTA DENTELL.	FEDERRING ARANDELA GROWER
8	339169X1		**1** NUT	ECROU DADO	MUTTER TUERCA
9	656632M4		**1** BRACKET	SUPPORT FIXATION STAFFETTA	HALTEARM SOPORTE

Lighting Equipment	Front	120-10
Eclairage	Avant	
Beleuchtungsanlage	Vorderseite	
Equipaggiamento Illuminazione	Frontale	
Equipo Alumbrado	Frontal	

1-WW02-019-A

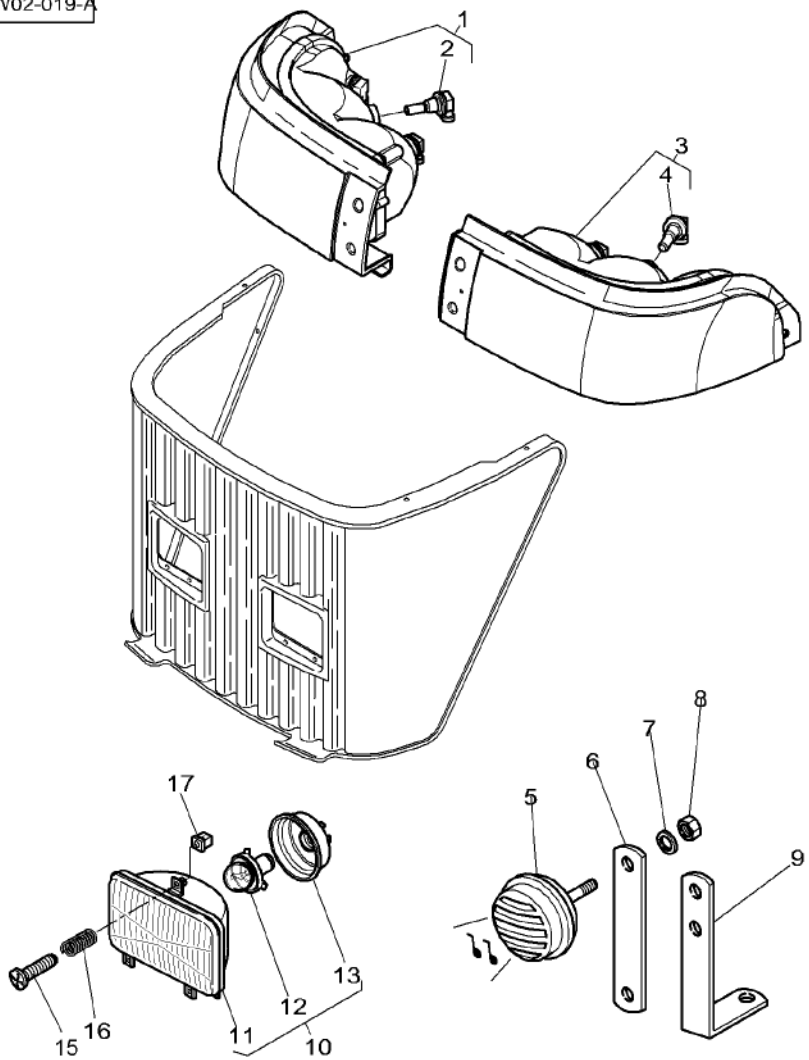

1	5017894M2	▶	1 LAMP	PHARE LAMPADINA	SCHEINWERFER FARO
2	***175-1323***	1 12V 55W	3 BULB	AMPOULE BULBO	GLUEHLAMPE BOMBILLA
3	5017895M2	◀	1 LAMP	PHARE LAMPADINA	SCHEINWERFER FARO
4	***175-1323***	3 12V 55W	3 BULB	AMPOULE BULBO	GLUEHLAMPE BOMBILLA
5	1678404M1		1 HORN	AVERTISSEUR AVVISATORE ACUST	HUPE BOCINA
6	3778841M2		1 STRAP	PATTE CORREGGIA	LASCHE FAJA
7	339374X1		1 LOCK WASHER	RONDELLE FREIN ROSETTA DENTELL.	FEDERRING ARANDELA GROWER
8	339169X1		1 NUT	ECROU DADO	MUTTER TUERCA
9	656632M4		1 BRACKET	SUPPORT FIXATION STAFFETTA	HALTEARM SOPORTE
10*	***3713799M91***	[A]	2 HEADLAMP	PHARE AVANT LAMPADA	FAHRSCHEINWERFER FARO DELANTERO
11*		11 REP. NO 10	1 HOUSING	CARTER CARCASSA	GEHAEUSE ALOJAMIENTO
12*	***961866M1***	11	1 BULB H/L 45/40W	AMPOULE 45/40W BULBO 45/40W HL	GLUEHL.45/40W BOMBFARO 45/40W
13*	3388264M1	11	1 CAP	CHAPEAU CAPUCHON	KAPPE TAPA
15*	4274756M1	M5X50	6 SCREW SPECIAL	VIS SPECIALE VITE SPECIALE	SPEZIALSCHRAUBE TORNILLO ESPEC.
16*	4274757M1		6 SPRING	RESSORT MOLLA	FEDER RESORTE
17*	3809347M1		6 NUT	ECROU DADO	MUTTER TUERCA

[A] FOR R.H DRIVING
CIRCULATION A DROITE
FUER RECHTE FAHREN
PER CIRCULACION DESTRA
PARA CIRCULACION DERECHO

Lighting Equipment	Front
Eclairage	Avant
Beleuchtungsanlage	Vorderseite
Equipaggiamento Illuminazione	Frontale
Equipo Alumbrado	Frontal

120-15

1-WW02-009-A

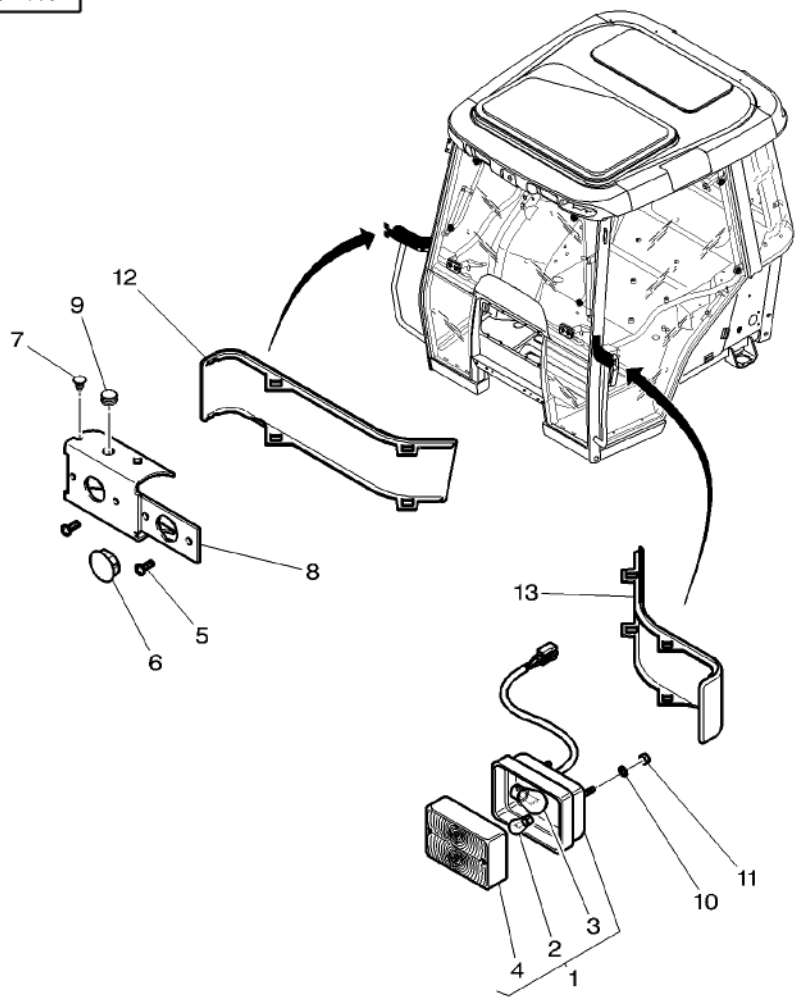

1*	3786791M92	(US)	2	CONTOUR LIGHT	FEUX DE POSITION CONTOUR LIGHT UMRISSLEUCHTE CONTOUR LIGHT
2	***1420037M1***	1	1	BULB 12V 5W	AMPOULE 12V 5W BULBO 12V 5W GLUEHL 12V 5W BOMBILLA 12V 5W
3	***621235M1***	1	1	BULB 12V 21W SBC	AMPOULE 12V 21W BULBO 12V 21W GLUEHL 12V21WSBC BOMB 12V 21W SBC
4	3105505M1	1	1	LENS	LENTILLE LENTE LINSE LENTE DE VIDRIO
5	3010578X1	M5 X 10	8	SCREW	VIS VITE SCHRAUBE TORNILLO
6	3596314M1	∅ 25,5	3	PLUG	BOUCHON TAPPO VERSCHL.STOPFEN TAPON
7	4275043M1	∅ 6	6	PLUG	BOUCHON TAPPO VERSCHL.STOPFEN TAPON
8	4273311M1	▶	1	SUPPORT	SUPPORT SUPPORTO LAGERUNG DISPOS.DE SOSTEN
9	3042523M1	∅ 10	1	PLUG	BOUCHON TAPPO VERSCHL.STOPFEN TAPON
10	390469X1		4	WASHER	RONDELLE RONDELLA UNTERLEGSCHEIBE ARANDELA
11	3010477X1	M5	4	NUT METRIC	ECROU METRIQUE DADO METRICO MUTTER METRISCH TUERCA METRICO
12	4273312M1	▶	1	MUFF	CACHE MANICOTTO DEVIAN FLANSCHMUFFE MANGUITO ACOPLAM
13	4272746M1	◀	1	MUFF	CACHE MANICOTTO DEVIAN FLANSCHMUFFE MANGUITO ACOPLAM

Lighting Equipment **Eclairage** **Beleuchtungsanlage** **Equipaggiamento Illuminazione** **Equipo Alumbrado**	**Front** **Avant** **Vorderseite** **Frontale** **Frontal**	**120-20**

US

1-WW02-006-A

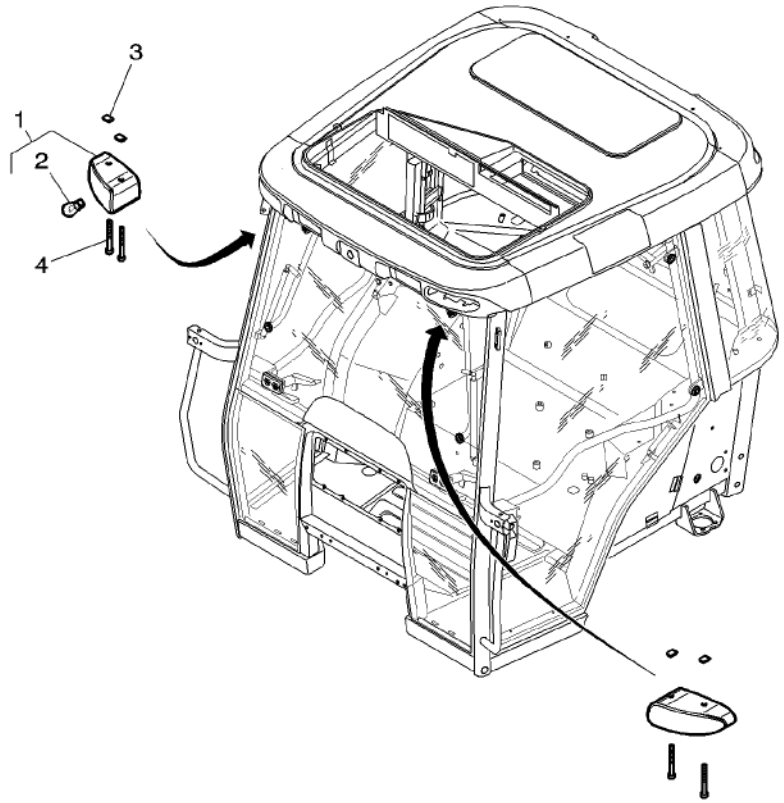

1	3787345M1		**2** FLASHER	CLIGNOTANT LAMPEGGIANTE	BLINKLICHT DESTELLO
2	***621235M1***	2	**1** BULB 12V 21W SBC	AMPOULE 12V 21W BULBO 12V 21W	GLUEHL 12V21WSBC BOMB 12V 21W SBC
3	3010070X1	M6	**4** NUT	ECROU DADO	MUTTER TUERCA
4	3011362X1	M6 X 90	**4** SCREW	VIS VITE	SCHRAUBE TORNILLO

Field Lights
Phare De Travail
Arbeitsscheinwerfer
Luce Illuminazione Campo
Luces De Campo

120-25

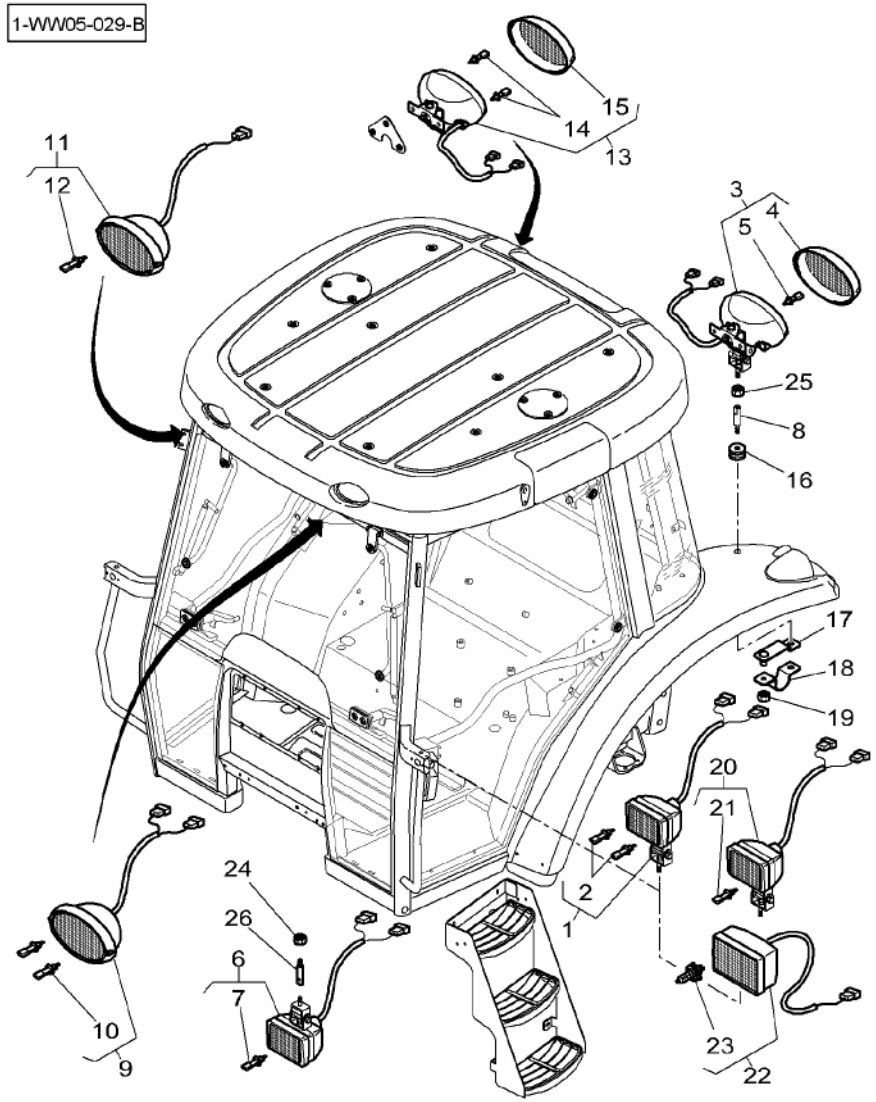

1	4272782M91		2	WORKLAMP	PHARE TRAVAIL LUCE DI LAVORO	ARBEITSSCHEINWER FARO DE TRABAJO
2	***1628494M1***	1 12V-55W	2	BULB H3	AMPOULE H3 BULBO H3	GLUEHLAMPE H3 BOMBILLA H3
3	3786668M93		2	WORKLAMP	PHARE TRAVAIL LUCE DI LAVORO	ARBEITSSCHEINWER FARO DE TRABAJO
4*	3907280M91	3	1	LENS	LENTILLE LENTE	LINSE LENTE DE VIDRIO
5	***1628494M1***	3 12V-55W	1	BULB H3	AMPOULE H3 BULBO H3	GLUEHLAMPE H3 BOMBILLA H3
6	4272783M92		2	WORKLAMP	PHARE TRAVAIL LUCE DI LAVORO	ARBEITSSCHEINWER FARO DE TRABAJO
7	***1628494M1***	6 12V-55W	1	BULB H3	AMPOULE H3 BULBO H3	GLUEHLAMPE H3 BOMBILLA H3
8	5016887M2		2	SPACER	ENTRETOISE DISTANZIALE	ABSTANDSTUECK DISCO ESPACIADOR
9	3786665M91		2	WORKLAMP	PHARE TRAVAIL LUCE DI LAVORO	ARBEITSSCHEINWER FARO DE TRABAJO
10	***1628494M1***	9 12V-55W	2	BULB H3	AMPOULE H3 BULBO H3	GLUEHLAMPE H3 BOMBILLA H3
11	3786664M91		2	WORKLAMP	PHARE TRAVAIL LUCE DI LAVORO	ARBEITSSCHEINWER FARO DE TRABAJO
12	***1628494M1***	11	1	BULB H3	AMPOULE H3 BULBO H3	GLUEHLAMPE H3 BOMBILLA H3
13	3786666M91		2	WORKLAMP	PHARE TRAVAIL LUCE DI LAVORO	ARBEITSSCHEINWER FARO DE TRABAJO
14	***1628494M1***	13 12V-55W	2	BULB H3	AMPOULE H3 BULBO H3	GLUEHLAMPE H3 BOMBILLA H3
15	3907064M1	13	1	LENS	LENTILLE LENTE	LINSE LENTE DE VIDRIO
16	70921230	∅ 27-35	4	GROMMET	PASSE FIL ANELLO PASSACAVO	GUMMITUELLE PASACABLE
17	4273760M1		2	BRIDLE	BRIDE BRIGLIA	SPANNBAND BRIDA
18*	4273761M2		2	BRIDLE	BRIDE BRIGLIA	SPANNBAND BRIDA
19	339169X1	M8	4	NUT	ECROU DADO	MUTTER TUERCA
20	4272781M92		2	WORKLAMP	PHARE TRAVAIL LUCE DI LAVORO	ARBEITSSCHEINWER FARO DE TRABAJO
21	***1628494M1***	20 12V-55W	1	BULB H3	AMPOULE H3 BULBO H3	GLUEHLAMPE H3 BOMBILLA H3
22	3786693M91	[A] US	2	LAMP	PHARE LAMPADINA	SCHEINWERFER FARO
23	***3713341M1***	22 H4	1	BULB 12V 60/55W	AMP H4 60/55 W BULBO 12V 60/55W	GLUEHL 12V60/55W BOMBILLA12V60/55
24*	339402X1	M10	1	NUT	ECROU DADO	MUTTER TUERCA
25	339402X1	M10	2	NUT	ECROU DADO	MUTTER TUERCA
26*	5016887M2		1	SPACER	ENTRETOISE DISTANZIALE	ABSTANDSTUECK DISCO ESPACIADOR

Field Lights
Phare De Travail
Arbeitsscheinwerfer
Luce Illuminazione Campo
Luces De Campo

120-25

1-WW05-029-B

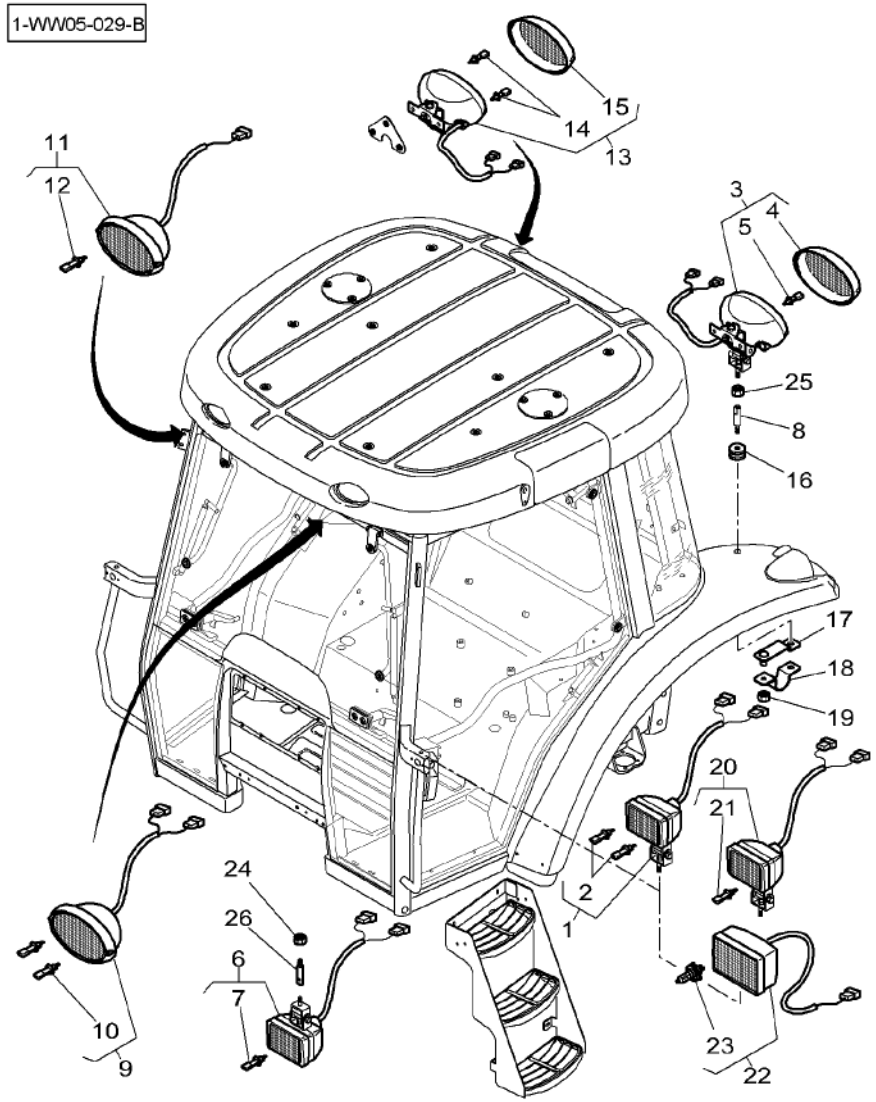

[A] WAY LIGHTS
PHARES ROUTE
FAHRSCHEINWERFER
PROJETTORI DE STRADA
FARROS DE CATRETERA

Field Lights
Phare De Travail
Arbeitsscheinwerfer
Luce Illuminazione Campo
Luces De Campo

120-30

Xenon / Pivoting
Au Xenon / Pivotant
Xenon / Luftpolsterungssitz
Xenon / Girando
Xenon / Redondo

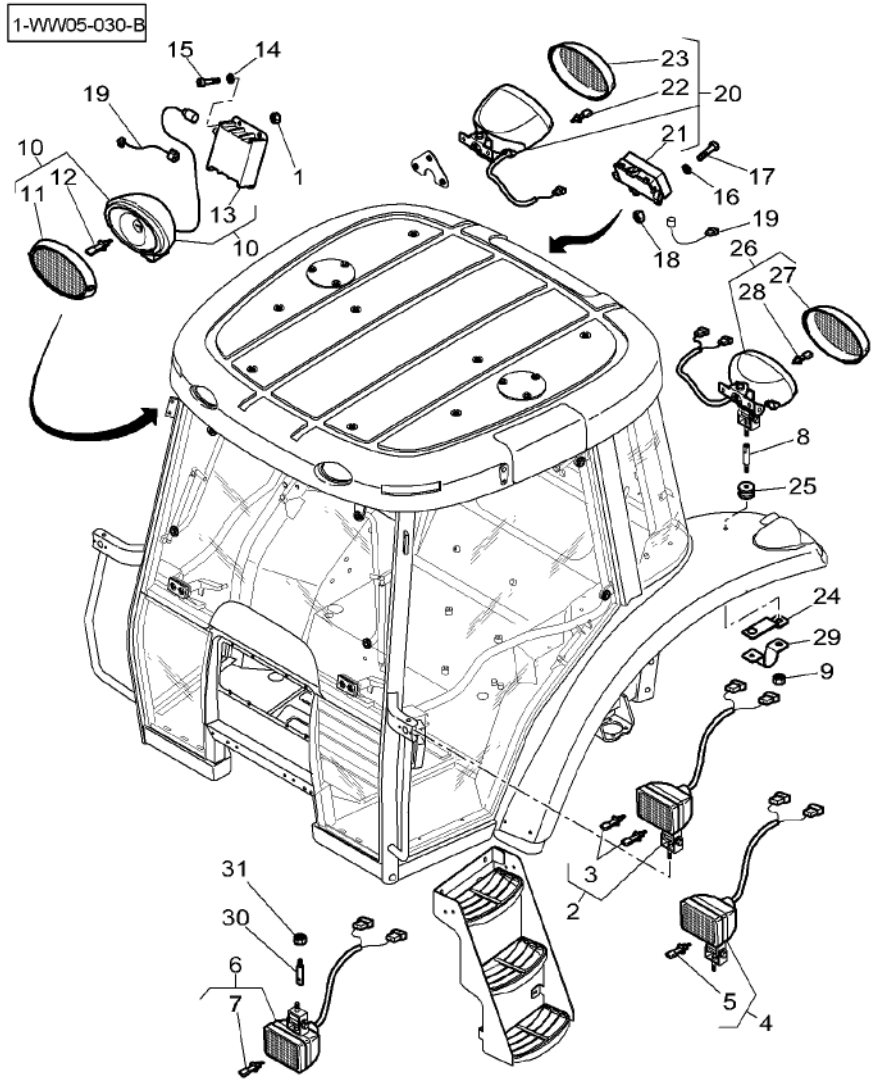

1	1441500X1	M6	**8**	LOCKNUT	ECROU BLOCAGE AUTOBLOCCANTE	SICHERUNGSMUTTER CONTRATUERCA
2	4272782M91		**2**	WORKLAMP	PHARE TRAVAIL LUCE DI LAVORO	ARBEITSSCHEINWER FARO DE TRABAJO
3	***1628494M1***	2 12V-55W	**2**	BULB H3	AMPOULE H3 BULBO H3	GLUEHLAMPE H3 BOMBILLA H3
4	4272781M92		**2**	WORKLAMP	PHARE TRAVAIL LUCE DI LAVORO	ARBEITSSCHEINWER FARO DE TRABAJO
5	***1628494M1***	4 12V-55W	**1**	BULB H3	AMPOULE H3 BULBO H3	GLUEHLAMPE H3 BOMBILLA H3
6	4272783M92		**2**	WORKLAMP	PHARE TRAVAIL LUCE DI LAVORO	ARBEITSSCHEINWER FARO DE TRABAJO
7	***1628494M1***	6 12V-55W	**1**	BULB H3	AMPOULE H3 BULBO H3	GLUEHLAMPE H3 BOMBILLA H3
8	5016887M2		**2**	SPACER	ENTRETOISE DISTANZIALE	ABSTANDSTUECK DISCO ESPACIADOR
9	339169X1	M8	**4**	NUT	ECROU DADO	MUTTER TUERCA
10	3788231M91		**2**	LAMP	PHARE LAMPADINA	SCHEINWERFER FARO
11	3907078M1	10 D2s 12V / 35W	**1**	LENS	LENTILLE LENTE	LINSE LENTE DE VIDRIO
12	***3907077M1***	10	**1**	BULB	AMPOULE BULBO	GLUEHLAMPE BOMBILLA
13	3907075M1	10	**1**	TRANSFORMER	TRANSFORMATEUR TRASFORMATORE	TRANSFORMATOR TRANSFORMADOR
14	390971X1	∅ 6-12 X 1,5	**16**	WASHER	RONDELLE RONDELLA	UNTERLEGSCHEIBE ARANDELA
15	3009281X1	M6 X 16	**8**	SCREW	VIS VITE	SCHRAUBE TORNILLO
16	390469X1	∅ 5-10 X 1,5	**6**	WASHER	RONDELLE RONDELLA	UNTERLEGSCHEIBE ARANDELA
17	**3010506X1**	M5 X 16	**6**	SCREW	VIS VITE	SCHRAUBE TORNILLO
18	1441494X1	M5	**6**	NUT METRIC	ECROU METRIQUE DADO METRICO	MUTTER METRISCH TUERCA METRICO
19	4272566M1	◄► 400 MM	**4**	HARNESS	FAISCEAU FASCIOCAVI	KABELBAUM MAZO CABLES
20	3788232M91		**2**	LAMP	PHARE LAMPADINA	SCHEINWERFER FARO
21	3907383M1	20	**1**	TRANSFORMER	TRANSFORMATEUR TRASFORMATORE	TRANSFORMATOR TRANSFORMADOR
22	***3907384M1***	20	**1**	BULB	AMPOULE BULBO	GLUEHLAMPE BOMBILLA
23	3907385M1	20	**1**	LENS	LENTILLE LENTE	LINSE LENTE DE VIDRIO
24	4273760M1		**2**	BRIDLE	BRIDE BRIGLIA	SPANNBAND BRIDA
25	70921230	∅ 27-35	**4**	GROMMET	PASSE FIL ANELLO PASSACAVO	GUMMITUELLE PASACABLE
26	3786668M93		**2**	WORKLAMP	PHARE TRAVAIL LUCE DI LAVORO	ARBEITSSCHEINWER FARO DE TRABAJO

Field Lights
Phare De Travail
Arbeitsscheinwerfer
Luce Illuminazione Campo
Luces De Campo

120-30

Xenon / Pivoting
Au Xenon / Pivotant
Xenon / Luftpolsterungssitz
Xenon / Girando
Xenon / Redondo

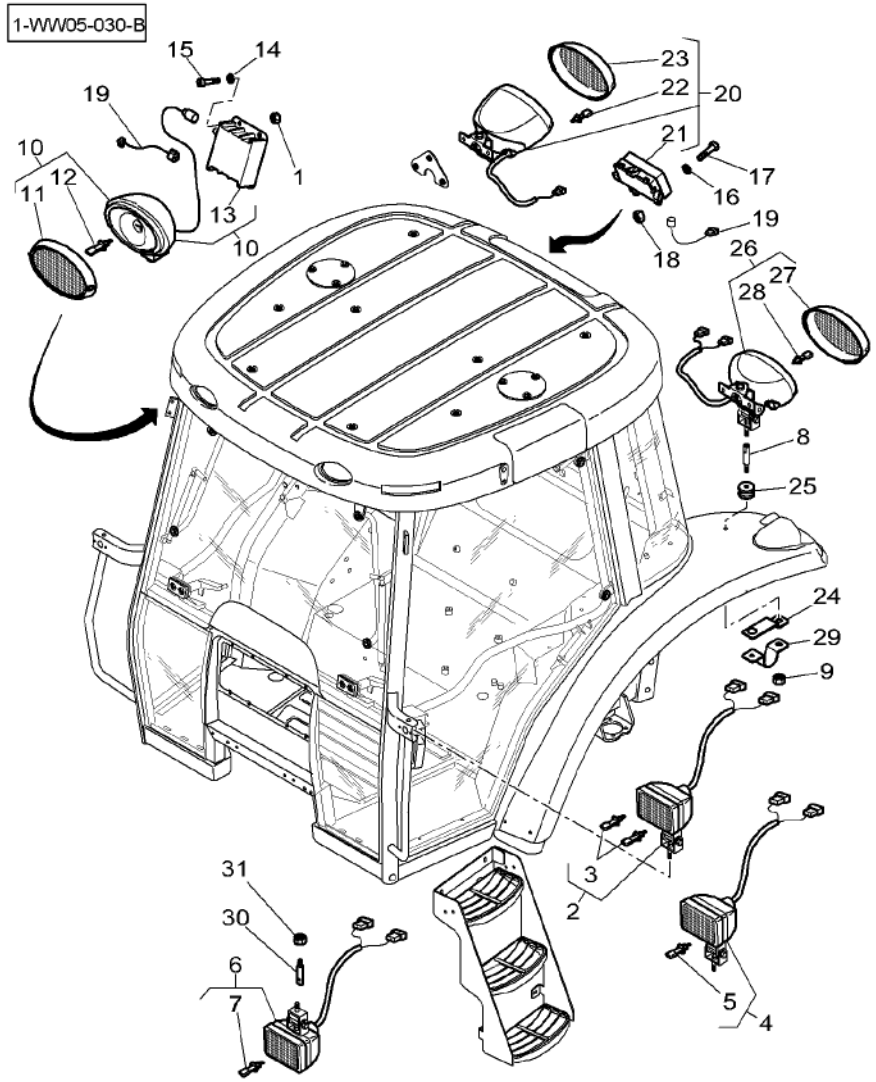

27*	3907280M91	26	1	LENS	LENTILLE LENTE
28	***1628494M1***	26 12V–55W	1	BULB H3	AMPOULE H3 BULBO H3
29*	4273761M2		2	BRIDLE	BRIDE BRIGLIA
30*	5016887M2		1	SPACER	ENTRETOISE DISTANZIALE
31*	339402X1	M10	1	NUT	ECROU DADO

LINSE
LENTE DE VIDRIO
GLUEHLAMPE H3
BOMBILLA H3
SPANNBAND
BRIDA
ABSTANDSTUECK
DISCO ESPACIADOR
MUTTER
TUERCA

Traffic Warning
Equipement Signalisation
Warausrustung
Equipaggiamento Segnalazione
Herramental Senalizacion

120-35

1-WW27-001-A

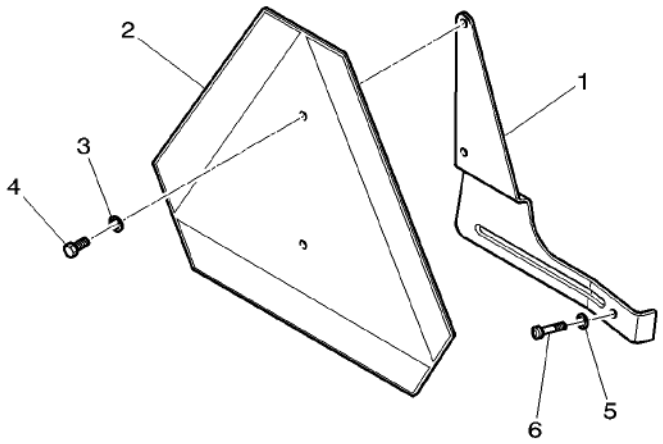

1	4271554M1		1	SUPPORT	SUPPORT SUPPORTO	LAGERUNG DISPOS.DE SOSTEN
2	3712185M1	[A]	1	TRIANGLE	TRIANGLE TRIANGOLO	DREIECK TRIANGULO
2	3789701M1	[B]	1	TRIANGLE	TRIANGLE TRIANGOLO	DREIECK TRIANGULO
3	339375X1		2	LOCK WASHER	RONDELLE FREIN ROSETTA DENTELL.	FEDERRING ARANDELA GROWER
4	339560X1	M6 X 16	2	HEX. SOCK. SCREW	VIS TETE HEX VITE PARKER	ZYLINDERSCHRAUBE TORN.CAB.HUECA
5	4275846M1	∅ 6,7–12,2 X 3	1	WASHER	RONDELLE RONDELLA	UNTERLEGSCHEIBE ARANDELA
6	4275839M1	M6 X 35	1	SCREW	VIS VITE	SCHRAUBE TORNILLO

[A] CEE STANDARD
NORME CEE
CEE NORMUNG
UNIFICAZIONE CEE
NORMALIZACION CEE

[B] SAE STANDARD
NORME SAE
SAE NORMUNG
UNIFICAZIONE SAE
NORMALIZACION SAE

Lighting Equipment Eclairage Beleuchtungsanlage Equipaggiamento Illuminazione Equipo Alumbrado	Rear Arriere Hinterteil Posteriore Trasera	120-40

1-WW03-018-A

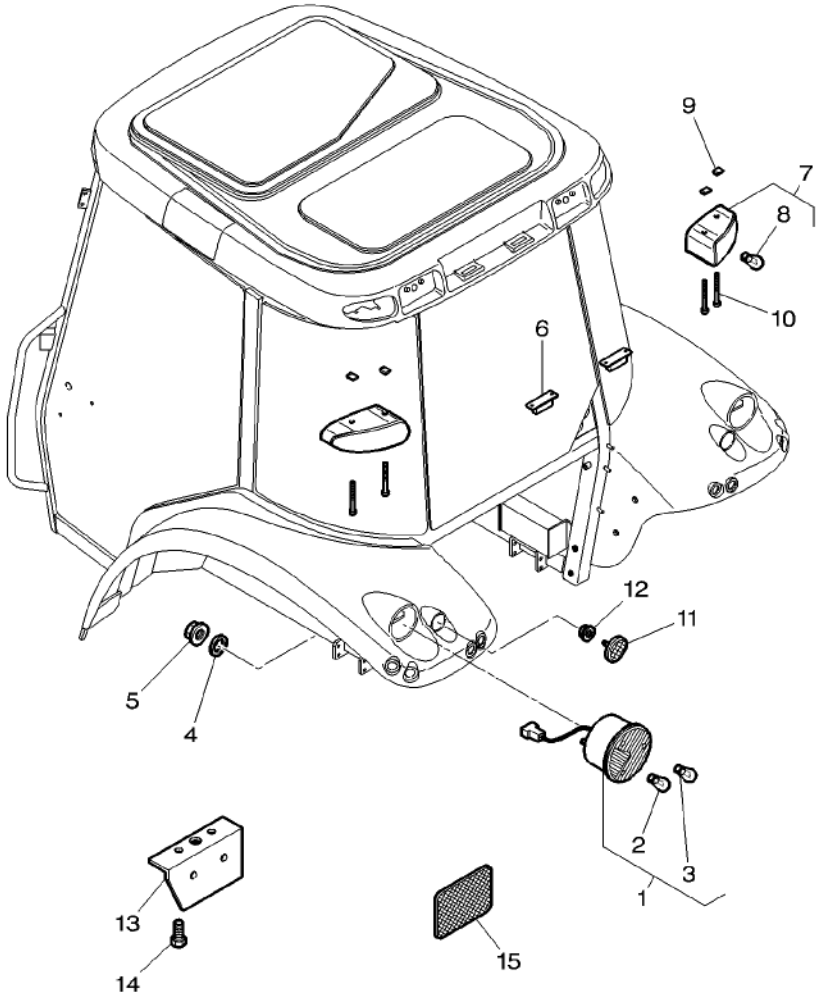

1	3786689M91		1	LH REAR LAMP	FEU AR GAUCHE RETRO LAMPADA SN	RUECKLEUCHTE LI LUZ DE COLA LI
1	3786690M91		1	RH REAR LAMP	FEU AR DROIT LAMPADINA DS POS	RUECKLEUCHTE RE LUZ DE COLA LD
1	3786691M91	US	1	LH REAR LAMP	FEU AR GAUCHE RETRO LAMPADA SN	RUECKLEUCHTE LI LUZ DE COLA LI
1	3786692M91	US	1	RH REAR LAMP	FEU AR DROIT LAMPADINA DS POS	RUECKLEUCHTE RE LUZ DE COLA LD
2	***621235M1***	1	1	BULB 12V 21W SBC	AMPOULE 12V 21W BULBO 12V 21W	GLUEHL 12V21WSBC BOMB 12V 21W SBC
3	***908543M1***	1	1	BULB S/L 21/5W	AMPOULE 21/5W BULBO 21/5W	GLUEHLAMPE 21/5W BOMB C/I 21/5W
4	390971X1	∅ 6-12 X 1,5	4	WASHER	RONDELLE RONDELLA	UNTERLEGSCHEIBE ARANDELA
5	1441500X1	M6	4	LOCKNUT	ECROU BLOCAGE AUTOBLOCCANTE	SICHERUNGSMUTTER CONTRATUERCA
6	3786670M1		2	N/PLATE LAMP	FEU PLAQUE IMMAT LAMPADINA TARGA	KENNZ.LEUCHTE LUZ DE MATRICULA
7	3787345M1		2	FLASHER	CLIGNOTANT LAMPEGGIANTE	BLINKLICHT DESTELLO
8	***621235M1***	7	1	BULB 12V 21W SBC	AMPOULE 12V 21W BULBO 12V 21W	GLUEHL 12V21WSBC BOMB 12V 21W SBC
9	3010070X1		4	NUT	ECROU DADO	MUTTER TUERCA
10	3011362X1	M6 X 90	4	SCREW	VIS VITE	SCHRAUBE TORNILLO
11	4271028M1		2	REFLECTOR	CATADIOPTRE OJO DE GATO	REFLEKTOR CATADIOPTRICO
12	3010477X1	M5	2	NUT METRIC	ECROU METRIQUE DADO METRICO	MUTTER METRISCH TUERCA METRICO
13	3052943M2	▶	1	BEARER	SUPPORT PALIER SUPPORTO PORTANT	AUFLAGER DISPOS.PORTADOR
13	3052944M2	◀	1	BEARER	SUPPORT PALIER SUPPORTO PORTANT	AUFLAGER DISPOS.PORTADOR
14	339124X1	M8 X 16	4	HEX. SOCK. SCREW	VIS TETE HEX VITE PARKER	ZYLINDERSCHRAUBE TORN.CAB.HUECA
15	3618951M1		2	REFLECTOR	CATADIOPTRE OJO DE GATO	REFLEKTOR CATADIOPTRICO

Lighting Equipment Eclairage Beleuchtungsanlage Equipaggiamento Illuminazione Equipo Alumbrado	Rear Arriere Hinterteil Posteriore Trasera	120-45

1-WW03-001-B

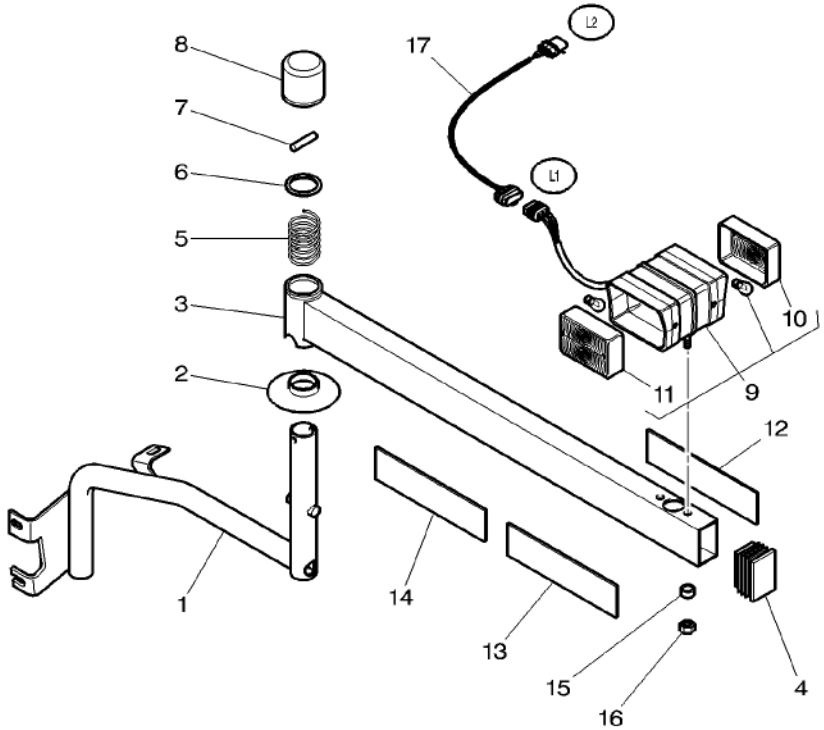

1	4273244M91	◀	1	SUPPORT	SUPPORT SUPPORTO	LAGERUNG DISPOS.DE SOSTEN
1	4273245M91	▶	1	SUPPORT	SUPPORT SUPPORTO	LAGERUNG DISPOS.DE SOSTEN
2	3788367M2		1	GASKET	JOINT GUARNIZIONE	DICHTSCHEIBE EMPAQUETADURA.
3	3788385M93	◀	1	SUPPORT	SUPPORT SUPPORTO	LAGERUNG DISPOS.DE SOSTEN
3	3788386M93	▶	1	SUPPORT	SUPPORT SUPPORTO	LAGERUNG DISPOS.DE SOSTEN
4	3788368M1		1	TAP	OBTURATEUR TAPPO*	HAHN GRIFO
5	3788364M2		1	SPRING	RESSORT MOLLA	FEDER RESORTE
6	3788365M2		1	WASHER	RONDELLE RONDELLA	UNTERLEGSCHEIBE ARANDELA
7	3019546X1	8 X 45	1	PIN	GOUPILLE PERNO	BOLZEN PASADOR
8	3788369M1		1	PLUG	BOUCHON TAPPO	VERSCHL.STOPFEN TAPON
9	3788465M2		1	LIGHT	FEU FARO	LEUCHTE LAMPARA/LUZ
10	3907168M91	9	1	LENS	LENTILLE LENTE	LINSE LENTE DE VIDRIO
11	3310902M91	9	1	LENS	LENTILLE LENTE	LINSE LENTE DE VIDRIO
12	3788462M1	[A]	1	REFLECTINGMIRROR	REFLECTEUR SPECCHIO RIFLET.	SPIEGELREFLEKTOR ESPEJO DE REFLEX
13	3788461M1	[B]	1	REFLECTINGMIRROR	REFLECTEUR SPECCHIO RIFLET.	SPIEGELREFLEKTOR ESPEJO DE REFLEX
14	3788460M1	[C]	1	REFLECTINGMIRROR	REFLECTEUR SPECCHIO RIFLET.	SPIEGELREFLEKTOR ESPEJO DE REFLEX
15	3580848M1	∅ 11-20 X 14,5 MM	2	SPACER	ENTRETOISE DISTANZIALE	ABSTANDSTUECK DISCO ESPACIADOR
16	339169X1	M8	2	NUT	ECROU DADO	MUTTER TUERCA
17	4274333M1		2	HARNESS	FAISCEAU FASCIOCAVI	KABELBAUM MAZO CABLES

[A] YELLOW
JAUNE
GELB
GIALLO
AMARILLO

[B] RED
ROUGE
ROT
ROSSO
ROJA

Lighting Equipment **Eclairage** **Beleuchtungsanlage** **Equipaggiamento Illuminazione** **Equipo Alumbrado**	**Rear** **Arriere** **Hinterteil** **Posteriore** **Trasera**	**120-45**

1-WW03-001-B

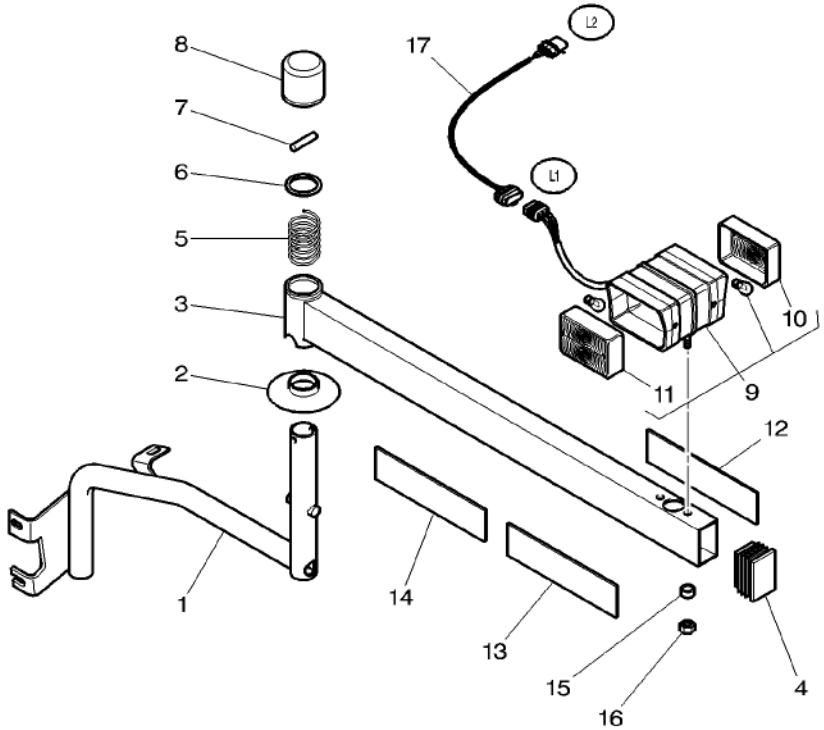

[C] ORANGE
ORANGE
ORANGE
ARANCIONE
ANARANJADO

Rotating Light
Gyrophare
Rundumkennleucht
Luce Rotativa
Luz Giratoria

120-50

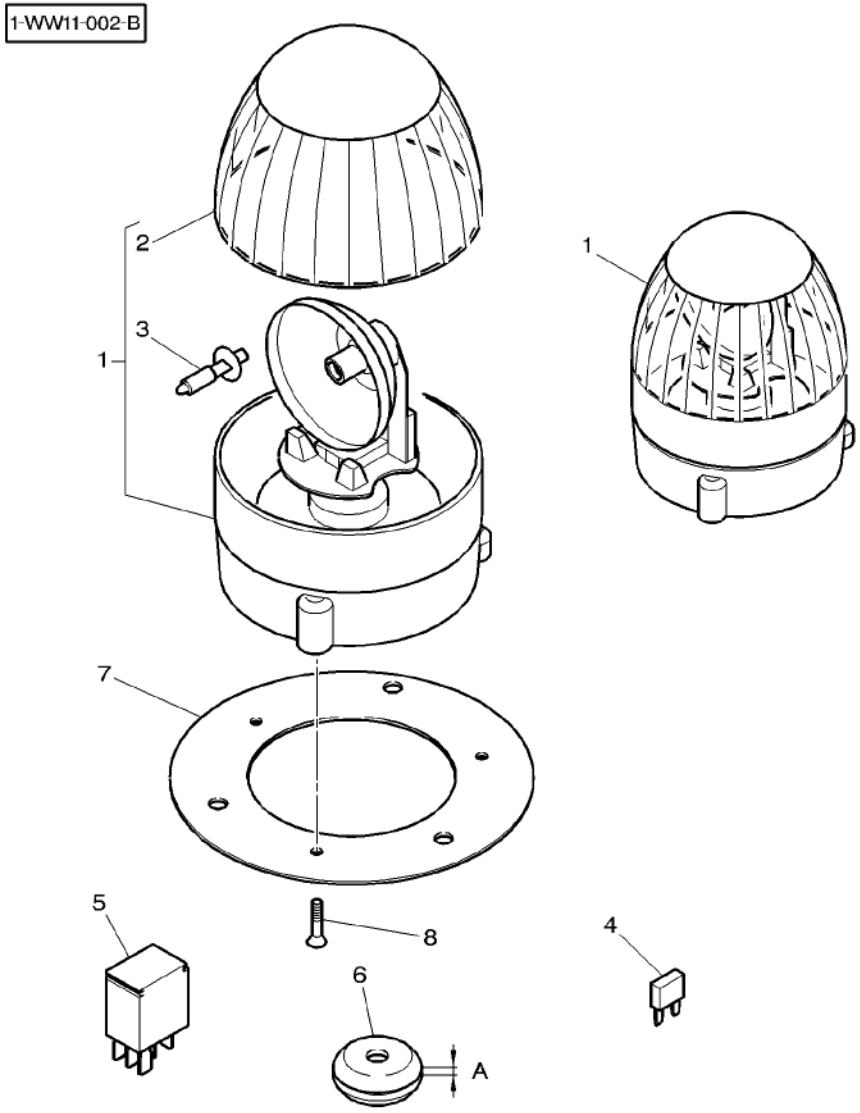

1	5017952M1		**1**	TURNING LIGHT	FEU TOURNANT LUCE ROTANTE	RUNDUMLEUCHTE LUZ ROTATORIA
2	***136-5254***	1	**1**	LENS	LENTILLE LENTE	LINSE LENTE DE VIDRIO
3	***9X-8118***	1 12V	**1**	BULB	AMPOULE BULBO	GLUEHLAMPE BOMBILLA
4	***4271800M1***	7,5 A	**1**	FUSE	FUSIBLE VALVOLINA	SICHERUNG FUSIBLE
4	***4271801M1***	10 A	**1**	FUSE	FUSIBLE VALVOLINA	SICHERUNG FUSIBLE
5	***4272431M1***		**1**	RELAY	RELAIS RELE	RELAIS RELE
6	3714694M1	A = 1,5 MM ∅ 7-21	**2**	GROMMET	PASSE FIL ANELLO PASSACAVO	GUMMITUELLE PASACABLE
6	3783677M1	A = 3 MM ∅ 7-21	**1**	GROMMET	PASSE FIL ANELLO PASSACAVO	GUMMITUELLE PASACABLE
7	5017954M1		**1**	SUPPORT	SUPPORT SUPPORTO	LAGERUNG DISPOS.DE SOSTEN
8	365924X1	No 10 X 16	**3**	SCREW	VIS VITE	SCHRAUBE TORNILLO

130

Front Wheels Roues Avant Vorderraeder Ruote Anteriori Ruedas Delanteras	4 Wheel Drive 4 Roues Motrices Allradantrieb 4 Ruote Motrici 4 Ruedas Motrices	130-5	Wheel Hub 10 Holes Assembling Moyeu De Roues 10 Trous De Fixation Radnabe 10 Loch Befestigung Mozzo Ruote 10 Foros Fissazione Cubo Rueda 10 Orificios Fijacion

1-WL03-002-D

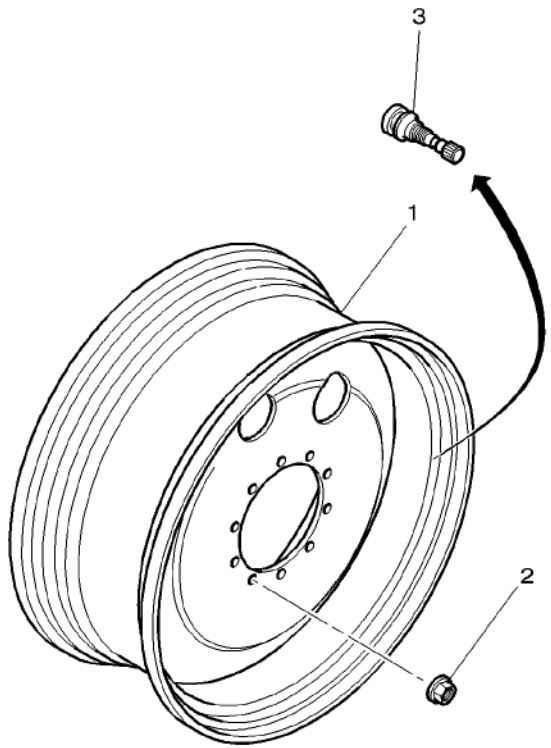

1*	3787689M1	W14L X 28"	2	RIM	JANTE CERCHIONE	FELGE LLANTA
1	3786703M1	W15L X 28"	2	RIM	JANTE CERCHIONE	FELGE LLANTA
1*	3788572M1	W23 X 30"	2	RIM	JANTE CERCHIONE	FELGE LLANTA
2	***3712611M2***	M22	20	NUT SPECIAL	ECROU SPECIAL DADO SPECIALE	SPEZIALMUTTER TUERCA ESPECIAL
3	4274219M1		2	PRESSURE VALVE	VALVE VALVOLA PRESSION	DRUCKVENTIL VALVULA PRESION

Front Wheels **Roues Avant** **Vorderraeder** **Ruote Anteriori** **Ruedas Delanteras**	**4 Wheel Drive** **4 Roues Motrices** **Allradantrieb** **4 Ruote Motrici** **4 Ruedas Motrices**	**130-10**	**Wheel Hub 12 Holes Assembling** **Moyeu De Roue 12 Trous Fixation** **Radnabe 12 Loch Befestigung** **Mozzo Ruote 12 Foros Fissazione** **Cubo Rueda 12 Orificios Fijacion**

1-WL03-011-A

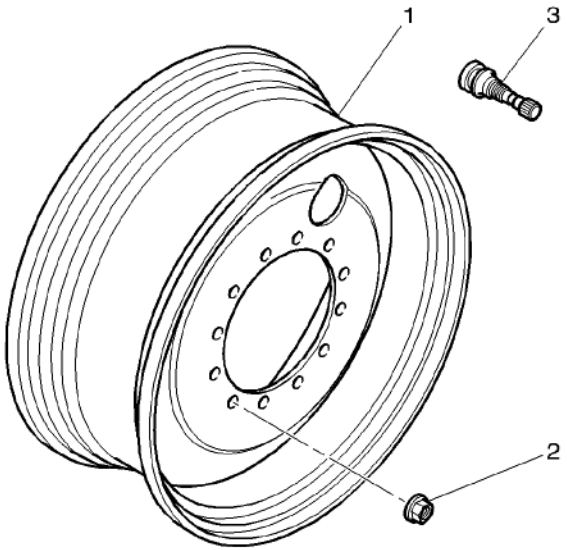

1	3788573M1	DWW 23A X 30"	**2**	RIM	JANTE CERCHIONE	FELGE LLANTA
2	***3712611M2***	M22	**24**	NUT SPECIAL	ECROU SPECIAL DADO SPECIALE	SPEZIALMUTTER TUERCA ESPECIAL
3	4274219M1		**2**	PRESSURE VALVE	VALVE VALVOLA PRESSION	DRUCKVENTIL VALVULA PRESION

Front Wheels Roues Avant Vorderraeder Ruote Anteriori Ruedas Delanteras	4 Wheel Drive 4 Roues Motrices Allradantrieb 4 Ruote Motrici 4 Ruedas Motrices	130-15	Wheel Hub 10 Holes Assembling Moyeu De Roues 10 Trous De Fixation Radnabe 10 Loch Befestigung Mozzo Ruote 10 Foros Fissazione Cubo Rueda 10 Orificios Fijacion

1-WL03-004-C

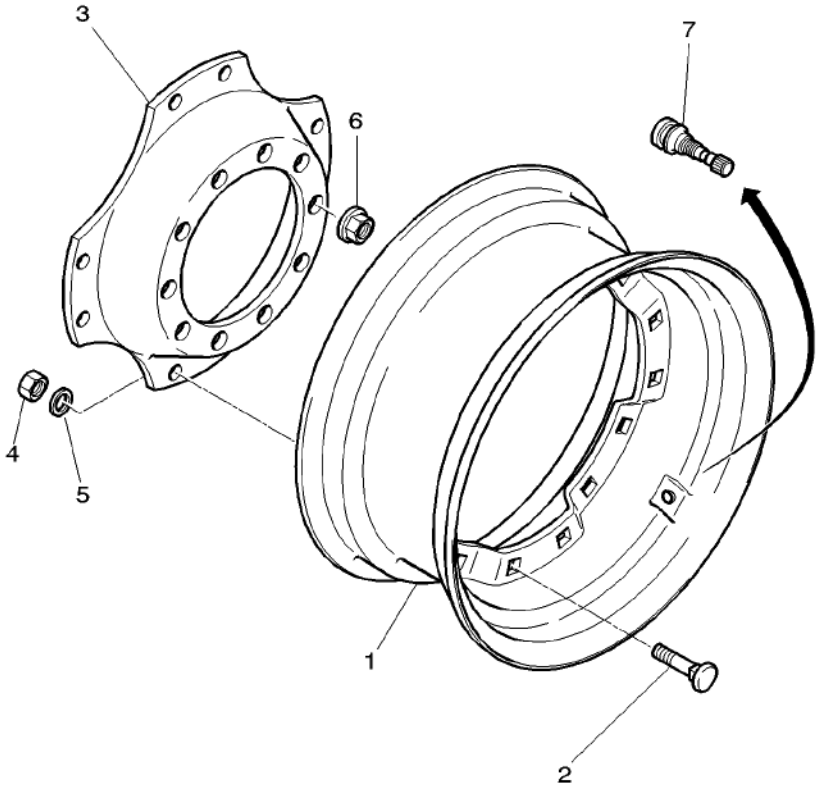

1 *	3786508M1	W15L X 26"	2	RIM	JANTE CERCHIONE FELGE LLANTA
1 *	3786607M1	W18L X 28"	2	RIM	JANTE CERCHIONE FELGE LLANTA
1 *	72514724	WH 12 X 28" ●○ 3786509M1	2	RIM	JANTE CERCHIONE FELGE LLANTA
1 *	3785778M1	DWW 13 X 30"	2	RIM	JANTE CERCHIONE FELGE LLANTA
1 *	3785786M1	W13 X 34"	2	RIM	JANTE CERCHIONE FELGE LLANTA
1 *	3786510M1	W15 X 28"	2	RIM	JANTE CERCHIONE FELGE LLANTA
1 *	3786511M1	W10 X 34"	2	RIM	JANTE CERCHIONE FELGE LLANTA
1	3785240M1	DWW 15L X 30"	2	RIM	JANTE CERCHIONE FELGE LLANTA
1 *	3786087M1	W15L X 34"	2	RIM	JANTE CERCHIONE FELGE LLANTA
1 *	4271722M1	WH10 X 38"	2	RIM	JANTE CERCHIONE FELGE LLANTA
2	3785847M1	M16 X 40	16	SCREW	VIS VITE SCHRAUBE TORNILLO
3	3785241M1	28" / 30"	2	DISC	DISQUE DISCO SCHEIBE DISCO
3 *	3786512M1	26"	2	DISC	DISQUE DISCO SCHEIBE DISCO
3 *	3786088M1	34"	2	DISC	DISQUE DISCO SCHEIBE DISCO
3 *	4271723M1	38"	2	DISC	DISQUE DISCO SCHEIBE DISCO
4	3785846M1	M16	16	NUT	ECROU DADO MUTTER TUERCA
5	3785848M1	∅ 16,3 X 31,5	16	WASHER	RONDELLE RONDELLA UNTERLEGSCHEIBE ARANDELA
6	***3712611M2***	M22	20	NUT SPECIAL	ECROU SPECIAL DADO SPECIALE SPEZIALMUTTER TUERCA ESPECIAL
7	4274219M1		2	PRESSURE VALVE	VALVE VALVOLA PRESSION DRUCKVENTIL VALVULA PRESION

Front Wheels **Roues Avant** **Vorderraeder** **Ruote Anteriori** **Ruedas Delanteras**	**4 Wheel Drive** **4 Roues Motrices** **Allradantrieb** **4 Ruote Motrici** **4 Ruedas Motrices**	**130-20**

Wheel Hub 12 Holes Assembling
Moyeu De Roue 12 Trous Fixation
Radnabe 12 Loch Befestigung
Mozzo Ruote 12 Foros Fissazione
Cubo Rueda 12 Orificios Fijacion

1-WL03-012-A

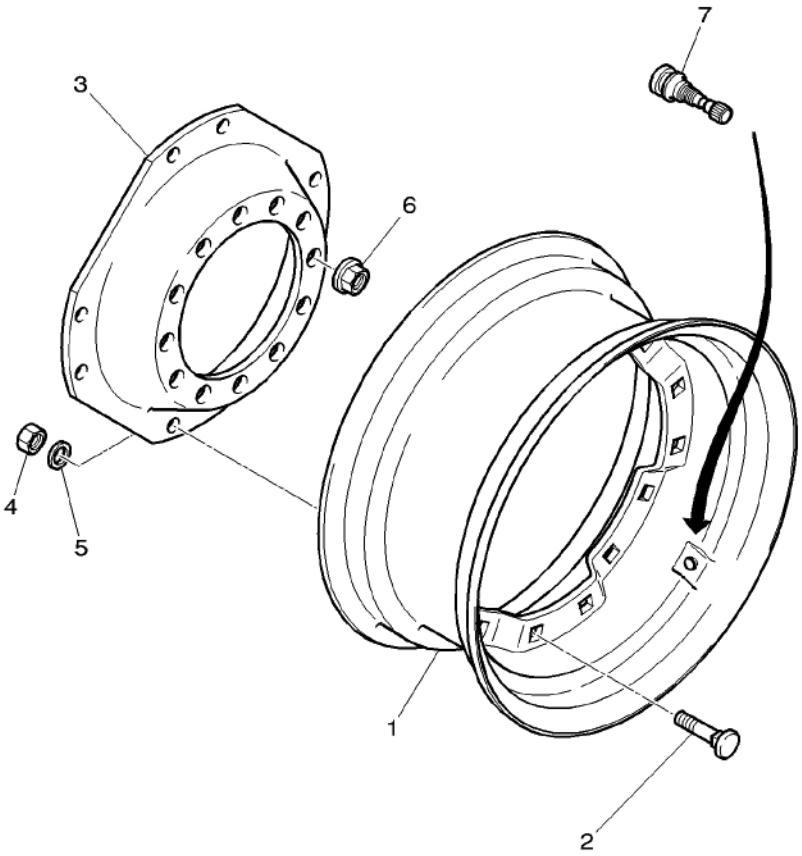

1	3786607M1	W18L X 28"	**2**	RIM	JANTE CERCHIONE	FELGE LLANTA
1	3785778M1	DWW 13 X 30"	**2**	RIM	JANTE CERCHIONE	FELGE LLANTA
1	3785240M1	DWW 15L X 30"	**2**	RIM	JANTE CERCHIONE	FELGE LLANTA
1	3785786M1	W13 X 34"	**2**	RIM	JANTE CERCHIONE	FELGE LLANTA
2	3785847M1		**16**	SCREW	VIS VITE	SCHRAUBE TORNILLO
3	3785098M1	34"	**2**	DISC	DISQUE DISCO	SCHEIBE DISCO
3	4270526M1	28"	**2**	DISC	DISQUE DISCO	SCHEIBE DISCO
4	3785846M1		**16**	NUT	ECROU DADO	MUTTER TUERCA
5	3785848M1		**16**	WASHER	RONDELLE RONDELLA	UNTERLEGSCHEIBE ARANDELA
6	***3712611M2***	M22	**24**	NUT SPECIAL	ECROU SPECIAL DADO SPECIALE	SPEZIALMUTTER TUERCA ESPECIAL
7	4274219M1		**2**	PRESSURE VALVE	VALVE VALVOLA PRESSION	DRUCKVENTIL VALVULA PRESION

Front Wheels **Roues Avant** **Vorderraeder** **Ruote Anteriori** **Ruedas Delanteras**	**4 Wheel Drive** **4 Roues Motrices** **Allradantrieb** **4 Ruote Motrici** **4 Ruedas Motrices**	**130-25**	**Wheel Hub 12 Holes Assembling** **Moyeu De Roue 12 Trous Fixation** **Radnabe 12 Loch Befestigung** **Mozzo Ruote 12 Foros Fissazione** **Cubo Rueda 12 Orificios Fijacion**

1-WL03-013-A

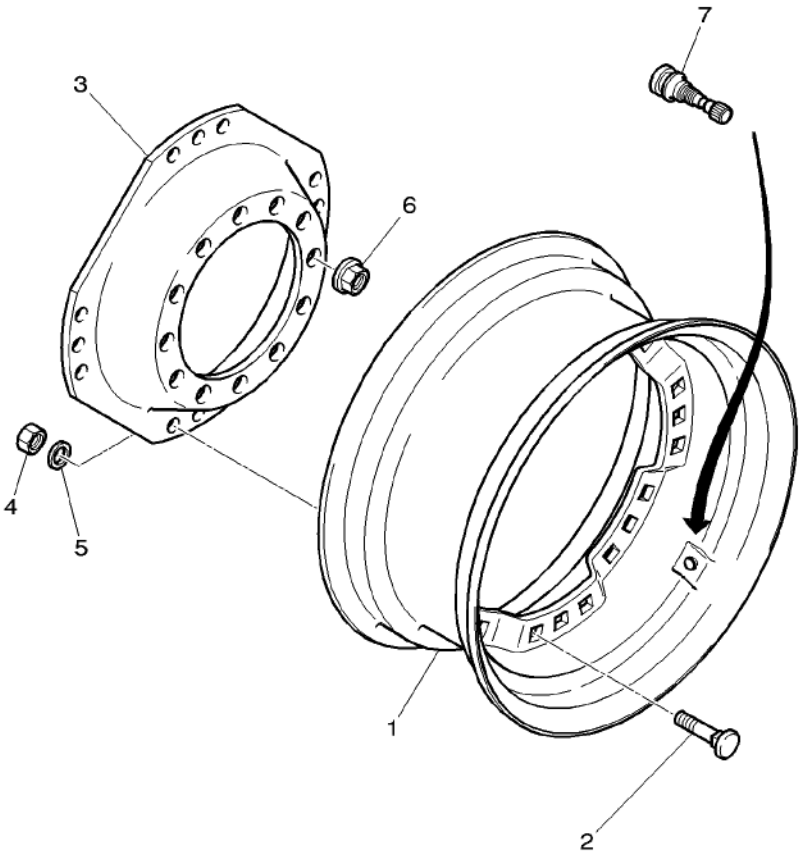

1	4271722M1	W10 X 38"	**2**	RIM	JANTE CERCHIONE	FELGE LLANTA
2	3785847M1		**24**	SCREW	VIS VITE	SCHRAUBE TORNILLO
3	4271724M1	38"	**2**	DISC	DISQUE DISCO	SCHEIBE DISCO
4	3785846M1		**24**	NUT	ECROU DADO	MUTTER TUERCA
5	3785848M1		**24**	WASHER	RONDELLE RONDELLA	UNTERLEGSCHEIBE ARANDELA
6	***3712611M2***	M22	**24**	NUT SPECIAL	ECROU SPECIAL DADO SPECIALE	SPEZIALMUTTER TUERCA ESPECIAL
7	4274219M1		**2**	PRESSURE VALVE	VALVE VALVOLA PRESSION	DRUCKVENTIL VALVULA PRESION

Front Axle 4 Wheel Drive Essieu Avant 4 Roues Motrices Vorderachse-4wd Assale Anteriore 4 Ruote Motrici Doble Traccion De Eje Frontal	Mudguards And Supports Garde Boue Et Supports Radabdeckung Mit Stutze Parafanghi E Supporto Guardabarros Y Soporte	130-30	Rigid Fixe Lenksaeule Fisso Fixe

1-WK14-002-A

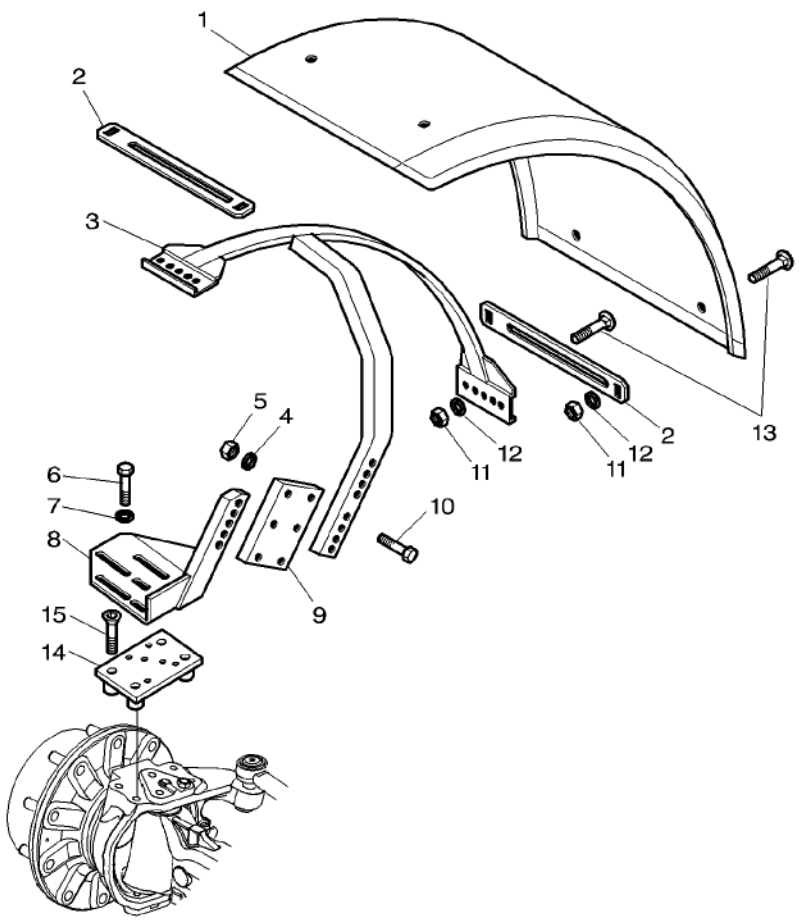

1	3619229M2	▶◀ 470 MM	2	FENDER	AILE PARAFANGO	KOTFLUEGEL GUARDABARRO
1	3779567M1	▶◀ 520 MM	2	FENDER	AILE PARAFANGO	KOTFLUEGEL GUARDABARRO
1*	3780467M1	▶◀ 620 MM	2	FENDER	AILE PARAFANGO	KOTFLUEGEL GUARDABARRO
2	3777586M2	◀▶ 340 MM	4	PLATE	PLAQUE PIASTRA	PLATTE PLATO
2	3777587M2	◀▶ 400 MM	4	PLATE	PLAQUE PIASTRA	PLATTE PLATO
2*	3780468M2	◀▶ 448 MM	4	PLATE	PLAQUE PIASTRA	PLATTE PLATO
3	3777588M1	◀	1	SUPPORT	SUPPORT SUPPORTO	LAGERUNG DISPOS.DE SOSTEN
3	3777590M1	▶	1	SUPPORT	SUPPORT SUPPORTO	LAGERUNG DISPOS.DE SOSTEN
4	390735X1	∅ 12-24 X 2,5	8	WASHER	RONDELLE RONDELLA	UNTERLEGSCHEIBE ARANDELA
5	3009695X1	M12	8	NUT	ECROU DADO	MUTTER TUERCA
6	3009492X1	M10 X 25	6	HEX. SOCK. SCREW	VIS TETE HEX VITE PARKER	ZYLINDERSCHRAUBE TORN.CAB.HUECA
7	390597X1	∅ 10-30 X 2,5	6	WASHER	RONDELLE RONDELLA	UNTERLEGSCHEIBE ARANDELA
8	3784571M1	◀	1	SUPPORT	SUPPORT SUPPORTO	LAGERUNG DISPOS.DE SOSTEN
8	3784572M1	▶	1	SUPPORT	SUPPORT SUPPORTO	LAGERUNG DISPOS.DE SOSTEN
9	3779565M2		2	SPACER	ENTRETOISE DISTANZIALE	ABSTANDSTUECK DISCO ESPACIADOR
10	3009513X1	M12 X 65	8	HEX. SOCK. SCREW	VIS TETE HEX VITE PARKER	ZYLINDERSCHRAUBE TORN.CAB.HUECA
11	339402X1	M10	12	NUT	ECROU DADO	MUTTER TUERCA
12	390734X1	∅ 10-21 X 2	12	WASHER	RONDELLE RONDELLA	UNTERLEGSCHEIBE ARANDELA
13	**390809X1**	M10 X 25	12	SCREW SPECIAL	VIS SPECIALE VITE SPECIALE	SPEZIALSCHRAUBE TORNILLO ESPEC.
14	3784569M1		2	SUPPORT	SUPPORT SUPPORTO	LAGERUNG DISPOS.DE SOSTEN
15	3009480X1	M16 X 60	8	SCREW	VIS VITE	SCHRAUBE TORNILLO

Front Axle 4 Wheel Drive Essieu Avant 4 Roues Motrices Vorderachse-4wd Assale Anteriore 4 Ruote Motrici Doble Traccion De Eje Frontal	Mudguards And Supports Garde Boue Et Supports Radabdeckung Mit Stutze Parafanghi E Supporto Guardabarros Y Soporte	130-35	Pivoting Pivotant Luftpolsterungssitz Girando Redondo

1-WK14-003-B

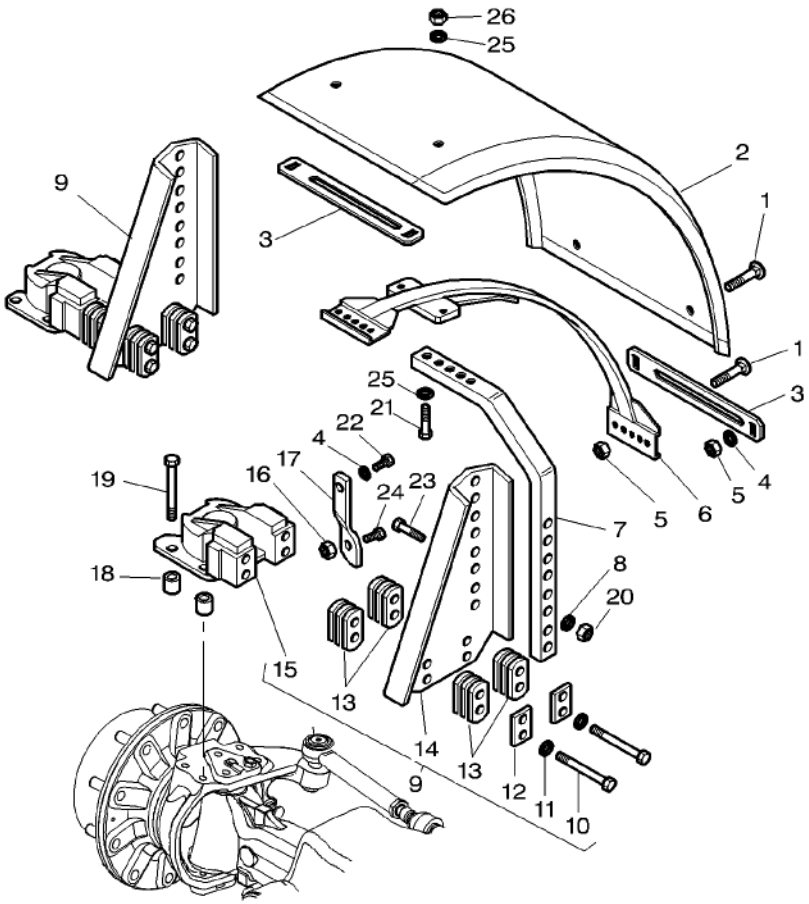

1*	390809X1	M10 X 25	12	SCREW SPECIAL	VIS SPECIALE VITE SPECIALE	SPEZIALSCHRAUBE TORNILLO ESPEC.
2	3619229M2	▶◀ 470 MM	2	FENDER	AILE PARAFANGO	KOTFLUEGEL GUARDABARRO
2*	3779567M1	▶◀ 520 MM	2	FENDER	AILE PARAFANGO	KOTFLUEGEL GUARDABARRO
2*	3780467M1	▶◀ 620 MM	2	FENDER	AILE PARAFANGO	KOTFLUEGEL GUARDABARRO
3	3777586M2	◀▶ 340 MM	4	PLATE	PLAQUE PIASTRA	PLATTE PLATO
3*	3777587M2	◀▶ 400 MM	4	PLATE	PLAQUE PIASTRA	PLATTE PLATO
3*	3780468M2	◀▶ 448 MM	4	PLATE	PLAQUE PIASTRA	PLATTE PLATO
4	390734X1	∅ 10-21 X 2	14	WASHER	RONDELLE RONDELLA	UNTERLEGSCHEIBE ARANDELA
5	339402X1	M10	12	NUT	ECROU DADO	MUTTER TUERCA
6	3784948M1		2	SAFETY FRAME	ARCEAU TELAIO SICUREZZA	SICHERH. RAHMEN BAST.SEGURIDAD
7	3784947M2		2	ARM	BRAS BRACCIO	ARM BRAZO
8	390735X1	∅ 12-24 X 2,5	8	WASHER	RONDELLE RONDELLA	UNTERLEGSCHEIBE ARANDELA
9	3784945M92	▶	1	PIVOT	PIVOT CARDINE	DREHZAPFEN PIVOTE
9	3784946M92	◀	1	PIVOT	PIVOT CARDINE	DREHZAPFEN PIVOTE
10	1442602X1	9 M10 X 100	4	HEX. SOCK. SCREW	VIS TETE HEX VITE PARKER	ZYLINDERSCHRAUBE TORN.CAB.HUECA
11	390734X1	9 ∅ 10-21 X 2	4	WASHER	RONDELLE RONDELLA	UNTERLEGSCHEIBE ARANDELA
12	3785052M1	9	2	BRIDLE	BRIDE BRIGLIA	SPANNBAND BRIDA
13	3785051M1	9	26	SPACER	ENTRETOISE DISTANZIALE	ABSTANDSTUECK DISCO ESPACIADOR
14	3785050M1	9 ◀	1	PLATE	PLAQUE PIASTRA	PLATTE PLATO
14	3785049M1	9 ▶	1	PLATE	PLAQUE PIASTRA	PLATTE PLATO
15	3785109M2	9 ▶ 130-40 No 1	1	PIVOT	PIVOT CARDINE	DREHZAPFEN PIVOTE
15	3785306M2	9 ◀ 130-40 No 1	1	PIVOT	PIVOT CARDINE	DREHZAPFEN PIVOTE
16	339054X1	M12	2	NUT	ECROU DADO	MUTTER TUERCA
17	3788128M3	N335044 ◀	1	STRAP	PATTE CORREGGIA	LASCHE FAJA
17*	4280475M1	N335045 ◀	1	STRAP	PATTE CORREGGIA	LASCHE FAJA
17	3788127M3	N335044 ▶	1	STRAP	PATTE CORREGGIA	LASCHE FAJA

Front Axle 4 Wheel Drive Essieu Avant 4 Roues Motrices Vorderachse-4wd Assale Anteriore 4 Ruote Motrici Doble Traccion De Eje Frontal	Mudguards And Supports Garde Boue Et Supports Radabdeckung Mit Stutze Parafanghi E Supporto Guardabarros Y Soporte	130-35	Pivoting Pivotant Luftpolsterungssitz Girando Redondo

1-WK14-003-B

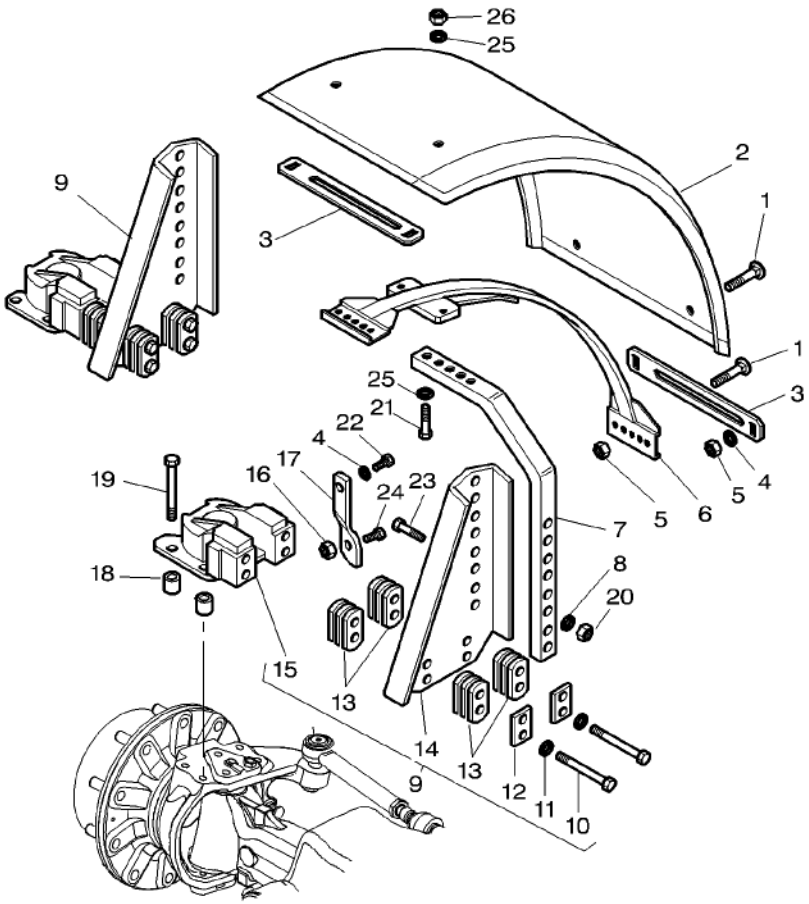

17*	4280473M1	➡ N335045 ▶	1	STRAP	PATTE CORREGGIA	LASCHE FAJA
18	3385920M1	➡ N335044 ∅ 17.6-32 X 40	8	SPACER	ENTRETOISE DISTANZIALE	ABSTANDSTUECK DISCO ESPACIADOR
18*	3011172X1	➡ N335045 ∅ 17.6-32 X 30	8	SPACER	ENTRETOISE DISTANZIALE	ABSTANDSTUECK DISCO ESPACIADOR
19	391889X1	M16 X 70	8	HEX. SOCK. SCREW	VIS TETE HEX VITE PARKER	ZYLINDERSCHRAUBE TORN.CAB.HUECA
19*	339881X1	M16 X 60	8	HEX. SOCK. SCREW	VIS TETE HEX VITE PARKER	ZYLINDERSCHRAUBE TORN.CAB.HUECA
20	1442190X1	M12	4	LOCKNUT	ECROU BLOCAGE AUTOBLOCCANTE	SICHERUNGSMUTTER CONTRATUERCA
21	1441226X1	M12 X 40	4	HEX. SOCK. SCREW	VIS TETE HEX VITE PARKER	ZYLINDERSCHRAUBE TORN.CAB.HUECA
22	1441302X1	M10 X 30	2	HEX. SOCK. SCREW	VIS TETE HEX VITE PARKER	ZYLINDERSCHRAUBE TORN.CAB.HUECA
23	3009510X1	M12 X 50	4	HEX. SOCK. SCREW	VIS TETE HEX VITE PARKER	ZYLINDERSCHRAUBE TORN.CAB.HUECA
24	1440716X1	M12 X 30	2	HEX. SOCK. SCREW	VIS TETE HEX VITE PARKER	ZYLINDERSCHRAUBE TORN.CAB.HUECA
25	1441664X1	∅ 16-30 X 3	8	WASHER	RONDELLE RONDELLA	UNTERLEGSCHEIBE ARANDELA
26	1442190X1	M12	4	LOCKNUT	ECROU BLOCAGE AUTOBLOCCANTE	SICHERUNGSMUTTER CONTRATUERCA

Front Axle 4 Wheel Drive Essieu Avant 4 Roues Motrices Vorderachse-4wd Assale Anteriore 4 Ruote Motrici Doble Traccion De Eje Frontal	Mudguards And Supports Garde Boue Et Supports Radabdeckung Mit Stutze Parafanghi E Supporto Guardabarros Y Soporte	130-40

1-WK14-004-A

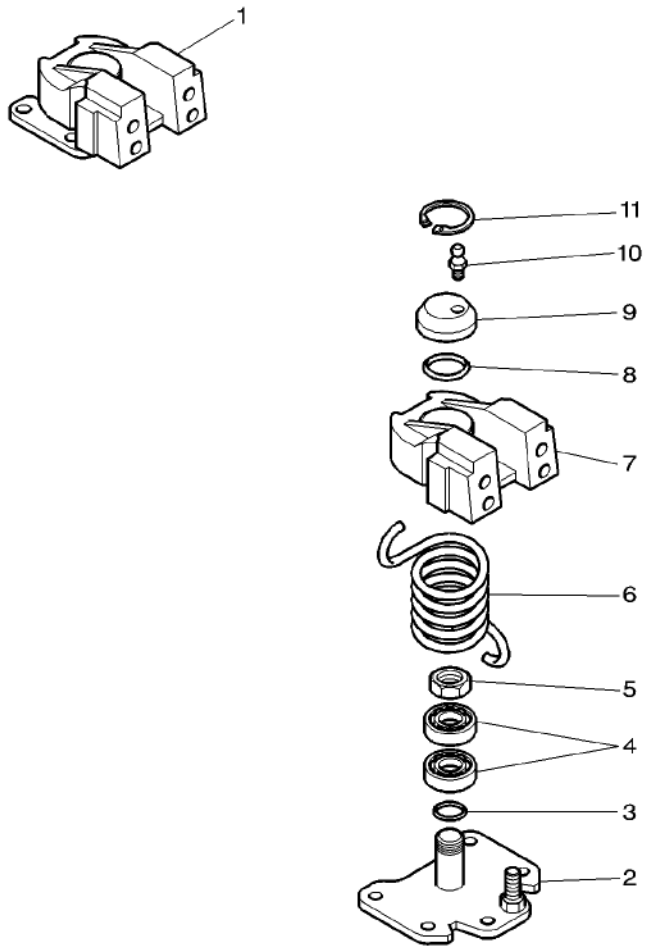

1*	3785306M2	◀	1	PIVOT	PIVOT CARDINE	DREHZAPFEN PIVOTE
1*	3785109M2	▶	1	PIVOT	PIVOT CARDINE	DREHZAPFEN PIVOTE
2		1 REF. 1	1	PEDESTAL	SOCLE PIEDISTALLO	SOCKEL PEDESTAL
3	3903902M1	1	1	GASKET	JOINT GUARNIZIONE	DICHTSCHEIBE EMPAQUETADURA.
4	3903897M1	1	2	BEARING ASSY	ROULEMENT CUSCINETTO COMPL	RADIALLAGER RODAMIENTO RAD
5	3000845X1	1 M25	1	TOP LOCKNUT	ECROU FREIN DADO DI TESTA	SELBSTS.MUTTER CONTRATUERCA SUP
6	3903899M1	1 ◀	1	SPRING	RESSORT MOLLA	FEDER RESORTE
6	3903898M1	1 ▶	1	SPRING	RESSORT MOLLA	FEDER RESORTE
7		1 REF. 1	1	COVER	COUVERCLE COPERCHIO	DECKEL CUBIERTA
8	3903903M1	1	1	GASKET	JOINT GUARNIZIONE	DICHTSCHEIBE EMPAQUETADURA.
9	3903896M1	1	1	COVER	COUVERCLE COPERCHIO	DECKEL CUBIERTA
10	3903900M1	1	1	GREASER	GRAISSEUR INGRASSATORE	FETTNIPPEL ENGRASADOR
11	3903901M1	1	1	SEGMENT	SEGMENT SEGMENTO	SEGMENT SEGMENTO

Rear Wheels Roues Arriere Hinterraeder Ruote Posteriori Ruedas Traseras	130-45	Wheel Hub 10 Holes Assembling Moyeu De Roues 10 Trous De Fixation Radnabe 10 Loch Befestigung Mozzo Ruote 10 Foros Fissazione Cubo Rueda 10 Orificios Fijacion

1-WM01-004-C

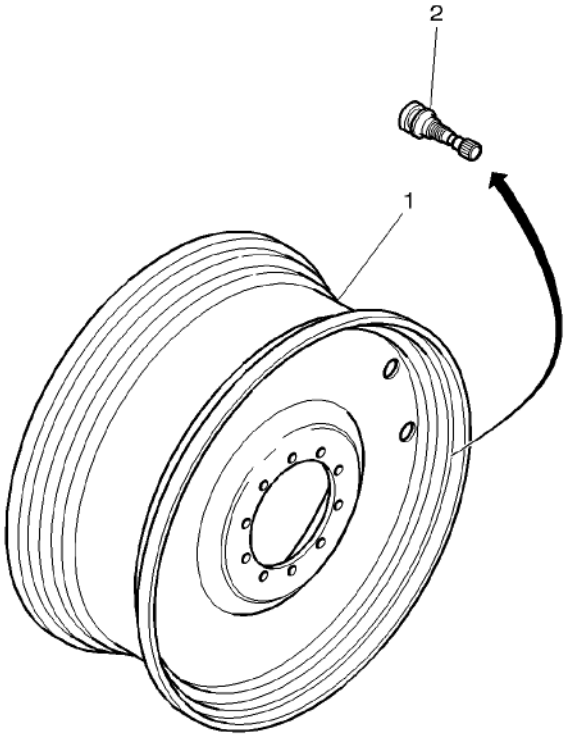

1	3784119M1	[DI] DWW 14L X 38"	2 RIM	JANTE CERCHIONE	FELGE LLANTA
1	3781970M2	[AJ] DWW 16L X 38"	2 RIM	JANTE CERCHIONE	FELGE LLANTA
1	3781971M2	[BJ] DWW 18L X 38"	2 RIM	JANTE CERCHIONE	FELGE LLANTA
1	3781972M2	[C] DWW 23A X 38"	2 RIM	JANTE CERCHIONE	FELGE LLANTA
1	3781968M2	[EJ] DWW 16L X 42"	2 RIM	JANTE CERCHIONE	FELGE LLANTA
1	3781969M2	[FJ] DWW 18L X 42"	2 RIM	JANTE CERCHIONE	FELGE LLANTA
1	3787712M1	[GJ] W 13 X 46"	2 RIM	JANTE CERCHIONE	FELGE LLANTA
1	3781982M2	[J] DD 16 X 46"	2 RIM	JANTE CERCHIONE	FELGE LLANTA
2	4274219M1		2 PRESSURE VALVE	VALVE VALVOLA PRESSION	DRUCKVENTIL VALVULA PRESION

[A] USED WITH 16.9–18.4–20.8–420/85–460/85–480/70 –520/70–540/65 X 38" TYRES
UTILISE AVEC PNEUS 16.9–18.4–20.8–420/85–460/85 –480/70–520/70–540/65 X 38"
VERWENDEN MIT REIFEN 16.9–18.4–20.8–420/85–460/85 –480/70–520/70–540/65 X 38"
USATO CON PNEUMATICI 16.9–18.4–20.8–420/85–460/85 –480/70–520/70–540/65 X 38"
EMPLEAR CON NEUMATICOS 6.9–18.4–20.8–420/85 –460/85–480/70–520/70–540/65 X 38"

[B] USED WITH 20.8–520/70–520/85–580/70–600/65 –650/65 X 38" TYRES
UTILISE AVEC PNEUS 20.8–520/70–520/85–580/70 –600/65–650/65 X 38"
VERWENDEN MIT REIFEN 20.8–520/70–520/85–580/70 –600/65–650/65 X 38"
USATO CON PNEUMATICI 20.8–520/70–520/85–580/70 –600/65–650/65 X 38"
EMPLEAR CON NEUMATICOS 20.8–520/70–520/85–580/70 –600/65–650/65 X 38"

[C] USED WITH 650/85–710/70 X 38" TYRES
UTILISE AVEC PNEUS 650/85–710/70 X 38"
VERWENDEN MIT REIFEN 650/85–710/70 X 38"
USATO CON PNEUMATICI 650/85–710/70 X 38"
EMPLEAR CON NEUMATICOS 650/85–710/70 X 38"

[D] USED WITH 16,9 – 420/85 X 38" TYRES
UTILISE AVEC PNEUS 16,9 AND 420/85 X 38"
VERWENDEN MIT REIFEN 16,9 – 420/85 X 38"
USATO CON PNEUMATICI 16,9 – 420/85 X 38"
EMPLEAR CON NEUMATICOS 16,9 – 420/85 X 38"

[E] USED WITH 18.4 X 42" TYRES
UTILISE AVEC PNEUS 18.4 X 42"
VERWENDEN MIT REIFEN 18.4 X 42"
USATO CON PNEUMATICI 18.4 X 42"
EMPLEAR CON NEUMATICOS 18.4 X 42"

1-WM01-004-C

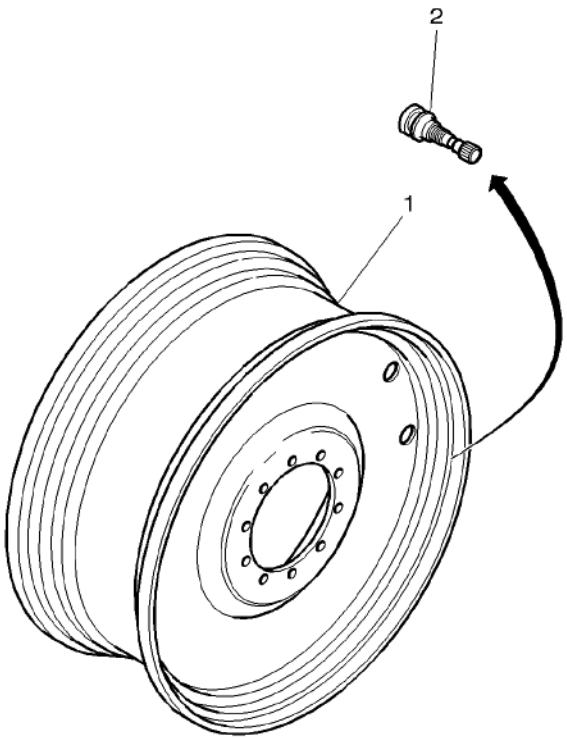

[F] USED WITH 20.8–620/70–350/65–520/85 X 42" TYRES
UTILISE AVEC PNEUS 20.8–620/70–350/65 –520/85 X 42"
VERWENDEN MIT REIFEN 20.8–620/70–350/65 –520/85 X 42"
USATO CON PNEUMATICI 20.8–620/70–350/65 –520/85 X 42"
EMPLEAR CON NEUMATICOS 20.8–620/70–350/65 –520/85 X 42"

[G] USED WITH 19.90" X 46" TYRES
UTILISE AVEC PNEUS 14.90" X 46"
NUR FUER REIFEN 14.90" X 46"
USARE CON PNEUMATICO 14.90" X 46"
USAR CON NEUMATICOS 14.90" X 46"

[I] WITH SHAFT DIAMETER 82 MM
AVEC ARBRE DIAMETRE 82 MM
MIT WELLE DURCHMESSER 82 MM
CON ALBERO DIAMETRO 82 MM
CON EJE DIAMETRO 82 MM

[J] CAN BE TWINED FITTED
PEUT ETRE MONTEE JUMELEE
KANN DOPPLEMONTIERT SEIN
PUO ESSARE ACCOPIARE
SE PUEDE EMPAREJA

Rear Wheels Roues Arriere Hinterraeder Ruote Posteriori Ruedas Traseras	130-50	Wheel Hub 10 Holes Assembling Moyeu De Roues 10 Trous De Fixation Radnabe 10 Loch Befestigung Mozzo Ruote 10 Foros Fissazione Cubo Rueda 10 Orificios Fijacion

1-WM01-008-B

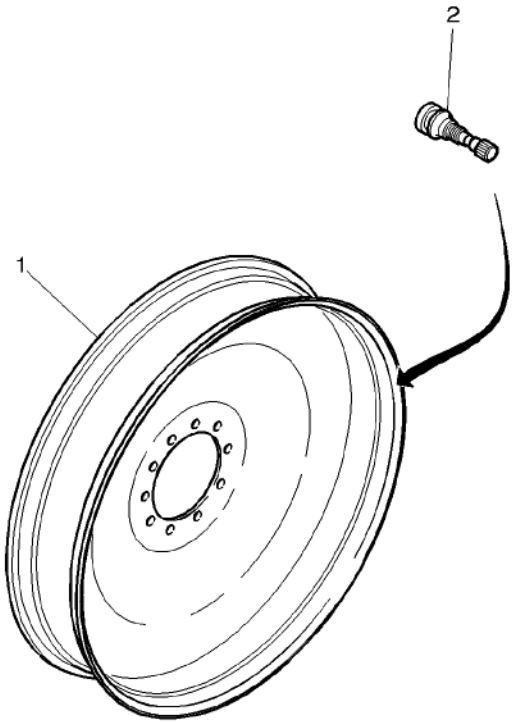

1	4271725M1	[A] W10 X 50"	2	RIM	JANTE CERCHIONE	FELGE LLANTA
1*	4271729M1	W10 X 54"	2	RIM	JANTE CERCHIONE	FELGE LLANTA
2	4274219M1		2	PRESSURE VALVE	VALVE VALVOLA PRESSION	DRUCKVENTIL VALVULA PRESION

[A] CAN BE TWINED FITTED
PEUT ETRE MONTEE JUMELEE
KANN DOPPLEMONTIERT SEIN
PUO ESSARE ACCOPIARE
SE PUEDE EMPAREJA

Rear Wheels Roues Arriere Hinterraeder Ruote Posteriori Ruedas Traseras	130-55	Wheel Hub 10 Holes Assembling Moyeu De Roues 10 Trous De Fixation Radnabe 10 Loch Befestigung Mozzo Ruote 10 Foros Fissazione Cubo Rueda 10 Orificios Fijacion

1-WM01-009-A

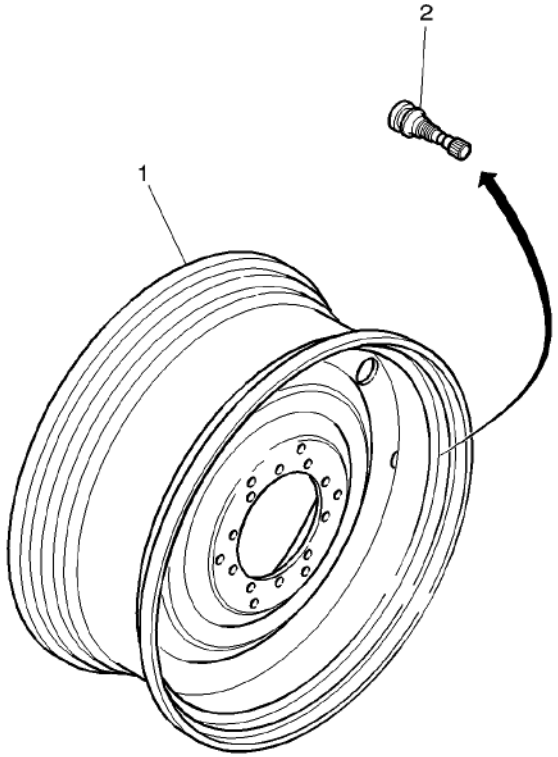

1	3788574M1	[A] DWW 27A X 42"	2	RIM	JANTE CERCHIONE	FELGE LLANTA
2	4274219M1		2	PRESSURE VALVE	VALVE VALVOLA PRESSION	DRUCKVENTIL VALVULA PRESION

[A] CAN BE TWINED FITTED
PEUT ETRE MONTEE JUMELEE
KANN DOPPLEMONTIERT SEIN
PUO ESSARE ACCOPIARE
SE PUEDE EMPAREJA

Rear Wheels
Roues Arriere
Hinterraeder
Ruote Posteriori
Ruedas Traseras

130-60

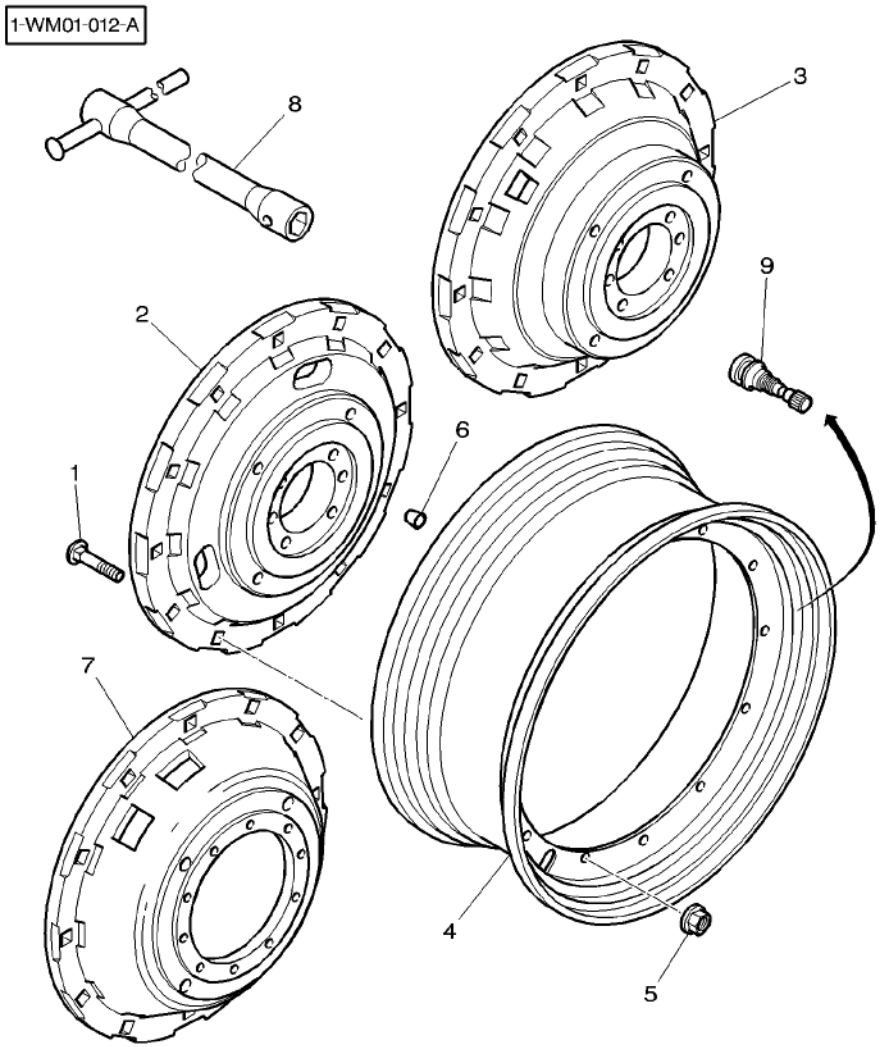

1	3384603M1	M18 X 95	**24** BOLT	BOULON BULLONE	MASCH.SCHRAUBE ESPIGA/BULON
2	3582139M4	38" 195 KG	**2** FLANGE	FLASQUE FLANGIA	FLANSCH PLETINA
3	3615370M3	38" 260 KG	**2** FLANGE	FLASQUE FLANGIA	FLANSCH PLETINA
4	3781929M1	[FGI] DWW 16L X 38"	**2** RIM	JANTE CERCHIONE	FELGE LLANTA
4	3781930M1	[FI] DWW 18L X 38"	**2** RIM	JANTE CERCHIONE	FELGE LLANTA
4	3782154M1	[F] DWW 23A X 38"	**2** RIM	JANTE CERCHIONE	FELGE LLANTA
4	3781926M1	[DF] DWW 16L X 42"	**2** RIM	JANTE CERCHIONE	FELGE LLANTA
4	3782155M1	[CF] DWW 18L X 42"	**2** RIM	JANTE CERCHIONE	FELGE LLANTA
4	3787713M1	[AFG] W 13 X 46"	**2** RIM	JANTE CERCHIONE	FELGE LLANTA
4	3782157M2	[BF] DD 16 X 46"	**2** RIM	JANTE CERCHIONE	FELGE LLANTA
4	4271726M1	[E] W 10 X 50"	**2** RIM	JANTE CERCHIONE	FELGE LLANTA
4*	4271730M1	[H] W 10 X 54"	**2** RIM	JANTE CERCHIONE	FELGE LLANTA
5	***3384600M2***	M18	**24** NUT SPECIAL	ECROU SPECIAL DADO SPECIALE	SPEZIALMUTTER TUERCA ESPECIAL
6	3780302M1		**8** DOWEL	PLOT SPINA	ZYLINDERSTIFT CENTRAJE
7	3716108M3	38" 209 KG	**1** DISC	DISQUE DISCO	SCHEIBE DISCO
8	3386406M1		**1** SPANNER	CLE CHIAVE	SCHR.SCHLUESSEL LLAVE DE RUEDA
9	4274219M1		**2** PRESSURE VALVE	VALVE VALVOLA PRESSION	DRUCKVENTIL VALVULA PRESION

[A] WITH RIM 3716108M3 CAN BE TWINED FITTED WITH WHEEL 3787712M1
AVEC VOILE 3716108M3 PEUT ETRE JUMELEE AVEC JANTE 3787712M1
MIT RADSCHUESSEL 3716108M3 KANN MIT FELGE 3787712M1 DOPPLEMONTIERT SEIN
CON CERCHIONE 3716108M3 PUO ESSARE ACCOPIARE CON RUOTA 3787712M1
CON LLANTA 3716108M3 SE PUEDE EMPAREJA CON RUEDA 3787712M1

[B] WITH RIM 3716108M3 CAN BE TWINED FITTED WITH WHEEL 3781982M1
AVEC VOILE 3716108M3 PEUT ETRE JUMELEE AVEC JANTE 3781982M1
MIT RADSCHUESSEL 3716108M3 KANN MIT FELGE 3781982M1 DOPPLEMONTIERT SEIN
CON CERCHIONE 3716108M3 PUO ESSARE ACCOPIARE CON RUOTA 3781982M1
CON LLANTA 3716108M3 SE PUEDE EMPAREJA CON RUEDA 3781982M1

[C] WITH RIM 3716108M3 CAN BE TWINED FITTED WITH WHEEL 3781969M2
AVEC VOILE 3716108M3 PEUT ETRE JUMELEE AVEC JANTE 3781969M2
MIT RADSCHUESSEL 3716108M3 KANN MIT FELGE 3781969M2 DOPPLEMONTIERT SEIN
CON CERCHIONE 3716108M3 PUO ESSARE ACCOPIARE CON RUOTA 3781969M2
CON LLANTA 3716108M3 SE PUEDE EMPAREJA CON RUEDA 3781969M2

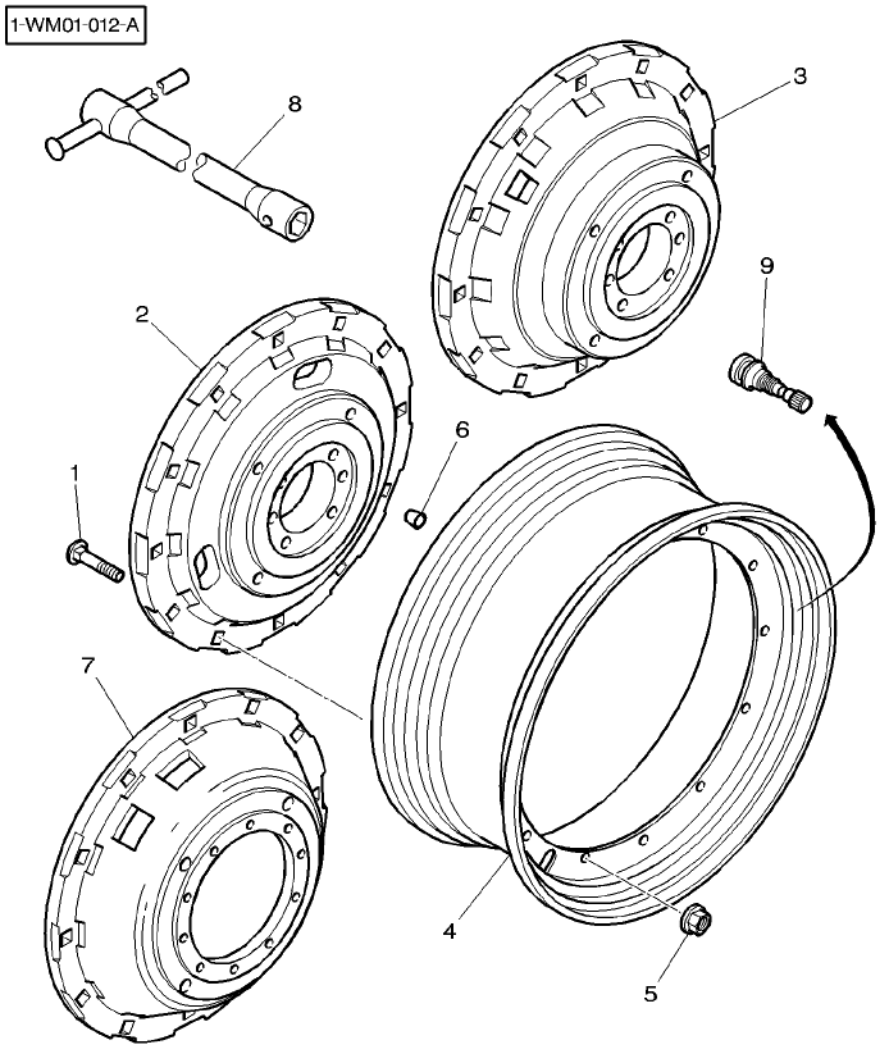

[D] WITH RIM 3716108M3 CAN BE TWINED FITTED WITH WHEEL 3781968M2
AVEC VOILE 3716108M3 PEUT ETRE JUMELEE AVEC JANTE 3781968M2
MIT RADSCHUESSEL 3716108M3 KANN MIT FELGE 3781968M2 DOPPLEMONTIERT SEIN
CON CERCHIONE 3716108M3 PUO ESSARE ACCOPIARE CON RUOTA 3781968M2
CON LLANTA 3716108M3 SE PUEDE EMPAREJA CON RUEDA 3781968M2

[E] WITH RIM 3716108M3 CAN BE TWINED FITTED WITH WHEEL 4271725M1
AVEC VOILE 3716108M3 PEUT ETRE JUMELEE AVEC JANTE 4271725M1
MIT RADSCHUESSEL 3716108M3 KANN MIT FELGE 4271725M1 DOPPLEMONTIERT SEIN
CON CERCHIONE 3716108M3 PUO ESSARE ACCOPIARE CON RUOTA 4271725M1
CON LLANTA 3716108M3 SE PUEDE EMPAREJA CON RUEDA 4271725M1

[F] WITH RIM 3716108M3 CAN BE TWINED FITTED
AVEC VOILE 3716108M3 PEUT ETRE JUMELEE
MIT RADSCHUESSEL 3716108M3 KANN DOPPLEMONTIERT SEIN
CON CERCHIONE 3716108M3 PUO ESSARE ACCOPIARE
CON LLANTA 3716108M3 SE PUEDE EMPAREJA

[G] WITH RIM 3582139M4+3615370M3 CAN BE TWINED FITTED
AVEC VOILE 3582139M4+3615370M3 PEUT ETRE JUMELEE
MIT RADSCHUESSEL 3582139M4+3615370M3 KANN DOPPLEMONTIERT SEIN
CON CERCHIONE 3582139M4+3615370M3 PUO ESSARE ACCOPIARE
CON LLANTA 3582139M4+3615370M3 SE PUEDE EMPAREJA

[H] WITH RIM 3716108M3 CAN BE TWINED FITTED WITH WHEEL 4271729M1
AVEC VOILE 3716108M3 PEUT ETRE JUMELEE AVEC JANTE 4271729M1 DOPPLEMONTIERT SEIN
MIT RADSCHUESSEL 3716108M3 KANN MIT FELGE 4271729M1
CON CERCHIONE 3716108M3 PUO ESSARE ACCOPIARE CON RUOTA 4271729M1
CON LLANTA 3716108M3 SE PUEDE EMPAREJA CON RUEDA 4271729M1

[I] WITH RIM 3716108M3 CAN BE TWINED FITTED WITH WHEEL 3781971M1
AVEC VOILE 3716108M3 PEUT ETRE JUMELEE AVEC JANTE 3781971M1
MIT RADSCHUESSEL 3716108M3 KANN MIT FELGE 3781971M1 DOPPLEMONTIERT SEIN
CON CERCHIONE 3716108M3 PUO ESSARE ACCOPIARE CON RUOTA 3781971M1
CON LLANTA 3716108M3 SE PUEDE EMPAREJA CON RUEDA 3781971M1

Rear Wheels	Fixing By Cone	130-65	Shaft Diameter 110 Mm / Cone/Wheel Hub Reversed
Roues Arriere	Fixation Par Cone		Arbre Diametre 110 Mm / Cone/Moyeu Inverse
Hinterraeder	Anbau Der Konus		Durchmesserwelle 110mm / Konus/Radnabegegenklarung
Ruote Posteriori	Montaggio Con Cono		Albero Diametro 110 Mm / Cono/Mozzo Di Ruota Invertito
Ruedas Traseras	Fijacion Con Cono		Palier Diametro 110mm / Cono/Cubo De Rueda Inverso

1-WM05-007-A

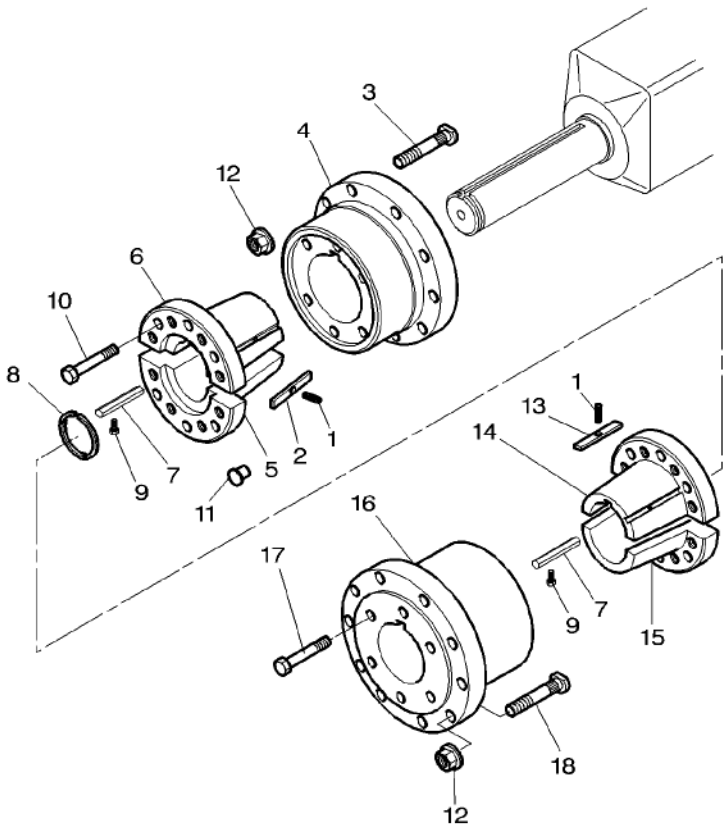

					●	SINGLE WHEELS	ROUES SIMPLES RUOTE SINGOLE	EINFACHRAEDER RUEDAS SENCILLAS
					●	DUAL WHEELS	ROUES JUMELEES RUOTE ACCOPIATE	ZWILLINGSRAEDER RUEDAS DOBLES
1	763786M1	∅ 3 X 19	4	2		PIN	GOUPILLE PERNO	BOLZEN PASADOR
2	509816M3		2	2		KEY	CLAVETTE CHIAVETTA	PASSKEIL CLAVE
3	3792488M2	[A] M22 X 78	20	20		STUD	GOUJON PRIGIONIERO	STEHBOLZEN CHAVETA ROSCADO
3	***3716105M2***	[B] M22 X 100	20	20		STUD	GOUJON PRIGIONIERO	STEHBOLZEN CHAVETA ROSCADO
4	3716107M2		2	2		HUB	MOYEU MOZZO	NABE CUBO
5	3716269M1	◄► 198 MM	2	2		CONE	CONE CONO	KONUS CONO
6	3716268M1	◄► 198 MM	2	2		CONE	CONE CONO	KONUS CONO
7	3716106M4		4	2		KEY	CLAVETTE CHIAVETTA	PASSKEIL CLAVE
8	3010765X1		4	2		RING	ANNEAU ANELLO	RING ARO
9	1440350X1	M6 X 20	4	2		SCREW METRIC	VIS METRIQUE VITE METRICA	SCHRAUBE METR TORNILLO METRICO
10	3010569X1	M20 X 80	12	12		HEX. SOCK. SCREW	VIS TETE HEX VITE PARKER	ZYLINDERSCHRAUBE TORN.CAB.HUECA
11	3791968M1		16	16		PLUG	BOUCHON TAPPO	VERSCHL.STOPFEN TAPON
12	***3712611M2***	M22	40	20		NUT SPECIAL	ECROU SPECIAL DADO SPECIALE	SPEZIALMUTTER TUERCA ESPECIAL
13	3787102M1		2			KEY	CLAVETTE CHIAVETTA	PASSKEIL CLAVE
14	3786847M1		2			CONE	CONE CONO	KONUS CONO
15	3786848M1		2			CONE	CONE CONO	KONUS CONO
16	3786490M1		2			HUB	MOYEU MOZZO	NABE CUBO
17	3580230M1	M20 X 190	16			HEX. SOCK. SCREW	VIS TETE HEX VITE PARKER	ZYLINDERSCHRAUBE TORN.CAB.HUECA
18	3792488M2	[A] M22 X 78	20			STUD	GOUJON PRIGIONIERO	STEHBOLZEN CHAVETA ROSCADO

[A] WITH RIM STEEL
AVEC JANTE ACIER
MIT FELGE STAHL
CON CERCHIONE ACCIAID
CON LLANTA ACERO

Rear Wheels **Roues Arriere** **Hinterraeder** **Ruote Posteriori** **Ruedas Traseras**	**Fixing By Cone** **Fixation Par Cone** **Anbau Der Konus** **Montaggio Con Cono** **Fijacion Con Cono**	**130-65**	**Shaft Diameter 110 Mm / Cone/Wheel Hub Reversed** **Arbre Diametre 110 Mm / Cone/Moyeu Inverse** **Durchmesserwelle 110mm / Konus/Radnabegegenklarung** **Albero Diametro 110 Mm / Cono/Mozzo Di Ruota Invertito** **Palier Diametro 110mm / Cono/Cubo De Rueda Inverso**

1-WM05-007-A

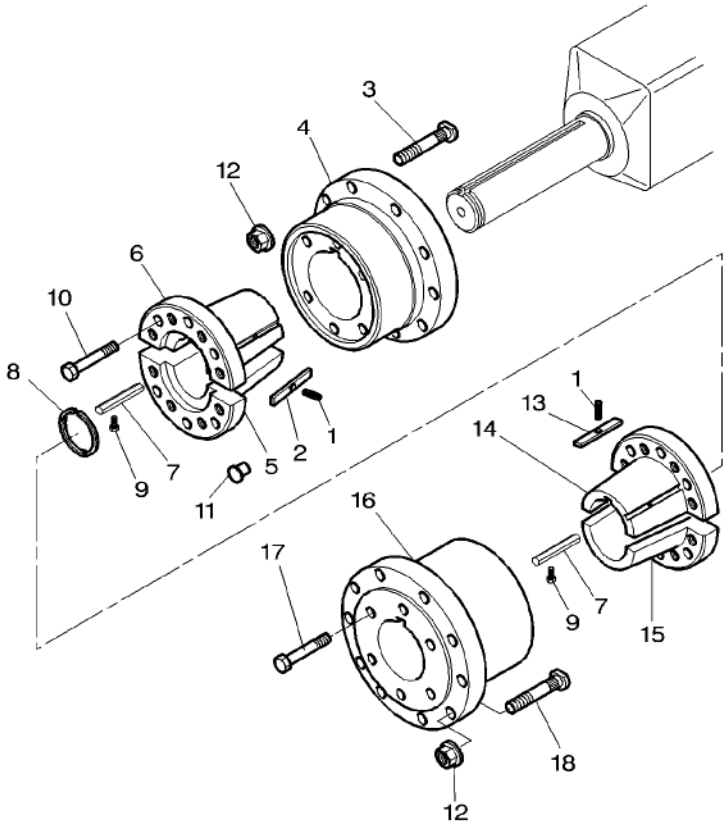

- SINGLE WHEELS — ROUES SIMPLES / RUOTE SINGOLE — EINFACHRAEDER / RUEDAS SENCILLAS
- DUAL WHEELS — ROUES JUMELEES / RUOTE ACCOPIATE — ZWILLINGSRAEDER / RUEDAS DOBLES

[B] WITH CAST WHEELS
AVEC ROUES FONTE
MIT GUSSFELGEN
CON RUOTA FUSA
CON RUEDAS DE FUNDICION

Rear Wheels **Roues Arriere** **Hinterraeder** **Ruote Posteriori** **Ruedas Traseras**	**Fixing By Cone** **Fixation Par Cone** **Anbau Der Konus** **Montaggio Con Cono** **Fijacion Con Cono**	**130-70**

Short Shaft Diameter 110mm – With Spacers For Dual Wheels Cone/Wheel Hub Reversed
Arbre Court Diametre 110mm – Avec Entretoises Pour Roues Cone/Moyeu Inverse
Durchmesserkurzwelle 110mm – Mit Abstandstueck Fur Zwillingsraeder Radnabe Gegenklaerung
Albero Corto Diametro 110mm – Con Distanziale Per Ruote Accopiate Mozzo Di Ruota Invertito
Palier Corto Diametro 110mm – Con Piezas Distances Por Ruedas Dobles Cono/Cubo De Rueda Invers

1-WM05-008-A

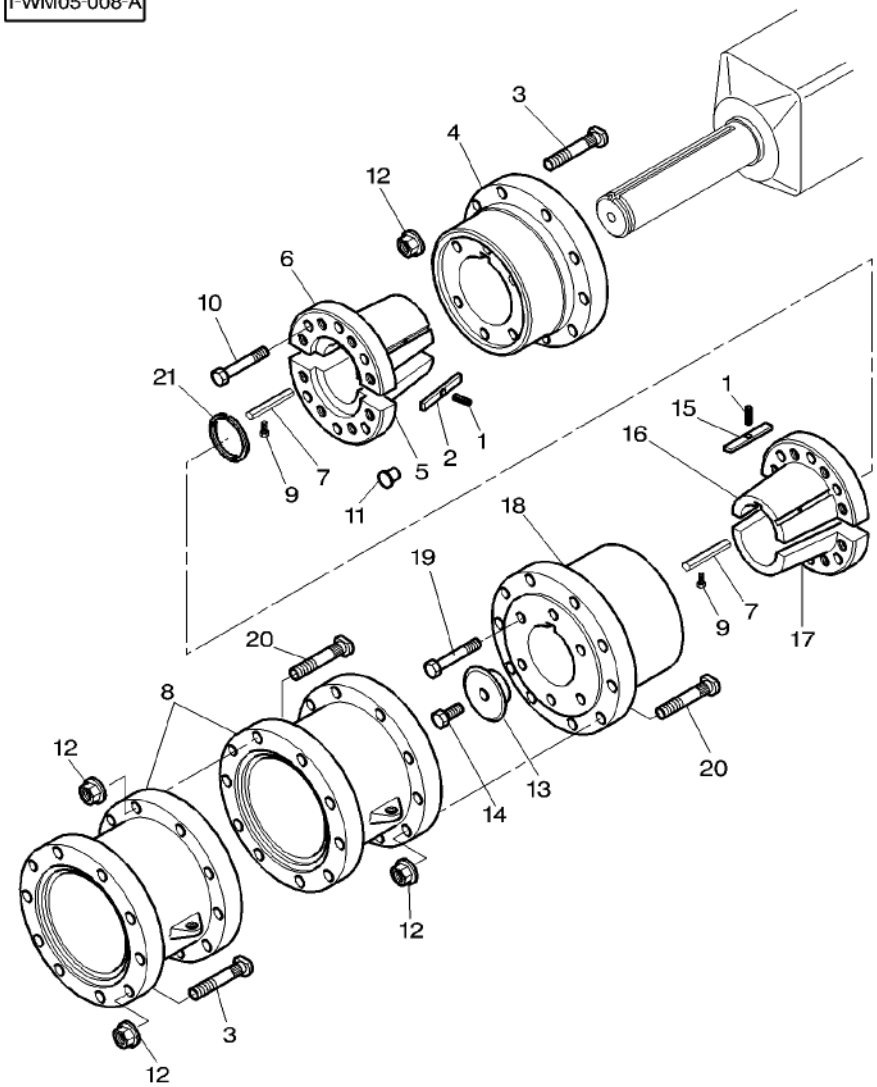

1	763786M1		4	PIN	GOUPILLE PERNO	BOLZEN PASADOR
2	509816M3		4	KEY	CLAVETTE CHIAVETTA	PASSKEIL CLAVE
3	3792488M2	M22 X 78	40	STUD	GOUJON PRIGIONIERO	STEHBOLZEN CHAVETA ROSCADO
3	3792488M2	[DE] M22 X 78	20	STUD	GOUJON PRIGIONIERO	STEHBOLZEN CHAVETA ROSCADO
4	3716107M2	[A]	2	HUB	MOYEU MOZZO	NABE CUBO
5	3716269M1	◀▶ 198 MM	4	CONE	CONE CONO	KONUS CONO
6	3716268M1	◀▶ 198 MM	4	CONE	CONE CONO	KONUS CONO
7	3716106M4		4	KEY	CLAVETTE CHIAVETTA	PASSKEIL CLAVE
8	3786577M2		4	SPACER	ENTRETOISE DISTANZIALE	ABSTANDSTUECK DISCO ESPACIADOR
9	1440350X1	M6 X 20	4	SCREW METRIC	VIS METRIQUE VITE METRICA	SCHRAUBE METR TORNILLO METRICO
10	3010569X1	M20 X 80	24	HEX. SOCK. SCREW	VIS TETE HEX VITE PARKER	ZYLINDERSCHRAUBE TORN.CAB.HUECA
11	3791968M1		32	PLUG	BOUCHON TAPPO	VERSCHL.STOPFEN TAPON
12	***3712611M2***	M22 X 1,5	80	NUT SPECIAL	ECROU SPECIAL DADO SPECIALE	SPEZIALMUTTER TUERCA ESPECIAL
13	3787332M1	[C]	2	THRUST WASHER	RONDELLE BUTEE RONDELLA REGGISP	ANLAUFSCHEIBE ARANDELA ACELER
14	3001462X1	[C] M24 X 60	2	HEX. SOCK. SCREW	VIS TETE HEX VITE PARKER	ZYLINDERSCHRAUBE TORN.CAB.HUECA
15	3787102M1		2	KEY	CLAVETTE CHIAVETTA	PASSKEIL CLAVE
16	3786847M1	◀▶ 174 MM	2	CONE	CONE CONO	KONUS CONO
17	3786848M1	◀▶ 174 MM	2	CONE	CONE CONO	KONUS CONO
18	3786490M1	[B]	2	HUB	MOYEU MOZZO	NABE CUBO
19	3580230M1	M20 X 190	16	HEX. SOCK. SCREW	VIS TETE HEX VITE PARKER	ZYLINDERSCHRAUBE TORN.CAB.HUECA
20	***3716105M2***	M22 X 100	40	STUD	GOUJON PRIGIONIERO	STEHBOLZEN CHAVETA ROSCADO
20	***3716105M2***	[DE] M22 X 100	60	STUD	GOUJON PRIGIONIERO	STEHBOLZEN CHAVETA ROSCADO
21	3010765X1	[F]	2	RING	ANNEAU ANELLO	RING ARO

[A] 6 HOLES FIXING
6 TROUS DE FIXATION
6 BEFESFIGUNGSLOCH
6 FORI PER FISSAGIO
6 ORIFICIOS PARA FIJAR

Rear Wheels **Roues Arriere** **Hinterraeder** **Ruote Posteriori** **Ruedas Traseras**	**Fixing By Cone** **Fixation Par Cone** **Anbau Der Konus** **Montaggio Con Cono** **Fijacion Con Cono**	**130-70**	**Short Shaft Diameter 110mm – With Spacers For Dual Wheels Cone/Wheel Hub Reversed** **Arbre Court Diametre 110mm – Avec Entretoises Pour Roues Cone/Moyeu Inverse** **Durchmesserkurzwelle 110mm – Mit Abstandstueck Fur Zwillingsraeder Radnabe Gegenklaerung** **Albero Corto Diametro 110mm – Con Distanziale Per Ruote Accopiate Mozzo Di Ruota Invertito** **Palier Corto Diametro 110mm – Con Piezas Distances Por Ruedas Dobles Cono/Cubo De Rueda Invers**

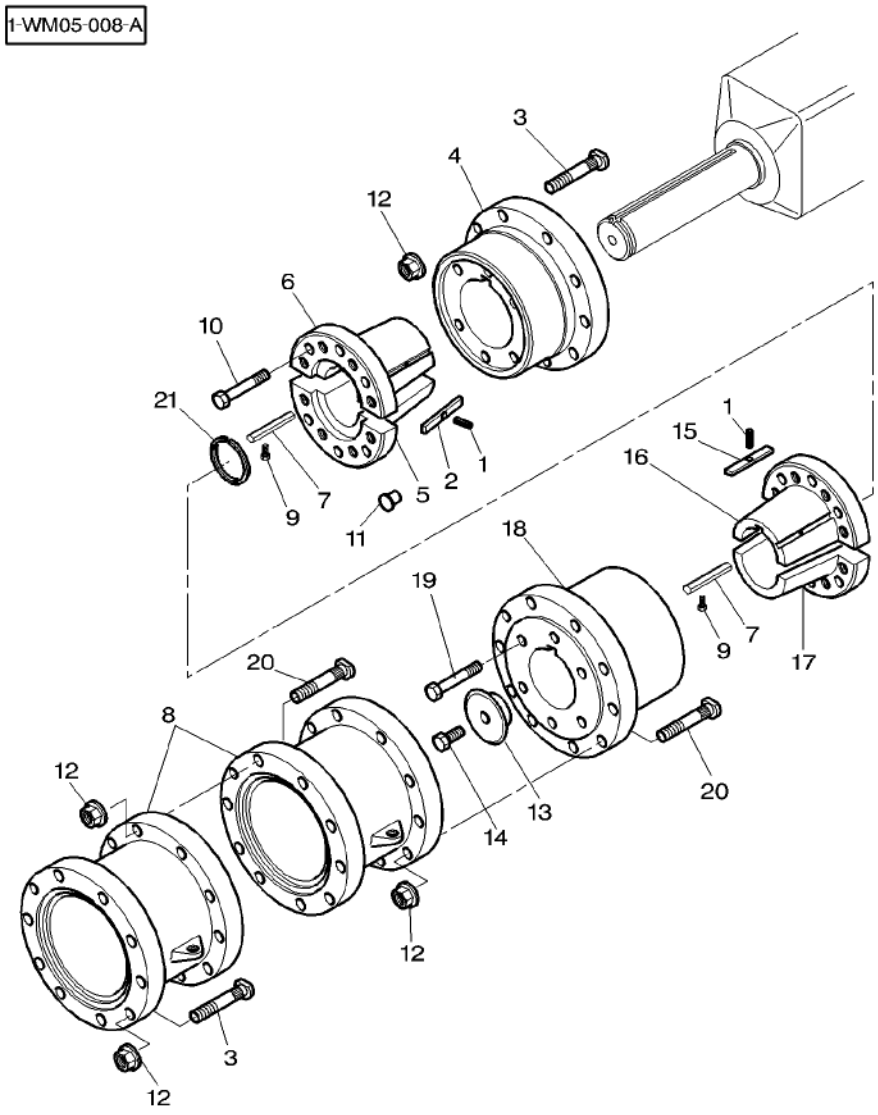

[B] 8 HOLES FIXING
8 TROUS DE FIXATION
8 LOCHERN FUER PACKDICHTE
8 FORI PER FISSAGIO
8 ORIFICIOS PARA FIJAR

[C] WITH SHORT SHAFT
AVEC ARBRE COURT
MIT KURZWELLE
CON ALBERO CORTO
CON EJE CORTO

[D] WITH CAST WHEELS
AVEC ROUES FONTE
MIT GUSSFELGEN
CON RUOTA FUSA
CON RUEDAS DE FUNDICION

[E] WITH RIM STEEL
AVEC JANTE ACIER
MIT FELGE STAHL
CON CERCHIONE ACCIAID
CON LLANTA ACERO

[F] WITH LONG SHAFT
AVEC ARBRE LONG
MIT AWG WELLE
CON ALBERO LONGO
CON EJE LARGO

Wheel Weights
Masses De Roue
Radgewichte
Contrappesi Per Ruote
Pesos De Rueda

130-75

1-WX17-002-A

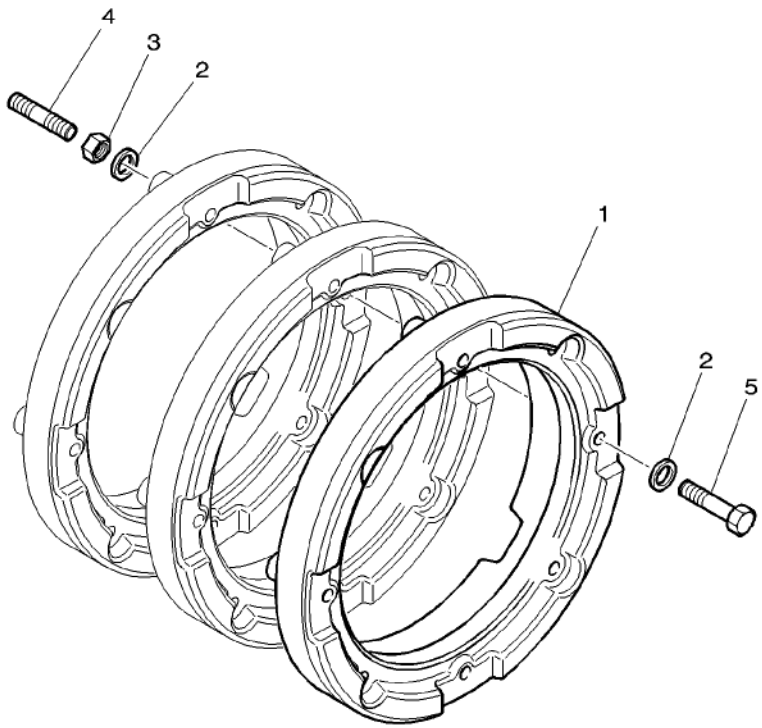

1	3789077M1	50 KG	X WEIGHT	MASSE PESO	GEWICHT PESO DE CARGA
1	3789078M1	200 KG	X WEIGHT	MASSE PESO	GEWICHT PESO DE CARGA
2	3019575X1	∅ 17–44 X 3	X WASHER	RONDELLE RONDELLA	UNTERLEGSCHEIBE ARANDELA
3	339034X1	M16	X NUT	ECROU DADO	MUTTER TUERCA
4	3386466M1	M16 X 65	X STUD	GOUJON PRIGIONIERO	STEHBOLZEN CHAVETA ROSCADO
4	3009933X1	M16–135	X STUD	GOUJON PRIGIONIERO	STEHBOLZEN CHAVETA ROSCADO
5*	3009244X1	M16 X 90	X PLOUGH BOLT	VIS A EMBASE VITE TESTA TONDA	SENKSCHLOSSSCHRB TORNILLO ALOJ C
5	3009248X1	M16 X 130	X PLOUGH BOLT	VIS A EMBASE VITE TESTA TONDA	SENKSCHLOSSSCHRB TORNILLO ALOJ C

Wheel Wedges
Cales De Roues
Unterlegkeile
Zeppe Per Ruote
Cunas De Rueda

130-80

1-WX37-008-A

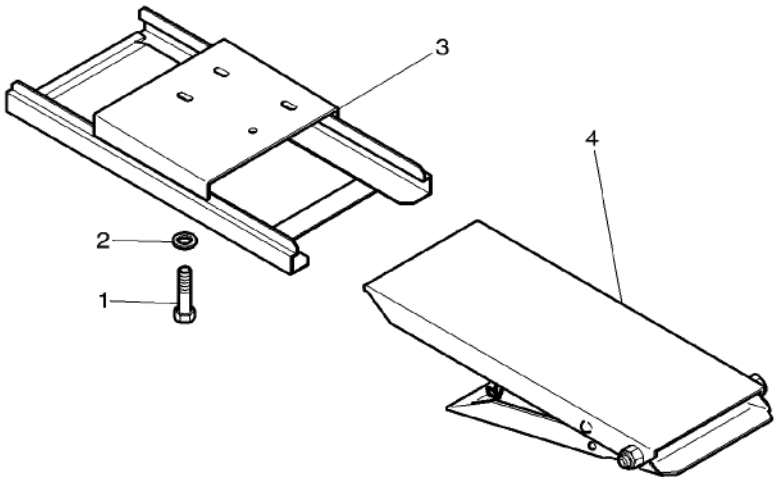

1	339124X1	M8 X 16	4	HEX. SOCK. SCREW	VIS TETE HEX VITE PARKER	ZYLINDERSCHRAUBE TORN.CAB.HUECA
2	390972X1		4	WASHER	RONDELLE RONDELLA	UNTERLEGSCHEIBE ARANDELA
3	4278080M2		1	SUPPORT	SUPPORT SUPPORTO	LAGERUNG DISPOS.DE SOSTEN
4*	4274765M1		1	CHOCK	CALE PASSACAVO	UNTERLEG-KEIL CALZA