S&S TUG

Operation, Maintenance, and Parts Manual

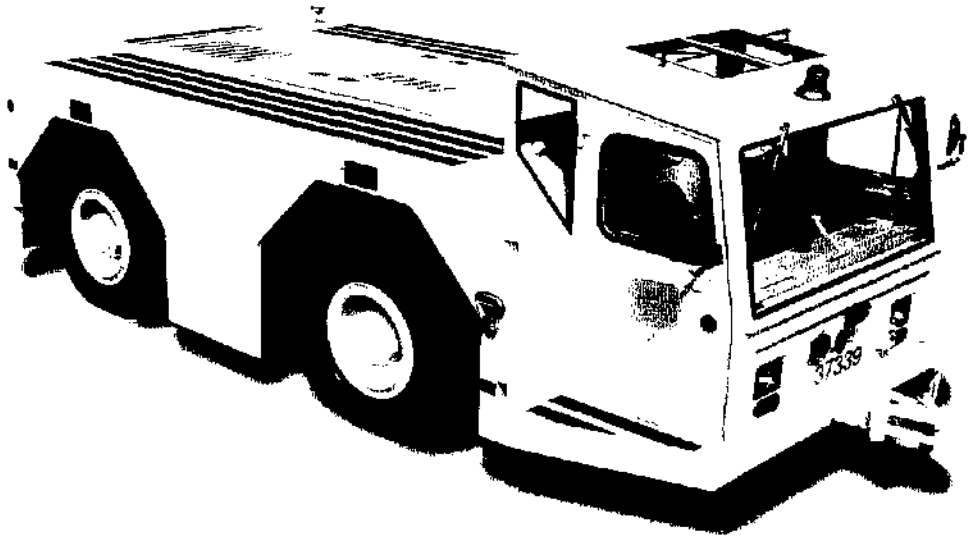

MODEL
GT-50DZ
TOW TRACTOR
WITH DEUTZ ENGINE

Aircraft Ground Support Equipment **CD274**

produced by

STEWART & STEVENSON
MARKETING SERVICES
TOTAL MARKETING SUPPORT

RECORD OF REVISIONS

PROPERTY OF: _____

COMPANY: _____

ADDRESS: _____

CITY _____ STATE _____ ZIP CODE _____

REVISION DATA

CHECK EACH REVISION RECEIVED, AND INSERT THE REVISED AND SUPPLEMENTARY PAGES IN YOUR MANUAL.

DATE OF ORIGINAL PUBLICATION: AUGUST 1994

REVISION	DATE
1	October 1994
2	November 1994
3	December 1994
4	March 1995
5	March 1997
6	
7	

LIST OF EFFECTIVE PAGES

Title Page	Orig
Record of Revisions-i	Rev 5
List of Effective Pages-ii and iii	Rev 5
Manual Table of Contents-iv thru x	Rev 3
List of Figures-xi thru xiii	Rev 3
List of Tables-xiv	Rev 3
Introduction-xv	Rev 3
Unit Identification-xv	Rev 3
Technical Assistance-xvi	Rev 3
Safety Precautions-xvii	Rev 5
How To Use This Manual-xviii	Rev 3
CHAPTER 1	
1-TOC-i thru 1-TOC-iv	Orig
1-1-1 thru 1-1-4	Rev 1
1-1-5 thru 1-1-12	Orig
1-2-1 and 1-2-2	Orig
1-2-3 and 1-2-4	Rev 1
1-2-5	Orig
1-2-6	Rev 1
1-2-7	Rev 3
1-2-8	Rev 1
1-2-9	Rev 3
1-2-10	Rev 1
1-2-11	Rev 3
1-2-12	Rev 1
1-2-13	Rev 3
1-2-14	Rev 1
1-3-1 and 1-3-2	Rev 3
1-3-3	Rev 2
1-3-3	Rev 2
1-3-4	Orig
1-3-5	Rev 1
1-3-6 thru 1-3-9	Rev 3
1-3-10	Rev 1
1-4-1 thru 1-4-4	Orig
1-5-1	Orig
1-5-2	Rev 1
1-5-3 thru 1-5-6	Orig
CHAPTER 2	
2-TOC-i and 2-TOC-ii	Orig
2-1-1	Rev 5
2-1-2 thru 2-1-4	Orig
2-2-1 and 2-2-2	Orig
2-2-3 and 2-2-4	Rev 4
2-2-5 and 2-2-6	Orig
2-2-7	Rev 5
2-2-8 thru 2-2-10	Orig
2-3-1 thru 2-3-4	Orig
MI01004-1	Orig
MI01004-2	Rev 1
MI02007-1 and MI02007-2	Orig
MI02008-1 and MI02008-2	Orig
MI02008-3	Rev 1
MI02008-4	Orig
MI02009-1 and MI02009-2	Orig
MI02009-3	Rev 1
MI02009-4	Orig
MI02010-1 and MI02010-2	Orig
MI02010-3	Rev 1
MI02010-4	Orig
MI02011-1 and MI02011-2	Orig
MI02011-3	Rev 1
MI02011-4	Orig
MI03006-1 thru MI03006-4	Orig
MI03007-1 and MI03007-2	Rev 1
MI03008-1 thru MI03008-6	Orig
MI03009-1 and MI03009-2	Orig
MI04007-1	Orig
MI04007-2	Rev 2
MI04009-1 and MI04009-2	Rev 2
MI04010-1 and MI04010-2	Orig
MI06003-1	Rev 3
MI06003-2 thru MI06003-4	Orig
MI08004-1	Orig
MI08004-2	Rev 1
MI08005-1	Orig
MI08005-2	Rev 1
MI09012-1 thru MI09012-4	Orig
MI12001-1	Rev 1
MI12001-2	Orig
MI99003-1 and MI99003-2	Orig
MI99003-3	Rev 4
MI99003-4	Orig
MI99003-5	Rev 4
MI99003-6	Rev 1
MI99004-1 thru MI99004-4	Rev 4
CHAPTER 3	
3-TOC-i and 3-TOC-ii	Orig
3-1-1	Rev 1
3-1-2	Orig
3-2-1	Rev 4
3-2-2 thru 3-2-8	Orig
CHAPTER 4	
4-TOC-i	Orig
4-TOC-ii	Rev 1
4-1-1 thru 4-1-4	Orig
4-2-1	Rev 4
4-2-2	Orig
4-3-1 and 4-3-2	Orig
4-3-3 thru 4-3-10	Rev 3
4-3-11	Rev 2

LIST OF EFFECTIVE PAGES

4-3-12	Rev 3
4-3-13 thru 4-3-15	Rev 2
4-3-16	Rev 3
4-3-17 thru 4-3-22	Rev 2
4-3-23	Rev 3
4-3-24	Rev 2
4-4-1 thru 4-4-3	Orig
4-4-4	Rev 4
4-4-5 and 4-4-6	Rev 3
4-4-7	Orig
4-4-8 thru 4-4-10	Rev 3
4-4-11 thru 4-4-20	Orig
4-4-21	Rev 3
4-4-22	Rev 4
4-4-23	Rev 3
4-4-24	Rev 4
4-4-25	Rev 3
4-4-26 thru 4-4-39	Orig
4-4-40 thru 4-4-40B	Rev 4
4-4-41	Orig
4-4-42 and 4-4-43	Rev 3
4-4-44 thru 4-4-47	Orig
4-4-48 and 4-4-49	Rev 3
4-4-50 thru 4-4-59	Orig
4-4-60 thru 4-4-63	Rev 3
4-4-64	Rev 2
4-4-65	Rev 3
4-4-66 thru 4-4-69	Orig
4-4-70 and 4-4-71	Rev 3
4-4-72	Orig
4-4-73	Rev 3
4-4-74 thru 4-4-80	Orig
4-4-81	Rev 3
4-4-82	Orig
4-4-83	Rev 3
4-4-84	Rev 4
4-4-85 thru 4-4-94	Deleted
12941092 (4 sheets)	Rev A
4-4-95 thru 4-4-98	Orig
4-4-99 thru 4-4-102	Rev 1
4-4-103	Rev 2
4-4-104 thru 4-4-107	Rev 1
4-4-108	Rev 4
12941675 (2 sheets)	Rev A

CHAPTER 5	
5-TOC-i	Rev 4
5-TOC-ii	Orig
CHAPTER 6	
6-TOC-i	Orig
6-TOC-ii	Rev 2
OPTION 1	
6-1-1	Rev 4
6-1-2	Orig
6-1-3 thru 6-1-9	Rev 4
6-1-10	Orig
OPTION 2	
6-2-1	Orig
6-2-2	Rev 4
6-2-3 and 6-2-4	Orig
INDEX-1 thru INDEX-4	Orig

MANUAL TABLE OF CONTENTS

DESCRIPTION	CHAPTER/SECTION/PAGE
Record of Revisions	Front Matter/i
List of Effective Pages	Front Matter/ii
Manual Table of Contents	Front Matter/iii
List of Figures	Front Matter/ix
List of Tables	Front Matter/xii
Introduction	Front Matter/xiii
Unit Identification	Front Matter/xiii
Technical Assistance	Front Matter/xiv
Safety Precautions	Front Matter/xv
How to Use This Manual	Front Matter/xvi

CHAPTER 1 GENERAL INFORMATION AND OPERATING INSTRUCTIONS

SECTION 1	GENERAL DESCRIPTION	1-1-1
1.1	INTRODUCTION	1-1-1
1.2	UNIT DESCRIPTION	1-1-1
1.3	ENGINE	1-1-3
1.4	TRANSMISSION	1-1-3
1.5	DRIVE LINE ASSEMBLY	1-1-3
1.6	FUEL SYSTEM	1-1-3
1.7	AIR INTAKE SYSTEM	1-1-4
1.8	EXHAUST SYSTEM	1-1-4
1.9	LUBRICATION SYSTEM	1-1-4
1.10	COOLING SYSTEM	1-1-4
1.11	STEERING SYSTEM	1-1-4
1.12	BRAKE SYSTEM	1-1-6
1.12.5	Parking Brake	1-1-9
1.13	LIFT CAB (OPTIONAL)	1-1-9
1.14	ELECTRICAL SYSTEM	1-1-9
1.14.2	Engine Starting and Battery Charging Circuits	1-1-10
1.14.3	Brake Booster Motor Circuit	1-1-10
1.14.4	Engine Run Relay Circuit	1-1-10
1.14.5	Horn Circuit	1-1-10
1.14.6	Engine Instrument Circuit	1-1-10
1.14.7	Light Circuit	1-1-10
1.14.8	Warning Light Circuit	1-1-11
1.14.9	Auxiliary Light Circuit	1-1-11
1.14.11	Engine Coolant Heater (Optional)	1-1-12
1.14.12	Engine Fuel/Water Separator and Fuel Heater (Optional)	1-1-12
1.14.13	Cab Circuits (Optional)	1-1-12

MANUAL TABLE OF CONTENTS (CONT.)

DESCRIPTION		CHAPTER/SECTION/PAGE
SECTION 2	OPERATION	1-2-1
2.1	PRE-OPERATIONAL CHECKS.	1-2-1
2.2	OPERATING PROCEDURES.	1-2-3
2.3	SHUTDOWN PROCEDURE.	1-2-4
2.4	CONTROLS AND INDICATORS.	1-2-7
SECTION 3	SPECIFICATIONS	1-3-1
3.1	INTRODUCTION	1-3-1
3.2	SPECIFICATION TABLES	1-3-1
3.3	POINTS OF SERVICE, SPECIFICATION, AND CAPACITIES.	1-3-4
SECTION 4	SHIPPING	1-4-1
4.1	INTRODUCTION.	1-4-1
4.2	TIE DOWN POINTS.	1-4-1
4.3	LIFTING.	1-4-1
4.4	PREPARING ENGINE.	1-4-1
4.5	PREPARING UNIT.	1-4-2
4.5.1	Batteries.	1-4-2
4.5.2	Windshields (Cab Option Only).	1-4-2
4.5.3	Control Panel (Without Cab Option Only).	1-4-2
4.5.4	Warning Beacons.	1-4-2
4.6	MARKING.	1-4-2
4.7	RECEIVING EQUIPMENT.	1-4-2
4.7.1	Inventory.	1-4-2
4.7.2	Inspection.	1-4-2
4.7.3	Notification.	1-4-2
4.8	PREPARING UNIT FOR SERVICE.	1-4-2
4.8.1	Windshields (Cab Option Only).	1-4-2
4.8.2	Warning beacon(s).	1-4-2
4.8.3	Air Cleaner.	1-4-3
4.8.4	Batteries.	1-4-3
4.8.5	Engine.	1-4-3
4.8.6	Control Panel (Without Cab Option Only).	1-4-3
4.8.7	Markings.	1-4-3
SECTION 5	STORAGE	1-5-1
5.1	SHORT-TERM STORAGE.	1-5-1
5.1.1	Engine.	1-5-1

MANUAL TABLE OF CONTENTS (CONT.)

DESCRIPTION **CHAPTER/SECTION/PAGE**

5.1.2 Transmission. 1-5-1
5.1.3 Drive Axles. 1-5-1
5.1.4 Tires. 1-5-1
5.1.5 Batteries. 1-5-1
5.2 RETURN TRACTOR TO OPERATION AFTER SHORT-TERM STORAGE. . . 1-5-1
5.2.1 Tires. 1-5-1
5.2.2 Batteries. 1-5-2
5.2.3 Engine. 1-5-2
5.2.4 Transmission. 1-5-2
5.3 LONG-TERM STORAGE. 1-5-2
5.3.1 Engine. 1-5-2
5.3.2 Batteries. 1-5-4
5.3.3 Drive axles. 1-5-4
5.3.4 Transmission. 1-5-4
5.3.5 Tires. 1-5-4
5.3.6 Windows (Cab Option Only). 1-5-4
5.4 RETURN TRACTOR TO OPERATION AFTER LONG-TERM STORAGE. . . . 1-5-4
5.4.1 Tires. 1-5-4
5.4.2 Windows (Cab Option Only). 1-5-5
5.4.3 Batteries. 1-5-5
5.4.4 Engine. 1-5-5
5.4.5 Transmission. 1-5-5
5.4.6 Drive axles. 1-5-5

CHAPTER 2 MAINTENANCE

SECTION 1 PREVENTIVE MAINTENANCE SCHEDULE 2-1-1

1.1 INTRODUCTION 2-1-1
1.2 HOW TO USE THE PREVENTIVE MAINTENANCE SCHEDULE 2-1-1

SECTION 2 TROUBLESHOOTING 2-2-1

2.1 INTRODUCTION 2-2-1
2.2 HOW TO USE THE TROUBLESHOOTING TABLES. 2-2-1
2.3 OBTAINING FACTORY ASSISTANCE. 2-2-1

SECTION 3 MAINTENANCE INSTRUCTIONS 2-3-1

3.1 INTRODUCTION. 2-3-1
3.2 HOW TO USE THE MAINTENANCE INSTRUCTIONS (MI). 2-3-1
3.3 LIST OF EFFECTIVE MAINTENANCE INSTRUCTIONS. 2-3-2

MANUAL TABLE OF CONTENTS (CONT.)

DESCRIPTION **CHAPTER/SECTION/PAGE**

CHAPTER 3 OVERHAUL

SECTION 1 OVERHAUL DATA 3-1-1

1.1 MODEL GT-50DZ TOW TRACTOR OVERHAUL. 3-1-1
1.2 ENGINE. 3-1-1
1.3 TRANSMISSION. 3-1-1
1.4 AXLES. 3-1-1

SECTION 2 REMOVAL AND INSTALLATION 3-2-1

2.1 ENGINE AND TRANSMISSION ASSEMBLY REMOVAL. 3-2-1
2.2 ENGINE AND TRANSMISSION ASSEMBLY INSTALLATION PROCEDURES. 3-2-4
2.3 AXLE REMOVAL PROCEDURES. 3-2-4
2.4 AXLE INSTALLATION PROCEDURES. 3-2-6

CHAPTER 4 PARTS

SECTION 1 PARTS LIST 4-1-1

1.1 INTRODUCTION. 4-1-1
1.2 PARTS LIST. 4-1-1
1.2.2 Figure and Index Number Column. 4-1-2
1.2.3 Part Number Column. 4-1-2
1.2.4 Manufacturer's Code. 4-1-2
1.2.5 Description Column. 4-1-2
1.2.6 Quantity Column. 4-1-2
1.3 HOW TO LOCATE PARTS. 4-1-2
1.4 HOW TO ORDER PARTS. 4-1-3

SECTION 2 MANUFACTURER'S CODES 4-2-1

SECTION 3 ALPHA-NUMERIC INDEX 4-3-1

3.1 INTRODUCTION. 4-3-1

SECTION 4 GROUP INDEX 4-4-1

GROUP 1 TOW TRACTOR ASSEMBLY 4-4-3
1.1 TOW TRACTOR OVERALL VIEW 4-4-4
1.2 OPERATOR'S COMPARTMENT 4-4-8
1.3 CAB MODEL 416 (OPTION) 4-4-12

MANUAL TABLE OF CONTENTS (CONT.)

DESCRIPTION		CHAPTER/SECTION/PAGE
GROUP 2	DRIVE LINE	4-4-19
2.1	ENGINE AND TRANSMISSION ASSEMBLY	4-4-20
2.2	ENGINE AND TRANSMISSION CONNECTION	4-4-22
2.3	DRIVE LINE ASSEMBLY	4-4-24
2.4	STEERABLE AXLE HOUSING	4-4-26
2.5	STEERABLE AXLE DIFFERENTIAL	4-4-28
2.6	STEERABLE AXLE STEERING PARTS	4-4-30
2.7	STEERABLE AXLE PLANETARY HUB REDUCERS	4-4-32
2.8	RIGID AXLE HOUSING	4-4-34
2.9	RIGID AXLE DIFFERENTIAL	4-4-36
2.10	RIGID AXLE PLANETARY HUB REDUCERS	4-4-38
GROUP 3	BRAKE SYSTEM COMPONENTS	4-4-41
3.1	BRAKE LINKAGE AND MASTER CYLINDER/ HYDRAULIC BOOSTER	4-4-42
3.2	BRAKE HYDRAULIC BOOSTER ASSEMBLY	4-4-44
3.3	BRAKE SYSTEM HYDRAULIC BOOSTER CIRCUIT	4-4-46
3.4	HYDRAULIC BRAKE SYSTEM	4-4-48
3.5	FRONT BRAKE ASSEMBLY	4-4-50
3.6	REAR BRAKE ASSEMBLY	4-4-52
3.7	PARKING BRAKE LINKAGE	4-4-54
3.8	PARKING BRAKE ASSEMBLY	4-4-56
GROUP 4	FUEL SYSTEM COMPONENTS	4-4-59
4.1	FUEL SYSTEM WITH FUEL FILTER/WATER SEPARTOR (OPTION)	4-4-60
4.3	THROTTLE CONTROL	4-4-64
GROUP 5	GOVERNOR ADJUSTMENT (NOT USED REFER TO GROUP 4)	4-4-67
GROUP 6	LUBRICATION SYSTEM FOR ENGINE AND TRANSMISSION	4-4-69
6.1	TRANSMISSION LUBE OIL SYSTEM	4-4-70
6.2	ENGINE LUBE OIL SYSTEM	4-4-72
GROUP 7	ENGINE COOLING SYSTEM COMPONENTS	4-4-75
7.1	ENGINE COOLING SYSTEM	4-4-76
GROUP 8	ENGINE AIR INTAKE AND EXHAUST SYSTEM	4-4-79
8.1	AIR INLET ASSEMBLY	4-4-80
8.2	EXHAUST SYSTEM	4-4-82

MANUAL TABLE OF CONTENTS (CONT.)

DESCRIPTION		CHAPTER/SECTION/PAGE
GROUP 9	ELECTRICAL SYSTEM COMPONENTS	4-4-85
9.1	OPERATOR CONTROL PANEL ASSEMBLY	4-4-86
9.2	ELECTRICAL PARTS	4-4-90
GROUP 10	GENERATOR (NOT USED)	4-4-95
GROUP 11	NOT USED	4-4-97
GROUP 12	STEERING SYSTEM COMPONENTS	4-4-99
12.1	STEERING COLUMN	4-4-100
12.2	HYDRAULIC STEERING VALVE ASSEMBLY	4-4-102
12.3	HYDRAULIC FILTER ASSEMBLY	4-4-104
12.4	HYDRAULIC STEERING PUMP	4-4-106
12.5	HYDRAULIC STEERING SYSTEM	4-4-108
CHAPTER 5	DRAWINGS	
	TABLE OF CONTENTS	5-TOC-i
CHAPTER 6	OPTIONS AND MANUFACTURER'S DATA	
	TABLE OF CONTENTS	6-TOC-i
	OPTIONAL EQUIPMENT - INTRODUCTION	6-INTRO-i
1.	GT50 STEERING OPTIONS	6-1-1
1.1	DESCRIPTION	6-1-1
1.1.1	STEERING MODES	6-1-1
1.1.2	ACTION OF FRONT AXLE	6-1-1
1.1.3	ACTION OF REAR AXLE	6-1-1
1.2	OPERATION	6-1-1
1.2.1	TRACK STEERING MODE	6-1-1
1.2.2	COORD STEERING MODE	6-1-1
1.2.3	CRAB STEERING MODE	6-1-1
1.3	MAINTENANCE	6-1-3
1.3.1	PREVENTIVE MAINTENANCE	6-1-3
1.3.2	TROUBLESHOOTING	6-1-3
1.3.3	ADJUSTMENTS	6-1-3
1.5	DRAWINGS	6-1-9

MANUAL TABLE OF CONTENTS (CONT.)

DESCRIPTION		CHAPTER/SECTION/PAGE
2.	CAB	6-2-1
2.1	DESCRIPTION	6-2-1
2.1.1	TYPES	6-2-1
2.1.2	STANDARD CAB	6-2-1
2.1.3	LIFT CAB	6-2-1
2.1.4	LIFT CAB HYDRAULIC SYSTEM	6-2-1
2.1.5	STANDARD CAB SPECIFICATIONS	6-2-1
2.1.6	LIFT CAB SPECIFICATIONS	6-2-2
2.2	OPERATION	6-2-2
2.2.1	LIFT CAB OPERATION	6-2-2
2.2.2	CONTROLS	6-2-2
2.3	MAINTENANCE	6-2-2
2.3.1	PREVENTIVE MAINTENANCE (FOR STANDARD AND LIFT CAB)	6-2-2
2.3.2	PREVENTIVE MAINTENANCE (FOR LIFT CAB ONLY)	6-2-3
2.4	PARTS LIST	6-2-3
2.4.1	STANDARD CAB	6-2-3
2.4.2	HYDRAULIC LIFT CAB	6-2-3
2.5	DRAWINGS	6-2-3

LIST OF FIGURES

CHAPTER/ FIGURE	TITLE	PAGE
CHAPTER 1	**GENERAL INFORMATION AND OPERATING INSTRUCTIONS**	
1.1	MODEL GT-50C/50CH TOW TRACTOR	1-1-1
1.2	DRIVE LINE ASSEMBLY	1-1-2
1.3	COOLING SYSTEM	1-1-5
1.4	HYDRAULIC STEERING SYSTEM SCHEMATIC	1-1-7
1.5	HYDRAULIC BRAKE SYSTEM	1-1-8
2.1	OPERATOR'S PANEL AND CONTROLS (TABLE 2.2)(SHEET 1 OF 3)	1-2-6
2.1	OPERATOR'S PANEL AND CONTROLS (TABLE 2.2)(SHEET 2 OF 3)	1-2-8
2.1	OPERATOR'S PANEL AND CONTROLS (TABLE 2.2)(SHEET 3 OF 3)	1-2-10
3.1	SERVICING POINTS (SHEET 1 OF 2)	1-3-6
3.1	SERVICING POINTS (SHEET 2 OF 2)	1-3-8
CHAPTER 2	**MAINTENANCE**	
1.	STEERING ASSEMBLY AND DRIVESHAFTS SERVICING POINTS	MI02008-2
1.	AXLE AND WHEEL END ASSEMBLY	MI02009-3
1.	TRANSMISSION SERVICING POINTS	MI02010-3
1.	AXLE AND WHEEL END ASSEMBLY SERVICING POINTS	MI02011-3
1.	PARKING BRAKE LINKAGE	MI03006-3
1.	BRAKE FLUID RESERVOIR	MI03007-2
1.	SERVICE BRAKE ASSEMBLY	MI03008-5
1.	FUEL/WATER SEPARATOR (STANDARD)	MI04006-2
1.	FUEL/WATER SEPARATOR (OPTION)	MI04007-2
1.	FUEL WATER SEPARATOR	MI04008-3
1.	FUEL FILTER/WATER SEPARATOR (OPTION)	MI04009-2
1.	FUEL SYSTEM	MI04010-2
1.	ENGINE OIL SYSTEM	MI06003-3
1.	ENGINE AIR FILTER RESTRICTION INDICATOR	MI08004-2
1.	ENGINE AIR INTAKE SYSTEM AND FILTER	MI08005-2
1.	BATTERY ELECTROLYTE LEVEL	MI09012-2
1.	HYDRAULIC FILTER ASSEMBLY	MI12001-2
1.	FLUID LEVEL AND FILL LOCATIONS	MI99003-3
2.	DIESEL FUEL TEMPERATURE SCALE	MI99003-5
1.	ALTERNATOR/WATER PUMP DRIVE BELTS ADJUSTMENT	MI99004-2
CHAPTER 3	**OVERHAUL**	
3.1	TRANSMISSION LIFTING BRACKET	3-2-1

LIST OF FIGURES (CONT.)

CHAPTER/ FIGURE	TITLE	PAGE
CHAPTER 4	**PARTS**	
1.1	TOW TRACTOR OVERALL VIEW	4-4-4
1.2	OPERATOR'S COMPARTMENT	4-4-8
1.3	CAB MODEL 416 (OPTION)	4-4-12
1.4	CAB MODEL 846 (OPTION)	4-4-14
1.5	CAB MODEL 812 (OPTION)	4-4-16
2.1	ENGINE AND TRANSMISSION ASSEMBLY	4-4-20
2.2	ENGINE AND TRANSMISSION CONNECTION	4-4-22
2.3	DRIVE LINE ASSEMBLY	4-4-24
2.4	STEERABLE AXLE HOUSING	4-4-26
2.5	STEERABLE AXLE DIFFERENTIAL	4-4-28
2.6	STEERABLE AXLE STEERING PARTS	4-4-30
2.7	STEERABLE AXLE PLANETARY HUB REDUCERS	4-4-32
2.8	RIGID AXLE HOUSING	4-4-34
2.9	RIGID AXLE DIFFERENTIAL	4-4-36
2.10	RIGID AXLE PLANETARY HUB REDUCERS	4-4-38
3.1	BRAKE LINKAGE AND MASTER CYLINDER/HYDRAULIC BOOSTER	4-4-42
3.2	BRAKE HYDRAULIC BOOSTER ASSEMBLY	4-4-44
3.3	BRAKE SYSTEM HYDRAULIC BOOSTER CIRCUIT	4-4-46
3.4	HYDRAULIC BRAKE SYSTEM	4-4-48
3.5	FRONT BRAKE ASSEMBLY	4-4-50
3.6	REAR BRAKE ASSEMBLY	4-4-52
3.7	PARKING BRAKE LINKAGE	4-4-54
3.8	PARKING BRAKE ASSEMBLY	4-4-56
4.1	FUEL SYSTEM WITH FUEL FILTER/WATER SEPARATOR (OPTION)	4-4-60
4.3	THROTTLE CONTROL	4-4-64
6.1	TRANSMISSION LUBE OIL SYSTEM	4-4-70
6.2	ENGINE LUBE OIL SYSTEM	4-4-72
7.1	ENGINE COOLING SYSTEM	4-4-76
8.1	AIR INLET ASSEMBLY	4-4-80
8.2	EXHAUST SYSTEM	4-4-82
9.1	OPERATOR CONTROL PANEL ASSEMBLY	4-4-86
9.2	ELECTRICAL PARTS	4-4-90
12.1	STEERING COLUMN	4-4-100

LIST OF FIGURES (CONT.)

CHAPTER/ FIGURE	TITLE	PAGE
12.2	HYDRAULIC STEERING VALVE ASSEMBLY	4-4-102
12.3	HYDRAULIC FILTER ASSEMBLY	4-4-104
12.4	HYDRAULIC STEERING PUMP	4-4-106
12.5	HYDRAULIC STEERING SYSTEM	4-4-108

LIST OF TABLES

CHAPTER/ TABLE NO.	TITLE	PAGE
CHAPTER 1	**GENERAL INFORMATION AND OPERATING INSTRUCTIONS**	
2.1	NORMAL OPERATING CONDITIONS	1-2-4
2.2	CONTROLS AND INDICATORS	1-2-7
3.1	SPECIFICATIONS	1-3-1
3.2	ENGINE LUBE OIL VISCOSITY SELECTION	1-3-5
3.3	SERVICING POINTS	1-3-7
CHAPTER 2	**MAINTENANCE**	
1.1	PREVENTIVE MAINTENANCE SCHEDULE	2-1-2
2.1	NO RESPONSE WHEN ENGINE START SWITCH IS ENERGIZED	2-2-3
2.2	ENGINE CRANKS BUT WILL NOT START	2-2-4
2.3	HYDRAULIC STEERING TROUBLESHOOTING	2-2-5
2.4	HYDRAULIC BRAKE TROUBLESHOOTING	2-2-7
2.5	INDICATOR LAMP AND LIGHT TROUBLESHOOTING	2-2-8
2.6	GAUGE TROUBLESHOOTING	2-2-9
3.1	LIST OF EFFECTIVE MAINTENANCE INSTRUCTIONS	2-3-3
1.	ENGINE LUBE OIL VISCOSITY SELECTION CHART	MI06003-4
1.	ENGINE LUBE OIL SPECIFICATIONS	MI99003-6
CHAPTER 4	**PARTS**	
1.1	PARTS LIST (EXAMPLE)	4-1-1
3.1	ALPHA-NUMERIC INDEX	4-3-3

INTRODUCTION

This manual contains instructions for the overhaul, maintenance, and operation of the:

MODEL GT-50DZ TOW TRACTOR

Full benefit of the long life and dependability built into these units can be realized through proper operation and maintenance. Of equal importance is the use of proper tools and procedures during equipment overhaul.

Personnel responsible for operation and maintenance should study the sections of the manual pertaining to their particular duties. Similarly, before beginning a repair or overhaul job, the service technician should read the manual carefully to become familiar with the components, parts, or subassemblies of the equipment.

UNIT IDENTIFICATION

To aid the technician in repair or service work on this unit, a Stewart & Stevenson identification nameplate is located on the operator's compartment of the unit.

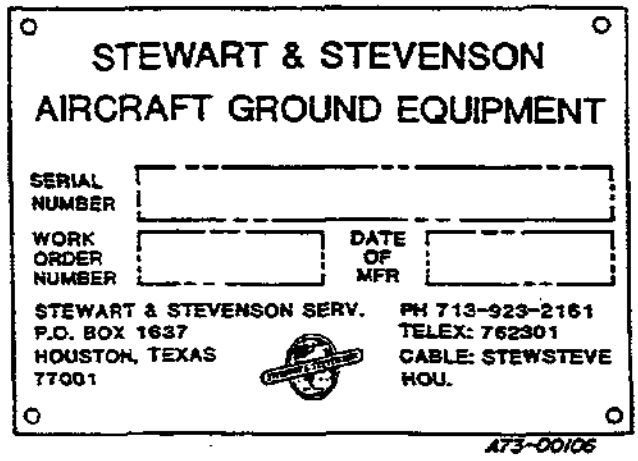

The serial number identification of each unit will appear on the nameplate (as shown above) along with the work order and date of manufacture. The mailing address of Stewart & Stevenson, telephone number, telex number, and cable information are all located on the bottom of the nameplate. This necessary information will ensure the customer a fast and accurate response to any parts and/or service request.

Please verify the serial number on the unit's identification nameplate and ENTER YOUR UNIT SERIAL NUMBER HERE: _____

If applicable, enter your company identification number here: _____

TECHNICAL ASSISTANCE

For parts or warranty assistance, wire, write, or call:

Stewart & Stevenson Services, Inc.
P.O. Box 1637
Houston, Texas 77251-1637.

For Airline Parts: 800-231-8181
(Texas Residents: 713-923-2161; ask for Airline Parts Department.)

For Airline Service: 800-527-3246; Stewart & Stevenson Warranty Department
(Texas Residents: 713-923-2161; ask for Warranty Department.)

Be sure to list the equipment model number, rating, specific nature of the problem, and the suspected area of malfunction.

SAFETY PRECAUTIONS

The safety precautions contained herein should be observed during all phases of operation.

1. Check to ensure that the parking (emergency) brake is set whenever the unit is intended to remain stationary.

2. Clean or service the unit only when the engine is shut down.

3. When cleaning, use only an approved solvent to prevent damage and/or deterioration to the equipment.

4. When filling the fuel tank, do not smoke or use an open flame in the vicinity.

5. Prior to starting the unit, ensure that no loose bars, tools, parts, and the like are lying in or on a part of the unit, as they could cause serious damage to the unit or bodily injury to personnel.

6. Ensure that personnel are well clear of the tractor wheels before beginning this procedure. Death or serious injury can result if someone is crushed between the wheels and the tractor.

7. When operating in an enclosed area, pipe the exhaust fumes outside.

8. Follow the manufacturer's recommendations to properly maintain equipment.

9. In case of malfunction, resulting in a shutdown, do not attempt to re-start the engine until the trouble has been corrected. Failure to comply could result in serious damage to the equipment.

10. In case of accident, shut down the unit immediately.

11. The tow tractor must be safely supported on blocks or other appropriate supporting devices before personnel may attempt access underneath the tractor. Equipment used to raise and support the tow tractor must be rated to withstand 150% (1-1/2 times) the tractor's gross vehicle weight.

12. This equipment uses both metric and S.A.E. (inch-type) nuts, bolts, and screws which can present special service requirements. Many metric measurements are very close in dimension to S.A.E.-rated nuts, bolts, and screws. The use of hardware with mismatched threads or improperly sized components can result in damage, malfunction, or possible personal injury. Components and hardware removed from tow tractor should be saved for re-use when possible. If not re-useable, care should be taken to select a replacement that matches the original in dimension, strength, and pitch of threads.

HOW TO USE THIS MANUAL

1. This manual is divided into six Chapters, with each Chapter subdivided into applicable sections. See the Table of Contents at the front of each Chapter for details of the contents of that respective Chapter.

2. The page numbering system utilizes a three-part number. The explanation is as follows:

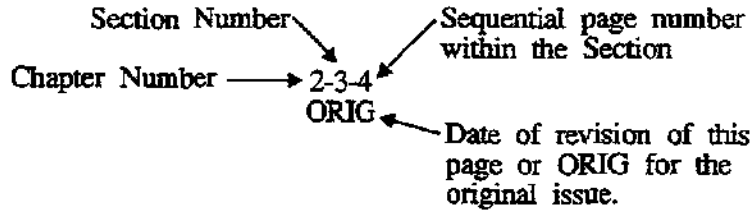

3. Cautions, Warnings, and Notes are used throughout this manual. The forms and explanations are as follows:

WARNING

REFERS TO POTENTIAL DANGER TO PERSONNEL IN THE FOLLOWING PARAGRAPH.

CAUTION

REFERS TO POTENTIAL DAMAGE TO EQUIPMENT OR COMPONENTS IN THE FOLLOWING PARAGRAPH.

NOTE

Calls attention to methods which make the job easier, or to operating procedures, conditions, etc., which should be highlighted. Notes appear before or after related text, whichever is more logical.

4. Chapter 6, Options and Manufacturer's Data, is divided into sections, when applicable. Minor options are included in the first five chapters of this manual. Major options will be documented in Chapter 6. Refer to the Table of Contents Chapter 6 for major options.Any information on adjustments,operation, or maintenance contained in Chapter 6 will supersede any related information in the first five chapters of this manual. Additional or new drawings and schematics, as required for major options, will also be located in Chapter 6 in sections in which they apply. It is recommended you review the Table of Contents in Chapter 6 and check your unit to see if it is equipped with any of the options listed.

CHAPTER 1

OPERATIONS

TABLE OF CONTENTS

SECTION/ PARAGRAPH	DESCRIPTION	PAGE
1	GENERAL DESCRIPTION	1-1-1
1.1	INTRODUCTION	1-1-1
1.2	UNIT DESCRIPTION	1-1-1
1.3	ENGINE	1-1-3
1.4	TRANSMISSION	1-1-3
1.5	DRIVE LINE ASSEMBLY	1-1-3
1.6	FUEL SYSTEM	1-1-3
1.7	AIR INTAKE SYSTEM	1-1-4
1.8	EXHAUST SYSTEM	1-1-4
1.9	LUBRICATION SYSTEM	1-1-4
1.10	COOLING SYSTEM	1-1-4
1.11	STEERING SYSTEM	1-1-4
1.12	BRAKE SYSTEM	1-1-6
1.12.5	Parking Brake	1-1-9
1.13	LIFT CAB (OPTIONAL)	1-1-9
1.14	ELECTRICAL SYSTEM	1-1-9
1.14.2	Engine Starting and Battery Charging Circuits	1-1-10
1.14.3	Brake Booster Motor Circuit	1-1-10
1.14.4	Engine Run Relay Circuit	1-1-10
1.14.5	Horn Circuit	1-1-10
1.14.6	Engine Instrument Circuit	1-1-10
1.14.7	Light Circuit	1-1-10
1.14.8	Warning Light Circuit	1-1-11
1.14.9	Auxiliary Light Circuit	1-1-11
1.14.10	Engine Coolant Heater (Optional)	1-1-12
1.14.11	Engine Fuel/Water Separator and Fuel Heater (Optional)	1-1-12
1.14.12	Cab Circuits (Optional)	1-1-12
2	OPERATION	1-2-1
2.1	PRE-OPERATIONAL CHECKS	1-2-1
2.2	OPERATING PROCEDURES	1-2-3
2.3	SHUTDOWN PROCEDURE	1-2-4
2.4	CONTROLS AND INDICATORS	1-2-6
3	SPECIFICATIONS	1-3-1
3.1	INTRODUCTION	1-3-1
3.2	SPECIFICATION TABLES	1-3-1
3.3	POINTS OF SERVICE, SPECIFICATION, AND CAPACITIES	1-3-4

TABLE OF CONTENTS

SECTION/ PARAGRAPH	DESCRIPTION	PAGE
4	SHIPPING	1-4-1
4.1	INTRODUCTION.	1-4-1
4.2	TIE DOWN POINTS.	1-4-1
4.3	LIFTING.	1-4-1
4.4	PREPARING ENGINE.	1-4-1
4.5	PREPARING UNIT.	1-4-2
4.5.1	Batteries.	1-4-2
4.5.2	Windshields (Cab Option Only).	1-4-2
4.5.3	Control Panel (Without Cab Option Only).	1-4-2
4.5.4	Warning Beacons.	1-4-2
4.6	MARKING.	1-4-2
4.7	RECEIVING EQUIPMENT.	1-4-2
4.7.1	Inventory.	1-4-2
4.7.2	Inspection.	1-4-2
4.7.3	Notification.	1-4-2
4.8	PREPARING UNIT FOR SERVICE.	1-4-2
4.8.1	Windshields (Cab Option Only).	1-4-2
4.8.2	Warning beacon(s).	1-4-2
4.8.3	Air Cleaner.	1-4-3
4.8.4	Batteries.	1-4-3
4.8.5	Engine.	1-4-3
4.8.6	Control Panel (Without Cab Option Only).	1-4-3
4.8.7	Markings.	1-4-3
5	STORAGE	1-5-1
5.1	SHORT-TERM STORAGE.	1-5-1
5.1.1	Engine.	1-5-1
5.1.2	Transmission.	1-5-1
5.1.3	Drive Axles.	1-5-1
5.1.4	Tires.	1-5-1
5.1.5	Batteries.	1-5-1
5.2	RETURN TRACTOR TO OPERATION AFTER SHORT-TERM STORAGE.	1-5-1
5.2.1	Tires.	1-5-1
5.2.2	Batteries.	1-5-2
5.2.3	Engine.	1-5-2
5.2.4	Transmission.	1-5-2
5.3	LONG-TERM STORAGE.	1-5-2
5.3.1	Engine.	1-5-2
5.3.2	Batteries.	1-5-4
5.3.3	Drive axles.	1-5-4
5.3.4	Transmission.	1-5-4
5.3.5	Tires.	1-5-4
5.3.6	Windows (Cab Option Only).	1-5-4

TABLE OF CONTENTS

SECTION/ PARAGRAPH	DESCRIPTION	PAGE
5.4	RETURN TRACTOR TO OPERATION AFTER LONG-TERM STORAGE.	1-5-4
5.4.1	Tires.	1-5-4
5.4.2	Windows (Cab Option Only).	1-5-5
5.4.3	Batteries.	1-5-5
5.4.4	Engine.	1-5-5
5.4.5	Transmission.	1-5-5
5.4.6	Drive axles.	1-5-5

SECTION 1
GENERAL DESCRIPTION

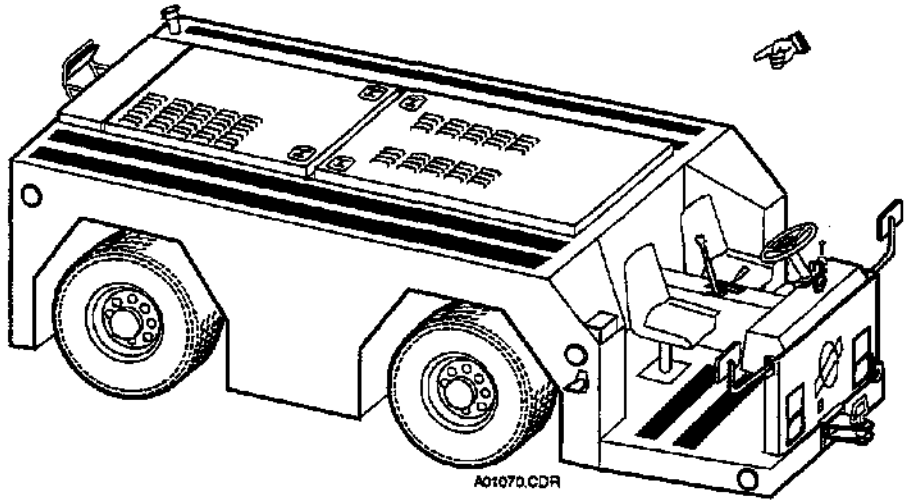

FIGURE 1.1 MODEL GT-50DZ TOW TRACTOR
(Shown without optional cab)

1.1 INTRODUCTION.

1.1.1 This manual contains operation, service, and parts information on the Stewart & Stevenson Model GT-50DZ Tow Tractor.

1.2 UNIT DESCRIPTION.

1.2.1 The Model GT-50DZ Tow Tractor is capable of generating approximately 40,000–48,000 pounds (177,920–213,504 N) of tractive effort. The tow tractor is available in weights of 50,000 pounds (22,680 kg) and 60,000 pounds (27,216 kg). It is powered by a vertical, in-line six-cylinder diesel engine and a Funk six- speed forward and three-speed reverse, semi-automatic transmission. The tow tractor can develop a top speed of about 15 miles per hour (24 km/h) without a vehicle in tow.

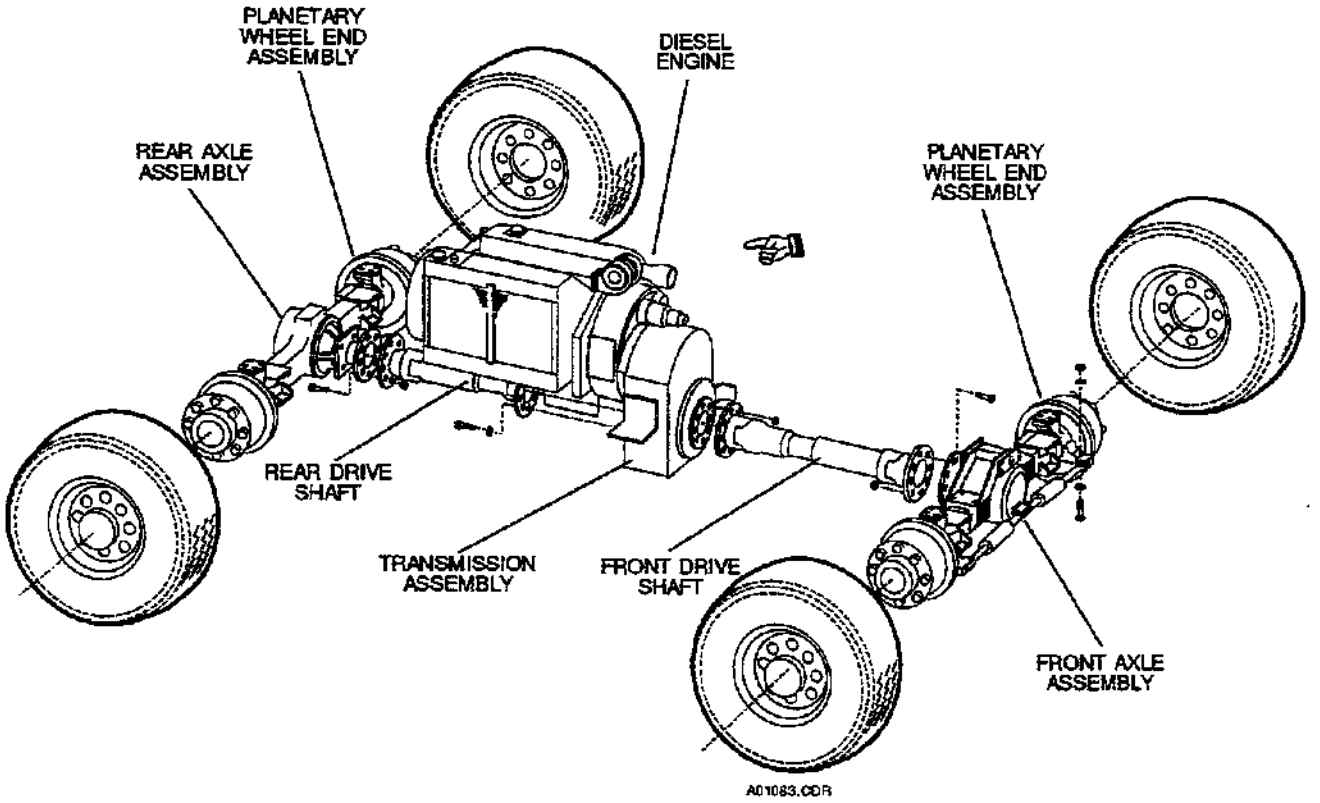

FIGURE 1.2 DRIVELINE ASSEMBLY

1.2.2 The Model GT-50DZ Tow Tractor (Figure 1.1) is comprised of the following major components and systems: engine, transmission, driveline assembly, fuel system, air intake system, lubrication system, cooling systems, steering system, brake system, and electrical system.

1.3 ENGINE.

1.3.1 The tow tractor engine is a four-stroke cycle, six-cylinder turbocharged Deutz diesel engine. Engine displacement is 436 cubic inches (7 L). The engine is an in-line cast iron block. It contains a single camshaft actuating all valves and the fuel injector pump. The vertically aligned gear train, located at the front end of the engine block, contains drive gears for the lubricating oil pump, crankshaft, camshaft, and fuel pump. For detailed information, refer to the engine specification manual located in Chapter 6.

1.4 TRANSMISSION.

1.4.1 The tow tractor is equipped with a Series 2000 Funk Transmission. It has six speeds forward and three speeds reverse. Other features are as listed below.

(a) Forward and reverse speeds are obtained through electrically controlled solenoids and hydraulically actuated multiple-disc clutches. The transmission can be shifted under full engine power.

(b) The clutches are hydraulically applied and spring-released. Each clutch uses a composition friction plate and a polished steel reaction plate.

(c) The power from the engine is transmitted to the transmission through a torque converter. The converter multiplies torque during heavy pull-down loads. When loads are light, the converter transmits the engine power directly. For detailed information, refer to the transmission service manual located in Chapter 6.

1.5 DRIVE LINE ASSEMBLY.

1.5.1 The engine is coupled to the transmission, which drives the front drive shaft and the rear drive shaft, as shown in Figure 1.2. The drive shafts transmit torque to the front and rear differentials. The axles from each differential transmit torque to the planetary wheel end assemblies.

1.6 FUEL SYSTEM.

1.6.1 Fuel from the fuel tank is pulled by the fuel transfer pump through a water separator (standard equipment) and a filter. From the filter, fuel flows to the housing for the injector pumps. Fuel enters this housing at the top and through an inside passage to the fuel transfer pump. From the fuel transfer pump, fuel under pressure, fills the housing for the fuel injection pumps. Pressure of the fuel in the housing is controlled with a bypass valve. Fuel pressure at full load is 30 psi (205 kPa). If fuel pressure exceeds this limit, the bypass will open allowing excess fuel to return to the inlet of the fuel transfer pump. A spin-on–type fuel filter is used on the engine. ■

1.7 AIR INTAKE SYSTEM.

1.7.1 The air intake system consists of an air filter with a dry-type filter element, tubing, connectors, and clamps. The air intake assembly routes filtered outside air to the engine air intake manifold. The air then enters the cylinders when the intake valves are open.

1.8 EXHAUST SYSTEM.

1.8.1 The exhaust system consists of two exhaust manifolds, ducting, clamps, and muffler assembly.

1.8.2 After ignition, the hot, burned exhaust gases, from the cylinders, are pushed out the exhaust valves to the exhaust manifold, through ducting to the muffler, and exited out the tailpipe.

1.9 LUBRICATION SYSTEM.

1.9.1 The engine lubrication system includes an oil pump, oil pump bypass valve, oil filter, oil filter bypass valve, oil cooler, oil cooler bypass valve, and an oil manifold.

1.9.2 A six-lobe rotary oil pump is located inside the front cover of the engine and is driven directly by the crankshaft. The oil bypass valve, located in the oil pump cover, controls pressure of oil coming from the pump. When pressure of oil flowing into the engine exceeds 55–80 psi (380–550 kPa), the bypass valve will open, controlling the output pressure of the pump.

1.9.3 The oil pump draws oil from the oil pan through the screened suction bell of the oil pump. The oil discharge from the pump flows to an oil passage in the engine front cover. It is then routed through the oil cooler and on to the oil filter. The oil filter will bypass oil if excessive restriction in the filter element is present. Oil from the filters is then routed to the engine oil manifold. After engine lubrication, oil drains back to the oil pan. For detailed information, refer to the engine system operation manual located in Chapter 6.

1.10 COOLING SYSTEM.

1.10.1 A radiator and fan are used to effectively dissipate the heat generated by the engine. The radiator is mounted directly to the engine. A centrifugal-type water pump is used to circulate the engine coolant (Figure 1.3). A blocking-type thermostat is used in the water outlet passage to control the flow. This provides fast engine warmup and a regulated coolant temperature.

1.10.2 The tow tractor is equipped with a heat exchanger for the hydraulic steering system, and a heat exchanger for the transmission. These are mounted within the tractor's engine bay and provide a means of dissipating heat from the steering and hydraulic fluids.

1.11 STEERING SYSTEM.

1.11.1 The Model GT-50DZ Tow Tractor is equipped with a hydrostatic-type power steering system. Hydraulic power is supplied by a hydraulic pump mounted on the back of the transmission.

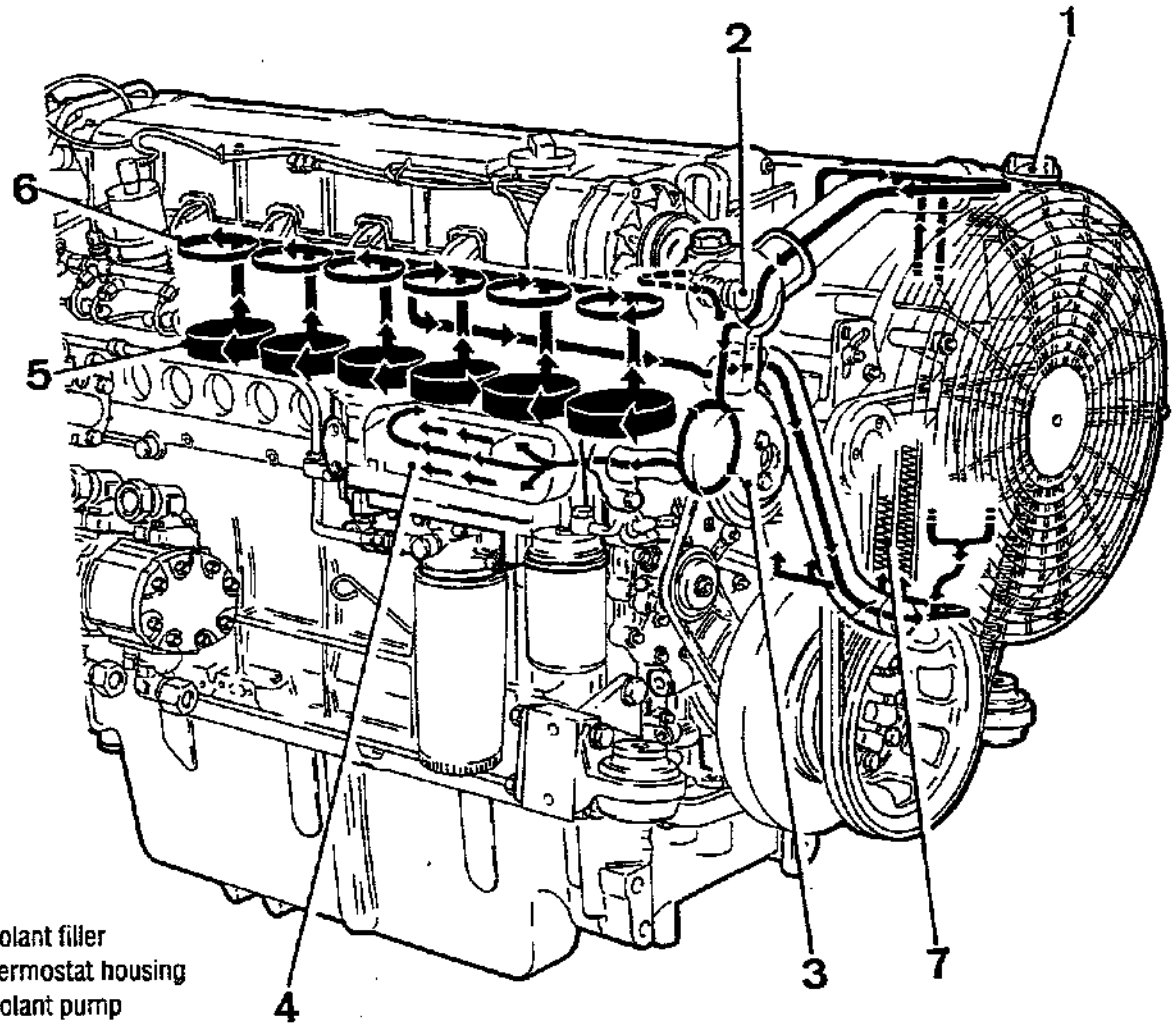

1 Coolant filler
2 Thermostat housing
3 Coolant pump
4 Lube oil cooler
5 Cylinder cooling
6 Cylinder head cooling
7 Heat exchanger with return line to thermostat housing

FIGURE 1.3 COOLING SYSTEM

NOTE

The Model GT-50DZ Tow Tractor has two hydraulic pumps. The pumps are mounted in tandem on the back of the transmission. These pumps supply hydraulic power to the steering system and the brake booster. A third hydraulic pump is installed on the opposite side of the transmission for the lift cab option and supplies hydraulic pressure for the up and down directional control of the cab.

1.11.2 The steering system is composed of six major components. These components are described as follows (Figure 1.4).

(a) Hydraulic Pump. This is a gear-type positive displacement pump directly driven off the transmission auxiliary drive. A suction hose from the pump inlet (suction side) is connected to the hydraulic reservoir.

(b) Flow Control Valve. This valve allows a constant volume of hydraulic fluid to flow to the steering system at high and low engine speeds while diverting excess flow directly back to the reservoir. The valve also contains an integral pressure relief valve which is factory pre-set at 2,250 psig (15,502 kPa).

(c) Steering Valve. The steering valve consists of a manually operated directional control valve and meter in a single valve. Rotation of the steering wheel (which is attached to the valve) directs fluid to the steering cylinders mounted on the steering axle.

(d) Steering Cylinders. The steering cylinders are double-acting hydraulic cylinders attached to the steering axle. When fluid, under pressure, is directed into the cylinders by the steering valve, the cylinders extend or retract to accomplish the required turning direction.

(e) Hydraulic Reservoir. This reservoir contains the hydraulic fluid necessary to operate the steering system, hydraulic power to the brake booster, and provide a reserve. The reservoir contains an integral filler cap and level gauge, strainer, and vent.

(f) Hydraulic Filter. The ModuFlow Filter Assembly is designed for fluid to flow from the inside to the outside of the filter element. A diverter/bypass valve ensures full-flow filtration until bypass pressure is reached. A Tells-All Indicator, mounted on the side of the filter housing, allows a visual indication of the relative dirt accumulation.

1.12 BRAKE SYSTEM.

1.12.1 The master cylinder and power booster assembly supply hydraulic brake fluid pressure to the brake cylinder at each wheel (Figure 1.5). Hydraulic power to the brake booster is supplied by a tandem-mounted, gear-type positive displacement pump driven off the hydraulic steering pump.

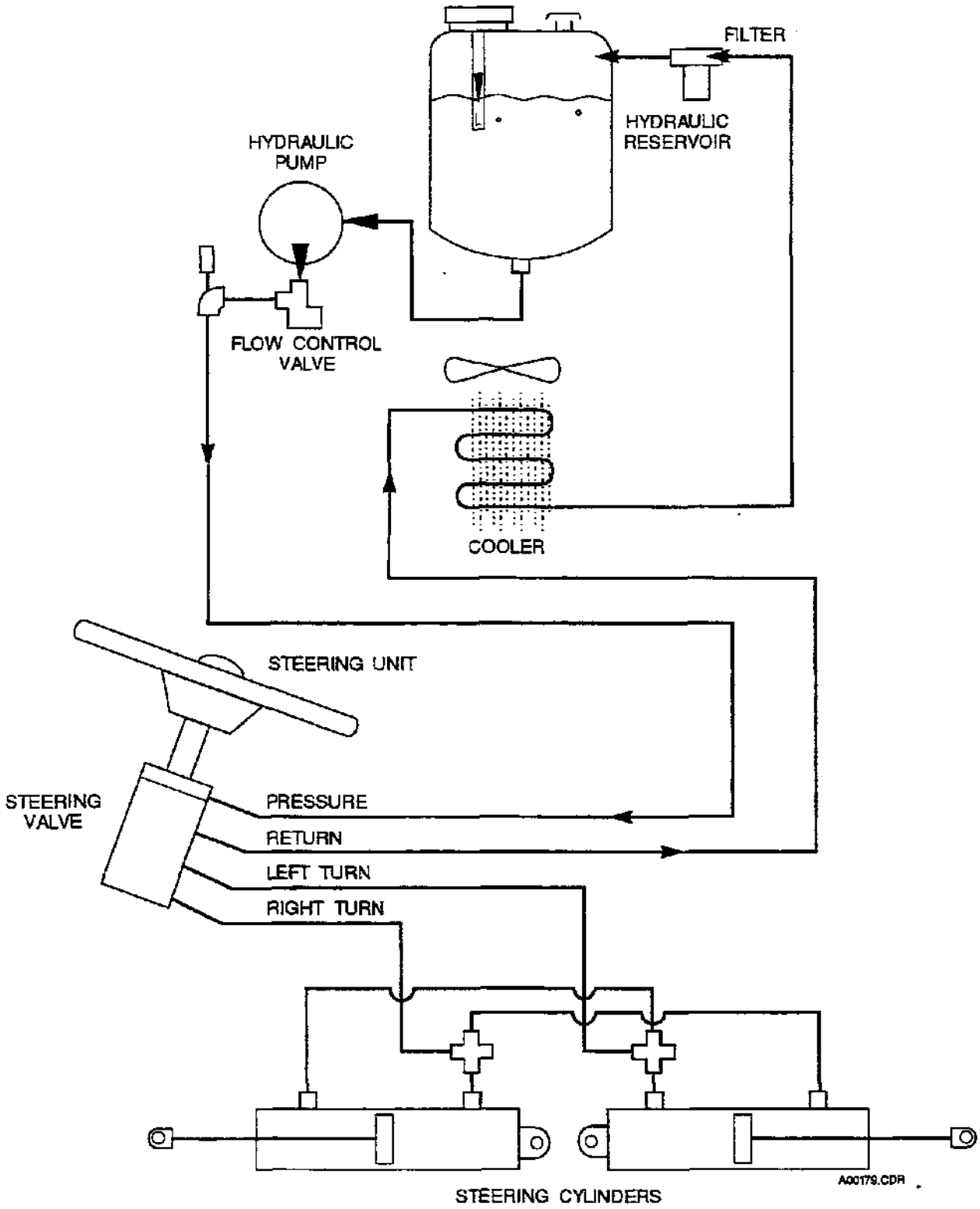

FIGURE 1.4 HYDRAULIC STEERING SYSTEM SCHEMATIC

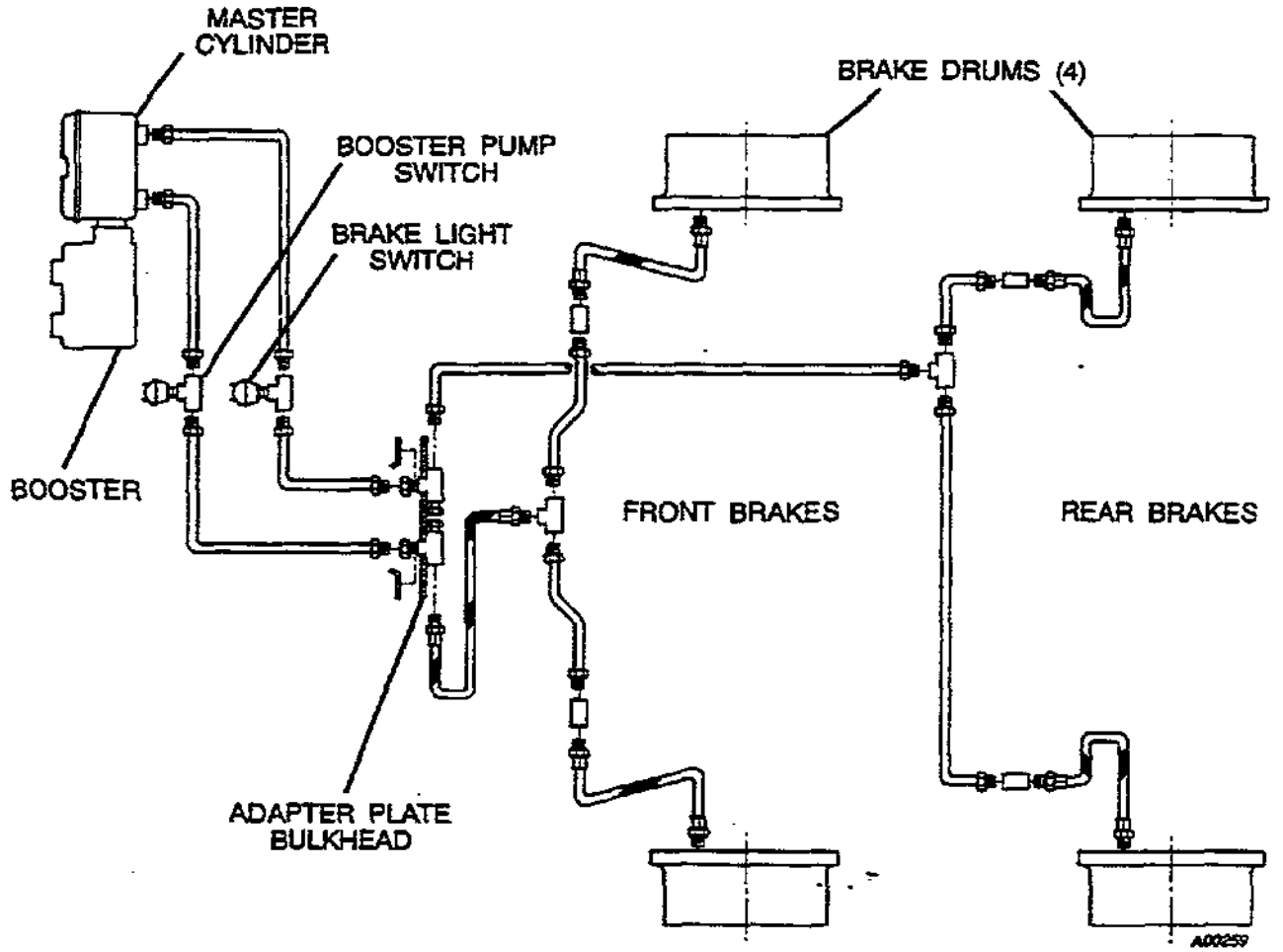

FIGURE 1.5 HYDRAULIC BRAKE SYSTEM

1.12.2 When the brake pedal is depressed, operating fluid pressure in the power booster forces a push rod in the power booster to actuate the primary and secondary pistons of the master cylinder. Movement of these pistons increases brake line pressure, causing the brakeshoes to actuate.

1.12.3 The primary and secondary chambers of the master cylinder function as two separate fluid systems. One chamber provides actuating fluid for the rear brakes, while the other chamber provides actuating fluid for the front brakes.

1.12.4 The hydraulic booster assembly includes a battery-powered backup booster pump. This backup pump supplies boost pressure in an emergency situation when the pressure in the brake booster cylinder is too low. This may happen if the engine is stalled while the tractor is in motion. The backup booster pump can also be used any time the service brakes are needed and the tractor engine is not running, provided the tractor's battery is charged and the battery cables are connected.

1.12.5 Parking Brake. The parking brake is a mechanical caliper type, which operates on the transmission output flange. It is applied by actuating the parking brake lever in the operator's compartment. The lever is connected to the parking brake caliper by a cable.

1.13 LIFT CAB (OPTIONAL).

1.13.1 The cab is a two-door, weathertight enclosure mounted on a steel-welded subframe. The controls are mounted inside the cab and are linked, either hydraulically, mechanically, or electrically, to the tractor body.

1.13.2 Pressurized hydraulic fluid is routed from the gear-type hydraulic pump, through the unloading valve, to the solenoid-operated directional control valve. This valve allows fluid flow for either lifting or lowering the cab, depending on its setting, controlled by the cab toggle switch located on the control panel. Refer to Stewart & Stevenson Cab Lift schematic located in Chapter 5.

(a) In cab lifting, the directional control valve routes fluid to the double pilot-operated check valve assembly, which contains two internal check valves. Pressure in the supply line opens one side of the internal check valves, admitting fluid to the top side of the cylinder. Simultaneously, pilot pressure, routed from the supply side of the assembly, opens the second internal check valve. This valve vents fluid from the low side of the cylinder, back to the reservoir.

(b) In lowering the cab, the directional valve routes the pressurized fluid to the lower side of the cylinder, reversing the flow through the double pilot-operated check valve assembly and cylinder.

1.14 ELECTRICAL SYSTEM.

1.14.1 The following paragraphs describe the theory of operation of the electrical system of the Model GT-50DZ Tow Tractor. Refer to Stewart & Stevenson Tow Tractor schematic diagram located in Chapter 5.

1.14.2 Engine Starting and Battery-Charging Circuits. With the engine shift lever in neutral and engine STOP/RUN/START switch S1 in START position, relay K1 is energized, and the contacts of engine starting contactor K1 close. Starting solenoid L1 is energized and applies 12-volt battery voltage to engine starting motor B1. After the engine starts and fuel pressure rises above 5 psi (34 kPa), the normally closed contacts of fuel pressure switch S3 open to prevent engagement of the starter while the engine is running. The battery- charging alternator G1 maintains battery BT1 in a charged condition and supplies power to the various 12-VDC engine accessory circuits.

1.14.3 Brake Booster Motor Circuit. This circuit supplies power to the brake booster backup pump motor in an emergency situation, when the brake booster cylinder has too low a hydraulic pressure to supply adequate boost to the master cylinder. This may happen when the engine is stalled while the tractor is in motion, or any time the engine is not running. When this condition exists, the backup hydraulic brake booster pump flow switch S18 (normally open when the engine is running) is closed. Therefore, when the brake pedal is depressed, causing switch S17 to close, it energizes backup brake booster pump motor control relay K4. The normally open K4 contacts then close, and apply 12-VDC battery voltage to backup brake booster pump motor B2 and BRAKE BOOSTER PUMP MOTOR ON lamp DS13. When the brake pedal is released, relay K4 deenergizes. The K4 contacts then open, lamp DS13 extinguishes, and pump motor B2 stops running. It takes approximately 68–72 pounds of foot pressure on the brake pedal to activate pump motor B2.

1.14.4 Engine Run Relay Circuit. At the same time that the STOP/RUN/START switch (S1) is being actuated to crank the engine, battery voltage is applied through fuse F2 and the closed contacts of S1 (RUN) to the engine run relay K2. Engine run relay K2 is energized, closing the K2 contacts in the engine starting and battery-charging circuits. The contacts of K2 closing energize the engine run relay L2, allowing the engine to start and run.

1.14.5 Horn Circuit. When horn button S5 is depressed, horn relay K3 energizes. Therefore, the normally open K3 contacts close and energize the horn H1 with 12 VDC from battery BT1. The action of relay contacts K6 are covered in the warning light circuit description.

1.14.6 Engine Instrument Circuit. When the engine is running and fuel pressure is 5 psi (34 kPa) or above, the engine fuel pressure switch S4 is closed and total (elapsed) time HOURMETER M1 is energized. With engine switch S1 in the RUN position, the circuits for the following instruments are energized: FUEL level gauge GA1, ENGINE OIL pressure gauge GA2, engine WATER (coolant) TEMPerature gauge GA3, battery voltage meter M2, and tachometer gauge GA4.

1.14.7 Light Circuit. PARKING LIGHTS switch S9, when placed in the ON position, applies 12 VDC from battery BT1 through fuse F1 to the following lamps: left tail lamp DS7, right tail lamp DS8, left front parking lamp DS9, and right front parking lamp DS10. Hydraulic brake pressure switch S10 energizes the stop element of taillight lamps DS7 and DS8 though hazard flasher switch S12, when the brake pedal is pressed. HEAD LIGHTS switch S11 energizes head lamps DS5 and DS6, tail lamps DS7 and DS8, and parking lamps DS9 and DS10. When placed in the ON position, HAZARD LIGHTS switch S12 energizes flasher FL1. Flasher FL1 then turns power on and off to tail lamps DS7 and DS8 and front hazard lamps DS9 and DS10.

1.14.8 Warning Light Circuit. The following steps (a) thru (d) describe the warning light circuit:

(a) If engine oil pressure drops below approximately 10 psi (69 kPa), engine low oil pressure switch S14 closes and engine LOW OIL PRESSure warning lamp DS12 illuminates. Conversely, when engine oil pressure rises above approximately 10 psi (69 kPa), switch S14 opens and lamp DS12 extinguishes.

(b) When coolant temperature is below approximately 205 °F (96 °C), switch S15 is open and lamp DS11 is extinguished. This is the normal operating condition. On the other hand, if engine coolant temperature exceeds approximately 205 °F (96 °C), engine high coolant temperature switch S15 closes and the COOLANT TEMPerature warning lamp DS11 illuminates.

(c) When the parking brake is applied, parking brake switch S6 closes and HAND BRAKE ON lamp DS1 illuminates.

(d) When the engine is running and fuel pressure is 5 psi (34 kPa) or above, fuel pressure switch S21 is closed. When the transmission is not engaged, the closure of S21 will not affect anything, as the K5 contacts in series with S21 are open when the transmission shifter is in the neutral position. However, when the transmission is not in neutral (is engaged), the K5 contacts are closed. Relay K5 is in the engine starting and battery-charging circuits. Therefore, when the parking brake is applied and the engine is running, and the transmission is engaged, the HAND BRAKE ON lamp DS1 and Transmission Engaged (parking brake warning) lamp DS17 illuminates to visually warn the driver. Moreover, at the same time DS17 illuminates, relay K6 is energized. The normally open K6 contacts then close and energize horn relay K3 in the horn circuit. In turn, the normally open K3 contacts close and energize the horn H1, giving the driver an additional warning.

(e) When the parking brake is released, lamps DS1 and DS17 extinguish and horn H1 stops sounding. Lamp DS17 and horn H1 can also be deenergized (with the parking brake on) by operating the transmission selector to the neutral position or stopping the engine.

1.14.9 Auxiliary Light Circuit. This circuit is explained in steps (a) and (b), as follows:

(a) Before the tow tractor is reversed (backed up), the driver manually closes switch S19 and thereby applies battery voltage to backup lamps DS15 and DS16. The lamps then illuminate to provide a visual warning that the tow tractor is being reversed.

(b) When panel lamp switch S20 is operated in the ON (closed) position, it applies battery voltage to the dash panel illumination lamp DS14. The lamp then illuminates, to provide the operator a better view of the controls and indicators during low-light conditions.

1.14.10 Engine Coolant Heater (Optional). In cold weather climates, under 40 °F (4.4 °C), an optional engine coolant heater is used to maintain the engine coolant at an operating temperature of 100–120 °F (38–49 °C). Refer to engine coolant heater circuit schematic in Chapter 5. The coolant is heated and circulated through the engine. A 115-VAC receptacle is located near the engine control panel for external AC connection.

1.14.11 Engine Fuel/Water Separator and Fuel Heater (Optional). The fuel/water separator and heater option are installed in place of the standard fuel/water separator. This separator filters and removes contaminants and water from the fuel before it enters the engine. The fuel/water separator may include a fuel heater, which is used below 40 °F (4.4 °C), to warm the fuel prior to it entering the engine, to ease starting. The fuel/water separator heating element uses engine battery voltage to operate and is controlled by a switch located on the engine control panel. Refer to Heater Circuit schematic located in Chapter 5.

1.14.12 Cab Circuits (Optional). The following paragraphs apply to units equipped with an optional cab:

(a) Cab Heater and Ventilating Fan Circuits. When engine run relay K2 is energized, 12 VDC is made available to the heater and ventilating fan motor circuits. The fan motors can then be controlled by the appropriate fan switch.

(b) Windshield Wiper and Dome Light Circuits (Optional). When engine run relay K2 is energized, 12 VDC is made available to the optional windshield wipers and dome light circuits. The windshield wiper switch controls power applied to the windshield wiper motor. The dome light switch is used to turn the interior dome lamp on or off.

SECTION 2

OPERATION

2.1 PRE-OPERATIONAL CHECKS.

CAUTION

BEFORE USING THE EQUIPMENT, THE OPERATOR SHOULD CAREFULLY READ THE INSTRUCTIONS IN THIS SECTION AND BECOME FAMILIAR WITH THE TOW TRACTOR'S CONTROLS AND INDICATORS, DESCRIBED IN TABLE 2.2 OF THIS SECTION.

NEVER RUN THE ENGINE WITH 115-VAC RECEPTACLE CONNECTED TO THE OPTIONAL ENGINE COOLANT HEATER. A FLOW CHECK VALVE STOPS COOLANT FLOW THROUGH THE HEATER WHILE THE ENGINE IS RUNNING. THE HEATER WILL BE DAMAGED IF 115-VAC IS CONNECTED TO THE HEATER RECEPTACLE WHILE THE ENGINE IS RUNNING.

NOTE

In temperatures below 40 °F (4.4 °C), ensure that in units with an engine fuel heater option, heaters are operating 10 minutes prior to engine starting and turned off before ENGINE STOP/RUN switch is placed in the RUN position.

In temperatures below 40 °F (4.4 °C), ensure that units with an engine coolant heater option are connected to engine external 115-VAC power source 1 hour prior to engine starting and operation.

In order to ensure safe, reliable operation, perform the following checks prior to operating the tractor:

(a) Set parking brake. (Pull handle up as far as it will go.)

(b) Walk around and inspect tractor for damage or missing equipment. Check for the following:

(1) Damaged or under-inflated tires. Cold-tire pressure should be 130 psi (895 kPa). Look for cuts, cracks in sidewalls, or foreign objects in treads.

(2) Loose wheel nuts.

(3) Leaking planetary wheel end housings.

(4) Proper operation of hitches.

(5) Damage to lights.

(6) Fire extinguishers fully charged and in place.

(c) Look underneath tractor for leaks of coolant, hydraulic fluid, transmission fluid, or lubricating oil. If significant leaks in any of these systems are found, repair as soon as possible.

(d) Check engine oil.

WARNING

DO NOT LOOSEN OR REMOVE RADIATOR CAP WHILE COOLANT IS HOT. HOT COOLANT UNDER PRESSURE CAN CAUSE SEVERE BURNS.

(e) Check engine coolant level. Coolant level should be approximately 1-1/2 inches (4 cm) below top of radiator fill neck. Add coolant as necessary, but do not overfill. Make a visual check for leaks.

(f) Inspect engine compartment for loose hardware, loose wires, and leaking lines or fittings.

(g) Check hydraulic system reservoir by removing filler cap to ensure there is enough fluid for operation. A very low fluid level indicates a serious leak in the system. Repair as soon as possible.

(h) When all mechanical checks are completed, move to the driver's seat in the cab. Check the operation of hazard flasher, stop- and taillights, headlights, backup lights, and dash panel lights.

(i) Check fuel level gauge to make sure tank is full.

NOTE

Fuel contamination owing to moisture condensing on the inner surfaces of the fuel tank can be minimized or eliminated by keeping the fuel tank as full as possible. The fuel tank should always be topped off at the end of the day's operation, as part of the post-operation maintenance routine.

(j) Check operation of 12-VDC brake backup booster pump as follows:

WARNING

IF ANY MALFUNCTION OF THE BRAKE SYSTEM OCCURS, THE TRACTOR SHOULD BE TAKEN OUT OF SERVICE UNTIL IT IS PROPERLY REPAIRED.

CAUTION

IF THE BRAKE BACKUP BOOSTER PUMP IS IN OPERATION LONGER THAN 1 MINUTE, POSSIBLE OVERHEATING AND DAMAGE TO THE MOTOR MAY OCCUR. THEREFORE, THE DRIVER SHOULD NOT APPLY HEAVY BRAKE PRESSURE ANY LONGER THAN IS NECESSARY.

(1) Make sure parking brake is still applied. Do not start engine. Turn engine STOP-RUN-CRANK switch to RUN position. ■

(2) Depress brake pedal firmly. The driver should be able to hear the DC motor running and see BRAKE BOOSTER PUMP ON lamp illuminated.

NOTE

It requires a minimum of approximately 68–72 lb (31–33 kg) of force, to activate the pressure switch to turn on the pump motor.

(3) Turn STOP-RUN-CRANK switch to STOP position and repeat step (2). ■

(k) Start engine and allow engine to idle. When engine coolant temperature reaches 160 °F (71.8 °C), check transmission oil level. Add oil as required. Do not overfill.

2.2 OPERATING PROCEDURES.

WARNING

MAKE SURE ALL PERSONNEL ARE CLEAR OF THE TOW TRACTOR BEFORE STARTING THE ENGINE.

(a) Check that parking brake is applied and transmission lever is in *Neutral* (*N*) position.

CAUTION

TO AVOID OVERHEATING OF STARTER MOTOR, DO NOT OPERATE STARTING MOTOR MORE THAN 30 SECONDS WITHOUT ALLOWING A MINIMUM COOLING PERIOD OF 2 MINUTES.

(b) To start engine, turn engine STOP-RUN-CRANK switch to RUN position. Observe the GLOW PLUG Lamp, when the lamp extinguishes, turn the STOP-RUN-CRANK switch to the CRANK position. ▌

(c) Depress brake pedal and release parking brake.

(d) Select desired position on transmission shift lever.

WARNING

DO NOT BACK UP (REVERSE) TRACTOR WITHOUT FIRST OPERATING BACKUP LIGHTS SWITCH TO ON POSITION. OPERATE SWITCH TO OFF POSITION WHEN TRACTOR IS NO LONGER IN REVERSE.

DO NOT SHIFT TRANSMISSION WHILE HANDLING AIRCRAFT.

(e) Release brake pedal and depress accelerator pedal to desired tractor speed.

CAUTION

THE PARKING BRAKE IS NOT INTENDED TO BE USED FOR NORMAL STOPPING.

(f) To stop tow tractor, release accelerator pedal and depress brake pedal.

2.2.1 Table 2.1, which follows, lists normal engine operating conditions.

TABLE 2.1 NORMAL OPERATING CONDITIONS

Engine Oil Pressure (3,000 rpm)	40–60 psi (275–413 kPa) (approx.)
Idle	12–15 psi (83–103 kPa) (approx.)
Coolant Temperature	160–185 °F (71–85 °C)
Engine Governor Speed	3,000 rpm
Idle Speed	700 rpm

2.3 SHUTDOWN PROCEDURE.

(a) Halt tow tractor at its parking location.

(b) Position transmission shift lever to *Neutral* (*N*) position.

(c) Apply parking brake.

(d) Turn off all accessory equipment (lights, etc.).

(e) To stop tractor engine, turn engine STOP-RUN-CRANK switch to STOP position.

THIS PAGE INTENTIONALLY LEFT BLANK

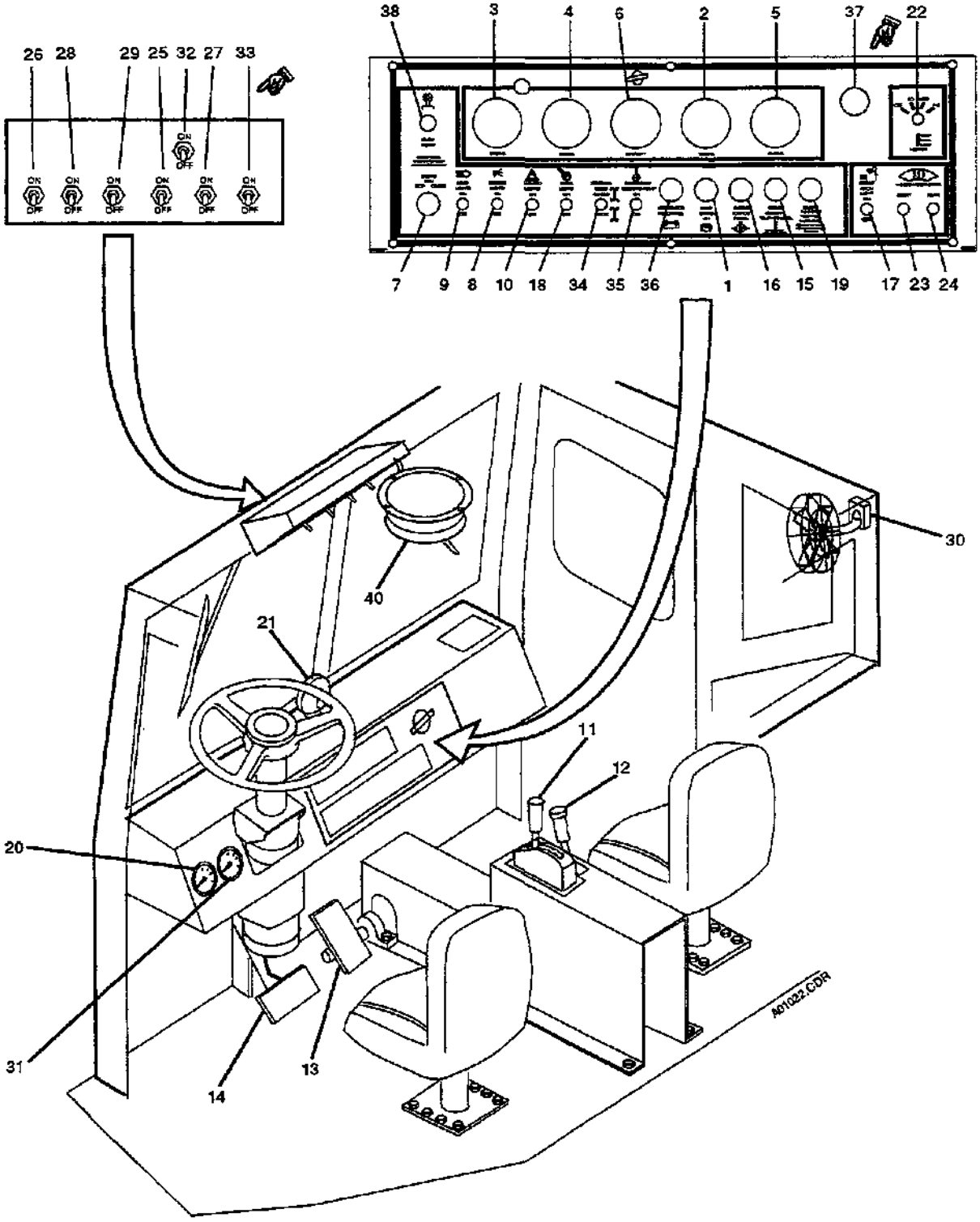

FIGURE 2.1 OPERATOR'S PANEL AND CONTROLS (TABLE 2.2) (SHEET 1 OF 4)

2.4 CONTROLS AND INDICATORS.

2.4.1 Table 2.2 lists the controls and indicators and explains the specific function of each. Reference Figure 2.1 for location of the item listed.

TABLE 2.2 CONTROLS AND INDICATORS (REFER TO FIGURE 2.1)

ITEM	NAME OF CONTROL OR INDICATOR	FUNCTION
1	Lamp, HAND BRAKE ON (Parking Brake) (DS1)	The HAND BRAKE ON lamp illuminates when the hand (parking) brake is actuated.
2	Gauge, FUEL Level (GA1)	The FUEL level gauge indicates the level of fuel in the tractor fuel tank.
3	Gauge, Engine Oil Pressure (GA2)	The engine Oil Pressure gauge is used to monitor engine lube oil pressure.
4	Gauge, Water Temperature (Engine Coolant Temperature) (GA3)	The engine coolant temperature gauge is used to monitor engine coolant temperature.
5	Meter, Time Elapsed (Hourmeter) (M1)	The time elapsed meter (Hourmeter) indicates total engine operating time.
6	Meter, Battery Voltage (Voltmeter) (M2)	The battery voltage meter (Voltmeter) indicates battery voltage when the tractor is in the CRANK or RUN position.
7	Switch, ENGINE STOP-RUN-CRANK (S1)	The ENGINE STOP-RUN-CRANK switch is a three-position, spring-return switch used to electrically start and stop the tractor engine.
8	Switch, PARKING LIGHTS ON/OFF (S9)	The PARKING LIGHTS switch is used to turn on the front and rear parking lights.
9	Switch, HEAD LIGHTS ON/OFF (S11)	The HEAD LIGHTS switch is used to turn on the headlights on the tractor. (It also turns on the parking lights if they are not already on.)

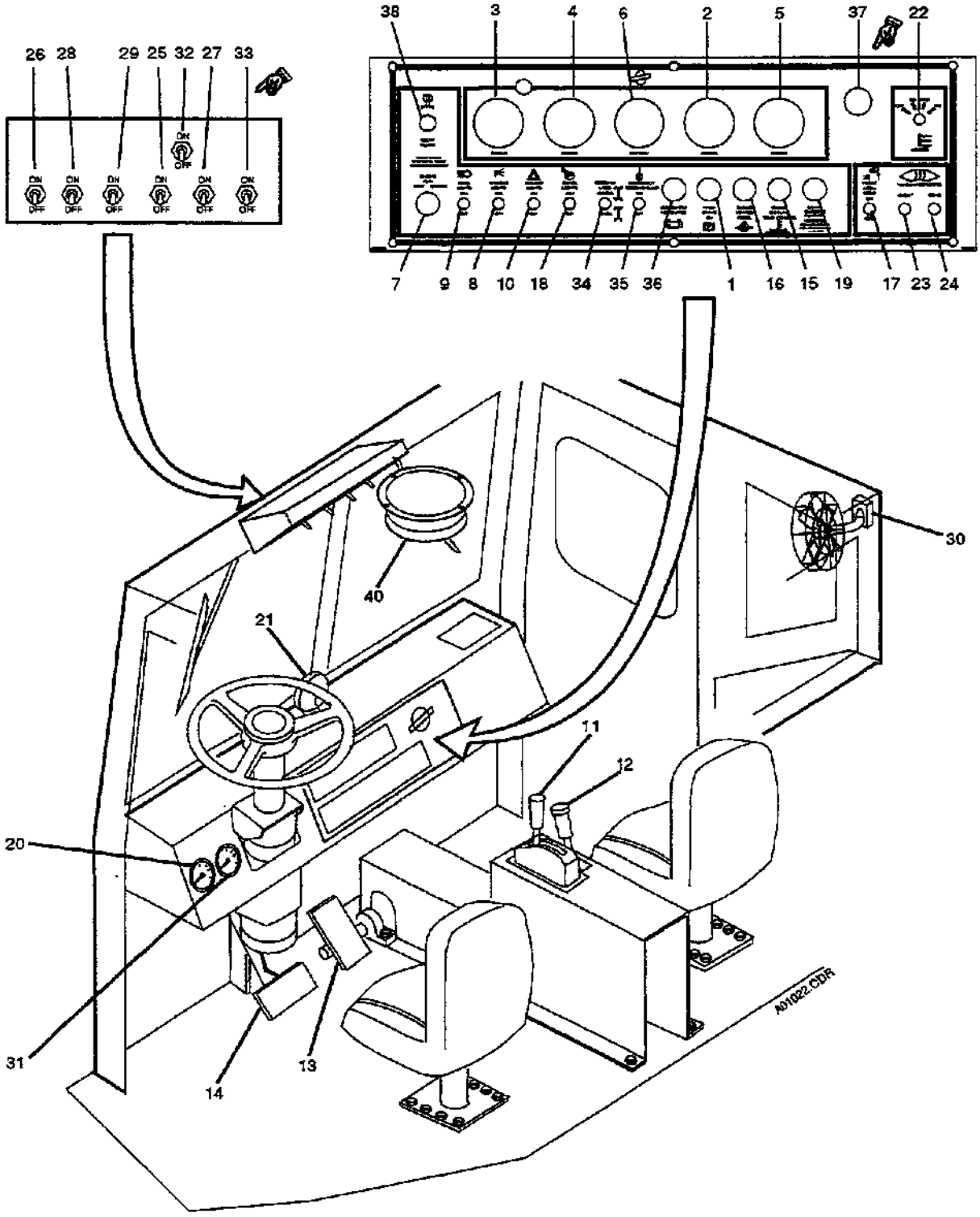

FIGURE 2.1 OPERATOR'S PANEL AND CONTROLS (TABLE 2.2) (SHEET 2 OF 4)

TABLE 2.2 CONTROLS AND INDICATORS (CONT.)
(REFER TO FIGURE 2.1)

ITEM	NAME OF CONTROL OR INDICATOR	FUNCTION
10	Switch, HAZARD LIGHTS ON/OFF (S12)	The HAZARD LIGHTS switch is used to turn on the front and rear hazard lights. (If optional turn signal switch is furnished; S12 is removed.)
11	Transmission Shift Lever	The transmission shift lever is used to activate the six-speed forward and three speed reverse Funk automatic transmission.
12	Parking Brake Lever	The parking brake lever is used to actuate the parking brake.
13	Accelerator	The accelerator is used by the operator to regulate the speed of the tow tractor.
14	Brake Pedal	The brake pedal is used by the operator to manually activate the brake system on the tow tractor.
15	Lamp, ENGINE COOLANT TEMPERATURE (DS11)	The ENGINE COOLANT TEMPERATURE warning lamp illuminates when engine block temperature exceeds 239 °F (115 °C).
16	Lamp, Engine LOW OIL PRESS (DS 12)	The engine LOW OIL PRESSure warning lamp illuminates when engine lubricating oil pressure drops to 5.8 psi (40 kPa).
17	Switch, FRONT PINTLE LIGHT ON/OFF	The FRONT PINTLE LIGHT switch is used to illuminate the FRONT PINTLE LIGHTS on the tractor.
18	Switch, PANEL LIGHTS ON/OFF (S20)	The PANEL LIGHTS switch operates the panel lights in operator's compartment.
19	Lamp, BRAKE BOOSTER PUMP ON (DS13)	The BRAKE BOOSTER PUMP ON lamp illuminates whenever the booster pump is supplying brake pressure to the brake system in an emergency situation.

* Optional Equipment

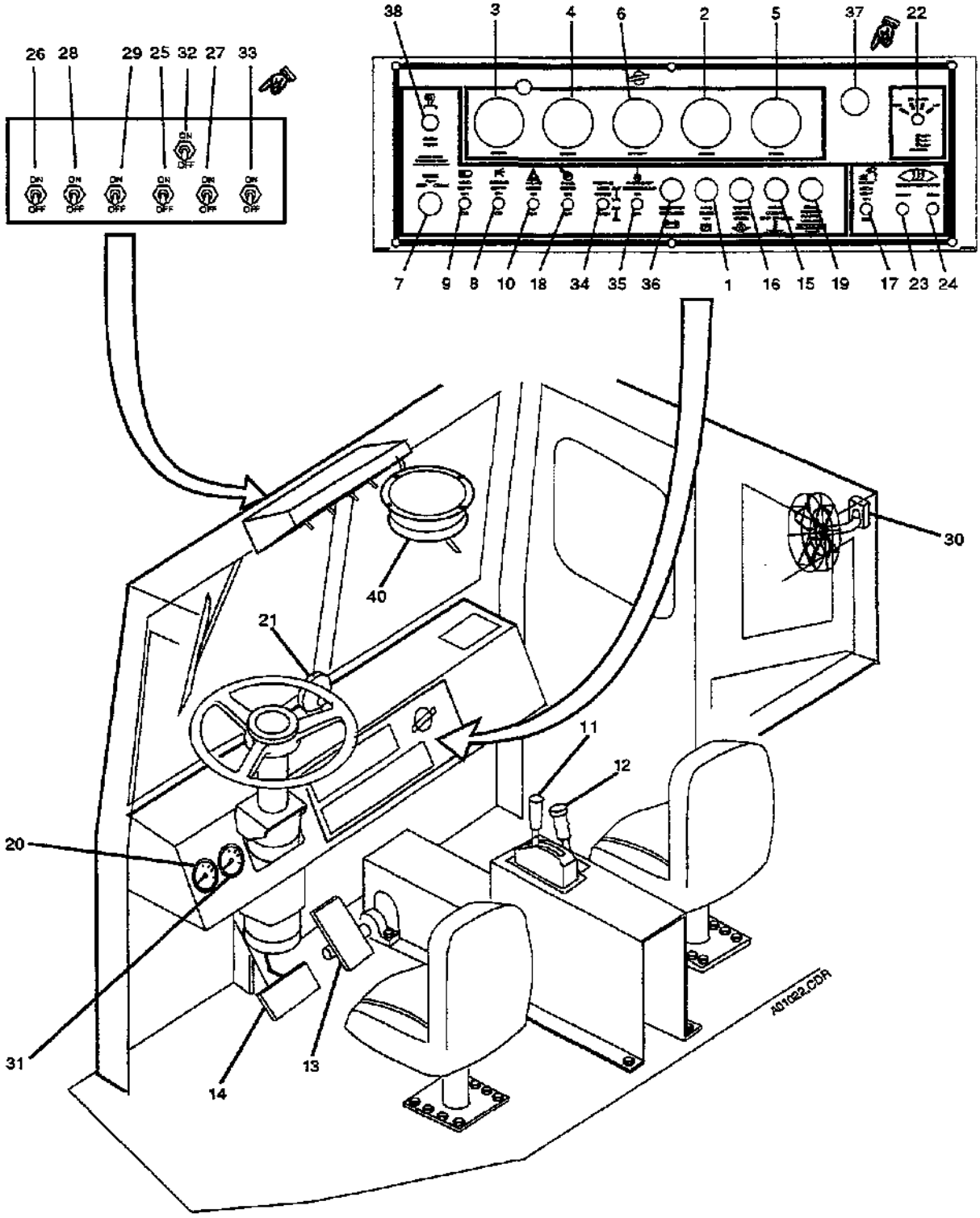

FIGURE 2.1 OPERATOR'S PANEL AND CONTROLS (TABLE 2.2) (SHEET 3 OF 4)

TABLE 2.2 CONTROLS AND INDICATORS (CONT.)
(REFER TO FIGURE 2.1)

ITEM	NAME OF CONTROL OR INDICATOR	FUNCTION
20	Gauge, Tachometer (GA4)	The tachometer indicates engine rpm.
21	Lamp, Parking Brake Warning (DS17)	Warning lamp illuminates with the parking brake applied, in addition to lamp DS1.
*22	Switch, Cab Heater Fan	Operates fan motor for cab heating. ■
*23	Switch, Windshield Defroster, FRONT	Operates blower motor for front defroster tube.
*24	Switch, Windshield Defroster, REAR	Operates blower motor for rear defroster tube.
*25	Switch, Rear Wiper Motor	Operates rear windshield wiper motor.
*26	Switch, Beacon	Operates rotating towing beacon. ■
*27	Switch, Front Wiper (Left)	Operates left front windshield wiper motor.
*28	Switch, Light, Dome	Operates the cab's dome light.
*29	Switch, Defogger Fan	Operates defogger fan.
*30	Defogger Fan	Circulates air in cab area to defog windows.
*31	Speedometer	Indicates vehicle speed.
*32	Switch, Overhead Wiper	Operates overhead wiper motor.
*33	Switch, Front Wiper (Right)	Operates right front windshield wiper motor.
*34	Selector, STEERING MODE COORD/TRACK	Selects vehicle STEERING MODE.
*35	Switch, EMERGENCY STEERING PUMP ON/OFF	Operates EMERGENCY STEERING PUMP.
36	Lamp, GENERATOR NO CHARGE	Warning lamp illuminates when alternator has failed.

* Optional Equipment

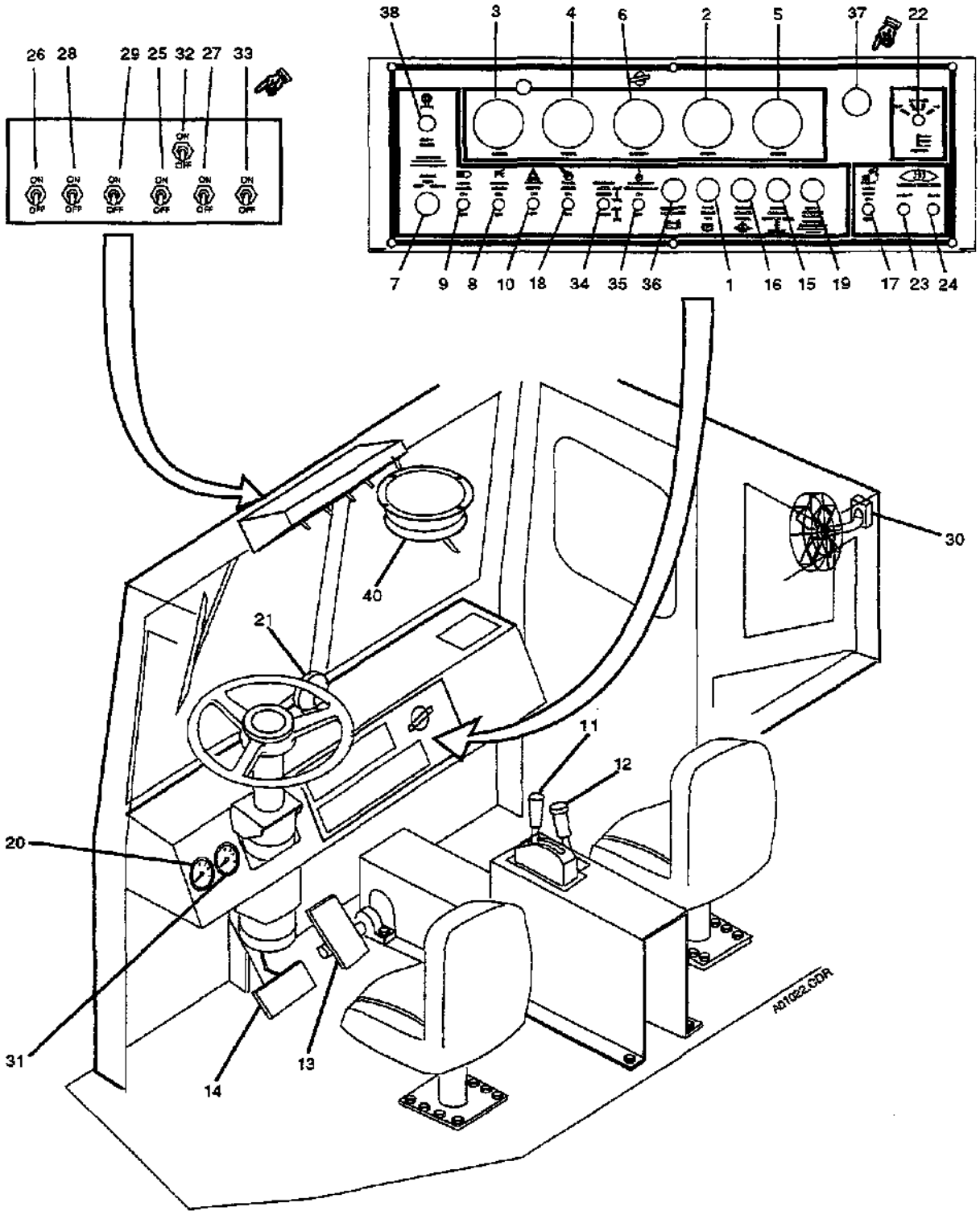

FIGURE 2.1 OPERATOR'S PANEL AND CONTROLS (TABLE 2.2) (SHEET 4 OF 4)

TABLE 2.2 CONTROLS AND INDICATORS (CONT.)
(REFER TO FIGURE 2.1)

ITEM	NAME OF CONTROL OR INDICATOR	FUNCTION
*37	Gauge, TRANSMISSION OIL TEMPERATURE	The transmission oil temperature gauge is used to monitor transmission fluid temperature.
38	Lamp, GLOW PLUGS	Lamp illuminates when GLOW PLUGS are hot and engine start can occur.
*39	Phone Jack (Not illustrated)	The headphone jack is mounted on the rear wall of the cab, between the operators seats.
*40	Light, Dome	Illuminates cab area.

*Optional Equipment

SECTION 3

SPECIFICATIONS

3.1 INTRODUCTION.

3.1.1 The following specification tables provide important data as to the characteristics of the GT-50DZ/50DZH ■ tow tractor and its related components.

3.2 SPECIFICATION TABLES.

3.2.1 Specifications for the GT-50DZ/50DZH tow tractor and related components are listed in Tables 3.1, 3.2, and ■ 3.3.

TABLE 3.1 SPECIFICATIONS

EQUIPMENT	SPECIFICATIONS
A. COMPLETE UNIT	TOW TRACTOR GT-50DZ/50DZH ■
1. Manufacturer	Stewart & Stevenson Services, Inc. Houston, Texas
2. Weight GT-50DZ/50DZH	 50,000–60,000 lb (22,680 –27,216 kg) ■
3. Tractive Effort	40,000–48,000 lb (177,920 –213,504 N) (varies with surface conditions)
4. Speed (Max.)	15 mph (24 km/h)
5. Length (Front/Rear Hitches)	224 in. (568 cm)
Length (Less Hitches)	188 in. (478 cm)
Length (w/Ground Power Unit)	266 in. (675 cm)
6. Width	102 in. (259 cm)
7. Height (Less Cab)	65 in. (165 cm), includes fuel fill pipe. ■
(With Cab Model 416)	86 in. (218 cm)
8. Wheel Base	90 in. (229 cm)
9. Turning Radius (Outside)	21 ft. 6 in. (6.6 meters)
10. Ground Clearance	7 in. (17.8 cm) ■
B. ENGINE	
1. Manufacturer	Deutz
2. Type	4-cycle, in-line 6-cylinder diesel, Model BF6M 1013 turbocharged
3. Number of Cylinders	6
4. Bore	4.25 in. (108 mm)
5. Stroke	5.12 in. (130 mm)

TABLE 3.1 SPECIFICATIONS (CONT.)

EQUIPMENT	SPECIFICATIONS
B. ENGINE (CONT.)	
6. Effective Displacement	436 cu. in. (7 L)
7. Speed (Idle)	700 rpm
(Governed)	2,500 rpm
8. Compression Ratio	17.6:1
9. Firing Order	1,5,3,6,2,4
10. Number of Main Bearings	7
11. Governor	Mechanical/Speed Limiting
12. Starting Motor	Deutz
13. Alternator - Battery Charger	Deutz
14. Regulator	Deutz
C. TRANSMISSION	
1. Manufacturer	Funk Mfg. Co., Inc.
2. Model	2263E13NB, Spec YZ15176
3. Speeds	6 Fwd, 3 Reverse
4. Controls	Electric, Modulated
5. Low Ratio	5.2:1
D. AXLE - FRONT	
1. Manufacturer/Model	Rockwell Int., Model 5MRDIA
2. Type	Planetary Drive (Limited Slip)
3. Overall Reduction	24.50:1
E. AXLE - REAR	
1. Manufacturer/Model	Rockwell Int., Model 5MRA
2. Type	Planetary Drive (Limited Slip)
3. Overall Reduction	24.50:1
F. WHEELS AND TIRES	
1. Wheel Type	Heavy-Duty (10-Stud Hole)
2. Tire Size	365/80R20PXZA
3. Inflation Pressure	130 psig (895 kPa)

TABLE 3.1 SPECIFICATIONS (CONT.)

EQUIPMENT	SPECIFICATIONS
G. BRAKES	
1. Service Brakes, Front and Rear	400X120 Hydraulic Drum
Service Brakes, Front and Rear	400X120 Hydraulic Drum
2. Parking	Mechanically actuated caliper located on transmission output flange-mounted disc.
H. STEERING HYDRAULIC SYSTEM	
1. Type	Hydrostatic
2. Pump	Direct-driven Gear Type
3. Steering Cylinders	Twin, double-acting
4. Hydraulic Pressure	2,250 psig (15,487 kPa)
I. ELECTRICAL SYSTEM	
1. Starting System	12 VDC
2. Charging System	12 VDC, 95 Amp
J. CAPACITY OF LUBE SYSTEMS (Approximate values)	
1. Engine Lube Oil	22 quarts (21 L)
2. Transmission Lube Oil	4 gallons (15 L)
3. Front Axle Lube Oil	
Differential Carrier	12 quarts (11.4 L)
Planetary Ends (2)	2.5 quarts (2.4 L)
4. Engine Cooling System	2.5 gallons (9.8 L)
5. Engine Fuel Tank	43 gallons (163 L)
6. Hydraulic Steering System	12.9 gallons (48 L)

K. ENGINE PROTECTIVE SYSTEM

The abnormal operating conditions listed below will cause illumination of warning lights located in operator's instrument panel.

1. High Water (Coolant) Temperature	239 °F (115 °C)
2. Low Engine Oil Pressure	5.8 psi (40 kPa)

TABLE 3.1 SPECIFICATIONS (CONT.)

L. ENGINE OIL GRADES

For the SAE viscosity grades of engine oil to use at various temperatures, refer to the Deutz Operator's Manual located in Chapter 6.

M. TRANSMISSION OIL GRADES

NOTE

Stewart & Stevenson recommends the use of ISO VG10 MOBIL 1310 in the transmission.

RECOMMENDED TRANSMISSION OILS	
PREVAILING AMBIENT TEMPERATURES	OIL SPECIFICATIONS
Above −10 °F (−23 °C)	Hydraulic Transmission Fluid Type C-3 (Except Grade 30)
Below −10 °F (−23 °C)	Hydraulic Transmission Fluid Type C-3 (Except Grade 30) Auxiliary preheat required to raise temperature in the sump to above −10 °F (−23 °C)
Above 32 °F (0 °C)	Hydraulic Transmission Fluid Type C-3 or C-3 Grade 30

3.3 POINTS OF SERVICE, SPECIFICATION, AND CAPACITIES.

For location of unit service points, specification, and capacities, refer to Figure 3.1 and Table 3.3 Service and Lubrication Point Specifications.

TABLE 3.2 ENGINE LUBE OIL SPECIFICATIONS

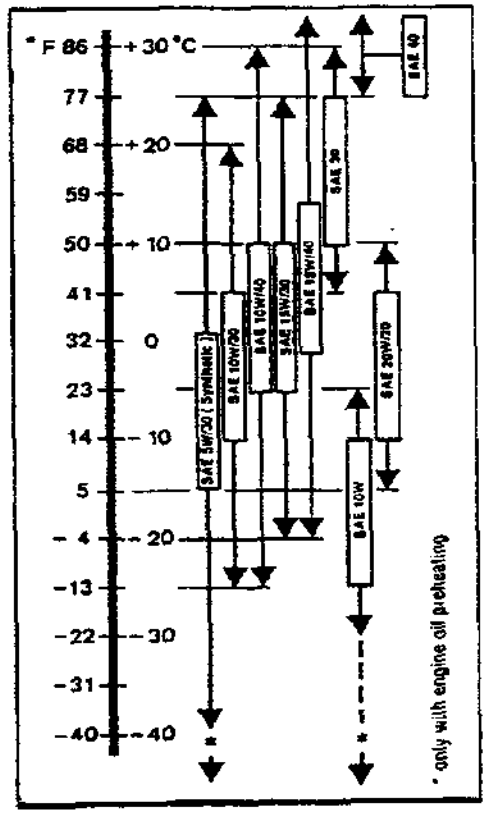

NOTE

Approved API Oils:

Naturally aspirated engines:	CC	
Turbocharged engines:	CD	CF
	CE	CF4

Approved CCMC Oils:

Naturally aspirated engines:	D4	
Turbocharged engines:	D4	D5*

* D5 (sulfate ash ≥ 1.8 % by mass) corresponds to SHPD*
* SHPD (Super High Performance Diesel) oils.

If in doubt, ask the nearest service representative.

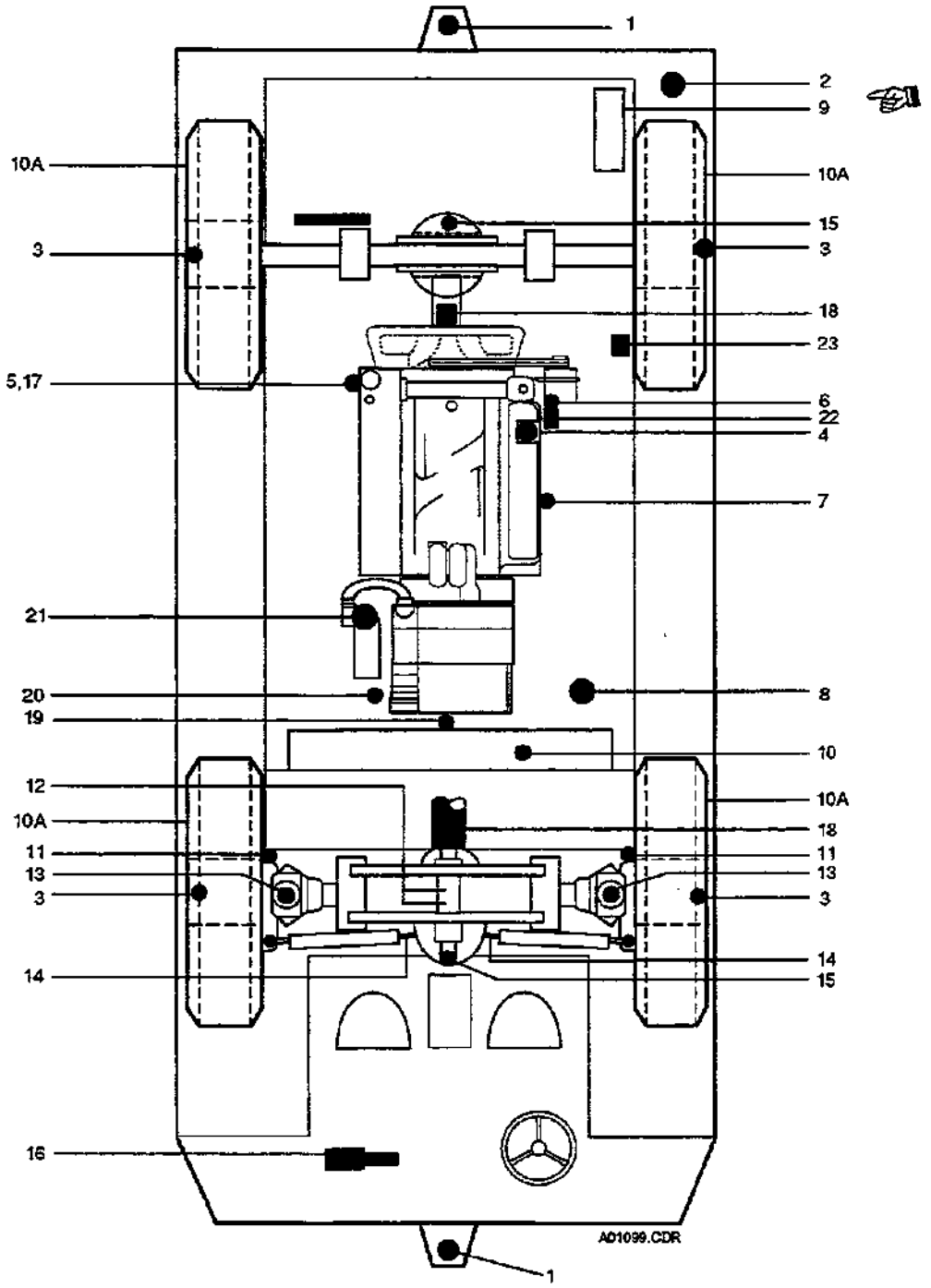

FIGURE 3.1 SERVICING POINTS (SHEET 1 OF 2)
(REFER TO TABLE 3.3)

TABLE 3.3 SERVICING POINTS
(REFER TO FIGURE 3.1)

ITEM	DESCRIPTION	SPECIFICATION	CAPACITY (APPROXIMATE)
1	Hitch Pin	Chassis Lube MIL-G-10924	Two Pins
2	Fuel Fill Cap	See Engine Manual in Chapter 6	43 Gallons (163 L)
3	Wheel End Assy. (Fill plug in center of hub; drain plug at perimeter.)	API GL 5, 80W90	2.6 Quarts (2.4 L)
4	Engine Oil Filler Cap	_____	_____
5	Engine Coolant Filler Cap	_____	_____
6	Final Fuel Filter Element	P/N 117-4423	
7	Engine Oil Dipstick	See Engine Manual in in Chapter 6	See Engine Manual in Chapter 6
8	Hydraulic System Filter Element	P/N 932409	_____
9	Engine Air Cleaner Element	P/N 70459A	_____
10	Hydraulic Reservoir Filler/Dipstick	Dexron II	18 Gallons (68 L)
10A	Tire Pressure (Cold)	365/80R20PXZA	130 psig (895 kPa) ■

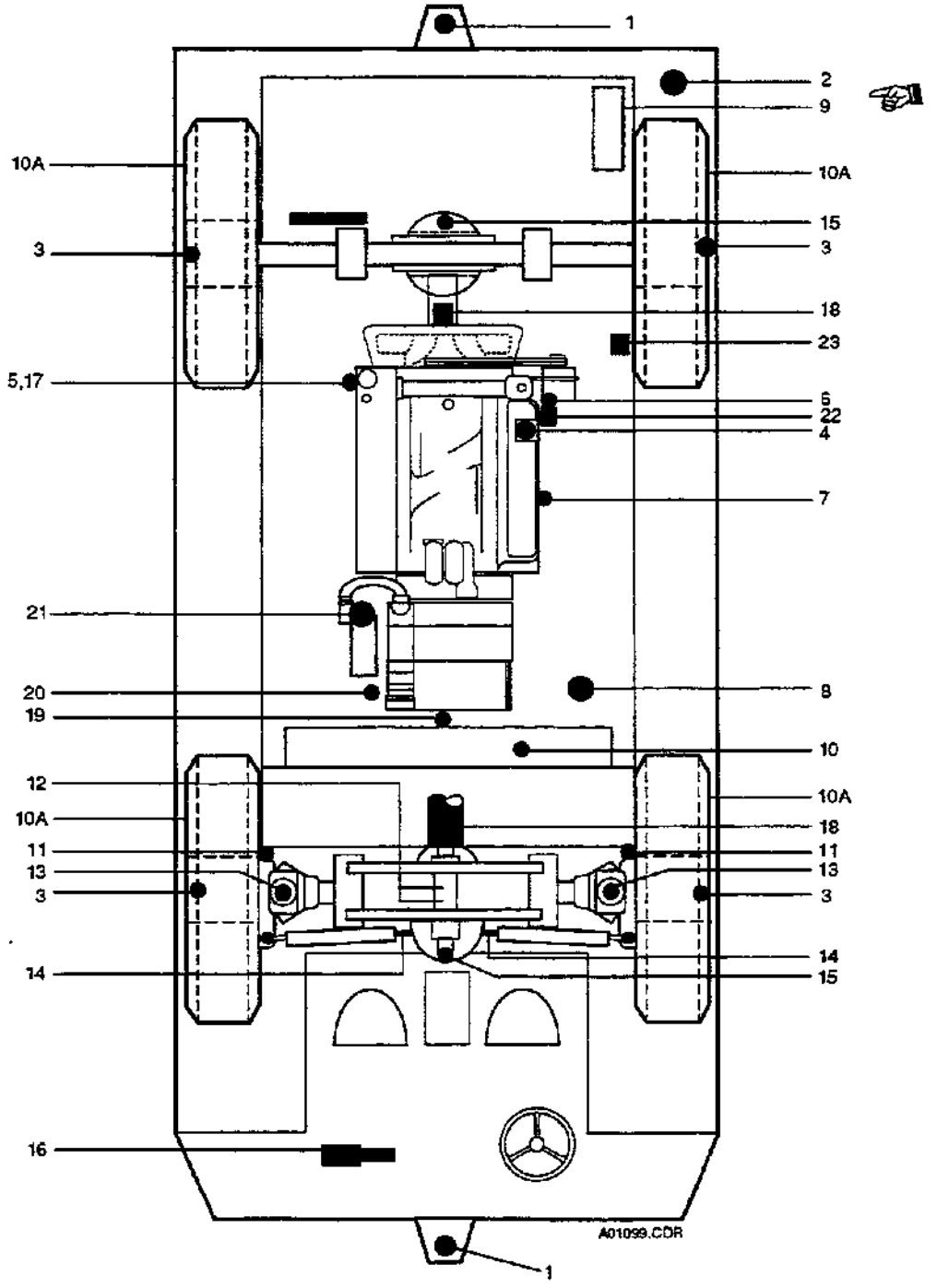

FIGURE 3.1 SERVICING POINTS (SHEET 2 OF 2)
(REFER TO TABLE 3.3)

TABLE 3.3 SERVICING POINTS (CONT.)
(REFER TO FIGURE 3.1)

ITEM	DESCRIPTION	SPECIFICATION	CAPACITY (APPROXIMATE)
11	Tie-Rod Ends	Chassis Lube MIL-G-10924	_____
12	Bolster Pivot	Chassis Lube MIL-G-10924	Two Fittings
13	Trunnion Pivot, Front Axle, (Top and Bottom)	NLGI No. 2, rust and corrosion inhibitors, able to withstand extreme pressure	Four Fittings
14	Pivot Ends, Steering Cylinders	Chassis Lube MIL-G-10924	Four Fittings
15	Differential Fill Plug	API GL 5, 80W90	2.4 Gallons (9 L)
16	Brake Master Cylinder	Brake Fluid, DOT-3	Add Fluid as Required
17	Engine Coolant	See Engine Manual in Chapter 6	2.38 Gallons (9 L)
18	Drive Shafts	Chassis Lube MIL-G-10924	Six Fittings
19	Transmission Fill Plug	See Table 3.1	4 Gallons (15 L)
20	Transmission Dipstick	See Transmission Manual, Chapter 6	_____
21	Transmission Fluid Filter	P/N 4003483	_____
22	Engine Oil Filter	P/N 117-4421	_____
23	Fuel/Water Separator	P/N 2020 SM-OR	_____

SECTION 4

SHIPPING

4.1 INTRODUCTION.

4.1.1 This section contains instructions for the preparation of shipping the tow tractor from one location to another. Normally, the shipping of the unit does not involve storage time. If the unit is to be stored before or after shipment, refer to section 5 of this chapter for details of preparation. The tractor is normally shipped in a fully operational status. The tractor can be driven to on-load or off-load from the trailer bed of the transporting truck. Any systems that are not operational shall be appropriately tagged on the unit and indicated on the shipping document that accompanies the tractor. If the fully operational method of shipment is not preferable, refer to paragraphs 4.4 through 4.8.

4.2 TIE-DOWN POINTS.

4.2.1 There are two tie-down points on the tow tractor. The tow tractor is secured through the forward and rear hitch pins. No other tie-down points are authorized.

4.3 LIFTING.

WARNING

TO AVOID INJURY TO PERSONNEL OR DAMAGE TO EQUIPMENT, ALWAYS USE LIFTING EQUIPMENT, SUPPORTS, AND CHAINS WITH A SAFE MINIMUM CAPACITY OF ONE AND ONE-HALF (1-1/2) TIMES THAT OF THE OBJECT BEING LIFTED OR SUPPORTED.

4.3.1 If lifting points are available, these points will be stenciled on the tractor or lifting eyes will be provided. The tow tractor may be lifted by a hydraulic lift (forklift) or by an overhead crane with capacity of 1-1/2 times greater than the unit being lifted.

4.4 PREPARING ENGINE.

4.4.1 Drain fuel tank; close and seal all openings.

4.4.2 Drain coolant from engine cooling system; close and seal all openings.

4.4.3 Seal end of exhaust with weatherproof tape, to prevent entry of foreign matter.

4.4.4 Seal the engine air intake by enclosing the air cleaner assembly in plastic sheeting and securing with duct tape to prevent entry of foreign matter.

4.5 PREPARING UNIT.

4.5.1 Batteries.

(a) Disconnect battery cables and securely fastened inside enclosure to prevent them from coming in contact with battery terminals.

(b) Ensure battery holddown devices are installed and tightened.

4.5.2 Windshields (Cab Option Only). Protect windshields with heavy cardboard or other suitable material and strapping, to prevent damage from impact by flying or loose debris.

4.5.3 Control Panel (Without Cab Option Only). Protect control panel with cardboard or other suitable material to prevent damage from impact by loose debris.

4.5.4 Warning Beacons. Remove roof-mounted beacon(s), if supplied, before shipment. Securely tape a protective covering over the beacon mounting plate(s). Securely pack roof-mounted beacon(s) in a box(es), label box(es), and ship with unit.

4.6 MARKING.

4.6.1 Before shipment, make sure that a warning tag of some type is securely fastened to the start switch on the control panel. This tag should warn as to the following:

WARNING

DO NOT START ENGINE! COOLANT HAS BEEN DRAINED.
FUEL HAS BEEN DRAINED.

4.7 RECEIVING EQUIPMENT.

4.7.1 Inventory. Inventory items received against shipper's Bill of Lading. Note any missing items on Bill of Lading.

4.7.2 Inspection. Inspect equipment for damage. Damaged coverings require an in-depth inspection in that area. Note any damaged items or protective coverings on Bill of Lading.

4.7.3 Notification. Immediately notify the shipper and any other responsible parties of missing items and/or damage found to the unit or parts of the unit.

4.8 PREPARING UNIT FOR SERVICE.

4.8.1 Windshields (Cab Option Only). Remove strapping and covering from windshields.

4.8.2 Warning beacon(s). If warning beacons are supplied on unit, remove protective tape covering from beacon mounting plate(s), remove beacon(s) from box(es), and install beacon(s).

4.8.3 Air Cleaner. Remove protective covering from air intake of the engine air cleaner.

4.8.4 Batteries. Ensure battery holddown devices are secure. Coat battery posts with petroleum jelly and install battery cables. Charge batteries if needed.

4.8.5 Engine. Perform the following:

(a) Remove sealing tape from end of exhaust pipe.

(b) Fill engine cooling system and radiator with coolant. Use coolant per Deutz Operation and Maintenance Manual, Chapter 6, Tab A, of this manual.

(c) Fill fuel tank with diesel fuel per Deutz Operation and Maintenance Manual, contained in Chapter 6 of this manual.

4.8.6 Control Panel (Without Cab Option Only). Remove cardboard from control panel.

4.8.7 Markings. Remove WARNING tag from start switch on the control panel. Perform Daily maintenance tasks as listed on the Preventative Maintenance Schedule in Chapter 2, Section 3, of this manual. Perform Pre-Start Procedures and Operation Procedures in Chapter 2, Section 3, of this manual.

SECTION 5

STORAGE

5.1 SHORT-TERM STORAGE.

NOTE

Short-term storage applies to equipment that is to be stored for a period of 30 to 120 days.

5.1.1 Engine. No special requirements.

5.1.2 Transmission. No special requirements.

5.1.3 Drive Axles. No special requirements.

5.1.4 Tires.

WARNING

TO AVOID INJURY TO PERSONNEL OR DAMAGE TO EQUIPMENT, ALWAYS USE LIFTING EQUIPMENT, SUPPORTS, AND CHAINS WITH A SAFE MINIMUM CAPACITY OF ONE AND ONE HALF (1-1/2) TIMES THAT OF THE OBJECT BEING LIFTED OR SUPPORTED.

(a) Use forklift or crane and lift unit.

(b) Support tractor with blocks beneath axles or body, to remove tractor weight from tires.

5.1.5 Batteries. Disconnect battery cables. Maintain batteries in a fully charged state during storage. Refer to Maintenance Instruction 09012.

5.2 RETURN TRACTOR TO OPERATION AFTER SHORT-TERM STORAGE.

5.2.1 Tires.

WARNING

TO AVOID INJURY TO PERSONNEL OR DAMAGE TO EQUIPMENT, ALWAYS USE LIFTING EQUIPMENT, SUPPORTS, AND CHAINS WITH A SAFE MINIMUM CAPACITY OF ONE AND ONE HALF (1-1/2) TIMES THAT OF THE OBJECT BEING LIFTED OR SUPPORTED.

(a) Use forklift or crane and lift tractor.

(b) Remove blocks from beneath axles or body.

(c) Lower tractor to ground.

(d) Check tire pressure, if required inflate to 130 PSI (895 kPa).

5.2.2 Batteries.

(a) Clean battery posts and cable clamps.

(b) Check electrolyte levels, service if required.

(c) Lightly coat clamps and battery posts with petroleum jelly.

(d) Connect battery cables.

(e) Charge batteries, if required.

5.2.3 Engine.

(a) Visually inspect systems to ensure integrity. Refer to Maintenance Instruction 01004, in Chapter 2.

(b) Check fluid levels and service as required. Refer to Maintenance Instruction 99003, in Chapter 2.

5.2.4 Transmission. Service as required. Refer to Maintenance Instruction 99003, in Chapter 2.

5.3 LONG-TERM STORAGE.

NOTE

Long-term storage is defined as a period of time exceeding 120 days.

5.3.1 Engine. It is recommended that volatile corrosion inhibitors (NOX-RUST VCI# 10 oil),black or dark colored plastic bags, and sealing tape (Kendall No. 231) be used to prevent internal engine damage, due to moisture. For application of this oil, an air compressor with sprayer attachment can be used. After application, the engine must be completely sealed to prevent vapors from escaping. For additional information on VCI oil contact:

Customer Service
Daubert Chemical co.
1200 Jorie Blvd.
Oakbrook,Illinois 80521
Telephone:(312) 582-1000

(a) Cooling System. Ensure system is clean and filled with a 50/50 mixture of ethylene glycol antifreeze and water, or an antifreeze mixture suitable to prevent freezing. Start unit, allow temperature to rise sufficiently to circulate coolant. Stop unit and allow to cool. Check level and fill as required to prevent any air space. Install radiator cap.

CAUTION

WHEN TURNING ENGINE OVER WITH STARTING CIRCUIT DISABLED DO NOT OPERATE STARTER FOR MORE THAN 30 SECONDS TO PREVENT OVERHEATING AND DAMAGE OF THE STARTER MOTOR.

(b) Air Intake. Remove air intake filter element. Disable starting circuit by pulling F2 located in back of the control panel. Turn the engine at cranking speed for approximately 15 seconds and use a sprayer to add a mixture of 50% VCI oil and 50% engine oil into the air intake. Minimum application rate is 2 ounces (60 ml). Install air filter element. Completely enclose air cleaner with dark plastic bag and seal with tape.

(c) Crankcase and Filter Elements. Oil filter elements do not need to be changed. If oil has been used 50 hours or less, leave it in the sump and add VCI oil at a rate of 3 to 4% by volume. If the oil has more than 50 hours of use, change it and add VCI oil at a rate of 3 to 4%. Place and seal plastic cover over dipstick and crankcase breather, use tape to seal any openings.

(d) Exhaust. Disconnect exhaust system at the engine exhaust manifolds, use sprayer to apply a mixture of 50% VCI oil and 50% engine oil into the exhaust manifold openings. Minimum application rate is 2 ounces (60 ml.). Connect exhaust system. Seal exhaust pipe with tape and plastic.

(e) Fuel System. Drain fuel tank. Use sprayer to apply 1 ounce (30 ml.) of VCI oil per each 7.50 gallons (30 liter) of tank capacity. Seal tank opening. Remove fuel filter, drain and reinstall. Clean the primary fuel filter (if equipped). Remove fuel injectors. Check fuel injectors and recondition if necessary, spray 1 ounce (30 ml.) of 50% VCI oil and 50% engine oil in each cylinder. Install fuel injectors and tighten to 30 ft/lb.(40 N.m). With a bar or turning tool, turn engine over slowly to lubricate cylinder walls.

(f) Belts. Loosen belt tension.

(g) Engine Exterior. Apply multipurpose grease on moving parts such as rod threads, linkage, and joints. Check all openings of the engine to ensure plastic covers are in place and sealed. Secure a waterproof cover over engine.

(h) Tagging. Fasten a tag to the starting switch on the control panel containing the following information:

WARNING
DO NOT START ENGINE!
UNIT IN STORAGE.
ALL SYSTEMS DRAINED OR PRESERVED.

5.3.2 Batteries. Disconnect battery cables and remove batteries from unit. Lightly coat cable clamps and hold down hardware with petroleum jelly. Place batteries in a dry, well ventilated area. Charge batteries if required, to obtain a specific gravity of 1.225. Do not store batteries directly on floor or ground.

NOTE

Remove waterproof cover every 2 to 3 months, check for engine corrosion and integrity of sealed areas. If any sealed system appears open, refer to appropriate system listed above and repeat application.

5.3.3 Drive axles. No special requirements.

5.3.4 Transmission. Refer to manufacturers recommendations contained in Funk, Model 2000 service manual, located in Chapter 6.

5.3.5 Tires.

WARNING

TO AVOID INJURY TO PERSONNEL OR DAMAGE TO EQUIPMENT, ALWAYS USE LIFTING EQUIPMENT, SUPPORTS, AND CHAINS WITH A SAFE MINIMUM CAPACITY OF ONE AND ONE HALF (1-1/2) TIMES THAT OF THE OBJECT BEING LIFTED OR SUPPORTED.

(a) Support tractor with blocks positioned beneath axles or body, to remove weight from tires.

(b) Reduce air pressure in tires to 60 PSI (414 kPa.).

5.3.6 Windows (Cab Option Only). Place heavy cardboard over windows, using bands around cab to hold in place.

5.4 RETURN TRACTOR TO OPERATION AFTER LONG-TERM STORAGE.

5.4.1 Tires.

(a) Inflate tires to 130 PSI (895 kPa).

(b) Remove tractor from blocks, as outlined in paragraph 5.2.1.

5.4.2 Windows (Cab Option Only). Remove cardboard and strapping.

5.4.3 Batteries.

(a) Check levels and service if required. Refer to Maintenance Instruction 09012, in Chapter 2.

(b) Install batteries in tractor.

(c) Clean battery cables and posts.

(d) Lightly coat clamps and battery posts with petroleum jelly.

(e) Connect battery cables to posts.

5.4.4 Engine.

(a) Remove plastic covers and tape from all openings of engine, and fuel tank.

(b) Drain oil sump, replace filters and refill oil sump. Refer to Maintenance Instruction 06003 in Chapter 2.

(c) Tighten alternator and water pump belts. Refer to Maintenance Instruction 99004 in Chapter 2.

(d) Replace fuel filter and water separator. Refer to maintenance instructions 04010 and 04008 in Chapter 2.

(e) Fill fuel tank and prime system. Refer to Maintenance Instruction 04010 in Chapter 2.

(f) Check coolant system and service if required. Refer to Deutz Operation and Maintenance Manual, located in Chapter 6, Tab A.

(g) Turn engine in normal rotation direction, using a bar or turning tool, to ensure there are no hydraulic locks or resistance.

5.4.5 Transmission. Refer to manufacturers recommendations contained in Funk Shift-O-Matic, Model 2000 transmission service manual, located in Chapter 6, Tab B.

5.4.6 Drive axles. No special requirements.

5.4.7 Perform pre-operational checks (refer to Maintenance Instruction 01004 in Chapter 2), remove warning tag from cab, and start unit. Unit may run rough and smoke for a few minutes until all preservative has been cleared from system. Before returning unit to service, operate at no load to ensure all systems are operating correctly.

CHAPTER 2

MAINTENANCE

TABLE OF CONTENTS

SECTION/ PARAGRAPH	DESCRIPTION	PAGE
1	PREVENTIVE MAINTENANCE SCHEDULE	2-1-1
1.1	INTRODUCTION	2-1-1
1.2	HOW TO USE THE PREVENTIVE MAINTENANCE SCHEDULE	2-1-1
2	TROUBLESHOOTING	2-2-1
2.1	INTRODUCTION	2-2-1
2.2	HOW TO USE THE TROUBLESHOOTING TABLES	2-2-1
2.3	OBTAINING FACTORY ASSISTANCE	2-2-1
3	MAINTENANCE INSTRUCTIONS	2-3-1
3.1	INTRODUCTION	2-3-1
3.2	HOW TO USE THE MAINTENANCE INSTRUCTIONS (MI)	2-3-1
3.3	LIST OF EFFECTIVE MAINTENANCE INSTRUCTIONS	2-3-2

SECTION 1

PREVENTIVE MAINTENANCE SCHEDULE

1.1 INTRODUCTION.

1.1.1 This preventive maintenance schedule (Table 1.1) defines preventive maintenance tasks and time intervals for each task. This schedule applies to all GT-50DZ tow tractors. The following information will help you to use the preventive maintenance schedule.

1.2 HOW TO USE THE PREVENTIVE MAINTENANCE SCHEDULE.

1.2.1 In order to use the preventive maintenance schedule, perform the following steps:

a. Refer to Table 1.1. The scheduled maintenance tasks are listed in rows on the far left-hand side of the table. The frequency of maintenance is listed in columns at the top of the table.

b. Immediately to the right of the maintenance tasks are references, which direct the technician to the required maintenance procedures. The references are defined as follows:

(1) MI 01001, MI 02001, etc.: Refer to Maintenance Instructions located in Chapter 2, Section 3.

(2) Chapter 6, Tab A, Tab B etc.: Refer to manufacturer's data located behind Tabs A, B etc. in Chapter 6 of this technical manual.

c. From the reference column, follow the row to the right until you see an "X" in one of the blocks.

d. From the "X", follow the column up until you reach the recommended frequency, or time interval between maintenance. Both calendar-day and hourly time intervals are included.

WARNING

ENSURE THAT PERSONNEL ARE WELL CLEAR OF THE TRACTOR WHEELS BEFORE BEGINNING THIS PROCEDURE. DEATH OR SERIOUS INJURY CAN RESULT IF SOMEONE IS CRUSHED BETWEEN THE WHEELS AND THE TRACTOR.

CAUTION

TO PREVENT DAMAGE TO UNIT, DO NOT EXCEED THE RECOMMENDED TIME INTERVAL BETWEEN INSPECTION, SERVICING OR LUBRICATION. INCREASE THE FREQUENCY OF INSPECTION, SERVICING, AND LUBRICATION IF THE UNIT IS OPERATED IN HARSH ENVIRONMENTAL CONDITIONS.

e. Each "X" indicates a need for preventive maintenance at the specified time interval. Perform the maintenance item at or before the indicated time interval.

TABLE 1.1 PREVENTIVE MAINTENANCE SCHEDULE

PREVENTIVE MAINTENANCE TASKS	REFERENCE	DAILY	WEEKLY 50 HRS	MONTHLY 200 HRS	6 MONTHS 500 HRS	YEARLY 1000 HRS
Fluid Levels, Check	MI 99003	X				
Unit, Visual Inspection	MI 01004	X				
Fuel/Water Separator, Drain Water (Raycor Separator)	MI 04007	X				
Battery, Service	MI 09012		X			
Tire Pressures, Check	MI 02007		X			
Hoses/Clamps, Inspect/Replace	Chapter 6, Tab A		X			
Engine Air Cleaner, Check Restriction Indicator.	MI 08004		X			
Differential and Wheel End Assembly Check Oil Levels *	MI 02009		*			X
Water Pump & Alternator V-drive Belts, Inspect/Adjust	MI 99004			X		
Transmission Oil and Filter, Change Oil, Replace Filter.	MI 02010			X		
Fuel Filter, Change Element.	MI 04010			X		
Engine Oil and Filters, Change Oil, Replace Filter.	MI 06003			X		
Valve Lash. **	Chapter 6, Tab A			**		X
Service Brake Reservoir, Check Level.	MI 03007				X	
Steering Assembly and Driveshaft, Lubricate.	MI 02008				X	
Fuel Water Separator, Replace, (Raycor Separator)	MI 04009				X	
Parking Brake, Inspect/Adjust	MI 03006					X
Service Brake Shoes, Inspect/Replace.	MI 03008					X

* Check first 50 hours, then according to schedule.
** Check first 200 hours, then according to schedule.

TABLE 1.1 PREVENTIVE MAINTENANCE SCHEDULE (CONT)

PREVENTIVE MAINTENANCE TASKS	REFERENCE	DAILY	WEEKLY 50 HRS	MONTHLY 200 HRS	6 MONTHS 500 HRS	YEARLY 1000 HRS
Service Brake System, Bleed Wheel Cylinders	MI 03009					X
Differential and Wheel End Assemblies Change Oil	MI 02011					X
Radiator, Inspect and Clean Core and Fins (Exterior).	Chapter 6, Tab A					X
Thermostats and Seals, Check	Chapter 6, Tab A					X
Cooling System, Clean, Flush, and Replace Coolant.	Chapter 6, Tab A					X
Hydraulic Oil System, Change Oil, Replace Filter	MI 12001					X
						X
						X
						X
						X
						X
						X
						X
						X
						X
						X
						X
						X

SECTION 2

TROUBLESHOOTING

2.1 INTRODUCTION.

2.1.1 The following troubleshooting tables provide information for diagnosing and correcting problems with the GT-50DZ tow tractor. This introduction will help you to quickly identify the problem and to make the necessary repairs to bring the unit back into service.

2.2 HOW TO USE THE TROUBLESHOOTING TABLES.

2.2.1 Before beginning any trouble diagnosis or corrective action, perform the following steps:

(a) Determine which of the following categories most closely relates to the problem your unit is experiencing:

(1) Engine Starting Failures (Tables 2.1 and 2.2)

(2) Hydraulic Steering (Table 2.3)

(3) Hydraulic Brakes (Table 2.4)

(4) Indicator Lamp and Lights (Table 2.5)

(5) Gauges (Table 2.6)

(b) Turn to the applicable troubleshooting table and read the information carefully.

NOTE

The probable causes for problems are listed in descending order from "most likely" to "least likely" to occur.

(c) Carefully perform the troubleshooting steps and recommended corrective action.

(d) When needed, the tables refer to Maintenance Instructions (MI XXXXX) for corrective action. Refer to the appropriate Maintenance Instruction, being careful to select the correct procedure for the assembly part number used on your unit.

2.3 OBTAINING FACTORY ASSISTANCE.

2.3.1 Where any references require contacting Stewart & Stevenson Services, Inc., follow these steps:

(a) Ensure that all steps of the troubleshooting chart(s) have been checked.

(b) Ensure that any Maintenance Instructions used apply to the part number assembly installed on your unit and that the instructions have been strictly complied with.

(c) Refer to the tow tractor nameplate for the unit Serial Number, note the part numbers of the affected assemblies, and contact:

Stewart & Stevenson Services, Inc.
P.O. Box 1637
Houston, TX 77251-1637
Phone: 800-527-3246
Phone (in Texas): 713-923-2161 (Warranty Dept.)
FAX: 713-923-9930

TABLE 2.1 NO RESPONSE WHEN ENGINE START SWITCH IS ENERGIZED

WARNING

DISCONNECT BATTERIES BEFORE PERFORMING CONTINUITY OR RESISTANCE CHECKS ON ELECTRICAL COMPONENTS. SEVERE BURNS COULD RESULT FROM COMING IN CONTACT WITH A LIVE CIRCUIT. REMOVE ALL RINGS, WATCHES, AND JEWELRY BEFORE PERFORMING VOLTAGE CHECKS.

NO RESPONSE WHEN ENGINE START SWITCH IS ENERGIZED	
CAUSE	CORRECTIVE ACTION
1. Transmission not in neutral (N)	Place transmission selector lever in neutral (N) position.
2. Loose battery connectors	1. Clean and tighten battery cables. 2. Repair or replace damaged battery cables as needed.
3. Battery Dead	1. Service and charge batteries. Refer to MI 09012. 2. Replace Batteries with damaged terminal(s), case, or cell plates.
4. 20 amp fuse (F2) open	Replace fuse (F2).
5. 20 amp fuse (F4) open	Replace fuse (F4).
6. Loose starter connections	1. Check starter motor (B1) and solenoid (L1) connections. 2. Clean and tighten loose connections.
7. Defective starter	Remove and repair or replace starter motor.
8. Electronic speed switch assy. (A1) contact close	Replace electronic speed switch assembly (A1).
9. Engine RUN/START switch (S1) malfunctioning	1. Test switch (S1). 2. Replace switch (S1).
10. Engine starting contactor (K1) defective	1. Tighten connectors. 2. Replace contactor (K1).
11. Engine run relay (K2) defective	Replace relay (K2).
12. Energized only when transmission shifter in neutral position relay (K5) defective	1. Check and tighten connectors. 2. Replace relay (K5).
13. Engine running relay (K6) defective	1. Check and tighten connectors. 2. Replace relay (K6)
14. Emergency engine shutdown switch (S7) malfunctioning (Optional)	1. Test switch 2. Check and tighten connectors 3. Replace switch (S7)
15. Engine seized	Refer to Deutz engine manual in Chapter 6, Tab A.

TABLE 2.2 ENGINE CRANKS BUT WILL NOT START

ENGINE CRANKS BUT WILL NOT START	
CAUSE	CORRECTIVE ACTION
1. Fuel low	1. Fill fuel tank. 2. Bleed fuel lines. Refer to MI 04010 for fuel system bleeding procedure.
2. High lube oil viscosity	1. Drain crankcase and fill with correct viscosity oil for current ambient temperatures. 2. If optional engine heater is installed, operate heater to thin oil.
3. Low battery output	1. Service and charge batteries. Refer to MI 09012. 2. Clean and tighten dirty or loose battery cable terminals. 3. Repair or replace damaged battery cables. 4. If battery heater is provided, operate heater to warm battery. 5. Replace damaged batteries.
4. Loose starter connections	Clean and tighten starter connections.
5. Starter defective	Replace starter.
6. Air in fuel lines	1. Check for air leaks. 2. Bleed air from system. Refer to MI 04010 for fuel system bleeding procedure.
7. Contaminated fuel	1. Inspect fuel tank and filter for dirt or other contaminants and replace or clean as necessary. 2. Refer to MI 04008 and MI 04010. If optional equipment is installed, refer to MI 04007 and MI 04009.
8. Faulty fuel pump	Call Stewart & Stevenson for Deutz service information or refer to Deutz System Operation, Testing and Adjustment Manual in Chapter 6, Tab A.
9. Fuel injection timing incorrect	Adjust injection timing. Refer to Deutz System Operation, Testing and Adjustment Manual in Chapter 6, Tab A.
10. Intake air flow restricted	1. Inspect air intake filter for restrictions. Refer to MI 08004. 2. Remove debris or replace filter. Refer to MI 08005.
11. Engine run solenoid (L2) defective	1. Check and tighten connectors. 2. Check wiring circuit to ensure solenoid is energized. 3. Replace solenoid (L2).
12. Electronic control unit assembly (ECU) defective	1. Check circuit and wiring integrity. 2. Reset circuit breaker (CB1) if tripped. 3. Replace electronic control unit (ECU).
13. Glow plugs (GPI - 6) defective	1. Check circuit and tighten connectors. 2. Replace glow plugs (GPI - 6).
14. Low engine compression	Call Stewart & Stevenson for Deutz service information.

TABLE 2.3 HYDRAULIC STEERING TROUBLESHOOTING

WARNING

EXERCISE EXTREME CAUTION WHEN PERFORMING MAINTENANCE ON THE HYDRAULIC SYSTEM. FLUID ESCAPING UNDER HIGH PRESSURE CAN CAUSE SERIOUS PERSONAL INJURY.

NO RESPONSE WHEN STEERING WHEEL IS TURNED SLOWLY	
CAUSE	CORRECTIVE ACTION
Low fluid level	1. Check fluid level in reservoir. Add fluid as necessary. 2. Check for leaks in system. 3. Repair or replace defective lines or components.

SLOW OR HARD RESPONSE	
CAUSE	CORRECTIVE ACTION
1. Filter bypassed	1. Check hydraulic filter indicator. 2. If filter is in bypass position, change filter element. Refer to MI 12001.
2. Line restriction	1. Check lines for damage. 2. Repair or replace lines as required.
3. Damaged component	Repair or replace component as required.

TABLE 2.3 HYDRAULIC STEERING TROUBLESHOOTING (CONT.)

HYDRAULIC PRESSURE LOW	
CAUSE	CORRECTIVE ACTION
1. Hydraulic pump	**NOTE** Make the following pressure checks with the engine running at proper idle speed. Wheels must be turned hard over, to bottom out cylinder. Check hydraulic pressure. a. Install pressure gauge in hydraulic system. b. Check that hydraulic pressure is approximately 2,250 PSI (15,503 kPa). c. If pressure is significantly less than 2,250 PSI (15,503 kPa), break connections and check pump discharge pressure for 2,250 PSI (15,503 kPa).
2. Flow control valve malfunctioning	1. If pump discharge pressure is 2,250 PSI (15,503 kPa), check relief valve by turning clockwise to increase pressure, counterclockwise to reduce pressure. 2. If no change is noted, tap flow control valve to unstick or replace flow control valve.
3. Steering valve malfunctioning	1. With steering wheel (steering valve) held stationary, check that pressure does not exist at steering cylinders. 2. If pressure exists, steering valve is faulty.
4. Steering cylinders malfunctioning	1. If no pressure exists, check steering cylinders. a. With gauges attached to the tee connection of each cylinder, rotate steering wheel and check pressure at both cylinders. One cylinder will register approximately 2,250 PSI (15,503 kPa) and the other should register little or no pressure while the steering wheel is being turned. b. If significant pressure exists at both points, one cylinder is faulty. Steering cylinders must be removed and checked to determine their condition.

WARNING

ENSURE THAT PERSONNEL ARE WELL CLEAR OF THE TRACTOR WHEELS BEFORE BEGINNING THIS PROCEDURE. DEATH OR SERIOUS INJURY CAN RESULT IF SOMEONE IS CRUSHED BETWEEN THE WHEELS AND THE TRACTOR.

TABLE 2.4 HYDRAULIC BRAKE TROUBLESHOOTING

BRAKE PEDAL SOFT OR SPONGY	
CAUSE	CORRECTIVE ACTION
Fluid level low	1. Check fluid level in master cylinder reservoir. Refer to MI 03007. 2. Check hydraulic lines for leaks. 3. Repair or replace defective lines or components. 4. Bleed air from brake system. Refer to MI 03009.

EXCESSIVE PEDAL TRAVEL, ABNORMAL STOPPING DISTANCE	
CAUSE	CORRECTIVE ACTION
1. Brake lining worn	1. Check brake pressure of hydraulic pump. Relief valve is set at 800 PSI. 2. Repair or replace defective pump. Relief 3. Check brake drums for scoring. 4. Resurface brake drums if necessary. Do not exceed minimum dimension.
2. Wheel cylinder defective	1. Check for brake fluid leakage at wheel cylinder. 2. Replace defective wheel cylinder.
3. Master cylinder defective	1. Check master cylinder for internal leakage. 2. Replace defective master cylinder.

HARD BRAKE PEDAL	
CAUSE	CORRECTIVE ACTION
Hydraulic pump defective	1. Check brake pressure of hydraulic pump. Relief valve is set at 800 PSI. 2. Repair or replace defective pump. Relief

NOISY OPERATION (GRINDING SOUND)	
CAUSE	CORRECTIVE ACTION
Brake lining	1. Check brake lining for imbedded debris. Refer to MI 03008 2. Replace brake linings if necessary.

TABLE 2.4 HYDRAULIC BRAKE TROUBLESHOOTING (CONT.)

NOISY OPERATION (SQUEALING SOUND)	
CAUSE	CORRECTIVE ACTION
Brake lining	1. Check brake lining for glazing. 2. Sand or replace brake linings if necessary.

LONG STOPPING DISTANCE (NORMAL BRAKE PEDAL)	
CAUSE	CORRECTIVE ACTION
Brake lining	1. Check brake lining for water, grease, or oil on lining. 2. If linings are wet with water, dry linings by applying brakes while unit is in motion. 3. If linings are oily or greasy, replace brake linings.

TABLE 2.5 INDICATOR LAMP AND LIGHT TROUBLESHOOTING

INDICATOR LIGHT OR LAMP NOT FUNCTIONING	
CAUSE	CORRECTIVE ACTION
1. Defective bulb	1. Place switch to ON position. 2. Remove lens cover and check bulb. 3. If bulb is defective, replace bulb. 4. If bulb is good, check voltage at bulb socket.
2. No voltage to bulb socket	1. Check voltage from switch. 2. If voltage from switch is correct, check wiring to socket. 3. Repair or replace defective wiring.
3. No voltage from switch	1. Check voltage to switch. 2. If voltage to switch is correct, replace switch.
4. No voltage to switch	1. Check wiring to power source. 2. Repair or replace defective wiring. 3. Check power source for 12 VDC. 4. If power source voltage is incorrect, repair or replace power source.

TABLE 2.6 GAUGE TROUBLESHOOTING

GAUGE INOPERATIVE	
CAUSE	CORRECTIVE ACTION
1. Gauge defective	1. Check voltage to gauge. 2. If voltage to gauge is 12 VDC, check ground from gauge. 3. If ground is good, replace gauge.
2. No ground from gauge	1. Check wiring from gauge and gauge connections. 2. Repair or replace any defective wiring or connections.
3. No voltage to gauge	1. Check wiring to gauge and gauge connections. 2. Repair or replace any defective wiring or connections.

SECTION 3

MAINTENANCE INSTRUCTIONS

3.1 INTRODUCTION.

3.1.1 These Maintenance Instructions (MI) provide information for servicing and maintaining the GT-50DZ Tow Tractor. The following information will assist you in using the maintenance instructions and allow you to service and maintain your unit.

3.1.2 The numbering system used for these maintenance instructions is based on the following:

Example MI 01001

a. The initials MI stand for Maintenance Instruction.

b. The first two numbers refer to the assigned category (01 for Body/Chassis). This category is assigned by Stewart & Stevenson and consists of the following codes:

01 BODY/CHASSIS
02 DRIVE TRAIN
03 BRAKES
04 FUEL SYSTEM
05 GOVERNORS (NOT USED, REFER TO FUEL SYSTEM)
06 LUBRICATION SYSTEM
07 NOT USED THIS PROJECT
08 INTAKE/EXHAUST SYSTEM
09 ELECTRICAL SYSTEM
10 GENERATOR (NOT USED, REFER TO ELECTRICAL SYSTEM)
11 NOT USED THIS PROJECT
12 STEERING SYSTEM
99 MISCELLANEOUS

c. The remaining numbers are sequential and allow for as many maintenance instructions per category, as required.

3.2 HOW TO USE THE MAINTENANCE INSTRUCTIONS (MI).

3.2.1 In order to use the maintenance instruction sheets, perform the following steps:

a. Look up the required maintenance instruction on the List of Effective Maintenance Instructions page.

b. To the right of the desired Maintenance Task is the Maintenance Instruction Number. All maintenance instructions are in sequential order by number.

c. Turn to the desired maintenance instruction. Verify the maintenance instruction reflects the configuration of your particular piece of equipment.

d. Remove maintenance instruction sheet(s). All maintenance instruction sheets list tools, equipment, and materials needed to complete the maintenance task. Gather all necessary tools, equipment, and materials and follow the instructions on sheet(s) to perform the maintenance task.

NOTE

If an office copier is available, make copies of the Maintenance Instruction pages, and return the original pages to your technical manual. This will ensure that needed maintenance information will still be available, despite loss or damage to sheets used at the unit.

e. After the maintenance task is complete, return the maintenance instruction sheets to the technical manual.

3.3 LIST OF EFFECTIVE MAINTENANCE INSTRUCTIONS.

Maintenance Instructions can be found using Table 3.1.

TABLE 3.1 LIST OF EFFECTIVE MAINTENANCE INSTRUCTIONS

MAINTENANCE TASK	MAINTENANCE INSTRUCTION NUMBER
Unit, Visual Inspection/Pre-operational Checks	MI 01004
Tire Pressure, Check	MI 02007
Steering Assembly, Driveshafts, Lubricate	MI 02008
Axle Assemblies/Wheel End Assemblies, Check Oil Levels	MI 02009
Transmission, Oil and Filter Change	MI 02010
Axle Assemblies/Wheel End Assemblies, Change Oil	MI 02011
Parking Brake, Check/Adjust	MI 03006
Service Brake, Check Fluid Level	MI 03007
Service Brake Assembly, Inspect/Replace	MI 03008
Service Brake, Bleed Wheel Cylinders	MI 03009
Fuel/Water Separator Drain Water	MI 04007
Fuel/Water Separator Change Element	MI 04009
Fuel Filter, Replace	MI 04010
Engine Oil and Filters, Change/Replace	MI 06003
Engine Air Intake Filter, Check Restriction Indicator	MI 08004
Engine Air Intake Filter, Change Element	MI 08005
Battery, Service	MI 09012
Hydraulic System, Change Filter Element	MI 12001
Fluid Levels, Check	MI 99003
Drive Belts, Check/Adjust	MI 99004

MAINTENANCE INSTRUCTION

TECHNICAL PROCEDURES

UNIT, VISUAL INSPECTION/PRE-OPERATIONAL CHECKS

Total Number of Pages in this MI is 2.

1. TOOLS/EQUIPMENT:

   a. Flashlight
   b. Clean rag

2. MATERIALS:

   None required

3. PROCEDURE:

   a. Apply parking brake.

   b. Inspect unit exterior for cleanliness, damage, and general condition.

   c. Ensure fire extinguishers are in place and fully charged.

   d. Inspect fuel system for leaks and general condition to include, hoses, lines, fittings and linkage.

   e. Inspect engine oil system for leaks around filters and gaskets.

   f. Inspect engine cooling system for leaks, condition of hoses, and cleanliness of the radiator exterior.

   g. Check exhaust system for integrity.(soot marks around coupling hardware indicates leakage.)

   h. Inspect transmission exterior for leaks, to include hoses and fittings to the remote transmission fluid cooler.

i. Inspect hydraulic system for leaks, to include hoses and fittings to the remote hydraulic fluid cooler.

j. Check front/rear axle differential cases and planetary hubs for oil leaks.

k. Check for damaged or under-inflated tires (should be 130 PSI (895 kPa) cold), foreign objects in tire tread.

l. Examine wiring for loose connectors, brittle insulation or cracks caused by heat.

m. Check operation of lights and horn.

n. Check operation of 12 volt DC brake backup booster pump as follows:

WARNING

IF ANY MALFUNCTION OF THE BRAKE SYSTEM OCCURS, THE TRACTOR SHOULD BE TAKEN OUT OF SERVICE UNTIL PROPER REPAIRS ARE MADE.

CAUTION

IF THE BRAKE BACKUP BOOSTER PUMP IS IN OPERATION LONGER THAN 1 MINUTE, POSSIBLE OVERHEATING AND DAMAGE TO THE MOTOR MAY OCCUR. THEREFORE, THE DRIVER SHOULD NOT APPLY HEAVY BRAKE PRESSURE ANY LONGER THAN NECESSARY.

■ (1) Do not start engine. Turn engine STOP-RUN-CRANK switch to RUN position.

(2) Depress brake pedal firmly. The driver should hear the DC motor running and see BRAKE BOOSTER PUMP ON lamp illuminated.

NOTE

It requires approximately 68 to 72 lbs.(31 to 33 kg) of force to activate the pressure switch to turn on the pump motor.

■ (3) Turn STOP-RUN-CRANK switch to STOP position and repeat step (2).

o. Correct/record any discrepancies.

MAINTENANCE INSTRUCTION

TECHNICAL PROCEDURES

TIRE PRESSURE, CHECK

Total Number of Pages in this MI is 2.

1. TOOLS/EQUIPMENT:

   Tire pressure gauge

2. MATERIALS:

   Shop air, if required

3. PROCEDURE:

WARNING

EYE PROTECTION MUST BE WORN WHEN USING PRESSURE AIR, DO NOT INFLATE TIRE OVER RATED PRESSURE, RUPTURE/EXPLOSION COULD OCCUR CAUSING EQUIPMENT DAMAGE AND PERSONNEL INJURY.

NOTE

Tire pressure should not be checked immediately after extensive road travel due to increased pressure caused by a rise in temperature due to friction. Tire pressure should be checked cold.

a. Apply parking brake.

b. Check tire pressure. Proper tire pressure is 130 psig (895 kPa) cold.

c. Inflate/deflate tire pressure to proper pressure using shop air, if required.

MAINTENANCE INSTRUCTION

TECHNICAL PROCEDURES

STEERING ASSEMBLY, DRIVE SHAFTS: LUBRICATE

Total Number of Pages in this MI is 4.

1. TOOLS/EQUIPMENT:

   a. Grease gun
   b. Clean rag
   c. Hydraulic jack, lifting capacity 1-1/2 times greater than unit weight.
   d. Stands, supporting capacity 1-1/2 times greater than unit weight.

2. MATERIAL:

   a. Grease - NGLI Grade 1 or 2, (Lithium Soap Base Grease)

3. PROCEDURE:

WARNING

TO AVOID INJURY TO PERSONNEL, ALWAYS USE LIFTING EQUIPMENT, SUPPORTS, AND CHAINS WITH A SAFE MINIMUM CAPACITY OF ONE AND A HALF (1-1/2) TIMES THAT OF THE OBJECT BEING LIFTED OR SUPPORTED.

Universal Joints. Apply lubricant to U-joint zerk fitting until grease appears at all journal cross bearing seals. This ensures removal of dirt particles and other contaminants and indicates complete lubrication of the joint. The cross joint seals are designed to relieve. However, if all the seals do not "pop" when being lubed, move the driveshaft laterally in all four directions and pull or push on the driveshaft in the direction opposite to the cross seal not relieving while lube gun pressure is being applied to the zerk fitting.

New Journal and Bearing Kits. These kits are supplied with only enough grease to protect the bearings during storage. Each journal cross joint lube reservoir should be fully packed with grease and each bearing assembly should also be wiped with grease; filling all cavities between the rollers and applying a liberal coat of grease on the bottom of each race. After the kits are installed into the driveshaft yokes, they should be relubed, through the zerks.

Driveshaft Yokes. Apply grease to zerk fitting until grease appears at the pressure relief hole. At this point, cover the pressure relief hole with your finger and continue to apply grease to the fitting until grease appears at sleeve yoke seal. New driveshafts should be fully lubed after installation.

a. Park unit on level ground.

b. Check wheels and apply parking brake.

c. Jack tractor up and place jackstands under unit as required.

d. Place warning tag on control panel stating "unit out of service".

e. Lubricate the following: (Refer to Figure 1 for locations).
   Tie Rod Ends (2), two fittings.
   Bolster Pivot (4), two fittings.
   Pivot Ends, Steering Cylinders (5), four fittings.
   Drive Shafts (1) two fittings, and Universals, four fittings.
   Trunnion Pivot, top and bottom (3), four fittings.

f. Remove tractor from jack stands.

g. Remove warning tag, and return unit to service.

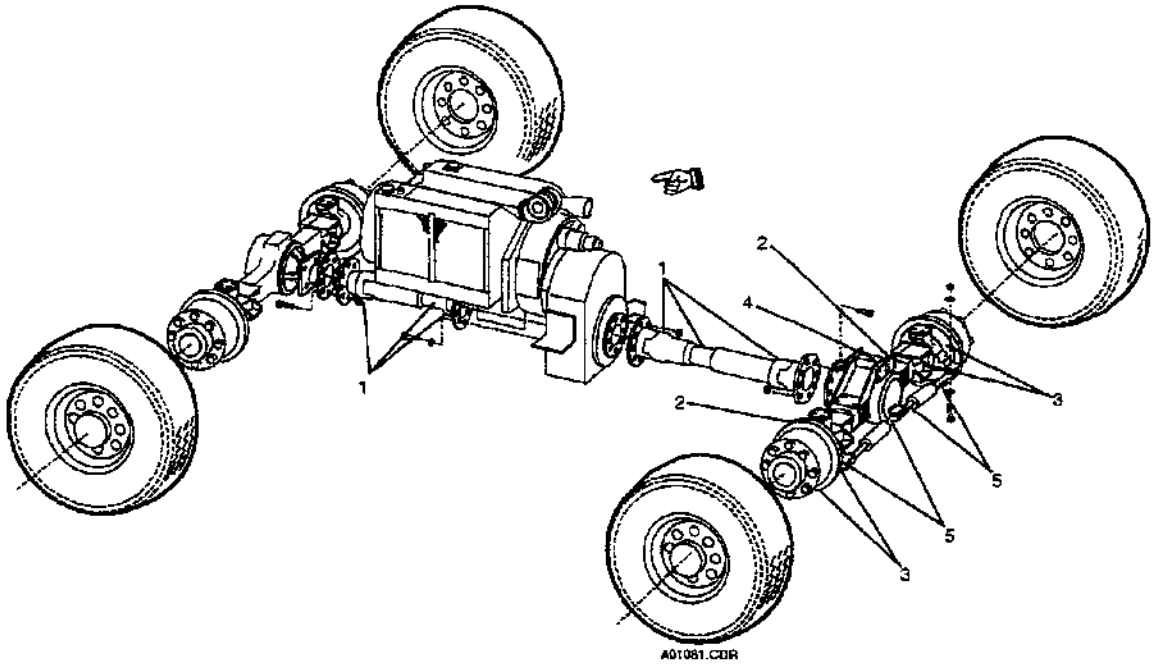

1. DRIVESHAFTS AND UNIVERSALS
2. TIE ROD ENDS
3. TRUNNION PIVOT
4. BOLSTER PIVOT
5. STEERING CYLINDER PIVOT ENDS

FIGURE 1. STEERING ASSEMBLY AND DRIVESHAFTS SERVICING POINTS

MAINTENANCE INSTRUCTION

TECHNICAL PROCEDURES

AXLE ASSEMBLIES/WHEEL END ASSEMBLIES CHECK OIL LEVELS

Total Number of Pages in this MI is 4.

1. TOOLS/EQUIPMENT:

   a. Standard mechanic's hand tool set
   b. Rag
   c. Flashlight
   d. Hydraulic jack, lifting capacity 1-1/2 times greater than unit.
   e. Stands, supporting capacity 1-1/2 times greater than unit.

2. MATERIALS:

   API GL 5, 80W90

3. PROCEDURES:

The oil in the differential and the wheel end assemblies should be level with fill plugs. Refer to Figure 1 for locations of fill plugs.

WARNING

TO AVOID INJURY TO PERSONNEL, ALWAYS USE LIFTING EQUIPMENT, SUPPORTS, AND CHAINS WITH A SAFE MINIMUM CAPACITY OF ONE AND A HALF (1-1/2) TIMES THAT OF THE OBJECT BEING LIFTED OR SUPPORTED.

AXLE ASSEMBLY.

a. Park unit on level ground.

b. Chock wheels and jack tractor up.

c. Place jack stands as required under unit.

d. Place warning tag on control panel stating "unit out of service."

e. Remove oil fill plug (1).

f. Shine light near fill hole. Fluid level should be level with or near opening.

g. Fill differential until oil is even with fill plug opening, (if required.)

h. Install fill plug. Repeat steps e through h for remaining differential.

WHEEL END ASSEMBLY.

a. Remove fill plug (2) located in middle of hub.

b. Shine light near fill plug. Fluid level should be level with or near opening.

c. Fill wheel end assembly (if required).

d. Install fill plug (2).

e. Repeat procedures a through d for remaining wheel end assemblies.

f. Remove unit from jack stands.

g. Remove warning tag and return unit to service.

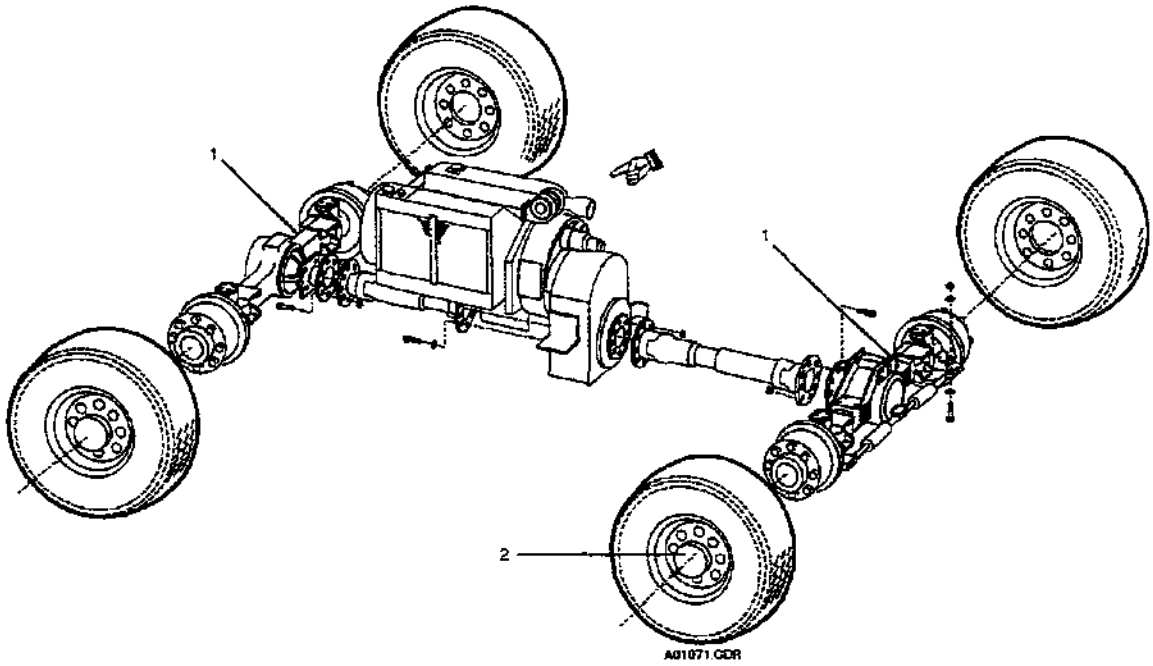

1. FILL PLUG **2. FILL PLUG**

FIGURE 1. AXLE AND WHEEL END ASSEMBLY

MAINTENANCE INSTRUCTION

TECHNICAL PROCEDURES

TRANSMISSION, OIL AND FILTER CHANGE

Total Number of Pages in this MI is 4.

1. TOOLS/EQUIPMENT:

   a. Standard mechanic's hand tool set
   b. Standard filter wrench
   c. Container
   d. Hydraulic jack, lifting capacity 1-1/2 times greater than unit weight
   e. Stands, supporting capacity 1-1/2 times greater than unit weight

2. MATERIALS:
   a. Filter P/N 4003483
   b. Transmission fluid, ISO VG10 MOBIL 1310 (Recommended)
      Type C-3, with ambient temp. below 32°F (0°C).
      Type C-3, or C-3 Grade 30 with ambient temp. above 32°F (0°C).

3. PROCEDURES:

WARNING

TO AVOID INJURY TO PERSONNEL OR DAMAGE TO THE EQUIPMENT, ALWAYS USE LIFTING EQUIPMENT, SUPPORTS, AND CHAINS WITH A SAFE MINIMUM CAPACITY OF ONE AND A HALF (1-1/2) TIMES THAT OF THE OBJECT BEING LIFTED OR SUPPORTED.

NOTE

Transmission fluid should be warm prior to draining.

a. Park unit on level ground.

b. Apply parking brake and check wheels. Place warning tag on control panel stating "unit out of service".

c. Jack tractor up and place jack stands under unit as required.

d. Place catch pan under transmission drain plug, located in lower front section of transmission case.

e. Loosen and remove drain plug and allow fluid to drain completely.

f. Install and tighten drain plug.

g. Place container under external mounted filter (1, Figure 1).

h. Using filter wrench, loosen and remove spin-on filter.

i. Inspect filter mounting base assembly sealing surface, ensure surface is clean.

j. Lightly coat new filter gasket with clean transmission fluid.

k. Carefully thread new filter onto filter mounting base assembly, and tighten hand tight (always refer to filter manufacturers' directions).

l. Fill transmission through filler pipe (3, Figure 1) with 4 gallons (15.1 liter) of approved fluid. Remove warning tag from control panel.

m. Remove unit from jack stands.

n. Start engine and run at idle speed to allow to allow fluid to circulate.

o. Check fluid level with dipstick (2, Figure 1).

p. Add fluid as required to maintain level in the safe operating zone.

q. Check system for leaks before returning unit to service.

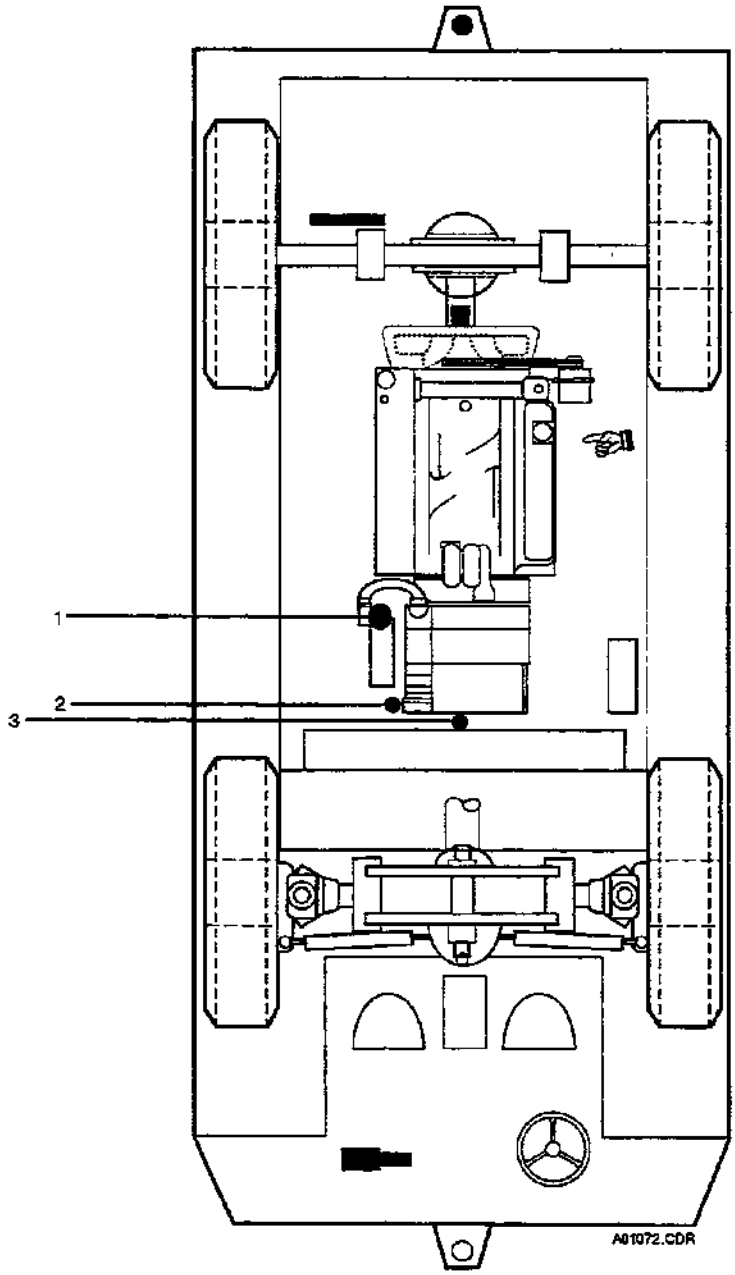

1. FILTER
2. DIPSTICK
3. FILLER PIPE

FIGURE 1. TRANSMISSION SERVICING POINTS

MAINTENANCE INSTRUCTION

TECHNICAL PROCEDURES

AXLE ASSEMBLIES/WHEEL END ASSEMBLIES CHANGE OIL

Total Number of Pages in this MI is 4.

1. TOOLS/EQUIPMENT:

   a. Standard mechanic's hand tool set
   b. Container
   c. Flashlight
   d. Funnel
   e. Hydraulic jack, lifting capacity 1-1/2 times greater than unit weight.
   f. Stands, supporting capacity 1-1/2 times greater than unit weight.

2. MATERIALS:

   a. 2.4 Gallons (9.4 L) API GL 5, 80W90 (per axle)
   b. 2.6 Quarts (2.4 L) API GL 5, 80W90, (per wheel end assembly)

3. PROCEDURES:

WARNING

TO AVOID INJURY TO PERSONNEL OR DAMAGE TO EQUIPMENT, ALWAYS USE LIFTING EQUIPMENT, SUPPORTS, AND CHAINS WITH A SAFE MINIMUM CAPACITY OF ONE AND A HALF (1-1/2) TIMES THAT OF THE OBJECT BEING LIFTED OR SUPPORTED.

AXLE ASSEMBLY.

a. Park unit on level ground.

NOTE

The oil in the differential and the wheel end assemblies will drain better if oil is warm. These components, even when warm will drain and fill slow.

b. Chock wheels and jack tractor up, place jack stands as required under unit. Place warning tag on control panel stating "unit out of service".

c. Place container under differential to catch draining oil.

d. Remove oil fill plug (1, Figure 1), and oil drain plug (2).

e. After drainage is complete, install drain plug.

f. Fill differential until oil is even with fill plug opening.

g. Install fill plug. Repeat steps a through e for remaining differential.

WHEEL END ASSEMBLY.

a. The drain plug (4) is located at the perimeter of the wheel hub. Rotate each wheel until drain plug is at bottom of hub. The fill plug (3) is located near the center of the hub.

b. Place container under wheel hub to catch oil.

c. Remove drain plug (4) and fill plug (3), allow hub to drain.

d. Install drain plug.

e. Add fresh oil through fill plug opening using a funnel until oil is level with opening. Install fill plug.

f. Repeat procedures a through e for remaining wheel end assemblies.

g. Remove unit from jack stands. Remove warning tag and return unit to service.

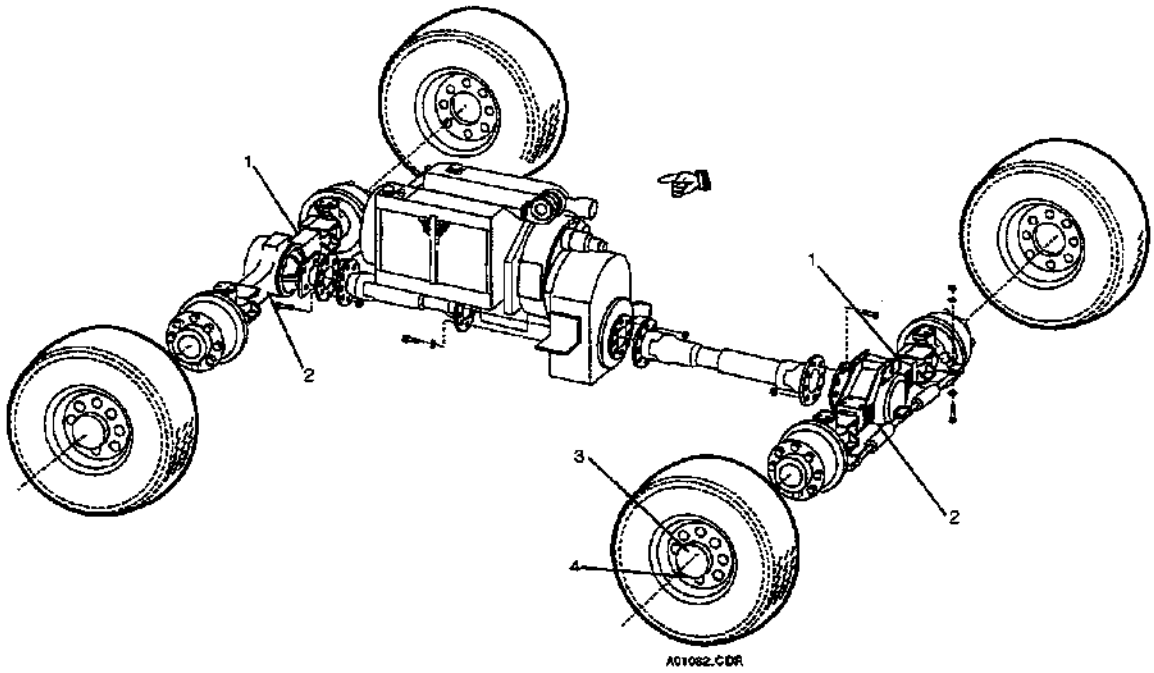

1. AXLE ASSEMBLY FILL PLUG
2. AXLE ASSEMBLY DRAIN PLUG
3. WHEEL END ASSEMBLY FILL PLUG
4. WHEEL END ASSEMBLY DRAIN

FIGURE 1. AXLE AND WHEEL END ASSEMBLY SERVICING POINTS

MAINTENANCE INSTRUCTION

TECHNICAL PROCEDURES

PARKING BRAKE, CHECK AND ADJUST

Total Number of Pages in this MI is 4.

1. TOOLS/EQUIPMENT:

   a. Standard mechanic's hand tool set
   b. Hydraulic jack, lifting capacity 1-1/2 times greater than unit weight.
   c. Stands, supporting capacity 1-1/2 times greater than unit weight.

2. MATERIAL:

   None required

3. PROCEDURE:

   MINOR ADJUSTMENT

NOTE

Some tow tractors are not equipped with bellcrank (3, Figure 1), however adjustment procedures are same as models with a bellcrank.

Minor tension adjustment of the parking brake is performed at the parking brake actuating lever in the operator's compartment. Refer to Figure 1 and adjust as follows:

a. Park tractor on level ground.

b. Chock wheels to immobilize unit.

c. Release parking brake to relieve tension on cable.

d. Back off set screw (2), and rotate adjustment knob (1) clockwise to tighten brake or counterclockwise to loosen brake.

CAUTION

TOO MUCH TENSION WILL MAKE HANDLE HARD TO OPERATE, AND CAN RESULT IN CABLE DAMAGE. TOO LITTLE TENSION WILL NOT FULLY ENGAGE THE BRAKE. BRAKE HANDLE SHOULD FULLY ENGAGE BRAKE WITHOUT EXCESSIVE EFFORT.

e. Operate brake handle to verify proper tension and operation.

f. When brake adjustment is completed, tighten set screw (2).

WARNING

TO AVOID INJURY TO PERSONNEL, ALWAYS USE LIFTING EQUIPMENT, SUPPORTS, AND CHAINS WITH A SAFE MINIMUM CAPACITY OF ONE AND A HALF (1-1/2) TIMES THAT OF THE OBJECT BEING LIFTED OR SUPPORTED.

MAJOR ADJUSTMENT

Major adjustments to the parking are made under the tow tractor at the caliper. As shown in Figure 1, the brake actuating linkage consists of a cable attached to a connecting link which pivots on the caliper arm. The brake is actuated by tentioning the cable. Adjust as follows:

a. Park tractor on level ground.

b. Chock wheels to immobilize unit.

c. Jack tractor up and place jack stands under tractor as required. Place warning tag on control panel stating "unit out of service".

d. Release parking brake.

e. Back off set screw (2), and rotate adjustment knob (1) fully counterclockwise.

f. To increase cable tension, loosen upper locknut (4), and tighten lower locknut (4) in 1/4 turn increments. After each adjustment, operate parking brake handle. Handle operation should be smooth, and engage brake without excessive effort.

g. Tighten upper locknut (4) after adjustment is complete.

h. To decrease cable tension, loosen lower locknut (4), and tighten upper locknut (4) in 1/4 turn increments. after each adjustment, operate parking brake handle. Handle operation should be smooth, and engage brake without excessive effort.

i. Tighten lower locknut (4) after adjustment is complete.

j. If necessary, make minor adjustment as per Minor Adjustment Procedures.

k. Tighten set screw (2) after all adjustments have been completed. Remove warning tag.

l. Set parking brake, start engine, place transmission in gear, parking brake should prevent wheels from rotating if properly adjusted.

m. Remove tractor from jack stands. Return unit to service.

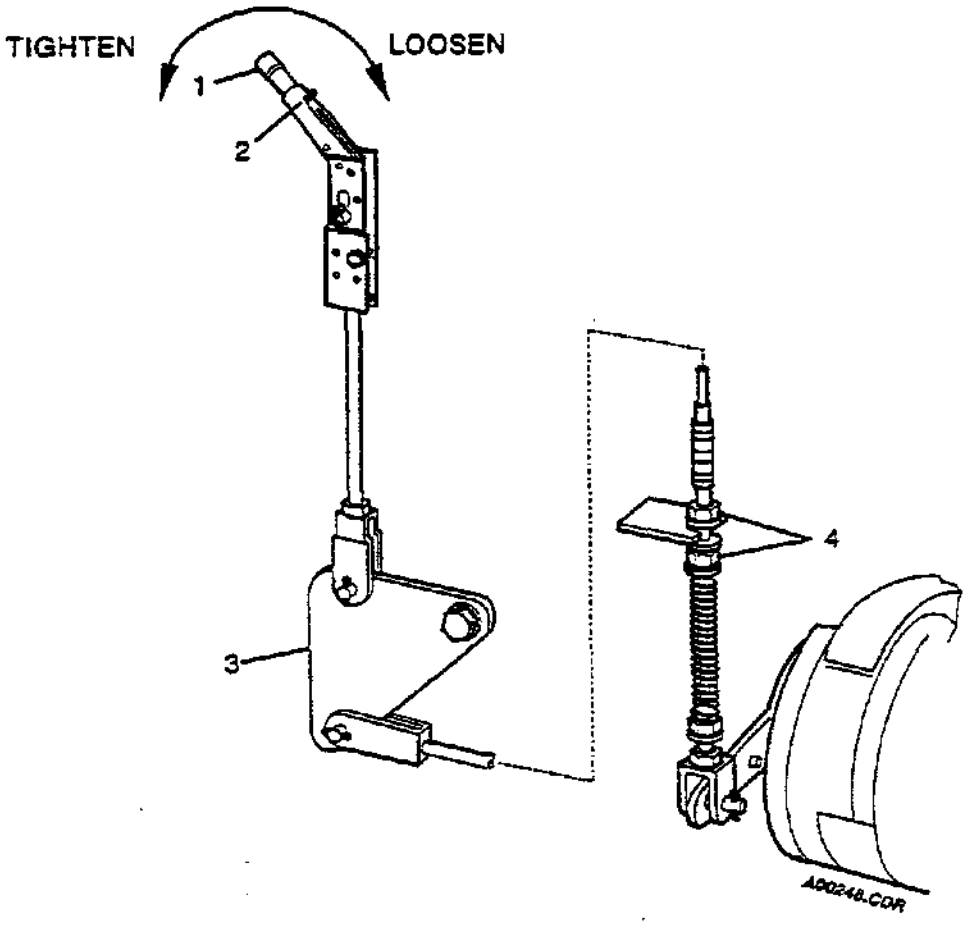

1. **ADJUSTMENT KNOB**
2. **SET SCREW**
3. **BELLCRANK**
4. **LOCKNUTS**

FIGURE 1. PARKING BRAKE LINKAGE

MAINTENANCE INSTRUCTION

TECHNICAL PROCEDURES

SERVICE BRAKE, CHECK FLUID LEVEL

Total Number of Pages in this MI is 2.

1. TOOLS/EQUIPMENT:

   Standard mechanic's hand tool set
   Clean rag

2. MATERIAL:

   Brake Fluid, DOT 3
   Check data plate mounted near master cylinder for specific fluid requirements.

3. PROCEDURE:

   a. Park unit on level ground.

   b. Apply parking brake. Place warning tag on control panel stating "unit out of service".

   c. Remove cover plate. Remove master cylinder reservoir caps (1, Figure 1), and check brake fluid level. If level is below filler neck, replenish brake fluid.

   d. Replace brake fluid reservoir caps.

   e. Inspect brake fluid lines and fittings for leaks. Repair any leaks found before returning unit to service. Wipe up any spilled fluid. Install cover plate. Remove warning tag.

   f. Return unit to service.

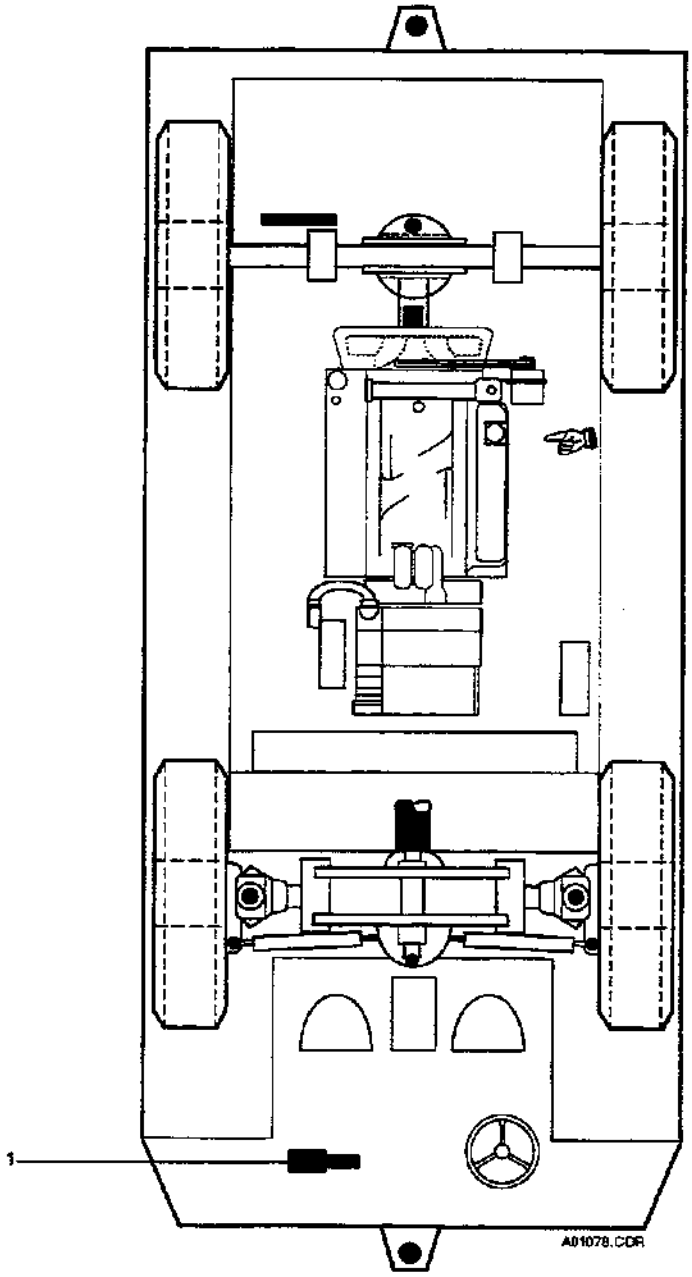

1. RESERVOIR CAP

FIGURE 1. BRAKE FLUID RESERVOIR

MAINTENANCE INSTRUCTION

TECHNICAL PROCEDURES

SERVICE BRAKE ASSEMBLY: INSPECT/REPLACE

Total Number of Pages in this MI is 6.

1. TOOLS/EQUIPMENT:

   a. Standard mechanic's hand tool set
   b. Torque wrench, 350 Ft/Lbs.
   b. Hydraulic jack, lifting capacity 1-1/2 times greater than unit weight.
   c. Stands, supporting capacity 1-1/2 times greater than unit weight.
   d. Brake adjustment tool (Optional)

2. MATERIAL:

   As Required.

3. PROCEDURE:

WARNING

TO AVOID INJURY TO PERSONNEL OR DAMAGE TO THE EQUIPMENT, ALWAYS USE LIFTING EQUIPMENT, SUPPORTS, AND CHAINS WITH A SAFE MINIMUM CAPACITY OF ONE AN A HALF (1-1/2) TIMES THAT OF THE OBJECT BEING LIFTED.

APPROPRIATE CAUTION SHOULD BE EXERCISED WHEN HANDLING HEAVY TRACTOR COMPONENTS, SUCH AS TIRES AND BRAKE SHOES.

   a. Park unit on level grounds.

b. Apply parking brake.

c. Jack unit up and place jack stands under unit as required. Place warning tag on control panel stating "unit out of service".

d. Remove tire and wheel assembly.

e. Remove the three hex socket bolts (6 mm) from face of brake drum (1,Figure 1) remove brake drum by pulling straight out.

NOTE

Deeply grooved or worn brake drums may be difficult to remove. If necessary, adjust brake shoes inward away from drum by turning the adjuster star wheels with a brake adjusting tool or large flat-tip screwdriver through the slot provided in the brake backing plate.

f. Inspect drum, scored surface may be resurfaced if minimum dimension is not exceeded.

g. Check brake lining (2), replace linings worn to 0.125 inch (6.35 mm) thickness, glazed linings can be sanded to remove glaze. Grease or oil impregnated linings must be replaced.

h. Check wheel cylinders (3) for leakage, and general condition of attaching hardware.

NOTE

If inspection reveals excessive wear or poor condition of the above mentioned items proceed to step j.

i. If no further maintenance is required assemble in reverse of steps d and e. Torque lug nuts to 350 Ft/Lb.

j. With a broad-bladed screwdriver, pry up spring to attaching plate (4) (enough to relieve spring tension), remove bolt (5) and washer (6) on one side of attaching plate (4). Repeat procedure for remaining spring. Remove springs (7).

k. Use a modified screwdriver (Insert B, Figure 1) to remove spring (8). Remove automatic adjuster (9).

WARNING

IN THE FOLLOWING STEP, THE BRAKE SHOES WILL BE FREE TO FALL FROM THE HUB.

l. Use the modified screwdriver again, push in on spring (10) sufficiently to remove the spring retainer (11).

m. Remove old brake shoe assembly.

NOTE

Clean brake assembly prior to re-assembly with an approved brake cleaner.

n. Examine brake wheel cylinders for leaks. Leaking wheel cylinder must be re-built or replaced.

NOTE

Re-building or replacing brake wheel cylinders requires bleeding of hydraulic brake circuits after repairs have been completed. Refer to MI 03009 for brake bleeding procedure.

o. Install new brake shoe assembly.

p. Refer to detail A (Figure 1) to adjust the automatic brake adjuster.

q. Check adjuster dimension (A),make necessary adjustment to reach (B) dimension.

r. Assembly is the reverse of steps (d) through (l).

s. Install wheel and tire assembly. Torque lug nuts to 350 ft/lbs.

t. Remove rubber plug (12) from brake shoe adjustment slot in brake backing plate (1).

u. Insert brake adjusting tool, or large flat-tip screwdriver blade through adjustment opening to contact ratchet teeth of brake adjuster.

v. Pry upward on adjuster teeth to tighten brake shoes.

w. Spin wheel to detect drag.

x. Continue adjustment until brake shoes begin to drag slightly, then loosen adjustment (pry downward on adjuster) just enough to eliminate drag.

y. Replace rubber plug into adjustment slot in backing plate.

z. Repeat steps (u) through (y) for remaining wheels.

x. Drive unit under no load condition to check brake system prior to returning unit to service. Remove warning tag and return unit to service.

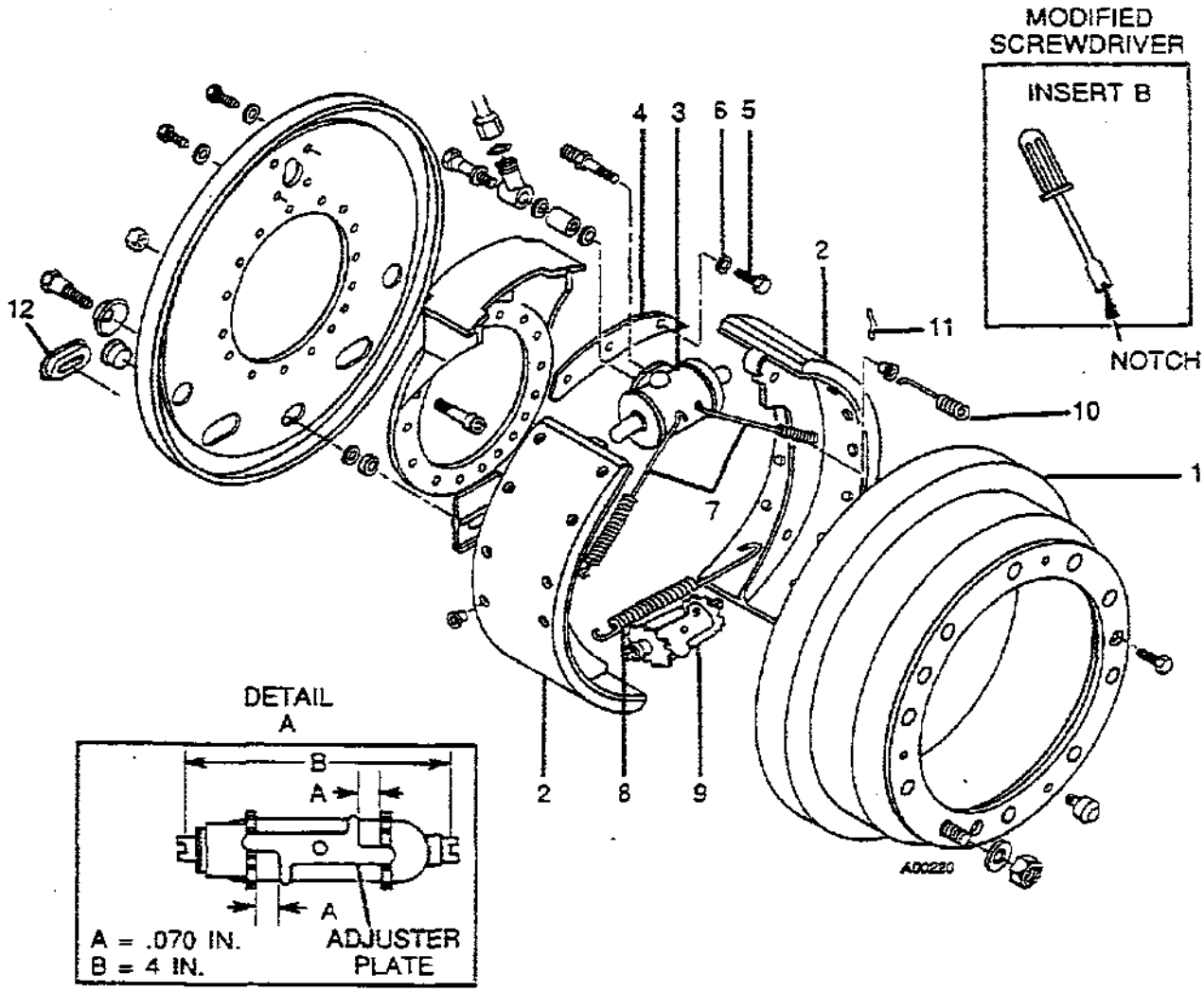

1. BRAKE DRUM
2. BRAKE LINING
3. WHEEL CYLINDER
4. ATTACHING PLATE
5. BOLT
6. WASHER
7. SPRINGS
8. SPRING
9. AUTOMATIC ADJUSTER
10. SPRING
11. SPRING RETAINER
12. RUBBER PLUG

FIGURE 1. SERVICE BRAKE ASSEMBLY

MAINTENANCE INSTRUCTION

TECHNICAL PROCEDURES

SERVICE BRAKES, BLEED WHEEL CYLINDERS

Total Number of Pages in this MI is 2.

1. TOOLS/EQUIPMENT:

   a. Standard mechanic's hand tool set
   b. Container
   c. 2 ft. section hose
   d. Hydraulic jack, lifting capacity 1-1/2 times greater than unit weight.
   e. Stands, supporting capacity 1-1/2 times greater than unit weight.

2. MATERIALS:

   Dot 3 brake fluid

3. PROCEDURES: This procedure requires two men.

CAUTION

BEFORE EACH STEP OF THE BRAKE SYSTEM BLEED PROCEDURE, ALWAYS CHECK MASTER CYLINDER RESERVOIR FLUID LEVEL. ENSURE THAT AN ADEQUATE MAKE-UP VOLUME OF FLUID IS AVAILABLE IN THE RESERVOIR AT ALL TIMES.

PLACE A SECTION OF HOSE OVER END OF BLEED VALVE, PLACE A CONTAINER UNDER OPPOSITE END OF HOSE TO CATCH EXPELED FLUID.

   a. Park tractor on level ground.

b. Chock wheels and apply parking brake.

c. Jack unit up and place jack stands under unit as required. Place warning tag on control panel stating "unit out of service".

WARNING

THE BATTERY'S GROUND CABLE (NEGATIVE) MUST BE REMOVED BEFORE THE POSITIVE CABLE TO PREVENT BURNS AND ELECTRICAL SPARKS.

d. Disconnect battery cables at batteries.

e. Pump brake pedal several times, then hold pedal depressed.

f. On one rear brake assembly, open bleed valve located on back of backing plate, allowing fluid and air to escape from the system.

g. With brake pedal depressed, close the brake bleed valve, then release pressure on brake pedal.

h. Repeat above steps until all air is removed from the system and a steady stream of fluid is observed from the brake bleed valve.

i. Repeat bleed procedures with opposite rear brake assembly. Then proceed to the front brakes and repeat steps (e) through (i).

WARNING

THE BATTERY'S POSITIVE CABLE MUST BE INSTALLED BEFORE THE NEGATIVE (GROUND) CABLE TO PREVENT BURNS AND ELECTRICAL SPARKS.

j. Reconnect battery cables to battery.

k. Remove unit from jack stands. Remove warning tag.

l. Drive unit under no load conditions to ensure brake system is operating properly before placing unit back in service.

MAINTENANCE INSTRUCTION

TECHNICAL PROCEDURES

FUEL/WATER SEPARATOR, DRAIN WATER

Total Number of Pages in this MI is 2.

1. TOOLS/EQUIPMENT:

   a. Container
   b. Clean rag

2. MATERIAL:

   None required

3. PROCEDURE:

The optional fuel/water separator is used in place of the standard fuel/water separator, and located in a different location. Drain the fuel/water separator as follows:

a. Park unit on level ground.

b. Apply parking brake.

c. Check clear collection bowl (1, Figure 1) on bottom of fuel/water separator assembly daily for accumulated water. If water is present, perform following steps:

(1) Place a small container below fuel/water separator to catch fluid.

(2) Open fuel/water separator assembly drain (2). Drain water into container. Close drain (2) when all water is removed.

(3) Properly dispose of fluids.

d. Wipe excess/spilled fuel from around fuel filter/water separator.

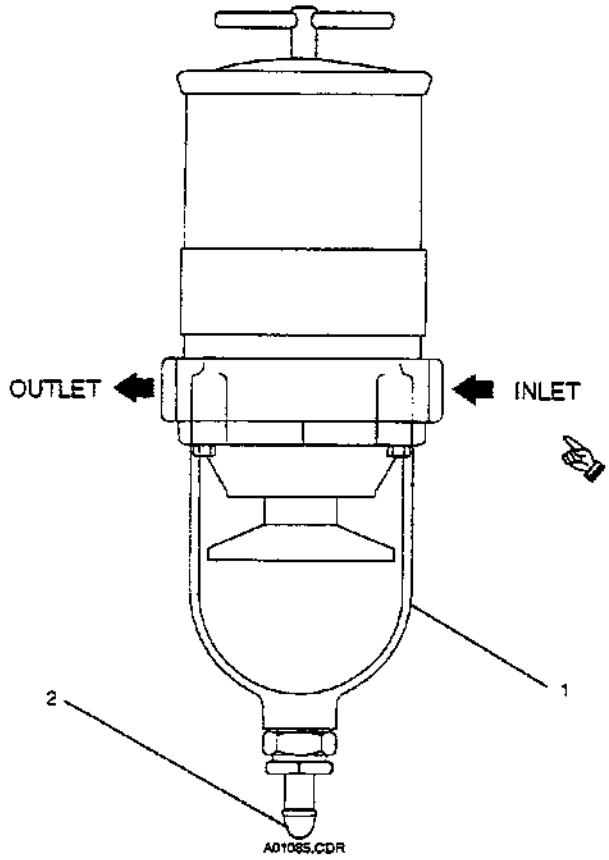

1. BOWL 2. DRAIN

FIGURE 1. FUEL/WATER SEPARATOR (OPTION)

MAINTENANCE INSTRUCTION

TECHNICAL PROCEDURES

FUEL FILTER/WATER SEPARATOR, CHANGE ELEMENT

Total Number of Pages in this MI is 2.

1. TOOLS/EQUIPMENT:

   a. Container suitable for collecting small quantities of spilled fuel
   b. Clean rag

2. MATERIAL:

   Filter element, P/N 2020SM-OR

3. PROCEDURE:

   a. Park unit on level ground.

   b. Apply parking brake. Place warning tag on control panel stating "unit out of service".

   c. Place container under separator to collect spilled fuel.

   d. Turn T-handle (1, Figure 1) counterclockwise and remove T-handle and lid (2).

   e. Remove element (5) by slowly pulling molded handle upward with a turning motion.

   f. Insert replacement element over center tube (6) with a downward, turning motion.

   g. Pour clean diesel fuel into filter/separator housing (4) until full.

   h. Inspect lid seal (3) and replace if necessary.

   i. Replace lid (2) and hand tighten T-handle (1).

j. Remove fuel container and wipe up excess fuel.

k. Start engine and check filter/separator assembly for leaks. Remove warning tag and return unit to service.

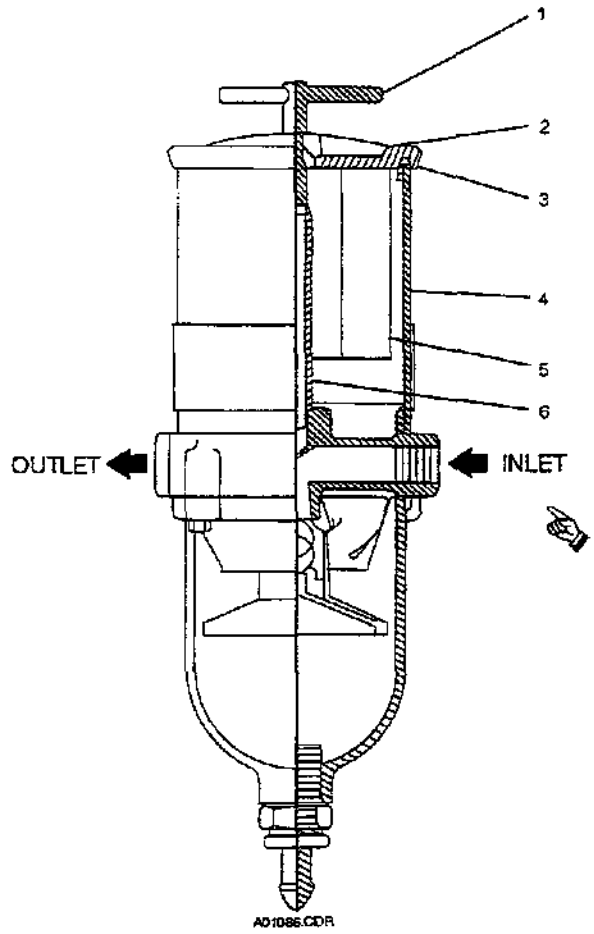

1. **T-HANDLE**
2. **LID**
3. **SEAL**
4. **HOUSING**
5. **ELEMENT**
6. **CENTER TUBE**

FIGURE 1. FUEL FILTER/WATER SEPARATOR (OPTION)

MAINTENANCE INSTRUCTION

TECHNICAL PROCEDURES

FUEL FILTER: REPLACE

Total Number of Pages in this MI is 2.

1. TOOLS/EQUIPMENT:

   a. Standard automotive mechanics hand tool set
   b. Filter wrench (strap-type or equivalent)
   c. Container

2. MATERIALS:

   Fuel filter, P/N 117-4423.

3. PROCEDURES:

   a. Park unit on level ground.

   b. Apply parking brake. Place warning tag on control panel stating "Unit Out of Service."

   c. Place container under fuel filter.

   d. Loosen spin-on filter (Figure 1) by turning counterclockwise and discard.

   e. Ensure sealing surface of filter mounting base is clean; apply clean fuel to new fuel filter gasket.

   f. Install new filter until sealing surfaces mate, then tighten 3/4 turn by hand. (Always refer to filter manufacturer's directions.)

   g. Check for leaks.

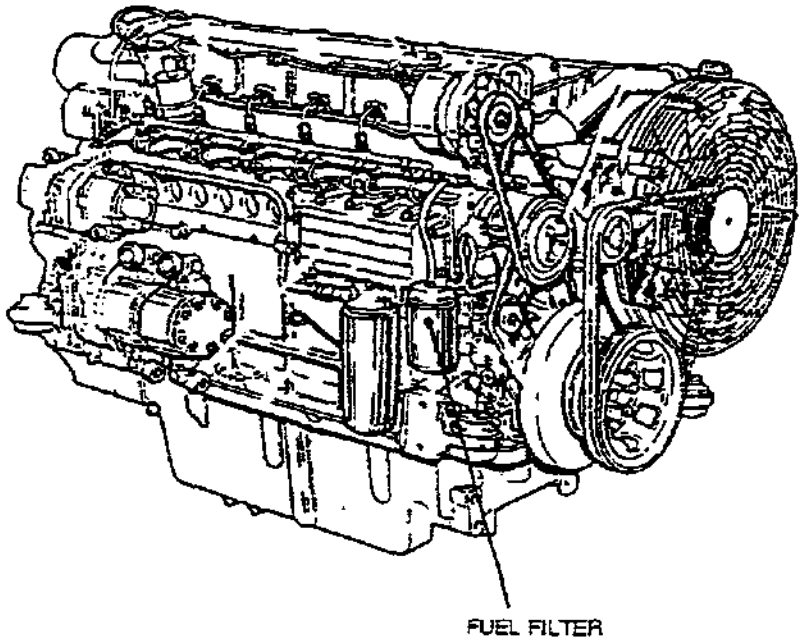

FIGURE 1. FUEL FILTER

MAINTENANCE INSTRUCTION

TECHNICAL PROCEDURES

ENGINE OIL AND FILTERS: CHANGE/REPLACE

Total Number of Pages in this MI is 4.

1. TOOLS/EQUIPMENT:

   a. Filter wrench (strap-type or equivalent)
   b. Standard automotive mechanics hand tool set
   c. Container
   d. Hydraulic jack, lifting capacity 1-1/2 times greater than unit weight.
   e. Stands, supporting capacity 1-1/2 times greater than unit weight.

2. MATERIALS:

   a. Filter, engine oil, P/N 117-4421.
   b. Oil, 22 quarts (21 L).

3. PROCEDURES:

NOTE

Engine oil is best changed just after operation, while engine is still warm. This ensures that most contaminants will still be suspended in oil and will be carried out of engine by oil as it drains.

a. Place unit on level ground.

b. Apply parking brake and chock wheels.

c. Jack tractor up and place jack stands under unit as required. Place warning tag on control panel stating "Unit Out of Service."

WARNING

OIL COULD BE VERY HOT. PROTECT YOURSELF WHEN PERFORMING OIL CHANGE BY USING RUBBER GLOVES.

e. Loosen and remove engine oil drain plug.

f. When oil is drained, install and tighten plug.

g. Place catch pan under engine oil filter (2).

h. Use a filter strap wrench to loosen spin-on oil filter. Remove filter and drain into catch pan.

i. Inspect filter mounting base assembly for deposits or dirt. Remove any deposits on filter gasket sealing surface. Wipe filter gasket sealing surface clean.

j. Fill new filter element with clean engine lube oil. (Refer to Table 1 to select engine lube oil, refer to Table 2 to select proper oil grade.)

k. Apply thin coat of oil to new filter gasket.

l. Carefully thread new oil filter onto mounting base assembly, and hand tighten. (Always refer to manufacturer's directions.)

CAUTION

DO NOT MIX OILS FROM DIFFERENT REFINERS, AND DO NOT MIX OILS OF DIFFERENT VISCOSITIES. CHECK CRANK-CASE OIL LEVEL FREQUENTLY WHILE FILLING TO PREVENT OVERFILLING; OIL LEAKS AND BEARING DAMAGE COULD RESULT.

m. Remove unit from jack stands.

n. Fill engine crankcase through filler neck (3) on rocker cover with 22 quarts (21 L) of approved oil using engine lube oil viscosity chart (Table 1). Check crankcase level with dipstick (4). Remove warning tag.

o. Start unit and check engine oil filter for leakage. If needed, tighten filter element with strap wrench, just enough to stop leak. Return unit to service.

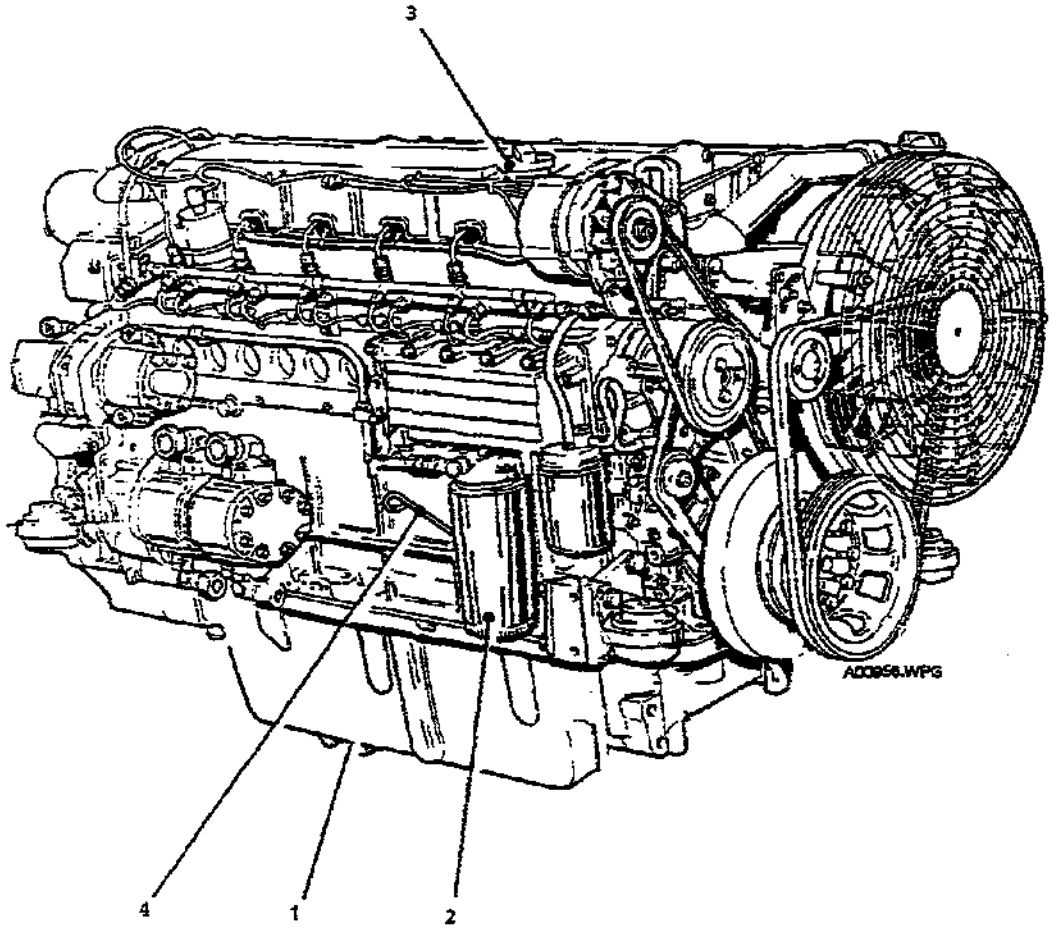

FIGURE 1. ENGINE OIL SYSTEM

TABLE 1. ENGINE LUBE OIL VISCOSITY SELECTION CHART

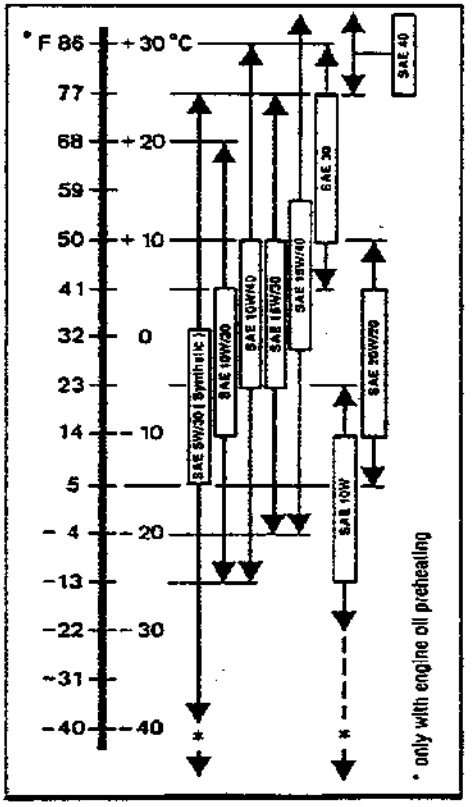

TABLE 2. ENGINE LUBE OIL QUALITY GRADE CHART

Approved API Oils:

Naturally aspirated engines:	CC	
Turbocharged engines:	CD	CF
	CE	CF4

Approved CCMC Oils:

Naturally aspirated engines:	D4	
Turbocharged engines:	D4	D5*

* D5 (sulfate ash ≥ 1.8 % by mass) corresponds to SHPD*
* SHPD (Super High Performance Diesel) oils.

If in doubt, ask the nearest service representative.

MAINTENANCE INSTRUCTION

TECHNICAL PROCEDURES

ENGINE AIR INTAKE FILTER: CHECK RESTRICTION INDICATOR

Total Number of Pages in this MI is 2.

1. TOOLS/EQUIPMENT:

   a. Clean rag
   b. Flashlight

2. MATERIAL:

   None required

3. PROCEDURE:

   a. Park unit on level ground.

   b. Apply parking brake.

   c. Locate air filter restriction indicator (1, Figure 1). Restriction indicator is mounted on engine air filter.

   d. Visually inspect indicator. The indicator shows highest restriction sensed during past operation.

   e. If indicator shows restriction in or approaching red zone, filter element must be replaced. Refer to MI 08005 for air filter element replacement procedures.

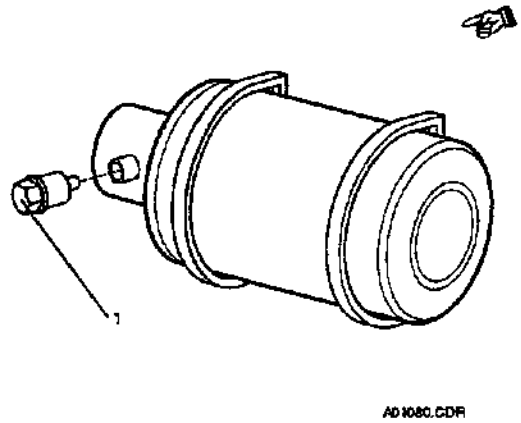

1. RESTRICTION INDICATOR

FIGURE 1. ENGINE AIR FILTER RESTRICTION INDICATOR

MAINTENANCE INSTRUCTION

TECHNICAL PROCEDURES

ENGINE AIR INTAKE FILTER, CHANGE ELEMENT

Total Number of Pages in this MI is 2.

1. TOOLS/EQUIPMENT:

   Clean rag

2. MATERIAL:

   Engine air intake element, P/N 70459A

3. PROCEDURE:

   Engine Air Filter Replacement.

   a. Park unit on level ground.

   b. Apply parking brake. Place warning tag on control panel stating "unit out of service".

   c. Loosen wing nut (1, Figure 1) that secures air filter element to housing.

CAUTION

MAKE SURE NO DEBRIS OR DIRT ENTERS AIR INLET WHILE OPEN. INGESTED DIRT OR DEBRIS CAN CAUSE SERIOUS ENGINE DAMAGE.

   d. Remove air filter element (2) and element retaining cover (3).

   e. Remove any accumulated dirt or debris from filter housing. Wipe housing clean to ensure an air-tight seal to new filter element.

a. Install new filter element (2) with retaining cover (3). Hand-tighten wing nut (1) until filter element is firmly seated.

b. Press button in bottom of air filter restriction indicator (4) to reset indicator to zero restriction. Remove warning tag and return unit to service.

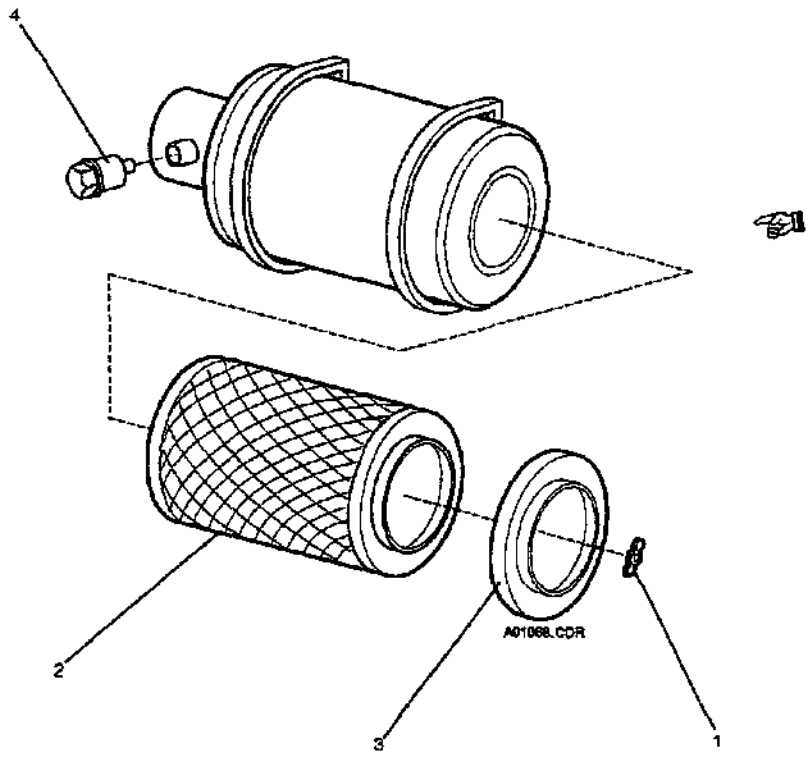

1. WING NUT
2. ELEMENT
3. RETAINING COVER
4. RESTRICTION INDICATION

FIGURE 1. ENGINE AIR INTAKE SYSTEM AND FILTER

MAINTENANCE INSTRUCTION

TECHNICAL PROCEDURES

BATTERY, SERVICE

Total Number of Pages in this MI is 4.

1. TOOLS/EQUIPMENT:

   a. Standard automotive mechanic's hand tool set
   b. Electrolyte tester - Kent-Moore Hydro-Spy P/N J23688, P/N J26568, or equivalent

2. MATERIAL:

   a. Sodium bicarbonate or ammonia
   b. Tap water
   c. Petroleum jelly
   d. Distilled water

3. PROCEDURE:

WARNING

LEAD-ACID BATTERIES EMIT EXPLOSIVE HYDROGEN GAS. DO NOT SMOKE, OR ALLOW OPEN SPARKS OR FLAMES NEAR BATTERIES WHEN THEY ARE BEING INSPECTED OR SERVICED. BATTERY ELECTROLYTE IS CORROSIVE ACID, AND CAN CAUSE CHEMICAL BURNS. WEAR EYE PROTECTION WHEN SERVICING BATTERY. WASH ANY BODY PART THAT CONTACTS BATTERY ELECTROLYTE AS SOON AS POSSIBLE.

   a. Park unit on level ground.

   b. Apply parking brake.

c. Check electrolyte levels in battery cells weekly. Electrolyte must always cover battery plates to prevent plate damage. Replenish cells with distilled water as needed to bring electrolyte level up to bottom of split vents.

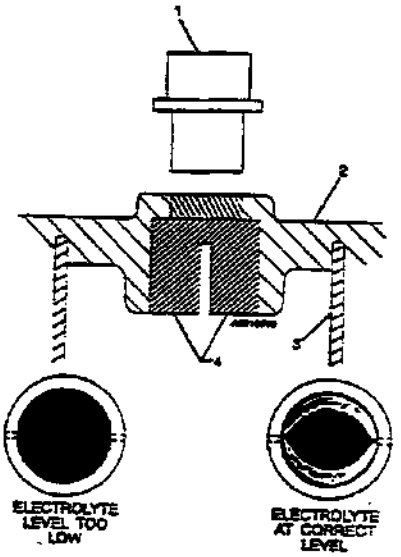

1. CAP
2. CASE
3. PLATE
4. SPLIT VENT

FIGURE 1. BATTERY ELECTROLYTE LEVEL

d. Perform a general inspection and cleaning of batteries every 6 months:

(1) Check battery cases for damage, cracks, and punctures. Batteries with punctured or cracked cases must be replaced.

WARNING

THE BATTERY'S GROUND CABLE (NEGATIVE) MUST BE REMOVED BEFORE THE POSITIVE CABLE TO PREVENT BURNS AND ELECTRICAL SPARKS.

(2) Remove battery ground cables. Remove battery positive cables.

(3) Inspect battery terminals and cables for dirt, corrosion.

(4) Neutralize corrosion with sodium bicarbonate or ammonia dissolved in tap water. Immerse corroded cable connectors and hardware in neutralizing solution until bubbles no longer form. Rinse neutralized cables with tap water.

NOTE

Battery cable clamps, if corroded to the point that their clamping force is impaired, must be replaced.

(5) Clean any accumulated dirt from battery cases with neutralizing solution, taking care to avoid spilling solution into battery cell vents. Rinse battery cases with tap water after neutralization.

(6) Polish or scrape battery terminals and cable terminals to expose bright metal, then coat terminals with petroleum jelly to protect them from moisture and acid fumes.

WARNING

THE BATTERY'S POSITIVE CABLE MUST BE INSTALLED BEFORE THE NEGATIVE (GROUND) CABLE TO PREVENT BURNS AND ELECTRICAL SPARKS.

(7) Reconnect positive and negative battery cables and tighten battery cable connectors.

e. Check specific gravity of electrolyte in every battery cell at least once a year. Use a battery electrolyte tester such as Kent-Moore Hydro-Spy P/N J23688, P/N J26568, or equivalent for accurate results.

NOTE

Keep battery fully charged, especially during cold weather.

MAINTENANCE INSTRUCTION

TECHNICAL PROCEDURES

HYDRAULIC SYSTEM: CHANGE FILTER ELEMENT

Total Number of Pages in this MI is 2.

1. TOOLS/EQUIPMENT:

   a. Standard automotive mechanics hand tool set
   b. Container
   c. Rags

2. MATERIALS:

   a. Filter element, P/N 932409
   b. O-rings, P/N N72350, Qty. two

3. PROCEDURES:

   a. Park unit on level ground.

   b. Apply parking brake. Place tag on control panel stating "unit out of service".

   c. Place container under filter housing.

   d. Loosen Allen head cap screws (1), turn cover (2) slightly to clear screws. Allow excess fluid to drain.

   e. Remove diverter/bypass valve assembly (3). Filter element (4) will follow valve assembly.

   f. Remove element from diverter/bypass valve assembly.

   g. Replace element on diverter/bypass valve assembly, inspect O-ring (6), replace if required. Ensure O-ring seats properly into head.

i. Inspect cover O-ring (5), replace if required.

j. Replace cover (2), and tighten screws (1). DO NOT OVER-TIGHTEN.

k. Remove filler cap on hydraulic tank.

l. Level indicator is attached to the filler cap. Fluid level should be in safe operating zone on level indicator. If required, add oil to maintain a safe operating level.

m. Start tractor and visually check all lines and fittings under pressure for leaks.

n. Stop tractor.

o. Remove warning tag and return unit to service.

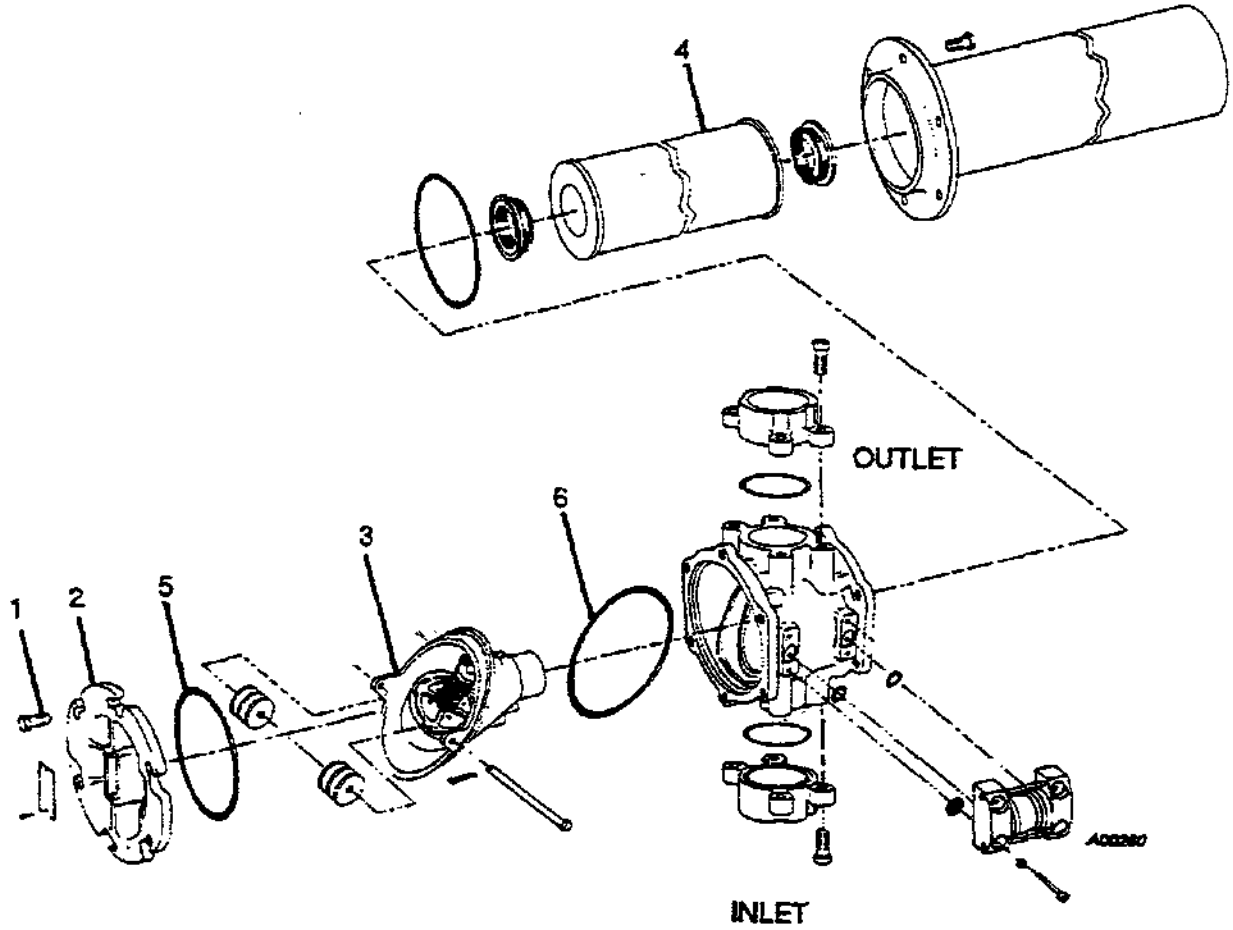

1. SCREW
2. COVER
3. DIVERTER/BYPASS
4. ELEMENT
5. O-RING
6. O-RING

FIGURE 1. HYDRAULIC FILTER ASSEMBLY

MAINTENANCE INSTRUCTION

TECHNICAL PROCEDURES

FLUID LEVELS, CHECK

Total Number of Pages in this MI is 6.

1. TOOLS/EQUIPMENT:

   a. Clean rag
   b. Flashlight

2. MATERIAL:

   None required except as needed. See specification page or procedural steps.

3. PROCEDURE:

   All fluid level checks should be performed with unit on level surface with parking brake applied.

FUEL TANK LEVEL

a. Check fuel tank level. Fuel level gauge is located on the control panel.

b. Fill as required through filler pipe (1, Figure 1). Use either Diesel Fuel Grade No. 1-D or Grade No. 2-D as defined by ASTM Designation D975 for diesel fuels or JET-A fuel. The temperature at time of start determines the type of diesel fuel to be used (See specifications sheet, Figure 2). Find expected air temperature at time of start on thermometer scale. Correct diesel grade fuel is shown to the right of scale.

ENGINE OIL LEVEL

a. With engine stopped, locate engine dipstick (2, Figure 1).

b. Pull dipstick out of tube, and wipe clean.

c. Re-insert dipstick, then withdraw it to read level. Oil level should be maintained between ADD and FULL range on dipstick.

CAUTION

OVER-FILLING ENGINE CRANKCASE CAN RESULT IN OIL LEAKS, OR POSSIBLY BEARING DAMAGE. CHECK OIL LEVEL FREQUENTLY WHILE ADDING OIL TO AVOID OVERFILLING.

d. If oil level is down to ADD mark on dipstick, add through filler (3, Figure 1) enough oil to bring level up near FULL level. (See Table 1 for specifications)

TRANSMISSION OIL LEVEL. Check transmission oil level daily or before operation.

NOTE

TRANSMISSION OIL LEVEL IS CHECKED WITH ENGINE RUNNING AT NORMAL OPERATING TEMPERATURE OF 160 TO 185°F (71 TO 85°C).

a. Ensure parking brake is set.

b. Transmission shift lever in neutral position.

c. Start engine, allow warm up time.

d. Locate transmission oil dipstick (4, Figure 1).

e. Pull transmission oil dipstick out of its tube, and wipe clean.

f. Re-insert dipstick, then withdraw and read oil level. Oil level should be maintained between the ADD and FULL range on dipstick.

CAUTION

OVER-FILLING TRANSMISSION CAN RESULT IN OIL LEAKS, OR POSSIBLE DAMAGE. CHECK OIL LEVEL FREQUENTLY WHILE ADDING OIL TO AVOID OVER-FILLING.

g. If oil level is down to ADD mark on dipstick, add through filler (5, Figure 1) enough oil to bring level up near FULL level. ISO VG MOBIL 1310 is recommended. For ambient

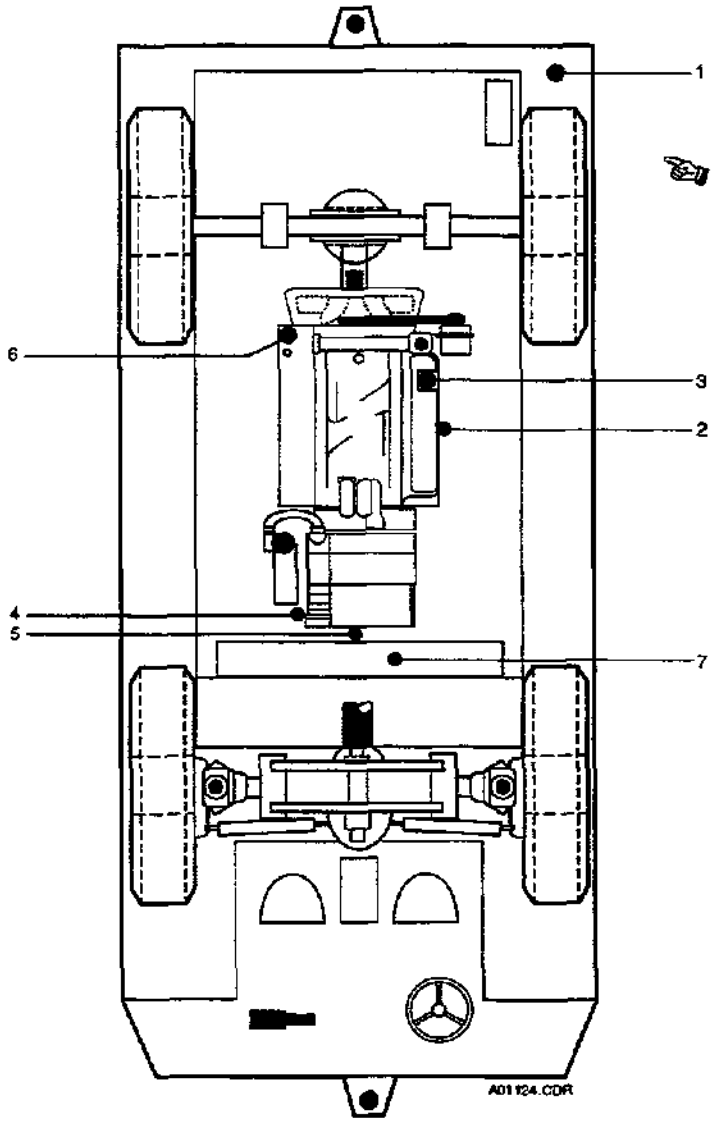

1. FUEL TANK FILL
2. ENGINE OIL LEVEL
3. ENGINE OIL FILL
4. TRANSMISSION LEVEL
5. TRANSMISSION OIL FILL
6. ENGINE COOLANT LEVEL
7. HYDRAULIC OIL LEVEL/FILL

FIGURE 1. FLUID LEVEL AND FILL LOCATIONS

ENGINE COOLANT LEVEL Check engine coolant level daily, or before operation.

WARNING

THE COOLING SYSTEM IS PRESSURIZED. ESCAPING STEAM AND HOT COOLANT CAN CAUSE SEVERE BURNS. NEVER OPEN A RADIATOR CAP WHEN COOLANT TEMPERATURE EXCEEDS 200°F (95°C), AND USE A CLOTH OR WEAR SUITABLE GLOVES TO HANDLE A HOT RADIATOR PRESSURE CAP. ETHYLENE GLYCOL ANTIFREEZE IS TOXIC, AND CAN IRRITATE SKIN. WASH ANY PART OF THE BODY THAT COMES IN CONTACT WITH ANTIFREEZE SOLUTION AS SOON AS POSSIBLE.

a. Locate, loosen, and remove radiator cap (6, Figure 1)

b. Look into upper radiator tank through open filler neck. Coolant level should be high enough to cover tubes of radiator core, but should be low enough to allow coolant to expand in tank as it warms.

NOTE

Some minor coolant loss is normal, due to thermal expansion. Very low coolant level (down to, or below core tubes) indicates serious leakage in system which must be located and corrected.

c. If needed, prepare coolant solution of 50% water, and 50% Ethylene glycol base antifreeze. Add coolant solution as required to restore level per step (b).

HYDRAULIC OIL LEVEL

a. Remove filler cap on tank (7, Figure 1).

b. Level indicator is attached to the filler cap. Fluid level should be in safe operating zone on level indicator. If required, add oil to maintain a safe operating level.

DIESEL FUEL SPECIFICATIONS

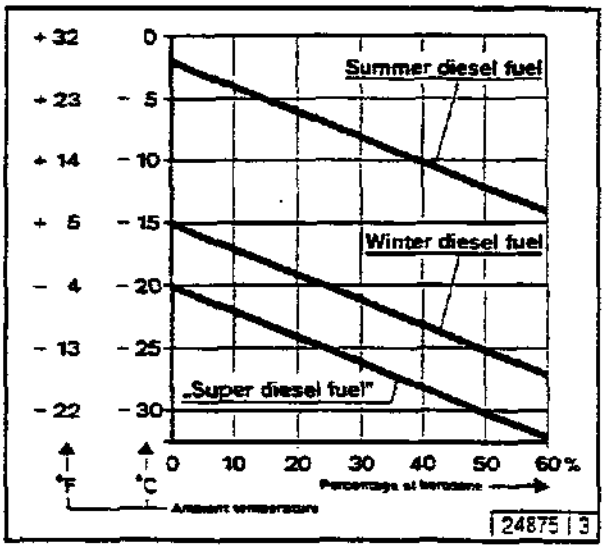

FIGURE 2. DIESEL FUEL TEMPERATURE SCALE

NOTE

At altitudes above 5,000 feet (1,525 meters) Use Grade 1-D for all temperatures. If engine is operated under "stand-by" conditions, use Grade 1-D for all temperatures.

Fuel sulphur content of less than 0.5 percent is preferred to prevent higher wear from corrosive combustion products.

Excessive white smoke at start-up could be the result of low cetane fuel.

Cetane number should be no less than 40 to ensure satisfactory starting and overall performance. At low temperatures and/or high altitude, a cetane number of more than 45 is recommended.

Cloud point should be at least 10° F (-12.2° C) below lowest expected air temperature at time of starting. Wax can separate from fuel when temperature decreases to cloud point and may plug filter.

TABLE 1. ENGINE LUBE OIL SPECIFICATIONS

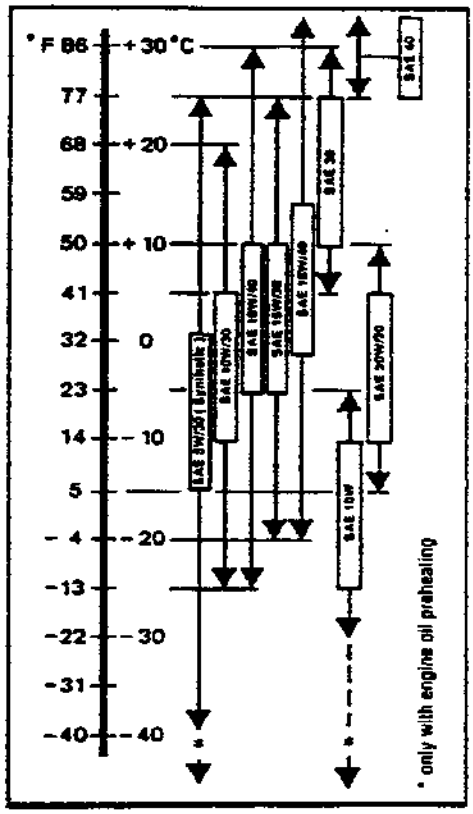

NOTE

Approved API Oils:

Naturally aspirated engines:	CC	
Turbocharged engines:	CD	CF
	CE	CF4

Approved CCMC Oils:

Naturally aspirated engines:	D4	
Turbocharged engines:	D4	D5'

' D5 (sulfate ash ≥ 1.8 % by mass) corresponds to SHPD*
* SHPD (Super High Performance Diesel) oils.

If in doubt, ask the nearest service representative.

MAINTENANCE INSTRUCTION

TECHNICAL PROCEDURES

DRIVE BELTS: CHECK AND ADJUST

Total Number of Pages in this MI is 4.

1. TOOLS/EQUIPMENT:

   a. Standard mechanic's hand tool set
   b. V-belt tension gauge

2. MATERIALS:

   None required.

3. PROCEDURES:

   a. Park unit on level ground.

   b. Apply parking brake. Place warning tag on control panel stating "Unit Out of Service."

   c. Visually inspect drive belts for general condition and adjustment.

   d. Use a V-belt tension gauge to check belt tension. (Refer to Deutz Operator's Manual located in Chapter 6.)

   e. Position gauge on V-belt midway between the pulleys.

   f. The tension gauge should indicate a force of 89.92 lb (400 N) for the alternator belt, 89.92 lb (400 N) for the fuel pump and coolant pump belts. ■

NOTE

If belt failure occurs or replacement is required, both belts must be replaced as a set.

Loose belts will vibrate and cause unnecessary wear on belts and pulleys. Belts which are adjusted too tight will cause unnecessary stress on pulley bearings and belts, and will shorten the life of both.

g. Adjust alternator pump belt tension as follows:

(1) Loosen mounting bolt (1, Figure 1), adjusting bracket bolt (2).

(2) Insert square wrench (3/8" drive ratchet) in square (4).

(3) Adjust alternator (3) in or out to achieve correct adjustment.

(4) Tighten adjusting bracket bolt (2). Tighten mounting bolt (1). Remove warning tag. Return unit to service.

NOTE

If new belts are installed, belt tension should be checked after 30 minutes of engine operation.

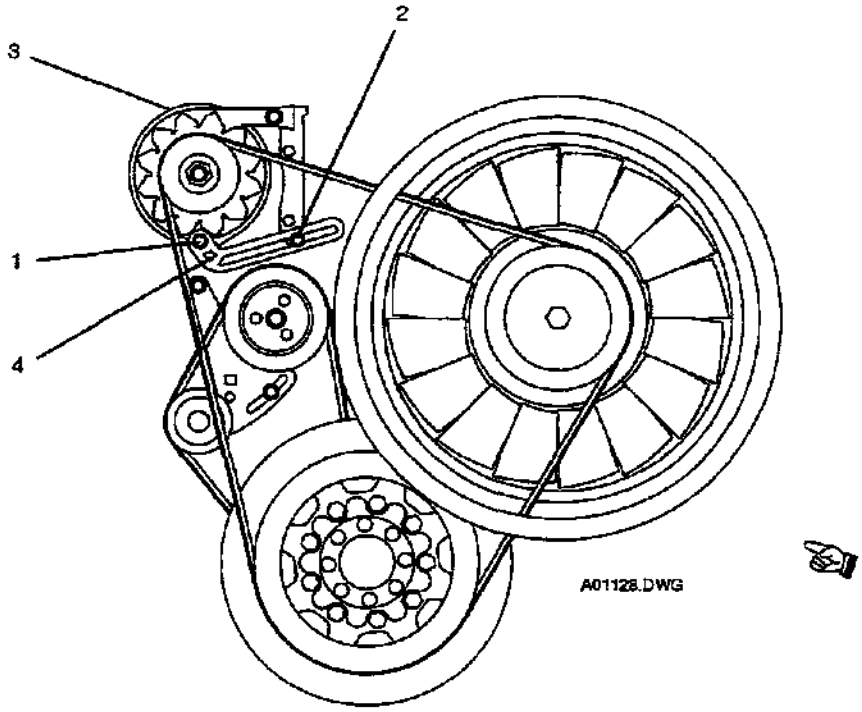

FIGURE 1. ALTERNATOR BELT ADJUSTMENT POINTS

h. Adjust coolant/fuel pump belts as follows:

(1) Loosen bolts (1 and 2, Figure 2).

(2) Insert square wrench in square (3).

(3) Push fuel pump (4) in direction of arrow until correct belt tension is achieved.

(4) Tighten bolts (1 and 2). Remove warning tag. Return unit to service.

NOTE

If new belts are installed, belt tension should be checked after 30 minutes of engine operation.

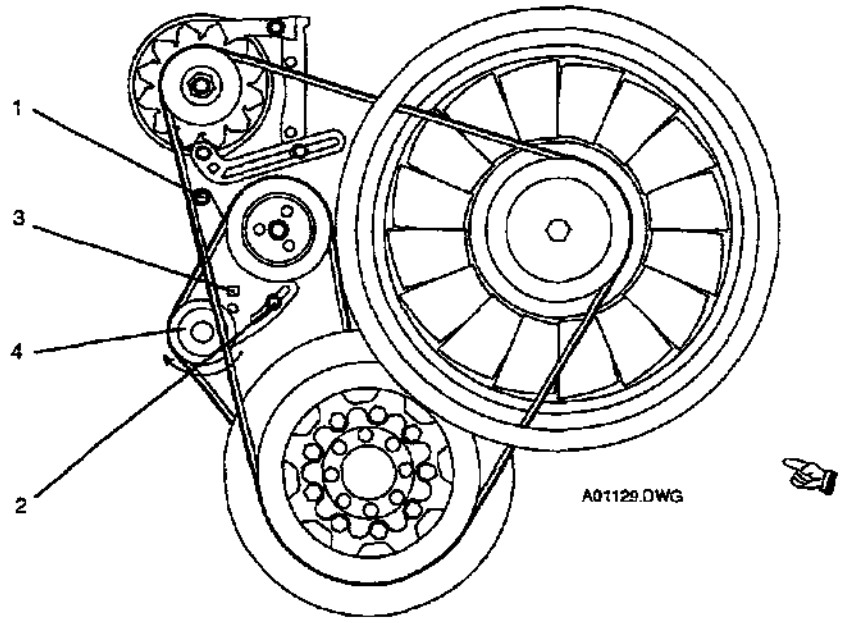

FIGURE 2. COOLANT FUEL PUMP BELT ADJUSTMENT POINTS

CHAPTER 3

OVERHAUL

TABLE OF CONTENTS

SECTION/ PARAGRAPH	DESCRIPTION	PAGE
1	OVERHAUL DATA	3-1-1
1.1	MODEL GT-50DZ TOW TRACTOR OVERHAUL.	3-1-1
1.2	ENGINE.	3-1-1
1.3	TRANSMISSION.	3-1-1
1.4	AXLES.	3-1-1
2	REMOVAL AND INSTALLATION	3-2-1
2.1	ENGINE AND TRANSMISSION ASSEMBLY REMOVAL.	3-2-1
2.2	ENGINE AND TRANSMISSION ASSEMBLY INSTALLATION.	3-2-4
2.3	AXLE REMOVAL PROCEDURES.	3-2-4
2.4	AXLE INSTALLATION PROCEDURES.	3-2-6

SECTION 1

OVERHAUL DATA

1.1 MODEL GT-50DZ TOW TRACTOR OVERHAUL.

1.1.1 The Model GT-50DZ Tow Tractor has many components which must be maintained by a flexible program of preventive maintenance, repair, and overhaul. Overhaul is normally conducted on a periodic basis or during unscheduled down time. Proper servicing, maintenance, manufacturer's recommendations, and record keeping are important in establishing overhaul periods.

1.1.2 Stewart & Stevenson provides preventive maintenance recommendations (Chapter 2, Section 1). Maintenance instructions are provided in Chapter 2, Section 3, for performing maintenance on specific components or for performing specific maintenance tasks. Troubleshooting tables (Chapter 2, Section 2), specific to this equipment, have also been provided to assist the operator and maintenance personnel in quickly isolating and correcting most common malfunctions. Removal and installation instructions (Chapter 3, Section 2), are provided for the removal and installation of the engine and transmission as an assembly.

1.2 ENGINE.

1.2.1 For engine maintenance and overhaul procedures, refer to the Deutz Engine Manual, located in Chapter 6, Tab A, of this manual.

1.3 TRANSMISSION.

1.3.1 A transmission overhaul manual is not included in this publication. A Funk Model 2000 Transmission Assembly Manual, P/N 4003558, can be obtained from Funk Transmission Company or Stewart & Stevenson.

1.4 AXLES.

1.4.1 An axle overhaul manual is not included in this publication. An axle overhaul manual can be obtained directly from Rockwell International Corporation or from Stewart & Stevenson.

NOTE

Overhaul information, for each component, may be obtained directly from the component manufacturer or by contacting:

Stewart & Stevenson Services, Inc.
P.O. Box 1637
ATTN: Airline Parts Sales Dept.
Houston, Texas 77251-1637
USA Phone 800-231-8181
Texas Phone 713-923-2161

SECTION 2

REMOVAL AND INSTALLATION

2.1 ENGINE AND TRANSMISSION ASSEMBLY REMOVAL.

2.1.1 The engine and transmission should be removed from the tractor as an assembly. Removing the engine and transmission assembly from the Model GT-50DZ tow tractor is a relatively easy task, because the unit has been designed for efficient maintenance. In the following procedures (paragraph 2.1.4), steps (a), (b), (c), (d), (z), (aa), (bb), (cc), (dd), and (ee) require working under the vehicle; the remaining steps are all accomplished from above the engine with the access door open, or within the operator compartment. There is 10 inches (25.4 cm) of clearance between the chassis and the ground when the tires are inflated to normal 130 PSI (895 kPa). Driving the tractor up onto blocks, over a pit, or in some other way increasing ground clearance is optional. (See Warning on next page.)

2.1.2 No special tools are required for engine and transmission assembly removal. Recommended tools are limited to those normally available to a mechanic.

2.1.3 Figure 3.1 shows a proper hoist of the engine and transmission assembly using a three point sling. Two points of the sling attach to engine mounted brackets, diagonally across from each other, near the front and rear of the engine's rocker covers. The third attaches to a fabricated bracket bolted to the front of the transmission case. Once attached, adjust the sling to raise the engine and transmission assembly in a level attitude out of its compartment.

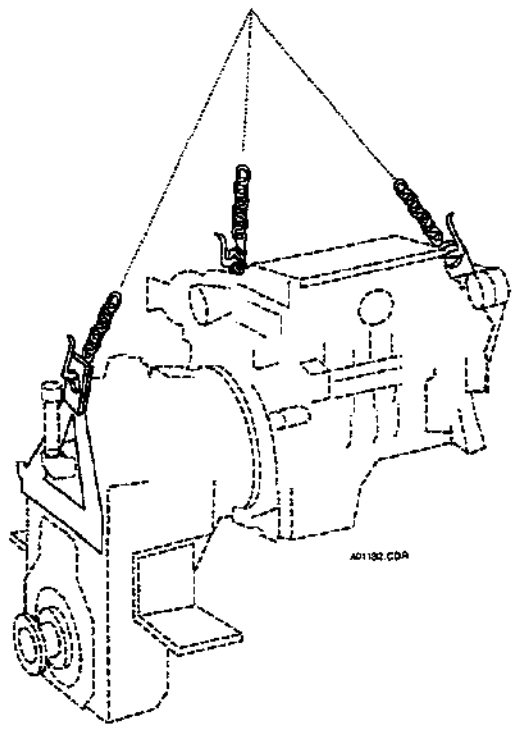

FIGURE 3.1 TRANSMISSION LIFTING BRACKET

WARNING

TO AVOID INJURY TO PERSONNEL OR DAMAGE TO THE EQUIPMENT, ALWAYS USE LIFTING EQUIPMENT, SUPPORTS, AND CHAINS WITH A SAFE MINIMUM CAPACITY OF ONE AND A HALF (1-1/2) TIMES THAT OF THE OBJECT BEING LIFTED OR SUPPORTED.

2.1.4 The following procedures must be accomplished before the engine and transmission assembly can be removed:

(a) Disconnect negative cable from battery. Disconnect battery cables from starting motor and from engine ground.

(b) The GT-50DZ may be equipped with an optional cab heater. If so, remove heater hoses at this time. One heater hose is attached to the water pump at the front of the engine; the other hose is connected to the water elbow at the front of the left cylinder head.

(c) Loosen, drain, and remove inlet and outlet hoses for transmission oil cooler.

(d) Loosen, drain, and remove inlet and outlet hoses for hydraulic oil cooler.

(e) Remove center rubber elbow connecting air intake line to air filter.

(f) Support air filter. Remove hex head bolts from air filter mounting bracket.

(g) Remove air filter assembly.

(h) Mark the hole in the governor control lever where the throttle linkage is attached. (May be only one hole in lever.)

(i) Remove clevis pin that connects governor control arm to end of throttle linkage. The clevis pin is secured by a cotter pin beneath the control arm.

(j) Disconnect governor control arm and put clevis and cotter pin into original hole.

(k) Loosen jamnut on throttle linkage adjustment bracket, remove cable from bracket.

(l) Drain hydraulic reservoir.

(m) Remove all hoses from hydraulic pump and flow divider, mounted on top of transmission.

(n) Remove hydraulic oil filter assembly by removing four Allen head capscrews from inlet and outlet flanges, and two hex head bolts from mounting bracket.

(o) Remove clamps that hold exhaust pipe to engine manifolds. Loosen lower clamp on muffler. Remove exhaust pipe.

(p) Disconnect electrical plug near engine flywheel; (this disconnects all engine electrical components.)

(q) Cover both ends of electrical plug with a tape wrapping to prevent contamination.

(r) Disconnect fuel return line from fuel manifold.

(s) Disconnect fuel supply line from fuel manifold.

(t) Protect open fuel lines from contamination by plugging open ends.

(u) The GT-50DZ may be equipped with optional ether injection for cold weather starting. Disconnect ether aid on intake manifold if tractor is so equipped.

(v) Remove transmission cooler supply and return lines from transmission.

(w) Disconnect parking brake cable by loosening locknut on adjustment mounting bracket and removing pin from clevis.

(x) Remove parking brake switch from mounting, located near actuating arm of brake caliper.

(y) Disconnect both drive shafts. There are sixteen 3/8-inch capscrews to be removed per driveshaft.

WARNING

WHEN SCREWS ARE REMOVED, THE DRIVE SHAFT WILL DROP UNTIL IT COMES TO REST ON FRAME MEMBER. KEEP HEAD CLEAR AND DO NOT GRASP FRAME MEMBER DIRECTLY BENEATH THE DRIVE SHAFT.

(z) Compress drive shaft splines to move flange away from transmission.

(aa) Remove two bolts securing engine mount front trunnion, near front of engine.

(bb) Remove two rear engine mounting bolts near transmission. Examine rear motor mount resilient bushings between engine mount brackets and chassis for wear. Be sure the bushings are kept for replacement. If bushings appear worn, they should be replaced.

2.1.5 Attach sling to engine and transmission lifting brackets.

WARNING

TO AVOID INJURY TO PERSONNEL OR DAMAGE TO THE EQUIPMENT, ALWAYS USE LIFTING EQUIPMENT, SUPPORTS, AND CHAINS WITH A SAFE MINIMUM CAPACITY OF ONE AN A HALF (1-1/2) TIMES THAT OF THE OBJECT BEING LIFTED OR SUPPORTED.

CAUTION

USE EXTREME CARE NOT TO DAMAGE ANY ENGINE, TRANSMISSION, OR CHASSIS COMPONENT WHEN REMOVING THE ENGINE TRANSMISSION ASSEMBLY.

2.1.6 Lift engine and transmission assembly. Prevent rotation of the assembly in order to avoid damage to any engine, transmission, or chassis component. Lift engine straight up.

2.2 ENGINE AND TRANSMISSION ASSEMBLY INSTALLATION.

2.2.1 Install engine and transmission assembly by reversing steps in engine and transmission removal procedure.

2.2.2 Check all fluid levels and service as needed. Start and leak check tractor.

2.3 AXLE REMOVAL PROCEDURES.

2.3.1 The front axle is mounted on a pivoting bolster to accommodate minor bumps and dips during operation. The rear axle is bolted solidly to the tractor chassis.

2.3.2 The following procedures are to be followed for removal of the axle assemblies.

WARNING

TO AVOID INJURY TO PERSONNEL OR DAMAGE TO THE EQUIPMENT, ALWAYS USE LIFTING EQUIPMENT, SUPPORTS, AND CHAINS WITH A SAFE MINIMUM CAPACITY OF ONE AND A HALF (1-1/2) TIMES THAT OF THE OBJECT BEING LIFTED OR SUPPORTED.

(a) Hoist tractor and place stands beneath chassis to provide at least 24 inches (61 cm) clearance beneath chassis.

(b) Remove wheel and tire assemblies.

WARNING

WEAR PROTECTIVE GOGGLES OR OTHER APPROPRIATE EYE PROTECTION WHEN LOOSENING BRAKE SYSTEM OR HYDRAULIC SYSTEM FITTINGS, AS RESIDUAL PRESSURE MAY BE PRESENT IN THESE SYSTEMS.

(c) Disconnect and cap brake lines that are attached to axle wheel cylinders.

(d) Disconnect hydraulic system hoses from steering cylinders on front axle. Cap hose fittings and plug cylinder ports to prevent system contamination.

(e) Disconnect drive shaft from axle pinion shaft.

(f) Support axle assembly with a hoist or heavy-duty transmission jack in such a fashion that axle cannot suddenly pivot about the bolster shaft.

WARNING

FOR THE SAFETY OF MAINTENANCE PERSONNEL, FRONT AXLE BOLSTER MOVEMENT MUST BE PREVENTED DURING AXLE INSTALLATION OR REMOVAL.

(g) Remove the eight nuts, bolts, and washers that attach front axle assembly to bolster; then carefully lower axle from its mounted position, and remove it from beneath tractor chassis.

(h) Remove cotter pins, washers, and clevis pins that retain hydraulic steering cylinders on axle assembly. Install cylinders in same locations on replacement axle assembly with new cotter pins, and new clevis pins if old pins show significant wear.

(i) On tow tractors with two-wheel steering, remove the rear non-steerable axle assembly in same manner as front axle, with the following exceptions:

(1) The rear axle is mounted solidly to the chassis, instead of to a pivoting bolster.

(2) The rear axle does not have hydraulic steering cylinders; therefore, steps calling for their disconnection and removal do not apply.

(j) On tow tractors with four-wheel steering (optional), remove rear axle in same manner as front axle, except the rear axle is mounted solidly to the chassis, instead of to a pivoting bolster.

2.4 AXLE INSTALLATION PROCEDURES.

2.4.1 Install axle assemblies by reversing steps of axle removal procedure, with the following additional requirements:

(a) Torque axle mounting bolts at 400 to 450 foot-pounds (545 to 610 Nm).

(b) Bleed hydraulic lines and steering cylinders while tractor is on stands as follows:

WARNING

THIS PROCEDURE REQUIRES TWO MEN. ONE MAN TO START AND STOP UNIT AND TURN STEERING WHEEL, AS REQUIRED, TO FORCE FLUID TO THE HYDRAULIC CYLINDERS. ONE MAN UNDER VEHICLE TO LOOSEN AND TIGHTEN FITTINGS, AS REQUIRED, TO EXPEL AIR FROM THE SYSTEM.

EXERCISE EXTREME CAUTION WHEN PERFORMING MAINTENANCE ON THE HYDRAULIC SYSTEM. FLUID ESCAPING UNDER HIGH PRESSURE CAN CAUSE SERIOUS PERSONAL INJURY. FACE SHIELD AND PROTECTIVE CLOTHING MUST BE WORN.

NOTE

With the four wheel steering option both axle must be in place and steering selector in COORD. mode.

(1) Check hydraulic reservoir, ensure fluid is at proper operating level.

(2) Attach hydraulic lines to hydraulic cylinders, snug fittings hand tight.

(3) Place container under fittings to catch draining fluid, place rag over fittings to divert any spray.

(4) Ensure front wheels are positioned straight ahead (zero pitch).

(5) Start engine, allow engine to idle.

(6) Slowly turn steering wheel to allow hydraulic cylinders to cycle to the cylinder end, expelling any trapped air, when all air has been expelled from that end of the cylinders, tighten the hydraulic line fittings.

(7) Repeat step (6) turning steering wheel in the opposite direction.

(8) Check hydraulic reservoir level, replenish to operating level.

(9) Prior to returning unit to service, drive unit to check response of hydraulic steering system., and check system for leaks.

(c) After front axle is installed, align wheels as follows: (On tow tractors with four-wheel steering option, the rear wheels also require alignment).

NOTE

Due to low operating speeds of the tow tractor minor variations in wheel alignment measurements are tolerable.

(1) Check caster and camber measurement, measurement should always remain at zero. Any variation from vertical indicates wear or failure of the pivot assembly bushing and must be replaced.

(2) Check toe-in and toe-out angle, measurement should remain zero, adjustment can be made at either or both ends of the tie rod assembly.

(d) Perform operational and leak check on tow tractor.

GROUP 1

TOW TRACTOR ASSEMBLY

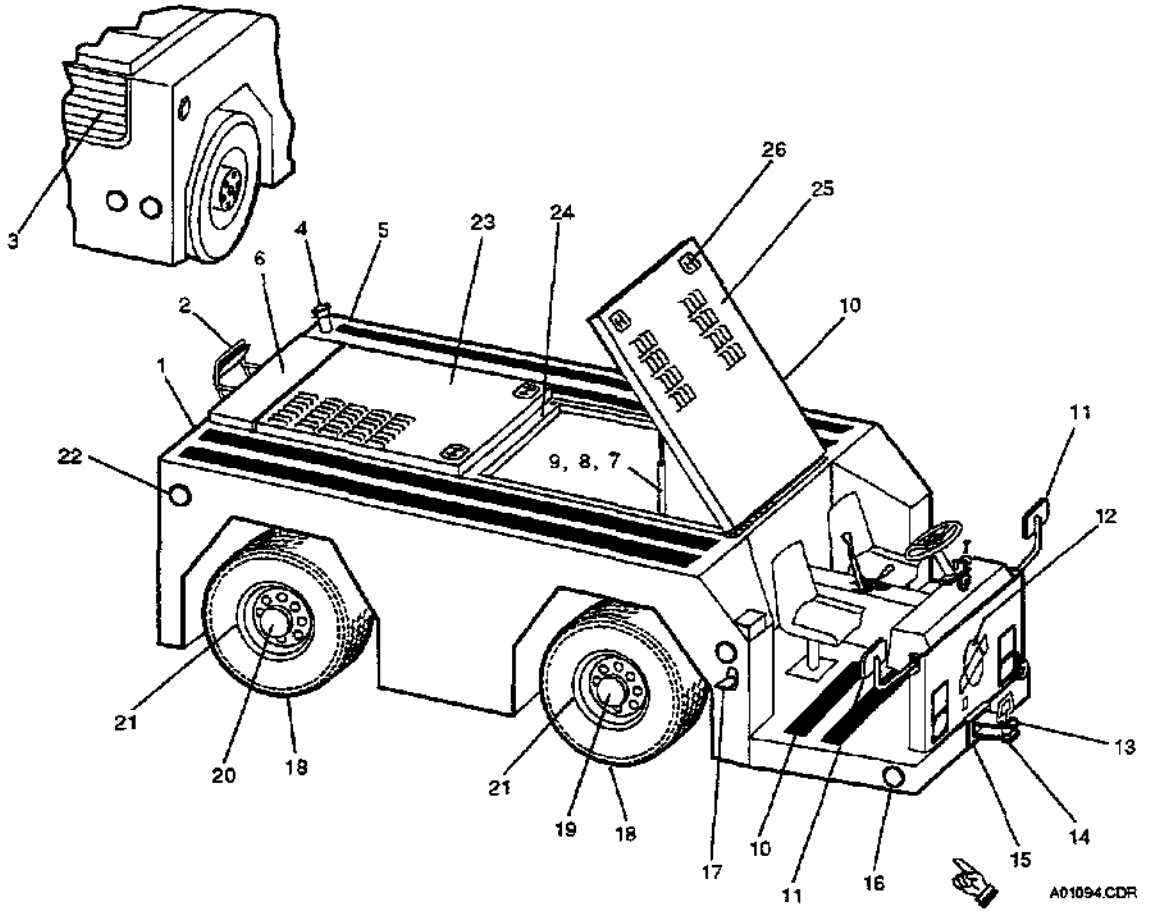

FIGURE 1.1 TOW TRACTOR OVERALL VIEW

FIG. & INDEX NO.	PART NO.	MFR. CODE	DESCRIPTION	QTY.
1.1			TOW TRACTOR ASSEMBLY	
-1	REF	81381	TOW TRACTOR, GT-50DZ/50DZH, STANDARD	REF
	REF	81381	. FRAME, GT-50DZ/50DZH	REF
-2	12884541	81381	. HITCH LIGHT AND MIRROR,(OPTION)	1
	64-101	81381	. . LAMP, SEALED, 12 V, ADJUSTABLE	1
	60-50001	81381	. . MIRROR ASSY.	1
-3	12941074	81381	. GRILL, AIR INTAKE DUCT	1
-4	76563	81381	. FUEL FILLER AND CAP ASSY. WITH CONE STRAINER	1
-5	98205	81381	. NAMEPLATE, DIESEL FUEL ONLY	1
-6	12940854	81381	. DUCT, AIR INTAKE	1
-7	78383	81381	. CYLINDER, GAS, ENGINE BAY DOOR (NOT SHOWN)	4
-8	A9002	81381	. CLIP, GAS CYLINDER	8
-9	A9008	81381	. STUD, GAS CYLINDER	8
-10	460MED	81381	. SAFETY WALK, BLACK SURFACE	AR
-11	28093	81381	. MIRROR, REAR VIEW	2
	86581	81381	. BRACKET, MIRROR	2
-12	99019	81381	. LOGO, METAL, 7 INCH	1
-13	56AD169	81381	. TOW HITCH ASSY.	2
-14	56AB170	81381	. . PIN, TOW HITCH	2
	12882462	81381	. . CAM LEVER, TOW HITCH	2
-15	86773	81381	. BOLT, HEX, GRADE 8, 5/8-11 X 1-3/4	12
	60578	81381	. LOCKWASHER, 5/8	12
-16	12912686	81381	. REFLECTOR, AMBER	2
-17	592614C1	81381	. STEP, FOLDING	1
-18	12890597	81381	. TIRE, (SEE FIG. 2.3)	REF
-19	12893102	81381	. AXLE ASSY., STEERABLE (FRONT)	
			SEE FIGS 2.5 THRU 2.8 FOR PARTS BREAKDOWN	1
-20	12893103	81381	. AXLE ASSY., RIGID (REAR)	
			SEE FIGS 2.9 THRU 2.11 FOR PARTS BREAKDOWN	1
-21	12902835	81381	. WHEEL ASSY., (SEE FIG 2.3)	4

FIG. & INDEX NO.	PART NO.	MFR. CODE	DESCRIPTION	QTY.
1.1			**TOW TRACTOR ASSEMBLY (CONT)**	
-22	12912685	81381	. REFLECTOR, RED	2
-23	12941170	81381	. DOOR, ACCESS, ENGINE BAY, REAR	1
-24	12941088	81381	. SUPPORT, DOOR	1
-25	12941171	81381	. DOOR, ACCESS, ENGINE BAY, FRONT	1
-26	6-800	81381	. LATCH, FOLDING "T" HANDLE	4

THIS PAGE INTENTIONALLY LEFT BLANK.

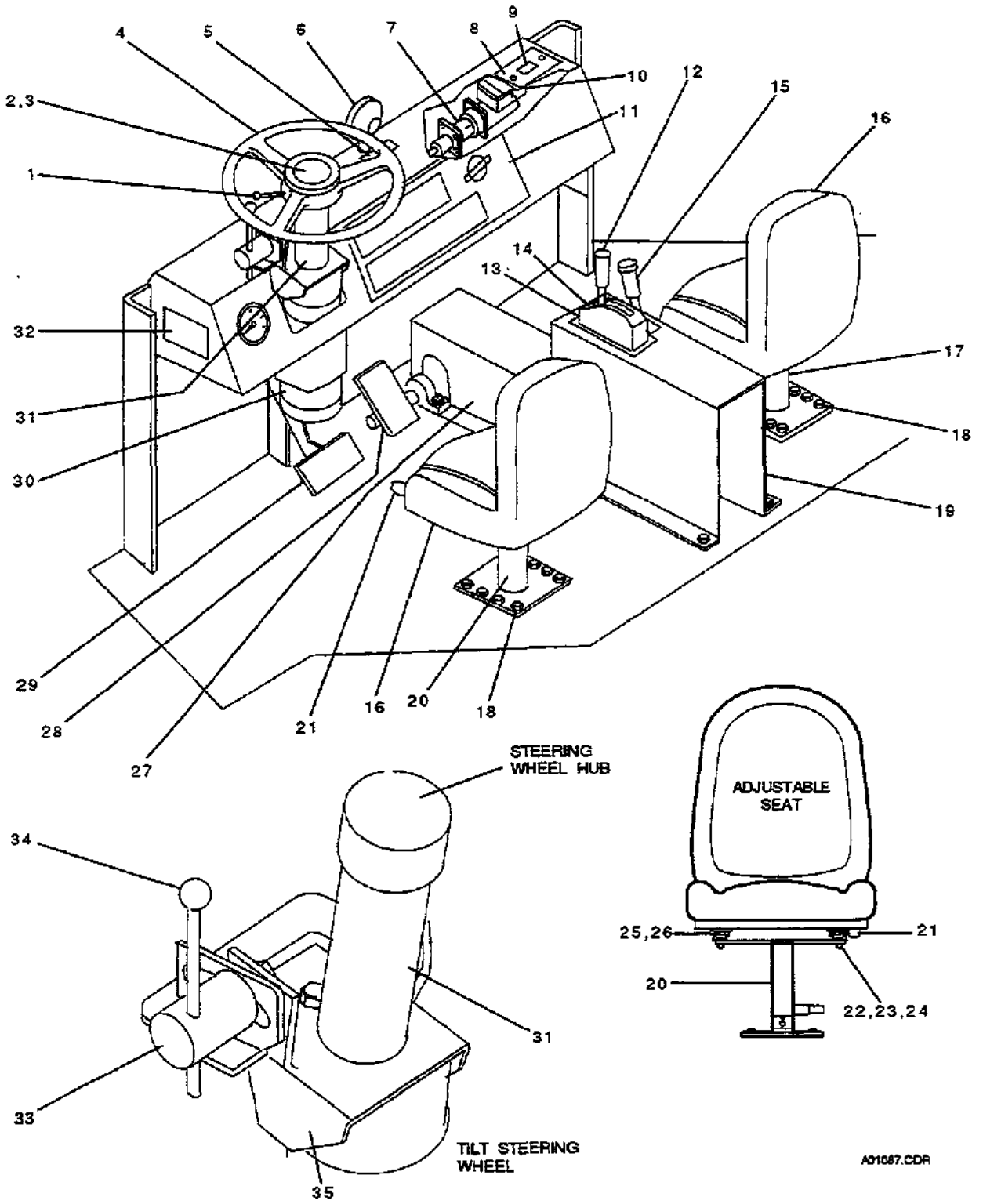

FIGURE 1.2 OPERATOR'S COMPARTMENT

FIG. & INDEX NO.	PART NO.	MFR. CODE	DESCRIPTION	QTY.
1.2	**12903968**	**81381**	**OPERATOR'S COMPARTMENT**	**1**
-1	900	81381	. SWITCH, TURN SIGNAL WITH HAZARD (A2)	1
	76459	81381	. FLASHER, TURN SIGNAL (NOT SHOWN)	1
-2	77791	81381	. NUT, STEERING WHEEL	1
-3	77793	16764	. KIT, HORN BUTTON (S5)	1
-4	7404900	81381	. STEERING WHEEL	1
-5	12902734	81381	. NAMEPLATE, DO NOT DRIVE TRACTOR WITH HAND (PARK) BRAKE APPLIED	1
-6	2702	81381	. LAMP, WARNING, PARK BRAKE ON (DS17)	1
-7	75860	81381	. BOOSTER, BRAKE, WITH MOTOR (SEE FIG. 3.1)	1
-8	86707	81381	. COVER, MASTER CYLINDER	1
-9	12871519	81381	. NAMEPLATE, USE DOT 5 BRAKE FLUID ONLY (OPTION)	1
-10	2236179	14894	. MASTER CYLINDER, BRAKE (SEE FIG. 3.1)	1 ■
-11	12940565	81381	. ASSEMBLY, CONTROL PANEL	1
-12	4041014	96105	. SHIFTER ASSY., TRANSMISSION, 6 FORWARD, 3 REVERSE	1
			ATTACHING PARTS	
	206612-1	96105	CONNECTOR	1
	54012-1	96105	. . SEAL, CABLE, AMP	1
	66102-2	96105	. . CLIP, TERMINAL, AMP	7
	66258-1	96105	. . CLIP, TERMINAL, AMP	2
			*****	
-13	12900120	81381	. NAMEPLATE, CAUTION, DO NOT SHIFT TRANSMISSION WHILE HANDLING AIRCRAFT	1
-14	12883514	81381	. NAMEPLATE, PUSH AND PULL AIRCRAFT IN LOW GEAR ONLY, F1-R1	1
-15	85175	81381	. LEVER ASSY., PARK BRAKE (SEE FIG. 3.7)	1
-16	85165	81381	. SEAT ASSY.	2
-17	78291	81381	. PEDESTAL FOR SEAT, NON-ADJUSTABLE	1
-18	60608	81381	. NUT, SELF LOCKING, 5/16-18	8
-19	98049	81381	. CONSOLE FOR SHIFTER ASSY.	1
-20	78290	81381	. PEDESTAL FOR SEAT, ADJUSTABLE	1
-21	85176	81381	. KIT, SEAT GUIDE	1
-22	60608	81381	. NUT, SELF LOCKING, 5/16-18	4
-23	73837	81381	. BOLT, 5/16-18 X 1-1/4	4
-24	76640	81381	. WASHER, FLAT, 5/16	4
-25	73812	81381	. BOLT, 5/16-18 X 1	4
-26	76640	81381	. WASHER, FLAT 5/16	4
-27	85342	81381	. COVER, HOSE	1
-28	76101	81381	. PEDAL, ACCELERATOR ASSY. (SEE FIG. 4.5)	1
-29	85967	81381	. PEDAL, BRAKE, (SEE FIG. 3.1)	1
-30	78341	81381	. STEERING VALVE (SEE FIG. 12.2)	1

FIG. & INDEX NO.	PART NO.	MFR. CODE	DESCRIPTION	QTY.
1.2	**12903968**	**81381**	**OPERATOR'S COMPARTMENT (CONT)**	**1**
-31	77790	81381	. STEERING COLUMN (SEE FIG. 12.1)	1
■ -32	12930133	81381	. PLATE, SERIAL NO. AND MODEL NO.	1
-33	12893992	81381	. TILT STEERING WHEEL (OPTION)	1
-34	6046K31	81381	. KNOB	2
-35	12893969	81381	. TILT ASSY.	1

THIS PAGE INTENTIONALLY LEFT BLANK

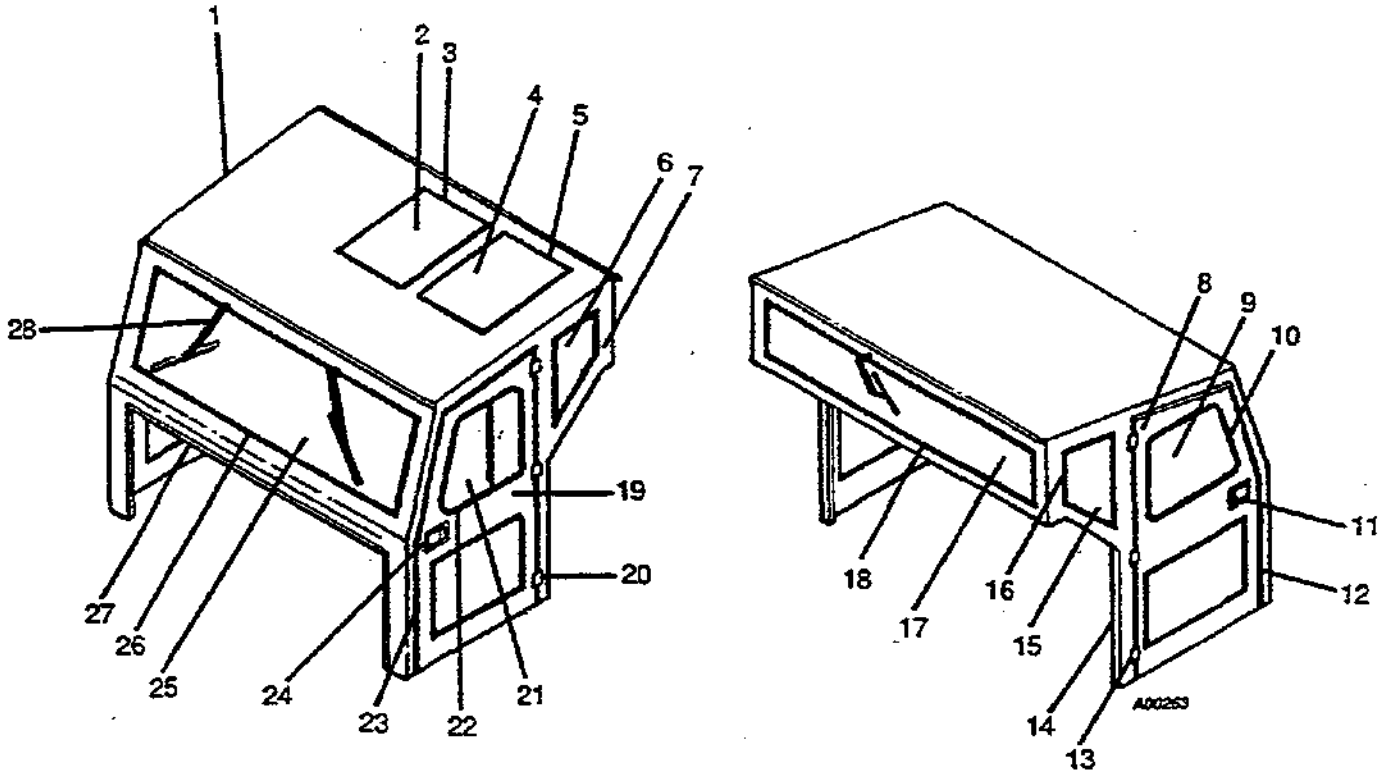

FIGURE 1.3 CAB MODEL 416 (OPTION)

FIG. & INDEX NO.	PART NO.	MFR. CODE	DESCRIPTION	QTY.
1.3			CAB MODEL 416 (OPTION)	
-1	88713	81381	CAB, GT-50DZ TOW TRACTOR, MARTIN MODEL 416	1
-2	416-7001-IB	60810	INBOARD SKYLITE PANEL	1
-3	416-7002-IB	60810	INBOARD SKYLITE MOUNTING KIT	1
-4	416-7001-OB	60810	OUTBOARD SKYLITE PANEL	1
-5	416-7002-OB	60810	OUTBOARD SKYLITE MOUNTING KIT	1
-6	416-801-L	60810	L.H. PORT PANEL GLASS	1
-7	416-802-L	60810	L.H. PORT MOUNTING RUBBER	1
-8	416-5000	60810	R.H. DOOR ASSY., COMPLETE	1
-9	416-A5001	60810	. ALUMINUM FRAMED WINDOW ASSY., R.H. DOOR	1
-10	416-A502	60810	. MOUNTING RUBBER, ALUMINUM FRAMED WINDOW, R.H. DOOR	1
-11	416-5002	60810	. R.H. DOOR LATCH	1
-12	416-504	60810	. R.H. DOOR TRIM AND SEAL KIT	1
-13	416-5003	60810	. R.H. DOOR HINGE KIT, 3 HINGES	1
-14	416-404	60810	REAR TRIM AND SEAL KIT	1
-15	416-801-R	60810	R.H. PORT PANEL GLASS	1
-16	416-802-R	60810	R.H. PORT MOUNTING RUBBER	1
-17	416-401	60810	REAR WINDSHIELD GLASS	1
-18	416-402	60810	MOUNTING RUBBER, REAR WINDSHIELD GLASS	1
-19	416-6000	60810	L.H. DOOR ASSY., COMPLETE	1
-20	416-6003	60810	. L.H. DOOR HINGE KIT, 3 HINGES	1
-21	416-A6001	60810	. ALUMINUM FRAMED WINDOW ASSY., L.H. DOOR	1
-22	416-A602	60810	. MOUNTING RUBBER, ALUMINUM FRAMED WINDOW, L.H. DOOR	1
-23	416-604	60810	. L. H. DOOR TRIM AND SEAL KIT	1
-24	416-6002	60810	. L.H. DOOR LATCH	1
-25	416-301	60810	FRONT WINDSHIELD GLASS	1
-26	416-302	60810	MOUNTING RUBBER, FRONT WINDSHIELD	1
-27	416-304	60810	FRONT WINDSHIELD TRIM AND SEAL KIT	1
-28	NO NUMBER	60810	WINDSHIELD WIPER ASSY., PARTS LISTED BELOW:	
	CABEOO28	60810	. SINGLE SPEED WIPER MOTOR, 12V, WITH A 1 INCH SHAFT	1
	CABE0028-01	60810	. SINGLE SPEED WIPER MOTOR, 12V, WITH A 2 INCH SHAFT	1
	CABE0028-03	60810	. SINGLE SPEED WIPER MOTOR, 12V, WITH A 3 INCH SHAFT	1
	CABE018-04	60810	. TOGGLE SWITCH	1
	CABW0044	60810	. WIPER ARM, ADJUSTABLE	1
	CABWOOO8	60810	. WIPER BLADE, 14 INCH	1

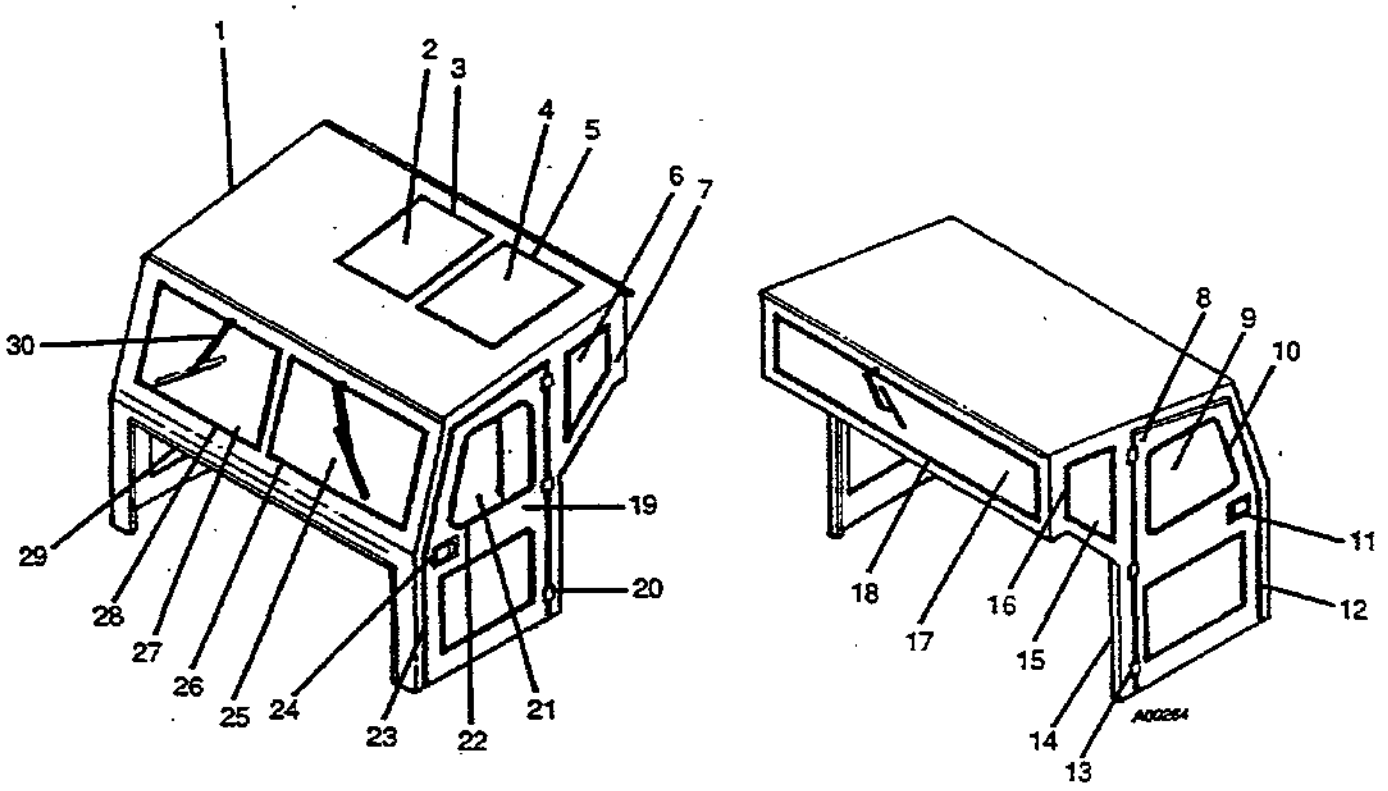

FIGURE 1.4 CAB MODEL 846 (OPTION)

FIG. & INDEX NO.	PART NO.	MFR. CODE	DESCRIPTION	QTY.
1.4			**CAB MODEL 846 (OPTION)**	
-1	12893246	81381	CAB, GT-50DZ TOW TRACTOR, MARTIN MODEL 846	1
-2	846-7001-IB	60810	INBOARD SKYLITE PANEL	1
-3	846-7002-IB	60810	INBOARD SKYLITE MOUNTING KIT	1
-4	846-7001-OB	60810	OUTBOARD SKYLITE PANEL	1
-5	846-7002-OB	60810	OUTBOARD SKYLITE MOUNTING KIT	1
-6	846-801-L	60810	L.H. PORT PANEL GLASS	1
-7	846-802-L	60810	L.H. PORT MOUNTING RUBBER	1
-8	846-5000	60810	R.H. DOOR ASSY., COMPLETE	1
-9	846-A5001	60810	. ALUMINUM FRAMED WINDOW ASSY. R.H. DOOR	1
-10	846-A502	60810	. MOUNTING RUBBER, ALUMINUM FRAMED WINDOW, R.H. DOOR	1
-11	846-5002	60810	. R.H. DOOR LATCH	1
-12	846-504	60810	. R.H. DOOR TRIM AND SEAL KIT	1
-13	846-5003	60810	. R.H. DOOR HINGE KIT, 3 HINGES	1
-14	846-404	60810	REAR TRIM AND SEAL KIT	1
-15	846-801-R	60810	R.H. PORT PANEL GLASS	1
-16	846-802-R	60810	R.H. PORT MOUNTING RUBBER	1
-17	846-401	60810	REAR WINDSHIELD GLASS	1
-18	846-402	60810	MOUNTING RUBBER, REAR WINDSHIELD GLASS	1
-19	846-6000	60810	L.H. DOOR ASSY., COMPLETE	1
-20	846-6003	60810	. L.H. DOOR HINGE KIT, 3 HINGES	1
-21	846-A6001	60810	. ALUMINUM FRAMED WINDOW ASSY., L.H. DOOR	1
-22	846-A602	60810	. MOUNTING RUBBER, ALUMINUM FRAMED WINDOW, L.H. DOOR	1
-23	846-604	60810	. L. H. DOOR TRIM AND SEAL KIT	1
-24	846-6002	60810	. L.H. DOOR LATCH	1
-25	846-301-L	60810	L.H. FRONT WINDSHIELD GLASS	1
-26	846-302-L	60810	MOUNTING RUBBER, L.H. FRONT WINDSHIELD	1
-27	846-301-R	60810	R.H. FRONT WINDSHIELD GLASS	1
-28	846-302-R	60810	MOUNTING RUBBER, R.H. FRONT WINDSHIELD	1
-29	846-304	60810	FRONT WINDSHIELD TRIM AND SEAL KIT	1
-30	NO NUMBER	60810	WINDSHIELD WIPER ASSY., PARTS LISTED BELOW:	
	CABEOO28	60810	. SINGLE SPEED WIPER MOTOR, 12V, WITH A 1 INCH SHAFT	1
	CABE0028-01	60810	. SINGLE SPEED WIPER MOTOR, 12V, WITH A 2 INCH SHAFT	1
	CABE0028-03	60810	. SINGLE SPEED WIPER MOTOR, 12V, WITH A 3 INCH SHAFT	1
	CABE018-04	60810	. TOGGLE SWITCH	1
	CABW0044	60810	. WIPER ARM, ADJUSTABLE	1
	CABWOOO8	60810	. WIPER BLADE, 14 INCH	1

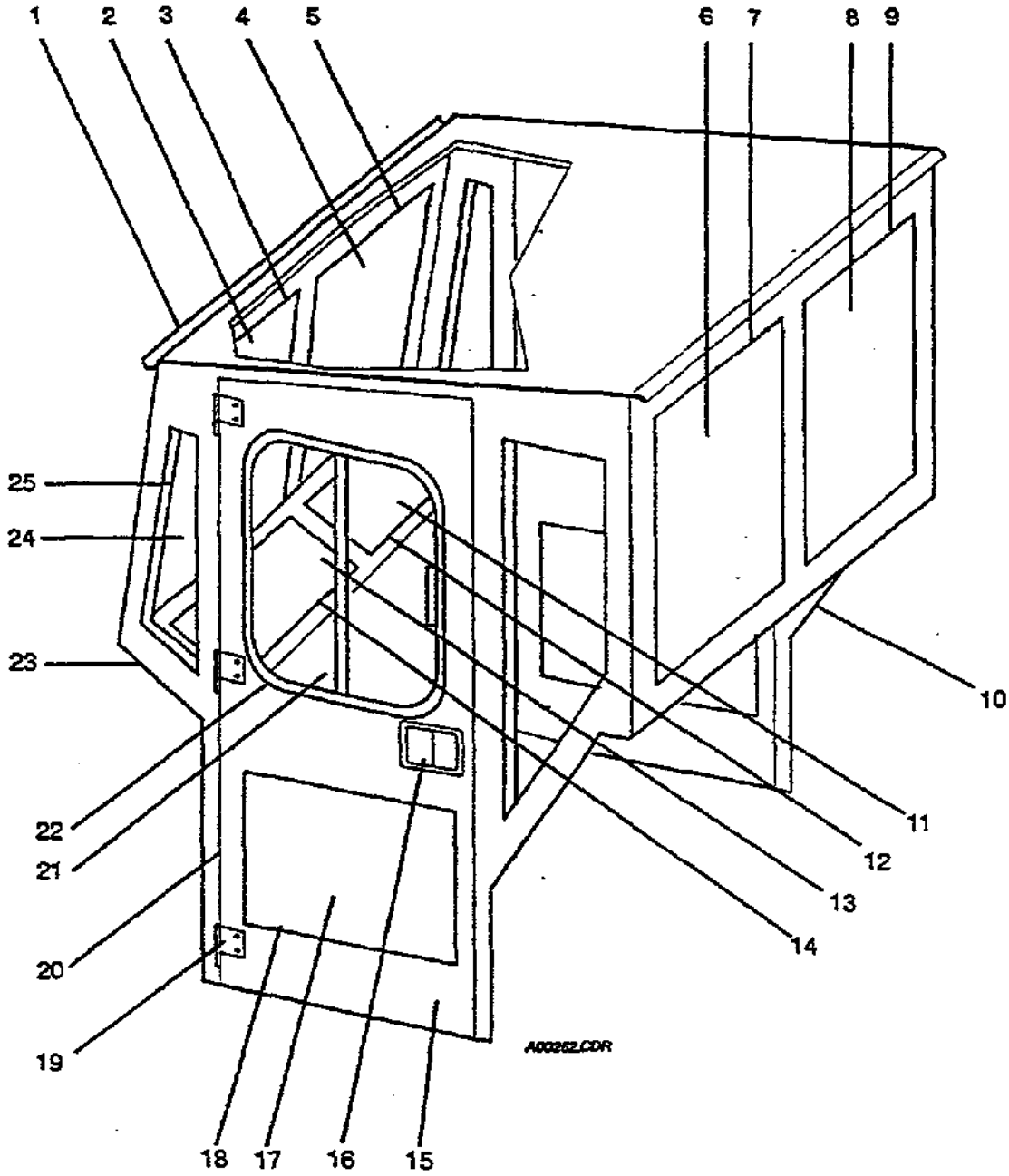

FIGURE 1.5 CAB MODEL 812 (OPTION)

FIG. & INDEX NO.	PART NO.	MFR. CODE	DESCRIPTION	QTY.
1.5			CAB MODEL 812 (OPTION)	
-1	12881355	81381	CAB, RAISED, GT-50DZ TOW TRACTOR	1
-2	812-301-UL	60810	UPPER L.H. FRONT WINDSHIELD GLASS	1
-3	812-302-UL	60810	UPPER L.H. FRONT WINDSHIELD MOUNTING RUBBER	1
-4	812-301-UR	60810	UPPER R.H. FRONT WINDSHIELD GLASS	1
-5	812-302-UR	60810	UPPER R.H. FRONT WINDSHIELD MOUNTING RUBBER	1
-6	812-401	60810	L.H. REAR WINDSHIELD GLASS	1
-7	812-402	60810	L.H. REAR WINDSHIELD GLASS MOUNTING RUBBER	1
-8	812-401	60810	R.H. REAR WINDSHIELD GLASS	1
-9	812-402	60810	R.H. REAR WINDSHIELD MOUNTING RUBBER	1
-10	812-404	60810	REAR TRIM AND SEAL KIT	1
-11	812-301-LR	60810	LOWER R.H. FRONT WINDSHIELD GLASS	1
-12	812-302-LR	60810	LOWER R.H FRONT WINDSHIELD MOUNTING RUBBER	1
-13	812-301-LL	60810	LOWER L.H. FRONT WINDSHIELD GLASS	1
-14	812-302-LL	60810	LOWER L.H. FRONT WINDSHIELD MOUNTING RUBBER	1
-15	812-6000	60810	L.H. DOOR ASSY., COMPLETE, INCLUDES ITEMS 16 THRU 22	1
	812-5000	60810	R.H. DOOR ASSY., COMPLETE, INCLUDES ITEMS 16 THRU 22	1
-16	812-6002	60810	. L.H. DOOR LATCH	1
	812-5002	60810	. R.H. DOOR LATCH	1
-17	812-600-L	60810	. L.H. LOWER WINDOW GLASS	1
	812-500-L	60810	. R.H. LOWER WINDOW GLASS	1
-18	812-602-L	60810	. L.H. LOWER DOOR WINDOW MOUNTING RUBBER	1
	812-502-L	60810	. R.H. LOWER DOOR WINDOW MOUNTING RUBBER	1
-19	812-6003	60810	. L.H. DOOR HINGE KIT, 3 HINGES	1
	812-5003	60810	. R.H. DOOR HINGE KIT, 3 HINGES	1
-20	812-604	60810	. L.H. DOOR TRIM AND SEAL KIT	1
	812-504	60810	. R.H. DOOR TRIM AND SEAL KIT	1
-21	812-A6001	60810	. L.H. DOOR ALUMINUM FRAMED WINDOW ASSY.	1
	812-A5001	60810	. R.H. DOOR ALUMINUM FRAMED WINDOW ASSY.	1
-22	812-A602	60810	. L.H. DOOR ALUMINUM FRAMED WINDOW MOUNTING RUBBER	1
	812-A502	60810	. R.H. DOOR ALUMINUM FRAMED WINDOW MOUNTING RUBBER	1
-23	812-304	60810	FRONT TRIM AND SEAL KIT	1
	812-804-L	60810	L.H. PORT TRIM AND SEAL KIT	1
	812-804-R	60810	R.H. PORT TRIM AND SEAL KIT	1
-24	812-801-L	60810	L.H. PORT PANEL GLASS	1
	812-801-R	60810	R.H. PORT PANEL GLASS	1
-25	812-802-L	60810	L.H. PORT MOUNTING RUBBER	1
	812-802-R	60810	R.H. PORT MOUNTING RUBBER	1

GROUP 2

DRIVE LINE

FIG. & INDEX NO.	PART NO.	MFR. CODE	DESCRIPTION	QTY.
2.1	**12940527**	**81381**	**ENGINE AND TRANSMISSION ASSEMBLY**	**1**
-1	12940138	62445	ENGINE, DIESEL, DEUTZ MODEL BF6M1013	1 ■
-2	117-4423	62445	ELEMENT, FUEL FILTER (NOT SHOWN)	1
-3	4003483	62445	ELEMENT, TRANSMISSION FILTER (NOT SHOWN)	1
-4	12940322	81381	TRANSMISSION, FUNK 2000 SERIES (SEE CHAPTER 6, TAB B FOR PARTS BREAKDOWN)	1 ■
-5	117-4421	62445	ELEMENT, ENGINE LUBE OIL FILTER	1

NOTE

Refer to Chapter 6, Tab A, Deutz Parts Manual for parts breakdown of engine.

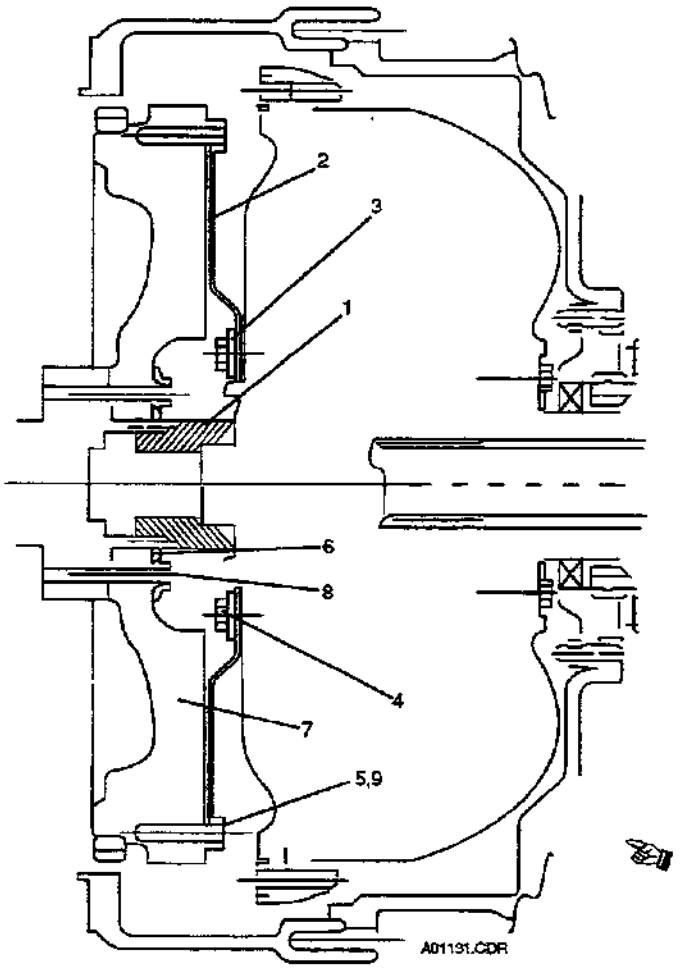

FIGURE 2.2 ENGINE AND TRANSMISSION CONNECTION

FIG. & INDEX NO.	PART NO.	MFR. CODE	DESCRIPTION	QTY.
2.2			ENGINE AND TRANSMISSION CONNECTION	
-1	YZ4102612	96105	SLEEVE, PILOT	1
-2	YZ101551	96015	DRIVE PLATE, FLEX	1
-3	4046750	96105	RING	1
-4	F1003012	96105	CAPSCREW	12
-5	12941154	81381	BOLT, HEX HEAD, 3/8-16NC X 1-1/4 LONG, GRADE	8
-6	2165148	62445	FLANGE, BEARING	REF
-7	224-8915	62445	FLYWHEEL ASSEMBLY	REF
-8	420-4181	62445	BOLT, FLYWHEEL	10
-9	99625	81381	WASHER, LOCK, 3/8, SPRING	8

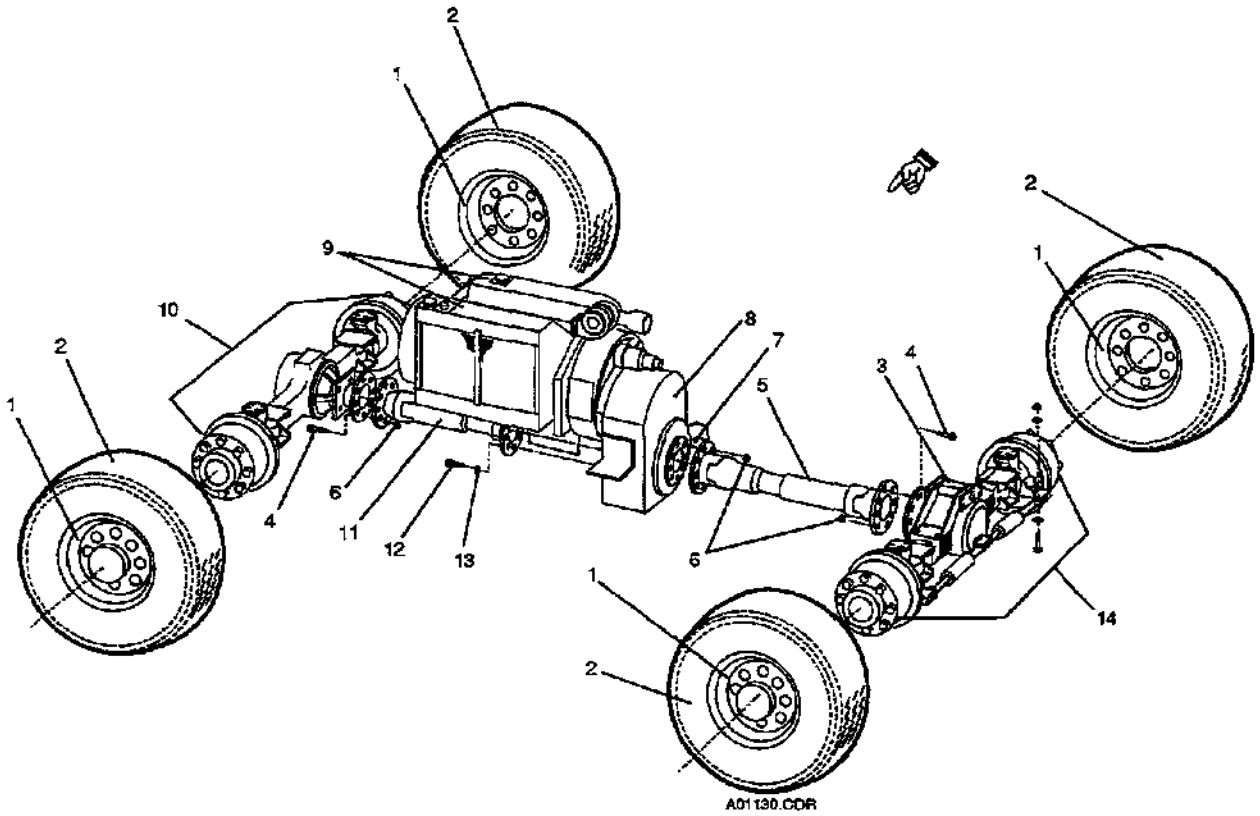

FIGURE 2.3 DRIVE LINE ASSEMBLY

FIG. & INDEX NO.	PART NO.	MFR. CODE	DESCRIPTION	QTY.
2.3			DRIVE LINE ASSEMBLY	
-1	12902835	81381	WHEEL ASSY., GT-50DZ TOW TRACTOR	4
	12902834	81381	. WHEEL, BASE	1
	3819	81381	. FLANGE	1
	3884	81381	. RING, SEAT	1
	3861	81381	. RING, LOCK	1
-2	12890597	81381	TIRE, MICHELIN, RADIAL, LOW PROFILE, METRIC SIZE, 365/80R20PXZA160, TUBE TYPE	4
-3	83931	81381	BOLSTER, FRONT AXLE	1
-4	12882602	81381	BOLT, 3/8-24 X 1-1/2, GRADE 8	16
-5	85214	81381	DRIVESHAFT, FRONT	1
	5-279X	81381	UNIVERSAL JOINT, SPACER	2
-6	12901015	81381	NUT, HEX, 3/8-24, FLEXLOCK	24
-7	86546	81381	BOLT, 3/8-24 X 2-1/4, GRADE 8	8
-8	12940322	81381	. TRANSMISSION, FUNK MODEL 2000 SERIES	1
-9	12940138	81381	. ENGINE, DIESEL, DEUTZ MODEL BF6M1013	1
-10	*12893103	81381	AXLE, RIGID (REAR), SOMA 5MRA8290FH, SEE FIG. 9.2 FOR BREAKDOWN OF AXLE ASSY.	1
-11	85213	81381	DRIVESHAFT, REAR	1
	5-279X	81381	UNIVERSAL JOINT, SPACER	2
-12	86611	81381	BOLT, 3/8-24 X 1/1/4, GRADE 8	8
-13	73790	81381	LOCKWASHER, 3/8	8
-14	12893102	81381	AXLE, STEERABLE (FRONT), SOMA 5MRDIA8353FH SEE FIG. 9.1 FOR BREAK DOWN OF AXLE ASSY.	1

*FOR FOUR WHEEL STEER OPTION ITEM 10 IS REPLACED BY ITEM 14

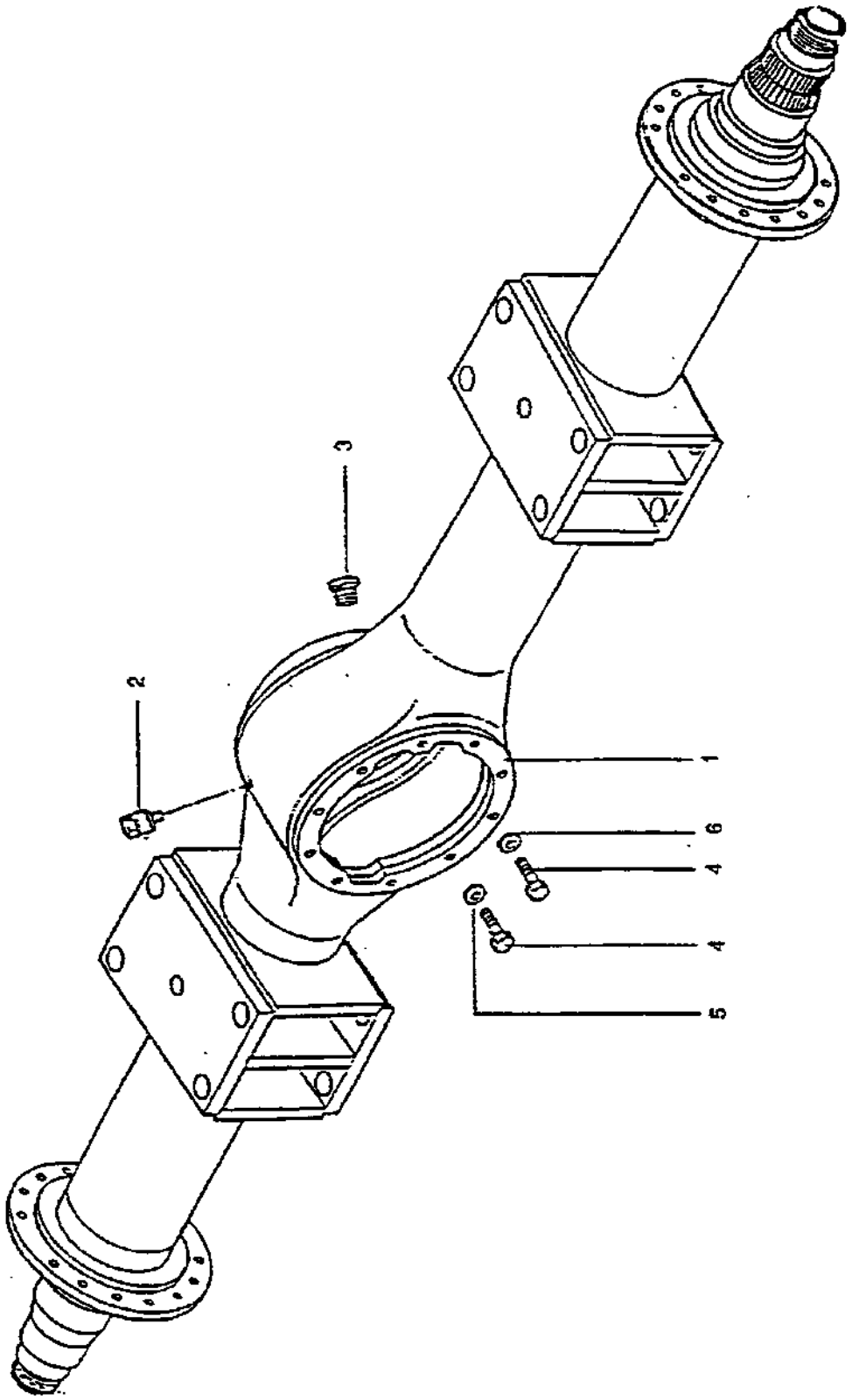

FIGURE 2.4 STEERABLE AXLE HOUSING

FIG. & INDEX NO.	PART NO.	MFR. CODE	DESCRIPTION	QTY.
2.4			STEERABLE AXLE HOUSING	
-1	A87029503	79780	AXLE HOUSING ASSEMBLY, 5MRDIA8353FH	1
-2	E75503173	79780	. BREATHER	1
-3	E75503039	79780	. PLUG	2
-4	E75000612	79780	. FASTENING SET	1
-5	E75502834	79780	. STUD	3
-6	E75500381	79780	. TAPER RING	3

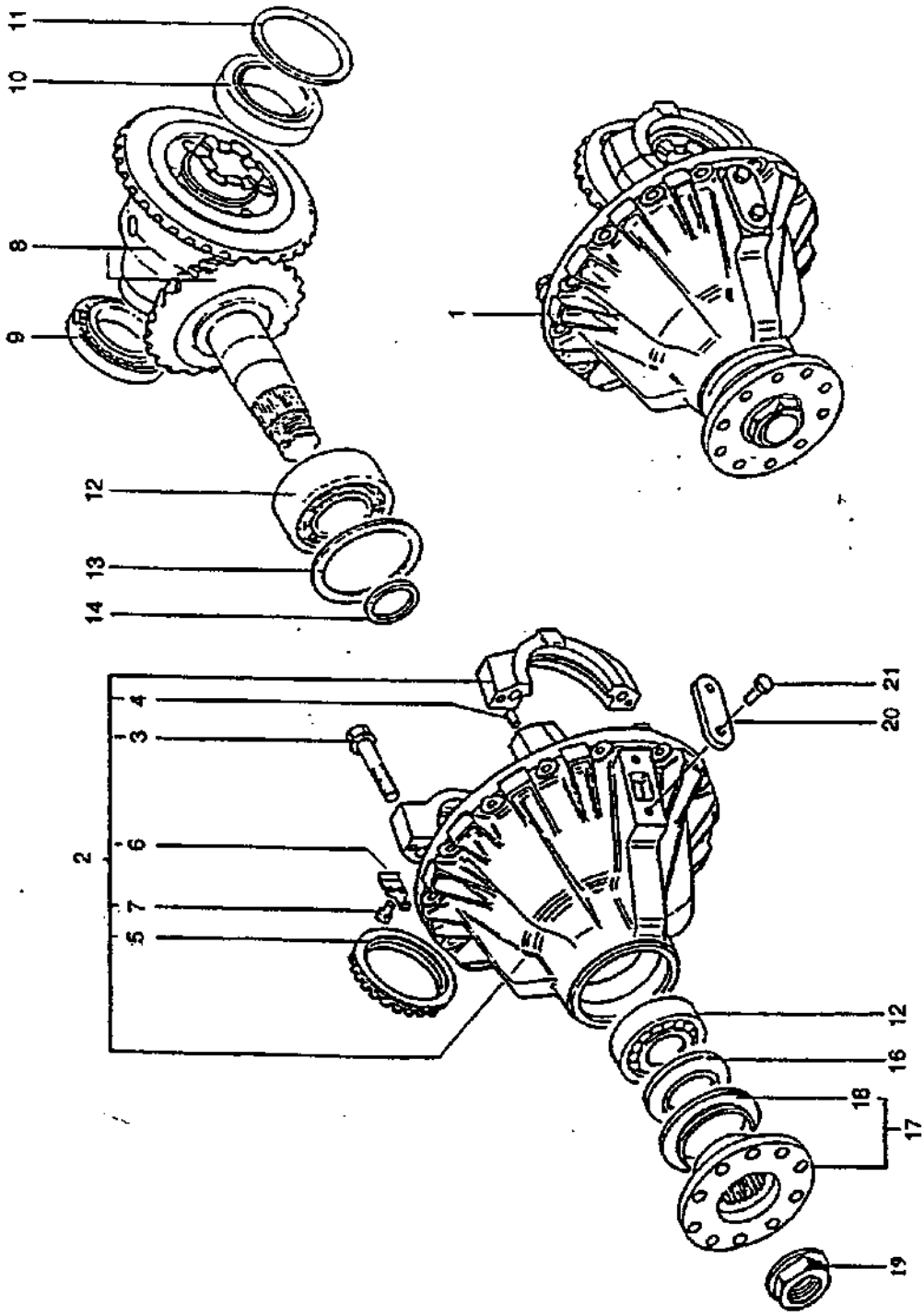

FIGURE 2.5 STEERABLE AXLE DIFFERENTIAL

FIG. & INDEX NO.	PART NO.	MFR. CODE	DESCRIPTION	QTY.
2.5			STEERABLE AXLE DIFFERENTIAL	
-1	A86004123	79870	DIFFERENTIAL CARRIER ASSY., 5MRDIA8353FH	1
-2	A88100010	79780	. HOUSING AND COVER ASSY.	1
-3	E75502646	79780	. SCREW	4
-4	E75600337	79780	. . PIN, LOCATING	4
-5	E88100014	79780	. . NUT, ADJUSTING	1
-6	E88100015	79780	. . NUT, LOCK PLATE	1
-7	E75500427	79780	. . SCREW	1
-8	A88110068	79780	. DIFFERENTIAL AND BEVEL GEAR SET, 8 X 35 LH	1
-9	A75650088	79780	. BEARING, TAPER	1
-10	A75650169	79780	. BEARING, TAPER	1
-11	A86010008	79780	. SHIM KIT, ADJUSTING	1
-12	A88130017	79780	. KIT, TAPER BEARING	1
-13	A86010009	79780	. SHIM KIT, ADJUSTING	1
-14	A86010012	79780	. SHIM KIT, ADJUSTING	1
-15	NOT USED			
-16	E75503484	79780	. SEAL, OIL	1
-17	A88140076	79780	. FLANGE ASSY.	1
-18	E88140025	79780	. . DUST, COVER	1
-19	E88140038	79780	. NUT, ADJUSTING	1
-20	E88100008	79780	. COVER	1
-21	E75502062	79780	. SCREW	2

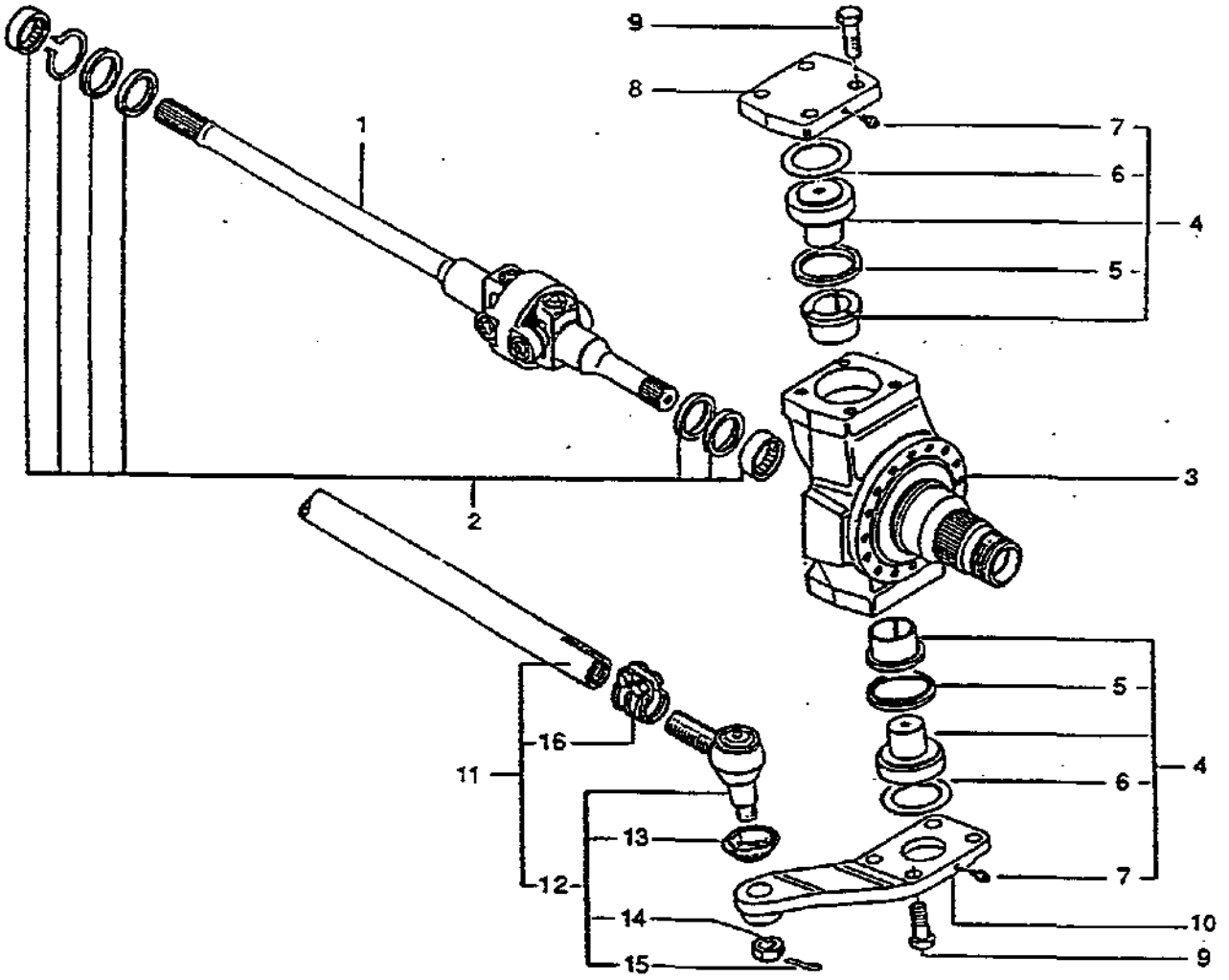

FIGURE 2.6 STEERABLE AXLE STEERING PARTS

FIG. & INDEX NO.	PART NO.	MFR. CODE	DESCRIPTION	QTY.
2.6			**STEERABLE AXLE STEERING PARTS**	
	MRDIA-8353FH	79780	STEERING PARTS	1
-1	E74015005	79780	. CONSTANT VELOCITY ASSY.	1
-2	A88510243	79780	. SEALING KIT	1
-3	A88500290	79780	. PIVOT AND SPINDLE ASSY.	1
-4	A88510244	79780	. LINK KIT	2
-5	E75503486	79780	. OIL SEAL	2
-6	A86020076	79780	. ADJUSTING SHIM KIT	2
-7	E75501903	79780	. OILER	2
-8	E88510208	79780	. COVER	1
-9	E75502752	79780	. SCREW	8
-10	A88550164	79780	. STEERING SWIVEL ARM	1
-11	E75701059	79780	. TRACK LOAD	1
-12	E75700593	79780	. ADJUSTING SOCKET, R	1
	E75700594	79780	. ADJUSTING SOCKET, L	1
-13	E75700688	79780	. . DUST COVER	1
-14	E75700689	79780	. . NUT	1
-15	E75502994	79780	. . DOWEL	1
-16	A75700690	79780	. ADJUSTING SLEEVE CLAMP	1

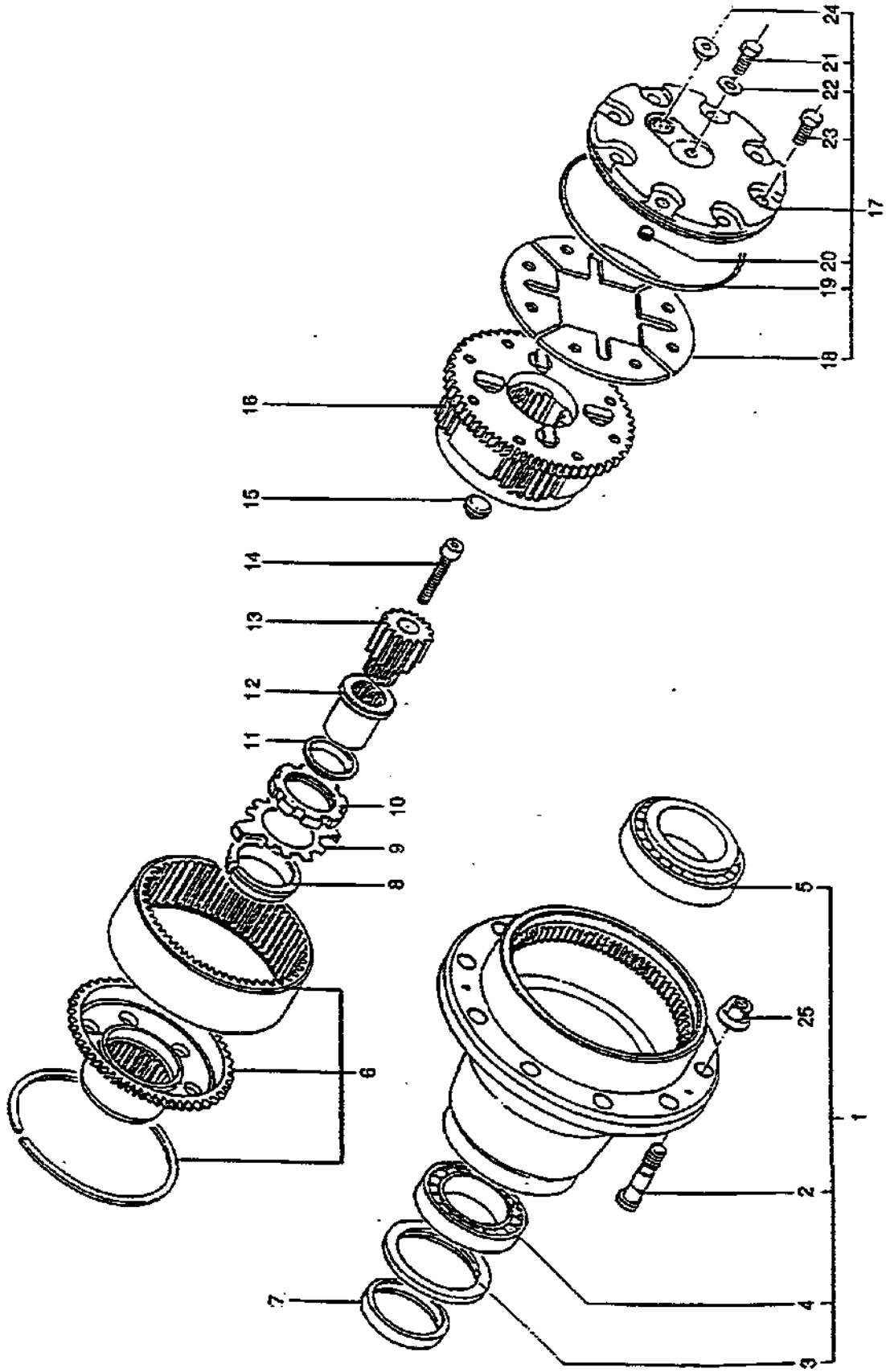

FIGURE 2.7 STEERABLE AXLE PLANETARY HUB REDUCERS

FIG. & INDEX NO.	PART NO.	MFR. CODE	DESCRIPTION	QTY.
2.7			**STEERABLE AXLE PLANETARY HUB REDUCERS**	
	5MRDIA8353FH	79780	. PLANETARY HUB REDUCERS	1
-1	A88401317	79780	. WHEEL HUB ASSY.	1
-2	E50000187	79780	. . WHEEL STUD	10
-3	G75503596	79780	. . OIL SEAL	1
-4	A75650151	79780	. . TAPER BEARING	1
-5	A75650594	79780	. . TAPER BEARING	1
-6	A88412020	79780	. RING GEAR CARRIER ASSY.	1
-7	E88350180	79780	. SEAL RACE	1
-8	E79001048	79780	. TAPER RING	1
-9	E88350017	79780	. LOCKING WASHER	1
-10	E88350016	79780	. SPINDLE NUT	1
-11	E88350189	79780	. SPINDLE RING	1
-12	E88350006	79780	. MUFF	1
-13	E88350142	79780	. SUNGEAR	1
-14	E75503408	79780	. SCREW	1
-15	E86030100	79780	. SET OF END THRUST	1
-16	A88423304	79780	. PLANET GEAR CARRIER ASSY.	1
-17	A88434041	79780	. COVER ASSY.	1
-18	A88350092	79780	. . SECTOR	4
-19	E75503017	79780	. . O-RING	1
-20	E88350086	79780	. . THRUST RETAINING WASHER	1
-21	E75503178	79780	. . SCREW	1
-22	E75500703	79780	. . DRAIN PLUG SEAL	1
-23	E75501386	79780	. . SCREW	8
-24	E75503039	79780	. PLUG	1
-25	E75230509	79780	. WHEEL NUT	10
	E75501988	79780	. WASHER	10

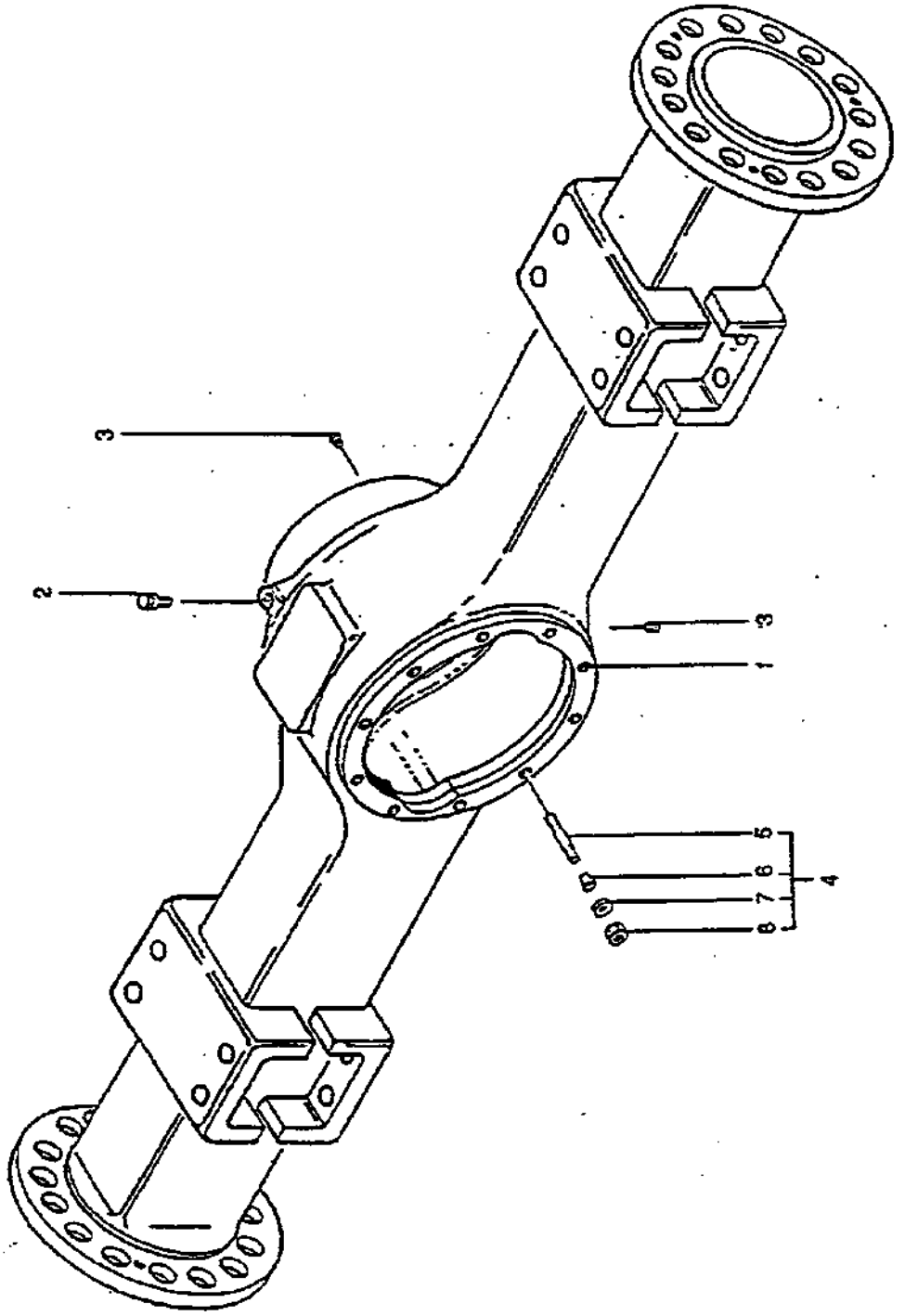

FIGURE 2.8 RIGID AXLE HOUSING

FIG. & INDEX NO.	PART NO.	MFR. CODE	DESCRIPTION	QTY.
2.8			**RIGID AXLE HOUSING**	
-1	A87027007	79780	. AXLE HOUSING ASSY., 5MRA8290FH	1
-2	E75503173	79780	. BREATHER	1
-3	E75503039	79780	. PLUG	2
-4	A75000598	79780	. FASTENING SET	1
-5	E75502834	79780	. . STUD	14
-6	E75500381	79780	. . TAPER RING	3
-7	E75501304	79780	. . WASHER	14
-8	E75502830	79780	. . NUT	

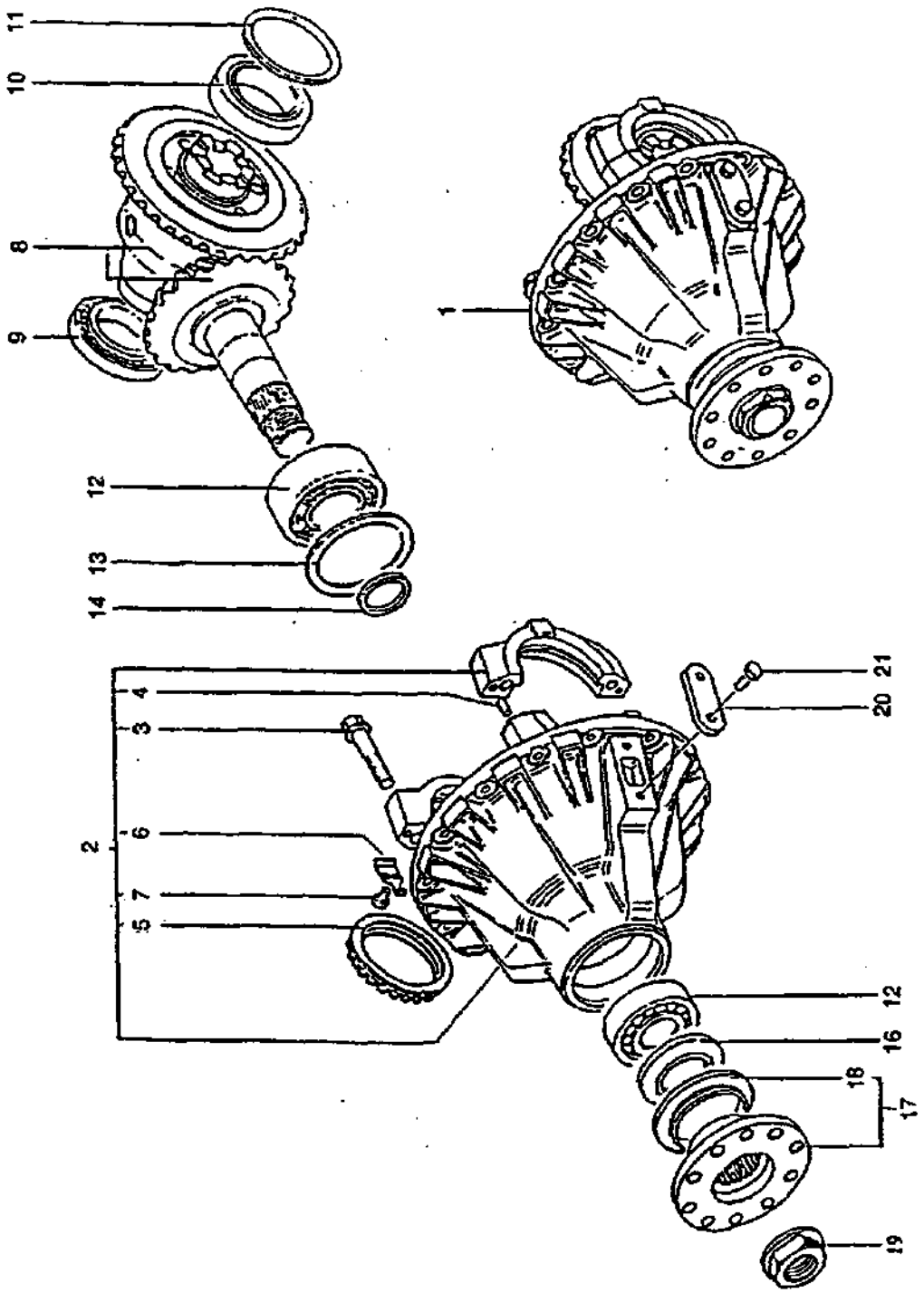

FIGURE 2.9 RIGID AXLE DIFFERENTIAL

FIG. & INDEX NO.	PART NO.	MFR. CODE	DESCRIPTION	QTY.
2.9			RIGID AXLE DIFFERENTIAL	
-1	A86004123	79870	DIFFERENTIAL CARRIER ASSY., 5MRA8290FH	1
-2	A88100010	79780	. HOUSING AND COVER ASSY.	1
-3	E75502646	79780	. . SCREW	4
-4	E75600337	79780	. . PIN, LOCATING	4
-5	E88100014	79780	. . NUT, ADJUSTING	1
-6	E88100015	79780	. . NUT, LOCK PLATE	1
-7	E75500427	79780	. . SCREW	1
-8	A88110068	79780	. DIFFERENTIAL AND BEVEL GEAR SET, 8 X 35 LH	1
-9	A75650088	79780	. BEARING, TAPER	1
-10	A75650169	79780	. BEARING, TAPER	1
-11	A86010008	79780	. SHIM KIT, ADJUSTING	1
-12	A88130017	79780	. KIT, TAPER BEARING	1
-13	A86010009	79780	. SHIM KIT, ADJUSTING	1
-14	A86010012	79780	. SHIM KIT, ADJUSTING	1
-15	NOT USED			
-16	E75503484	79780	. SEAL, OIL	1
-17	A88140076	79780	. FLANGE ASSY.	1
-18	E88140025	79780	. . DUST, COVER	1
-19	E88140038	79780	. NUT, ADJUSTING	1
-20	E88100008	79780	. COVER	1
-21	E75502062	79780	. SCREW	2

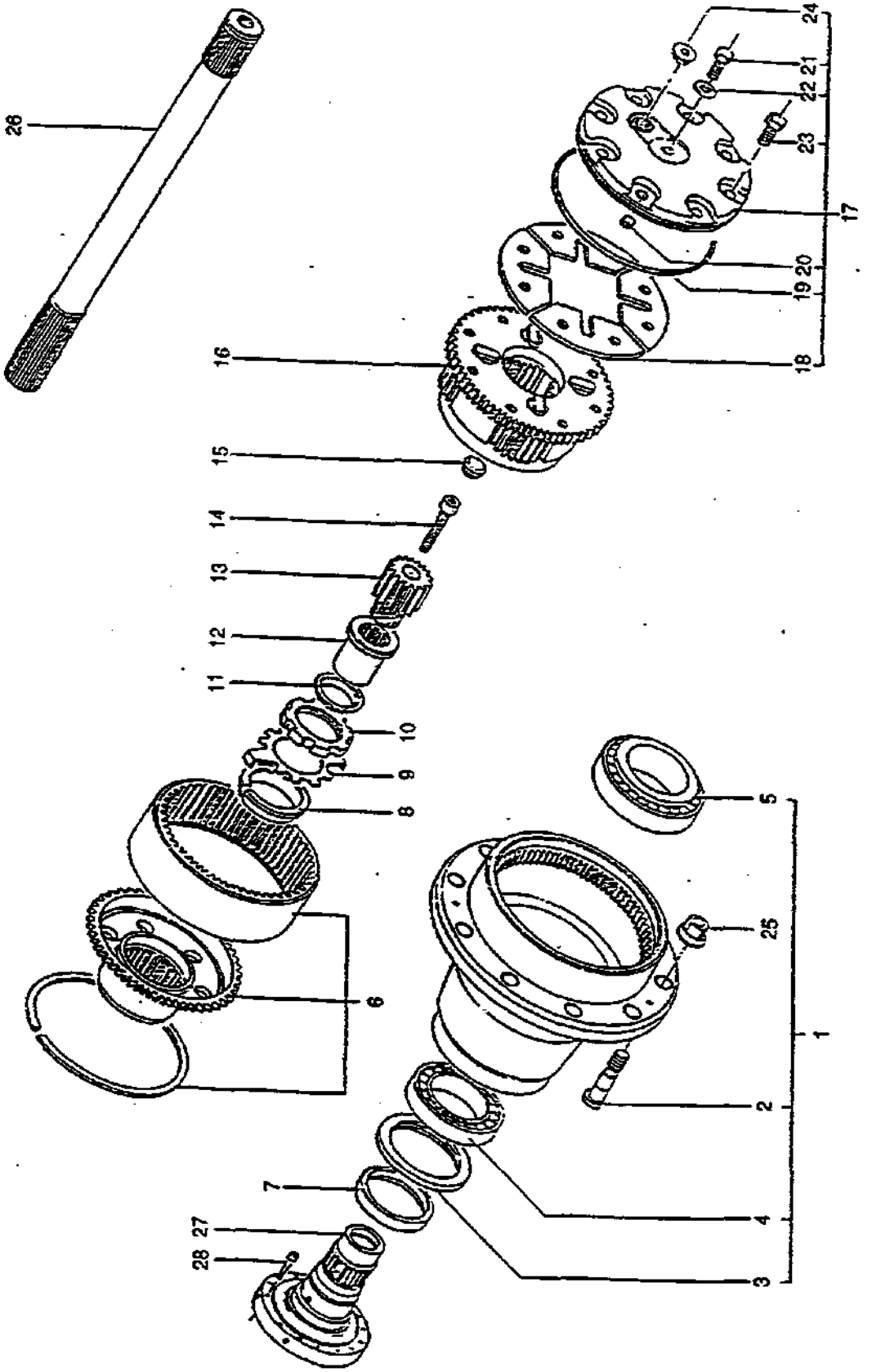

FIGURE 2.10 RIGID AXLE PLANETARY HUB REDUCERS

FIG. & INDEX NO.	PART NO.	MFR. CODE	DESCRIPTION	QTY.
2.10			RIGID AXLE PLANETARY HUB REDUCERS	
	5MRA8290FH	79780	. PLANETARY HUB REDUCERS	1
-1	A88401317	79780	. WHEEL HUB ASSY.	1
-2	E50000187	79780	. . WHEEL STUD	10
-3	G75503596	79780	. . OIL SEAL	1
-4	A75650151	79780	. . TAPER BEARING	1
-5	A75650594	79780	. . TAPER BEARING	1
-6	A88412020	79780	. RING GEAR CARRIER ASSY.	1
-7	E88350180	79780	. SEAL RACE	1
-8	E79001048	79780	. TAPER RING	1
-9	E88350017	79780	. LOCKING WASHER	1
-10	E88350016	79780	. SPINDLE NUT	1
-11	E75101174	79780	. SPINDLE RING	1
-12	E88350006	79780	. MUFF	1
-13	E88350142	79780	. SUNGEAR	1
-14	E75503408	79780	. SCREW	1
-15	E86030100	79780	. SET OF END THRUST	1
-16	A88423304	79780	. PLANET GEAR CARRIER ASSY.	1
-17	A88434041	79780	. COVER ASSY.	1
-18	A88350092	79780	. . SECTOR	4
-19	E75503017	79780	. . O-RING	1
-20	E88350086	79780	. . THRUST RETAINING WASHER	1
-21	E75503178	79780	. . SCREW	1
-22	E75500703	79780	. . DRAIN PLUG SEAL	1
-23	E75501386	79780	. . SCREW	8
-24	E75503039	79780	. PLUG	1
-25	E75230509	79780	. WHEEL NUT	10
-26	E88700556	79780	. AXLE SHAFT	1
-27	E88504017	79780	. SPINDLE	1
-28	E75502016	79780	. SCREW	3

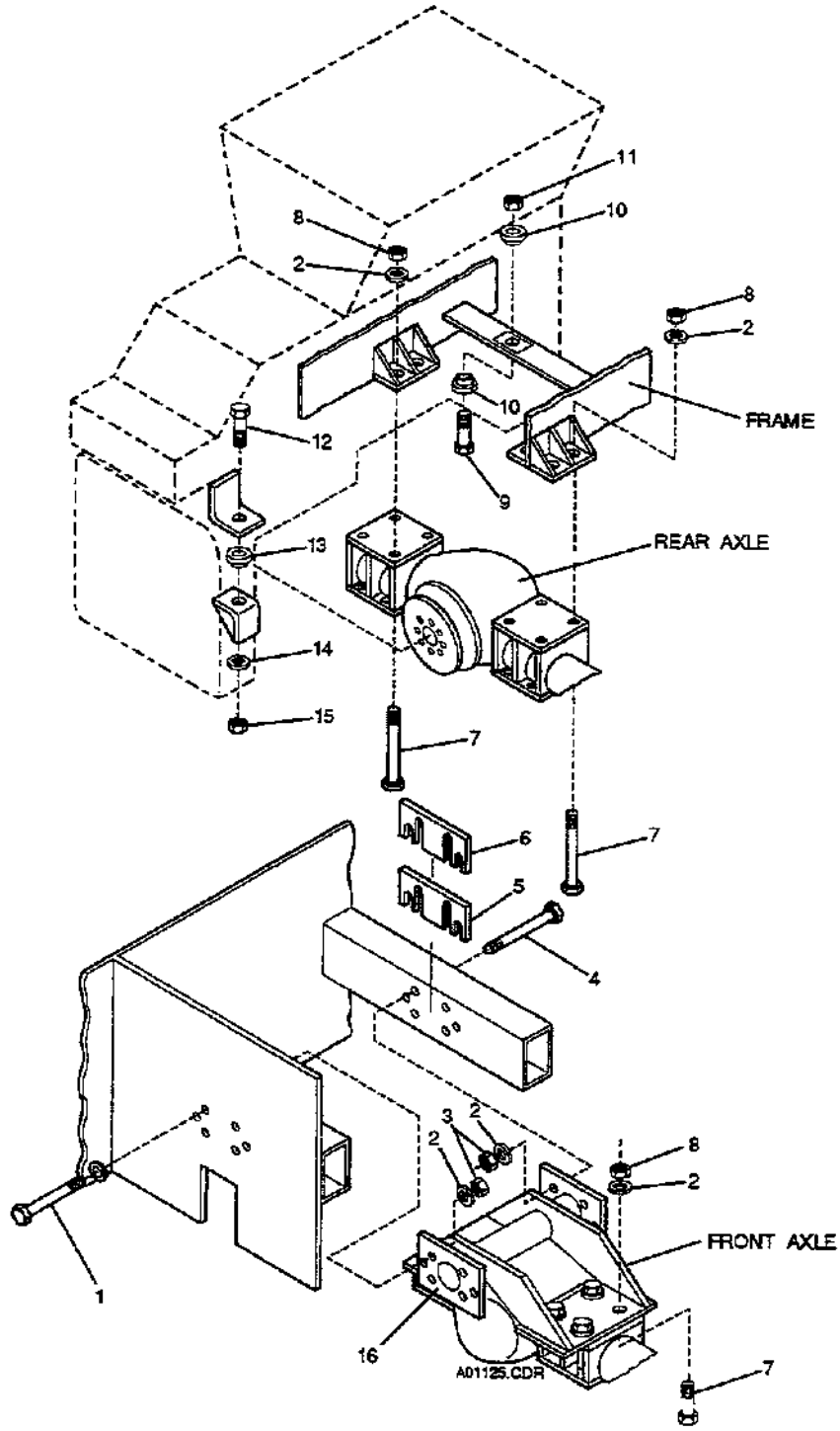

FIGURE 2.11 AXLE MOUNTING

FIG. & INDEX NO.	PART NO.	MFR. CODE	DESCRIPTION	QTY.
2.11			**AXLE MOUNTING**	
-1	85338	81381	. Bolt, 1 In. -8 NC x 9-1/2 In., Grade 5	6
-2	73796	81381	. Lockwasher, 1 In.	28
-3	74030	81381	. Nut, 1 In. -8 NC Grade 5	12
-4	78343	81381	. Bolt, 1 In. -8 NC x 8-1/2 In., Grade 5	6
-5	77160	81381	. Shim, Bolster ADJ (18 GA.)	6
-6	77141	81381	. Shim, Bolster ADJ (16 GA.)	6
-7	84233	81381	. Bolt, 1 In. -8 NC x 11 In., Grade 8	16
-8	75801	81381	. Nut, 1 In. -8 NC, Grade 8	16
-9	A8002-187	81381	. Bolt, 3/4 NF x 3-1/2" LG, Grade 5	1
-10	SSB33-1000-4	81381	. Mount, SSB Series, 2 Piece	1
-11	73777	81381	. Nut, 3/4-16 NF, Hex, Lock, Grade 5	1
-12	78340	81381	. Bolt, 5/8 In. -11 NC x 3-3/4 In. Grade 5	2
-13	74674	81381	. Isolator, Vibration	2
-14	R187333	81381	. Washer, 5/8 In. ID x 2-1/4 In. OD x 3/16 In.	2
-15	73775	81381	. Nut, 5/8 In. -11 NC, Hex Lock Grade 5	2
-16	84199	81381	. Socket Assy., Shaft, Bolster	2

GROUP 3
BRAKE SYSTEM COMPONENTS

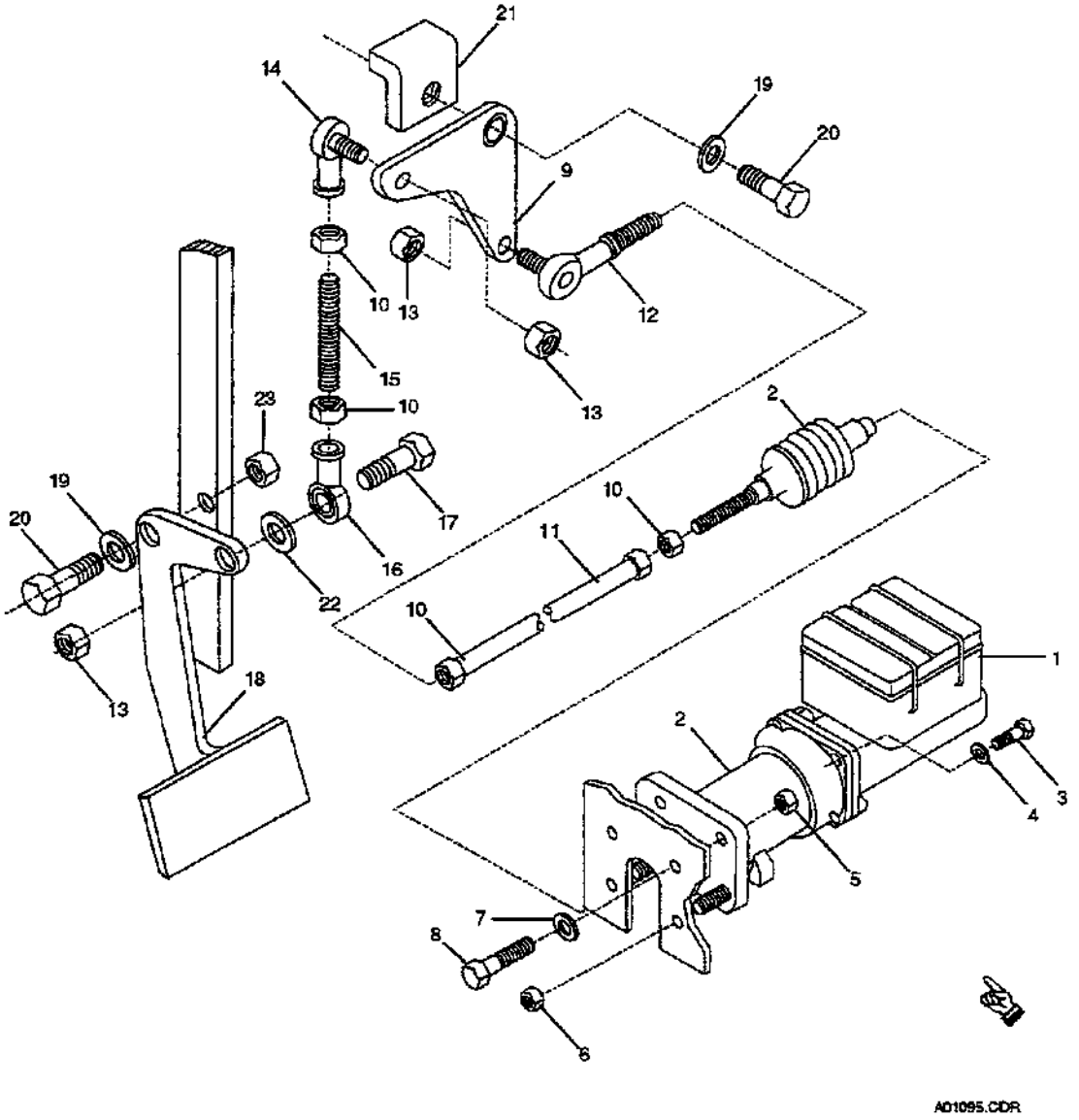

FIGURE 3.1 BRAKE LINKAGE AND MASTER CYLINDER/HYDRAULIC BOOSTER

FIG. & INDEX NO.	PART NO.	MFR. CODE	DESCRIPTION	QTY.
3.1			**BRAKE LINKAGE AND MASTER CYLINDER/HYDRAULIC BOOSTER**	
-1		14894	. MASTER CYLINDER, BRAKE, 1.75 INCH X 2.25 INCH	1
	22387	14894	. KIT, REPAIR, MASTER CYLINDER	1
-2	75860	81381	. BOOSTER, BRAKE WITH MOTOR (DELCO MORAINE) (B2)	1
-3	73815	81381	. BOLT, 3/8-16 X 3/4	4
-4	73790	81381	. WASHER, LOCK, 3/8 INCH	4
-5	12901015	81381	. NUT, 3/8-24, HEX, FLEXLOCK	4
-6	NOT USED			
-7	71068	81381	. WASHER, FLAT 3/8	4
-8	86611	81381	. BOLT, 3/8-24 X 1-1/4	2
-9	84159	81381	. CRANK, BRAKE PEDAL	1
-10	75835	81381	. NUT, 1/2-20, HEX	4
-11	85504	81381	. ROD, BRAKE	1
-12	78830	81381	. ROD END, BALL JOINT, MALE, W/STUD 1/2-20	1
-13	12881366	81381	. NUT, 1/2-20, HEX, FLEXLOCK	3
-14	78286	81381	. ROD END, BALL JOINT, FEMALE, W/STUD, 1/2-20	1
-15	76109	81381	. ROD, THREADED, 1/2-20	1
-16	TR-8	81381	. ROD END, FEMALE	1
-17	80952	81381	. BOLT, 1/2-20 X 1-1/2	1
-18	85967	81381	. BRAKE PEDAL	1
-19	81451	81381	. WASHER, BRONZE THRUST	2
-20	85062	81381	. BOLT, SHOULDER, 5/8-11 X 3/4	2
-21	12881300-30	81381	. BRACKET, PART OF CHASSIS	1
-22	12921714	81381	. WASHER, FLAT, 1/2	1
-23	73775	81381	. NUT, 5/8-11, HEX, FLEXLOCK	1

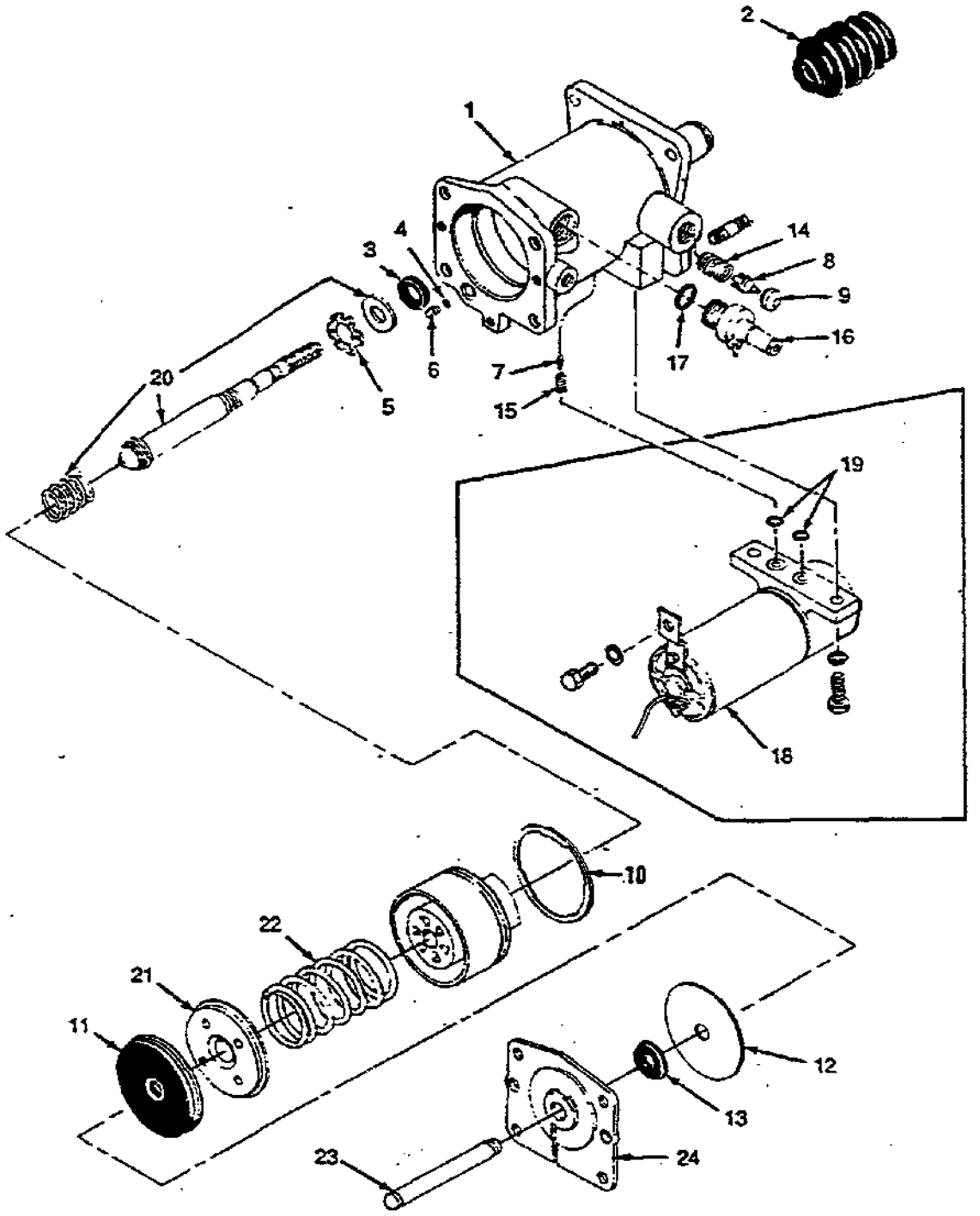

FIGURE 3.2 BRAKE HYDRAULIC BOOSTER ASSEMBLY

FIG. & INDEX NO.	PART NO.	MFR. CODE	DESCRIPTION	QTY.
3.2			**BRAKE HYDRAULIC BOOSTER ASSEMBLY**	
	75860	81381	HYDRAULIC BOOSTER ASSY., POWER BRAKE	1
-1	18006994	76562	. POWER HEAD ASSY.	1
	18004797	76462	. KIT, POWER HEAD	1
-2	18000641	76462	. BOOT	1
-3	18004548	76462	. SEAL, DOUBLE LIP	1
-4	5472239	76462	. O-RING	1
-5	5471970	76462	. BUMPER, CONTROL VALVE	1
-6	5472238	76462	. PLUG, SEAL RETAINER	1
-7	18001602	76462	. VALVE, RELIEF	1
-8	2620427	76462	. VALVE, CHECK	1
-9	5472234	76462	. INSERT, TUBE FITTING, 1/2 INCH	1
-10	2623020	76462	. SEAL, POWER PISTON	1
-11	5473593	76462	. SEAL, CYLINDER	1
-12	2620428	76462	. PLATE, SEAL SUPPORT	1
-13	2620430	76462	. SEAL, PISTON ROD	1
	1800415A	76462	. KIT, POWER HEAD SPRINGS	1
-14	2620426	76462	. SPRING, CHECK VALVE	1
-15	18001601	76462	. SPRING, RELIEF VALVE	1
	89458	81381	. KIT, FLOW SWITCH	1
-16	18002912	76462	. SWITCH, FLOW	1
-17	547386	76462	. O-RING	1
-18	18006974	76462	. PUMP ASSY., 12VDC, EMERGENCY, (BACK UP TO BOOSTER)	1
	18007368	76462	. PUMP	1
-19	18002229	76462	. O-RING	2
-20	18002858	76462	. CONTROL VALVE ASSY.	1
-21	2620429	76462	. EXPANDER, SEAL	1
-22	2623111	76462	. SPRING, PISTON RETURN	1
-23	18002774	76462	. ROD, PISTON	1
-24	5473592	76462	. CAP, POWER HEAD	1

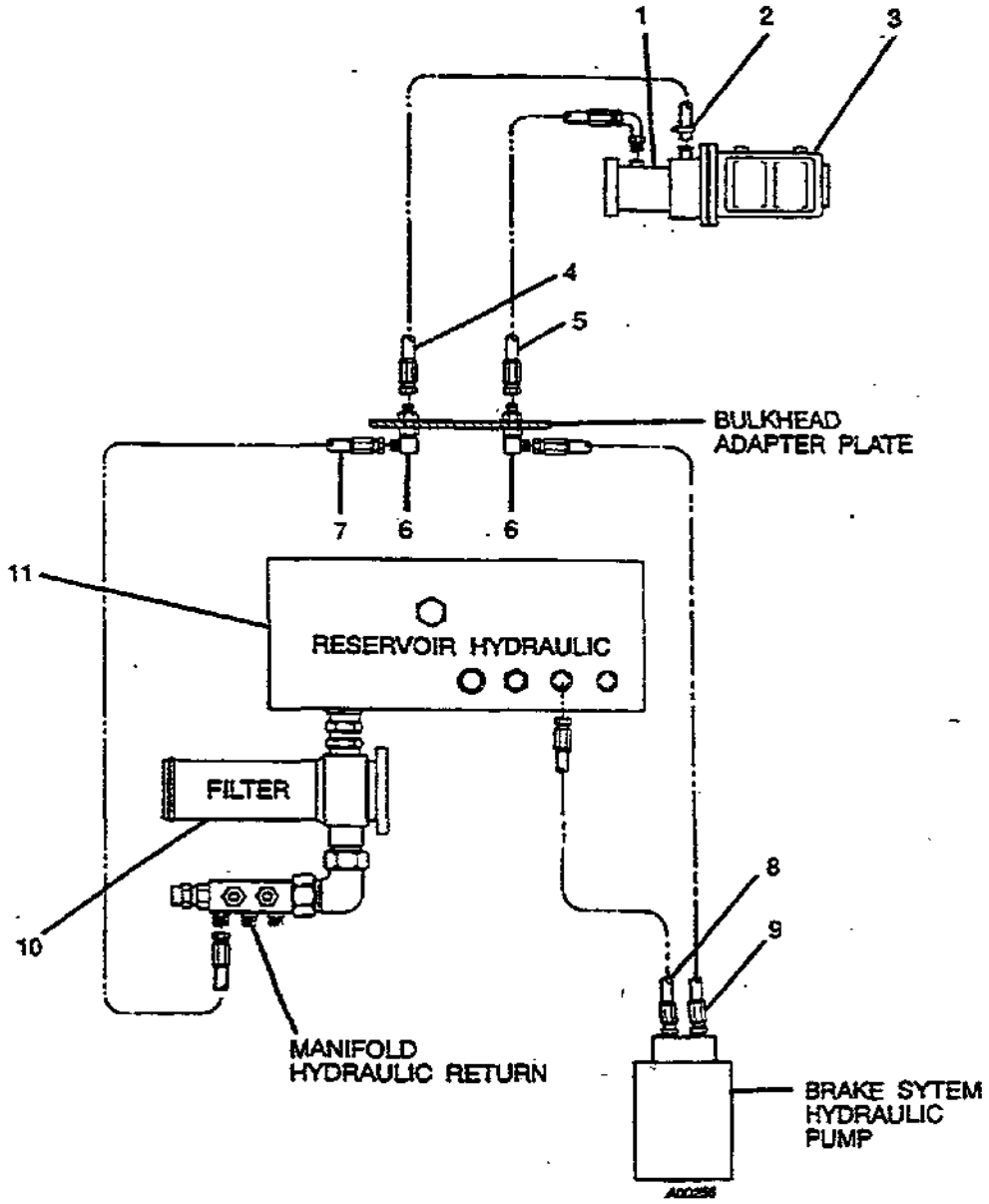

FIGURE 3.3 BRAKE SYSTEM HYDRAULIC BOOSTER CIRCUIT

FIG. & INDEX NO.	PART NO.	MFR. CODE	DESCRIPTION	QTY.
3.3			**BRAKE SYSTEM HYDRAULIC B00STER CIRCUIT**	
-1	75860	81381	BOOSTER, BRAKE WITH MOTOR, DELCO MORAINE (SEE FIG. 3.2)	1
-2	78305	81381	CLAMP, HOSE	1
-3	2236179	81381	MASTER CYLINDER, BRAKE (SEE FIG 3.1)	1
-4	90324	81381	HOSE ASSY., BOOSTER TO BULKHEAD	1
-5	90325	81381	HOSE ASSY., BULKHEAD TO BOOSTER	1
-6	85761	81381	ADAPTER, BULKHEAD 90°	2
-7	85745	81381	HOSE ASSY., BULKHEAD TO MANIFOLD	1
-8	85747	81381	HOSE ASSY., TANK TO PUMP	1
-9	12904104	81381	HOSE ASSY., PUMP TO BULKHEAD	1
-10	85164	81381	FILTER ASSY., (SEE FIG. 12.3)	1
-11	84541	81381	RESERVOIR, HYDRAULIC (SEE FIG. 12.5)	1

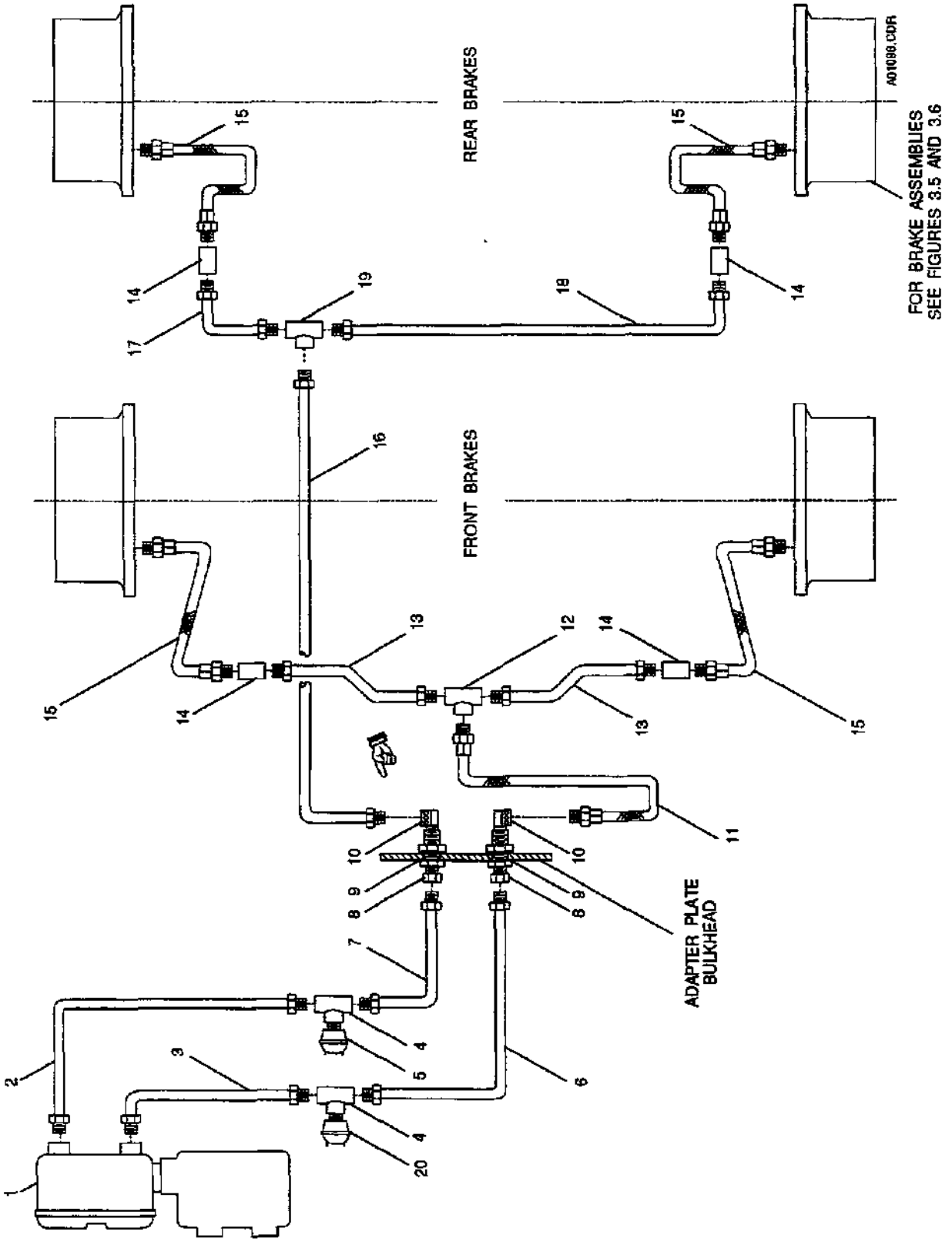

FIGURE 3.4 HYDRAULIC BRAKE SYSTEM

FIG. & INDEX NO.	PART NO.	MFR. CODE	DESCRIPTION	QTY.
3.4			**HYDRAULIC BRAKE SYSTEM**	
-1	2233700	14894	MASTER CYLINDER, 1.75 INCH X 2.25 INCH (SEE FIG. 3.1)	1 ■
-2	85822	81381	TUBE ASSY., MASTER CYLINDER, REAR	1
-3	85823	81381	TUBE ASSY., MASTER CYLINDER, FRONT	1
-4	78228	81381	TEE, ADAPTER	2
-5	78237	81381	SWITCH, PRESSURE, BRAKE LIGHT (S10)	1
-6	12890713	81381	TUBE ASSY., OPERATOR COMPARTMENT (FRONT)	1
-7	12890714	81381	TUBE ASSY., OPERATOR COMPARTMENT (REAR)	1
-8	202X4	79470	CONNECTOR, ADAPTER, MALE, 1/4 TUBE O.D., INVERTED FLARE TO 1/8 MALE PIPE THREAD	2
-9	207ACBH2	93061	ANCHOR CONNECTOR, 1/8 PIPE THREAD, 5/8-18 STRAIGHT THREAD	2
-10	402X4	79470	CONNECTOR, ELBOW, 90 DEGREES, INVERTED FLARE	2
-11	85875	81381	HOSE ASSY., BOLSTER	1
-12	75826	81381	TEE, UNION, BOLT MOUNT	1
-13	85818	81381	TUBE ASSY., BOLSTER	2
-14	75827	81381	CONNECTOR, 1/4 INCH TUBE	4
-15	94663	81381	HOSE ASSY., BRAKE WHEEL CYLINDER	4 ■
-16	85386	81381	TUBE ASSY., REAR BRAKES	1
-17	85840	81381	TUBE ASSY., RIGHT REAR BRAKE	1
-18	12890715	81381	TUBE ASSY., LEFT REAR BRAKE	1
-19	85889	81381	TEE, UNION	1
-20	78237	81381	SWITCH, PRESSURE, BOOST PUMP ON (S17)	1

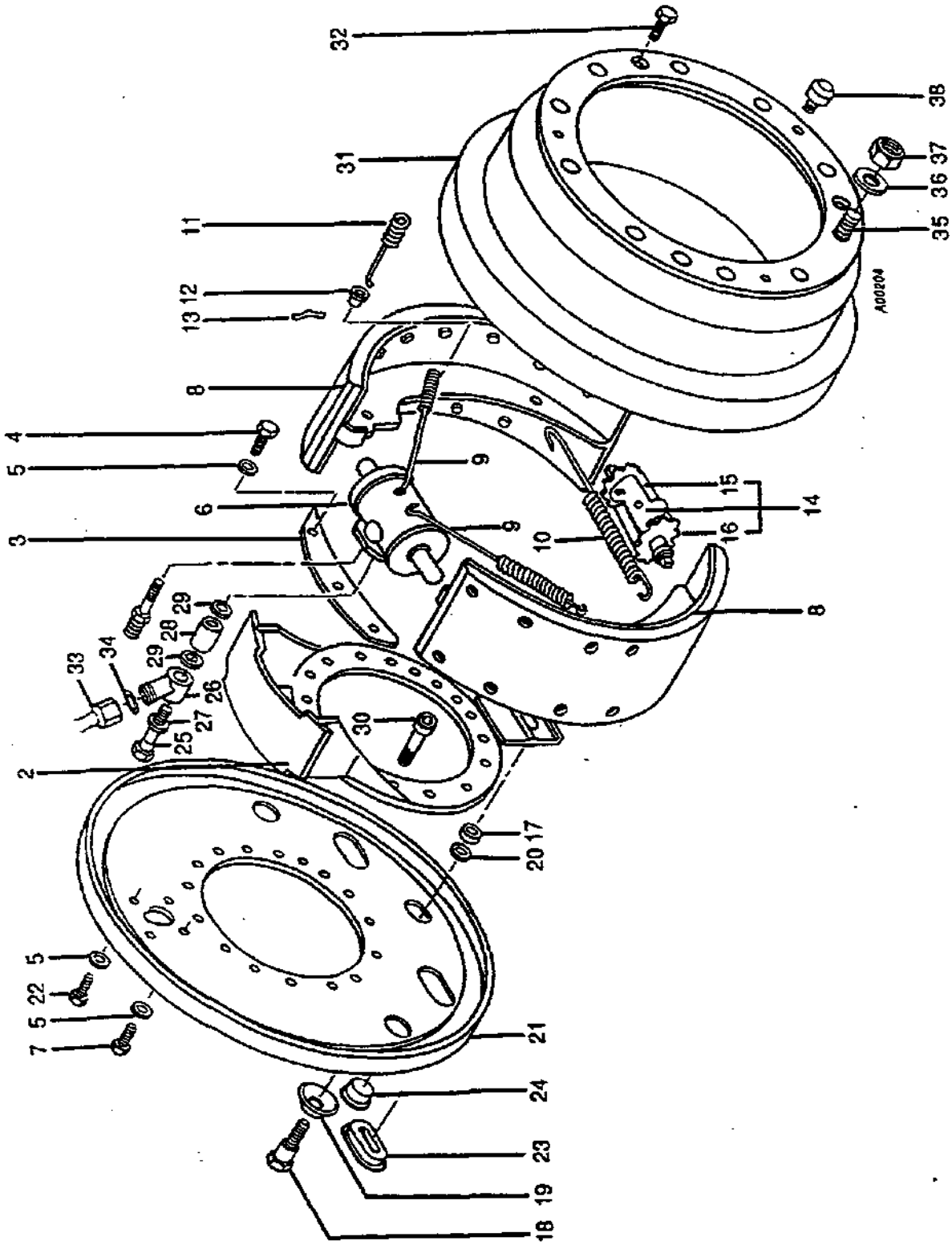

FIGURE 3.5 FRONT BRAKE ASSEMBLY

FIG. & INDEX NO.	PART NO.	MFR. CODE	DESCRIPTION	QTY.
3.5			FRONT BRAKE ASSEMBLY	
-1	E75701050	79780	BRAKE ASSY., COMPLETE, 400 X 120	1
-2	E75750346	79780	. SPIDER, BRAKE	1
-3	E75750159	79780	. PLATE, STRAP	1
-4	E75750042	79780	. SCREW	2
-5	E75700741	79780	. WASHER	10
-6	E75750348	79780	. WHEEL CYLINDER	1
-7	E75502112	79780	. SCREW	2
-8	E75750347	79780	. BRAKE SHOE ASSEMBLY	2
-9	E75750051	79780	. SPRING,SHOE RETURN	2
-10	E75750345	79780	. SPRING, SHOE RETURN, BOTTOM	1
-11	E75750073	79780	. SPRING, PRESSURE, (RETAINING)	2
-12	E75750055	79780	. PLATE, LOCK	2
-13	E75700625	79780	. RING	2
-14	E75750163	79780	. ADJUSTMENT DEVICE	1
-15	E75750162	79780	. SPRING	2
-16	E75750071	79780	. SCREW	2
-17	E75750057	79780	. WASHER	1
-18	E75750060	79780	. SCREW	1
-19	E75750059	79780	. SEAL	1
-20	E75750058	79780	. WASHER	1
-21	E75750209	79780	. DUST SHIELD	1
-22	E75750042	79780	. SCREW	6
-23	E75750063	79780	. PLUG	2
-24	E75750027	79780	. PLUG	4
-25	E75750090	79780	. SCREW (BLEEDER VALVE)	1
-26	E75700596	79780	. CONNECTION	1
-27	E75750095	79780	. SEALING RING	1
-28	E75750249	79780	. SPACER	1
-29	E75750096	79780	. SEALING RING	2
-30	E75503069	79780	. SCREW	15
-31	E72012017	79780	. DRUM, 400 X 120, (WITHOUT PIN, ITEM 38)	1
	12903406	81381	. DRUM ASSY., 400 X 120, (WITH PIN, ITEM 38)	1
-32	E75500639	70780	. SCREW	3
-33	E88900122	79780	. CONNECTION	1
-34	E75503488	79780	. WASHER	1
-35	E50000187	79780	. STUD	10
-36	E75501988	79780	. WASHER, FLAT	10
-37	E75230509	79780	. NUT, HEX, WHEEL LUG	10
-38	12903405	81381	. PIN, LOCATING, SAFETY, USED WITH P/N 12903406 DRUM ASSY., ITEM 31	1

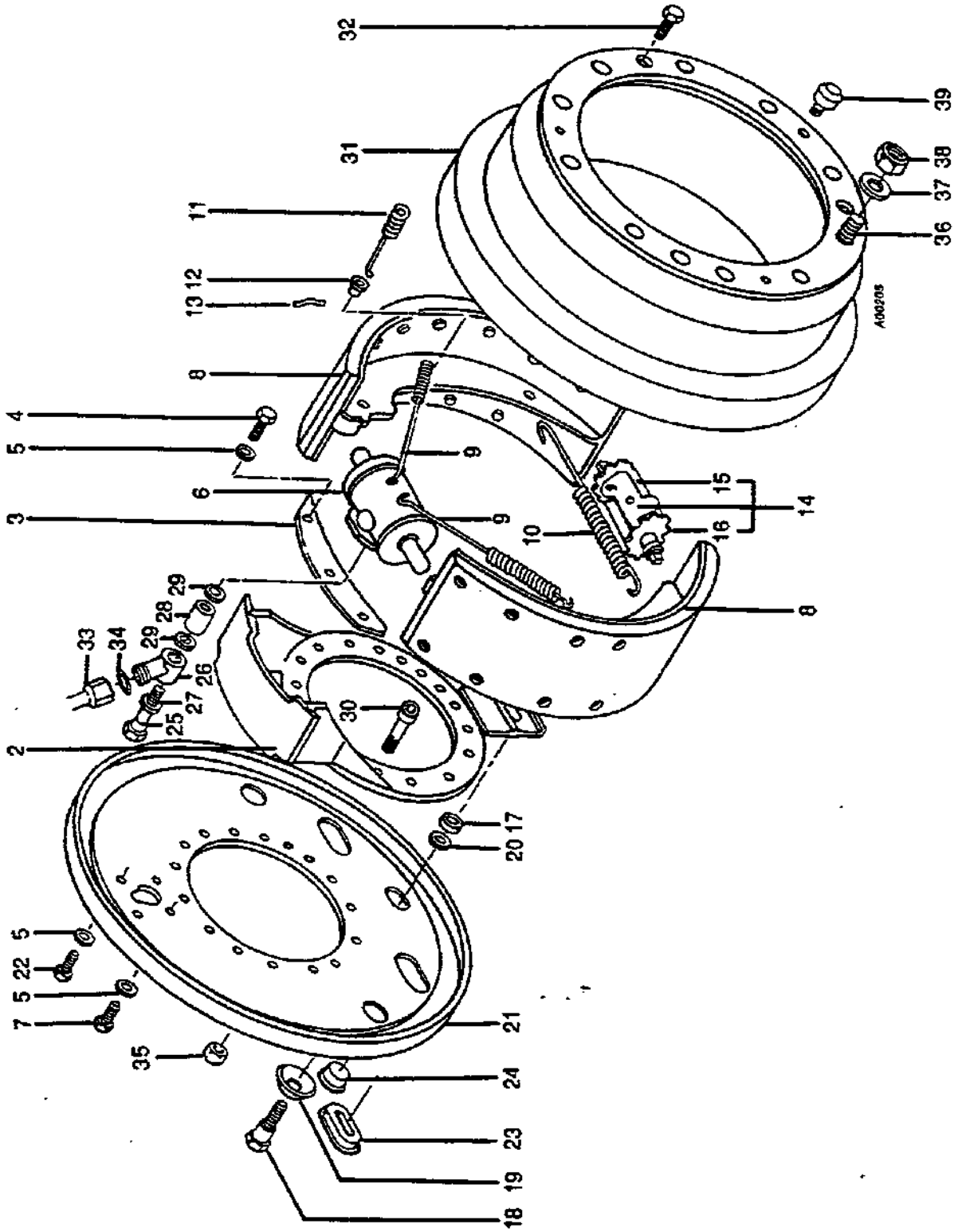

FIGURE 3.6 REAR BRAKE ASSEMBLY

FIG. & INDEX NO.	PART NO.	MFR. CODE	DESCRIPTION	QTY.
3.6			REAR BRAKE ASSEMBLY	
-1	E75701050	79780	BRAKE ASSY., COMPLETE, 400 X 120	1
-2	E75750346	79780	. SPIDER, BRAKE	1
-3	E75750159	79780	. PLATE, STRAP	1
-4	E75750042	79780	. SCREW,	2
-5	E75700741	79780	. WASHER	10
-6	E75750348	79780	. WHEEL CYLINDER	1
-7	E75502112	79780	. SCREW	2
-8	E75750347	79780	. BRAKE SHOE ASSEMBLY	2
-9	E75750051	79780	. SPRING,SHOE RETURN	2
-10	E75750345	79780	. SPRING, SHOE RETURN, BOTTOM	1
-11	E75750073	79780	. SPRING, PRESSURE, (RETAINING)	2
-12	E75750055	79780	. PLATE, LOCK	2
-13	E75700625	79780	. RING	2
-14	E75750163	79780	. ADJUSTMENT DEVICE	1
-15	E75750162	79780	. SPRING	2
-16	E75750071	79780	. SCREW	2
-17	E75750057	79780	. WASHER	1
-18	E75750060	79780	. SCREW	1
-19	E75750059	79780	. SEAL	1
-20	E75750058	79780	. WASHER	1
-21	E75750209	79780	. DUST SHIELD	1
-22	E75750042	79780	. SCREW	6
-23	E75750063	79780	. PLUG	2
-24	E75750027	79780	. PLUG	4
-25	E75750090	79780	. SCREW (BLEEDER VALVE)	1
-26	E75700596	79780	. CONNECTION	1
-27	E75750095	79780	. SEALING RING	1
-28	E75750249	79780	. SPACER	1
-29	E75750096	79780	. SEALING RING	2
-30	E75502124	79780	. SCREW	15
-31	E72012017	79780	. DRUM, 400 X 120, (WITHOUT PIN, ITEM 39)	1
	12903406	81381	. DRUM ASSY., 400 X 120, (WITH PIN, ITEM 39)	1
-32	E75500639	70780	. SCREW	3
-33	E88900122	79780	. CONNECTION	1
-34	E75503488	79780	. WASHER	1
-35	E75503336	79780	. NUT	15
-36	E50000187	79780	. STUD	10
-37	E75501988	79780	. WASHER, FLAT	10
-38	E75230509	79780	. NUT, HEX, WHEEL LUG	10
-39	12903405	81381	. PIN, LOCATING, SAFETY, USED WITH P/N 12903406 DRUM ASSY., ITEM 31	1

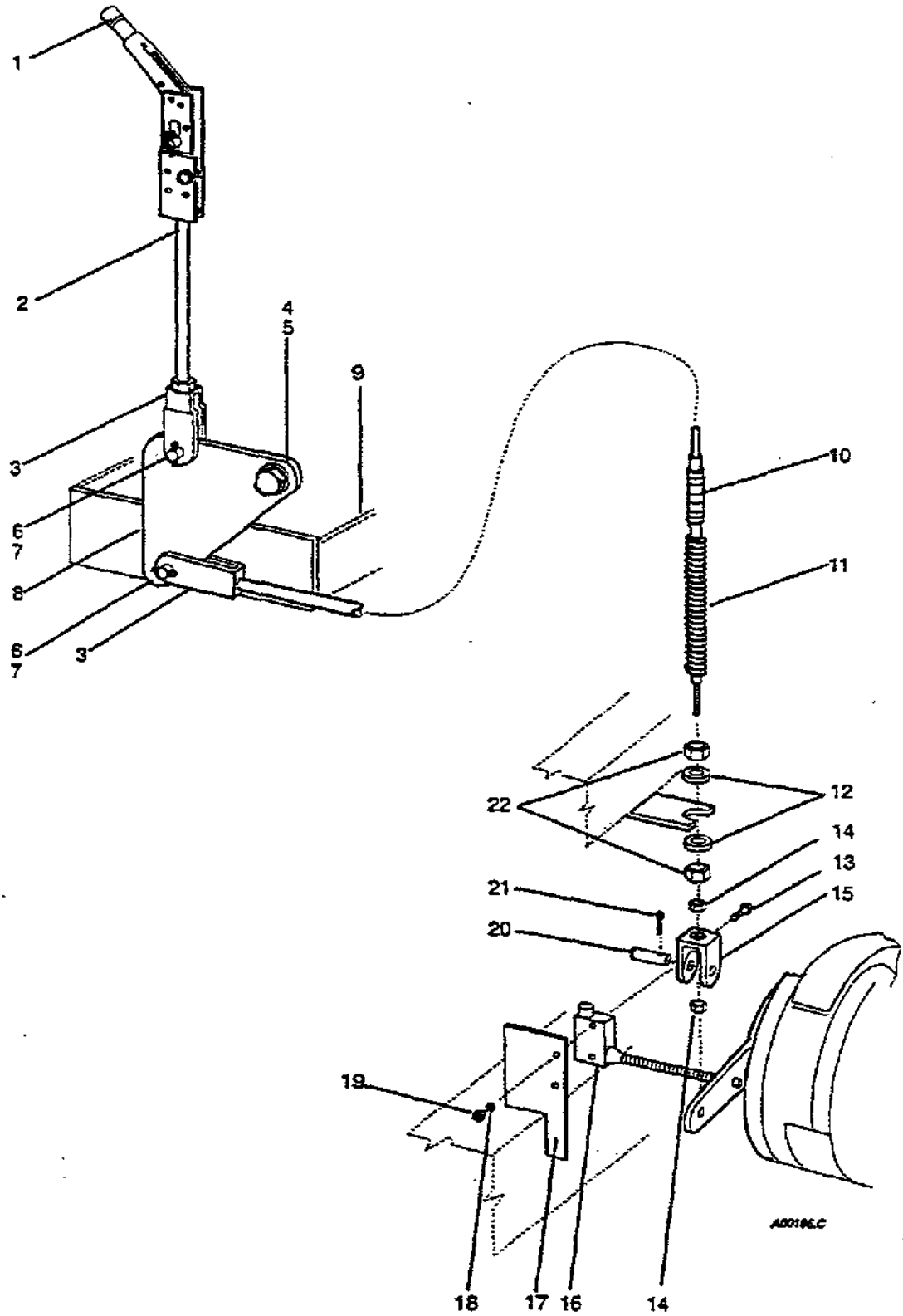

FIGURE 3.7 PARKING BRAKE LINKAGE

FIG. & INDEX NO.	PART NO.	MFR. CODE	DESCRIPTION	QTY.
3.7			PARKING BRAKE LINKAGE	
-1	85175	81381	. LEVER ASSY., PARKING BRAKE	1
-2	12881786-1	81381	. ROD, THREADED, 5/16-24	1
-3	116535	81381	. CLEVIS, YOKE END	2
-4	85062	81381	. BOLT, SHOULDER, 5/8 X 11	1
-5	85868	81381	. BUSHING	1
-6	103495	81381	. PIN. CLEVIS, 5/16 INCH	2
-7	12871041	81381	. PIN, COTTER, 1/16 X 1/2	2
-8	12881784	81381	. BELLCRANK	1
-9	12881785	81381	. MOUNT	1
-10	12881526	81381	. CABLE, PARKING BRAKE	1
-11	12885050	81381	. SPRING, COMPRESSION, 3/4 O.D.X 10 INCH	1
-12	73794	81381	. WASHER, FLAT, 5/8 INCH	2
-13	73756	81381	. SCREW, 8-32 X 2-1/4	2
-14	73761	81381	. NUT, HEX, 5/16-24	2
-15	CS541	06970	. CLEVIS	1
-16	54LA81	23826	. SWITCH, PARKING BRAKE (S6)	1
-17	86453	81381	. BRACKET, MOUNTING	1
-18	60606	81381	. WASHER, FLAT NO. 10	2
-19	73769	81381	. NUT, 8-32	2
-20	CP103	06970	. PIN, CLEVIS	1
-21	12871041	81381	. PIN,COTTER	1
-22	73781	81381	. NUT, JAM, 9/16-12	2

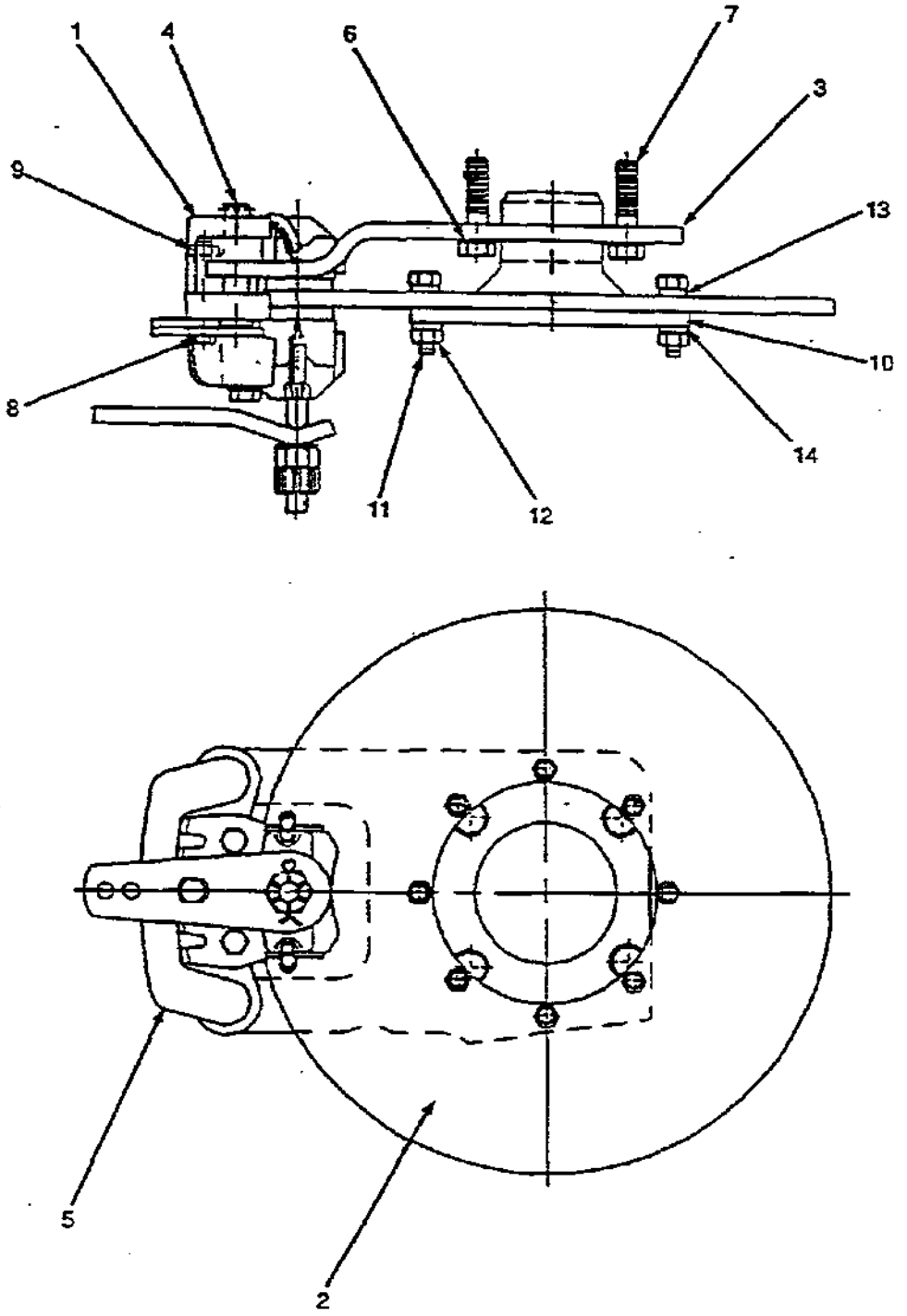

FIGURE 3.8 PARKING BRAKE ASSEMBLY

FIG. & INDEX NO.	PART NO.	MFR. CODE	DESCRIPTION	QTY.
3.8			**PARKING BRAKE ASSEMBLY**	
-1	4003259	96105	CALIPER ASSY.	1
-2	4001362	96105	. DISC, BRAKE	2
-3	4002655	96105	. BRACKET, SUPPORT	1
-4	F2400775	96105	. PIN, CLEVIS	2
-5	4041311	96501	. PIN, RETAINER	1
-6	F16204	96501	. LOCKWASHER	4
-7	F1005032	96501	. SCREW, HEX CAP	4
-8	F1003036	96105	. SCREW, HEX CAP	1
-9	F79104	96105	. NUT	1
-10	4010486	96105	. FLANGE, COMPANION	1
-11	F1003528	96105	. SCREW, HEX CAP	8
-12	F1300600	96105	. NUT, HEX	8
-13	F16202	96106	. LOCKWASHER	8
-14	4012821	96105	. WASHER, CLIPPED	8
-15	98-09436	96105	KIT, PARKING BRAKE, TWO PADS AND ATTACHING SPRINGS (NOT SHOWN)	1

GROUP 4

FUEL SYSTEM

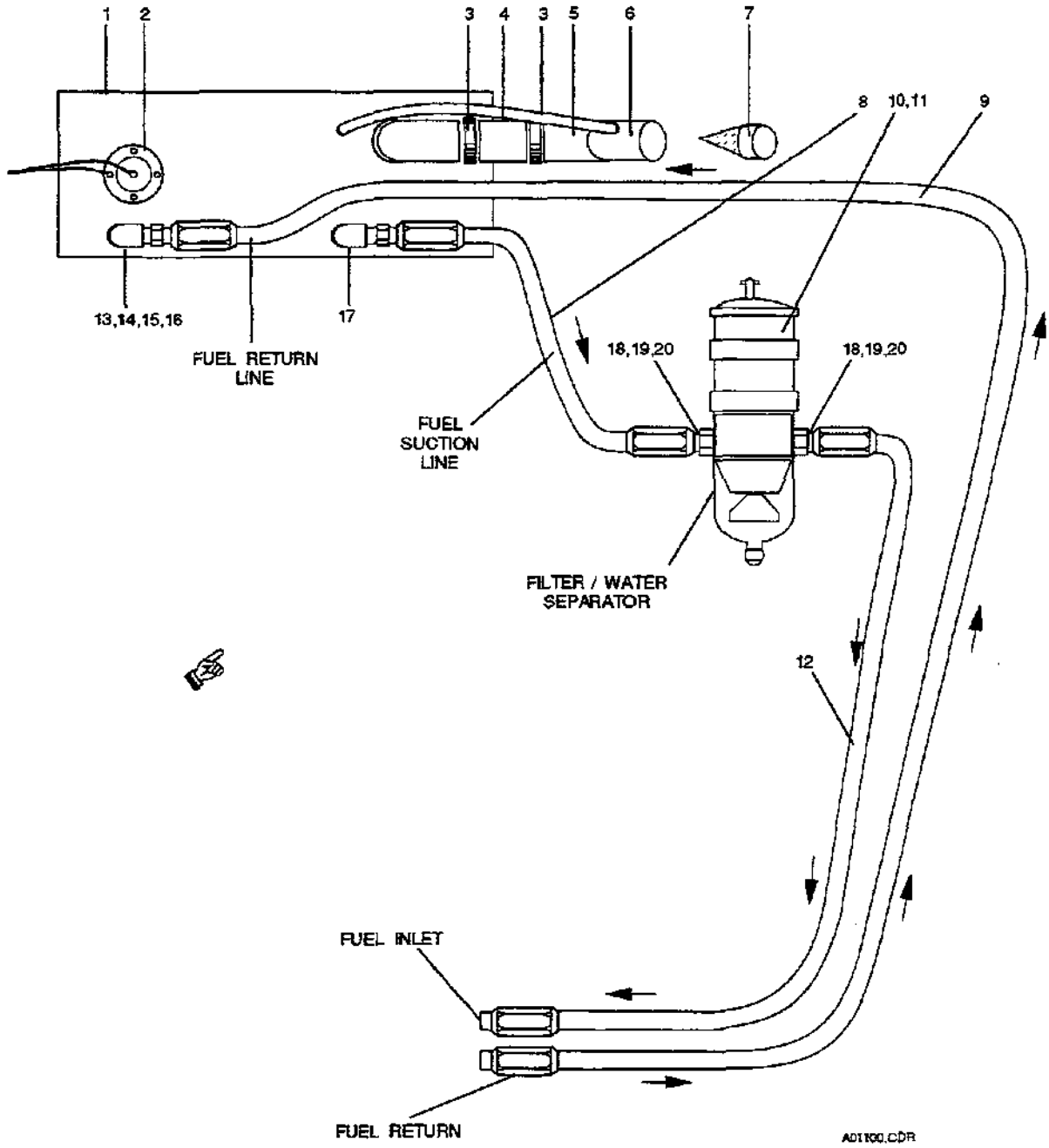

FIGURE 4.1 FUEL SYSTEM WITH FUEL FILTER/WATER SEPARATOR

FIG. & INDEX NO.	PART NO.	MFR. CODE	DESCRIPTION	QTY.
4.1			**FUEL SYSTEM WITH FUEL FILTER/WATER SEPARATOR**	
-1	84542	81381	TANK, FUEL	1
-2	02380-17	81381	SENDER, FUEL LEVEL	1
-3	P14-8341	81381	CLAMP, FUEL HOSE	2
-4	94978	81381	HOSE, FUEL FILL	1
-5	12940328	81381	HOSE, AIR VENT, #8	1
	12892901	81381	CLAMP, AIR VENT HOSE, #8	2
-6	REF.	81381	FILLER TUBE, PART OF FRAME ASSY. 1-1/2 INCH NPT	1
-7	76563	81381	FUEL FILLER AND CAP ASSY. WITH CONE STRAINER, 2-1/2 INCH NPT	1
-8	12902570	81381	HOSE ASSY., SUCTION, TANK TO FILTER/WATER SEPARATOR	1
-9	12941639	81381	HOSE ASSY., FUEL RETURN, ENGINE TO TANK	1
-10	1000-FG	55752	FUEL FILTER/WATER SEPARATOR ASSY.	1
-11	2020SM-OR	55752	ELEMENT, FUEL FILTER/WATER SEPARATOR, (RACOR) (NOT SHOWN)	1
-12	12941635	81381	HOSE ASSY., FILTER/WATER SEPARATOR TO ENGINE	1
-13	79408	81381	NIPPLE, CLOSE, PIPE, 1/4	1
-14	80011	81381	REDUCER, PIPE, 3/8 NPTF X 1/4 NPTF	1
-15	KF06-06PS	81381	ADAPTER, PUSH-ON FITTING, MALE, PIPE, 3/8 HOSE I.D. TO 3/8 PIPE	1
-16	12885513	81381	CLAMP, HOSE, WORM, #4	1
-17	202X6X6	79470	ADAPTER, CONNECTOR, MALE 3/8 TUBE O.D. TO 3/8 MALE PIPE THREAD, INVERTED	1
-18	9040-10-8	55752	ADAPTER, STRAIGHT, THREAD, FEMALE PIPE, 7/8-14 W/O-RING TO 1/2-14 PIPE THREAD	2
-19	3220X8X6	79470	BUSHING, PIPE, 1/2 MALE TO 3/8 FEMALE PIPE THREAD	2
-20	402X6X6	79470	ADAPTER, ELBOW, MALE, 90 DEG., 3/8 TUBE O.D. TO 3/8 MALE PIPE THREAD, 2 INVERTED	2
-21	117-4423	62445	FILTER, FUEL (NOT SHOWN)	1

DELETED

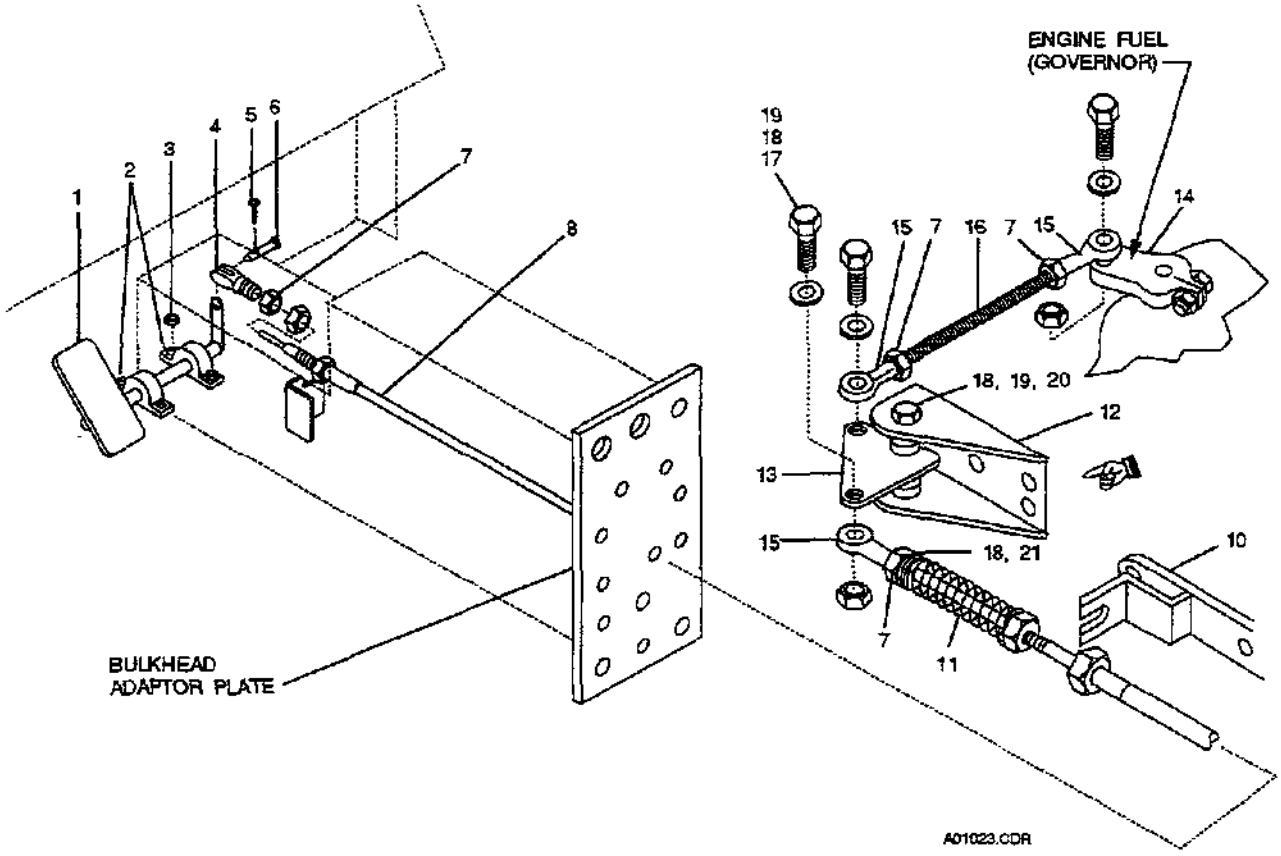

FIGURE 4.3 THROTTLE CONTROL

FIG. & INDEX NO.	PART NO.	MFR. CODE	DESCRIPTION	QTY.
4.3			**THROTTLE CONTROL**	
-1	76101	81381	. PEDAL, ACCELERATOR ASSY.	1
-2	76094	81381	. BEARING	2
-3	60608	81381	. NUT, 5/16-18	4
-4	104036	3B518	. CLEVIS	2
-5	12871041	81381	. PIN, COTTER, 1/16 X 1/2	2
-6	5147345	3B518	. PIN, CLEVIS	2
-7	73759	81381	. NUT, 1/4-28	2
-8	85566	81381	. CABLE, ACCELERATOR	1
-9	NOT USED			
-10	12941070	81381	. BRACKET, THROTTLE CABLE	2
-11	12885050	81381	. SPRING, RETURN	1
-12	12941071	81381	. BRACKET, THROTTLE PIVOT	1
-13	12941072	81381	. CONTROL ARM, THROTTLE	1
-14	REF	62445	. LEVER, GOVERNOR	1
-15	TR-4N	81381	. ROD END, BALL JOINT, FEMALE	2
-16	12941460	81381	. ROD, 1/4–28NF, ALL THREAD × 6 LG	1
-17	79582	81381	. BOLT, 1/4–20NC × 1" LG	3
-18	73802	81381	. WASHER, FLAT, 1/4"	6
-19	12880389	81381	. NUT, 1/4–20NC, FLEXLOCK	4
-20	12881804	81381	. BOLT, 1/4–20NC × 3" LG	3
-21	73798	81381	. WASHER, FLAT, 3/8"	1

GROUP 5

NOT USED

GROUP 6

LUBRICATION SYSTEM FOR ENGINE AND TRANSMISSION

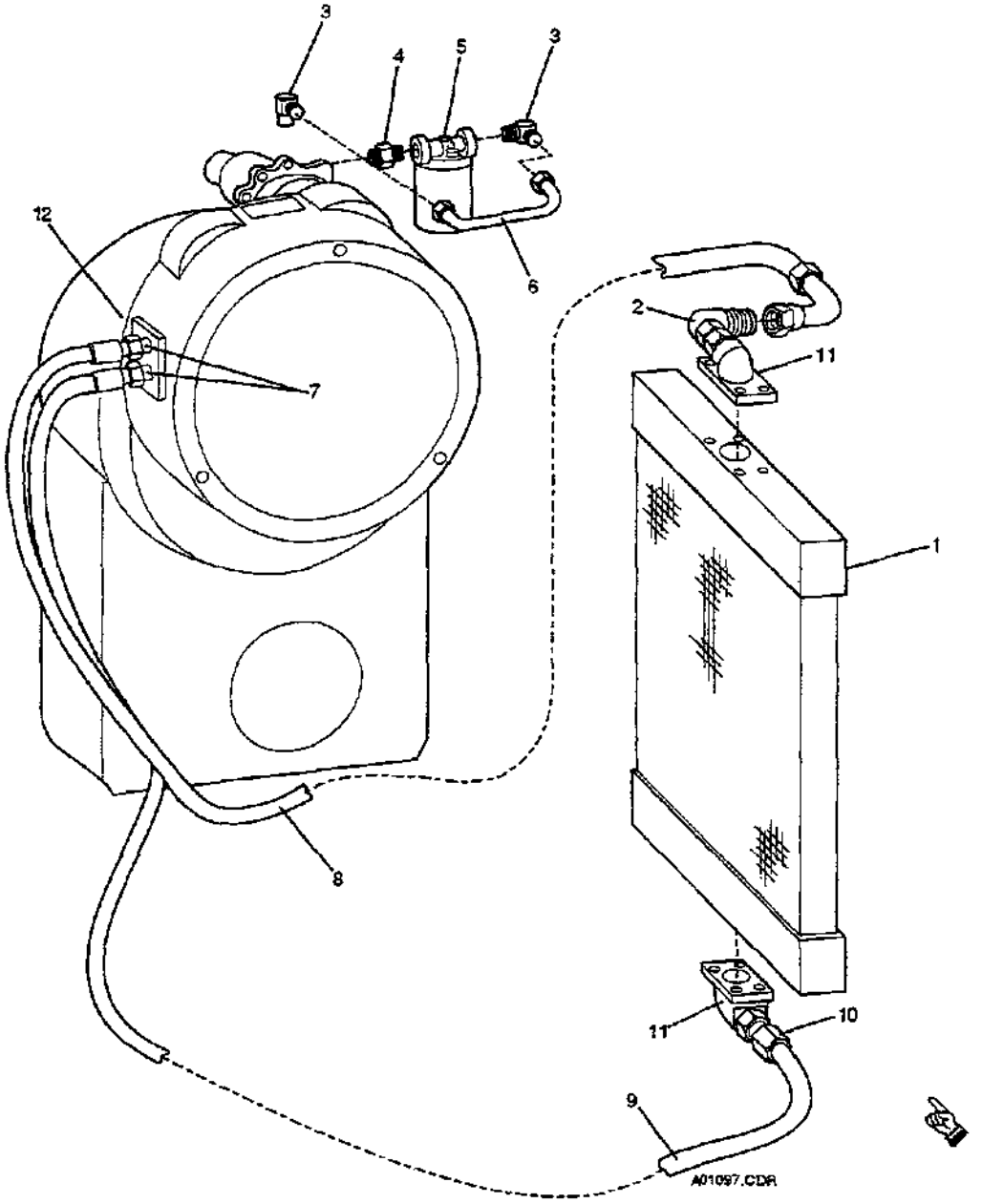

FIGURE 6.1 TRANSMISSION LUBE OIL SYSTEM

FIG. & INDEX NO.	PART NO.	MFR. CODE	DESCRIPTION	QTY.
6.1			TRANSMISSION LUBE OIL SYSTEM	
-1	*REF	62445	COOLER, TRANSMISSION, HYDRAULIC OIL	1
-2	76966	81381	ADAPTER, 90° ELBOW, 1 INCH TUBE	1
-3	76966	81381	ADAPTER, 90° ELBOW	2
-4	16-F50F50-S	81381	ADAPTER, UNION	1
-5	83327	81381	FILTER ASSY., TRANSMISSION	1
	4003483	96105	ELEMENT, TRANSMISSION FILTER	
-6	85905	81381	TUBE ASSY., TRANSMISSION FILTER	1
-7	86083	81381	ADAPTER, 45° ELBOW, 1 INCH TUBE	2
-8	12941193	81381	HOSE ASSY., TRANSMISSION TO COOLER	1
-9	12941194	81381	HOSE ASSY., COOLER TO TRANSMISSION	1
-10	76942	81381	ADAPTER, CONNECTOR, STRAIGHT, 1 INCH TUBE	1
-11	W-164-16-16-UM10	63383	KIT, FLANGE (INCLUDES O-RING AND MOUNTING HARDWARE	2
-12	**323057	59197	SENDER, OIL TEMPERATURE, TRANSMISSION FLUID TEMPERATURE	1

* TRANSMISSION COOLER IS FURNISHED INTEGRAL WITH DEUTZ ENGINE. SEE DEUTZ PARTS BOOK FOR PART NUMBER.

** OPTIONAL

FIG. & INDEX NO.	PART NO.	MFR. CODE	DESCRIPTION	QTY.
6.2			**ENGINE LUBE SYSTEM**	
-1	117-4421	62445	. ELEMENT, ENGINE LUBE FILTER (NOT SHOWN)	1 ■

NOTE

The engine lube system is completely contained within the engine assembly. Refer to the Deutz Parts Manual, located in Chapter 6, Tab A of this manual.

GROUP 8

ENGINE AIR INTAKE AND EXHAUST SYSTEM

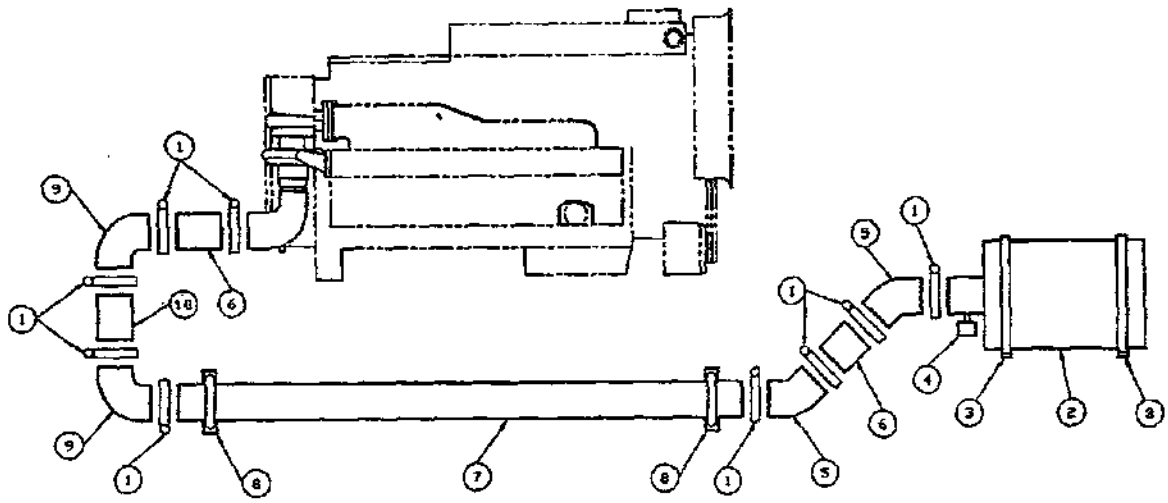

FIGURE 8.1 AIR INLET ASSEMBLY

FIG. & INDEX NO.	PART NO.	MFR. CODE	DESCRIPTION	QTY.
8.1			**AIR INLET ASSEMBLY**	
-1	5118393	81381	. CLAMP, HOSE	9
-2	79021-N	81381	. ASSEMBLY, AIR CLEANER	1
	70459A	76700	. . ELEMENT, AIR FILTER	1
	Q01444	76700	. . WING NUT	1
	Q19270	76700	. . COVER, AIR FILTER	1
-3	Q27271	81381	. CLAMP, AIR CLEANER	2
-4	Q06324	81381	. INDICATOR, AIR CLEANER	1
-5	97098	81381	. ELBOW, 45°, RUBBER, 4"	2
-6	12941086	81381	. TUBE, CONNECTOR, SHORT	2
-7	12941081	81381	. TUBE, AIR CLEANER	1
-8	P206410	81265	. U-BOLT, 5/16–NC × 4" ID	2
-9	97089	81381	. ELBOW, 90°, RUBBER, 4"	2
-10	12941464	81381	. TUBE, CONNECTOR	1

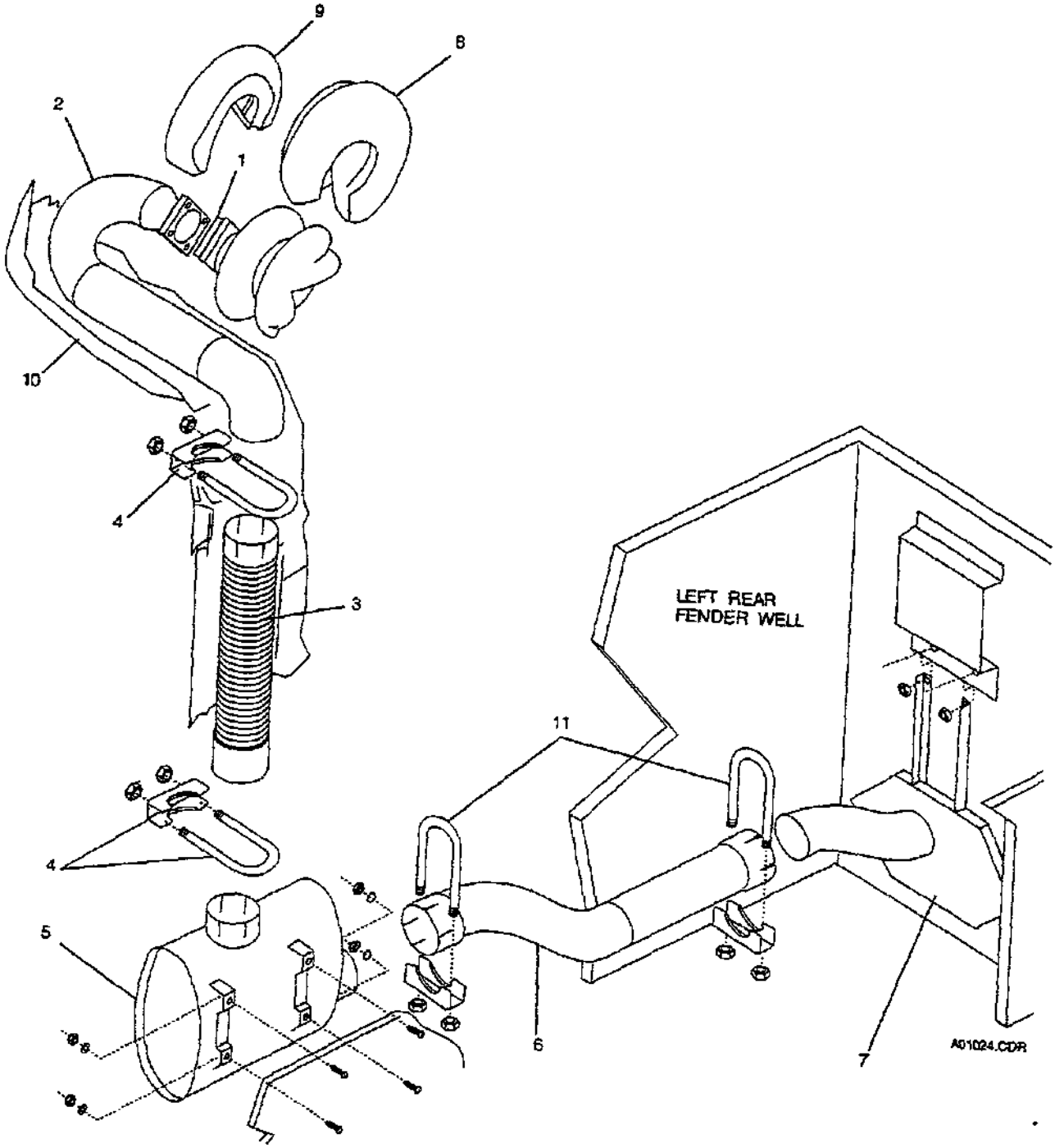

FIGURE 8.2 EXHAUST SYSTEM

FIG. & INDEX NO.	PART NO.	MFR. CODE	DESCRIPTION	QTY.
8.2			**EXHAUST SYSTEM**	
-1	*REF	81381	. GASKET, TURBO OUTLET	1 ■
-2	12941068	81381	. EXHAUST TUBE, GT-50 W/DEUTZ	1
-3	231-0240	81381	. CONNECTOR, FLEX, 4" × 18" LG	1 ■
-4	P206410	18265	. CLAMP, EXHAUST, GUILLOTINE, 4"	2
-5	12913909	81381	. MUFFLER, SPARK ARRESTOR, 3-1/2" OD	1
-6	12920081	81381	. TAIL PIPE, MUFFLER OUTLET, GT-50	1
-7	12913908	81381	. EXHAUST, OUTLET, GT-50	1
-8	12941199	81381	. EXHAUST, BLANKET, TURBO, DEUTZ-GT	1
-9	12941200	81381	. EXHAUST, BLANKET, TURBO TO FLEX	1
-10	12941201	81381	. EXHAUST, BLANKET, FLEX DEUTZ-GT	1
-11	17008	18265	. CLAMP, EXHAUST, GUILLOTINE, 3-1/2"	2

NOTE:
* TURBO OUTLET GASKET IS FURNISHED INTEGRAL WITH DEUTZ ENGINE. SEE DEUTZ PARTS BOOK FOR PART NUMBER.

GROUP 9

ELECTRICAL SYSTEM COMPONENTS

SHEET NUMBER	ZONE NUMBER	ITEM NUMBER	PART NUMBER	MFR. CODE	DESCRIPTION	QTY
3, 4	D/4, C2	A1	12940635	81381	ASSEMBLY, ELECTRONIC SPEED SWITCH, ENERGIZES K6 AT 800 RPM	1
			(ESSOSA-2000-A0)	76388		
3	D5/4	* A2	600	77977	ASSEMBLY, TURN SIGNALS	1
4	C6	A1M	77971	81381	ALARM, ENGINE TROUBLE	1
			(SC620)	32942		
3	B7	B1	1179918	62445	MOTOR, ENGINE STARTING, 12V	1
3	B3	B2	79980	81381	MOTOR, BACK-UP BRAKE BOOSTER PUMP (BACK-UP TO ENGINE	1
			(MBD6232)	78462	DRIVEN HYDRAULIC BRAKE PUMP) (WHEN ENGINE STALLS), 12V	
3	C/D8	B7A, B	69602	81381	BATTERY, 12V-DC SYSTEM	2
			(DHD8D06)			
3	B7	CB1	CDUM-120	73600	CIRCUIT BREAKER, 120 AMP, GLOW PLUGS	1
4	C5, C6	CR1, 3	76580	81381	RECTIFIER, BLOCKING, 1 AMP, 600 P.I.V.	2
			(IN4006)	04713		
4,3	B2, B7	CR2, 4	IN3212	04713	RECTIFIER, DISCHARGE, 3 AMP, 600 P.I.V.	2
4	B7	CR5	76580	81381	RECTIFIER, DISCHARGE, 1 AMP, 600 P.I.V.	1
			(IN4006)	04713		
4	B7	CR6	IN3212	04713	RECTIFIER, BLOCKING, 3 AMP, 600 P.I.V.	1
4	C6	DS1	76482	81381	LAMP, INDICATING PARKING BRAKE ON, 12V	1
			(257)	24446		
		—	76481	81381	HOLDER, LAMP, RED LENS FOR ITEM DS1	1
			(80-1310-0511-303)	83330		
4	C6	DS2	1815	24446	LAMP, ALTERNATOR FAILURE, 12V	1
		—	76481	81381	HOLDER, LAMP, RED LENS FOR ITEM DS2	1
			(80-1310-0511-303)	83330		
—	—	DS3	—	—	NOT USED	
4	C7	DS4	77957	81381	LAMP, GLOW PLUG ENERGIZED, 12V	1
			(1816)	24446		
		—	125-1310-11-103	71744	HOLDER, LAMP FOR ITEM DS4	1
		—	125-6193-403	71744	LENS, LAMP, AMBER FOR ITEM DS4	1
3	B2	DS5	85401	81381	LAMP, HEAD, LEFT SIDE, 12V	1
			(5004651-12V)	78422		
3	B4/3	DS6	85401	81381	LAMP, HEAD, RIGHT SIDE, 12V	1
			(5004651-12V)	78422		
3, 3	C4/3, C2	DS7, 8	1157	24446	LAMP, LEFT/RIGHT TAIL, PARKING, STOP/HAZARD, 12V	2
		—	2809	08162	HOLDER, LAMP, RED LENS FOR ITEMS DS7 & DS8	2
3	B2, B4/3	DS9, 10	6030Y	13646	LAMP, LEFT/RIGHT FRONT, PARKING AND HAZARD, 12V	2
4	C6	DS11	76482	81381	LAMP, ENGINE HIGH COOLANT TEMP. OR LOW LEVEL WARNING	1
			(257)	24446		
		—	76481	81381	HOLDER, LAMP, RED LENS FOR ITEM DS11	1
			(80-1310-0511-303)	83330		
4	C6	DS12	76482	81381	LAMP, ENGINE LOW OIL PRESSURE WARNING, 12V	1
			(257)	24446		
		—	76481	81381	HOLDER, LAMP, RED LENS FOR ITEM DS12	1
			(80-1310-0511-303)	83330		
4	C5	DS13	76482	81381	LAMP, BACK-UP BRAKE BOOSTER PUMP MOTOR ON, 12V	1
			(257)	24446		
		—	76481	81381	HOLDER, LAMP, RED LENS FOR ITEM DS13	1
			(80-1310-0511-303)	83330		
4	D7	DS14	67	24446	LAMP, PANEL ILLUMINATION, 12V	1
		—	DL-13	13445	HOLDER, LAMP, WITH HOOD, STEM MOUNTED FOR ITEM DS14	1
3	C4/5, C2	DS15, 16	1157	24446	LAMP, BACK-UP, 12V	2
		—	2809	08162	HOLDER, LAMP, FOR ITEMS DS15 & DS16	2
		—	9016W	08162	LENS, LAMP, CLEAR FOR ITEMS DS15 & DS16	2
3	D5/4	DS17	1157	24446	LAMP, WARNING, HANDBRAKE ON AND TRANSMISSION ENGAGED, 12V	1
		—	2702	77977	HOLDER, LAMP, RED LENS FOR ITEM DS17	1
3	B7/6	ECU	1179712	62445	ASSEMBLY, ELECTRONIC CONTROL UNIT, ENGINE GLOW PLUGS	1
4	B7	F1	77949	81381	FUSE, 15 AMP, PARKING, TAIL LIGHTS	1
			(AGC-15)	75915		
4	B7	F2	77950	81381	FUSE, 20 AMP, ENGINE STARTING, ENGINE RUNNING AND INSTRUMENTS,	1
			(AGC-20)	75915	BACK-UP LIGHTS, WARNING LIGHTS	
4	B7	F3	77950	81381	FUSE, 20 AMP, FOR OPTIONAL CAB HEATER, DEFROSTER	1
			(AGC-20)	75915		
4	B7	F4	77950	81381	FUSE, 20 AMP, ENGINE RUN SOLENOID, TRANSMISSION SHIFTER	1
			(AGC-20)	75915		

SHEET NUMBER	ZONE NUMBER	ITEM NUMBER	PART NUMBER	MFR. CODE	DESCRIPTION	QTY
4	B7	F5	77951	81381	FUSE, 25 AMP, HEADLAMPS	1
			(AGC-25)	75915		
4	B6	F6	77948	81381	FUSE, 15 AMP, TURN SIGNAL, [illegible]	1
			(AGC-15)	75915		
4	B6	F7	77951	81381	FUSE, 25 AMP, FOR OPTIONAL WINDSHIELD WIPER MOTORS,	1
			(AGC-25)	75915	DOME LIGHTS, VENTILATING FAN	
4	B6	F8	77949	81381	FUSE, 15 AMP, HORN	1
			(AGC-15)	75915		
		—	150870	75915	HOLDER, FUSE, INLINE FOR ITEM F8	1
		—	399904	75915	FUSE BLOCK, 1 POLE, SCREW TERMINAL FOR ITEMS F6, F7, & F8	3
		—	399904	75915	FUSE BLOCK, 4 POLE, SCREW TERMINAL FOR ITEMS F1-4	1
3	D5/4	* FL1	76480	81381	FLASHER, TURN SIGNAL AND HAZARD LAMPS, 12V	1
			(180)	77977		
		—	3002	13445	INSNAP, SOCKET, FLASHER FOR ITEM FL1	1
3	A6, D7	G1	1179602	62445	ALTERNATOR, BATTERY CHARGING WITH INTERNAL VOLTAGE REGULATOR,	1
					95 AMP, 12V	
4	C6	GA1	304506	59197	GAUGE, DIESEL FUEL LEVEL	1
4	C7	GA2	352545	59197	GAUGE, ENGINE OIL PRESSURE	1
4	C7	GA3	340594	59197	GAUGE, ENGINE COOLANT TEMPERATURE	1
3	D5/4	GA4	12940636	81381	GAUGE, TACHOMETER	1
			(SSSAO-49462)	06046		
3	A7	GP1-6	1179370	62445	GLOW PLUG, ENGINE	6
3	B3	H1	1882164	16475	HORN, 12V	1
3	C5/3	J1	4532402X-28-115	77820	RECEPTACLE, MATES WITH ITEM P1	1
3	A7/6	J2	1233159	62445	RECEPTACLE, MATES WITH ITEM P2 (WHITE COLOR)	1
			(163037-0)	OLAFB		
		—	113-5373	62445	PIN (TERMINALS) FEMALE FOR ITEM J2	7
			(160448)	OLAFB		
4	C5	J3	1375-03-09-1154	27264	RECEPTACLE, MATES WITH ITEM P3	1
4	C5	J4	1-480709-0	OLAFB	RECEPTACLE, MATES WITH ITEM P4	1
3	D/C5/3	J5	MS3102A-24-28	71820	RECEPTACLE, MATES WITH ITEM P5	1
3	A7/6	J6	1233159	62445	RECEPTACLE, MATES WITH ITEM P6 (YELLOW COLOR)	1
			(163037-4)	OLAFB		
		—	113-5373	62445	PIN (TERMINALS) FEMALE FOR ITEM J6	6
			(160448)	OLAFB		
3	B7/6	K1	12940344	81381	CONTACTOR, ENGINE STARTING, 12V-DC COIL	1
			(24009-15)	13445		
4	B7	K2	P8972DY12	77342	RELAY, ENGINE RUN (IGNITION SWITCH ON) 12V-DC COIL	1
4	B6	K3	1119284	16475	RELAY, HORN, 12V-DC COIL	1
4	B7	K4	12940344	81381	RELAY, BACK-UP BRAKE BOOSTER PUMP MOTOR CONTROL,	1
			(24009-15)	13445	12V-DC COIL	
4	B7	K5	67795	81381	RELAY, ENERGIZED ONLY WHEN TRANSMISSION SHIFTER IN NEUTRAL	1
			(KUP14D11-12V)	77342	POSITION, 12V-DC COIL	
		—	67798	81381	SOCKET, RELAY, PLUG-IN FOR ITEM K5	1
			(27E121)	77342		
		—	67796	81381	SPRING, HOLD DOWN, FOR PLUG-IN RELAY FOR ITEM K5	1
			(HS0SL614)	77342		
3, 4	D7/6, C3	K6	67779	81381	RELAY, ENGINE RUNNING, ENERGIZED AT 800 RPM, 12V-DC COIL	1
			(KUP14D15-12V)	77342		
		—	67797	81381	SOCKET, RELAY, PLUG-IN FOR ITEM K6	1
			(27E121)	77342		
		—	67796	81381	SPRING, HOLD DOWN, FOR PLUG-IN RELAY FOR ITEM K6	1
			(HS0SL614)	77342		
3, 4	D7/6, C3	K7	67779	81381	RELAY, BACK-UP LIGHTS, 12V-DC COIL	1
			(KUP14D15-12V)	77342		
		—	67797	81381	SOCKET, RELAY, PLUG-IN FOR ITEM K7	1
			(27E121)	77342		
		—	67796	81381	SPRING, HOLD DOWN FOR PLUG-IN RELAY FOR ITEM K7	1
			(HS0SL614)	77342		

NOTE:

1. WHEN TWO (2) PART NUMBERS ARE SHOWN, THEY ARE LISTED IN THE FOLLOWING ORDER: ORIGINAL EQUIPMENT MANUFACTURER WILL BE LISTED FIRST, DIRECTLY BELOW IN PARENTHESIS WILL BE VENDOR/MFGR'S PART NO. IF AVAILABLE.

REVISION				
ZONE	LTR	DESCRIPTION	DATE	APPROVED
	A	REVISED PER ECN #80462	9/16/94	DD

STEWART & STEVENSON SERVICES
P.O. BOX 1637 HOUSTON, TEXAS, U.S.A.

R.SOUTHARD 8/24
P.JRIVERA 8/24
D.DEARING 8/24

ELECTRICAL MATERIAL LIST AND EQUIPMENT LOCATION, GT50 TOW TRACTOR WITH DEUTZ ENGINE

F 81381 12941092 A

SCALE NONE SHEET 1 OF 4

SHEET NUMBER	ZONE NUMBER	ITEM NUMBER	PART NUMBER	MFR. CODE	DESCRIPTION	QTY
3	B7	L1	1318436	62445	SOLENOID, ENGINE STARTING MOTOR, 12V-DC COIL	1
3	A7	L2	4190849	62445	SOLENOID, ENGINE RUN, ENERGIZED TO RUN, 12V-DC COIL	1
—	—	L3	—	—	NOT USED	
3	A7	L4	—	62445	SOLENOID, ENGINE EXCESS FUEL START ALLOWANCE, 12V-DC COIL	1
4	C6	M1	94608	81389	METER, ELAPSED TIME	1
			(85006-05)	57730		
4	C6	M2	332202	81389	METER, BATTERY VOLTAGE	1
3	C5	P1	MS3106A-20-11P	73630	PLUG, MATES WITH ITEM J1	1
3	A3/6	P2	1298025	62445	PLUG, MATES WITH ITEM J2, RUN, WITH ELECT. HARNESS	1
			(163006-4)	01450		
		—	003-3041	62445	PIN (TERMINALS) MALE, FOR ITEM P2	7
			(42460-2)	01450		
3	C5	P3	03-09-2154	52384	PLUG, MATES WITH ITEM J3	1
3	C5	P4	1-480788-0	01450	PLUG, MATES WITH ITEM J4	1
3	D/C6/5	P5	MS3106A-24-2P	73630	PLUG, MATES WITH ITEM J5	1
3	A7/6	P6	1248002	62445	PLUG, MATES WITH ITEM J6, RUN, WITH ELECT. HARNESS	1
			(163006-4)	01450		
		—	003-3041	62445	PIN (TERMINALS) FEMALE, FOR ITEM P6	8
			(42460-2)	01450		
3	A7	PA	—	62445	PLUG, MATES WITH ITEM PU1	1
		—	4190847	62445	HOUSING FOR ITEM PA (QTY 1)	REF
		—	4190851	62445	SEAL FOR ITEM PA (QTY 2)	REF
		—	4190849	62445	PIN (TERMINALS) FOR ITEM PA (QTY 2)	REF
3	A7	PB	1178936	62445	PLUG, MATES WITH ITEM R3, RUN, WITH ELECT. HARNESS	1
3	A7	PC	4199144	62445	PLUG, MATES WITH ITEM L4, RUN, WITH ELECT. HARNESS	1
		—	4199128	62445	HOUSING FOR ITEM PC (QTY 1)	REF
		—	4199129	62445	SEAL FOR ITEM PC (QTY 3)	REF
		—	4199143	62445	PIN (TERMINALS) FOR ITEM PC (QTY 2)	REF
3	A6	PD	1178935	62445	PLUG, MATES WITH ITEM R2, RUN, WITH ELECT. HARNESS	1
3	A7/6	PE	—	62445	PLUG, MATES WITH ITEM L2, RUN, WITH ELECT. HARNESS	1
		—	4190847	62445	HOUSING FOR ITEM PE (QTY 1)	REF
		—	4190853	62445	SEAL FOR ITEM PE (QTY 2)	REF
		—	4190852	62445	PIN (TERMINALS) FOR ITEM PE (QTY 2)	REF
3	B7	PF	—	62445	PLUG, MATES WITH ITEM DH1	1
		—	1179737	62445	HOUSING FOR ITEM PF (QTY 1)	REF
		—	1179736	62445	SEAL FOR ITEM PF (QTY 1)	REF
		—	1178740	62445	PIN (TERMINALS) FOR ITEM PF (QTY 2)	REF
3	B7/2	PG	—	62445	PLUG, MATES WITH ITEM ECU	1
		—	4199331	62445	HOUSING FOR ITEM PG (QTY 1)	REF
		—	4199333	62445	COVER FOR ITEM PG (QTY 1)	REF
		—	4199332	62445	PIN (TERMINALS) FOR ITEM PG (QTY 4)	REF
3	A7	PU1	4364426	62445	MAGNETIC PICKUP, SPEED SENSOR FOR ITEM A1	1
3	C4/7	R1	12280-17	81381	SENDING UNIT, DIESEL FUEL LEVEL	1
3	A6	R2	4190806	62445	SENDING UNIT, COMBINATION ENGINE OIL PRESSURE GAUGE, LOW OIL	1
					PRESSURE SWITCH, N/C CLOSES AT 5.8 PSI ON FALLING PRESSURE	
3	A7	R3	4190804	62445	SENDING UNIT, COMBINATION ENGINE COOLANT TEMP. GAUGE,	1
					HIGH COOLANT TEMP. SWITCH (CLOSES AT 230°F)	
4	C5	R4	93.220	44655	RESISTOR, BORDEN, 220 OHM, 3.2W	1
4	C7	S1	958-8634	13445	SWITCH, ENGINE STOP/RUN/START, 3 POSITION, MAINTAINED	1
					CONTACTS IN STOP AND RUN, MOMENTARY CONTACTS IN START	
—	—	S2-4	—	—	NOT USED	
3	D6/4	S5	77753	81389	SWITCH, HORN, PUSHBUTTON	1
			(208-1013-001)	98159		
3	D6	S6	54LA81	33626	SWITCH, PARKING BRAKE	1
3	D6/4	* S7	803T-F0SA4	08121	SWITCH, EMERGENCY ENGINE SHUTDOWN (OPTIONAL)	1
—	—	S8	—	—	NOT USED	
4	C7	S9	76473	81389	SWITCH, PARKING LIGHTS	1
			(M335058-22)	15605		
3	S4/3	S10	78237	81389	SWITCH, HYDRAULIC BRAKE PRESSURE, BRAKE LIGHTS	1
			(8626)	13445		
4	C7	S11	67646	81389	SWITCH, HEADLAMP	1
			(M335058-22)	15605		
—	—	S12-15	—	—	NOT USED	
3	S7	S16	4199022	62445	SWITCH, ENGINE LOW COOLANT LEVEL	1
3	S4/5	S17	78237	81389	SWITCH, HYDRAULIC BRAKE PRESSURE, BACKUP BRAKE BOOSTER	1
			(8626)	13445		
—	—	S18, 19	—	—	NOT USED	
4	C7	S20	76473	81389	SWITCH, PANEL LAMP	1
			(M335058-22)	15605		

SHEET NUMBER	ZONE NUMBER	ITEM NUMBER	PART NUMBER	MFR. CODE	DESCRIPTION	QTY
3	C5	—	4041014	96105	TRANSMISSION POSITION (SHIFTER) SELECTOR ASSEMBLY	1
4	B7/6	TB1	5-142	71785	TERMINAL BOARD, 30 AMP, 5 POINT	1
		—	1455-142	71785	INSULATOR, MARKER STRIP, 141, 5 POINT FOR ITEM TB1	1
3	B2, B4/3	TB2, 3	67486	81381	TERMINAL BOARD, 30 AMP, 4 POINT	2
			(4-141)	71785		
		—	79646	81381	INSULATOR, MARKER STRIP, 141, 4 POINT FOR ITEMS TB2 & TB3	2
			(M34-141)	71785		
3	C7, D7/6	TB4, 5	67487	81389	TERMINAL BOARD, 20 AMP, 6 POINT	2
			(6-141)	71785		
		—	79647	81381	INSULATOR, MARKER STRIP, 141, 6 POINT FOR ITEMS TB4 & TB5	2
			(M36-141)	71785		
3, 4	D7/6, B3/2	TB6	67488	81381	TERMINAL BOARD, 20 AMP, 12 POINT	1
			(12-141)	71785		
		—	79480	81381	INSULATOR, MARKER STRIP, 141, 12 POINT FOR ITEM TB6	1
			(M312-141)	71785		
3	A7/6	TB7	4364430	62445	TERMINAL BLOCK, GLOW PLUGS	1

SYM	QTY	DESCRIPTION	DATE	APPROVED
	A	REVISED PER ECN #60462	07/16/04	DO

STEWART & STEVENSON SERVICES
P.O. BOX 1637 HOUSTON, TEXAS, U.S.A.

ELECTRICAL MATERIAL LIST AND EQUIPMENT LOCATION, GT50 TOW TRACTOR WITH DEUTZ ENGINE

F | 81381 | 12941092 | A

SHEET 2 OF 4

E

ZONE	LTR	DESCRIPTION	DATE	APPROVED
	A	REVISED PER ECN #60462	9/15/94	DD

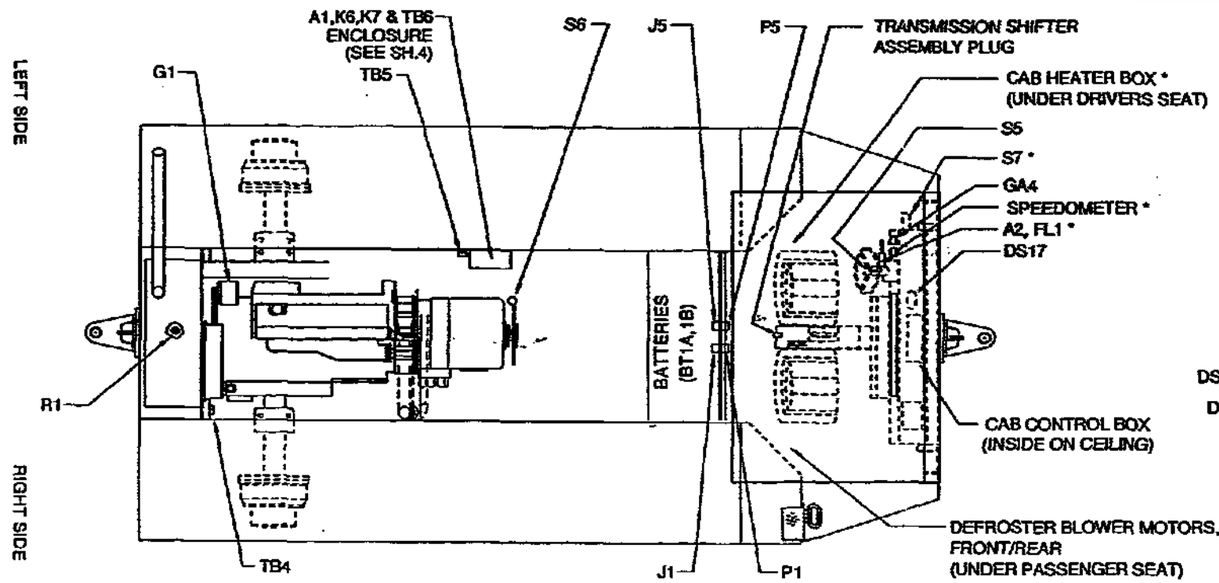

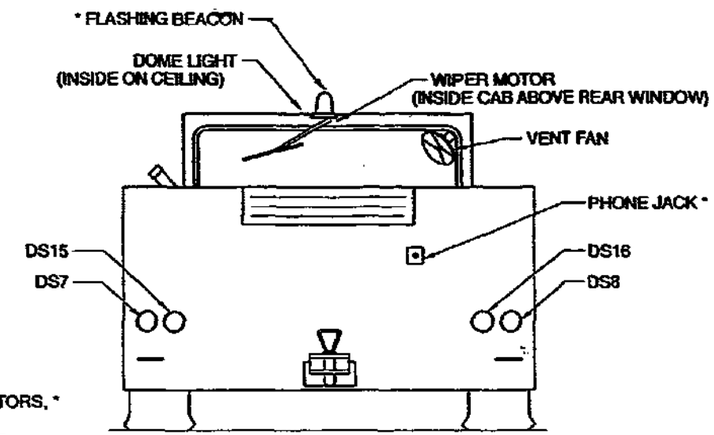

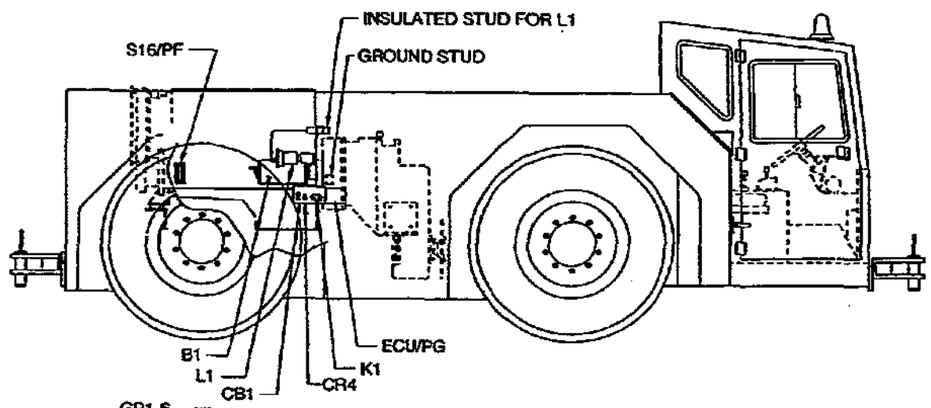

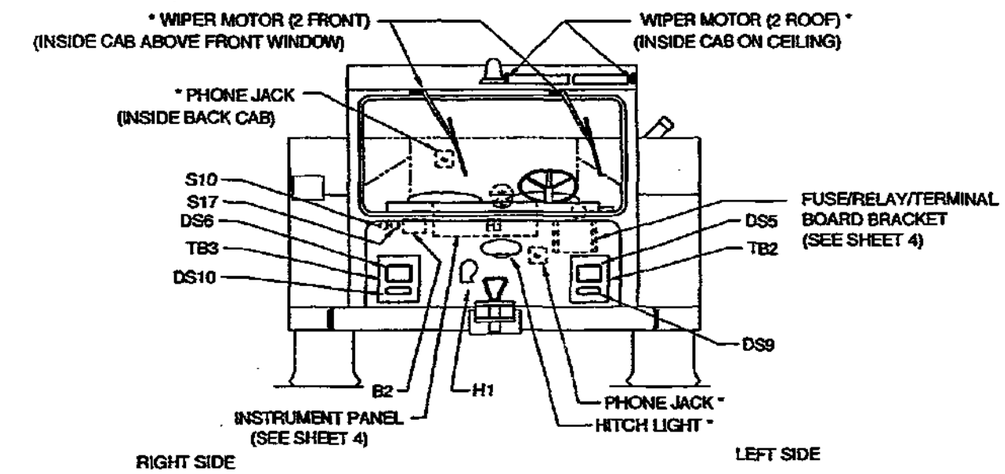

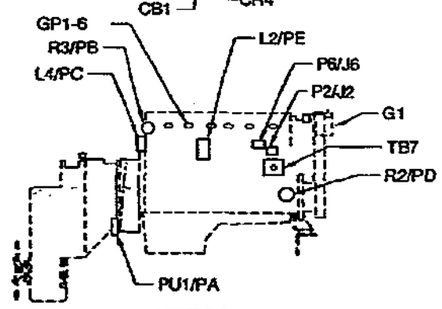

LEFT SIDE OF ENGINE

NOTE: CAB, CAB ACCESSORIES AND ITEMS WITH AN ASTERISK ARE OPTIONAL.

SEE SHEET 1 & 2 FOR LEGEND

QTY REQD	FIGURE NO.	PART OR IDENTIFYING NO.	NOMENCLATURE OR DESCRIPTION	MATERIAL OR SPECIFICATION	REF NO.

PARTS LIST

WEIGHTS			
STRESS			
MATERIALS & PROCESS			
MANUFACTURING ENGRG			
QUALITY ASSURANCE			
ADDITIONAL APPROVALS	DATE		

UNLESS OTHERWISE SPECIFIED DIMENSIONS ARE IN INCHES
DECIMALS TOLERANCES ANGULAR
.XX ±.03 .XXX ±.005 .XXXX ±.0005 ±
DO NOT SCALE DRAWING
FINISH
FINISH
146753

CONTRACT NO.	
DRAWN R.SOUTHARD	SIZE 694
CHECK P.J.RIVERA	7/94
DESIGN D.DEARING	7/94
DESIGN ACCURACY	
CUSTOMER	

STEWART & STEVENSON SERVICES
P.O. BOX 1637 HOUSTON, TEXAS, U.S.A.

TITLE
ELECTRICAL MATERIAL LIST AND EQUIPMENT LOCATION, GT50 TOW TRACTOR WITH DEUTZ ENGINE

SIZE	PROJECT NO.	DWG NO.	REV
D	81381	12941092	A

SCALE SHEET 3 OF 4

ZONE	LTR	DESCRIPTION	DATE	APPROVED
	A	REVISED PER ECN #50462	9/19/94	OD

NOTE:
ITEMS ALM, CR1, CR3 & R4 ARE MOUNTED BEHIND PANEL

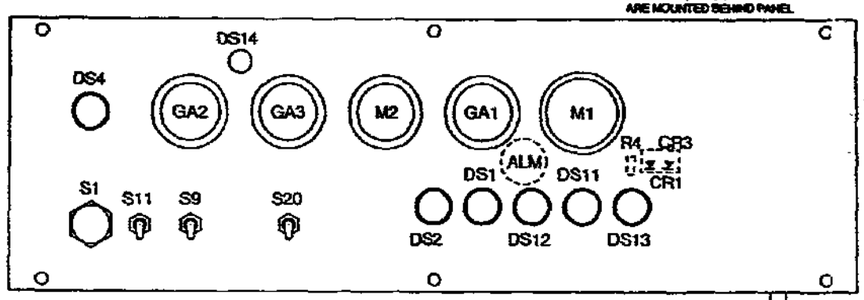

INSTRUMENT PANEL
FRONT VIEW

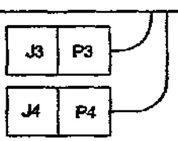

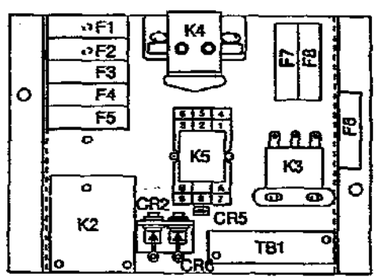

FUSE/RELAY/TERMINAL BOARD BRACKET

ENCLOSURE FOR ITEMS A1, K6, K7 & TB6
(LOCATED IN ENGINE BAY AREA, SEE SH-1)
(SHOWN WITHOUT COVER)

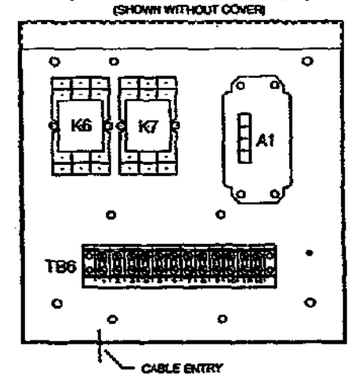

SEE SHEET 1 & 2 FOR LEGEND

QTY REQD	FSCM NO.	PART OR IDENTIFYING NO.	NOMENCLATURE OR DESCRIPTION	MATERIAL SPECIFICATION	ITEM NO.

PARTSLIST

UNLESS OTHERWISE SPECIFIED DIMENSIONS ARE IN INCHES
DECIMALS TOLERANCES ANGULAR
.XX ±.03
.XXX ±.010
DO NOT SCALE DRAWING
TREATMENT
FINISH
146/58
NEXT ASSY
APPLICATION
SHIPPED TO
NOT NT
CHG NT

CONTRACT NO.
DRAWN R.SCURTHARD 6/94
CHECK P.J.RIVERA 7/94
DESIGN D.D.GARING 7/94
APPROVAL ACTIVITY
CUSTOMER

STEWART & STEVENSON SERVICES
P.O. BOX 1637 HOUSTON, TEXAS, U.S.A.

TITLE
ELECTRICAL MATERIAL LIST AND EQUIPMENT LOCATION, GT50 TOW TRACTOR WITH DEUTZ ENGINE

SIZE	FSCM NO.	DWG NO.	REV
D	81381	12941092	A

SCALE | DO NOT SCALE DWG | SHEET 4 OF 4

GROUP 10

GENERATOR

NOT USED

GROUP 11

NOT USED

GROUP 12

STEERING SYSTEM COMPONENTS

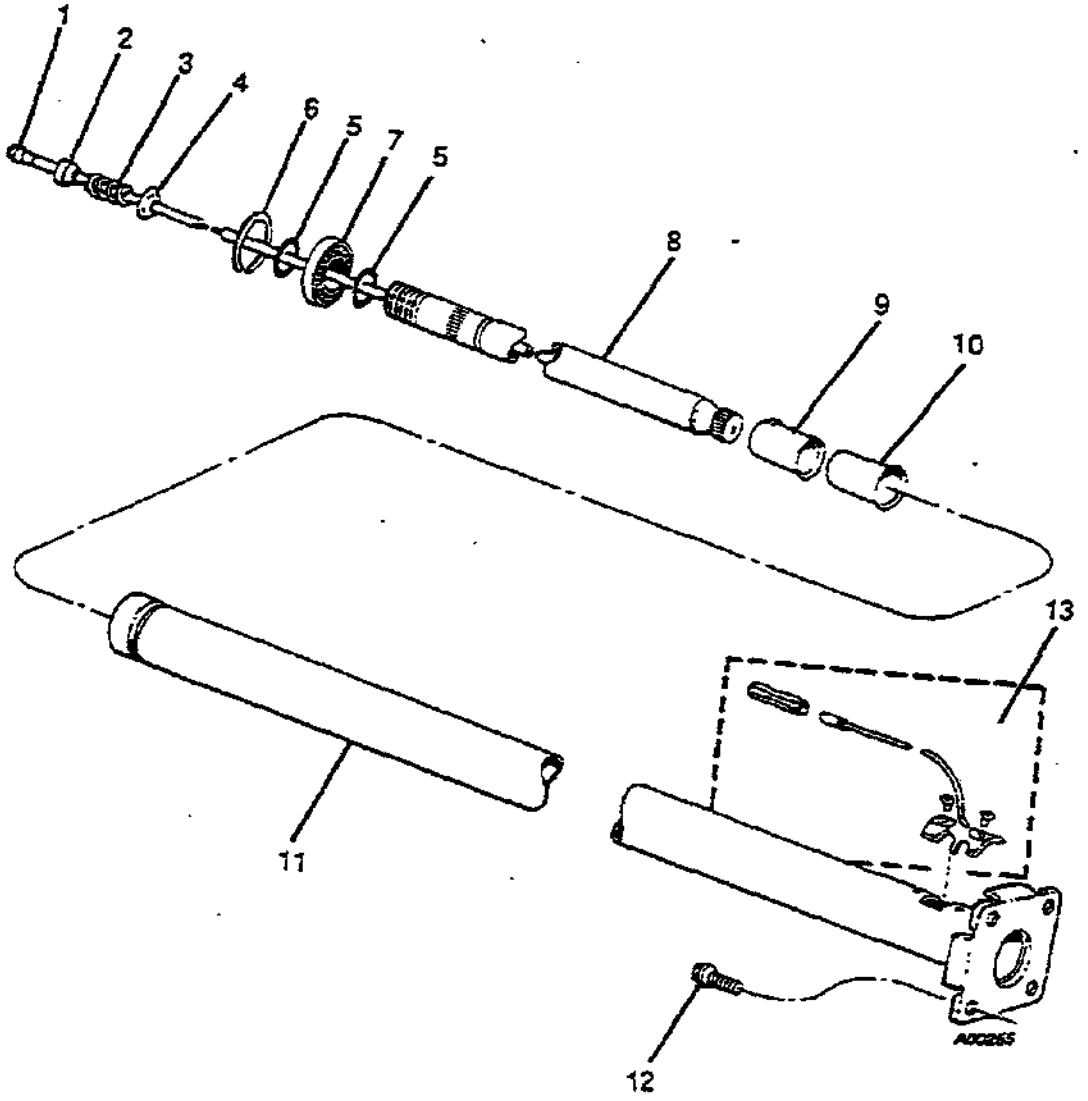

FIGURE 12.1 STEERING COLUMN

FIG. & INDEX NO.	PART NO.	MFR. CODE	DESCRIPTION	QTY.
12.1			STEERING COLUMN	
	77790	81381	STEERING COLUMN ASSY.	1
-1	21142-1	96151	. TERMINAL AND WIRE	1
-2	21138	96151	. INSULATOR, CONTACT	1
-3	5029	96151	. SPRING, CONTACT	1
-4	5028	96151	. WASHER, CONTACT	1
-5	14092	96151	. SNAP RING	2
-6	5245	96151	. RING, RETAINER	1
-7	21146	96151	. BEARING ASSY.	1
-8	5259-1	96151	. SHAFT ASSY., STEERING	1
-9	21149	96151	. RING, CONTACT	1
-10	21151	96151	. INSULATOR, CONTACT RING	1
-11	5244-1	96151	. TUBE AND FLANGE ASSY.	1
-12	21047-1	96151	. CAPSCREW, 3/8-16 X 3/4	2
-13	21141	96151	. BRUSH ASSY., HORN	1
			ATTACHING PARTS	
	21173	96151	. . CONNECTOR, TWO WIRE	1
	21143	96151	. . TERMINAL WIRE	1
	21144	96151	. . SCREW, SELF TAPPING	2
	204-1007-003	96151	. . WIRE, COLUMN HORN	1

*****

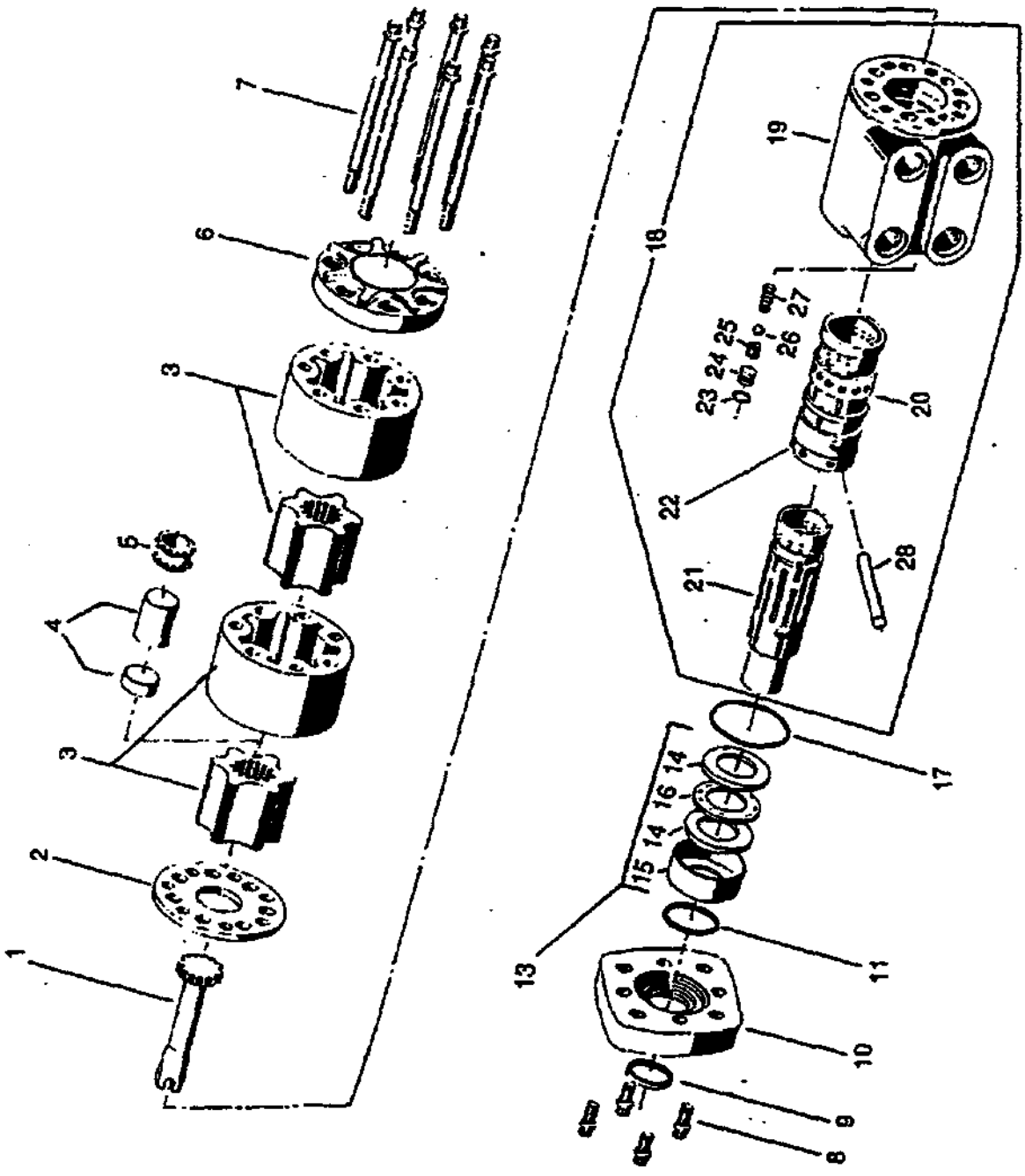

FIGURE 12.2 HYDRAULIC STEERING VALVE ASSEMBLY

FIG. & INDEX NO.	PART NO.	MFR. CODE	DESCRIPTION	QTY.
12.2			HYDRAULIC STEERING VALVE ASSEMBLY	
	78341	81381	VALVE ASSY., HYDRAULIC STEERING, 211-1-39	1
-1	5126	96151	. DRIVE	1
-2	5414	96151	. PLATE	1
-3	5663-1	96151	. GEAR SET	2
-4	622	96151	. SPACER C, 0.98 INCH	1
	838	96151	. SPACER C, 0.483 INCH	1
-5	5213	96151	. SPLINE	1
-6	6481	96151	. CAP, END	1
-7	5389-13	96151	. CAPSCREW, 12 PT. DR., 3-1/2 INCH	7
-8	21046-1	96151	. CAPSCREW, 12 PT. DR., 5/8-18	4
-9	844	96151	. SEAL, OIL, 1.25 OD X 0.125 THICK	1
-10	843	96151	. PLATE, MOUNT, VALVE HOUSING	1
-11	20599	96151	. SEAL, QUAD RING, 1-5/16 INCH OD X 1/8 1 INCH	1
-12	NOT USED			
-13	NOT USED			
-14	5542	96151	. BEARING RACE	2
-15	5543	96151	. LOCATOR BEARING	1
-16	5544	96151	. BEARING, NEEDLE, THRUST	1
-17	15048	96151	. SEAL, O-RING	1
-18	6419	96151	. CONTROL PARTS ASSY.	1
-19	5651	96151	. . HOUSING, VALVE	1
-20	6420	96151	. . SLEEVE, CONTROL	1
-21	6421	96151	. . SPOOL, CONTROL	1
-22	370	96151	. SPRING, CENTERING	6
-23	15006	96151	. SEAL, O-RING	1
-14	21124	96151	. PLUG, SEAL	1
-25	859	96151	. SEAT, CHECK	1
-26	18026	96151	. BALL, STEEL, 1/4 INCH	1
-27	857	96151	. SPRING, COMPRESSION	1
-28	15	96151	. PIN, CENTERING	1
	5140	96151	. SEAL KIT	2

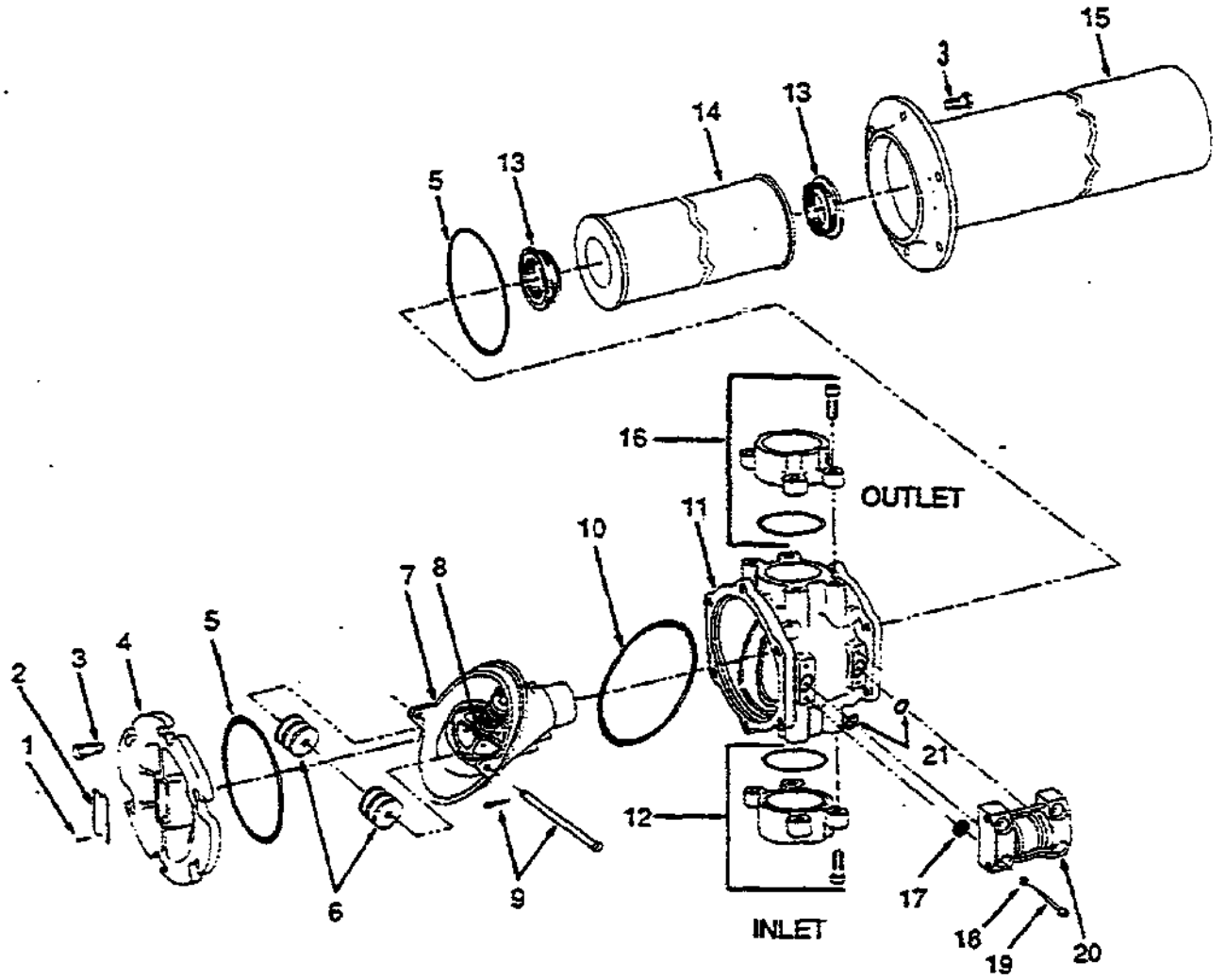

FIGURE 12.3 HYDRAULIC FILTER ASSEMBLY

FIG. & INDEX NO.	PART NO.	MFR. CODE	DESCRIPTION	QTY.
12.3			HYDRAULIC FILTER ASSEMBLY	
	12940839	81381	FILTER ASSY., COMPLETE	1
-1	900028	09990	. SCREW, NAMEPLATE	1
-2	924928	09990	. NAMEPLATE	1
-3	926633	09990	. CAP SCREW, 5/16-18 X 1	12
-4	924634	09990	. COVER	1
-5	N72350	09990	. O-RING, COVER AND BOWL	2
-6	924948	09990	. MAGNETS	2
-7	926582	09990	. DIVERTER, METALLIC, ALUMINUM, 25 PSI	1
-8	924776	09990	. POPPET VALVE ASSY.	1
-9	924319	09990	. HANDLE, DIVERTER	1
	926179	09990	. TUBE, HANDLE, DIVERTER	1
-10	N72350	09990	. O-RING, DIVERTER	1
-11	925972	09990	. HEAD, MACHINED ONLY	1
-12	924913	0999O	. FLANGE KIT, INLET	1
-13	924433	09990	. GROMMET	2
-14	932409	09990	. ELEMENT, 10B	1 ■
-15	924302	09990	. BOWL	1
-16	924782	09990	. FLANGE KIT, OUTLET	1
-17	924695	09990	. GASKET, SPONGE	4
	926126	09990	. GASKET, PAPER,	2
-18	924754	09990	. LOCKWASHER	4
-19	924861	09990	. SCREW, SOCKET HD., 10-24 X 5/8	4
	900445	09990	. SCREW, SOCKET HD., 10-24 X 1-1/2	4
-20	924776	09990	. INDICATOR, VISUAL	1
-21	V72010	0999	. O-RING	2

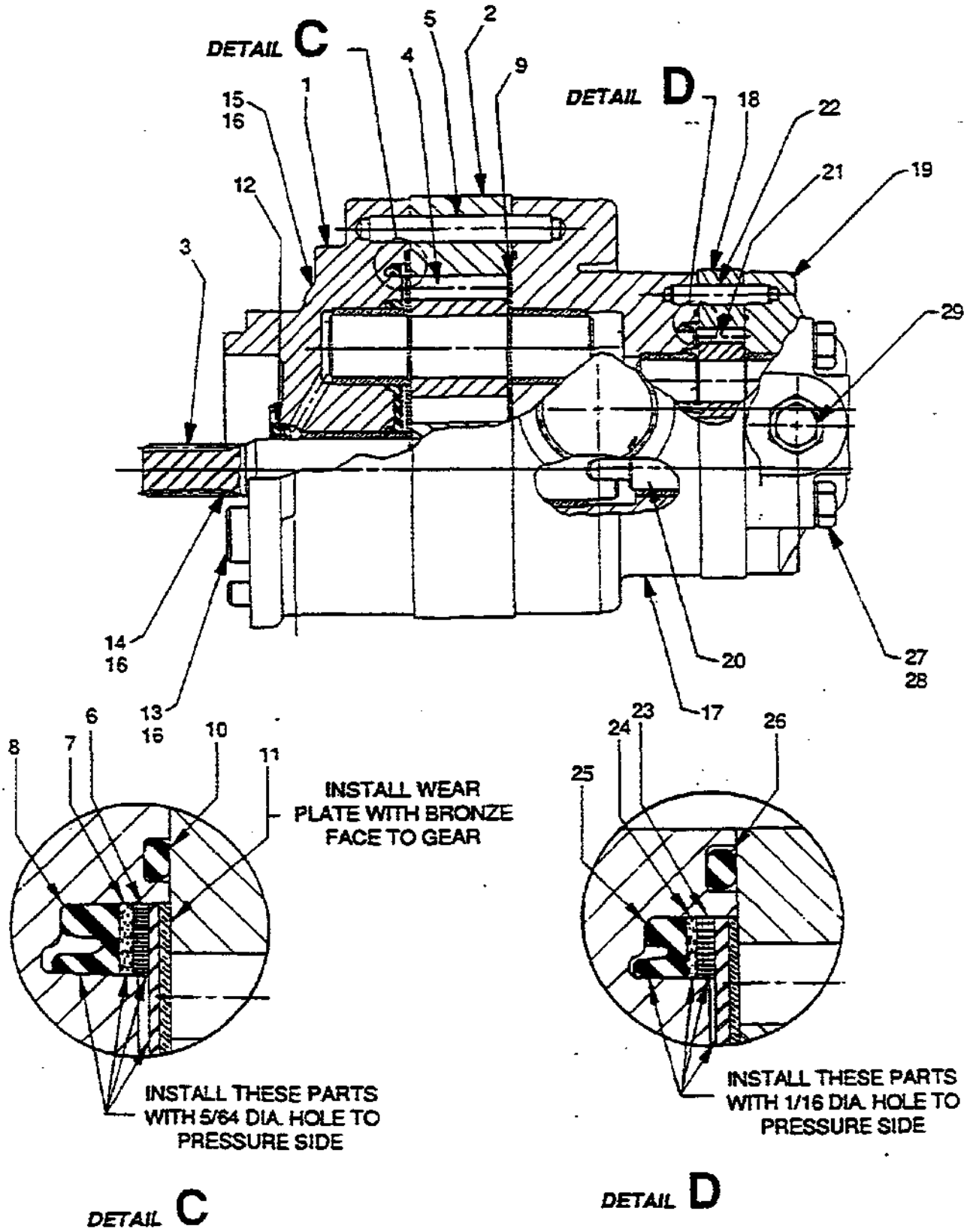

FIGURE 12.4 HYDRAULIC STEERING PUMP

FIG. & INDEX NO.	PART NO.	MFR. CODE	DESCRIPTION	QTY.
12.4			HYDRAULIC STEERING PUMP	
	83503	81381	PUMP, HYDRAULIC, HD77BK2A17N	1
-1	725321	09990	. FRONT COVER ASSY.	1
-2	675549	09990	. CENTER SECTION, FIRST STAGE	1
-3	835304	09990	. DRIVE GEAR ASSY.	1
-4	695639	09990	. DRIVEN GEAR ASSY., FIRST STAGE	1
-5	117X183	09990	. PIN, DOWEL, 2-1/4 INCH	2
-6	659942	09990	. SHIELD, HEAT	1
-7	656934	09990	. GASKET	1
-8	656934	09990	. SEAL	1
-9	675512	09990	. PLATE, THRUST	1
-10	104X41A	09990	. O-RING	2
-11	656928	09990	. PLATE, WEAR	1
-12	656941	09990	. SEAL, ROTARY	1
-13	116X35	09990	. SCREW, HEX HD	4
-14	115X37	09990	. SCREW, HEX HD	2
-15	118X35	09990	. SCREW, SOCKET HD	2
-16	34X144	09990	. WASHER	8
-17	766049	09990	. MID SECTION	1
-18	656559	09990	. CENTER SECTION, SECOND STAGE	1
-19	695947	09990	. BACK COVER ASSY.	1
-20	766033	09990	. DRIVE SHAFT ASSY.	1
-21	656241	09990	. DRIVEN GEAR ASSY., SECOND STAGE	1
-22	117X154	09990	. PIN, DOWEL	1
-23	655287	09990	. SHIELD, HEAT	1
-24	655288	09990	. GASKET	1
-25	655273	09990	. V-SEAL	1
-26	104-34A	09990	. O-RING	2
-27	116-2	09990	. SCREW	4
-28	34X143	09990	. WASHER	4
-29	68051	09990	. VALVE, RELIEF	1

CHAPTER 5

DRAWINGS

TABLE OF CONTENTS

TITLE	DRAWING NO.	REV.
Wiring Schematic, Speedometer for Tow Tractor	12882388	-
Installation Diagram, Typical Emergency Steering Option	12911450	A
Wiring Schematic, Tow Tractor Transmission & Shifter	12922459	A
Electrical Schematic, GT-50DZ Tow Tractor	12940821	-
Wiring Diagram, GT50 Tow Tractor with Deutz Engine	12940822	-
Wiring Schematic, Back-up Alarm	12941077	-
Schematic, Steering Control Circuit	12941079	-
Diagram, Hydraulic Circuit, Four Wheel Steering	12941163	A
Wiring Schematic, Flashing Beacon	12941205	-
Wiring Schematic, Emergency Back-up Steering System	12941217	-
Diagram, Standard Two Wheel Steering Circuit	12941675	A
Diagram, Two Mode, Four Wheel Steering	12941676	-

REVISIONS				
ZONE	LTR	DESCRIPTION	DATE	APPROVED

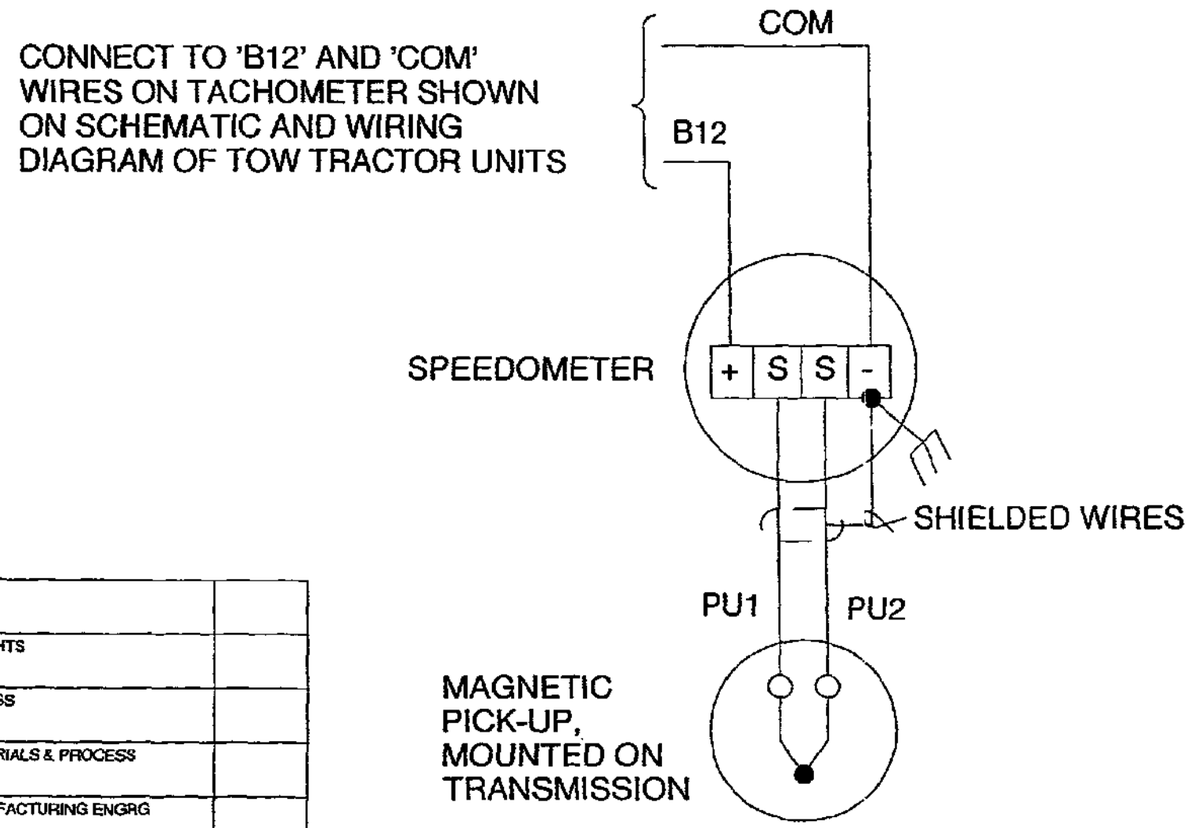

WEIGHTS	
STRESS	
MATERIALS & PROCESS	
MANUFACTURING ENGRG	
QUALITY ASSURANCE	
ADDITIONAL APPROVALS	DATE

QTY REQD	FSCM NO.	PART OR IDENTIFYING NO.	NOMENCLATURE OR DESCRIPTION	MATERIAL/SPECIFICATION	ITEM NO.

PARTS LIST

PART DASH NO.	NEXT	FINAL	NEXT ASSY	USED ON
		-		132333

QTY REQD PER ASSY	APPLICATION

UNLESS OTHERWISE SPECIFIED
DIMENSIONS ARE IN INCHES
TOLERANCES
DECIMALS .XX ± .03 .XXX ± .010
ANGULAR ±
DO NOT SCALE DRAWING

TREATMENT

FINISH

SIMILAR TO | ACT WT | CALC WT

CONTRACT NO.

		DATE
DRAWN	R.SOUTHARD	5/88
CHECK	D.DEARING	5/88
DESIGN	D.DEARING	5/88
DESIGN ACTIVITY		
CUSTOMER		

STEWART & STEVENSON SERVICES
P.O.BOX 1637 HOUSTON, TEXAS, U.S.A.

TITLE
WIRING SCHEMATIC, SPEEDOMETER FOR TOW TRACTOR UNITS

SIZE	FSCM NO.	DWG. NO.
A	81381	12882388

SCALE N/A | RELEASE DATE | SHEET 1 OF 1

REVISION				
ZONE	LTR	DESCRIPTION	DATE	APPROVED
	A	REVISED PER ECN #58180	5/5/92	JR

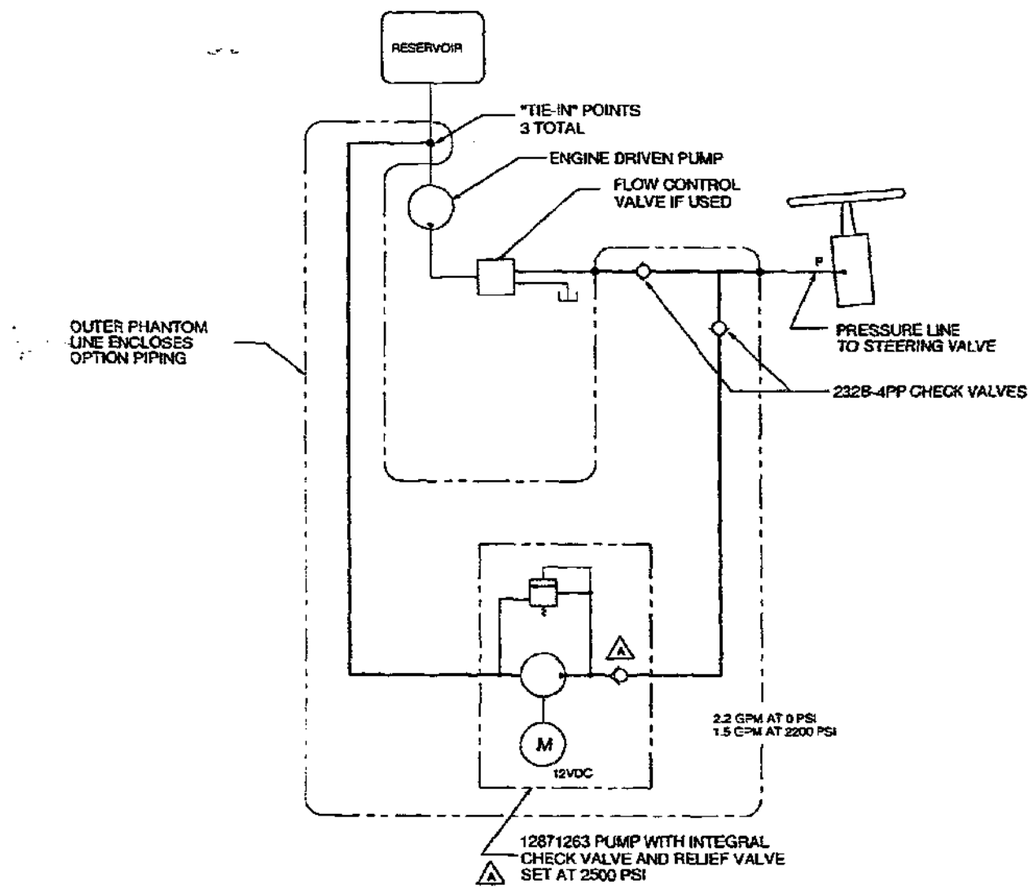

QTY REQD	FSCM NO.	PART OR IDENTIFYING NO.	NOMENCLATURE OR DESCRIPTION	MATERIAL/SPECIFICATION	ITEM NO.

PARTS LIST

WEIGHTS						
STRESS						
MATERIALS & PROCESS						
MANUFACTURING SHOWS						
QUALITY ASSURANCE					12693432	
ADDITIONAL APPROVALS	DATE	PART DASH NO.	NEXT	FINAL	NEXT ASSY	USED ON
			QTY REQD PER ASSY		APPLICATION	

UNLESS OTHERWISE SPECIFIED DIMENSIONS ARE IN INCHES
DECIMALS .XX ±.03 TOLERANCES ± ANGULAR
.XXX ±.010
DO NOT SCALE DRAWING

TREATMENT N/A
FINISH N/A
SIMILAR TO | ACT WT | CALC WT

CONTRACT NO.

		DATE
DRAWN	R.SOUTHARD	5/91
CHECK	J.RUSH	5/91
DESIGN	J.RUSH	5/91
DESIGN ACTIVITY		
CUSTOMER		

STEWART & STEVENSON SERVICES
P.O. BOX 1637 HOUSTON, TEXAS, U.S.A.

TITLE
INSTALLATION DIAGRAM,TYPICAL
EMERGENCY STEERING OPTION
12VDC DRIVEN HYD PUMP

SIZE	FSCM NO.	DWG NO.	
D	81381	12911450	A

SCALE N/A | RELEASE DATE | SHEET 1 OF 1

ZONE	LTR	DESCRIPTION	DATE	APPROVED
	A	REVISED PER ECN #60445	9/13/94	DD

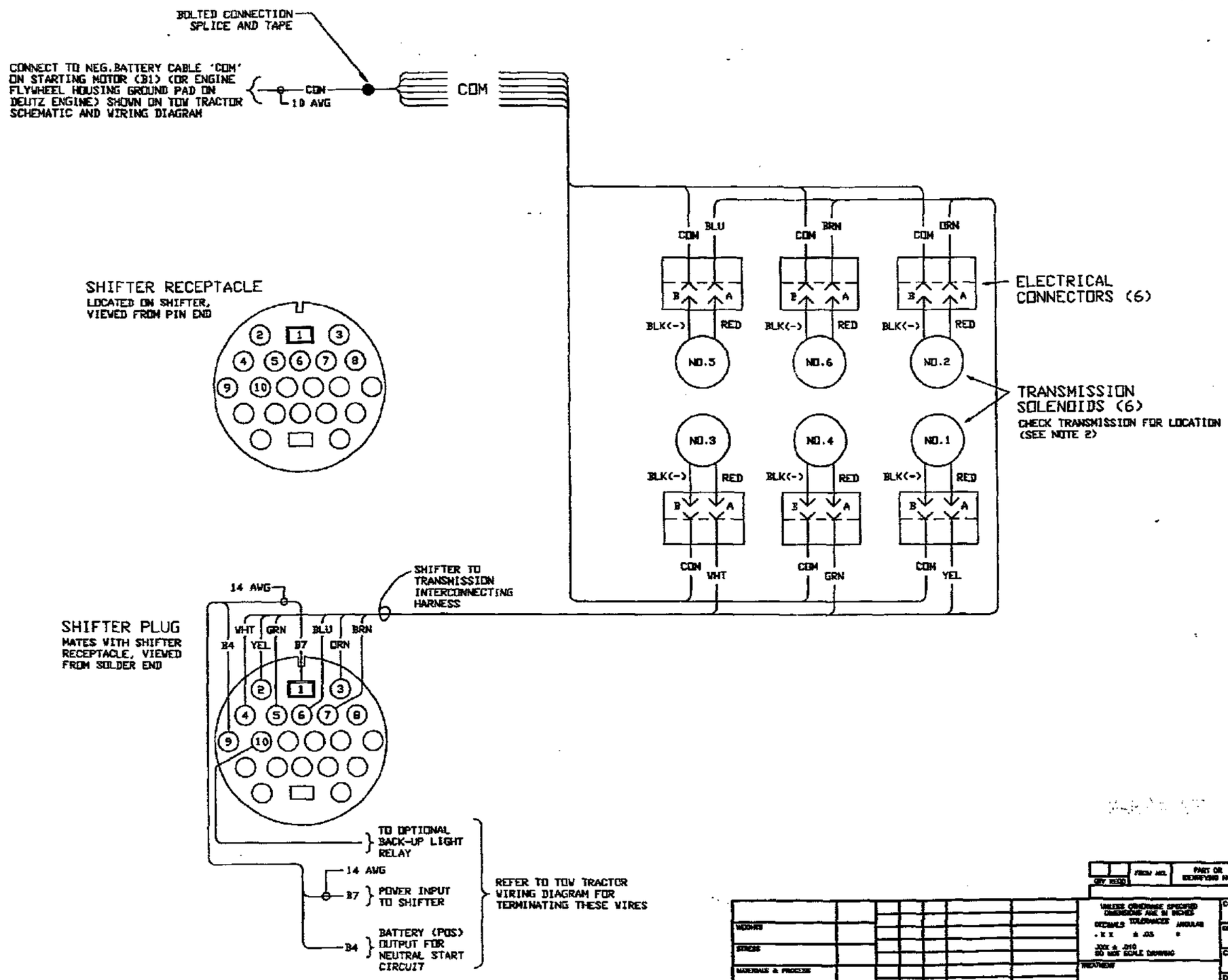

SHIFTER POSITION	SOLENOID NUMBER ENERGIZED	SHIFTER PLUG PIN NO.(S) ENERGIZED
R-3	3, 4	4, 5, 8, & 10
R-2	2, 4	3, 5, & 10
R-1	1, 4	2, 5, & 10
NEUTRAL		9
F-1	1, 6	2, 7
F-2	2, 6	3, 7
F-3	1, 5	2, 6
F-4	2, 5	3, 6, & 8
F-5	3, 6	4, 7, & 8
F-6	3, 5	4, 6, & 8

NOTES:

1. BATTERY POSITIVE POWER INPUT IS APPLIED TO SHIFTER PLUG PIN NO.1. THIS BATTERY POSITIVE INPUT SUPPLIES POWER TO ALL REMAINING PINS OF THE SHIFTER PLUG.
2. THE SOLENOID NO. WILL BE STAMPED NEXT TO THE SOLENOID VALVE BODY.

APPLICATION

1. SHIFTER
   A) FUNK P.N.4041014
   B) FUNK P.N.4041024
2. TRANSMISSION
   A) FUNK 5.2/1 RATIO, P.N.2263E13NB, SPEC.NO.10610A (S&SS P.N.83320)

QTY REQD	FROM NO.	PART OR IDENTIFYING NO.	NOMENCLATURE OR DESCRIPTION	MATERIAL/SPECIFICATION	ITEM NO.

PARTS LIST

WEIGHTS						
STRESS						
MATERIALS & PROCESS						
MANUFACTURING ENGRG						146758
QUALITY ASSURANCE						143294
ADDITIONAL APPROVALS	DATE	PART DASH NO.	NEXT	FINAL	NEXT ASSY	USED ON
			QTY REQD PER ASSY		APPLICATION	

UNLESS OTHERWISE SPECIFIED DIMENSIONS ARE IN INCHES
DECIMALS .XX ± .03 TOLERANCES ± .XXX ± .010 ANGULAR ±
DO NOT SCALE DRAWING

TREATMENT

FINISH

SIMILAR TO | ACT WT | CALC WT

CONTRACT NO.

		DATE
DRAWN	R.SOUTHARD	7/92
CHECK	P.J.RIVERA	6/94
DESIGN	D.DEARING	6/94
DESIGN ACTIVITY		
CUSTOMER		

STEWART & STEVENSON SERVICES
P.O. BOX 1637 HOUSTON, TEXAS, U.S.A.

TITLE: WIRING SCHEMATIC, TOW TRACTOR TRANSMISSION AND SHIFTER

SIZE	FSCM NO.	DWG NO.	REV.
D	81381	12922459	A

SCALE N/A | RELEASE DATE | SHEET 1 OF 1

REF NO.	DESCRIPTION	LOCATED ON SHEET NO.
A1	ASSEMBLY, ELECTRONIC SPEED SWITCH, ENERGIZES K6 AT 550 RPM	2
A2	ASSEMBLY, TURN SIGNALS	2
ALM	ALARM, ENGINE TROUBLE	2
B1	MOTOR, ENGINE STARTING	2
B2	MOTOR, BACK-UP BRAKE BOOSTER PUMP (BACK-UP TO ENGINE DRIVEN HYDRAULIC BRAKE PUMP) (WHEN ENGINE STALLS)	2
BT1A,B	BATTERY, 12V-DC SYSTEM	2
CB1	CIRCUIT BREAKER, 120 AMP, GLOW PLUGS	2
CR1,3,6	RECTIFIER, BLOCKING	2
CR2,4,5	RECTIFIER, DISCHARGE	2
DS1	LAMP, INDICATING, PARKING BRAKE ON	2
DS2	LAMP, ALTERNATOR FAILURE	2
DS3	NOT USED	—
DS4	LAMP, GLOW PLUG ENERGIZED	2
DS5	LAMP, HEAD, LEFT SIDE	2
DS6	LAMP, HEAD, RIGHT SIDE	2
DS7	LAMP, LEFT TAIL, PARKING, STOP/HAZARD	2
DS8	LAMP, RIGHT TAIL, PARKING, STOP/HAZARD	2
DS9	LAMP, LEFT FRONT, PARKING AND HAZARD	2
DS10	LAMP, RIGHT FRONT, PARKING AND HAZARD	2
DS11	LAMP, ENGINE HIGH COOLANT TEMPERATURE OR LOW LEVEL WARNING	2
DS12	LAMP, ENGINE LOW OIL PRESSURE WARNING	2
DS13	LAMP, BACK-UP BRAKE BOOSTER PUMP MOTOR ON	2
DS14	LAMP, PANEL ILLUMINATION	2
DS15,16	LAMP, BACK-UP	2
DS17	LAMP, WARNING, HANDBRAKE ON AND TRANSMISSION ENGAGED	2
ECU	ASSEMBLY, ELECTRONIC CONTROL UNIT, ENGINE GLOW PLUGS	2
F1	FUSE, 15 AMP, PARKING, TAIL LIGHTS	2
F2	FUSE, 20 AMP, ENGINE STARTING, ENGINE RUNNING AND INSTRUMENTS, BACK-UP LIGHTS, WARNING LIGHTS	2
F3	FUSE, 20 AMP, FOR OPTIONAL CAB HEATER, DEFROSTER	2
F4	FUSE, 20 AMP, ENGINE RUN SOLENOID,TRANSMISSION SHIFTER	2
F5	FUSE, 25 AMP, HEADLAMPS	2
F6	FUSE, 15 AMP, TURN SIGNAL, STOP/HAZARAD LIGHTS	2
F7	FUSE, 25 AMP, FOR OPTIONAL WINDSHIELD VIPER MOTORS, DOME LIGHT, VENTILATING FAN	2
F8	FUSE, 15 AMP, HORN	2
FL1	FLASHER, TURN SIGNAL AND HAZARD LAMPS	2
G1	ALTERNATOR, BATTERY CHARGING WITH INTERNAL VOLT. REG.	2
GA1	GAUGE, DIESEL FUEL LEVEL	2
GA2	GAUGE, ENGINE OIL PRESSURE	2
GA3	GAUGE, ENGINE COOLANT TEMPERATURE	2
GA4	GAUGE, TACHOMETER	2
GP1-6	GLOW PLUG, ENGINE	2
H1	HORN	2

REF NO.	DESCRIPTION	LOCATED ON SHEET NO.
K1	CONTACTOR, ENGINE STARTING	2
K2	RELAY, ENGINE RUN (IGNITION SWITCH ON)	2
K3	RELAY, HORN	2
K4	RELAY, BACK-UP BRAKE BOOSTER PUMP MOTOR CONTROL	2
K5	RELAY, ENERGIZED ONLY WHEN TRANSMISSION SHIFTER IN NEUTRAL POSITION	2
K6	RELAY, ENGINE RUNNING, ENERGIZED AT 550 RPM	2
K7	RELAY, BACK-UP LIGHTS	2
L1	SOLENOID, ENGINE STARTING MOTOR	2
L2	SOLENOID, ENGINE RUN, ENERGIZE TO RUN	2
L3	NOT USED	--
L4	SOLENOID, ENGINE EXCESS FUEL START ALLOWANCE	2
M1	METER, ELAPSED TIME	2
M2	METER, BATTERY VOLTAGE	2
PA	PLUG, MATES WITH ITEM PU1	2
PB	PLUG, MATES WITH ITEM R3	2
PC	PLUG, MATES WITH ITEM L4	2
PD	PLUG, MATES WITH ITEM R2	2
PE	PLUG, MATES WITH ITEM L2	2
PF	PLUG, MATES WITH ITEM S16	2
PG	PLUG, MATES WITH ITEM ECU	2
PU1	MAGNETIC PICKUP, SPEED SENSOR FOR ITEM A1	2
R1	SENDING UNIT, DIESEL FUEL LEVEL	2
R2	SENDING UNIT, COMBINATION ENGINE OIL PRESSURE GAUGE, LOW OIL PRESSURE SWITCH, N/C, CLOSES AT 5.8 PSI ON FALLING PRESSURE	2
R3	SENDING UNIT, COMBINATION ENGINE COOLANT TEMP.GAUGE, HIGH COOLANT TEMP.SWITCH (CLOSES AT 239°F)	2
R4	RESISTOR, BURDEN, 220 OHM, 3.25W	2
S1	SWITCH, ENGINE STOP/RUN/START, 3 POSITION, MAINTAINED CONTACTS IN STOP AND RUN, MOMENTARY CONTACTS IN START	2
S2-4	NOT USED	—
S5	SWITCH, HORN, PUSHBUTTON	2
S6	SWITCH, PARKING BRAKE	2
* S7	SWITCH, EMERGENCY ENGINE SHUTDOWN (OPTIONAL)	2
S8	NOT USED	—
S9	SWITCH, PARKING LIGHTS	2
S10	SWITCH, HYDRAULIC BRAKE PRESSURE, BRAKE LIGHTS	2
S11	SWITCH, HEADLAMP	2
S12-15	NOT USED	—
S16	SWITCH, ENGINE LOW COOLANT LEVEL	2
S17	SWITCH, HYDRAULIC BRAKE PRESSURE, BACK-UP BRAKE BOOSTER	2
S18,19	NOT USED	—
S20	SWITCH, PANEL LAMP	2
—	TRANSMISSION POSITION (SHIFTER) SELECTOR ASSEMBLY	2

LEGEND

STEWART & STEVENSON SERVICES
P.O. BOX 1637 HOUSTON, TEXAS, USA

R.SOUTHARD 5/94
P.J.RIVERA 7/94
D.DEARING 7/94

SCHEMATIC,
GT50 TOW TRACTOR
WITH DEUTZ ENGINE

F 81381 12940821

SCALE N/A SHEET 1 OF 2

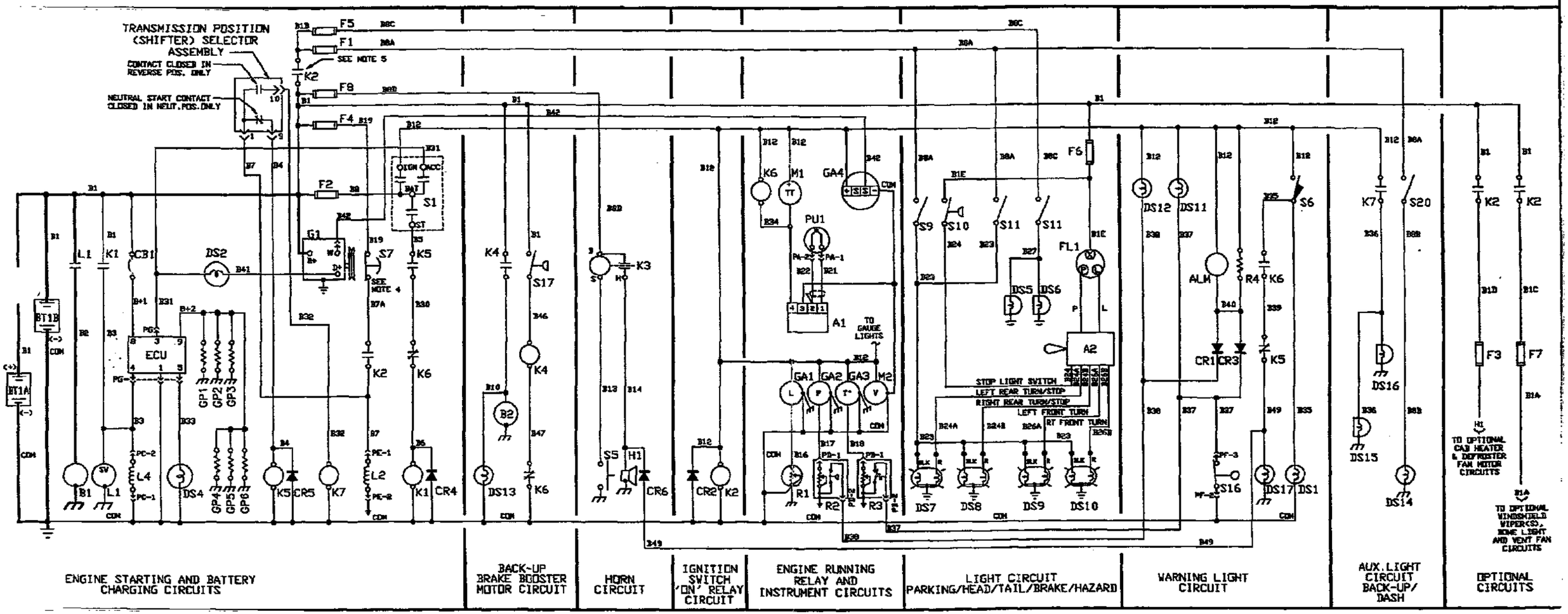

SEE SHEET 1 FOR LEGEND

NOTES:
1. ALL SWITCHES AND RELAYS SHOWN DE-ACTUATED (DE-ENERGIZED).
2. REFER TO S&SS DWG. 12940822 FOR UNIT WIRING DIAGRAM.
3. REFER TO S&SS DWG. 12941092 FOR ELECTRICAL EQUIPMENT LOCATION.
4. IF OPTIONAL SWITCH S7 IS NOT FURNISHED WIRES B19 AND B7A ARE SPLICED TOGETHER AND TAPED.
5. IF IT IS NOT DESIRED THAT K2 DISCONNECT HEAD, PARK AND TAIL LIGHTS A JUMPER IS PLACED ACROSS THESE CONTACTS.

STEWART & STEVENSON SERVICES
P.O. BOX 1637 HOUSTON, TEXAS U.S.A.

SCHEMATIC, GT50 TOW TRACTOR WITH DEUTZ ENGINE

R.SOUTHARD	5/94	
P.J.RIVERA	7/94	
D.DEARING	7/94	

F 81381 12940821

SCALE N/A 2 OF 2

ZONE	REV	DESCRIPTION	DATE	APPROVED
	A	REVISED PER ECN #90464	9/19/94	DO
	B	REVISED SH. 2 PER ECI #002005 (ECR #004628)	1/6/97	MC

LEGEND

LOCATION ON DWG. SHEET NO.-ZONE:	ITEM	DESCRIPTION
4-D1	A1	ASSEMBLY, ELECTRONIC SPEED SWITCH, ENERGIZES K6 AT 550 RPM
2-E8	A2	ASSEMBLY, TURN SIGNALS
2-F4	ALM	ALARM, ENGINE TROUBLE
4-G3	B1	MOTOR, ENGINE STARTING
3-F4	B2	MOTOR, BACK-UP BRAKE BOOSTER PUMP (BACK-UP TO ENGINE DRIVEN HYDRAULIC BRAKE PUMP) (WHEN ENGINE STALLS)
4-F4	BT1A,B	BATTERY, 12V-DC SYSTEM
4-F3	CB1	CIRCUIT BREAKER, 120 AMP, GLOW PLUGS
2-F4, F4, 3-B7	CR1,3,6	RECTIFIER, BLOCKING
3-B7, 4-F3, 3-C7	CR2,4,5	RECTIFIER, DISCHARGE
2-G4	DS1	LAMP, INDICATING, PARKING BRAKE ON
2-G4	DS2	LAMP, ALTERNATOR FAILURE
---	DS3	NOT USED
2-E7	DS4	LAMP, GLOW PLUG ENERGIZED
3-F8	DS5	LAMP, HEAD, LEFT SIDE
3-F3	DS6	LAMP, HEAD, RIGHT SIDE
4-D8	DS7	LAMP, LEFT TAIL, PARKING, STOP/HAZARD
4-D8	DS8	LAMP, RIGHT TAIL, PARKING, STOP/HAZARD
3-F8	DS9	LAMP, LEFT FRONT, PARKING AND HAZARD
3-F2	DS10	LAMP, RIGHT FRONT, PARKING AND HAZARD
2-G3	DS11	LAMP, ENGINE HIGH COOLANT TEMPERATURE OR LOW LEVEL WARNING
2-G4	DS12	LAMP, ENGINE LOW OIL PRESSURE WARNING
2-G3	DS13	LAMP, BACK-UP BRAKE BOOSTER PUMP MOTOR ON
2-D5	DS14	LAMP, PANEL ILLUMINATION
4-D8, D6	DS15,16	LAMP, BACK-UP
3-G8	DS17	LAMP, WARNING, HANDBRAKE ON AND TRANSMISSION ENGAGED
4-F1	ECU	ASSEMBLY, ELECTRONIC CONTROL UNIT, ENGINE GLOW PLUGS
3-D8	F1	FUSE, 15 AMP, PARKING, TAIL LIGHTS
3-D8	F2	FUSE, 20 AMP, ENGINE STARTING, ENGINE RUNNING AND INSTRUMENTS, BACK-UP LIGHTS, WARNING LIGHTS
3-D8	F3	FUSE, 20 AMP, FOR OPTIONAL CAB HEATER, DEFROSTER
3-D8	F4	FUSE, 20 AMP, ENGINE RUN SOLENOID,TRANSMISSION SHIFTER
3-D8	F5	FUSE, 25 AMP, HEADLAMPS
3-B5	F6	FUSE, 15 AMP, TURN SIGNAL, STOP/HAZARD LIGHTS
3-D6	F7	FUSE, 25 AMP, FOR OPTIONAL WINDSHIELD WIPER MOTORS, DOME LIGHT, VENTILATING FAN
3-D6	F8	FUSE, 15 AMP, HORN
2-E8	FL1	FLASHER, TURN SIGNAL AND HAZARD LAMPS
4-G5	G1	ALTERNATOR, BATTERY CHARGING WITH INTERNAL VOLT. REG.
2-E4	GA1	GAUGE, DIESEL FUEL LEVEL
2-E6	GA2	GAUGE, ENGINE OIL PRESSURE
2-E5	GA3	GAUGE, ENGINE COOLANT TEMPERATURE
2-G8	GA4	GAUGE, TACHOMETER
4-G8/7	GP1-6	GLOW PLUG, ENGINE
3-F8	H1	HORN
4-B7	J1	RECEPTACLE, MATES WITH P1
4-D4	J2	RECEPTACLE, MATES WITH P2
3-F5	J3	RECEPTACLE, MATES WITH P3
3-F7	J4	RECEPTACLE, MATES WITH P4
4-B8	J5	RECEPTACLE, MATES WITH P5
4-D5	J6	RECEPTACLE, MATES WITH P6
4-F2	K1	CONTACTOR, ENGINE STARTING
3-B8	K2	RELAY, ENGINE RUN (IGNITION SWITCH ON)
3-C6	K3	RELAY, HORN
3-D7	K4	RELAY, BACK-UP BRAKE BOOSTER PUMP MOTOR CONTROL

LEGEND (CONT.)

LOCATION ON DWG. SHEET NO.-ZONE:	ITEM	DESCRIPTION
3-C7	K5	RELAY, ENERGIZED ONLY WHEN TRANSMISSION SHIFTER IN NEUTRAL POSITION
4-D2	K6	RELAY, ENGINE RUNNING, ENERGIZED AT 550 RPM
4-D2	K7	RELAY, BACK-UP LIGHTS
4-G3	L1	SOLENOID, ENGINE STARTING MOTOR
4-F7	L2	SOLENOID, ENGINE RUN, ENERGIZE TO RUN
---	L3	NOT USED
4-F8	L4	SOLENOID, ENGINE EXCESS FUEL START ALLOWANCE
2-E3	M1	METER, ELAPSED TIME
2-E5	M2	METER, BATTERY VOLTAGE
2-B/C3	P1	PLUG, MATES WITH J1
4-G7	P2	PLUG, MATES WITH J2
2-B8	P3	PLUG, MATES WITH J3
2-B7	P4	PLUG, MATES WITH J4
2-B5	P5	PLUG, MATES WITH J5
4-G6	P6	PLUG, MATES WITH J6
4-F8	PA	PLUG, MATES WITH ITEM PU1
4-G8	PB	PLUG, MATES WITH ITEM R3
4-F8	PC	PLUG, MATES WITH ITEM L4
4-F6	PD	PLUG, MATES WITH ITEM R2
4-F7	PE	PLUG, MATES WITH ITEM L2
4-F5	PF	PLUG, MATES WITH ITEM S16
4-F1	PG	PLUG, MATES WITH ITEM ECU
4-F8	PU1	MAGNETIC PICKUP, SPEED SENSOR FOR ITEM A1
4-D7	R1	SENDING UNIT, DIESEL FUEL LEVEL
4-F6	R2	SENDING UNIT, COMBINATION ENGINE OIL PRESSURE GAUGE, LOW OIL PRESSURE SWITCH, N/C, CLOSES AT 5.8 PSI ON FALLING PRESSURE
4-G8	R3	SENDING UNIT, COMBINATION ENGINE COOLANT TEMP.GAUGE, HIGH COOLANT TEMP.SWITCH (CLOSES AT 239°F)
2-F4	R4	RESISTOR, BURDEN, 220 OHM, 3.25W
2-G7	S1	SWITCH, ENGINE STOP/RUN/START, 3 POSITION, MAINTAINED CONTACTS IN STOP AND RUN, MOMENTARY CONTACTS IN START
---	S2-4	NOT USED
3-F7	S5	SWITCH, HORN, PUSHBUTTON
4-B3	S6	SWITCH, PARKING BRAKE
3-G7 *	S7	SWITCH, EMERGENCY ENGINE SHUTDOWN (OPTIONAL)
---	S8	NOT USED
2-G8	S9	SWITCH, PARKING LIGHTS
3-F3	S10	SWITCH, HYDRAULIC BRAKE PRESSURE, BRAKE LIGHTS
2-G7	S11	SWITCH, HEADLAMP
---	S12-15	NOT USED
4-F5	S16	SWITCH, ENGINE LOW COOLANT LEVEL
3-F4	S17	SWITCH, HYDRAULIC BRAKE PRESSURE, BACK-UP BRAKE BOOSTER
---	S18,19	NOT USED
2-G5	S20	SWITCH, PANEL LAMP
2-G6	SPLC1-5	SPLICE FOR A2 CONNECTION
3-F3	SPLC6	SPLICE
2-B6	--	TRANSMISSION POSITION (SHIFTER) SELECTOR ASSEMBLY
3-B6, F8, F3/2	TB1-3	TERMINAL BOARD
4-E7, C4, C1/2, H8	TB4-7	TERMINAL BOARD

NOTES:

1. ALL SWITCHES AND RELAYS SHOWN DE-ACTUATED (DE-ENERGIZED).
2. ALL WIRE SIZES TO BE 16 AWG UNLESS OTHERWISE NOTED.
3. REFER TO S&SS DRAWING 12940821 FOR UNIT SCHEMATIC
4. REFER TO S&SS DRAWING 12941092 FOR ELECTRICAL EQUIPMENT LOCATION DIAGRAM.

LEGEND

DRAWN	R.SOUTHARD	5/94
CHECK	P.J.RIVERA	7/94
ENGRG	B.DEARING	7/94

STEWART & STEVENSON SERVICES
P.O. BOX 1637 HOUSTON, TEXAS, USA

WIRING DIAGRAM, GT50 TOW TRACTOR WITH DEUTZ ENGINE

SIZE	FSCM NO.	DWG NO.	REV
B	81381	12940822	B

SCALE N/A SHEET 1 OF 4

REV	SYM	DESCRIPTION	DATE	APPROVED
	A	REVISED PER ECN #00464	9/19/96	DD
	B	REVISED SH. 2 & 3 PER ECI #062805 (ECR #004626)	1/6/97	MC

INSTRUMENT PANEL - REAR VIEW - INVERTED

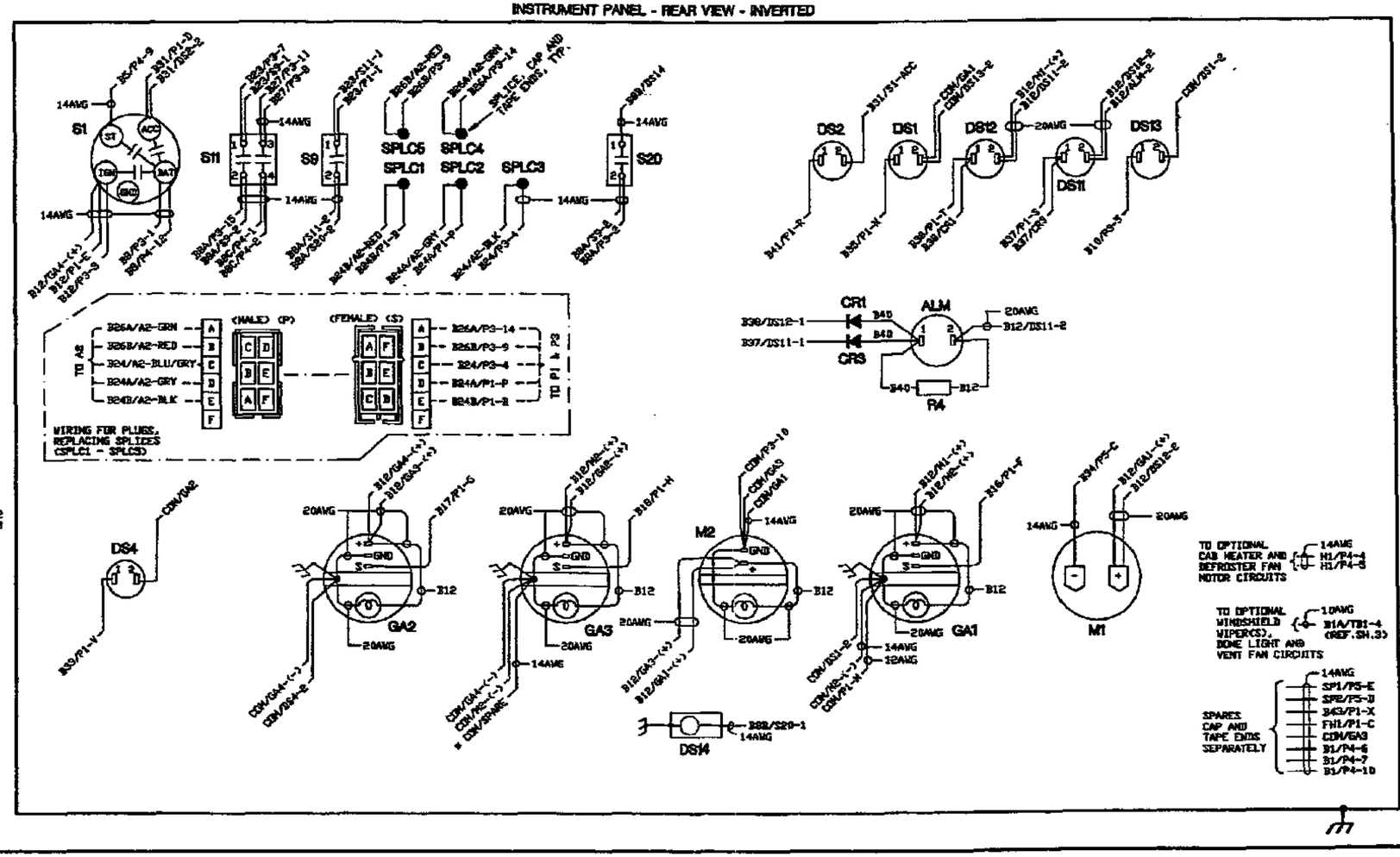

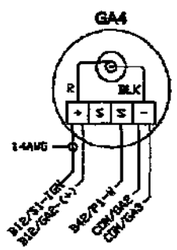

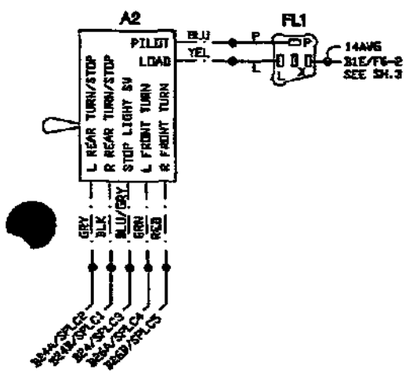

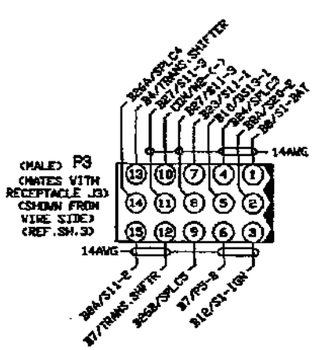

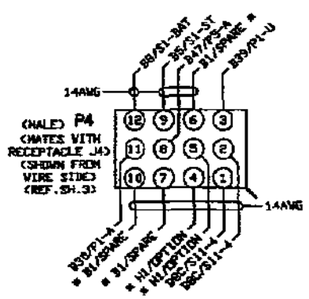

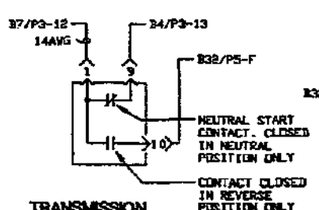

TRANSMISSION POSITION (SHIFTER) SELECTOR ASSEMBLY

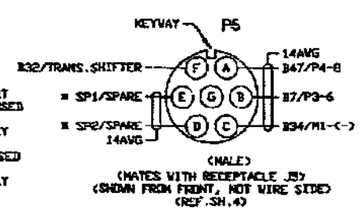

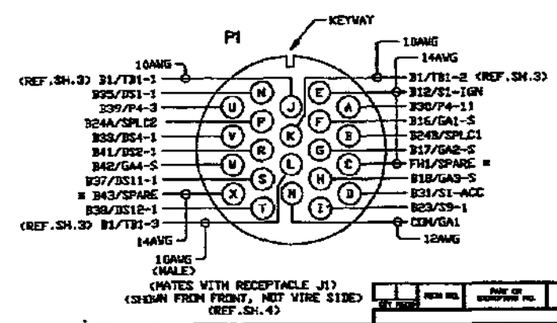

NOTE:
* THESE WIRES ARE TERMINATED IN ZONES D2, E2.

SEE SHEET 1 FOR LEGEND AND NOTES

DRAWN	R. SOUTHARD	6/94	
CHECK	P.J. RIVERA	7/94	
DESIGN	B. DEARING	7/94	

146758

STEWART & STEVENSON SERVICES
P.O. BOX 1637 HOUSTON, TEXAS, U.S.A.

WIRING DIAGRAM, GT50 TOW TRACTOR WITH DEUTZ ENGINE

SIZE	PROJ. NO.	DWG. NO.	REV.
B	81381	12940822	B

SCALE N/A SHEET 2 OF 4

ZONE	LTR	DESCRIPTION	DATE	APPROVED
	A	REVISED PER ECN #60464	9/19/94	DD
	B	REVISED SH. 2 & 3 PER ECI #082605 (ECR #004828)	1/8/97	MC

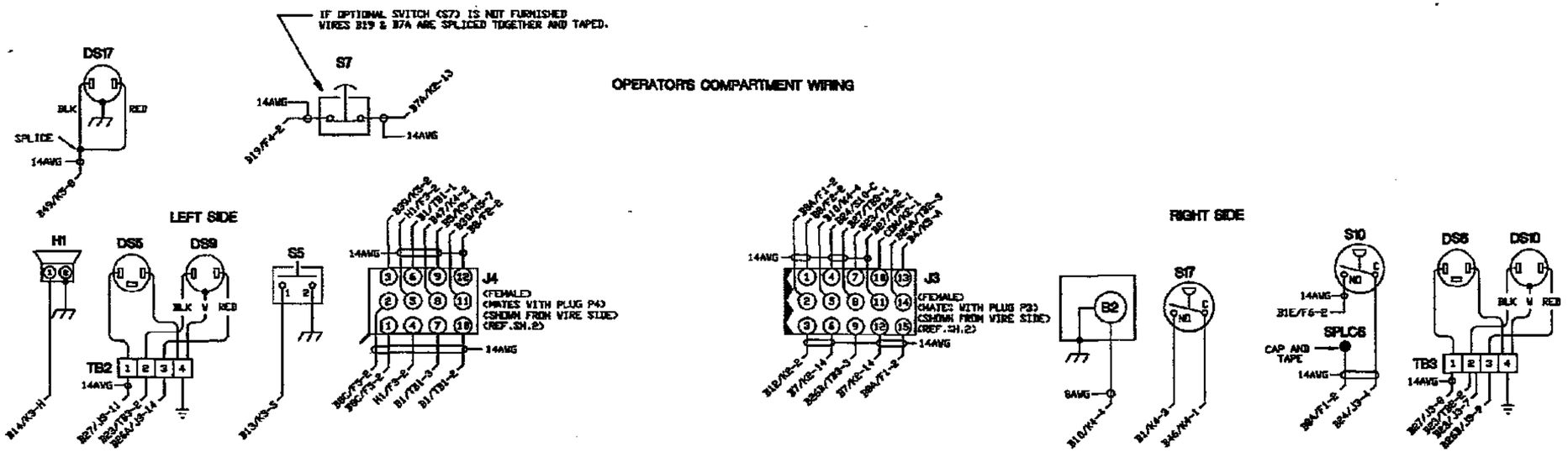

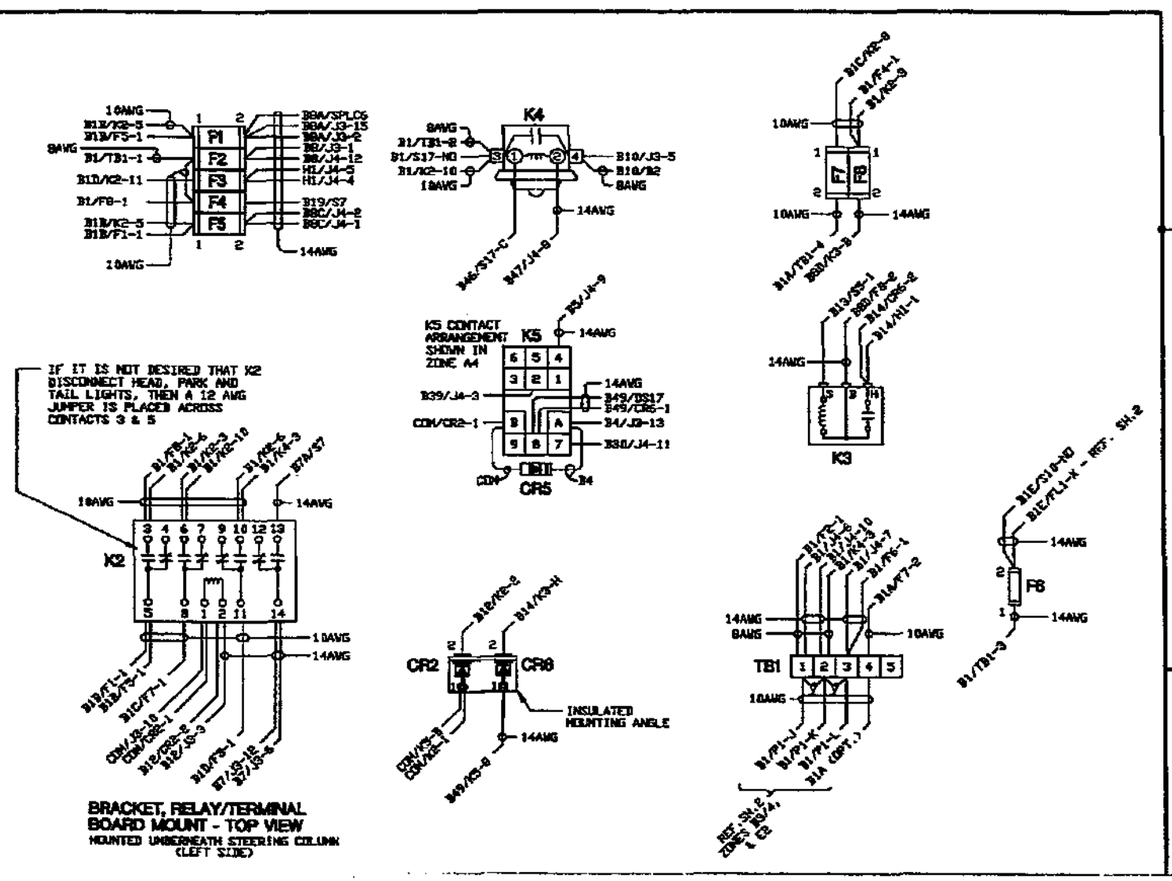

BRACKET, RELAY/TERMINAL BOARD MOUNT - TOP VIEW
MOUNTED UNDERNEATH STEERING COLUMN (LEFT SIDE)

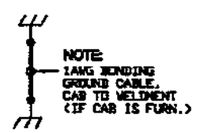

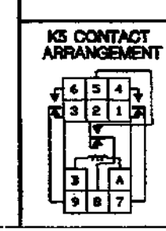

SEE SHEET 1 FOR LEGEND AND NOTES

STEWART & STEVENSON SERVICES
P.O. BOX 1637 HOUSTON, TEXAS, USA

DRAWN	B.SOUTHARD	6/94
CHECK	P.J.RIVERA	7/94
APPR	B.BEARING	7/94

TITLE: WIRING DIAGRAM, GT60 TOW TRACTOR WITH DEUTZ ENGINE

SIZE	CODE IDENT NO.	DWG NO.	REV
B	81381	12940822	B

SCALE N/A | SHEET 3 OF 4

SYM	CH	DESCRIPTION	DATE	APPROVED
	A	REVISED PER ECN #60484	9/19/94	DD

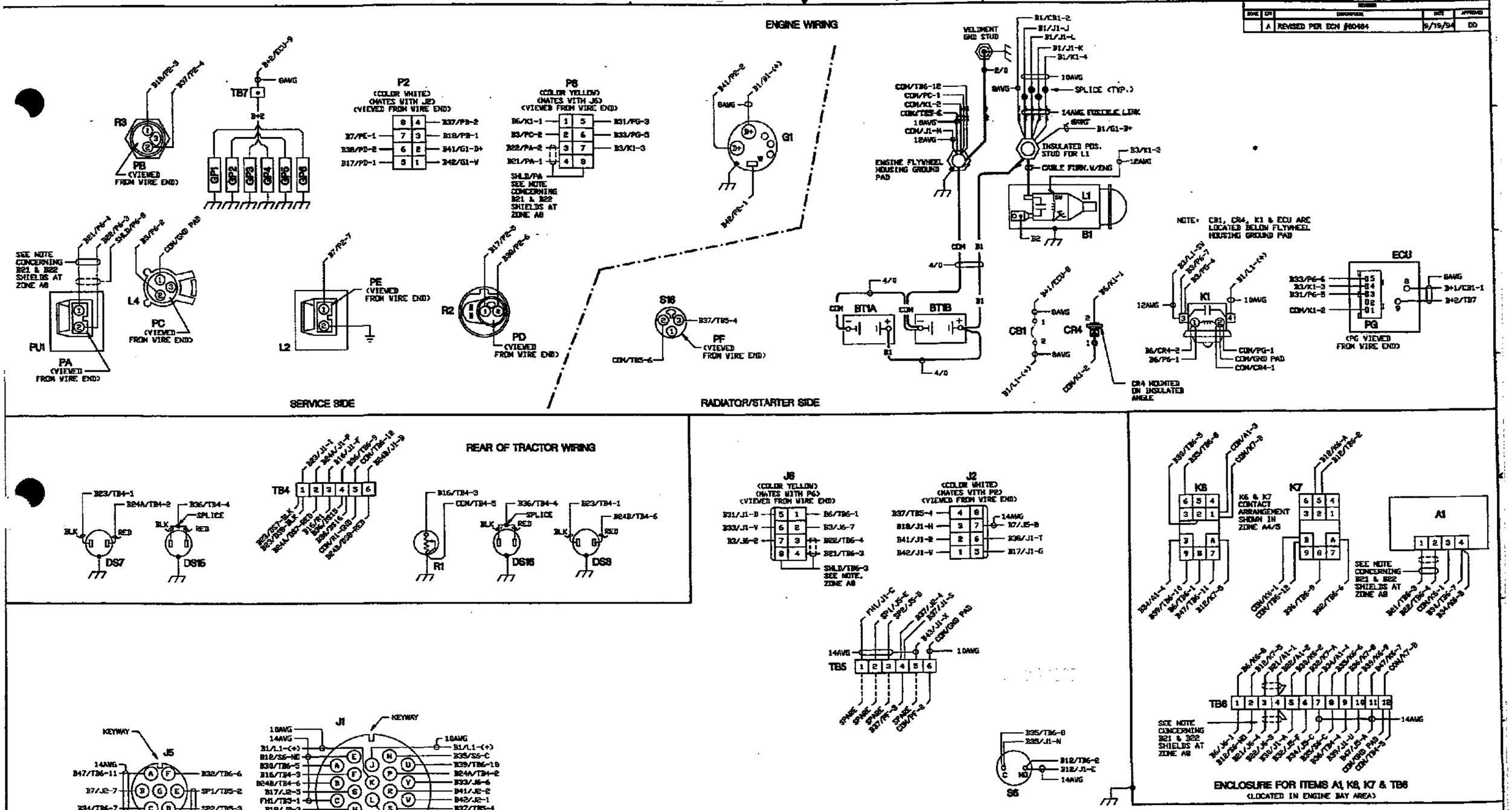

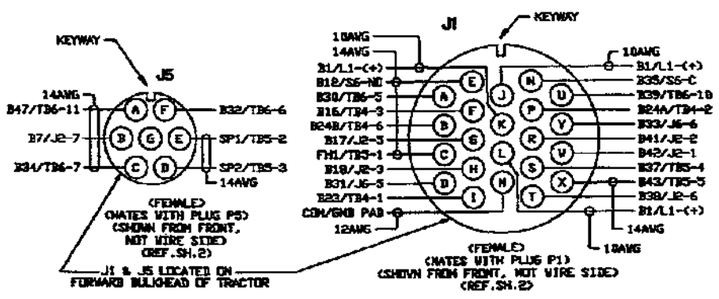

NOTE: 18 AWG SHIELDED PAIR, WITH INSULATED OUTER JACKET. SHIELD IS NOT GROUNDED AND IS TO CONNECT TO WIRE B22 AT TB6-4.

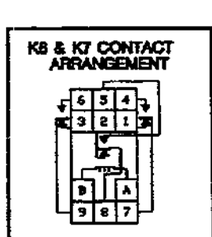

SEE SHEET 1 FOR LEGEND AND NOTES

STEWART & STEVENSON SERVICES
P.O. BOX 1637 HOUSTON, TEXAS, USA.

DRAWN	R.SOUTHARD	6/94
CHECKED	P.J.RIVERA	7/94
ENGINEER	B.DEARING	7/94

WIRING DIAGRAM, GT50 TOW TRACTOR WITH DEUTZ ENGINE

SIZE	FSCM NO.	DWG NO.	REV
B	81361	12940822	B

SCALE N/A WEIGHT SHEET 4 OF 4

REVISIONS				
ZONE	LTR	DESCRIPTION	DATE	APPROVED

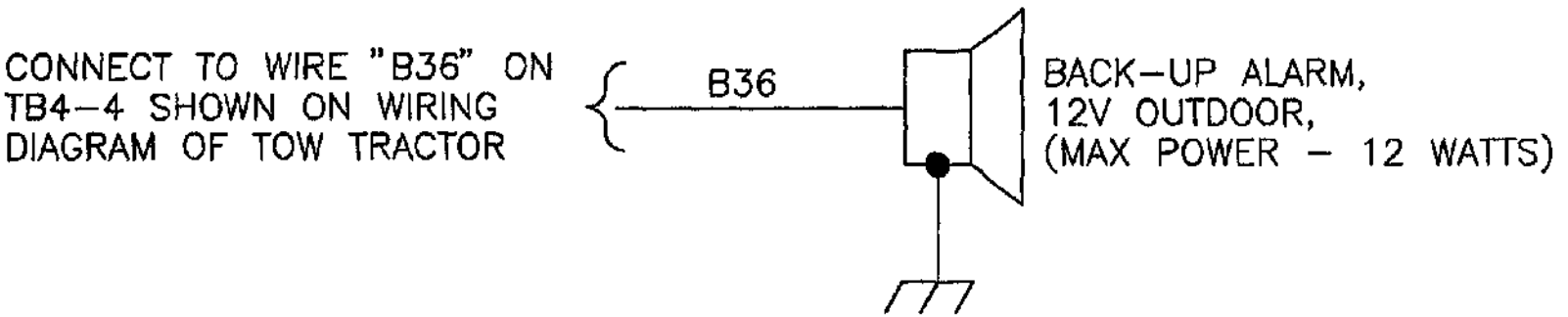

WEIGHTS	
STRESS	
MATERIALS & PROCESS	
MANUFACTURING ENGRG	
QUALITY ASSURANCE	
ADDITIONAL APPROVALS	DATE

QTY REQD	FSCM NO.	PART OR IDENTIFYING NO.	NOMENCLATURE OR DESCRIPTION	MATERIAL/SPECIFICATION	ITEM NO.

PARTS LIST

PART DASH NO.	NEXT	FINAL	NEXT ASSY	USED ON
				146758
	QTY REQD PER ASSY		APPLICATION	

UNLESS OTHERWISE SPECIFIED
DIMENSIONS ARE IN INCHES
TOLERANCES
DECIMALS .XX ± .03 .XXX ± .010
ANGULAR ±
DO NOT SCALE DRAWING

TREATMENT

FINISH

SIMILAR TO | ACT WT | CALC WT

CONTRACT NO.

		DATE
DRAWN	R.SOUTHARD	5/94
CHECK	P.J.RIVERA	5/94
DESIGN	D.DEARING	5/94
DESIGN ACTIVITY		
CUSTOMER		

STEWART & STEVENSON SERVICES
P.O.BOX 1637 HOUSTON, TEXAS, U.S.A.

TITLE
WIRING SCHEMATIC, BACK-UP ALARM, ACTIVATED BY TRANSMISSION SHIFTER AUX. RELAY FOR TOW TRACTOR

SIZE	FSCM NO.	DWG. NO.
A	81381	12941077

SCALE	RELEASE DATE	SHEET
N/A		1 OF 1

REVISION				
ZONE	LTR	DESCRIPTION	DATE	APPROVED

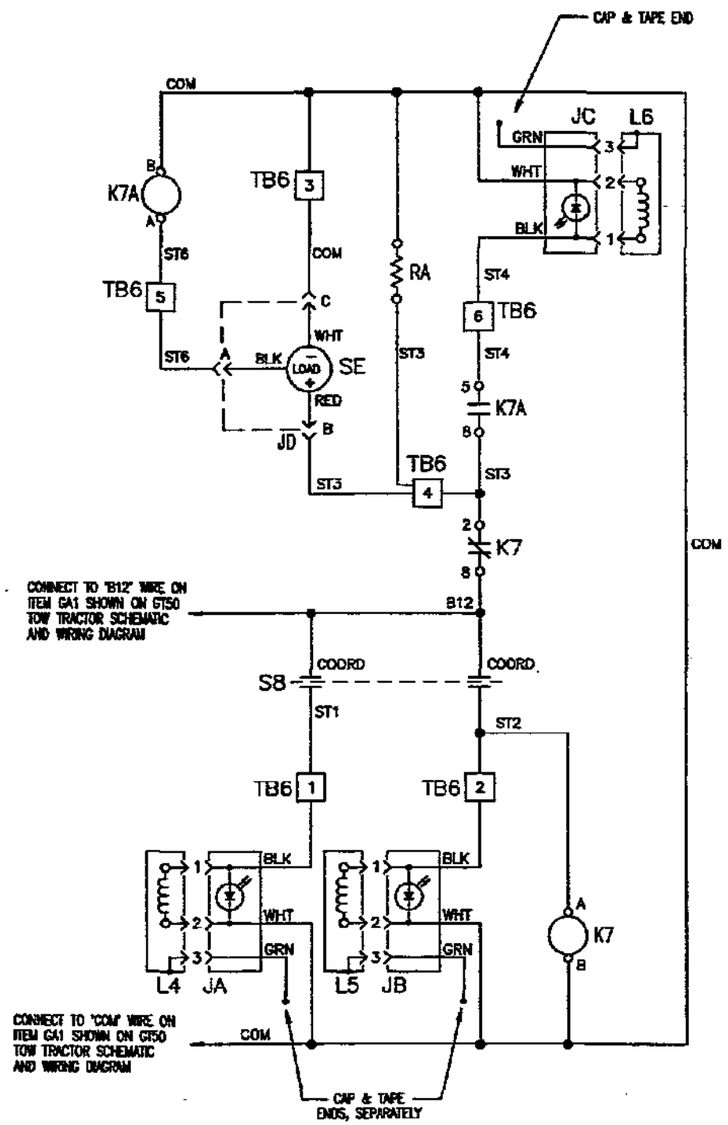

LEGEND

K7	RELAY, DISABLES REAR WHEEL TRACK CENTERING CIRCUIT (WHEN OPERATING IN COORD MODE)
K7A	RELAY, TRACK LOCKING. ENERGIZES SOLENOID L6 WHICH LOCKS REAR WHEELS IN CENTER POSITION (WHEN OPERATING IN TRACK MODE)
JA–C	CONNECTOR WITH LED WHICH INDICATES SOLENOID ENERGIZED
JD	CONNECTOR, MAGNETIC REED SWITCH
L4	SOLENOID, SELECTS COORD STEERING MODE WHEN ENERGIZED (ACTUATES COORD CLUTCH CONTROL) N/C ORIFICE
L5	SOLENOID, SELECTS TRACK STEERING MODE WHEN DE–ENERGIZED (ACTUATES TRACK CLUTCH CONTROL) N/O ORIFICE
L6	SOLENOID, REAR WHEEL TRACK LOCKING. ENERGIZED TO LOCK REAR WHEELS IN CENTER POSITION (WHEN OPERATING IN TRACK MODE)
RA	RESISTOR, BURDEN, 220 OHM, 3–1/4W
S8	SWITCH, STEERING MODE SELECTOR, 2 POSTION (TRACK–COORD)
SE	SENSOR, MAGNETIC REED SWITCH, ENERGIZES RELAY K7A WHEN REAR WHEELS ARE CENTERED (WHEN OPERATING IN TRACK MODE)
TB6	TERMINAL BOARD

NOTE:

1. THE STEERING CONTROL CIRCUIT IS SHOWN WIRED FOR TWO MODE STEERING SYSTEM (TRACK–COORD).

MAR 0 9 1997

QTY REQD	FSCM NO.	PART OR IDENTIFYING NO.	NOMENCLATURE OR DESCRIPTION	MATERIAL/SPECIFICATION	ITEM NO.

PARTS LIST

WEIGHT							
STRESS							
MATERIALS & PROCESS							
MANUFACTURING ENGRG							
QUALITY ASSURANCE							146758
ADDITIONAL APPROVALS	DATE	PART DASH NO.	NEXT	FINAL	NEXT ASSY	USED ON	
			QTY REQD PER ASSY		APPLICATION		

UNLESS OTHERWISE SPECIFIED DIMENSIONS ARE IN INCHES
DECIMALS .XX ± .03 TOLERANCES ANGULAR ±
.XXX & .010 DO NOT SCALE DRAWING

TREATMENT

FINISH

SIMILAR TO | ACT WT | CALC WT

CONTRACT NO.		
DRAWN	R.SOUTHARD	6/94
CHECK	P.J.RIVERA	6/94
DESIGN	D.DEARING	6/94
DESIGN ACTIVITY		
OVERSEER		

STEWART & STEVENSON SERVICES
P.O. BOX 1637 HOUSTON, TEXAS, U.S.A.

TITLE
SCHEMATIC, STEERING CONTROL CIRCUIT, TWO MODE, TRACK/COORD, GT50 TOW TRACTOR

SIZE	FSCM NO.	DWG NO.
D	81381	12941079

SCALE N/A | RELEASE DATE | SHEET 1 OF 1

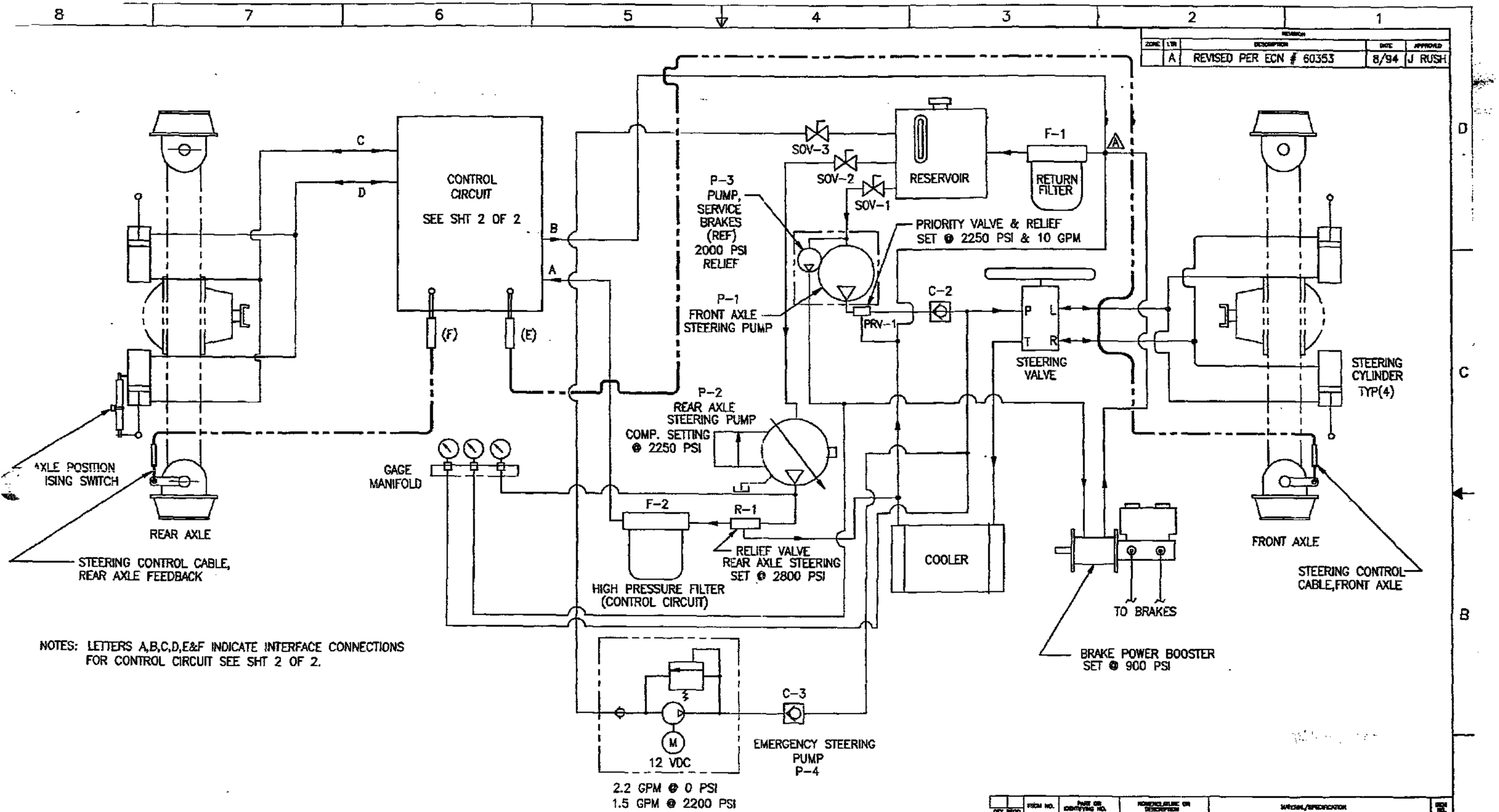

NOTES: LETTERS A,B,C,D,E&F INDICATE INTERFACE CONNECTIONS FOR CONTROL CIRCUIT SEE SHT 2 OF 2.

QTY REQD	FSCM NO.	PART OR IDENTIFYING NO.	NOMENCLATURE OR DESCRIPTION	MATERIAL/SPECIFICATION	ITEM NO.

PARTS LIST

WEIGHTS						
STRESS						
MATERIALS & PROCESS						
MANUFACTURING ENGRG						
QUALITY ASSURANCE						
ADDITIONAL APPROVALS	DATE	PART DASH NO.	NEXT	FINAL	NEXT ASSY	USED ON
			QTY REQD PER ASSY		APPLICATION	

UNLESS OTHERWISE SPECIFIED DIMENSIONS ARE IN INCHES
TOLERANCES
DECIMALS .XX ± .010 .XXX ± .010
ANGULAR ±
DO NOT SCALE DRAWING

TREATMENT
FINISH
SIMILAR TO | ACT WT | CALC WT

CONTRACT NO.		
DRAWN	BOB FORD	6/94
CHECK	J RUSH	6/94
DESIGN	J RUSH	6/94
DESIGN ACTIVITY		
CUSTOMER		

STEWART & STEVENSON SERVICES
P.O. BOX 1637 HOUSTON, TEXAS, U.S.A.

TITLE
HYDRAULIC CIRCUIT FOUR WHEEL STEERING GT-50 TOW TRACTOR

SIZE	FSCM NO.	DWG NO.	
D	81381	12941163	A

SCALE | RELEASE DATE | SHEET 1 OF 2

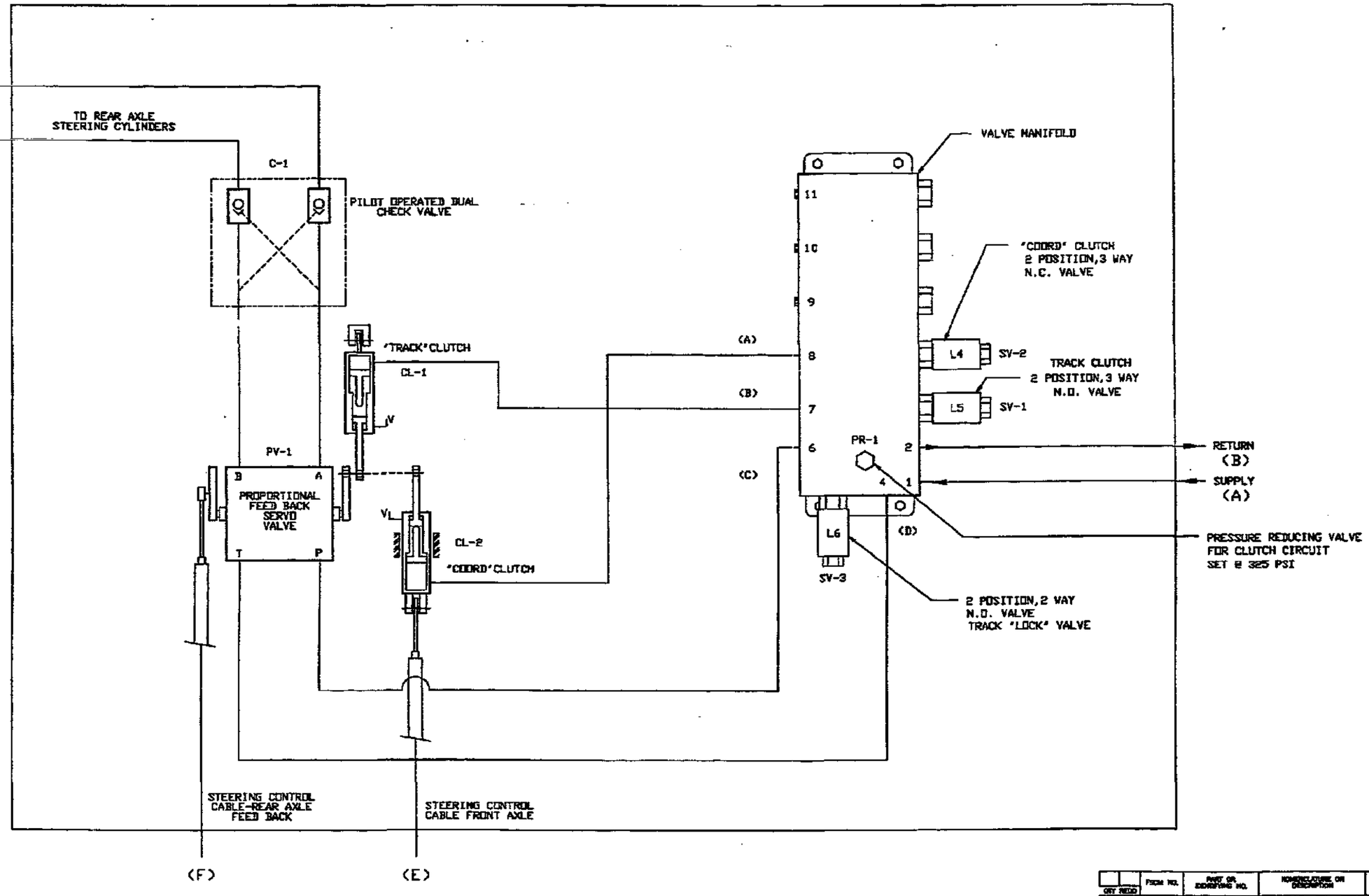

NOTE: A,B,C,D,E & F ARE INTERFACE CONNECTIONS.
SEE SHEET 1 OF 2

ZONE	LTR	REVISION DESCRIPTION	DATE	APPROVED

QTY REQD		FIGM NO.	PART OR IDENTIFYING NO.	NOMENCLATURE OR DESCRIPTION	MATERIAL/SPECIFICATION	ITEM NO.

PARTS LIST

WEIGHTS
SIZES
MATERIALS & PROCESS
MANUFACTURING ENGRG
QUALITY ASSURANCE
ADDITIONAL APPROVALS — DATE

PART DASH NO.	NEXT	FINAL	NEXT ASSY	USED ON
	QTY REQD PER ASSY		APPLICATION	

UNLESS OTHERWISE SPECIFIED DIMENSIONS ARE IN INCHES
DECIMALS .XX ± .03 TOLERANCES ANGULAR ±
.XXX ± .010 DO NOT SCALE DRAWING

TREATMENT
FINISH
SIMILAR TO — ACT WT — CALC WT

CONTRACT NO.

		DATE
DRAWN	J MORALES	6/94
CHECK	J RUSH	6/94
DESIGN	J RUSH	6/94
DESIGN ACTIVITY		
CUSTOMER		

STEWART & STEVENSON SERVICES
P.O. BOX 1637 HOUSTON, TEXAS, U.S.A.

TITLE
HYDRAULIC CIRCUIT, FOUR WHEEL STEERING, GT-50 TOW TRACTOR

SIZE D — FIGM NO. 81381 — DWG NO. 12941163
SCALE NTS — REVISE DATE — SHEET 2 OF 2

REVISIONS				
ZONE	LTR	DESCRIPTION	DATE	APPROVED

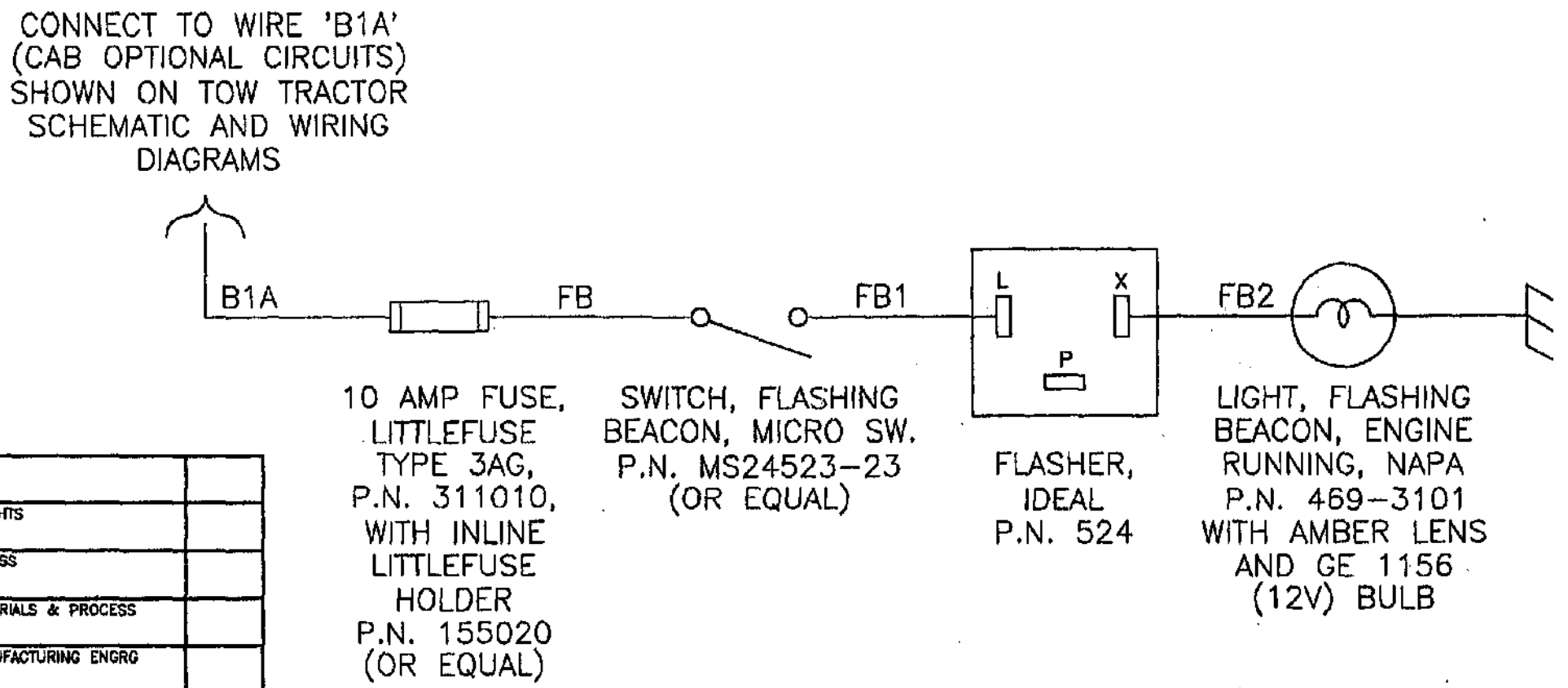

WEIGHTS	
STRESS	
MATERIALS & PROCESS	
MANUFACTURING ENGRG	
QUALITY ASSURANCE	
ADDITIONAL APPROVALS	DATE

QTY REQD		FSCM NO.	PART OR IDENTIFYING NO.	NOMENCLATURE OR DESCRIPTION	MATERIAL/SPECIFICATION	ITEM NO.

PARTS LIST

PART DASH NO.	NEXT	FINAL	NEXT ASSY	USED ON
				146758

QTY REQD PER ASSY | APPLICATION

UNLESS OTHERWISE SPECIFIED DIMENSIONS ARE IN INCHES
TOLERANCES
DECIMALS .XX ± .03 .XXX ± .010
ANGULAR ±
DO NOT SCALE DRAWING

TREATMENT

FINISH

SIMILAR TO | ACT WT | CALC WT

CONTRACT NO.

		DATE
DRAWN	R.SOUTHARD	6/94
CHECK	P.J.RIVERA	6/94
DESIGN	D.DEARING	6/94
DESIGN ACTIVITY		
CUSTOMER		

STEWART & STEVENSON SERVICES
P.O.BOX 1637 HOUSTON, TEXAS, U.S.A.

TITLE WIRING SCHEMATIC, FLASHING BEACON, OPERATES WHEN TRACTOR ENGINE IS RUNNING, TOW TRACTOR UNIT

SIZE	FSCM NO.	DWG. NO.
A	81381	12941205

SCALE N/A | RELEASE DATE | SHEET 1 OF 1

REVISIONS				
ZONE	LTR	DESCRIPTION	DATE	APPROVED

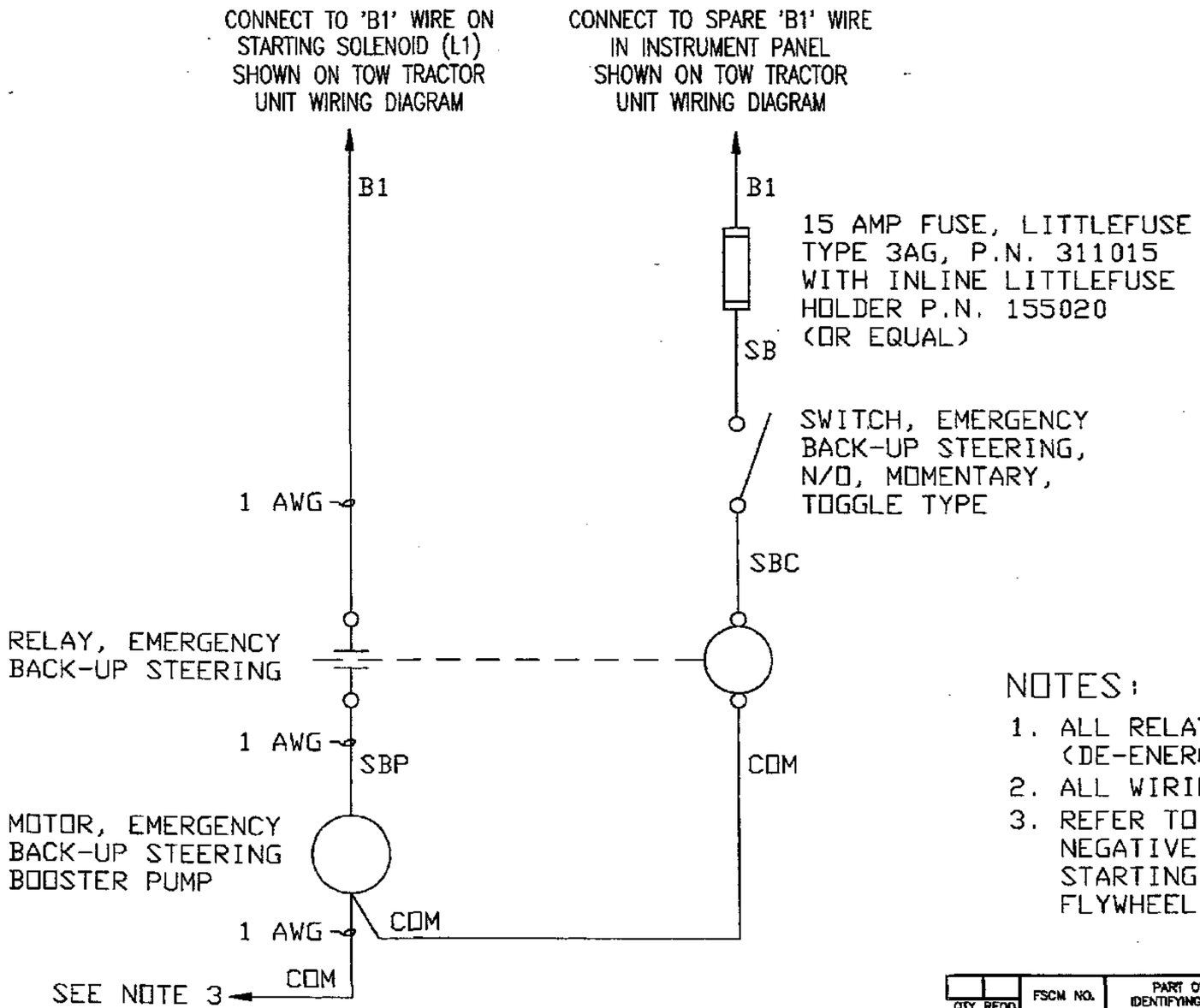

NOTES:

1. ALL RELAYS AND SWITCHES SHOWN DE-ACTUATED (DE-ENERGIZED).
2. ALL WIRING TO BE 16 AWG UNLESS OTHERWISE NOTED.
3. REFER TO UNIT WIRING DIAGRAM AND CONNECT TO NEGATIVE BATTERY CABLE (MARKED 'COM') AT ENGINE STARTING MOTOR ON CAT ENGINE OR AT ENGINE FLYWHEEL HOUSING GROUND PAD ON DEUTZ ENGINE.

QTY REQD	FSCM NO.	PART OR IDENTIFYING NO.	NOMENCLATURE OR DESCRIPTION	MATERIAL/SPECIFICATION	ITEM NO.

PARTS LIST

WEIGHTS						
STRESS						
MATERIALS & PROCESS						
MANUFACTURING ENGRG						146758
QUALITY ASSURANCE		PART DASH NO.	NEXT	FINAL	NEXT ASSY	USED ON
ADDITIONAL APPROVALS	DATE		QTY REQD PER ASSY		APPLICATION	

UNLESS OTHERWISE SPECIFIED DIMENSIONS ARE IN INCHES TOLERANCES
DECIMALS .XX ± .03 .XXX ± .010 ANGULAR ±
DO NOT SCALE DRAWING

TREATMENT

FINISH

SIMILAR TO | ACT WT | CALC WT

CONTRACT NO.

		DATE
DRAWN	R.SOUTHARD	6/94
CHECK	D.DEARING	6/94
DESIGN	D.DEARING	6/94
DESIGN ACTIVITY		
CUSTOMER		

STEWART & STEVENSON SERVICES
P.O.BOX 1637 HOUSTON,TEXAS,U.S.A.

TITLE
WIRING SCHEMATIC,
EMERGENCY BACK-UP STEERING SYSTEM
FOR GT50 TOW TRACTOR

SIZE	FSCM NO.	DWG. NO.
B	81381	12941217

SCALE N/A | RELEASE DATE | SHEET 1 OF 1

REVISION				
ZONE	LTR	DESCRIPTION	DATE	APPROVED
	A	REVISED PER ECN #60593	11/94	JR
	B	REVISED PER ECN #60957	3/95	JR

QTY REQD	FROM NO.	PART OR IDENTIFYING NO.	NOMENCLATURE OR DESCRIPTION	MATERIAL/SPECIFICATION	ITEM NO.
2	81381	85740	HOSE,ASSY.	BULKHEAD TO HYD.CYLINDER	30
1	81381	12904283	BULKHEAD PLATE		29
2	81381	85762	ADAPTER	90°BULKHEAD UNION	28
1	81381	85763	ADAPTER	90°BULKHEAD UNION	27
1	81381	85743	HOSE,ASSY.	FLOW DIVIDER TO BULKHEAD	26
1	81381	85764	ADAPTER	90°BULKHEAD UNION	25
1	01276	2215-12 -10S	ADAPTER,UNION	37°FLARE	24
1	81381	12941636	HOSE,ASSY.	BULKHEAD TO HYD.COOLER	23
REF	81381	DB-1231	HEAT EXCHANGER	HYD.COOLER	22
2	81381	76958	ADAPTER,ELBOW	90°	21
1	81381	12941637	HOSE,ASSY.	HYD.COOLER TO FILTER	20
2	81381	86054	CAP,37°	FLARE,5/8"TUBE	19
REF	93061	V500P-16	VALVE	BALL, SHUTOFF,1"	18
1	93061	V500P-24	VALVE	BALL, SHUTOFF,1-1/2"	17
1	81381	12940839	FILTER,ASSY.	HYD.FLUID	16
1	81381	76969	ADAPTER,ELBOW	90°	15
1	81381	84634	MANIFOLD	HYD.RETURN	14
1	81381	12904102	HOSE,ASSY.	FLOW DIVIDER TO FILTER	13
1	81381	12904103	HOSE,ASSY.	FLOW DIVIDER TO FILTER	12
1	81381	76958	ADAPTER,ELBOW	90°	11
1	81381	76927	ADAPTER,CONN		10
1	81381	76953	ADAPTER,ELBOW	90°	9
1	81381	78104	ADAPTER	EXPANDER O-RING	8
1	81381	83502	FLOW DIVIDER	WITH RELIEF	7
			NOT USED		6
1	81381	12941632	HOSE,ASSY.	TANK TO STEERING PUMP	5
1	81381	12940316	HYD.,TANK		4
1	30780	12-F50 F50-S	ADAPTER,CONN	UNION	3
1	81381	76967	ADAPTER,ELBOW	90°	2
REF	81381	83503	HYD.,PUMP	GEAR TYPE	1

PARTS LIST

SEE NOTE 1

SEE NOTE 2 B

A

QTY REQD	FROM NO.	PART OR IDENTIFYING NO.	NOMENCLATURE OR DESCRIPTION	MATERIAL/SPECIFICATION	ITEM NO.
4	81381	85421	PIVOT,PIN	STEERING CYL.(NOT SHOWN)	46
2	81381	73826	BOLT	3/8-16 NC X 3/4"	45
2	81381	73790	LOCKWASHER	3/8"	44
1	81381	77790	STEERING	COLUMN	43
REF	81381	78341	VALVE,STEERING		42
1	81381	76924	ADAPTER	O-RING CONN.	41
1	81381	76924	ADAPTER	O-RING CONN.	40
2	81381	76923	ADAPTER	O-RING CONN.	39
1	81381	90327	HOSE,ASSY.	BULKHEAD TO ORBITROL "L"	38
1	81381	90326	HOSE,ASSY.	BULKHEAD TO ORBITROL "R"	37
1	81381	90328	HOSE,ASSY.	BULKHEAD TO ORBITROL "T"	36
1	81381	90329	HOSE,ASSY.	BULKHEAD TO ORBITROL "P"	35
2	81381	85739	HOSE,ASSY.	CYLINDER CROSSOVER	34
2	81381	76956	ADAPTER,ELBOW	90°	33
2	81381	12883378	HYD.CYLINDER		32
2	81381	84726	ADAPTER,TEE	5/8"TUBE	31

PARTS LIST

NOTE:
1. ITEM 19 NOT USED WITH 4 WHEEL STEERING OPTION.
2. ITEM 18 USED ONLY WITH OPTIONAL EMERGENCY STEERING PUMP. SHOWN HERE FOR REFERENCE ONLY.

B

B	B	REV
2	1	SHEET

REV STATUS OF SHEETS

WEIGHT
STRESS
MATERIALS & PROCESS
MANUFACTURING ENGINEER
QUALITY ASSURANCE
ADDITIONAL APPROVALS — DATE

PART DASH NO.	NEXT	FINAL	NEXT ASSY	USED ON
	QTY REQD ASSY		APPLICATION	

UNLESS OTHERWISE SPECIFIED DIMENSIONS ARE IN INCHES
DECIMALS TOLERANCES ANGULAR
.XX ± .03 ±
.XXX ± .010
DO NOT SCALE DRAWING

TREATMENT
FINISH
SIMILAR TO — ACT WT — CALC WT

CONTRACT NO.
DRAWN J HERALES 9/94
CHECK J.RUSH 9/94
DESIGN J.RUSH 9/94
DESIGN ACTIVITY
CUSTOMER

STEWART & STEVENSON SERVICES
P.O. BOX 1637 HOUSTON, TEXAS, U.S.A.

TITLE
STANDARD TWO WHEEL STEERING CIRCUIT
GT50 TOW TRACTOR/DEUTZ ENG.

SIZE	FROM NO.	DWG NO.	
D	81381	12941675	B

ZONE	LTR	DESCRIPTION	DATE	APPROVED
	A	REVISED PER ECN #60593	11/94	JR
	B	REVISED PER ECN #60957	3/95	JR

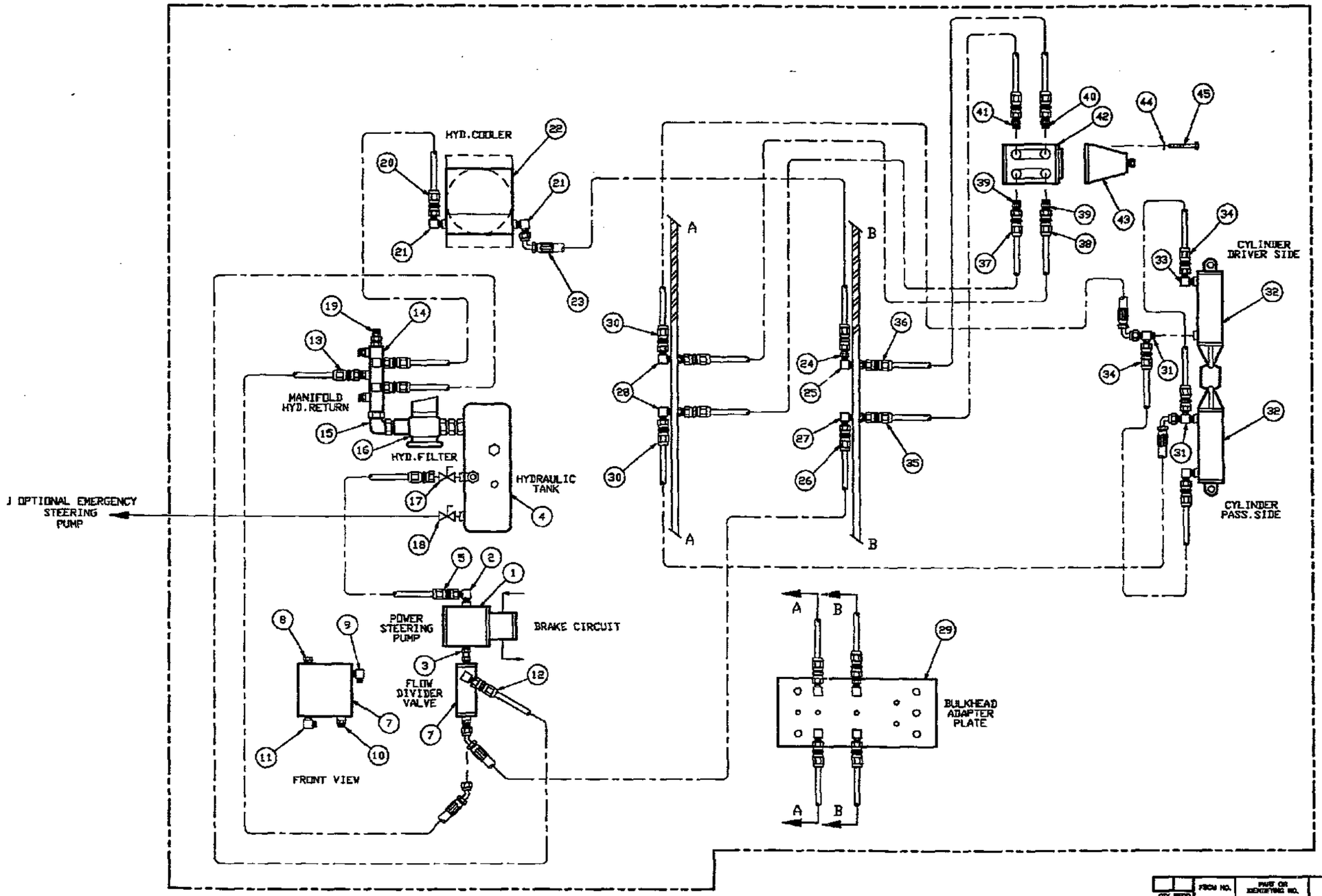

QTY REQD	FSCM NO.	PART OR IDENTIFYING NO.	NOMENCLATURE OR DESCRIPTION	MATERIAL/SPECIFICATION	ITEM NO.

PARTS LIST

WEIGHTS
STRESS
MATERIALS & PROCESS
MANUFACTURING ENGRG
QUALITY ASSURANCE
ADDITIONAL APPROVALS — DATE

PART DASH NO.	NEXT	FINAL	NEXT ASSY	USED ON
	QTY REQD PER ASSY		APPLICATION	

UNLESS OTHERWISE SPECIFIED DIMENSIONS ARE IN INCHES
DECIMALS TOLERANCES ANGULAR
.XX ± .03 ±
.XXX ± .010
DO NOT SCALE DRAWING

TREATMENT
FINISH
SIMILAR TO — ACT WT — CALC WT

CONTRACT NO.
DRAWN — J MORALES — DATE 9/94
CHECK — J.RUSH — 9/94
DESIGN — J.RUSH — 9/94
DESIGN ACTIVITY
CUSTOMER

STEWART & STEVENSON SERVICES
P.O. BOX 1637 HOUSTON, TEXAS, U.S.A.

TITLE
STANDARD TWO WHEEL STEERING CIRCUIT
GT50 TOW TRACTOR/DEUTZ ENG.

SIZE D — FSCM NO. 81381 — DWG NO. 12941675 — B

ZONE	LTR	REVISION DESCRIPTION	DATE	APPROVED

QTY REQD	FSCM NO.	PART OR IDENTIFYING NO.	NOMENCLATURE OR DESCRIPTION	MATERIAL/SPECIFICATION	ITEM NO.
1	81381	V500P-24	VALVE	BALL,SHUTOFF,1-1/2"	42
2	81381	99757	BOLT	1/4"-20NC X 3-1/2" LG	41
4	81381	85421	PIN,PIVOT	CYLINDER,STEERING	40
-1	81381	12893103	AXLE	DRIVE,RIGID (NOT SHOWN)	39
+1	81381	12893102	AXLE	DRIVE,STEERABLE (NOT SHOWN)	38
2	81381	12921153	SPACER	FILTER MOUNTING	37
1	81381	12900024	BRACKET	CABLE MOUNTING,REAR AXLE (NOT SHOWN)	36
1	81381	12912910	BRACKET	CABLE MOUNTING,FRONT AXLE (NOT SHOWN)	35
2	81381	12912273	PLATE	CABLE PIVOT,AXLE (NOT SHOWN)	34
1	81381	12921176	BRACKET	RELIEF VALVE	33
2	81381	12883378	CYLINDER	STEERING	32
2	81381	85739	HOSE,ASSY	CROSSOVER	31

PARTS LIST

QTY REQD	FSCM NO.	PART OR IDENTIFYING NO.	NOMENCLATURE OR DESCRIPTION	MATERIAL/SPECIFICATION	ITEM NO.
4	81381	76956	ADAPTER,ELL	90°,5/8 TUBE	30
2	81381	203102-10 -10S	TEE		29
1	81381	12912987	HOSE,ASSY	REAR STEERING AXLE,LH	28
1	81381	12912990	HOSE,ASSY	REAR STEERING AXLE,RH	27
REF	81381	12941189	HOSE,ASSY	FILTER TO STEERING BOARD	26
1	81381	76932	ADAPTER CONN.	1/2 TUBE	25
1	81381	85177	FILTER	HYDRAULIC	24
1	81381	76958	ADAPTER,ELL	90°,1/2 TUBE	23
1	81381	12912991	HOSE,ASSY	RELIEF TO FILTER	22
1	81381	VPRP5B-3AA -280	VALVE	RELIEF	21
1	81381	76927	ADAPTER CONN.	1/2 TUBE	20
1	81381	76933	ADAPTER CONN.	5/8 TUBE	19
1	81381	203102-8 -8S	TEE		18
1	81381	221501-8 -4S	REDUCER		17
1	81381	12912923	HOSE,ASSY	PUMP PILOT	16
1	81381	76945	ADAPTER,ELL	90°,1/4 TUBE	15
1	81381	12912981	HOSE,ASSY	PUMP TO RELIEF	14
1	81381	76958	ADAPTER,ELL	1/2 TUBE	13
1	81381	76913	ADAPTER CONN.	3/8 TUBE	12
1	81381	202702-20 -20S	ADAPTER		11
1	81381	83501	PUMP	HYD,PISTON	10
1	81381	83412	KIT	PUMP DRIVE	9
REF	81381	12941187	HOSE,ASSY	RETURN STEERING TO MANIFOLD	8
1	81381	12941188	HOSE,ASSY	RELIEF TO RETURN	7
1	81381	12912995	HOSE,ASSY	SUCTION	6
1	81381	84903	ADAPTER,ELL	90°,1-1/4 TUBE	5
1	81381	98541	HOSE,ASSY	DRAIN	4
1	81381	75359	ADAPTER,ELL	90°,3/8 TUBE	3
1	81381	12941396		CONTROL CIRCUIT,TWO MODE	2
REF	81381	12941675	CIRCUIT	2 WHEEL STEERING,STANDARD	1

PARTS LIST

MAR 06 1997

WEIGHTS			
STRESS			
MATERIALS & PROCESS			
MANUFACTURING ENGRG			
QUALITY ASSURANCE			
ADDITIONAL APPROVALS	DATE		

PART DASH NO.	NEXT	FINAL	NEXT ASSY	USED ON
	QTY REQD PER ASSY		APPLICATION	

–	–	REV	REV STATUS OF SHEETS
2	1	SHEET	

UNLESS OTHERWISE SPECIFIED DIMENSIONS ARE IN INCHES
TOLERANCES
DECIMALS .XX ± .03 ANGULAR ±
.XXX ± .010
DO NOT SCALE DRAWING

TREATMENT

FINISH

SIMILAR TO | ACT WT | CALC WT

CONTRACT NO.

		DATE
DRAWN	J.MORALES	9/94
CHECK	J.RUSH	9/94
DESIGN	J.RUSH	9/94
DESIGN ACTIVITY		
CUSTOMER		

STEWART & STEVENSON SERVICES
P.O. BOX 1637 HOUSTON, TEXAS, U.S.A.

TITLE
PARTS LIST,GT50 TWO MODE, FOUR WHEEL STEERING DEUTZ ENGINE

SIZE D | FSCM NO. 81381 | DWG NO. 12941676

SCALE NTS | RELEASE DATE | SHEET 1 OF 2

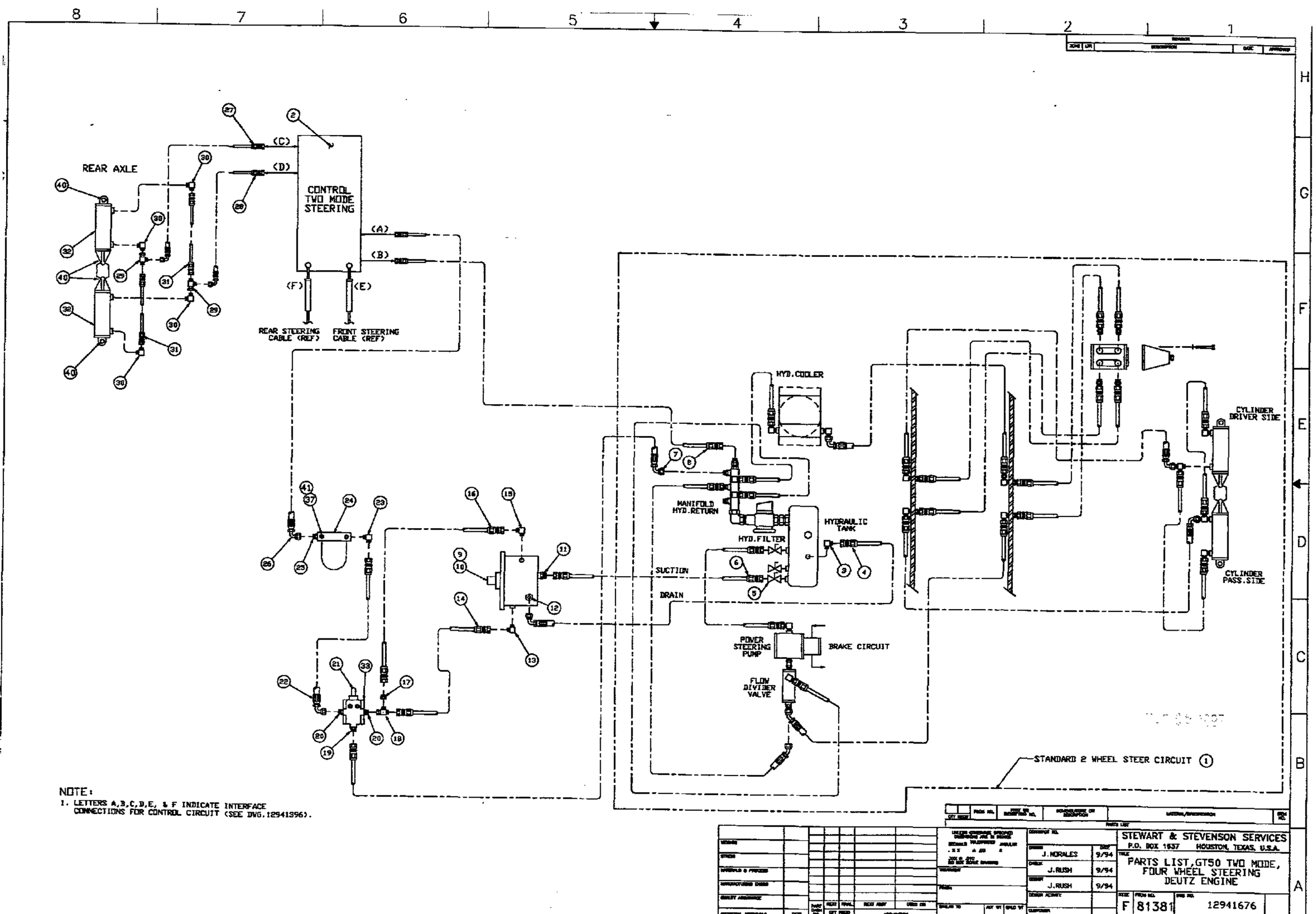

NOTE:
1. LETTERS A,B,C,D,E, & F INDICATE INTERFACE CONNECTIONS FOR CONTROL CIRCUIT (SEE DWG.12941396).

STEWART & STEVENSON SERVICES
P.O. BOX 1637 HOUSTON, TEXAS, U.S.A.

PARTS LIST, GT50 TWO MODE, FOUR WHEEL STEERING DEUTZ ENGINE

J.NORALES	9/94	
J.RUSH	9/94	
J.RUSH	9/94	

F 81381 12941676

CHAPTER 6

OPTIONS AND MANUFACTURER'S DATA

TABLE OF CONTENTS

SECTION/ PARAGRAPH	DESCRIPTION	PAGE
1.	GT50 Steering Options	6-1-1
1.1	DESCRIPTION	6-1-1
1.1.1	Steering Modes	6-1-1
1.1.2	Action of Front Axle	6-1-1
1.1.3	Action of Rear Axle	6-1-1
1.2	OPERATION	6-1-1
1.2.1	Track Steering Mode	6-1-1
1.2.2	Coord Steering Mode	6-1-1
1.2.3	Crab Steering Mode	6-1-1
1.3	MAINTENANCE	6-1-3
1.3.1	Preventive Maintenance	6-1-3
1.3.2	Troubleshooting	6-1-3
1.3.3	Adjustments	6-1-3
1.5	DRAWINGS	6-1-9
2.	CAB	6-2-1
2.1	DESCRIPTION	6-2-1
2.1.1	Types	6-2-1
2.1.2	Standard Cab	6-2-1
2.1.3	Lift Cab	6-2-1
2.1.4	Lift Cab Hydraulic System	6-2-1
2.1.5	Standard Cab Specifications	6-2-1
2.1.6	Lift Cab Specifications	6-2-2
2.2	OPERATION	6-2-2
2.2.1	Lift Cab Operation	6-2-2
2.2.2	Controls	6-2-2
2.3	MAINTENANCE	6-2-2
2.3.1	Preventive Maintenance (For Standard and Lift Cab)	6-2-2
2.3.2	Preventive Maintenance (For Lift Cab Only)	6-2-3
2.4	PARTS LIST	6-2-3
2.4.1	Standard Cab	6-2-3
2.4.2	Hydraulic Lift Cab	6-2-3
2.5	DRAWINGS	6-2-3

The following is a list of component manufacturer's service literature included in this chapter.

TAB	DESCRIPTION
A.	Deutz Operators Manual
	Deutz Spare Parts Number List
	Deutz Service Manual
B.	Funk Shift-O-Matic Model 2000 Transmission Service Manual, P/N 4003557
	Funk Shift-O-Matic Model 2000 Transmission Parts Manual (Spec. YZ15176)

OPTION 1

GT-50 STEERING OPTIONS (TWO MODE AND THREE MODE)

1.1 DESCRIPTION.

1.1.1 Steering Modes. The GT-50 Tow Tractor can be provided with a choice of two optional four-wheel hydrostatic mechanical steering systems. The two optional modes of steering are controlled by the steering mode selector switch located on the instrument panel.

1.1.2 Steering Options. These optional modes allow additional maneuverability for operation in confined areas and for aircraft towing and parking (Figure 6.1).

(a) Two Mode Option - Provides TRACK and COORD steering (Ref. Ch. 5 DWG. 12941163).

(b) Three Mode Option - Provides TRACK, COORD, and CRAB steering.

1.1.3 Action of Front Axle Steering Loop. The action of the front axle remains the same, regardless of the steering mode. Refer to Chapter 1, Section 1 for a description.

1.1.4 Action of Rear Axle Steering Loop. This loop provides the means of steering the rear wheels of the tow tractor. The components of this loop consist of the following:

(a) Transmission mounted, direct driven, piston pump, variable volume, pressure compensated, set at 2250 PSIG (15, 514 kPa).;

(b) Pressure relief valve set at 2800 PSIG (19,310 kPa);

(c) High pressure full flow filter;

(d) Two-mode or three mode control circuit consisting of a proportional feedback servo valve which is mechanically operated, solenoid-actuated pilot valves, hydraulic clutches, and a reed switch;

(e) Double, pilot-operated check valve; and

(f) Rear axle steering cylinders.

The rear axle steering is controlled by mechanically-operated proportional feedback servo valve and the steering mode selector switch. The proportional valve directs the pressurized hydraulic fluid from the variable volume pump to the rear axle steering cylinders. The proportional valve metering element is opened left and right through movement of a cable attached to the front axle king-pin through a cable and clutch.

1.2 OPERATION.

1.2.1 Track Steering Mode. In the TRACK mode, steering is accomplished by the front axles only. The rear wheels remain in a straight position. The rear wheels are locked in the TRACK position by a reed switch that senses correct alignment (Ref. Ch. 5 DWG. 12941163).

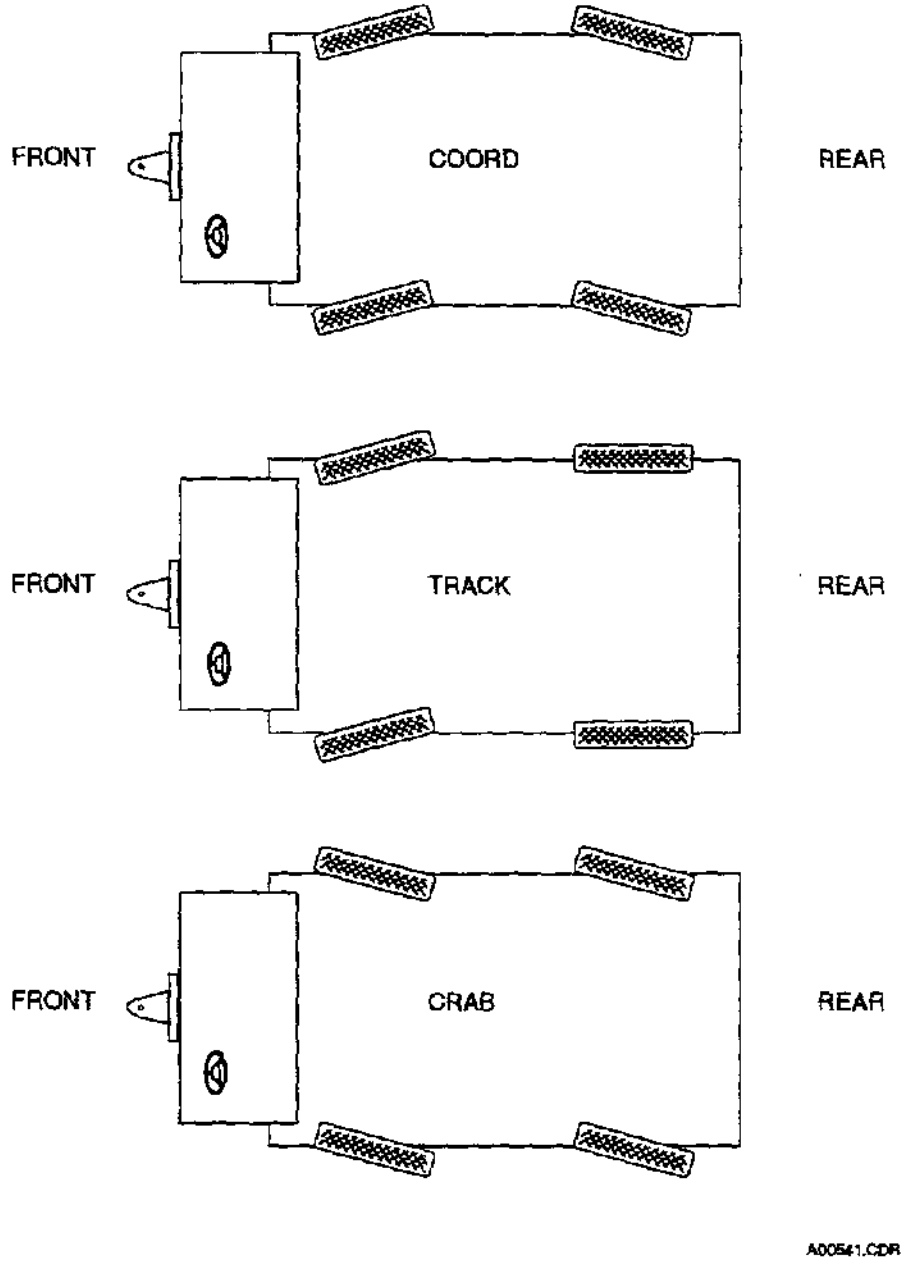

FIGURE 6.1 STEERING MODES

1.2.2 Coord Steering Mode.

(a) In the COORD mode, steering to the right or left will move the cable and clutch assembly, opening the proportional valve left or right. This will allow pressurized hydraulic fluid to flow to the rear axle steering cylinders. The pilot valve is controlled by the steering mode selector switch located on the instrument panel. It allows flow of pressurized hydraulic fluid to the clutch, only when in the COORD mode. The cable attached to the clutch deflects the proportional valve, allowing pressurized hydraulic fluid to flow to the rear steering cylinders.

(b) The right rear axle kingpin has a cable that provides feedback to the proportional valve, repositioning the valve to stop the flow of hydraulic fluid to the rear wheels when the rear wheels and front wheels are at the correct synchronized position (Ref. Ch. 5 DWG. 12941163).

1.2.3 Crab Steering Mode. In the CRAB (additional option to two-mode) mode, the hydraulic arrangement reverses the normal flow of a coordinated steer to the rear axle steering cylinders, thus setting the tires in a CRAB position. The pilot valve for the CRAB mode is controlled by the steering mode selector switch located on the instrument panel.

1.2.4 Rear Axle Check Valve. The double, pilot-operated check valve is located in the rear axle steering loop, between the servo valve and steering cylinders. The check valve opens to permit fluid flow in both directions when pressure is applied from the servo valve. When the servo valve is centered, the double check valves serve to retain the fluid in the steering cylinders. This prevents the rear wheels from being deflected out of their commanded alignment by any lateral forces that they would encounter during normal operation.

1.3 MAINTENANCE.

1.3.1 Preventive Maintenance.

(a) Daily, perform the following checks and services:

(1) Ensure that hydraulic reservoir is filled to proper level.

WARNING

STANDING IN VICINITY OF TRACTOR TIRES, DURING ENGINE START-UP AND OPERATION, CAN RESULT IN SERIOUS PERSONAL INJURY OR DEATH. TRACTOR TIRES, STEERED BY 2,250 PSI (15,514 kPa) HYDRAULIC PRESSURE, CAN CRUSH PERSONNEL.

(2) Start engine and check steering system operation in each steering mode.

(3) Shut down engine and check for obvious signs of leaks.

(b) Monthly, perform the following checks and services:

(1) Check all hoses for cracks, splits. and chafing. Replace damaged hoses.

(2) Ensure that all fittings are tight and not leaking.

(3) Ensure that all steering components are securely mounted.

(4) Check both ends of each axle cable for secure attachment, cable damage, and damage to end bearing. Replace damaged cables and/or end bearings. Tighten loose attaching hardware.

(5) Using all-purpose grease, lightly coat cable ends.

1.3.2 Troubleshooting. For troubleshooting information, refer to Hydraulic Steering Troubleshooting, Chapter 2, Section 2, Table 2.2.

1.3.3 Adjustments.

WARNING

ESCAPING PRESSURIZED HYDRAULIC FLUID CAN CAUSE PERSONAL INJURY.

■ (a) Axle cable adjustment on two-mode steering system may be performed, as follows (Figures 6.3, 6.4, and 6.5)

WARNING

KEEP AWAY FROM TRACTOR TIRES DURING ENGINE START-UP AND OPERATION. TIRES TURNING UNDER HIGH HYDRAULIC PRESSURE, 2,250 PSI (15,514 kPa), CAN CAUSE SERIOUS INJURY OR DEATH.

WARNING

TO AVOID INJURY TO PERSONNEL OR DAMAGE TO THE EQUIPMENT, ALWAYS USE LIFTING EQUIPMENT, SUPPORTS, AND CHAINS WITH A SAFE MINIMUM CAPACITY OF ONE AND A HALF (1-1/2) TIMES THAT OF THE OBJECT BEING LIFTED OR SUPPORTED.

(1) Lift tractor off ground (if possible). If not, lubricate tires with liquid soap for ease of turning wheels.

(2) Disconnect front cable (1) from clutch (2).

■ (3) Disconnect rear cable (3) from proportional valve arm (11).

(4) Start tractor. Place switch in COORD mode. Align front passenger wheel with outside of wheel well by turning steering wheel (Figure 6.4).

(5) Disconnect TRACK solenoid valve (5) from terminal board (6). Disconnect wire marked ST2 from slot 4 on terminal board. This will activate both TRACK and COORD clutches.

(6) Square proportional valve arm (4) with steering board (90° angle) by turning TRACK clutch turnbuckle (7) (Figure 6.3 Detail A)

(7) Align front cable rod end (1) with COORD clutch (2). To adjust, use rod end (8), do not move arm (4). Bolt cable to clutch.

(8) Reconnect TRACK solenoid valve (5) to terminal board (6).

DELETED

FIGURE 6.2 HYDRAULIC STEERING CONTROL PANEL

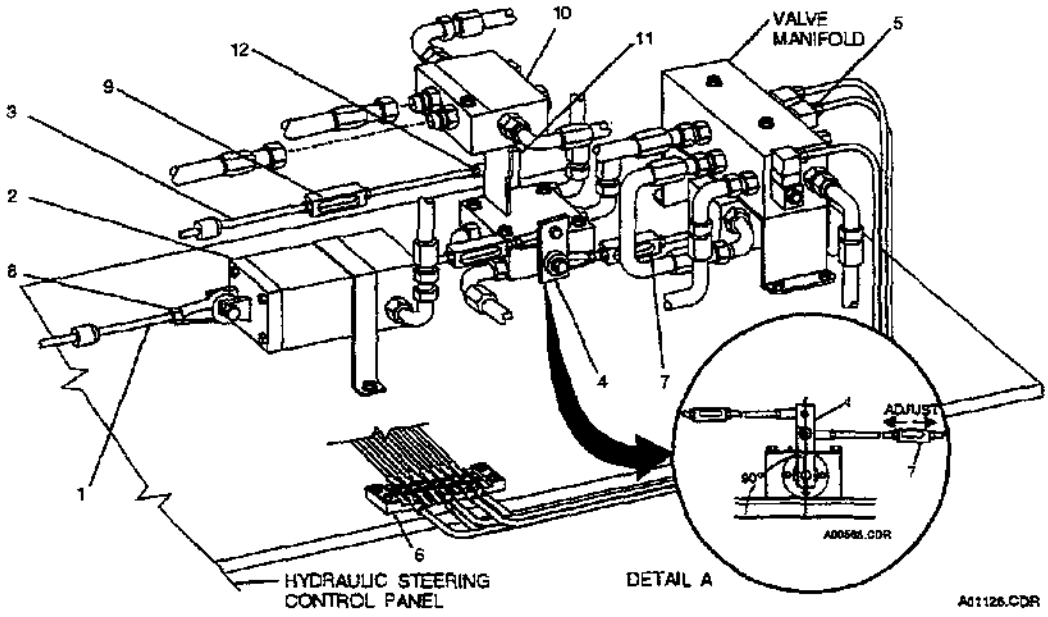

FIGURE 6.3 AXLE CABLE ADJUSTMENTS

(9) Align rear passenger wheel with outside of wheelwell by moving rear cable proportional valve arm (11) up and down very slowly (Figure 6.3).

(10) Once wheel is aligned, adjust rear cable turnbuckle (9) to match rod end with proportional valve, DO NOT MOVE ARM (11). Then bolt rod end (12) to valve arm (11).

(11) After front and rear wheels have been properly aligned with frame, check and adjust, if necessary the steering sensor located on rear axle steer cylinder. (Figure 6.5)

a. Loosen the band on the reed switch.

b. Turn the master switch to the "RUN" position (DO NOT start the engines).

c. Slide the reed switch on the air cylinder either left or right as required to cause the red light on the switch to illuminate. Continue to move the switch in the same direction until the light goes off. Note the distance you moved the switch from the point at which the light came on until the light went off. This distance is the band width of the "on" position. Move the switch back until it is positioned in the center of the band width distance.

d. Tighten the band on the reed switch.

e. Return The master switch to the "OFF" position.

(12) Operate and check steering operation before returning to service.

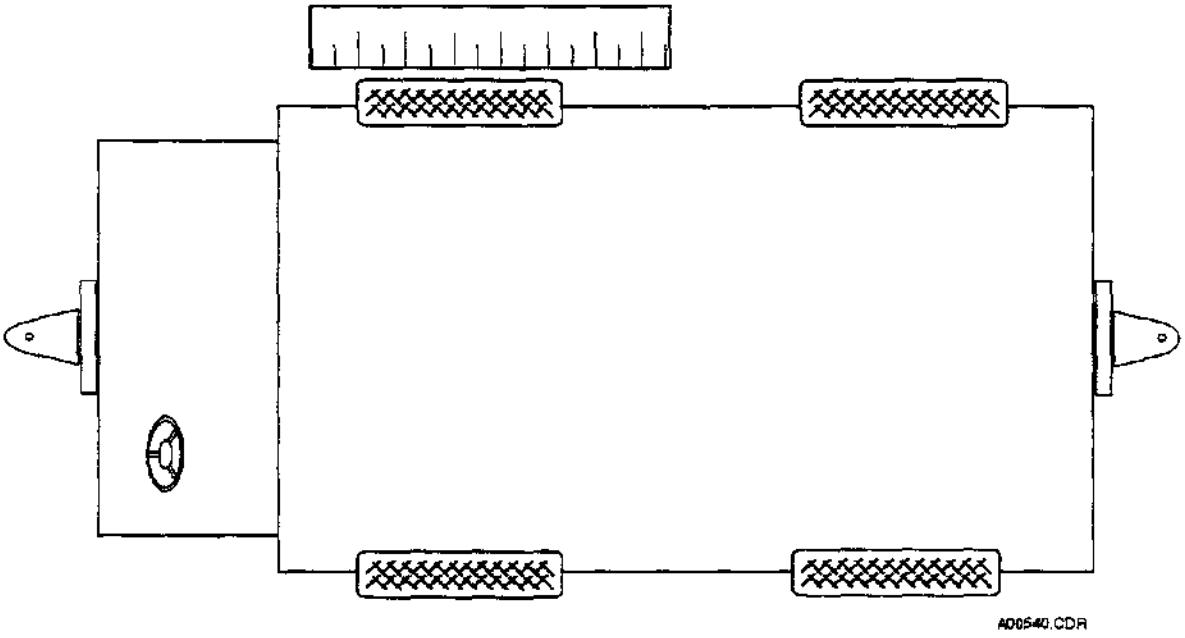

FIGURE 6.4 WHEEL ALIGHMENT

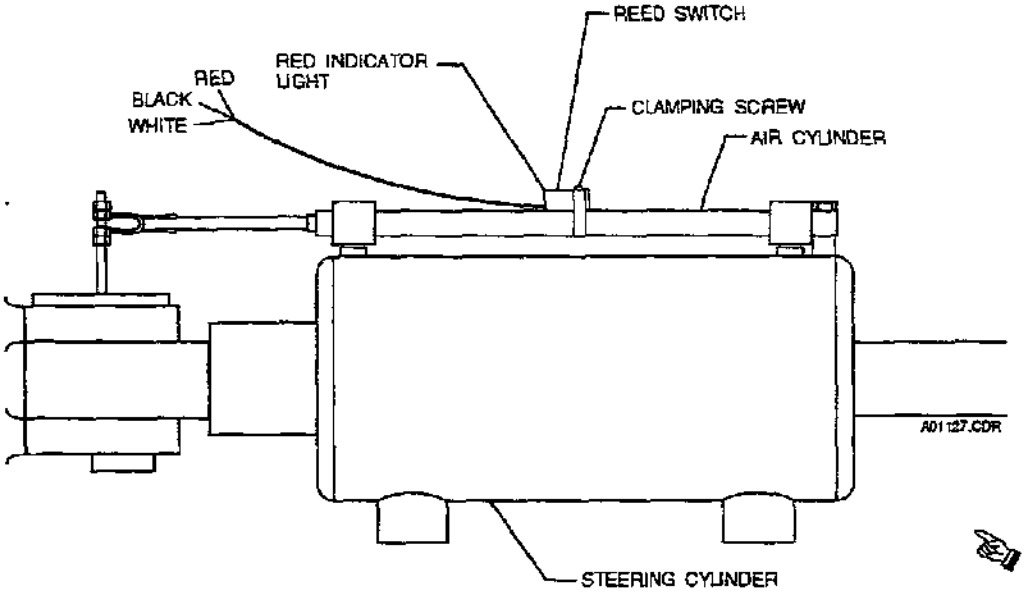

FIGURE 6.5 STEERING SENSOR ASSEMBLY

(c) Axle cable adjustment on three-mode steering system may be performed, as follows (Figure 6.6)

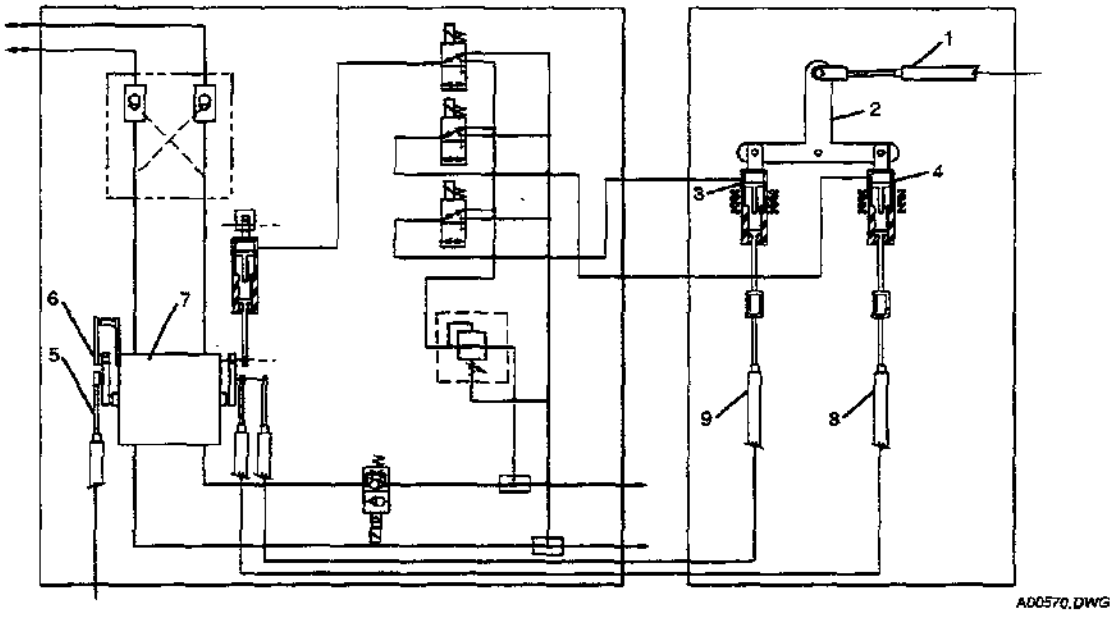

FIGURE 6.6 THREE MODE STEERING ADJUSTMENTS

(1) Start engine.

(2) To center the rear wheels, place the steering mode selector switch in the TRACK position. Align rear wheels with outside of wheel well (Figure 6.4).

(3) Shut down the engine.

(4) Disconnect front axle cable end (1) from bellcrank (2) located on CRAB (3) and COORD (4) clutches.

(5) Disconnect rear axle cable end (5) from output lever (6) of proportional valve (7).

(6) Tag track solenoid wiring for identification and disconnect from terminal board.

(7) Start tractor engine.

(8) With engine running, position bellcrank (2) squarely atop the CRAB (3) and COORD(4) clutches.

(9) Disconnect both ends of the COORD cable (8) and the CRAB cable (9).

(10) Slide each cable in or out of its cable housing until an equal length of cable protrudes from each end of cable housing.

(11) Adjust length of each cable end and reinstall in original position.

(12) Connect front axle cable (1) to bellcrank (2).

(13) Manually align rear wheels (Figure 6.4) by moving output lever (6) of proportional valve (7).

(14) Connect rear axle cable (5) to output lever of proportional valve.

(15) Connect Track Solenoid Wiring.

(16) Operate and check steering for proper operation.

1.4 PARTS. Refer to the following drawings for parts information.

(a) Standard Two Wheel Steering Circuit, 12941675 (Ref. Ch. 5)

(b) Two Mode, Four Wheel Steering, 12941676 (Ref. Ch. 5)

(c) Three Mode, Four Wheel Steering, 12920656

(d) Three Mode Control Circuit, Four Wheel Steering, 12920657

(e) Two Mode, Control Circuit, Steering System, 12941079 (Ref. Ch. 5)

1.5 DRAWINGS. The following drawings are provided at the end of Option 1.

(a) Three Mode, Four Wheel Steering, 12920656

(b) Three Mode Control Circuit, Four Wheel Steering, 12920657

(c) Schematic, 2 Mode, Control Circuit, 12921538

(d) Schematic, 3 Mode, Control Circuit, 12921542

REVISION				
ZONE	LTR	DESCRIPTION	DATE	APPROVED

QTY REQD	FSCM NO.	PART OR IDENTIFYING NO.	NOMENCLATURE OR DESCRIPTION	MATERIAL/SPECIFICATION	ITEM NO.
4	81381	76956	ADAPTER,ELL	90°,5/8 TUBE	30
2	81381	203102-10 -10S	TEE		29
1	81381	12912987	HOSE,ASSY	REAR STEERING AXLE,LH	28
1	81381	12912990	HOSE,ASSY	REAR STEERING AXLE,RH	27
1	81381	12912992	HOSE,ASSY	FILTER TO STEERING BOARD	26
1	81381	76932	ADAPTER CONN.	1/2 TUBE	25
1	81381	85177	FILTER	HYDRAULIC	24
1	81381	76958	ADAPTER,ELL	90°,1/2 TUBE	23
1	81381	12912991	HOSE,ASSY	RELIEF TO FILTER	22
1	81381	VPRP5B-3AA -280	VALVE	RELIEF	21
1	81381	76927	ADAPTER CONN.	1/2 TUBE	20
1	81381	76933	ADAPTER CONN.	5/8 TUBE	19
1	81381	203102-8 -8S	TEE		18
1	81381	221501-8 -4S	REDUCER		17
1	81381	12912923	HOSE,ASSY	PUMP PILOT	16
1	81381	76945	ADAPTER,ELL	90°,1/4 TUBE	15
1	81381	12912981	HOSE,ASSY	PUMP TO RELIEF	14
1	81381	76958	ADAPTER,ELL	1/2 TUBE	13
1	81381	76913	ADAPTER CONN.	3/8 TUBE	12
1	81381	202702-20 -20S	ADAPTER		11
1	81381	83501	PUMP	HYD,PISTON	10
1	81381	83412	KIT	PUMP DRIVE	9
1	81381	12912993	HOSE,ASSY	RETURN STEERING TO MANIFOLD	8
1	81381	12912922	HOSE,ASSY	RELIEF TO RETURN	7
1	81381	12912995	HOSE,ASSY	SUCTION	6
1	81381	84903	ADAPTER,ELL	90°,1-1/4 TUBE	5
1	81381	98541	HOSE,ASSY	DRAIN	4
1	81381	75359	ADAPTER,ELL	90°,3/8 TUBE	3
1	81381	12920657		CONTROL CIRCUIT,3 MODE	2
REF	81381	12921057	CIRCUIT	2 WHEEL STEERING	1

PARTS LIST

QTY REQD	FSCM NO.	PART OR IDENTIFYING NO.	NOMENCLATURE OR DESCRIPTION	MATERIAL/SPECIFICATION	ITEM NO.
1	81381	12921160	BOX	BATTERY (MODIFIED) (NOT SHOWN)	42
2	81381	99757	BOLT	1/4"-20NC X 3-1/2" LG	41
4	81381	85421	PIN,PIVOT	CYLINDER,STEERING	40
+1	81381	12893103	AXLE	DRIVE,RIGID (NOT SHOWN)	39
+1	81381	12893102	AXLE	DRIVE,STEERABLE (NOT SHOWN)	38
2	81381	12921153	SPACER	FILTER MOUNTING	37
1	81381	12900024	BRACKET	CABLE MOUNTING,REAR AXLE (NOT SHOWN)	36
1	81381	12912910	BRACKET	CABLE MOUNTING,FRONT AXLE (NOT SHOWN)	35
2	81381	12912273	PLATE	CABLE PIVOT,AXLE (NOT SHOWN)	34
1	81381	12921176	BRACKET	RELIEF VALVE	33
2	81381	12883378	CYLINDER	STEERING	32
2	81381	85739	HOSE,ASSY	CROSSOVER	31

PARTS LIST

WEIGHTS					
STRESS					
MATERIALS & PROCESS					
MANUFACTURING ENGRG					
QUALITY ASSURANCE					
ADDITIONAL APPROVALS	DATE	PART DASH NO.	NEXT / FINAL	NEXT ASSY	USED ON
			QTY REQD PER ASSY	APPLICATION	

UNLESS OTHERWISE SPECIFIED DIMENSIONS ARE IN INCHES
DECIMALS TOLERANCES ANGULAR
.XX ±.03 ±
.XXX ±.010
DO NOT SCALE DRAWING

TREATMENT

FINISH

SIMILAR TO | ACT WT | CALC WT

CONTRACT NO.

		DATE
DRAWN	R.SOJTHARD	5/92
CHECK	J.RUSH	5/92
DESIGN	J.RUSH	5/92
DESIGN ACTIVITY		
CUSTOMER		

STEWART & STEVENSON SERVICES
P.O. BOX 1637 HOUSTON, TEXAS, U.S.A.

TITLE
PARTS LIST,
GT50 THREE MODE,
FOUR WHEEL STEERING

SIZE D | FSCM NO. 81381 | DWG NO. 12920656

SCALE NTS | RELEASE DATE | SHEET 1 OF 2

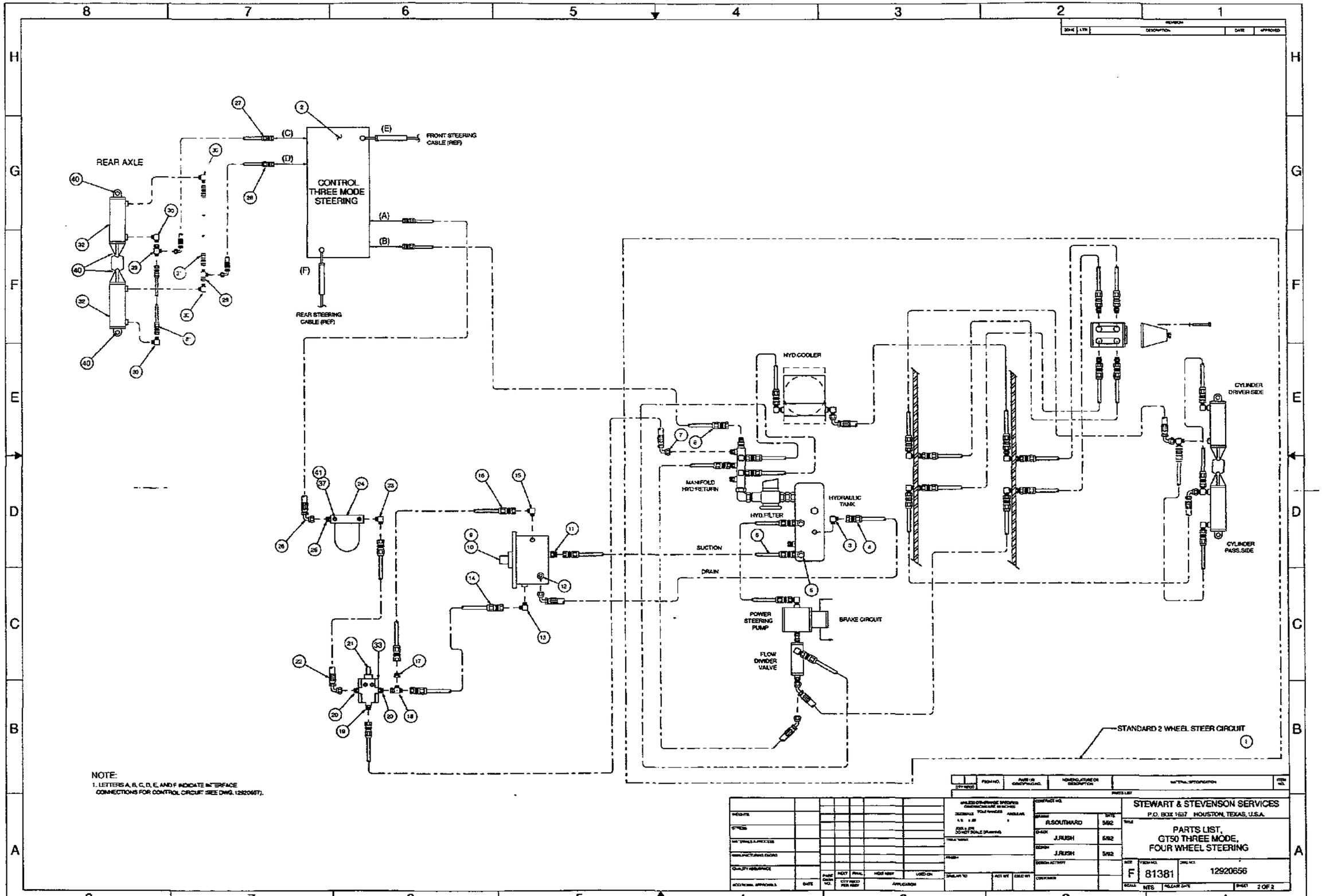
REAR AXLE
CONTROL THREE MODE STEERING
(A)
(B)
(C)
(D)
(E)
(F)
FRONT STEERING CABLE (REF)
REAR STEERING CABLE (REF)
HYD.COOLER
MANIFOLD HYD.RETURN
HYD.FILTER
HYDRAULIC TANK
SUCTION
DRAIN
POWER STEERING PUMP
BRAKE CIRCUIT
FLOW DIVIDER VALVE
CYLINDER DRIVER SIDE
CYLINDER PASS.SIDE
STANDARD 2 WHEEL STEER CIRCUIT
NOTE:
1. LETTERS A, B, C, D, E, AND F INDICATE INTERFACE CONNECTIONS FOR CONTROL CIRCUIT (SEE DWG. 12920657).
STEWART & STEVENSON SERVICES
P.O. BOX 1637 HOUSTON, TEXAS, U.S.A.
PARTS LIST, GT50 THREE MODE, FOUR WHEEL STEERING
R.SOUTHARD 5/92
J.RUSH 5/92
J.RUSH 5/92
F 81381 12920656
NTS
2 OF 2

REVISION				
ZONE	LTR	DESCRIPTION	DATE	APPROVED
	A	REVISED PER ECN #58185	5/7/92	JR

QTY REQD	FSCM NO.	PART OR IDENTIFYING NO.	NOMENCLATURE OR DESCRIPTION	MATERIAL/SPECIFICATION	ITEM NO.
1	81381	12E57	SWITCH	PROXIMITY	68
1	81381	12913581	BRACKET	PROXIMITY SWITCH	67
1	81381	12912837	BRACKET	CENTER SENSING	66
1	81381	12870424	CLUTCH, POSITIONING	HYDRAULIC STEERING	65
1	81381	12870423	BELL CRANK		64
1	81381	12883983	BRACKET	STEERING CLUTCHES, 3 MODE	63
2	81381	5176810	PIN, CLEVIS	1/4" DIA X 1-1/4 LG	62
1	81381	184-M-TG-4-72	CABLE	72.00" LG, FRONT AXLE	61
1	81381	12874047	BASE PLATE ASS'Y	3 MODE STEERING	60
—	—		NOT USED	—	59
2	81381	12910393	HOSE ASS'Y	SOLENOID TO CLUTCH ASSY	58
1	81381	12910397	TUBE ASS'Y	COORD. SOL "A" TO CRAB SOL "A"	57
1	81381	12910396	TUBE ASS'Y	COORD. SOL "C" TO CRAB SOL "C"	56
1	81381	14C11S -A12H-T8	SOLENOID VALVE	1/2" SAE, 3000#, 12VDC	55
1	81381	12892229	HOSE ASS'Y	PRESSURE	54

PARTS LIST

QTY REQD	FSCM NO.	PART OR IDENTIFYING NO.	NOMENCLATURE OR DESCRIPTION	MATERIAL/SPECIFICATION	ITEM NO.
1	81381	12892230	HOSE ASS'Y	PROPORTIONAL, RIGHT HAND	53
1	81381	12892231	HOSE ASS'Y	PROPORTIONAL, LEFT HAND	52
1	81381	12892115	BRACKET	CHECK VALVE MOUNTING	51
1	81381	CKEAXANYAJ	VALVE, CHECK	1/2", DUAL PILOT TO OPEN	50
1	81381	12892116	BRACKET	SOLENOID VALVE STEERING	49
2	81381	12882876	CABLE	SADDLE FRONT, 2 MODE	48
1	81381	12910395	TUBE ASS'Y	PRESSURE REDUCING VALVE A	47
1	81381	12881548	TUBE ASS'Y	TRAC. SOL "C" TO COORD SOL "A"	46
1	81381	12881547	TUBE ASS'Y	TRAC. SOL "A" TO COORD SOL "C"	45
1	81381	12910426	TUBE ASS'Y	CRAB. SOL "A" TO REG VALVE "REG"	44
1	81381	12910425	TUBE ASS'Y	CRAB. SOL "C" TO REG VALVE "B"	43
1	81381	12910398	TUBE ASS'Y	PRESSURE REDUCING VALVE "B"	42
REF	81381	12912993	HOSE ASS'Y	"T" PORT ON SERVO VALVE	41
1	81381	FF1852T -1212S	ADAPTER	.75", ORS/SAE O-RING BOSS	40
1	81381	FF1852T -1010S	ADAPTER	.63", ORS/SAE O-RING BOSS	39
5	81381	FF1868T -0406S	ADAPTER, ELBOW	90°, .25", ORS/SAE	38
REF	81381	12912992	HOSE ASS'Y	HIGH PRESSURE	37
1	81381	FF1852T -0812S	ADAPTER	.50", ORS/SAE O-RING BOSS	36
1	81381	FF1852T -0810S	ADAPTER	.50", ORS/SAE O-RING BOSS	35
1	81381	12873469	MANIFOLD	TANK, HYDRAULIC PANEL	34
1	81381	12873468	MANIFOLD	PRESSURE, HYDRAULIC PANEL	33
1	81381	12873364	SPACER	REDUCER VALVE, HYDRAULIC STEERING	32
1	81381	PR102S306T	VALVE	PRESSURE REDUCING	31
5	81381	FF2114T -0404S	ADAPTER, TEE	.25", ORS/ORS, FEM/ORS	30
—	—		NOT USED	—	29

PARTS LIST

QTY REQD	FSCM NO.	PART OR IDENTIFYING NO.	NOMENCLATURE OR DESCRIPTION	MATERIAL/SPECIFICATION	ITEM NO.
9	81381	FF1852T -0406S	ADAPTER	.25", ORS/SAE O-RING BOSS	28
3	81381	12873365	SPACER	SOLENOID VALVE, HYDRAULIC STEERING	27
3	81381	8-5-6T-A -12VDC	SOLENOID VALVE	3 WAY, 6 PORT, 12VDC	26
1	81381	85082	BOLT, SHOULDER	5/8"-11NC X 3/4" LG	25
1	81381	12873791	HOSE ASS'Y	SOLENOID VALVE TO HYD.	24
3	81381	FF1868T -0404S	ADAPTER, ELBOW	90°, .25", ORS/SAE	23
5	81381	5061871	SHIM	—	22
5	81381	A061869	U-BOLT	—	21
1	81381	12894400	CABLE, REAR		20
1	81381	5127420	ROD, LINK	5/16"-24NF X 6.00, LEFT & RIGHT HAND	19
2	81381	184-M-GG-4-60	CABLE, FRONT	60.00" LG	18
1	81381	73795	WASHER, FLAT	3/4" STEEL	17
5	81381	5120472	ROD, END BEARING	5/16"-24NF	16
9	81381	99844	NUT, HEX	5/16"-24NF, GRADE 5, STEEL	15
4	81381	121928	NUT, JAM	5/16"-24NF, L.H.	14
2	81381	12873779	ROD, ALL THREAD	5/16"-24NF X 2.00	13
4	81381	12873166	TURNBUCKLE	STEERING	12
1	81381	12873558	BRACKET ASS'Y	C CLUTCH, 2 MODE	11
2	81381	12873013	CLUTCH ASS'Y	STEERING	10
1	81381	12873793	HOSE ASS'Y	SERVO VALVE TO MANIFOLD	9
1	81381	12873792	HOSE ASS'Y	SERVO VALVE TO MANIFOLD	8
REF	81381	12912990	HOSE ASS'Y	"C" PORT ON CHECK VALVE	7
REF	81381	12912987	HOSE ASS'Y	"C" PORT ON CHECK VALVE	6
10	81381	FF1852T -0808S	ADAPTER	.50", ORS/SAE O-RING BOSS	5
0	81381	12872500	ARM, ROTARY VALVE	FEEDBACK (PART OF ITEM 2	4
0	81381	12872470	ARM, ROTARY VALVE	INPUT (PART OF ITEM 2)	3
1	81381	12881699	SERVO VALVE, ASS'Y	WITH ROTOR ARMS	2
1	81381	12920719	BASE PLATE ASS'Y	HYDRAULIC STEERING, 3 MODE	1

PARTS LIST

A	A	REV	REV STATUS OF SHEETS		
2	1	SHEET			

WEIGHTS
STRESS
MATERIALS & PROCESS
MANUFACTURING ENGRG
QUALITY ASSURANCE
ADDITIONAL APPROVALS — DATE

PART DASH NO. | NEXT | FINAL | NEXT ASSY | USED ON
QTY REQD PER ASSY | APPLICATION

UNLESS OTHERWISE SPECIFIED DIMENSIONS ARE IN INCHES
DECIMALS TOLERANCES REGULAR
.XX ± .03 ±
.XXX ± .010
DO NOT SCALE DRAWING

TREATMENT N/A
FINISH N/A
SIMILAR TO | ACT WT | CALC WT

CONTRACT NO.

		DATE
DRAWN	J MORALES	3/92
CHECK	J.RUSH	4/92
DESIGN	J.RUSH	4/92
DESIGN ACTIVITY		
CUSTOMER		

STEWART & STEVENSON SERVICES
P.O. BOX 1637 HOUSTON, TEXAS, U.S.A.

TITLE
THREE MODE CONTROL CIRCUIT
STEERING SYSTEM, HYDRAULIC
GT50 TOW TRACTOR

SIZE D | FSCM NO. 81381 | DWG NO. 12920657 | A
SCALE N/A | RELEASE DATE | SHEET 1 OF 2

REVISION				
ZONE	LTR	DESCRIPTION	DATE	APPROVED
	A	REVISED PER ECN #58185	5/7/92	JR

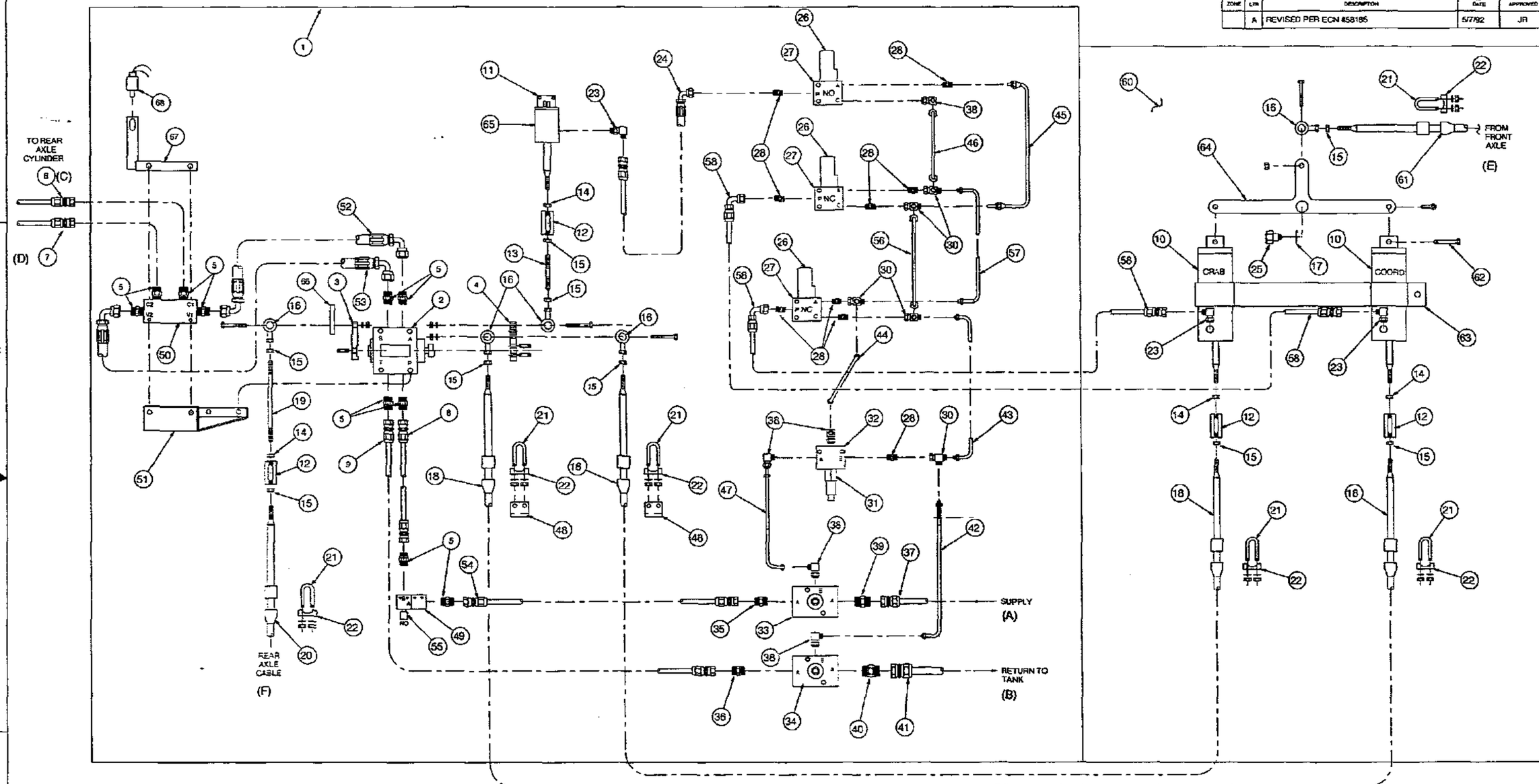

NOTE:
1. LETTERS A,B,C,D,E, & F INDICATE INTERFACE CONNECTIONS (SEE DWG.12920656).

QTY REQD	FSCM NO.	PART OR IDENTIFYING NO.	NOMENCLATURE OR DESCRIPTION	MATERIAL/SPECIFICATION	ITEM NO.

PARTS LIST

WEIGHTS			
STRESS			
MATERIALS & PROCESS			
MANUFACTURING ENGRG			
QUALITY ASSURANCE			
ADDITIONAL APPROVALS	DATE		

PARTS DASH NO.	NEXT	FINAL	NEXT ASSY	USED ON
	QTY REQD PER ASSY		APPLICATION	

UNLESS OTHERWISE SPECIFIED DIMENSIONS ARE IN INCHES
DECIMALS .XX ± .03 .XXX ± .010 TOLERANCES ANGULAR ±
DO NOT SCALE DRAWING

TREATMENT N/A
FINISH N/A
SIMILAR TO | ACT WT | CALC WT

CONTRACT NO.
DRAWN J MORALES 3/92
CHECK J.RUSH 4/92
DESIGN J.RUSH 4/92
DESIGN ACTIVITY
CUSTOMER

STEWART & STEVENSON SERVICES
P.O. BOX 1837 HOUSTON, TEXAS, U.S.A.

TITLE
THREE MODE CONTROL CIRCUIT
STEERING SYSTEM, HYDRAULIC
GT50 TOW TRACTOR

SIZE	FSCM NO.	DWG NO.	
D	81381	12920657	A

SCALE N/A | RELEASE DATE | SHEET 2 OF 2

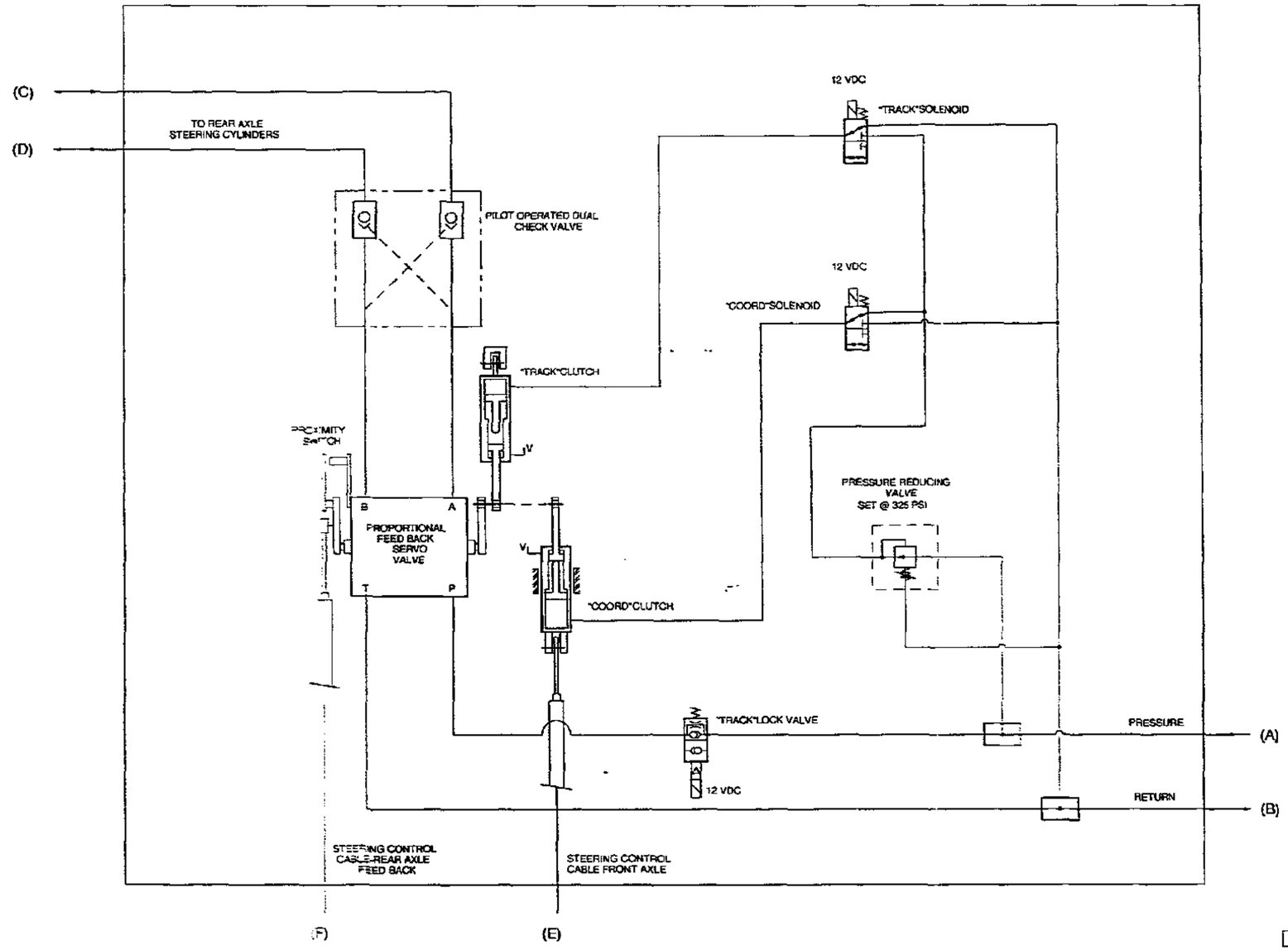

NOTE:A,B,C,D,E & F ARE INTERFACE CONNECTIONS.
SEE DWG.12921529 FOR GT 90
SEE DWG.12921552 FOR GT 50

REVISION				
ZONE	LTR	DESCRIPTION	DATE	APPROVED

QTY REQD	FSCM NO.	PART OR IDENTIFYING NO.	NOMENCLATURE OR DESCRIPTION	MATERIAL SPECIFICATION	ITEM NO.

PARTS LIST

WEIGHTS						
STRESS						
MATERIALS & PROCESS						
MANUFACTURING ENGRG						
QUALITY ASSURANCE						
ADDITIONAL APPROVALS	DATE	PART DASH NO.	NEXT	FINAL	NEXT ASSY	USED ON
			QTY REQD PER ASSY		APPLICATION	

UNLESS OTHERWISE SPECIFIED DIMENSIONS ARE IN INCHES
DECIMALS .XX ± .03 TOLERANCES ANGULAR ±
.XXX ± .010
DO NOT SCALE DRAWING

TREATMENT
FINISH
SIMILAR TO | ACT WT | CALC WT

CONTRACT NO.

		DATE
DRAWN	J MORALES	5/92
CHECK	J RUSH	5/92
DESIGN	J RUSH	5/92
DESIGN ACTIVITY		
CUSTOMER		

STEWART & STEVENSON SERVICES
P.O. BOX 1637 HOUSTON, TEXAS, U.S.A.

TITLE
SCHEMATIC,2 MODE, CONTROL CIRCUIT

SIZE	FSCM NO.	DWG NO.
D	81381	12921538

SCALE NTS | RELEASE DATE | SHEET 1 OF 1

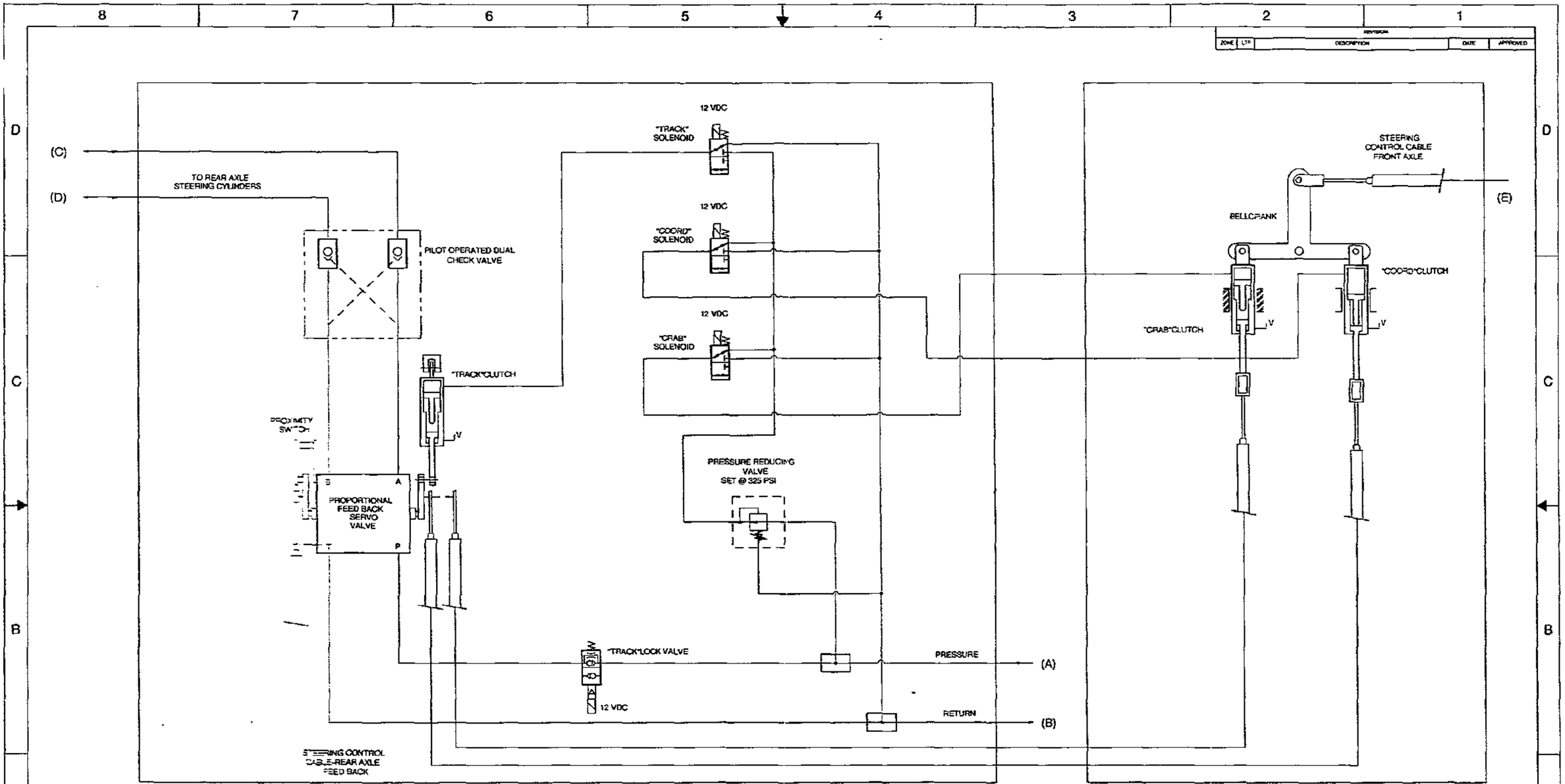

NOTE:A,B,C,D,E & F ARE INTERFACE CONNECTIONS.
SEE DWG.12921529 FOR GT SC
SEE DWG.12921552 FOR GT SC

ZONE	LTR	DESCRIPTION	DATE	APPROVED

QTY REQD	FSCM NO.	PART OR IDENTIFYING NO.	NOMENCLATURE OR DESCRIPTION	MATERIAL SPECIFICATION	ITEM NO.
			PARTS LIST		

WEIGHTS
STRESS
MATERIALS & PROCESS
MANUFACTURING ENGRG
QUALITY ASSURANCE
ADDITIONAL APPROVALS — DATE

PART DASH NO.	NEXT	FINAL	NEXT ASSY	USED ON
	QTY REQD PER ASSY		APPLICATION	

UNLESS OTHERWISE SPECIFIED DIMENSIONS ARE IN INCHES
TOLERANCES
DECIMALS .XX ± .03 .XXX ± .010 — ANGULAR ±
DO NOT SCALE DRAWING

TREATMENT
FINISH
SIMILAR TO — ACT WT — CALC WT

CONTRACT NO.

		DATE
DRAWN	J MORALES	5/92
CHECK	J RUSH	5/92
DESIGN	J RUSH	5/92
DESIGN ACTIVITY		
CUSTOMER		

STEWART & STEVENSON SERVICES
P.O. BOX 1637 HOUSTON, TEXAS, U.S.A.

TITLE
SCHEMATIC,3 MODE, CONTROL CIRCUIT

SIZE	FSCM NO.	DWG NO.
D	81381	12921542

SCALE NTS — RELEASE DATE — SHEET 1 OF 1

OPTION 2

CAB

2.1 DESCRIPTION.

2.1.1 Types. There are two types of cabs available for the GT-50DZ Tow Tractor. The first style of cab is bolted to the tractor frame, sealed at all mating surfaces, and is stationary. The second style of cab is mounted on top of a hydraulic elevating mechanism, which is mounted to the frame. Although all cabs are optional, for descriptive purposes, the first style will be referred to as a standard cab. The second style will be referred to as the lift cab.

2.1.2 Standard Cab. The cab is a two-door enclosure, designed to accommodate two persons. In addition to the windshield, the cab is equipped with a sliding window in each door, a rear window, two roof windows, and a lower windshield, which affords increased ground visibility. Two windshield wipers are provided for the windshield and one is provided for the rear window. A dome light, defogger fan, and door stops are provided with the cab.

2.1.3 Lift Cab. The cab is a two-person, weather-tight enclosure mounted on a steel-welded subframe. All controls and indicators are mounted inside the cab and are linked, either hydraulically, mechanically, or electrically, to the tractor body.

2.1.4 Lift Cab Hydraulic System. A gear pump driven off a transmission accessory drive supplies hydraulic fluid to the cab lift circuit. Pump pressure is controlled by an unloading relief valve which is normally open to allow flow to return to the reservoir under minimal pressure. When the CAB toggle switch is activated, 12 VDC electrical power closes the unloading solenoid and energizes the directional control valve solenoid allowing pump flow under pressure to be directed to the cab lift cylinder. This will either raise or lower the cab, depending on which solenoid is energized on the directional control valve. Pump pressure is regulated to 1250 psi. The relief valve incorporated in the unloading relief valve is factory set.

(a) In CAB lifting, the directional valve routes fluid to the double pilot-operated check valve assembly, which contains two internal check valves. Pressure in the supply line opens one of the internal check valves, admitting fluid to the top side of the cylinder. Simultaneously, pilot pressure, routed from the supply side of the assembly, opens the second internal check valve. This valve vents fluid from the low side of the cylinder, back to the reservoir.

(b) In lowering the cab, the directional valve routes the pressurized fluid to the lower side of the cylinder, reversing the flow through the double pilot-operated check valve assembly and cylinder.

2.1.5 Standard Cab Specifications. Specifications are as follows:

Height	60 Inches (1,524 mm)
Width	62 Inches (1,575 mm)

2.1.6 Lift Cab Specifications. The hydraulic lift cab specifications are as follows:

Width	90 Inches (2,286 mm)
Height	54 Inches (1,372 mm)
Lift	28 Inches (711 mm)
Hydraulic System	
Max. Operating Pressure	1250 psi (8,620 kpa)

2.2 OPERATION.

2.2.1 Lift Cab Operation.

(a) To raise cab, move CAB toggle switch lever to UP position until desired height is achieved.

(b) Release CAB toggle switch lever to halt cab movement.

(c) To lower cab, set CAB toggle switch lever to DOWN position.

(d) After operation, release switch lever which is spring return to "OFF."

2.2.2 Controls. The only control provided for the hydraulic lift cab is the CAB toggle switch on the control panel.

2.3 MAINTENANCE.

2.3.1 Preventive Maintenance (For Standard and Lift Cab).

(a) Daily, perform the following checks and services:

(1) Clean all window glass with glass cleaner.

(2) Check operation of windshield wipers and defogger fan.

(3) Ensure that windshield wiper blades are in good condition.

(4) Ensure that door latches operate properly.

(b) Weekly, perform the following checks and services:

(1) Perform the daily check and services, as described in paragraph 2.3.1 (a).

(2) Ensure that sliding window channels are clean and free of obstructions.

(3) Lubricate door latches and hinges with light machine oil.

2.3.2 Preventive Maintenance (For Lift Cab Only).

(a) Daily, perform the following checks and services:

(1) Ensure that all vertical tracks are free of trash and foreign matter.

(2) Ensure that the hydraulic fluid reservoir is filled to proper level.

(3) With engine running, check cab operation by raising cab to maximum height and lowering to normal (lowest) position.

(b) Weekly, perform the following checks and services:

(1) Lubricate door hinges and latches with lightweight machine oil.

(2) Inspect hydraulic hoses for cracks, splits, cuts, and chafing. Replace defective hoses.

(3) Ensure that all hydraulic fittings are securely installed and not leaking.

(c) Monthly, perform the following checks and services:

(1) Lubricate rollers and bearings. Use NLGI No. 1 grease.

(2) Lubricate cylinder mounting pins with all-purpose grease.

(3) Ensure that all components are securely installed.

2.3.3 Troubleshooting. Troubles, probable causes, and remedies are presented in Table 2.1.

2.4 PARTS LIST.

2.4.1 Standard Cab. Refer to the Martin Cab replacement parts guide provided at the end of this section for parts identification for the standard cab.

2.4.2 Hydraulic Lift Cab. Refer to drawings 12885243 and 12910173 provided at the end of Option 2 for parts identification for the hydraulic lift cab.

2.5 DRAWINGS.

The following drawings are provided at the end of Option 2:

(a) 12885243, Roller Assembly, Lateral Guide, GT90 Lift Cab
(b) 12893969, Assembly, Tilt Steering Wheel GT50H/60
(c) 12910173, Assembly, Elevating Cab Lift Mechanism GT50H Tow Tractor
(d) 12910229, Schematic, Cab Lift GT50 Tow Tractor

TABLE 2.1 HYDRAULIC LIFT CAB TROUBLESHOOTING CHART

TROUBLE	PROBABLE CAUSE	REMEDY
Cab will not lift or lower.	Defective CAB toggle switch.	Replace switch.
	Detached or loosely attached wiring at toggle switch, unloading valve, or solenoid-operated directional valve.	Attach wiring securely.
	Defective solenoid-operated unloader valve.	Replace solenoid-operated unloader valve.
	Defective solenoid-operated directional valve.	Replace solenoid-operated directional valve.
	Defective double pilot-operated check valve.	Replace double pilot-operated check valve.
	Leaking hose, fitting, or component.	Replace defective hose or component. Tighten fitting. If leak persists, replace fitting.
Cab lifts slowly with jerky movement or cab lifts too quickly.	Improperly adjusted or defective flow control valve.	Adjust flow control valve; replace if necessary.

REVISION				
ZONE	LTR	DESCRIPTION	DATE	APPROVED
	A	REVISED PER ECN #55967	8/23/90	JR
	B	REVISED PER ECN #56626	3/20/91	JR

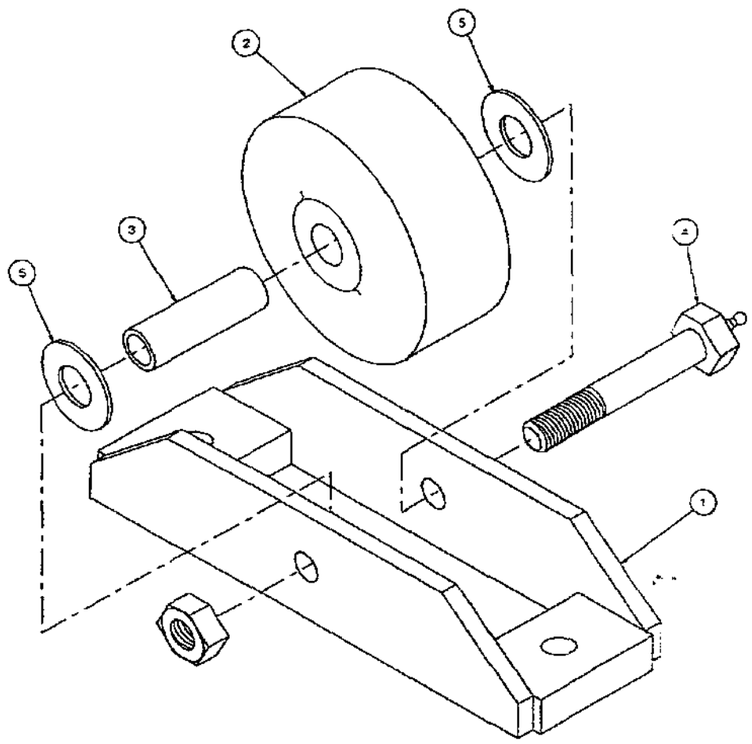

QTY REQD	FSCM NO.	PART OR IDENTIFYING NO.	NOMENCLATURE OR DESCRIPTION	MATERIAL/SPECIFICATION	ITEM NO.
2	81381	94358	WASHER	FLAT, 1/2" X 1-3/8" O.D.	5
1	ALBION	ZJ-084506	AXLE	1/2" DIA W/NUT & ZERK FITTING	4
1	ALBION	ZF081230	BUSHING	WHEEL	3
1	ALBION	CA-04101-12	WHEEL	4" DIA	2
1	81381	12885242	BRACKET,	LATERAL GUIDE WHEEL WELDMENT	1

PARTS LIST

WEIGHTS						
STRESS						
MATERIALS & PROCESS						
MANUFACTURING ENGRG						
QUALITY ASSURANCE						136162
ADDITIONAL APPROVALS	DATE	PART DASH NO.	NEXT	FINAL	NEXT ASSY	USED ON
			QTY REQD PER ASSY		APPLICATION	

UNLESS OTHERWISE SPECIFIED DIMENSIONS ARE IN INCHES
TOLERANCES
DECIMALS .XX ± .05 .XXX ± .010
ANGULAR ±
DO NOT SCALE DRAWING

TREATMENT

FINISH

SIMILAR TO | ACT WT | CALC WT

CONTRACT NO

		DATE
DRAWN	S. BESIER	10/89
CHECK	M. REYNA	10/89
DESIGN	J. RUSH	10/89
DESIGN ACTIVITY		
CUSTOMER		

STEWART & STEVENSON SERVICES
P.O. BOX 1637 HOUSTON, TEXAS, U.S.A.

TITLE
ROLLER ASSEMBLY, LATERAL GUIDE, GT90 LIFT CAB

SIZE	FSCM NO.	DWG NO.	
D	81381	12885243	B

SCALE NONE | RELEASE DATE | SHEET 1 OF 1

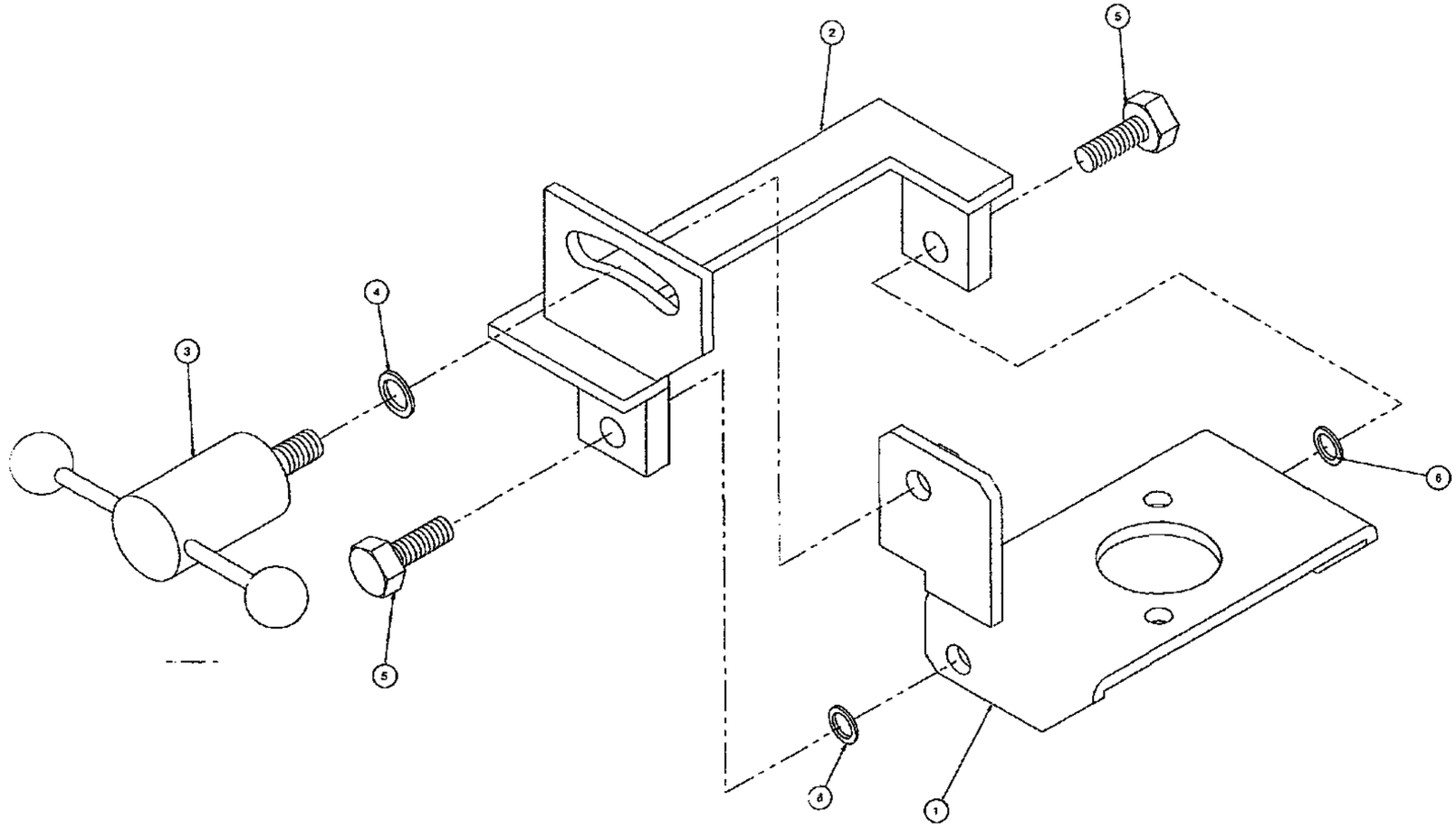

QTY REQD	FROM NO.	PART OR IDENTIFYING NO.	NOMENCLATURE OR DESCRIPTION	MATERIAL/SPECIFICATION	ITEM NO.
2	81381	73792	WASHER, FLAT	1/2"	6
2	81381	73820	BOLT, HEX	1/2"-13NC X 1-1/4	5
1	81381	81451	WASHER, THRUST	.75 ID X 1.38 OD X 1.25 THK	4
1	81381	12873179	BOLT ASS'Y	RETAINING, STEERING VALVE MOUNT	3
1	81381	12893990	BRACKET	PIVOT, ADJUSTABLE STEERING WHEEL	2
1	81381	12893991	MOUNT	STEERING WHEEL, ADJUSTABLE POSITION	1

PARTS LIST

REVISION

ZONE	LTR	DESCRIPTION	DATE	APPROVED

PART DASH NO.	NEXT	FINAL	NEXT ASSY	USE/FOR
	1	1	12893993	

QTY REQD PER ASSY — APPLICATION

WEIGHTS
STRESS
MATERIALS & PROCESS
MANUFACTURING ENGRG
QUALITY ASSURANCE
ADDITIONAL APPROVALS — DATE

UNLESS OTHERWISE SPECIFIED DIMENSIONS ARE IN INCHES
TOLERANCES: DECIMALS .XX ± .03, .XXX ± .010; ANGULAR ±
DO NOT SCALE DRAWING

TREATMENT: N/A
FINISH: N/A
SIMILAR TO — ACT WT — CALC WT

CONTRACT NO

		DATE
DRAWN	R.SOUTHARD	12/89
CHECK	M.REYNA	12/89
DESIGN	J.RUSH	12/89
DESIGN ACTIVITY		
CUSTOMER		

STEWART & STEVENSON SERVICES
P.O. BOX 1637 HOUSTON, TEXAS, U.S.A.

TITLE: ASSEMBLY, TILT STEERING WHEEL GT50H/60

SIZE: D — FSCM NO.: 81381 — DWG NO.: 12893969
SCALE: N/A — RELEASE DATE — SHEET 1 OF 1

REVISION				
ZONE	LTR	DESCRIPTION	DATE	APPROVED
	A	REVISED PER ECN #56538	2/28/91	JR
	B	REVISED PER ECN #59873	2/4/94	JR

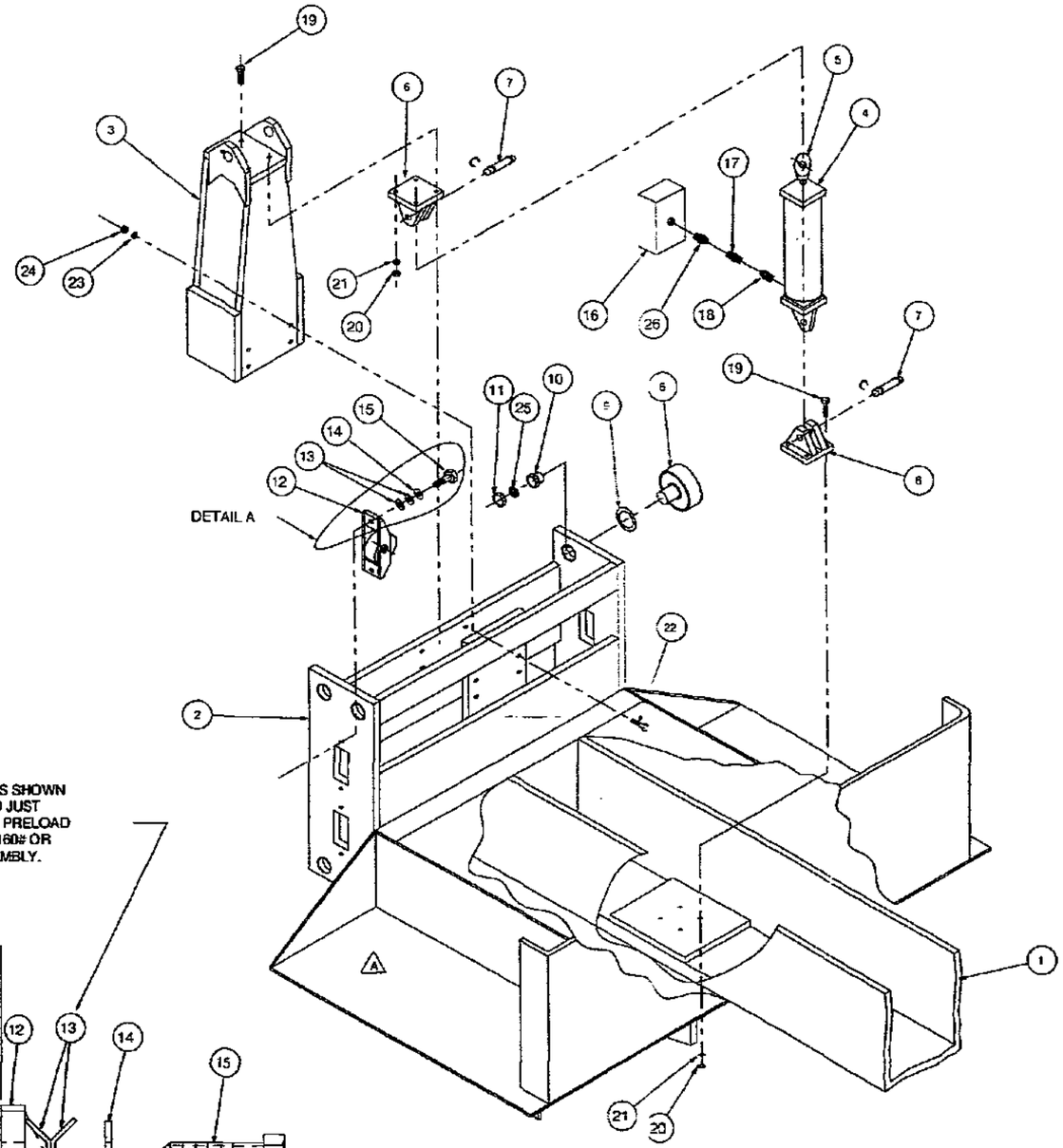

STACK DISC SPRINGS AS SHOWN THEN TIGHTEN BOLT TO JUST FLATTEN THE SPRINGS. PRELOAD ON EACH END WILL BE 160# OR 320# PER ROLLER ASSEMBLY.

NOM. 3/8" GAP
SET AT ASSEMBLY
SEAL THDS W/LOCTITE

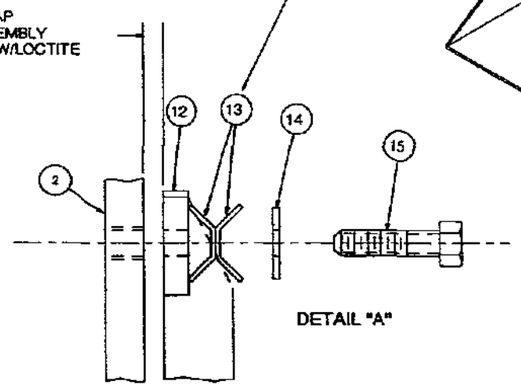

DETAIL "A"

QTY REQD	FSCM NO.	PART OR IDENTIFYING NO.	NOMENCLATURE OR DESCRIPTION	MATERIAL/SPECIFICATION	ITEM NO.
A 10	81381	12693455	WASHER,LOCK	GUIDE BAR ATTACHING (N/S)	28
A 10	81381	12900094	BOLT	GUIDE BAR ATTACHING (N/S)	27
1	AEROQUIP	2066-8-8S	ADAPTOR		26
8	81381	12884765	WASHER, FLAT	1"	25
8	81381	73774	NUT, LOCK	1/2"-13NC	24
8	81381	73792	WASHER, FLAT	1/2" STD	23
8	81381	62880	BOLT, HEX	1/2"-13NC X 2.25 LG	22
8	81381	71068	WASHER, FLAT	3/8"	21
8	81381	81566	NUT, LOCK	3/8"-16NC	20
8	81381	73843	BOLT, HEX	3/8"-16NC X 2.50 LG	19
1	AEROQUIP	2216-8-10S	ADAPTOR		18
1	AEROQUIP	2083-8-8S	NIPPLE	1/2" NPT	17
1	PARKER	CDP101P6T	VALVE, CHECK	DOUBLE PILOT OPERATED	16
8	81381	71025	BOLT, HEX	1/2"-13NC X 2.00 LG	15
8	81381	94358	WASHER, FLAT	1/2" X 1-3/8" OD	14
16	SCHOORR	31.5X16.3X.5	SPRING, DISC		13
4	81381	12885243	ASSEMBLY	ROLLER, LATERAL GUIDE	12
8	81381	12884766	NUT, LOCK	1"-14 THD	11
8	81381	12884852	BUSHING	ECCENTRIC	10
8	81381	12884853	WASHER	THRUST	9
8	81381	S-88-LW	CAM FOLLOWER	2-3/4" DIA	8
2	81381	12884735	PIN	CYLINDER, WITH SNAP RINGS	7
2	81381	12884736	MOUNT	CYLINDER	6
1	81381	12884734	ROD EYE	CYLINDER	5
1	81381	12893470	CYLINDER	CAB LIFT (28" STROKE)	4
1	81381	12893763	FRAME, UPPER	LIFT STRUCTURE	3
1	81381	12910171	ASSEMBLY	LIFT STRUCTURE	2
REF	81381	12910162	FRAME		1

PARTS LIST

WEIGHTS
STRESS
MATERIALS & PROCESS
MANUFACTURING ENGRG
QUALITY ASSURANCE
ADDITIONAL APPROVALS — DATE

PART DASH NO. | NEXT | FINAL | QTY REQD PER ASSY | NEXT ASSY | USED ON — APPLICATION

UNLESS OTHERWISE SPECIFIED DIMENSIONS ARE IN INCHES
TOLERANCES — DECIMALS .XX ± .03, .XXX ± .010, DO NOT SCALE DRAWING — ANGULAR ±
TREATMENT: N/A
FINISH: N/A
SIMILAR TO | ACT WT | CALC WT

CONTRACT NO
DRAWN: R.SOUTHARD 1/91
CHECK: R.FORD 1/91
DESIGN: J.RUSH 1/91
DESIGN ACTIVITY
CUSTOMER

STEWART & STEVENSON SERVICES
P.O. BOX 1637 HOUSTON, TEXAS, U.S.A.

TITLE: ASSEMBLY, ELEVATING CAB LIFT MECHANISM GT50H TOW TRACTOR

SIZE D | FSCM NO. 81381 | DWG NO. 12910173 | B
SCALE 1/8 | RELEASE DATE | SHEET 1 OF 1

REVISION				
ZONE	LTR	DESCRIPTION	DATE	APPROVED
	A	REVISED PER ECN #56502	2/15/91	JR
	B	REVISED PER ECN #56886	5/20/91	JR
	C	REVISED PER ECN #58676	9/28/92	JR
	D	REVISED PER ECN #58689	10/9/92	JR

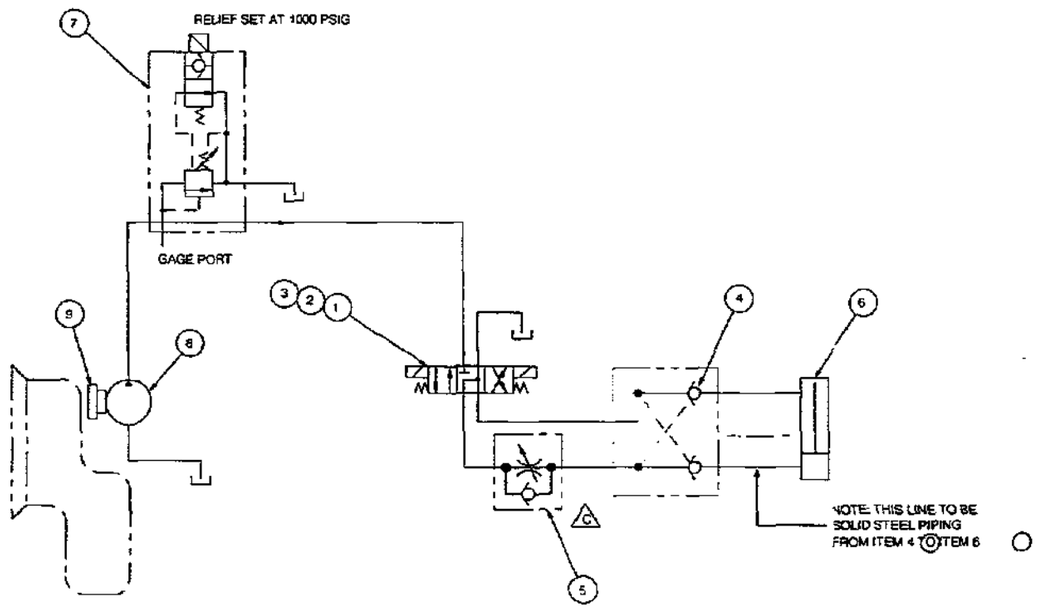

QTY REQD	FSCM NO.	PART OR IDENTIFYING NO.	NOMENCLATURE OR DESCRIPTION	MATERIAL/SPECIFICATION	ITEM NO.
1	FUNK	4102091SA	ADAPTER	SAE "A" PUMP DRIVE	9
1	PARKER	H31AB2A	PUMP	HYDRAULIC GEAR	8
1	SUN	YRCGLBNJJ	VALVE	UNLOADING RELIEF	7
1	81381	12684733	CYLINDER	2-1/2" BORE, CAB LIFT	6
1	PARKER	F520S	FLOW CONTROL		5
1	PARKER	CDP101P8T	VALVE CHECK	DOUBLE PILOT OPERATED	4
1	PARKER	8K210	BOLT KIT		3
1	PARKER	SP023SA	SUB PLATE		2
1	PARKER	01VW4CK	VALVE	DIRECTIONAL CONTROL, 3 POSITION	1

PARTS LIST

WEIGHTS
STRESS
MATERIALS & PROCESS
MANUFACTURING ENGRG
QUALITY ASSURANCE
ADDITIONAL APPROVALS — DATE

PART DWG NO.	NEXT	FINAL	NEXT ASSY	USED ON
	QTY REQD PER ASSY		APPLICATION	

UNLESS OTHERWISE SPECIFIED DIMENSIONS ARE IN INCHES
TOLERANCES
DECIMALS .XX ± .03 .XXX ± .010 — ANGULAR ±
DO NOT SCALE DRAWING

TREATMENT: N/A
FINISH: N/A
SIMILAR TO — ACT WT — CALC WT

CONTRACT NO.

		DATE
DRAWN	R.SOUTHARD	1/91
CHECK	J.MORALES	1/91
DESIGN	J.RUSH	1/91
DESIGN ACTIVITY		
CUSTOMER		

STEWART & STEVENSON SERVICES
P.O. BOX 1637 HOUSTON, TEXAS, U.S.A.

TITLE
SCHEMATIC, CABLIFT GT50 TOW TRACTOR

SIZE D — FSCM NO. 81381 — DWG NO. 12910229 — D
SCALE N/A — RELEASE DATE — SHEET 1 OF 1

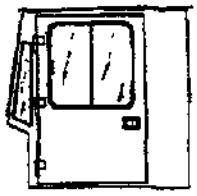

Stewart Stevenson

GT-90/GT-50

Martin Model Number 881-2

FLUSH MOUNT CAB

MARTIN CAB®

S+S p/N 12923479

Phone (216) 651-3882 Fax (216) 651-2079

Mark No.	Item Description	Part No.
3A	Upper R. H. Front Windshield Glass	881-2-301-UR
3B	Upper R. H. Front Windshield Mounting Rubber	881-2-302-UR
3C	Upper L. H. Front Windshield Glass	881-2-301-UL
3D	Upper L. H. Front Windshield Mounting Rubber	881-2-302-UL
3E	Lower R. H. Front Windshield Glass	881-2-301-LR
3F	Lower R. H. Front Windshield Mounting Rubber	881-2-302-LR
3G	Lower L. H. Front Windshield Glass	881-2-301-LL
3H	Lower L. H. Front Windshield Mounting Rubber	881-2-302-LL
3J	Front Windshield Trim and Seal Kit	881-2-304
4A	R. H. Rear Windshield Glass	881-2-401-RH
4B	R. H. Rear Windshield Glass Mounting Rubber	881-2-402-RH
4C	L. H. Rear Aluminum Framed Window Assembly	881-2-A4001-L
4D	L. H. Rear Aluminum Framed Window Mtg. Rubber	881-2-A4002-L
4E	Rear Trim and Seal Kit	881-2-404
5A	R. H. Door Assembly Complete	881-2-5000
5B	R. H. Door Latch	881-2-5002
5C	R. H. Door Hinge Kit (Three Hinges)	881-2-5003
5D	R. H. Door Aluminum Framed Window Assembly	881-2-A5001
5E	R. H. Door Aluminum Framed Window Mounting Rubber	881-2-A502
5F	R. H. Door Trim and Seal Kit (Full Perimeter)	881-2-504
5G	R. H. Body Gasket and Seal Kit	881-2-505-B
6A	L. H. Door Assembly Complete	881-2-6000
6B	L. H. Door Latch	881-2-6002
6C	L. H. Door Hinge Kit (Three Hinges)	881-2-6003
6D	L. H. Door Aluminum Framed Window Assembly	881-2-A6001
6E	L. H. Door Aluminum Framed Window Mounting Rubber	881-2-A602
6F	L. H. Door Trim and Seal Kit (Full Perimeter)	881-2-604
6G	L. H. Body Gasket and Seal Kit	881-2-605-B
7A	Skylight Panel	881-2-7001
7B	Skylight Mounting Kit	881-2-7002
8A	R. H. Front Port Lexan	881-2-801-RF
8B	L. H. Front Port Lexan	881-2-801-LF

Copyright 1994 MSM Inc.

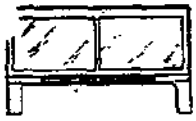

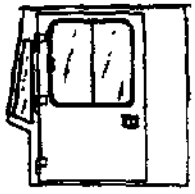

Stewart Stevenson

GT-90

Martin Model Number 881-2

MARTIN CAB®

Phone (216) 651-3882 Fax (216) 651-2079

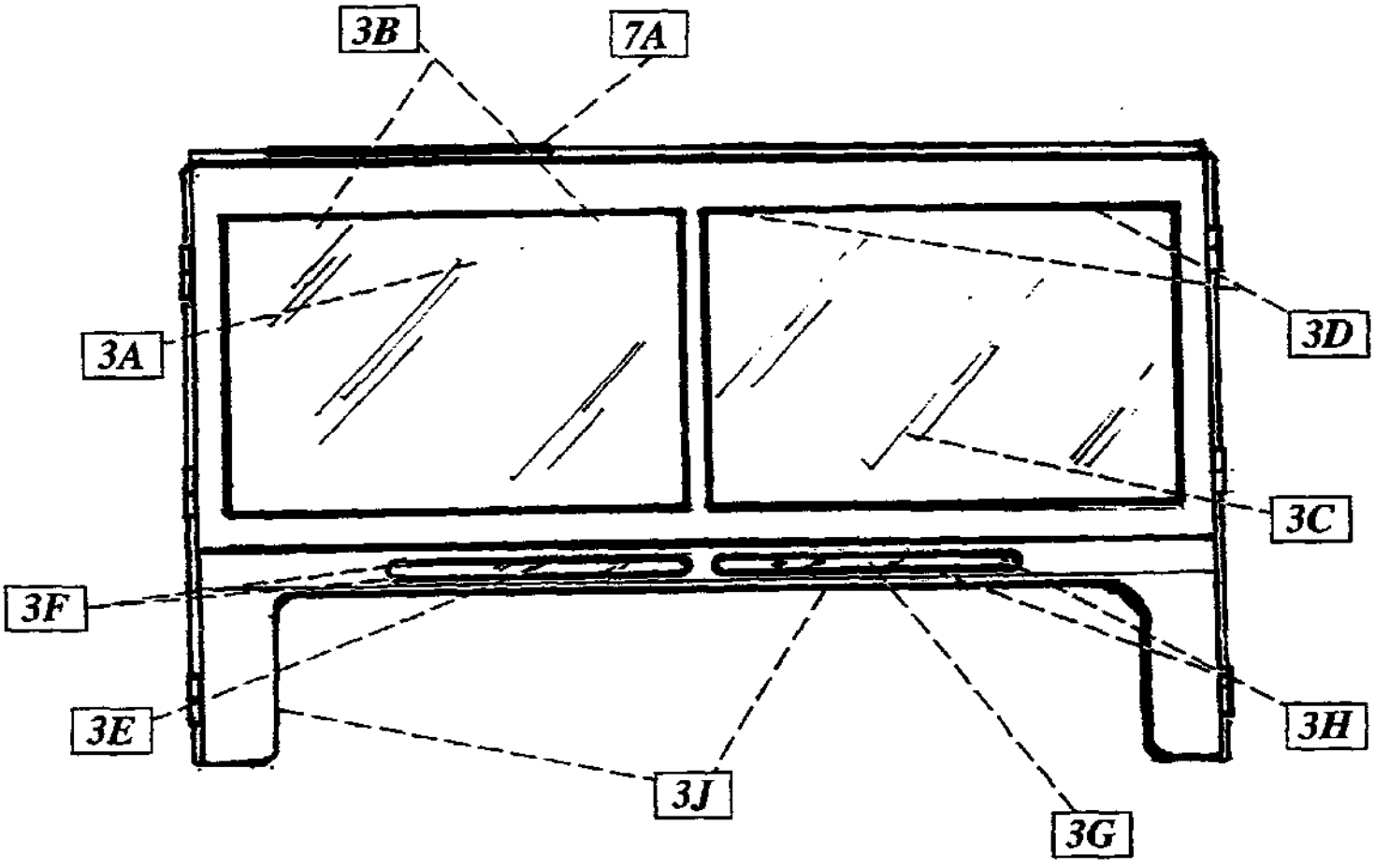

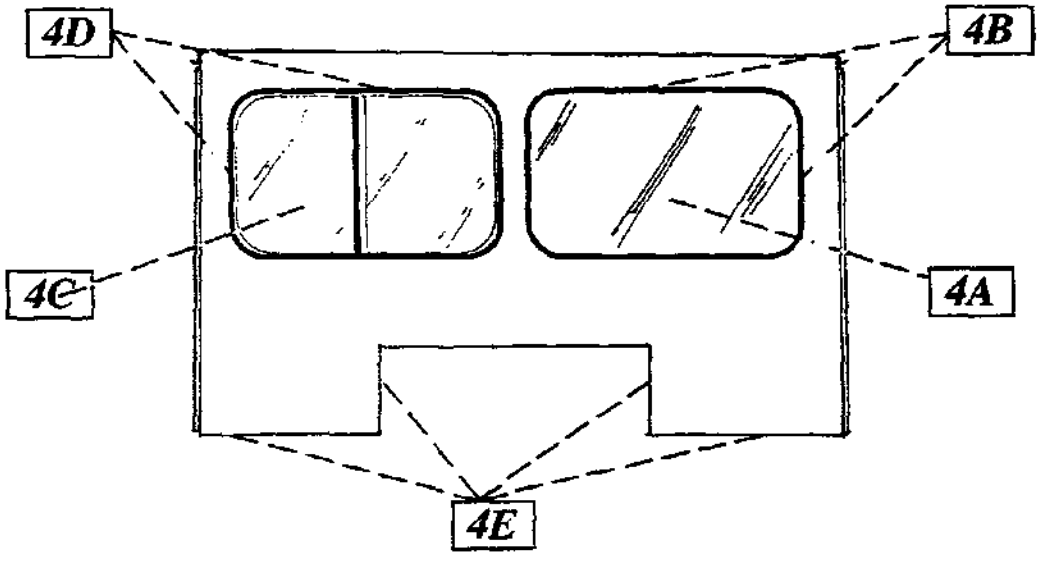

Copyright 1994 MSM Inc.

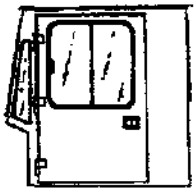

Stewart Stevenson

GT-90

Martin Model Number 881-2

MARTIN CAB®

Phone (216) 651-3882 Fax (216) 651-2079

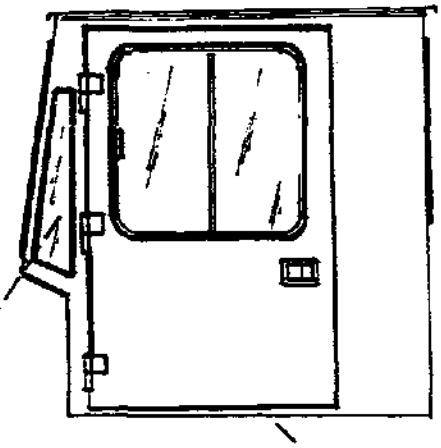

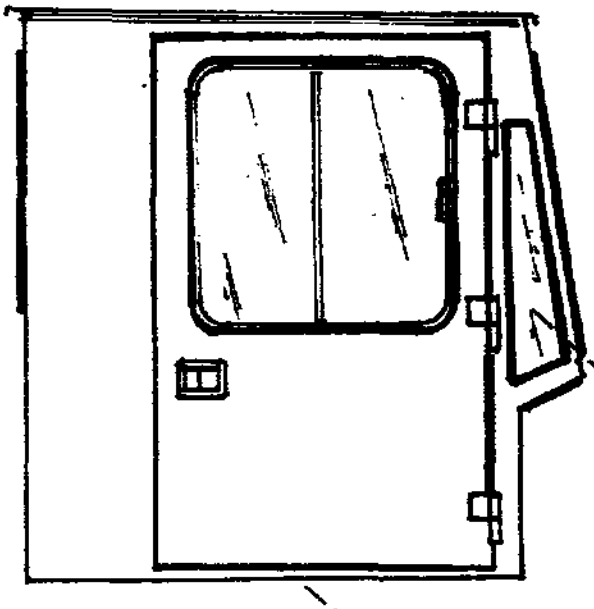

8B

6G

8A

5G

5A

881-1-5000
R. H. Door Assembly
Complete (Shown)

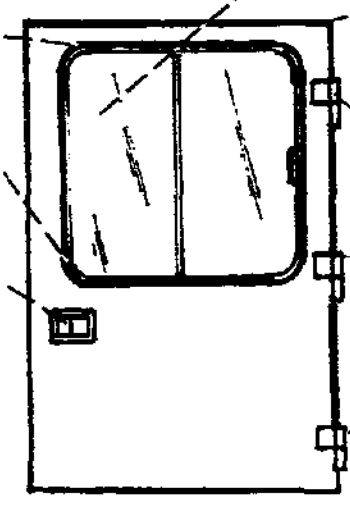

5D

5E

5B

5F

R. H. Door Trim
and Seal Kit (Full
Perimeter)

5C

Note:
For L. H. Door Parts use the
"6" Prefix. (see Page 2)

Copyright 1994 MSM Inc.

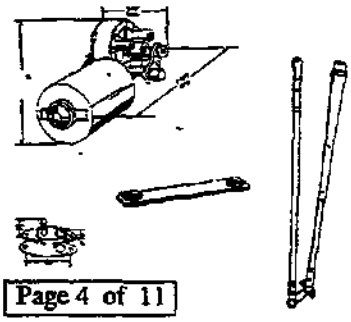

Replacement Parts Guide

Pantographic Wiper Assembly

Stewart Stevenson GT-90 Model #881-2

MARTIN CAB®

Phone (216) 651-3882 Fax (216) 651-2079

Mark No.	Item Description	Part No.
1	Washer (Used only on Dual Link Applications)	CAB W0033
2	Washer (Used only on Dual Link Applications)	CAB W0034
2.5	Drive Link	CAB W0060
3	Nut	CAB W0035
4	Fastening Screws (Three Required Per Wiper)	CAB W0036
5	Hi-Vis Link	CAB W0060
6	Spacing Washer	CAB W0037
7	Spring Clip	CAB W0038
8	Washer	CAB W0021
9	Washer	CAB W0022
10	Nut	CAB W0040
11	Cap	CAB W0047
12	Knurled Driver	CAB W0039
13	Nut	CAB W0048
14	Washer	CAB W0049
15	Screw (Two Required Per Wiper)	CAB W0050
16	Two Speed Wiper Motor 12volt	CAB W0023
17	Hi-Vis Link Cover	CAB W0062
18	Toggle Switch, Two Speed	CAB E0027-1
19	Optional Rotary Switch, Two Speed	CAB E0027
20	Piviot Arm and Shaft Assembly 2" Length	CAB W0019
21	Pantographic Adapter and Gasket	CAB W0043
22	Wiper Arm (Pantographic) 18" Length	CAB W0012
23	Wiper Blade (Pantographic) 20" Length	CAB W0005

Copyright 1994 MSM Inc.

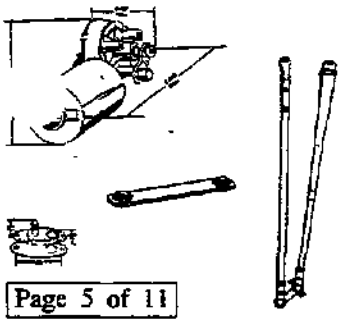

Replacement Parts Guide

Pantographic Wiper Assembly

Stewart Stevenson GT-90 Model #881-2

MARTIN CAB®

Phone (216) 651-3882 Fax (216) 651-2079

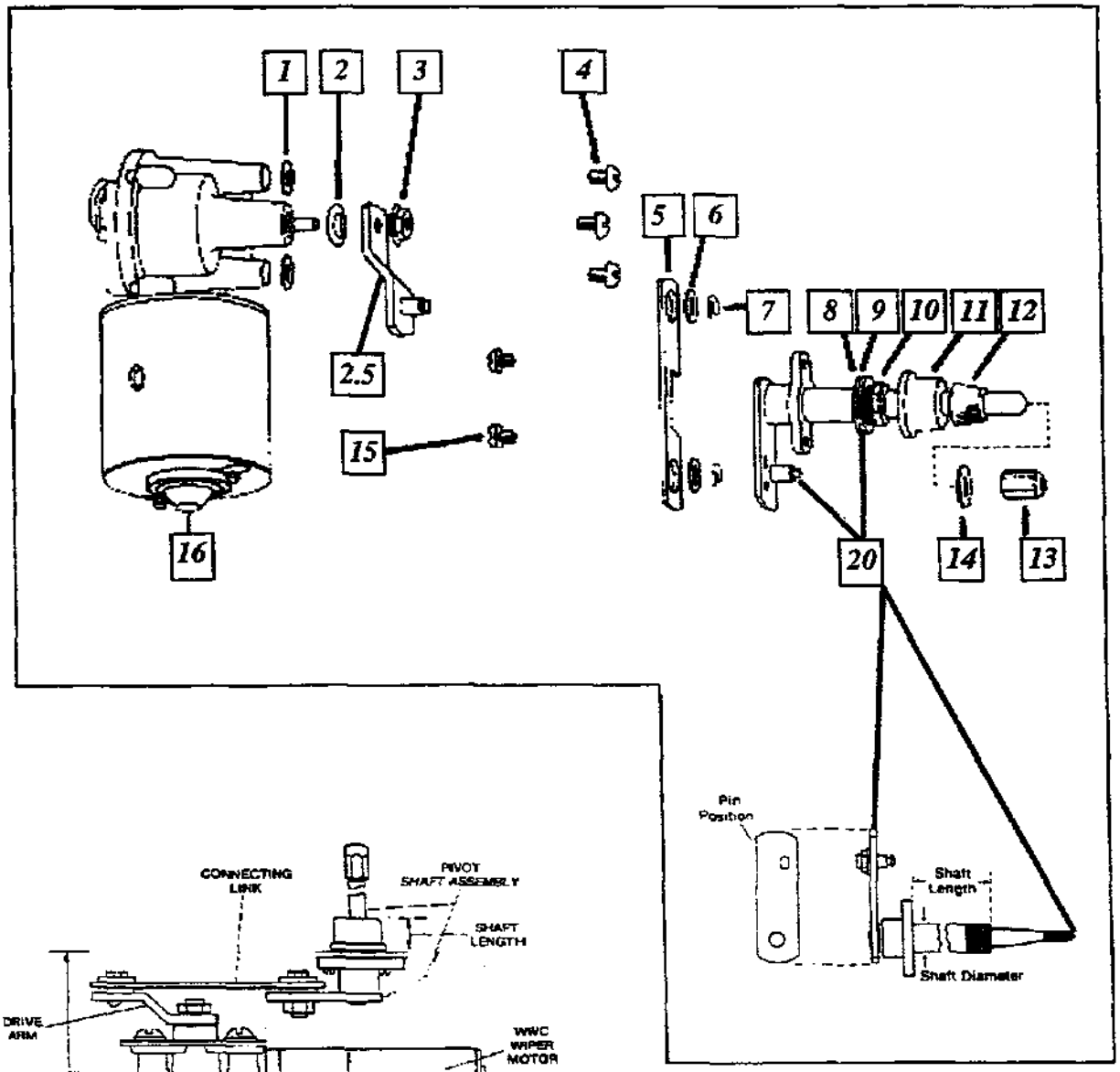

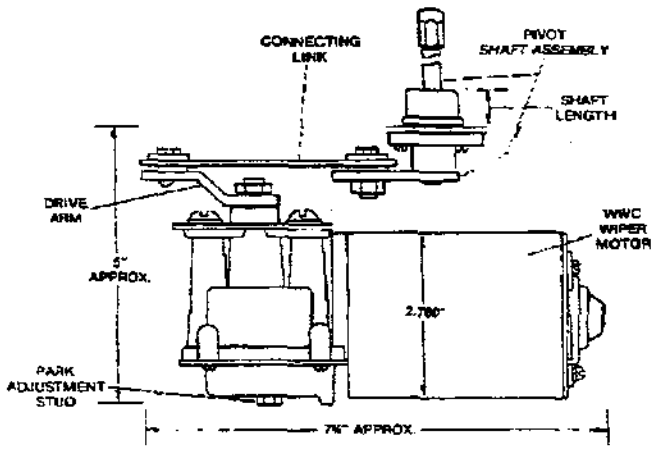

Copyright 1994 MSM Inc.

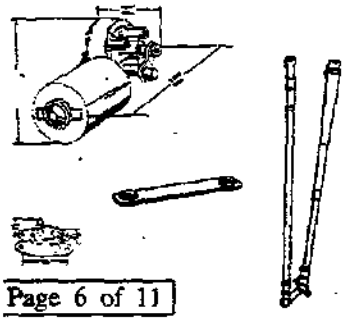

Replacement Parts Guide

Pantographic Wiper Assembly

Stewart Stevenson GT-90 Model #881-2

MARTIN CAB®

Phone (216) 651-3882 Fax (216) 651-2079

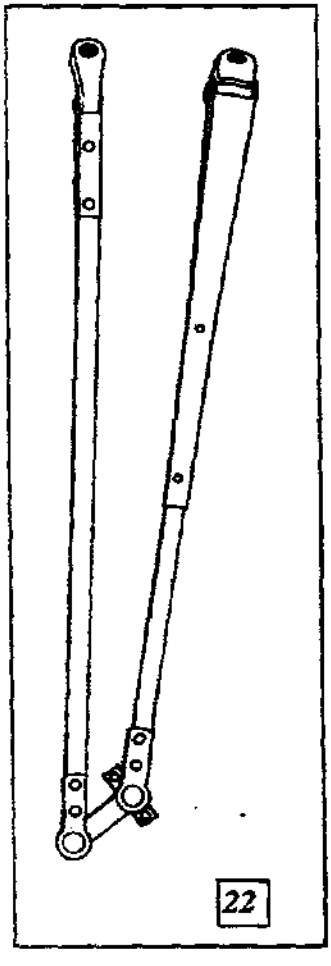

22

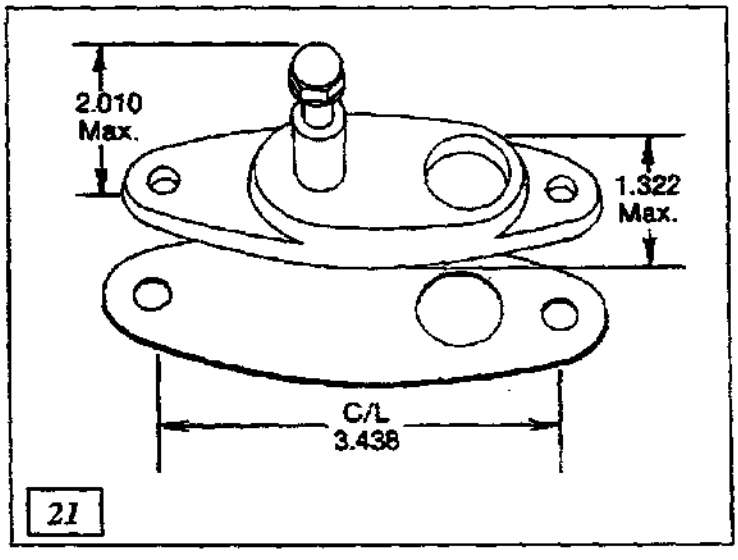

21

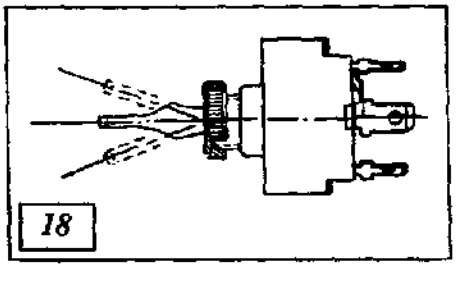

18

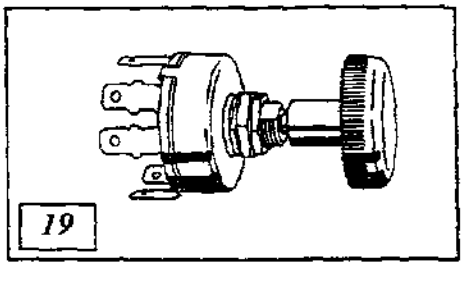

19

Copyright 1994 MSM Inc.

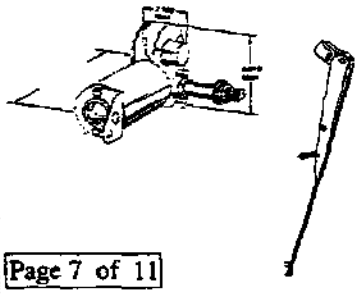

Replacement Parts Guide

Standard Wiper Assembly

Stewart Stevenson GT-90 Model #881-2

MARTIN CAB®

Phone (216) 651-3882 Fax (216) 651-2079

Mark No.	Item Description	Part No.
1	Single Speed Wiper Motor 12volt (With a 2" Shaft)	CAB W0028-S
2	Toggle Switch	CAB E0028
3	Wiper Arm 11"- 14" (Adjustable)	CAB W0044
4	Wiper Blade 14" Length	CAB W0008

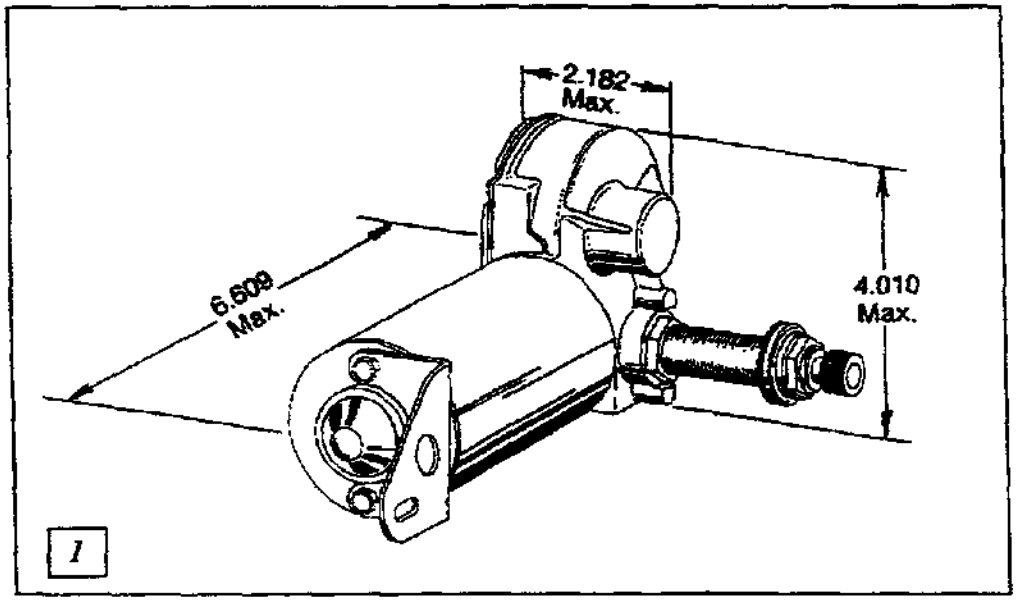

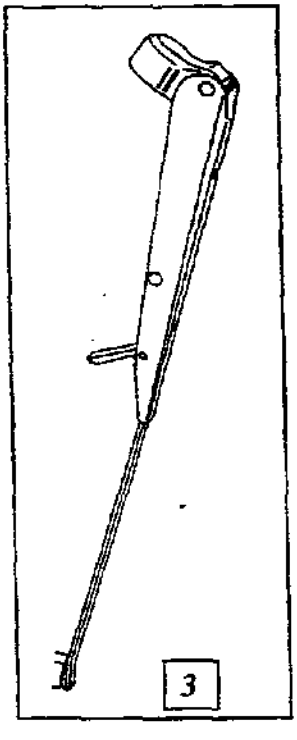

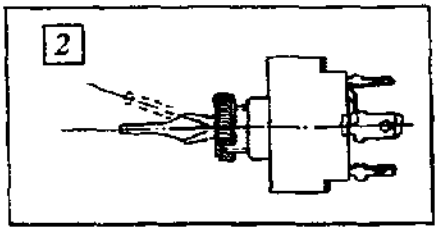

Copyright 1994 MSM Inc.

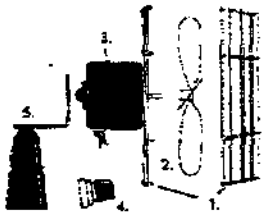

Replacement Parts Guide

Defogger Fan

Stewart Stevenson GT-90 Model #881-2

MARTIN CAB®

Phone (216) 651-3882 Fax (216) 651-2079

Mark No.	*Item Description*	*Part No.*
1	*Grille Guard (Front/Rear)*	***HEAT 0063***
2	*Fan Blade*	***HEAT 0069***
3	*Fan Motor 12 volt*	***CAB 0058-1***
4	*Toggle Switch*	***CAB 0067-1***
5	*Base Assembly*	***HEAT 0061***

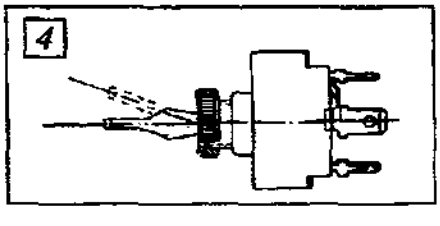

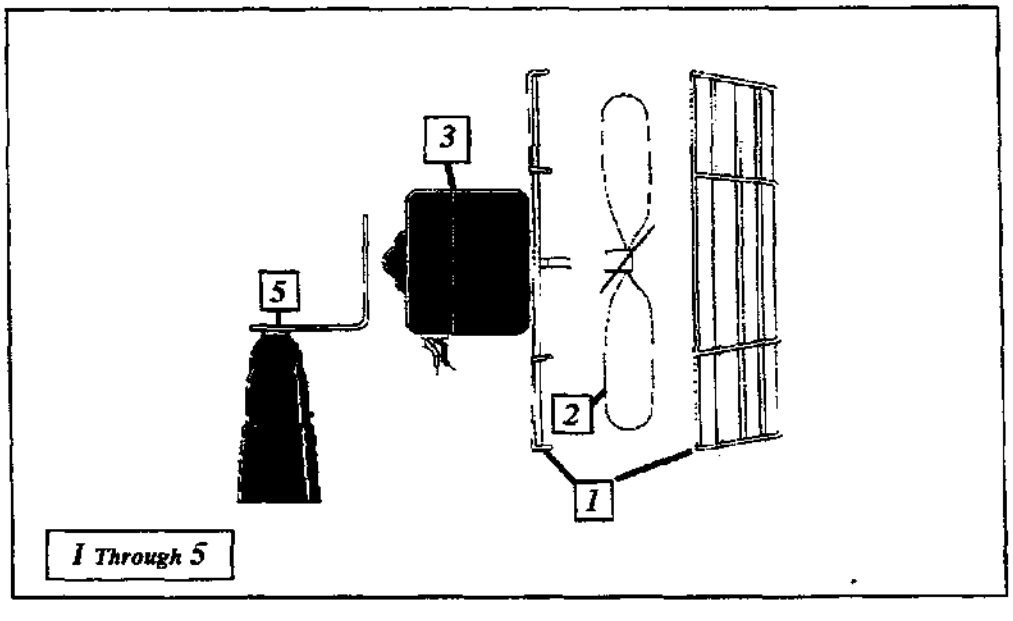

Copyright 1994 MSM Inc.

Replacement Parts Guide

Window Defroster

Stewart Stevenson GT-90 Model #881-2

MARTIN CAB®

Phone (216) 651-3882 Fax (216) 651-2079

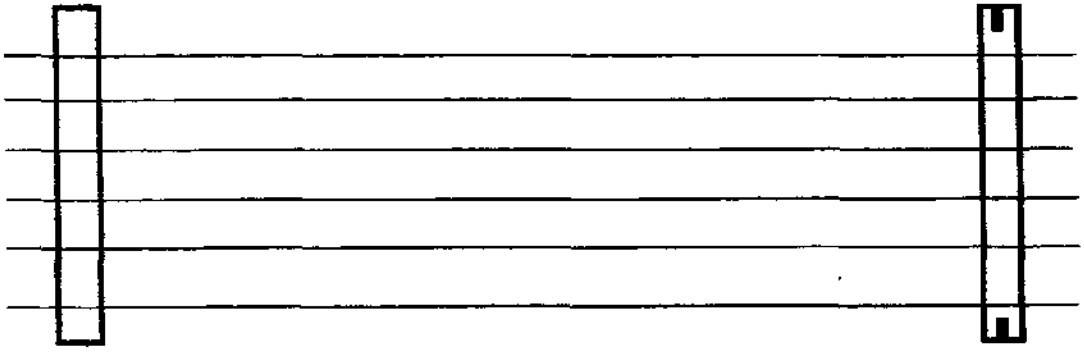

Mark No.	*Item Description*	*Part No.*
1	*Window Defroster Strip*	***DS/12V***

Copyright 1994 MSM Inc.

Dome Light

Stewart Stevenson GT-90 Model #881-2

MARTIN CAB®

Phone (216) 651-3882 Fax (216) 651-2079

Mark No.	Item Description	Part No.
1	Dome Light (switch on dash).....	DL/12V
	* Standard unit has the switch mounted on the base, this may be moved to any location desired (remount wire not included).	

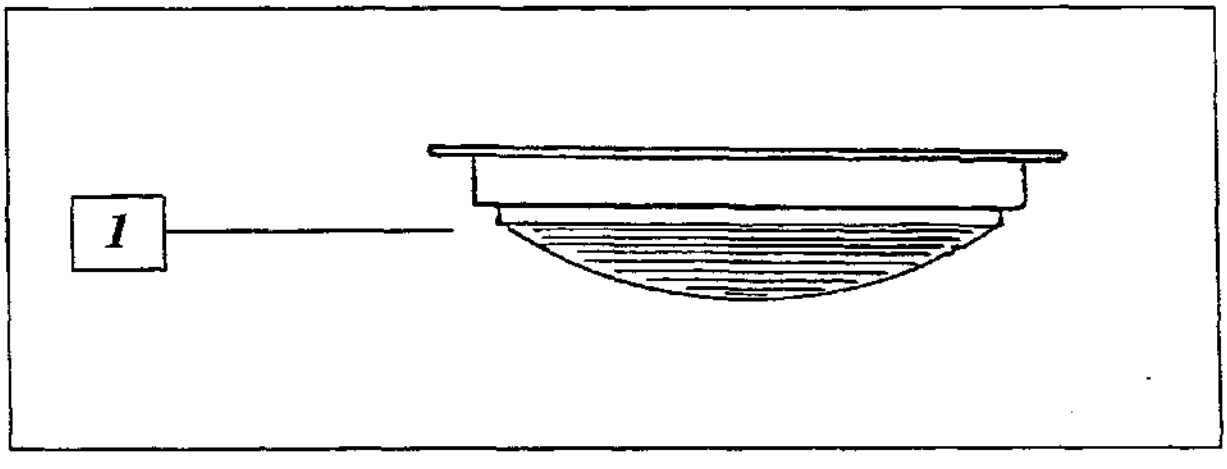

Copyright 1994 MSM Inc.

General Reference

Wiring Harness Color Code

Stewart Stevenson GT-90 Model #881-2

MARTIN CAB®
Phone (216) 651-3882 Fax (216) 651-2079

Wire Color	General Use	Wire Size
Black	Hot Wire to Fuse Block	**14 Gage**
Brown	Tail Lights / Parking Lights	**16 Gage**
Orange	Left Hand Turn Signal	**16 Gage**
Green	Right Hand Turn Signal	**16 Gage**
White	Common Ground	**16 Gage**
Gray	Dome Light	**16 Gage**
Yellow	Rear Windshield Wipers	**16 Gage**
Blue	Spot Lights	**16 Gage**
Purple	Front Work Lights	**16 Gage**
Red	Stop Lights	**16 Gage**
White with Red Tracer	Any Rear Warning or Back Up Lights	**16 Gage**
White with Green Tracer	Rear Work Lights	**16 Gage**
White with Brown Tracer	Defogger Fan	**16 Gage**
White with Black Tracer	Heater Units	**16 Gage**
White with Orange Tracer	Four Way Flashers	**16 Gage**

Copyright 1994 MSM Inc.

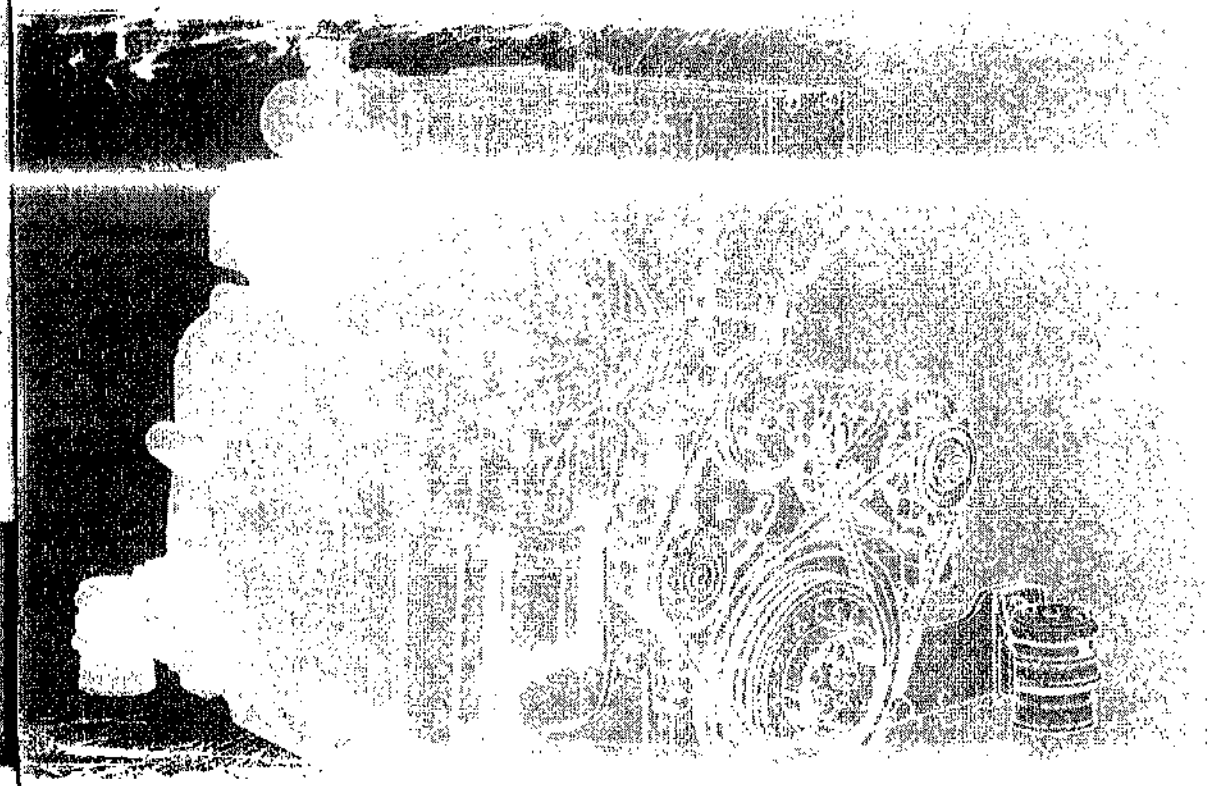

DEUTZ

Operation Manual

1012
1013

DEUTZ

- Please read and observe the information given in this Operation Manual. This will enable you to avoid accidents, preserve the manufacturer's warranty and maintain the engine in peak operating condition.
- This engine has been built exclusively for the application specified in the scope of supply – as described by the equipment manufacturer – and is to be used only for the intended purpose. Any use exceeding that scope is considered to be contrary to the intended purpose. The manufacturer will not assume responsibility for any damage resulting therefrom. The risks involved are to be borne solely by the user.
- Use in accordance with the intended purpose also implies compliance with the conditions laid down by the manufacturer for operation, maintenance and servicing. The engine should only be operated by personnel trained in its use and the hazards involved.
- The relevant accident prevention guidelines and other generally accepted safety and industrial hygiene regulations must be observed.
- Unauthorized engine modifications will invalidate any liability claims against the manufacturer for resultant damage. Manipulations of the injection and regulating system may also influence the performance of the engine, and its emissions. Adherence to legislation on pollution cannot be guaranteed under such conditions.
- Do not alter, modify or adapt the cooling air intake area to the fan. The manufacturer will not assume responsibility for any damage resulting therefrom.

Engine serial number: | | | | | | | |

Please enter the engine serial number here. This number should be quoted when inquiring about Customer Service, Repairs or Spare Parts (see Section 2.1).

All rights reserved. Technical modifications required to improve our engines are reserved with regard to specification data and other technical information contained in this Operation Manual. No part of this Manual may be reproduced in any form or by any means without our written approval.

Operation Manual

1012

1013

0297 9682 en

DEUTZ

Foreword

Dear Customer,

Liquid-cooled DEUTZ engines are designed for a large number of applications. Consequently, a wide range of variants are offered to meet the requirements of specific cases.

Your engine is appropriately equipped for the installation concerned, which means that not all of the components described in this Operation Manual are necessarily mounted to your engine.

We have endeavored to highlight any differences so that you will be able to locate the operating and maintenance instructions relevant to your engine quickly and easily.

Please read this Manual before starting your engine, and always observe the operating and maintenance instructions.

We are available to help with any additional inquiries.

Sincerely,

DEUTZ AG

Table of contents

1. General

2. Engine Description
2.1 Model
2.1.1 Rating Plate
2.1.2 Rating Plate Location
2.1.3 Engine Serial Number
2.1.4 Cylinder Numbering
2.2 Engine Illustrations
2.2.1 Service Side 1012
2.2.2 Starter Side 1012
2.2.3 Service Side 1012 E
2.2.4 Starter Side 1012 E
2.2.5 Service Side 1013
2.2.6 Starter Side 1013
2.2.7 Service Side 1013 E
2.2.8 Starter Side 1013 E
2.2.9 Starter Side Unit Engine BF4M 1013 EC
2.2.10 Service Side Unit Engine BF4M 1013 EC
2.2.11 Starter Side Unit Engine BF6M 1013 EC
2.2.12 Service Side Unit Engine BF6M 1013 EC
2.3 Lube Oil Circuit
2.3.1 Lube Oil Circuit Schematic 1012/1012 E
2.3.2 Lube Oil Circuit Schematic 1013/1013 E
2.4 Fuel System
2.4.1 Fuel System Schematic
2.5 Cooling System
2.5.1 Cooling System Schematic 1012
2.5.2 Cooling System Schematic 1012 E
2.5.3 Cooling System Schematic 1013
2.5.4 Cooling System Schematic 1013 E

3. Engine Operation
3.1 Commissioning
3.1.1 Adding Engine Oil
3.1.2 Filling Oil Bath Air Cleaner
3.1.3 Adding Fuel
3.1.4 Filling/Venting the Cooling System
3.1.5 Other Preparations
3.1.6 Other Preparations
3.2 Starting
3.2.1 Electric Starting
3.3 Monitoring Systems
3.3.1 Engine Oil Pressure
3.3.2 Coolant Temperature
3.3.3 Coolant Level/Level Gauge
3.4 Stopping
3.4.1 Engines with Mechanical Shutdown
3.4.2 Engines with Electrical Shutdown
3.5 Operating Conditions
3.5.1 Winter Operation
3.5.2 High Ambient Temperature, High Altitude

4. Operating Media
4.1 Lube Oil
4.1.1 Quality Grade
4.1.2 Viscosity
4.2 Fuel
4.2.1 Quality Grade
4.2.2 Winter Grade Fuel
4.3 Coolant
4.3.1 Water Quality for Coolant Preparation
4.3.2 Coolant Preparation
4.3.3 Antifreeze/Chemical Corrosion Inhibitors

5. Routine Maintenance
5.1 Maintenance Schedule
5.2 Maintenance Chart
5.3 Maintenance Record

Table of contents

6. Service and Maintenance
6.1 Lubrication System
6.1.1 Oil Change Intervals
6.1.2 Changing Engine Oil, Checking Oil Level
6.1.3 Changing Oil Filter
6.1.4 Cleaning/Changing Oil Filter (Cup)
6.2 Fuel System
6.2.1 Changing Fuel Filter
6.2.2 Cleaning / Changing Fuel Pre-Filter Element
6.2.3 Venting the Fuel System with Preliminary Fuel Filter
6.2.4 Venting the Fuel System w/o Preliminary Fuel Filter
6.2.5 Changing Fuel Leakage Pipes
6.3 Cooling System
6.3.1 Cleaning Intervals
6.3.2 Cleaning Cooling System
6.3.3 Draining Cooling System 1012 / 1013
6.3.4 Filling / Venting Cooling System 1012 / 1013
6.3.5 Draining the Cooling System 1012 E / 1013 E
6.3.6 Filling/Venting the Cooling System 1012 E / 1013 E
6.3.7 Draining the Cooling System Unit Engine
6.3.8 Filling/Venting the Cooling System Unit Engine
6.3.9 Draining the Charge Air Cooler
6.4 Combustion Air Cleaner
6.4.1 Cleaning Intervals
6.4.2 Emptying Cyclone-Type Precleaner
6.4.3 Cleaning Oil Bath Air Cleaner
6.4.4 Dry Type Air Cleaner
6.5 Belt Drives
6.5.1 Checking V-Belts
6.5.2 Tensioning Fan / Alternator Belts 1012
6.5.3 Changing Fan / Alternator Belts 1012
6.5.4 Tensioning Coolant / Fuel Pump Belts 1012
6.5.5 Changing Coolant / Fuel Pump Belts 1012
6.5.6 Tensioning Coolant / Fuel Pump Belts 1012 E
6.5.7 Changing Coolant / Fuel Pump Belts 1012 E
6.5.8 Tensioning Alternator Belt 1012 E
6.5.9 Changing Alternator Belt 1012 E
6.5.10 Tensioning / Changing Compressor / Alternator Belts 1013
6.5.11 Tensioning Coolant / Fuel Pump Belts 1013
6.5.12 Changing Coolant / Fuel Pump Belts 1013
6.5.13 Tensioning / Changing Alternator Belt 1013
6.5.14 Tensioning Coolant / Fuel Pump Belts 1013 E
6.5.15 Changing Coolant / Fuel Pump Belts 1013 E
6.5.16 Tensioning / Changing Compressor Belt
6.6 Adjustments
6.6.1 Checking / Adjusting Valve Clearances
6.6.1.1 Valve Clearance Adjustment Schematic
6.7 Accessories
6.7.1 Battery
6.7.1.1 Checking the Battery and Cable Connections
6.7.1.2 Checking Electrolyte Level
6.7.1.3 Checking Specific Gravity of Electrolyte
6.7.2 Three-Phase Alternator
6.7.3 Lifting Tackle

7. Troubleshooting
7.1 Diagnosis Chart

8. Engine Preservation
8.1 Preservation

9. Technical Specifications
9.1 Engine Specifications and Settings
9.2 Torque Wrench Settings
9.3 Tools

10. Service

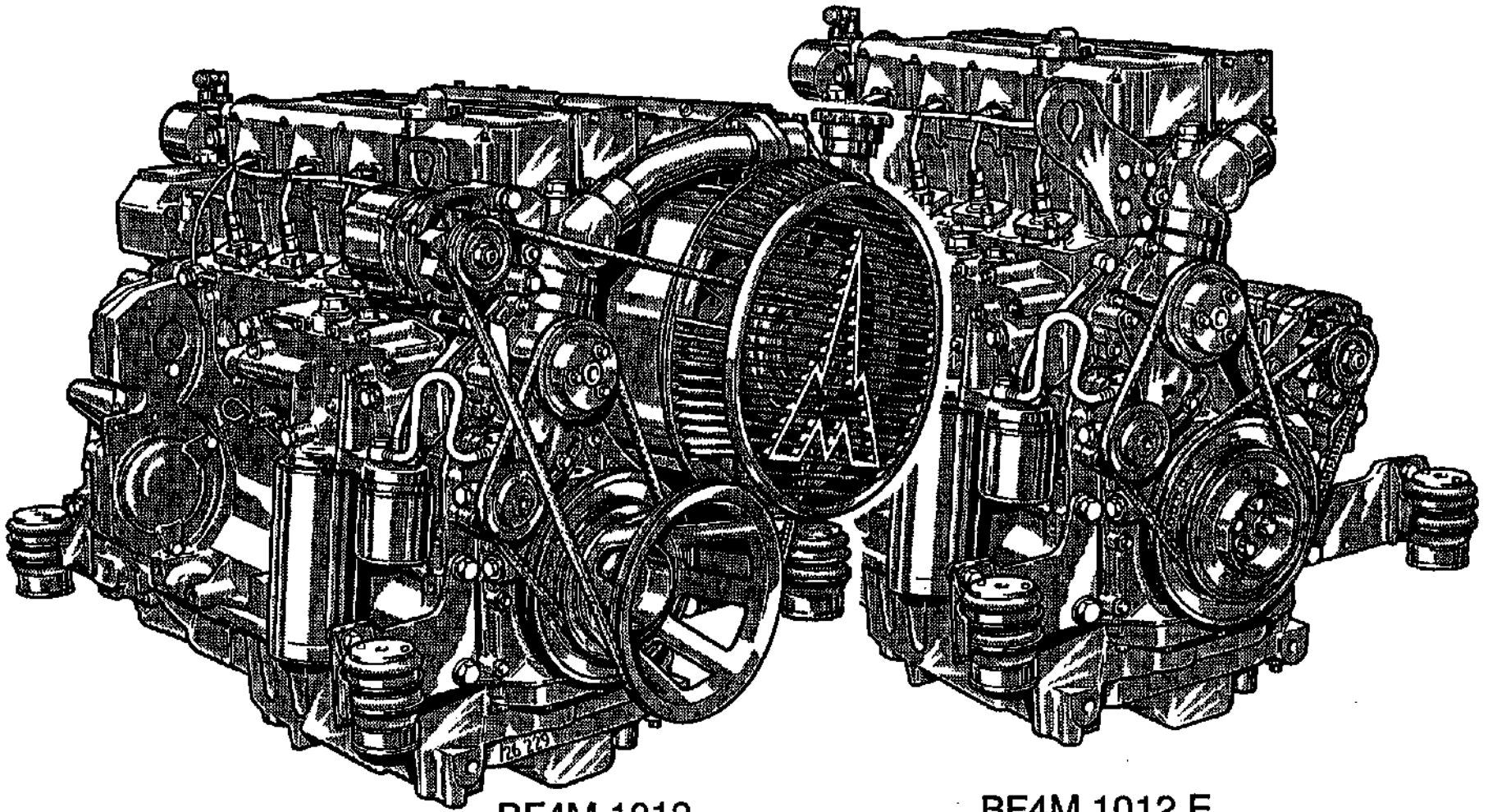

BF4M 1012

BF4M 1012 E

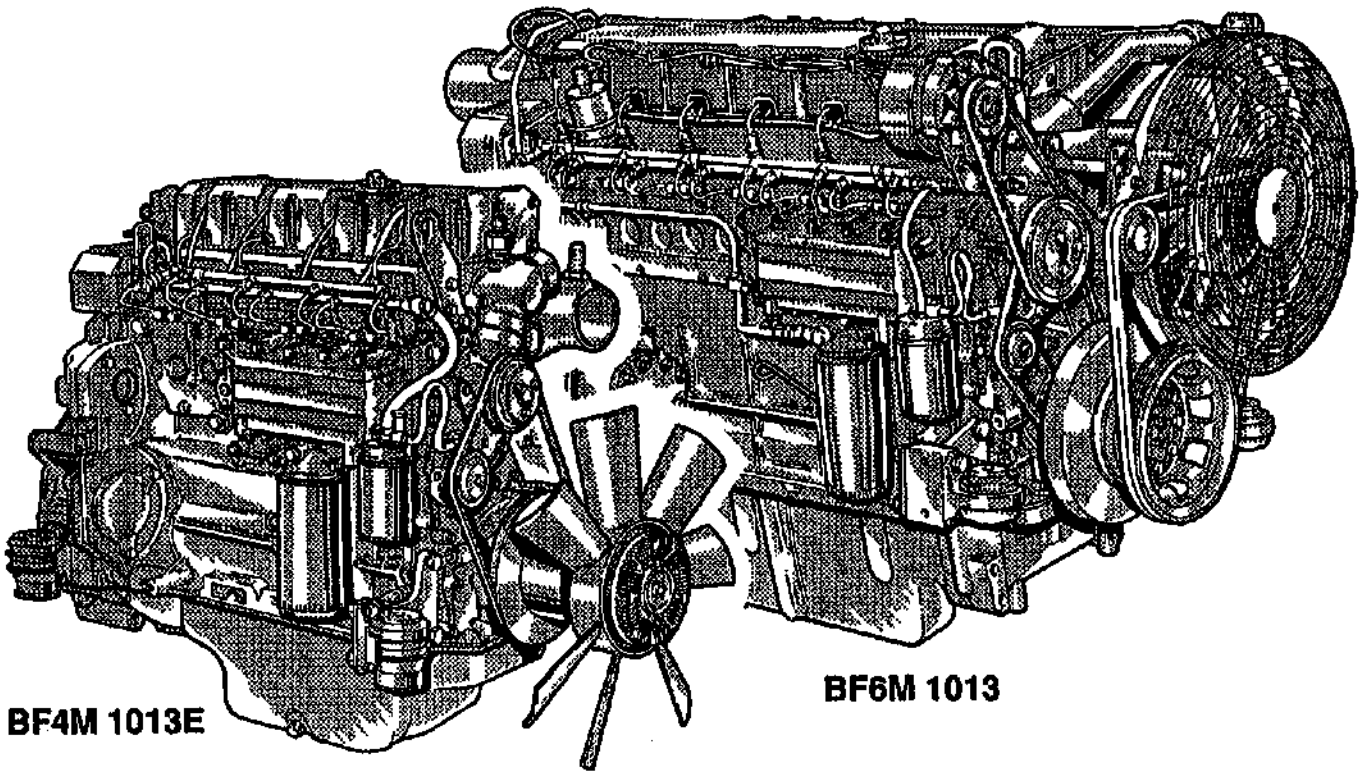
BF4M 1013E
BF6M 1013

DEUTZ Engines

are the product of many years of research and development. The resulting know-how, coupled with stringent quality standards, guarantee their long service life, high reliability and low fuel consumption. It goes without saying that DEUTZ Engines meet the highest standards for environmental protection.

Care and Maintenance

Sound care and maintenance practices will ensure that the engine continues to meet the requirements placed on it. Recommended service intervals must be observed and service and maintenance work carried out conscientiously. Special care should be taken under abnormally demanding operating conditions.

Service

Please contact one of our authorized service representatives in the event of breakdowns or for spare parts inquiries. Our trained specialists will carry out repairs quickly and professionally, using only genuine spare parts.

Beware of Running Engine

Shut the engine down before carrying out maintenance or repair work. Ensure that the engine cannot be accidentally started.
When the work is complete, be sure to refit any panels and guards that may have been removed.
Observe industrial safety regulations when running the engine in an enclosed space or underground.
When carrying out work on the running engine, make sure that all clothing is worn close to the body.
Never fill the fuel tank while the engine is running.

Safety

This symbol is used for all safety warnings which - if not observed - constitute immediate danger to the life and limb of the persons involved. Please follow them carefully. The attention of operating personnel should be drawn to these safety instructions. General safety and accident prevention regulations laid down by law must also be observed.

Asbestos

DEUTZ original parts are asbestos-free.

Engine Description

2

2.1 Model
2.2 Engine Illustrations
2.3 Lube Oil Circuit
2.4 Fuel System
2.5 Cooling System

2.1.1 Rating Plate

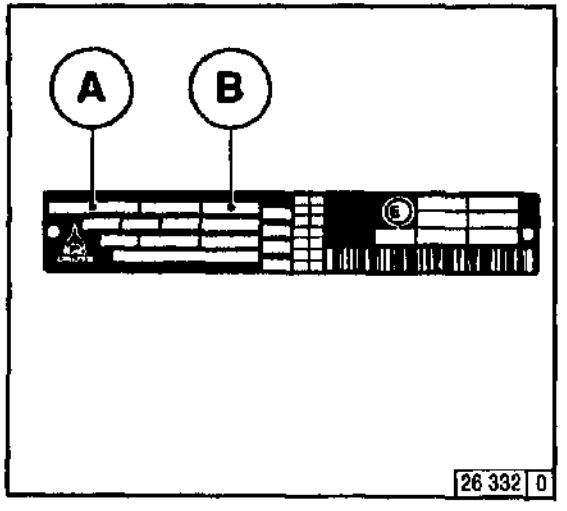

The model **A**, the engine serial number **B** and the performance data are stamped on the rating plate. The model and engine serial number must be given when ordering spare parts.

2.1.2 Rating Plate Location

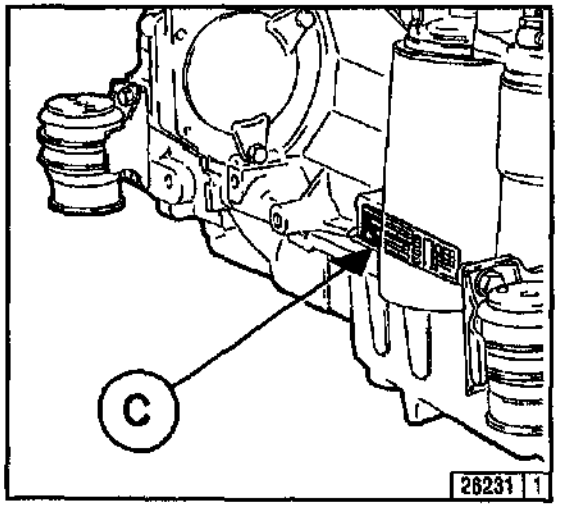

The rating plate **C** is attached to the crankcase.

2.1.3 Engine Serial Number

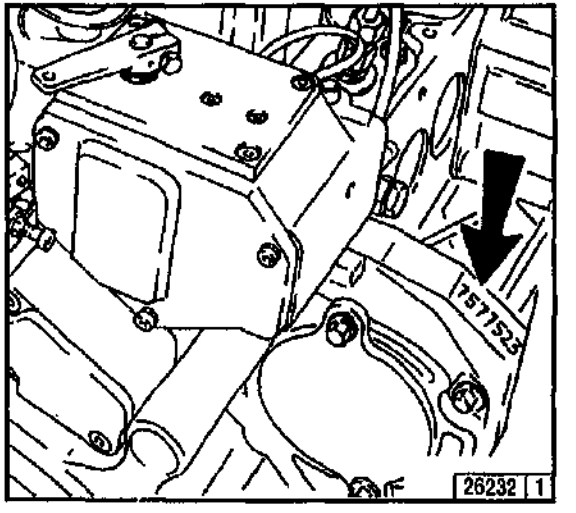

The engine serial number is also stamped on the crankcase itself **(arrow)**.

2.1.4 Cylinder Numbering

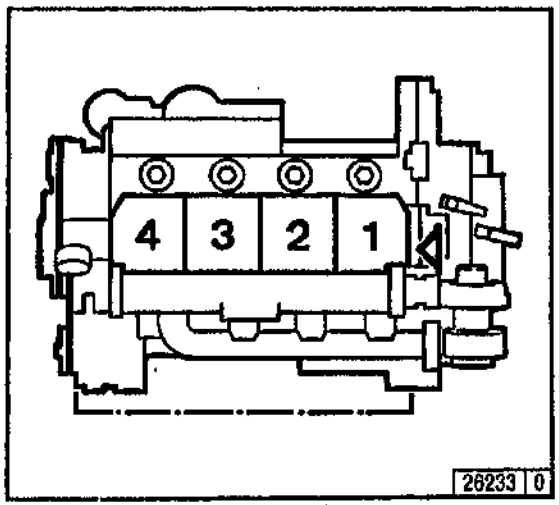

Cylinders are numbered consecutively, beginning at the flywheel end.

2.2.1 Service Side 1012

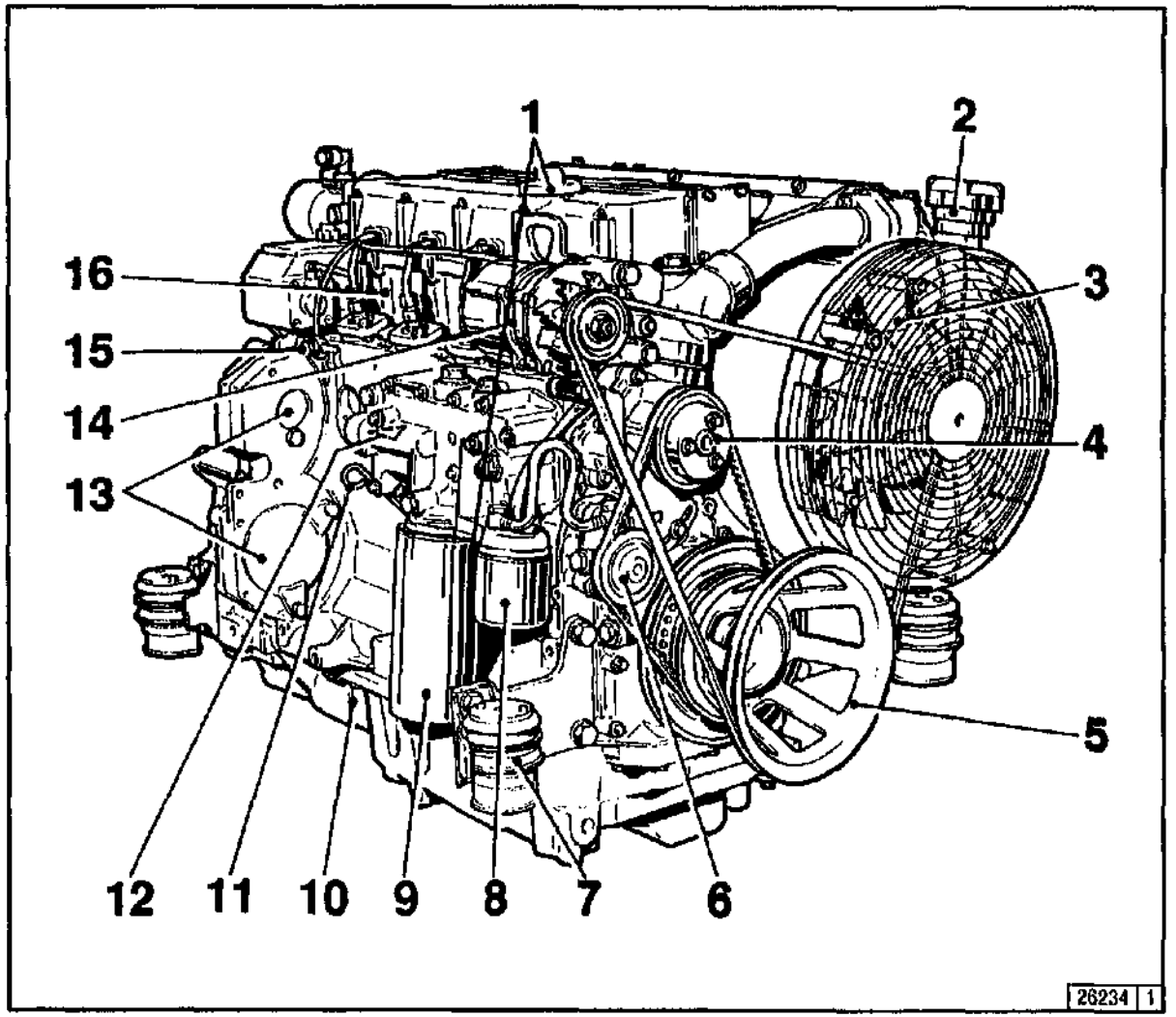

1 Oil filler (option: between filters)
2 Coolant filler
3 Cooling fan
4 Coolant pump
5 Belt pulley
6 Fuel pump
7 Engine mount
8 Fuel filter
9 Lube oil filter
10 Oil pan
11 Dipstick
12 Lube oil cooler
13 Mounting facility for hydraulic pumps
14 Alternator
15 Back leak fuel pipe with pressure-regulating valve
16 Cylinder head

2.2.2 Starter Side 1012

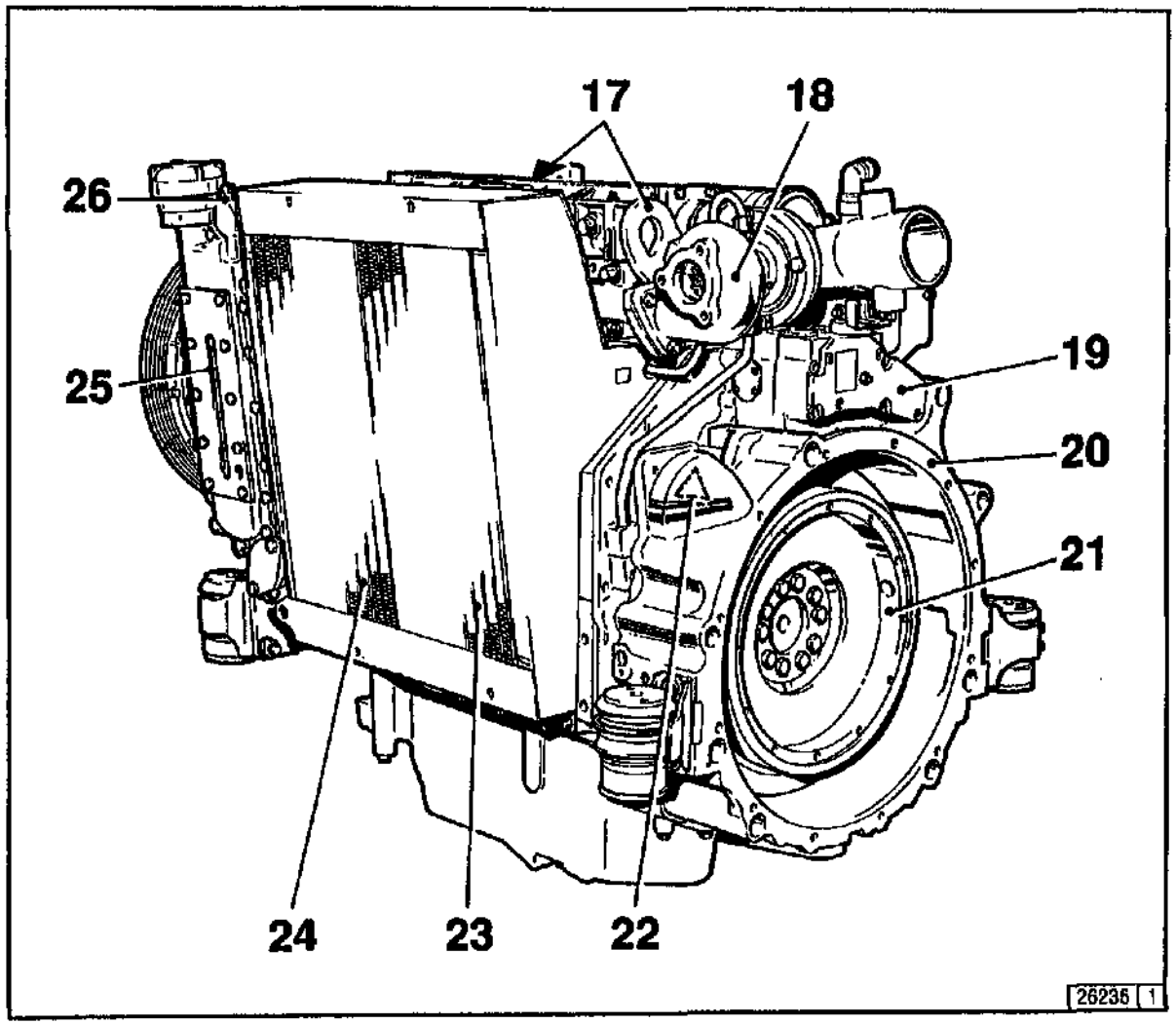

17 Lifting points
18 Exhaust turbocharger
19 Speed governor
20 SAE housing
21 Flywheel
22 Starter motor
23 Hydraulic oil cooler
24 Coolant heat exchanger
25 Coolant level gauge
26 Bleeder valve

2.2.3 Service Side 1012 E

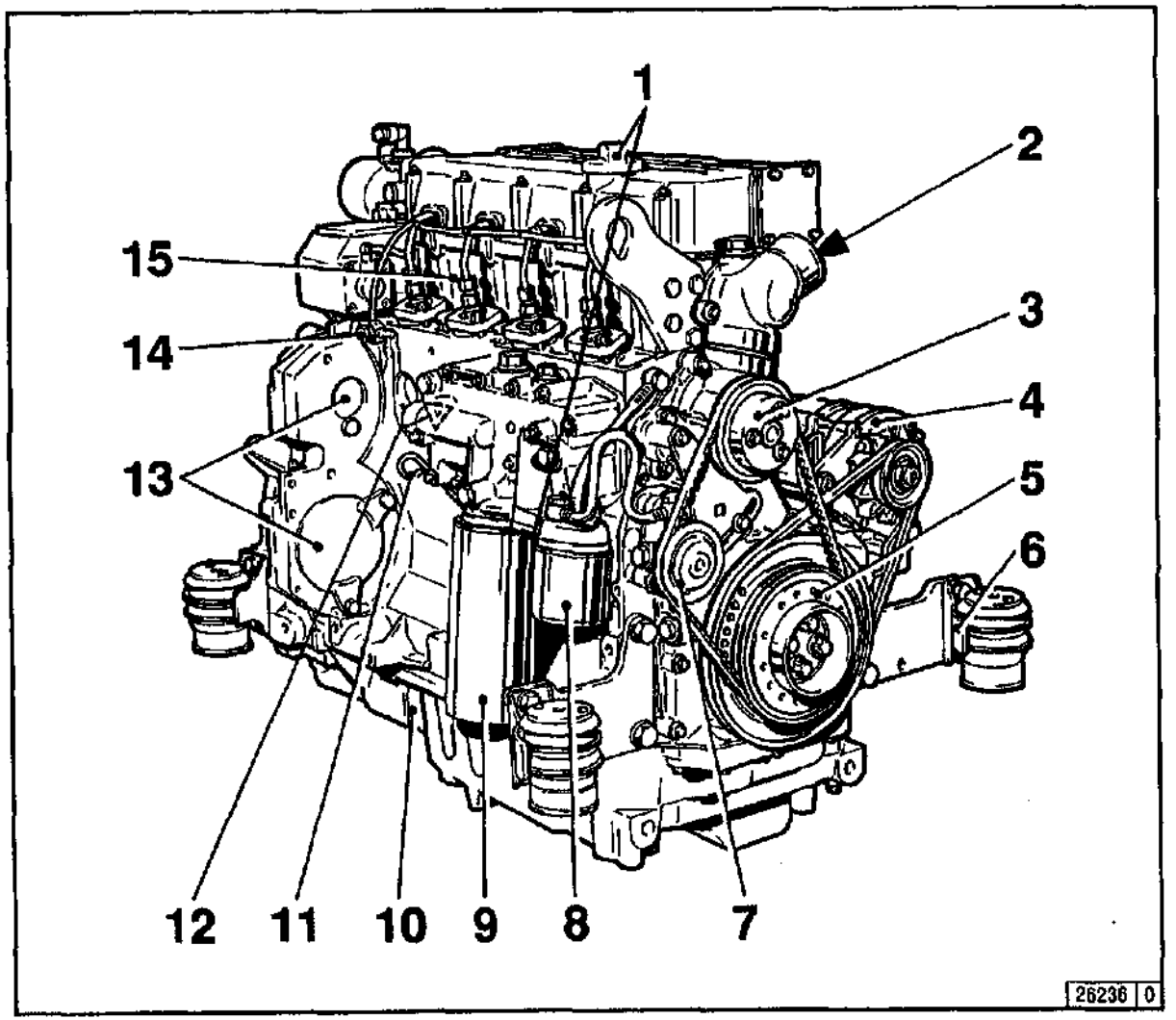

1 Oil filler (option: between filters)
2 Coolant inlet
3 Coolant pump
4 Alternator
5 Belt pulley
6 Engine mount
7 Fuel pump
8 Fuel filter
9 Lube oil filter
10 Oil pan
11 Dipstick
12 Lube oil cooler
13 Mounting facility for hydraulic pump
14 Back leak fuel pipe with pressure-regulating valve
15 Cylinder head

2.2.4 Starter Side 1012 E

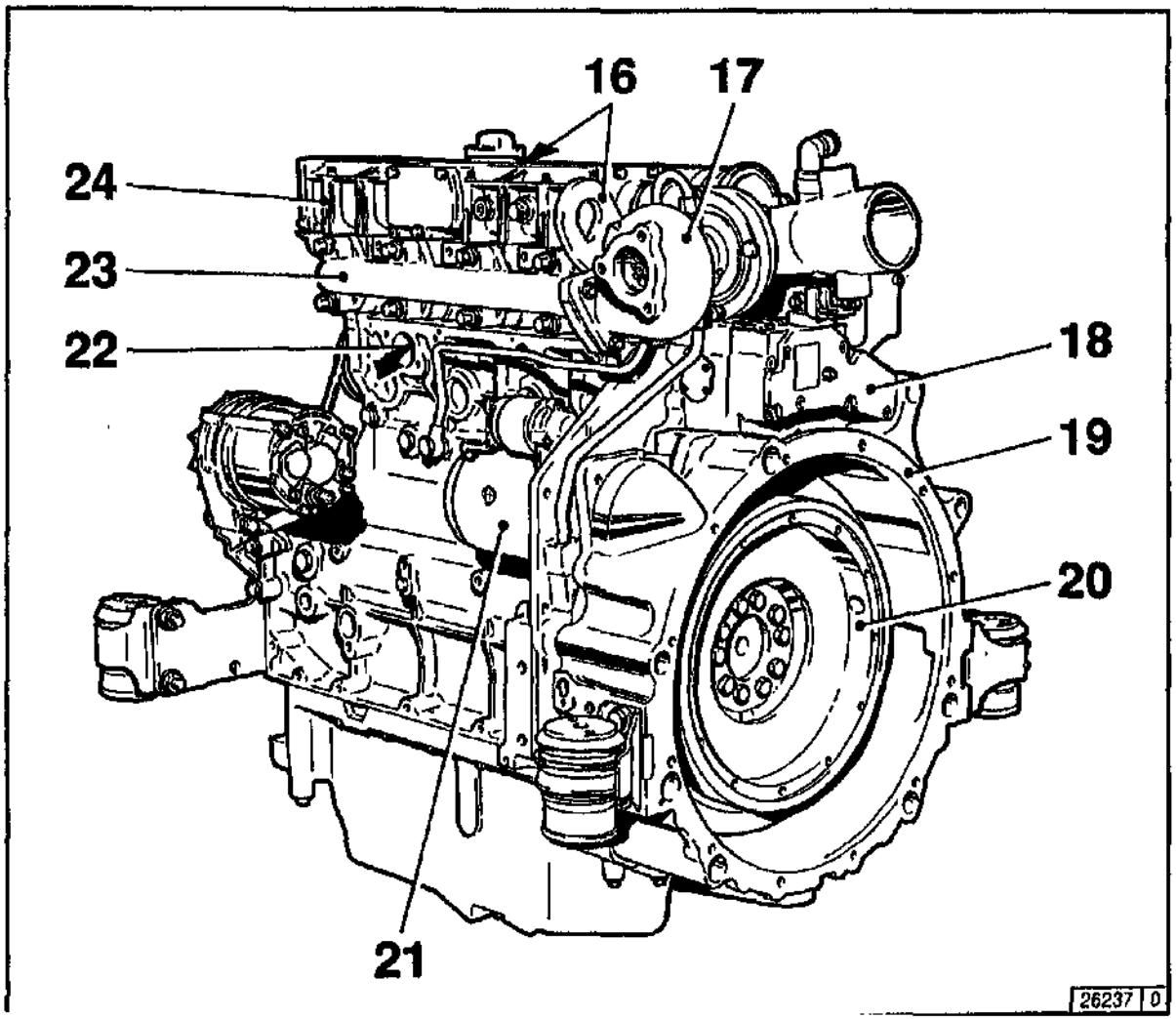

16 Lifting points
17 Exhaust turbocharger
18 Speed governor
19 SAE housing
20 Flywheel
21 Starter motor
22 *Coolant outlet to heat exchanger*
23 Exhaust manifold
24 Air intake manifold

2.2.5 Service Side 1013

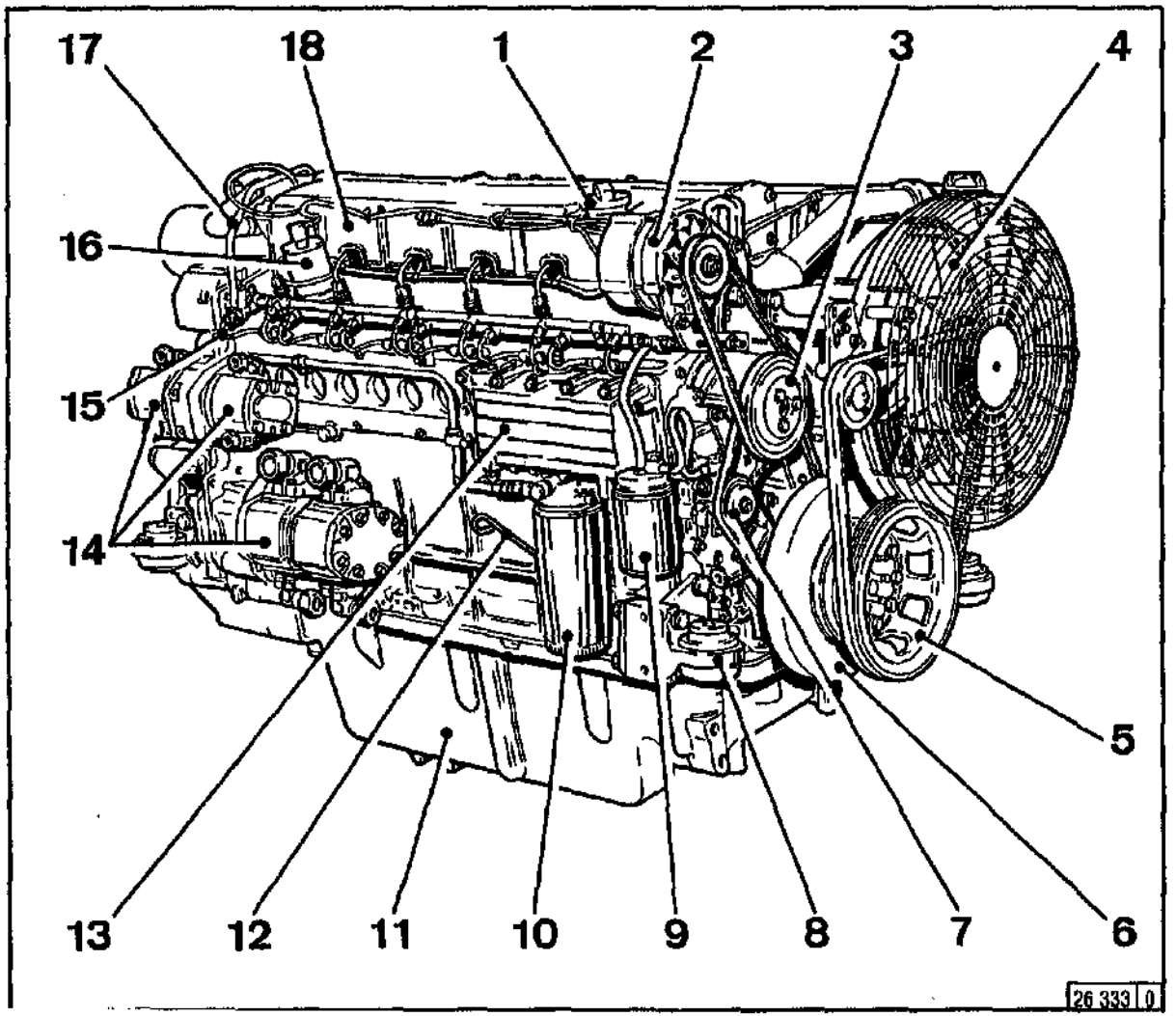

1 Oil filler (option: between filters)
2 Alternator
3 Coolant pump
4 Fan
5 Belt Pulley
6 Vibration damper
7 Fuel pump
8 Engine mount
9 Fuel filter
10 Lube oil filter
11 Oil pan
12 Dipstick
13 Lube oil cooler
14 Hydraulic pumps (or compressor)
15 Fuel pipe
16 Solenoid
17 Lube oil line to turbocharger
18 Cylinder head

2.2.6 Starter Side 1013

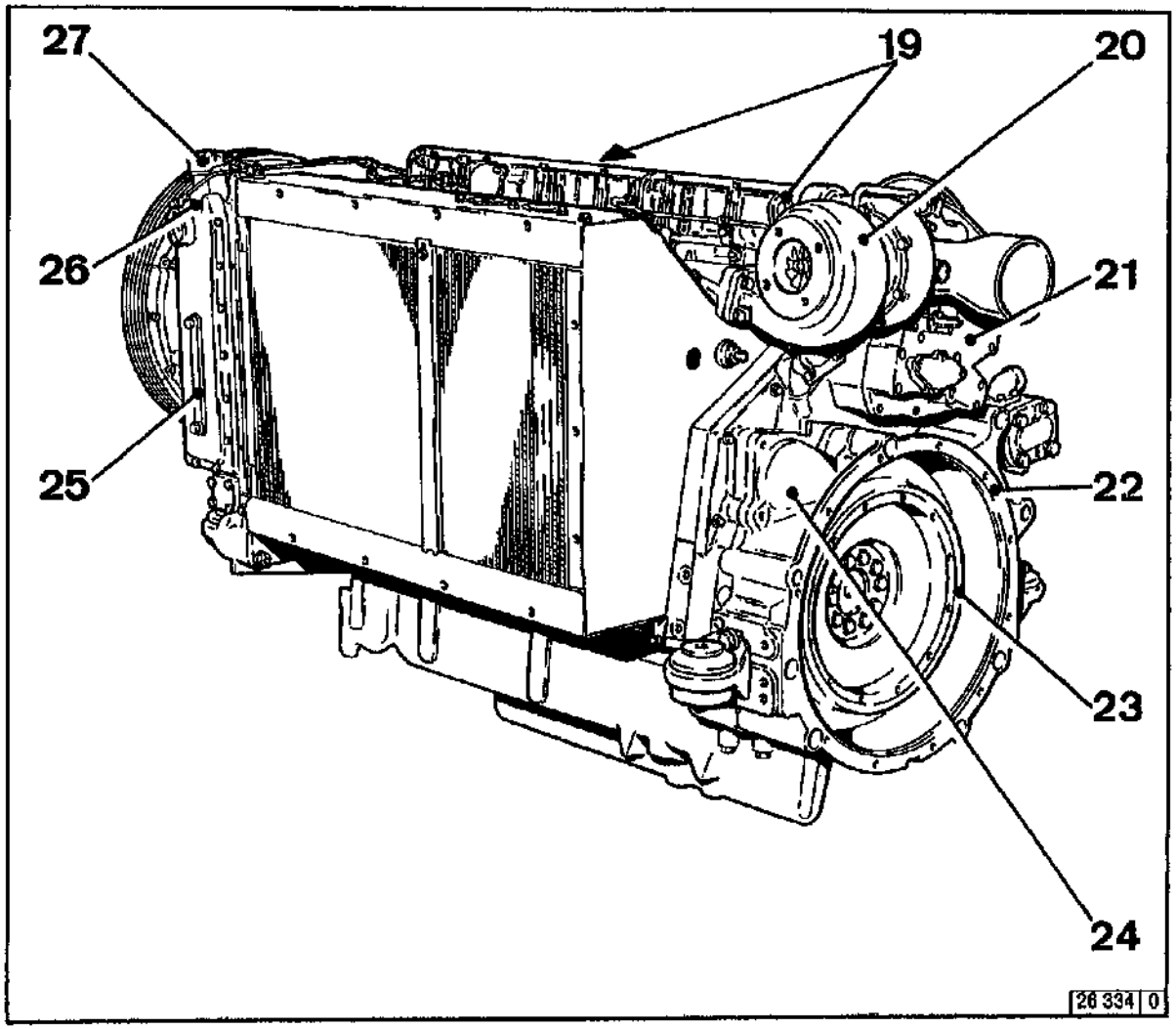

19 Lifting points
20 Exhaust turbocharger
21 Speed governor
22 SAE housing
23 Flywheel
24 Starter motor
25 Coolant level gauge
26 Bleeder valve
27 Coolant filler cap

2.2.7 Service Side 1013 E

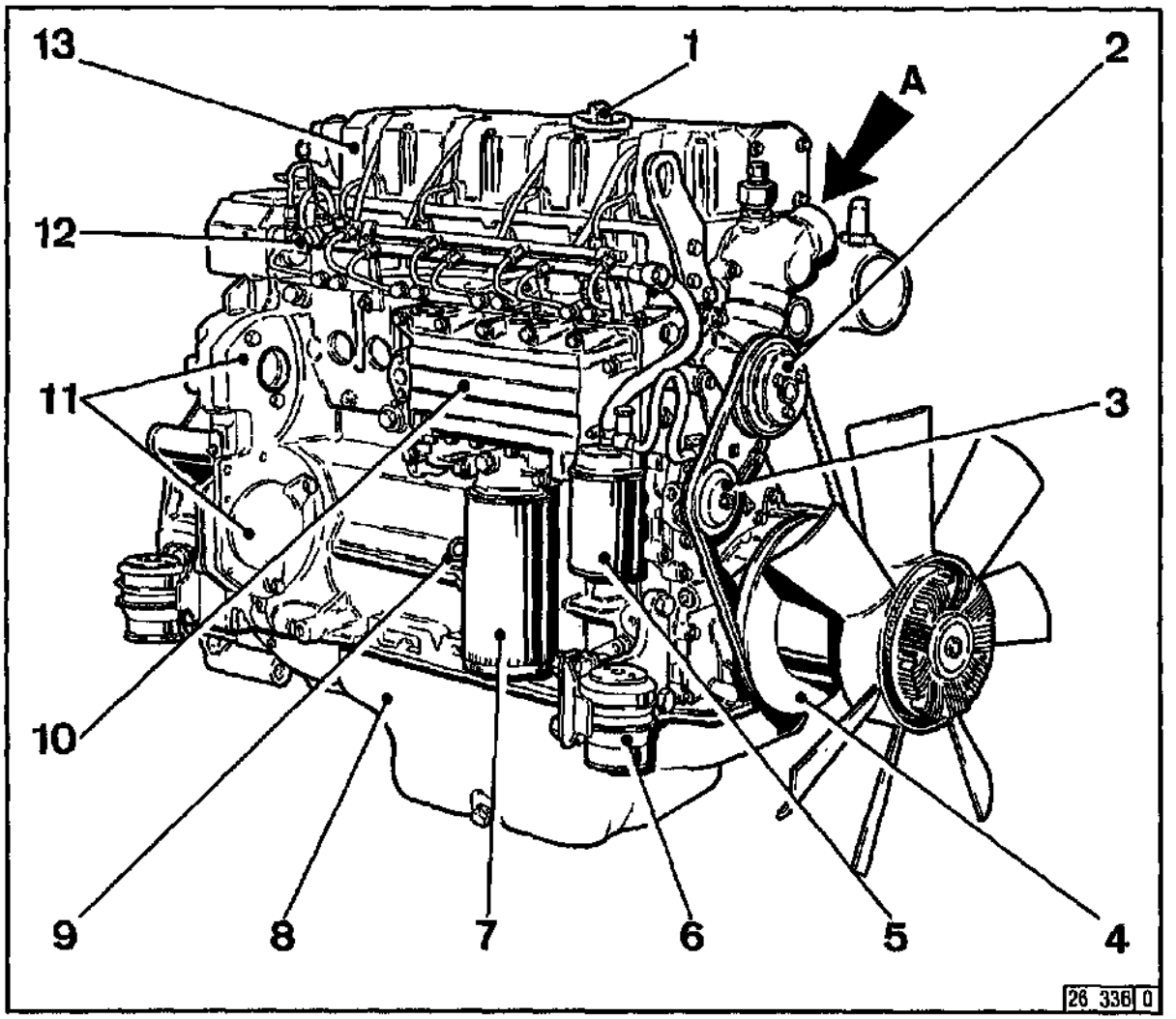

1 Oil filler
2 Coolant pump
3 Fuel pump
4 Vibration damper
5 Lube oil filter
6 Engine mount
7 Fuel filter
8 Oil pan
9 Dipstick
10 Lube oil cooler
11 Mounting facility for hydraulic pump
12 Back leak fuel pipe with pressure-regulating valve
13 Cylinder head
A Coolant inlet

2.2.8 Starter Side 1013 E

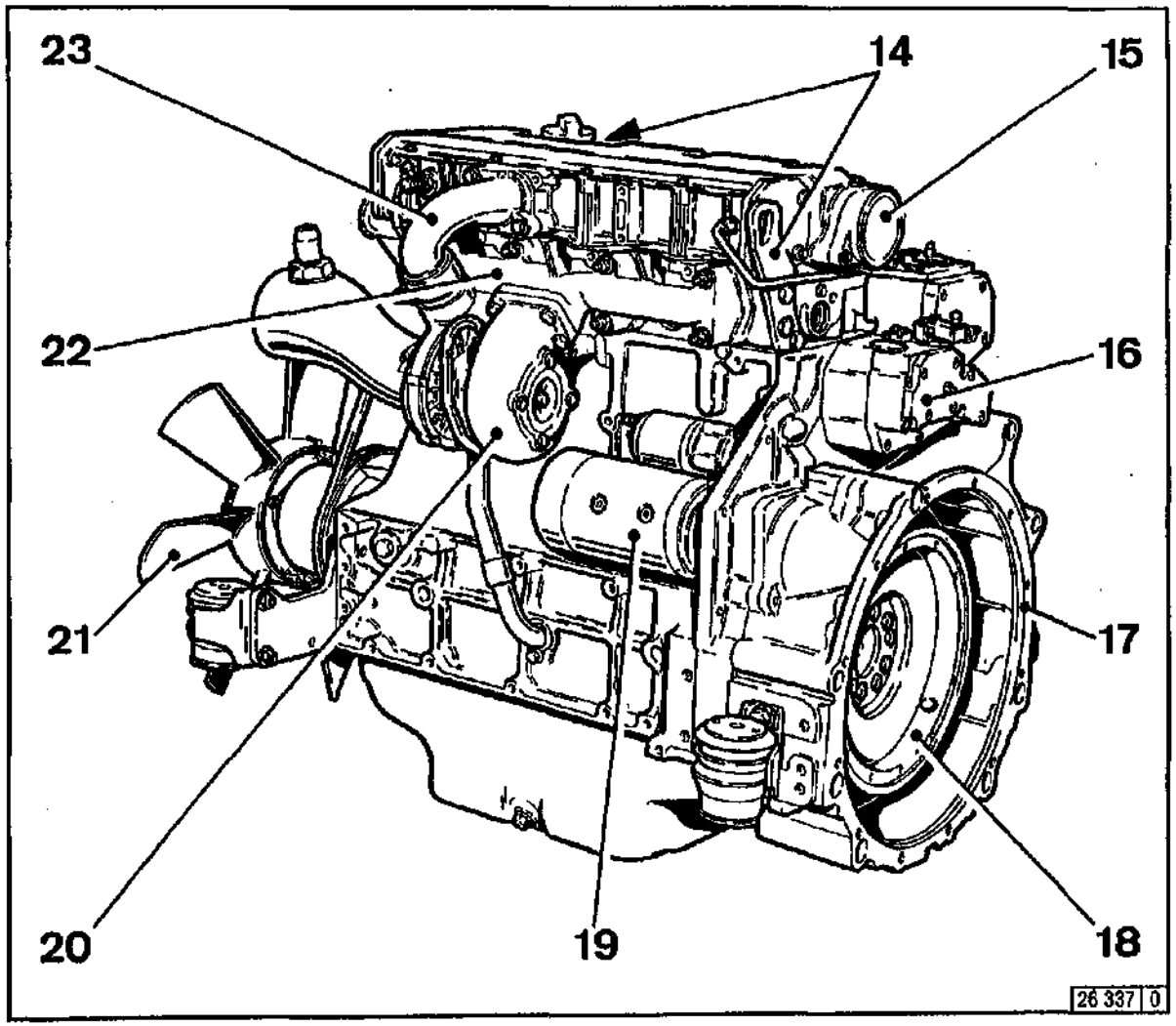

14 Lifting points
15 Crankcase breather valve
16 Speed governor
17 SAE housing
18 Flywheel
19 Starter motor
20 Exhaust turbocharger
21 Fan
22 Exhaust manifold
23 Air intake manifold

2.2.9 Starter Side
Unit Engine BF4M 1013 EC

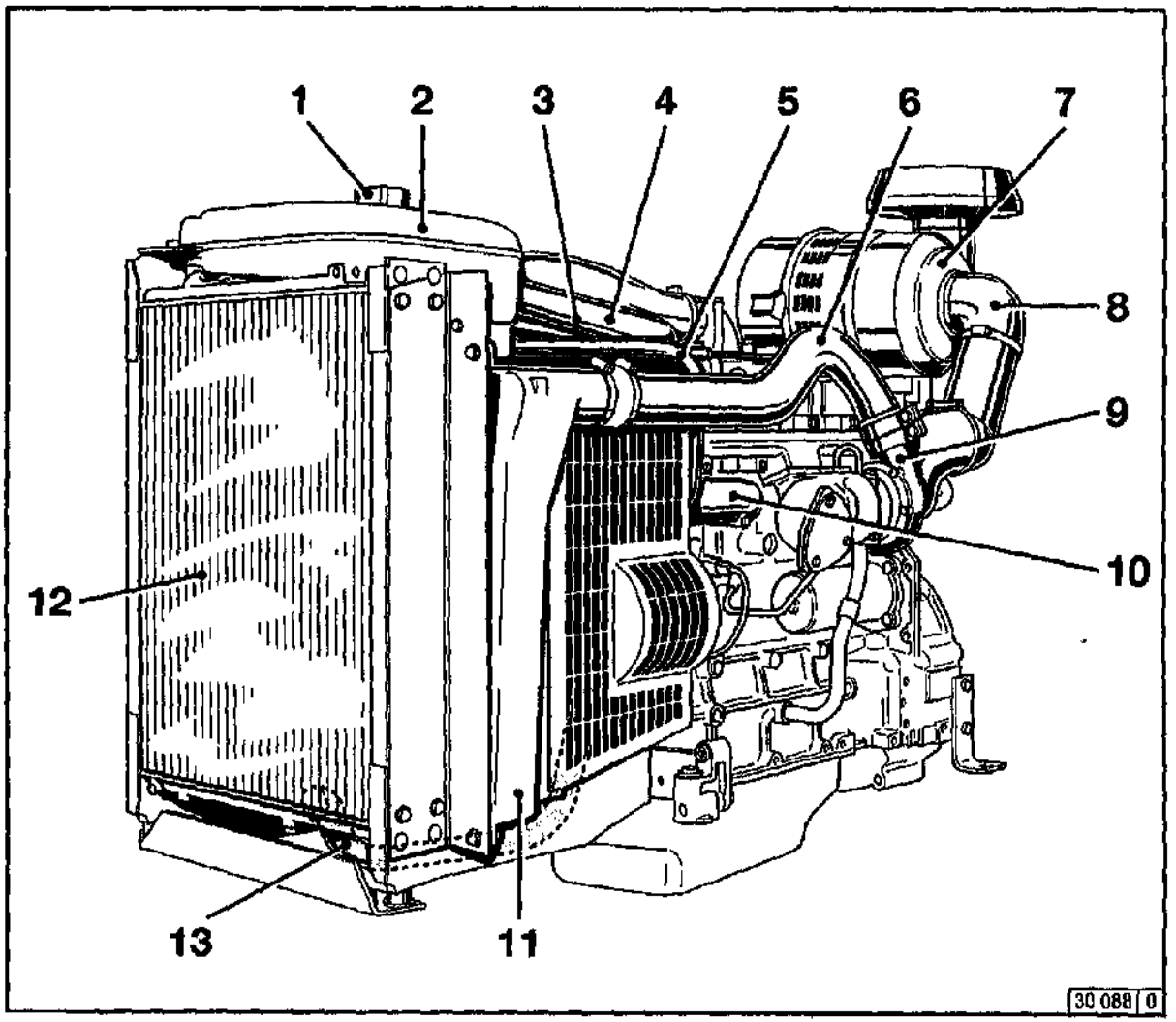

1 Coolant filler neck with cap
2 Expansion tank
3 Vent line from cylinder head to expansion tank
4 Coolant line from engine crankcase to engine fluid radiator
5 Expansion line from expansion tank to radiator
6 Charge air line from exhaust turbocharger to charge-air cooler
7 Dry air filter
8 Induction air line between dry air filter and exhaust turbocharger
9 Exhaust turbocharger
10 Coolant line from crankcase to engine fluid radiator
11 Charge-air cooler
12 Engine fluid radiator
13 Coolant line from engine fluid radiator to engine thermostat

2.2.10 Service Side
Unit Engine BF4M 1013 EC

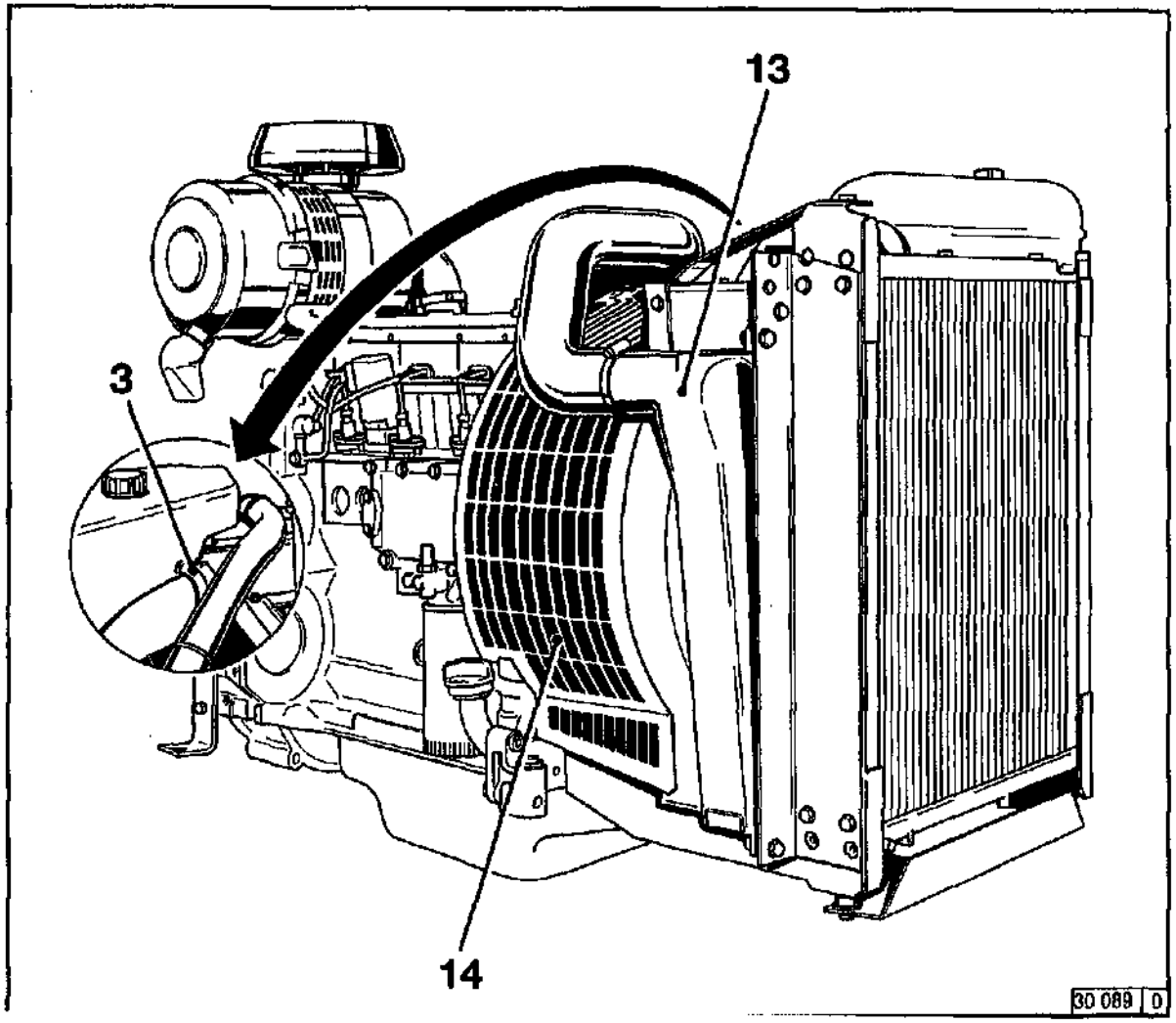

3 Ventilation line from cylinder head to expansion tank
13 Charge-air line from charge-air cooler to engine
14 Protective guard

2.2.11 Starter Side
Unit Engine BF6M 1013 EC

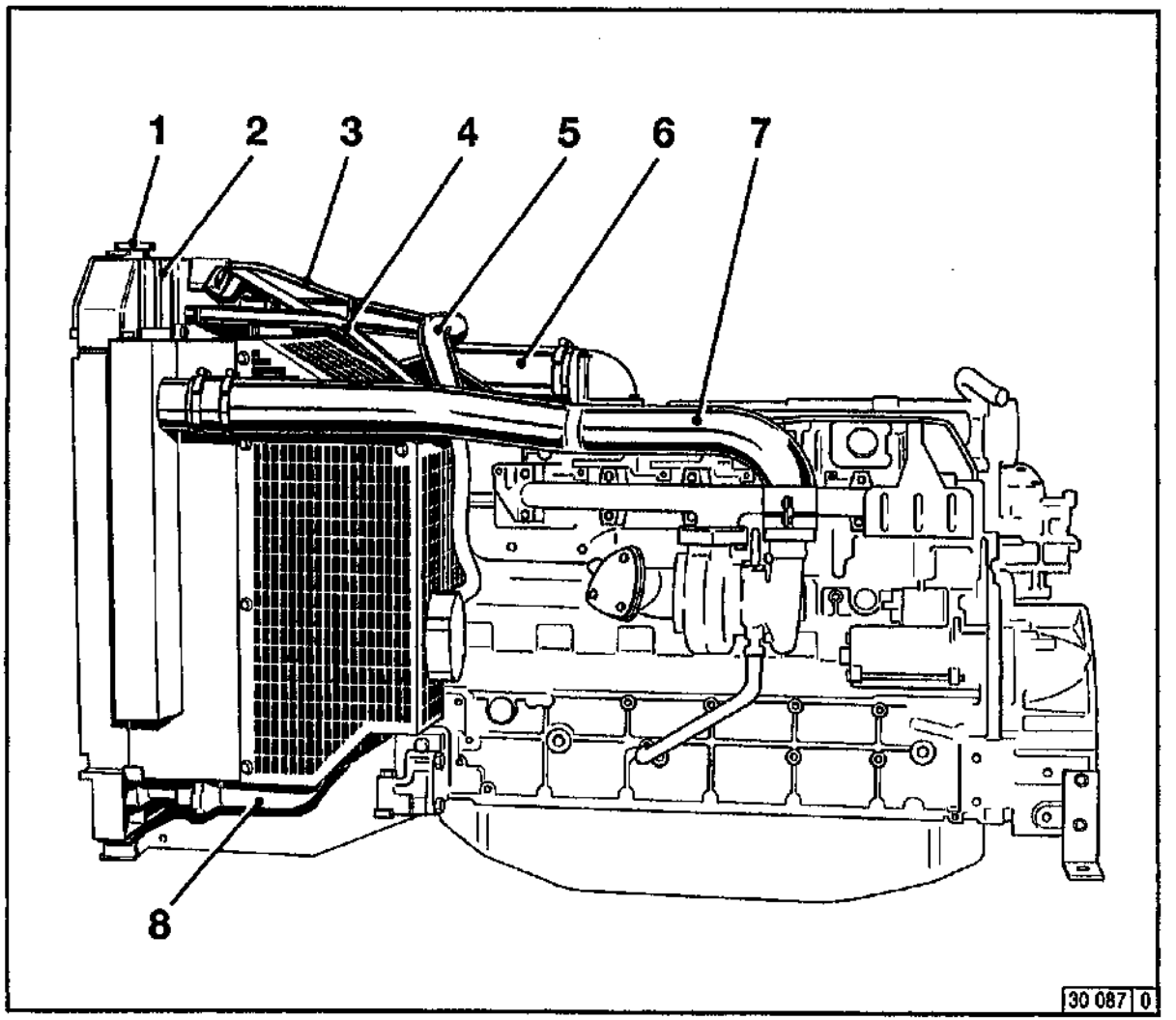

1 Filler neck with cap
2 Expansion tank
3 Vent line from cylinder head to expansion tank
4 Expansion line from expansion tank to coolant pump
5 Coolant line from crankcase to engine fluid radiator
6 Charge-air line from charge-air cooler to engine
7 Charge-air line from exhaust turbocharger to charge-air cooler
8 Coolant line from engine fluid radiator to engine thermostat

2.2.12 Service Side
Unit Engine BF4M 1013 EC

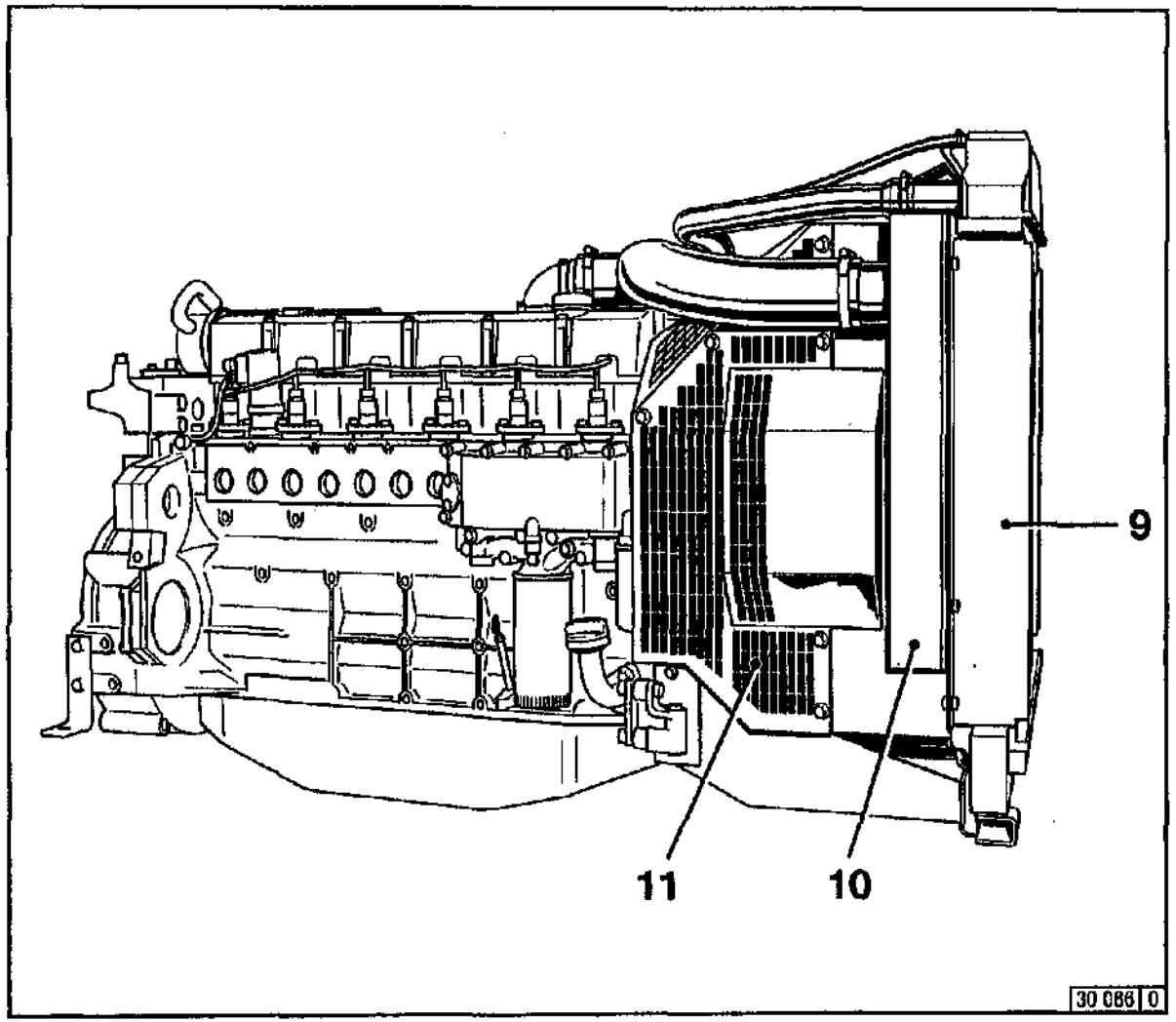

9 Engine fluid radiator
10 Charge-air cooler
11 Protective guard

2.3.1 Lube Oil Circuit Schematic 1012 / 1012 E

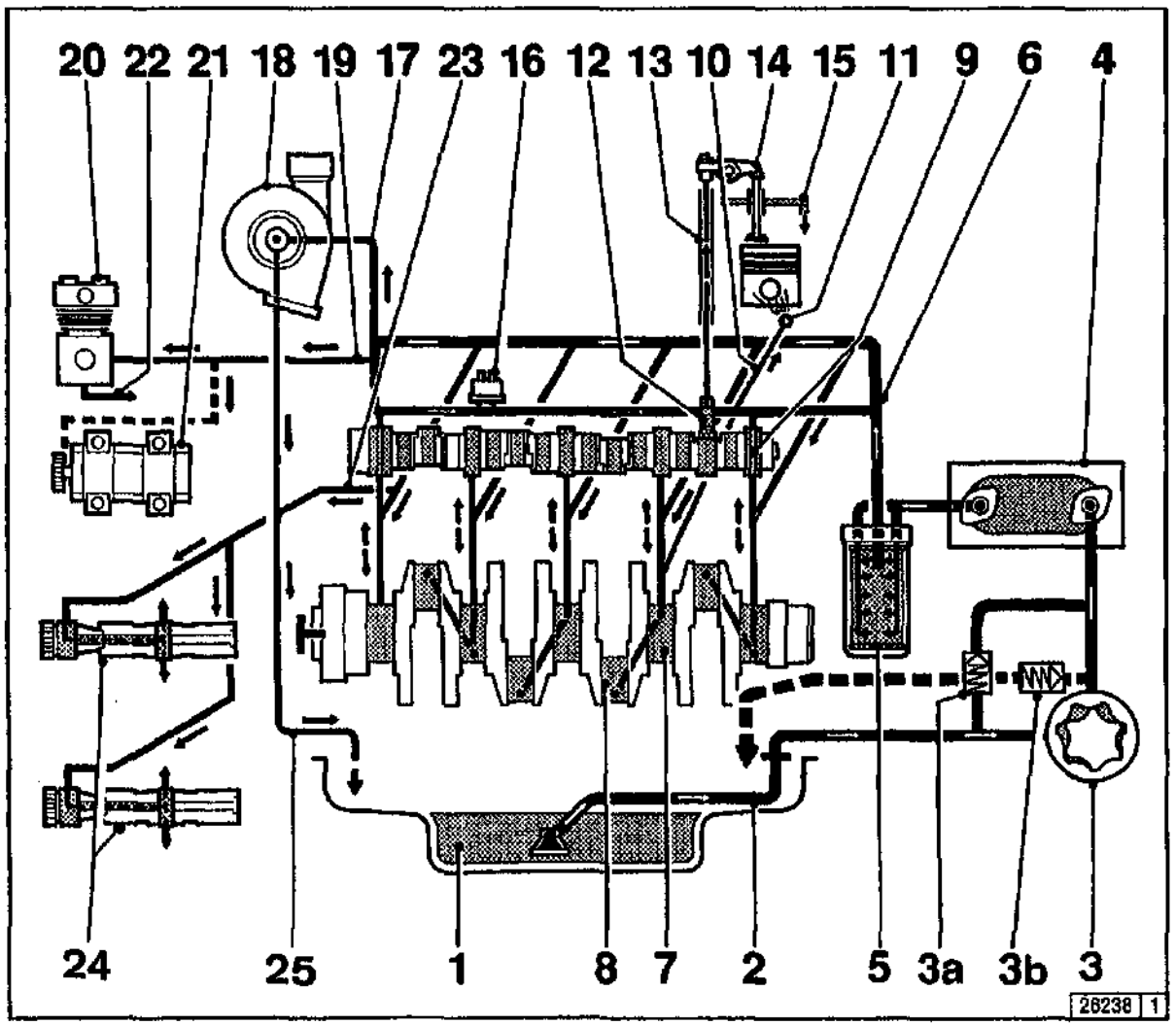

1 Oil pan
2 Air intake manifold
3 Lube oil pump
3a Back leak fuel valve
3b Pressure-relief valve
4 Lube oil cooler
5 Lube oil filter
6 Main oil gallery
7 Crankshaft bearing
8 Conrod bearing
9 Camshaft bearing
10 Line to spray nozzle
11 Spray nozzle for piston cooling
12 Tappet w/ control bore for pulse lubrication of rocker arms
13 Pushrod (designed for lube oil supply of rocker arms)
14 Rocker arm
15 Return line to oil pan
16 Oil sensor
17 Oil line to exhaust turbocharger
18 Exhaust turbocharger
19 Oil line to compressor or hydraulic pump
20 Compressor
21 Hydraulic pump
22 Return line to compressor or hydraulic pump
23 Line to mass balancing gear (2x)
24 Counterbalancing shafts
25 Exhaust turbocharger return to crankcase

2.3.2 Lube Oil Circuit Schematic 1013 / 1013 E

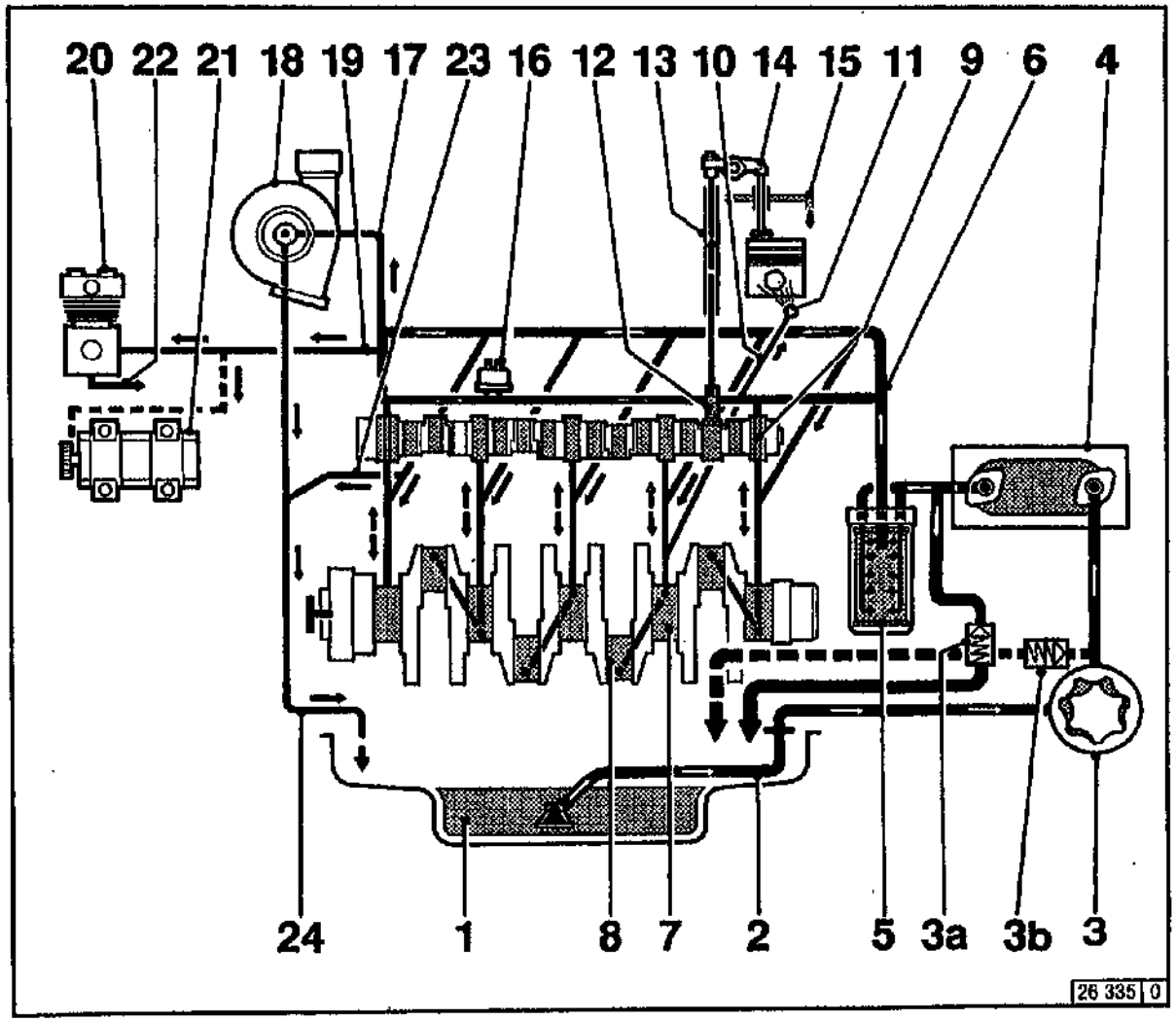

1 Oil pan
2 Air intake manifold
3 Lube oil pump
3a Back leak fuel valve
3b Pressure-relief valve
4 Lube oil cooler
5 Lube oil filter
6 Main oil gallery
7 Crankshaft bearing
8 Conrod bearing
9 Camshaft bearing
10 Spray nozzle line
11 Spray nozzle for piston cooling
12 Tappet w/ control bore for pulse lubrication of rocker arms
13 Pushrod (designed for lube oil supply of rocker arms)
14 Rocker arm
15 Return line to oil pan
16 Oil sensor
17 Oil line to exhaust turbocharger
18 Exhaust turbocharger
19 Oil line to compressor or hydraulic pump
20 Compressor
21 Hydraulic pump
22 Return line to compressor or hydraulic pump
23 Return to oil pan
24 Exhaust turbocharger return to crankcase

2

2.4.1 Fuel System Schematic

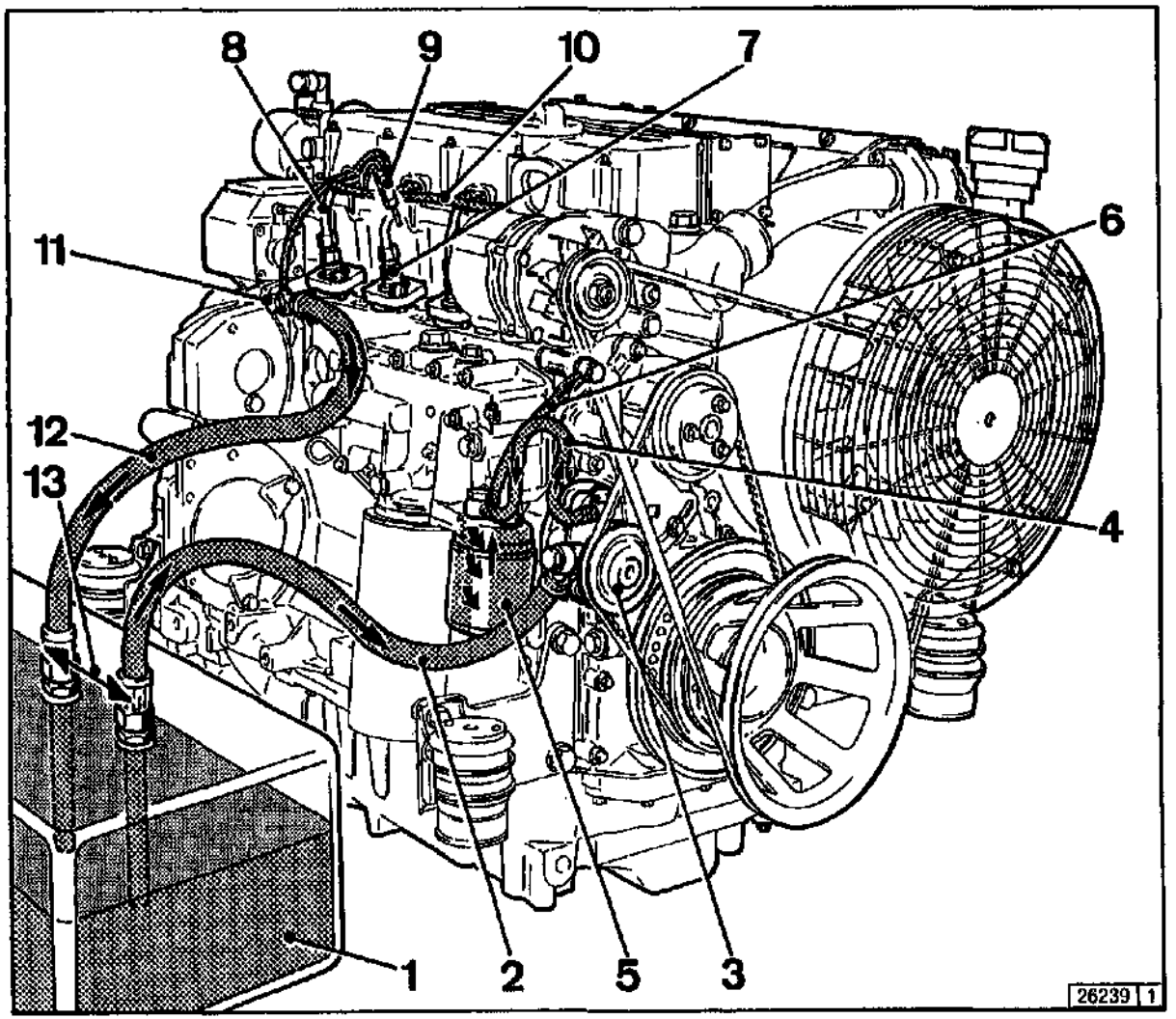

1 Fuel tank
2 Line to fuel pump
3 Fuel pump
4 Line to fuel filter
5 Fuel filter
6 Line to injection pumps
7 Injection pump
8 Line to injector
9 Injector
10 Back leak fuel pipe
11 Banjo bolt with pressure-regulating valve
12 Return line to fuel tank
13 Keep this spacing as wide as possible

2.5.1 Cooling System Schematic 1012

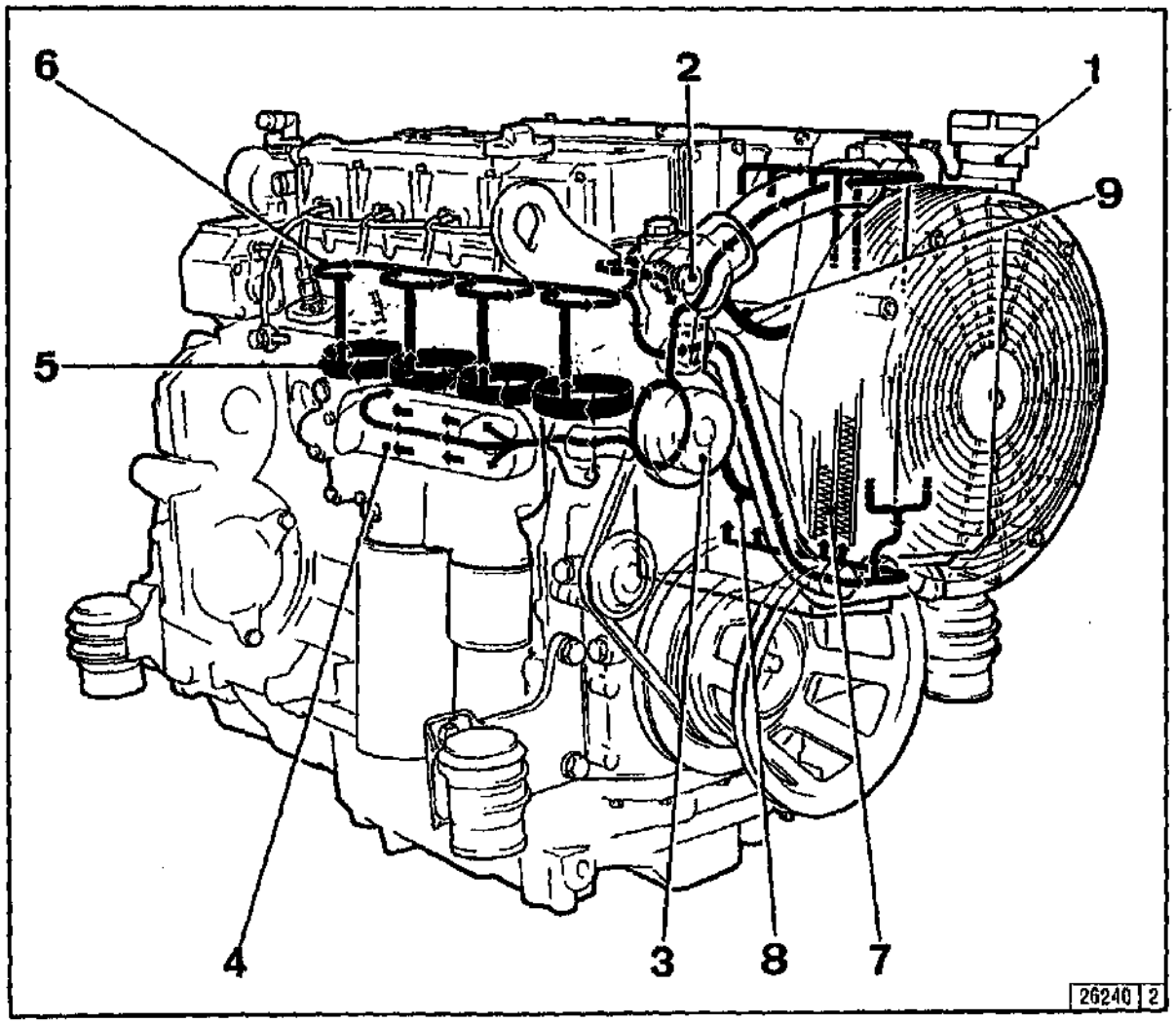

1 Coolant filler
2 Thermostat housing
3 Coolant pump
4 Lube oil cooler
5 Cylinder cooling
6 Cylinder head cooling
7 Heat exchanger
8 Return from thermostat to coolant pump housing
9 Ventilation line from cylinder head to heat exchanger (expansion tank)

2.5.2 Cooling System Schematic
1012 E
entrance regulation

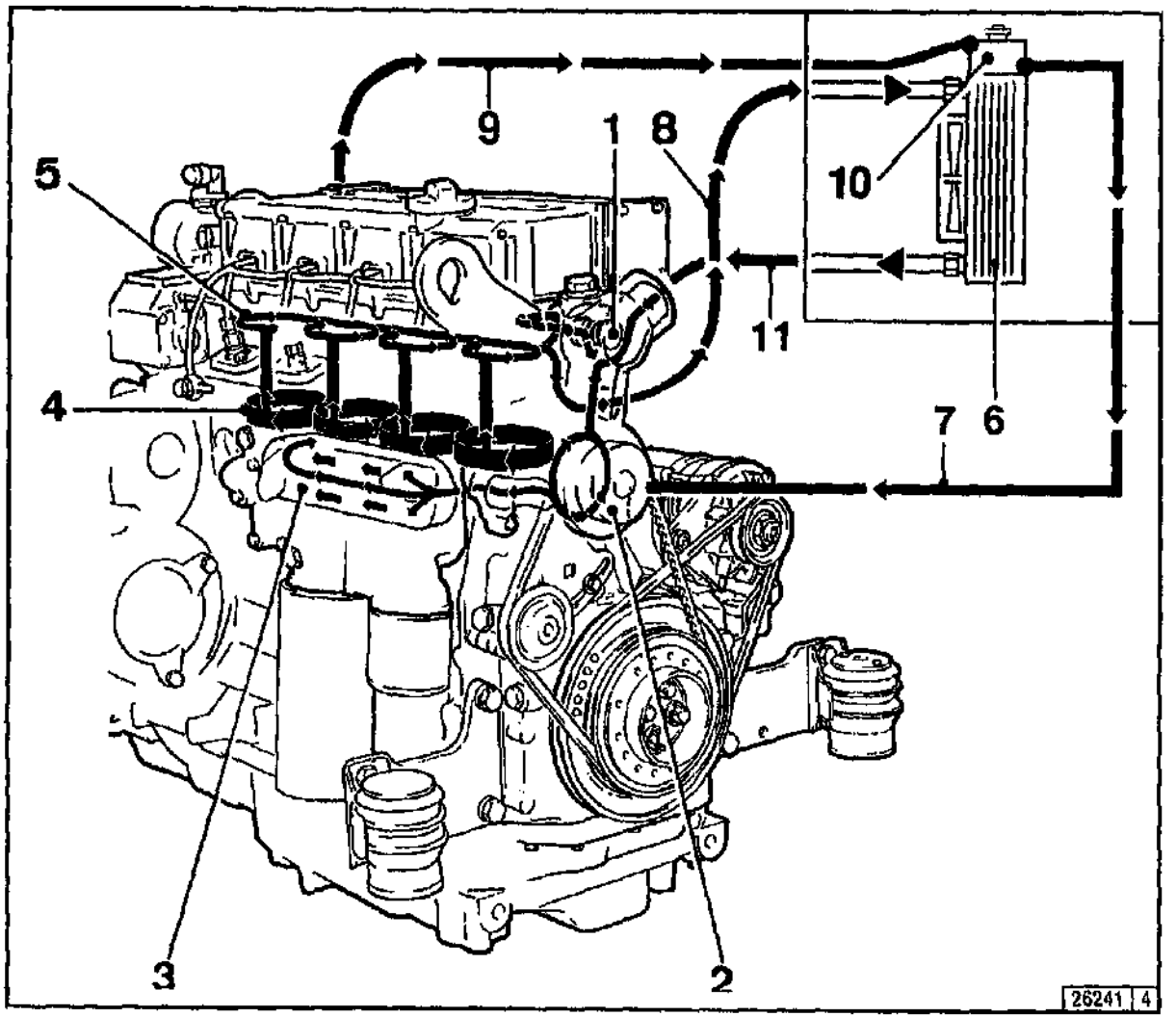

1 Thermostat housing
2 Coolant pump
3 Lube oil cooler
4 Cylinder cooling
5 Cylinder head cooling
6 Heat exchanger
7 Ventilation line expansion tank - coolant pump
8 Line from engine to heat exchanger
9 Ventilation line from cylinder head to expansion tank
10 Expansion tank
11 Line from heat exchanger to thermostat

2.5.3 Cooling System Schematic 1013

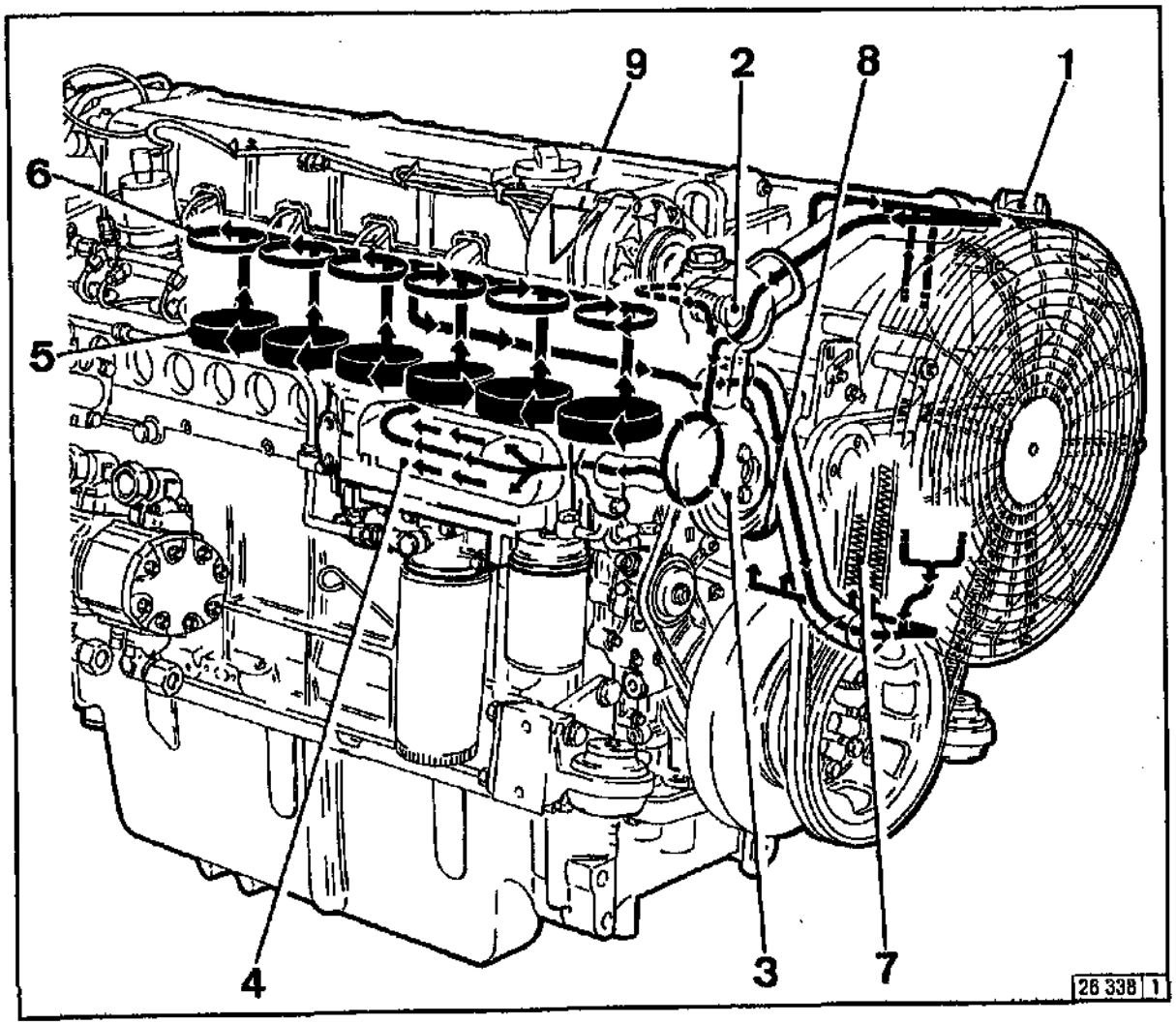

1 Coolant filler
2 Thermostat housing
3 Coolant pump
4 Lube oil cooler
5 Cylinder cooling
6 Cylinder head cooling
7 Heat exchanger
8 Expansion line coolant pump/expansion tank
9 Ventilation line from cylinder head to heat exchanger (expansion tank)

2.5.4 Cooling System Schematic
1013 E
entrance regulation

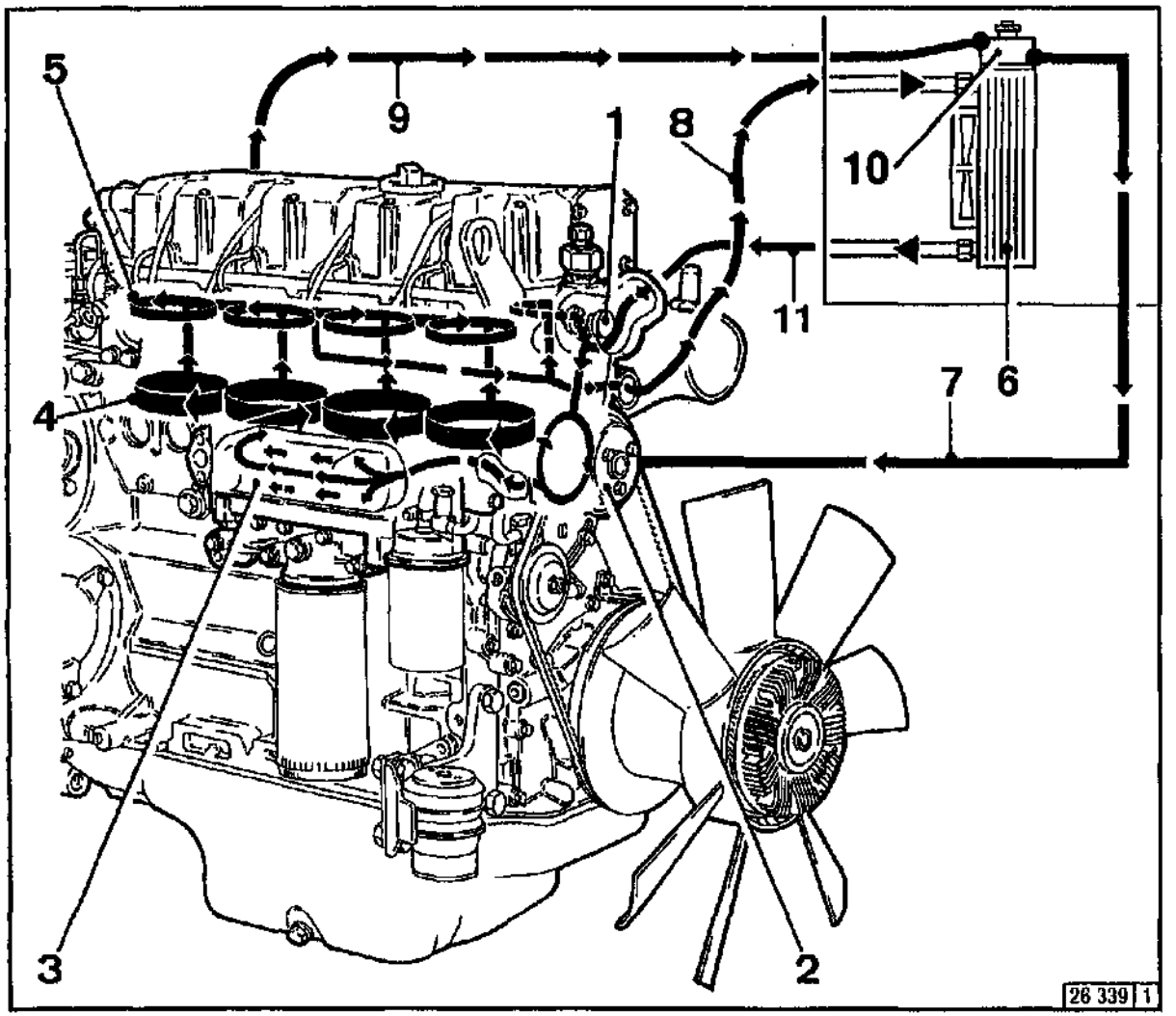

1 Thermostat housing
2 Coolant pump
3 Lube oil cooler
4 Cylinder cooling
5 Cylinder head cooling
6 Heat exchanger
7 Ventilation line expansion tank - coolant pump
8 Line from engine to heat exchanger
9 Ventilation line from cylinder head to expansion tank
10 Expansion tank
11 Line from heat exchanger to thermostat

Engine Operation

3

3.1 Commissioning
3.2 Starting
3.3 Monitoring Systems
3.4 Stopping
3.5 Operating Conditions

3.1.1 Adding Engine Oil

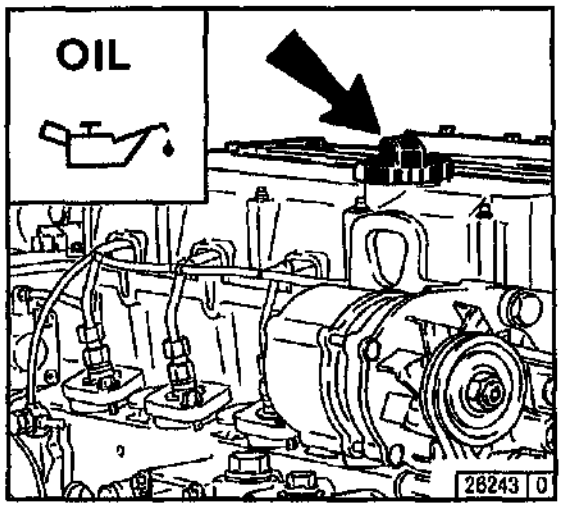

As a rule, engines are delivered empty of oil.
Pour lube oil into the oil filler neck (arrow).
For oil quantities, see 9.1.
For oil grade and viscosity, see 4.1.

3.1.2 Filling Oil Bath Air Cleaner

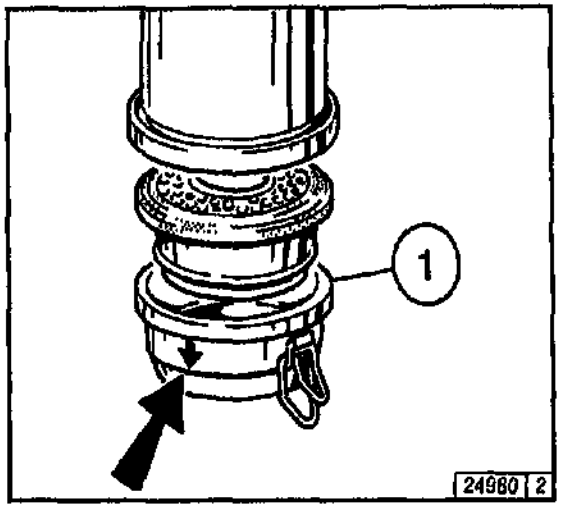

Fill oil cup 1 of the oil bath air cleaner (if fitted) with oil up to the arrow.
For oil grade and viscosity, see 4.1.

Do not fill the precleaner dust collector (if fitted) with oil.

3.1.3 Adding Fuel

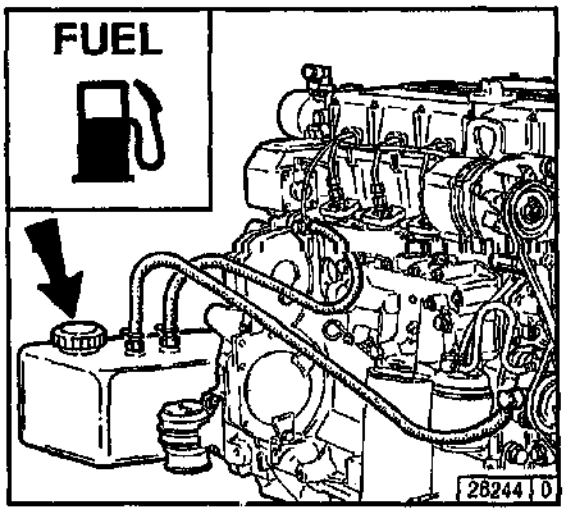

Use only commercial-grade diesel fuel. For fuel grade, see 4.2.
If required use a preliminary fuel filter.
If in doubt, please ask your service representative.
Use summer or winter-grade fuel, depending on the ambient temperature.

Never fill the fuel tank while the engine is running. Keep the filler cap area clean and do not spill fuel.

3.1.4 Filling/Venting the Cooling System

- 1012/1013
  See section 6.3.4
- 1012 E/1013 E
  See section 6.3.6
- Unit engine (with frontal radiator)
  See section 6.3.8.

3.1.5 Other Preparations

- Check battery and cable connections, see 6.7.1.
- **Trial run**
  - After the engine has been prepared, let it run for about 10 minutes without load.

  During and after trial run
  - Check the engine for leaks.

  After the engine has been turned off
  - Check the oil level and top up if necessary, see 6.1.2.
  - *Tighten the V-belt, see 6.5.*
- **Breaking-in**
  During the break-in phase - about 200 operating hours - check the oil level twice a day.
  After the engine is broken in, checking once a day will be sufficient.
- **Commissioning conserved engines**
  Remove conservation materials as outlined in section 8.1

3

3.2.1 Electric Starting

Before starting, make sure that *nobody is standing in the immediate vicinity of the engine or driven machine.*
After repair work:
Check that all guards have been replaced and that all tools have been removed from the engine.
When starting with glow plugs, do not use any other starter substance (e.g. injection with start pilot). Doing so could result in an accident.
Important:
Never start the engine with speed governor removed. Disconnect battery.

Do not actuate the starter for more than 20 seconds. If the engine does not catch, wait a minute then try again.
If the engine does not catch after two attempts, refer to the Diagnosis Chart (see 7.1).

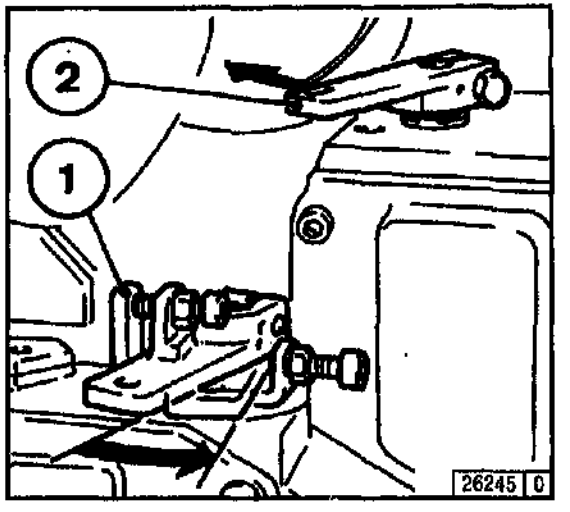

- Disengage the clutch to separate the engine from the driven equipment.
- Move speed control lever 1 in direction of arrow at least to middle speed position.
- Move shutdown lever 2 to operating position (in opposite direction of arrow).

Starting without Cold-Start Aid

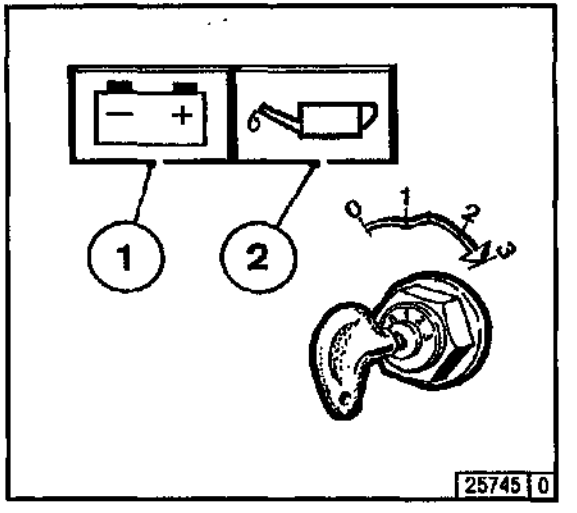

- Insert key.
  – Position 0 = no operating voltage.
- Turn key clockwise.
  – Position 1 = operating voltage.
  – Pilot lights 1 and 2 come on.
- Push the key in and turn it further clockwise against spring pressure.
  – Position 2 = no function
  – Position 3 = start
- Release key as soon as engine fires.
  – Pilot lights go out.

Starting with Heater Plugs

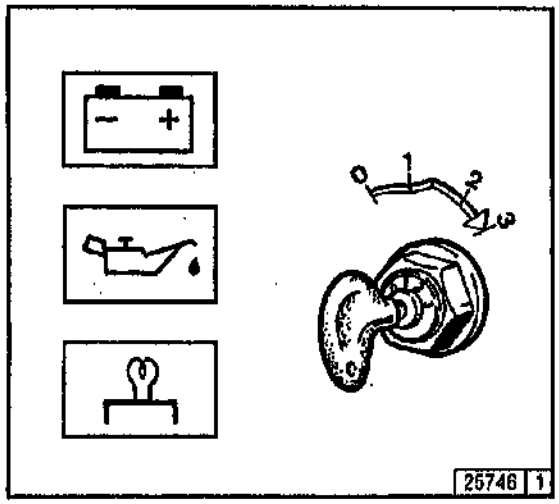

- Insert key.
  - Position 0 = no operating voltage.

- Turn key clockwise.
  - Position 1 = operating voltage.
  - Pilot lights come on. Leave to preheat until pilot lights go out.

- Push key in and turn further clockwise against spring pressure.
  - Position 2 = no function.
  - Position 3 = start.

- Release key as soon as engine fires.
  - Pilot lights go out.

3.3.1 Engine Oil Pressure

Oil Pressure Pilot Light

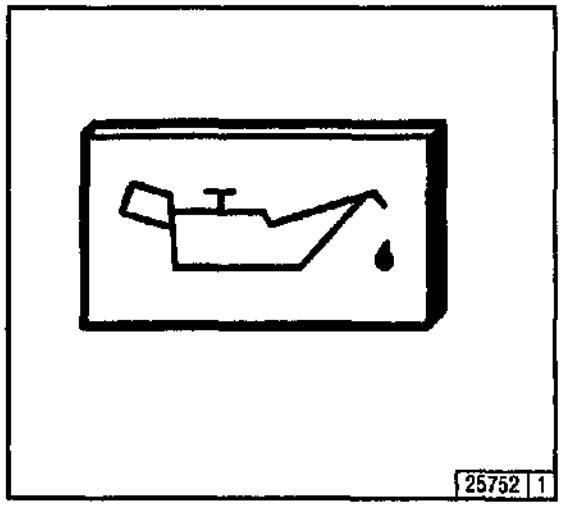

- The oil pressure pilot light comes on with operating voltage on and engine off.
- The oil pressure pilot light should go out when the engine is running.

Oil Pressure Indicator

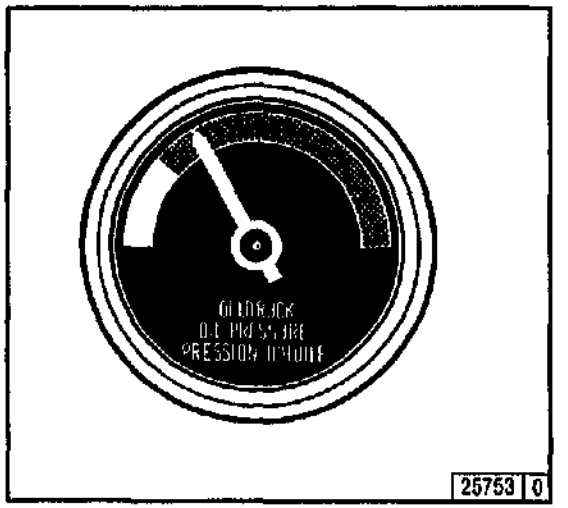

- The pointer must remain in the green sector over the entire operating range.

Oil Pressure Gauge

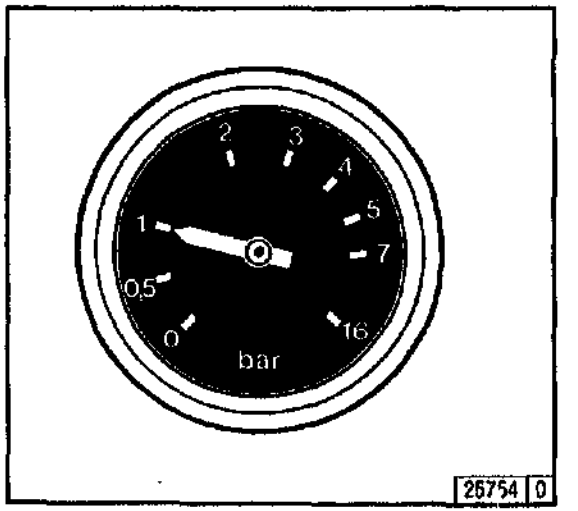

- The pointer must indicate the minimum oil pressure (see 9.1).

3.3.2 Coolant Temperature

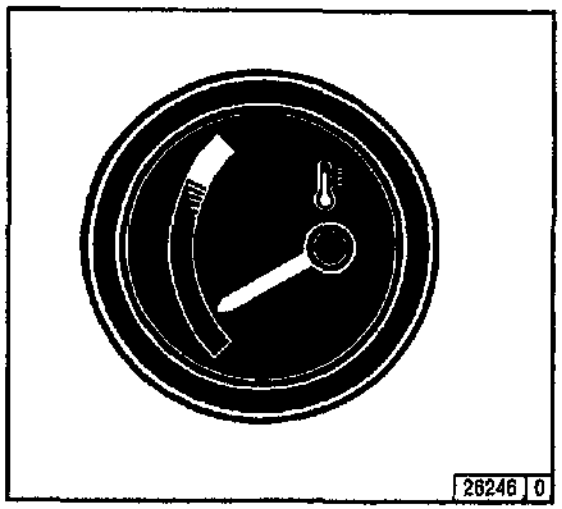

- The coolant temperature gauge pointer should remain in the green sector most of the time. It should rarely enter the yellow-green sector. If the pointer enters the orange sector, the engine is overheating. Turn it off and establish the cause from the Diagnosis Chart (see 7.1).

3.3.3 Coolant Level / Coolant Level Gauge

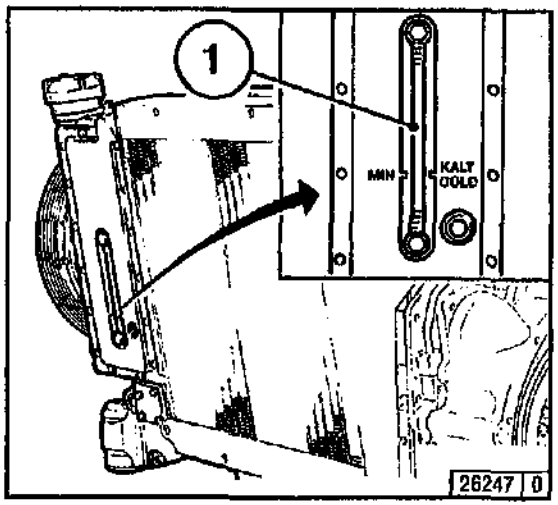

- When the engine is cold, coolant level 1 should be above the KALT-COLD mark.

- Top up with coolant if the level falls below the MIN mark on the sight glass, or if the coolant warning switch comes on.
  - Unscrew the filler cap.
  - Top up with coolant up to the upper edge of the filler neck.
  - Tighten the filler cap

- If it is not possible to carry out a check at the inspection opening, if required carry out a check at the filler neck:
  If you cannot see any fluid:
  - topping up is required.

- If a level switch is fitted, the engine is shut down automatically when the level falls below the MIN marking.

3.4.1 Engines with Mechanical Shutdown

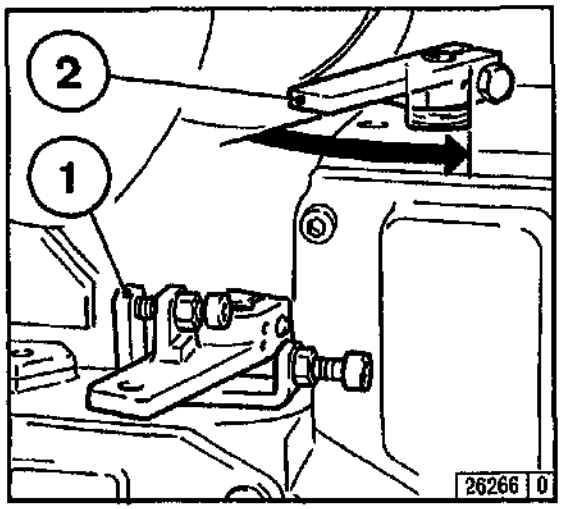

- Move speed control lever 1 to low idle.
- Operate shutdown lever 2 until the engine comes to a stop. The charge pilot light and the oil pressure pilot light will come on when the engine stops.
- Turn key counterclockwise (to Position 0) and remove. The pilot lights will go out.

Where possible, do not switch the engine off from full load. Leave running in idle for approx. 2 minutes.

3.4.2 Engines with Electrical Shutdown

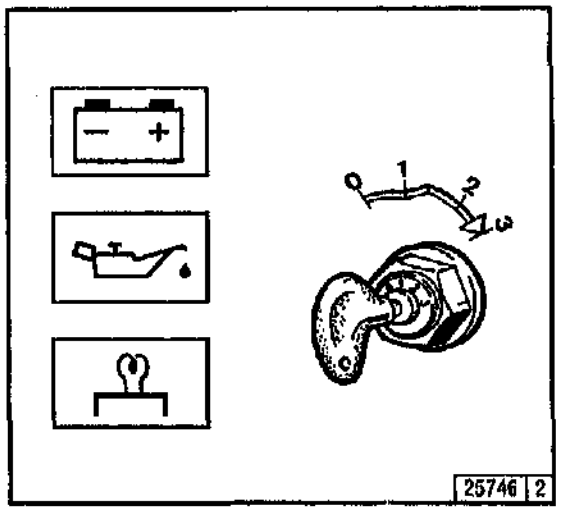

- Turn key counterclockwise (to Position 0) and remove. The pilot lights will go out.

3.5.1 Winter Operation

- **Lube Oil Viscosity**
  - Select the oil viscosity (SAE grade) according to the ambient temperature when the engine is started (see 4.1.2).
  - Increase oil change frequency when operating below –10°C, see 6.1.1.

- **Diesel Fuel**
  - Use winter-grade diesel fuel for operation below 0°C, see 4.2.2.

- **Coolant**
  - Set the water/antifreeze mix to suit the lowest likely temperature (max. –35°C), see 4.3.1.

- **Additional Maintenance Work**
  - Drain the sludge from the fuel tank once a week by undoing the drain plug.
  - Adjust the oil level in the oil bath air cleaner (if fitted) to suit the ambient temperature.
  - At temperatures below –20°C, lubricate the flywheel ring gear from time to time with low-temperature grease, such as Bosch FT 1 V 31. To do so, remove the starter and introduce the grease through the pinion hole.

- **Cold-Start Aids**
  - At temperatures near or below freezing point, use glow plugs if necessary (see 3.2.1). This not only lowers the starting limit temperature, but provides easier starting at temperatures normally not requiring a starting aid.

- **Battery**
  - Efficient cold starting requires a healthy battery (see 6.7.1).
  - The starting limit temperature can be lowered by 4-5°C by heating the battery up to about +20°C. To do so, remove the battery and store in a warm place.

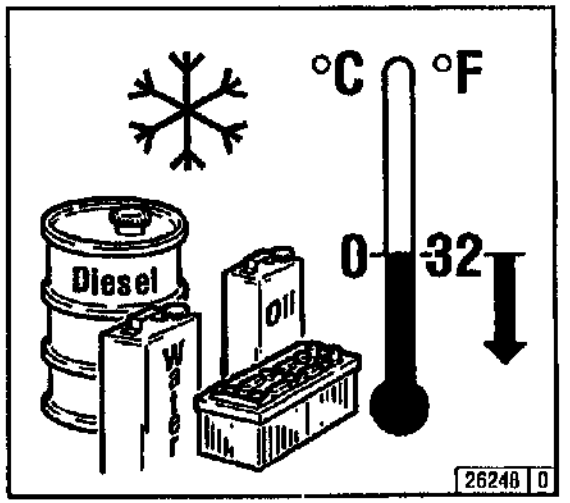

3.5.2 High Ambient Temperature, High Altitude

- As the altitude and ambient temperature rise, the density of the air tends to decrease, which affects the maximum power output of the engine, the exhaust gas quality and, in extreme cases, the starting behavior. Under transient conditions, the engine can be used at altitudes up to 1000 meters / 3400 feet and temperatures up to 30°C.
  If the engine is to operate under more severe conditions (at higher altitudes or temperatures), it will be necessary to reduce the injected fuel quantity and, thus, engine power.

- If you have any doubts about engine operation under these or similar conditions, ask your engine or equipment supplier whether the engine has been derated in the interests of reliability, service life and exhaust gas quality (smoke). Otherwise, contact the nearest service representative.

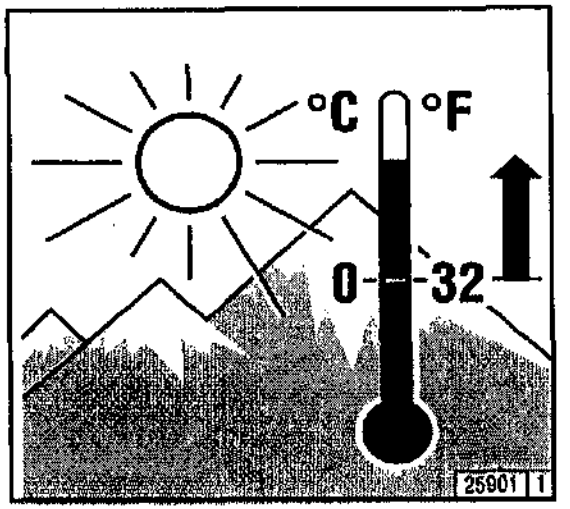

Operating Media

4

4.1 Lube Oil
4.2 Fuel
4.3 Coolant

4.1.1 Quality Grade

Lube oils are differentiated according to their *performance and quality class. In common use* are specifications named after the **API** (American Petroleum Institute) and **ACEA** (European Oil Sequences).

Approved API Oils:
Turbocharged engines: CF-4 CG-4 CH-4

Approved ACEA Oils:
Turbocharged engines: E1-E3/96 + E4-98

If in doubt, contact your service representative

4.1.2 Viscosity

As the viscosity of lube oil is dependent on *temperature, the choice of SAE grade should be* governed by the ambient temperature prevailing at the engine operating site.
Optimum operating behaviour will be attained if you take the accompanying oil viscosity diagram as a guide.
Should the temperature fall temporarily below the limits of the SAE grade selected, cold starting may be affected but the engine will not be damaged.
*In order to keep wear to a minimum, do not ex*ceed application limits for extended periods of time.
Oil changes dictated by the seasons can be avoided by using multi-grade lube oils. Multi-grade oils - particularly low-friction oils - also reduce fuel consumption.

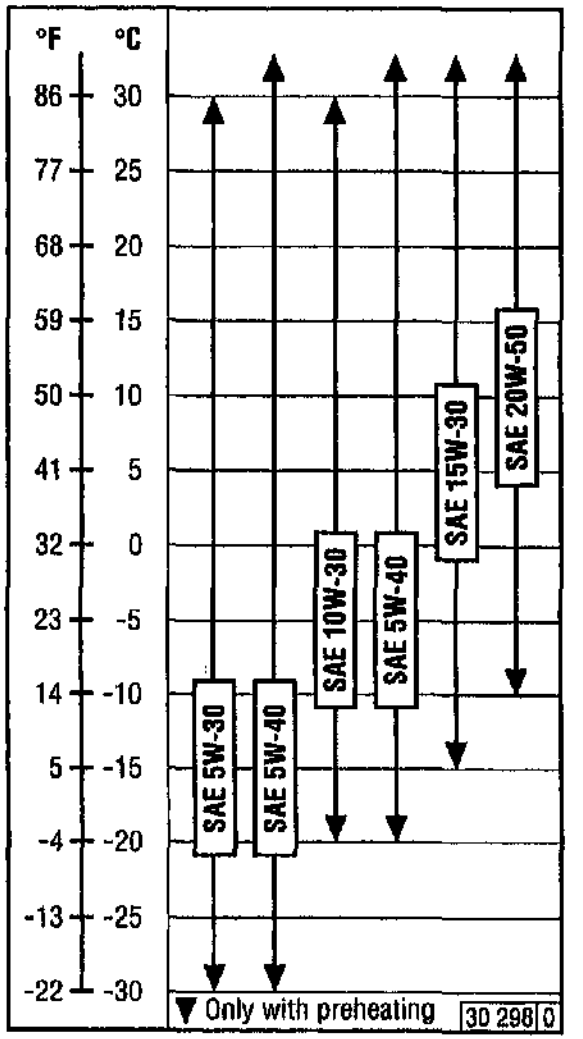

4.2.1 Quality Grade

Use commercially available diesel fuel with less than 0.5% sulphur content. If the sulfur content is higher than 0.5%, oil change intervals should be reduced (see 6.1.1).

The following fuel specifications/standards are approved:

- EN 590
- BS 2869: A1 and A2
- ASTM D975-96: 1-D and 2-D
- NATO Code F-34/F-35, F44, F-54 and F-63

4.2.2 Winter-Grade Fuel

Waxing may occur at low temperatures, clogging the fuel system and reducing engine efficiency. If the ambient temperature is less than 0 °C, winter-grade fuel (suitable down to -20 °C) should be used. This fuel is usually available from filling stations well in advance of the cold months.

- At temperatures below -20°C/, kerosene should be added to the diesel fuel. The relevant percentages are given in the diagram at the right
- Special diesel fuels can be used for climatic zones down to - 44 °C.

If summer-grade diesel fuel must be used at temperatures below 0°C, up to 60% kerosene can be added (see diagram).

In most cases, adequate resistance to cold can be obtained by adding a flow improver (additive). Please contact your DEUTZ partner.

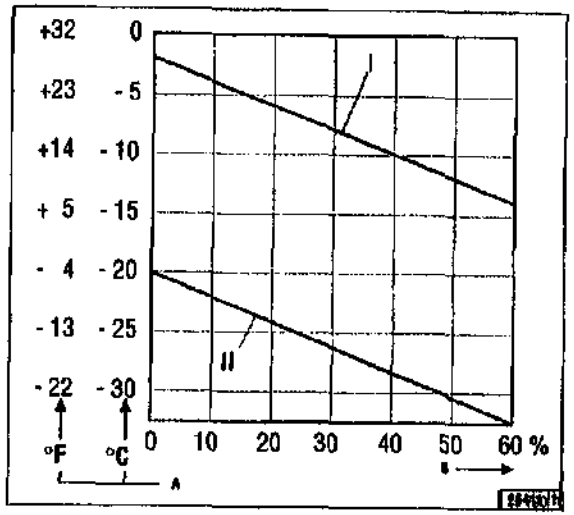

Legend:	
I	Summer diesel fuel
II	Winter diesel fuel
A	*Outside temperature*
B	Percentage of kerosene to be added

Mix in tank only. Fill with the appropriate amount of kerosene first, then add the diesel fuel.

4.3.1 Water Quality for Coolant Preparation

The values given below must not be exceeded.
A test kit (order number 1213 0382) can be obtained from DEUTZ Service to check the quality of the water available.

Water quality		min.	max.
pH-value at 20°C /68° F		6.5	8.5
Chloride ion content	[mg/dm3]	–	100
Sulfate ion content	[mg/dm3]	–	100
Total hardness	[°dGH]	3	20

4.3.2 Coolant Preparation

The preparation and monitoring of coolant in liquid-cooled engines is especially important because corrosion, cavitation and freezing can lead to engine damage.
The coolant is prepared by admixing a cooling system protective liquid with the cooling water.
The cooling system must be monitored regularly (see 5.1). The water level and the cooling system protective liquid concentration should both be checked.
The cooling system protective liquid concentration can be checked with a commercially available tester (e.g. gefo glycomat®).

When **nitrite-based** cooling system protective liquids are mixed with **amine-based** liquids, harmful nitrosamines are formed.

4.3.3 Cooling System Protective Liquid

DEUTZ cooling system protective agents can be obtained under order number 01011490 (5 litres) or 1221 1500 (210 litres). These are nitrite-, amine- and phosphate-free and provide effective protection against corrosion, cavitation and freezing.
If the above-mentioned cooling system agents are not available, the following products can be used in exceptional cases.

Manufacturer	Product description
AVIA	AVIA Antifreeze Extra
BASF	Glysantin G 48
DEA	DEA radiator antifreeze
SHELL	SHELL GlycoShell

The concentration of the cooling system protective liquid in the coolant may not fall below/exceed the following limits:

Cooling system protective liquid	Water
max. 45 Vol.%	55%
min. 35 Vol.%	65%

For the quantity, see table overpage and information in section 9.1.
Other cooling system protective liquids, e.g. chemical corrosion inhibitors, can, in exceptional circumstances, be used in the coolant, in consultation with DEUTZ Service. Order the cooling system protective liquid from: **DEUTZ Service**

Cooling system protective liquids must be disposed of in accordance with environmental regulations.

Cooling System Protection

Cooling system protective agent [Vol %]	Cooling protection [°C]	Cooling system capacity *) [Liters]							
		18	20	22	25	27	30	32	35
		Cooling system protective liquid [Liters]							
35	–22	2.8	7.0	7.7	8.75	9.5	10.5	11.2	12.3
40	–28	7.2	8.0	8.8	10.0	10.8	12.0	12.8	14.0
45	–35	8.1	9.0	9.9	11.3	12.2	13.5	14.4	15.8
50	–45	9.0	10.0	11.0	12.5	13.5	15.0	16.0	17.5

*) For quantity of coolant in your engine, see Section 9.1.
Note: For figures in gray field, refer back to head-office.

Routine Maintenance

5

5.1 Maintenance Schedule
5.2 Maintenance Chart
5.3 Maintenance Record

In running hours (h)[1] every									check / clean / renew	Job	Section
once after 2) 50-150	Every 10 h or daily	125	250	500	1000	1500	2000	3000			
	●								●	Oil level [2) 9)]	6.1.2/ 3.1.6
●									●	Engine for leakages	
	●								●	Oil bath- and dry type air cleaners [3) 4)]	6.4
		●							●	Battery and lead connections	6.7.1
		●	●	●	●		●		●	Cooling system (dep. on engine use) [3) 6)]	6.3.1/ 6.3.2
●				●					●	Engine oil (dep. on engine use) [5)]	6.1.1/ 6.1.2
●				●					●	Oil filter cartridge	6.1.3
●					●				●	Fuel filter cartridge	6.2.1
●					●				●	Fuel prefilter	6.2 / 6.3
●					● 7)				●	Fuel leakage lines	6.2.5
●						●			●	Valve clearance (readjust if nec.)	6.6.1
●				●					●	Engine mounts (retighten if necessary)	9.2
●				●					●	V-belts (retension if nec.)	6.5
●									●	Alarm system, engine mounts	3.3/ 9.3
●				●					●	Radiator bearing rubber/locking elements	
					●				●	Glow plugs	
							● 7)		●	Coolant [6)]	6.3.3/ 6.3.4
				●					●	Coolant , additive-concentration	4.3.2/ 4.3.3
	●								●	Coolant level	3.3.3
					●				●	Hose connections / clamps on air intake side, CAC [10)]	6.3.3/9-6.2.5

The specified engine maintenance times are maximum values. Depending on the operating environment, shorter maintenance intervals may be required. Please observe the operating instructions of the equipment manufacturer.

1) recommended maximum
2) commissioning new and reconditioned engines
3) clean if needed
4) change if required. If fitted, service according to maint-
5) oil grade API-CD or ACEA E1-E3-96+E4-98 for turbocharged engines, for oil change intervals, see 6.1.1
6) check antifreeze or if necessary chemical concentration every 500 OH
7) as change at least every 2 years
8) system cleaning
9) check twice a day during the run-in phase
10) drain off any lube oil/condensation water that has collected in the charge-air cooler, see section 6 .3.9

The maintenance chart shown here is supplied as self-adhesive label with each engine. It should be affixed where it can be seen clearly on the engine or driven equipment.

Check that this is the case.

If necessary, ask your engine or equipment supplier for a fresh supply of labels.

Routine work should be carried out according to the schedule in 5.1.

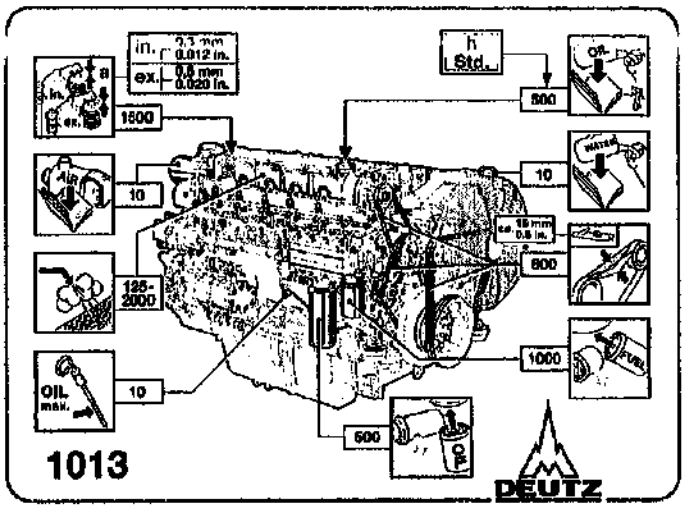

0297 7782

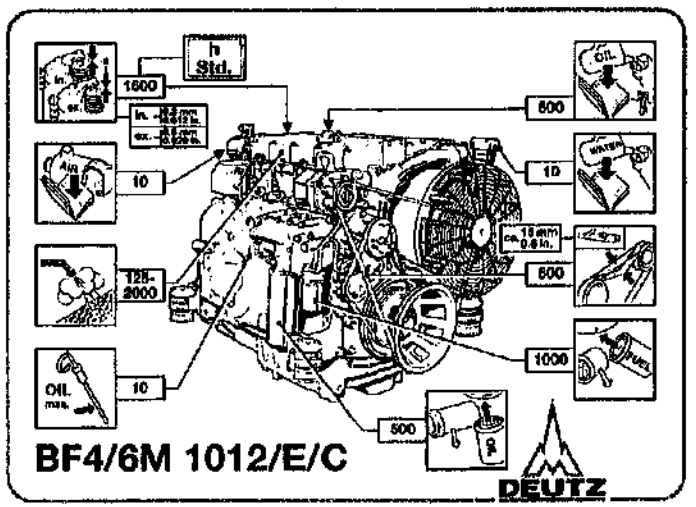

0297 7783

Stop the engine before carrying out any maintenance work.

The service diagram for series 1012/1013 (filling the cooling system, venting, bleeding) featured on this page is stuck on the engine as a servicing aid.

Check that this is the case!

If the sticker is not on the engine, ask for a replacement from your engine or vehicle supplier.

For a full description regarding servicing, see Sections 3.1.4, 6.3.3 and 6.3.4.

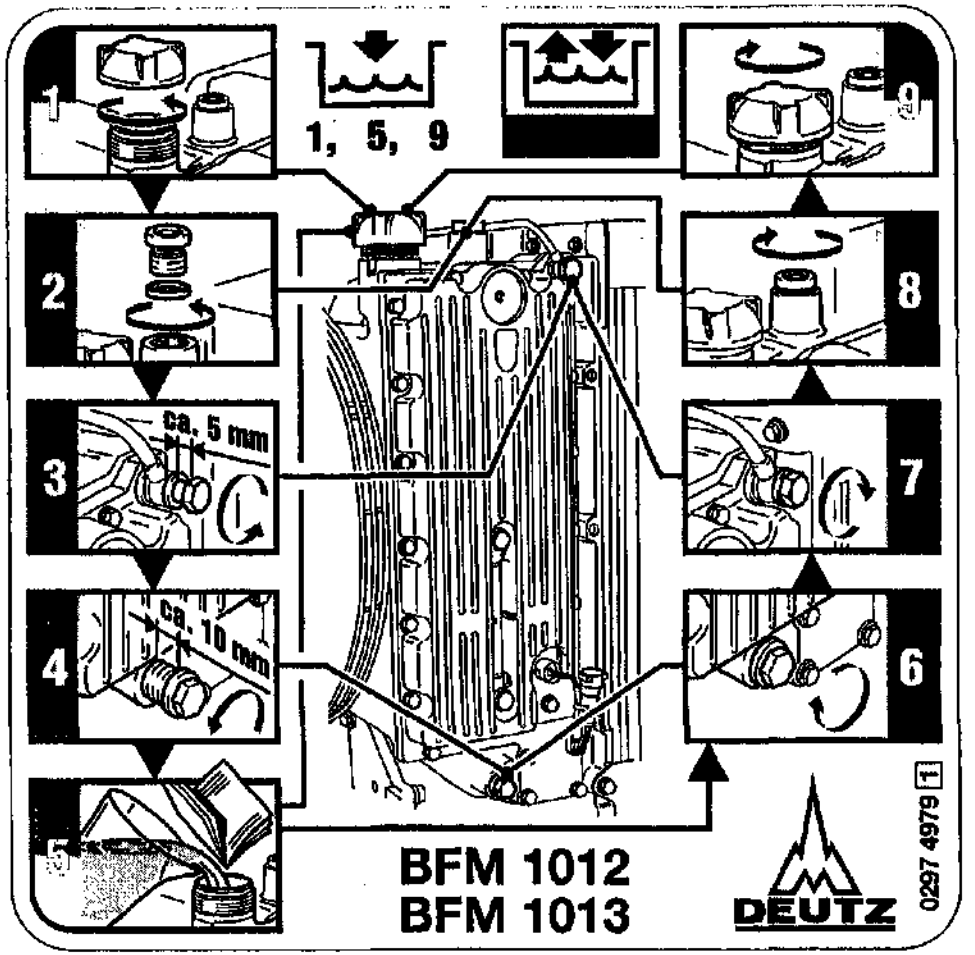

The service diagram for series 1012/1013 (filling the cooling system, venting, bleeding) featured on this page is stuck on the engine as a servicing aid. Check that this is the case!

If the sticker is not on the engine, ask for a replacement from your engine or vehicle supplier.
For a full description regarding servicing, see Sections 3.1.4, 6.3.3 and 6.3.4.

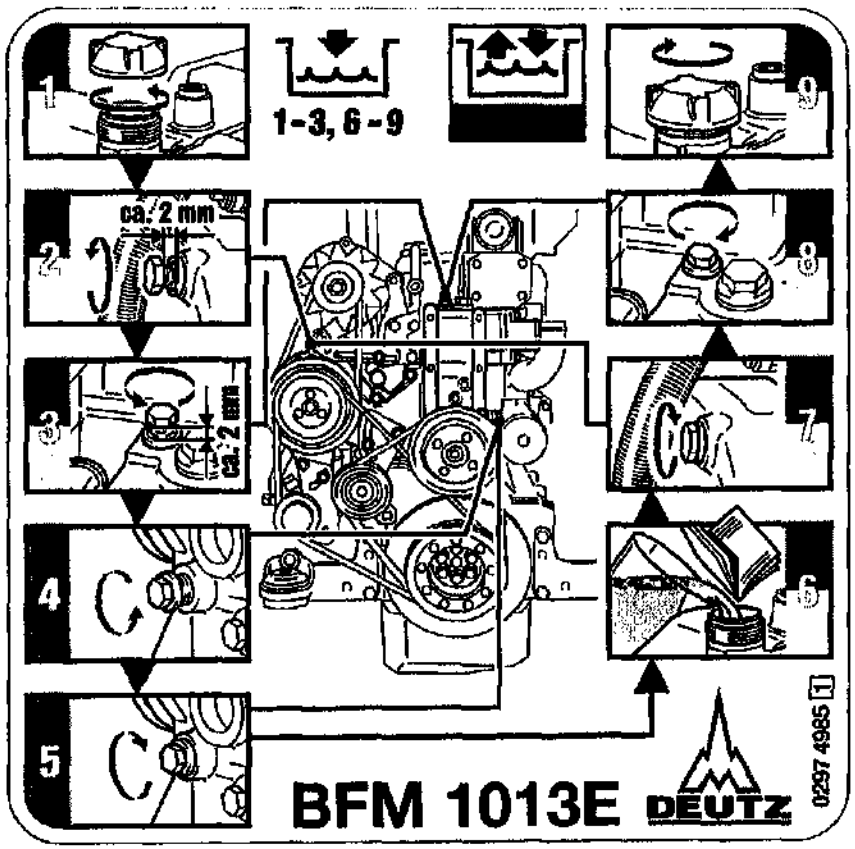

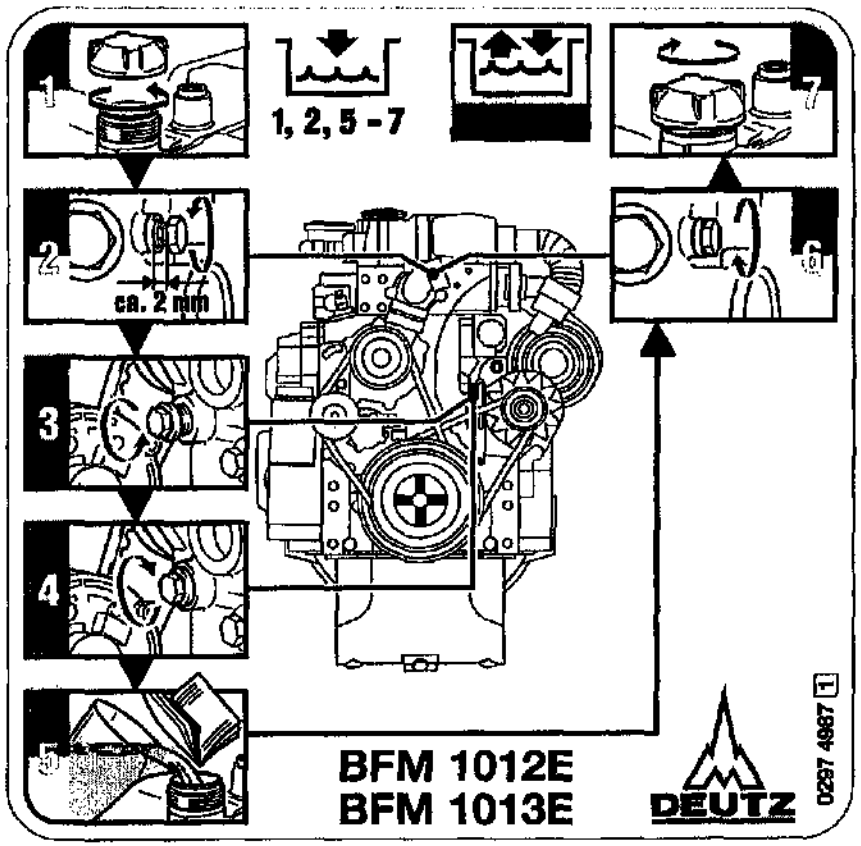

Hours.	Date	Signaure / Stamp	Hours	Date	Signaure / Stamp
50-150*			-		
125			250		
375			500		
625			750		
875			1000		
1125			1250		
1375			1500		
1625			1750		
1875			2000		
2115			2250		
2375			2500		
2625			2750		

* Commissioning new and overhauled engines
The maintenance jobs duly completed can be recorded in the above table.

5.3 Completed Maintenance Jobs

Hours	Date	Signaure / Stamp	Hours	Date	Signaure / Stamp
2875			3000		
3125			3250		
3375			3500		
3625			3750		
3875			4000		
4125			4250		
4375			4500		
4625			4750		
4875			5000		
5125			5250		
5375			5500		
5625			5750		

The maintenance jobs duly completed can be recorded in the above table.

Hours.	Date	Signaure / Stamp	Hours	Date	Signaure / Stamp
5875			6000		
6125			6250		
6375			6500		
6625			6750		
6875			7000		
7125			7250		
7375			7500		
7625			7750		
7825			8000		
8125			8250		
8375			8500		
8625			8750		

The maintenance jobs duly completed can be recorded in the above table.

5.3 Completed Maintenance Jobs

Hours	Date	Signaure / Stamp	Hours	Date	Signaure / Stamp
8875			9000		
9125			9250		
9375			9500		
9625			9750		
9875			10000		
10125			10250		
10375			10500		
10625			10750		
10825			11000		
11125			11250		
11375			11500		
11625			11750		

The maintenance jobs duly completed can be recorded in the above table.

Service and Maintenance

6

6.1 Lubrication System
6.2 Fuel System
6.3 Cooling System
6.4 Combustion Air Cleaner
6.5 Belt Drives
6.6 Adjustments
6.7 Accessories

6.1.1 Oil Change Intervals

- The oil change intervals are dependent on the engine application and the quality of the lube oil.
- If the engine runs fewer hours during the year than stated in the table, the oil should be changed at least **once a year.**
- The table refers to the following conditions:
  - For diesel fuel: sulfur content max. 0.5 % by weight.
  - Continuous ambient temperatures down to -10 °C / +14°F
- For fuels
  - with sulfur content is > 0.5 to 1 %

  or
  - continuous ambient temperature below -10 °C/+14°F
  - with bio-diesel fuels in accordance with DIN 51606-FAME the intervals between oil changes should be halved.
- *In the case of fuels containing more than 1 %* sulfur, contact your **service representative.**

Oil Grade	Turbocharged engine
API Classification	CF-4 CG-4 CH-4
ACEA Classification	E1– E3/96 + E4-98

Oil Change Intervals	Service Group	Average Speed [km]	[OH]	[km]
Equipment Engines	–	–	500	–
Automotive Engines	I II III	25 40 60	– – –	10 000 20 000 30 000

Change the oil with the engine off but still warm (lube oil temperature approx. 80 °C).

6.1.2 Checking Oil Level / Changing Engine Oil

6.1.2.1 Checking Oil Level

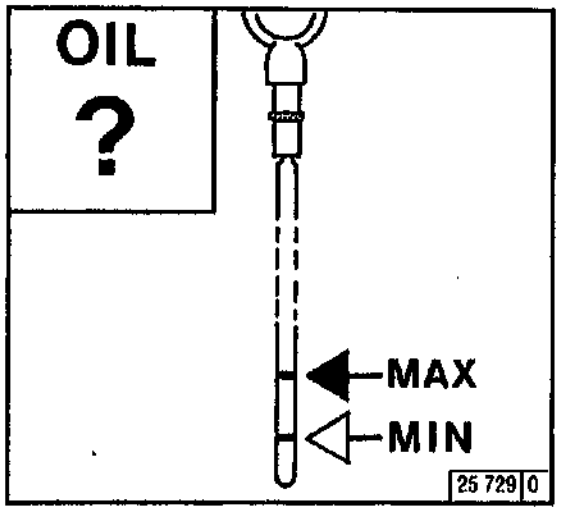

- Ensure that the engine or vehicle is on a level surface.
- **– Warm engine**
- Switch off engine, wait 5 minutes and check the oil level
- **– Cold engine**
  Check the oil level
- Remove the dipstick
- Wipe off with a non-fibrous, clean cloth.
- Insert up to the stop and pull out again.
- Check oil level, if required top up to the **"MAX"** level
  – If the oil level is just above the **"MIN"** mark, it should be topped up.

The oil level must not drop below the **"MIN"** mark.

6.1.2.2 Changing Engine Oil

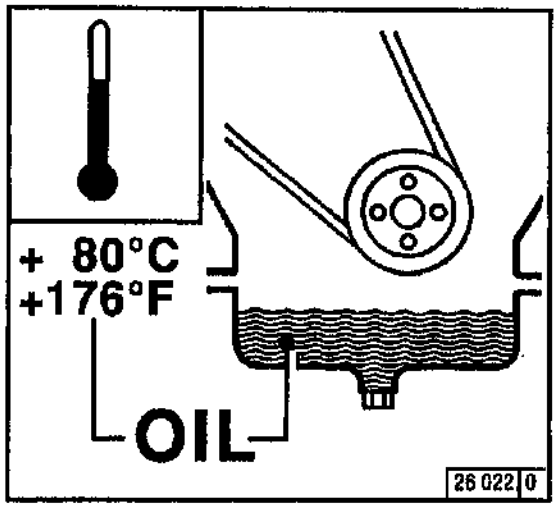

- Run the engine warm
- Ensure that the engine or vehicle is on a level surface
  – Lube oil temperature approx. 80°C.
- Switch off the engine.

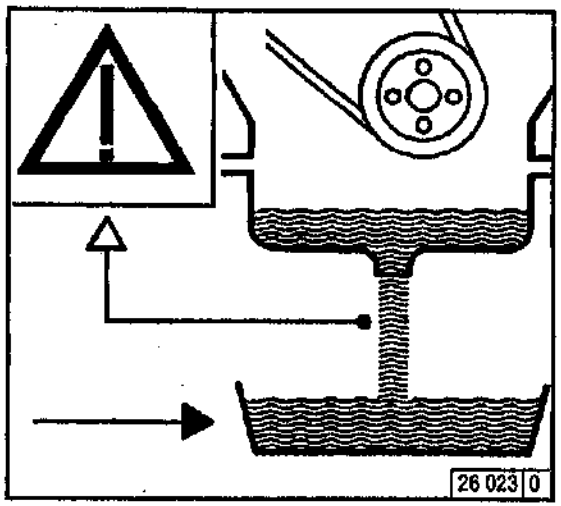

- Place an oil tray beneath the engine
- Unscrew drain plug.
- Drain oil.
- Fit oil drain plug with new gasket and tighten firmly (for torque, see 9.2).
- Fill with lube oil
  – For grade/viscosity, see 4.1.
  – For quantity, see 9.1.
- Check oil level, see 6.1.2.1

Be careful when draining hot oil - danger of scalds! Do not let used oil run into the soil but catch it in a container ready for proper disposal.

6.1.3 Changing Oil Filter

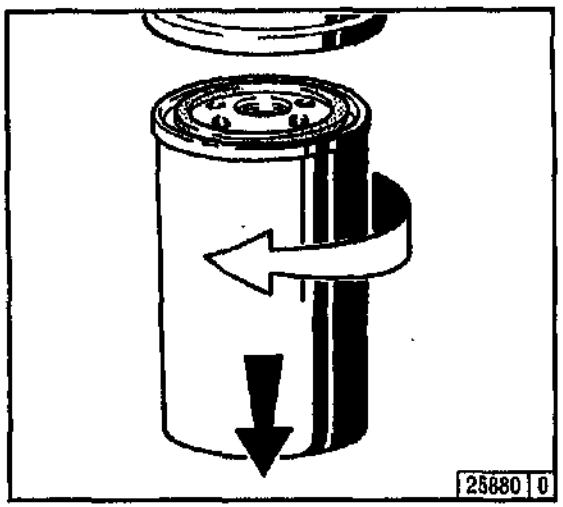

- With fitted torsion lock:
  Loosen screws and slide clamps downwards.
- Undo the filter cartridge with commercial tool and spin off.
- Catch any dripping oil.

Beware of burns from hot oil.

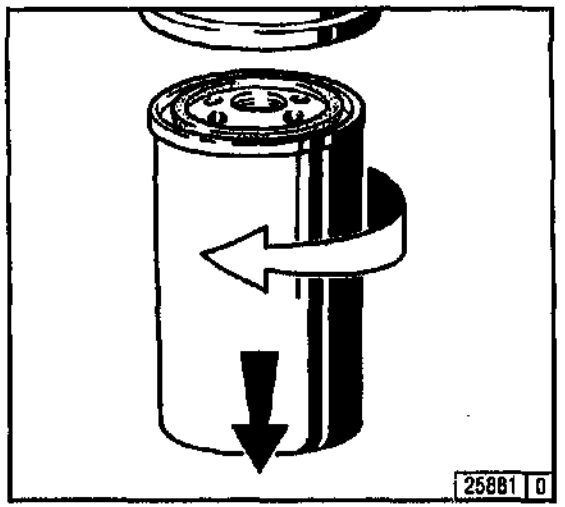

- Clean any dirt from the filter carrier rim.
- Lightly oil the rubber gasket of the new oil filter cartridge.
- Screw in the new cartridge finger tight against the gasket.

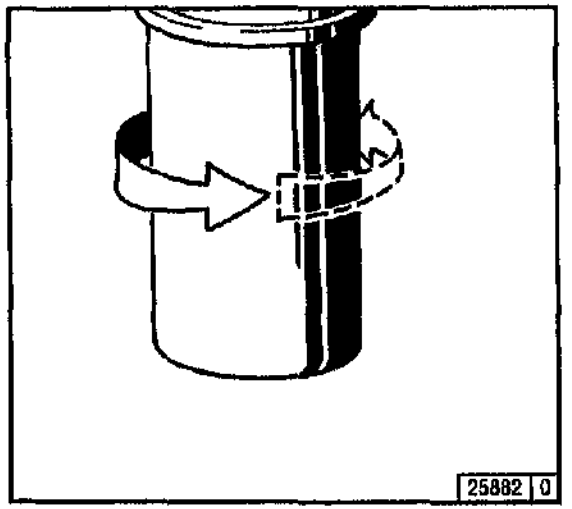

- Check that the cartridge is correctly seated against the gasket and tighten with a final half-turn.
- If a torsion lock is fitted:
  Slide clamps up into position and tighten screws.
- Check oil level (see 6.1.2).
- Check oil pressure (see 3.3.1).
- Check cartridge seal.

6.1.4 Cleaning/Changing Oil filter (Cup)

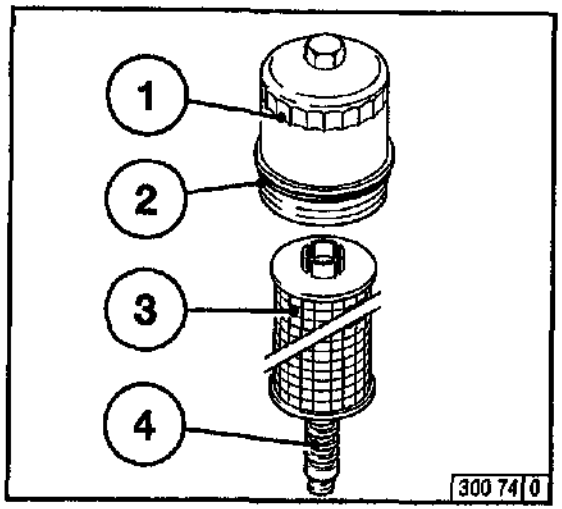

- Switch off the engine.
- Loosen the lube oil filter cap 1 and unscrew in an anticlockwise direction.
- Carefully lift the paper filter cartridge 3 out of guide 4.
- Catch any dripping oil.
- Change the paper filter cartridge 3.
- Clean any dirt from the filter carrier rim and the lube oil filter cover 1 and guide 4.
- Replace rubber seal 2 and apply a small amount of grease

Caution: hot oil!
Risk of scalding!

- Carefully insert the new paper filter cartridge 3 in guide 4.
- Tighten lube oil filter cover 1 in the clockwise direction (25 Nm).
- Start the engine.
- Check the oil level, see 6.1.2.
- Check the oil pressure, see 3.3.1.
- Check lube oil filter fitting for leaks.

6.2.1 Changing Fuel Filter

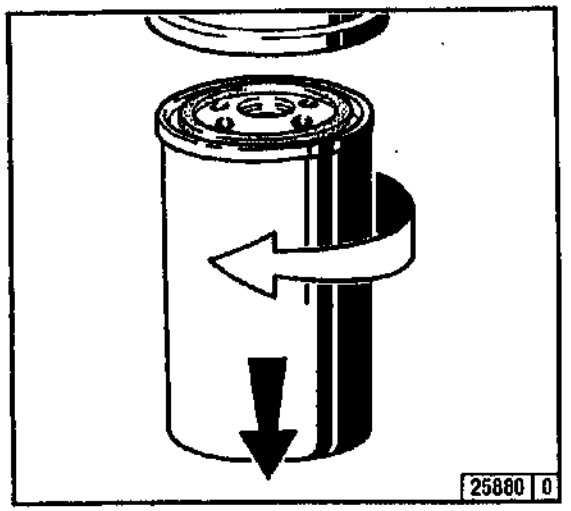

- Close fuel stopcock.
- Undo fuel filter cartridge with commercial tool and spin off.
- Catch any fuel.

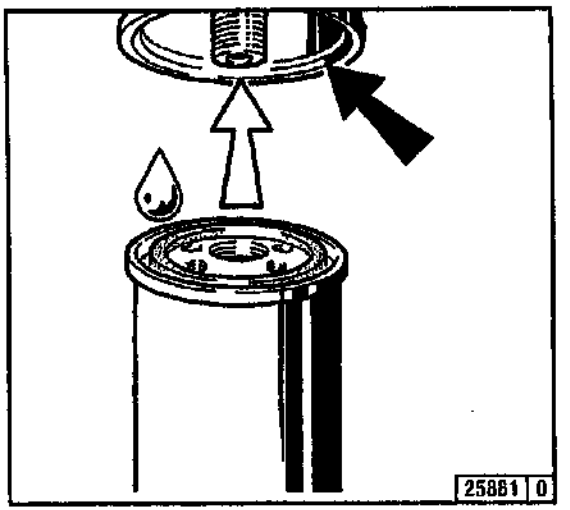

- Clean any dirt from the filter carrier rim.
- Apply light film of oil or diesel fuel to the rubber gasket of the new fuel filter cartridge.
- Screw in the new cartridge finger tight against the gasket.

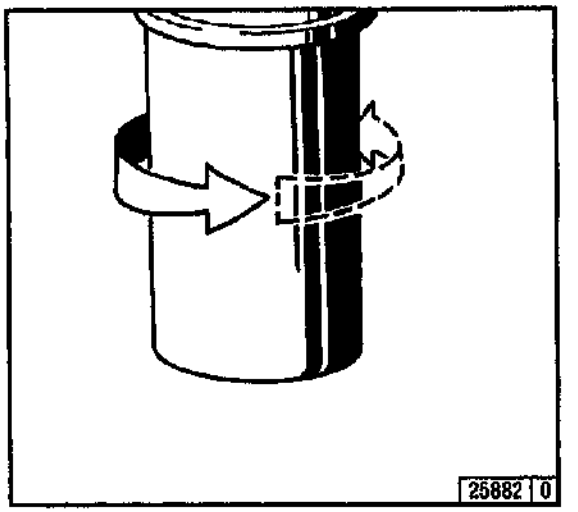

- Check that the cartridge is seated correctly against the gasket and tighten with a final half-turn.
- Open fuel stopcock.
- Check for leaks.

Keep naked flames away when working on the fuel system. Do not smoke!

The fuel system does not need to be bled.

6.2.2 Cleaning/Changing Fuel Pre-Filter Element

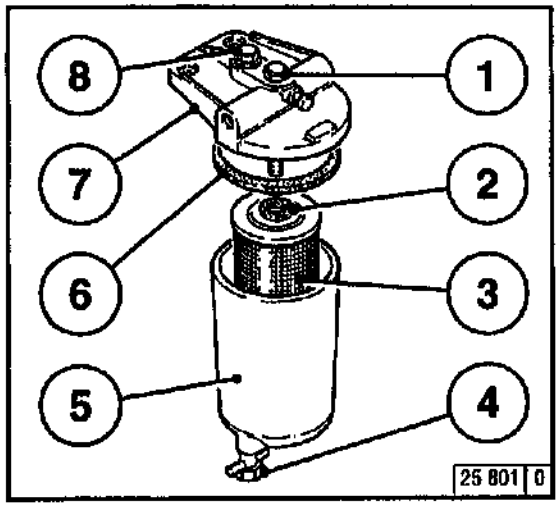

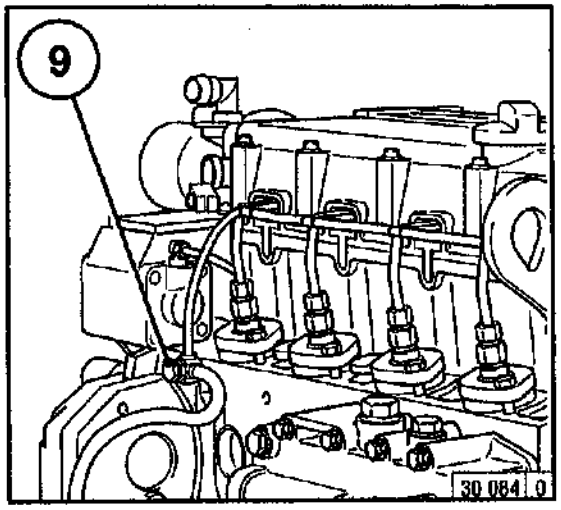

Cleaning:

- Close fuel stopcock.
- Place the fuel pan beneath the preliminary fuel filter.
- Remove drain plug 4 and drain off fuel.
- Unscrew clamping screw 1, remove filter housing 5 with filter insert 3.
- Clean sealing surface of the filter bracket 7 and filter insert housing 5 of any dirt.
- Insert new sealing ring 6 and filter insert 3 (change as necessary).
  – Push the filter insert up to approx. 3 cm over the edge of the housing onto the guide in the filter housing 5.
- Press filter housing 5 with filter insert 3 and sealing ring 6 against the filter console 7 and screw into place with clamping screw 1 (tightening torque 25 Nm).
  Note: It must be possible to push the upper seal 2 on filter insert 3 over the guide bracket on filter console 7.
- Tighten drain plug 4.
- Open fuel stopcock.
- Check for leaks after the engine has been started.

Changing:

- Replace defective filter insert 3.

6.2.3 Venting the Fuel System with Preliminary Fuel Filter

Bleeding:

- Place the fuel pan beneath the preliminary fuel filter.
- Loosen drain plug 4 and observe the draining fluid. When fuel instead of water starts to flow, retighten drain plug 4.
- Check for leaks after the engine has been started.

Venting:

- During initial commissioning, after maintenance work or if the tank is run empty it is essential to vent the fuel system.
- Set engine controller to stop position
- Place fuel collecting trough under the filter housing (5) / pressure control valve (9).
- Open fuel stopcock, pressure control valve (9), vent screw (8)
- Turn engine with starter (max. 20 sec.) until fuel with no air bubbles escapes from vent screw (8) and pressure holding valve (9).
- **Tighten** vent screw 8 (tightening torque 15 Nm) and pressure control valve 9.
- Set engine controller to start position and start
- When the engine has started check for leaks

Avoid naked flames when working on the fuel system. Do not smoke. Dispose of waste fuel in an environmentally-friendly way

6.2.4 Changing Fuel Leakage Line

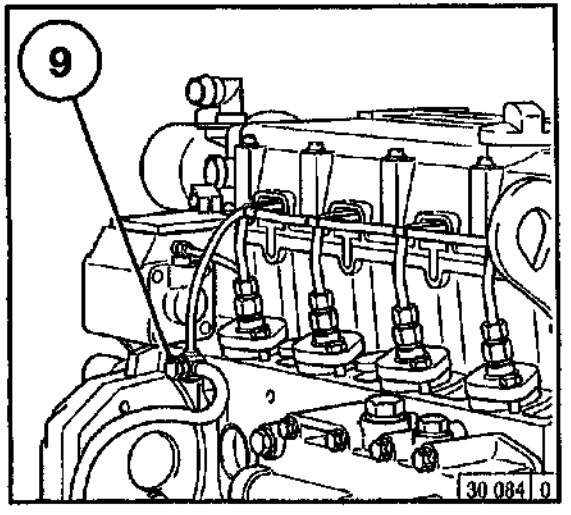

- Set engine controller to stop position
- Open fuel stopcock
- Loosen pressure holding valve (9)
  Catch any fuel which escapes and dispose of in an environmentally-friendly way
- Turn engine with starter (max. 20 sec.) until fuel with no air bubbles escapes from pressure holding valve (9).
- Tighten up pressure holding valve (9).
- Set engine controller to start position and start
- When the engine has started check for leaks

Avoid naked flames when working on the fuel system. Do not smoke. Dispose of waste fuel in an environmentally-friendly way

6.2.5 Changing Fuel Leakage Pipes

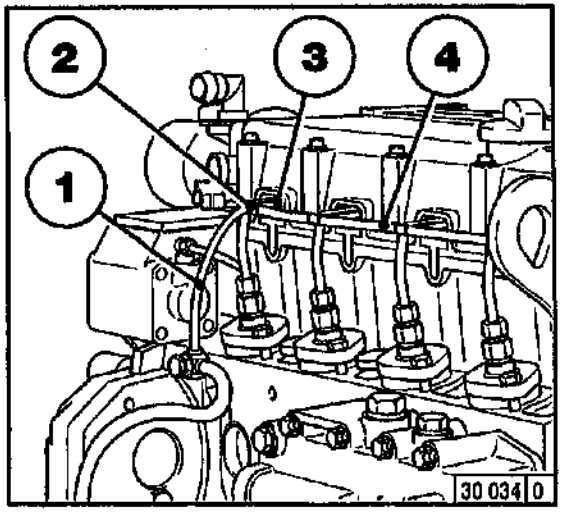

- Close fuel stopcock
- Dismantle valve cap cover
- Remove rubber hoses (3) from the injection valves
- Dismantle rubber hoses (1), (3) and (4) and connection piece (2) and dispose of in an environmentally-friendly way
- Fit new rubber hoses (1), (3) and (4) and connection piece (2)
- Connect rubber hoses (3) to injection valves
- Remount valve cap cover
- Open fuel stopcock
- When the engine has started check for leaks

6.3.1 Cleaning Intervals

- The amount of contamination in the cooling system depends on the engine application.
- Spilled oil or fuel on the engine increases the risk of contamination. Be especially careful if the engine is used in dusty environments.
- Serious contamination can occur, for example:
  - on construction sites where there is a high level of air-borne dust.
  - in harvesting application where there are high concentrations of chaff and chopped straw in the vicinity of the machine.
- Because applications vary, cleaning intervals have to be determined from case to case. The cleaning intervals given in the table below can be used as a guide.

Checking / Cleaning Intervals	
Suggested OH	**Application**
2000	Ships, gensets in enclosed spaces, pumps
1000	Vehicles on paved roads
500	Tractors, forklift trucks, mobile gensets
250	Vehicles on construction sites and unpaved roads, construction equipment, compressors,underground mining equipment
125	Agricultural machinery, harvester tractors

6.3.2 Cleaning Cooling System

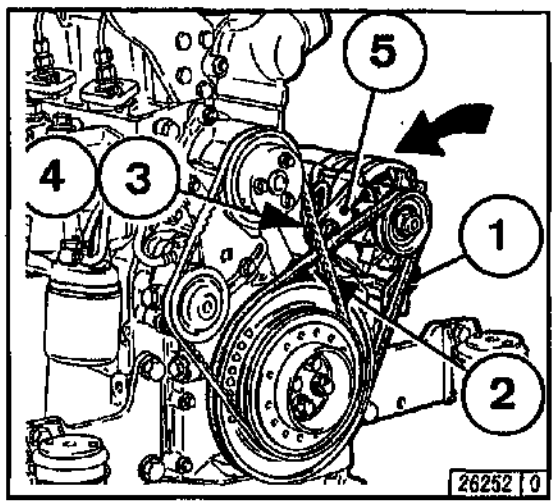

Series 1012/1013

- Place a cleaning bath under the heat exchanger (it. 2).
- Remove the service flap on the heat exchanger (see insert).

Compressed Air
- Blow out heat exchanger with compressed air (first from it. 3, then from it. 1).
  Be careful not to damage the cooling fins.
- Wash out loosened dirt with a hose.

Cold Cleansing Agent
- Spray the heat exchanger with a commercial cold cleansing agent and let stand for about 10 minutes.
- First spray clean with a water jet from position 3 then from position 1 (do not spray sensitive engine components directly with a water jet, eg generator, cables, electronic components, fan drive).

Cleaning with steam or with hot water
- Remove oil and grease residues with the jet set at a gentle setting.

- Refit service flap.
- Run the engine up to normal operating temperature to evaporate any remaining water.

Series 1012E/1013E

- If an external cooling system is fitted, follow the manufacturer's instructions.

Unit engine

- Clean as described under series 1012/1013. *The cleaning jet must be positioned parallel to* the cooling-air ducts.

Hose pressure: max. 100 bar

6.3.3 Draining Cooling System

1012 / 1013

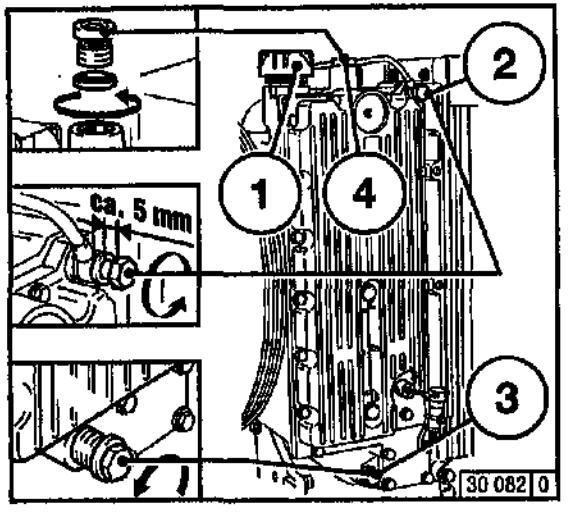

- Place container under drain plug 3.
- Unscrew cap 1.
- Unscrew drain plug 3 fully.
- Drain coolant.
- Drain the remaining fluid from the engine oil cooler (coolant duct).
- Screw in the sealing plug 3 up to the first notch and screw in the sealing plug on the oil cooler (arrow).
  Fill/vent the cooling system: see section 6.3.4

Be careful when draining hot coolant – danger of scalds! Collect drained coolant and dispose of according to environmental regulations.

If a heater is connected to the cooling system, all heater valves must be opened during filling.
Depending on the water content and the installation position of the heater, it may be required to repeat the last point several times to vent the heater system.

6.3.4 Filling / Venting Cooling System 1012 / 1013

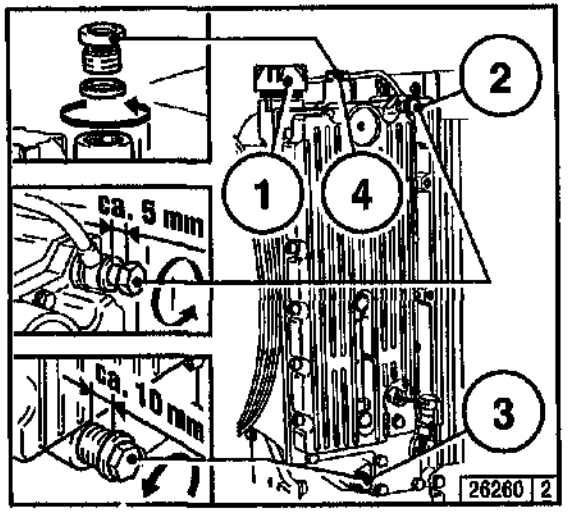

- Unscrew cap 1
- Loosen sealing plug 2
- Unscrew vent plug 4.
- Unscrew sealing plug 3 (10 mm) up to the first notch.
- Add coolant up to the max. marking or fill-up limit (heater valve – if fitted – of the unit must be opened).
- Tighten sealing plug 2 (tightening torque 18 Nm)
- Tighten vent plug 4 (tightening torque 40 Nm)
- Tighten sealing plug 3.
- Close cap 1.
- Start engine and warm up until thermostat opens.
- Switch off engine.
- Check coolant level (see section 3.3.3) and top up as required.

6.3.5 Draining the Cooling System 1012 E / 1013 E

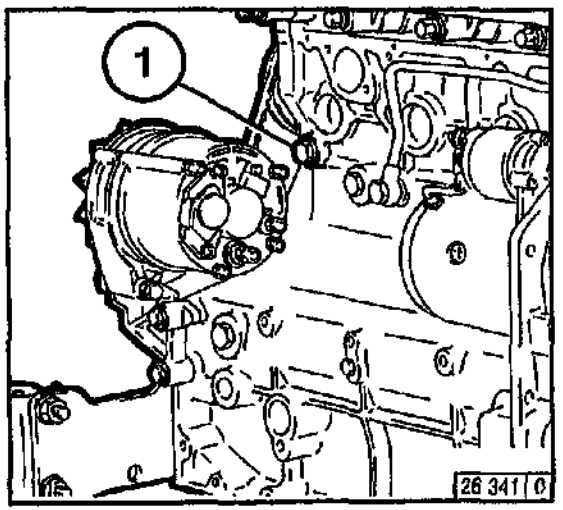

- Place a container under sealing plug 1.
- Remove sealing plug 1 from the crankcase.
- Drain off the coolant.
- Tighten sealing plug 1 again.
- If sealing plug 1 is not accessible, the system can be drained at the engine oil cooler (coolant duct).

Filling/venting the cooling system:
See section 6.3.6.

Be careful when draining hot coolant – danger of scalds! Collect drained coolant and dispose of according to environmental regulations.

6.3.6 Filling/Venting the Cooling System 1012 E/1013 E Standard engine

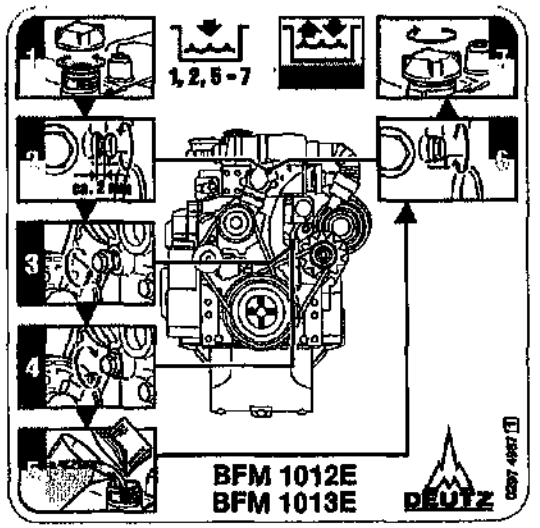

- Open radiator cap position 1.
- Loosen vent plug position 2.
- Add coolant up to the maximum marking or filler limit (heater valve of the system must be opened – if fitted).
- Tighten vent plug position 2 + sealing plug position 3.
- Close radiator cap position 1.
- Start engine and warm up until thermostat opens.
- Switch off engine.
- Check coolant level when the engine is cold and top up as required.
- Close the radiator sealing plug position 1.

Venting

- The cooling systems, which are built in line with our installation guidelines, are vented automatically after they have been filled.
- With external cooling systems in accordance with the specifications of the manufacturer.

1013 E
Short engine

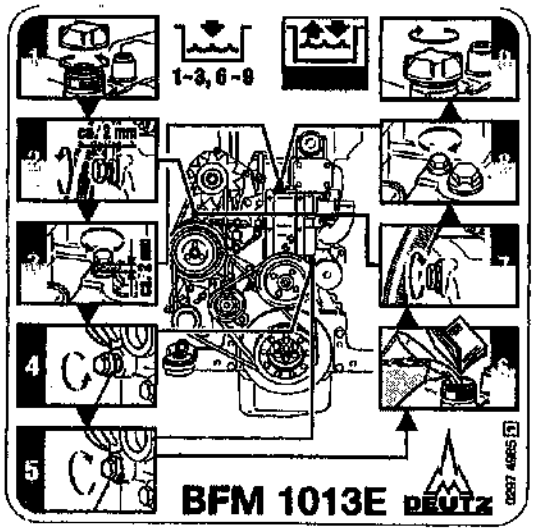

- Loosen vent plug position 2 and sealing plug position 3.
- Add coolant up to the maximum marking or filler limit (heater valve of the system must be opened – if fitted).
- Tighten vent plug position 2 + sealing plug position 3.
- Close radiator cap position 1.
- Start engine and warm up until thermostat opens.
- Switch off engine.
- Check coolant level when the engine is cold and top up as required.
- Close the radiator sealing plug position 1.

Venting

- The cooling systems, which are built in line with our installation guidelines, are vented automatically after they have been filled.
- With external cooling systems in accordance with the specifications of the manufacturer.
- Start the engine and warm up until the thermostat opens.

6.3.7 Draining the Cooling System Unit Engine (4 Cylinders)

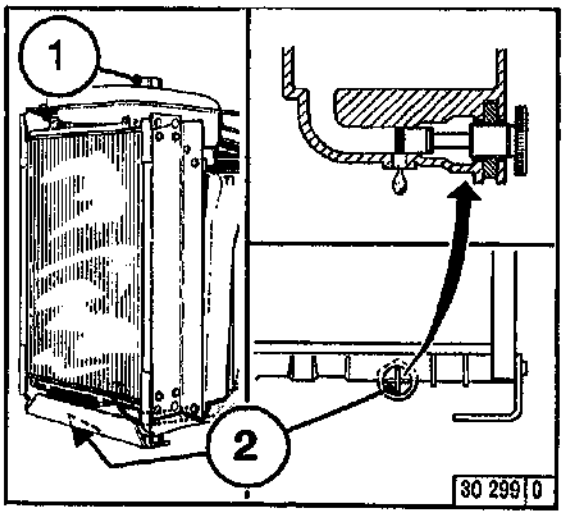

- Open the cap 1 of the expansion tank.
- Place a container beneath knurled screw 2.
- Unscrew the knurled screw 2 in an anti-clockwise direction until coolant is emitted.
- Drain off coolant.
- In case of clogging, rinse the radiator through with clear water.
- Tighten knurled screw 2.
  Filling/venting the cooling system:
  see section 6.3.8

Unit engine (6 cylinders)

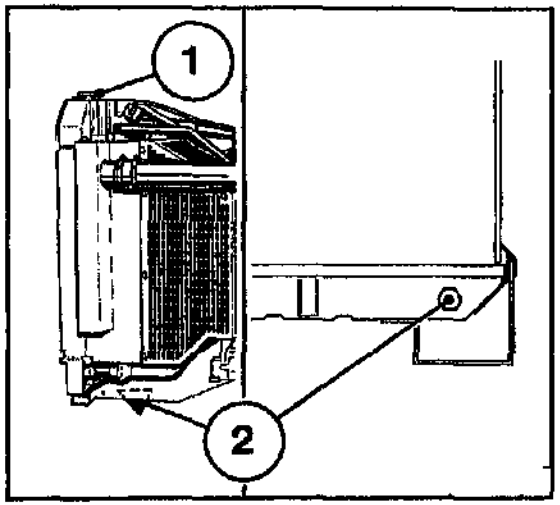

- Open the cap 1 of the expansion tank.
- Place a container beneath sealing plug 2.
- *Unscrew the sealing plug 2.*
- Drain off coolant.
- In case of clogging, rinse the radiator through with clear water.
- Tighten sealing plug 2.
  Filling/venting the cooling system:
  see section 6.3.8

Be careful when draining hot coolant - danger of scalds! Collect drained coolant and dispose of according to *environmental regulations.*

6.3.8 Filling/Venting the Cooling System
Unit Engine

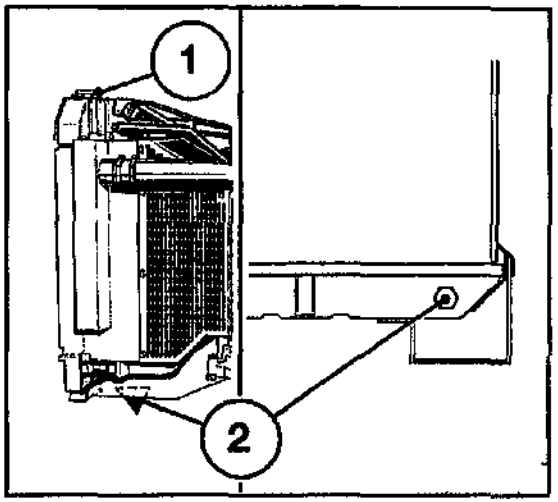

- Open the cap 1 of the expansion tank.
- **Slowly** add coolant up to the max. marking or filler limit.
- Close the cap.
- Start the engine and warm up until the thermostat opens, the upper coolant line warms up tangibly.
- Briefly run the engine at nominal output (fixed setting), this rinses out any pockets.
- Switch off the engine and leave to cool down.
- Open cap 1, add coolant up to the max. marking or filler limit and close the cap 1.
- *Once the engine has been run once, check the* coolant level when the engine is cold.

If a heater is connected to the cooling system, the heater valves must be opened when coolant is added. *Depending on the coolant cont*ents and the installation location of the heater, it may be

6.3.9 Draining the Charge-Air Cooler

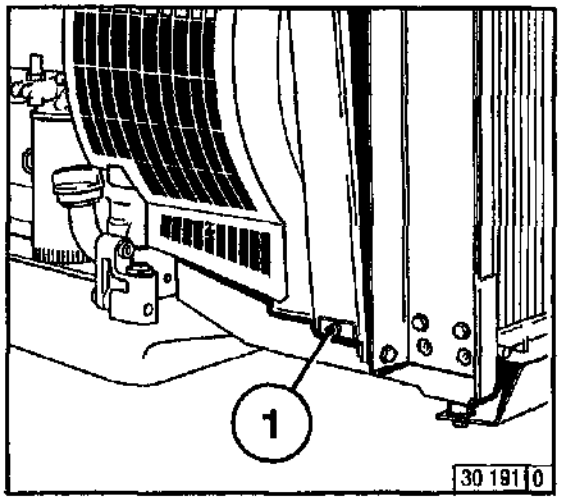

- Loosen the drain plug 1 on the end of the charge-air cooler.
- Drain off any oil residues that may be remaining.
- Close the drain plug 1.

6.4.1 Cleaning Intervals

- The amount of dirt in the air cleaner depends on the amount of dust in the air and the size of the air cleaner used. If a high level of dust is anticipated, a cyclone-type precleaner can be fitted to the air cleaner.
- Cleaning intervals will have to be determined from case to case.
- If a dry type air cleaner is used, clean when indicated by the service indicator or switch.
- Air cleaner servicing is needed when:
  - **Service Indicator**
    the red signal 1 is fully visible when the engine is off.
  - **Service Switch**
    the yellow pilot light comes on when the engine is running.
- After carrying out service work, reset the signal by pressing the button on the service indicator.

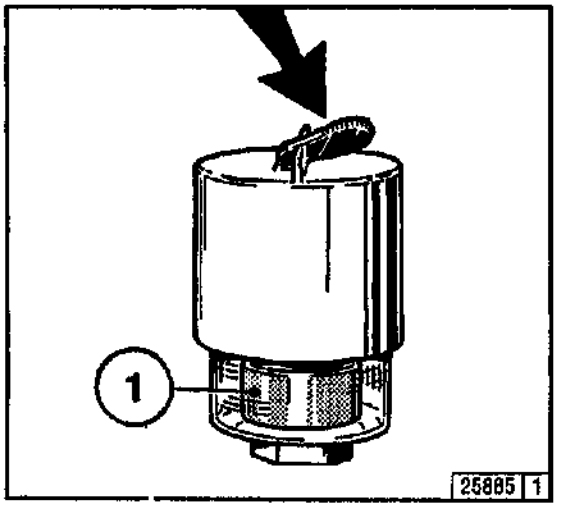

6.4.2 Emptying Cyclone Type Precleaner

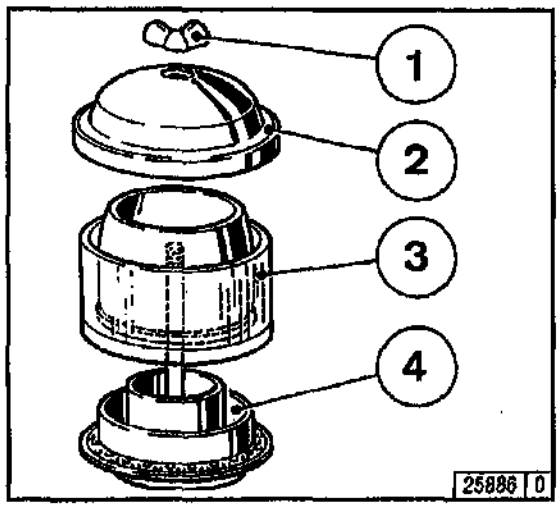

- Undo wing nut 1 and remove cover 2.
- Remove collector bowl 3 from lower section 4 and empty. Clean leaves, straw and other foreign matter from lower section of precleaner.
- Reposition collector bowl 3 onto lower section 4, fasten cover 2 in place by tightening wing nut 1.

Never fill collector bowl with oil. Replace collector bowl if damaged.

6.4.3 Cleaning Oil Bath Air Cleaner

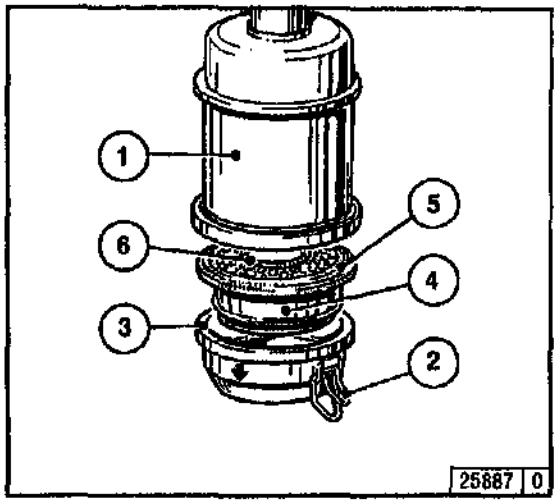

- Turn engine off and wait about 10 minutes for the oil to drain from filter housing 1.
- Release snap clips 2 and remove oil cup 3 together with filter element 4. If necessary prize element out with a screwdriver, taking care not to damage the rubber gasket 5.
- Remove dirty oil and sludge. Clean oil cup.
- Clean filter element 4 in diesel fuel and allow to drip-dry.
- Clean filter housing 1 if very dirty.
- Inspect and replace rubber gaskets 5 and 6 if necessary.
- Fill oil cup with engine oil up to the mark (arrow) (for viscosity, see 4.1.2).
- Refit oil cup and element to filter housing and secure with snap clips.

Never clean air cleaner with gasoline. Dispose of old oil in accordance with environmental regulations.

6.4.4 Dry Type Air Cleaner

Dust Discharge Valve

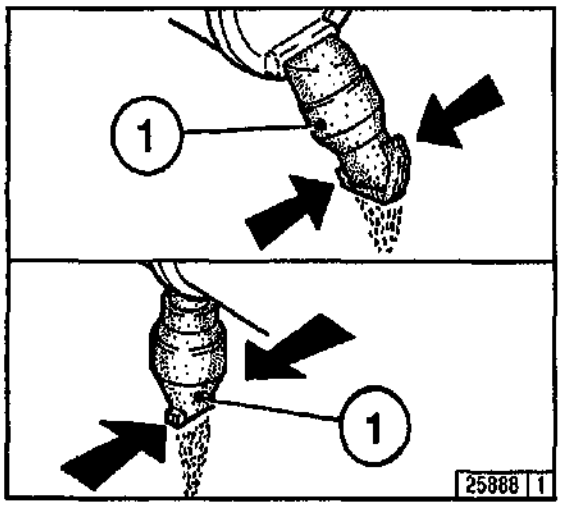

- Empty dust discharge valve 1 by pressing apart lips of discharge slot as indicated by arrows.
- Clean discharge slot from time to time.
- Remove any caked dirt by pressing together the upper section of the valve.

Filter Cartridge

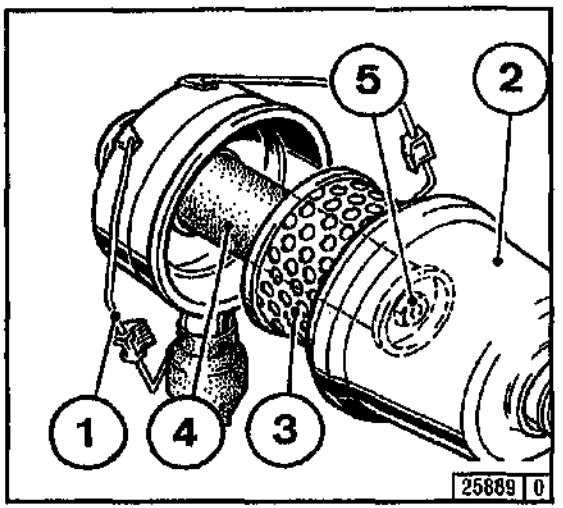

- Undo clip fasteners 1.
- Take off hood 2 and remove cartridge 3.
- Clean cartridge (replace at least once a year).
- *Clean cartridge 3:*
  - Blow out from inside out with dry compressed air (max. 5 bar), or
  - in difficult cases, tap out, taking care not to damage the cartridge, or
  - wash according to manufacturer's instructions.
- Check paper filter (light showing through) and *gaskets for damage. Replace if necessary.*
- After five air cleaner services or after two years at the latest, replace safety cartridge 4 (never clean).
  To do so:
  - Undo hex. nut 5 and remove cartridge 4.
  - *Install new cartridge, insert and tighten hex. nut.*
- Install cartridge 3, replace hood 2 and do up clip fasteners.

Never clean filter cartridge with gasoline or hot fluids.

6.5.1 Checking V-Belts

1012

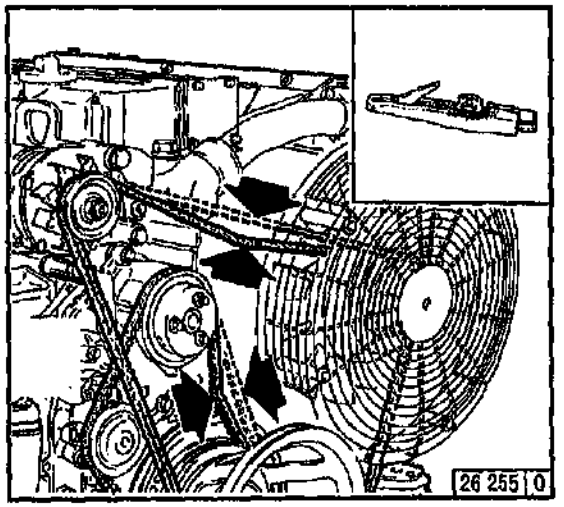

- Inspect entire V-belt for damage.
- Replace damaged V-belts.
- After installing new belts, run engine for 15 minutes, then check belt tension.
- Use a V-belt tension gauge (see 9.3) to check belt tension.
  - Place indicator arm 1 into gauge.
  - Position gauge on V-belt 2, midway between the pulleys, with flange 3 on bottom of gauge against the edge of belt.
  - Push slowly on the black pad 4 at right angles to belt 2 until the spring is heard or felt to trigger.

1013

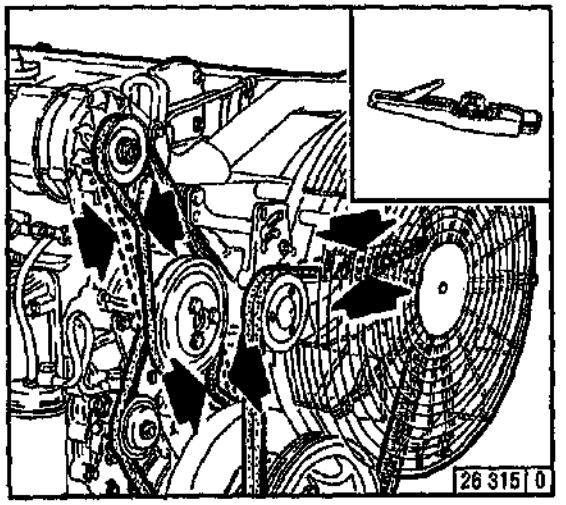

- Carefully remove the gauge without altering the position of the indicator arm.
  - Read off the value: Turn the gauge sideways to see the exact spot where the top of the black indicator arm 1 intersects scale 5 (arrow). For settings, see 9.1.
  - If necessary, retension belt and measure again.

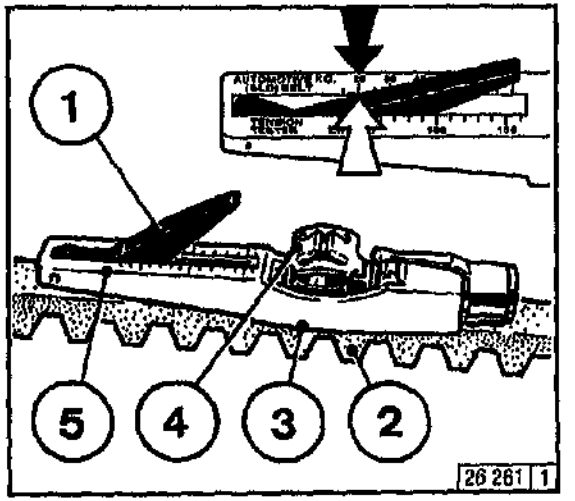

Check, tension and change belts only with the engine off. Refit belt guard, if provided.

6.5.2 Tensioning Fan / Alternator Belts 1012

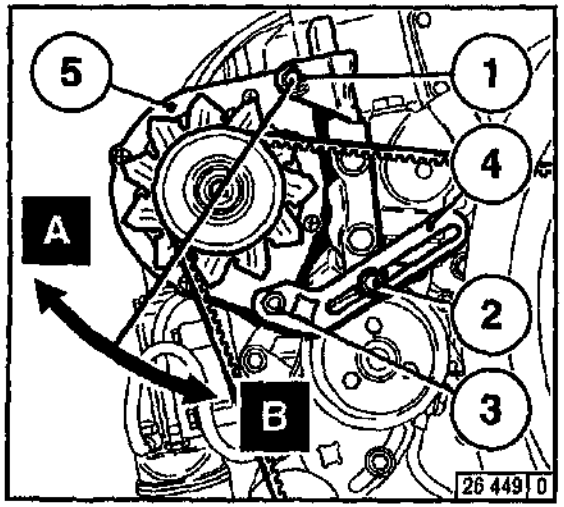

- Slacken off bolts 1, 2 and 3.
- Press alternator 5 in direction of arrow A until correct belt tension is achieved.
- Re-tighten bolts 1, 2 and 3.

Check, tension and change belts only with the engine off. Refit belt guard, if provided.

6.5.3 Changing Fan / Alternator Belts 1012

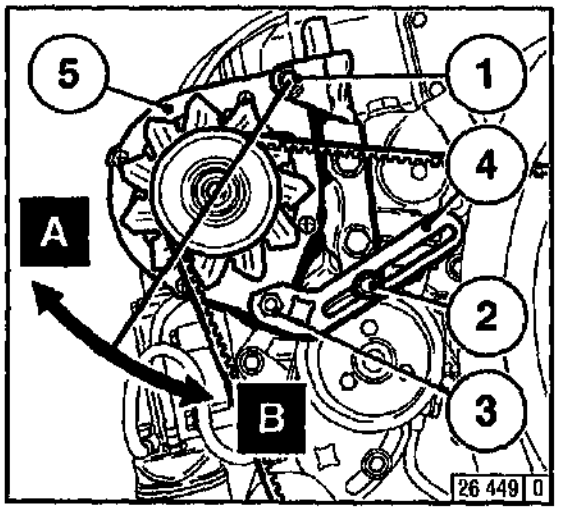

- Slacken off bolts 1, 2 and 3.
- Press alternator in direction of arrow B.
- Remove and replace belt.
- Tension belt in accordance with 6.5.3.
- Re-tighten bolts 1, 2 and 3.

6.5.4 Tensioning Coolant / Fuel Pump Belts 1012

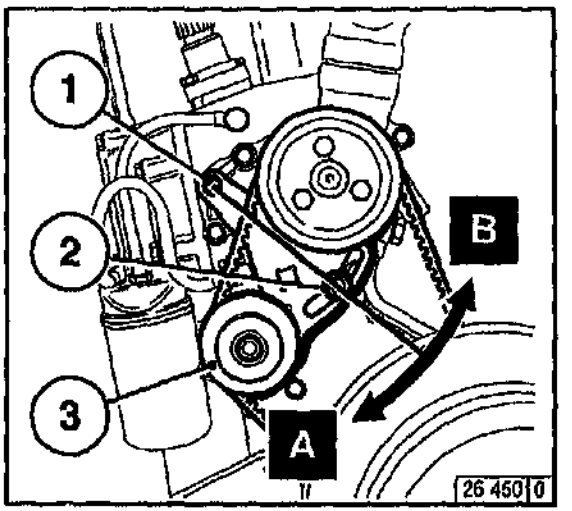

- Slacken off bolts 1 and 2.
- Push fuel pump 3 in direction of arrow (A) until correct belt tension is achieved.
- Re-tighten bolts 1 and 2.

6.5.5 Changing Coolant / Fuel Pump Belts 1012

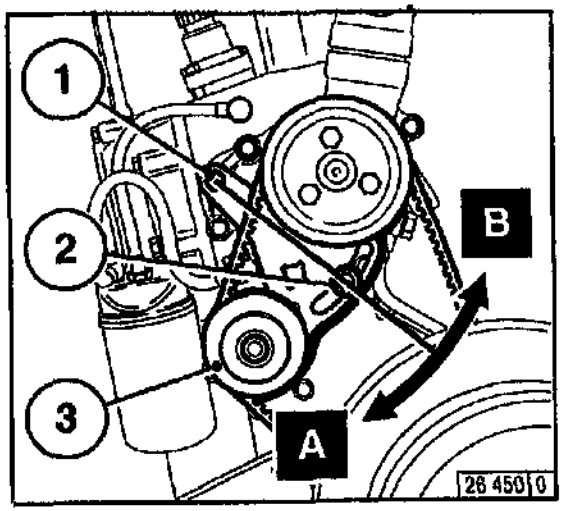

- Remove fan belt as described in 6.5.3.
- Slacken off bolts 1 and 2.
- Push fuel pump 3 in direction of arrow (B).
- Remove and replace belt.
- Push fuel pump in direction of arrow (A) until correct belt tension is achieved.
- Tighten bolts 1 and 2.
- Reinstall fan belt and tension as described in 6.5.2.

6.5.6 Tensioning Coolant / Fuel Pump Belts 1012 E

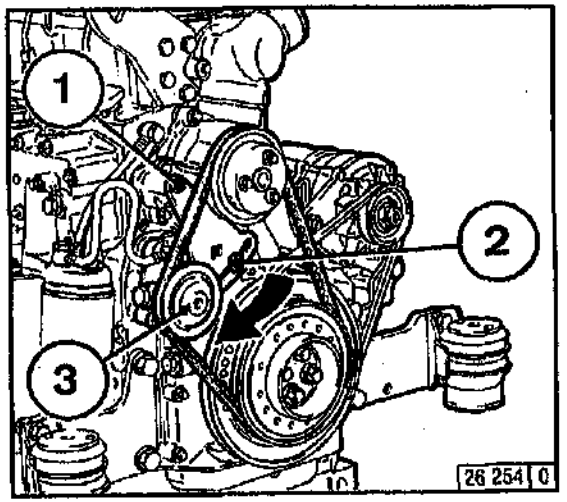

- Slacken off bolts 1 and 2.
- Push fuel pump 3 in direction of arrow until correct belt tension is achieved.
- Tighten bolts 1 and 2.

Check, tension and change belts only with the engine off. Refit belt guard, if provided.

6.5.7 Changing Coolant / Fuel Pump Belts 1012 E

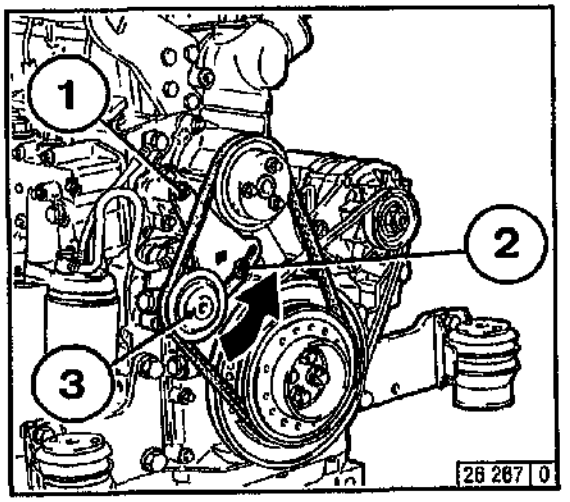

- Slacken off bolts 1 and 2.
- Push fuel pump 3 in direction of arrow.
- Remove and replace belt.
- Push fuel pump in opposite direction of arrow until correct belt tension is achieved.
- Tighten bolts 1 and 2.

6.5.8 Tensioning Alternator Belt 1012 E

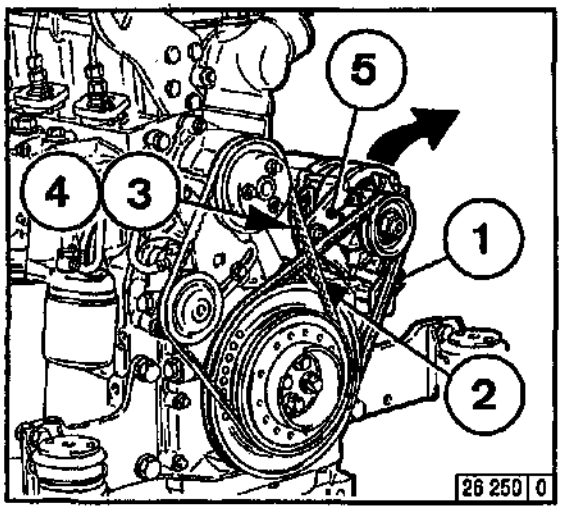

- Slacken off bolts 1, 2 and 4.
- Move alternator 5 in direction of arrow by turning bolt 3 until correct belt tension is achieved.
- Tighten bolts 1, 2 and 4.

Check, tension and change belts only with the engine off. Refit belt guard, if provided.

6.5.9 Changing Alternator Belt 1012 E

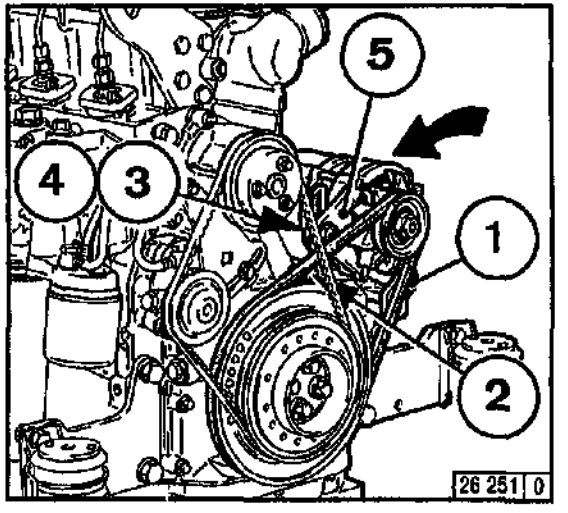

- Remove fuel pump belt as described in 6.5.7.
- Slacken off bolts 1, 2 and 4.
- Adjust bolt 3 until the V-belt can be removed.
- Fit new belt.
- Adjust bolt 3 until the correct belt tension is achieved.
- Tighten bolts 1, 2 and 4.
- Reinstall fuel pump belt and tension as described in 6.5.6.

6.5.10 Tensioning / Changing Fan Belt 1013

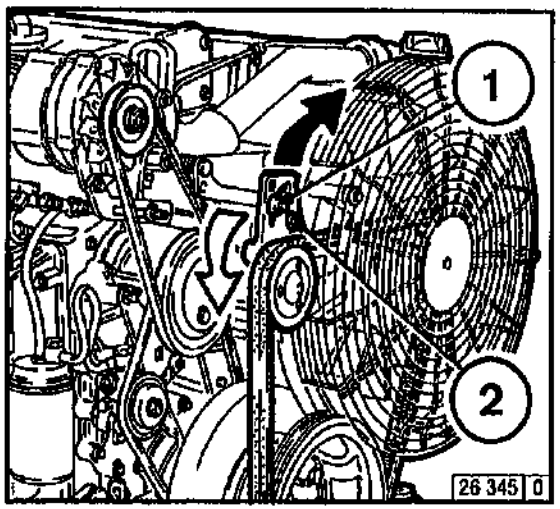

- Slacken off bolts 1 and 2.
  - Tensioning:
    Insert square wrench in square and pull in direction of arrow until correct belt tension is achieved.
  - Changing:
    Insert square wrench in square and loosen in opposite direction of arrow. Tension new belt as described above.
- Tighten bolts 1 and 2.

6.5.11 Tensioning Coolant / Fuel Pump belts 1013

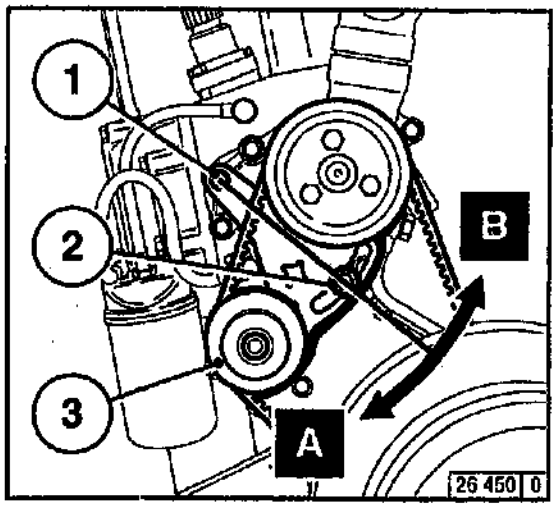

- Slacken off bolts 1 and 2.
- Push fuel pump 3 in direction (A) of arrow until correct belt tension is achieved.
- Tighten bolts 1 and 2.

Check, tension and change belts only with the engine off. Refit belt guard, if provided.

6.5.12 Changing Coolant / Fuel Pump Belts 1013

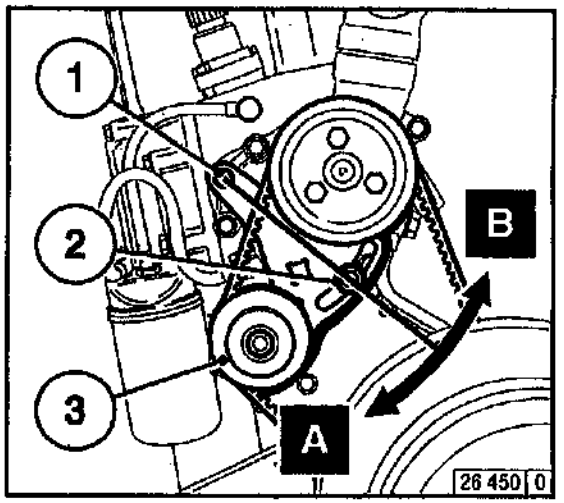

- Remove fan / alternator belt as described in 6.5.10 and 6.5.13.
- Slacken off bolts 1 and 2.
- Push fuel pump 3 in direction (B) of arrow.
- Remove and replace belt.
- Push fuel pump in direction (A) of arrow until correct belt tension is achieved.
- Tighten bolts 1 and 2.
- Reinstall fan / alternator belt and retension as described in 6.5.10 and 6.5.13.

6.5.13 Tensioning /Changing Alternator Belt 1013

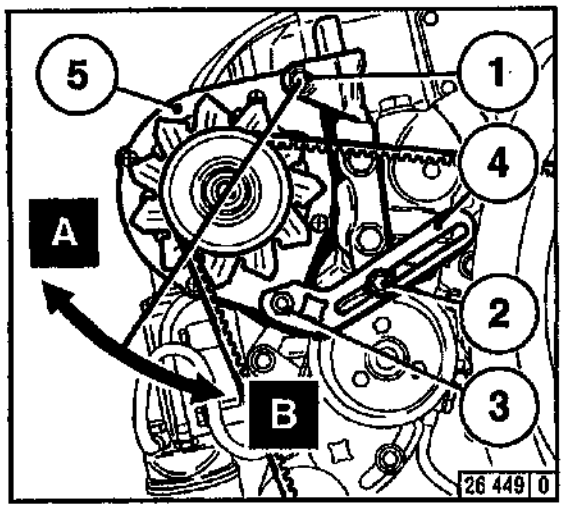

Tensioning:
- Slacken off bolts 1, 2 and 3.
- Move alternator 5 in direction of arrow (A) until correct belt tension is achieved.
- Re-tighten bolts 1, 2 and 3.

Changing:
- Slacken off bolts 1, 2 and 3.
- Move alternator 5 in direction of arrow (B) until belt is exposed.
- Remove and replace belt, tension (see above).
- Re-tighten bolts 1, 2 and 3.

6.5.14 Tensioning Coolant /Fuel Pump Belts 1013 E

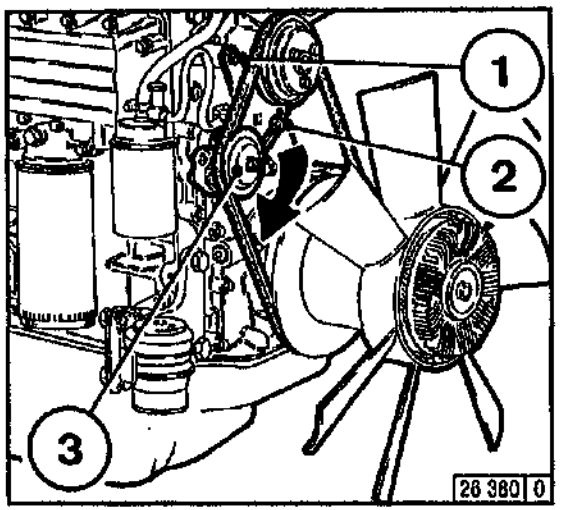

- Slacken off bolts 1 and 2.
- Push fuel pump 3 in direction of arrow until correct belt tension is achieved.
- Tighten bolts 1 and 2.

6.5.15 Changing Coolant / Fuel Pump Belts 1013 E

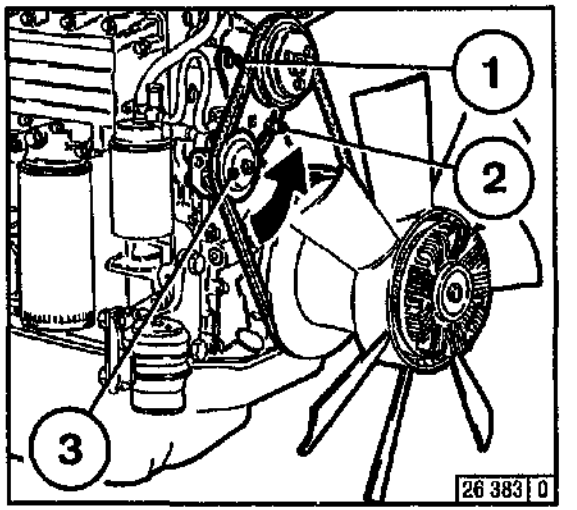

- Slacken off bolts 1 and 2.
- Push fuel pump 3 in direction of arrow.
- Remove and replace belt.
- Push fuel pump 3 in opposite direction of arrow until correct belt tension is achieved.
- Tighten bolts 1 and 2.

Check, tension and change belts only with the engine off. Refit belt guard, if provided.

6.5.16 Tensioning / Changing Compressor Belt

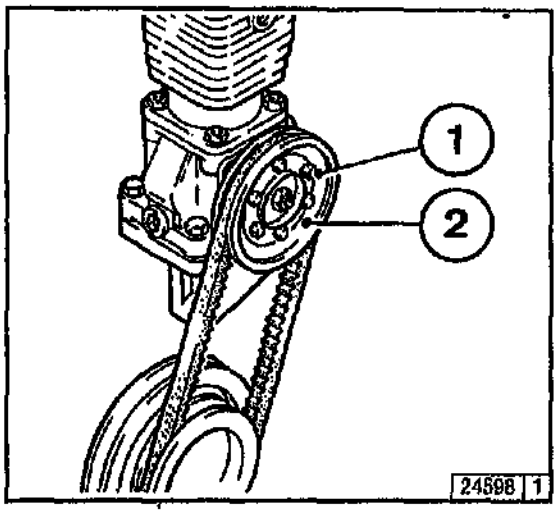

- Remove hex. bolts 1.
- Take off outer half-pulley 2.
- Replace belt if necessary.

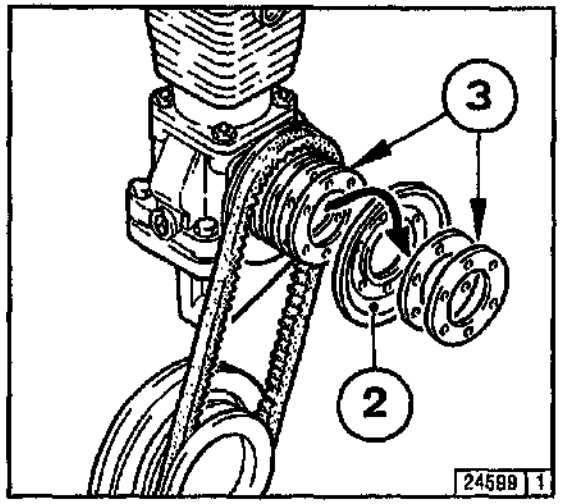

- To retension belt, remove one or more shims 3 – as may be required – from inside. Place removed shim(s) outside on removed half-pulley 2.
- Turn engine over while tightening bolts 1 to prevent belt being pinched.

Check, tension and change belts only with the engine off. Refit guard, if provided.

6.6.1 Checking / Adjusting Valve Clearances

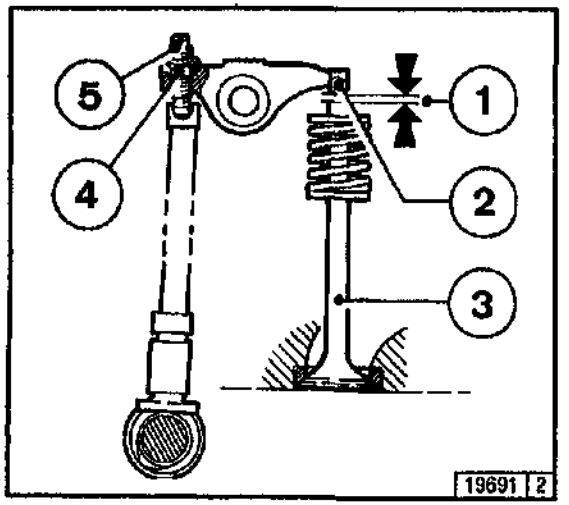

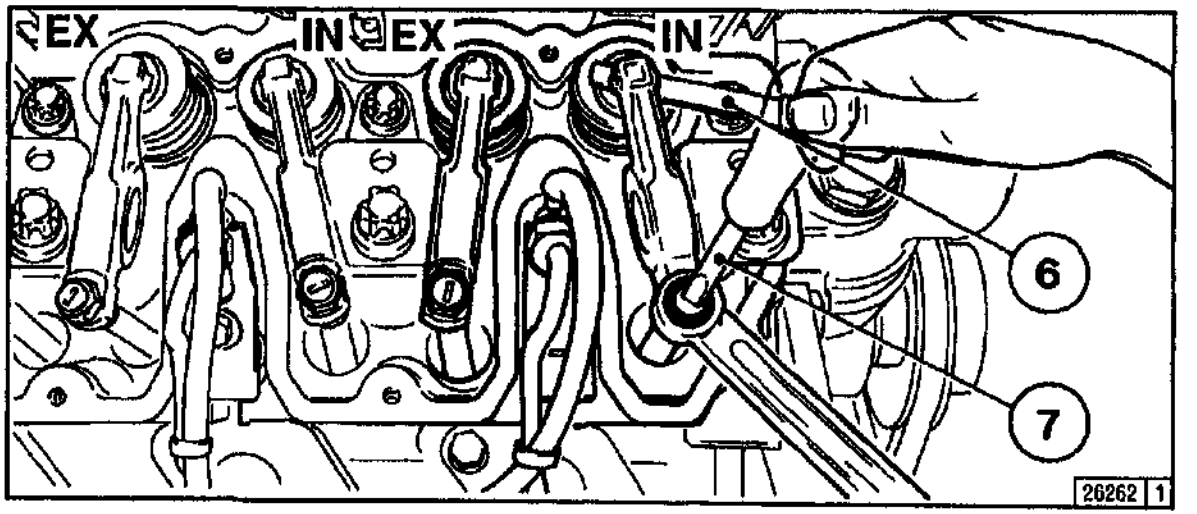

- Slacken off breather valve and swing to one side.
- Remove rocker cover.
- Position crankshaft as per schematic 6.6.1.1
- Before adjusting valve clearance, allow engine to cool down for at least 30 minutes. The oil temperature should be below 80 °C / 176 °F.
- Check valve clearance between rocker arm / tappet contact face 2 and valve stem 3 with feeler gauge 6 (there should be only slight resistance when feeler blade is inserted).
  For permissible valve clearance, see 9.1.
- Adjust valve clearance if necessary:
  - Release locknut 4.
  - Use screwdriver 7 to turn setscrew 5 so that the correct clearance is attained after locknut 4 has been tightened.
- Check and adjust valve clearance on all remaining cylinders.
- Replace rocker cover (use new gasket if needed).
- Swing breather valve back into position and secure.

6.6.1.1 Valve Clearance Adjustment Schematic

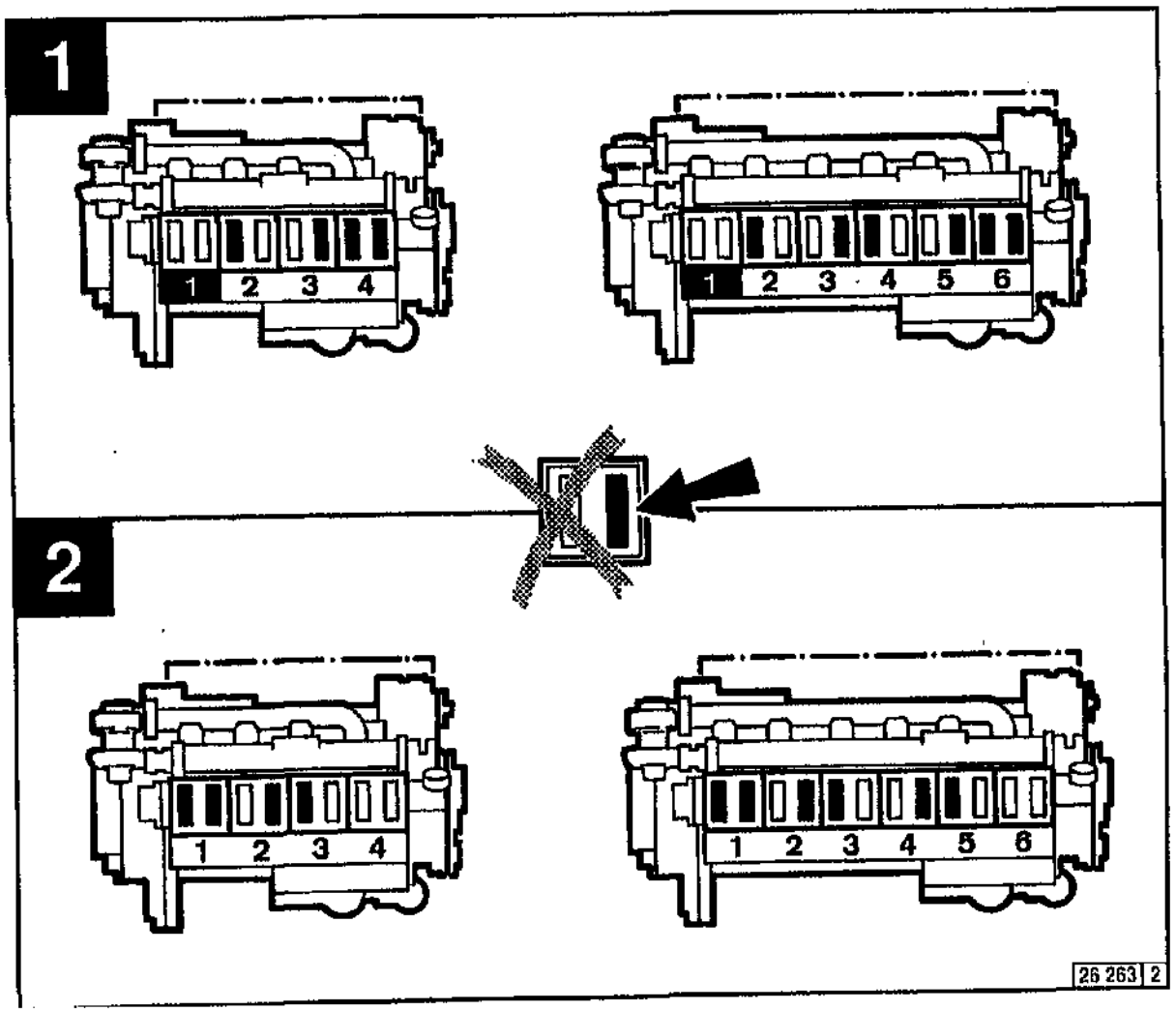

- **Crankshaft Position 1:**
  Turn crankshaft until both valves in cylinder 1 overlap (exhaust valve about to close, inlet valve about to open). Adjust clearance of valves **marked in black** on schematic. Mark respective rocker arm with chalk to show that adjustment has been done.

- **Crankshaft Position 2:**
  Turn crankshaft one full revolution (360°).
  Adjust clearance of valves **marked in black** on schematic.

6

6.7.1 Battery

6.7.1.1 Checking Battery and Cable Connectors

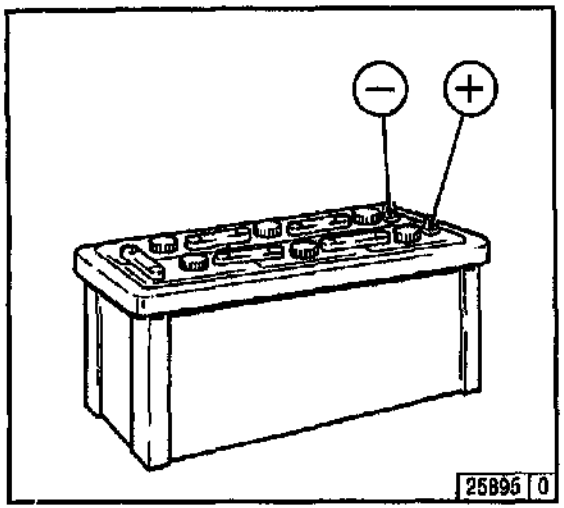

- Keep battery clean and dry.
- Undo dirty clamps.
- Clean terminal posts (+ and –) and clamps of the battery, and grease with acid-free and acid-resistant grease.
- When reassembling, ensure that clamps make good contact. Do up clamp bolts finger tight.

6.7.1.2 Checking Electrolyte Level

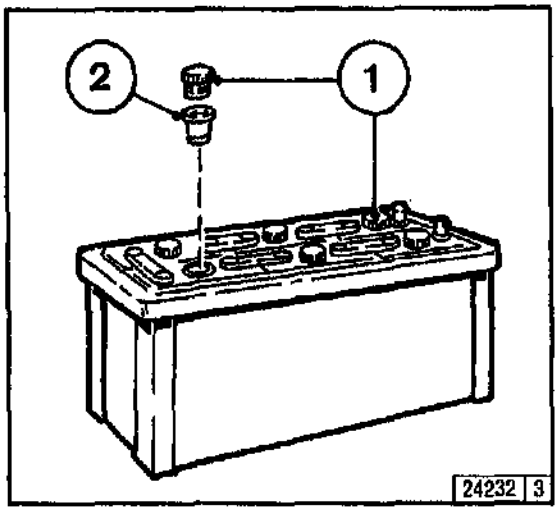

- Remove caps 1.
- If testers 2 are used, the electrolyte should come up to their base.
- If testers are not used, the electrolyte level should be 10-15 mm above the top of the plates.
- If necessary, top up with distilled water.
- Replace caps.

6.7.1.3 Checking Specific Gravity of Electrolyte

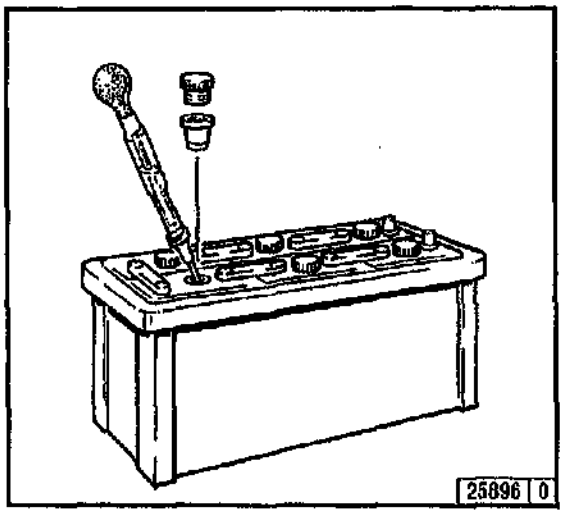

- Measure the specific gravity of individual cells with a commercial hydrometer.

  The hydrometer reading (see table on following page) indicates the state of charge. During measurement, the temperature of the electrolyte should preferably be 20°C / 68°F.

Specific Gravity				
in [kg/l]		in °Bé [°Baumé]*		State of Charge
Normal	Tropics	Normal	Tropics	
1.28	1.23	32	27	Fully charged
1.20	1.12	24	16	Half charged, recharge
1.12	1.08	16	11	Discharged, recharge immediately

* Measurement of specific gravity in °Bé is out of date and rarely used today.

The gases emitted by the battery are explosive. Keep sparks and naked flames away from the battery.
Do not allow battery acid to come into contact with skin or clothing.
Wear protective goggles.
Do not rest tools on the battery.

6.7.2 Three-Phase Alternator

Notes on the three-phase system:

- **Never** disconnect the cables between battery, alternator and regulator while the engine is **running.**
- If, however, it is necessary to start and operate the engine without the battery, disconnect the regulator from the alternator before starting.
- Be sure not to confuse the battery terminals.
- Replace defective bulb of the charge pilot lamp immediately.
- Cleaning the engine: Do not spray water/steam directly onto the alternator. Run the engine up to normal operating temperature to evaporate any remaining water.
- The habit of touching a lead against the frame to check whether it is live must under no circumstances be used with three-phase electrical systems.
- In the case of electric welding, connect the ground terminal on the welder directly to the piece being welded.

6.7.3 Lifting Tackle

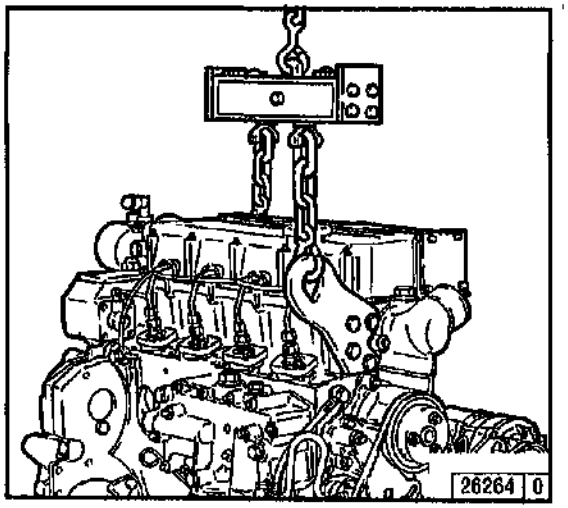

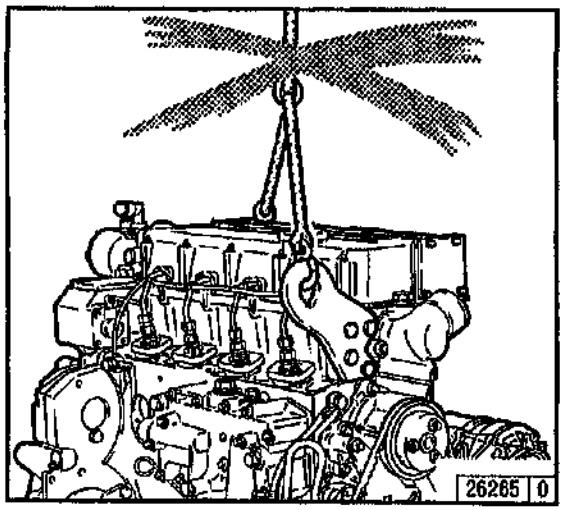

- Always use proper lifting tackle when transporting the engine.

Use only the correct lifting tackle.

7.1 Diagnosis Chart

- If engine problems occur, they frequently have their cause in improper operation or engine maintenance.
- If problems do occur, always check first that the operating and maintenance instructions have been followed.
- A diagnosis chart is given on the facing page.
- If you cannot identify the cause of the problem or are unable to rectify it yourself, please contact DEUTZ Service.

Before starting, make sure that nobody is standing in the immediate vicinity of the engine or driven machine.
Important: When carrying out repair work, never start the engine with speed governor removed.
Disconnect battery.

7.1 Diagnosis Chart

Troubleshooting

Fault										Cause	Section	
Engine fails or is difficult to start										Not declutched (where possible)	Operation	P
	Engine starts but runs unevenly or stalls									Below starting limit temperature		P
		Engine overheats. Temperature monitor gives warning								Engine shutdown lever in stop position (faulty solenoid)		P
			Engine gives poor performance							Oil level too low		A
				Engine not firing on all cylinders						Oil level too high		S
					Engine has little or no oil pressure					Excessive inclination of engine		P / E
						Engine oil consumption excessive				Speed control lever set to middle position		P / E
							Engine smokes - blue			Dirty air cleaner/Faulty turbocharger	Combustion air	P / W
								- white		Air cleaner service switch/indicator defective		P
									- black	LDA* defective (leaking line)		P
										Charge air line leaking		P / W
										Coolant pump defective	Cooling system	P / R
										Charge air cooler contaminated		P / R
										Coolant heat exchanger dirty		P / R
										Cooling fan defective, split or loose V-belt (belt-driven fuel pump)		P / W
										Cooling air temperature rise/ hot air recirculation		P
										Battery defective or discharged	Electrics	P

Remedy	
Check	P
Adjust	E
Replace	W
Clean	R
Top up	A
Lower level	S

*LDA = Aneroid device

Fault	Remedy	
Engine fails or is difficult to start	Check	P
Engine starts but runs unevenly or stalls	Adjust	E
Engine overheats. Temperature monitor gives warning	Replace	W
Engine gives poor performance	Clean	R
Engine not firing on all cylinders	Top up	A
Engine has little or no oil pressure	Lower level	S
Engine oil consumption excessive		
Engine smokes - blue		
- white		
- black		

Engine fails or is difficult to start	Engine starts but runs unevenly or stalls	Engine overheats. Temperature monitor gives warning	Engine gives poor performance	Engine not firing on all cylinders	Engine has little or no oil pressure	Engine oil consumption excessive	Engine smokes - blue	- white	- black	Cause	Section	
●										Electrics cable connections to starter, electrical system loose or oxidized	Electrics	P
●										Starter defective or pinion does not engage		P
●	●		●					●	●	Incorrect valve clearance	Engine	E
●	●		●	●						Leaking injection line		P
		●								Vent pipe blocked (coolant heat exchanger)		P / R
●								●		Glow plugs defective		P
●	●	●	●	●				●	●	Injector defective		P / W
●	●		●	●						Air in fuel system		P / W
●	●		●	●						Fuel filter/prefilter dirty		P/ R /W
		●								Oil filter defective		W
●					●	●				Incorrect lube oil SAE class or quality	Operating media	W
●	●		●					●		Fuel quality not as per Operation Manual		P/ W
		●								Coolant level too low		P/ A

8.1 Preservation

8

8.1 Preservation

If the engine is to remain idle for an extended period of time, it is necessary to take protective measures to prevent rust formation. The preservative measures described here will protect the engine for up to 6 months. The procedure will have to be reversed before the engine is recommissioned.

- Anti-corrosion oils to specification:
  - MIL-L-21260B
  - TL 9150-037/2
  - NATO code C 640/642

- Recommended cleansing agent to remove preservatives when recommissioning engine:
  - Petroleum benzine (hazardous materials class A3)

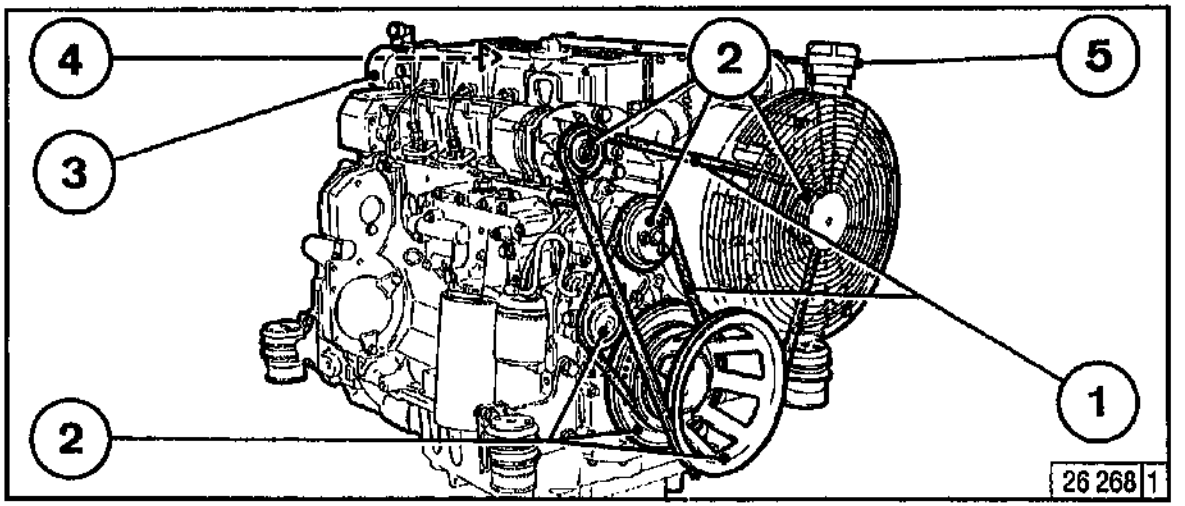

Preserving Engine:

- Clean engine (with cold cleansing agent if preferred). See 6.3.2.
- Run engine until warm, then turn off.
- Drain engine oil (see 6.1.2) and fill with anti-corrosion oil.
- Drain coolant (see 6.3.3/6.3.5).
- Fill with anti-corrosion agent (see 4.3.3).
- If necessary, clean oil bath air cleaner (see 6.4.3) and fill with anti-corrosion oil.
- Drain fuel tank.
- Make up a mixture of 90% diesel fuel and 10% anti-corrosion oil, and refill fuel tank.
- Run engine for about 10 minutes.
- Turn engine off.
- Turn engine over manually several times. If using starter, set shutdown lever to stop position.
- Remove V-belts 1 and store in wrapped condition.
- Spray grooves of V-belt pulleys 2 with anti-corrosion agent.
- Close off intake ports 3 and exhaust ports 4.
- Lightly grease and replace coolant filler 5.
- Drain anti-corrosion agent (see 6.3.3 / 6.3.5).

Removing Engine Preservatives:

- Remove anti-corrosion agent from grooves in V-belt pulleys 2.
- Install V-belts 1. Retension after brief operation is necessary (see 6.5).
- Remove covers from intake port 3 and exhaust port 4.
- Fill with coolant (see 6.3.4 / 6.3.5).
- Start engine.

Technical Specifications

9

9.1 Engine Specifications and Settings
9.2 Torque Wrench Settings
9.3 Tools

Model		BF4M 1012 BF4M 1012 E	BF4M 1012 C BF4M 1012 EC	BF6M 1012 BF6M 1012 E	BF6M 1012 C BF6M 1012 EC
Number of cylinders		4	4	6	6
Cylinder arrangement		vertical, in line			
Bore	[mm]	94			
Stroke	[mm]	115			
Total displacement	[cm³]	3192	3192	4788	4788
Compression ratio	[ε].	17.5			
Working cycle/Combustion system		4-stroke diesel with turbocharging and direct injection			
Charge air cooler		w/o	w/	w/o	w/
Direction of rotation		counter-clockwise			
Weight 1012 / C incl. cooling system	[kg approx.]	contact company headquarters			
Weight 1012 E / EC w/o cooling system as per DIN 70020-A	[kg approx.]	330	332	435	437
Engine power	[kW]	[1].			
Speed	[rpm]	[1].			
Valve clearance with cold engine	[mm]	Inlet 0,3 + 0,1 / Outlet 0,5 + 0,1.			
Injector opening pressure	[bar]	250/275			
Start of delivery	[°crank angle bTDC]	[1].			
Firing order of engine		1-3-4-2	1-3-4-2	1-5-3-6-2-4	1-5-3-6-2-4
V-belt tension:		Pre-tension / re-tension [2].			
Generator fan	[N]	450 / 300 ± 50.			
Fuel pump - coolant pump	[N]	450 / 300 ± 50.			
Compressor	[N]	550 / 450 ± 50.			

[1] Engine power, speed, start of delivery are stamped on engine rating plate, see also 2.1

[2] Retension 15 minutes after the engine has been driven under load

Model BFM1012 / E		BF4M 1012 BF4M 1012 E	BF4M 1012 C BF4M 1012 EC	BF6M 1012 BF6M 1012 E	BF6M 1012 C BF6M 1012 EC
Cooling system		Liquid-cooled/Cooling system protection			
Coolant quantity					
1012/C	[litres approx.]	9.3	10.0	12.2	13.6
1012 E/EC [5]	[litres approx.]	5.6	5.6	7.3	7.3
1012 unit engine (with frontal radiator)	[litres approx.]	15.9	18.1		
Permissible continuous coolant temperature					
Engine outlet, with performance group I	[°C]	max.110 [6]			
Engine outlet, with performance group II-IV	[°C]	max.105 [6]			
Thermostat initial opening at	[°C]	83 [7]			
Thermostat full open temperature	[°C]	95 [8]			
Coolant prewarming		[4]			
Coolant pump					
Delivery pressure in	[bar]	[9]			
Delivery rate in	[m³ /h]	[9]			
Power consumption in	[kW]	[9]			
Lubrication		forced-feed lubrication			
Oil temperature in oil pan	[°C]	125			
Min. oil pressure with engine warm (120°C and SAE oil 15 W 40) and low idle speed	[bar]	0.8			
Oil capacity (first fill-up) without filter	[litres approx.]	8.5 [3]	8.5 [3]	12.5 [3]	12.5 [3]
Oil capacity (first fill-up) with filter	[litres approx.]	10.0 [3]	10.0 [3]	14.0 [3]	14.0 [3]

[3] Approximate figures can vary depending on the design. The upper marking on the dipstick is always the maximum.
[4] Only during winter (see 3.5.1)
[5] Only engine capacity without radiator. Capacity of external cooling system dependent on cooling system design.
[6] Other performance groups have different values. Please contact company headquarters.
[7] With external cooling systems with outlet control, the temperature at which the thermostat opens is 87°C
[8] With external cooling systems with outlet control, the temperature at which the thermostat is fully opened is 102°C.
[9] Please contact company headquarters (varies depending on engine design)

[8] With external cooling systems with outlet control, the temperature at which the thermostat is fully opened is 102°C.

Technical Specifications

9.1 Engine Specifications and Settings

Model		BF4M 1013 — BF4M 1013 E	BF4M 1013 C — BF4M 1013 EC	BF6M 1013 — BF6M 1013 E	BF6M 1013 C — BF6M 1013 EC	BF6M 1013 CP — BF6M 1013 ECP
Number of cylinders		4	4	6	6	6
Cylinder arrangement		vertical, in line				
Bore	[mm]	108				
Stroke	[mm]	130				
Total displacement	[cm³]	4764	4764	7146	7146	7146
Compression ratio	[ε].	17.5				
Working cycle/Combustion system		4-stroke diesel with turbocharging and direct injection				
Charge air cooler		w/o	w/	w/o	w/	w/
Direction of rotation		counter-clockwise				
Weight 1013 / CP incl. cooling system	[kg approx.]	contact company headquarters				
Weight 1013 E / EC / ECP w/o cooling system as per DIN 70020-A	[kg approx.]	455	455	600	600	600
Engine power	[kW]	[1].				
Speed	[rpm]	[1].				
Valve clearance with cold engine	[mm]	Inlet 0,3 + 0,1 / Outlet 0,5 + 0,1.				
Injector opening pressure	[bar]	250/275				
Start of delivery	[°crank angle bTDC]	[1].				
Firing order of engine		1-3-4-2	1-3-4-2	1-5-3-6-2-4	1-5-3-6-2-4	1-5-3-6-2-4
V-belt tension:		Pre-tension / re-tension [2].				
Generator fan	[N]	450 / 300 ± 50.				
Fuel pump - coolant pump	[N]	450 / 300 ± 50.				
Compressor	[N]	550 / 375 ± 50.				

[1] Engine power, speed, start of delivery are stamped on engine rating plate, see also 2.1

[2] Retension 15 minutes after the engine has been driven under load

Model 1013 /E		BF4M 1013 — BF4M 1013 E	BF4M 1013 C — BF4M 1013 EC	BF6M 1013 — BF6M 1013 E	BF6M 1013 C — BF6M 1013 EC	BF6M 1013 CP — BF6M 1013 ECP
Cooling system		Liquid-cooled/Cooling system protection				
Coolant quantity						
1013 / C / CP .	[litres approx.]	12.1	13.6	15	16.3	16.9
1013 E / EC / ECP [5]	[litres approx.]	7.2	7.2	9.8	9.8	9.8
1013 unit engine (with frontal radiator)	[litres approx.]	17.5	19.7	22	23.7	23.7
Permissible continuous coolant temperature						
Engine outlet, with performance group I	[°C]	max.110 [6].				
Engine outlet, with performance group II-IV	[°C]	max.105 [6].				
Thermostat initial opening at	[°C]	83 [7].				
Thermostat full open temperature	[°C]	95 [8].				
Coolant prewarming		[4].				
Coolant pump						
Delivery pressure in	[bar]	[9].				
Delivery rate in	[m³ /h]	[9].				
Power consumption in	[kW]	[9].				
Lubrication		forced-feed lubrication				
Oil temperature in oil pan	[°C]	max. 125				
Min. oil pressure with engine warm (120°C and SAE oil 15 W 40) and low idle speed	[bar]	0.8				
Oil capacity (first fill-up) without filter	[litres approx.]	13 [3].	13 [3].	20 [3].	20 [3].	20 [3].
Oil capacity (first fill-up) with filter	[litres approx.]	14.0 [3].	14.0 [3].	21.0 [3].	21.0 [3].	21.0 [3].

[3] Approximate figures can vary depending on the design. The upper marking on the dipstick is always the maximum.
[4] Only during winter (see 3.5.1)
[5] Only engine capacity without radiator. Capacity of external cooling system dependent on cooling system design.
[6] Other performance groups have different values. Please contact company headquarters.
[7] With external cooling systems with outlet control, the temperature at which the thermostat opens is 87°C
[8] With external cooling systems with outlet control, the temperature at which the thermostat is fully opened is 102°C.
[9] Please contact company headquarters (varies depending on engine design)

Location	Preload [Nm]			Torquing Load [Nm]				Total [Nm]	Remarks
	Stage 1	Stage 2	Stage 3	Stage 1	Stage 2	Stage 3	Stage 4		
Rocker cover								8,5	
Rocker arm setscrew								21	
Mount, flywheel side								187	M16x40 8.8 A4C
Mount, turbocharger side								187	M16x40 8.8 A4C
Air intake manifold								8,5	
Exhaust manifold								21	
Oil drain plug								50	
Injector mounting								16	Torx
Injection line mounting								30	M14x1.5
Oil pan (cast iron)								29	
Oil pan (sheet metal)								21	

TORX

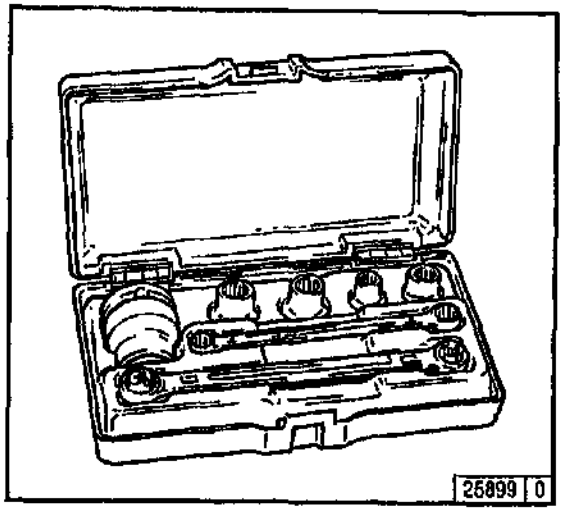

A TORX wrench set is used with engines in the 1012/1013 series. This system was chosen because of the many advantages it offers:

- Outstanding accessibility to bolts.
- High load transfer when loosening and tightening.
- Almost impossible for socket to slide off or break.

<u>TORX tools can be ordered from:</u>

WILBÄR
Postfach 14 05 80
D-42826 Remscheid

V-belt Tension Gauge

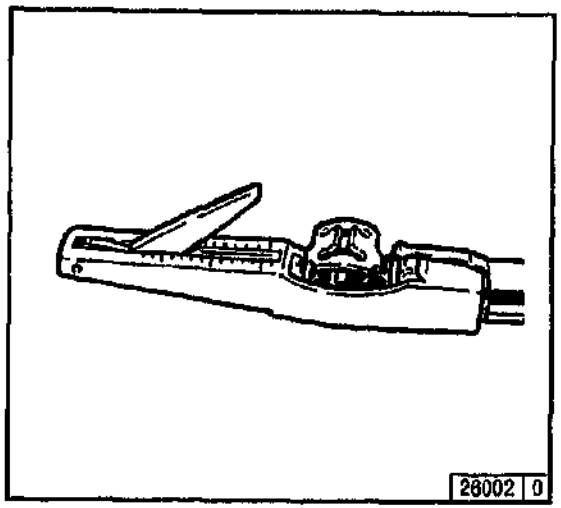

The V-belt tension gauge can be obtained under order number **91 107** from:

WILBÄR
Postfach 14 05 80
D-42826 Remscheid

Notes

Notes

Notes

Knowing it's DEUTZ

DEUTZ has always stood for excellence in motor construction, pioneering many developments in the industry. As an independent motor manufacturer, we offer — worldwide — a comprehensive range of diesel and gas motors spanning from 4kW to 7,400kW. Our products are perfectly tailored to meet our customers' individual requirements.

Over 1.4 million DEUTZ motors do their job reliably all over the world. We are determined to preserve the high standard of performance and dependability of our motors, thus keeping our customers satisfied at all times. Therefore we are represented worldwide through a network of highly competent service partners who will meet the needs of our customers, wherever they are.

This is why DEUTZ is not only the name for motors which pack a lot of inventive genius. DEUTZ also means reliable service and comprehensive support to enhance your motor's performance.

This index Sales & Service offers you an overview of the DEUTZ partners in your vicinity, including the products for which they are responsible and the range of services provided. But even when no direct product responsibility is mentioned, your DEUTZ partner will be happy to help you with expert advice.

The index is constantly updated. Please ask your DEUTZ service partner for the latest edition.

DEUTZ AG — at your service.

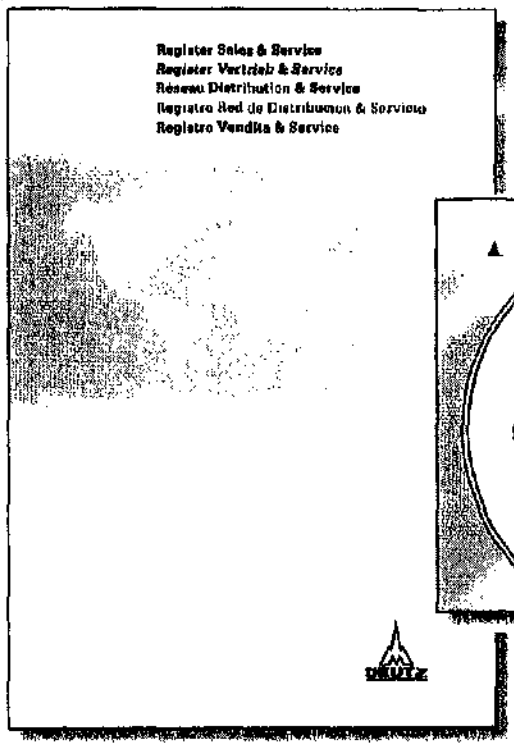

Order-No.: 0297 7444

Order-No.: 0297 7445 (CD-ROM)

Obtainable from the local service Partner reponsible for you or from:

DEUTZ AG
Deutz-Mülheimer Str. 147-149
D-51057 Köln

Phone: 0049-221-822-0
Telefax: 0049-221-822-5304
Telex: 8812-0 khd d
http://www.deutz.de

DEUTZ

Knowing it's a DEUTZ.

DEUTZ AG

Service-Technik

Servicedokumentation

Deutz-Mülheimer Str. 147-149

D-51057 Köln

Telefon: 02 21-8 22-0

Fax: 02 21-8 22-53 58

http://www.deutz.de

Printed in Germany

All rights reserved

1st Edition, 3/99

Order No.: 0297 9682

(05.99)

Spare Parts Number List
Liste des Numéros de Pièces de Rechange
Lista de Números de Piezas de Repuesto

KHD DEUTZ SERVICE

DEUTZ CORPORATION

BF6M 1013

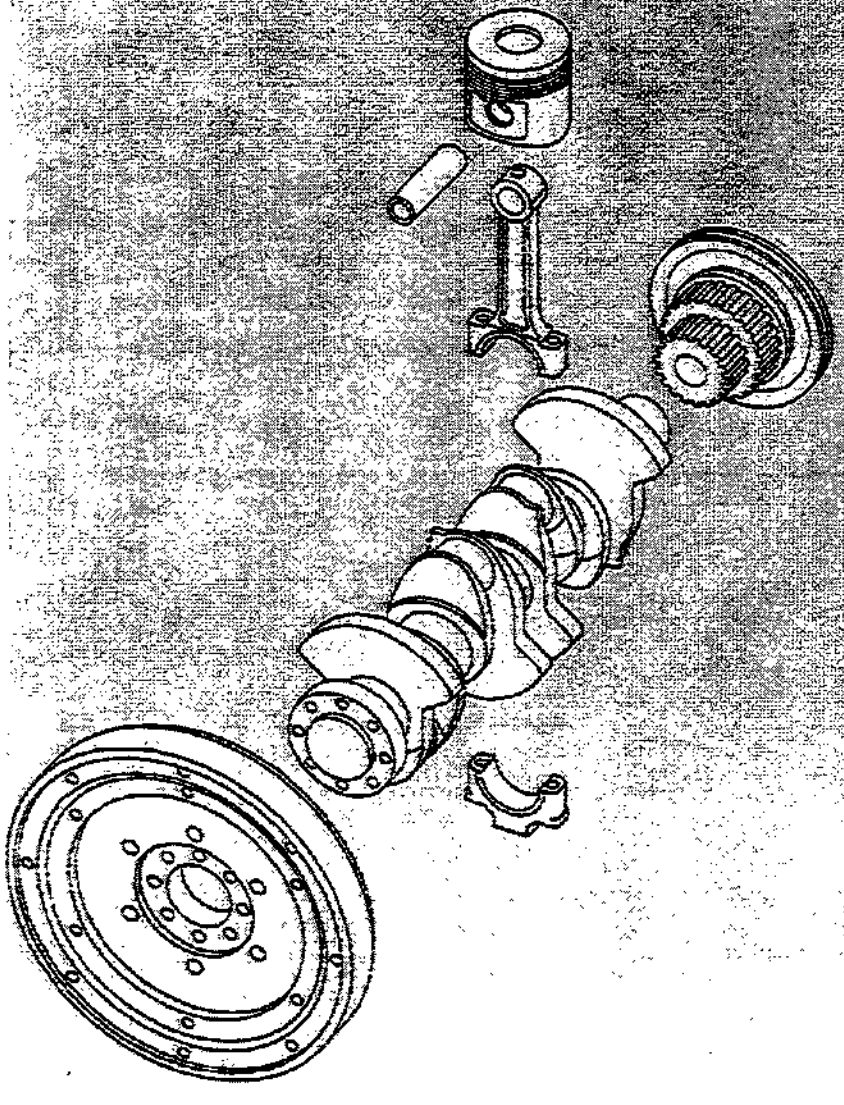

KHD DEUTZ

Impressum:
DEUTZ SERVICE INTERNATIONAL GmbH
Deutz-Mülheimer Straße 107
Postfach 80 05 09
D-51057 Köln

Tel. (02 21) 8 22-0
Telex 8 812-241
Fax (02 21) 8 22-53 58

Printed in Germany
Inhalt und Gestaltung:
Servicedokumentation

Alle Rechte vorbehalten

Die in dieser Ersatzteilliste aufgeführten Bauteile sind nur für Reparatur von Motoren der Marke DEUTZ der bezeichneten Baureihe zu verwenden (bestimmungsgemäßer Gebrauch).
Über den fachgerechten Einbau von Ersatzteilen informieren die Betriebsanleitung (Wartungsarbeiten) und das Werkstatthandbuch (Reparaturarbeiten) ausführlich. Für Schäden oder Verletzungen von Personen, die aus der Nichtbeachtung der entsprechenden Anleitung führen, übernimmt der Hersteller keine Haftung.

The parts contained in this Catalogue are typespecific and shall be used only for repairing engines belonging to the DEUTZ engine family given on the cover.
Full particulars for the correct installation of parts are to be found in the relevant Operating (maintenance work) and Workshop Manual (repair). The engine builder shall not be liable for any damage or injury resulting from non-compliance with guidelines given in the manuals.

Le présent Catalogue de pièces de rechange énumère des composants à utiliser uniquement à des fins de réparation pour moteurs DEUTZ de la série indiquée (utilisation spécifique).
Les constructions de service (travaux d'entretien) et le Manuel d'atelier (travaux de réparation) donne d'amples informations sur le montage approprié des pièces.
Le fabricant décline toute responsabilité découlant de dommages ou de blessures de personnes résultant de non-respect des présentes instructions.

Los componentes indicados en esta Lista de Repuestos se emplearán exclusivamente para la reparación de motores DEUTZ de la serie indicada (uso conforme a las prescripciones).
Respecto al montaje pericial de repuestos véanse los Manuales de Instrucciones (trabajos de mantenimiento) y el Manual de Taller (trabajos reparación). El fabricante no responde de daños o lesiones de personas resultantes por inobservancia del correspondiente Manual.

Spare Parts Number List
Liste des Numéros de Pièces de Rechange
Lista de Números de Piezas de Repuestos

DEUTZ CORPORATION

BF6M 1013

Motor-Nr:0 031 655

Oktober 1994

Vervielfältigung und/oder Veröffentlichung dieser Unterlage ist ohne unser Einverständnis untersagt.

Reproduction and/or publication of this document is subject to our approval.

Toute reproduction et/ou publication du présent document est strictement interdite sans notre accord.

No se permite reproducir ni publicar este documento sin nuestra previa autorización.

Sehr geehrter Kunde,

Ihr Motor ist dem Einbaufall entsprechend ausgerüstet. Mit Hilfe der in dieser Ersatzteilliste grafisch dargestellten Motorbauteile können Sie das für Ihren Motor relevante Ersatzteil leicht herausfinden und die entsprechende Teilnummer bestimmen. Wenn Sie zu der so ermittelten Teilnummer auch die Nummer Ihres Motors angeben, erhalten Sie in jedem Fall das aktuelle Bauteil, auch wenn im Rahmen der Weiterentwicklung eine neue Teilnummer vergeben wurde.

Bitte beachten Sie bei der Ersatzteilbestellung unsere Bestellhinweise, damit wir Ihnen schnell und zuverlässig die benötigten Ersatzteile in der jeweils dem letzten Änderungsstand entsprechenden Ausführung liefern können.

Für Rückfragen steht Ihnen die DEUTZ SERVICE INTERNATIONAL GmbH gerne zur Verfügung.

Ihr

DEUTZ SERVICE INTERNATIONAL GmbH

Dear Customer,

The specification of your engine meets the requirements of your specific application. The engine components shown in this spare parts list will enable you to identify the engine spare part concerned as well as the corresponding part number. Provided that in addition to the part number so identified, you indicate the serial number of your engine, you will be supplied with the correct component part, even if a new part number has been assigned in the course of on-going development work.

When placing the order, please observe our relevant note. This will ensure speedy and reliable supply of the required parts which are in accordance with the latest technological standard.

If there are any questions, DEUTZ SERVICE INTERNATIONAL GmbH is always pleased to give you detailed advice.

Sincerely,

DEUTZ SERVICE INTERNATIONAL GmbH

Cher client,

Votre moteur est équipé en fonction de son montage. A l'aide des éléments détachés du moteur, figurés dans cette liste des pièces de rechange, vous pouvez sans difficulté trouver la pièce de rechange relative à votre moteur et déterminer le numéro de pièce correspondant. Si vous indiquez le numéromoteur en même temps que le numéro de pièce ainsi déterminé, vous obiendrez en tout cas l'élément détaché actuel, même si un nouveau numéro de pièce à été choisi dans le cadre du développement.

Lors de votre commande de pièces de rechange veuillez respecter nos indications de commande, afin que nous puissions vous fournir rapidement et sûrement les pièces de rechange demandées dans la version correspondante réactualisée.

Pour toutes questions complémentaires, le SERVICE DEUTZ INTERNATIONAL GmbH est à votre entière disposition.

DEUTZ SERVICE INTERNATIONAL GmbH

Estimado cliente:

Su motor extà equipado segùn el empleo als cual està destinado. Con ayuda de los componentes del motor representados gráficamente en la presente lista de repuestos le será fácil averiguar la pieza que le interesa, asi como determinar el número de la misma. Si aparte del número de pieza así localizado Ud. indica también el número de su motor, recibirá en todo caso el cmponente más reciente aun cuando en el marco del desarrollo ulterior se hubiese modificado su número.

Le rogamos tenga en cuenta nuestras indicaciones al confeccionar su pedido de repuestos para que le podamos suministrar rápida y seguramente los repuestos requeridos en la ejecución de acuerdo con el último estado de modificación.

EL SERVICIO DEUTZ INTERNATIONAL GmbH está siempre gustosamente a su disposición para cuantas consultas tenga a bien hacerle.

DEUTZ SERVICE INTERNATIONAL GmbH

1. **Allgemeines**
2. **Ersatzteildokumentation**
2.1 Gegenüberstellungsverzeichnis
2.2 Baugruppenübersicht
2.3 Baugruppenverzeichnis
2.4 Ersatzteilnummernlistenblatt
2.5 Teileverwendung
3. **Ersatzteilbestellung**
4. **DEUTZ SERVICE INTERNATIONAL GmbH**
5. **Ersatzteilnummernlistenblätter**

---

1. **General**
2. **Spare Parts Documentation**
2.1 Cross-Reference List
2.2 Assembly Group Table
2.3 Assembly Group List
2.4 Spare Part Numbers List Sheets
2.5 Where-Used List
3. **Spare Parts Orders**
4. **DEUTZ SERVICE INTERNATIONAL GmbH**
5. **Spare Part Numbers List Sheet**

---

1. **Généralités**
2. **Documentation pièces de rechange**
2.1 Liste des correspondances
2.2 Tableau récapitulatif des groupes de construction
2.3 Index des groupes de construction
2.4 Feuille de liste des numéros de pièces
2.5 Référence d'utilisation de pièces
3. **Commande des pièces de rechange**
4. **SERVICE DEUTZ INTERNATIONAL GmbH**
5. **Feuilles de liste des numéros de pièces**

---

1. **Generalidades**
2. **Documentación para piezas de repuesto**
2.1 Indice correlativo de números de motor y números de producto
2.2 Cuadro sinóptico de grupos de construcción
2.3 Indice de grupos de construcción
2.4 Hoja de lista de números de piezas
2.5 Indice de hojas de lista
3. **Pedido de repuestos**
4. **SERVICIO DEUTZ INTERNATIONAL GmbH**
5. **Hojas de listas de números de piezas**

Motoren von Deutz und Deutz MWM

sind das Produkt jahrelanger Forschung und Entwicklung. Das dadurch gewonnene fundierte know how in Verbindung mit hohen Qualitätsanforderungen ist die Garantie für die Herstellung von Motoren mit langer Lebensdauer, hoher Zuverlässigkeit und geringem Kraftstoffverbrauch. Es ist selbstverständlich, daß auch die hohen Anforderungen zum Schutz der Umwelt erfüllt werden.

DEUTZ SERVICE

Wenden Sie sich bei Betriebsstörungen und Ersatzteilfragen an Ihre zuständige DEUTZ-Vertretung. Unser geschultes Fachpersonal sorgt im Schadensfall für eine schnelle und fachgerechte Instandsetzung unter Verwendung von DEUTZ Ersatzteilen.

Original Teile

unterliegen den gleichen strengen Qualitätsanforderungen wie die Motoren der Marken DEUTZ und DEUTZ MWM. Weiterentwicklungen zur Verbesserung der Motoren werden selbstverständlich auch bei den im DEUTZ SERVICE erhältlichen Original Teilen eingeführt. Nur die Verwendung von nach neuesten Erkenntnissen gefertigten Original Teilen bietet die Gewähr einwandfreier Funktion und hoher Zuverlässigkeit.

Vorsicht bei laufendem Motor

Wartungsarbeiten oder Reparaturen nur bei abgestelltem Motor durchführen. Evtl. entfernte Schutzvorrichtungen nach Abschluß der Arbeiten wieder montieren. Bei Arbeiten am laufenden Motor soll die Arbeitskleidung fest anliegen. Nur bei abgestelltem Motor tanken. Motor nie in geschlossenen Räumen laufen lassen - Vergiftungsgefahr.

Austauschkomponenten

O Deutz Austauschkomponenten sind eine preiswerte Alternative zu Original Teilen. Selbstverständlich gelten auch hier - wie für Neuteile - höchste Qualitätsmaßstäbe. In Funktion und Zuverlässigkeit sind Austauschkomponenten den Original Teilen gleichwertig.

Achten Sie bei Reparaturarbeiten auf entsprechend gekennzeichnete Austauschkomponenten „O"

Asbest

a Bei diesem Motor verwendete Dichtungen können Asbest enthalten.
Bitte achten Sie bei Reparaturarbeiten auf entsprechend gekennzeichnete Ersatzteile „a".

Engines Deutz and Deutz MWM

are products based on long-standing research and development. The profound know-how so acquired, combined with high quality standards, guarantee that engines leaving our works are distinguished by a long life expectancy, a high degree of reliability and excellent fuel economy. It goes without saying that they meet the high requirements of environmental compatibility.

DEUTZ SERVICE

Whenever you have any troubles in operation or need spare parts, please turn to the next DEUTZ agency. Our well-trained staff will arrange for quick, expert help using genuine DEUTZ spare parts.

Genuine Spare Parts

are subject to the same stringent quality standards as the engines of the trademarks DEUTZ and DEUTZ MWM. Advances in engine design apply equally to the genuine spare parts obtainable from DEUTZ SERVICE. To ensure smooth operation and a high degree of reliability of your engines, it is highly recommended to use solely genuine spare parts made according to the latest technological standards.

Beware of the Running Engine

Be sure to shut down the engine before performing maintenance or repair work. After repair, put back into place any removed panels and guards. When doing work on the running engine, working clothes should fit tightly so that loose ends cannot get caught. Do not run the engine in closed rooms - poison hazard!

DEUTZ Remanufactured Components

O are a cost-effective alternative to genuine spare parts. Of course, they are subject to the same high quality standards as new parts. And as regards operation and reliability, remanufactured components are absolutely comparable to genuine spare parts.

When carrying out repair work, watch out for mark „O" identifying the remanufactured component.

Asbestos

a The gaskets used in this engine may contain asbestos.
The relevant spare parts are marked with an „a".

Moteurs Deutz et Deutz MWM
sont le fruit de longues recherches et d'un développement continu. Le solide savoir-faire ainsi acquis conjugué à des exigences élevées en matière de qualité est la garantie de fabrication de moteurs à longue durée de vie, haute fiabilité et faible consommation en combustible. Il va de soi que les moteurs doivent aussi respecter des exigences élevées en matière de protection de l'environnement.

SERVICE DEUTZ
En cas de pannes et de questions concernant les pièces de rechange veuillez vous adresser à votre agence DEUTZ compétente. Notre personnel qualifié et averti assure, en cas d'incident, une remise en état rapide et appropriée de votre moteur en utilisant les pièces de rechange DEUTZ.

Pièces de rechange DEUTZ
Elles sont soumises au même niveau d'exigence de qualité que les moteurs DEUTZ et DEUTZ MWM. Tout progrès visant à améliorer les moteurs est naturellement immédiatement adopté pour les pièces de rechange DEUTZ. Seule l'utilisation de pièces de rechange DEUTZ d'origine fabriquées selon des méthodes ultramodernes garantit un fonctionnement irréprochable et une haute fiabilité.

Précaution à prendre quand le moteur marche
N'effectuer les travaux d'entretien ou les réparations qu'à l'arrêt du moteur. A la fin des travaux penser à remonter les dispositifs de protection ayant été déposés. Lors de travaux à faire sur le moteur en marche, les vêtements de travail doivent bien coller au corps. Ne faire le plein que lorsque le moteur est arrêté. Ne jamais faire fonctionner les moteurs dans des locaux fermés. Danger d'asphyxie!

Composants de rechange DEUTZ
Les composants de rechange DEUTZ sont une alternative bon marché aux pièces de rechange d'origine DEUTZ. Là aussi, de même que pour les pièces neuves, on applique des normes de qualité élevées. Du point de vue fonctionnement et fiabilité les composants de rechange DEUTZ sont équivalents aux pièces de rechange DEUTZ.
Veillez, lors de travaux de réparation, à ce que les composants de rechange soient marqués de la lettre „O".

Amiante
Les joints utilisés sur ce moteur peuvent être en amiante.
Lors de travaux de réparation veillez à ce que les pièces de rechange soient marquées de la lettre „a".

Motores Deutz y Deutz MWM
son el producto de trabajos de investigación y desarrollo de largos años. El fundado know how así logrado conjuntamente con altas exigencias de calidad es la garantía para la fabricación de motores de larga duración, gran fiabilidad y bajo consumo de combustible. Se sobreentiende que se cumplen también las elevadas exigencias para la protección del ambiente.

SERVICIO DEUTZ
En caso de perturbaciones de servicio y cuestiones de repuestos, sírvase dirigirse al representante DEUTZ competente. En caso de avería, nuestro personal bien entrenado se ocupa de un reacondicionado rápido y correcto empleando repuestos DEUTZ.

Repuestos originales
están sometidos a las mismas severas exigencias respecto a la calidad que los motores marca DEUTZ y DEUTZ MWM. Desarrollos ulteriores para perfeccionar los motores son introducidos desde luego también en los repuestos originales obtenibles en el SERVICIO DEUTZ. Sólo el empleo de repuestos originales fabricados según los conocimientos más recientes garantiza un funcionamiento impecable y alta fiabilidad.

Atención a motor en marcha
Realizar trabajos de mantenimiento o reparación únicamente a motor parado. Remontar una vez terminados los trabajos los dispositivos de protección quitados eventualmente. En caso de que se tengan que efectuar trabajos en el motor en marcha, la ropa de trabajo debe tocar al cuerpo para evitar accidentes. Hacer el repostado sólo a motor parado. No hacer funcionar nunca el motor en locales cerrados - peligro de intoxicación.

Componentes reacondicionados
Componentes reacondicionados DEUTZ constituyen una alternativa económica frente a los repuestos originales.
Naturalmente rigen también aquí, igual que para piezas nuevas, elevadísimas exigencias de calidad. Los repuestos reacondicionados equivalen a los repuestos originales en cuanto a funcionamiento y fiabilidad. Al efectuar trabajos de reparación, preste atención a componentes reacondicionados que llevan la correspondiente marcación „O".

Amianto
Juntas empleadas en este motor pueden contener amianto.
Al efectuar trabajos de reparación, preste atención a repuestos que llevan la correspondiente marcación „a".

Die Ersatzteilnummernliste enthält alle Ersatzteile für die im Titel genannten Motoren. Dabei können mehrere Motorvarianten zusammengefaßt sein. Die Bestimmung des für den Motor richtigen Ersatzteiles erfordert somit die Beachtung systembedingter notwendiger Tabellen, die im folgenden erläutert sind:

2.1 Gegenüberstellungsverzeichnis (GV)

Motoren gleicher Ausführung sind unter einer Produktnummer zusammengefaßt. Aus dem Gegenüberstellungsverzeichnis kann bei bekannter Motor-Nummer die zugehörige Produktnummer (8-stellig + 2 Index-Stellen, z. B. 0531 1071/04) ermittelt werden.

2.2 Baugruppenübersicht

Die Komponenten des Motors sind nach Baugruppen geordnet. Welcher Baugruppe das jeweilige Ersatzteil zugeordnet ist, kann der Baugruppenübersicht überschlägig entnommen werden.

2.3 Baugruppenverzeichnis (BG)

Das Baugruppenverzeichnis ist eine Auflistung aller zu einer Produktnummer gehörenden Ersatzteilnummernlistenblätter. Es ist nach Baugruppen - entsprechend der Motoraufgliederung - sortiert.

Eine Baugruppenübersicht ist zur Verdeutlichung dem Baugruppenverzeichnis vorangestellt.

Im Baugruppenverzeichnis sind maximal 5 verschiedene Produktnummern nebeneinander dargestellt.

2.4 Ersatzteilnummernlistenblätter

Die Ersatzteilnummernlistenblätter bestehen aus je einem Bild- und Text-Teil. Alle ersatzteilrelevanten Teile sind perspektivisch in Explosionsdarstellung in der oberen Blatthälfte dargestellt. Über die Positionsnummer können dem darunterliegenden Textteil die Teile-Nummer, benötigte Stückzahl, Benennung, sowie gegebenenfalls Normangaben etc. entnommen werden.

Die Ersatzteilnummernblätter sind - wie im Beispiel angegeben - oben rechts gekennzeichnet und nach Baugruppen geordnet. Innerhalb einer Baugruppe ist nach laufender Nr. sortiert.

0150 - 07 - 501 4711

- 4711 — laufende Nummer
- 07 — Baugruppe
- 0150 — Techn. Ordnungs-Nr.

2.5 Teileverwendung

Alle dokumentierten Ersatzteile sind in der Teileverwendung den Ersatzteilnummernlistenblättern gegenübergestellt. Damit kann über die Teilenummer das Ersatzteilnummernlistenblatt ermittelt werden, in dem das Teil enthalten ist.

The spare part numbers list covers all spare parts for the engines referred to in the title block, whereby several engine versions may be combined. In identifying the appropriate spare part for the engine, please observe the tables described below, which are required by the EDP system.

2.1 Cross-Reference List (GV)

Engines with the same specification are combined under a particular product number. With the engine serial number known, it is possible to identify the related product number (8-digit + 2 index digits, e. g. 0531 1071/04) from the cross-reference list.

2.2 Assembly Group Table

The engine components are arranged according to assembly groups. The assembly group table shows the assembly group to which the respective spare part is assigned.

2.3 Assembly Group List (BG)

This is a listing of all spare part numbers list sheets belonging to a particular product number. It is arranged according to assembly groups.

The assembly group table is put in front of the assembly group list for explanation.

The assembly group list shows a maximum of 5 different product numbers side by side.

2.4 Spare Part Numbers List Sheets

The spare part numbers list sheets comprise a graphic section and a text section each. The upper half of the sheet presents an exploded view of all relevant components regarding spare parts. The part number, the required quantity, the designation, any standard data if required, etc. can be taken from the subsequent text section, using the item number.

As shown by the example, the spare part numbers sheets are identified in the top right-hand corner and are arranged according to assembly groups. Within an assembly group, consecutive numbers are used.

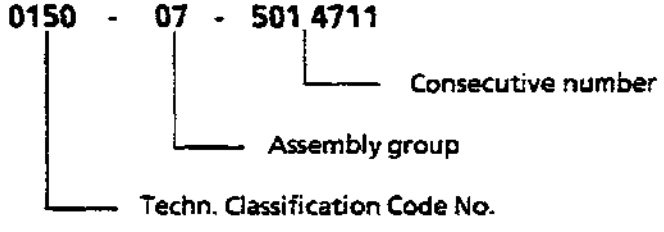

2.5 Where-Used List

This is a cross-reference list which permits cross-reference from all spare parts covered by the documentation to the spare part numbers list sheets. The part number helps identify the spare part numbers list sheet which includes the part concerned.

La liste des numéros de pièces de rechange comprend toutes les pièces de rechange pour les moteurs mentionnés au titre. C'est possible que plusieurs variantes de moteur y sont réunies. La détermination de la pièce de rechange appropriée pour le moteur exige donc que l'on respecte la nécessité de tableaux en fonction du système. Ces tableaux sont expliqués par la suite:

2.1 Liste des correspondances (GV)

Les moteurs du même modèle sont mentionnés sous un numéro de produit. Moyennant la liste des correspondances le numéro du produit correspondant (à 8 positions + 2 positions index, p. e. 0531 1071/04), peut être déterminé, pourvu que le numéro-moteur soit connu.

2.2 Tableau récapitulatif des groupes de construction

Les composants du moteur sont classés d'après des groupes de construction. Du tableau récapitulatif des groupes de construction ressort approximativement l'affectation de la pièce de rechange correspondante aux groupes de construction.

2.3 Index des groupes de construction (BG)

L'index des groupes de construction représente un répertoire comprenant toutes les feuilles de liste des numéros de pièces affectées à un numéro de produit. Ce répertoire est classé - conformément à la classification du moteur - suivant les groupes de construction.

Pour y voir plus clair un tableau récapitulatif des groupes de construction précède l'index des groupes de construction. Dans l'index des groupes de construction sont juxtaposés au maximum 5 numéros différents de produit.

2.4 Feuilles de liste des numéros de pièces

Celles-ci sont divisées chaque fois en une partie de planche et une partie de texte. La partie supérieure de la feuille représente par dessin en perspective tous les éléments relatifs aux pièces de rechange. La partie inférieure de la feuille comprend le texte dont on peut tirer par l'intermédiaire du numéro de position, le numéro de la pièce, la quantité nécessaire, la désignation, ainsi que, le cas échéant, les indications de norme etc.

Les feuilles de liste des numéros de pièces sont marquées en haut à droite - voir exemple - et disposées d'après les groupes de construction. Le groupe de construction est groupé selon le numéro courant.

0150 - 07 - 501 4711

- 4711 — numéro courant
- 07 — groupe de construction
- 0150 — no. d'ordre techn.

2.5 Référence d'utilisation de pièces

Dans la référence d'utilisation de pièces toutes les pièces de rechange documentées sont comparées avec les feuilles de liste des numéros de pièces. Ainsi peut être déterminée par l'intermédiaire du numéro de pièce la feuille de liste des numéros de pièces comprenant cette pièce.

La lista de números de pieza incluye todas las piezas de repuesto para los motores indicados en el título. Para poder determinar una pieza de un motor específico es por tanto necesario, en función del sistema aplicado, recurrir a cuadros e índices que a continuación se explican:

2.1 Indice correlativo de números de motor y números de producto (GV)

Motores de la misma versión tienen un número de producto conjunto. El índice correlativo de números de motor y números de producto sirve para averiguar el número de producto a partir del número de motor. Cada número de producto está configurado por 8 cifras más 2 cifras índice, p. ej. 0531 1071/04.

2.2 Cuadro sinóptico de grupos de construcción

Los componentes del motor están ordenados por grupos de construcción. Del cuadro sinóptico de grupos de construcción se puede deducir, someramente, el grupo al que está asignada la respectiva pieza.

2.3 Indice de grupos de construcción (BG)

El índice de grupos de construcción constituye un alistado de todas las hojas de listas de números de piezas por orden de grupos de construcción de acuerdo con la división del motor.

Para mayor facilidad, el índice de grupos de construcción va precedido por un cuadro sinóptico de grupos de construcción.

En el índice, hay a lo sumo 5 renglones de números de producto.

2.4 Hojas de listas de números de piezas

Cada hoja de una lista de números de piezas consiste en una parte ilustrada y otra que contiene el texto correspondiente. En la mitad superior de la hoja, todas las partes del motor relevantes bajo el aspecto de repuesto se representan en dibujos de despiece en perspectiva. El número de posición sirve para deducir del texto abajo, el número de la pieza, la cantidad que se requiere de la misma, su denominación y, según el caso, datos de norma, etc.

Como se puede ver en el ejemplo, las hojas llevan arriba a la derecha una identificación y están ordenadas por grupos de construcción. Dentro del grupo de construcción, el orden es por números corrientes.

0150 - 07 - 501 4711

- 4711 — número corriente
- 07 — grupo de construcción
- 0150 — No. de orden técnico

2.5 Indice de hojas de listas

En este índice, todos los repuestos recogidos en la documentación están relacionados con hojas de listas. A raíz de ello, se puede encontrar por medio del número de la pieza la hoja de lista en la que figura aquella.

Baugruppenübersicht
Index of construction groups
Indexdes groupes de construction
Indice de los grupos de construcción

Motoren
Engines
Moteurs
Motores

KHD DEUTZ SERVICE

01
Kurbelgehäuse
Crankcase
Carter
Carter

01
Kurbelgehäuse
Crankcase
Carter
Carter

02
Ölwanne
Oil pan
Carter d'huile
Suministro de aceite

04
Zylinder
Cylinder
Cylinder
Cilindro

05
Kurbelwelle
Crankshaft
Vilebrequin
Cigueenal

06
Pleuelstange
Connecting rod
Bielle
Biela

07
Kolben
Piston
Piston
Embolo

08
Zylinderkopf
Cylinder head
Culasse
Culata

09
Räderkasten
Timing chest
Carter de distribution
Caja tren de egranajes

10
Nockenwelle
Camshaft
Arbre a cames
Arbol de leves

11
Steuerungsteile
Timing gears
Organes de distribution
Pates de distribución

14
Schmierölpumpe
Lube oil pump
Pompe d'huile de graissage
Bomba de aceite lubricante

15
Schmierölfilter/-kühler
Lube oil filter/-cooler
Filtre/Radiateur a huile-moteur
Filtro/refrigrador de aceite lubricante

15
Schmierölkühler
Lube oil cooler
Radiateur d'huile de graissage
Refrigerador de aceite lubrificante

15
Schmierölfilter
Lube oil filter
Filtre a huile-moteur
Filtro de aceite lubrificante

16
Ölleitungen
Oil pipes
Conduites d'huile
Tuberias de aceite

17
Einspritzpumpe
Injection pump
Pompe d'injection
Bomba de inyección

18
Einspritzpumpenantrieb
Injection pump drive
Entrainement de pombe d'injection
Accionamiento para bomba de inyección

19
Einspritzventil
Injector
Injecteur
Inyector

20
Kraftstoffbehälter
Fuel filter
Filtre nourrice
Filtro de combustible

21
Kraftstoffleitungen
Fuel pipes
Tuyauteries a combustible
Tuberias de combustible

21
Kraftstoffbehälter
Fuel tank
Reservoir a gas-oil
Tanque de combustible

22
Saugrohr/Luftfilter
Suction pipe/Air cleaner
Tube d'aspiration/Filtre d'air
Tubo de aspiración/Filtre de aire

22
Luftfilter
Air cleaner
Filtre d'air
Filtro de aire

22
Saugrohr
Suction pipe
Tube d'aspiration
Tubo de aspiración

23
Schmierölbehälter
Lube oil tank
Reservoir d'huile
Tanque aceite lubricante

26
Glühanlage
Heater plug installation
Equipement de precheuffage
Sistema de incandescenia

27
Regler
Controller
Regulateur
Regulador

29
Reguliergestänge
Control linkage
Tringlerie de controlle
Vanillage de regulación

30
Druckluftanlassteuerung
Airstarting control
Distribution d'air de lancement
Distribution de arrangue neumatico

31
Anlaßventil
Starting valve
Soupape de lancement
Valulade arranquer

32
Anlaßsystem
Starting system
Systeme demarrage
Sistema de arrangue

33
Luftpresser
Air compreser
Compresseur d'air
Compreor de aire

34
Schwingungsdämpfer
Vibration damper
Amortisseur de vibrations
Amortiguador de vibraciónes

35
Fahrstand
Control unit
Poste de conduite
Puesto mando

35
Armaturenkasten
Instrument box
Tableau de bord
Caja instrumentos

36
Wasserkühler
Water cooler
Refroidisseuer d'eau
Compresor de aire

37
Kühlwasserpumpe
Cooling water pump
Pommpe a eau
Bomba de aqua refrigerante

38
Kühlwasserleitungen
Water pipes
Conduites d'eau de refroidissement
Tuberias aqua refrigerante

Baugruppenübersicht
Index of construction groups
Indexdes groupes de construction
Indice de los grupos de construcción

Motoren
Engines
Moteurs
Motores

KHD DEUTZ SERVICE

39 Kühlgebläse Cooling air blower Turbine de refroidissement Ventilador de refrigeración	**50** Spezialwerkzeuge Special tools Outils speciaux Herramientas especiales	**75** Heizung Heating system Chauffage Calefacción
40 Kühlluftführung Cooling air ducting Guidage d'air de refroidissement Conduccion de aire refrigerante	**51** Messgeräte Measuring instruments Instruments de measure Aparatos de medición	**81** Kupplungsbetätigung Clutch control Commande embrayage Accionamiento embrague
40 Kühlluftführung Cooling air ducting Guidage d'air de refroidissement Conduccion de aire refrigerante	**52** Kupplung Clutch Embrayage Embrague	**83** Hydraulikpumpe Hydraulic pump Pompe hydraulique Bomba hid
41 Abgassammelrohr Exhaust manifolt Collecteur echappement Celector escape	**56** Motorabstellung Enginestutdown Arret du moteur Dispositivo de parada de motor	**84** Laufsteg Gangway Passerelle Pasarela
42 Anlreinvorrichtung Exhaust manifold Collecteur echchapement Celector escape	**57** Keilriemenschutz V-belt guard Pare-courroe Proteccion de correa trapecial	**85** Schwungradbremse Flywheelbrake Frein sur volant Freno de volante
43 Abgasturbolader Turbocharger Turbo-compresseur de suralimentation Turbo-sobrealimentador	**58** Ladeluftkühler Intercooler Refroidisseur d'air de suralimentation Refrigerator para aire de sobrealimentación	**86** Zylinderschmierung Cylinder lubrication Lubrification des cylindres Lubrificación de cilindros
44 Generator/Starter Dynamo/Starter motor Dynamo/Moteur de demarr Elektrogenerador/Arrancador	**59** Werkzeuge für Einspritzpumpe Injection pump tools Outils pour pompe d'injection Herramentas para bomba de inyección	**87** Ladeluftleitung Charge air pipe Conduit d'air de suralimentation Conducto de aire de sobrealimentación
44 Generator Dynamo Dynamo Elektrogenerador	**61** Abluftkasten Air discharge frame Hotte de depart d'air vice Caja de evacuación de aire	**90** Allgemein General Généralités General
44 Starter Starter motor Moteur de demarr Arrancador	**63** Starthilfe Starting aid Assistance de demarrage Piloto de arranque	**99** Service-Informationen Service information Information service Información servico
45 Nebenabtrieb Auxiliary drive Sortie secondaire Tom. fuerza secund.	**64** Gasanlage Gascombustion system Installation à gaz Instalción de gas	
46/47 Motorlagerung Engine mounting Suspension du moteur Suspension del motor	**65** Einspritzventilkühlung Injector cooling Refroidissement des injecteurs Refrigeración de inyectores	
48 Elektrische Teile Electrical accessories Accesories electriques Accesorios electricos	**70** Motorklappenbremse Engine brake Rein clapet moteur Freno tr'amp. motor	
49 Werkzeuge Tools Outils Herramentas	**71** Schalldämpfer Silencer Silencieux Silenciador	

Bei der Ermittlung der Ersatzteilnummer anhand des vorliegenden Kataloges ist wie folgt vorzugehen:

- **Ermittlung der Motornummer**

  Die Motornummer ist auf dem Firmenschild sowie auf dem Kurbelgehäuse eingestempelt.
  Lage des Firmenschildes bzw. der eingestempelten Motor-Nummer siehe Betriebsanleitung.

- **Bestimmung der Produktnummer aus dem Gegenüberstellungsverzeichnis (GV)**
  Entfällt bei KLU-bezogenen Unterlagen (s. Titel).

- **Bestimmung der Baugruppe, der das benötigte Ersatzteil zuzuordnen ist, aus der Baugruppenübersicht.**

- **Bestimmung der für den Motor zutreffenden Ersatzteilnummernlistenblätter der gewählten Baugruppe aus dem Baugruppenverzeichnis.**

- **Ermittlung der Ersatzteilnummer aus dem Ersatzteilnummernlistenblatt.**

Für die Ersatzteilbestellung genügt die Angabe der so ermittelten Teilenummer zusammen mit der Motor-Bauart und Motor-Nummer und erforderlichen Stückzahl. Über die Motornummer wird sichergestellt, daß auch bei späteren Änderungen immer das für den Motor richtige Ersatzteil geliefert wird.

Die Ersatzteil- und Austauschkomponenten-Lieferungen erfolgen auf der Grundlage unserer Verkaufsbedingungen.

Ersatzteilbestellung
Motor-Bauart: **F2L1011**
Motor-Nr.: **7 688 488**

lfd. Nr.	Stück	Teilenummer
		417 3862
		117 8419
		417 3861

In identifying the spare parts number, based on the present catalogue, proceed as follows:

- **Identify the engine serial number**

  The engine serial number is stamped on the nameplate. For the position of the nameplate/stamped engine serial number, see Operation Manual.

- **Identify the product number from the cross-reference list (GV)**
  Does not apply to customer specification-related documents (see title block).

- **Identify the assembly group to which the required spare part is to be assigned, using the assembly group table.**

- **Identify the engine-related spare part numbers list sheets of the appropriate assembly group, using the assembly group list.**

- **Identify the spare parts number, using the spare part numbers list sheet.**

When ordering spare parts, it is sufficient to indicate the part number so identified, together with the engine model and serial number and the required quantity. Indication of the engine serial number will always ensure supply of the correct engine spare part, even if technical modifications should have been made in the meantime.

The supply of spare parts and remanufactured component parts is subject to our Conditions of Sale.

Spare Parts Order Specimen
Engine Model: **F2L1011**
Engine serial No.: **7 688 488**

Ser. No.	Qty.	Part Number
		417 3862
		117 8419
		417 3861

Lors de la détermination du numéro de la pièce de rechange au moyen du présent catalogue il faut procéder de la facon suivante:

- **Détermination du numéro-moteur**

  Le numéro-moteur est frappé sur la plaque de firme ainsi que sur le carter-moteur. Pour trouver la position de la plaque de firme ou bien du numéro-moteur frappé voir le manuel d'instructions.

- **Détermination du numéro de produit à l'aide de la liste des correspondances (GV)**
  Supprimée en cas de documents qui concernent le Volume Livraisons Clients (v. titre)

- **Détermination du groupe de construction auquel il faut affecter la pièce de rechange nécessaire, à l'aide du tableau récapitulatif des groupes de construction.**

- **Détermination des feuilles de liste des numéros de pièces faisant partie du groupe de construction choisi, appropriées pour le moteur, à l'aide de l'index des groupes de construction.**

- **Détermination du numéro de la pièce de rechange à l'aide de la feuille de liste des numéros de pièces.**

Pour la commande de pièces de rechange il suffit d'indiquer le numéro de pièce ainsi déterminé conjointement avec le type et le numéro du moteur ainsi que la quantité nécessaire. Moyennant le numéro du moteur il est assuré que la pièce de rechange appropriée pour le moteur est toujours fournie, même lors de modifications ultérieures.

Les livraisons des pièces de rechange et des composants de rechange s'effectuent selon nos conditions de vente.

Commande de pièces de rechange
Type du moteur: **F2L1011**
No. du moteur: **7 688 488**

No. Courant	Nb pces	No de pièces
		417 3862
		117 8419
		417 3861

Para la determinación del número de la pieza en base al presente catálogo se procederá de la siguiente manera:

- **Determinación del número de motor**

  El número de motor se halla troquelado en la placa de fábrica así como en el bloque motor. Respecto al emplazamiento de la placa o el número estampado en el motor sírvase consultar el correspondiente manual de instrucciones.

- **Determinación del número de producto en base al índice correlativo de números de motor y números de producto (GV)**
  Se suprime si la documentación se refiere al volumen de suministro (véase título).

- **Determinación del grupo de construcción al que habrá de asignarse la pieza requerida, en base del cuadro sinóptico de grupos de construcción.**

- **Determinación de las hojas de listas de números de piezas del grupo de construcción elegido para el motor, en base al índice de grupos de construcción.**

- **Determinación del número de la pieza en base a la hoja de lista de números de piezas.**

Para la realización del pedido de repuestos basta indicar el número de la pieza así localizada, en conjunto con el tipo y número del motor, y la cantidad necesaria de la misma. A través del número de motor queda asegurado que también en caso de modificaciones posteriores siempre será suministrada la pieza que corresponda al motor.

Los suministros de piezas de repuesto y componentes reacondicionados se efectúan con arreglo a nuestras condiciones de ventas.

Pedido de repuestos
Tipo de motor: **F2L1011**
No. de motor: **7 688 488**

No. Corr.	Canti-add	Pieza no.
		417 3862
		117 8419
		417 3861

DEUTZ SERVICE INTERNATIONAL GmbH
Deutz-Mülheimer Str. 107
POSTFACH 80 05 09
D - 50679 Köln

Regionen		Deutschland Österreich Schweiz Osteuropa	Restlich. Europa Nordamerika Mittelamerika	Südamerika Afrika	Asien Australien
Vertrieb	Telefon	(0221) 822 5247	(0221) 822 5224	(0221) 822 5250	(0221) 822 5096
	Fax.	(0221) 822 2909/5462			
	Telex	8812 253 KHD D			
Ersatzteilabwicklung	Tel.	(0221) 8225556/555	(0221) 8225557/555	(0221) 822 5559/5558	
	Fax.	(0221) 822 2700			
	Telex	8812 251 KHD D			
Kundendienst	Tel.	(0221) 822 3168			
	Fax.	(0221) 822 5356			
	Telex	8812 241 KHD D			

Rufen Sie uns an, wir nennen Ihnen die für Sie günstigste, regionale DEUTZ SERVICE-Adresse.
Give us a ring and we shall furnish you with the address of the DEUTZ SERVICE outpost nearest to your facility.
N'hésitez pas à nous téléphoner, nous vous indiquerons l'adresse du point de SERVICE DEUTZ régional le plus proche de chez vous.
Llámenos para que podamos darle la dirección del Servicio DEUTZ regional más cerca de Ud.

Service-Telefon für technische Rückfragen
Service telephone for technical enquiries
Service téléfonique pour informationes techniques supplémentaires
Consultorio Técnico Telefonico

(02 21) 822 5454

Von 08.00 bis 17.00 Uhr mit direkter Vermittlung
Nachts, an Wochenenden und an Feiertagen als Anrufbeantworter (wir reagieren am nächsten Arbeitstag).

Personal answering service from 8.00 am to 5.00 pm.
At all other times and on weekends and holidays an ansafone system operates
(wecall back on next working day).

De 8h à 17h liaison directe.
Nuits, week-end, jours fériés, répondeur automatique (nous vous recontactons le jour ouvrable suivant).

De 08.00 a 17.00 en conección directa.
Noche, fines de semana y festivos contestador automático. (Respondemos el próximo dia laborable)

000

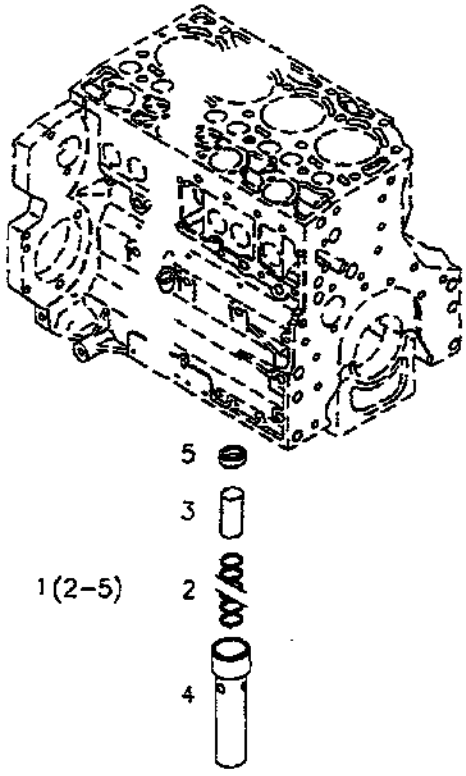

DRUCKHALTEVENTIL PRESSURESTAT CLAPET DE RETENUE VALVULA RETENCION 0130-01 507 0364

Bild Pos.	Teile-Nr.	Stck.-zahl	DEUTSCH	ENGLISH	FRANCAIS	ESPANOL	Nummer/Bemerkung	ETK
1	0420 2104	1	DRUCKHALTEVENTIL	PRESSURESTAT	CLAPET DE RETENUE	VALVULA RETENCION	MIT POS.... WITH ITEM.... AVEC POSTE.... CON POS. ..... (2-5)	
2	0420 0782	1	DRUCKFEDER	COMPRESSION SPRING	RESSORT DE PRESS.	RESORTE DE PRESION		
3	0420 2102	1	VENTILKOLBEN	VALVE PLUNGER	TIGE DE SOUPAPE	PISTON DE VALVULA		
4	0420 1747	1	HUELSE	SLEEVE	DOUILLE	CASQUILLO		
5	0420 1794	1	RING	RING	BAGUE/ANNEAU	ANILLO		
185	0100 9893	1	SICHERUNGSMITTEL	SAFETY/LOCK.AGENT	RESINE-FREIN	MEDIO AFIANZADOR	H 000899-DEUTZ DW 71- 50 ML	

000

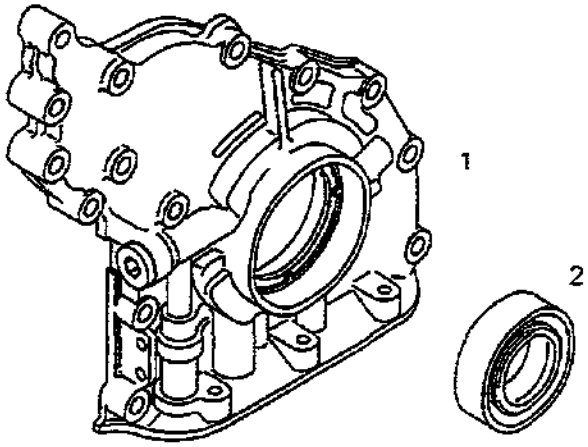

VORDERER-DECKEL FRONT COVER COUVERCLE AV TAPA DELANTERA 0130-01 507 0362

Bild Pos.	Teile-Nr.	Stck. zahl	DEUTSCH	ENGLISH	FRANCAIS	ESPANOL	Nummer/Bemerkung	ETK
1	0420 4237	1	VORDERER-DECKEL	FRONT COVER	COUVERCLE AV	TAPA DELANTERA		
2	0420 2260	1	WELLENDICHTRING	ROT.SHAFT LIP SEAL	JOINT A LEVRE	RETEN		

000

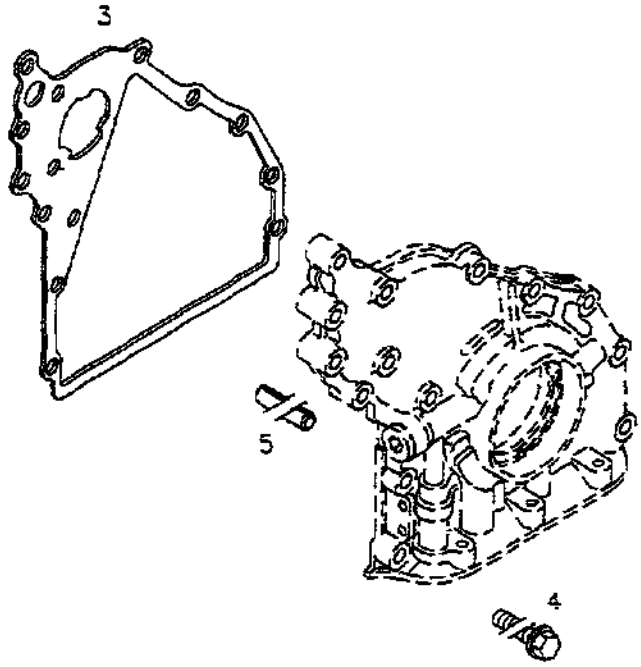

BEFESTIGUNGSTEILE FASTENINGS PIECES DE FIXAT. PIEZAS DE SUJECION 0130-01 507 0361

Bild Pos.	Teile-Nr.	Stck. zahl	DEUTSCH	ENGLISH	FRANCAIS	ESPANOL	Nummer/Bemerkung	ETK
3	0420 4450	1	DICHTUNG	GASKET	GARNITURE/JOINT	JUNTA		
4	0114 3362	14	SECHSKANTSCHRAUBE	HEXAGON BOLT	VIS TETE HEXAGONAL	TORN.DE CABE.EXAG.	H 002008-F-M 8 X 35- 10.9-A4C	
5	0117 9794	1	SPANNBUCHSE	CLAMPING BUSH	DOUILLE DE SERRAGE	PASADOR ELASTICO	H 002341-B11X 8	

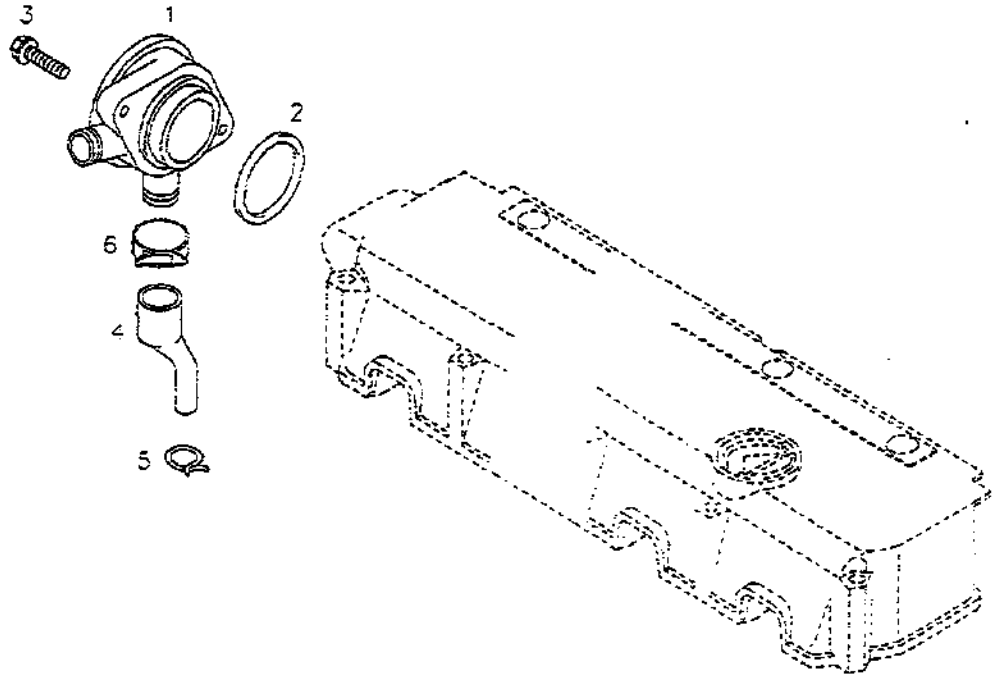

KURB.GEH.ENTLUEFT. CRANKCASE BREATHER RENIFLARD DESAIREAC. BLOQUE 0130-01 507 0052

Bild Pos.	Teile-Nr.	Stck. zahl	DEUTSCH	ENGLISH	FRANCAIS	ESPANOL	Nummer/Bemerkung	ETK
1	0419 7667	1	DRUCKREGELVENTIL	PRESSURE REGULATOR	REGULATEUR PRESS.	VALV.REGUL.PRESION		
2	0117 1584	1	RUNDDICHTRING	O-SEAL	ANNEAU TORIQUE	JUNTA TORNICA	H 002927- 52 X 5 -FPM-1-70	01
3	0117 9193	2	SECHSKANTSCHRAUBE	HEXAGON BOLT	VIS TETE HEXAGONAL	TORN.DE CABE.EXAG.	H 002008-F-M 6 X 30- 10.9-A4C	
4	0420 2849	1	GUMMIMUFFE	RUBBER SLEEVE	MANCHON CAOUTCHOUC	MANGUITO DE GOMA		
5	0116 6476	1	SCHLAUCHKLEMME	HOSE CLIP	COLLIER A FLEXIBLE	PINZA DE MANGUERA	H 000735-SK 14	
6	0117 8750	1	FEDERBANDSCHELLE	SPRING BAND CLAMP	COLLIER FEUILLARD	ABRAZADERA	H 003461-D29 -FED.ST	

001

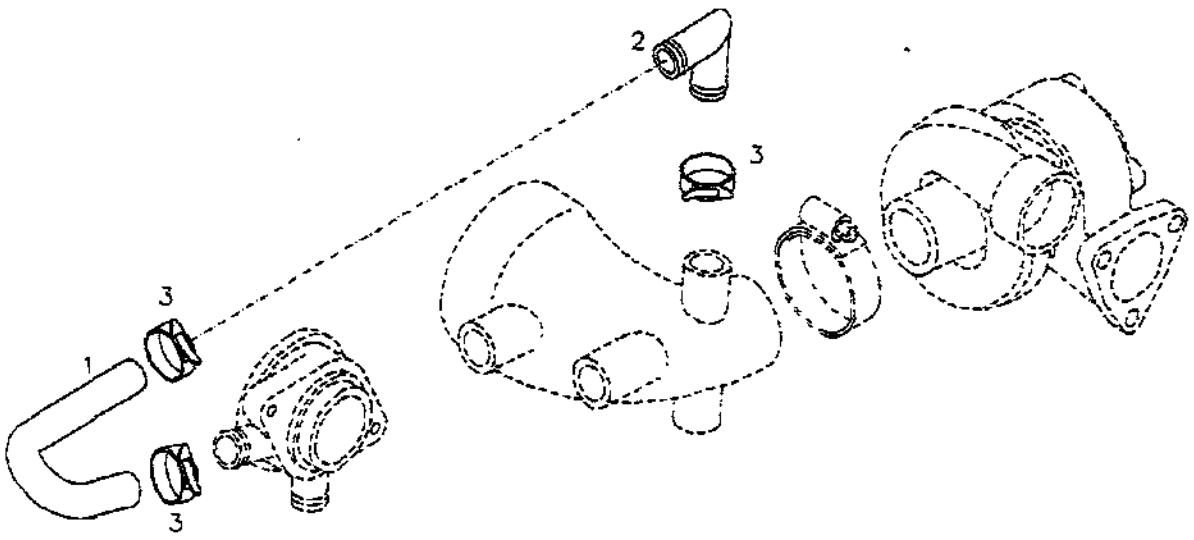

ENTLUEFT.SCHLAUCH BLEEDING TUBE TUBE DESAERATION MANGUERA DESAIREA. 0130-01 507 0050

Bild Pos.	Teile-Nr.	Stck-zahl	DEUTSCH	ENGLISH	FRANCAIS	ESPANOL	Nummer/Bemerkung	ETK
1	0419 8572	1	ENTLUEFT.SCHLAUCH	BLEEDING TUBE	TUBE DESAERATION	MANGUERA DESAIREA.		
2	0419 7718	1	WINKELSTUTZEN	ELBOW	RACCORD COUDE	ACOPLAMIEN.ANGULAR		
3	0117 8750	3	FEDERBANDSCHELLE	SPRING BAND CLAMP	COLLIER FEUILLARD	ABRAZADERA	H 003461-D29 -FED.ST	

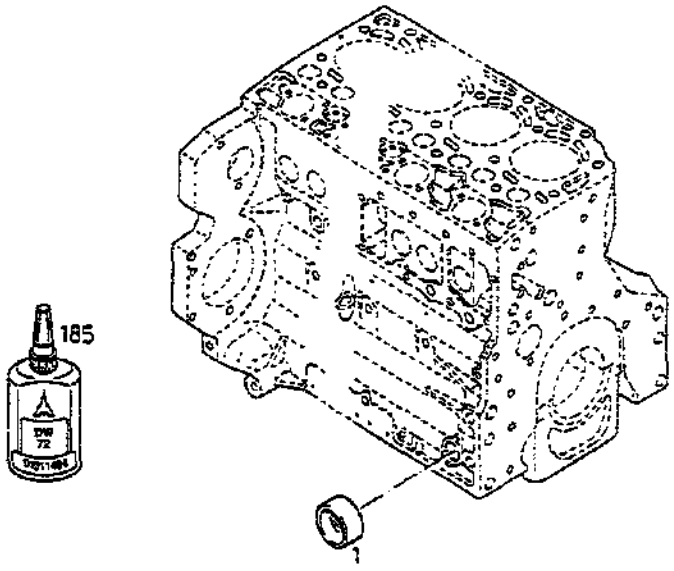

VERSCHLUSSSTOPFEN NIPPLE BOUCHON TAPON 0130-01 507 0027

Bild Pos.	Teile-Nr.	Stck. zahl	DEUTSCH	ENGLISH	FRANCAIS	ESPANOL	Nummer/Bemerkung	ETK
1	0117 9634	1	KERNLOCHVERSCHLUSS	CORE HOLE PLUG	BOUCHON TROU DESS	TAPON CIERRE MACHO	H 002860-A36-ST-FE/ZNPHR	
185	0101 1484	1	SICHERUNGSMITTEL	SAFETY/LOCK.AGENT	RESINE-FREIN	MEDIO AFIANZADOR	H 000899-DEUTZ DW 72- 50 ML	

Baugruppe / Constr. Group / Groupe de Constr. / Grupo de Constr.	05370217/02				
83 VERSCHLUSSTEILE BLANKING PARTS OBTURATEURS PIEZAS DE CIERRE	0507 0066 0507 0067 0507 0540 -	- - - -	- - - -	- - - -	- - - -
90 DICHTUNGSSATZ GASKET SET JEU DE JOINTS JUEGO DE JUNTAS	0507 0907 - - -	- - - -	- - - -	- - - -	- - - -
KUEHLSYSTEMSCHUTZ COOL.SYST.PROTECT. PROT.SYST.REFROID. PROTECC.SIST.REFRI	0507 0283 - - -	- - - -	- - - -	- - - -	- - - -

Baugruppen-Verzeichnis der Teilenummern-Listen
Index of Construction Groups for Parts Number Lists
Index des Groupes de Construction pour les Listes de Numeros de Pieces
Indice de los Grupos de Construccion para las Listas de Numeros de Piezas

Seite
Page

Baugruppe / Constr. Group / Groupe de Constr. / Grupo de Constr.					

Baugruppe / Constr. Group / Groupe de Constr. / Grupo de Constr.	05370217/02				
51 TEMPERATURGEBER TEMPER. TRANSMITTER SONDE THERMIQUE SENSOR TEMPERATUR	0507 0151 - - -	- - - -	- - - -	- - - -	- - - -
NIVEAUSCHALTER LEVEL SWITCH LEVEL SWITCH CONTACTOR DE NIVEL	0507 0263 - - -	- - - -	- - - -	- - - -	- - - -
52 ABDECKBLECH COVER PLATE TOLE RECOUVREMENT CHAPA DE CUBIERTA	0507 0175 - - -	- - - -	- - - -	- - - -	- - - -
ANSCHLUSSGEHAEUSE CONNECTION HOUSING CARTER ADAPTATION CAJA DE CONEXION	0507 0481 - - -	- - - -	- - - -	- - - -	- - - -
BEFESTIGUNGSTEILE FASTENINGS PIECES DE FIXAT. PIEZAS DE SUJECION	0507 0482 - - -	- - - -	- - - -	- - - -	- - - -
56 MOTORABSTELLUNG SHUTDOWN DEVICE ARRET DU MOTEUR PARADA DEL MOTOR	0507 0649 - - -	- - - -	- - - -	- - - -	- - - -
VERSCHLUSSTEILE BLANKING PARTS OBTURATEURS PIEZAS DE CIERRE	0507 0143 - - -	- - - -	- - - -	- - - -	- - - -

Baugruppe / Constr. Group / Groupe de Constr. / Grupo de Constr.	05370217/02				
56 ANBAUTEILE ACCESSORIES ACCESSOIRES PIEZAS DE MONTAJE	0507 0260 - - -	- - - -	- - - -	- - - -	- - - -
83 KABELBAUM CABLE HARNESS FAISCEAU DE CABLES HAZ DE CABLES	0507 0221 - - -	- - - -	- - - -	- - - -	- - - -
SCHALTGERAET SWITCHING DEVICE CONTACTEUR CONTACTOR	0507 0225 - - -	- - - -	- - - -	- - - -	- - - -
VERSCHLUSSTEILE BLANKING PARTS OBTURATEURS PIEZAS DE CIERRE	0507 0306 - - -	- - - -	- - - -	- - - -	- - - -
ANBAUTEILE ACCESSORIES ACCESSOIRES PIEZAS DE MONTAJE	0507 0222 - - -	- - - -	- - - -	- - - -	- - - -
GLUEHSTIFTKERZE GLOW PLUG BOUGIE PREHCAUFF. BUJIA INCANDESCENT	0507 0220 - - -	- - - -	- - - -	- - - -	- - - -
75 VERSCHLUSSTEILE BLANKING PARTS OBTURATEURS PIEZAS DE CIERRE	0507 0100 - - -	- - - -	- - - -	- - - -	- - - -

Baugruppe / Constr. Group / Groupe de Constr. / Grupo de Constr.	05370217/02				
46 ANBAUTEILE ACCESSORIES ACCESSOIRES PIEZAS DE MONTAJE	0507 0465 - - -	- - - -	- - - -	- - - -	- - - -
47 ANBAUTEILE ACCESSORIES ACCESSOIRES PIEZAS DE MONTAJE	0507 0142 - - -	- - - -	- - - -	- - - -	- - - -
48 ANSCHLUSSSTECKER ATTACHMENT PLUG FICHE DE CONNEXION CLAVIJA DE CONEX.	0507 0288 - - -	- - - -	- - - -	- - - -	- - - -
BEFESTIGUNGSTEILE FASTENINGS PIECES DE FIXAT. PIEZAS DE SUJECION	0507 0583 - - -	- - - -	- - - -	- - - -	- - - -
INDUKTIV.WEGGEBER SENSOR SONDE INDUCT. SONDA DE INDUCCION	0507 0265 - - -	- - - -	- - - -	- - - -	- - - -
KABELBAUM CABLE HARNESS FAISCEAU DE CABLES HAZ DE CABLES	0507 0399 0507 0662 - -	- - - -	- - - -	- - - -	- - - -
STECKVERBINDUNG PLUG CONNECTION CONNEXION ENFICH CONEXION D.ENCHUFE	0507 0321 - - -	- - - -	- - - -	- - - -	- - - -

Baugruppe / Constr. Group / Groupe de Constr. / Grupo de Constr.	05370217/02				
48 VERBINDUNGSLEITUNG CONNECTING PIPE CONDUIT JONCTION TUBERIA DE UNION	0507 0327 - - -	- - - -	- - - -	- - - -	- - - -
VERSCHLUSSTEILE BLANKING PARTS OBTURATEURS PIEZAS DE CIERRE	0507 0149 - - -	- - - -	- - - -	- - - -	- - - -
ANBAUTEILE ACCESSORIES ACCESSOIRES PIEZAS DE MONTAJE	0507 0502 - - -	- - - -	- - - -	- - - -	- - - -
DRUCKGEBER PRESSURE SENSOR TRANSMETTEUR DE PR TRANSMISOR PRESION	0507 0295 - - -	- - - -	- - - -	- - - -	- - - -
STECKVERBINDER PLUG-IN CONNECTOR CONNECTEUR EN FICH LIGADOR DE ENCHUFE	0507 0266 - - -	- - - -	- - - -	- - - -	- - - -
51 ANSCHLUSSSTECKER ATTACHMENT PLUG FICHE DE CONNEXION CLAVIJA DE CONEX.	0507 0343 - - -	- - - -	- - - -	- - - -	- - - -
ANBAUTEILE ACCESSORIES ACCESSOIRES PIEZAS DE MONTAJE	0507 0264 - - -	- - - -	- - - -	- - - -	- - - -

Baugruppe / Constr. Group / Groupe de Constr. / Grupo de Constr.	05370217/02				
40 UNTERTEIL BASE PARTIE INFERIEURE PARTE INFERIOR	0507 0474 0507 0894 - -	- - - -	- - - -	- - - -	- - - -
SCHAULOCHBLECH INSPECT.HOLE SHEET TOLE TROU REGARD CHAPA ABERT.INSPEC	0507 0475 - - -	- - - -	- - - -	- - - -	- - - -
VERSCHLUSSBLECH LOCK SHEET VERROU CHAPA DE CIERRE	0507 0919 - - -	- - - -	- - - -	- - - -	- - - -
41 ABGASLEITUNG EXHAUST PIPE TUBULURE D'ECHAPP. TUBERIA DE ESCAPE	0507 0505 - - -	- - - -	- - - -	- - - -	- - - -
FLANSCH FLANGE BRIDE/COLLET BRIDA	0500 2097 - - -	- - - -	- - - -	- - - -	- - - -
ABGASROHRKRUEMMER EXHAUST MANIFOLD COUDE ECHAPPEMENT CODO DE ESCAPE	0500 6694 - - -	- - - -	- - - -	- - - -	- - - -
43 ABGASTURBOLADER TURBOCHARGER TURBOCOMPRESSEUR TURBO	0507 0820 - - -	- - - -	- - - -	- - - -	- - - -

Baugruppe / Constr. Group / Groupe de Constr. / Grupo de Constr.	05370217/02				
43 SCHMIEROELLEITUNG LUBRICAT. OIL LINE CONDUITE A HUILE TUBER.ACEITE LUBR.	0507 0506 - - -	- - - -	- - - -	- - - -	- - - -
VERSCHLUSSTEILE BLANKING PARTS OBTURATEURS PIEZAS DE CIERRE	0507 0056 0507 0058 - -	- - - -	- - - -	- - - -	- - - -
44 BEFESTIGUNGSTEILE FASTENINGS PIECES DE FIXAT. PIEZAS DE SUJECION	0507 0866 - - -	- - - -	- - - -	- - - -	- - - -
GENERATOR GENERATOR GENERATRICE GENERADOR	0506 4817 - - -	- - - -	- - - -	- - - -	- - - -
STARTER STARTER DEMARREUR ARRANCADOR	0507 0158 - - -	- - - -	- - - -	- - - -	- - - -
ANBAUTEILE ACCESSORIES ACCESSOIRES PIEZAS DE MONTAJE	0507 0509 - - -	- - - -	- - - -	- - - -	- - - -
TEILE Z. GENERATOR PARTS OF ALTERNAT. PIECES ALTERNATEUR COMPON.P. GENERAD.	0506 4986 - - -	- - - -	- - - -	- - - -	- - - -

Baugruppe / Constr. Group / Groupe de Constr. / Grupo de Constr.	05370217/02				
39 ENTLUEFTUNGS.LEIT. BREATHER LINE CONDUITE DE DESAER TUBERIA DESAIREAC.	0507 0463	-	-	-	-
KEILRIEMENSCHEIBE V-GROOVED PULLEY POULIE A GORGE POLEA TRAPECIAL	0507 0790	-	-	-	-
KUEHLGEBLAESE COOLING FAN SOUFFLANTE REFROID VENTILADOR	0507 0816	-	-	-	-
LUFTLEITBLECH AIR BAFFLE TOLE-CONDUIT.D'AIR CHAPA GUIA DE AIRE	0507 0344	-	-	-	-
SCHMALKEILRIEMEN NARROW V-BELT COURR TRAP ETROITE CORR.TRAPEC.ESTREC	0507 0508	-	-	-	-
LUFTFUEHRUNGSRING AIR GUIDE RING BAGUE ANILLO GUIA AIRE	0507 0308	-	-	-	-
SCHMALKEILR.SATZ SET NARROW V-BELTS JEU COUR.TRAP.PLAT JGO.CORREAS TRAPEC	0507 0647	-	-	-	-

Baugruppe / Constr. Group / Groupe de Constr. / Grupo de Constr.	05370217/02				
40 ABSCHLUSSBLECH END PLATE TOLE FERMETURE CHAPA CIERRE	0507 0868	-	-	-	-
BEFESTIGUNGSLEISTE FASTENING RAIL LANGUETTE DE FIX LISTON DE SUJECION	0507 0923	-	-	-	-
BEFESTIGUNGSWINKEL FIXING BRACKET EQUERRE D.FIXATION ANGULO DE SUJECION	0507 0922	-	-	-	-
BEFESTIGUNGSTEILE FASTENINGS PIECES DE FIXAT. PIEZAS DE SUJECION	0507 1901	-	-	-	-
DECKEL COVER COUVERCLE TAPA	0507 0477 0507 0791	-	-	-	-
LUFTLEITBLECH AIR BAFFLE TOLE-CONDUIT.D'AIR CHAPA GUIA DE AIRE	0507 0478	-	-	-	-
OBERTEIL TOP PART PARTIE SUPERIEURE PARTE SUPERIOR	0507 0476	-	-	-	-
ZWISCHENWAND PARTIT./BULKHEAD CLOISON INTERM. TABIQUE INTERMEDIO	0507 0807	-	-	-	-

Baugruppe / Constr. Group / Groupe de Constr. / Grupo de Constr.	05370217/02				
27 LUFTLEITUNG INLET MANIFOLD CONDUITE D'AIR TUBERIA DE AIRE	0507 0473	-	-	-	-
REGELSTANGE CONTROL ROD TIGE DE REGLAGE BARRA D.REGULACION	0507 0525	-	-	-	-
ZWISCHENRAD IDLER GEAR ROUE INTERMEDIAIRE ENGRAN. INTERMEDIO	0507 0038	-	-	-	-
REGLER CONTROLLER REGULATEUR REGULADOR	0507 0567	-	-	-	-
36 WASSERKUEHLER WATER COOLER REFROIDISSEUR EAU ENFRIADOR DE AGUA	0507 0511	-	-	-	-
KUEHLER/HALTERUNG COOLER ASSEMBLY RADIATEUR/SUPPORT RADIADOR/SOPORTE	0507 0918	-	-	-	-
37 KUEHLWASSERPUMPE COOLING WATER PUMP POMPE D'EAU REFRDI BOMBA AGUA REFRIG.	0507 0458	-	-	-	-

Baugruppe / Constr. Group / Groupe de Constr. / Grupo de Constr.	05370217/02				
37 ANTRIEBSTEILE DRIVING PARTS PIECES D'ENTRAINEM PIEZAS ACCIONAMIE.	0507 0127	-	-	-	-
38 ENTLUEFT.SCHRAUBE VENT PLUG VIS DE PURGE D'AIR TORN.PURGA AIRE	0507 0462	-	-	-	-
THERMOSTAT THERMOSTAT THERMOSTAT TERMOSTATO	0507 0459	-	-	-	-
AUSGLEICHLEITUNG BALANCING LINE CONDUIT COMPENSATR TUBERIA COMPENSAC.	0507 0514	-	-	-	-
KUEHLWASSERLEITUNG COOLING WATER LINE CONDUITE D'EAU TUBER.AG.REFRIGER.	0507 0512	-	-	-	-
KUEHLMITTELLEITUNG COOLANT PIPE CONDUITE TUBER.MEDIO REFRIG	0507 0513	-	-	-	-
39 ANBAU ASSEMBLY L'ASSEMBLAGE MONTAJE	0507 0451	-	-	-	-

Baugruppe / Constr. Group / Groupe de Constr. / Grupo de Constr.	05370217/02				
19 BEFESTIGUNGSTEILE FASTENINGS PIECES DE FIXAT. PIEZAS DE SUJECION	0507 0352 - - -	- - - -	- - - -	- - - -	- - - -
EINSPRITZVENTIL FUEL INJECTOR PORTE-INJECTEUR INYECTOR	0507 0524 - - -	- - - -	- - - -	- - - -	- - - -
20 BEFESTIGUNGSTEILE FASTENINGS PIECES DE FIXAT. PIEZAS DE SUJECION	0507 0124 - - -	- - - -	- - - -	- - - -	- - - -
FILTERPATRONE FILTER CARTRIDGE CARTOUCHE FILTRANT CARTUCHO FILTRO	0503 7735 - - -	- - - -	- - - -	- - - -	- - - -
KRAFTSTOFFPUMPE FUEL PUMP POMPE A COMBUST BOMBA COMBUSTIBLE	0507 0499 - - -	- - - -	- - - -	- - - -	- - - -
21 EINSPRITZLEITUNG HIGH PRESSURE PIPE TUYAUTERIE TUBERIA INYECCION	0507 0621 - - -	- - - -	- - - -	- - - -	- - - -
KRAFTSTOFFLEITUNG FUEL LINE CONDUITE COMBUST. TUBERIA COMBUSTIB.	0507 0348 - - -	- - - -	- - - -	- - - -	- - - -

Baugruppe / Constr. Group / Groupe de Constr. / Grupo de Constr.	05370217/02				
21 UEBERSTROEMLEITUNG OVERFLOW LINE CONDUITE DECHARGE TUBERIA DE REBOSE	0507 0363 - - -	- - - -	- - - -	- - - -	- - - -
22 DECKEL COVER COUVERCLE TAPA	0507 0495 0507 0496 0507 0788 -	- - - -	- - - -	- - - -	- - - -
KRUEMMER MANIFOLD COUDE CODO	0507 0498 - - -	- - - -	- - - -	- - - -	- - - -
LADELUFTLEITUNG TUBER. AIRE SOBREAL TUBULURE D'AIR TUB.A/SOBREALIMENT	0507 0867 - - -	- - - -	- - - -	- - - -	- - - -
VERSCHLUSSTEILE BLANKING PARTS OBTURATEURS PIEZAS DE CIERRE	0507 0047 - - -	- - - -	- - - -	- - - -	- - - -
STECKSTUECK PLUG PIECE A ENFICHER PIEZA DE ENCHUFE	0507 0497 - - -	- - - -	- - - -	- - - -	- - - -
27 BEFESTIGUNGSTEILE FASTENINGS PIECES DE FIXAT. PIEZAS DE SUJECION	0507 0543 0507 0771 - -	- - - -	- - - -	- - - -	- - - -

Baugruppe / Constr. Group / Groupe de Constr. / Grupo de Constr.	05370217/02				
11 STEUERUNGSTEILE VALVE DRIVE PIÈCES DISTRIBUT PIEZAS DISTRIBUC.	0507 0353 - - -	- - - -	- - - -	- - - -	- - - -
15 BEFESTIGUNGSTEILE FASTENINGS PIÈCES DE FIXAT. PIEZAS DE SUJECION	0507 0487 - - -	- - - -	- - - -	- - - -	- - - -
FILTERPATRONE FILTER CARTRIDGE CARTOUCHE FILTRANT CARTUCHO FILTRO	0503 2122 - - -	- - - -	- - - -	- - - -	- - - -
MESSANSCHLUSS TEST COUPLING PRISE DIAGNOSTIC EMPALME D.MEDICION	0507 0488 - - -	- - - -	- - - -	- - - -	- - - -
OELKUEHLER OIL COOLER REFROIDISSEUR ENFRIADOR D.ACEITE	0507 0485 - - -	- - - -	- - - -	- - - -	- - - -
OELKUEHL.BEFESTIG. OIL COOLER FASTEN. ATTACHE REFR.HUILE SUJEC.ENFRI.ACEITE	0507 0609 - - -	- - - -	- - - -	- - - -	- - - -
VERSCHLUSSTEILE BLANKING PARTS OBTURATEURS PIEZAS DE CIERRE	0507 0486 0507 0489 - -	- - - -	- - - -	- - - -	- - - -

Baugruppe / Constr. Group / Groupe de Constr. / Grupo de Constr.	05370217/02				
15 OELKUEHLERGEHAEUSE OIL COOLER BOX BOITIER D.REFRIGER CAJA ENFRI.ACEITE	0507 0484 0507 0588 - -	- - - -	- - - -	- - - -	- - - -
HYDRAUL.OELKUEHLER HYDRAUL.OIL COOLER REFR.D'HUILE HYDR. REFRIG.ACTE.CONVER	0507 0850 - - -	- - - -	- - - -	- - - -	- - - -
16 OELSAUGROHR OIL SUCTION PIPE TUBULURE D'ASPIRAT TUBO ASPIR.ACEITE	0507 0846 - - -	- - - -	- - - -	- - - -	- - - -
17 BEFESTIGUNGSTEILE FASTENINGS PIÈCES DE FIXAT. PIEZAS DE SUJECION	0507 0676 - - -	- - - -	- - - -	- - - -	- - - -
EINSPRITZPUMPE FUEL INJECT. PUMP POMPE D'INJECTION BOMBA DE INYECCION	0507 0472 - - -	- - - -	- - - -	- - - -	- - - -
ROLLENSTOESSEL ROLLER TAPPET POUSSOIR A GALET TAQUE DE RODILLO	0507 0528 - - -	- - - -	- - - -	- - - -	- - - -

Baugruppe / Constr. Group / Groupe de Constr. / Grupo de Constr.	05370217/02				
05 SCHWINGS.DAEMPFER VIBRATION DAMPER AMORT.VIBRATIONS AMORTIGUAD.OSCILAC	0507 0490	-	-	-	-
SCHWUNGRAD FLYWHEEL VOLANT VOLANTE	0507 1000	-	-	-	-
ANBAUTEILE ACCESSORIES ACCESSOIRES PIEZAS DE MONTAJE	0507 1002	-	-	-	-
06 PLEUELSTANGE CONNECTING ROD BIELLE BIELA	0507 0354	-	-	-	-
07 KOLBEN PISTON PISTON PISTON	0507 0650	-	-	-	-
08 BEFESTIGUNGSTEILE FASTENINGS PIECES DE FIXAT. PIEZAS DE SUJECION	0507 0356	-	-	-	-

Baugruppe / Constr. Group / Groupe de Constr. / Grupo de Constr.	05370217/02				
08 MOTORAUFHAENGUNG ENGINE MOUNTING SUSPENSION MOTEUR ANCLAJE DEL MOTOR	0507 0164	-	-	-	-
ZYLINDERKOPF CYLINDER HEAD CULASSE CULATA	0507 0851	-	-	-	-
ZYLINDERKOPFHAUBE VALVE MECHAN.COVER CAPOT DE CULBUTEUR TAPA DE BALANCINES	0507 0857	-	-	-	-
09 RAEDERKASTEN GEARCASE BOITE D'ENGRENAGES CAJA DE ENGRANAJES	0507 0531	-	-	-	-
10 NOCKENWELLE CAMSHAFT ARBRE A CAMES ARBOL DE LEVAS	0507 0811	-	-	-	-
11 KIPPHEBELBOCK ROCKER ARM BRACKET SUPPORT DE L'AXE CABALLETE BALANCIN	0507 0357	-	-	-	-

Baugruppe / Constr. Group / Groupe de Constr. / Grupo de Constr.	05370217/02				
01 BEFESTIGUNGSTEILE FASTENINGS PIECES DE FIXAT. PIEZAS DE SUJECION	0507 0361 - - -	- - - -	- - - -	- - - -	- - - -
ENTLUEFT.SCHLAUCH BLEEDING TUBE TUBE DESAERATION MANGUERA DESAIREA.	0507 0050 - - -	- - - -	- - - -	- - - -	- - - -
FUEHRUNGSROHR GUIDE TUBE TUYAU DE GUIDAGE TUBO GUIA	0507 0845 - - -	- - - -	- - - -	- - - -	- - - -
KURB.GEH.ENTLUEFT. CRANKCASE BREATHER RENIFLARD DESAIREAC. BLOQUE	0507 0052 - - -	- - - -	- - - -	- - - -	- - - -
KURBELGEHAEUSE CRANKCASE CARTER BLOQUE DE CILINDR.	0507 0537 - - -	- - - -	- - - -	- - - -	- - - -
OELMESSSTAB DIPSTICK JAUGE D PROFONDEUR SONDA DE ACEITE	0507 0806 - - -	- - - -	- - - -	- - - -	- - - -
VERSCHLUSSSTOPFEN NIPPLE BOUCHON TAPON	0507 0027 - - -	- - - -	- - - -	- - - -	- - - -
VORDERER-DECKEL FRONT COVER COUVERCLE AV TAPA DELANTERA	0507 0362 - - -	- - - -	- - - -	- - - -	- - - -

Baugruppe / Constr. Group / Groupe de Constr. / Grupo de Constr.	05370217/02				
01 DRUCKHALTEVENTIL PRESSURESTAT CLAPET DE RETENUE VALVULA RETENCION	0507 0364 - - -	- - - -	- - - -	- - - -	- - - -
KOLBENKUEHLDUESE PISTON COOL.NOZZLE GICLEUR D.REFROID. TOBERA DE REFRIG.	0507 0470 - - -	- - - -	- - - -	- - - -	- - - -
02 OELWANNE OIL PAN CARTER A HUILE CARTER DE ACEITE	0507 0847 - - -	- - - -	- - - -	- - - -	- - - -
05 BEFESTIGUNGSTEILE FASTENINGS PIECES DE FIXAT. PIEZAS DE SUJECION	0507 0580 0507 1001 - -	- - - -	- - - -	- - - -	- - - -
KEILRIEMENSCHEIBE V-GROOVED PULLEY POULIE A GORGE POLEA TRAPECIAL	0507 0464 - - -	- - - -	- - - -	- - - -	- - - -
KEILR.SCHEIBENANB. V-BELT PULLEY ASSY MONT.POULIE COURR MONTAJ.POLEA CORR.	0507 0249 - - -	- - - -	- - - -	- - - -	- - - -
KURBELWELLE CRANKSHAFT VILEBREQUIN CIGUENAL	0507 0533 - - -	- - - -	- - - -	- - - -	- - - -

Gegenüberstellungsverzeichnis

DATUM: 20.10.94 SEITE: 14

MOTOR - NR. VON - BIS	PRODUKT-NR.	BAUART	NENNLEISTUNG KW	1/MIN

Gegenüberstellungsverzeichnis

DATUM: 20.10.94 SEITE: 13

MOTOR - NR. VON - BIS	PRODUKT-NR.	BAUART	NENNLEISTUNG KW	1/MIN
0 031 655	05370217/02	BF 6M1013	141,0	2500

000

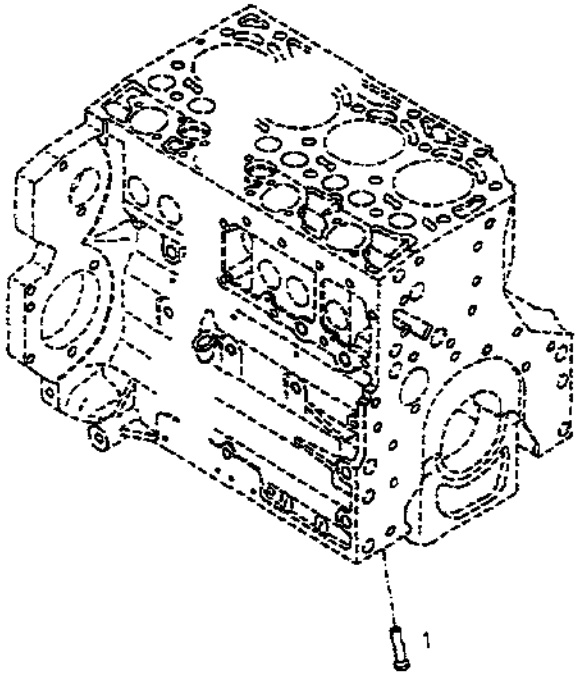

KOLBENKUEHLDUESE PISTON COOL.NOZZLE GICLEUR D.REFROID. TOBERA DE REFRIG. 0130-01 507 0470

Bild Pos.	Teile-Nr.	Stck. zahl	DEUTSCH	ENGLISH	FRANCAIS	ESPANOL	Nummer/Bemerkung	ETK
1	0420 3930	6	KOLBENKUEHLDUESE	PISTON COOL.NOZZLE	GICLEUR D.REFROID.	TOBERA DE REFRIG.		

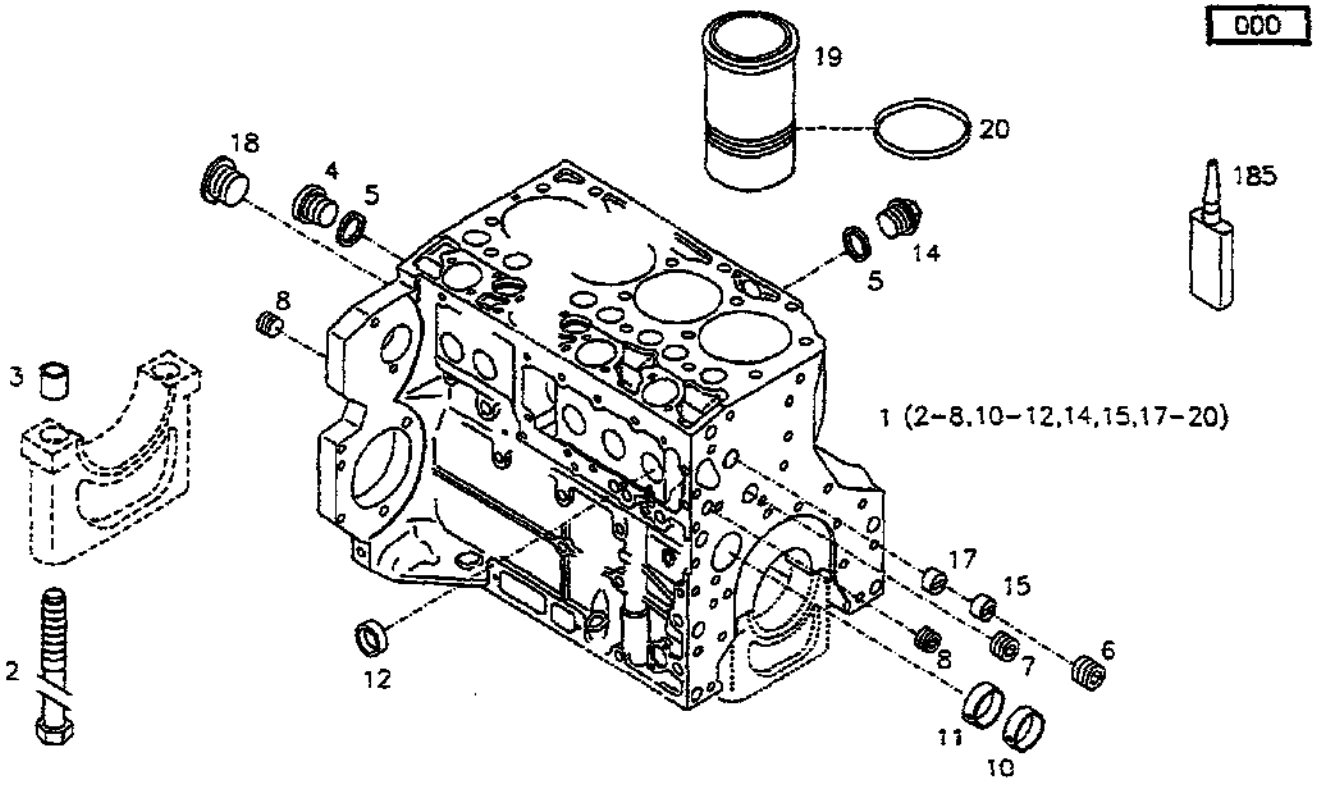

KURBELGEHAEUSE CRANKCASE CARTER BLOQUE DE CILINDR. 0130-01 507 0537

Bild Pos.	Teile-Nr.	Stck zahl	DEUTSCH	ENGLISH	FRANÇAIS	ESPANOL	Nummer/Bemerkung	ETK
1	0420 5612	1	KURBELGEHAEUSE	CRANKCASE	CARTER	BLOQUE DE CILINDR.	MIT POS.... WITH ITEM.... AVEC POSTE.... CON POS..... (2-8,10-12,14,15,17-20)	
2	0420 1011	14	SECHSKANTSCHRAUBE	HEXAGON SET SCREW	VIS TETE HEXAGONAL	TORNILLO DE CABEZA		
3	0420 0078	14	PASSBUCHSE	DOWEL BUSH	DOUILLE CENTRAGE	CASQUILLO D.AJUSTE		
4	0113 7743	1	VERSCHLUSSSCHRAUBE	SCREW PLUG	BOUCHON FILETE	TAPON ROSCADO	DIN 000908-M14X1,5-ST-A4C	
5	0111 8688	2	DICHTRING	SEALING RING	BAGUE D'ETANCHEITE	ANILLO JUNTA	DIN 007603-A 14 X 18 -CU	01
6	0117 9199	1	VERSCHLUSSSCHRAUBE	SCREW PLUG	BOUCHON FILETE	TAPON ROSCADO	H 002812-906-M30X1,5-ST-A4C-P RE 5	
7	0117 9207	1	VERSCHLUSSSCHRAUBE	SCREW PLUG	BOUCHON FILETE	TAPON ROSCADO	H 002812-906-M22X1,5-ST-A4C-P RE 5	
8	0117 9196	3	VERSCHLUSSSCHRAUBE	SCREW PLUG	BOUCHON FILETE	TAPON ROSCADO	H 002812-906-M14X1,5-ST-A4C-P RE 5	
10	0420 0021	6	LAGERBUCHSE	BEARING BUSH	BAGUE	CASQUILLO COJINETE		
11	0420 0022	1	LAGERBUCHSE	BEARING BUSH	BAGUE	CASQUILLO COJINETE		
12	0117 9635	10	KERNLOCHVERSCHLUSS	CORE HOLE PLUG	BOUCHON TROU DESS	TAPON CIERRE MACHO	H 002860-A45-ST-FE/ZNPHR	
14	0110 0940	1	VERSCHLUSSSCHRAUBE	SCREW PLUG	BOUCHON FILETE	TAPON ROSCADO	DIN 007604-AM14X1,5 -ST-A4C	
15	0420 2518	1	FUEHRUNGSHUELSE	GUIDE SLEEVE	DOUILLE DE GUIDAGE	CASQUILLO GUIA		
17	0420 2517	1	FUEHRUNGSHUELSE	GUIDE SLEEVE	DOUILLE DE GUIDAGE	CASQUILLO GUIA		
18	0116 5790	1	SCHLITZSTOPFEN	SLOTTED PLUG	BOUCHON FENDU	TAPON RANURADO	H 000710-M22X1,5	
19	0420 0255	6	ZYLINDERLAUFBUCHSE	CYLINDER LINER	CHEMISE DE CYL.	CAMISA CILINDRO		
20	0117 9023	12	RUNDDICHTRING	O-SEAL	ANNEAU TORIQUE	JUNTA TORNICA	H 002927-115 X 3 -FPM-2-70	
185	0101 1484	1	SICHERUNGSMITTEL	SAFETY/LOCK.AGENT	RESINE-FREIN	MEDIO AFIANZADOR	H 000699-DEUTZ DW 72- 50 ML	

000

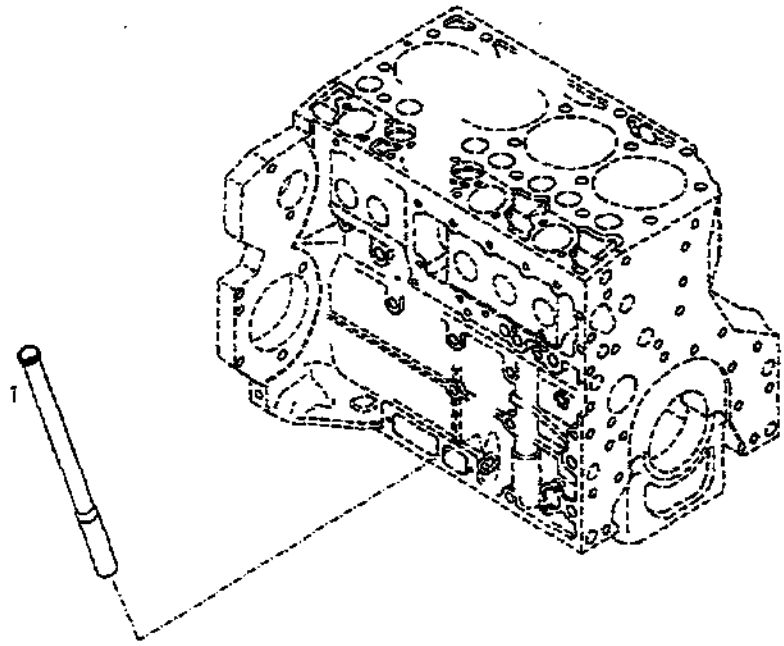

FUEHRUNGSROHR GUIDE TUBE TUYAU DE GUIDAGE TUBO GUIA 0130-01 507 0645

Bild Pos.	Teile-Nr.	Stck.-zahl	DEUTSCH	ENGLISH	FRANCAIS	ESPANOL	Nummer/Bemerkung	ETK
1	0420 4590	1	FUEHRUNGSROHR	GUIDE TUBE	TUYAU DE GUIDAGE	TUBO GUIA		

000

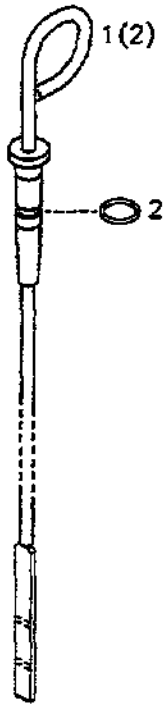

DELMESSSTAB DIPSTICK JAUGE D.PROFONDEUR SONDA DE ACEITE 0130-01 507 0806

Bild Pos.	Teile-Nr.	Stck. zahl	DEUTSCH	ENGLISH	FRANCAIS	ESPANOL	Nummer/Bemerkung	ETK
1	0117 9983	1	DELMESSSTAB	DIPSTICK	JAUGE D.PROFONDEUR	SONDA DE ACEITE	H 003535-AV - 226- 181X 30- 3 8 MIT POS.... WITH ITEM.... AVEC POSTE.... CON POS. ..... (2)	
2	0117 4311	1	RUNDDICHTRING	O-SEAL	ANNEAU TORIQUE	JUNTA TORNICA	H 002927- 4,3 X 2,4 -FPM-1-70	01

000

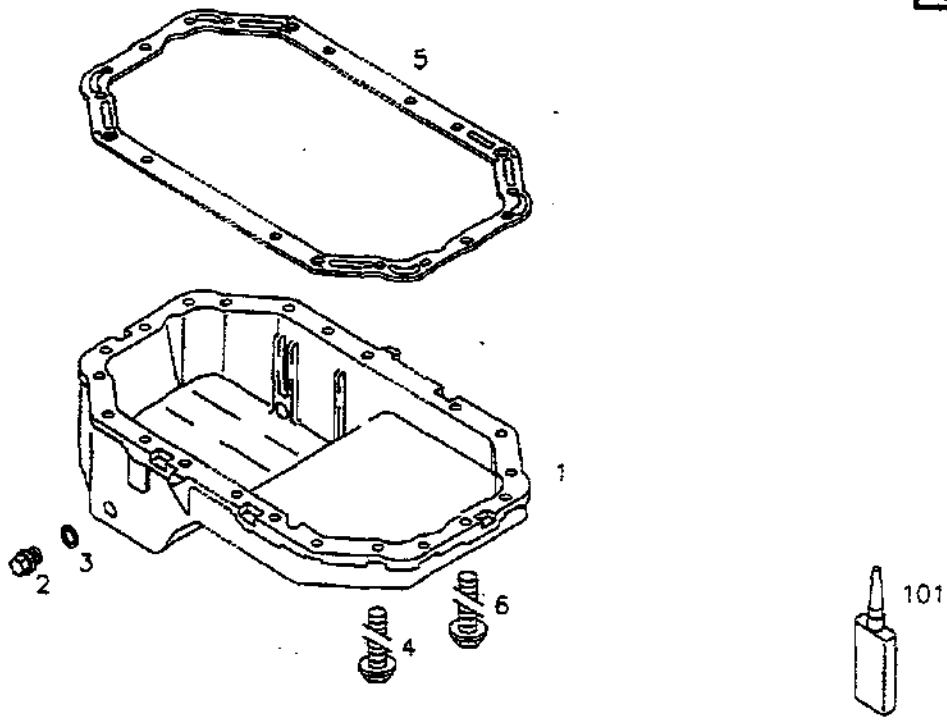

OELWANNE | OIL PAN | CARTER A HUILE | CARTER DE ACEITE | 0130-02 | 507 0847

Bild Pos.	Teile-Nr.	Stck-zahl	DEUTSCH	ENGLISH	FRANCAIS	ESPANOL	Nummer/Bemerkung	ETK
1	0420 5701	1	OELWANNE	OIL PAN	CARTER A HUILE	CARTER DE ACEITE	MIT POS.... WITH ITEM.... AVEC POSTE.... CON POS. ..... (2,3)	
2	0113 3831	2	VERSCHLUSSSCHRAUBE	SCREW PLUG	BOUCHON FILETE	TAPON ROSCADO	DIN 000910- M18X1,5 -ST-A4C	
3	0111 8718	2	DICHTRING	SEALING RING	BAGUE D'ETANCHEITE	ANILLO JUNTA	DIN 007603-A 18 X 24 -CU	01
4	0114 3389	27	SECHSKANTSCHRAUBE	HEXAGON BOLT	VIS TETE HEXAGONAL	TORN.DE CABE.EXAG.	H 002008-F-M 8 X 20-LG 2,5-10 .9-A4C	
5	0420 4459	1	DICHTUNG	GASKET	GARNITURE/JOINT	JUNTA		
6	0114 3362	7	SECHSKANTSCHRAUBE	HEXAGON BOLT	VIS TETE HEXAGONAL	TORN.DE CABE.EXAG.	H 002008-F-M 8 X 35- 10.9-A4C	
101	0100 8383	1	DICHTUNGSMASSE	PACKING COMPOUND	HERMETIC	PASTA HERMETIZANTE	H 000699-DEUTZ DW 47- 75 ML	01

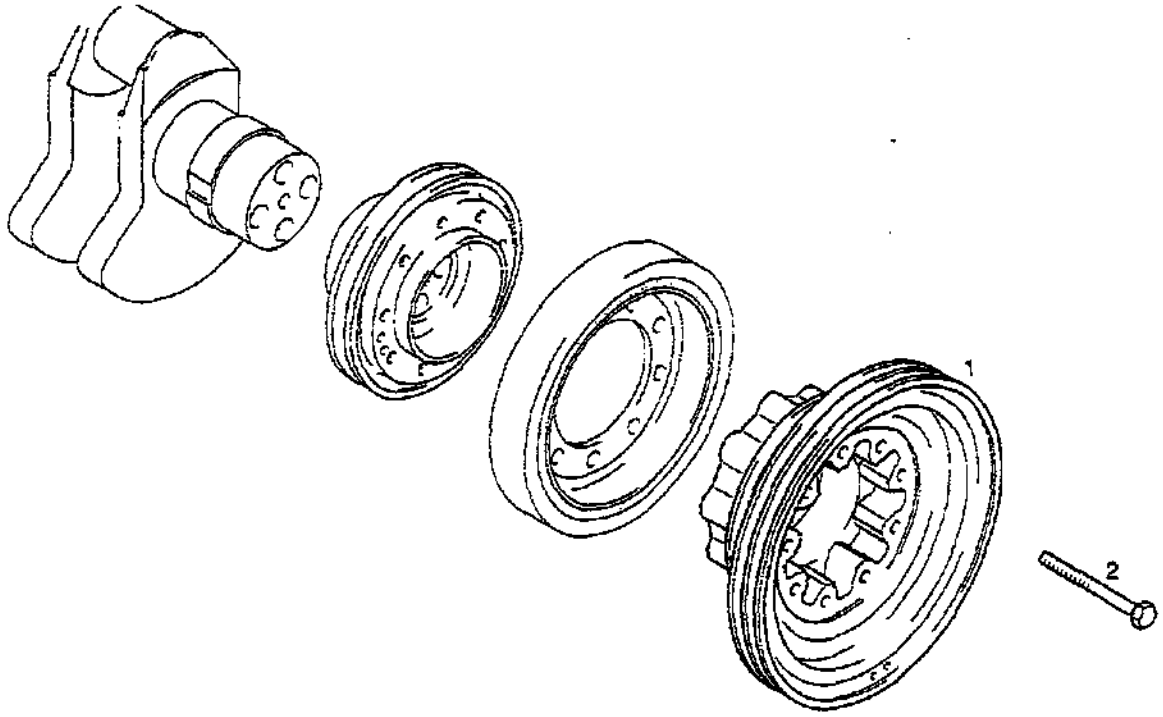

KEILR.SCHEIBENANB. V-BELT PULLEY ASSY MONT.POULIE COURR MONTAJ.POLEA CORR. 0130-05 507 0249

Bild Pos.	Teile-Nr.	Stck. zahl	DEUTSCH	ENGLISH	FRANCAIS	ESPANOL	Nummer/Bemerkung	ETK
1	0419 7633	1	KEILRIEMENSCHEIBE	V-GROOVED PULLEY	POULIE A GORGE	POLEA TRAPECIAL		
2	0113 9579	9	SECHSKANTSCHRAUBE	HEXAGON BOLT	VIS TETE HEXAGONAL	TORN.DE CABE.EXAG.	DIN 000931- M10 x 95 - 10.9-O ELGESCHW.	

000

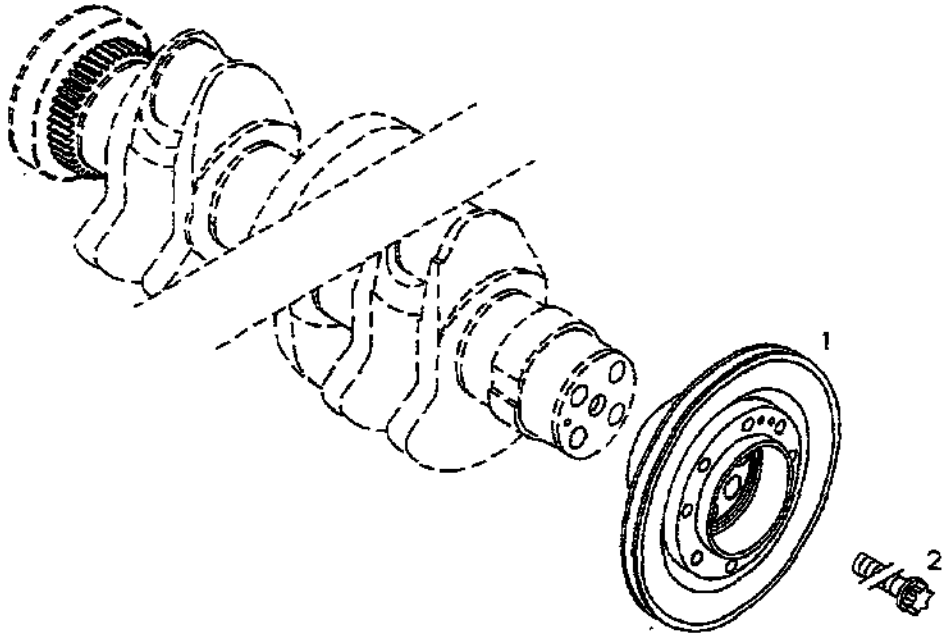

KEILRIEMENSCHEIBE V-GROOVED PULLEY POULIE A GORGE POLEA TRAPECIAL 0130-05 507 0464

Bild Pos.	Teile-Nr.	Stck. zahl	DEUTSCH	ENGLISH	FRANCAIS	ESPANOL	Nummer/Bemerkung	ETK
1	0419 8808	1	KEILRIEMENSCHEIBE	V-GROOVED PULLEY	POULIE A GORGE	POLEA TRAPECIAL		
2	0117 9415	6	TORX-SCHRAUBE	TORX-HEAD BOLT	VIS A TETE TORX	TORNILLO TEST.TORX	H 0C2032-HBM16X1,5X80-10.9-OE LGESCHWAERZT	

000

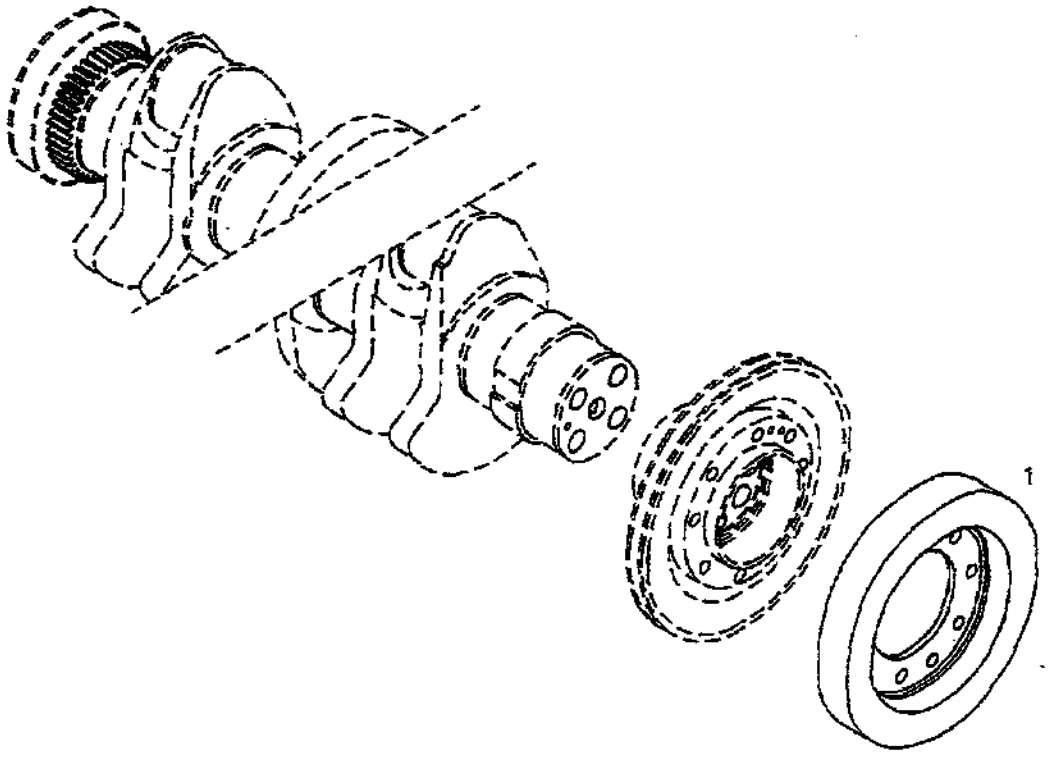

SCHWINGS.DAEMPFER VIBRATION DAMPER AMORT.VIBRATIONS AMORTIGUAD.OSCILAC 0130-05 507 0490

Bild Pos.	Teile-Nr.	Stck. zahl	DEUTSCH	ENGLISH	FRANCAIS	ESPANOL	Nummer/Bemerkung	ETK
1	0420 1620	1	SCHWINGS.DAEMPFER	VIBRATION DAMPER	AMORT.VIBRATIONS	AMORTIGUAD.OSCILAC		

001

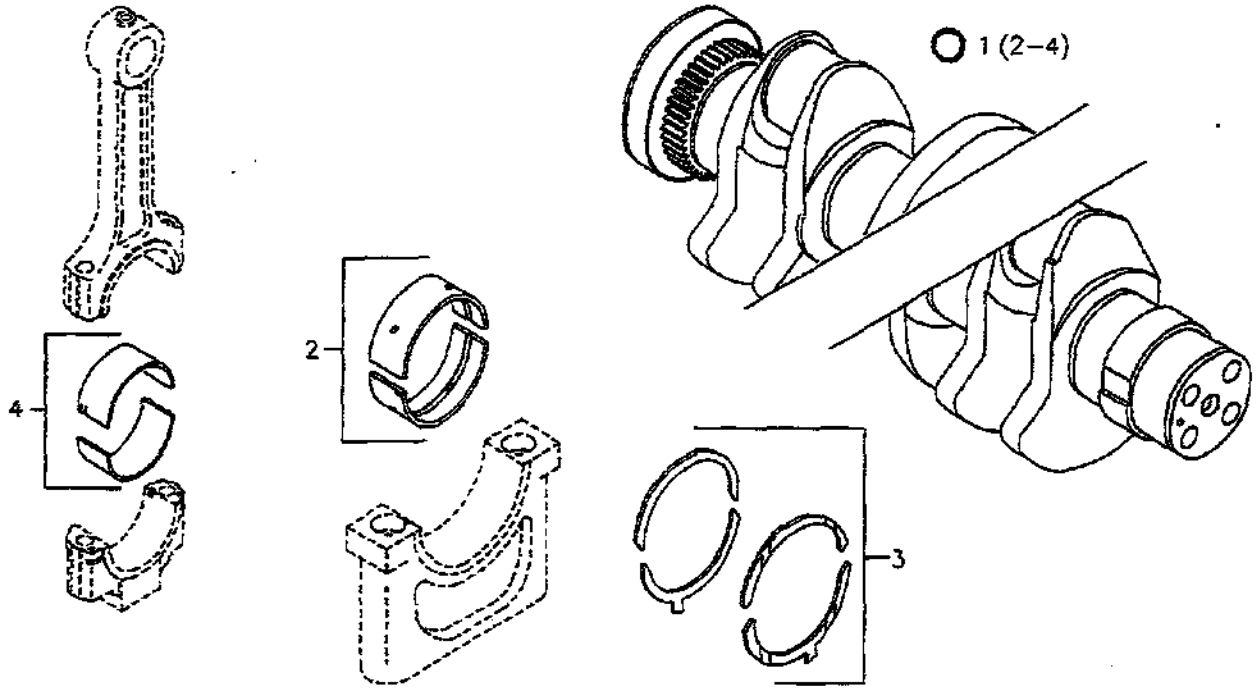

KURBELWELLE CRANKSHAFT VILEBREQUIN CIGUENAL 0130-05 507 0533

Bild Pos.	Teile-Nr.	Stck. zahl	DEUTSCH	ENGLISH	FRANCAIS	ESPANOL	Nummer/Bemerkung	ETK
1	0292 9571	1	KURBELWELLE	CRANKSHAFT	VILEBREQUIN	CIGUENAL	NEUTEIL, AUSTAUSCHTEIL SIEHE POS.(A) KOMPL. MIT POS. SPAREPART (NEW), REMANUFACTURED PART SEE ITEM (A) COMPL. WITH ITEM NOUVELLE PIECE, PIECE DE RECHANGE VOIR REP. (A) COMPLET AVEC REP. COMPONENTE NUEVO, COMPONENTE REACONDICIONADO VER POS. (A) COMPL. CON POS. A 950 B (2-4)	
2	0292 9430	7	KURBELWELLENLAGER	MAIN BEARING	PALIER DE LIGNE	COJINETE D.BANCADA	NORMAL (A) MM RD, UNTERMASSTUFE SIEHE POS.(B) STANDARD (A)MM RD, FOR UNDERSIZE SEE ITEM (B) NORMAL (A) MM ROND, COTE EN SOUS-DIMENSION, VOIR POSTE (B DIAM. NORMAL (A)MM, MEDIDA DE DESGASTE VER POS. (B) A 85,00 MM B 952,962	
3	0292 9438	1	ANLAUFSCHEIBE	THRUST WASHER	RONDELLE DE BUTEE	ARANDELA TOPE	NORMAL (A)MM, UEBERMASSTUFE SIEHE POS. (B) STANDARD (A)MM, FOR OVERSIZE SEE ITEM (B) NORMAL (A)MM, COTE EN SURDIMENSION VOIR POSTE (B) NORMAL (A)MM, SOBREMEDIDA VE POS. (B) A 2,9 MM B 953,963	

001

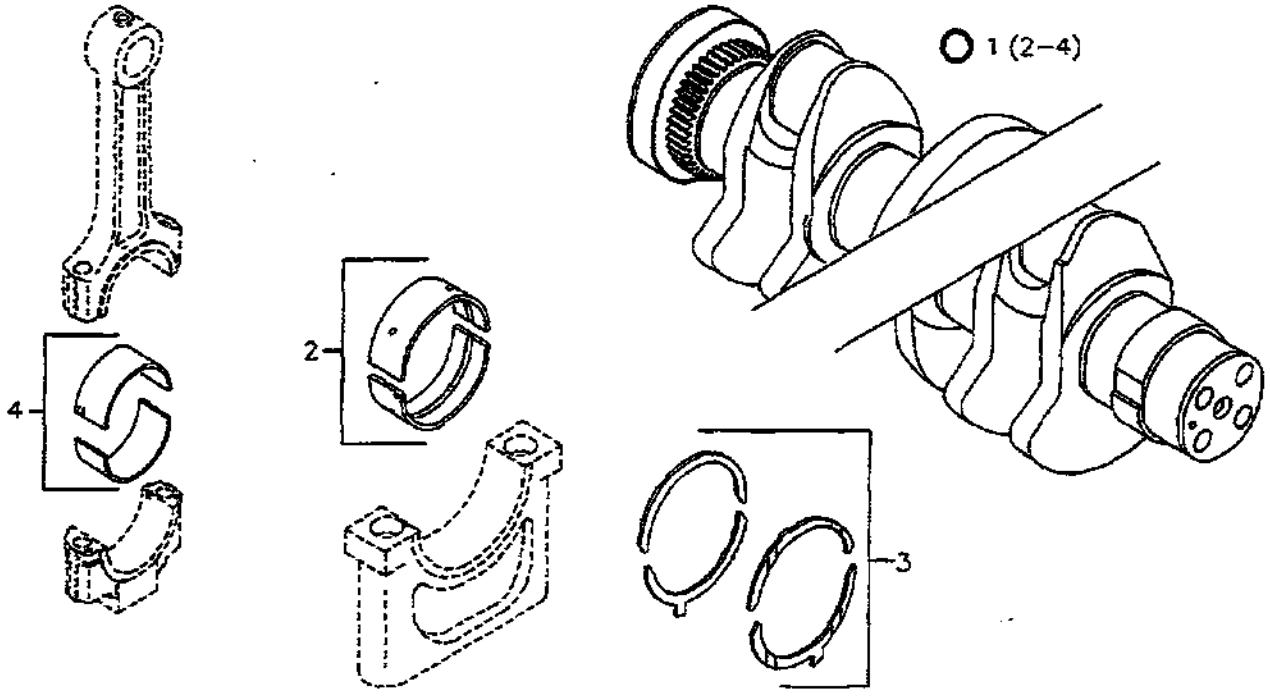

KURBELWELLE CRANKSHAFT VILEBREQUIN CIGUENAL 0130-05 507 0533

Bild Pos	Teile-Nr.	Stck. zahl	DEUTSCH	ENGLISH	FRANCAIS	ESPANOL	Nummer/Bemerkung	ETK
4	0292 9434	8	PLEUELLAGER	BIG END BEARING	PALIER TETE BIELLE	COJINETE CAB.BIELA	NORMAL (A) MM RD. UNTERMASSTUFE SIEHE POS.(B) STANDARD (A)MM RD. FOR UNDERSIZE SEE ITEM (B) NORMAL (A) MM ROND. COTE EN SOUS-DIMENSION. VOIR POSTE (B) DIAM. NORMAL (A)MM. MEDIDA DE DESGASTE VER POS. (B) A 86.00 MM B 954,964	
950	0292 9574	NB	AUST.-KURBELWELLE	EXCHANG.CRANKSHAFT	VILEBREQ.D'ECHANGE	CIGUENAL REACONDIC	AUSTAUSCHTEIL FUER POS. (A) KOMPL. MIT POS. (B) REBUILT PART FOR ITEM (A) COMPL. WITH ITEM (B) PIECE DE RECHANGE POUR POS(A) COMPLET AVEC REP. (B) PIEZA REACONDICIONADA PARA POS. (A) COMPL. CON POS. (B) B 952,953,954 BZW 962,963,964	
952	0292 9431	NB	KURBELWELLENLAGER	MAIN BEARING	PALIER DE LIGNE	COJINETE D.BANCADA	1. UNTERMASSTUFE 1ST UNDERSIZE 1ERE COTE EN SOUS-DIMENSION 1A MEDIDA DE DESGASTE 84,75 MM RD	
953	0292 9439	NB	ANLAUFSCHEIBE	THRUST WASHER	RONDELLE DE BUTEE	ARANDELA TOPE	1. UEBERMASSTUFE 1ST OVERSIZE 1ERE COTE EN SURDIMENSION 1A SOBREMEDIDA 3,1 MM	
954	0292 9435	NB	PLEUELLAGER	BIG END BEARING	PALIER TETE BIELLE	COJINETE CAB.BIELA	1. UNTERMASSTUFE 1ST UNDERSIZE 1ERE COTE EN SOUS-DIMENSION 1A MEDIDA DE DESGASTE 67,75 MM RD	

001

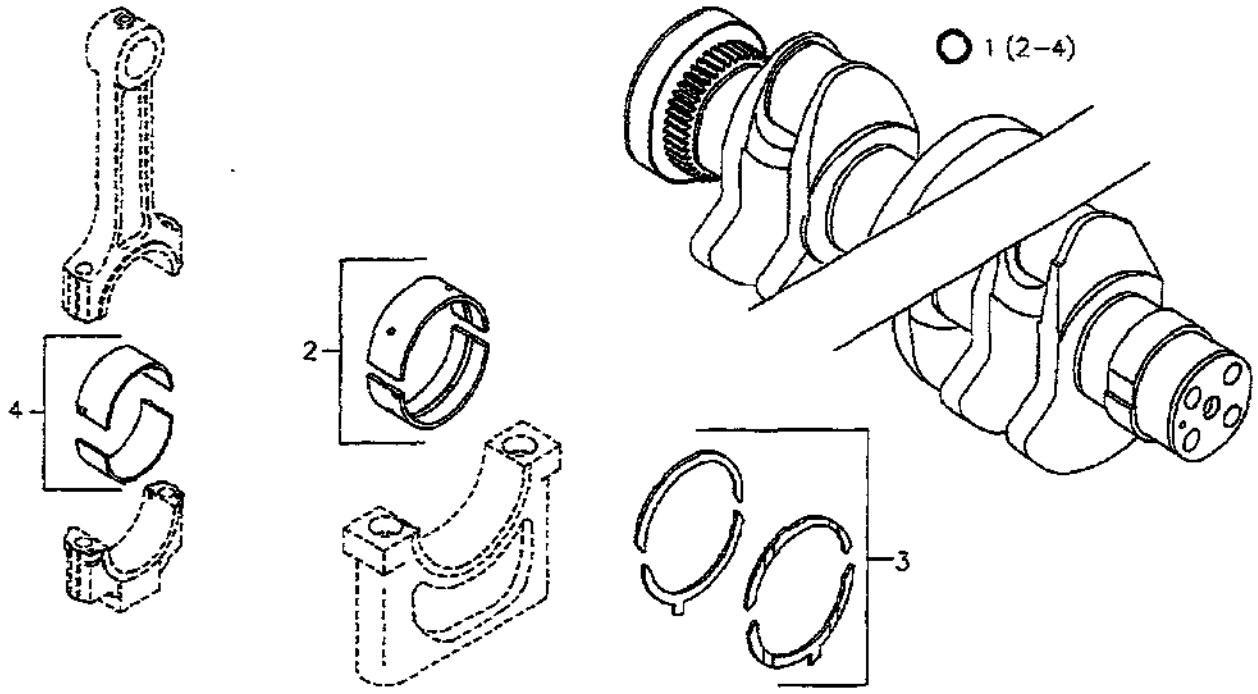

KURBELWELLE CRANKSHAFT VILEBREQUIN CIGUENAL 0130-05 507 0533

Bild Pos.	Teile-Nr.	Stck. zahl	DEUTSCH	ENGLISH	FRANCAIS	ESPANOL	Nummer/Bemerkung	ETK
962	0292 9432	NB	KURBELWELLENLAGER	MAIN BEARING	PALIER DE LIGNE	COJINETE D.BANCADA	2. UNTERMASSTUFE 2ND UNDERSIZE 2EME COTE EN SOUS-DIMENSION 2A MEDIDA DE DESGASTE 84,50 MM RD	
963	0292 9439	NB	ANLAUFSCHEIBE	THRUST WASHER	RONDELLE DE BUTEE	ARANDELA TOPE		
964	0292 9436	NB	PLEUELLAGER	BIG END BEARING	PALIER TÊTE BIELLE	COJINETE CAB.BIELA	2. UNTERMASSTUFE 2ND UNDERSIZE 2EME COTE EN SOUS-DIMENSION 2A MEDIDA DE DESGASTE 67,50 MM RD	

000

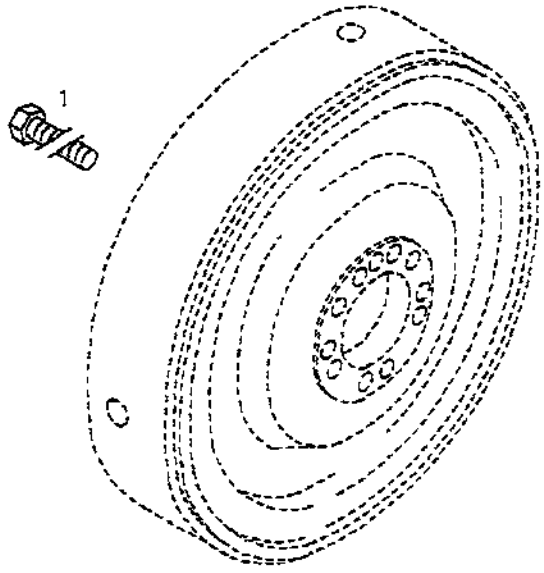

BEFESTIGUNGSTEILE FASTENINGS PIECES DE FIXAT. PIEZAS DE SUJECION 0130-05 507 0580

Bild Pos.	Teile-Nr.	Stck. zahl	DEUTSCH	ENGLISH	FRANCAIS	ESPANOL	Nummer/Bemerkung	ETK
1	0420 4128	10	SECHSKANTSCHRAUBE	HEXAGON BOLT	VIS TETE HEXAGONAL	TORN.DE CABE.EXAG.		

000

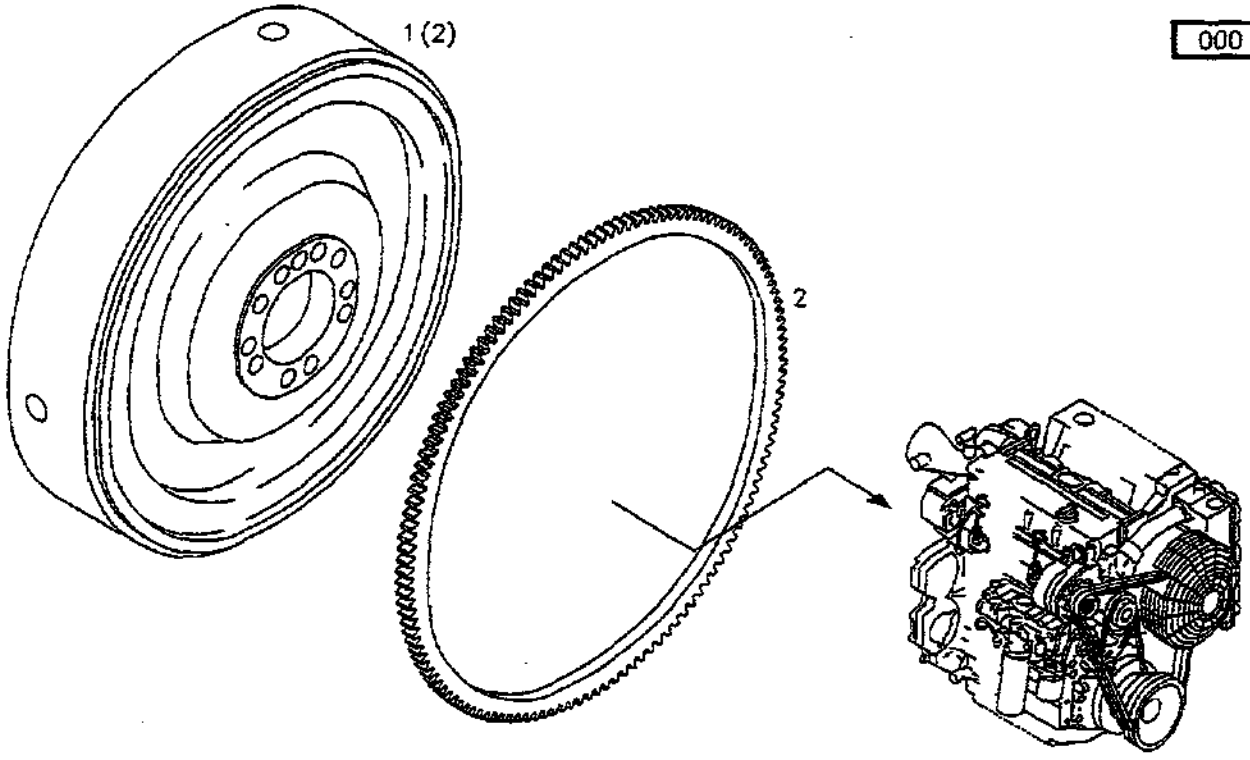

Bild Pos.	Teile-Nr.	Stck.-zahl	SCHWUNGRAD DEUTSCH	FLYWHEEL ENGLISH	VOLANT FRANCAIS	VOLANTE ESPANOL	0130-05 507 1000 Nummer/Bemerkung	ETK
1	0420 7517	1	SCHWUNGRAD	FLYWHEEL	VOLANT	VOLANTE	MIT POS.... WITH ITEM.... AVEC POSTE.... CON POS. ..... (2)	
2	0213 1081	1	ZAHNKRANZ	GEAR RIM	COURONNE DENTEE	CORONA DENTADA		

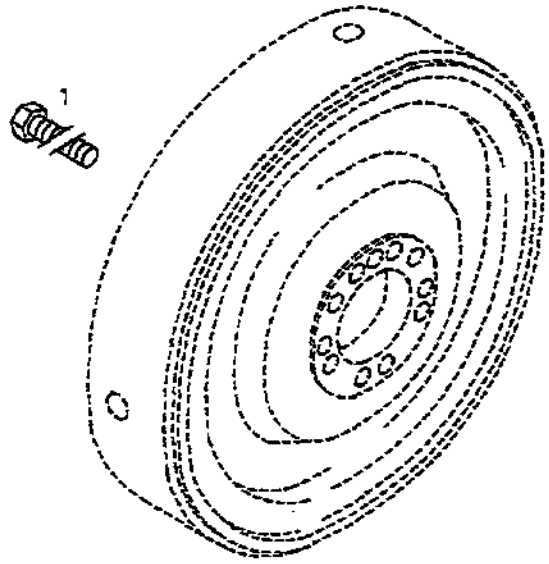

BEFESTIGUNGSTEILE FASTENINGS PIECES DE FIXAT. PIEZAS DE SUJECION 0130-05 507 1001

Bild Pos.	Teile-Nr.	Stck. zahl	DEUTSCH	ENGLISH	FRANCAIS	ESPANOL	Nummer/Bemerkung	ETK
1	0420 4181	10	SECHSKANTSCHRAUBE	HEXAGON BOLT	VIS TETE HEXAGONAL	TORN.DE CABE.EXAG.		

000

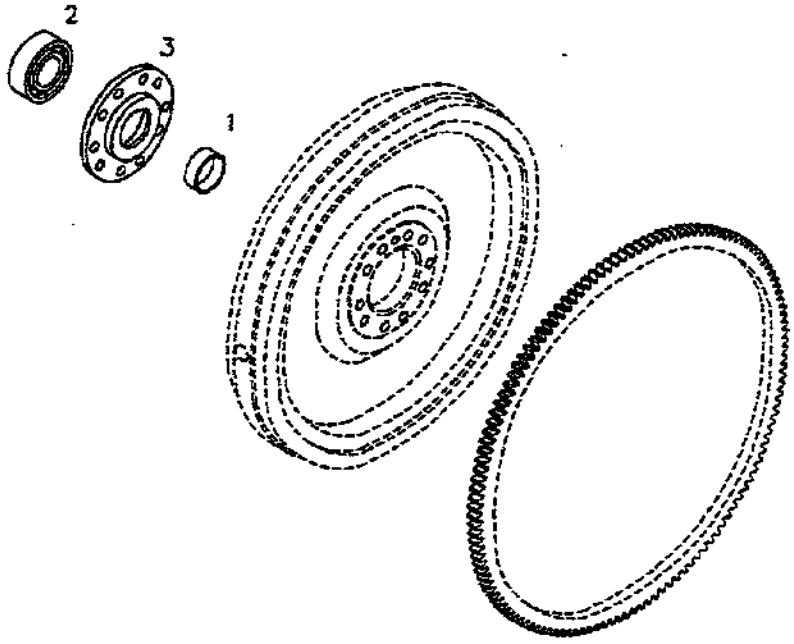

ANBAUTEILE ACCESSORIES ACCESSOIRES PIEZAS DE MONTAJE 0130-05 507 1002

Bild Pos.	Teile-Nr.	Stck. zahl	DEUTSCH	ENGLISH	FRANCAIS	ESPANOL	Nummer/Bemerkung	ETK
1	0420 7515	1	BUCHSE	BUSH	COUILLE	CASQUILLO		
2	0113 6333	1	RILLENKUGELLAGER	BALL BEARING	ROULEM. A BILLES	RODAMIENTO D.BOLAS	DIN 000625- 6205-2RS C3	
3	0215 5148	1	LAGERFLANSCH	BEARING FLANGE	BRIDE SUPPORT	BRIDA DE COJINETE		

000

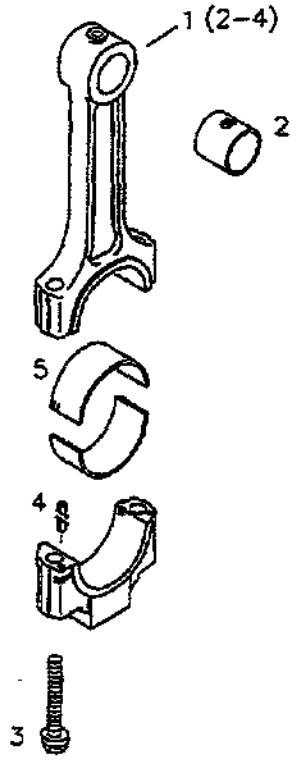

PLEUELSTANGE CONNECTING ROD BIELLE BIELA 0130-06 507 0354

Bild Pos.	Teile-Nr.	Stck.-zahl	DEUTSCH	ENGLISH	FRANCAIS	ESPANOL	Nummer/Bemerkung	ETK
1	0420 0485	1	PLEUELSTANGE	CONNECTING ROD	BIELLE	BIELA	MIT POS.... WITH ITEM.... AVEC POSTE.... CON POS. ..... (2-4)	
2	0420 0024	1	PLEUELBUCHSE	BIG END BUSH	BAGUE	CASQUILLO DE BIELA		
3	0420 0468	2	PLEUELSCHRAUBE	BIG END BOLT	BOULON	TORNILLO DE BIELA		
4	0113 3876	2	SPANNSTIFT	STRAIGHT PIN	GOUPILLE SERRAGE	PASADOR ELASTICO	DIN 001481- 5 X 10-A4C	
5	0292 9434	1	PLEUELLAGER	BIG END BEARING	PALIER TETE BIELLE	COJINETE CAB.BIELA		

000

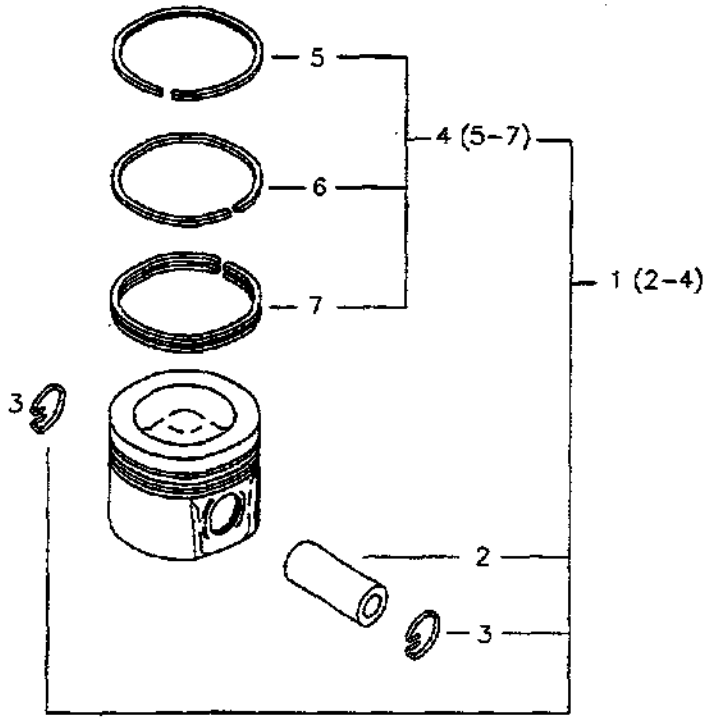

KOLBEN PISTON PISTON PISTON 0130-07 507 0650

Bild Pos.	Teile-Nr.	Stck. zahl	DEUTSCH	ENGLISH	FRANCAIS	ESPANOL	Nummer/Bemerkung	ETK
1	0420 5456	1	KOLBEN	PISTON	PISTON	PISTON	MIT POS.... WITH ITEM.... AVEC POSTE.... CON POS. ..... (2-4)	
2	0420 0139	1	KOLBENBOLZEN	PISTON PIN	AXE DE PISTON	BULON DEL PISTON		
3	0420 0339	2	SPRENGRING	SNAP RING	ANNEAU ELASTIQUE	ANILLO D.EXPANSION		
4	0420 5308	1	KOLBENRINGSATZ	SET OF PIST. RINGS	JEU DES SEGMENTS	JUEGO AROS PISTON	MIT POS.... WITH ITEM.... AVEC POSTE.... CON POS. ..... (5-7)	
5	0420 0610	1	TRAPEZRING	KEYSTONE RING	SEGMENT TRAPEZOID.	SEGMENTO TRAPECIAL		
6	0420 5310	1	MINUTENRING	TAPER-FACED RING	SEGM.PORTEE CONIQ.	SEGMENTO CONICO		
7	0420 0432	1	DACHFASENRING	OIL CONTROL RING	SEGMENT RACLEUR	SEGMENTO ENGRASE		

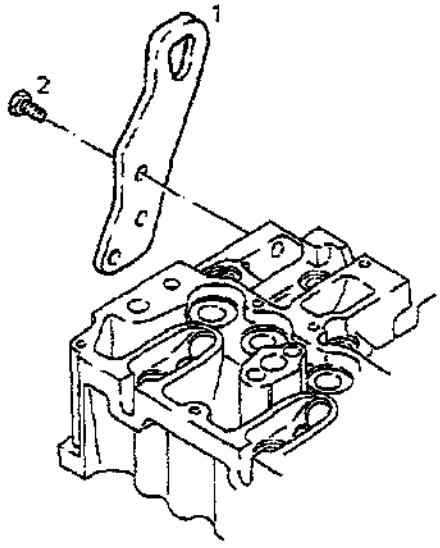

MOTORAUFHAENGUNG ENGINE MOUNTING SUSPENSION MOTEUR ANCLAJE DEL MOTOR 0130-08 507 0164

Bild Pos.	Teile-Nr.	Stck. zahl	DEUTSCH	ENGLISH	FRANCAIS	ESPANOL	Nummer/Bemerkung	ETK
1	0419 7427	1	AUFHAENGEBLECH	SUSPENSING PLATE	TOLE DE SUSPENDU	CHAPA DE SUSPENS.		
2	0111 2412	3	SECHSKANTSCHRAUBE	HEXAGON BOLT	VIS TETE HEXAGONAL	TORN.DE CABE.EXAG.	DIN 000933-M10 X 22 - 8.8-A4C	

000

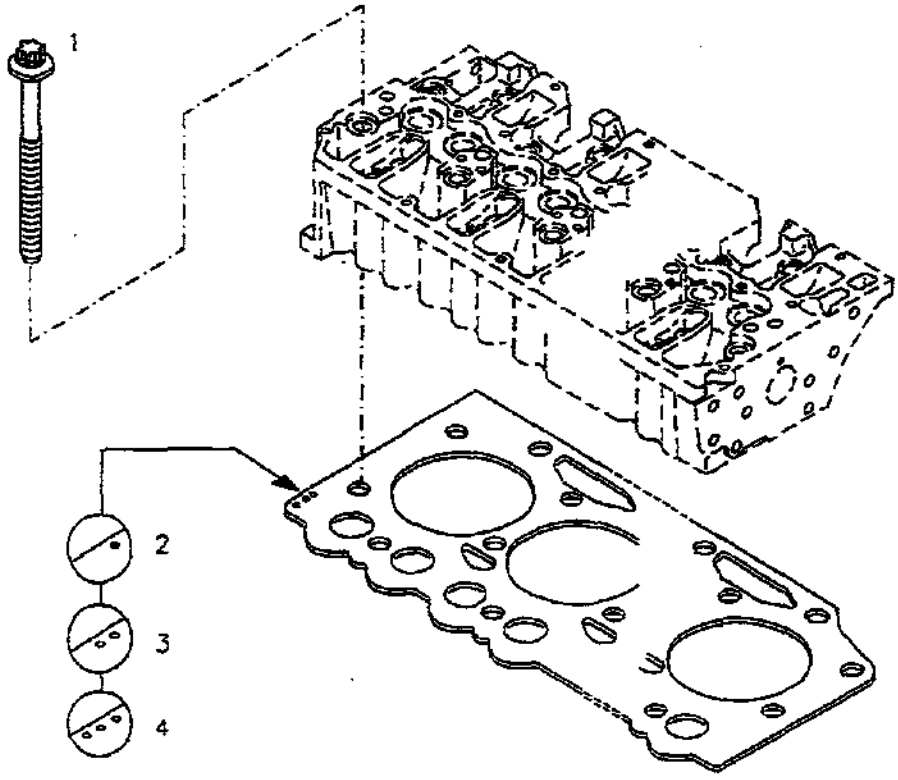

BEFESTIGUNGSTEILE FASTENINGS PIECES DE FIXAT. PIEZAS DE SUJECION 0130-08 507 0356

Bild Pos.	Teile-Nr.	Stck. zahl	DEUTSCH	ENGLISH	FRANCAIS	ESPANOL	Nummer/Bemerkung	ETK
1	0420 2005	26	ZYL.KOPFSCHRAUBE	CYLINDER HEAD BOLT	GOUJON CULASSE	TORNILLO DE CULATA		
2	0420 1559	NB	ZYL.KOPFDICHTUNG	CYLIND.HEAD GASKET	JOINT DE CULASSE	JUNTA DE CULATA		
3	0420 1560	NB	ZYL.KOPFDICHTUNG	CYLIND.HEAD GASKET	JOINT DE CULASSE	JUNTA DE CULATA		
4	0420 1561	NB	ZYL.KOPFDICHTUNG	CYLIND.HEAD GASKET	JOINT DE CULASSE	JUNTA DE CULATA		

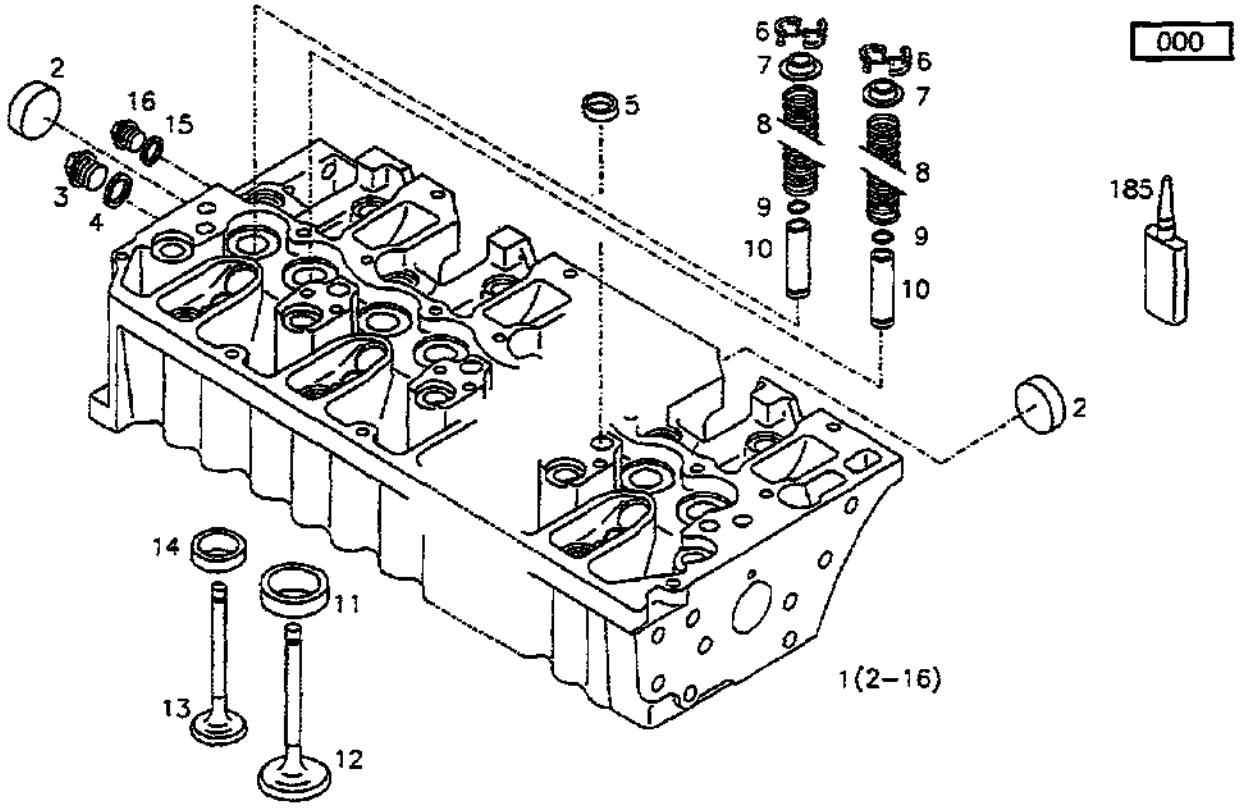

ZYLINDERKOPF CYLINDER HEAD CULASSE CULATA 0130-08 507 0651

Bild Pos.	Teile-Nr.	Stck.-zahl	DEUTSCH	ENGLISH	FRANCAIS	ESPANOL	Nummer/Bemerkung	ETK
1	0420 5357	1	ZYLINDERKOPF	CYLINDER HEAD	CULASSE	CULATA	MIT POS.... WITH ITEM.... AVEC POSTE.... CON POS. ..... (2-16)	
2	0117 9634	6	KERNLOCHVERSCHLUSS	CORE HOLE PLUG	BOUCHON TROU DESS	TAPON CIERRE MACHO	H 002860-A36-ST-FE/ZNPHR	
3	0110 0940	1	VERSCHLUSSSCHRAUBE	SCREW PLUG	BOUCHON FILETE	TAPON ROSCADO	DIN 007604-AM14X1.5 -ST-A4C	
4	0111 8688	1	DICHTRING	SEALING RING	BAGUE D'ETANCHEITE	ANILLO JUNTA	DIN 007603-A 14 X 18 -CU	01
5	0116 5628	5	KERNLOCHVERSCHLUSS	CORE HOLE PLUG	BOUCHON TROU DESS	TAPON CIERRE MACHO	H 000711-B20	
6	1216 4698	24	VENTILKEGELSTUECK	VALVE COLLET	SEMI-CONE VALVULA	CONE ABRAZADOR	H 007020-MK 9	
7	0420 0114	12	FEDERTELLER	VALV.SPRING RETAIN	COUPELLE MOBILE	PLATO RESORTE VALV		
8	0420 0150	12	DRUCKFEDER	COMPRESSION SPRING	RESSORT DE PRESS.	RESORTE DE PRESION		
9	0115 3857	12	RUNDDICHTRING	O-SEAL	ANNEAU TORIQUE	JUNTA TORNICA	H 002927- 9 X 1.5 -FPM-1-82	
10	0420 1238	12	VENTILFUEHRUNG	VALVE GUIDE	GUIDE DE SOUPAPE	GUIA DE VALVULA		
11	0420 0170	6	VENTILSITZRING	VALVE SEAT INSERT	SIEGE RAPPORTE	ANILLO ASIENT.VALV		
12	0420 4014	6	EINLASSVENTIL	INLET VALVE	SOUPAP.D'ADMISSION	VALVUL.DE ADMISION		
13	0420 4015	6	AUSLASSVENTIL	EXHAUST VALVE	SOUPAP.D'ECHAPPEM.	VALVULA DE ESCAPE		
14	0420 0171	6	VENTILSITZRING	VALVE SEAT INSERT	SIEGE RAPPORTE	ANILLO ASIENT.VALV		
15	0111 8659	2	DICHTRING	SEALING RING	BAGUE D'ETANCHEITE	ANILLO JUNTA	DIN 007603-A 10 X 13.5-CU	01
16	0110 0371	1	VERSCHLUSSSCHRAUBE	SCREW PLUG	BOUCHON FILETE	TAPON ROSCADO	DIN 007604-AM10X1 -ST-A4C	
185	0101 1442	1	SICHERUNGSMITTEL	SAFETY/LOCK.AGENT	RESINE-FREIN	MEDIO AFIANZADOR	H 000689-DEUTZ DW 72- 250 ML	

000

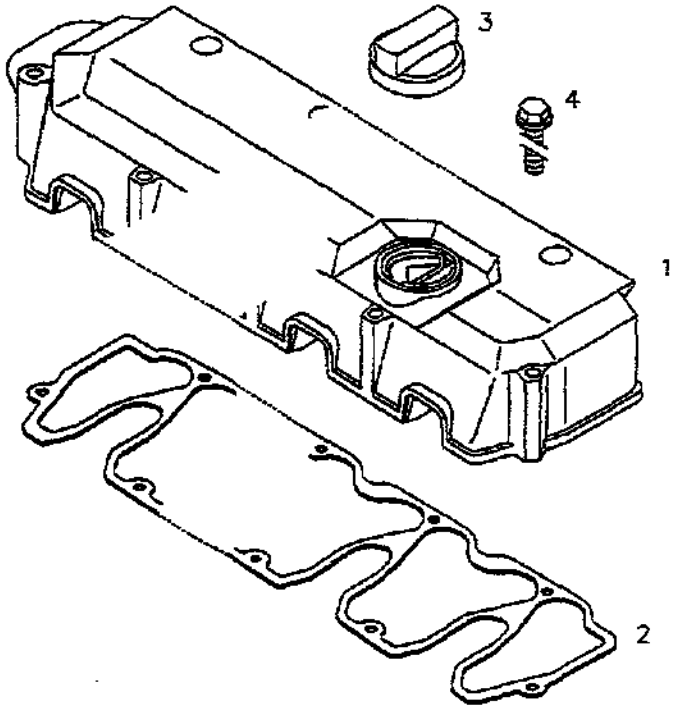

ZYLINDERKOPFHAUBE VALVE MECHAN.COVER CAPOT DE CULBUTEUR TAPA DE BALANCINES 0130-08 507 0857

Bild Pos.	Teile-Nr.	Stck. zahl	DEUTSCH	ENGLISH	FRANCAIS	ESPANOL	Nummer/Bemerkung	ETK
1	0420 5058	1	VENTILANTR.HAUBE	VALVE MECHAN.COVER	CAPOT DE CULBUTEUR	TAPA DE BALANCINES		
2	0420 5894	1	DICHTUNG	GASKET	GARNITURE/JOINT	JUNTA		
3	0117 9630	1	EINFUELLVERSCHLUSS	FILLER CAP	BOUCHON DE REMPL	TAPON LLENADO		
4	0117 9293	13	SECHSKANTSCHRAUBE	HEXAGON BOLT	VIS TETE HEXAGONAL	TORN.DE CABE.EXAG.	H 002008-F-M 6 X 95- 10.9-A4C	

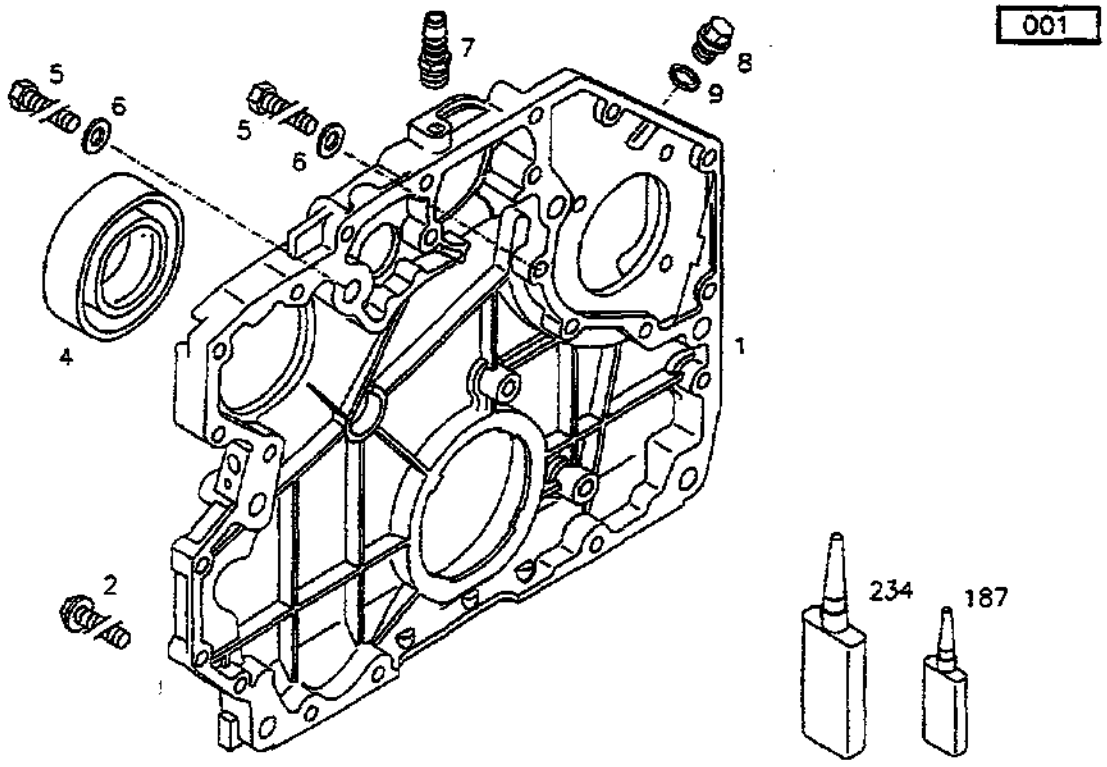

RAEDERKASTEN GEARCASE BOITE D'ENGRENAGES CAJA DE ENGRANAJES 0130-09 507 0531

Bild Pos.	Teile-Nr.	Stck. zahl	DEUTSCH	ENGLISH	FRANCAIS	ESPANOL	Nummer/Bemerkung	ETK
1	0420 3226	1	RAEDERKASTEN	GEARCASE	BOITE D'ENGRENAGES	CAJA DE ENGRANAJES		
2	0114 3362	16	SECHSKANTSCHRAUBE	HEXAGON BOLT	VIS TETE HEXAGONAL	TORN.DE CABE.EXAG.	H 002008-F-M 8 X 35- 10.9-A4C	
4	0420 2332	1	WELLENDICHTRING	ROT.SHAFT LIP SEAL	JOINT A LEVRE	RETEN		
5	0112 2462	2	SECHSKANTSCHRAUBE	HEXAGON BOLT	VIS TETE HEXAGONAL	TORN.DE CABE.EXAG.	DIN 000933-M16 X 80 - 10.9-DE LGESCHW	
6	0110 7117	2	SCHEIBE	PLAIN WASHER	RONDELLE PLATE	ARANDELA PLANA	DIN 000125-A17 -140HV-A4C	
7	0117 8868	1	SCHLAUCHANSCHLUSS	HOSE CONNECTOR	RACCORD FLEXIBLE	RACOR P. MANGUERA	H 003452-E 8/M12X1,5-ST	
8	0111 8688	1	DICHTRING	SEALING RING	BAGUE D'ETANCHEITE	ANILLO JUNTA	DIN 007603-A 14 X 18 -CU WWW-NR. 6.0432.01.0.1418	01
9	0114 3503	1	VERSCHLUSSSCHRAUBE	SCREW PLUG	BOUCHON FILETE	TAPON ROSCADO	DIN 000910- M14X1,5 -ST-A4C	
187	0100 9893	1	SICHERUNGSMITTEL	SAFETY/LOCK.AGENT	RESINE-FREIN	MEDIO AFIANZADOR	H 000699-DEUTZ DW 71- 50 ML WWW-NR. 01009893	
234	0101 6024	1	DICHTUNGSMASSE	PACKING COMPOUND	HERMETIC	PASTA HERMETIZANTE	H 000699-DEUTZ DW 67	

000

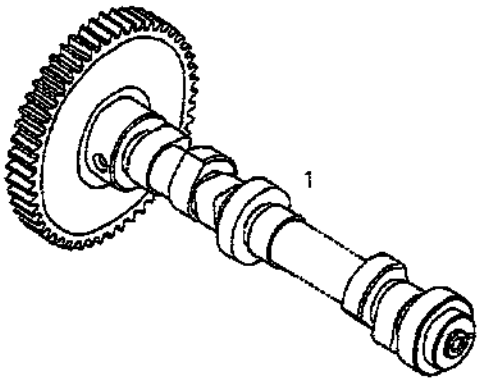

NOCKENWELLE CAMSHAFT ARBRE A CAMES ARBOL DE LEVAS 0130-10 507 0811

Bild Pos.	Teile-Nr.	Stck zahl	DEUTSCH	ENGLISH	FRANCAIS	ESPANOL	Nummer/Bemerkung	ETK
1	0420 5367	1	NOCKENWELLE	CAMSHAFT	ARBRE A CAMES	ARBOL DE LEVAS		

000

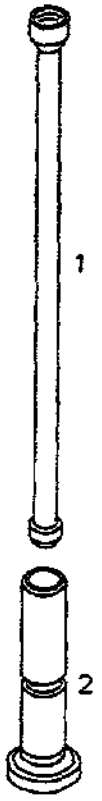

STEUERUNGSTEILE VALVE DRIVE PIECES DISTRIBUT PIEZAS DISTRIBUC. 0130-11 507 0353

Bild Pos.	Teile-Nr.	Stck. zahl	DEUTSCH	ENGLISH	FRANCAIS	ESPANOL	Nummer/Bemerkung	ETK
1	0420 0203	2	STOSSSTANGE	PUSHROD	TIGE DE CULBUTEUR	BARRA DE EMPUJE		
2	0420 0194	2	STOESSEL	TAPPET	POUSSOIR	TAQUE		

Rocker arm bracket
Support de l'axe
Caballete de balancin

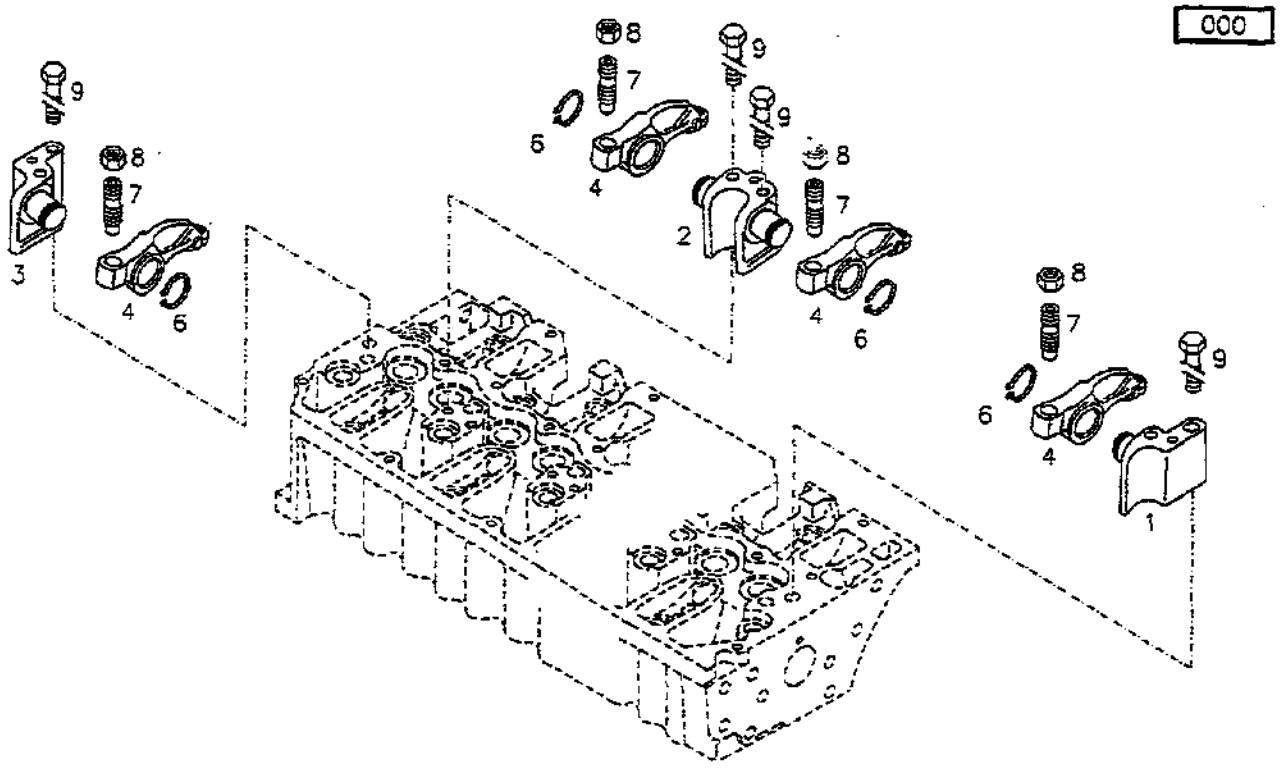

KIPPHEBELBOCK ROCKER ARM BRACKET SUPPORT DE L'AXE CABALLETE BALANCIN 0130-11 507 0357

Bild Pos.	Teile-Nr.	Stck. zahl	DEUTSCH	ENGLISH	FRANCAIS	ESPANOL	Nummer/Bemerkung	ETK
1	0420 0959	1	KIPPHEBELBOCK	ROCKER ARM BRACKET	SUPPORT DE L'AXE	CABALLETE BALANCIN		
2	0420 0960	5	KIPPHEBELBOCK	ROCKER ARM BRACKET	SUPPORT DE L'AXE	CABALLETE BALANCIN		
3	0420 0951	1	KIPPHEBELBOCK	ROCKER ARM BRACKET	SUPPORT DE L'AXE	CABALLETE BALANCIN		
4	0420 4023	12	KIPPHEBEL	ROCKER ARM	CULBUTEUR	BALANCIN		
6	0110 7731	12	SICHERUNGSRING	CIRCLIP	CIRCLIP	ANILLO D.SEGURIDAD	DIN 000471- 21X1,2	
7	0419 2398	12	EINSTELLSCHRAUBE	ADJUSTING SCREW	VIS DE REGLAGE	TORNILLO GRADUABLE		
8	0210 9637	12	SECHSKANTMUTTER	HEXAGON NUT	ECROU HEXAGONAL	TUERCA EXAGONAL		
9	0111 1186	14	SECHSKANTSCHRAUBE	HEXAGON BOLT	VIS TETE HEXAGONAL	TORN.DE CABE.EXAG.	DIN 000931- M 8 X 75 - 8.8-A4 C	

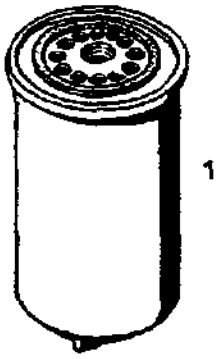

FILTERPATRONE FILTER CARTRIDGE CARTOUCHE FILTRANT CARTUCHO FILTRO 0148-15 503 2122

Bild Pos.	Teile-Nr.	Stck. zahl	DEUTSCH	ENGLISH	FRANCAIS	ESPANOL	Nummer/Bemerkung	ETK
1	0117 4421	1	SCHMIEROELFILTER	LUBRIC. OIL FILTER	FILTRE A HUILE	FILTRO ACEITE LUBR	H 004123- AD1,5R-2-11-212-1	01

000

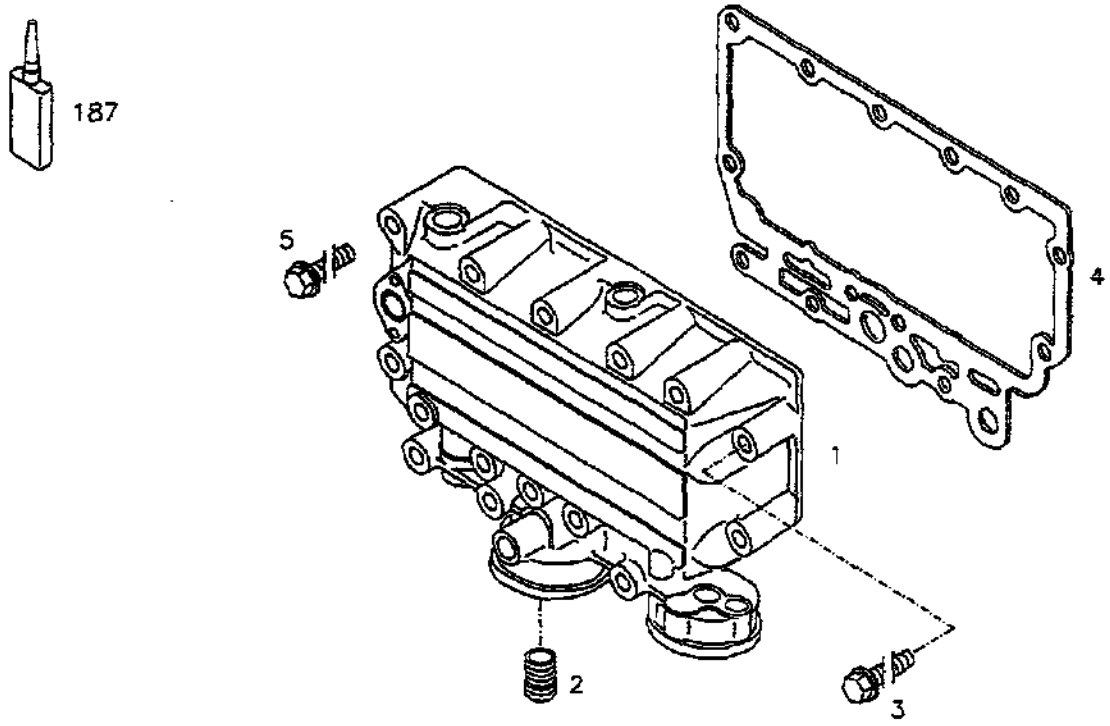

OELKUEHLERGEHAEUSE OIL COOLER BOX BOITIER D.REFRIGER CAJA ENFRI.ACEITE 0130-15 507 0484

Bild Pos.	Teile-Nr.	Stck.-zahl	DEUTSCH	ENGLISH	FRANCAIS	ESPANOL	Nummer/Bemerkung	ETK
1	0420 2316	1	OELKUEHLERGEHAEUSE	OIL COOLER BOX	BOITIER D.REFRIGER	CAJA ENFRI.ACEITE	MIT POS.... WITH ITEM.... AVEC POSTE.... CON POS.	
2	0419 2447	1	GEWINDEBUCHSE	SCREWED BUSH	DOUILLE FILETEE	CASQUILLO ROSCADO		
3	0114 3363	2	SECHSKANTSCHRAUBE	HEXAGON BOLT	VIS TETE HEXAGONAL	TORN.DE CABE.EXAG.	H 002008-F-M 8 X 50- 10.9-A4C	
4	0420 0859	1	DICHTUNG	GASKET	GARNITURE/JOINT	JUNTA		
5	0114 3383	12	SECHSKANTSCHRAUBE	HEXAGON BOLT	VIS TETE HEXAGONAL	TORN.DE CABE.EXAG.	H 002008-F-M 8 X 75- 10.9-A4C	
187	0100 9893	1	SICHERUNGSMITTEL	SAFETY/LOCK.AGENT	RESINE-FREIN	MEDIO AFIANZADOR	H 000599-DEUTZ DW.71- 50 ML	

000

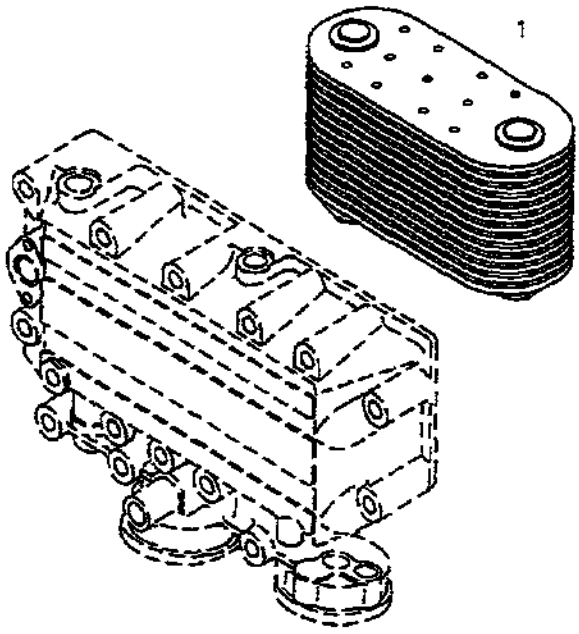

OELKUEHLER OIL COOLER REFROIDISSEUR ENFRIADOR D.ACEITE 0130-15 507 0485

Bild Pos.	Teile-Nr.	Stck. zahl	DEUTSCH	ENGLISH	FRANCAIS	ESPANOL	Nummer/Bemerkung	ETK
1	0420 3560	1	OELKUEHLER	OIL COOLER	REFROIDISSEUR	ENFRIADOR D.ACEITE		

000

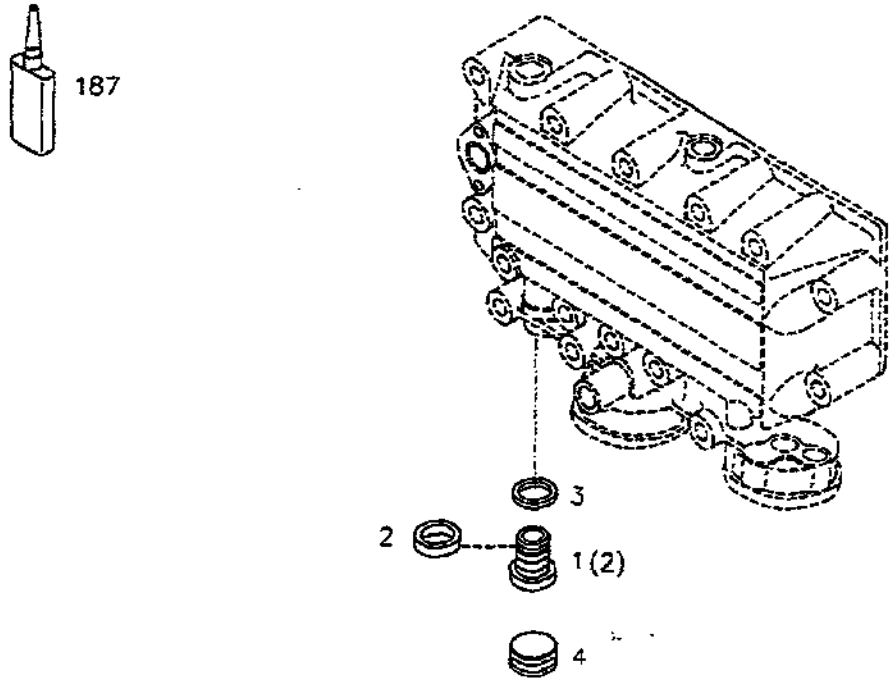

BEFESTIGUNGSTEILE FASTENINGS PIECES DE FIXAT. PIEZAS DE SUJECION 0130-15 507 0487

Bild Pos.	Teile-Nr.	Stck. zahl	DEUTSCH	ENGLISH	FRANCAIS	ESPANOL	Nummer/Bemerkung	ETK
1	0420 1285	1	BUNDSCHRAUBE	COLLAR SCREW	VIS A COLLET	TORNILLO ASIENTO	MIT POS.... WITH ITEM.... AVEC POSTE.... CON POS. ..... (2)	
2	0420 1286	1	DICHTRING	SEALING RING	BAGUE D'ETANCHEITE	ANILLO JUNTA	H 002914-CM26X1,5 -PTFE-SPEZI AL-BRAUN	
3	0111 8763	1	DICHTRING	SEALING RING	BAGUE D'ETANCHEITE	ANILLO JUNTA	DIN 007603-A 26 X 32 -ALU	
4	0116 8995	1	SCHLITZSTOPFEN	SLOTTED PLUG	BOUCHON FENDU	TAPON RANURADO	H 000810-M38X1,5	
187	0100 9893	NB	SICHERUNGSMITTEL	SAFETY/LOCK.AGENT	RESINE-FREIN	MEDIO AFIANZADOR	H 000699-DEUTZ DW 71- 50 ML	

000

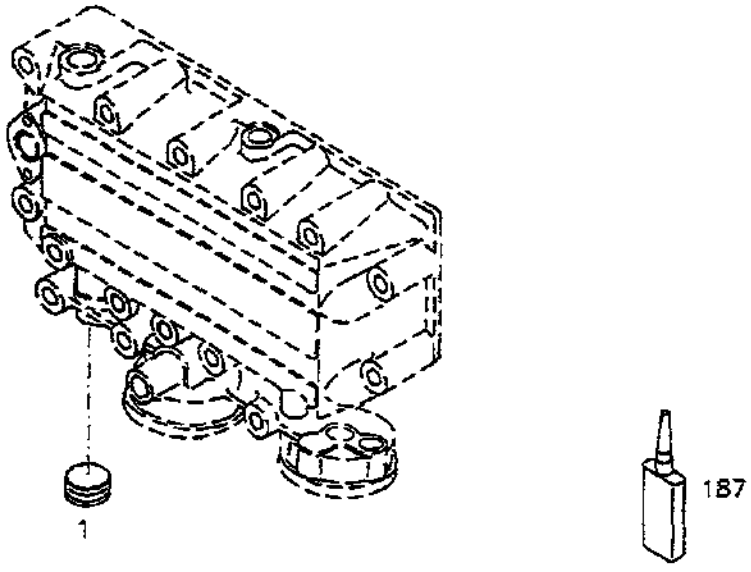

VERSCHLUSSTEILE BLANKING PARTS OBTURATEURS PIEZAS DE CIERRE 0130-15 507 0486

Bild Pos.	Teile-Nr.	Stck. zahl	DEUTSCH	ENGLISH	FRANCAIS	ESPANOL	Nummer/Bemerkung	ETK
1	0116 6995	1	SCHLITZSTOPFEN	SLOTTED PLUG	BOUCHON FENDU	TAPON RANURADO	H 000810-M38X1,5	
187	0100 9893	1	SICHERUNGSMITTEL	SAFETY/LOCK.AGENT	RESINE-FREIN	MEDIO AFIANZADOR	H 000699-DEUTZ DW 71- 50 ML	

000

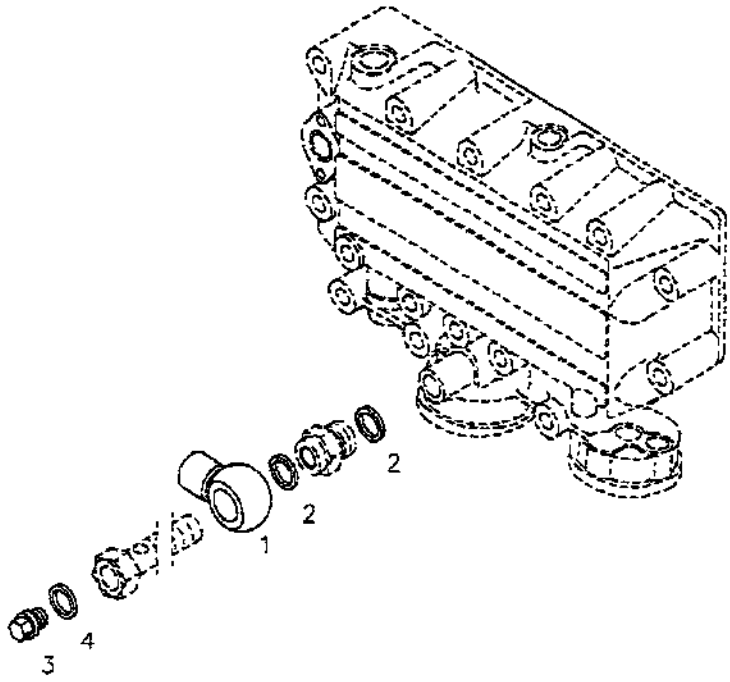

MESSANSCHLUSS TEST COUPLING PRISE DIAGNOSTIC EMPALME D.MEDICION 0130-15 507 0488

Bild Pos.	Teile-Nr.	Stck. Zahl	DEUTSCH	ENGLISH	FRANCAIS	ESPANOL	Nummer/Bemerkung	ETK
1	0336 6185	1	GEWINDERINGSTUECK	THREADED FITTING	PIECE ANNUL FILETE	PZA.ANULAR ROSCADA		
2	0111 8688	4	DICHTRING	SEALING RING	BAGUE D'ETANCHEITE	ANILLO JUNTA	DIN 007603-A 14 X 18 -CU	01
3	0112 4445	1	VERSCHLUSSSCHRAUBE	SCREW PLUG	BOUCHON FILETE	TAPON ROSCADO	DIN 000910- M10X1 -ST-A4C	
4	0111 8659	1	DICHTRING	SEALING RING	BAGUE D'ETANCHEITE	ANILLO JUNTA	DIN 007603-A 10 X 13,5-CU	01

000

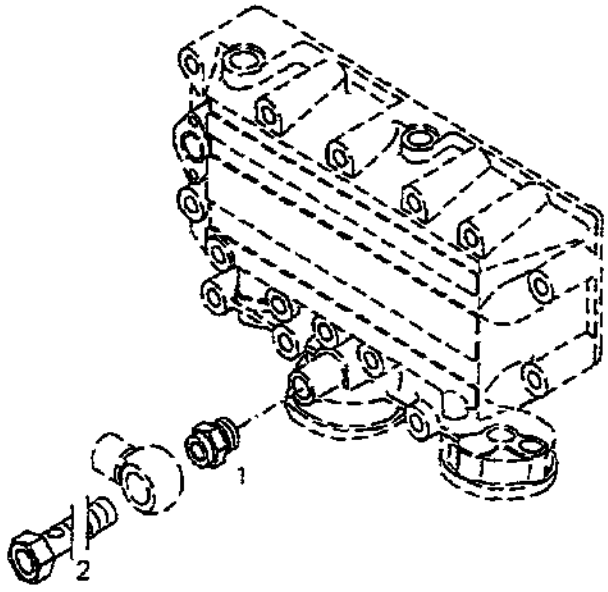

VERSCHLUSSTEILE BLANKING PARTS OBTURATEURS PIEZAS DE CIERRE 0130-15 507 0489

Bild Pos.	Teile-Nr.	Stck. zahl	DEUTSCH	ENGLISH	FRANCAIS	ESPANOL	Nummer/Bemerkung	ETK
1	0414 9058	1	GEWINDEBUCHSE	SCREWED BUSH	DOUILLE FILETEE	CASQUILLO ROSCADO		
2	0335 9329	1	HOHLSCHRAUBE	HOLLOW SCREW	VIS BANJO	TORNILLO HUECO		

000

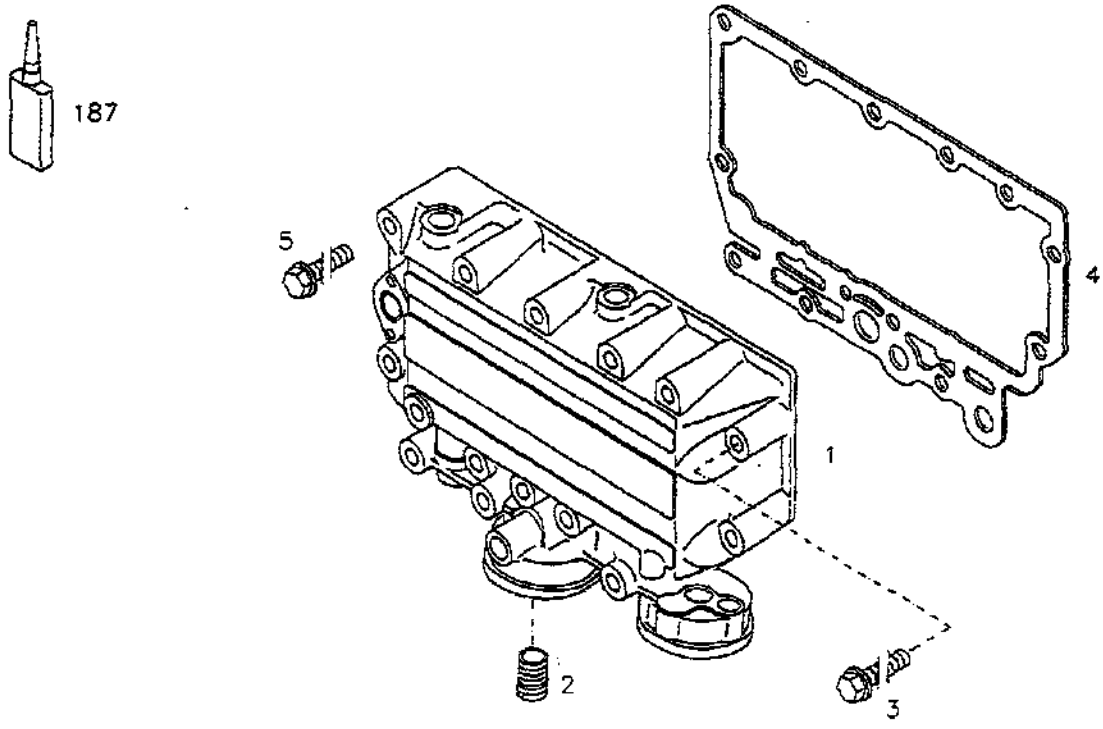

OELKUEHLERGEHAEUSE OIL COOLER BOX BOITIER D.REFRIGER CAJA ENFRI.ACEITE 0130-15 507 0588

Bild Pos.	Teile-Nr.	Stck. zahl	DEUTSCH	ENGLISH	FRANCAIS	ESPANOL	Nummer/Bemerkung	ETK
1	0420 2317	1	OELKUEHLERGEHAEUSE	OIL COOLER BOX	BOITIER D.REFRIGER	CAJA ENFRI.ACEITE		
2	0419 2447	1	GEWINDEBUCHSE	SCREWED BUSH	DOUILLE FILETEE	CASQUILLO ROSCADO		
3	0114 3363	2	SECHSKANTSCHRAUBE	HEXAGON BOLT	VIS TETE HEXAGONAL	TORN.DE CABE.EXAG.	H 002008-F-M 8 X 50- 10.9-A4C	
4	0420 0859	1	DICHTUNG	GASKET	GARNITURE/JOINT	JUNTA		
5	0114 3383	12	SECHSKANTSCHRAUBE	HEXAGON BOLT	VIS TETE HEXAGONAL	TORN.DE CABE.EXAG.	H 002008-F-M 8 X 75- 10.9-A4C	
187	0100 9893	1	SICHERUNGSMITTEL	SAFETY/LOCK.AGENT	RESINE-FREIN	MEDIO AFIANZADOR	H 000599-DEUTZ DW 71- 50 ML	

000

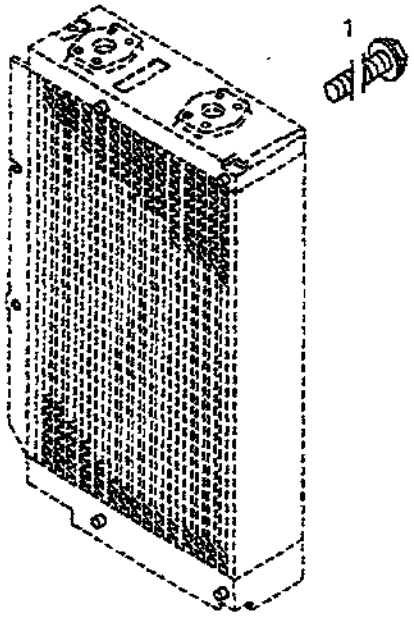

OELKUEHL.BEFESTIG. OIL COOLER FASTEN. ATTACHE REFR.HUILE SUJEC.ENFRI.ACEITE 0130-15 507 0609

Bild Pos.	Teile-Nr.	Stck zahl	DEUTSCH	ENGLISH	FRANCAIS	ESPANOL	Nummer/Bemerkung	ETK
1	0117 9295	4	SECHSKANTSCHRAUBE	HEXAGON BOLT	VIS TETE HEXAGONAL	TORN.DE CABE.EXAG.	H 002008-F-M 8 X100- 10.9-A4C	

000

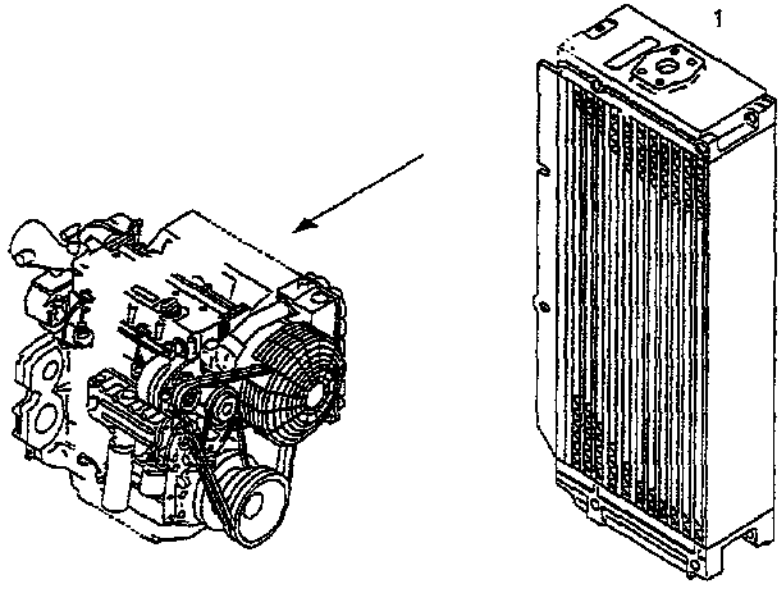

HYDRAUL.OELKUEHLER HYDRAUL.OIL COOLER REFR.D'HUILE HYDR. REFRIG.ACTE.CONVER 0130-15 507 0850

Bild Pos.	Teile-Nr.	Stck. zahl	DEUTSCH	ENGLISH	FRANÇAIS	ESPANOL	Nummer/Bemerkung	ETK
1	0420 3435	1	HYDRAUL.OELKUEHLER	HYDRAUL.OIL COOLER	REFR.D'HUILE HYDR.	REFRIG.ACTE.CONVER		

000

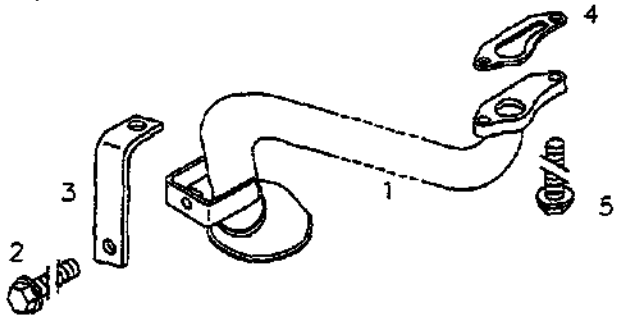

OELSAUGROHR OIL SUCTION PIPE TUBULURE D'ASPIRAT TUBO ASPIR.ACEITE 0130-16 507 0846

Bild Pos.	Teile-Nr.	Stck. zahl	DEUTSCH	ENGLISH	FRANCAIS	ESPANOL	Nummer/Bemerkung	ETK
1	0420 4870	1	OELSAUGROHR	OIL SUCTION PIPE	TUBULURE D'ASPIRAT	TUBO ASPIR.ACEITE		
2	0117 9587	2	SECHSKANTSCHRAUBE	HEXAGON BOLT	VIS TETE HEXAGONAL	TORN.DE CABE.EXAG.	H 002008-F-M 8 X 25- 10.9	
3	0420 4803	1	LASCHE	CONNECTING PLATE	ECLISSE	ECLISA		
4	0419 8741	1	DICHTUNG	GASKET	GARNITURE/JOINT	JUNTA		
5	0114 3941	2	SECHSKANTSCHRAUBE	HEXAGON BOLT	VIS TETE HEXAGONAL	TORN.DE CABE.EXAG.	H 002008-F-M 8 X 55- 10.9-A4C	

000

EINSPRITZPUMPE FUEL INJECT. PUMP POMPE D'INJECTION BOMBA DE INYECCION 0130-17 507 0472

Bild Pos.	Teile-Nr.	Stck. zahl	DEUTSCH	ENGLISH	FRANCAIS	ESPANOL	Nummer/Bemerkung	ETK
1	0211 1066	1	EINSPRITZPUMPE	FUEL INJECT. PUMP	POMPE D'INJECTION	BOMBA DE INYECCION		

000

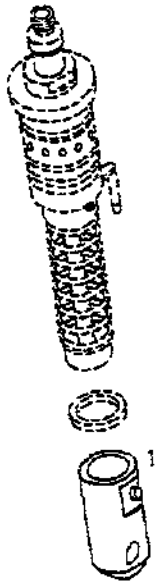

ROLLENSTOESSEL ROLLER TAPPET POUSSOIR A GALET TAQUE DE RODILLO 0130-17 507 0528

Bild Pos.	Teile-Nr.	Stck. zahl	DEUTSCH	ENGLISH	FRANCAIS	ESPANOL	Nummer/Bemerkung	ETK
1	0212 6891	1	ROLLENSTOESSEL	ROLLER TAPPET	POUSSOIR A GALET	TAQUE DE RODILLO		

000

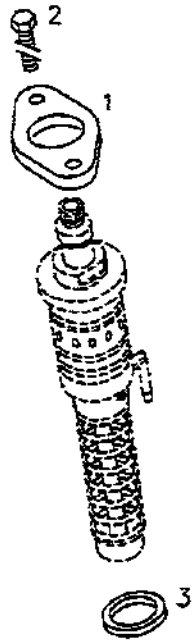

BEFESTIGUNGSTEILE FASTENINGS PIECES DE FIXAT. PIEZAS DE SUJECION 0130-17 507 0676

Bild Pos.	Teile-Nr.	Stck. zahl	DEUTSCH	ENGLISH	FRANCAIS	ESPANOL	Nummer/Bemerkung	ETK
1	0420 1696	1	FLANSCH	FLANGE	BRIDE/COLLET	BRIDA		
2	0111 2338	2	SECHSKANTSCHRAUBE	HEXAGON BOLT	VIS TETE HEXAGONAL	TORN. DE CABE. EXAG.	DIN 000933-M 8 x 30 - 10.9-A4 C	
3	0420 4140	1	AUSGLEICHSCHEIBE	SHIM	CALE	ARANDELA COMPENS.	VOM MESSERGEBNIS ABHAENGIG, DICKE (A) = ...MM. ANDERE DICKEN SIEHE POS. (B) DEPENDIG UPON MEASUREMENT RESULT, DIFFERENT THICKNESSES - SEE ITEM - EN FONCTION DU RESULTAT DE MESURE; POUR D' AUTRES EPAISSEURS VOIR REPERE CORRESPOND. SEGUN EL RESULTADO DE LA MEDICION; PARA OTROS ESPESORES, VER POS. A=1.00 MM B=950-976	
950	0420 4141	NB	AUSGLEICHSCHEIBE	SHIM	CALE	ARANDELA COMPENS.	....MM DICK ....MM THICKNESS ....MM D'EPAISSEUR ESPESOR:....MM 1,1 MM	
951	0420 4142	NB	AUSGLEICHSCHEIBE	SHIM	CALE	ARANDELA COMPENS.	....MM DICK ....MM THICKNESS ....MM D'EPAISSEUR ESPESOR:....MM 1,2 MM	
952	0420 4143	NB	AUSGLEICHSCHEIBE	SHIM	CALE	ARANDELA COMPENS.	....MM DICK ....MM THICKNESS ....MM D'EPAISSEUR ESPESOR:....MM 1,3 MM	
953	0420 4144	NB	AUSGLEICHSCHEIBE	SHIM	CALE	ARANDELA COMPENS.	....MM DICK ....MM THICKNESS ....MM D'EPAISSEUR ESPESOR:....MM 1,4 MM	

000

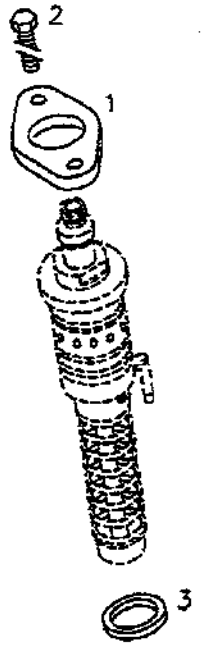

BEFESTIGUNGSTEILE FASTENINGS PIECES DE FIXAT. PIEZAS DE SUJECION 0130-17 507 0676

Bild Pos.	Teile-Nr.	Stck. zahl	DEUTSCH	ENGLISH	FRANCAIS	ESPANOL	Nummer/Bemerkung	ETK
954	0420 4145	NB	AUSGLEICHSCHEIBE	SHIM	CALE	ARANDELA COMPENS.	....MM DICK ....MM THICKNESS ....MM D'EPAISSEUR ESPESOR:....MM 1,5 MM	
955	0420 4146	NB	AUSGLEICHSCHEIBE	SHIM	CALE	ARANDELA COMPENS.	....MM DICK ....MM THICKNESS ....MM D'EPAISSEUR ESPESOR:....MM 1,6 MM	
956	0420 4147	NB	AUSGLEICHSCHEIBE	SHIM	CALE	ARANDELA COMPENS.	....MM DICK ....MM THICKNESS ....MM D'EPAISSEUR ESPESOR:....MM 1,7 MM	
957	0420 4148	NB	AUSGLEICHSCHEIBE	SHIM	CALE	ARANDELA COMPENS.	....MM DICK ....MM THICKNESS ....MM D'EPAISSEUR ESPESOR:....MM 1,8 MM	
958	0420 4149	NB	AUSGLEICHSCHEIBE	SHIM	CALE	ARANDELA COMPENS.	....MM DICK ....MM THICKNESS ....MM D'EPAISSEUR ESPESOR:....MM 1,9 MM	
959	0420 4150	NB	AUSGLEICHSCHEIBE	SHIM	CALE	ARANDELA COMPENS.	....MM DICK ....MM THICKNESS ....MM D'EPAISSEUR ESPESOR:....MM 2,0 MM	
960	0420 4151	NB	AUSGLEICHSCHEIBE	SHIM	CALE	ARANDELA COMPENS.	....MM DICK ....MM THICKNESS ....MM D'EPAISSEUR ESPESOR:....MM 2,1 MM	

000

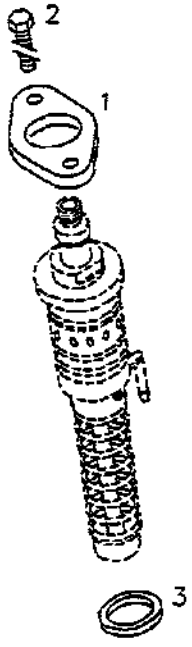

BEFESTIGUNGSTEILE FASTENINGS PIECES DE FIXAT. PIEZAS DE SUJECION 0130-17 507 0676

Bild Pos.	Teile-Nr.	Stck. zahl	DEUTSCH	ENGLISH	FRANCAIS	ESPANOL	Nummer/Bemerkung	ETK
961	0420 4152	NB	AUSGLEICHSCHEIBE	SHIM	CALE	ARANDELA COMPENS.	....MM DICK ....MM THICKNESS ....MM D'EPAISSEUR ESPESOR:....MM 2,2 MM	
962	0420 4153	NB	AUSGLEICHSCHEIBE	SHIM	CALE	ARANDELA COMPENS.	....MM DICK ....MM THICKNESS ....MM D'EPAISSEUR ESPESOR:....MM 2,3 MM	
963	0420 4154	NB	AUSGLEICHSCHEIBE	SHIM	CALE	ARANDELA COMPENS.	....MM DICK ....MM THICKNESS ....MM D'EPAISSEUR ESPESOR:....MM 2,4 MM	
964	0420 4155	NB	AUSGLEICHSCHEIBE	SHIM	CALE	ARANDELA COMPENS.	....MM DICK ....MM THICKNESS ....MM D'EPAISSEUR ESPESOR:....MM 2,5 MM	
965	0420 4156	NB	AUSGLEICHSCHEIBE	SHIM	CALE	ARANDELA COMPENS.	....MM DICK ....MM THICKNESS ....MM D'EPAISSEUR ESPESOR:....MM 2,6 MM	
966	0420 4157	NB	AUSGLEICHSCHEIBE	SHIM	CALE	ARANDELA COMPENS.	....MM DICK ....MM THICKNESS ....MM D'EPAISSEUR ESPESOR:....MM 2,7 MM	
967	0420 4158	NB	AUSGLEICHSCHEIBE	SHIM	CALE	ARANDELA COMPENS.	....MM DICK ....MM THICKNESS ....MM D'EPAISSEUR ESPESOR:....MM 2,8 MM	

000

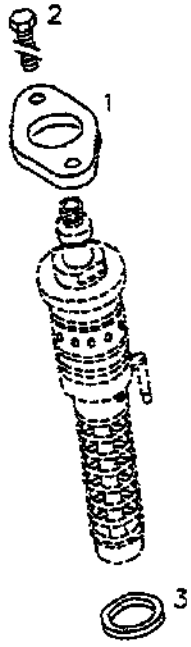

BEFESTIGUNGSTEILE FASTENINGS PIECES DE FIXAT. PIEZAS DE SUJECION 0130-17 507 0676

Bild Pos.	Teile-Nr.	Stck. zahl	DEUTSCH	ENGLISH	FRANCAIS	ESPANOL	Nummer/Bemerkung	ETK
968	0420 4159	NB	AUSGLEICHSCHEIBE	SHIM	CALE	ARANDELA COMPENS.	....MM DICK ....MM THICKNESS ....MM D'EPAISSEUR ESPESOR:....MM 2,9 MM	
969	0420 4160	NB	AUSGLEICHSCHEIBE	SHIM	CALE	ARANDELA COMPENS.	....MM DICK ....MM THICKNESS ....MM D'EPAISSEUR ESPESOR:....MM 3,0 MM	
970	0420 4161	NB	AUSGLEICHSCHEIBE	SHIM	CALE	ARANDELA COMPENS.	....MM DICK ....MM THICKNESS ....MM D'EPAISSEUR ESPESOR:....MM 3,1 MM	
971	0420 4162	NB	AUSGLEICHSCHEIBE	SHIM	CALE	ARANDELA COMPENS.	....MM DICK ....MM THICKNESS ....MM D'EPAISSEUR ESPESOR:....MM 3,2 MM	
972	0420 4163	NB	AUSGLEICHSCHEIBE	SHIM	CALE	ARANDELA COMPENS.	....MM DICK ....MM THICKNESS ....MM D'EPAISSEUR ESPESOR:....MM 3,3 MM	
973	0420 4164	NB	AUSGLEICHSCHEIBE	SHIM	CALE	ARANDELA COMPENS.	....MM DICK ....MM THICKNESS ....MM D'EPAISSEUR ESPESOR:....MM 3,4 MM	
974	0420 4165	NB	AUSGLEICHSCHEIBE	SHIM	CALE	ARANDELA COMPENS.	....MM DICK ....MM THICKNESS ....MM D'EPAISSEUR ESPESOR:....MM 3,5 MM	

000

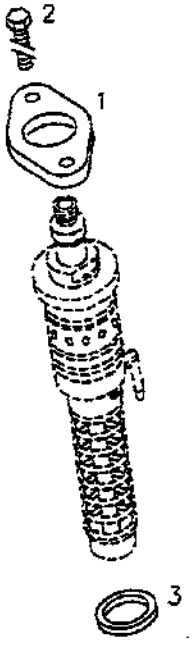

BEFESTIGUNGSTEILE FASTENINGS PIECES DE FIXAT. PIEZAS DE SUJECION 0130-17 507 0676

Bild Pos.	Teile-Nr.	Stck. zahl	DEUTSCH	ENGLISH	FRANCAIS	ESPANOL	Nummer/Bemerkung	ETK
975	0420 4166	NS	AUSGLEICHSCHEIBE	SHIM	CALE	ARANDELA COMPENS.	....MM DICK ....MM THICKNESS ....MM D'EPAISSEUR ESPESOR:....MM 3,6 MM	
976	0420 4187	NS	AUSGLEICHSCHEIBE	SHIM	CALE	ARANDELA COMPENS.	....MM DICK ....MM THICKNESS ....MM D'EPAISSEUR ESPESOR:....MM 3,7 MM	

000

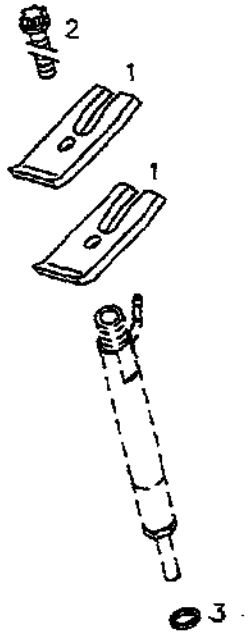

BEFESTIGUNGSTEILE FASTENINGS PIECES DE FIXAT. PIEZAS DE SUJECION 0130-19 507 0352

Bild Pos.	Teile-Nr.	Stck. zahl	DEUTSCH	ENGLISH	FRANCAIS	ESPANOL	Nummer/Bemerkung	ETK
1	0420 1666	2	PRATZE	CLAW	GRIFFE	PATA		
2	0117 9409	1	TORX-SCHRAUBE	TORX-HEAD BOLT	VIS A TETE TORX	TORNILLO TEST.TORX	H 002032-HBM 8X 50-10.9 -A4C-W	
3	0417 5610	1	DICHTRING	SEALING RING	BAGUE D'ETANCHEITE	ANILLO JUNTA		01

001

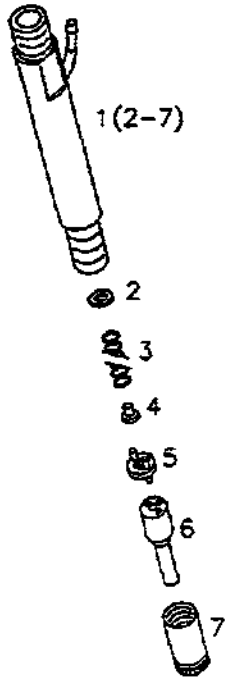

EINSPRITZVENTIL FUEL INJECTOR PORTE-INJECTEUR INYECTOR 0130-19 507 0524

Bild Pos.	Teile-Nr.	Stck.-zahl	DEUTSCH	ENGLISH	FRANCAIS	ESPANOL	Nummer/Bemerkung	ETK
1	0212 6992	1	EINSPRITZVENTIL	FUEL INJECTOR	PORTE-INJECTEUR	INYECTOR	MIT POS.... WITH ITEM.... AVEC POSTE.... CON POS. ..... (2-7)	01
2	0131 8285	NB	AUSGLEICHSCHEIBE	SHIM	CALE	ARANDELA COMPENS.	NORMAL (A)MM, UEBERMASSTUFE SIEHE POS. (B) STANDARD (A)MM, FOR OVERSIZE SEE ITEM (B) NORMAL (A)MM, COTE EN SURDIMENSION VOIR POSTE (B) NORMAL (A)MM, SOBREMEDIDA VE POS. (B) (A) 1.00 (B) 950-978	
3	0131 8353	1	DRUCKFEDER	COMPRESSION SPRING	RESSORT DE PRESS.	RESORTE DE PRESION		
4	0131 8363	1	DRUCKBOLZEN	THRUST BOLT	POUSSOIR	BULON DE PRESION		
5	0131 8355	1	ZWISCHENSCHEIBE	SPACER	ENTRETOISE	ARANDELA INTERMED.		
6	0212 6998	1	DUESENELEMENT	NOZZLE ELEMENT	GARNITUR INJECTEUR	ELEMENTO DE TOBERA		
7	0131 8357	1	DUESENSPANNMUTTER	NOZZLE CAP NUT	ECROU DE BUSE	TUERCA DE TOBLERA		
950	0131 8329	NB	AUSGLEICHSCHEIBE	SHIM	CALE	ARANDELA COMPENS.	UEBERMASSTUFE OVERSIZE COTE EN SURDIMENSION SOBREMEDIDA 1,04 MM	
951	0131 8330	NB	AUSGLEICHSCHEIBE	SHIM	CALE	ARANDELA COMPENS.	UEBERMASSTUFE OVERSIZE COTE EN SURDIMENSIÔN SOBREMEDIDA 1,08 MM	
952	0131 8286	NB	AUSGLEICHSCHEIBE	SHIM	CALE	ARANDELA COMPENS.	UEBERMASSTUFE OVERSIZE COTE EN SURDIMENSION SOBREMEDIDA 1,10 MM	

001

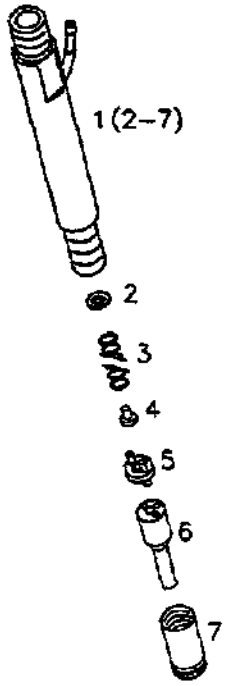

EINSPRITZVENTIL FUEL INJECTOR PORTE-INJECTEUR INYECTOR 0130-19 507 0524

Bild Pos.	Teile-Nr.	Stck. zahl	DEUTSCH	ENGLISH	FRANCAIS	ESPANOL	Nummer/Bemerkung	ETK
953	0131 8331	NB	AUSGLEICHSCHEIBE	SHIM	CALE	ARANDELA COMPENS.	UEBERMASSTUFE OVERSIZE COTE EN SURDIMENSION SOBREMEDIDA 1,14 MM	
954	0131 8332	NB	AUSGLEICHSCHEIBE	SHIM	CALE	ARANDELA COMPENS.	UEBERMASSTUFE OVERSIZE COTE EN SURDIMENSION SOBREMEDIDA 1,18 MM	
955	0131 8333	NB	AUSGLEICHSCHEIBE	SHIM	CALE	ARANDELA COMPENS.	UEBERMASSTUFE OVERSIZE COTE EN SURDIMENSION SOBREMEDIDA 1,20 MM	
956	0131 8287	NB	AUSGLEICHSCHEIBE	SHIM	CALE	ARANDELA COMPENS.	UEBERMASSTUFE OVERSIZE COTE EN SURDIMENSION SOBREMEDIDA 1,24 MM	
957	0131 8334	NB	AUSGLEICHSCHEIBE	SHIM	CALE	ARANDELA COMPENS.	UEBERMASSTUFE OVERSIZE COTE EN SURDIMENSION SOBREMEDIDA 1,28 MM	
958	0131 8335	NB	AUSGLEICHSCHEIBE	SHIM	CALE	ARANDELA COMPENS.	UEBERMASSTUFE OVERSIZE COTE EN SURDIMENSION SOBREMEDIDA 1,30 MM	
959	0131 8336	NB	AUSGLEICHSCHEIBE	SHIM	CALE	ARANDELA COMPENS.	UEBERMASSTUFE OVERSIZE COTE EN SURDIMENSION SOBREMEDIDA 1,34 MM	

001

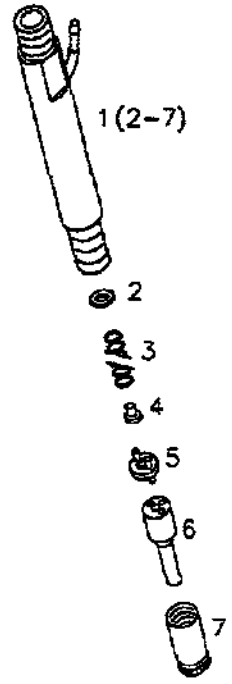

EINSPRITZVENTIL FUEL INJECTOR PORTE-INJECTEUR INYECTOR 0130-19 507 0524

Bild Pos.	Teile-Nr.	Stck. zahl	DEUTSCH	ENGLISH	FRANCAIS	ESPANOL	Nummer/Bemerkung	ETK
960	0131 8337	NB	AUSGLEICHSCHEIBE	SHIM	CALE	ARANDELA COMPENS.	UEBERMASSTUFE OVERSIZE COTE EN SURDIMENSION SOBREMEDIDA 1,38 MM	
961	0131 8338	NB	AUSGLEICHSCHEIBE	SHIM	CALE	ARANDELA COMPENS.	UEBERMASSTUFE OVERSIZE COTE EN SURDIMENSION SOBREMEDIDA 1,40 MM	
962	0131 8339	NB	AUSGLEICHSCHEIBE	SHIM	CALE	ARANDELA COMPENS.	UEBERMASSTUFE OVERSIZE COTE EN SURDIMENSION SOBREMEDIDA 1,44 MM	
963	0131 8340	NB	AUSGLEICHSCHEIBE	SHIM	CALE	ARANDELA COMPENS.	UEBERMASSTUFE OVERSIZE COTE EN SURDIMENSION SOBREMEDIDA 1,48 MM	
964	0131 8288	NB	AUSGLEICHSCHEIBE	SHIM	CALE	ARANDELA COMPENS.	UEBERMASSTUFE OVERSIZE COTE EN SURDIMENSION SOBREMEDIDA 1,50 MM	
965	0131 8341	NB	AUSGLEICHSCHEIBE	SHIM	CALE	ARANDELA COMPENS.	UEBERMASSTUFE OVERSIZE COTE EN SURDIMENSION SOBREMEDIDA 1,54 MM	
966	0131 8342	NB	AUSGLEICHSCHEIBE	SHIM	CALE	ARANDELA COMPENS.	UEBERMASSTUFE OVERSIZE COTE EN SURDIMENSION SOBREMEDIDA 1,58 MM	

001

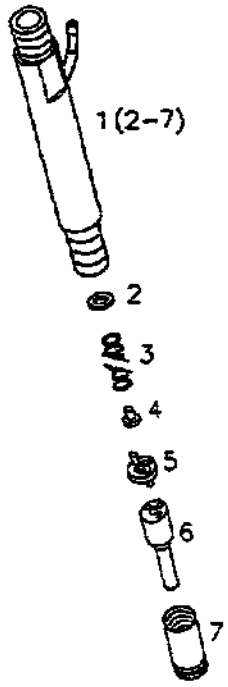

EINSPRITZVENTIL FUEL INJECTOR PORTE-INJECTEUR INYECTOR 0130-19 507 0524

Bild Pos.	Teile-Nr.	Stck. zahl	DEUTSCH	ENGLISH	FRANCAIS	ESPANOL	Nummer/Bemerkung	ETK
967	0131 8343	NB	AUSGLEICHSCHEIBE	SHIM	CALE	ARANDELA COMPENS.	UEBERMASSTUFE OVERSIZE COTE EN SURDIMENSION SOBREMEDIDA 1,60 MM	
968	0131 8344	NB	AUSGLEICHSCHEIBE	SHIM	CALE	ARANDELA COMPENS.	UEBERMASSTUFE OVERSIZE COTE EN SURDIMENSION SOBREMEDIDA 1,64 MM	
969	0131 8345	NB	AUSGLEICHSCHEIBE	SHIM	CALE	ARANDELA COMPENS.	UEBERMASSTUFE OVERSIZE COTE EN SURDIMENSION SOBREMEDIDA 1,68 MM	
970	0131 8346	NB	AUSGLEICHSCHEIBE	SHIM	CALE	ARANDELA COMPENS.	UEBERMASSTUFE OVERSIZE COTE EN SURDIMENSION SOBREMEDIDA 1,70 MM	
971	0131 8289	NB	AUSGLEICHSCHEIBE	SHIM	CALE	ARANDELA COMPENS.	UEBERMASSTUFE OVERSIZE COTE EN SURDIMENSION SOBREMEDIDA 1,74 MM	
972	0131 8347	NB	AUSGLEICHSCHEIBE	SHIM	CALE	ARANDELA COMPENS.	UEBERMASSTUFE OVERSIZE COTE EN SURDIMENSION SOBREMEDIDA 1,78 MM	
973	0131 8348	NB	AUSGLEICHSCHEIBE	SHIM	CALE	ARANDELA COMPENS.	UEBERMASSTUFE OVERSIZE COTE EN SURDIMENSION SOBREMEDIDA 1,80 MM	

001

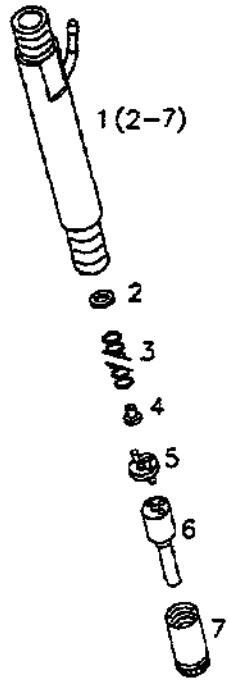

EINSPRITZVENTIL FUEL INJECTOR PORTE-INJECTEUR INYECTOR 0130-19 507 0524

Bild Pos.	Teile-Nr.	Stck. zahl	DEUTSCH	ENGLISH	FRANCAIS	ESPANOL	Nummer/Bemerkung	ETK
974	0131 8349	NB	AUSGLEICHSCHEIBE	SHIM	CALE	ARANDELA COMPENS.	UEBERMASSTUFE OVERSIZE COTE EN SURDIMENSION SOBREMEDIDA 1,84 MM	
975	0131 8350	NB	AUSGLEICHSCHEIBE	SHIM	CALE	ARANDELA COMPENS.	UEBERMASSTUFE OVERSIZE COTE EN SURDIMENSION SOBREMEDIDA 1,88 MM	
976	0131 8351	NB	AUSGLEICHSCHEIBE	SHIM	CALE	ARANDELA COMPENS.	UEBERMASSTUFE OVERSIZE COTE EN SURDIMENSION SOBREMEDIDA 1,90 MM	
977	0131 8352	NB	AUSGLEICHSCHEIBE	SHIM	CALE	ARANDELA COMPENS.	UEBERMASSTUFE OVERSIZE COTE EN SURDIMENSION SOBREMEDIDA 1,94 MM	
978	0131 8290	NB	AUSGLEICHSCHEIBE	SHIM	CALE	ARANDELA COMPENS.	UEBERMASSTUFE OVERSIZE COTE EN SURDIMENSION SOBREMEDIDA 1,98 MM	

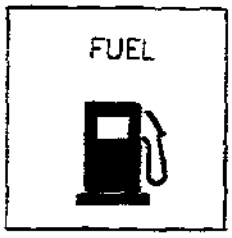

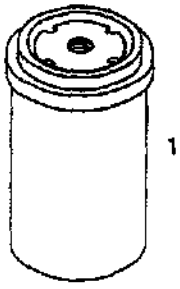

FILTERPATRONE FILTER CARTRIDGE CARTOUCHE FILTRANT CARTUCHO FILTRO 0150-20 503 7735

Bild Pos.	Teile-Nr.	Stck. zahl	DEUTSCH	ENGLISH	FRANÇAIS	ESPANOL	Nummer/Bemerkung	ETK
1	0117 4423	1	KRAFTSTOFFFILTER	FUEL FILTER	FILTRE A COMBUST.	FILTRO COMBUSTIBLE	H 004117- 0 0,6 -R	01

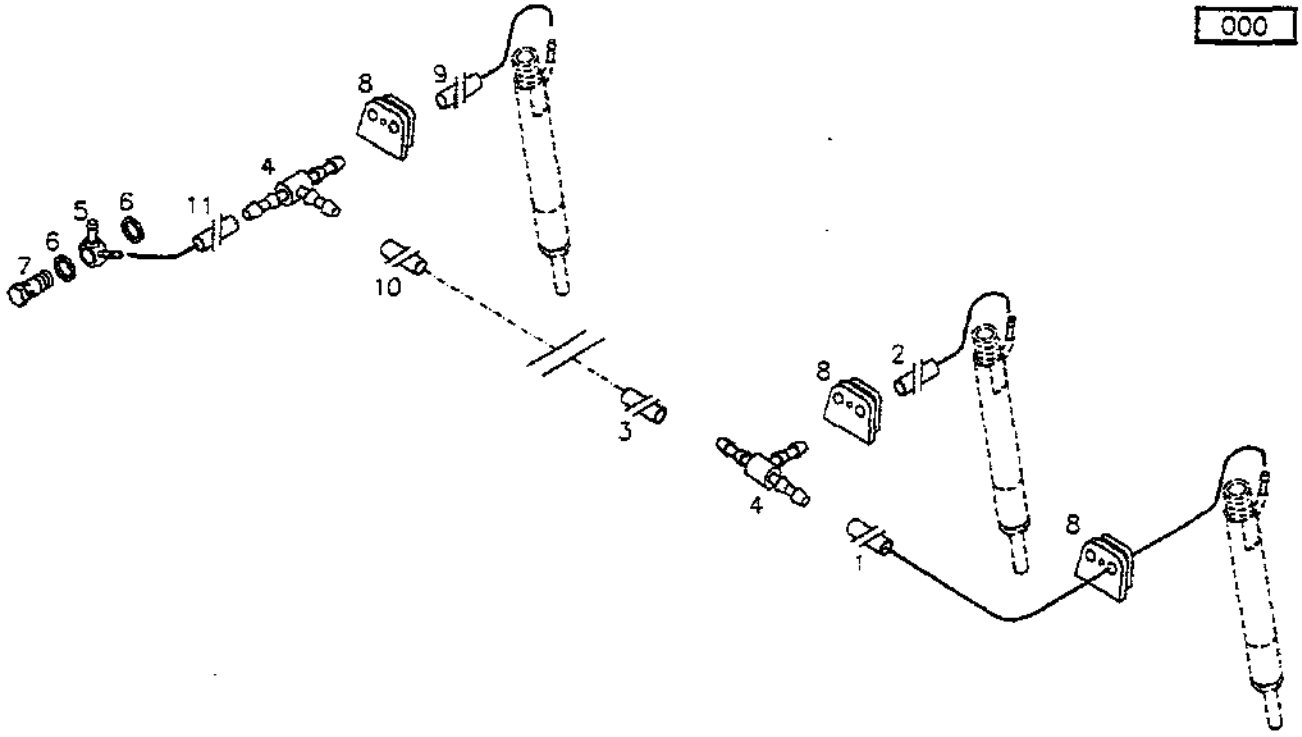

UEBERSTROEMLEITUNG OVERFLOW LINE CONDUITE DECHARGE TUBERIA DE REBOSE 0130-21 507 0363

Bild Pos.	Teile-Nr.	Stck. zahl	DEUTSCH	ENGLISH	FRANCAIS	ESPANOL	Nummer/Bemerkung	ETK
10	0117 9850	MTR	GUMMISCHLAUCH	RUBBER HOSE	FLEXIBLE CAOUTCH	MANGUERA DE GOMA	H 003405-C1-3,2X7 X 200 -NBR-4-68 LANG LONG LONG (UE) (S) LARGO 0,200 METER	
11	0117 9480	MTR	GUMMISCHLAUCH	RUBBER HOSE	FLEXIBLE CAOUTCH	MANGUERA DE GOMA	H 003405-C 3,2X7 X 150 -NBR-4-68 LANG LONG LONG (UE) (S) LARGO 0,150 METER	

000

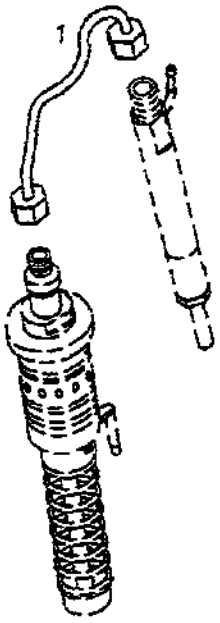

EINSPRITZLEITUNG HIGH PRESSURE PIPE TUYAUTERIE TUBERIA INYECCION 0130-21 507 0521

Bild Pos.	Teile-Nr.	Stck. zahl	DEUTSCH	ENGLISH	FRANCAIS	ESPANOL	Nummer/Bemerkung	ETK
1	0211 1026	1	EINSPRITZLEITUNG	HIGH PRESSURE PIPE	TUYAUTERIE	TUBERIA INYECCION		

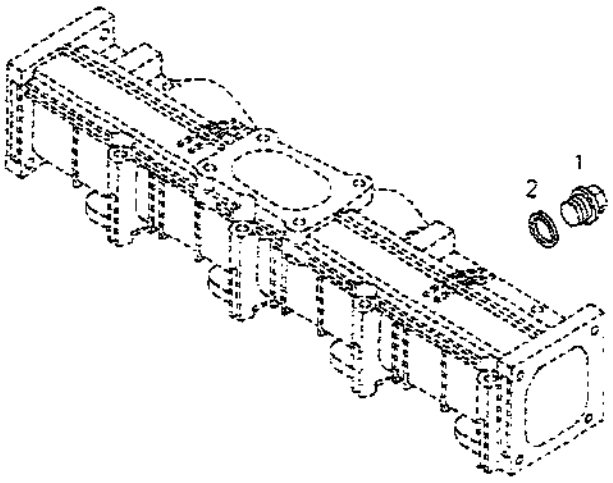

VERSCHLUSSTEILE BLANKING PARTS OBTURATEURS PIEZAS DE CIERRE 0130-22 507 0047

Bild Pos.	Teile-Nr.	Stck. zahl	DEUTSCH	ENGLISH	FRANCAIS	ESPANOL	Nummer/Bemerkung	ETK
1	0113 3832	1	VERSCHLUSSSCHRAUBE	SCREW PLUG	BOUCHON FILETE	TAPON ROSCADO	DIN 000910- M14X1,5 -ST-ZNPHR F	
2	0111 8888	1	DICHTRING	SEALING RING	BAGUE D'ETANCHEITE	ANILLO JUNTA	DIN 007603-A 14 X 18 -CU	01

001

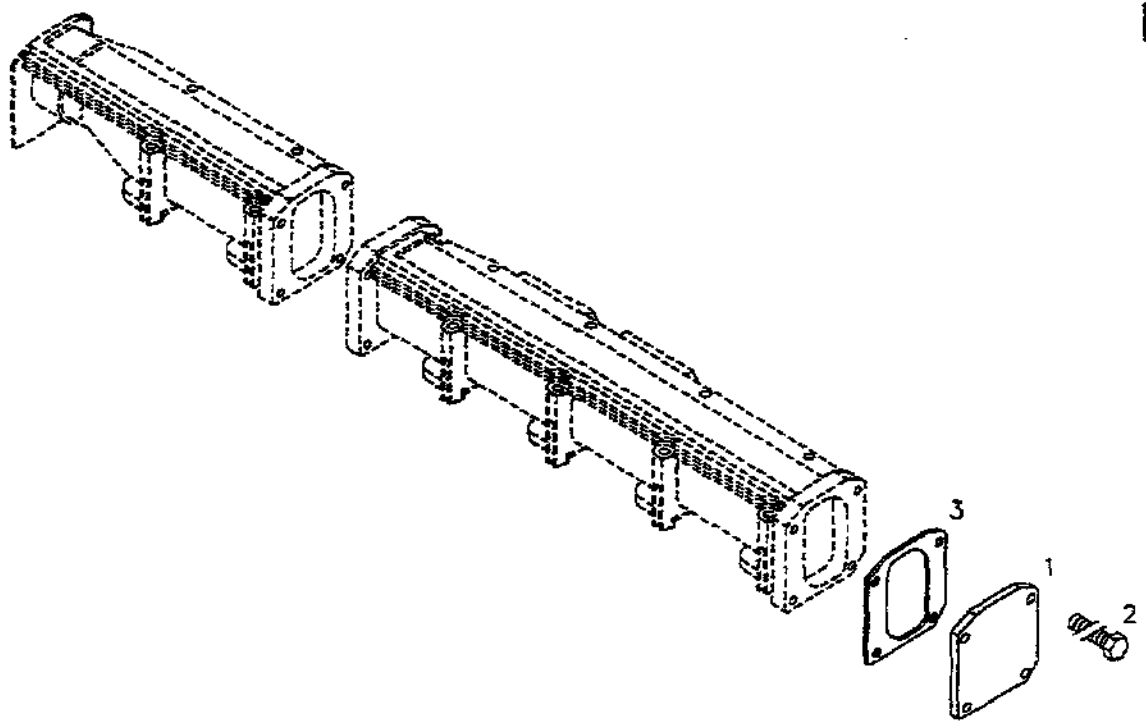

DECKEL COVER COUVERCLE TAPA 0130-22 507 0495

Bild Pos.	Teile-Nr.	Stck zahl	DEUTSCH	ENGLISH	FRANCAIS	ESPANOL	Nummer/Bemerkung	ETK
1	0420 2048	1	DECKEL	COVER	COUVERCLE	TAPA		
2	0111 2326	4	SECHSKANTSCHRAUBE	HEXAGON BOLT	VIS TETE HEXAGONAL	TORN.DE CABE.EXAG.	DIN 000933-M 8 X 22 - 8.8-A4C	
3	0420 3304	1	DICHTUNG	GASKET	GARNITURE/JOINT	JUNTA		

000

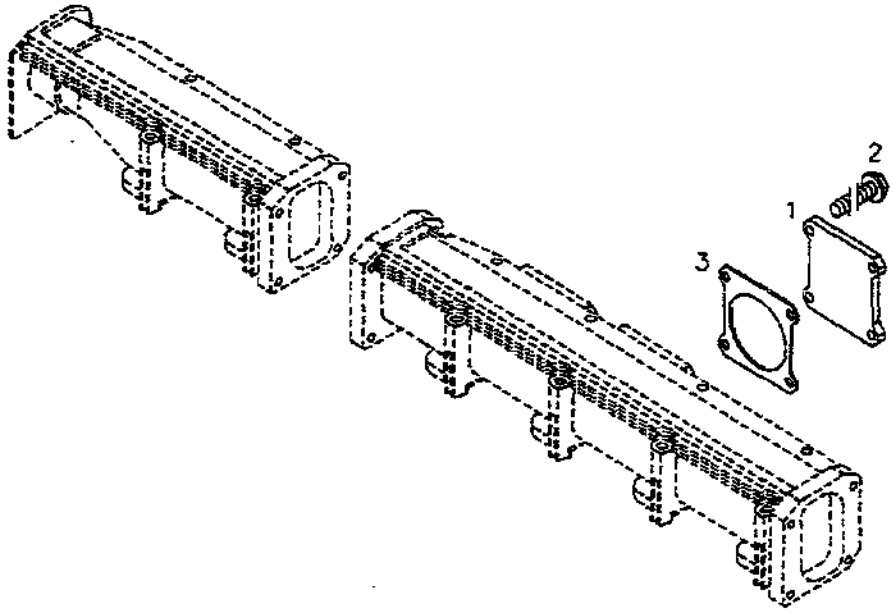

Bild Pos.	Teile-Nr.	Stck. zahl	DECKEL DEUTSCH	COVER ENGLISH	COUVERCLE FRANCAIS	TAPA ESPANOL	0130-22 507 0496 Nummer/Bemerkung	ETK
1	0420 1997	1	DECKEL	COVER	COUVERCLE	TAPA		
2	0117 9567	4	SECHSKANTSCHRAUBE	HEXAGON BOLT	VIS TETE HEXAGONAL	TORN.DE CABE.EXAG.	H 002008-F-M 8 X 25- 10.9	
3	0420 4722	1	DICHTUNG	GASKET	GARNITURE/JOINT	JUNTA		

000

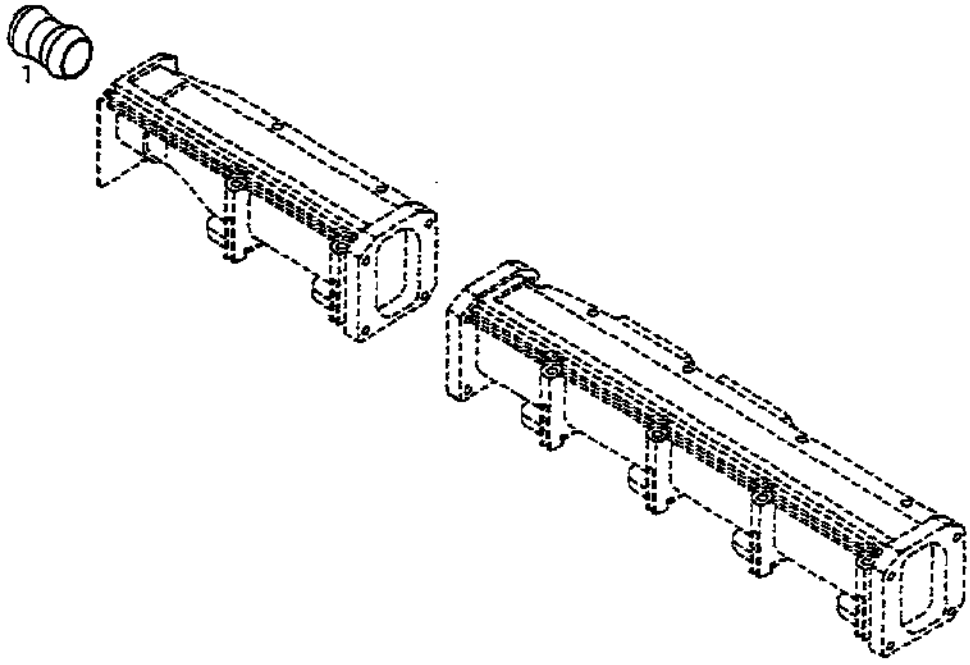

STECKSTUECK PLUG PIECE A ENFICHER PIEZA DE ENCHUFE 0130-22 507 0497

Bild Pos.	Teile-Nr.	Stck. zahl	DEUTSCH	ENGLISH	FRANCAIS	ESPANOL	Nummer/Bemerkung	ETK
1	0418 4991	1	STECKSTUECK	PLUG	PIECE A ENFICHER	PIEZA DE ENCHUFE		

000

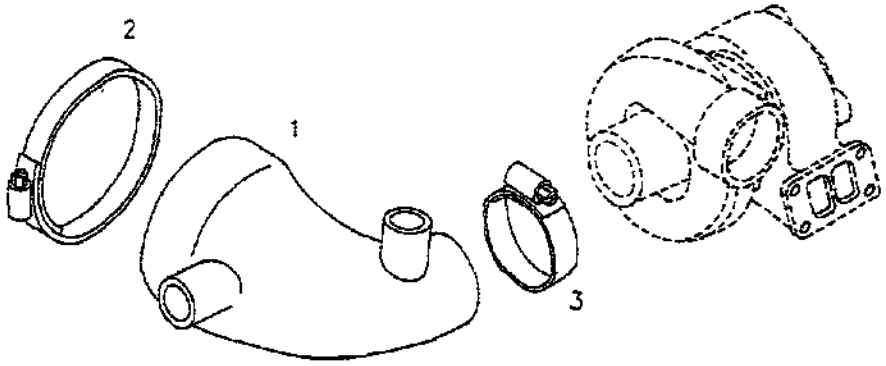

KRUEMMER MANIFOLD COUDE CODO 0130-22 507 0498

Bild Pos.	Teile-Nr.	Stck. zahl	DEUTSCH	ENGLISH	FRANCAIS	ESPANOL	Nummer/Bemerkung	ETK
1	0420 4434	1	KRUEMMER	MANIFOLD	COUDE	CODO		
2	0117 3940	1	SCHLAUCHSCHELLE	HOSE CLIP	COLLIER DE SERRAGE	ABRAZADER.MANGUERA	H 003461-B13 C 70- 90-W1	
3	0112 8278	1	SCHLAUCHSCHELLE	HOSE CLIP	COLLIER DE SERRAGE	ABRAZADER.MANGUERA	H 003461-B13 C110-130-W1	

000

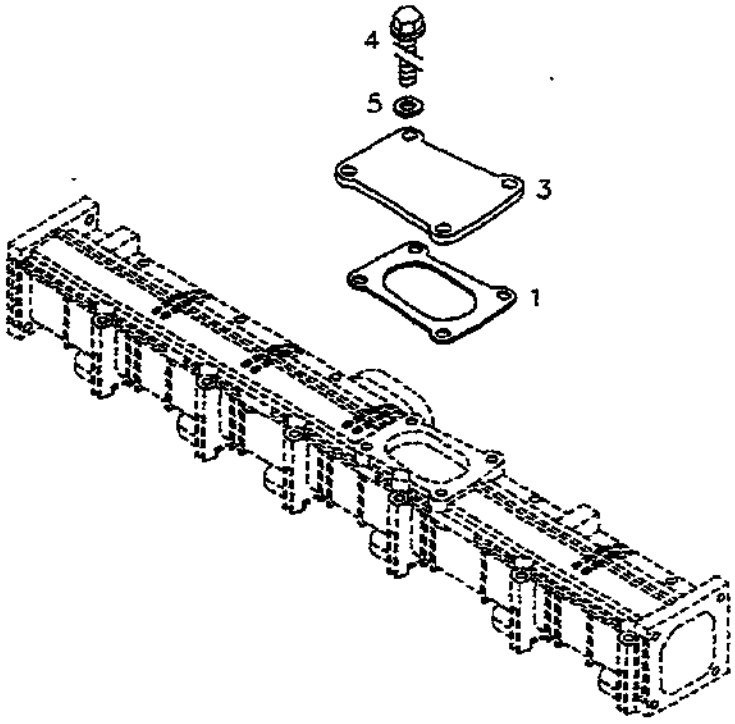

DECKEL COVER COUVERCLE TAPA 0130-22 507 0788

Bild Pos.	Teile-Nr.	Stck. zahl	DEUTSCH	ENGLISH	FRANCAIS	ESPANOL	Nummer/Bemerkung	ETK
1	0420 3849	1	DICHTUNG	GASKET	GARNITURE/JOINT	JUNTA		
3	0420 3945	1	DECKEL	COVER	COUVERCLE	TAPA		
4	0117 9292	4	SECHSKANTSCHRAUBE	HEXAGON BOLT	VIS TETE HEXAGONAL	TORN.DE CABE.EXAG.	H 002008-F-M 8 X 20- 10.9-A4C	
5	0110 7095	4	SCHEIBE	PLAIN WASHER	RONDELLE PLATE	ARANDELA PLANA	DIN 000125-A 8,4-140HV-A4C	

000

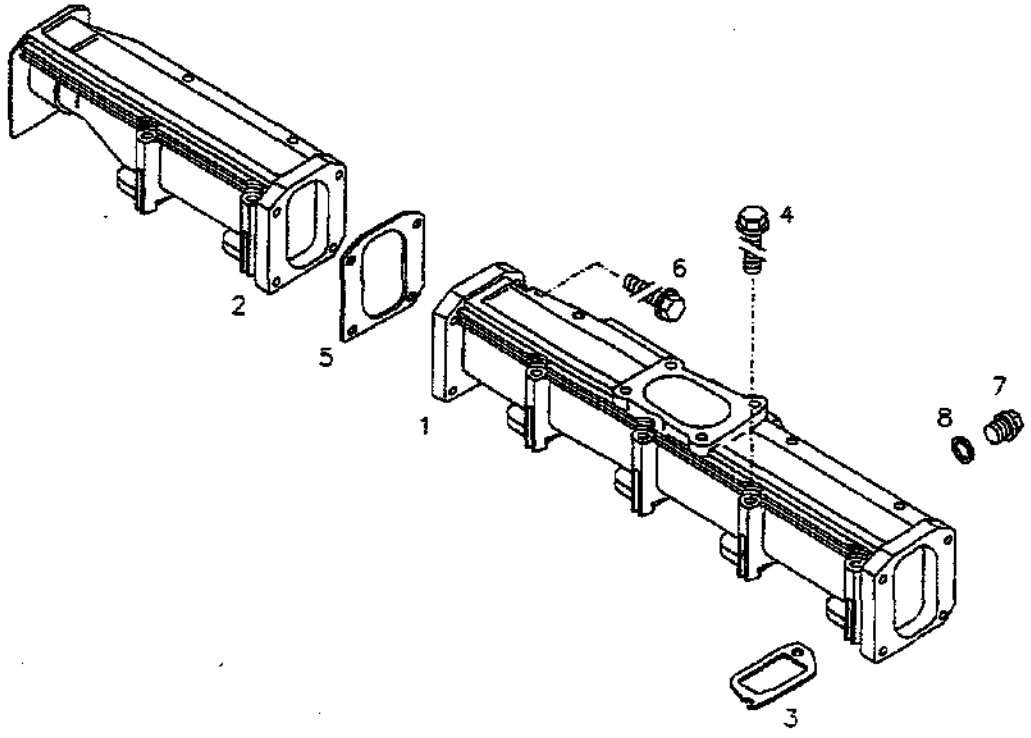

LADELUFTLEITUNG TUBER.AIRE SOBREAL TUBULURE D'AIR TUB.A/SOBREALIMENT 0130-22 507 0867

Bild Pos.	Teile-Nr.	Stck. zahl	DEUTSCH	ENGLISH	FRANCAIS	ESPANOL	Nummer/Bemerkung	ETK
1	0420 5203	1	LADELUFTLEITUNG	TUBER.AIRE SOBREAL	TUBULURE D'AIR	TUB.A/SOBREALIMENT		
2	0420 2695	1	LADELUFTLEITUNG	TUBER.AIRE SOBREAL	TUBULURE D'AIR	TUB.A/SOBREALIMENT		
3	0420 0095	6	DICHTUNG	GASKET	GARNITURE/JOINT	JUNTA		
4	0117 9293	12	SECHSKANTSCHRAUBE	HEXAGON BOLT	VIS TETE HEXAGONAL	TORN.DE CABE.EXAG.	H 002008-F-M 6 X 95- 10.9-A4C	
5	0420 3304	1	DICHTUNG	GASKET	GARNITURE/JOINT	JUNTA		
6	0117 9193	4	SECHSKANTSCHRAUBE	HEXAGON BOLT	VIS TETE HEXAGONAL	TORN.DE CABE.EXAG.	H 002008-F-M 6 X 30- 10.9-A4C	
7	0113 3632	1	VERSCHLUSSSCHRAUBE	SCREW PLUG	BOUCHON FILETE	TAPON ROSCADO	DIN 000910- M14X1,5 -ST-ZNPHR F	
8	0111 8668	1	DICHTRING	SEALING RING	BAGUE D'ETANCHEITE	ANILLO JUNTA	DIN 007603-A 14 X 18 -CU	01

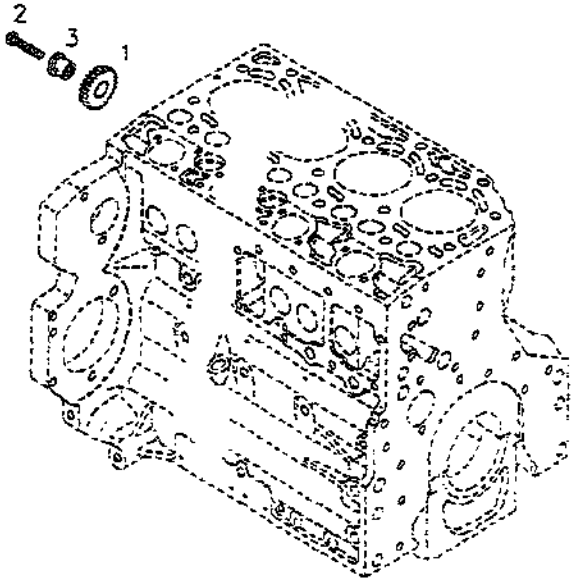

ZWISCHENRAD IDLER GEAR ROUE INTERMEDIAIRE ENGRAN. INTERMEDIO 0130-27 507 0038

Bild Pos.	Teile-Nr.	Stck. zahl	DEUTSCH	ENGLISH	FRANCAIS	ESPANOL	Nummer/Bemerkung	ETK
1	0419 7462	1	ZAHNRAD	TOOTHED GEAR	ROUE D'ENGRENAGE	ENGRANAJE		
2	0111 2350	1	SECHSKANTSCHRAUBE	HEXAGON BOLT	VIS TETE HEXAGONAL	TORN.DE CABE.EXAG.	DIN 000933-M 8 X 35 - 8.8-A4C	
3	0419 2487	1	LAGERZAPFEN	JOURNAL	TOURILLON	MUNON SOPORTE		

000

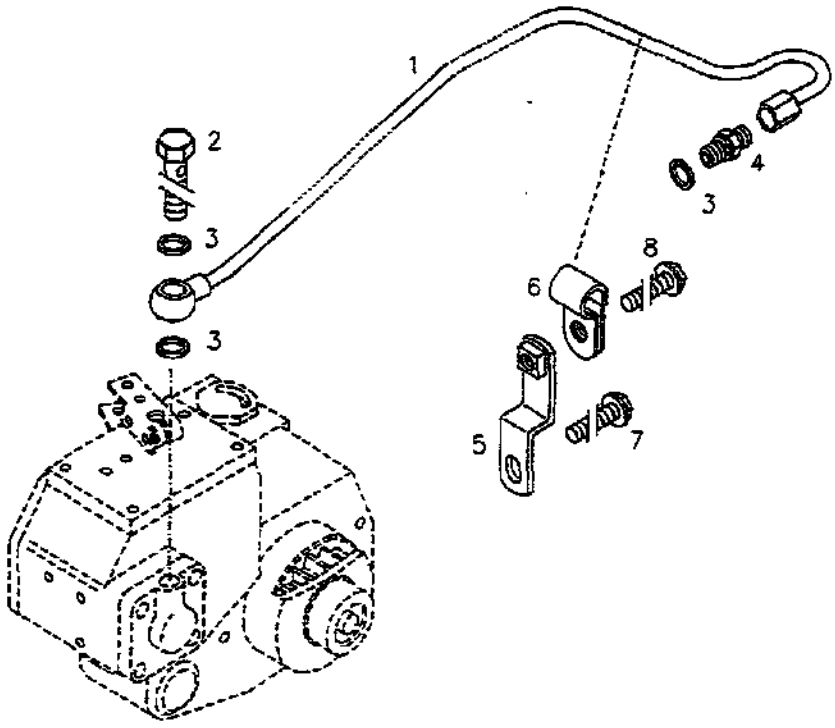

Bild Pos.	Teile-Nr.	Stck. zahl	DEUTSCH	ENGLISH	FRANCAIS	ESPANOL	Nummer/Bemerkung	ETK
			LUFTLEITUNG	INLET MANIFOLD	CONDUITE D'AIR	TUBERIA DE AIRE	0130-27 507 0473	
1	0420 3342	1	LUFTLEITUNG	INLET MANIFOLD	CONDUITE D'AIR	TUBERIA DE AIRE		
2	0111 9237	1	HOHLSCHRAUBE	HOLLOW SCREW	VIS BANJO	TORNILLO HUECO	H 003102-D 6 M-ST-A4C	
3	0111 8659	3	DICHTRING	SEALING RING	BAGUE D'ETANCHEITE	ANILLO JUNTA	DIN 007603-A 10 X 13.5-CU	01
4	0114 3481	1	STUTZEN	SOCKET/ADAPTER	TUBULURE/RACCORD	RACOR	DIN 003901-L 6A-M-ST-A4C	
5	0420 3363	1	HALTER	BRACKET	SUPPORT/PORTEGUTIL	SOPORTE		
6	0117 5536	1	ROHRSCHELLE	PIPE CLAMP	COLLIER PR TUBES	ABRAZADERA DE TUBO	H 003223-C 8X15-ST/DEUTZ MVQ 1-70	
7	0114 3382	1	SECHSKANTSCHRAUBE	HEXAGON BOLT	VIS TETE HEXAGONAL	TORN.DE CABE.EXAG.	H 002008-F-M 8 X 12-LG 2.5-10 .9-A4C	
8	0117 9291	1	SECHSKANTSCHRAUBE	HEXAGON BOLT	VIS TETE HEXAGONAL	TORN.DE CABE.EXAG.	H 002008-F-M 8 X 16- 10.9-A4C	

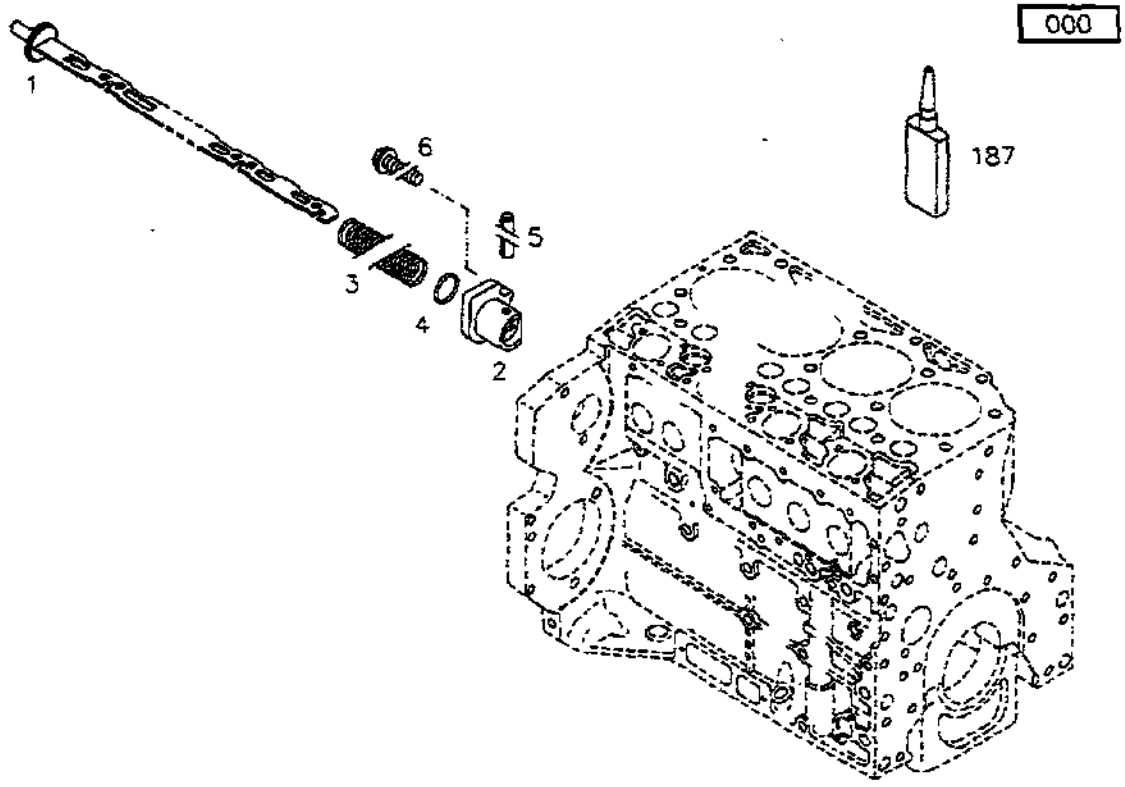

REGELSTANGE CONTROL ROD TIGE DE REGLAGE BARRA D.REGULACION 0130-27 507 0525

Bild Pos.	Teile-Nr.	Stck. (zahl)	DEUTSCH	ENGLISH	FRANCAIS	ESPANOL	Nummer/Bemerkung	ETK
1	0420 2898	1	REGELSTANGE	CONTROL ROD	TIGE DE REGLAGE	BARRA D.REGULACION		
2	0419 7392	1	FUEHRUNGSBUCHSE	GUIDE BUSH	DOUILLE-PILOTE	CASQUILLO GUIA		
3	0211 1122	1	DRUCKFEDER	COMPRESSION SPRING	RESSORT DE PRESS.	RESORTE DE PRESION		
4	0419 7393	1	SCHEIBE	PLAIN WASHER	RONDELLE PLATE	ARANDELA PLANA		
5	0111 5451	1	SPANNSTIFT	STRAIGHT PIN	GOUPILLE SERRAGE	PASADOR ELASTICO	ISO 008752- 6 X 20	
6	0114 3369	1	SECHSKANTSCHRAUBE	HEXAGON BOLT	VIS TETE HEXAGONAL	TORN.DE CABE.EXAG.	H 002008-F-M 8 X 20-LG 2,5-10 .9-A4C	
187	0100 9893	1	SICHERUNGSMITTEL	SAFETY/LOCK.AGENT	RESINE-FREIN	MEDIO AFIANZADOR	H 000699-DEUTZ DW 71- 50 ML	

000

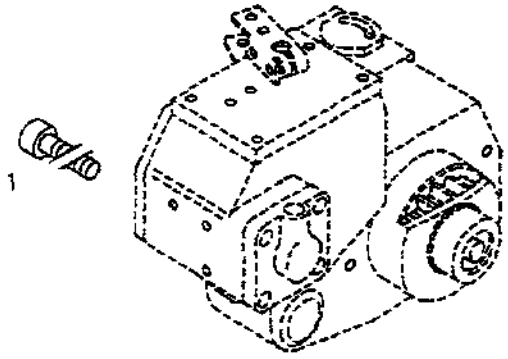

BEFESTIGUNGSTEILE FASTENINGS PIECES DE FIXAT. PIEZAS DE SUJECION 0130-27 507 0543

Bild Pos.	Teile-Nr.	Stck. zahl	DEUTSCH	ENGLISH	FRANCAIS	ESPANOL	Nummer/Bemerkung	ETK
1	0113 3880	4	ZYLINDERSCHRAUBE	CHEESE HEAD SCREW	VIS TETE CYLINDR.	TORN. CABEZA CIL.	DIN 006912-M 6 X 20- 8.8 -A4C	

000

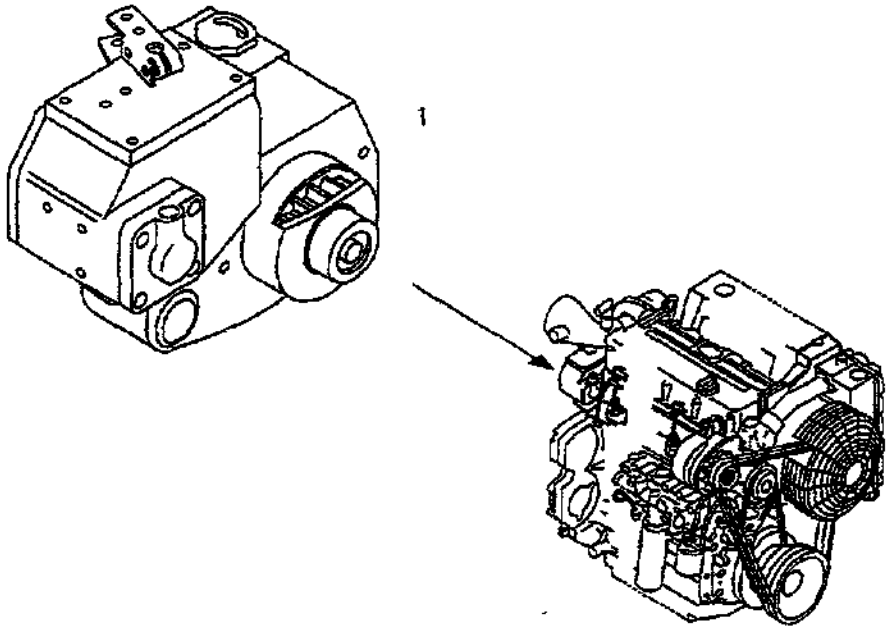

REGLER CONTROLLER REGULATEUR REGULADOR 0130-27 507 0567

Bild Pos.	Teile-Nr.	Stck. zahl	DEUTSCH	ENGLISH	FRANCAIS	ESPANOL	Nummer/Bemerkung	ETK
1	0211 1107	1	REGLER	CONTROLLER	REGULATEUR	REGULADOR		

000

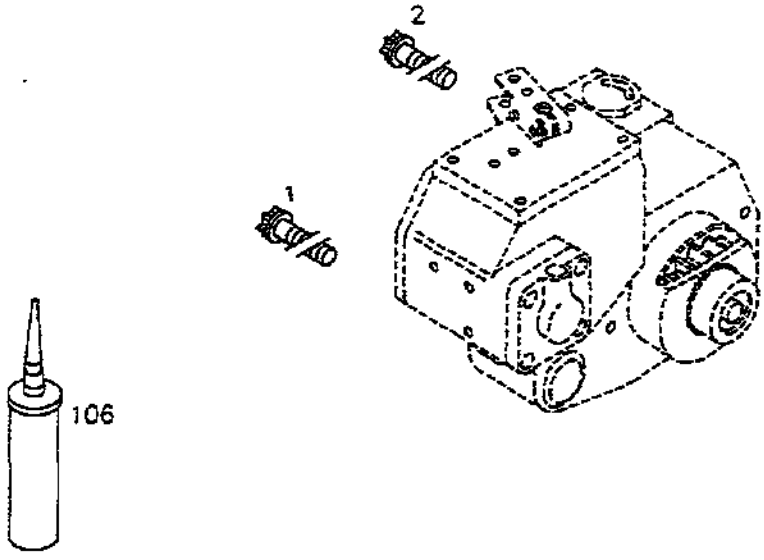

BEFESTIGUNGSTEILE FASTENINGS PIECES DE FIXAT. PIEZAS DE SUJECION 0130-27 507 0771

Bild Pos.	Teile-Nr.	Stck. zahl	DEUTSCH	ENGLISH	FRANÇAIS	ESPANOL	Nummer/Bemerkung	ETK
1	0117 9410	1	TORX-SCHRAUBE	TORX-HEAD BOLT	VIS A TETE TORX	TORNILLO TEST.TORX	H 002032-HBM 8X 55-10.9 -A4C-W	
2	0211 1248	4	TORX-SCHRAUBE	TORX-HEAD BOLT	VIS A TETE TORX	TORNILLO TEST.TORX		
106	0140 0735	1	DICHTUNGSMASSE	PACKING COMPOUND	HERMETIC	PASTA HERMETIZANTE	H 000699-DEUTZ DW 48- 315 CCM	01

000

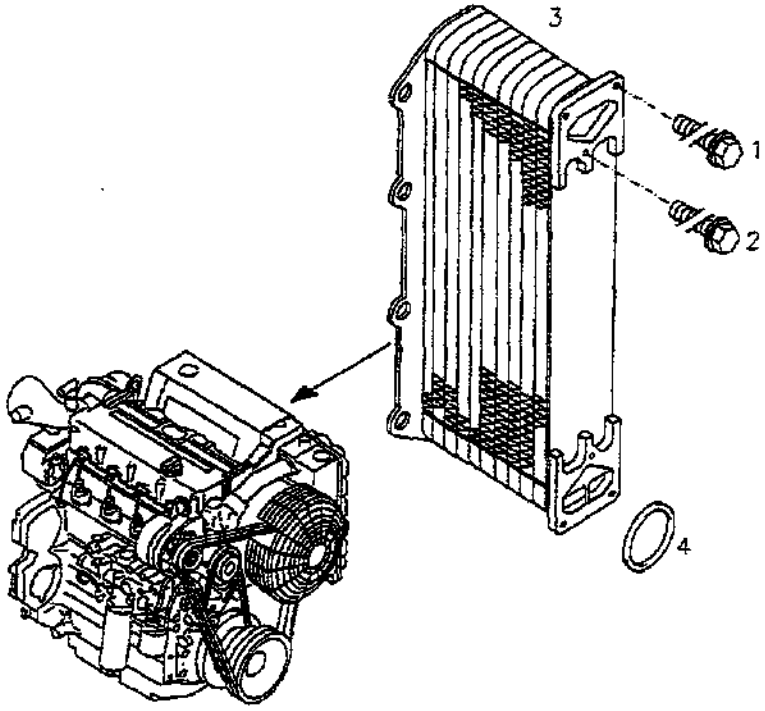

WASSERKUEHLER WATER COOLER REFROIDISSEUR EAU ENFRIADOR DE AGUA 0130-36 507 0511

Bild Pos.	Teile-Nr.	Stck. zahl	DEUTSCH	ENGLISH	FRANCAIS	ESPANOL	Nummer/Bemerkung	ETK
1	0117 9193	4	SECHSKANTSCHRAUBE	HEXAGON BOLT	VIS TETE HEXAGONAL	TORN.DE CABE.EXAG.	H 002008-F-M 6 X 30- 10.9-A4C	
2	0117 9211	2	SECHSKANTSCHRAUBE	HEXAGON BOLT	VIS TETE HEXAGONAL	TORN.DE CABE.EXAG.	H 002008-F-M 6 X 90- 10.9-A4C	
3	0420 3899	1	WASSERKUEHLER	WATER COOLER	REFROIDISSEUR EAU	ENFRIADOR DE AGUA		
4	0420 1463	2	RUNDDICHTRING	O-SEAL	ANNEAU TORIQUE	JUNTA TORNICA	H 002927- 80 X 4 -EPDM-6-70	

000

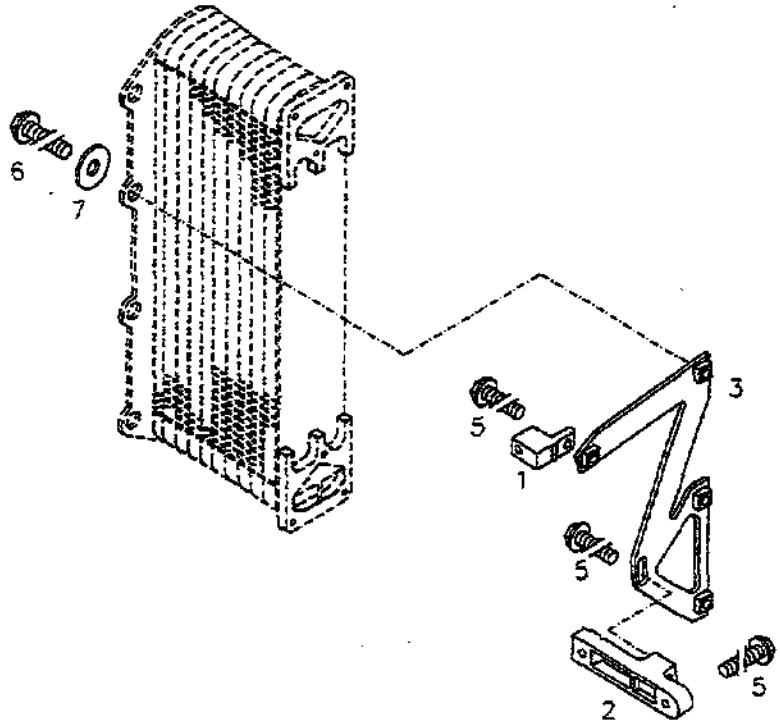

KUEHLER/HALTERUNG COOLER ASSEMBLY RADIATEUR/SUPPORT RADIADOR/SOPORTE 0130-36 507 0918

Bild Pos.	Teile-Nr.	Stck. zahl	DEUTSCH	ENGLISH	FRANCAIS	ESPANOL	Nummer/Bemerkung	ETK
1	0420 5209	1	KONSOLE	BRACKET	CONSOLE	CONSOLA		
2	0420 3632	1	KONSOLE	BRACKET	CONSOLE	CONSOLA		
3	0420 4932	1	STUETZE	SUPPORT	SUPPORT/APPUI	APOYO		
5	0114 3362	5	SECHSKANTSCHRAUBE	HEXAGON BOLT	VIS TETE HEXAGONAL	TORN.DE CABE.EXAG.	H 002008-F-M 8 X 35- 10.9-A4C	
6	0114 3369	3	SECHSKANTSCHRAUBE	HEXAGON BOLT	VIS TETE HEXAGONAL	TORN.DE CABE.EXAG.	H 002008-F-M 8 X 20-LG 2,5-10.9-A4C	
7	0113 8374	4	SCHEIBE	PLAIN WASHER	RONDELLE PLATE	ARANDELA PLANA	DIN 007349- 8,4-ST-A4C	

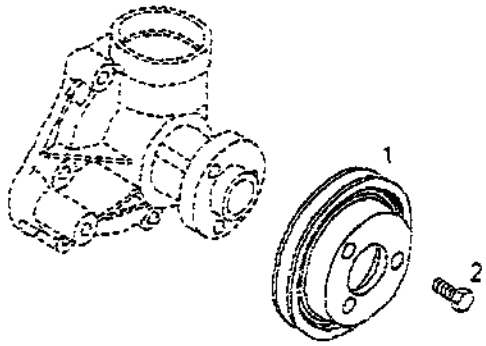

ANTRIEBSTEILE DRIVING PARTS PIECES D'ENTRAINEM PIEZAS ACCIONAMIE. 0130-37 507 0127

Bild Pos.	Teile-Nr.	Stck. zahl	DEUTSCH	ENGLISH	FRANCAIS	ESPANOL	Nummer/Bemerkung	ETK
1	0420 1579	1	KEILRIEMENSCHEIBE	V-GROOVED PULLEY	POULIE A GORGE	POLEA TRAPECIAL		
2	0113 2564	3	SECHSKANTSCHRAUBE	HEXAGON BOLT	VIS TETE HEXAGONAL	TORN.DE CABE.EXAG.	DIN 000933-M 8 X 14 - 8.8-A4C	

000

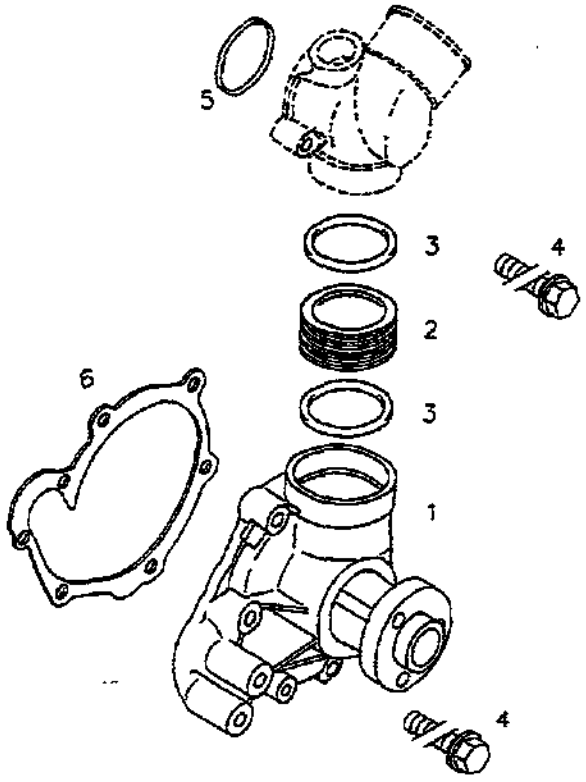

KUEHLWASSERPUMPE COOLING WATER PUMP POMPE D'EAU REFROI BOMBA AGUA REFRIG. 0130-37 507 0458

Bild Pos.	Teile-Nr.	Stck. zahl	DEUTSCH	ENGLISH	FRANCAIS	ESPANOL	Nummer/Bemerkung	STK
1	0420 4123	1	KUEHLWASSERPUMPE	COOLING WATER PUMP	POMPE D'EAU REFROI	BOMBA AGUA REFRIG.		
2	0420 0486	1	STECKSTUECK	PLUG	PIECE A ENFICHER	PIEZA DE ENCHUFE		
3	0420 0205	2	RUNDDICHTRING	O-SEAL	ANNEAU TORIQUE	JUNTA TORNICA	H 002927- 50 X 5 -EPDM-6-70	
4	0114 3362	9	SECHSKANTSCHRAUBE	HEXAGON BOLT	VIS TETE HEXAGONAL	TORN.DE CABE.EXAG.	H 002008-F-M 8 X 35- 10.9-A4C	
5	0117 9868	1	RUNDDICHTRING	O-SEAL	ANNEAU TORIQUE	JUNTA TORNICA	H 002927- 82 X 3 -EPDM-6-70	
6	0419 8968	1	FLACHDICHTUNG	FLAT GASKET	GARNITURE PLATE	JUNTA PLANA		

000

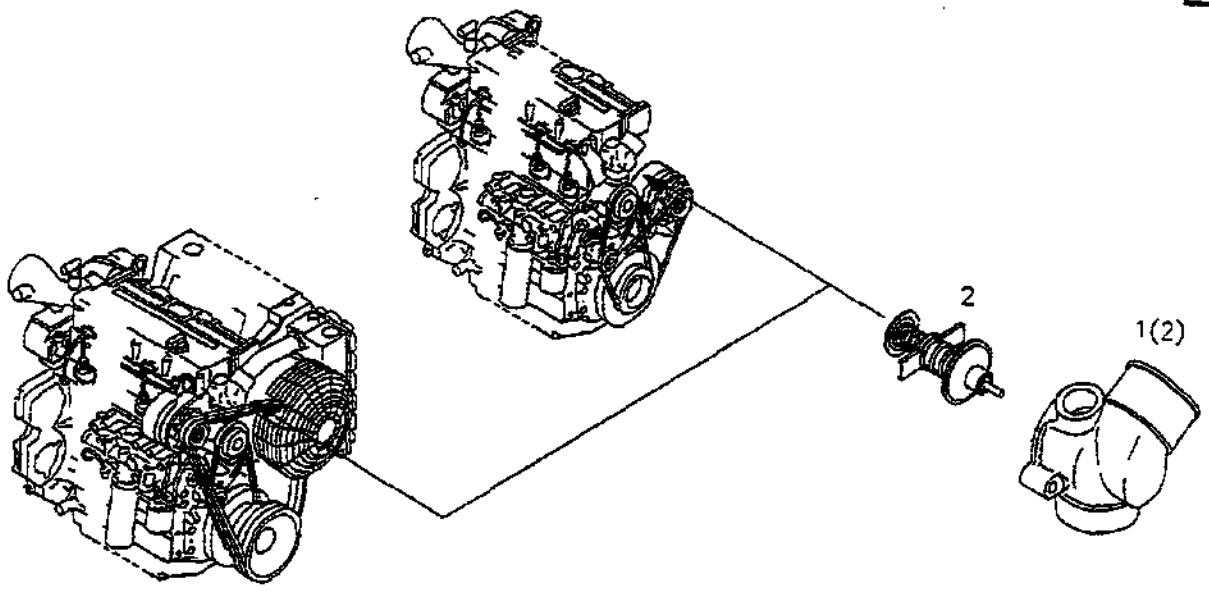

Bild Pos.	Teile-Nr.	Stck. zahl	DEUTSCH	ENGLISH	FRANCAIS	ESPANOL	Nummer/Bemerkung	ETK
			THERMOSTAT	THERMOSTAT	THERMOSTAT	TERMOSTATO	0130-38 507 0459	
1	0419 8792	1	THERMOSTAT	THERMOSTAT	THERMOSTAT	TERMOSTATO	MIT POS.... WITH ITEM.... AVEC POSTE.... CON POS. ..... (2)	
2	0420 4796	1	EINSATZ	INSERT/ELEMENT	GARNITURE	ELEMENTO/SUPLEMEN.		

Vent plug
Vis de purge d'air
Tornillo purga aire

0130 -38- 0507 0462

000

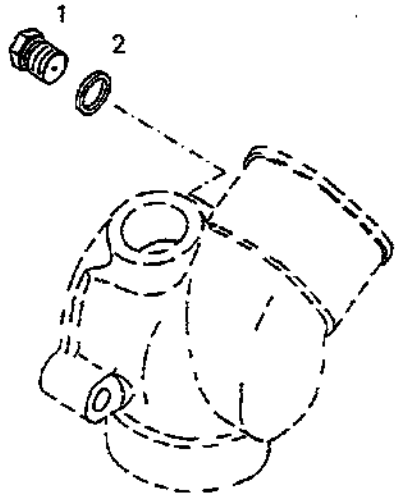

ENTLUEFT.SCHRAUBE VENT PLUG VIS DE PURGE D'AIR TORN.PURGA AIRE 0130-38 507 0462

Bild Pos.	Teile-Nr.	Stck.-zahl	DEUTSCH	ENGLISH	FRANCAIS	ESPANOL	Nummer/Bemerkung	ETK
1	0420 4875	1	ENTLUEFT.SCHRAUBE	VENT PLUG	VIS DE PURGE D'AIR	TORN.PURGA AIRE		
2	0111 8868	1	DICHTRING	SEALING RING	BAGUE D'ETANCHEITE	ANILLO JUNTA	DIN 007603-A 10 X 16 -AL	01

000

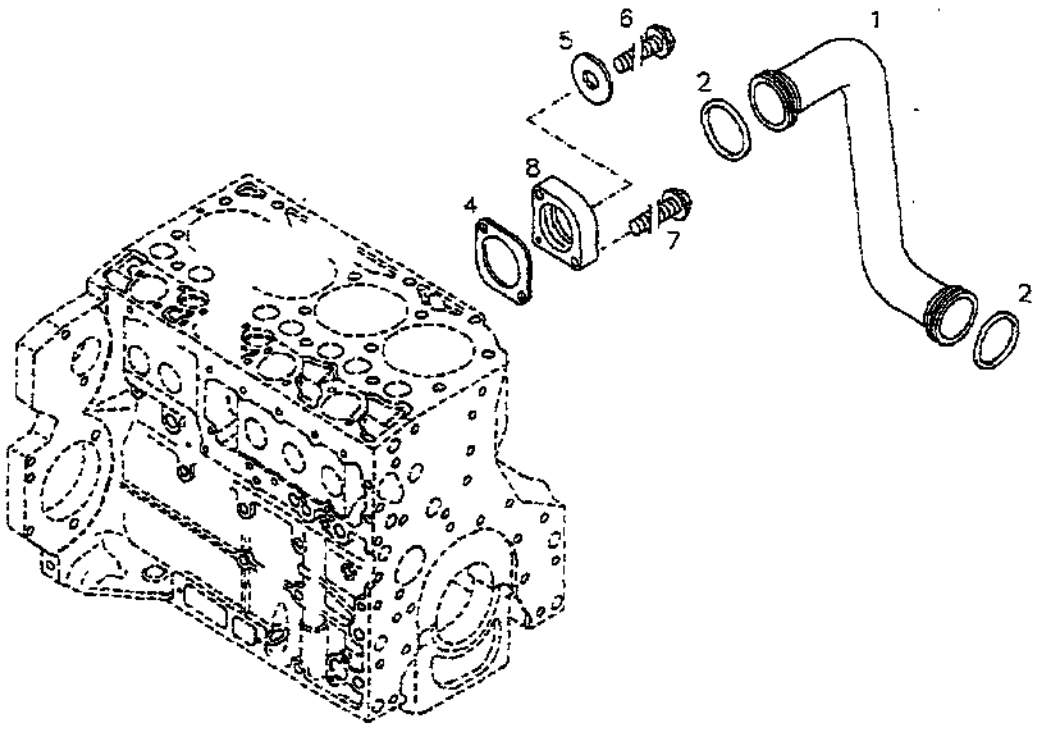

KUEHLWASSERLEITUNG COOLING WATER LINE CONDUITE D'EAU TUBER.AG.REFRIGER. 0130-38 507 0512

Bild Pos.	Teile-Nr.	Stck. zahl	DEUTSCH	ENGLISH	FRANCAIS	ESPANOL	Nummer/Bemerkung	ETK
1	0420 1466	1	KUEHLWASSERLEITUNG	COOLING WATER LINE	CONDUITE D'EAU	TUBER.AG.REFRIGER.		
2	0420 0582	2	RUNDDICHTRING	O-SEAL	ANNEAU TORIQUE	JUNTA TORNICA	H 002927- 42 X 4 -EPDM-B-70	
4	0420 2328	1	DICHTUNG	GASKET	GARNITURE/JOINT	JUNTA		
5	0113 8374	1	SCHEIBE	PLAIN WASHER	RONDELLE PLATE	ARANDELA PLANA	DIN 007349- 8,4-ST-A4C	
6	0114 3369	1	SECHSKANTSCHRAUBE	HEXAGON BOLT	VIS TETE HEXAGONAL	TORN.DE CABE.EXAG.	H 002008-F-M 8 X 20-LG 2,5-10 .9-A4C	
7	0114 3362	2	SECHSKANTSCHRAUBE	HEXAGON BOLT	VIS TETE HEXAGONAL	TORN.DE CABE.EXAG.	H 002008-F-M 8 X 35- 10.9-A4C	
8	0420 2299	1	FLANSCH	FLANGE	BRIDE/COLLET	BRIDA		

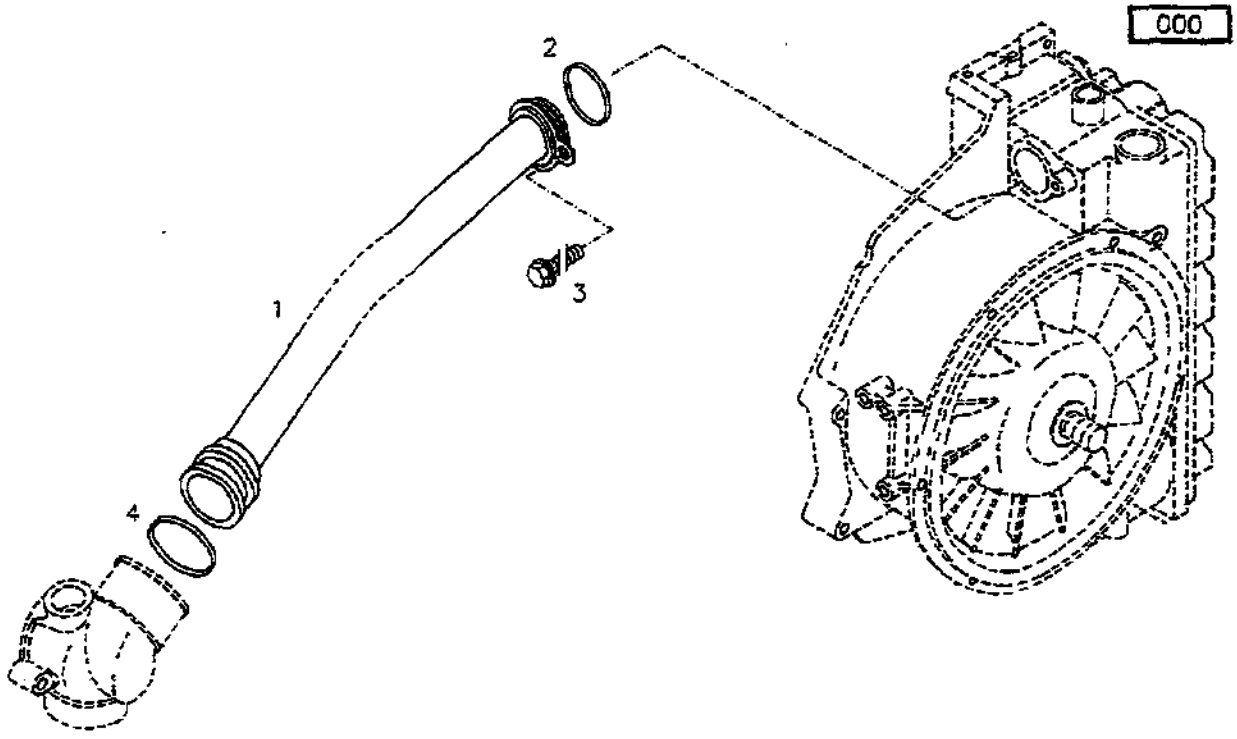

KUEHLMITTELLEITUNG COOLANT PIPE CONDUITE TUBER.MEDIO REFRIG 0130-38 507 0513

Bild Pos.	Teile-Nr.	Stck. zahl	DEUTSCH	ENGLISH	FRANCAIS	ESPANOL	Nummer/Bemerkung	ETK
1	0420 5506	1	KUEHLMITTELLEITUNG	COOLANT PIPE	CONDUITE	TUBER.MEDIO REFRIG		
2	0420 0582	1	RUNDDICHTRING	O-SEAL	ANNEAU TORIQUE	JUNTA TORNICA	H 002927- 42 X 4 -EPDM-6-70	
3	0114 3384	1	SECHSKANTSCHRAUBE	HEXAGON BOLT	VIS TETE HEXAGONAL	TORN.DE CABE.EXAG.	H 002008-F-M 6 X 16-LG 2,5-10 .9-A4C	
4	0420 0583	1	RUNDDICHTRING	O-SEAL	ANNEAU TORIQUE	JUNTA TORNICA	H 002927- 35 X 4 -EPDM-6-70	

001

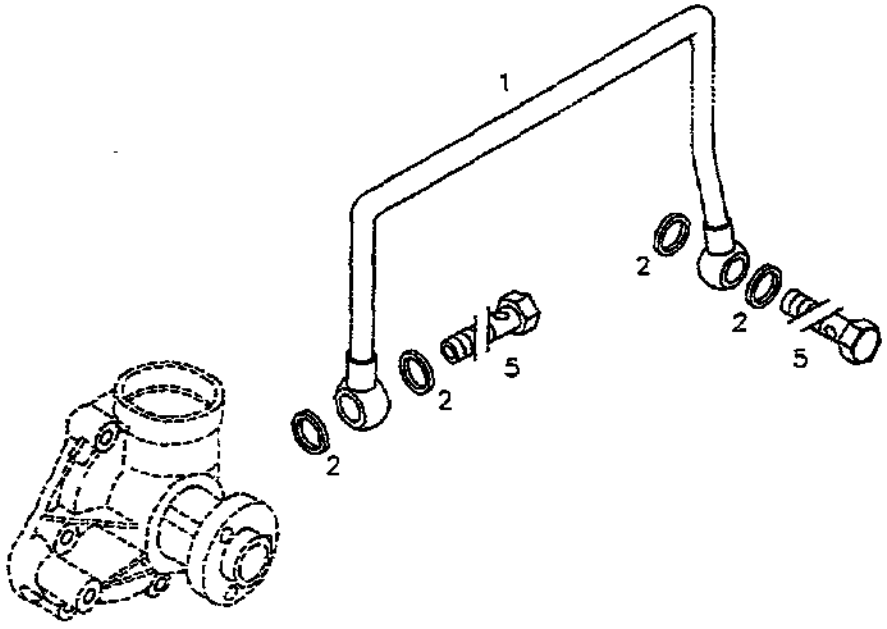

AUSGLEICHLEITUNG BALANCING LINE CONDUIT COMPENSATR TUBERIA COMPENSAC. 0130-38 507 0514

Bild Pos.	Teile-Nr.	Stck. Zahl	DEUTSCH	ENGLISH	FRANCAIS	ESPANOL	Nummer/Bemerkung	ETK
1	0420 3735	1	AUSGLEICHSLEITUNG	EQUALIZING LINE	OHNE BENENNUNG	OHNE BENENNUNG		
2	0111 8699	4	DICHTRING	SEALING RING	BAGUE D'ETANCHEITE	ANILLO JUNTA	DIN 007603-A 16 X 20 -AL	01
5	0113 7064	2	HOHLSCHRAUBE	HOLLOW SCREW	VIS BANJO	TORNILLO HUECO	H 003102-012 M-ST-A4C	

001

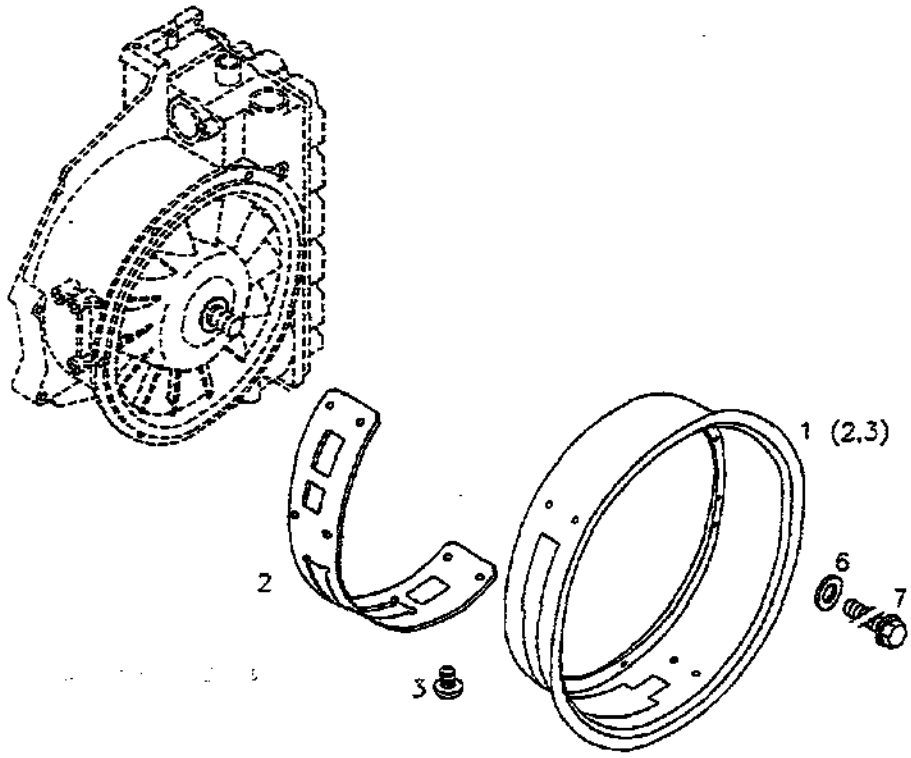

LUFTFUEHRUNGSRING AIR GUIDE RING BAGUE ANILLO GUIA AIRE 0130-39 507 0308

Bild Pos.	Teile-Nr.	Stck. zahl	DEUTSCH	ENGLISH	FRANCAIS	ESPANOL	Nummer/Bemerkung	ETK
1	0420 6307	1	LUFTFUEHRUNGSRING	AIR GUIDE RING	BAGUE	ANILLO GUIA AIRE	MIT POS.... WITH ITEM.... AVEC POSTE.... CON POS. ..... (2,3)	
2	0420 6309	1	DICHTBAND	SEALING TAPE	RUBAN D'ETANCHEIT	CINTA HERMETIZANTE		
3	0117 7491	6	BEFESTIGUNGSKNOPF	FASTENER BUTTON	BOUTON FIXATION	BOTON DE SUJECION	H 007502- A-20X 3 - 6,5 -PE-S W	
6	0115 1684	6	SCHEIBE	PLAIN WASHER	RONDELLE PLATE	ARANDELA PLANA	DIN 000125- 6,4-200HV-A4C	
7	0117 9291	6	SECHSKANTSCHRAUBE	HEXAGON BOLT	VIS TETE HEXAGONAL	TORN.DE CABE.EXAG.	H 002008-F-M 6 X 16- 10.9-A4C	

000

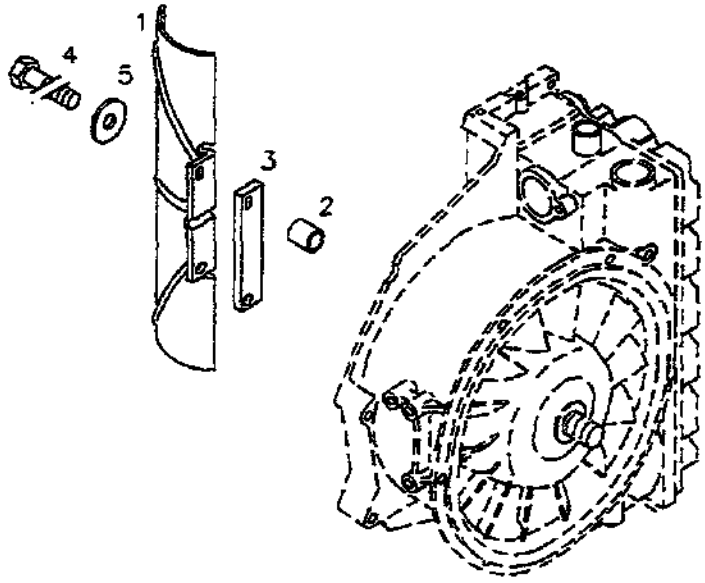

LUFTLEITBLECH AIR BAFFLE TOLE-CONDUIT.D'AIR CHAPA GUIA DE AIRE 0130-39 507 0344

Bild Pos.	Teile-Nr.	Stck. zahl	DEUTSCH	ENGLISH	FRANCAIS	ESPANOL	Nummer/Bemerkung	ETK
1	0420 0914	1	LUFTLEITBLECH	AIR BAFFLE	TOLE-CONDUIT.D'AIR	CHAPA GUIA DE AIRE		
2	0420 0917	2	ABSTANDBUCHSE	SPACER BUSH	DOUILLE ECARTEM	CASQUILLO DISTANC.		
3	0420 2253	1	PLATTE	PLATE	PLAQUE	PLACA		
4	0112 6974	2	SECHSKANTSCHRAUBE	HEXAGON BOLT	VIS TETE HEXAGONAL	TORN.DE CABE.EXAG.	DIN 000931- M 6 X 65 - 8.8-A-A4C	
5	0081 0311	2	SCHEIBE	PLAIN WASHER	RONDELLE PLATE	ARANDELA PLANA	DIN 007349- 6,4-ST-A4C	

BEFESTIGUNGSTEILE FASTENINGS PIECES DE FIXAT. PIEZAS DE SUJECION 0130-20 507 0124

Bild Pos.	Teile-Nr.	Stck. zahl	DEUTSCH	ENGLISH	FRANCAIS	ESPANOL	Nummer/Bemerkung	ETK
1	0114 3389	2	SECHSKANTSCHRAUBE	HEXAGON BOLT	VIS TETE HEXAGONAL	TORN.DE CABE.EXAG.	H 002008-F-M 8 X 20-LG 2.5-10.9-A4C	
2	0113 8374	1	SCHEIBE	PLAIN WASHER	RONDELLE PLATE	ARANDELA PLANA	DIN 007348- 8,4-ST-A4C	

000

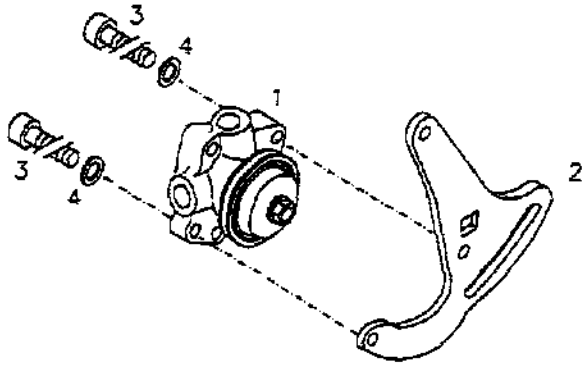

KRAFTSTOFFPUMPE FUEL PUMP POMPE A COMBUST BOMBA COMBUSTIBLE 0130-20 507 0499

Bild Pos.	Teile-Nr.	Stck zahl	DEUTSCH	ENGLISH	FRANCAIS	ESPANOL	Nummer/Bemerkung	ETK
1	0419 8727	1	KRAFTSTOFFPUMPE	FUEL PUMP	POMPE A COMBUST	BOMBA COMBUSTIBLE		
2	0419 5722	1	SPANNLASCHE	CLAMPING STRAP	ECLISSE DE SERRAGE	ECLISA DE APRIETE		
3	0111 0577	2	ZYLINDERSCHRAUBE	CHEESE HEAD SCREW	VIS TETE CYLINDR.	TORN. CABEZA CIL.	DIN 000912- M 8 X 25 - 8.8-A4 C	
4	0110 7283	2	FEDERSCHEIBE	SPRING WASHER	RONDELLE ELASTIQUE	ARANDELA ELASTICA	DIN 000137-B 8-FST-A4C	

000

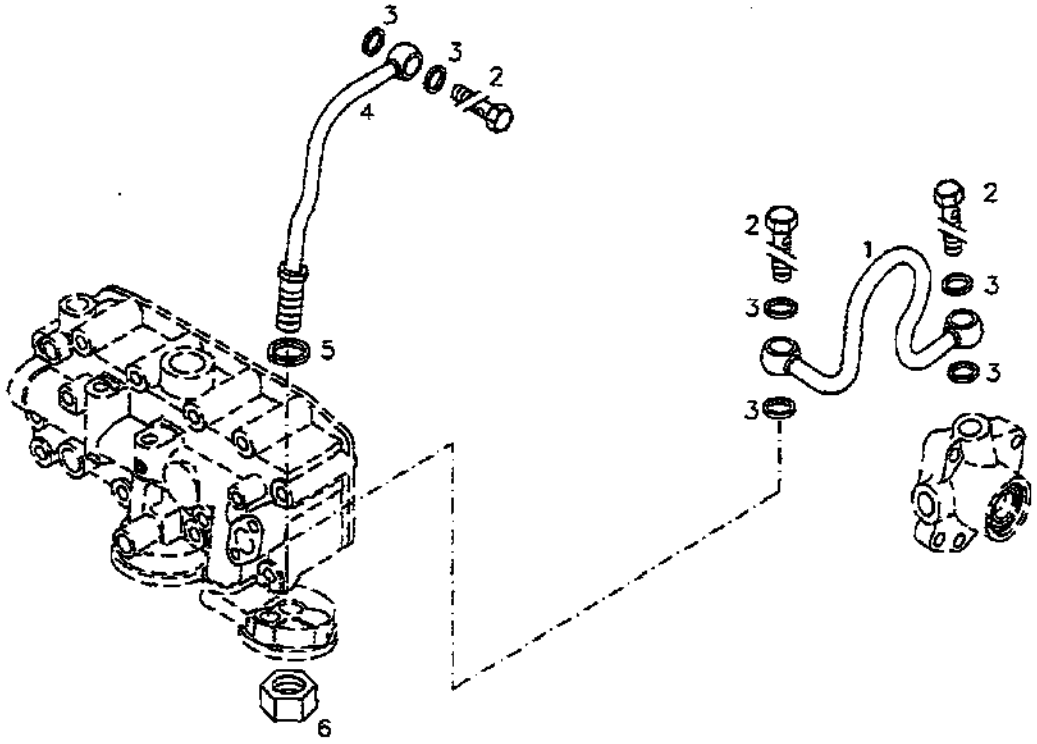

KRAFTSTOFFLEITUNG FUEL LINE CONDUITE COMBUST. TUBERIA COMBUSTIB. 0130-21 507 0348

Bild Pos.	Teile-Nr.	Stck. zahl	DEUTSCH	ENGLISH	FRANCAIS	ESPANOL	Nummer/Bemerkung	ETK
1	0420 3540	1	KRAFTSTOFFLEITUNG	FUEL LINE	CONDUITE COMBUST.	TUBERIA COMBUSTIB.		
2	0111 9246	3	HOHLSCHRAUBE	HOLLOW SCREW	VIS BANJO	TORNILLO HUECO	H 003102-010 M-ST-A4C	
3	0111 8688	6	DICHTRING	SEALING RING	BAGUE D'ÉTANCHEITE	ANILLO JUNTA	DIN 007603-A 14 X 18 -CU	01
4	0419 7453	1	KRAFTSTOFFLEITUNG	FUEL LINE	CONDUITE COMBUST.	TUBERIA COMBUSTIB.		
5	0111 8700	1	DICHTRING	SEALING RING	BAGUE D'ÉTANCHEITE	ANILLO JUNTA	DIN 007603-A 16 X 20 -CU	01
6	0111 2895	1	SECHSKANTMUTTER	HEXAGON NUT	ECROU HEXAGONAL	TUERCA EXAGONAL	DIN 000934-M16 X1,5 - 8-A4C	

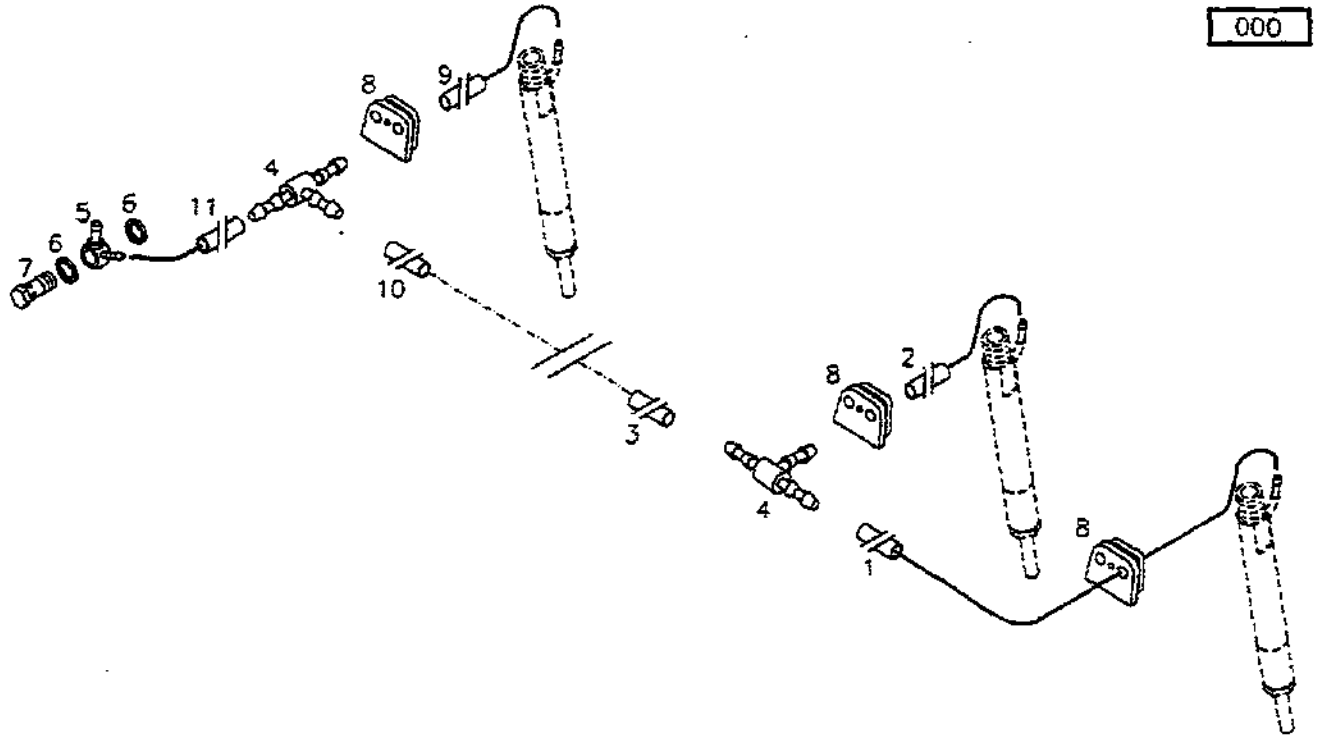

UEBERSTROEMLEITUNG OVERFLOW LINE CONDUITE DECHARGE TUBERIA DE REBOSE 0130-21 507 0363

Bild Pos.	Teile-Nr.	Stck. zahl	DEUTSCH	ENGLISH	FRANCAIS	ESPANOL	Nummer/Bemerkung	ETK
1	0117 9876	MTR	GUMMISCHLAUCH	RUBBER HOSE	FLEXIBLE CAOUTCH	MANGUERA DE GOMA	H 003405-C1-3,2X7 X 270 -NBR-4-68 LANG LONG LONG (UE) (S) LARGO 0,270 METER	
2	0117 9248	MTR	GUMMISCHLAUCH	RUBBER HOSE	FLEXIBLE CAOUTCH	MANGUERA DE GOMA	H 003405-C1-3,2X7 X 145 -NBR-4-68 LANG LONG LONG (UE) (S) LARGO 0,145 METER	
3	0117 9877	MTR	GUMMISCHLAUCH	RUBBER HOSE	FLEXIBLE CAOUTCH	MANGUERA DE GOMA	H 003405-C1-3,2X7 X 130 -NBR-4-68 LANG LONG LONG (UE) (S) LARGO 0,130 METER	
4	0117 9240	5	T-STUECK	T-FITTING	PIECE T	ACOPLAMIENTO EN T	H 003452-F 4 -POM-1-STD C-SW	
5	0419 7854	1	RINGSTUECK	BANJO FITTING	PIECE ANNULAIRE	PIEZA ANULAR		
6	0111 8693	2	DICHTRING	SEALING RING	BAGUE D'ÉTANCHEITE	ANILLO JUNTA	DIN 007603-A 14 X 20 -CU	D1
7	0419 7599	1	DRUCKHALTEVENTIL	PRESSURESTAT	CLAPET DE RETENUE	VALVULA RETENCION		
8	0419 8035	6	DICHTGUMMI	RUBBER SEAL	BOURRELET EN CC	BURLETE DE GOMA		
9	0117 8412	MTR	GUMMISCHLAUCH	RUBBER HOSE	FLEXIBLE CAOUTCH	MANGUERA DE GOMA	H 003405-C 3,2X7 X 135 -NBR-4-68 LANG LONG LONG (UE) (S) LARGO 0,135 METER	

000

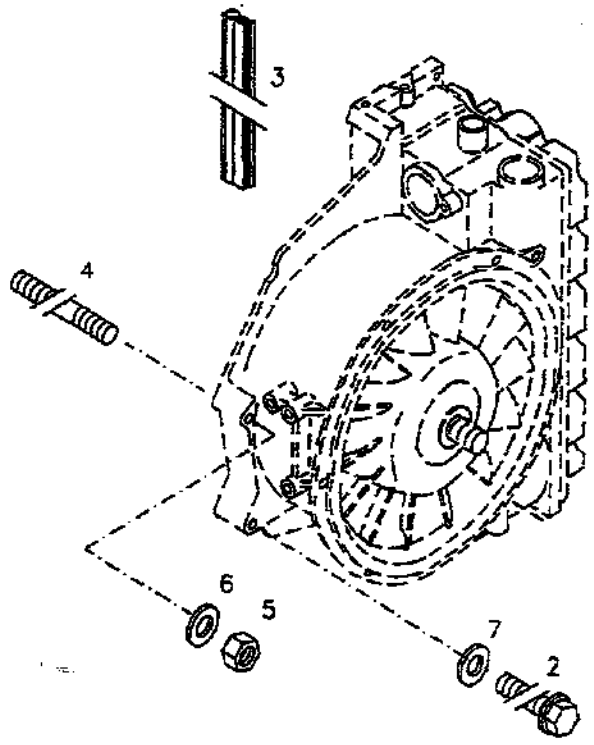

ANBAU ASSEMBLY L'ASSEMBLAGE MONTAJE 0130-39 507 0461

Bild Pos.	Teile-Nr.	Stck. zahl	DEUTSCH	ENGLISH	FRANCAIS	ESPANOL	Nummer/Bemerkung	ETK
2	0114 3363	4	SECHSKANTSCHRAUBE	HEXAGON BOLT	VIS TETE HEXAGONAL	TORN.DE CABE.EXAG.	H 002006-F-M 8 X 50- 10.9-A4C	
3	0138 8766	MTR	KLEMMPROFIL	CLAMPING SECTION	PROFIL DE SERRAGE	PERFIL DE APRIETE	H 846471-13-PN 1 LANG LONG LONG (UE) (S) LARGO 320 MM.	
4	0112 6209	1	STIFTSCHRAUBE	STUD	GOUJON	ESPARRAGO	DIN 000939-M 8 X 50 - 8.8-A4C	
5	0111 2824	1	SECHSKANTMUTTER	HEXAGON NUT	ECROU HEXAGONAL	TUERCA EXAGONAL	DIN 000934-M 8 - 8-A4C	
6	0115 1019	1	SCHEIBE	PLAIN WASHER	RONDELLE PLATE	ARANDELA PLANA	DIN 000125- 8,4-200HV	
7	0434 5707	1	SCHEIBE	PLAIN WASHER	RONDELLE PLATE	ARANDELA PLANA		

000

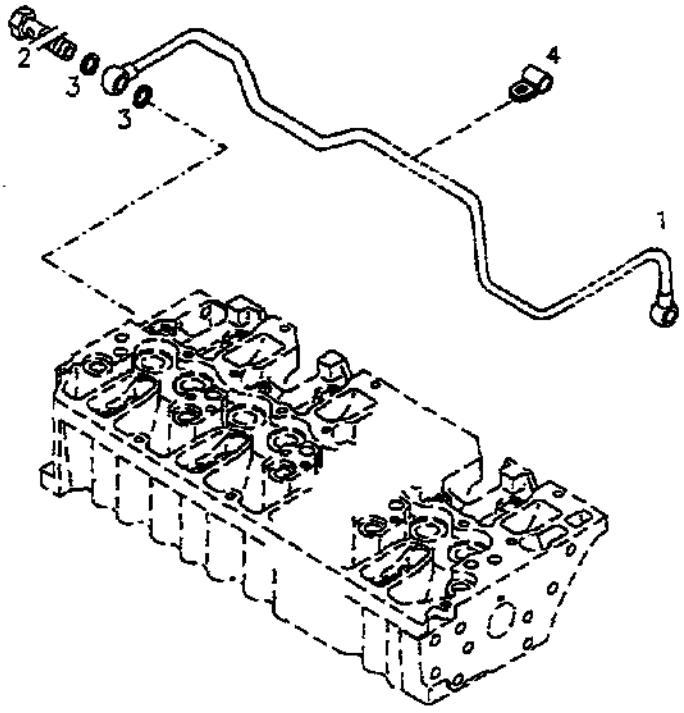

ENTLUEFTUNGS.LEIT. BREATHER LINE CONDUITE DE DESAER TUBERIA DESAIREAC. 0130-39 507 0463

Bild Pos.	Teile-Nr.	Stck. zahl	DEUTSCH	ENGLISH	FRANCAIS	ESPANOL	Nummer/Bemerkung	ETK
1	0420 4993	1	ENTLUEFTUNGS.LEIT.	BREATHER LINE	CONDUITE DE DESAER	TUBERIA DESAIREAC.		
2	0111 9237	2	HOHLSCHRAUBE	HOLLOW SCREW	VIS BANJO	TORNILLO HUECO	H 003102-D 6 M-ST-A4C	
3	0111 8668	4	DICHTRING	SEALING RING	BAGUE D'ETANCHEITE	ANILLO JUNTA	DIN 007603-A 10 X 16 -AL	01
4	0117 5536	3	ROHRSCHELLE	PIPE CLAMP	COLLIER PR TUBES	ABRAZADERA DE TUBO	H 003223-C 6X15-ST/DEUTZ MVQ 1-70	

000

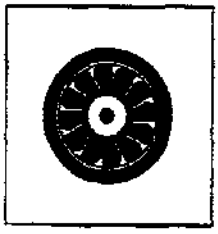

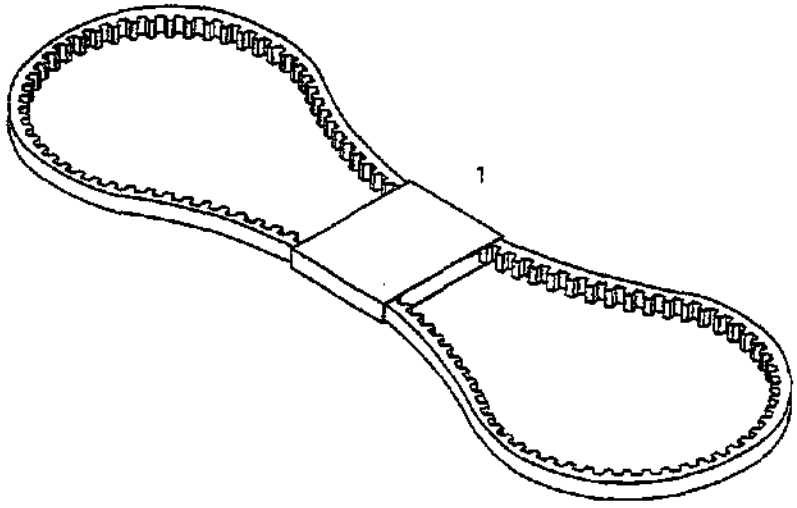

SCHMALKEILRIEMEN NARROW V-BELT COURR TRAP ETROITE CORR.TRAPEC.ESTREC 0130-39 507 0508

Bild Pos.	Teile-Nr.	Stck.-zahl	DEUTSCH	ENGLISH	FRANCAIS	ESPANOL	Nummer/Bemerkung	ETK
1	0117 9988	1	SCHMALKEILRIEMEN	NARROW V-BELT	COURR TRAP ETROITE	CORR.TRAPEC.ESTREC	H 003710-AVX 10X1025LA-WA *0 -10	

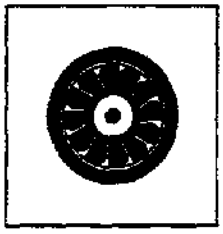

001

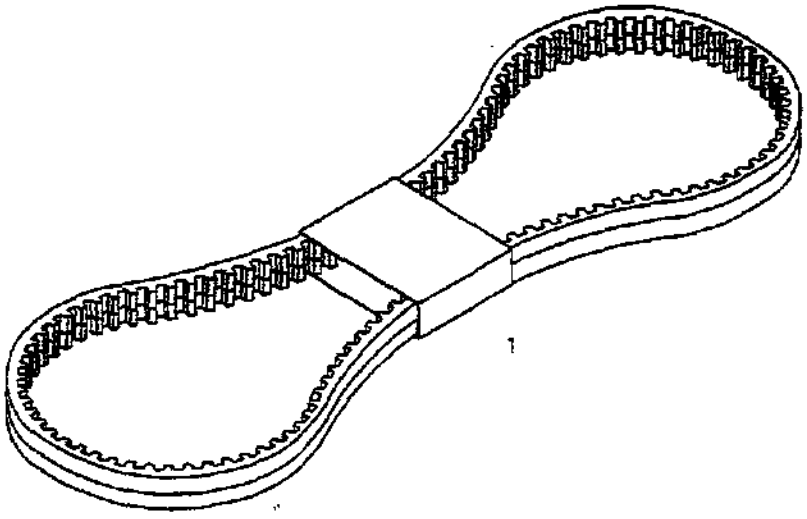

SCHMALKEILR.SATZ SET NARROW V-BELTS JEU COUR.TRAP.PLAT JGO.CORREAS TRAPEC 0130-39 507 0647

Bild Pos.	Teile-Nr.	Stck. zahl	DEUTSCH	ENGLISH	FRANCAIS	ESPANOL	Nummer/Bemerkung	ETK
1	0117 9792	1	SCHMALKEILR.SATZ	SET NARROW V-BELTS	JEU COUR.TRAP.PLAT	JGO.CORREAS TRAPEC	H 003710-2X AVX 10X1700LA -WA	

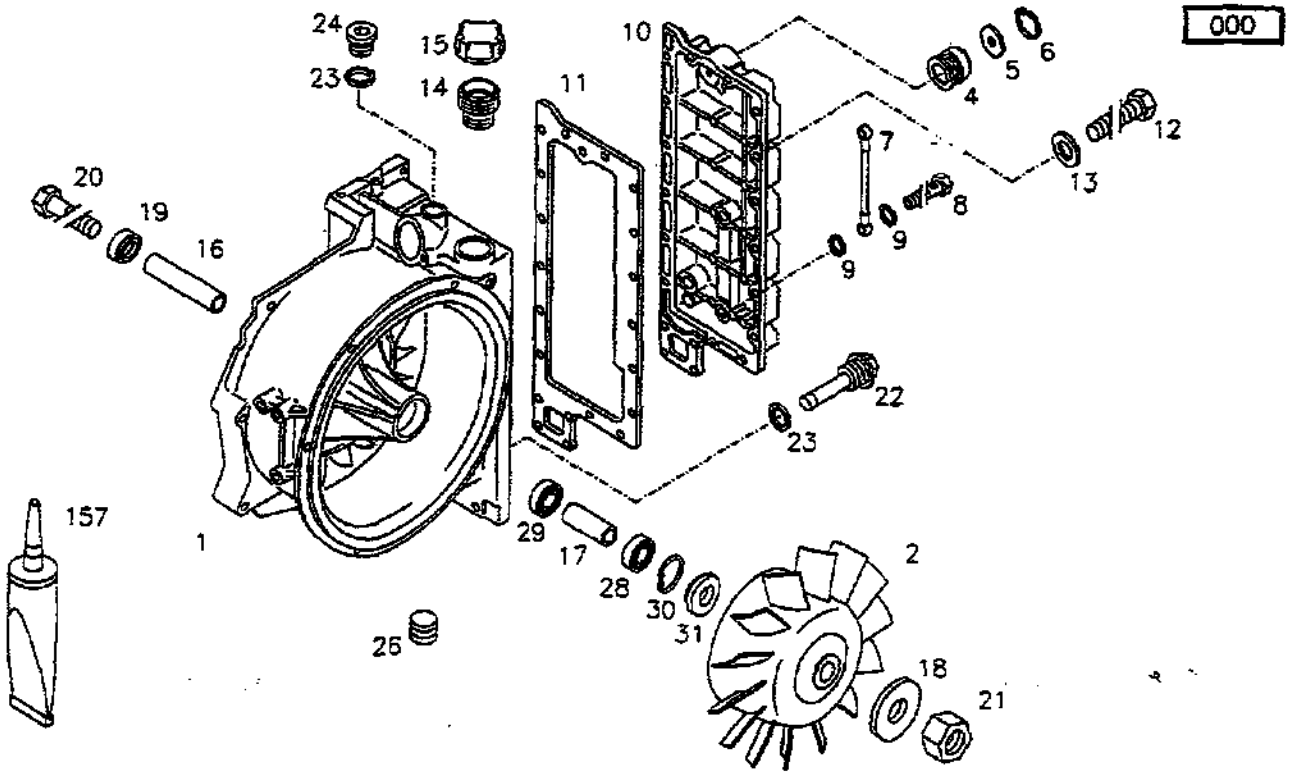

KUEHLGEBLAESE COOLING FAN SOUFFLANTE REFROID VENTILADOR 0130-39 507 0816

Bild Pos.	Teile-Nr.	Stck. zahl	DEUTSCH	ENGLISH	FRANCAIS	ESPANOL	Nummer/Bemerkung	ETK
1	0420 2174	1	GEBLAESETRAEGER	BLOWER CARRIER	SUPPORT SOUFFLANT.	SOPORTE VENTILADOR		
2	0420 2041	1	LAUFRAD	IMPELLER	ROUE A AUBES/ROTOR	ROTOR		
4	0420 2004	1	DRUCKVENTIL	PRESSU.CONTR.VALVE	SOUPAPE REFOULEM.	VALVULA DE PRESION		
5	0420 2127	1	SCHEIBE	PLAIN WASHER	RONDELLE PLATE	ARANDELA PLANA		
6	0110 7830	1	SICHERUNGSRING	CIRCLIP	CIRCLIP	ANILLO D.SEGURIDAD	DIN 000472- 42X1.75	
7	0420 2185	1	SCHLAUCHLEITUNG	HOSE ASSEMBLY	CONDUITE FLEXIBLE	MANGUERA		
8	0111 9237	2	HOHLSCHRAUBE	HOLLOW SCREW	VIS BANJO	TORNILLO HUECO	H 003102-D 6 M-ST-A4C	
9	0111 8658	4	DICHTRING	SEALING RING	BAGUE D'ETANCHEITE	ANILLO JUNTA	DIN 007603-A 10 X 13.5-AL	01
10	0420 2686	1	DECKEL	COVER	COUVERCLE	TAPA		
11	0420 2180	1	DICHTUNG	GASKET	GARNITURE/JOINT	JUNTA		
12	0117 9162	20	SECHSKANTSCHRAUBE	HEXAGON BOLT	VIS TETE HEXAGONAL	TORN.DE CABE.EXAG.	H 002094-AM 6X25	
13	0115 1664	20	SCHEIBE	PLAIN WASHER	RONDELLE PLATE	ARANDELA PLANA	DIN 000125- 6.4-200HV-A4C	
14	0420 2126	1	EINFUELLSTUTZEN	FILLER NECK	TUBULURE DE REMPL	TUBULADURA LLENADO		
15	0420 2158	1	SCHRAUBKAPPE	SCREW CAP	CAPUCHON FILETE	CAPERUZA ROSCADA		
16	0420 3318	1	HOHLWELLE	HOLLOW SHAFT	ARBRE CREUX	EJE HUECO		
17	0336 3687	1	BUCHSE	BUSH	DOUILLE	CASQUILLO		
18	0113 3726	1	SCHEIBE	PLAIN WASHER	RONDELLE PLATE	ARANDELA PLANA	DIN 009021-13 -140HV-A4C	
19	0420 2181	1	SCHEIBE	PLAIN WASHER	RONDELLE PLATE	ARANDELA PLANA		
20	0114 3505	1	SECHSKANTSCHRAUBE	HEXAGON BOLT	VIS TETE HEXAGONAL	TORN.DE CABE.EXAG.	DIN 000931- M12 X180 - 10.9-A	
21	0112 5801	1	SECHSKANTMUTTER	HEXAGON NUT	ECROU HEXAGONAL	TUERCA EXAGONAL	DIN 000934-M12 -10-A4C	
22	0420 2516	1	ABLASSSCHRAUBE	DRAIN PLUG	VIS DE VIDANGE	TORNILLO DE PURGA		
23	0111 8726	2	DICHTRING	SEALING RING	BAGUE D'ETANCHEITE	ANILLO JUNTA	DIN 007603-A 20 X 24 -AL	01

000

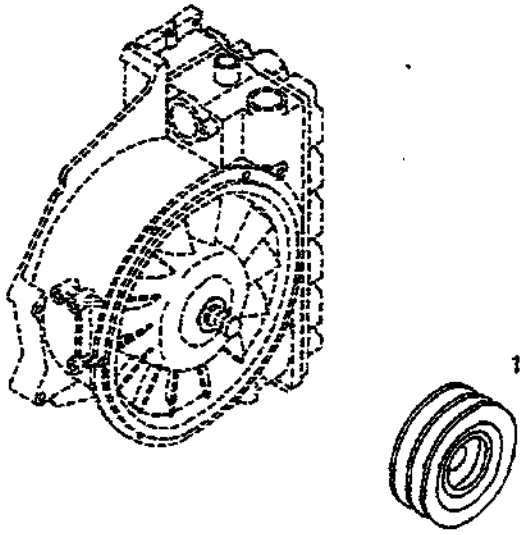

KEILRIEMENSCHEIBE V-GROOVED PULLEY POULIE A GORGE POLEA TRAPECIAL 0130-39 507 0790

Bild Pos.	Teile-Nr.	Stck. zahl	DEUTSCH	ENGLISH	FRANCAIS	ESPANOL	Nummer/Bemerkung	ETK
1	0420 2876	1	KEILRIEMENSCHEIBE	V-GROOVED PULLEY	POULIE A GORGE	POLEA TRAPECIAL		

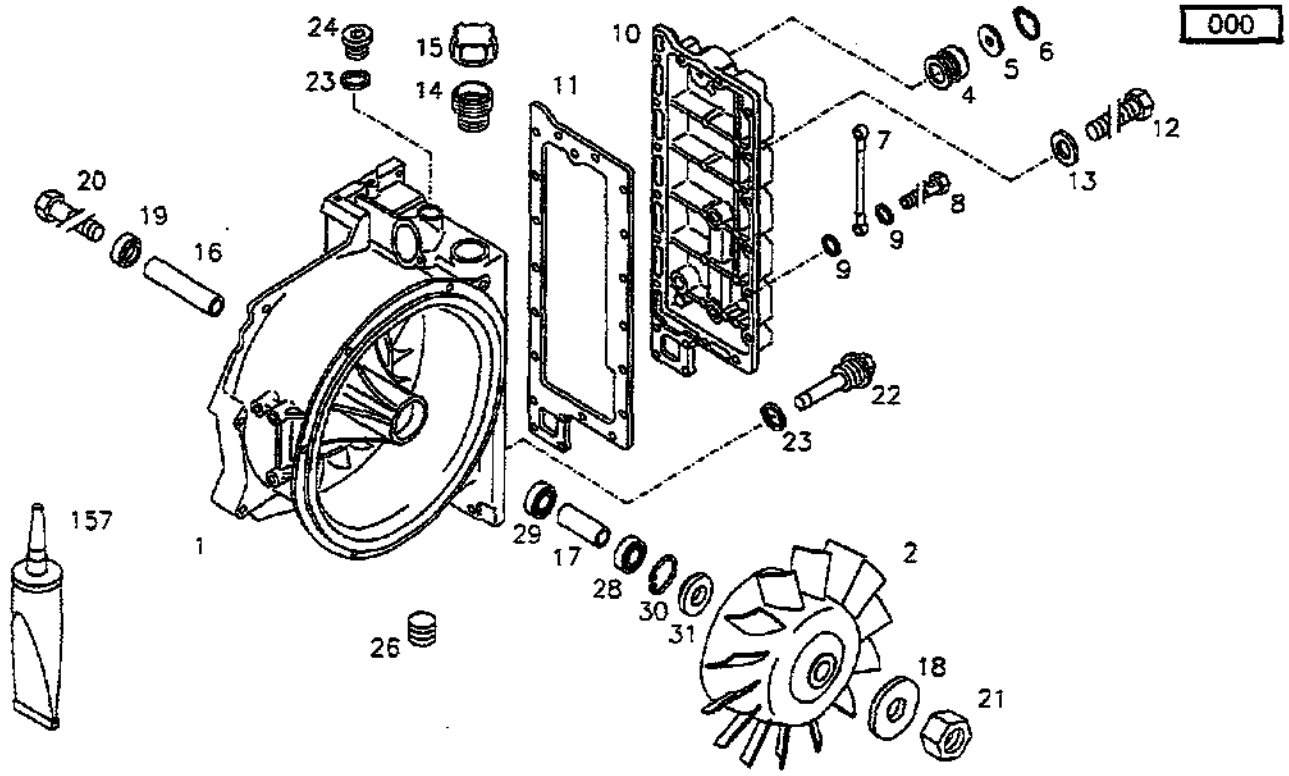

KUEHLGEBLAESE COOLING FAN SOUFFLANTE REFROID VENTILADOR 0130-39 507 0816

Bild Pos.	Teile-Nr.	Stck.-zahl	DEUTSCH	ENGLISH	FRANCAIS	ESPANOL	Nummer/Bemerkung	ETK
24	0520 8701	1	VERSCHLUSSSCHRAUBE	SCREW PLUG	BOUCHON FILETE	TAPON ROSCADO	DIN 000908-M20X1.5-ST-ZNPHRF	
26	0117 9198	1	VERSCHLUSSSCHRAUBE	SCREW PLUG	BOUCHON FILETE	TAPON ROSCADO	H 002812-905-M18X1.5-ST-A4C-P RE 5	
28	0117 9116	1	RILLENKUGELLAGER	BALL BEARING	ROULEM. A BILLES	RODAMIENTO D.BOLAS	H 004461-63 05-2RS-C3	
29	0117 9730	1	RILLENKUGELLAGER	BALL BEARING	ROULEM. A BILLES	RODAMIENTO D.BOLAS	H 004461-60 05-2RS -C3	
30	0110 7844	1	SICHERUNGSRING	CIRCLIP	CIRCLIP	ANILLO D.SEGURIDAD	DIN 000472- 62X2	
31	0420 2345	1	DRUCKSTUECK	THRUST PAD	POUSSOIR	PIEZA DE PRESION		
157	0100 8874	1	SICHERUNGSMITTEL	SAFETY/LOCK AGENT	RESINE-FREIN	MEDIO AFIANZADOR	H 000699-DEUTZ DW.84- 50 ML	

000

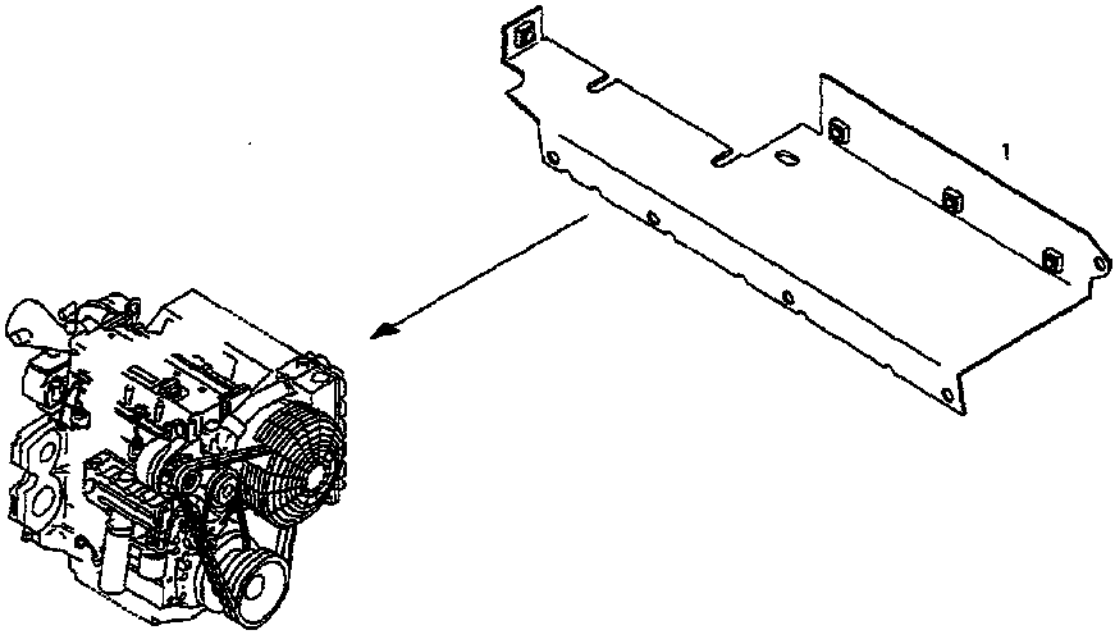

UNTERTEIL BASE PARTIE INFERIEURE PARTE INFERIOR 0130-40 507 0474

Bild Pos.	Teile-Nr.	Stck. zahl	DEUTSCH	ENGLISH	FRANCAIS	ESPANOL	Nummer/Bemerkung	ETK
1	0420 3442	1	UNTERTEIL	BASE	PARTIE INFERIEURE	PARTE INFERIOR		

000

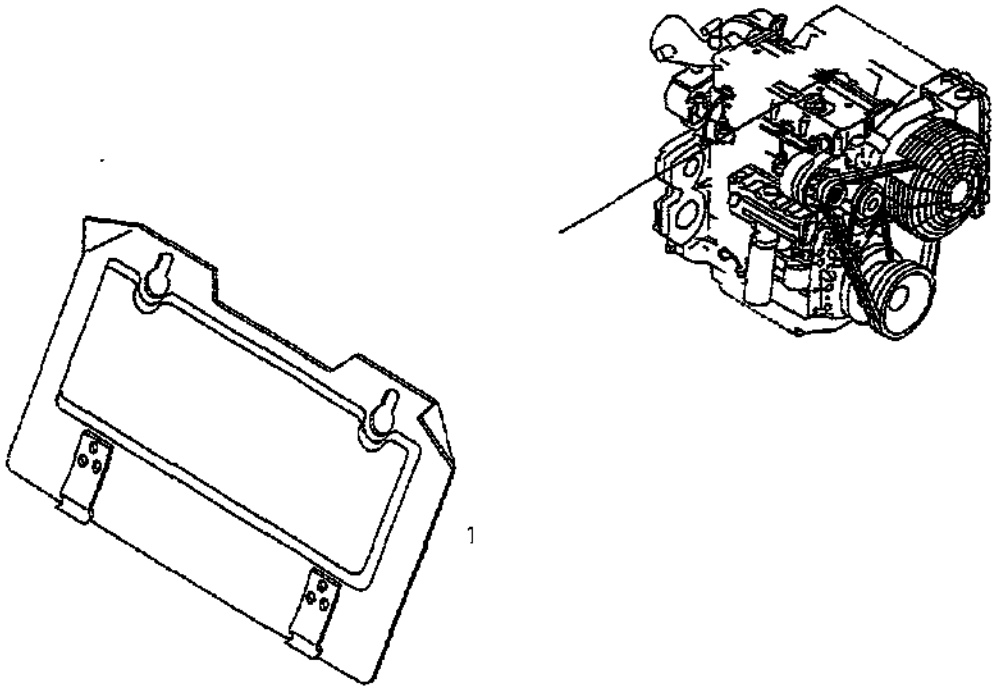

SCHAULOCHBLECH INSPECT.HOLE SHEET TOLE TROU REGARD CHAPA ABERT.INSPEC 0130-40 507 0475

Bild Pos.	Teile-Nr.	Stck. zahl	DEUTSCH	ENGLISH	FRANÇAIS	ESPANOL	Nummer/Bemerkung	ETK
1	0420 3489	1	SCHAULOCHBLECH	INSPECT.HOLE SHEET	TOLE TROU REGARD	CHAPA ABERT.INSPEC		

000

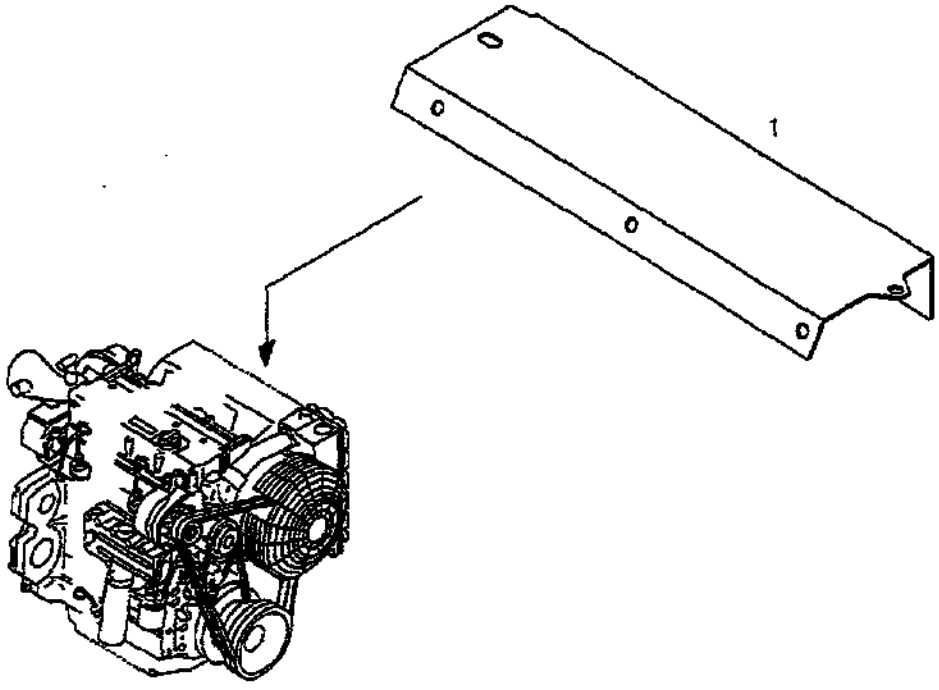

OBERTEIL TOP PART PARTIE SUPERIEURE PARTE SUPERIOR 0130-40 507 0476

Bild Pos.	Teile-Nr.	Stck. zahl	DEUTSCH	ENGLISH	FRANCAIS	ESPANOL	Nummer/Bemerkung	ETK
1	0420 3474	1	OBERTEIL	TOP PART	PARTIE SUPERIEURE	PARTE SUPERIOR		

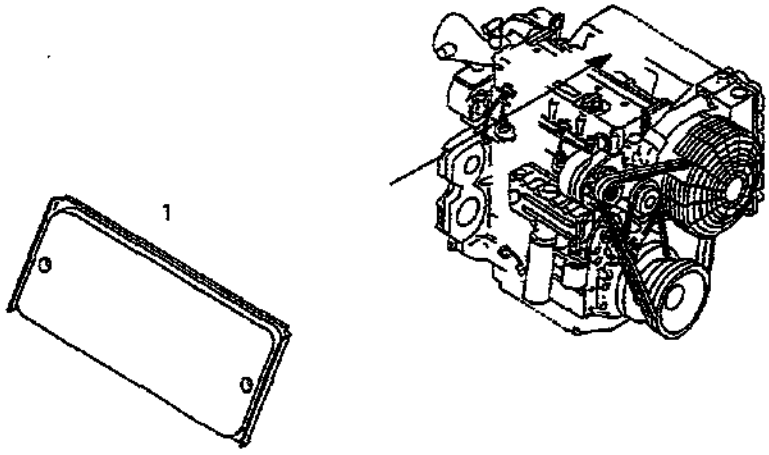

Bild Pos.	Teile-Nr.	Stck. zahl	DECKEL DEUTSCH	COVER ENGLISH	COUVERCLE FRANCAIS	TAPA ESPAMOL	0130-40 507 0477 Nummer/Bemerkung	ETK
1	0420 5045	1	DECKEL	COVER	COUVERCLE	TAPA		

000

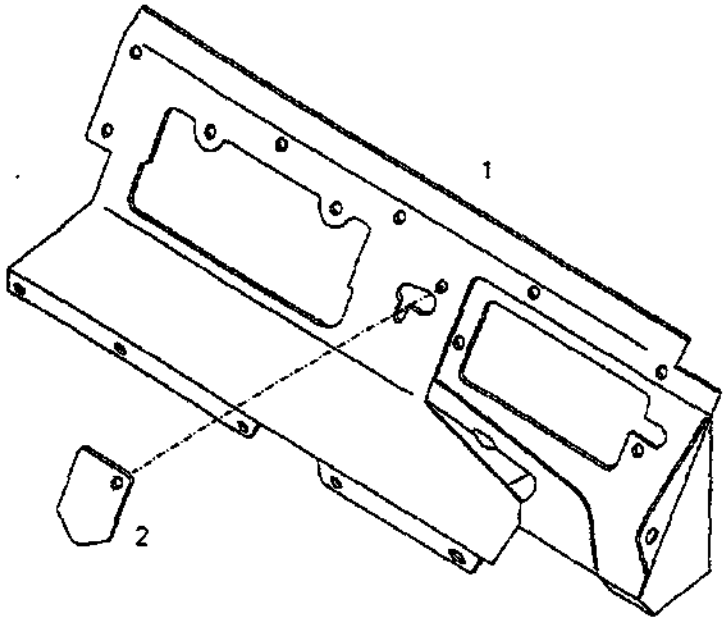

LUFTLEITBLECH AIR BAFFLE TOLE-CONDUIT.D'AIR CHAPA GUIA DE AIRE 0130-40 507 0478

Bild Pos.	Teile-Nr.	Stck. zahl	DEUTSCH	ENGLISH	FRANCAIS	ESPANOL	Nummer/Bemerkung	ETK
1	0420 3976	1	LUFTLEITBLECH	AIR BAFFLE	TOLE-CONDUIT.D'AIR	CHAPA GUIA DE AIRE		
2	0420 5018	1	DECKEL	COVER	COUVERCLE	TAPA		

000

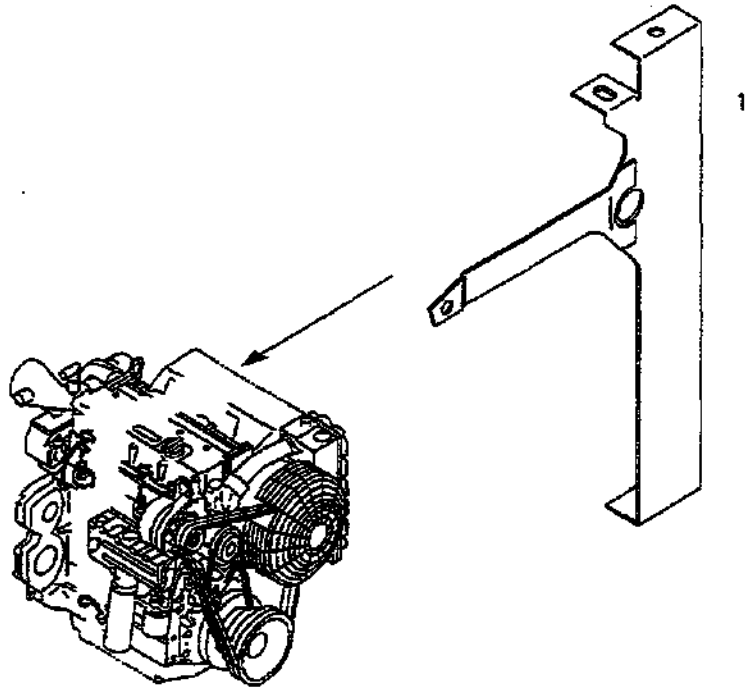

ZWISCHENWAND PARTIT./BULKHEAD CLOISON INTERM. TABIQUE INTERMEDIO 0130-40 507 0607

Bild Pos.	Teile-Nr.	Stck. zahl	DEUTSCH	ENGLISH	FRANCAIS	ESPANOL	Nummer/Bemerkung	ETK
1	0420 5214	1	ZWISCHENWAND	PARTIT./BULKHEAD	CLOISON INTERM.	TABIQUE INTERMEDIO		

000

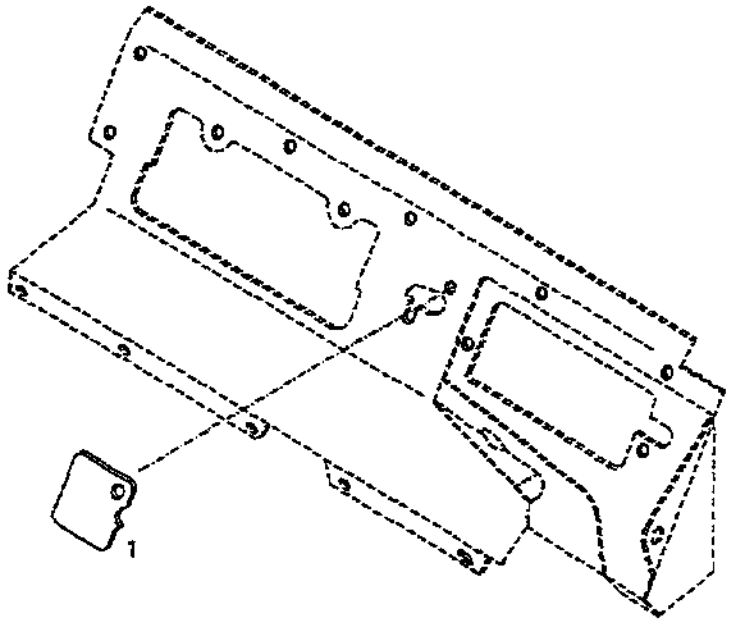

DECKEL COVER COUVERCLE TAPA 0130-40 507 0791

Bild Pos.	Teile-Nr.	Stck. zahl	DEUTSCH	ENGLISH	FRANCAIS	ESPANOL	Nummer/Bemerkung	ETK
1	0420 6450	1	DECKEL	COVER	COUVERCLE	TAPA		

000

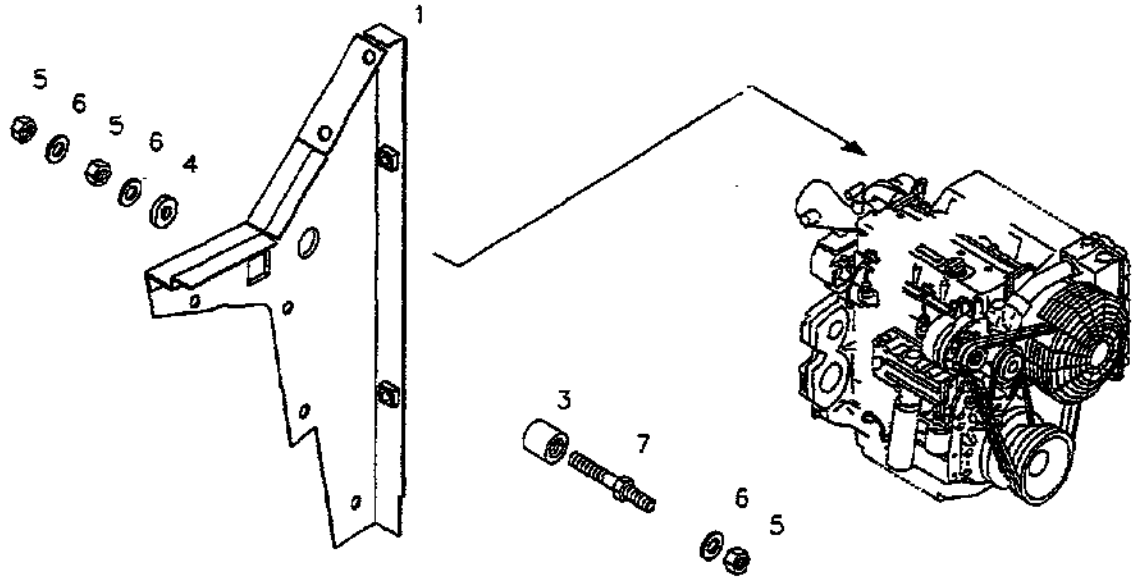

ABSCHLUSSBLECH END PLATE TOLE FERMETURE CHAPA CIERRE 0130-40 507 0858

Bild Pos.	Teile-Nr.	Stck. zahl	DEUTSCH	ENGLISH	FRANCAIS	ESPANOL	Nummer/Bemerkung	ETK
1	0420 6489	1	ABSCHLUSSBLECH	END PLATE	TOLE FERMETURE	CHAPA CIERRE		
3	0419 0871	1	ISOLIERBUCHSE	BUSH	MANCHON	CASQUILLO AISLANTE		
4	0419 0870	1	ISOLIERSCHEIBE	INSULATING WASHER	DISQUE ISOLATEUR	ARANDELA AISLANTE		
5	0111 2856	3	SECHSKANTMUTTER	HEXAGON NUT	ECROU HEXAGONAL	TUERCA EXAGONAL	DIN 000934-M12 - CUZN39PB2F43	
6	0110 7111	3	SCHEIBE	PLAIN WASHER	RONDELLE PLATE	ARANDELA PLANA	DIN 000125-A13 -CUZN40AL2F60	
7	0419 9135	1	ANSCHLUSSBOLZEN	TERMINAL BOLT	TIGE FILETEE	BULON DE CONEXION		

000

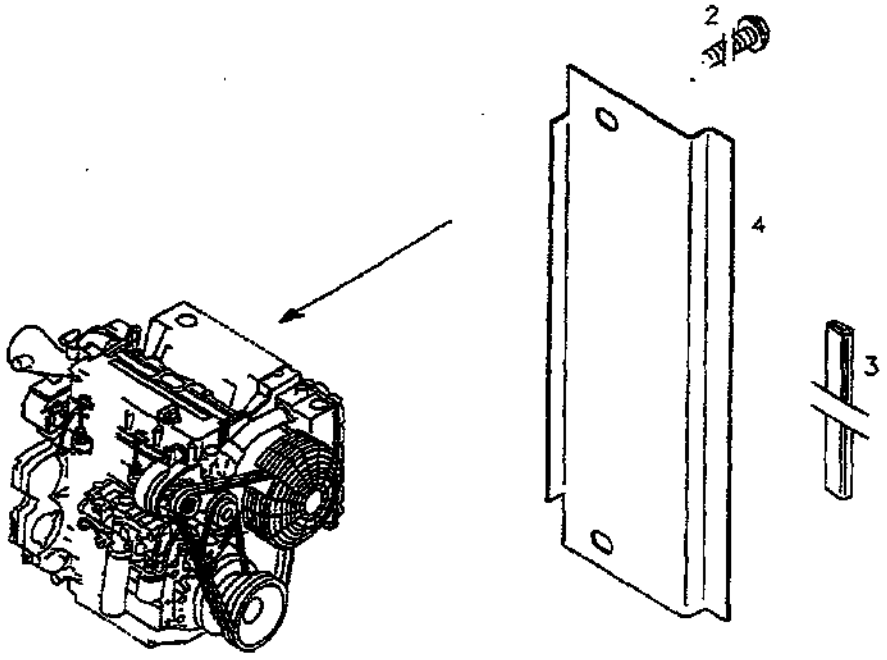

VERSCHLUSSBLECH LOCK SHEET VERROU CHAPA DE CIERRE 0130-40 507 0919

Bild Pos.	Teile-Nr.	Stck zahl	DEUTSCH	ENGLISH	FRANCAIS	ESPANOL	Nummer/Bemerkung	ETK
2	0114 3384	7	SECHSKANTSCHRAUBE	HEXAGON BOLT	VIS TETE HEXAGONAL	TORN.DE CABE.EXAG.	H 002008-F-M 8 X 16-LG 2.5-10 .9-A4C	
3	0140 4847	MTR	KLEMMPROFIL	CLAMPING SECTION	PROFIL DE SERRAGE	PERFIL DE APRIETE	H 846471-04-PN 1X 529-EPDM LANG LONG LONG (UE) (S) LARGO 507 MM	
4	0420 3713	1	VERSCHLUSSBLECH	LOCK SHEET	VERROU	CHAPA DE CIERRE		

000

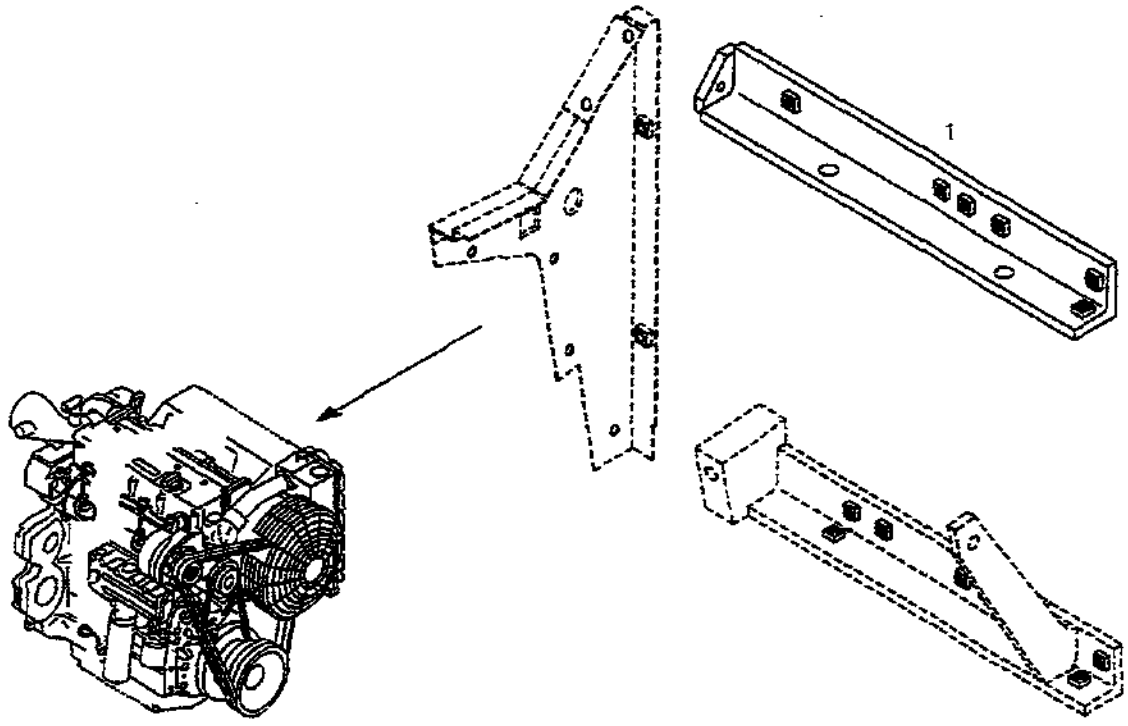

BEFESTIGUNGSWINKEL FIXING BRACKET EQUERRE D.FIXATION ANGULO DE SUJECION 0130-40 507 0922

Bild Pos.	Teile-Nr.	Stck. zahl	DEUTSCH	ENGLISH	FRANCAIS	ESPANOL	Nummer/Bemerkung	ETK
1	0420 3574	1	BEFESTIGUNGSWINKEL	FIXING BRACKET	EQUERRE D.FIXATION	ANGULO DE SUJECION		

000

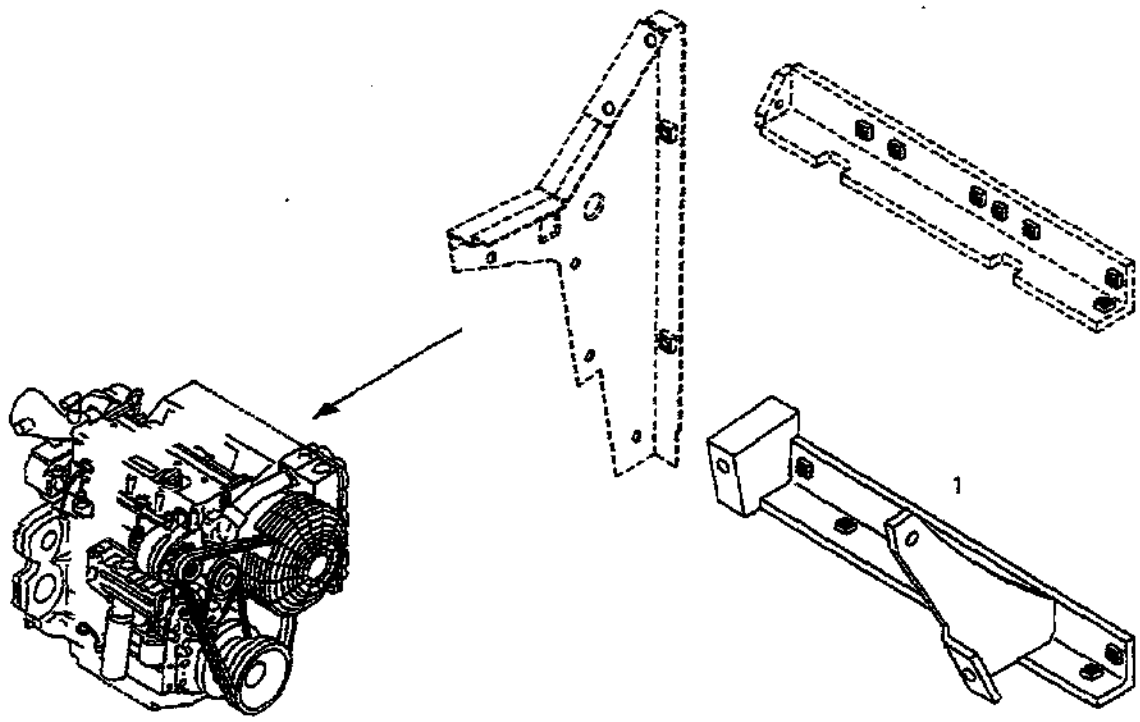

BEFESTIGUNGSLEISTE FASTENING RAIL LANGUETTE DE FIX LISTON DE SUJECION 0130-40 507 0923

Bild Pos.	Teile-Nr.	Stck. zahl	DEUTSCH	ENGLISH	FRANCAIS	ESPANOL	Nummer/Bemerkung	ETK
1	0420 3521	1	BEFESTIGUNGSLEISTE	FASTENING RAIL	LANGUETTE DE FIX	LISTON DE SUJECION		

UNTERTEIL BASE PARTIE INFERIEURE PARTE INFERIOR 0130-40 507 0994

Bild Pos.	Teile-Nr.	Stck. zahl	DEUTSCH	ENGLISH	FRANCAIS	ESPANOL	Nummer/Bemerkung	ETK
1	0510 1995	1	IN VORBEREITUNG					

000

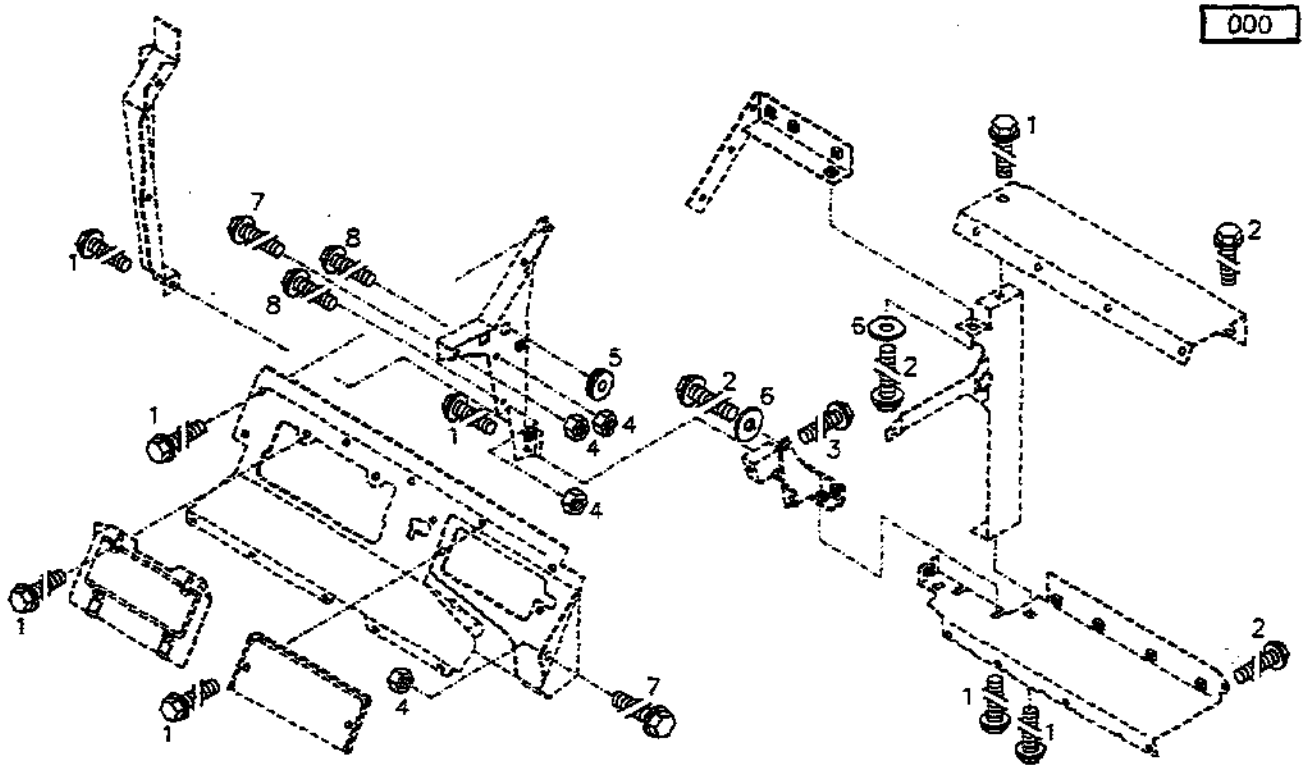

BEFESTIGUNGSTEILE FASTENINGS PIECES DE FIXAT. PIEZAS DE SUJECION 0130-40 507 1901

Bild Pos.	Teile-Nr.	Stck. zahl	DEUTSCH	ENGLISH	FRANCAIS	ESPANOL	Nummer/Bemerkung	ETK
1	0114 3382	25	SECHSKANTSCHRAUBE	HEXAGON BOLT	VIS TETE HEXAGONAL	TORN.DE CABE.EXAG.	H 002008-F-M 8 X 12-LG 2,5-10 .9-A4C	
2	0114 3369	6	SECHSKANTSCHRAUBE	HEXAGON BOLT	VIS TETE HEXAGONAL	TORN.DE CABE.EXAG.	H 002008-F-M 8 X 20-LG 2,5-10 .9-A4C	
3	0114 3363	1	SECHSKANTSCHRAUBE	HEXAGON BOLT	VIS TETE HEXAGONAL	TORN.DE CABE.EXAG.	H 002008-F-M 8 X 50- 10.9-A4C	
4	0113 7057	4	SECHSKANTMUTTER	HEXAGON NUT	ECROU HEXAGONAL	TUERCA EXAGONAL	DIN 000934-M 8 - 8	
5	0116 3944	1	GUMMITUELLE	RUBBER GROMMET	MANCHON CAOUTCHOUC	FUNDA DE GOMA	H 002928-F10 X25 X 2 -GI DEUT Z 7	
6	0113 8374	3	SCHEIBE	PLAIN WASHER	RONDELLE PLATE	ARANDELA PLANA	DIN 007349- 8,4-ST-A4C	
7	0117 9567	2	SECHSKANTSCHRAUBE	HEXAGON BOLT	VIS TETE HEXAGONAL	TORN.DE CABE.EXAG.	H 002008-F-M 8 X 25- 10.9	
8	0114 3365	2	SECHSKANTSCHRAUBE	HEXAGON BOLT	VIS TETE HEXAGONAL	TORN.DE CABE.EXAG.	H 002008-F-M 8 X 30- 10.9-A4C	

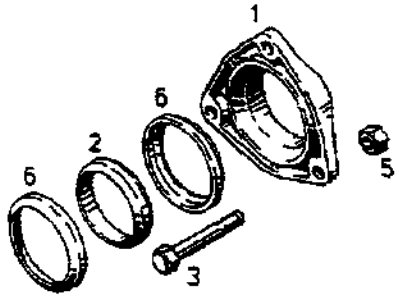

FLANSCH FLANGE BRIDE/COLLET BRIDA 0147-41 500 2097

Bild Pos.	Teile-Nr.	Stck. zahl	DEUTSCH	ENGLISH	FRANCAIS	ESPANOL	Nummer/Bemerkung	STK
1	0336 0673	1	DREILOCHFLANSCH	THREE-HOLE FLANGE	BRIDE A TROIS TROU	BRIDA 3 AGUJEROS		
2	0242 0249	1	DICHTRING	SEALING RING	BAGUE D'ETANCHEITE	ANILLO JUNTA		01
3	0110 0450	3	SECHSKANTSCHRAUBE	HEXAGON BOLT	VIS TETE HEXAGONAL	TORN.DE CABE.EXAG.	DIN 000933-M10 X 50 - 10.9-A4 C	
5	0113 6454	3	SECHSKANTMUTTER	HEXAGON NUT	ECROU HEXAGONAL	TUERCA EXAGONAL	DIN 000980-VM10 -10-A4C GEWAC HST	
6	0336 1218	1	DICHTUNG	GASKET	GARNITURE/JOINT	JUNTA	ASBESTHALTIG ASBESTFREI, SIEHE POS. CONTAINING ASBESTOS FREE OF ASBESTOS - SEE ITEM CONTENANT DE L' AMIANTE SANS AMIANTE, VOIR POSTE CON AMIANTO SIN AMIANTO, VEASE POS. 950	01
950	0415 7356	1	DICHTUNG	GASKET	GARNITURE/JOINT	JUNTA	ASBESTFREI ASBESTHALTIG SIEHE POS. FREE OF ASBESTOS CONTAINING ASBESTOS -SEE ITEM SANS AMIANTE CONTENANT DE L' AMIANTE, VOIR POSTE SIN AMIANTO CON AMIANTO, VEASE POS. 006	

Z

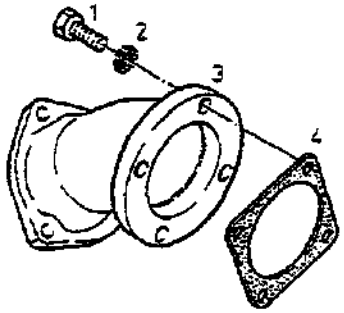

ABGASROHRKRUEMMER EXHAUST MANIFOLD COUDE ECHAPPEMENT CODO DE ESCAPE 0150-41 500 6694

Bild Pos.	Teile-Nr.	Stck. zahl	DEUTSCH	ENGLISH	FRANCAIS	ESPANOL	Nummer/Bemerkung	ETK
1	0347 0246	4	SECHSKANTSCHRAUBE	HEXAGON BOLT	VIS TETE HEXAGONAL	TORN.DE CABE.EXAG.		
2	0111 7869	4	ZAHNSCHEIBE	TOOTH LOCK WASHER	RONDELLE DENTEE	ARANDELA DENTADA	DIN 006797-A10,5-A4C	
3	0415 8040	1	ABGASROHRKRUEMMER	EXHAUST MANIFOLD	COUDE ECHAPPEMENT	CODO DE ESCAPE		
4	0223 1127	1	DICHTUNG	GASKET	GARNITURE/JOINT	JUNTA	ASBESTHALTIG ASBESTFREI, SIEHE POS. CONTAINING ASBESTOS FREE OF ASBESTOS - SEE ITEM CONTENANT DE L' AMIANTE SANS AMIANTE, VOIR POSTE CON AMIANTO SIN AMIANTO, VEASE POS. 006	01
950	0415 7280	1	DICHTUNG	GASKET	GARNITURE/JOINT	JUNTA	ASBESTFREI ASBESTHALTIG SIEHE POS. FREE OF ASBESTOS CONTAINING ASBESTOS -SEE ITEM SANS AMIANTE CONTENANT DE L' AMIANTE, VOIR POSTE SIN AMIANTO CON AMIANTO, VEASE POS. 004	

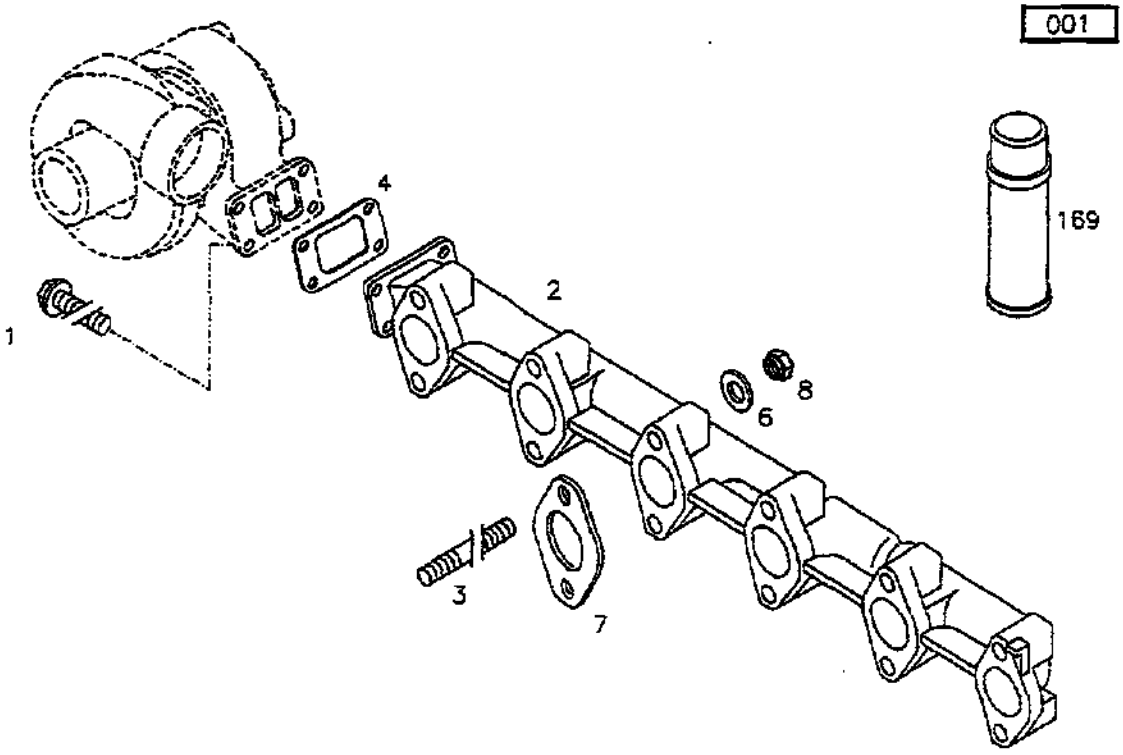

ABGASLEITUNG EXHAUST PIPE TUBULURE D'ECHAPP. TUBERIA DE ESCAPE 0130-41 507 0505

Bild Pos.	Teile-Nr.	Stck. zahl	DEUTSCH	ENGLISH	FRANCAIS	ESPANOL	Nummer/Bemerkung	ETK
1	0347 0246	4	SECHSKANTSCHRAUBE	HEXAGON BOLT	VIS TETE HEXAGONAL	TORN.DE CABE.EXAG.		
2	0420 2344	1	ABGASLEITUNG	EXHAUST PIPE	TUBULURE D'ECHAPP.	TUBERIA DE ESCAPE		
3	0214 3324	12	STIFTSCHRAUBE	STUD	GOUJON	ESPARRAGO		
4	0418 2521	1	DICHTUNG	GASKET	GARNITURE/JOINT	JUNTA		
6	0419 7422	12	SCHEIBE	PLAIN WASHER	RONDELLE PLATE	ARANDELA PLANA		
7	0419 7463	6	DICHTUNG	GASKET	GARNITURE/JOINT	JUNTA		
8	0116 4582	12	SECHSKANTMUTTER	HEXAGON NUT	ECROU HEXAGONAL	TUERCA EXAGONAL	H 002132- M 8 -10-C2A	
169	0140 0668	NB	MONTAGEMITTEL	FITTING COMPOUND	MOYENS DE MONTAGE	MEDIO DE MONTAJE	H 000685-DEUTZ S 1- 400 ML	

001

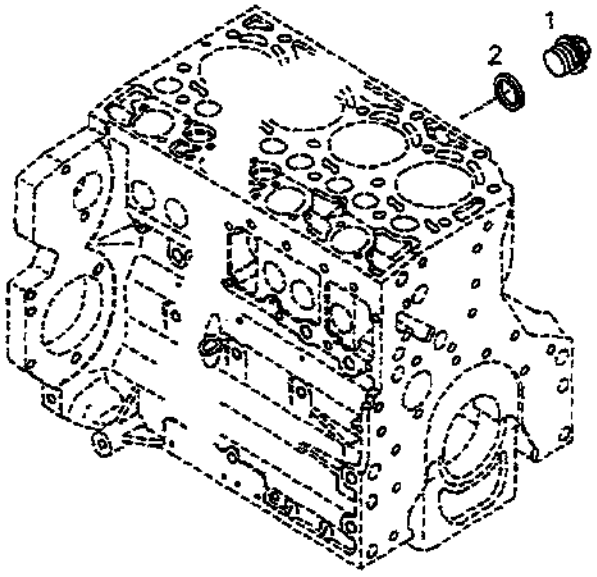

VERSCHLUSSTEILE BLANKING PARTS OBTURATEURS PIEZAS DE CIERRE 0130-43 507 0056

Bild Pos.	Teile-Nr.	Stck. zahl	DEUTSCH	ENGLISH	FRANCAIS	ESPANOL	Nummer/Bemerkung	ETK
1	0110 0940	1	VERSCHLUSSSCHRAUBE	SCREW PLUG	BOUCHON FILETE	TAPON ROSCADO	DIN 007604-AM14X1,5 -ST-A4C	
2	0111 8888	1	DICHTRING	SEALING RING	BAGUE D'ETANCHEITE	ANILLO JUNTA	DIN 007603-A 14 X 18 -CU	01

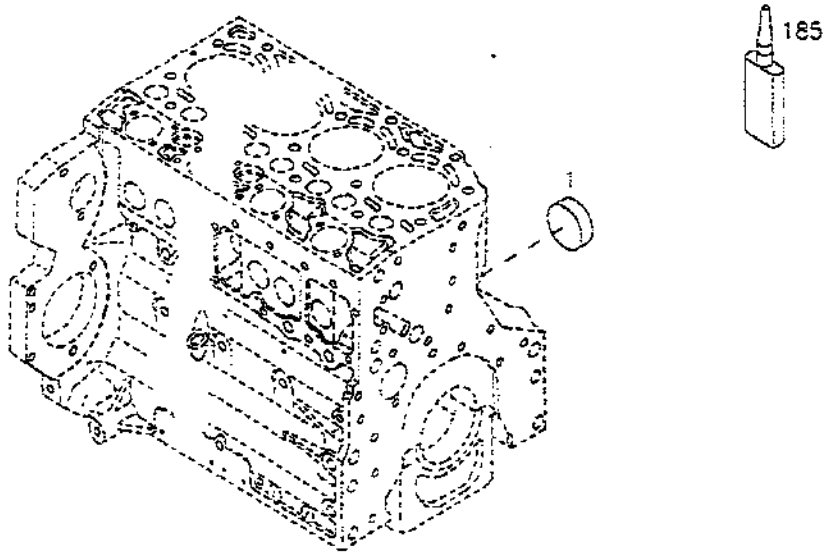

VERSCHLUSSTEILE BLANKING PARTS OBTURATEURS PIEZAS DE CIERRE 0130-43 507 0058

Bild Pos.	Teile-Nr.	Stck. zahl	DEUTSCH	ENGLISH	FRANÇAIS	ESPANOL	Nummer/Bemerkung	ETK
1	0117 9708	1	KERNLOCHVERSCHLUSS	CORE HOLE PLUG	BOUCHON TROU DESS	TAPON CIERRE MACHO	H 002850-A28-ST-FE/ZNPHR	
185	0101 1484	1	SICHERUNGSMITTEL	SAFETY/LOCK.AGENT	RESINE-FREIN	MEDIO AFIANZADOR	H 00069S-DEUTZ DW 72- 50 ML	

000

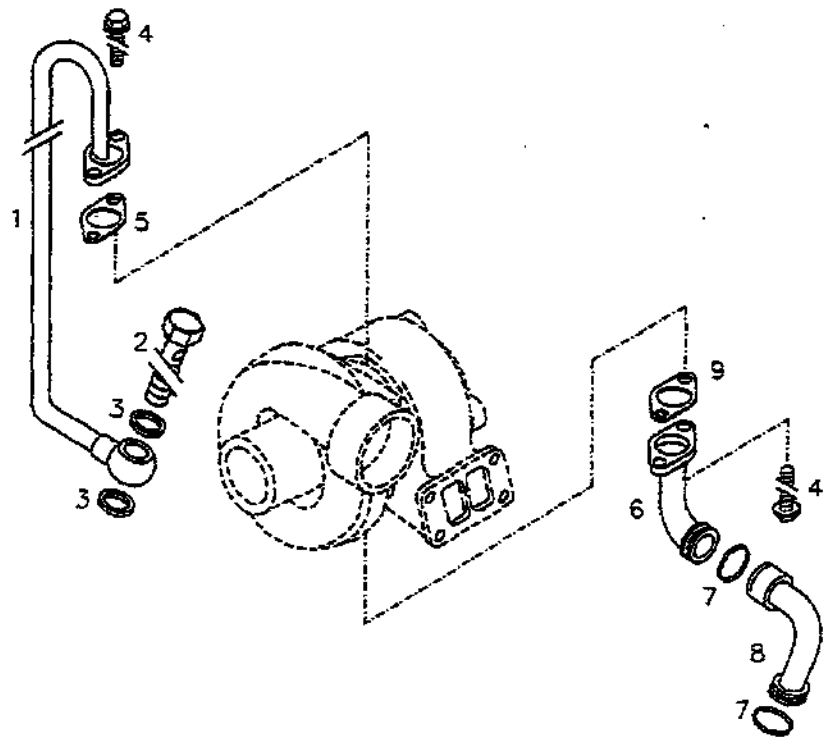

SCHMIEROELLEITUNG LUBRICAT. OIL LINE CONDUITE A HUILE TUBER.ACEITE LUBR. 0130-43 507 0506

Bild Pos.	Teile-Nr.	Stck. zahl	DEUTSCH	ENGLISH	FRANCAIS	ESPANOL	Nummer/Bemerkung	ETK
1	0420 4108	1	SCHMIEROELLEITUNG	LUBRICAT. OIL LINE	CONDUITE A HUILE	TUBER.ACEITE LUBR.		
2	0111 9246	1	HOHLSCHRAUBE	HOLLOW SCREW	VIS BANJO	TORNILLO HUECO	H 003102-D10 M-ST-A4C	
3	0111 8688	2	DICHTRING	SEALING RING	BAGUE D'ETANCHEITE	ANILLO JUNTA	DIN 007603-A 14 X 18 -CU	CI
4	0114 3369	4	SECHSKANTSCHRAUBE	HEXAGON BOLT	VIS TETE HEXAGONAL	TORN.DE CABE.EXAG.	H 002008-F-M 8 X 20-LG 2.5-10 .9-A4C	
5	0418 2519	1	DICHTUNG	GASKET	GARNITURE/JOINT	JUNTA		
6	0420 4098	1	RUECKLAUFLEITUNG	RETURN LINE	CONDUITE DE RETOUR	TUBERIA DE RETORNO		
7	0117 9277	2	RUNDDICHTRING	O-SEAL	ANNEAU TORIQUE	JUNTA TORNICA	H 002927- 22 X 3.5 -NVQ-1-70	
8	0420 4095	1	RUECKLAUFLEITUNG	RETURN LINE	CONDUITE DE RETOUR	TUBERIA DE RETORNO		
9	0418 2520	1	DICHTUNG	GASKET	GARNITURE/JOINT	JUNTA		

000

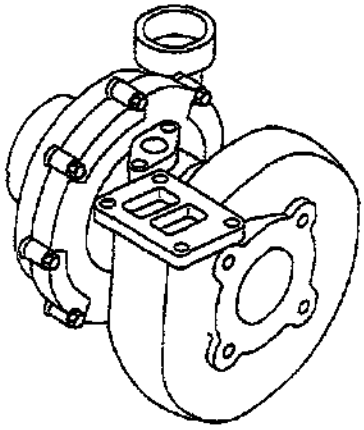

ABGASTURBOLADER TURBOCHARGER TURBOCOMPRESSEUR TURBO 0130-43 507 0820

Bild Pos.	Teile-Nr.	Stck zahl	DEUTSCH	ENGLISH	FRANCAIS	ESPANOL	Nummer/Bemerkung	ETK
1	0420 6943	1	ABGASTURBOLADER	TURBOCHARGER	TURBOCOMPRESSEUR	TURBO		

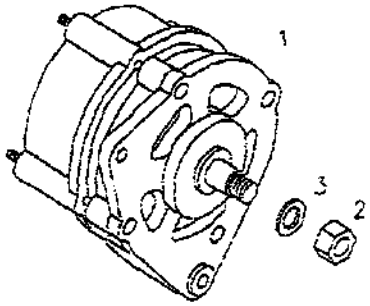

GENERATOR GENERATOR GENERATRICE GENERADOR 0148-44 506 4817

Bild Pos.	Teile-Nr.	Stck. zahl	DEUTSCH	ENGLISH	FRANCAIS	ESPANOL	Nummer/Bemerkung	ETK
1	0117 8607	1	GENERATOR	GENERATOR	GENERATRICE	GENERADOR	H 821170- E45RL14X 95 EINZELTEILE SIEHE ETL-BLATT FOR SINGLE PARTS SEE PN-LIST SHEET PIECES DETACHEES VOIR FEUILLE DE LISTE DE NO. DE PIECES COMPONENTES VER HOJA DEL CATALOGO DE REPUESTOS 0148-44-0506 4985	
2	0113 1115	1	SECHSKANTMUTTER	HEXAGON NUT	ECROU HEXAGONAL	TUERCA EXAGONAL	DIN 000439-BM16X1,5 -05-A4C	
3	0110 3952	1	FEDERSCHEIBE	SPRING WASHER	RONDELLE ELASTIQUE	ARANDELA ELASTICA	DIN 000137-B16-FST-A4C	01

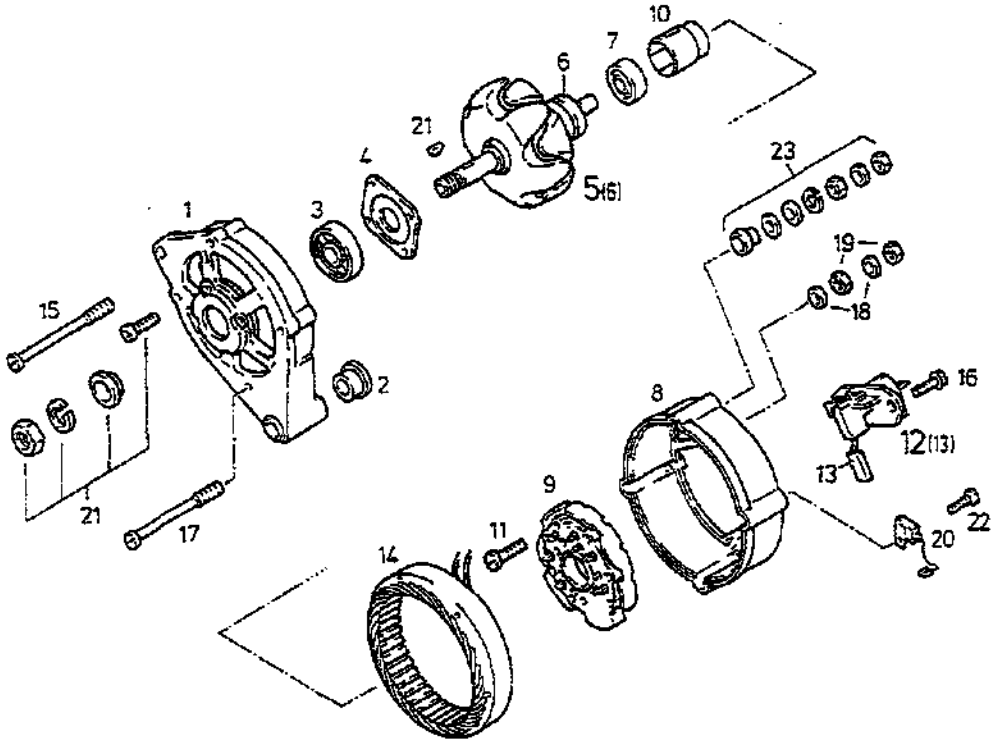

TEILE 2. GENERATOR PARTS OF ALTERNAT. PIECES ALTERNATEUR COMPON.P. GENERAD. 0148-44 506 4986

Bild Pos.	Teile-Nr.	Stck. zahl	DEUTSCH	ENGLISH	FRANÇAIS	ESPANOL	Nummer/Bemerkung	ETK
1	0130 8494	1	ANTRIEBSLAGER	DRIVE BEARING	PALIER DE COMMANDE	SOPORTE ACCIONAM.		
2	0131 8754	1	ANSCHLAGBUCHSE	STOP BUSH	DOUILLE DE BUTEE	CASQUILLO TOPE		
3	0131 8680	1	RILLENKUGELLAGER	BALL BEARING	ROULEM. A BILLES	RODAMIENTO D.BOLAS		
4	0132 1476	1	ABDECKPLATTE	COVER PLATE	PLAQUE PROTECTION	PLACA RECUBRIMIEN.		
5	0131 8545	1	LAEUFER	ROTOR/IMPELLER	ROTOR	ROTOR		
6	0132 0413	1	SCHLEIFRING	SLIP RING	BAGUE COLLECTRICE	ANILLO DESLIZANTE		
7	0131 8569	1	RILLENKUGELLAGER	BALL BEARING	ROULEM. A BILLES	RODAMIENTO D.BOLAS		
8	0132 1071	1	SCHLEIFRINGLAGER	SLIP RING BEARING	FLASQUE COTE BAGUE	COJ.ANILLOS ROZANT		
9	0132 1074	1	GLEICHRICHTER	RECTIFIER	REDRESSEUR	RECTIFICADOR		
10	0132 1068	1	SCHUTZHUELSE	COVER	DOUILLE PROTECTR	CASQUILLO PROTECT.		
11	0132 0991	2	SCHRAUBE	SCREW/BOLT	VIS/BOULON	TORNILLO		
12	0117 7145	1	SPANNUNGSREGLER	VOLTAGE REGULATOR	REGULATEUR TENSION	REGULADOR VOLTAJE	H 822111- AH -14V 95A	
13	0131 8683	1	KOHLEBUERSTENSATZ	CARBON BRUSHES	LOT BALAIS	JUEGO D.ESCOBILLAS		
14	0132 1070	1	STAENDER	COLUMN	COLONNE	COLUMNA		
15	0132 1477	3	LINSENSCHRAUBE	BINDING HEAD SCREW	VIS A TETE CYLIND.	TORNILLO		
16	0131 8549	2	SCHRAUBE	SCREW/BOLT	VIS/BOULON	TORNILLO		
17	0130 7178	1	LINSENSCHRAUBE	BINDING HEAD SCREW	VIS A TETE CYLIND.	TORNILLO		
18	0131 8550	2	FEDERSCHEIBE	SPRING WASHER	RONDELLE ELASTIQUE	ARANDELA ELASTICA		
19	0132 1485	2	SECHSKANTMUTTER	HEXAGON NUT	ECROU HEXAGONAL	TUERCA EXAGONAL		
20	0298 5186	1	ENTSTOERKONDENSAT.	SUPPRESS.CAPACITOR	CONDENS ANTIPARAS	CONDENS.ANTIPARAS.		
21	0130 7188	1	TEILESATZ	SET OF PARTS	LOT DE PIECES	JUEGO DE PIEZAS		
22	0132 1484	1	LINSENSCHRAUBE	BINDING HEAD SCREW	VIS A TETE CYLIND.	TORNILLO		

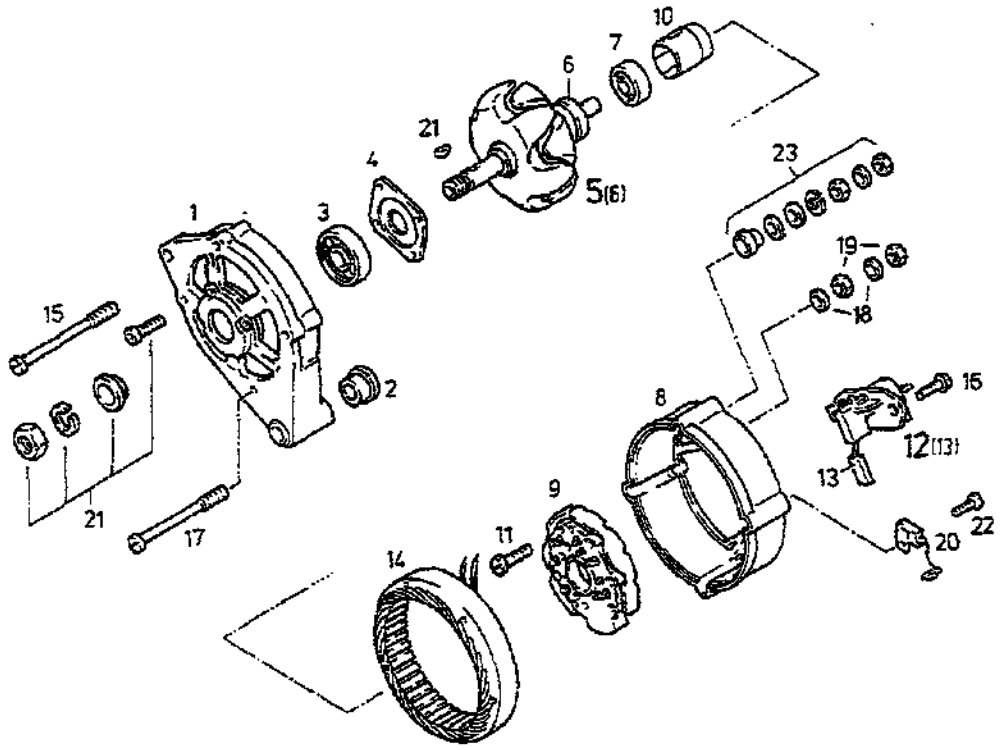

TEILE Z. GENERATOR PARTS OF ALTERNAT. PIECES ALTERNATEUR COMPON.P. GENERAD. 0148-44 506 4986

Bild Pos.	Teile-Nr.	Stck. zahl	DEUTSCH	ENGLISH	FRANCAIS	ESPANOL	Nummer/Bemerkung	ETK
23	0132 1072	1	TEILESATZ	SET OF PARTS	LOT DE PIECES	JUEGO DE PIEZAS		

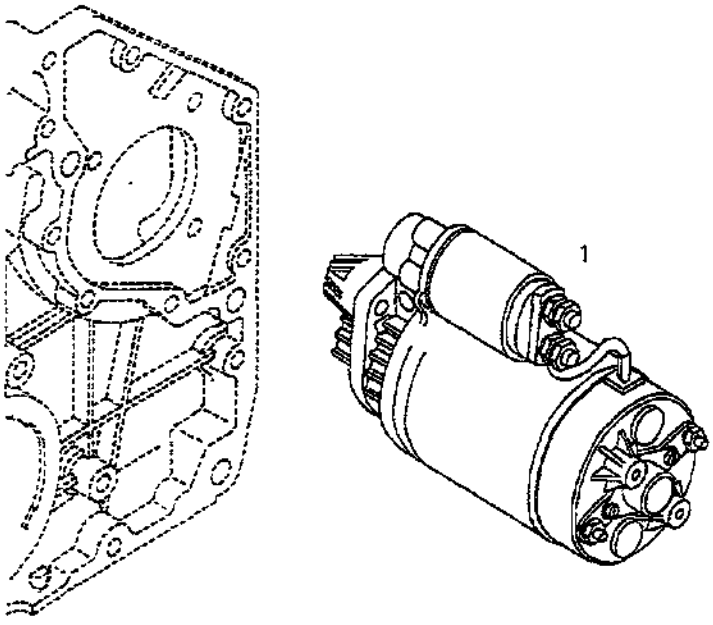

			STARTER	STARTER	DEMARREUR	ARRANCADOR	0130-44 507 0158	
Bild Pos.	Teile-Nr.	Stck. zahl	DEUTSCH	ENGLISH	FRANCAIS	ESPANOL	Nummer/Bemerkung	ETK
1	0117 9318	1	STARTER	STARTER	DEMARREUR	ARRANCADOR	H 821970-FB21R12X 3,1KW	

000

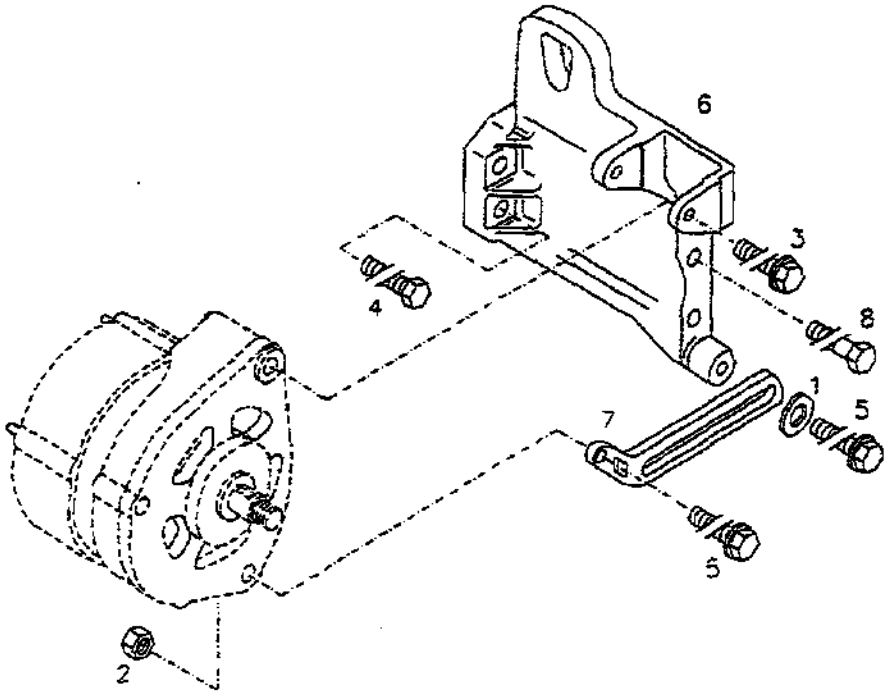

ANBAUTEILE ACCESSORIES ACCESSOIRES PIEZAS DE MONTAJE 0130-44 507 0509

Bild Pos.	Teile-Nr.	Stck. zahl	DEUTSCH	ENGLISH	FRANCAIS	ESPANOL	Nummer/Bemerkung	ETK
1	0240 4201	1	SCHEIBE	PLAIN WASHER	RONDELLE PLATE	ARANDELA PLANA		
2	0111 2824	1	SECHSKANTMUTTER	HEXAGON NUT	ECROU HEXAGONAL	TUERCA EXAGONAL	DIN 000934-M 8 - 8-A4C	
3	0114 3383	1	SECHSKANTSCHRAUBE	HEXAGON BOLT	VIS TETE HEXAGONAL	TORN.DE CABE.EXAG.	H 002008-F-M 8 X 75- 10.9-A4C	
4	0113 7389	2	SECHSKANTSCHRAUBE	HEXAGON BOLT	VIS TETE HEXAGONAL	TORN.DE CABE.EXAG.	DIN 000933-M10 X 35 - 10.9-DE LGESCHW.	
5	0117 9567	2	SECHSKANTSCHRAUBE	HEXAGON BOLT	VIS TETE HEXAGONAL	TORN.DE CABE.EXAG.	H 002008-F-M 8 X 25- 10.9	
6	0420 4224	1	KONSOLE	BRACKET	CONSOLE	CONSOLA		
7	0420 1837	1	SPANNLASCHE	CLAMPING STRAP	ECLISSE DE SERRAGE	ECLISA DE APRIETE		
8	0111 1386	2	SECHSKANTSCHRAUBE	HEXAGON BOLT	VIS TETE HEXAGONAL	TORN.DE CABE.EXAG.	DIN 000931- M10 X190 - 8.8-A-A4C	

000

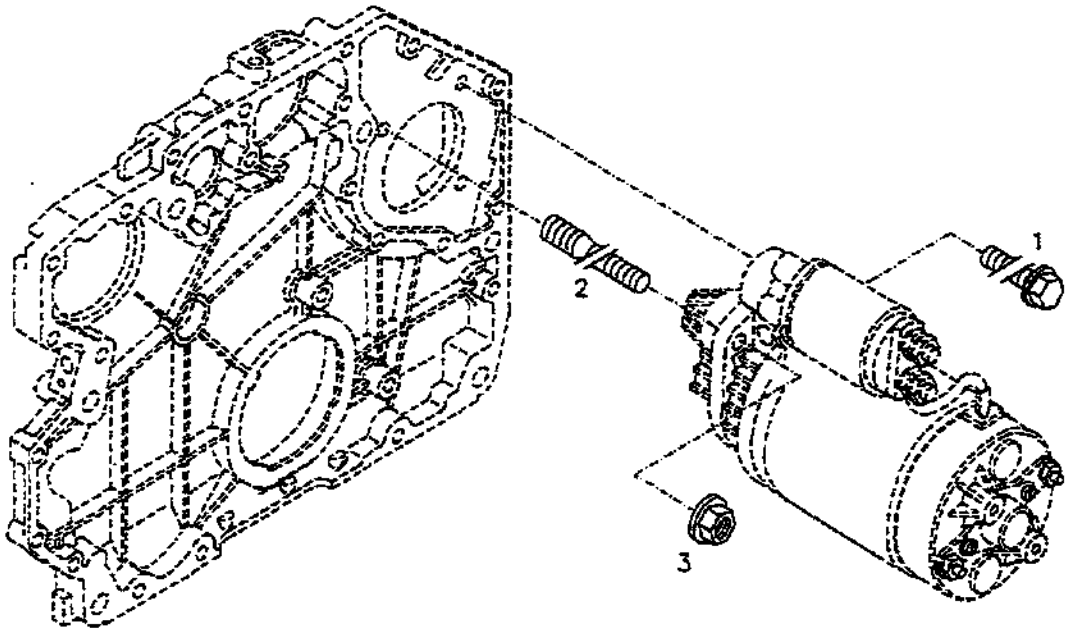

BEFESTIGUNGSTEILE FASTENINGS PIECES DE FIXAT. PIEZAS DE SUJECION 0130-44 507 0666

Bild Pos.	Teile-Nr.	Stck. zahl	DEUTSCH	ENGLISH	FRANCAIS	ESPANOL	Nummer/Bemerkung	ETK
1	0117 9874	2	SECHSKANTSCHRAUBE	HEXAGON BOLT	VIS TETE HEXAGONAL	TORN.DE CABE.EXAG.	H 002008-F-M10 X 38- 10.9-A4C	
2	0420 5743	1	STIFTSCHRAUBE	STUD	GOUJON	ESPARRAGO		
3	0420 5841	1	BUNDMUTTER	SHOULDER NUT	ECROU A EMBASE	TUERCA CON ASIENTO		

000

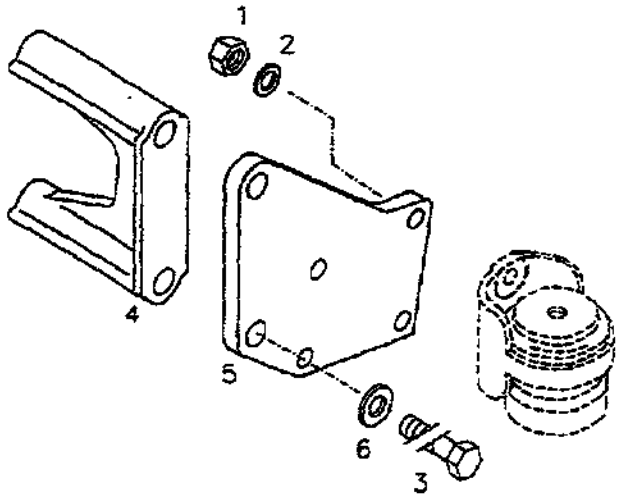

ANBAUTEILE ACCESSORIES ACCESSOIRES PIEZAS DE MONTAJE 0130-46 507 0465

Bild Pos.	Teile-Nr.	Stck. zahl	DEUTSCH	ENGLISH	FRANCAIS	ESPANOL	Nummer/Bemerkung	ETK
1	0111 2858	2	SECHSKANTMUTTER	HEXAGON NUT	ECROU HEXAGONAL	TUERCA EXAGONAL	DIN 000934-M12 - 8-A4C	
2	0121 6119	2	SCHEIBE	PLAIN WASHER	RONDELLE PLATE	ARANDELA PLANA	H 002308-13 X21X1,5	
3	0110 1543	2	SECHSKANTSCHRAUBE	HEXAGON BOLT	VIS TETE HEXAGONAL	TORN.DE CABE.EXAG.	DIN 000931- M16 X110 - 8.8-A4 C	
4	0420 4677	1	ABSTANDSTUECK	SPACER	ENTRETOISE	PIEZA DE DISTANCIA		
5	0420 5884	1	HALTER	BRACKET	SUPPORT/PORTEQUTIL	SOPORTE		
6	0110 7117	2	SCHEIBE	PLAIN WASHER	RONDELLE PLATE	ARANDELA PLANA	DIN 000125-A17 -140HV-A4C	

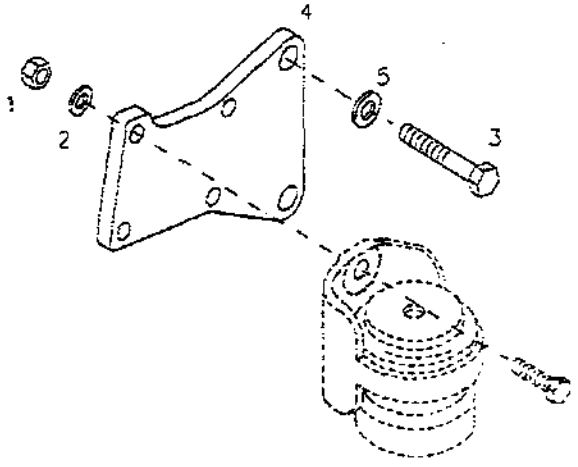

ANBAUTEILE ACCESSORIES ACCESSOIRES PIEZAS DE MONTAJE 0130-47 507 0142

Bild Pos.	Teile-Nr.	Stck. zahl	DEUTSCH	ENGLISH	FRANCAIS	ESPANOL	Nummer/Bemerkung	ETK
1	0111 2858	2	SECHSKANTMUTTER	HEXAGON NUT	ECROU HEXAGONAL	TUERCA EXAGONAL	DIN 000934-M12 - 8-A4C	
2	0121 6119	2	SCHEIBE	PLAIN WASHER	RONDELLE PLATE	ARANDELA PLANA	H 002308-13 X21X1,5	
3	0111 2887	2	SECHSKANTSCHRAUBE	HEXAGON BOLT	VIS TETE HEXAGONAL	TORN.DE CABE.EXAG.	DIN 000933-M16 X 40 - 8.8-A4C	
4	0419 7551	1	HALTER	BRACKET	SUPPORT/PORTEOUTIL	SOPORTE		
5	0110 7117	2	SCHEIBE	PLAIN WASHER	RONDELLE PLATE	ARANDELA PLANA	DIN 000125-A17 -140HV-A4C	

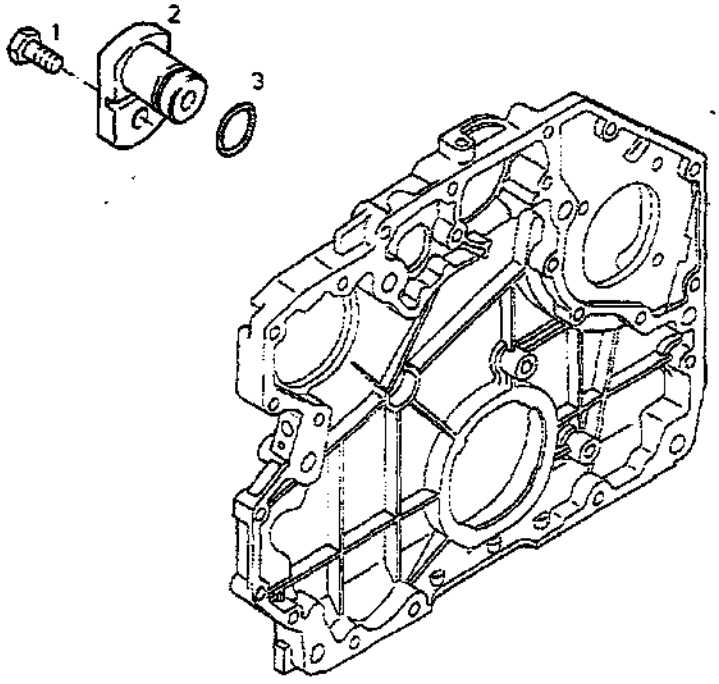

VERSCHLUSSTEILE BLANKING PARTS OBTURATEURS PIEZAS DE CIERRE 0130-48 507 0149

Bild Pos.	Teile-Nr.	Stck-zahl	DEUTSCH	ENGLISH	FRANCAIS	ESPANOL	Nummer/Bemerkung	ETK
1	0117 4199	1	SECHSKANTSCHRAUBE	HEXAGON BOLT	VIS TETE HEXAGONAL	TORN.DE CABE.EXAG.	H 002091- 933-M 6 X 12- 8.8-A 4C	
2	0420 3060	1	VERSCHLUSSTEILE	BLANKING PARTS	OBTURATEURS	PIEZAS DE CIERRE		
3	0121 0163	1	RUNDDICHTRING	O-SEAL	ANNEAU TORIQUE	JUNTA TORNICA	H 002927- 12 X 2 -ACM-1-70	01

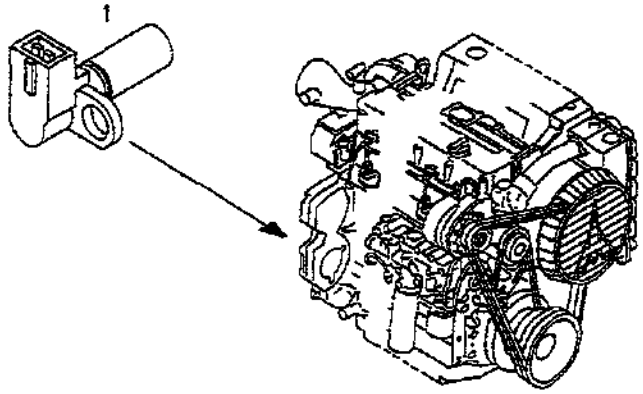

INDUKTIV.WEGGEBER SENSOR SONDE INDUCT. SONDA DE INDUCCION 0130-48 507 0265

Bild Pos.	Teile-Nr.	Stck. zahl	DEUTSCH	ENGLISH	FRANCAIS	ESPANOL	Nummer/Bemerkung	ETK
1	0436 4426	1	DREHZAHLGEBER	TACHO-GENERATOR	DYNAMO TACHYMETR	GENERADOR TACOMETR		

002

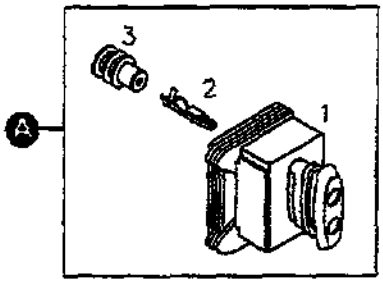

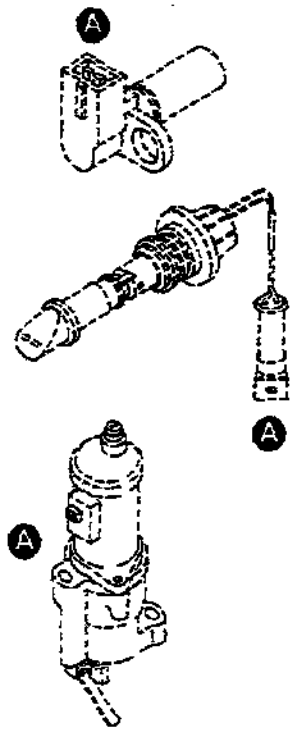

STECKVERBINDER PLUG-IN CONNECTOR CONNECTEUR EN FICH LIGADOR DE ENCHUFE 0130-48 507 0266

Bild Pos.	Teile-Nr.	Stck-zahl	DEUTSCH	ENGLISH	FRANCAIS	ESPANOL	Nummer/Bemerkung	ETK
1	0419 0847	1	STECKHUELS.GEHAEUS	HOUSING	BOITIER CONNECTEUR	CAJA MANGUIT.ENCH.		
2	0419 0848	2	BUCHSENKONTAKT	JACK	DOUILLE DE CONTACT	CASQUILLO HEMBRA		
3	0419 0851	2	DICHTUNG	GASKET	GARNITURE/JOINT	JUNTA		

002

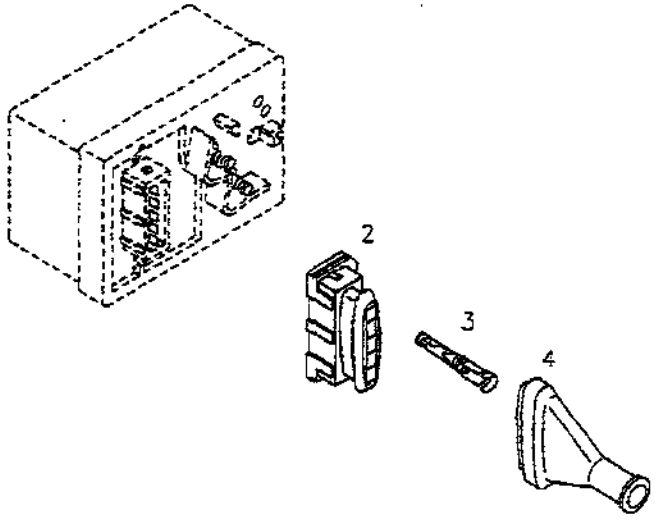

ANSCHLUSSSTECKER ATTACHMENT PLUG FICHE DE CONNEXION CLAVIJA DE CONEX. 0130-48 507 0268

Bild Pos.	Teile-Nr.	Stck. zahl	DEUTSCH	ENGLISH	FRANCAIS	ESPANOL	Nummer/Bemerkung	ETK
2	0419 9031	1	STECKHUELS.GEHAEUS	HOUSING	BOITIER CONNECTEUR	CAJA MANGUIT.ENCH.		
3	0419 9032	4	BUCHSENKONTAKT	JACK	DOUILLE DE CONTACT	CASQUILLO HEMBRA		
4	0419 9033	1	SCHUTZKAPPE	PROTECTING CAP	CAPUCHON PROTECT.	CAPERUZA PROTECT.		

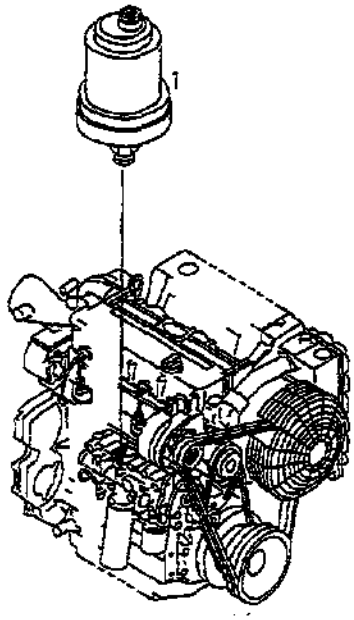

DRUCKGEBER PRESSURE SENSOR TRANSMETTEUR DE PR TRANSMISOR PRESION 0130-48 507 0295

Bild Pos.	Teile-Nr.	Stck. zahl	DEUTSCH	ENGLISH	FRANÇAIS	ESPANOL	Nummer/Bemerkung	ETK
1	0419 0809	1	DRUCKAUFNEHMER	PRESSURE PICKUP	CAPTEUR D.PRESSION	CAPTAD.PRESION		

000

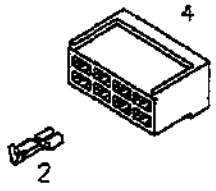

STECKVERBINDUNG PLUG CONNECTION CONNEXION ENFICH CONEXION D.ENCHUFE 0130-48 507 0321

Bild Pos.	Teile-Nr.	Stck. zahl	DEUTSCH	ENGLISH	FRANCAIS	ESPANOL	Nummer/Bemerkung	ETK
2	0113 9373	16	STECKHUELSE	PLUG-IN SLEEVE	ALVEOLE	CASQUILLO ENCHUFE	DIN 046340-A6,3-2,5-BZ-GAL SN	
4	0123 8026	1	HUELSENGEHAEUSE	RECEPTACLE HOUSING	CARTER FEMELLE	CAJA DE ENCHUFE	H 007642-NH6,3-8-NATUR	

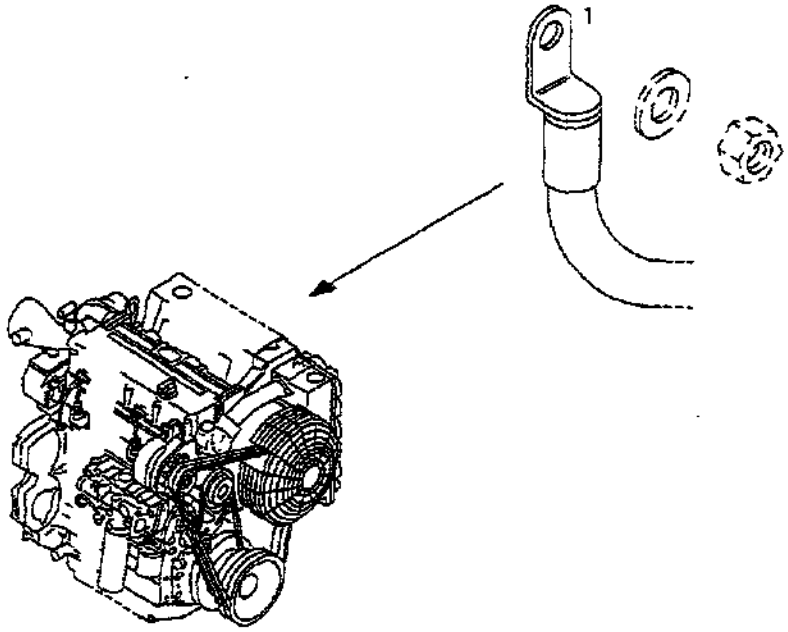

VERBINDUNGSLEITUNG CONNECTING PIPE CONDUIT JONCTION TUBERIA DE UNION 0130-48 507 0327

Bild Pos.	Teile-Nr.	Stck. zahl	DEUTSCH	ENGLISH	FRANCAIS	ESPANOL	Nummer/Bemerkung	ETK
1	0419 0998	1	VERBINDUNGSLEITUNG	CONNECTING PIPE	CONDUIT JONCTION	TUBERIA DE UNION		

000

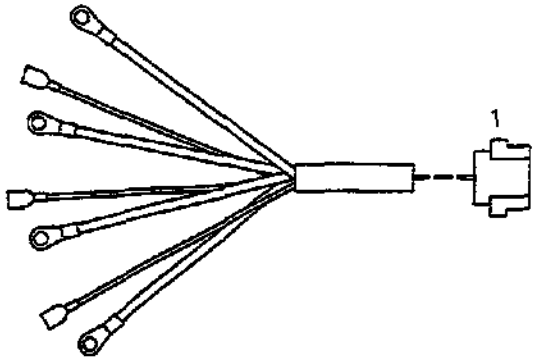

KABELBAUM CABLE HARNESS FAISCEAU DE CABLES HAZ DE CABLES 0130-48 507 0399

Bild Pos.	Teile-Nr.	Stck. zahl	DEUTSCH	ENGLISH	FRANCAIS	ESPANOL	Nummer/Bemerkung	ETK
1	0419 0828	1	KABELBAUM	CABLE HARNESS	FAISCEAU DE CABLES	HAZ DE CABLES		

000

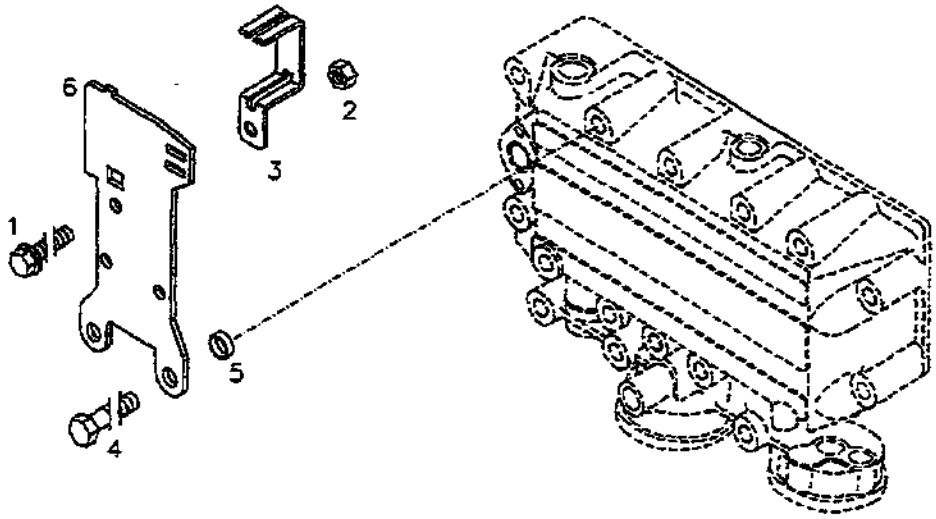

ANBAUTEILE ACCESSORIES ACCESSOIRES PIEZAS DE MONTAJE 0130-48 507 0502

Bild Pos.	Teile-Nr.	Stck. zahl	DEUTSCH	ENGLISH	FRANCAIS	ESPANOL	Nummer/Bemerkung	ETK
1	0117 9291	1	SECHSKANTSCHRAUBE	HEXAGON BOLT	VIS TETE HEXAGONAL	TORN.DE CABE.EXAG.	H 002008-F-M 6 X 16- 10.9-A4C	
2	0111 2813	1	SECHSKANTMUTTER	HEXAGON NUT	ECROU HEXAGONAL	TUERCA EXAGONAL	DIN 000934-M 6 - 8-A4C	01
3	0419 8832	1	HALTER	BRACKET	SUPPORT/PORTEOUTIL	SOPORTE		
4	0112 2399	2	SECHSKANTSCHRAUBE	HEXAGON BOLT	VIS TETE HEXAGONAL	TORN.DE CABE.EXAG.	DIN 000931- M 8 X 85 - 8.8-A-A4C	
5	0336 3990	2	BUCHSE	BUSH	DOUILLE	CASQUILLO		
6	0420 5124	1	HALTER	BRACKET	SUPPORT/PORTEOUTIL	SOPORTE		

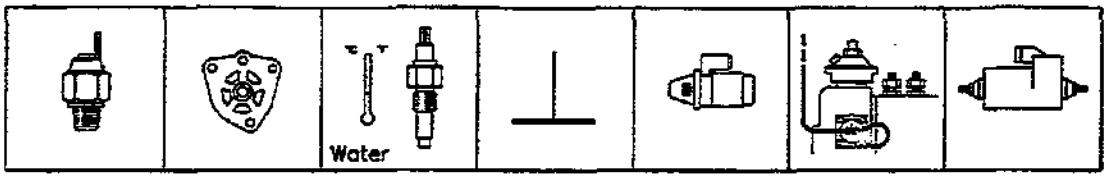

000

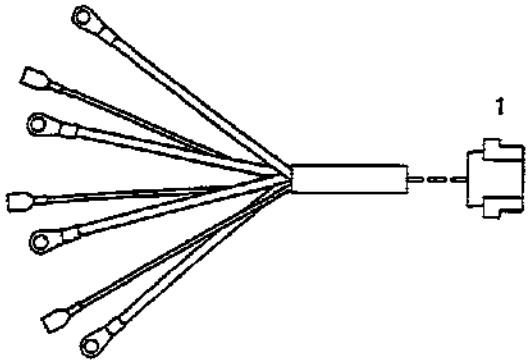

KABELBAUM CABLE HARNESS FAISCEAU DE CABLES HAZ DE CABLES 0130-48 507 0662

Bild Pos.	Teile-Nr.	Stck. zahl	DEUTSCH	ENGLISH	FRANCAIS	ESPANOL	Nummer/Bemerkung	ETK
1	0419 9132	1	KABELBAUM	CABLE HARNESS	FAISCEAU DE CABLES	HAZ DE CABLES		

000

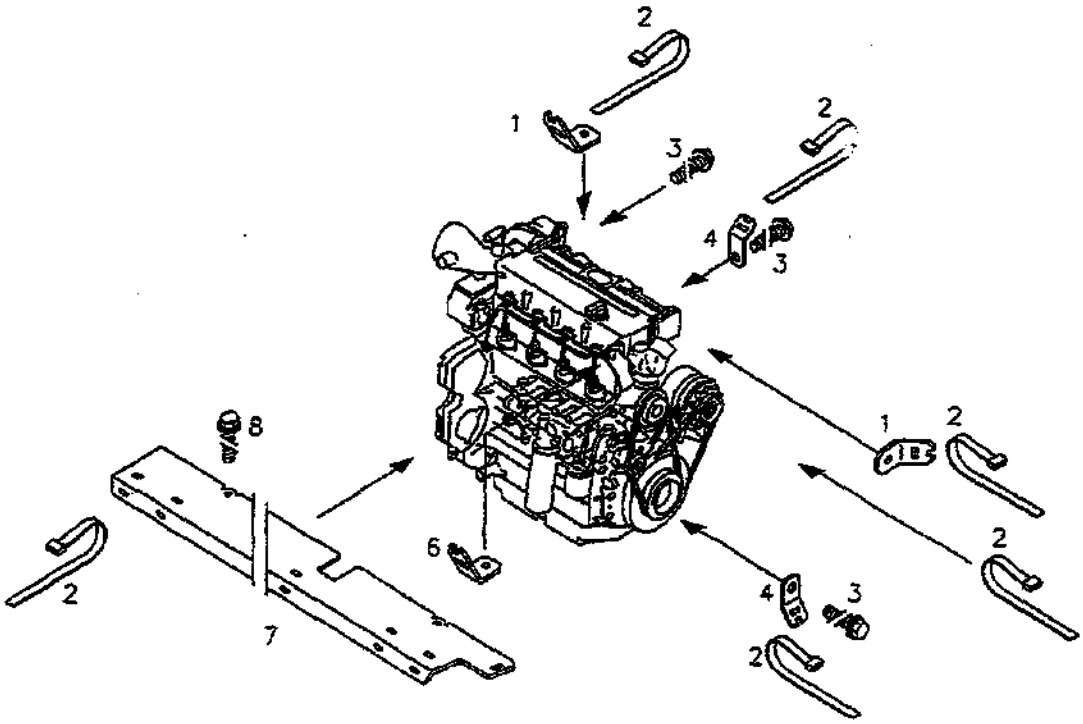

BEFESTIGUNGSTEILE FASTENINGS PIECES DE FIXAT. PIEZAS DE SUJECION 0130-48 507 0663

Bild Pos.	Teile-Nr.	Stck. zahl	DEUTSCH	ENGLISH	FRANCAIS	ESPANOL	Nummer/Bemerkung	ETK
1	0419 0904	NB	HALTER	BRACKET	SUPPORT/PORTEQUTIL	SOPORTE		
2	0117 6435	NB	HALTEBAND	CLAMPING BAND	BANDE DE SERRAGE	FLEJE DE SUJECION	H 007672-P 180X 4,8	
3	0114 3382	NB	SECHSKANTSCHRAUBE	HEXAGON BOLT	VIS TETE HEXAGONAL	TORN.DE CABE.EXAG.	H 002008-F-M 8 X 12-LG 2.5-10 .9-A4C	
4	0224 9331	NB	HALTER	BRACKET	SUPPORT/PORTEQUTIL	SOPORTE		
6	0419 9094	1	HALTER	BRACKET	SUPPORT/PORTEQUTIL	SOPORTE		
7	0419 9175	1	ABDECKBLECH	COVER PLATE	TOLE RECOUVREMENT	CHAPA DE CUBIERTA		
8	0118 0018	NB	SECHSKANTSCHRAUBE	HEXAGON BOLT	VIS TETE HEXAGONAL	TORN.DE CABE.EXAG.	H 002008-F-M 8 X 12- 10.9-A4C	

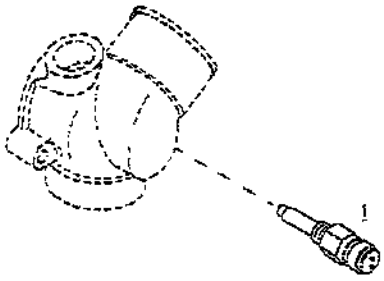

TEMPERATURGEBER TEMPER. TRANSMITTER SONDE THERMIQUE SENSOR TEMPERATUR 0130-51 507 0151

Bild Pos.	Teile-Nr.	Stck. zahl	DEUTSCH	ENGLISH	FRANCAIS	ESPANOL	Nummer/Bemerkung	ETK
1	0419 0804	1	TEMPERATURGEBER	TEMPER. TRANSMITTER	SONDE THERMIQUE	SENSOR TEMPERATUR		

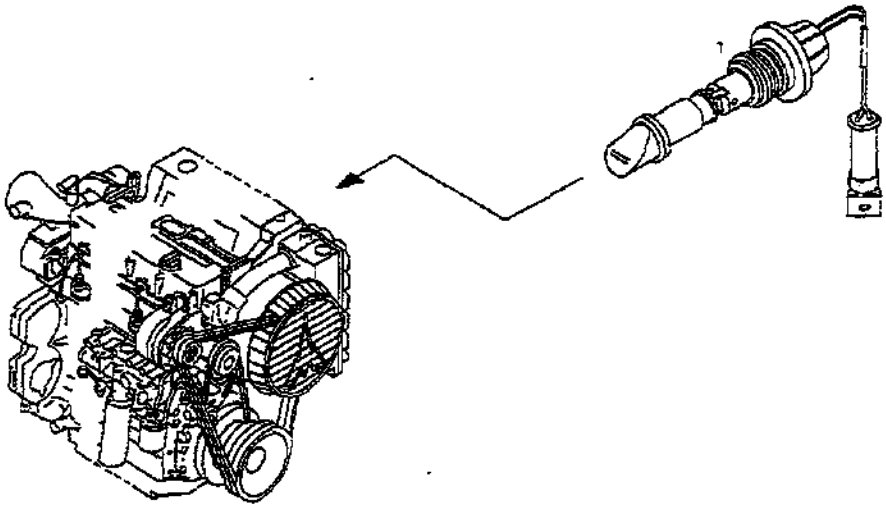

NIVEAUSCHALTER LEVEL SWITCH OHNE BENENNUNG CONTACTOR DE NIVEL 0130-51 507 0263

Bild Pos.	Teile-Nr.	Stck. zahl	DEUTSCH	ENGLISH	FRANCAIS	ESPANOL	Nummer/Bemerkung	ETK
1	0419 9022	1	NIVEAUSCHALTER	LEVEL SWITCH	OHNE BENENNUNG	CONTACTOR DE NIVEL		

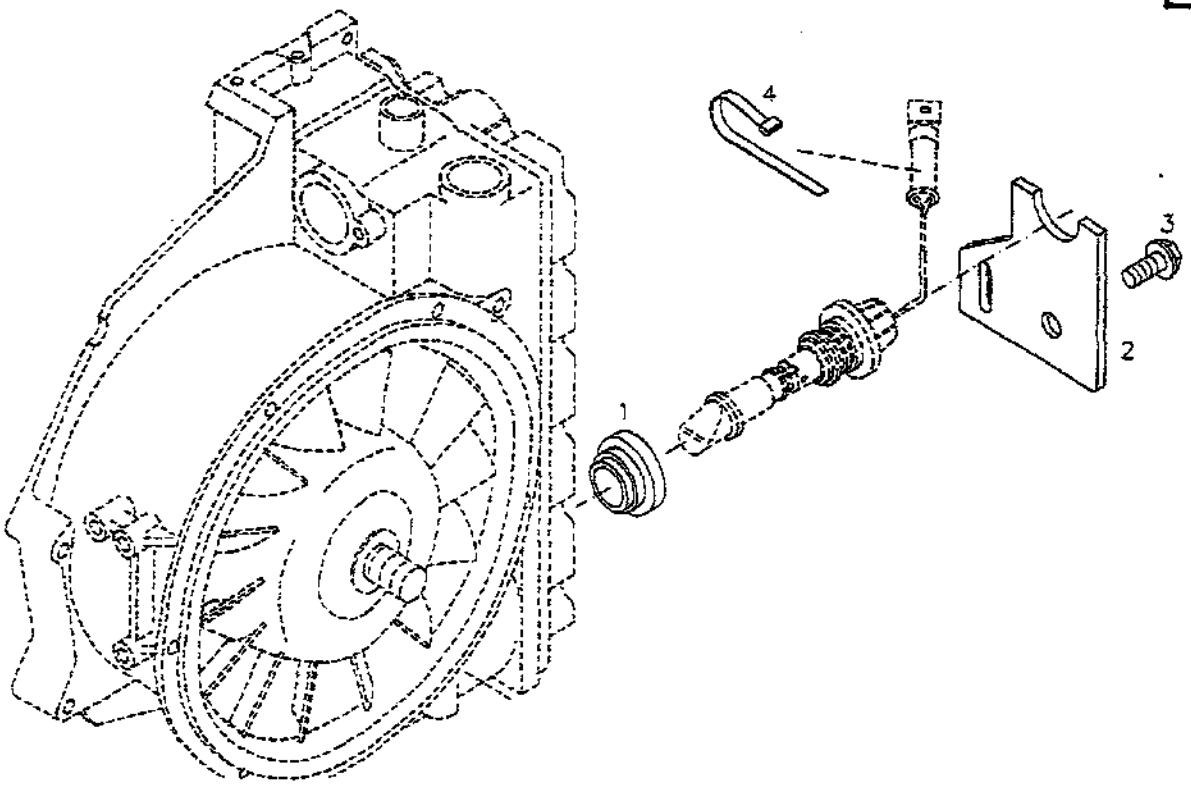

ANBAUTEILE ACCESSORIES ACCESSOIRES PIEZAS DE MONTAJE 0130-51 507 0264

Bild Pos.	Teile-Nr.	Stck. zahl	DEUTSCH	ENGLISH	FRANCAIS	ESPANOL	Nummer/Bemerkung	ETK
1	0420 0740	1	GUMMIMUFFE	RUBBER SLEEVE	MANCHON CAOUTCHOUC	MANGUITO DE GOMA		
2	0420 2814	1	HALTER	BRACKET	SUPPORT/PORTEQUTIL	SOPORTE		
3	0114 3369	1	SECHSKANTSCHRAUBE	HEXAGON BOLT	VIS TETE HEXAGONAL	TORN.DE CABE.EXAG.	H 002008-F-M 8 X 20-LG 2.5-10 .9-A4C	
4	0117 6435	1	HALTEBAND	CLAMPING BAND	BANDE DE SERRAGE	FLEJE DE SUJECION	H 007672-F 160X 4.8	

001

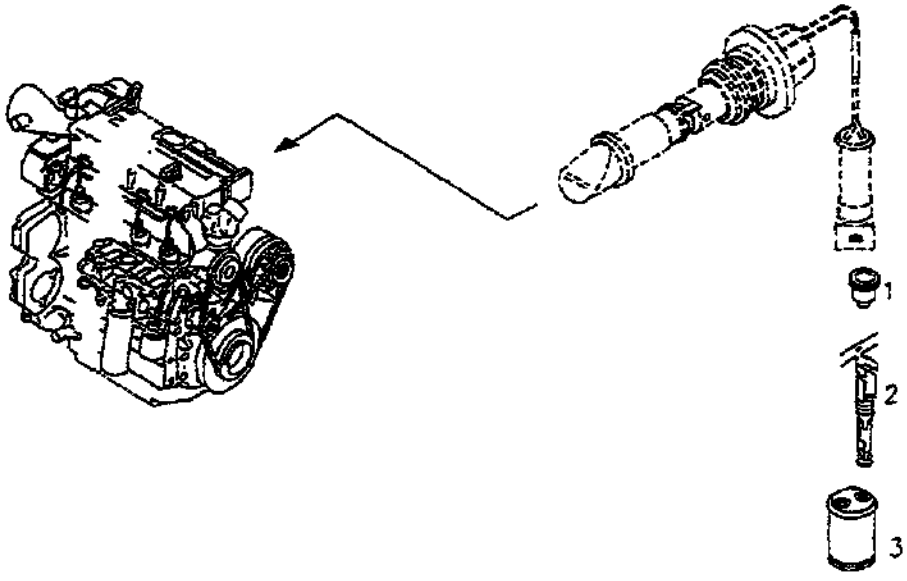

ANSCHLUSSSTECKER ATTACHMENT PLUG FICHE DE CONNEXION CLAVIJA DE CONEX. 0130-51 507 0343

Bild Pos.	Teile-Nr.	Stck. zahl	DEUTSCH	ENGLISH	FRANCAIS	ESPANOL	Nummer/Bemerkung	ETK
1	0117 9736	2	DICHTUNGSTUELLE	OHNE BENENNUNG	OHNE BENENNUNG	OHNE BENENNUNG	H 823849-E1-2,3-3,0-CR-GRAU	
2	0117 9740	2	BUCHSENKONTAKT	JACK	DOUILLE DE CONTACT	CASQUILLO HEMBRA	H 823849-C1- 1,7 X1,0-2,5 -CU SN-S	
3	0117 9737	1	BUCHSENGEHAEUSE	BEARING HOUSING	LOGEMENT DU PALIER	CAJA SUPORTE	H 823849-A1- 2-PA-SW	

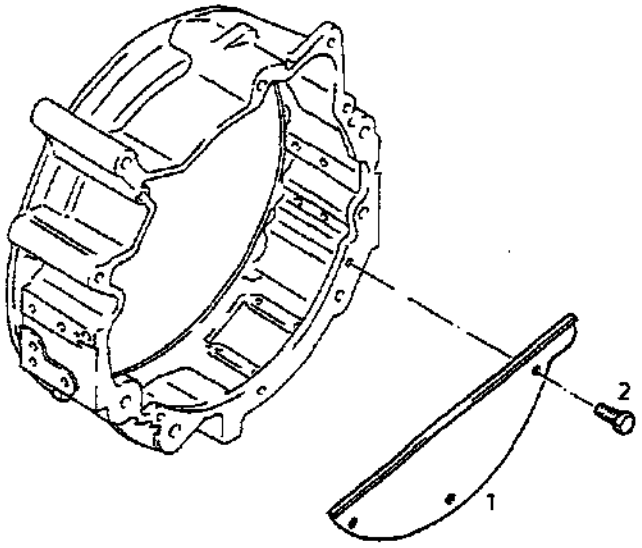

ABDECKBLECH COVER PLATE TOLE RECOUVREMENT CHAPA DE CUBIERTA 0130-52 507 0175

Bild Pos.	Teile-Nr.	Stck. zahl	DEUTSCH	ENGLISH	FRANCAIS	ESPANOL	Nummer/Bemerkung	ETK
1	0419 5682	1	ABDECKBLECH	COVER PLATE	TOLE RECOUVREMENT	CHAPA DE CUBIERTA		
2	0111 2232	3	SECHSKANTSCHRAUBE	HEXAGON BOLT	VIS TETE HEXAGONAL	TORN.DE CABE.EXAG.	DIN 000933-M 8 x 10 - 8.8-A4C	01

000

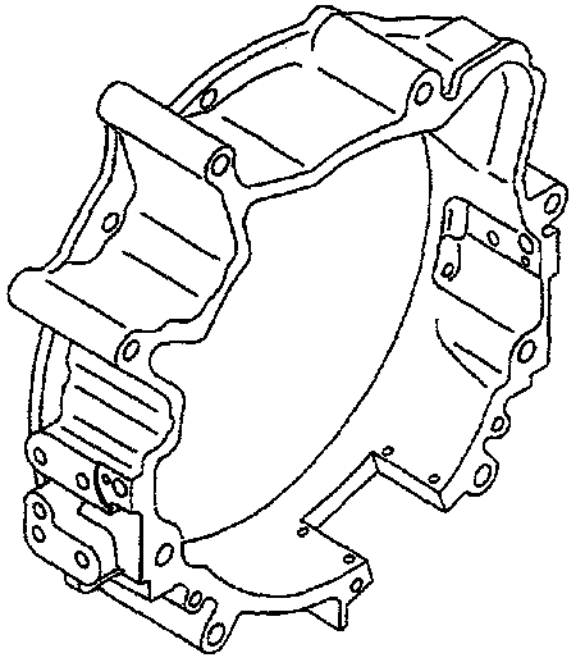

ANSCHLUSSGEHAEUSE CONNECTION HOUSING CARTER ADAPTATION CAJA DE CONEXION 0130-52 507 0481

Bild Pos.	Teile-Nr.	Stck. zahl	DEUTSCH	ENGLISH	FRANCAIS	ESPANOL	Nummer/Bemerkung	ETK
1	0420 4628	1	ANSCHLUSSGEHAEUSE	CONNECTION HOUSING	CARTER ADAPTATION	CAJA DE CONEXION		

000

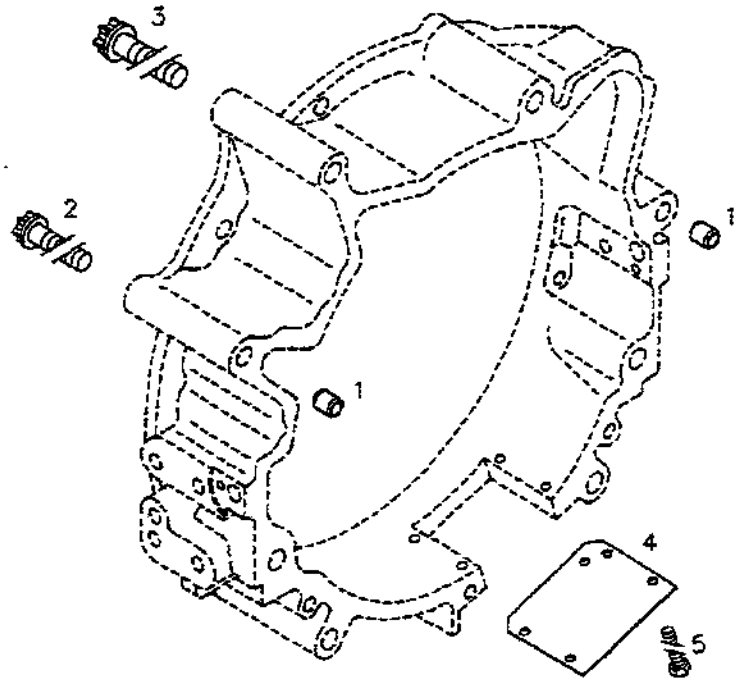

BEFESTIGUNGSTEILE FASTENINGS PIECES DE FIXAT. PIEZAS DE SUJECION 0130-52 507 0482

Bild Pos.	Teile-Nr.	Stck. zahl	DEUTSCH	ENGLISH	FRANCAIS	ESPANOL	Nummer/Bemerkung	STK
1	0419 8487	2	BUCHSE	BUSH	DOUILLE	CASQUILLO		
2	0117 9871	2	TORX-SCHRAUBE	TORX-HEAD BOLT	VIS A TETE TORX	TORNILLO TEST.TORX	H 002032-HBM12X150-10.9 -OELG ESCHWAERZT	
3	0117 9873	4	TORX-SCHRAUBE	TORX-HEAD BOLT	VIS A TETE TORX	TORNILLO TEST.TORX	H 002032-HBM16X150-10.9 -OELG ESCHWAERZT	
4	0419 5681	1	ABDECKBLECH	COVER PLATE	TOLE RECOUVREMENT	CHAPA DE CUBIERTA		
5	0111 2240	4	SECHSKANTSCHRAUBE	HEXAGON BOLT	VIS TETE HEXAGONAL	TORN.DE CABE.EXAG.	DIN 000933-M 6 X 12 - 8.8-A4C	

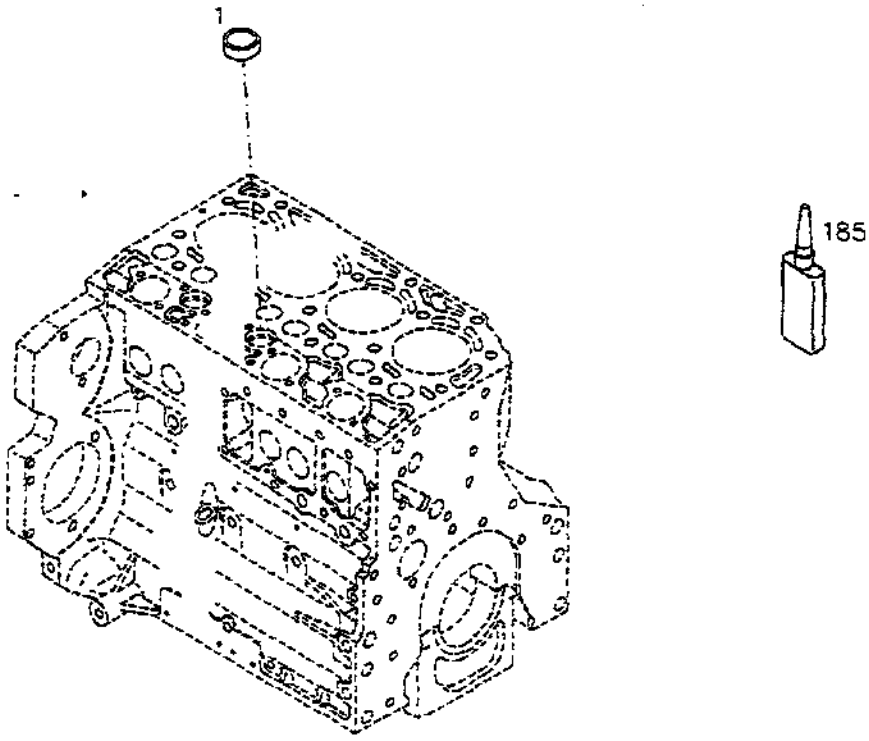

VERSCHLUSSTEILE BLANKING PARTS OBTURATEURS PIEZAS DE CIERRE 0130-56 507 0143

Bild Pos.	Teile-Nr.	Stck zahl	DEUTSCH	ENGLISH	FRANCAIS	ESPANOL	Nummer/Bemerkung	ETK
1	0117 9709	1	KERNLOCHVERSCHLUSS	CORE HOLE PLUG	BOUCHON TROU DESS	TAPON CIERRE MACHO	H 002860-A32-ST-FE/ZNPHR	
185	0101 1484	1	SICHERUNGSMITTEL	SAFETY/LOCK.AGENT	RESINE-FREIN	MEDIO AFIANZADOR	H 000699-DEUTZ DW 72- 50 ML	

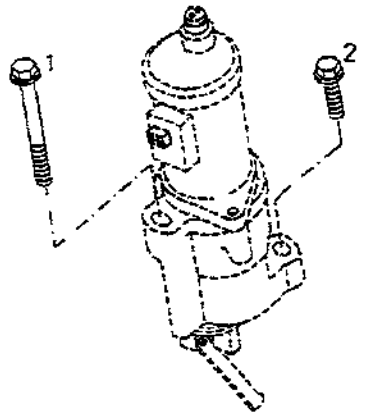

ANBAUTEILE ACCESSORIES ACCESSOIRES PIEZAS DE MONTAJE 0130-56 507 0260

Bild Pos.	Teile-Nr.	Stck. zahl	DEUTSCH	ENGLISH	FRANCAIS	ESPANOL	Nummer/Bemerkung	ETK
1	0117 9330	1	SECHSKANTSCHRAUBE	HEXAGON BOLT	VIS TETE HEXAGONAL	TORN.DE CABE.EXAG.	H 002008-F-M 8 X 65- 10.9-A4C	
2	0114 3369	1	SECHSKANTSCHRAUBE	HEXAGON BOLT	VIS TETE HEXAGONAL	TORN.DE CABE.EXAG.	H 002008-F-M 8 X 20-LG 2,5-10 .9-A4C	

000

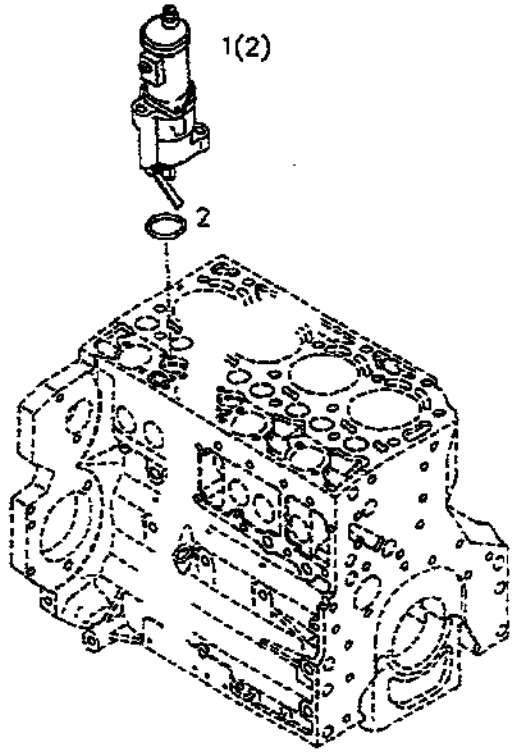

MOTORABSTELLUNG SHUTDOWN DEVICE ARRET DU MOTEUR PARADA DEL MOTOR 0130-56 507 0649

Bild Pos.	Teile-Nr.	Stck zab	DEUTSCH	ENGLISH	FRANCAIS	ESPANOL	Nummer/Bemerkung	ETK
1	0419 8949	1	MOTORABSTELLUNG	SHUTDOWN DEVICE	ARRET DU MOTEUR	PARADA DEL MOTOR	MIT POS.... WITH ITEM.... AVEC POSTE.... CON POS. ..... (2)	
2	0117 9559	1	RUNDDICHTRING	O-SEAL	ANNEAU TORIQUE	JUNTA TORNICA	H 002927- 26 X 3 -ACM-1-70	

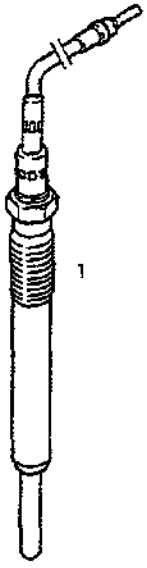

GLUEHSTIFTKERZE GLOW PLUG BOUGIE PREHCAUFF. BUJIA INCANDESCENT 0130-63 507 0220

Bild Pos.	Teile-Nr.	Stck-zahl	DEUTSCH	ENGLISH	FRANCAIS	ESPANOL	Nummer/Bemerkung	ETK
1	0117 9370	1	GLUEHSTIFTKERZE	GLOW PLUG	BOUGIE PREHCAUFF.	BUJIA INCANDESCENT	H 824606- S12V LKS M12X1,25	

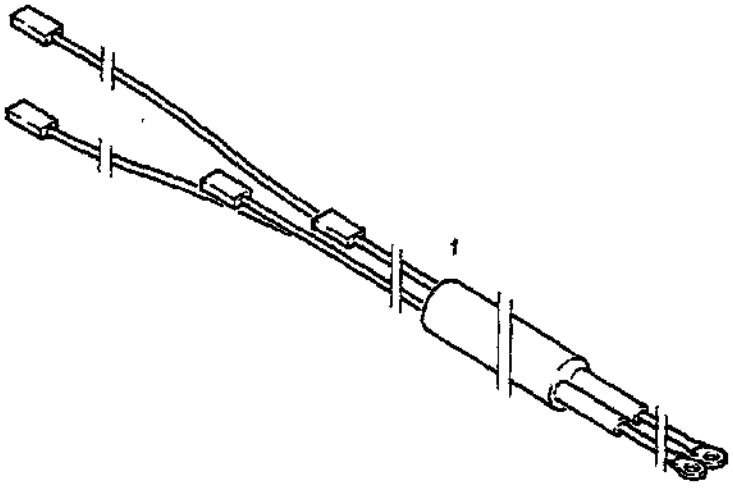

KABELBAUM CABLE HARNESS FAISCEAU DE CABLES HAZ DE CABLES 0130-63 507 0221

Bild Pos.	Teile-Nr.	Stck. zahl	DEUTSCH	ENGLISH	FRANCAIS	ESPANOL	Nummer/Bemerkung	ETK
1	0419 0827	1	KABELBAUM	CABLE HARNESS	FAISCEAU DE CABLES	HAZ DE CABLES		

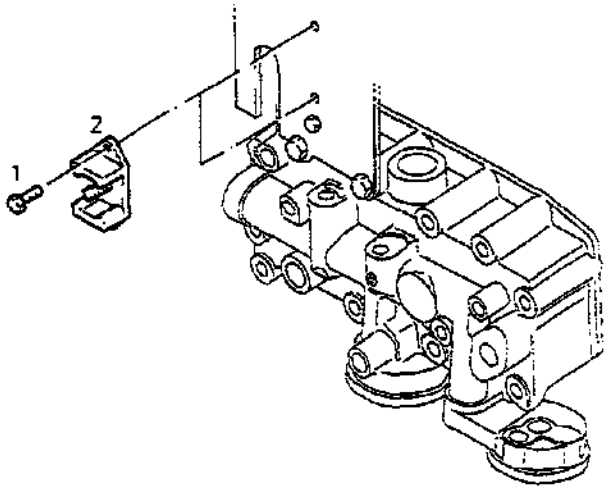

ANBAUTEILE ACCESSORIES ACCESSOIRES PIEZAS DE MONTAJE 0130-63 507 0222

Bild Pos.	Teile-Nr.	Stck. zahl	DEUTSCH	ENGLISH	FRANCAIS	ESPANOL	Nummer/Bemerkung	ETK
1	0110 3999	2	SECHSKANTSCHRAUBE	HEXAGON BOLT	VIS TETE HEXAGONAL	TORN.DE CABE.EXAG.	DIN 000933-M 5 X 16 - 8.8-A4C	
2	0438 4130	1	KABELKLEMME	CABLE CLAMP	BORNE DE CABLE	BORNE DE CABLE		

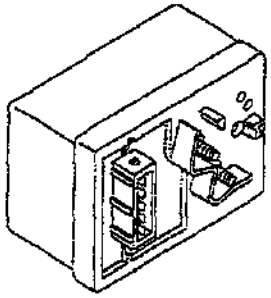

SCHALTGERAET SWITCHING DEVICE CONTACTEUR CONTACTOR 0130-63 507 0225

Bild Pos.	Teile-Nr.	Stck zahl	DEUTSCH	ENGLISH	FRANCAIS	ESPANOL	Nummer/Bemerkung	ETK
1	0117 9712	1	GLUEHZEITST.GERAET	GL.TIME CONTR.UNIT	COMM.TEMP D'INCAND	APARAT.TIEMP.ENCEN	H 824630-80-12V	

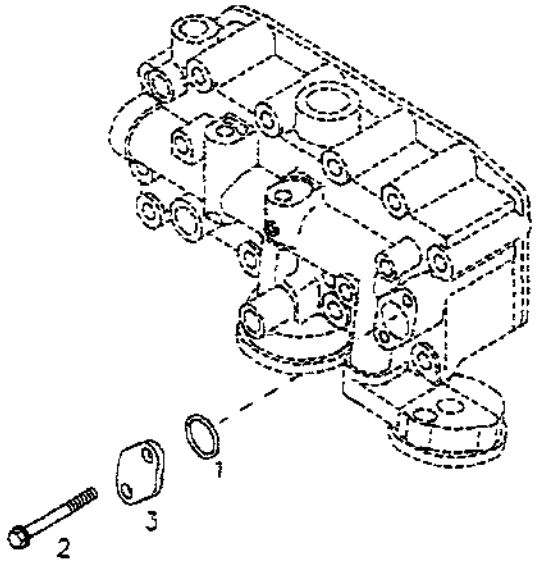

VERSCHLUSSTEILE BLANKING PARTS OBTURATEURS PIEZAS DE CIERRE 0130-63 507 0306

Bild Pos.	Teile-Nr.	Stck. zahl	DEUTSCH	ENGLISH	FRANÇAIS	ESPANOL	Nummer/Bemerkung	ETK
1	0117 8864	1	RUNDDICHTRING	O-SEAL	ANNEAU TORIQUE	JUNTA TORNICA	H 002927- 20 X 2,5 -FPM-1-70	
2	0111 2326	2	SECHSKANTSCHRAUBE	HEXAGON BOLT	VIS TETE HEXAGONAL	TORN.DE CABE.EXAG.	DIN 000933-M 8 X 22 - 8.8-A4C	
3	0419 7585	1	BLINDFLANSCH	BLANK FLANGE	BRIDE D'OBTURATION	BRIDA CIEGA		

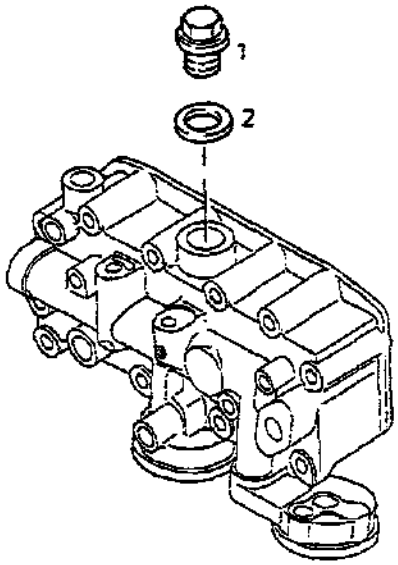

VERSCHLUSSTEILE BLANKING PARTS OBTURATEURS PIEZAS DE CIERRE 0130-75 507 0100

Bild Pos.	Teile-Nr.	Stck. zahl	DEUTSCH	ENGLISH	FRANCAIS	ESPANOL	Nummer/Bemerkung	ETK
1	0111 0442	1	VERSCHLUSSSCHRAUBE	SCREW PLUG	BOUCHON FILETE	TAPON ROSCADO	DIN 000910- M26X1,5 -ST	
2	0111 8759	1	DICHTRING	SEALING RING	BAGUE D'ETANCHEITE	ANILLO JUNTA	DIN 007603-A 26 X 31 -AL	

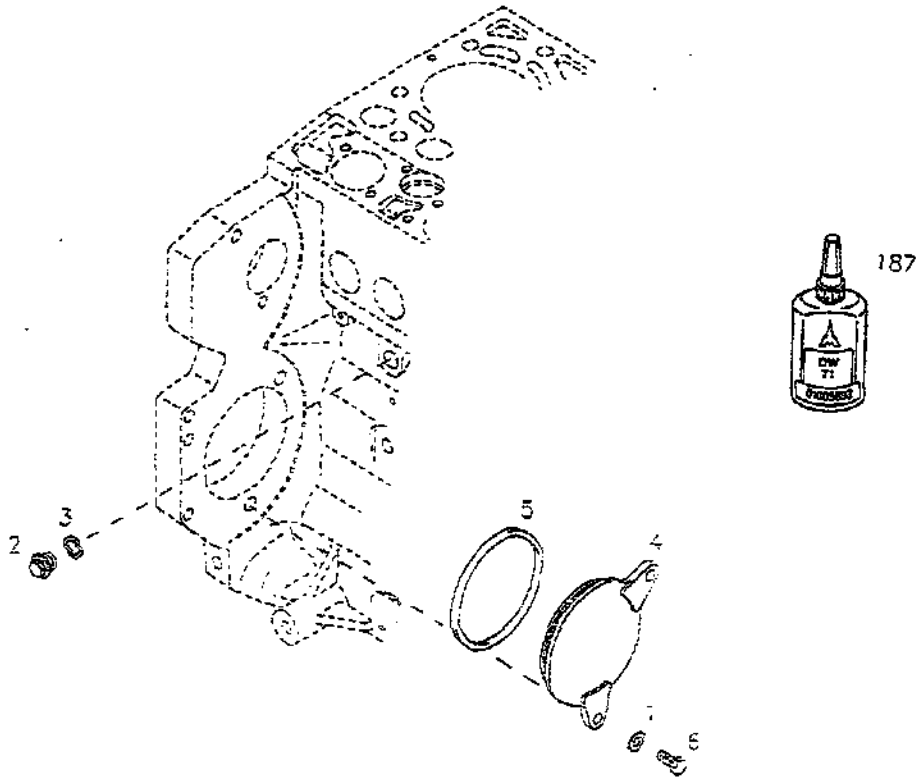

VERSCHLUSSTEILE BLANKING PARTS OBTURATEURS PIEZAS DE CIERRE 0130-83 507 0066

Bild Pos.	Teile-Nr.	Stck. zahl	DEUTSCH	ENGLISH	FRANCAIS	ESPANOL	Nummer/Bemerkung	ETK
1	0110 7550	2	SCHEIBE	PLAIN WASHER	RONDELLE PLATE	ARANDELA PLANA	DIN 000433-10,5-140HV-A4C	
2	0110 0940	1	VERSCHLUSSSCHRAUBE	SCREW PLUG	BOUCHON FILETE	TAPON ROSCADO	DIN 007604-AM14X1,5 -ST-A4C	
3	0111 8688	1	DICHTRING	SEALING RING	BAGUE D'ETANCHEITE	ANILLO JUNTA	DIN 007603-A 14 X 18 -CU	01
4	0419 5106	1	DECKEL	COVER	COUVERCLE	TAPA		
5	0117 8021	1	RUNDDICHTRING	O-SEAL	ANNEAU TORIQUE	JUNTA TORNICA	H 002927- 98 X 3 -NBR-1-70	
6	0111 2407	2	SECHSKANTSCHRAUBE	HEXAGON BOLT	VIS TETE HEXAGONAL	TORN.DE CABE.EXAG.	DIN 000933-M10 X 20 - 8.8-A4C	
187	0100 9893	1	SICHERUNGSMITTEL	SAFETY/LOCK.AGENT	RESINE-FREIN	MEDIO AFIANZADOR	H 000699-DEUTZ DW 71- 50 ML	

001

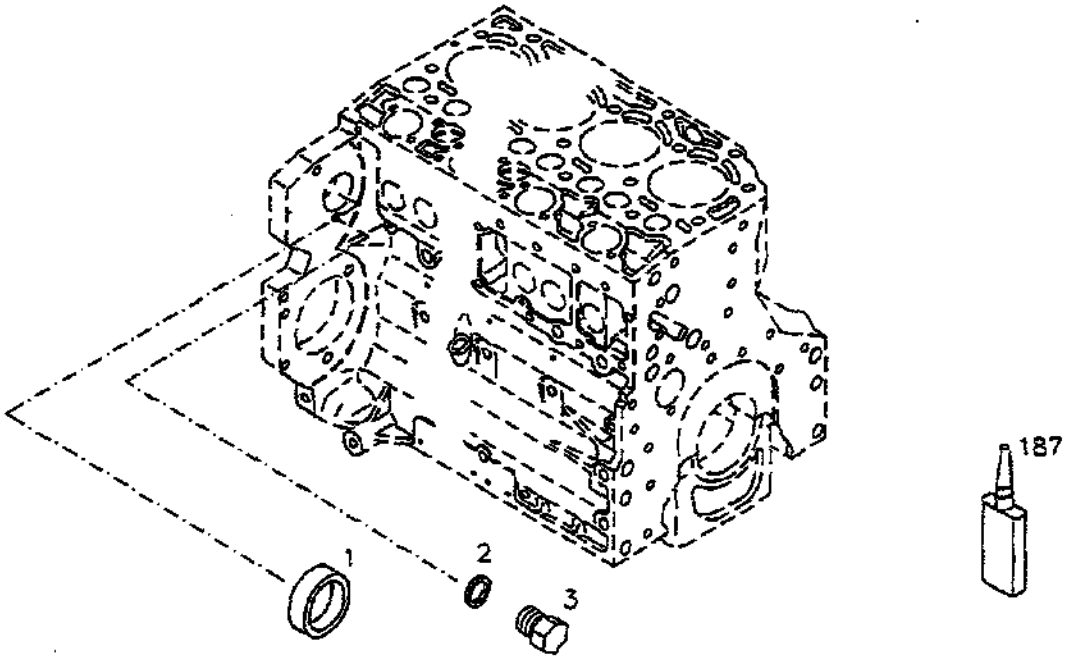

VERSCHLUSSTEILE BLANKING PARTS OBTURATEURS PIEZAS DE CIERRE 0130-83 507 0067

Bild Pos.	Teile-Nr.	Stck. zahl	DEUTSCH	ENGLISH	FRANCAIS	ESPANOL	Nummer/Bemerkung	ETK
1	0116 5839	1	KERNLOCHVERSCHLUSS	CORE HOLE PLUG	BOUCHON TROU DESS	TAPON CIERRE MACHO	H 000711-850	
2	0111 8859	2	DICHTRING	SEALING RING	BAGUE D'ETANCHEITE	ANILLO JUNTA	DIN 007603-A 10 X 13,5-CU	01
3	0121 5567	2	VERSCHLUSSSCHRAUBE	SCREW PLUG	BOUCHON FILETE	TAPON ROSCADO		
187	0100 9883	1	SICHERUNGSMITTEL	SAFETY/LOCK.AGENT	RESINE-FREIN	MEDIO AFIANZADOR	H 000899-DEUTZ DW 71- 50 ML	

000

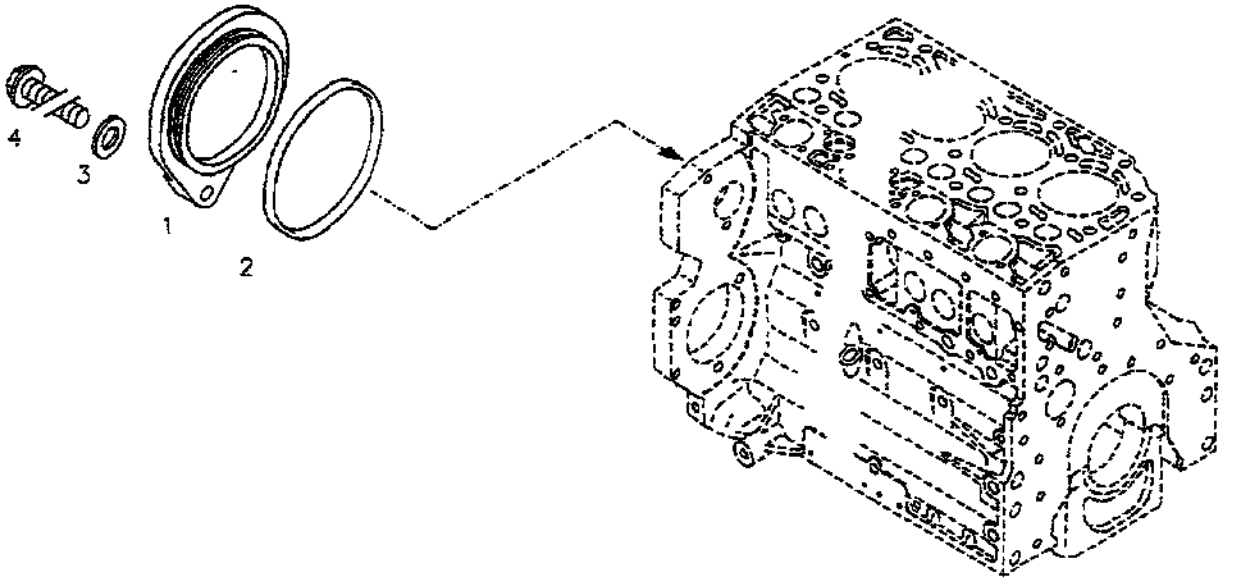

VERSCHLUSSTEILE BLANKING PARTS OBTURATEURS PIEZAS DE CIERRE 0130-83 507 0540

Bild Pos.	Teile-Nr.	Stck. zahl	DEUTSCH	ENGLISH	FRANCAIS	ESPANOL	Nummer/Bemerkung	ETK
1	0420 5878	1	VERSCHLUSSDECKEL	COVER	COUVERCLE OBTURAT.	TAPA DE CIERRE		
2	0116 0982	1	RUNDDICHTRING	O-SEAL	ANNEAU TORIQUE	JUNTA TORNICA	H 002927- 82 X 4 -NBR-1-70	
3	0115 1019	1	SCHEIBE	PLAIN WASHER	RONDELLE PLATE	ARANDELA PLANA	DIN 000125- 8,4-200HV	
4	0117 9567	1	SECHSKANTSCHRAUBE	HEXAGON BOLT	VIS TETE HEXAGONAL	TORN.DE CABE.EXAG.	H 002008-F-M 8 X 25- 10.9	

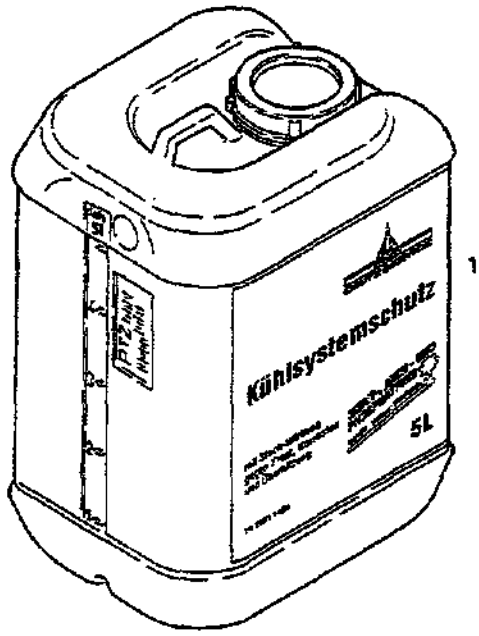

KUEHLSYSTEMSCHUTZ COOL.SYST.PROTECT. PROT.SYST.REFROID. PROTECC.SIST.REFRI 0199-90 507 0283

Bild Pos.	Teile-Nr.	Stck. zahl	DEUTSCH	ENGLISH	FRANCAIS	ESPANOL	Nummer/Bemerkung	ETK
1	0101 1490	NB	KUEHLSYSTEMSCHUTZ	COOL.SYST.PROTECT.	PROT.SYST.REFROID.	PROTECC.SIST.REFRI		

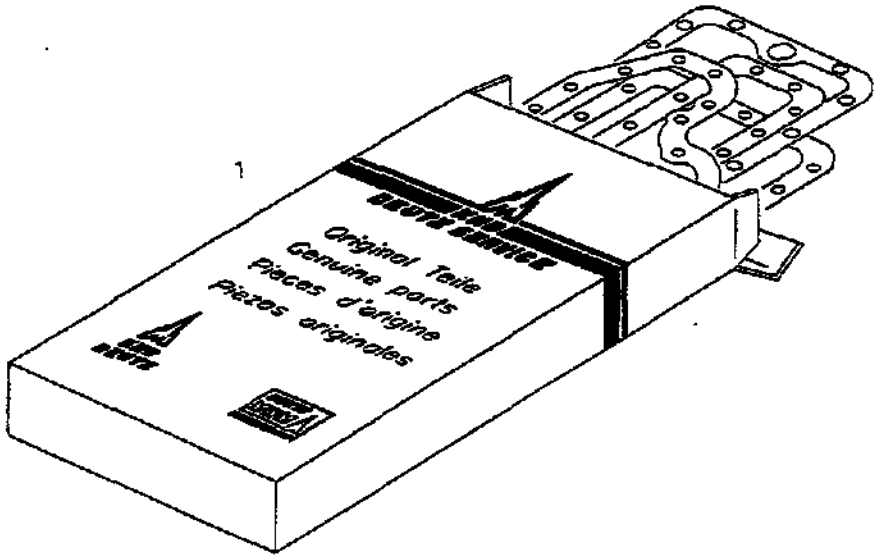

DICHTUNGSSATZ GASKET SET JEU DE JOINTS JUEGO DE JUNTAS 0130-90 507 0907

Bild Pos.	Teile-Nr.	Stck. zahl	DEUTSCH	ENGLISH	FRANCAIS	ESPAÑOL	Nummer/Bemerkung	ETK
1	0292 9886	1	DICHTUNGSSATZ	GASKET SET	JEU DE JOINTS	JUEGO DE JUNTAS	DICHTUNGSSATZ FUER BF 6M 1013 /E/C/EC/CP/ECP	
20	0111 8642	1	DICHTRING	SEALING RING	BAGUE D'ETANCHEITE	ANILLO JUNTA	DIN 007603-A 6 X 10 -FI	01
30	0111 8647	1	DICHTRING	SEALING RING	BAGUE D'ETANCHEITE	ANILLO JUNTA	DIN 007603-A 8 X 11,5-CU	01
50	0111 8658	6	DICHTRING	SEALING RING	BAGUE D'ETANCHEITE	ANILLO JUNTA	DIN 007603-A 10 X 13,5-AL	01
60	0111 8659	15	DICHTRING	SEALING RING	BAGUE D'ETANCHEITE	ANILLO JUNTA	DIN 007603-A 10 X 13,5-CU	01
70	0111 8664	4	DICHTRING	SEALING RING	BAGUE D'ETANCHEITE	ANILLO JUNTA	DIN 007603-A 10 X 14 -CU	01
80	0111 8668	5	DICHTRING	SEALING RING	BAGUE D'ETANCHEITE	ANILLO JUNTA	DIN 007603-A 10 X 16 -AL	01
90	0111 8669	3	DICHTRING	SEALING RING	BAGUE D'ETANCHEITE	ANILLO JUNTA	DIN 007603-A 10 X 16 -CU	01
100	0111 8673	3	DICHTRING	SEALING RING	BAGUE D'ETANCHEITE	ANILLO JUNTA	DIN 007603-A 12 X 15,5-CU	01
110	0111 8688	24	DICHTRING	SEALING RING	BAGUE D'ETANCHEITE	ANILLO JUNTA	DIN 007603-A 14 X 18 -CU	01
120	0111 8693	14	DICHTRING	SEALING RING	BAGUE D'ETANCHEITE	ANILLO JUNTA	DIN 007603-A 14 X 20 -CU	01
130	0111 8699	6	DICHTRING	SEALING RING	BAGUE D'ETANCHEITE	ANILLO JUNTA	DIN 007603-A 16 X 20 -AL	01
140	0111 8700	6	DICHTRING	SEALING RING	BAGUE D'ETANCHEITE	ANILLO JUNTA	DIN 007603-A 16 X 20 -CU	01
160	0111 8718	2	DICHTRING	SEALING RING	BAGUE D'ETANCHEITE	ANILLO JUNTA	DIN 007603-A 18 X 24 -CU	01
170	0111 8726	2	DICHTRING	SEALING RING	BAGUE D'ETANCHEITE	ANILLO JUNTA	DIN 007603-A 20 X 24 -AL	01
190	0111 8759	1	DICHTRING	SEALING RING	BAGUE D'ETANCHEITE	ANILLO JUNTA	DIN 007603-A 26 X 31 -AL	
200	0111 8763	2	DICHTRING	SEALING RING	BAGUE D'ETANCHEITE	ANILLO JUNTA	DIN 007603-A 26 X 32 -ALU	
220	0117 1584	1	RUNDDICHTRING	O-SEAL	ANNEAU TORIQUE	JUNTA TORNICA	H 002927- 52 X 5 -FPM-1-70	01
270	0420 5894	1	DICHTUNG	GASKET	GARNITURE/JOINT	JUNTA		
280	0419 8035	6	DICHTGUMMI	RUBBER SEAL	BOURRELET EN CC	BURLETE DE GOMA		
300	0115 3857	12	RUNDDICHTRING	O-SEAL	ANNEAU TORIQUE	JUNTA TORNICA	H 002927- 9 X 1,5 -FPM-1-82	
310	0117 9023	12	RUNDDICHTRING	O-SEAL	ANNEAU TORIQUE	JUNTA TORNICA	H 002927-115 X 3 -FPM-2-70	

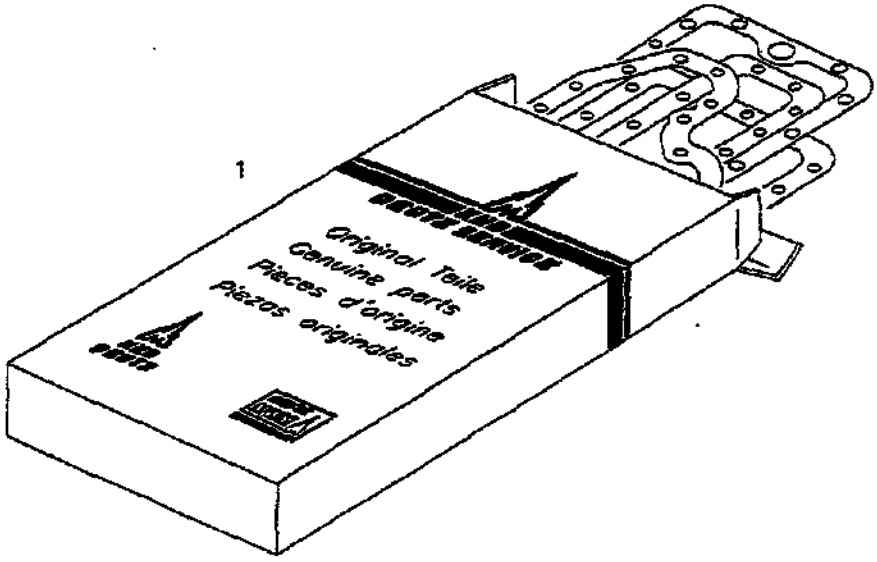

DICHTUNGSSATZ GASKET SET JEU DE JOINTS JUEGO DE JUNTAS 0130-90 507 0907

Bild Pos.	Teile-Nr.	Stck. zahl	DEUTSCH	ENGLISH	FRANCAIS	ESPANOL	Nummer/Bemerkung	ETK
330	0420 4450	1	DICHTUNG	GASKET	GARNITURE/JOINT	JUNTA		
340	0116 5973	1	RUNDDICHTRING	O-SEAL	ANNEAU TORIQUE	JUNTA TORNICA	H 002927- 5 X 1,5 -NBR-1-60	01
350	0117 4311	1	RUNDDICHTRING	O-SEAL	ANNEAU TORIQUE	JUNTA TORNICA	H 002927- 4,3 X 2,4 -FPM-1-70	01
360	0115 7771	1	DICHTUNG	GASKET	GARNITURE/JOINT	JUNTA	H 002946-35X 58X1,5 -DEUTZ FW 31	
380	0419 8741	1	DICHTUNG	GASKET	GARNITURE/JOINT	JUNTA		
420	0420 4459	1	DICHTUNG	GASKET	GARNITURE/JOINT	JUNTA		
430	0121 0163	1	RUNDDICHTRING	O-SEAL	ANNEAU TORIQUE	JUNTA TORNICA	H 002927- 12 X 2 -ACM-1-70	01
440	1201 9935	1	DICHTRING	SEALING RING	BAGUE D'ETANCHEITE	ANILLO JUNTA		
450	0117 9559	1	RUNDDICHTRING	O-SEAL	ANNEAU TORIQUE	JUNTA TORNICA	H 002927- 26 X 3 -ACM-1-70	
460	0131 8390	6	O-RING	O-RING	JOINT TORIQUE	JUNTA TORICA		
470	0131 8391	12	O-RING	O-RING	JOINT TORIQUE	JUNTA TORICA		
480	0417 5510	6	DICHTRING	SEALING RING	BAGUE D'ETANCHEITE	ANILLO JUNTA		01
500	0420 0095	6	DICHTUNG	GASKET	GARNITURE/JOINT	JUNTA		
520	0117 9287	2	RUNDDICHTRING	O-SEAL	ANNEAU TORIQUE	JUNTA TORNICA	H 002927- 40 X 6 -MVQ-1-70	
530	0242 4963	1	DICHTRING	SEALING RING	BAGUE D'ETANCHEITE	ANILLO JUNTA		
540	0419 8834	1	DICHTUNG	GASKET	GARNITURE/JOINT	JUNTA		
560	0420 3649	1	DICHTUNG	GASKET	GARNITURE/JOINT	JUNTA		
570	0420 3304	2	DICHTUNG	GASKET	GARNITURE/JOINT	JUNTA		
580	0420 4722	1	DICHTUNG	GASKET	GARNITURE/JOINT	JUNTA		
590	0419 7463	6	DICHTUNG	GASKET	GARNITURE/JOINT	JUNTA		
600	0418 2521	1	DICHTUNG	GASKET	GARNITURE/JOINT	JUNTA		
640	0117 9277	2	RUNDDICHTRING	O-SEAL	ANNEAU TORIQUE	JUNTA TORNICA	H 002927- 22 X 3,5 -MVQ-1-70	

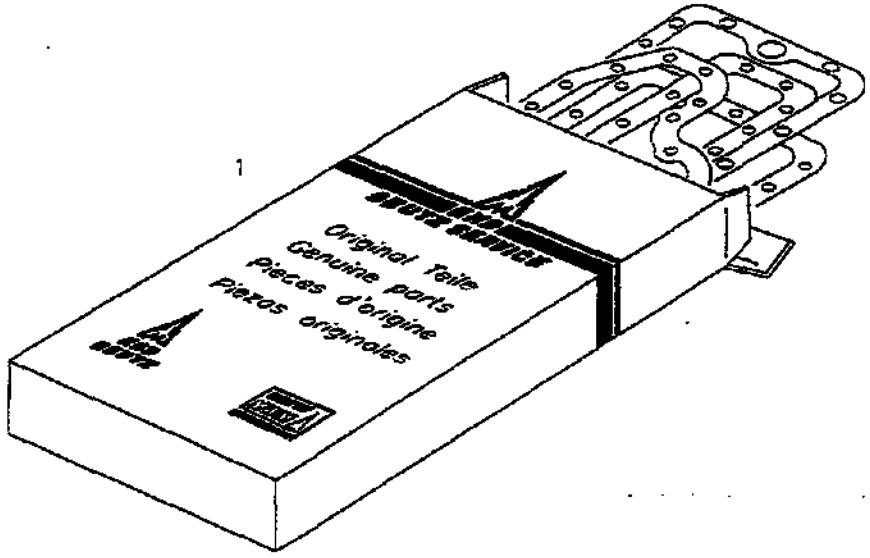

DICHTUNGSSATZ GASKET SET JEU DE JOINTS JUEGO DE JUNTAS 0130-90 507 0907

Bild Pos.	Teile-Nr.	Stck zahl	DEUTSCH	ENGLISH	FRANCAIS	ESPANOL	Nummer/Bemerkung	ETK
660	0418 2519	1	DICHTUNG	GASKET	GARNITURE/JOINT	JUNTA		
670	0418 2520	1	DICHTUNG	GASKET	GARNITURE/JOINT	JUNTA		
710	0420 0859	1	DICHTUNG	GASKET	GARNITURE/JOINT	JUNTA		
720	0420 1286	2	DICHTRING	SEALING RING	BAGUE D'ÉTANCHEITE	ANILLO JUNTA	H 002914-CM26X1,5 -PTFE-SPEZIAL-BRAUN	
740	0117 8884	1	RUNDDICHTRING	O-SEAL	ANNEAU TORIQUE	JUNTA TORNICA	H 002927- 20 X 2,5 -FPM-1-70	
750	0420 0205	2	RUNDDICHTRING	O-SEAL	ANNEAU TORIQUE	JUNTA TORNICA	H 002927- 50 X 5 -EPDM-6-70	
760	0117 9868	1	RUNDDICHTRING	O-SEAL	ANNEAU TORIQUE	JUNTA TORNICA	H 002927- 82 X 3 -EPDM-6-70	
770	0118 0080	1	RUNDDICHTRING	O-SEAL	ANNEAU TORIQUE	JUNTA TORNICA	H 002927- 80 X 3 -EPDM-6-70	
780	0419 7108	1	RUNDDICHTRING	O-SEAL	ANNEAU TORIQUE	JUNTA TORNICA	H 002927- 14 X 3 -EPDM-6-70	
790	0420 0347	1	RUNDDICHTRING	O-SEAL	ANNEAU TORIQUE	JUNTA TORNICA	H 002927- 70 X 3 -EPDM-6-70	
800	0420 0582	4	RUNDDICHTRING	O-SEAL	ANNEAU TORIQUE	JUNTA TORNICA	H 002927- 42 X 4 -EPDM-6-70	
810	0420 0583	1	RUNDDICHTRING	O-SEAL	ANNEAU TORIQUE	JUNTA TORNICA	H 002927- 35 X 4 -EPDM-6-70	
830	0420 1463	2	RUNDDICHTRING	O-SEAL	ANNEAU TORIQUE	JUNTA TORNICA	H 002927- 60 X 4 -EPDM-6-70	
840	0420 2180	1	DICHTUNG	GASKET	GARNITURE/JOINT	JUNTA		
850	0419 8968	1	FLACHDICHTUNG	FLAT GASKET	GARNITURE PLATE	JUNTA PLANA		
880	0420 2326	1	DICHTUNG	GASKET	GARNITURE/JOINT	JUNTA		
890	0117 8021	1	RUNDDICHTRING	O-SEAL	ANNEAU TORIQUE	JUNTA TORNICA	H 002927- 98 X 3 -NBR-1-70	
900	0116 0962	1	RUNDDICHTRING	O-SEAL	ANNEAU TORIQUE	JUNTA TORNICA	H 002927- 82 X 4 -NBR-1-70	
920	0420 2332	1	WELLENDICHTRING	ROT.SHAFT LIP SEAL	JOINT A LÈVRE	RETEN		
940	0420 2260	1	WELLENDICHTRING	ROT.SHAFT LIP SEAL	JOINT A LÈVRE	RETEN		

TEILEVERWENDUNG
ALLOCATION O F PARTS NO.
AFFECTATION DES NO. DE PIECES
ASIGNACION DE NUMEROS DE PIEZAS

TEILE-NR.	TO-NUM.	BAU-GR	ETL-BLAETTER	BILD POS.	TEILE-NR.	TO-NUM.	BAU-GR	ETL-BLAETTER	BILD POS.	TEILE-NR.	TO-NUM.	BAU-GR	ETL-BLAETTER	BILD POS.
0121 5567	8923-05	83	0507 0067	003	0131 8550	0150-44	44	0506 4986	018	0292 9439	0131-05	05	0507 0533	953
0121 6119	8923-08	46	0507 0465	002	0131 8569	0119-44	44	0506 4986	007		0131-05	05	0507 0533	963
	8923-08	47	0507 0142	002	0131 8680	0119-44	44	0506 4986	003	0292 9571	0131-05	05	0507 0533	001
0123 8026	8239-70	48	0507 0321	004	0131 8683	0119-44	44	0506 4986	013	0292 9574	0131-05	05	0507 0533	950
0130 7178	8776-12	44	0506 4986	017	0131 8754	0148-44	44	0506 4986	002	0292 9685	0130-90	90	0507 0907	001
0130 7188	0144-44	44	0506 4986	021	0132 0413	0150-44	44	0506 4986	006	0298 5186	8776-12	44	0506 4986	020
0130 8494	8776-12	44	0506 4986	001	0132 0991	0148-44	44	0506 4986	011	0335 9329	0144-20	15	0507 0489	002
0131 8285	0138-19	19	0507 0524	002	0132 1068	0150-44	44	0506 4986	010	0336 0673	0144-41	41	0500 2097	001
0131 8286	0138-19	19	0507 0524	952	0132 1070	0150-44	44	0506 4986	014	0336 1218	0144-70	41	0500 2097	006
0131 8287	0138-19	19	0507 0524	955	0132 1071	0150-44	44	0506 4986	008	0336 3687	0150-39	39	0507 0816	017
0131 8288	0138-19	19	0507 0524	964	0132 1072	0150-44	44	0506 4986	023	0336 3990	0150-44	48	0507 0502	005
0131 8289	0138-19	19	0507 0524	971	0132 1074	0150-44	44	0506 4986	009	0336 6186	0152-20	15	0507 0488	001
0131 8290	0138-19	19	0507 0524	978	0132 1476	8211-70	44	0506 4986	004	0347 0246	0170-41	41	0500 6694	001
0131 8329	0130-19	19	0507 0524	950	0132 1477	8211-70	44	0506 4986	015		0170-41	41	0507 0505	001
0131 8330	0130-19	19	0507 0524	951	0132 1484	8211-70	44	0506 4986	022	0414 9058	0148-01	15	0507 0489	001
0131 8331	0130-19	19	0507 0524	953	0132 1485	8211-70	44	0506 4986	019	0415 7260	0150-41	41	0500 6694	950
0131 8332	0130-19	19	0507 0524	954	0138 8786	8464-71	39	0507 0461	003	0415 7356	0150-70	41	0500 2097	959
0131 8333	0130-19	19	0507 0524	955	0140 0868	8530-37	41	0507 0505	169	0415 8040	0150-43	41	0500 6694	003
0131 8334	0130-19	19	0507 0524	957	0140 0735	8518-02	27	0507 0771	106	0417 5610	0138-19	19	0507 0352	003
0131 8335	0130-19	19	0507 0524	958	0140 4847	8464-71	40	0507 0919	003		0138-19	90	0507 0907	480
0131 8336	0130-19	19	0507 0524	959	0210 9637	0138-11	11	0507 0357	008	0418 2519	0148-43	43	0507 0508	005
0131 8337	0130-19	19	0507 0524	960	0211 1026	0131-21	21	0507 0521	001		0148-43	90	0507 0907	880
0131 8338	0130-19	19	0507 0524	961	0211 1066	0131-17	17	0507 0472	001	0418 2520	0148-43	43	0507 0508	009
0131 8339	0130-19	19	0507 0524	962	0211 1107	0131-27	27	0507 0567	001		0148-43	90	0507 0907	870
0131 8340	0130-19	19	0507 0524	963	0211 1122	0130-27	27	0507 0525	003	0418 2521	0148-43	41	0507 0505	004
0131 8341	0130-19	19	0507 0524	965	0211 1248	0130-27	27	0507 0771	002		0148-43	90	0507 0907	800
0131 8342	0130-19	19	0507 0524	966	0212 6891	0131-17	17	0507 0528	001	0418 4991	0148-43	22	0507 0497	001
0131 8343	0130-19	19	0507 0524	967	0212 6992	0131-19	19	0507 0524	001	0419 0804	8203-13	51	0507 0151	001
0131 8344	0130-19	19	0507 0524	968	0212 6998	0131-19	19	0507 0524	006	0419 0809	8203-10	48	0507 0295	001
0131 8345	0130-19	19	0507 0524	969	0213 1081	0150-05	05	0502 1000	002	0419 0827	0130-48	53	0507 0221	001
0131 8346	0130-19	19	0507 0524	970	0214 3324	0148-08	41	0507 0505	003	0419 0828	0130-48	48	0507 0399	001
0131 8347	0130-19	19	0507 0524	972	0216 5148	0150-05	05	0507 1002	003	0419 0847	8238-49	48	0507 0266	001
0131 8348	0130-19	19	0507 0524	973	0223 1127	0150-41	41	0500 8694	004	0419 0848	8238-49	48	0507 0266	002
0131 8349	0130-19	19	0507 0524	974	0224 9331	0148-48	48	0507 0663	004	0419 0851	8238-49	48	0507 0266	003
0131 8350	0130-19	19	0507 0524	975	0240 4201	0148-02	44	0507 0509	001	0419 0870	0130-48	40	0507 0858	004
0131 8351	0130-19	19	0507 0524	976	0242 0249	0148-41	41	0500 2097	002	0419 0871	0130-48	40	0507 0858	003
0131 8352	0130-19	19	0507 0524	977	0242 4983	0148-43	90	0507 0907	530	0419 0904	0130-48	48	0507 0663	001
0131 8353	0130-19	19	0507 0524	003	0292 9430	0131-05	05	0507 0533	002	0419 0998	0130-48	48	0507 0327	001
0131 8355	0130-19	19	0507 0524	005	0292 9431	0131-05	05	0507 0533	952	0419 2398	0130-11	11	0507 0357	007
0131 8357	0130-19	19	0507 0524	007	0292 9432	0131-05	05	0507 0533	962	0419 2447	0130-15	15	0507 0484	002
0131 8363	0138-19	19	0507 0524	004	0292 9434	0130-06	06	0507 0533	004		0130-15	15	0507 0588	002
0131 8380	0130-17	90	0507 0907	480		0130-06	06	0507 0354	005	0419 2487	0130-72	27	0507 0038	003
0131 8381	0130-17	90	0507 0907	470	0292 9435	0131-06	05	0507 0533	954	0419 5106	0130-83	83	0507 0068	004
0131 8545	0150-44	44	0506 4986	005	0292 9436	0131-06	05	0507 0533	964	0419 5681	0130-52	52	0507 0432	004
0131 8549	0150-44	44	0506 4986	016	0292 9438	0131-05	05	0507 0533	003	0419 5682	0130-52	52	0507 0175	001

TEILEVERWENDUNG
ALLOCATION O F PARTS NO.
AFFECTATION DES NO. DE PIECES
ASIGNACION DE NUMEROS DE PIEZAS

TEILE-NR.	TO-NUM.	BAU-GR	ETL-BLAETTER	BILD POS.	TEILE-NR.	TO-NUM.	BAU-GR	ETL-BLAETTER	BILD POS.	TEILE-NR.	TO-NUM.	BAU-GR	ETL-BLAETTER	BILD POS.
0419 5722	0130-37	20	0507 0498	002	0420 0114	0131-08	08	0507 0661	007	0420 1666	0131-19	19	0507 0352	001
0419 7106	8929-27	90	0507 0907	780	0420 0139	0131-07	07	0507 0650	002	0420 1698	0131-17	17	0507 0676	001
0419 7392	0130-27	27	0507 0525	002	0420 0150	0131-08	08	0507 0651	008	0420 1747	0131-01	01	0507 0364	004
0419 7393	0130-27	27	0507 0525	004	0420 0170	0131-08	08	0507 0651	011	0420 1794	0131-01	01	0507 0364	005
0419 7422	0130-41	41	0507 0505	006	0420 0171	0131-08	08	0507 0651	014	0420 1837	0131-44	44	0507 0509	007
0419 7427	0130-08	08	0507 0164	001	0420 0194	0131-11	11	0507 0353	002	0420 1897	0131-22	22	0507 0496	001
0419 7453	0130-21	21	0507 0348	004	0420 0203	0131-11	11	0507 0353	001	0420 2004	0131-39	39	0507 0816	004
0419 7462	0130-27	27	0507 0038	001	0420 0205	8929-27	37	0507 0458	003	0420 2005	0131-08	08	0507 0358	001
0419 7483	0130-41	41	0507 0505	007		8929-27	90	0507 0907	750	0420 2041	0131-39	39	0507 0816	002
	0130-41	90	0507 0907	590	0420 0255	0131-04	01	0507 0537	019	0420 2048	0131-22	22	0507 0495	001
0419 7551	0130-46	47	0507 0142	004	0420 0338	0131-07	07	0507 0650	003	0420 2102	0131-01	01	0507 0364	003
0419 7585	0130-63	63	0507 0306	003	0420 0347	8929-27	90	0507 0907	790	0420 2104	0131-01	01	0507 0364	001
0419 7599	0130-21	21	0507 0363	007	0420 0432	0131-07	07	0507 0650	007	0420 2126	0131-39	39	0507 0816	014
0419 7633	0130-05	05	0507 0249	001	0420 0455	0131-06	06	0507 0354	001	0420 2127	0131-39	39	0507 0816	005
0419 7667	0130-01	01	0507 0052	001	0420 0458	0131-06	06	0507 0354	003	0420 2156	0131-39	39	0507 0816	015
0419 7718	0130-22	01	0507 0050	002	0420 0486	0131-38	37	0507 0458	002	0420 2174	0131-39	39	0507 0816	001
0419 7854	0130-21	21	0507 0363	005	0420 0582	8929-27	38	0507 0512	002	0420 2180	0131-39	39	0507 0816	011
0419 8035	0130-21	21	0507 0363	008		8929-27	38	0507 0513	002		0131-39	90	0507 0907	840
	0130-21	90	0507 0907	280		8929-27	90	0507 0907	800	0420 2181	0131-39	39	0507 0816	019
0419 8487	0130-52	52	0507 0482	001	0420 0583	8929-27	38	0507 0513	004	0420 2185	0131-39	39	0507 0816	007
0419 8572	0130-01	01	0507 0050	001		8929-27	90	0507 0907	810	0420 2253	0131-39	39	0507 0344	003
0419 8608	0131-05	05	0507 0464	001	0420 0610	0131-07	07	0507 0650	005	0420 2260	0131-01	01	0507 0362	002
0419 8727	0130-20	20	0507 0499	001	0420 0740	0131-39	51	0507 0264	001		0131-01	90	0507 0907	940
0419 8741	0130-16	16	0507 0846	004	0420 0782	0131-01	01	0507 0384	002	0420 2299	0131-38	38	0507 0512	008
	0130-16	90	0507 0907	380	0420 0859	0131-15	15	0507 0484	004	0420 2316	0131-15	15	0507 0484	001
0419 8792	0131-38	38	0507 0459	001		0131-15	15	0507 0588	004	0420 2317	0131-15	15	0507 0588	001
0419 8832	0130-48	48	0507 0502	003		0131-15	90	0507 0907	710	0420 2326	0131-38	38	0507 0512	004
0419 8834	0130-22	90	0507 0907	540	0420 0814	0131-39	39	0507 0344	001		0131-38	90	0507 0907	680
0419 8849	0130-56	56	0507 0649	001	0420 0917	0131-39	39	0507 0344	002	0420 2332	0131-01	09	0507 0531	004
0419 8868	0131-38	37	0507 0458	006	0420 0959	0131-11	11	0507 0357	001		0131-01	90	0507 0907	320
	0131-38	90	0507 0907	850	0420 0980	0131-11	11	0507 0357	002	0420 2344	0131-41	41	0507 0505	002
0419 9022	8210-24	51	0507 0263	001	0420 0981	0131-11	11	0507 0357	003	0420 2345	0131-39	39	0507 0816	031
0419 9031	8238-49	48	0507 0268	002	0420 1011	0131-01	01	0507 0537	002	0420 2516	0131-39	39	0507 0816	022
0419 9032	8238-49	48	0507 0268	003	0420 1238	0131-08	08	0507 0651	010	0420 2517	0131-01	01	0507 0537	017
0419 9033	8238-49	48	0507 0268	004	0420 1285	0131-15	15	0507 0487	001	0420 2518	0131-01	01	0507 0537	015
0419 9094	0130-48	48	0507 0663	006	0420 1286	8929-14	15	0507 0487	002	0420 2685	0131-39	39	0507 0816	010
0419 9132	0130-48	48	0507 0662	001		8929-14	90	0507 0907	720	0420 2695	0131-22	22	0507 0867	002
0419 9135	0130-48	40	0507 0858	007	0420 1463	8929-27	38	0507 0511	004	0420 2814	0131-39	51	0507 0264	002
19 9175	0131-48	48	0507 0663	007		8929-27	90	0507 0907	830	0420 2849	0131-01	01	0507 0052	004
20 0021	0131-01	01	0507 0537	010	0420 1466	0131-38	38	0507 0512	001	0420 2875	0131-39	39	0507 0790	001
20 0022	0131-01	01	0507 0537	011	0420 1559	0131-08	08	0507 0358	002	0420 2898	0131-27	27	0507 0525	001
0420 0024	0131-06	06	0507 0354	002	0420 1560	0131-08	08	0507 0356	003	0420 3060	0131-48	48	0507 0149	002
0420 0078	0131-01	01	0507 0537	003	0420 1561	0131-08	08	0507 0356	004	0420 3226	0131-09	09	0507 0531	001
0420 0095	0131-22	22	0507 0867	008	0420 1579	0131-37	37	0507 0127	001	0420 3304	0131-22	22	0507 0495	003
	0131-22	90	0507 0907	500	0420 1620	0131-05	05	0507 0490	001		0131-22	22	0507 0867	005

TEILEVERWENDUNG
ALLOCATION O F PARTS NO.
AFFECTATION DES NO. DE PIECES
ASIGNACIÓN DE NUMEROS DE PIEZAS

TEILE-NR.	TO-NUM.	BAU-GR	ETL-BLAETTER	BILD POS.	TEILE-NR.	TO-NUM.	BAU-GR	ETL-BLAETTER	BILD POS.	TEILE-NR.	TO-NUM.	BAU-GR	ETL-BLAETTER	BILD POS.
0081 0311	8923-08	39	0507 0344	005	0111 2326	8920-07	63	0507 0306	002	0111 8700	8929-05	21	0507 0348	005
0100 8383	8518-02	02	0507 0847	101	0111 2336	8920-07	17	0507 0676	002		8929-05	90	0507 0907	140
0100 8874	8518-21	39	0507 0816	157	0111 2350	8920-07	27	0507 0038	002	0111 8718	8929-05	02	0507 0847	003
0100 9893	8518-21	01	0507 0364	185	0111 2407	8920-07	83	0507 0066	006		8929-05	90	0507 0907	150
	8518-21	09	0507 0531	187	0111 2412	8920-07	08	0507 0164	002	0111 8726	8929-05	39	0507 0816	023
	8518-21	15	0507 0484	187	0111 2687	8920-07	47	0507 0142	003		8929-05	90	0507 0907	170
	8518-21	15	0507 0486	187	0111 2813	8921-02	48	0507 0502	002	0111 8759	8929-05	75	0507 0100	002
	8518-21	15	0507 0487	187	0111 2824	8921-02	35	0507 0461	005		8929-05	90	0507 0907	180
	8518-21	15	0507 0588	187		8921-02	44	0507 0509	002	0111 8763	8929-05	15	0507 0487	003
	8518-21	27	0507 0525	187	0111 2856	8921-02	40	0507 0858	005		8929-05	90	0507 0907	200
	8518-21	83	0507 0066	187	0111 2858	8921-02	46	0507 0465	001	0111 9237	8931-02	27	0507 0473	002
	8518-21	83	0507 0067	187		8921-02	47	0507 0142	001		8931-02	39	0507 0463	002
0101 1442	8518-21	08	0507 0651	185	0111 2895	8921-02	21	0507 0348	006		8931-02	39	0507 0816	008
0101 1464	8518-21	01	0507 0027	185	0111 5451	8924-59	27	0507 0525	005	0111 9248	8931-02	21	0507 0348	002
	8518-21	01	0507 0537	185	0111 7869	8922-13	41	0500 6894	002		8931-02	43	0507 0505	002
	8518-21	43	0507 0058	185	0111 8642	8929-05	90	0507 0907	020	0112 2399	8920-01	48	0507 0502	004
	8518-21	56	0507 0143	185	0111 8647	8929-05	90	0507 0907	030	0112 2462	8920-07	09	0507 0531	005
0101 1490	8536-01	90	0507 0283	001	0111 8658	8929-05	39	0507 0816	008	0112 4445	8928-01	15	0507 0488	003
0101 6024	8518-21	09	0507 0531	234		8929-05	90	0507 0907	050	0112 5801	8921-02	39	0507 0816	021
0110 0371	8928-01	08	0507 0651	016	0111 8659	8929-05	08	0507 0651	015	0112 6209	8920-73	39	0507 0461	004
0110 0450	8920-07	41	0500 2097	003		8929-05	15	0507 0488	004	0112 6874	8920-01	39	0507 0344	004
0110 0940	8928-01	01	0507 0537	014		8929-05	27	0507 0473	003	0112 8278	8934-61	22	0507 0498	003
	8928-01	08	0507 0651	003		8929-05	83	0507 0067	002	0113 1115	8921-16	44	0506 4817	002
	8928-01	43	0507 0056	001		8929-05	90	0507 0907	050	0113 2554	8920-07	37	0507 0127	002
	8928-01	83	0507 0062	002	0111 8664	8929-05	90	0507 0907	070	0113 3531	8928-01	02	0507 0847	002
0110 1543	8920-01	46	0507 0465	003	0111 8668	8929-05	38	0507 0462	002	0113 3632	8928-01	22	0507 0047	001
0110 3952	8922-05	44	0506 4817	003		8929-05	39	0507 0463	003		8928-01	22	0507 0567	007
0110 3999	8920-07	63	0507 0222	001		8929-05	90	0507 0907	080	0113 3680	8920-35	27	0507 0543	001
0110 7095	8923-01	22	0507 0788	005	0111 8669	8929-05	90	0507 0907	090	0113 3726	8923-08	39	0507 0816	018
0110 7111	8923-01	40	0507 0858	006	0111 8673	8929-05	90	0507 0907	100	0113 3876	8924-59	06	0507 0354	004
0110 7117	8923-01	09	0507 0531	006	0111 8688	8929-05	01	0507 0537	005	0113 6333	8944-50	05	0507 1002	002
	8923-01	46	0507 0465	006		8929-05	08	0507 0651	004	0113 6454	8921-32	41	0500 2097	005
	8923-01	47	0507 0142	005		8929-05	09	0507 0531	008	0113 7057	8921-02	40	0507 1901	004
0110 7283	8922-05	20	0507 0499	004		8929-05	15	0507 0488	002	0113 7064	8931-02	38	0507 0514	005
0110 7550	8923-08	83	0507 0066	001		8929-05	21	0507 0348	003	0113 7389	8920-07	44	0507 0509	004
0110 7731	8922-73	11	0507 0357	006		8929-05	22	0507 0047	002	0113 7743	8928-27	01	0507 0537	004
0110 7830	8922-74	39	0507 0816	006		8929-05	22	0507 0867	008	0113 8374	8923-08	20	0507 0124	002
0110 7844	8922-74	39	0507 0816	030		8929-05	43	0507 0056	002		8923-08	36	0507 0918	007
0111 0442	8928-01	73	0507 0100	001		8929-05	43	0507 0506	003		8923-08	38	0507 0512	005
0111 0577	8920-35	20	0507 0499	003		8929-05	83	0507 0066	003		8923-08	40	0507 1901	006
0111 1186	8920-01	17	0507 0357	009		8929-05	90	0507 0907	110	0113 9373	8239-55	48	0507 0321	002
0111 1395	8920-01	44	0507 0509	008	0111 8693	8929-05	21	0507 0363	006	0113 9579	8920-01	05	0507 0249	002
0111 2232	8920-07	52	0507 0175	002		8929-05	90	0507 0907	120	0114 3362	8920-08	01	0507 0361	004
0111 2240	8920-07	92	0507 0482	005	0111 8699	8929-05	38	0507 0514	002		8920-08	02	0507 0847	006
0111 2326	8920-07	22	0507 0495	002		8929-05	90	0507 0907	130		8920-08	09	0507 0531	002

TEILEVERWENDUNG
ALLOCATION O F PARTS NO.
AFFECTATION DES NO. DE PIECES
ASIGNACIÓN DE NUMEROS DE PIEZAS

TEILE-NR.	TO-NUM.	BAU-GR	ETL-BLAETTER	BILD POS.	TEILE-NR.	TO-NUM.	BAU-GR	ETL-BLAETTER	BILD POS.	TEILE-NR.	TO-NUM.	BAU-GR	ETL-BLAETTER	BILD POS.
0114 3362	8920-08	36	0507 0918	005	0116 6995	8928-38	15	0507 0486	001	0117 9292	8920-08	22	0507 0788	004
	8920-08	37	0507 0458	004		8928-38	15	0507 0487	004	0117 9293	8920-08	08	0507 0857	004
	8920-08	38	0507 0512	007	0117 1584	8929-27	01	0507 0052	002		8920-08	22	0507 0867	004
0114 3363	8920-08	15	0507 0484	003		8929-27	90	0507 0907	220	0117 9295	8920-08	15	0507 0509	001
	8920-08	15	0507 0588	003	0117 3940	8934-61	22	0507 0498	002	0117 9318	8219-70	44	0507 0158	001
	8920-08	39	0507 0461	002	0117 4199	8920-91	48	0507 0149	001	0117 9330	8920-08	56	0507 0260	001
	8920-08	40	0507 1901	003	0117 4311	8929-27	01	0507 0806	002	0117 9370	8246-06	63	0507 0220	001
0114 3365	8920-08	40	0507 1901	008		8929-27	90	0507 0907	350	0117 9409	8920-32	19	0507 0352	002
0114 3369	8920-08	02	0507 0847	004	0117 4421	8941-23	15	0503 2122	001	0117 9410	8920-32	27	0507 0771	001
	8920-08	20	0507 0124	001	0117 4423	8941-17	20	0503 7735	001	0117 9415	8920-32	05	0507 0464	002
	8920-08	27	0507 0525	006	0117 5536	8932-23	27	0507 0473	006	0117 9490	8934-05	21	0507 0363	011
	8920-08	36	0507 0918	006		8932-23	39	0507 0463	004	0117 9559	8929-27	58	0507 0849	002
	8920-08	38	0507 0512	006	0117 6435	8250-28	48	0507 0663	002		8929-27	90	0507 0907	450
	8920-08	40	0507 1901	002		8250-28	51	0507 0284	004	0117 9567	8920-08	16	0507 0846	002
	8920-08	43	0507 0506	004	0117 7145	8221-11	44	0506 4886	012		8920-08	22	0507 0496	002
	8920-08	51	0507 0264	003	0117 7491	8875-02	39	0507 0308	003		8920-08	40	0507 1901	007
	8920-08	56	0507 0260	002	0117 8021	8929-27	83	0507 0066	005		8920-08	44	0507 0509	005
0114 3382	8920-08	27	0507 0473	007		8929-27	90	0507 0907	890		8920-08	83	0507 0540	004
	8920-08	40	0507 1901	001	0117 8412	8934-05	21	0507 0363	009	0117 9680	8928-75	08	0507 0857	003
	8920-08	48	0507 0653	003	0117 8607	8211-70	44	0506 4817	001	0117 9684	8928-10	01	0507 0027	001
0114 3383	8920-08	15	0507 0484	005	0117 8888	8934-52	08	0507 0531	007		8928-10	08	0507 0651	002
	8920-08	15	0507 0588	005	0117 8750	8934-61	01	0507 0060	003	0117 9635	8928-10	01	0507 0537	012
	8920-08	44	0507 0509	003		8934-61	01	0507 0052	006	0117 9708	8928-60	43	0507 0058	001
0114 3384	8920-08	38	0507 0513	003	0117 8884	8929-27	83	0507 0306	001	0117 9709	8928-60	56	0507 0143	001
	8920-08	40	0507 0919	002		8929-27	90	0507 0907	740	0117 9712	8246-30	63	0507 0225	001
0114 3481	8931-20	27	0507 0473	004	0117 9023	8929-27	01	0507 0537	020	0117 9730	8944-61	39	0507 0816	029
0114 3503	8928-01	09	0507 0531	009		8929-27	90	0507 0907	310	0117 9736	8238-49	51	0507 0343	001
0114 3505	8920-01	39	0507 0816	020	0117 9116	8944-61	39	0507 0816	028	0117 9737	8238-49	51	0507 0343	003
0114 3941	8920-08	16	0507 0846	005	0117 9162	8920-94	39	0507 0816	012	0117 9740	8238-49	51	0507 0343	002
0115 1019	8923-01	39	0507 0461	006	0117 9193	8920-08	01	0507 0052	003	0117 9792	8937-10	39	0507 0847	001
	8923-01	83	0507 0540	003		8920-08	22	0507 0867	006	0117 9794	8923-41	01	0507 0361	005
0115 1664	8923-01	39	0507 0308	006		8920-08	36	0507 0511	001	0117 9850	8934-05	21	0507 0363	010
	8923-01	39	0507 0816	013	0117 9196	8928-12	01	0507 0537	008	0117 9858	8929-27	37	0507 0458	005
0115 3857	8929-27	08	0507 0651	009	0117 9198	8928-12	39	0507 0816	025		8929-27	90	0507 0907	760
	8929-27	90	0507 0907	300	0117 9199	8928-12	01	0507 0537	005	0117 9871	8920-32	52	0507 0482	002
0115 7771	8929-45	90	0507 0907	350	0117 9207	8928-12	01	0507 0537	007	0117 9873	8920-32	52	0507 0482	003
0116 0962	8929-27	83	0507 0540	002	0117 9211	8920-08	36	0507 0511	002	0117 9874	8920-08	44	0507 0666	001
	8929-27	90	0507 0907	900	0117 9240	8934-52	21	0507 0363	004	0117 9876	8934-05	21	0507 0363	001
0116 3944	8929-28	40	0507 1901	005	0117 9246	8934-05	21	0507 0363	002	0117 9877	8934-05	21	0507 0363	003
0116 4582	8921-32	41	0507 0505	008	0117 9277	8929-27	43	0507 0506	007	0117 9983	8935-35	01	0507 0606	001
0116 5790	8928-38	01	0507 0537	018		8929-27	90	0507 0907	640	0117 9988	8937-10	39	0507 0508	001
0116 5828	8928-60	08	0507 0651	006	0117 9287	8929-27	90	0507 0907	520	0118 0018	8920-08	48	0507 0663	008
0116 5839	8928-60	83	0507 0067	001	0117 9291	8920-08	27	0507 0473	008	0118 0060	8929-27	90	0507 0907	770
0116 5973	8929-27	90	0507 0907	340		8920-08	39	0507 0308	007	0121 0163	8929-27	48	0507 0149	003
0116 6476	8934-61	01	0507 0052	005		8920-08	48	0507 0502	001		8929-27	90	0507 0907	430

TEILEVERWENDUNG
ALLOCATION O F PARTS NO.
AFFECTATION DES NO. DE PIECES
ASIGNACION DE NUMEROS DE PIEZAS

TEILE-NR.	TO-NUM.	BAU-GR	ETL-BLAETTER	BILD POS.	TEILE-NR.	TO-NUM.	BAU-GR	ETL-BLAETTER	BILD POS.	TEILE-NR.	TO-NUM.	BAU-GR	ETL-BLAETTER	BILD POS.
0420 3304	0131-22	90	0507 0907	570	0420 4156	0130-17	17	0507 0676	965	0420 5743	0130-44	44	0507 0666	002
0420 3318	0131-39	39	0507 0816	016	0420 4157	0130-17	17	0507 0676	966	0420 5841	0130-44	44	0507 0666	003
0420 3342	0131-27	27	0507 0473	001	0420 4158	0130-17	17	0507 0676	967	0420 5878	0130-83	83	0507 0540	001
0420 3353	0131-27	27	0507 0473	005	0420 4159	0130-17	17	0507 0676	968	0420 5884	0130-46	46	0507 0465	005
0420 3435	0131-15	15	0507 0850	001	0420 4160	0130-17	17	0507 0676	969	0420 5894	0131-08	08	0507 0857	002
0420 3442	0131-40	40	0507 0474	001	0420 4161	0130-17	17	0507 0676	970		0131-08	90	0507 0907	270
0420 3474	0131-40	40	0507 0476	001	0420 4162	0130-17	17	0507 0676	971	0420 6018	0131-40	40	0507 0476	002
0420 3489	0131-40	40	0507 0475	001	0420 4163	0130-17	17	0507 0676	972	0420 6307	0131-39	39	0507 0308	001
0420 3521	0131-40	40	0507 0923	001	0420 4164	0130-17	17	0507 0676	973	0420 6309	0131-39	39	0507 0308	002
0420 3540	0130-21	21	0507 0348	001	0420 4165	0130-17	17	0507 0676	974	0420 6450	0131-40	40	0507 0781	001
0420 3560	0131-15	15	0507 0485	001	0420 4166	0130-17	17	0507 0676	975	0420 6489	0131-40	40	0507 0858	001
0420 3574	0131-40	40	0507 0922	001	0420 4167	0130-17	17	0507 0676	976	0420 6943	0130-43	43	0507 0820	001
0420 3632	0131-36	36	0507 0918	002	0420 4181	0130-05	05	0507 1001	001	0420 7515	0131-05	05	0507 1002	001
0420 3649	0131-58	22	0507 0788	001	0420 4224	0130-44	44	0507 0509	006	0420 7517	0131-05	05	0507 1000	001
	0131-58	90	0507 0907	560	0420 4237	0131-01	01	0507 0362	001	0434 5707	1405-14	39	0507 0481	007
0420 3699	0131-36	36	0507 0511	003	0420 4434	0131-22	22	0507 0498	001	0436 4426	8203-00	48	0507 0265	001
0420 3713	0131-40	40	0507 0919	004	0420 4450	0131-01	01	0507 0361	003	0438 4130	1101-49	63	0507 0222	002
0420 3736	0131-38	38	0507 0514	001		0131-01	90	0507 0907	330	0510 1999	0199-80	40	0507 0994	001
0420 3930	0131-01	01	0507 0470	001	0420 4459	0131-02	02	0507 0847	005	0820 8701	8928-27	39	0507 0816	024
0420 3945	0131-22	22	0507 0788	003		0131-02	90	0507 0907	420	1201 9935	0112-90	90	0507 0907	440
0420 3976	0131-40	40	0507 0478	001	0420 4590	0131-01	01	0507 0645	001	1216 4698	8370-20	08	0507 0551	005
0420 4014	0131-08	08	0507 0651	012	0420 4628	0130-52	52	0507 0461	001					
0420 4015	0131-08	08	0507 0651	013	0420 4677	0131-47	46	0507 0465	004					
0420 4023	0131-11	11	0507 0357	004	0420 4722	0131-22	22	0507 0495	003					
0420 4095	0131-43	43	0507 0506	005		0131-22	90	0507 0907	560					
0420 4098	0131-43	43	0507 0506	006	0420 4796	0130-38	38	0507 0459	002					
0420 4108	0131-43	43	0507 0506	001	0420 4803	0131-16	16	0507 0846	003					
0420 4123	0131-37	37	0507 0458	001	0420 4870	0131-16	16	0507 0846	001					
0420 4128	0130-05	05	0507 0580	001	0420 4876	0130-37	38	0507 0462	001					
0420 4140	0130-17	17	0507 0676	003	0420 4932	0131-36	36	0507 0918	003					
0420 4141	0130-17	17	0507 0676	950	0420 4993	0131-38	39	0507 0463	001					
0420 4142	0130-17	17	0507 0676	951	0420 5045	0131-40	40	0507 0477	001					
0420 4143	0130-17	17	0507 0676	952	0420 5058	0131-08	08	0507 0857	001					
0420 4144	0130-17	17	0507 0676	953	0420 5124	0131-48	48	0507 0502	006					
0420 4145	0130-17	17	0507 0676	954	0420 5203	0131-22	22	0507 0867	001					
0420 4146	0130-17	17	0507 0676	955	0420 5209	0131-36	36	0507 0918	001					
0420 4147	0130-17	17	0507 0676	956	0420 5214	0131-40	40	0507 0607	001					
0420 4148	0130-17	17	0507 0676	957	0420 5308	0131-07	07	0507 0650	004					
0420 4149	0130-17	17	0507 0676	958	0420 5310	0131-07	07	0507 0650	006					
0420 4150	0130-17	17	0507 0676	959	0420 5357	0131-08	08	0507 0551	001					
0420 4151	0130-17	17	0507 0676	960	0420 5367	0131-10	10	0507 0811	001					
0420 4152	0130-17	17	0507 0676	961	0420 5456	0131-07	07	0507 0550	001					
0420 4153	0130-17	17	0507 0676	962	0420 5506	0131-38	38	0507 0513	001					
0420 4154	0130-17	17	0507 0676	963	0420 5612	0131-01	01	0507 0537	001					
0420 4155	0130-17	17	0507 0676	964	0420 5701	0131-02	02	0507 0847	001					

Workshop Manual
Manual de Taller

1012 / 1013

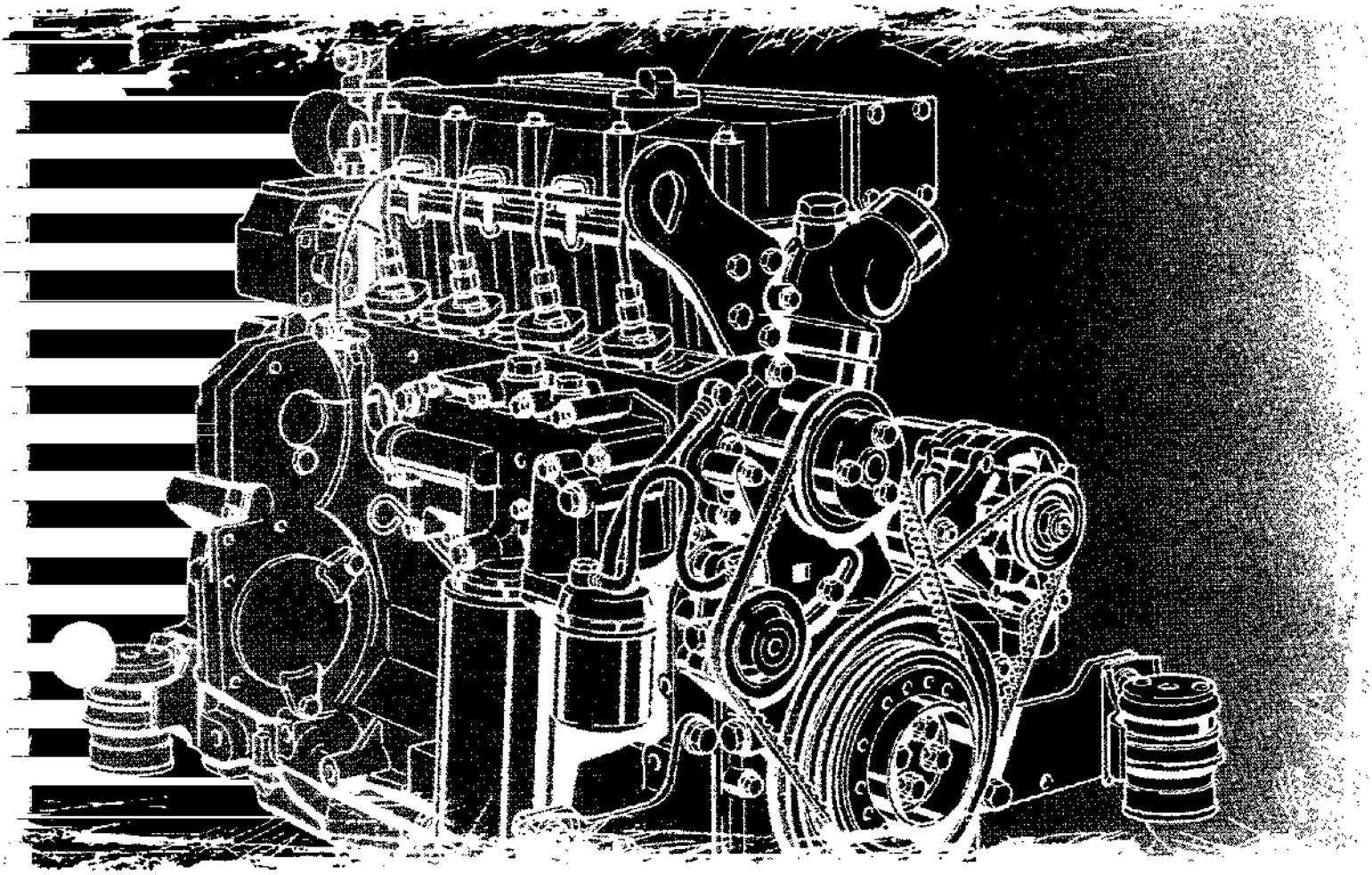

DEUTZ

DEUTZ

Workshop Manual

Manual de Taller

BFM 1012/1013

0297 7438

In view of continuous design improvements or changes, the technical specifications and the illustrations shown in this Workshop Manual are subject to alteration. Reprinting and reproduction, in part or in whole, are subject to our written approval.

Nos reservamos el derecho de introducir modificaciones técnicas necesarias para el mejoramiento de motores, aunque difieran de las ilustraciones y datos contenidos en este Manual de Taller. La reimpresión del presente libro o cualquiera forma de reproducción, aunque sea parcial, requiere nuestra autorización por escrito.

DEUTZ

FOREWORD

Reliable engine operation is dependent on properly executed repairs as well as adjustment work.

This Workshop Manual describes the appropriate operations for any repair and adjustment work on the engine and engine components. It is presumed that this work will be carried out by qualified *personnel*.

This operation manual has been designed for quick and easy understanding. Therefore the concise text passages are accompanied by pictographs to illustrate the relevant operation.

The Workshop Manual has been laid out to ensure quick comprehension of the contents, i. e illustrations have been placed adjacent to the brief text passages to clearly show the working operations.

Aspects of operation and maintenance are dealt with in the respective Operation Manual.

For spare parts orders the respective spare parts catalogue should be referred to.

This Workshop Manual is not subject to engineering change service and is valid until next issue.

Therefore please refer to the information in our Technical Circulars when carrying out repairs.

General information:

- Please read carefully and observe the instructions given in this Workshop Manual to avoid accidents and ensure that your engine always functions properly and reliably.

- Make sure that this Workshop Manual is readily available for all those carrying out repairs or adjustments and that the contents are well understood.

- Non-compliance with these repair instructions may result in malfunction and engine damage as well as personal injuries for which the manufacturer shall not accept any liability.

- The accident prevention regulations and all other generally recognized regulations on safety and occupational medicine are to be observed.

- A prerequisite for successful repair is that all required equipment, hand and special tools are available and in perfect working order.

- Optimal operation economy, reliability and durability of the engine can only be ensured when genuine parts of DEUTZ AG are used.

- Engine components such as springs, clamps, snap rings, etc. may cause injury if not handled with care.

- Engine repairs must be carried out in accordance with intended use as defined by the equipment manufacturer. For conversions, only parts approved by DEUTZ AG for a specific purpose should be used.

PROLOGO

Una ejecución competente de trabajos de reparación y ajuste es requisito fundamental para un funcionamiento seguro del motor.

En el presente manual para talleres han sido descritos los ciclos convenientes de trabajo para reparaciones y ajustes del motor y de sus componentes. Se presupone, no obstante, que los trabajos serán realizados por personal técnico especializado.

Con el fin de simplificar la comprensión del contenido del manual para talleres, se han agregado símbolos significativos a los textos explicatorios, visualizando así el trabajo a realizar.

Para la rápida comprensión del contenido de los textos breves desciptivos se han introducido en el manual de taller símbolos que visualizan la operación a realizar.

Informaciones con respecto al manejo y al servicio de entretenimiento del motor, se encuentran en el Manual de Instrucciones de Servicio correspondiente.

Para pedidos de repuestos servirá de base el respectivo catálogo de repuestos.

El presente manual para talleres no está sujeto a un servicio continuado de modificaciones e innovaciones. Cada nueva edición incluye todas las modificaciones del caso.

Al efectuar reparaciones, aconsejamos asimismo tomar en cuenta las advertencias pertinentes de nuestras circulares técnicas.

Advertencias generales:

- Le recomendamos la detenida lectura y observancia de las informaciones contenidas en este Manual de taller. Así evitará accidentes y dispondrá de un motor que funciona perfectamente.

- Haga lo necesario para que este Manual esté a disposición de toda persona que participe en trabajos de reparación y ajuste, y cuide de que sí comprenda el contenido.

- Al no tenerse en cuenta estas instrucciones de reparación, podrán surgir perturbaciones en el funcionamiento y averías en el motor así como lesiones de personas para las cuales el fabricante no asume responsabilidad alguna.

- Se cumplirán las normas aplicables para la prevención de accidentes así como todas las demás normas de seguridad y medicina laboral generalmente aceptadas.

- Es condición para la correcta reparación que estén disponibles todos los requeridos equipos, herramientas manuales y especiales en perfecto estado.

- Máxima rentabilidad, fiabilidad y larga duración quedan garantizadas únicamente al emplearse repuestos originales de DEUTZ AG.

- Piezas del motor, tales como resortes, garras, aros de sujeción elásticos, etc. , aumentan en caso de tratamiento incorrecto el peligro de lesiones.

- El reacondicionado del motor deberá corresponder al empleo previsto definido por el fabricante del equipo. En caso de transformaciones, se deberán emplear únicamente piezas admitidas por DEUTZ AG para el respectivo uso previsto.

Table of contents
Indice

Specification data / Key to symbols
Datos téchicos / Leyenda de símbolos 1

Checking and adjusting
Verificación y ajustes 2

Repair of components
Reparación de componentes 3

Disassembly and reassembly of complete engine
Despiece y ensamblado conjunto de moto 4

Tools
Herramientas 5

Specification data

Datos técnicos

BFM 1012/1013

Notes for the user of this Workshop Manual
In this Workshop Manual all specification data, adjustment values and tightening specifications are allocated to those parts where they are needed for service work, disassembly and reassembly on the engine.

Indicación para el uso del manual de taller
En este manual de taller se indican todos los datos técnicos, valores de ajuste y prescripciones de apriete en los puntos donde son requeridos para la realización de trabajos de servicio, desmontaje y montaje en el motor.

DEUTZ

Workshop Manual BFM 1012/E, BFM 1013/E

English

1. Specification data

	Page
Specification data	1.00.01 - 1.00.07
Schematic for valve clearance adjustment	1.00.09
Tightening order for cylinder head bolts	1.00.11
Shim thickness for determining commencement of delivery with Bosch injection pump	1.00.13
Shim thickness for determining commencement of delivery with Bosch injection pump replacement on BFM 1012 in case of service.Standard dimensions Lo = 109 mm	1.00.15
Shim thickness for determining commencement of delivery with Bosch injection pump replacement on BFM 1012 in case of service.Standard dimensions Lo = 119 mm	1.00.15.1
Shim thickness for determining commencement of delivery with Bosch injection pump replacement on BFM 1013 in case of service. Standard dimensions Lo = 143 mm	1.00.17
Determining corrected installation dimension and EP code with Bosch injection pump	1.00.19
Key to symbols	1.00.21

Español

1. Datos técnicos

	Página
Datos técnicos	1.00.01 - 1.00.07
Esquema para el ajuste del juego de válvulas	1.00.09
Sucesión de los trabajos al apretar los tornillos de culata	1.00.11
Determinación del espesor de la arandela de reglaje para el comienzo de alimentación en bombas de inyección Bosch	1.00.13
Determinación del espesor de la arandela de reglaje para el comienzo de alimentación al cambiar bombas de inyección Bosch, en el caso de servicio- BFM 1012. Medida básica Lo = 109 mm	1.00.15
Determinación del espesor de la arandela de reglaje para el comienzo de alimentación al cambiar bombas de inyección Bosch, en el caso de servicio- BFM 1012. Medida básica Lo = 119 mm	1.00.15.1
Determinación del espesor de la arandela de reglaje para el comienzo de alimentación al cambiar bombas de inyección Bosch, en el caso de servicio- BFM 1013. Medida básica Lo = 143 mm	1.00.17
Determinación de la medida de montaje corregida y del código EP para bombas de inyección Bosch	1.00.19
Leyenda de símbolos	1.00.21

Workshop Manual BFM 1012/E, BFM 1013/E

English	Español
Engine weight acc. to DIN 70020 - A approx. kg	Peso del motor según DIN 70020 -A aprox. kg
Engine swept volume cm^3	Cilindrada total cm^3
Bore mm	Calibre mm
Stroke mm	Carrera mm
Direction of rotation	Sentido de giro
Rated speed max. rpm	Régimen nominal máx. r/min
Minimum idle speed rpm	Régimen mín. en vacío r/min
Working cycle	Sistema de trabajo

BF4M 1012 BF4M 1013	BF4M 1012 E BF4M 1013 E	BF6M 1012 BF6M 1013	BF6M 1012 E BF6M 1013 E
incl. cooling system *incl. sistema de refrige.*	without cooling system *sin sistema de refrige.*	incl. cooling system *incl. sistema de refrige.*	without cooling system *sin sistema de refrige.*
380 BFM 1012 480 BFM 1013	330 BFM 1012 E 430 BFM 1013 E	490 BFM 1012 625 BFM 1013	435 BFM 1012 E 570 BFM 1013 E
3192 BFM 1012/ E 4764 BFM 1013/ E		4788 BFM 1012/ E 7146 BFM 1013/ E	
94 BFM 1012/ E 108 BFM 1013/ E			
115 BFM 1012/ E 130 BFM 1013/ E			
When facing flywheel counter-clockwise *Mirándose sobre el volante,a la izquierda*			
2500 BFM 1012/ E 2300 BFM 1013/ E			
650			
Four-stroke diesel Diesel a 4 tiempos			

Workshop Manual BFM 1012/E, BFM 1013/E

English	Español
Combustion system	Sistema de combustión
Compression ratio	Relación de compresión
Compression pressure bar	Pressión de compresión bar
Fiing order	Orden de encendido
Dimensions of engine incl. standard adapter housing	Dimensiones del motor con caja de adaptación (normal)
Max. length mm	Longitud max. mm
Max. width mm	Anchura máx. mm
Max. height mm	Altura máx. mm

Workshop Manual BFM 1012/E, BFM 1013/E

BF4M 1012 BF4M 1013	BF4M 1012 E BF4M 1013 E	BF6M 1012 BF6M 1013	BF6M 1012 E BF6M 1013 E
Direct injection Inyectión directa			
17,5 BFM 1012/ E 17,6 BFM 1013/ E			
28 - 33 BFM 1012/ E 30 - 38 BFM 1013/ E			
1 - 3 - 4 - 2		1 - 5 - 3 - 6 - 2 - 4	
874 BFM 1012 945 BFM 1013	775 BFM 1012 E 862 BFM 1013 E	1120 BFM 1012 1239 BFM 1013	1003 BFM 1012 E 1146 BFM 1013 E
678 BFM 1012 685 BFM 1013	540 BFM 1012 E 616 BFM 1013 E	678 BFM 1012 760 BFM 1013	540 BFM 1012 E 622 BFM 1013 E
743 BFM 1012 818 BFM 1013	742 BFM 1012 E 844 BFM 1013 E	834 BFM 1012 868 BFM 1013	827 BFM 1012 E 852 BFM 1013 E

Workshop Manual BFM 1012/E, BFM 1013/E

[illegible]	[illegible]
Valve timing without valve clearance adjusted	Cotas de reglaje sin juegos de válvulas y de empujadores
Inlet opens before TDC degrees	Admisión abre a.PMS grados
Inlet closes after BDC degrees	Admisión cierra t.PMI grados
Exhaust opens before BDC degrees	Escape abre a.PMI grados
Exhaust closes after TDC degrees	Escape cierra t.PMS grados
Pressurestat bar	Válvula reguladora final bar
Lube oil pressure at low idling Temperature approx. 120° C oil SAE 15W/40 min. bar	Presión de aceite a marcha lenta en vacío Temperatura aprox. 120° C aceite SAE 15W/40 mín. bar

46 BFM 1012/ E 46,5 BFM 1013/ E			
56 BFM 1012/ E 55,5 BFM 1013/ E			
96 BFM 1012/ E 100,5 BFM 1013/ E			
50 BFM 1012/ E 51,5 BFM 1013/ E			
6 ± 0,75		10 ± 1	
0,8			

Schematic for valve clearance adjustment
Esquema para el adjuste de holgura de válvulas

Workshop Manual BFM 1012/E, BFM 1013/E

Crankshaft position **1**

Posición del cigüeñal

Turn engine until valves of cylinder No. 1 overlap.

Gírese el motor, hasta que las válvulas del cilindro N° 1 coincidan en su posición momentánea.

Crankshaft position **2**

Posición del cigüeñal

Continuese girando el motor por una rotación completa (360°)

Turn engine further by one complete revolution (360°).

Not ready for adjustment.

no ajustable

Ready for adjustment.

ajustable

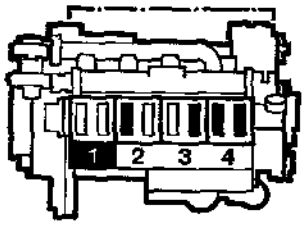

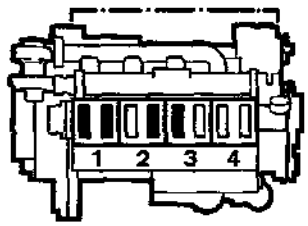

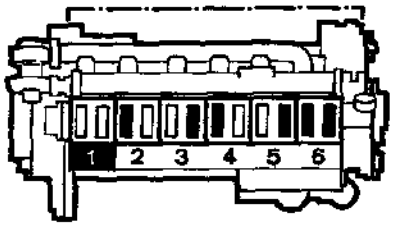

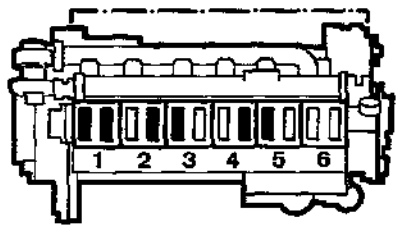

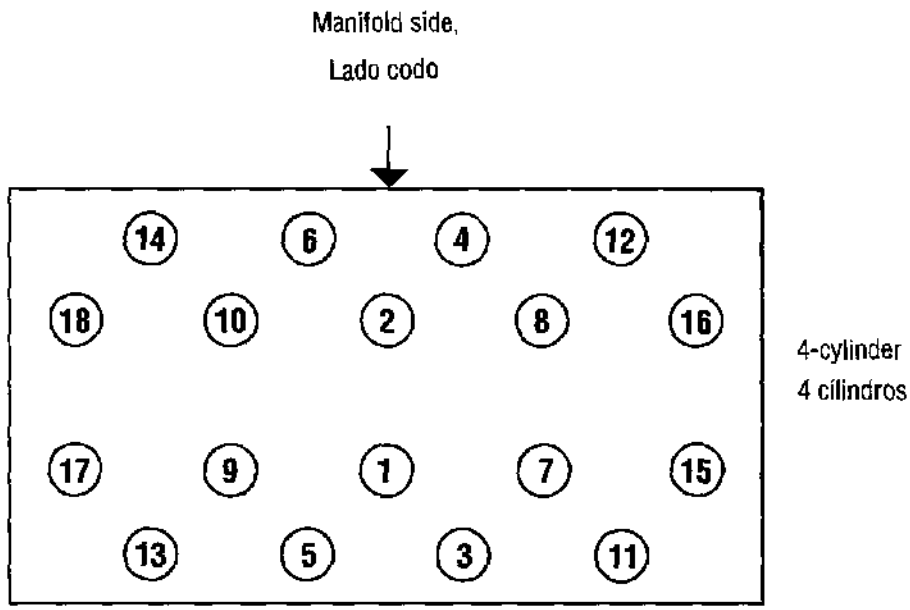
Manifold side,
Lado codo
14
6
4
12
18
10
2
8
16
17
9
1
7
15
13
5
3
11
4-cylinder
4 cilindros

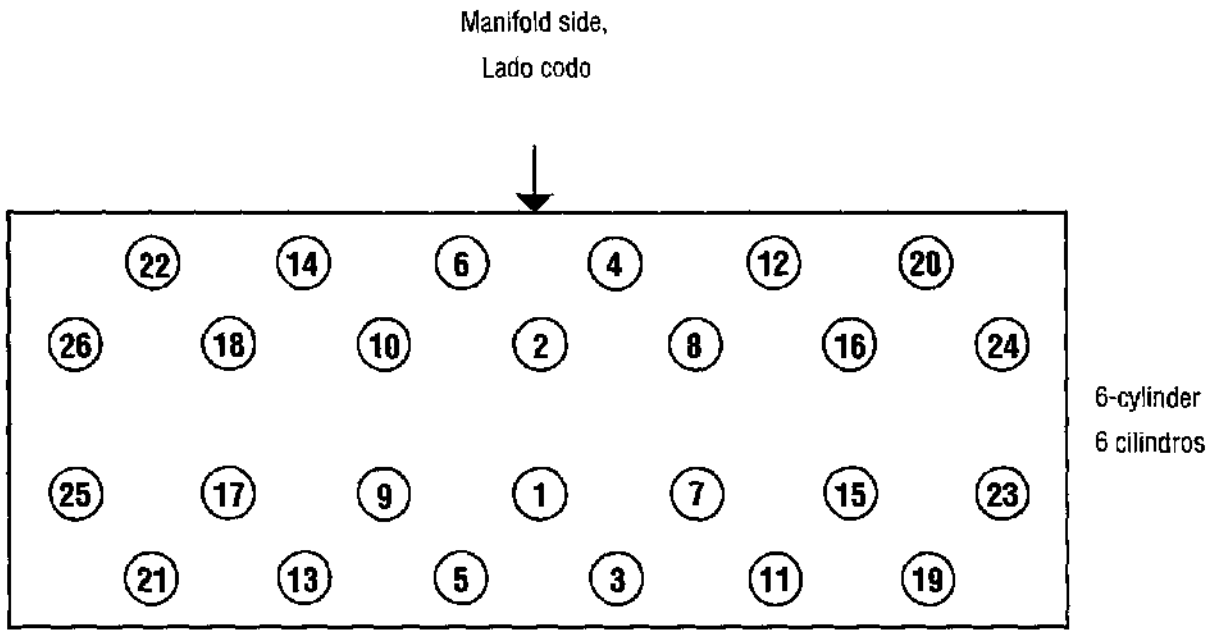
Manifold side,
Lado codo
22
14
6
4
12
20
26
18
10
2
8
16
24
25
17
9
1
7
15
23
21
13
5
3
11
19
6-cylinder
6 cilindros

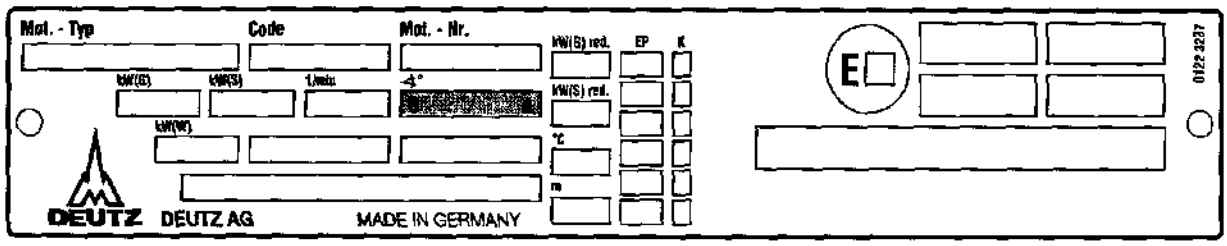

Note:

As of July 1996, camshaft type A, B or C will also be indicated in the inscription field for the commencement of delivery. It is absolutely necessary to consider this when determining the standard dimension of the injection pumps, see table 1.

Nota:

A partir de julio de 1996 figura en el recuadro para el comienzo de alimentación de la placa de fabricante también el tipo de árbol de levas A, B o C, lo que es imprescindible tener en cuenta para el ajuste básico de las bombas de inyección, ver la tabla 1.

Determining shim thickness for commencement of delivery.
Bosch injection pump

Table 1

Engine type	Commencement of delivery (FB) (° C/A BTDC)	Camshaft type	Pre-stroke (Vh) Nom. value (mm)	Pre-stroke correction factor (mm/° C/A)	Standard dimensions inj. pump (Lo) (mm)
BFM 1012	6	C	5,16	0,1	109 / 119
BFM 1012	7	C	4,98	0,1	109 / 119
BFM 1012	8	C	4,80	0,1	109 / 119
BFM 1012/ C	9	C	4,63	0,1	109 / 119
BFM 1012/ C	10	C	4,47	0,1	109 / 119
BFM 1012/ C	11	C	4,30	0,1	109 / 119
BFM 1012	12	C	4,14	0,1	109 / 119
BFM 1012	13	C	4,00	0,1	109 / 119
BFM 1013	5	A	6,32	0,1	143
BFM 1013	6	A	6,11	0,1	143
BFM 1013	7	A	5,90	0,1	143
BFM 1013	8	A	5,70	0,1	143
BFM 1013/ C	9	A	5,50	0,1	143
BFM 1013	10	A	5,31	0,1	143
BFM 1013	4	B	5,70	0,1	143
BFM 1013	4,5	B	5,60	0,1	143
BFM 1013	5	B	5,50	0,1	143
BFM 1013	5,5	B	5,40	0,1	143
BFM 1013	6	B	5,31	0,1	143
BFM 1013	7	B	5,10	0,1	143

Table 2

Theor. thickness "T_s" (mm)	Shim-thickness "S_s" (mm)	Theor. thickness "T_s" (mm)	Shim-thickness "S_s" (mm)
0,95 - 1,049	1,0	2,45 - 2,549	2,5
1,05 - 1,149	1,1	2,55 - 2,649	2,6
1,15 - 1,249	1,2	2,65 - 2,749	2,7
1,25 - 1,349	1,3	2,75 - 2,849	2,8
1,35 - 1,449	1,4	2,85 - 2,949	2,9
1,45 - 1,549	1,5	2,95 - 3,049	3,0
1,55 - 1,649	1,6	3,05 - 3,149	3,1
1,65 - 1,749	1,7	3,15 - 3,249	3,2
1,75 - 1,849	1,8	3,25 - 3,349	3,3
1,85 - 1,949	1,9	3,35 - 3,449	3,4
1,95 - 2,049	2,0	3,45 - 3,549	3,5
2,05 - 2,149	2,1	3,55 - 3,649	3,6
2,15 - 2,249	2,2	3,65 - 3,749	3,7
2,25 - 2,349	2,3		
2,35 - 2,449	2,4		

Calculation example:

		BFM 1012				BFM 1013			
Cylinder No.		0	0	1	2	0	1	2	3
Injection pump No.		xxx	xxx			xxx			
FB measured	°C/A	8	8			10			
FB nom. from table 1	°C/A	9	9			10			
Vh corr. factor from table 1	mm/°C/A	0.1	0.1			0.1			
Vh nom. from table 1	mm	4.63	4.63			5.31			
L0 nom. from table 1	mm	**109**	**119**			**143**			
A/100 of inj. pump	mm	0.53	0.22			1.33			
L measured	mm	116.26	126.57			152.22			
E1 = FB act. - FB nom	°C/A	-1	-1			0			
E2 = E1 x Vh corr. factor	mm	-0.1	-0.1			0			
E3 = E2 + Vh nom.	mm	4.53	4.53			5.31			
E4 = E3 + L 0	mm	113.53	123.53			148.31			
E5 = E4 + A/100	mm	114.06	123.75			149.64			
Ts = L - E5	mm	2.20	2.82			2.58			
"Ss" from table 2	mm	**2.2**	**2.8**			**2.6**			

Determinación del espesor de la arandela de reglaje para el comienzo de alimentación. Bombas de inyección Bosch

Tabla 1

Tipo de motor	Comienzo de alimentación (FB) V. nom./tol. (°cigüeñal a PMS)	Árbol de levas tipo	Carrera previa (Vh) corrección Valor nom. (mm)	Carrera previa Factor de inyecc.- (mm/°cigüeñal)	Medida básica Bomba (Lo) (mm)
BFM 1012	6	C	5,16	0,1	109 / 119
BFM 1012	7	C	4,98	0,1	109 / 119
BFM 1012	8	C	4,80	0,1	109 / 119
BFM 1012/ C	9	C	4,63	0,1	109 / 119
BFM 1012/ C	10	C	4,47	0,1	109 / 119
BFM 1012/ C	11	C	4,30	0,1	109 / 119
BFM 1012	12	C	4,14	0,1	109 / 119
BFM 1012	13	C	4,00	0,1	109 / 119
BFM 1013	5	A	6,32	0,1	143
BFM 1013	6	A	6,11	0,1	143
BFM 1013	7	A	5,90	0,1	143
BFM 1013	8	A	5,70	0,1	143
BFM 1013/ C	9	A	5,50	0,1	143
BFM 1013	10	A	5,31	0,1	143
BFM 1013	4	B	5,70	0,1	143
BFM 1013	4,5	B	5,60	0,1	143
BFM 1013	5	B	5,50	0,1	143
BFM 1013	5,5	B	5,40	0,1	143
BFM 1013	6	B	5,31	0,1	143
BFM 1013	7	B	5,10	0,1	143

Tabla 2

Espesor teór. "T_s" (mm)	Espesor de arandela de reglaje "S_s" (mm)	Espesor teór. "T_s" (mm)	Espesor de arandela de reglaje "S_s" (mm)
0,95 - 1,049	1,0	2,45 - 2,549	2,5
1,05 - 1,149	1,1	2,55 - 2,649	2,6
1,15 - 1,249	1,2	2,65 - 2,749	2,7
1,25 - 1,349	1,3	2,75 - 2,849	2,8
1,35 - 1,449	1,4	2,85 - 2,949	2,9
1,45 - 1,549	1,5	2,95 - 3,049	3,0
1,55 - 1,649	1,6	3,05 - 3,149	3,1
1,65 - 1,749	1,7	3,15 - 3,249	3,2
1,75 - 1,849	1,8	3,25 - 3,349	3,3
1,85 - 1,949	1,9	3,35 - 3,449	3,4
1,95 - 2,049	2,0	3,45 - 3,549	3,5
2,05 - 2,149	2,1	3,55 - 3,649	3,6
2,15 - 2,249	2,2	3,65 - 3,749	3,7
2,25 - 2,349	2,3		
2,35 - 2,449	2,4		

Ejemplo de cálculo:

		BFM 1012				BFM 1013			
Cilindro No.		0	0	1	2	0	1	2	3
Bomba de inyección No.		xxx	xxx			xxx			
FB real medido	°cig.	8	8			10			
FB nom. de la tabla 1	°cig.	9	9			10			
Vh factor corr. de la tabla 1	mm/°cig.	0,1	0,1			0,1			
Vh nom. de la tabla 1	mm	4,63	4,63			5,31			
L0 de la tabla 1	mm	**109**	**119**			**143**			
A/100 de la bomba inyectora	mm	0,53	0,22			1,33			
L medido	mm	116,26	126,57			152,22			
E1 = FB real - FB nom.	°Kw	-1	-1			0			
E2 = E1 x Vh factor corr.	mm	-0,1	-0,1			0			
E3 = E2 + Vh nom.	mm	4,53	4,53			5,31			
E4 = E3 + L 0	mm	113,53	123,53			148,31			
E5 = E4 + A/100	mm	114,06	123,75			149,64			
Ts = L - E5	mm	2,20	2,82			2,58			
"Ss" de la tabla 2	mm	**2,2**	**2,8**			**2,6**			

Determining shim thickness for Bosch injection pump replacement on BFM 1012 in case of service. Standard dimensions Lo = 109 mm

The old injection pump with shim is not required for such purpose.

Example: The injection pump of cylinder 3 is to be replaced on a BFM 1012 engine.

Procedure:

Read off EP code for cylinder 3 from nameplate under column „EP", e.g. 070.
(Reading sequence: line 1=cyl.1, line 2 = cyl.2, etc.

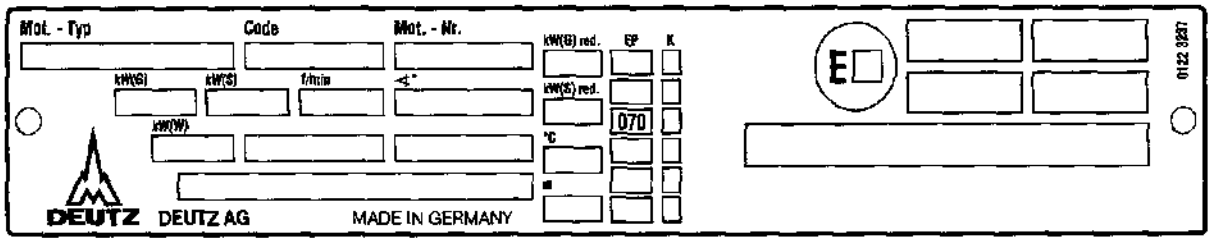

Take corrected injection pump installation dimension (E_K) from table 3 according to EP code, e.g. 111.725 mm.

Tabelle 3

E_K (mm)	EP code	E_K (mm)	EP code	E_K (mm)	EP code	E_K (mm)	EP code	E_K (mm)	EP code
110.0		110.6		111.2	049	111.8	073	112.4	097
110.025		110.625		111.225	050	111.825	074	112.425	098
110.05		110.65		111.25	051	111.85	075	112.45	099
110.075		110.675		111.275	052	111.875	076	112.475	100
110.1		110.7		111.3	053	111.9	077	112.5	101
110.125		110.725		111.325	054	111.925	078	112.525	102
110.15		110.75	031	111.35	055	111.95	079	112.55	103
110.175		110.775	032	111.375	056	111.975	080	112.575	104
110.2		110.8	033	111.4	057	112.0	081	112.6	105
110.225		110.825	034	111.425	058	112.025	082	112.625	106
110.25		110.85	035	111.45	059	112.05	083	112.65	
110.275		110.875	036	111.475	060	112.075	084	112.675	
110.3		110.9	037	111.5	061	112.1	085	112.7	
110.325		110.925	038	111.525	062	112.125	086	112.725	
110.35		110.95	039	111.55	063	112.15	087	112.75	
110.375		110.975	040	111.575	064	112.175	088	112.775	
110.4		111.0	041	111.6	065	112.2	089	112.8	
110.425		111.025	042	111.625	066	112.225	090	112.825	
110.45		111.05	043	111.65	067	112.25	091	112.85	
110.475		111.075	044	111.675	068	112.275	092	112.875	
110.5		111.1	045	111.7	069	112.3	093	112.9	
110.525		111.125	046	111.725	070	112.325	094	112.925	
110.55		111.15	047	111.75	071	112.35	095	112.95	
110.575		111.175	048	111.775	072	112.375	096	112.975	

Take code for injection pump length (A) from new injection pump, e.g. 53.

Take standard dimension of injection pump (L_0) from table 1, e.g. 109 mm.

Determine theoretical shim thickness (T_s).

$T_s = E_K - (L_0 + A/100)$

T_s = 111.725 mm - (109 mm + 53/100 mm)

T_s = 2.195 mm

Select shim thickness (S_s) according to table 2.

T_s 2.195 mm = **S_s 2.2 mm**

Determinación del espesor de la arandela de reglaje para el comienzo de alimentación al cambiar bombas de inyección Bosch, en el caso de servicio - BFM 1012. Medida básica Lo = 109 mm

Para ello, no se requiere la antigua bomba de inyección ni la antigua arandela de reglaje.

Ejemplo: En un motor BF6M 1012 hay que cambiar la bomba de inyección del cilindro No. 3.

Modo de proceder:

Leer de la placa de fabricante, en la columna EP, el código EP para el cilindro 3, p.ej. 070. (Orden de lectura: línea 1 = cil. 1, línea 2 = cil. 2, etc.)

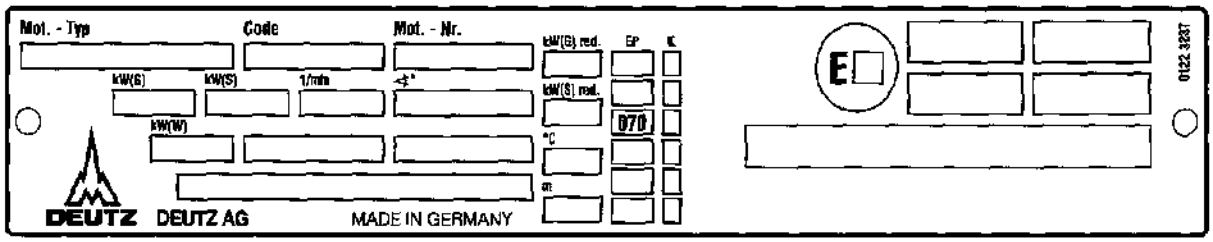

Tomar de la tabla 3 la medida de montaje corregida (E_k) para la bomba de inyección, correspondiente al código EP, p.ej. 111,725 mm.

Tabla 3

E_K (mm)	Código EP	E_K (mm)	Código EP	E_K (mm)	Código EP	E_K (mm)	Código EP	E_K (mm)	Código EP
110,0		110,6		111,2	049	111,8	073	112,4	097
110,025		110,625		111,225	050	111,825	074	112,425	098
110,05		110,65		111,25	051	111,85	075	112,45	099
110,075		110,675		111,275	052	111,875	076	112,475	100
110,1		110,7		111,3	053	111,9	077	112,5	101
110,125		110,725		111,325	054	111,925	078	112,525	102
110,15		110,75	031	111,35	055	111,95	079	112,55	103
110,175		110,775	032	111,375	056	111,975	080	112,575	104
110,2		110,8	033	111,4	057	112,0	081	112,6	105
110,225		110,825	034	111,425	058	112,025	082	112,625	106
110,25		110,85	035	111,45	059	112,05	083	112,65	
110,275		110,875	036	111,475	060	112,075	084	112,675	
110,3		110,9	037	111,5	061	112,1	085	112,7	
110,325		110,925	038	111,525	062	112,125	086	112,725	
110,35		110,95	039	111,55	063	112,15	087	112,75	
110,375		110,975	040	111,575	064	112,175	088	112,775	
110,4		111,0	041	111,6	065	112,2	089	112,8	
110,425		111,025	042	111,625	066	112,225	090	112,825	
110,45		111,05	043	111,65	067	112,25	091	112,85	
110,475		111,075	044	111,675	068	112,275	092	112,875	
110,5		111,1	045	111,7	069	112,3	093	112,9	
110,525		111,125	046	111,725	070	112,325	094	112,925	
110,55		111,15	047	111,75	071	112,35	095	112,95	
110,575		111,175	048	111,775	072	112,375	096	112,975	

Leer de la bomba de inyección nueva el índice de longitud de bomba (A), p.ej. 53.

Tomar de la tabla 1 la medida básica de bomba (Lo), p.ej. 109 mm.

Determinar el espesor teórico (T_s) de la arandela.

$T_s = E_K - (Lo + A/100)$

$T_s = 111{,}725 \text{ mm} - (109 \text{ mm} + 53/100 \text{ mm})$

$T_s = 2{,}195 \text{ mm}$

Elegir el espesor de la arandela de reglaje (S_s) según la tabla 2.

T_s 2,195 mm = **S_s 2,2 mm**

Determining shim thickness for Bosch injection pump replacement on BFM 1012 in case of service. Standard dimensions L0 = 119 mm

ıe old injection pump with shim is not required for such purpose.

Example: The injection pump of cylinder 3 is to be replaced on a BFM 1012 engine.

Procedure:

Read off EP code for cylinder 3 from nameplate under column „EP", e.g. 183.
(Reading sequence: line 1=cyl.1, line 2 = cyl.2, etc.

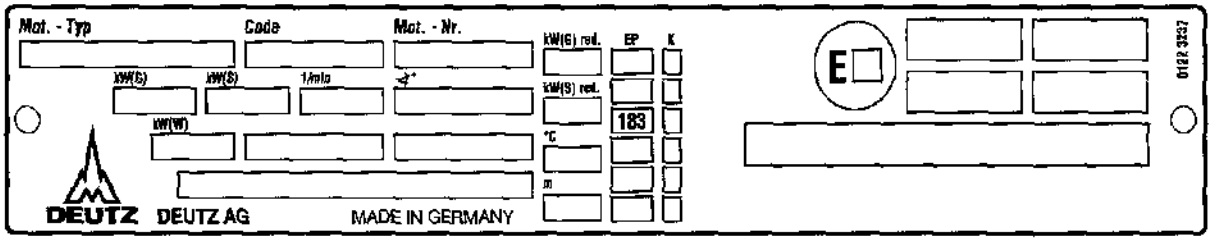

Take corrected injection pump installation dimension (E_K) from table 4 according to EP code, e.g. 122.05 mm.

Tabelle 4

E_K (mm)	EP code	E_K (mm)	EP code	E_K (mm)	EP code	E_K (mm)	EP code	E_K (mm)	EP code
120.0		120.6		121.2	149	121.8	173	122.4	197
120.025		120.625		121.225	150	121.825	174	122.425	198
120.05		120.65		121.25	151	121.85	175	122.45	199
120.075		120.675		121.275	152	121.875	176	122.475	200
120.1		120.7		121.3	153	121.9	177	122.5	201
120.125		120.725		121.325	154	121.925	178	122.525	202
120.15		120.75	131	121.35	155	121.95	179	122.55	203
120.175		120.775	132	121.375	156	121.975	180	122.575	204
120.2		120.8	133	121.4	157	122.0	181	122.6	205
120.225		120.825	134	121.425	158	122.025	182	122.625	206
120.25		120.85	135	121.45	159	122.05	183	122.65	207
120.275		120.875	136	121.475	160	122.075	184	122.675	208
120.3		120.9	137	121.5	161	122.1	185	122.7	209
120.325		120.925	138	121.525	162	122.125	186	122.725	210
120.35		120.95	139	121.55	163	122.15	187	122.75	211
120.375		120.975	140	121.575	164	122.175	188	122.775	212
120.4		121.0	141	121.6	165	122.2	189	122.8	213
120.425		121.025	142	121.625	166	122.225	190	122.825	214
120.45		121.05	143	121.65	167	122.25	191	122.85	215
120.475		121.075	144	121.675	168	122.275	192	122.875	
120.5		121.1	145	121.7	169	122.3	193	122.9	
120.525		121.125	146	121.725	170	122.325	194	122.925	
120.55		121.15	147	121.75	171	122.35	195	122.95	
120.575		121.175	148	121.775	172	122.375	196	112.975	

Take code for injection pump length (A) from new injection pump, e.g. 22.

Take standard dimension of injection pump (L_0) from table 1, e.g. 119 mm.

Determine theoretical shim thickness (T_s).

$T_s = E_K - (L_0 + A/100)$

$T_s = 122.05$ mm - (119 mm + 22/100 mm)

$T_s = 2.83$ mm

Select shim thickness (S_s) according to table 2.

T_s 2.83 mm = **S_s 2.8 mm**

Determining shim thickness for Bosch injection pump replacement on BFM 1013 in case of service. Standard dimensions L0 = 143 mm

The old injection pump with shim is not required for such purpose.

Example: The injection pump of cylinder 3 is to be replaced on a BFM 1013 engine.

Procedure:

Read off EP code for cylinder 3 from nameplate under column „EP", e.g. 397.
(Reading sequence: line 1=cyl.1, line 2 = cyl.2, etc.

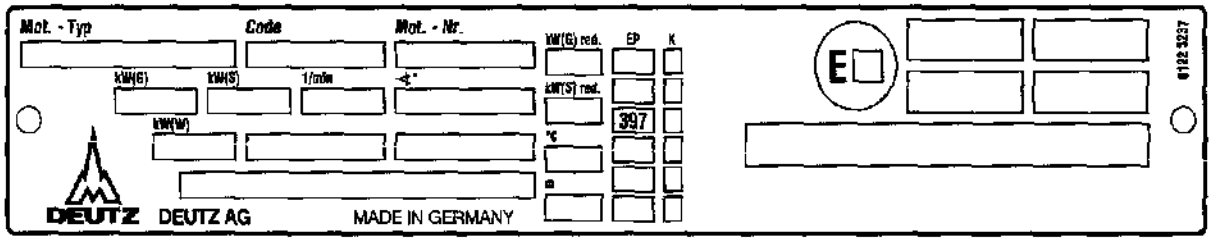

Take corrected injection pump installation dimension (E_K) from table 5 according to EP code, e.g. 146.9 mm.

Table 5

E_K (mm)	EP code	E_K (mm)	EP code	E_K (mm)	EP code	E_K (mm)	EP code	E_K (mm)	EP code
144.5		145.1		145.7	349	146.3	373	146.9	397
144.525		145.125		145.725	350	146.325	374	146.925	398
144.55		145.15		145.75	351	146.35	375	146.95	399
144.575		145.175		145.775	352	146.375	376	146.975	400
144.6		145.2		145.8	353	146.4	377	147.0	401
144.625		145.225		145.825	354	146.425	378	147.025	
144.65		145.25		145.85	355	146.45	379	147.05	
144.675		145.275		145.875	356	146.475	380	147.075	
144.7		145.3		145.9	357	146.5	381	147.1	
144.725		145.325		145.925	358	146.525	382	147.125	
144.75		145.35	335	145.95	359	146.55	383	147.15	
144.775		145.375	336	145.975	360	146.575	384	147.175	
144.8		145.4	337	146.0	361	146.6	385	147.2	
144.825		145.425	338	146.025	362	146.625	386	147.225	
144.85		145.45	339	146.05	363	146.65	387	147.25	
144.875		145.475	340	146.075	364	146.675	388	147.275	
144.9		145.5	341	146.1	365	146.7	389	147.3	
144.925		145.525	342	146.125	366	146.725	390	147.325	
144.95		145.55	343	146.15	367	146.75	391	147.35	
144.975		145.575	344	146.175	368	146.775	392	147.375	
145.0		145.6	345	146.2	369	146.8	393	147.4	
145.025		145.625	346	146.225	370	146.825	394	147.425	
145.05		145.65	347	146.25	371	146.85	395	147.45	
145.075		145.675	348	146.275	372	146.875	396	147.475	

Take code for injection pump length (A) from new injection pump, e.g. 133.

Take standard dimension of injection pump (L_0) from table 1, e.g. 143 mm.

Determine theoretical shim thickness (T_s).

$T_s = E_K - (L_0 + A/100)$

$T_s = 146.9$ mm - (143 mm + 133/100 mm)

$T_s = 2.57$ mm

Select shim thickness (S_s) according to table 2.

T_s 2.57 mm = **S_s 2.6 mm**

Determinación del espesor de la arandela de reglaje para el comienzo de alimentación al cambiar bombas de inyección Bosch. en el caso de servicio BFM 1013. Medida básica L0 = 143 mm

Para ello, no se requiere la antigua bomba de inyección ni la antigua arandela de reglaje.

Ejemplo: En un motor BF6M 1013 hay que cambiar la bomba de inyección del cilindro No. 3.

Modo de proceder:

Leer de la placa de fabricante, en la columna EP, el código EP para el cilindro 3, p.ej. 397. (Orden de lectura: línea 1 = cil. 1, línea 2 = cil. 2, etc.)

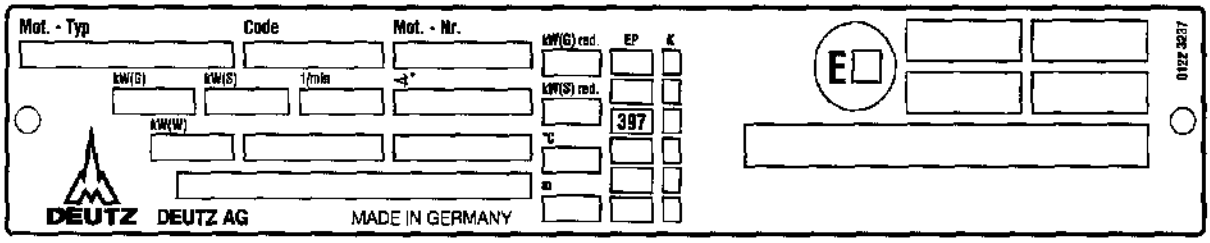

Tomar de la tabla 5 la medida de montaje corregida (E_k) para la bomba de inyección, correspondiente al código EP, p.ej. 146,9 mm.

Tabla 5

E_K (mm)	Código EP	E_K (mm)	Código EP	E_K (mm)	Código EP	E_K (mm)	Código EP	E_K (mm)	Código EP
144,5		145,1		145,7	349	146,3	373	146,9	397
144,525		145,125		145,725	350	146,325	374	146,925	398
144,55		145,15		145,75	351	146,35	375	146,95	399
144,575		145,175		145,775	352	146,375	376	146,975	400
144,6		145,2		145,8	353	146,4	377	147,0	401
144,625		145,225		145,825	354	146,425	378	147,025	
144,65		145,25		145,85	355	146,45	379	147,05	
144,675		145,275		145,875	356	146,475	380	147,075	
144,7		145,3		145,9	357	146,5	381	147,1	
144,725		145,325		145,925	358	146,525	382	147,125	
144,75		145,35	335	145,95	359	146,55	383	147,15	
144,775		145,375	336	145,975	360	146,575	384	147,175	
144,8		145,4	337	146,0	361	146,6	385	147,2	
144,825		145,425	338	146,025	362	146,625	386	147,225	
144,85		145,45	339	146,05	363	146,65	387	147,25	
144,875		145,475	340	146,075	364	146,675	388	147,275	
144,9		145,5	341	146,1	365	146,7	389	147,3	
144,925		145,525	342	146,125	366	146,725	390	147,325	
144,95		145,55	343	146,15	367	146,75	391	147,35	
144,975		145,575	344	146,175	368	146,775	392	147,375	
145,0		145,6	345	146,2	369	146,8	393	147,4	
145,025		145,625	346	146,225	370	146,825	394	147,425	
145,05		145,65	347	146,25	371	146,85	395	147,45	
145,075		145,675	348	146,275	372	146,875	396	147,475	

Leer de la bomba de inyección nueva el índice de longitud de bomba (A), p.ej. 133.

Tomar de la tabla 1 la medida básica de bomba (Lo), p.ej. 143 mm.

Determinar el espesor teórico (T_s) de la arandela.

$T_s = E_k - (Lo + A/100)$

T_s = 146,9 mm - (143 mm + 133/100 mm)

T_s = 2,57 mm

Elegir el espesor de la arandela de reglaje (S_s) según la tabla 2.

T_s 2,57 mm = **S_s 2,6 mm**

Determining corrected installation dimension (E_K) and EP code for Bosch injection pump.

When replacing crankcase, camshaft or roller tappets, the corrected installation dimension (E_K) must be determined once again and the relevant EP code on the nameplate must be changed.
For tables see pages 1.00.13 and 1.00.15 / 1.00.15.1 / 1.00.17

Calculation example:

		BFM 1012				BFM 1013			
Cylinder No.		0	0	1	2	0	1	2	3
Lo nom. from table 1	mm	**109**	**119**			**143**			
FB measured	°C/A	8	8			10			
FB nom. from table	°C/A	9	9			10			
Vh corr.factor from tab.1	mm/°C/A	0.1	0,1			0.1			
Vh nom. from table 1	mm	4.63	4.63			5.31			
L measured	mm	116.26	126.57			152.22			
E1 = FB actual - FB nom	°C/A	-1	-1			0			
E2 = E1 x Vh corr.factor	mm	-0.1	-0. 1			0			
E3 = E2 + Vh nom.	mm	4.53	4.53			5.31			
EK = L - E3	mm	111.73	122.04			146.91			
E_K symm. rounded	mm	111.725	122.05			146.9			
EP code from table 3		**070**							
EP code from table 4			**183**						
EP code from table 5						**397**			

Determinación de la medida de montaje corregida (E_K) y del código EP para bombas de inyección Bosch.

Al cambiar el bloque motor, árbol de levas o empujador de rodillo, hay que determinar de nuevo la medida de montaje corregida (E_K).

Para las tablas, véanse las páginas 1.00.13 y 1.00.15 / 1.00.15.1 / 1.00.17

Ejemplo de cálculo:		**BFM 1012**				**BFM 1013**			
Cilindro No.		0	0	1	2	0	1	2	3
Lo de la tabla 1	mm	**109**	**119**			**143**			
FB real medido	°cig.	8	8			10			
FB nom. de la tabla 1	°cig.	9	9			10			
Vh factor corr. de la tabla 1	mm/°cig.	0,1	0,1			0,1			
Vh nom. de la tabla 1	mm	4,63	4,63			5,31			
L medido	mm	116,26	126,57			152,22			
E1 = FB real - FB nom.	°cig.	-1	-1			0			
E2 = E1 x Vh factor corr.	mm	-0,1	-0,1			0			
E3 = E2 + Vh nom.	mm	4,53	4,53			5,31			
E_K = L - E3	mm	111,73	122,04			146,91			
E_K redondeado simétricamente	mm	111,725	122,05			146,9			
Código EP de la tabla 3		**070**							
Código EP de la tabla 4			**183**						
Código EP de la tabla 5						**397**			

Workshop Manual BFM 1012/E, BFM 1013/E

	Disassembly *of assembly groups*			Guard against personal injury *Indication of hazard*
	Reassemble to form assembly group			Guard against material damage Damage to parts
	Remove obstructing parts			Prop up - Support - Hold
	Reinstall - Remount parts which had obstructed disassembly			Oil
	Attention! Important notice!			Grease
	Check - Adjust e.g. torque, dimensions, pressures, etc.			Mark *before disassembly, observe marks when reassembling*
	Special tool			Balance Eliminate any imbalance
	Note direction of installation			Filling - Topping up - Refilling e. g. oil, cooling water, etc.
	Visual inspection			Drain off e. g. oil cooling water, etc.
	Possibly still serviceable Renew if necessary			Loosen - Release e. g. loosening a clamping device
	Renew at each reassembly			Tighten - Clamp e. g. tightening a clamping device
	Unlock - Lock e. g. splint pin, locking plate, etc.			Vent
	Lock - Adhere e.g. with liquid sealant			Machining process

Key to Symbols
Leyenda de Símbolos

Workshop Manual BFM 1012/E, BFM 1013/E

	Desarmar grupos de construcción			Evitar accidentes indica puntos peligro
	Rearmar un grupo de construcción			Evitar daños materiales avería de piezas
	Desmontar partes que puedan estorbar			Calzar - Apoyar
	Montar - Incorporar partes que puedan estorbar en el desmontaje			Aceitar
	!Atención! Indicación importante			Engrasar
	Verificar - Graduar - Ajustar (p. ej. pares, medidas, presiones)			Marcar antes del desmontaje - controlar la marcación en el remontaje
	Herramienta especial			Equilibar Eliminar desequilibros o excentricidades
	Observar la dirección de montaje			Llenar - Rellenar - Completar p. ej. aceite, agua refrigerante, etc.
	Control - Examen verificatión visual			Evacuar - Vaciar p. ej. aceite, agua refrigerante, etc.
	Re - utilización condicional sustituir en caso necesario			Soltar p. ej. un sistema de fijación o tensado
	Sustituir en cada montaje			Tensar - Apretar p. ej. un sistema de fijación o tensado
	Desafianzar - Afianzar (mecánicamente) (p. ej. pasador de aletas, chapa de seguridad, etc).			Purgar el aire
	Afianzar - Pegar p. ej. con medio liquido			Mecanización con arranque de virutas

Checking and adjusting

Verificación y ajustes

BFM 1012/1013

DEUTZ

English

2. Checking and adjusting

	Page
Valve clearance	2.00.01 - 2.00.02
Compression pressure	2.00.03 - 2.00.04
Injector	2.00.05 - 2.00.07

Español

2. Verificación y ajustes

	Pagina
Juego de válvulas	2.00.01 - 2.00.02
Presión de compresión	2.00.03 - 2.00.04
Inyector	2.00.05 - 2.00.07

English

Special tool required:

Turning gear _____ 100 320
Turning gear _____ 100 330

The standard valve clearance can be *adjusted:*

with engine cold or warm after cooling down for at least **0.5 h.**
Oil temperature ≤ **80°C.**

Note: The valve clearance is to be increased by **0.1 mm** at every *cylinder head gasket renewal.* The standard valve clearance is to be adjusted after completion of **50-150** hours of operation.

Cylinder head cover and crankcase breather have been removed

1. Turn engine until valves of cyl. No. 1 overlap.

See specification data for valve clearance adjustment schematic.

1.1 *If the engine is not freely accessible* at the V-belt pulley, turning gear 100 320 may be used with the hydraulic pump removed.

Note: Valves overlapping means: Exhaust valve about to close. Inlet valve about to open. Neither pushrod can be turned in this position.

Español

Herramienta especial:

Dispositivo de viraje _____ 100 320
Dispositivo de viraje _____ 100 330

El ajuste del juego estándar de válvulas *es posible:*

Con el motor frío o, según el caso, caliente después de transcurrir por lo menos **media hora** para su enfriamiento. Temperatura del aceite: ≤ **80°C.**

Nota: Cada vez que se cambia la junta de la culata, debe aumentarse el *juego por* **0,1 mm.**
Tras **50-150** horas de servicio se ajustará el juego estándar.

La tapa de culatas y la ventilación del cárter del cigüeñal están *desmontadas.*

1. Girar el cigüeñal hasta que se crucen las válvulas en el cilindro 1.

Para el esquema de ajuste del juego de válvulas, véanse los Datos Técnicos.

1.1 *Si el motor no ofrece un libre* acceso a la polea acanalada, es posible utilizar el dispositivo de viraje 100 320, una vez desmontada la bomba hidráulica.

Nota: Cruce de válvulas significa: La válvula de escape aún no está cerrada y la de admisión comienza a abrirse. En este momento, no es posible girar las dos varillas de empuje.

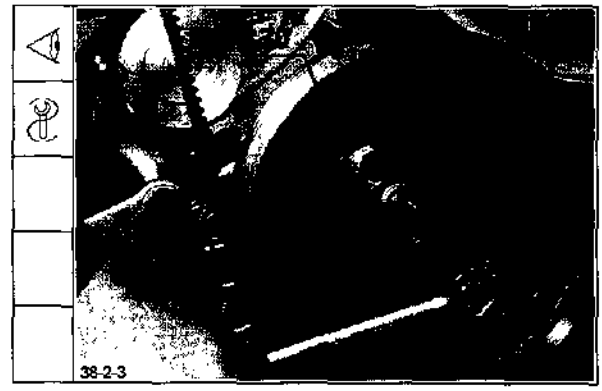

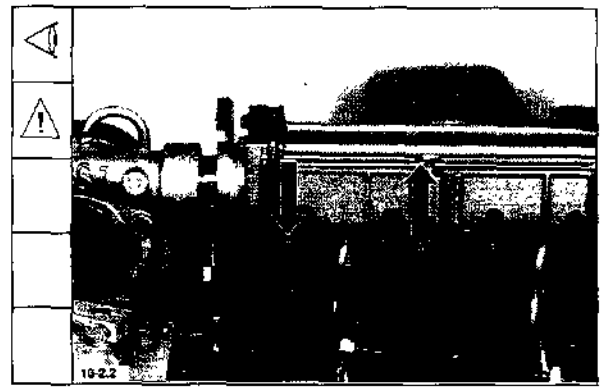

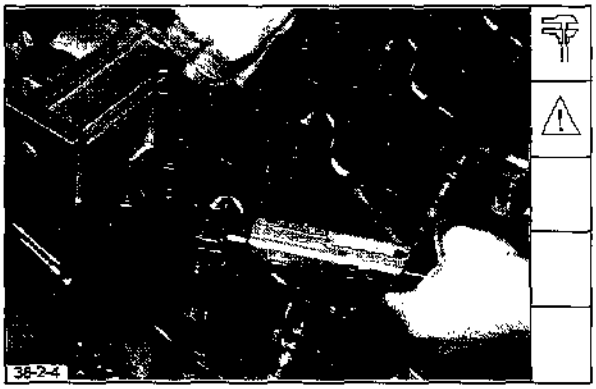

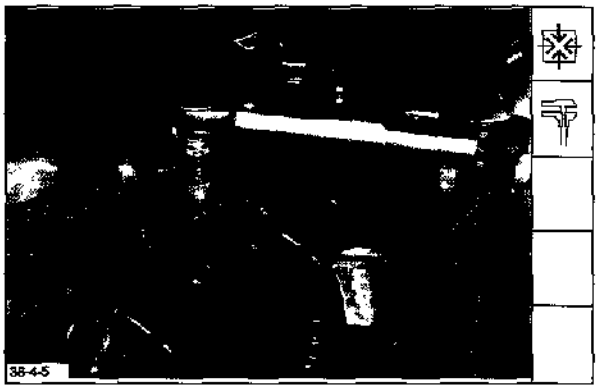

English

2. Adjust valve clearance on respective cylinder with feeler gauge.

Note: Inlet valve clearance: **0.3 mm**
Exhaust valve clearancee: **0.5 mm**

3. Tighten locknut with a torque of **20 ±2 Nm**. Recheck the adjustment with feeler gauge.

4. Position gasket in place.

5. Fit cylinder head cover and cover plate. Tighten bolts with a torque of **9 ±1 Nm**.

6. Fit crankcase breather. Tighten bolts with a torque of **9 ±1 Nm**.

Español

2. Ajustar el juego de válvulas en el cilindro correspondiente con la galga de espesores.

Nota: Juego de válvulas
- admisión: **0,3 mm**
- escape: **0,5 mm**

3. Apretar la contratuerca con un par de **20 ±2 Nm**. Comprobar nuevamente el ajuste efectuado, con la galga de espesores.

4. Poner la junta en su sitio.

5. Montar la tapa de culata y la chapa de recubrimiento. Apretar los tornillos con un par de **9 ±1 Nm.**

6. Montar el sistema de ventilación del cárter. Apretar los tornillos con un par de **9 ±1 Nm.**

English

Commercial tools required:

Compression tester ———— 8005
Torx tool kit ———— 8189

Special tool required:

Connector ———— 100 110

Injectors have been removed, valve clearance has been checked.

1. Insert connector with new special seal.

2. Fit clamping pad. Tighten bolt.

3. If necessary, screw on adapter for connector.

Español

Herramientas corrientes en el comercio:

Compresímetro ———— 8005
Juego de herramientas Torx ———— 8189

Herramienta especial:

Pieza de empalme ———— 100 110

Los inyectores están desmontados y el juego de válvulas controlado.

1. Introducir la pieza de empalme con una junta especial nueva.

2. Colocar la garra de sujeción. Apretar el tornillo.

3. De ser necesario, enroscar el adaptador de la pieza de empalme.

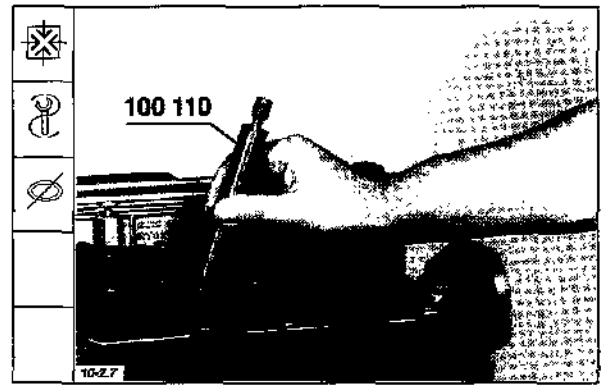

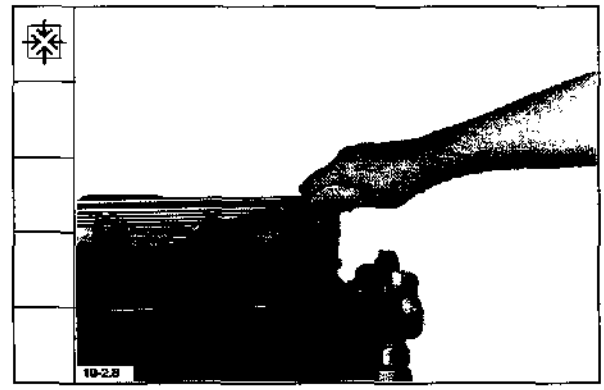

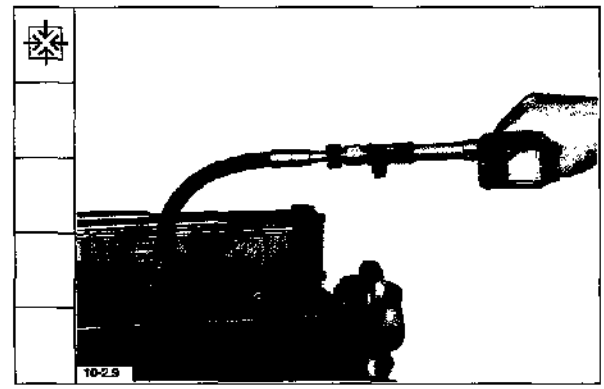

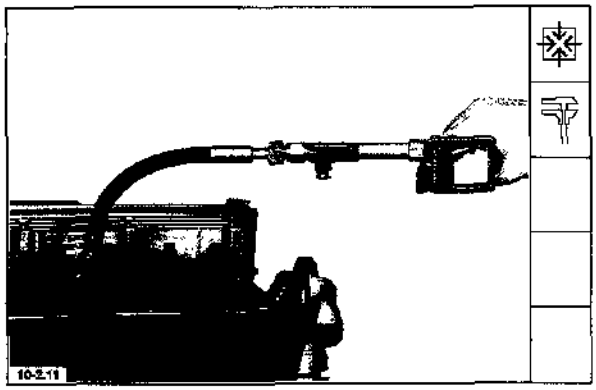

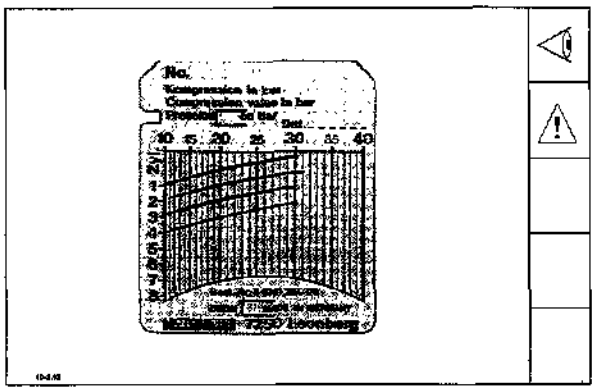

English

4. Connect compression tester. Turn engine with starter.
   Compression pressure:

BFM 1012	**28-33 bar**
BFM 1013	**30-38 bar**

The measured compression pressure is dependent on the starting speed during the measuring process and also on the altitude of the engine site. Therefore it is difficult to specify precise limit values. It is recommended to use the compression pressure measurement only for comparison of compression pressures of all cylinders in one engine. If a difference in pressure in excess of **15%** is determined, the cylinder unit concerned should be dismantled to establish the cause.

Note: Fit injectors with new special seals. Position clamping pads and start bolts.
Fit **new** injection lines. Screw on cap nuts fingertight.
The sealing cones must match precisely.
Rebending is not permissible. The injection lines may not be used twice.
Tighten bolts of clamping pads with a torque of **16 + 5 Nm**.
Preload cap nuts of injection lines on injection pumps and injectors with a torque of approx. **5 Nm**. Thereafter tighten cap nuts with a torque of **25 + 3.5 Nm**.
Leakage fuel lines must always be renewed.
Tighten cylinder head cover with a torque of **9 ± 1 Nm**.

Español

4. Conectar el compresímetro. Girar el motor con ayuda del arrancador.
   Presión de compresión:

BFM 1012	**28-33 bar**
BFM 1013	**30-38 bar**

El valor de compresión medido depende de la velocidad de arranque durante la medición y de la altitud del lugar de instalación del motor.
Por tanto, no es posible fijar valores límite exactos. La medición de compresión se aconseja solamente como una medida de comparación entre todos los cilindros de un mismo motor, Si se verifican diferencias superiores al **15%**, es conveniente buscar la causa, desmontando la unidad de cilindro afectada.

Nota: Montar los inyectores provistc de juntas especiales nuevas.
Colocar las patas de sujeción y enroscar los tornillos, dejándolos sueltos.
Montar tuberías de inyección **nuevas**. Enroscar las tuercas de empalme con la mano.
Los conos de obturación deben quedar asentados uno exactamente sobre el otro.
Es inadmisible corregir el curvado. La tuberías de inyección no deben ser empleadas dos veces.
Apretar los tornillos de las patas de sujeción con un par de **16 + 5 Nm.**
Apretar las tuercas de empalme de las tuberías de inyección en las bombas de inyección a inyectores inicialmente con un par de aprox. **5 Nm** y, luego, con un par de **25 + 3,5 Nm**.
Las tuberías de combustible sobrante han de sustituirse siempre por otras nuevas.
Apretar la tapa de culatas con un par de **9 ± 1 Nm**.

English

Commercial tools required:

Nozzle tester _____ 8008
Long socket a/flats 15 _____ 8012

Special tool required:

Assembly tool _____ 110 110

Note: Utmost cleanliness must be ensured when working on the injection equipment. For testing the injector use only pure test oil to ISO 4113 or clean diesel fuel.

Caution

Beware of injection nozzle fuel jet. The fuel penetrates deeply into the skin tissue and may cause blood poisening.

1. Connect injector to nozzle tester.

2. Checking opening pressure

With pressure gauge switched on, slowly press down lever of nozzle tester. The pressure at which the gauge pointer stops or suddenly drops, is the opening pressure.
Opening pressure check value for possible reuse:
BFM 1012 **250 + 8 bar**
BFM 1013 **275 + 8 bar.**

Español

Herramientas corrientes en el mercado:

Comprobador para inyectores ___ 8008
Dado de vaso de 15 _____ 8012

Herramienta especial:

Dispositivo de montaje _____ 110 110

Nota: Al trabajar en el equipo de inyección, se deberá observar máxima limpieza. Para la prueba de los inyectores sólo se utilizará aceite de ensayo puro según ISO 4113 o com bustible diesel limpio.

Atención

No acercar nunca las manos a los chorros del inyector, pues el combustible se introduce en la carne y destruye los tejidos. Si llega a la sangre, produce grave intoxicación.

1. Empalmar el inyector al comprobador.

2. Comprobación de la presión de apertura

Con el manómetro conectado, empujar la palanca del comprobador lentamente hacia abajo. La presión a la que la aguja se detiene o cae repentinamente, es la presión de apertura.
Valor de control de presión de apertura para la reutilización:
BFM 1012 **250 + 8 bar**
BFM 1013 **275 + 8 bar.**

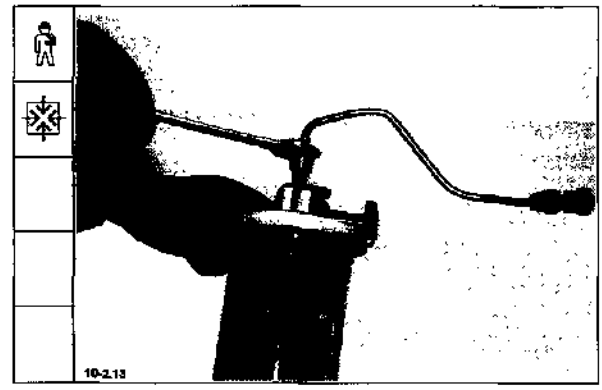

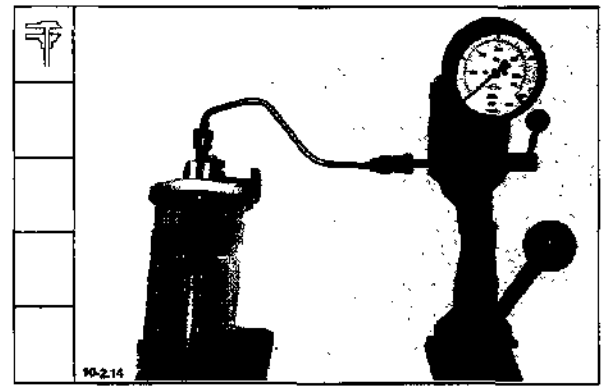

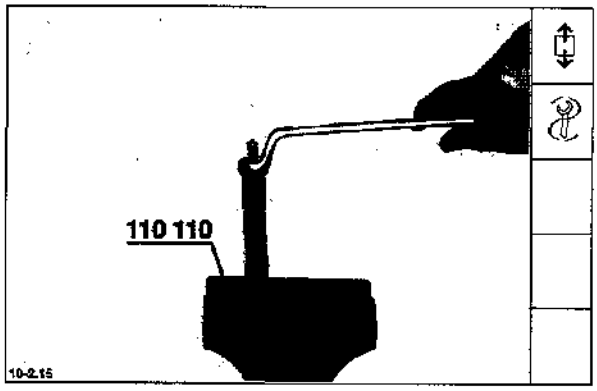

English

3. Adjusting the opening pressure on the injector

Unscrew cap nut and remove all parts.

Español

3. Ajuste de la presión de apertura en el inyector

Desenroscar la tuerca de unión y desmontar todas las piezas.

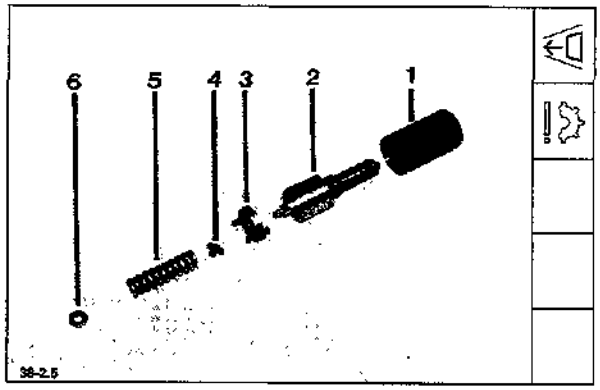

Sequence of parts disassembly

1. *Cap nut*
2. Injection nozzle
3. Adapter
4. Thrust pin
5. Compression spring
6. Shim

Secuencia del despiece

1. *Tuerca de unión*
2. Inyector propiamente dicho
3. Pieza intermedia
4. Perno de presión
5. Muelle de presión
6. Arandela de reglaje

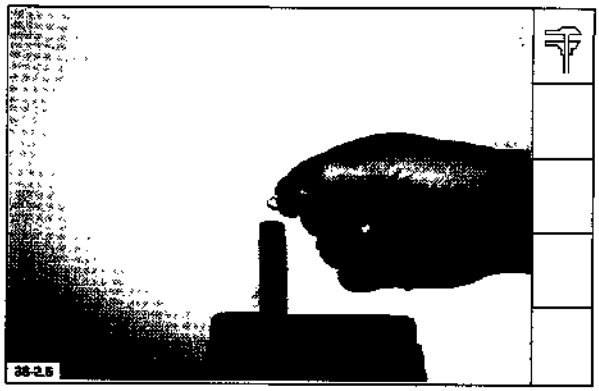

4. Adjust pressure by selecting appropriate shim. A thicker shim increases the opening pressure. Tighten cap nut with a torque of **40 - 50 Nm**. Recheck injector on nozzle tester.

4. Ajustar la presión eligiendo la arandela adecuada. Una arandela más gruesa da una presión más elevada. Rearmar el inyector. Apretar la tuerca de unión con un par de **40 - 50 Nm**. Volver aensayar el inyector sobre el comprobador.

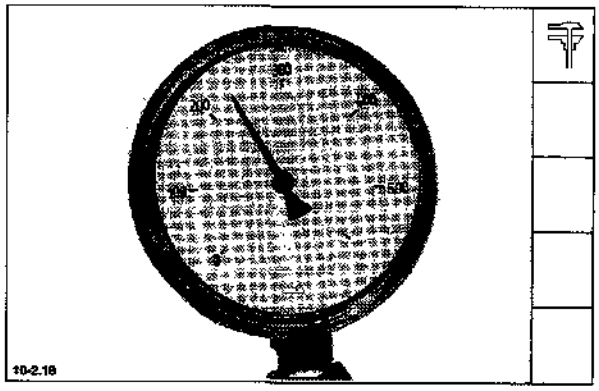

5. Checking for tightness

Dry nozzle and nozzle holder - blow out with compressed air. Press down handlever of tester until a pressure of up to about **20 bar** below the previous opening pressure reading is attained.

5. Comprobación de estanqueidad

Secar el inyector y el portainyector, soplándolos con aire comprimido. Empujar la palanca de mano del comprobador lentamente hacia abajo hasta alcanzar un valor de aprox. **20 bar** por debajo de la presión de apertura leída previamente.

English

6. Nozzle is tight if there is no dripping within a period of **10** seconds.

7. In case of a drip, the injector must be dismantled and cleaned to remedy the leak. If this does not cure the leak, the injector must be replaced.

   Reworking is not permissible.

8. Buzzing and spray pattern test

Switch off pressure gauge of tester.

The buzzing test permits an audible check of the ease of movement of the nozzle needle in the nozzle body. New injectors emit a different buzzing sound as compared to used injectors. It deteriorates due to wear in the needle seat area. If an injection nozzle does not buzz despite cleaning, it must be renewed.

A used injector should buzz clearly during rapid actuation of the handlever, while exhibiting a well atomized spray pattern. The spray pattern may differ noticeably from that of a new injector.

Español

6. El inyector es estanco si, parados **10** segundos, no sale ni una gota de líquido.

7. Si cae una gota, el inyector debe ser desarmado y limpiado para eliminar la falta de estanqueidad. Si esto no surte efecto, deberá reemplazarse el inyector.

   Trabajos de repaso no están permitidos.

8. Comprobación del ronquido y chorro

Desconectar el manómetro del comprobador.

La comprobación del ronquido permite un control acústico de la facilidad de movimiento de la aguja dentro del cuerpo del inyector. Los inyectores nuevos tienen un ronquido diferente de los usados. El desgaste en la zona de asiento de la aguja lo empeora. Si, pese a la limpieza previa, el inyector no produce el ronquido característico, es necesario sustituirlo por otro nuevo.

Al accionarse rápidamente la palanca de mano del comprobador, un inyector usado debe roncar de forma audible y producir un chorro bien pulverizado. La forma del chorro puede diferir, en tal caso, notablemente de la que se obtiene con un inyector nuevo.

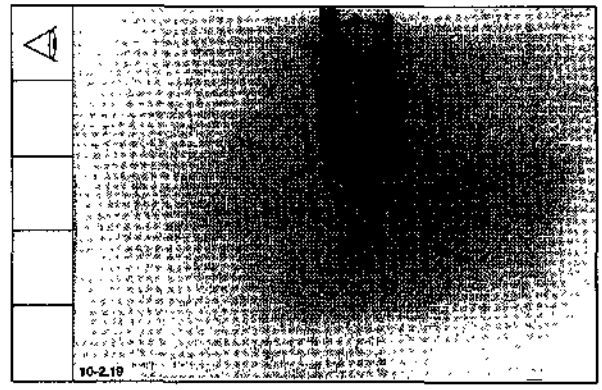

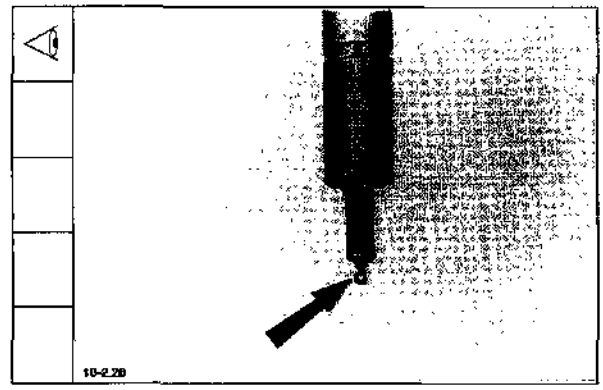

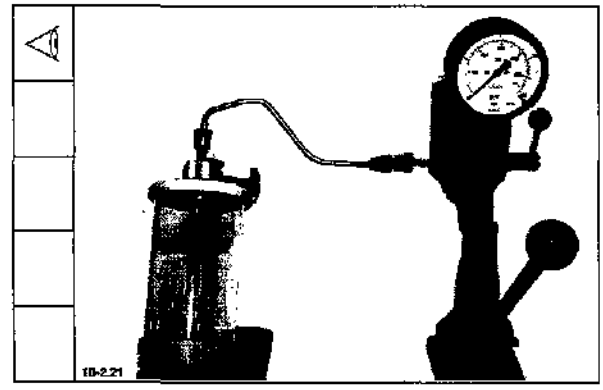

Repair of components

Reparación de componentes

BFM 1012/1013

DEUTZ

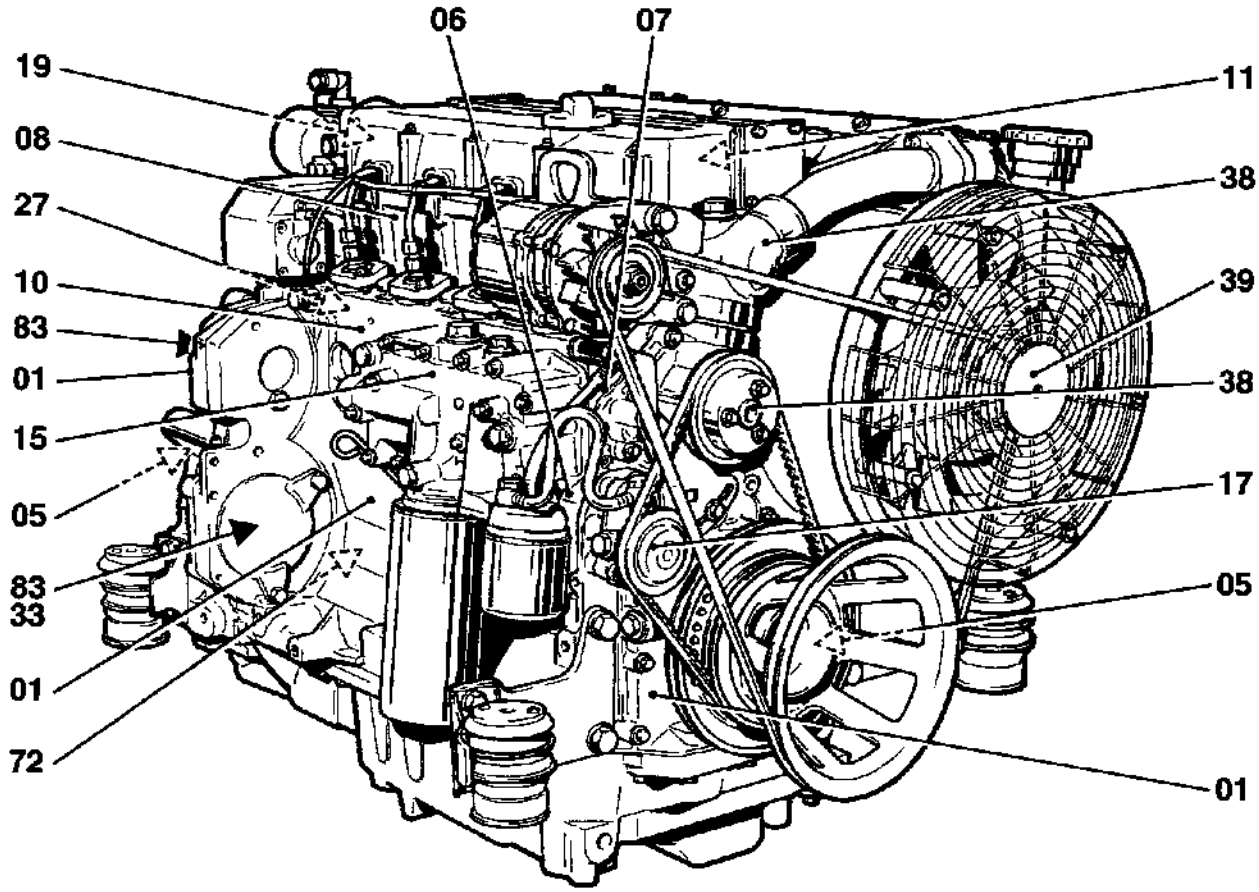
06
07
19
11
08
38
27
39
10
83
01
38
15
17
05
83
33
05
01
72
01

English

3. Repair of components

Assembly Group	Description	Page
01	Crankcase w. integrated cylinder liners	3.01.01 - 3.01.11
01	Front cover/lube oil pump	3.01.15 - 3.01.17
01	Timing chest	3.01.21 - 3.01.22
05	Crankshaft	3.05.25 - 3.05.28
05	Starter ring gear/flywheel	3.05.31
06	Connecting rod	3.06.35 - 3.06.40
07	Piston	3.07.43 - 3.07.45
08	Cylinder head	3.08.49 - 3.08.54
10	Camshaft	3.10.57
11	Rocker arm	3.11.61
15	Lube oil cooler	3.15.65 - 3.15.69
17	Fuel pump	3.17.73
19	Injector	3.19.77 - 3.19.79
27	Control rod	3.27.83 - 3.27.84
33	Air compressor	3.33.87
38	Thermostat	3.38.91
38	Coolant pump	3.38.95
39	Fan drive	3.39.99 - 3.39.103
72	Mass balancing shaft	3.72.107
83	Hydraulic pump drive	3.83.111 - 3.83.113
83	Hydraulic pump w. fastening flange	3.83.117 - 3.83.118

3. Reparación de componentes

Grupo de construcción	Denominación	Página
01	Bloque de cilindros	3.01.01 - 3.01.11
01	Tapa frontal/bomba de aceite lubricante	3.01.15 - 3.01.17
01	Cárter de la distribución	3.01.21 - 3.01.22
05	Cigüeñal	3.05.25 - 3.05.28
05	Corona dentada/volante	3.05.31
06	Biela	3.06.35 - 3.06.40
07	Pistón	3.07.43 - 3.07.45
08	Culata	3.08.49 - 3.08.54
10	Arbol de levas	3.10.57
11	Soporte de balancines	3.11.61
15	Refrigerador de aceite lubricante	3.15.65 - 3.15.69
17	Bomba de combustible	3.17.73
19	Inyector	3.19.77 - 3.19.79
27	Barra cremallera	3.27.83 - 3.27.84
33	Compresor de aire	3.33.87
38	Termostato	3.38.91
38	Bomba de líquido refrigerante	3.38.95
39	Turbina de refrigeración	3.39.99 - 3.39.103
72	Eje compensador de masa	3.72.107
83	Accionamiento de la bomba hidráulica	3.83.111 - 3.83.113
83	Bomba hidráulica con brida de fijación	3.83.117 - 3.83.118

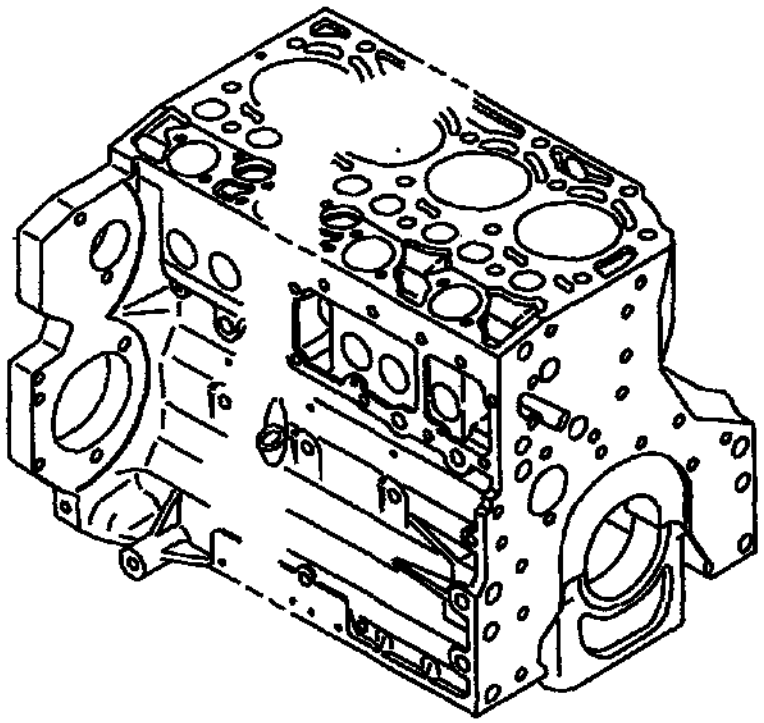

English

Commercial tools required:

Screw driver socket _____ 8112
Internal dial gauge

Special tools required:

Assembly tool for
camshaft sleeves BFM 1012 _ 143 790
BFM 1013 _ 143 810
Assembly tool for
engine balancer
bushes BFM 1012 _____ 143 780
Assembly tool forcontrol
rod sleeves BFM 1012 _____ 110 470
BFM 1013 _____ 110 480
Assembly tool for
cylinder liners BFM 1013 ____ 150 100
Extractor BFM 1013 _____ 150 800

1. Clean crankcase and inspect for damage.

Note: Prior to measurement tighten main bearing caps as specified.

Initial tightening torque:

BFM 1012	**30 Nm**
BFM 1013	**50 Nm**
1st tightening angle:	**60°**
2nd tightening angle:	**60°**

2. Set internal dial gauge.

BFM 1012 to	**94 mm**
BFM 1013 to	**108 mm**

Español

Herramientas comerciales:

Punta recambiable de
destornillador _____ 8112
Micrómetro de interiores

Herramientas especiales:

Herramienta de montaje para
casquillos de árbol de levas
BFM 1012 _____ 143 790
BFM 1013 _____ 143 810
Herramienta de montaje para
casquillos de árboles compensadores
de masa BFM 1012 _____ 143 780
Herramienta de montaje para
manguitos de cremallera
BFM 1012 _____ 110 470
BFM 1013 _____ 110 480
Herramienta de montaje
para camisas de
cilindro BFM 1013 _____ *150 100*
Dispositivo de extracción
BFM 1013 _____ 150 800

1. Limpiar el cárter del cigüeñal y examinarlo visualmente en cuanto a daños.

Nota: Antes de proceder a la medición, apretar las tapas de los cojinetes *de apoyo del cigüeñal según* prescripción.

Apriete inicial:

BFM 1012	**30 Nm**
BFM 1013	**50 Nm**
Reapriete:	
1ª fase	**60°**
2ª fase	**60°**

2. Ajustar el micrómetro de interiores.

BFM 1012 a	**94 mm**
BFM 1013 a	**108 mm**

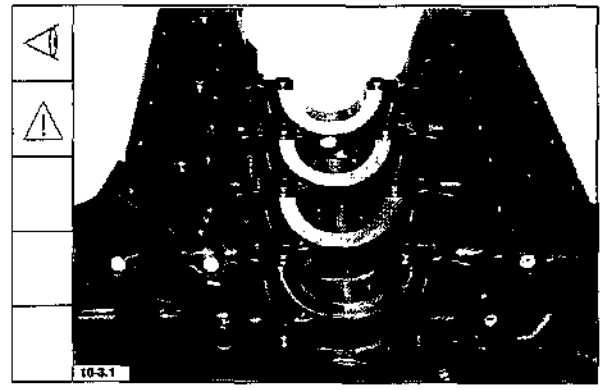

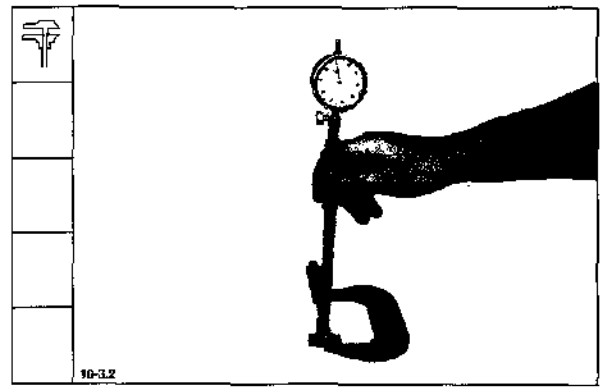

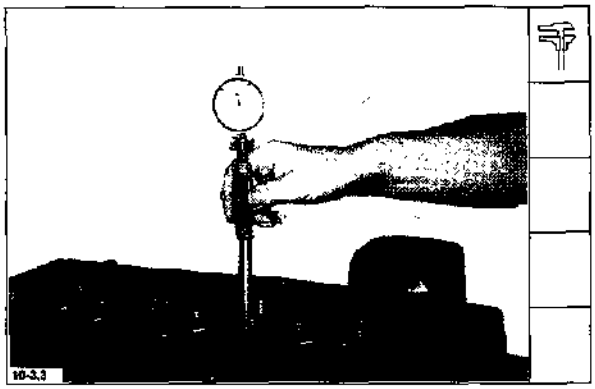

English

3. Gauge cylinders-

Cylinder bore:

BFM 1012	**94 + 0.02 mm**
BFM 1013	**108 + 0.02 mm**

Wear limit:

BFM 1012	**94.1 mm**
BFM 1013	**108.1 mm**

Español

3. Medir los cilindros-

Calibre:

BFM 1012	**94 + 0,02 mm**
BFM 1013	**108 + 0,02 mm**

Límite de desgaste:

BFM 1012	**94,1 mm**
BFM 1013	**108,1 mm**

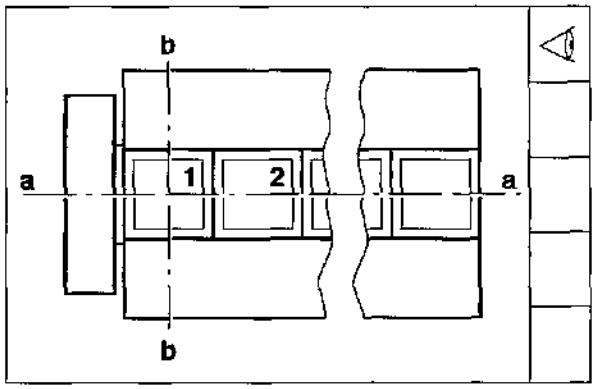

3.1 - in the engine's longitudinal axis „a" and transverse axis „b"

3.1 - en los ejes longitudinal „a" y transversal „b" del motor

3.2 - and in planes 1-3.

3.2 - y en los planos 1-3.

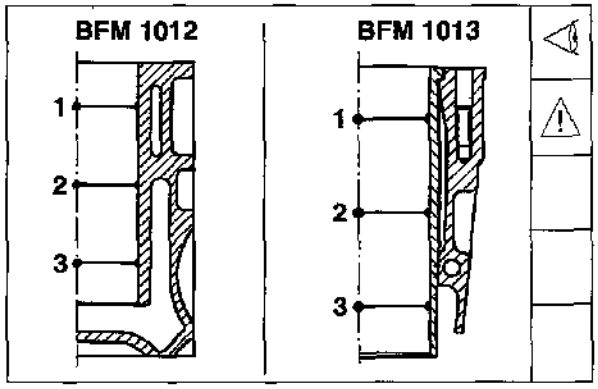

Note: BFM 1012 crankcase with integrated cylinder liners. If the cylinder working surface is worn, it is possible to obtain a bored out crankcase equipped with new cylinder liners (slip-fit liners) from our Service Center Übersee.

Nota: Bloque motor BFM 1012. Si la superficie de roce de los cilindros está desgastada, existe la posibilidad de adquirir, en nuestro Centro de Servicio de Übersee, un bloque motor con los cilindros mandrinados y dotados de nuevas camisas (slipfit).

4. Remove cylinder liners with BFM 1013.

4. En BFM 1013, desmontar las camisas de cilindro.

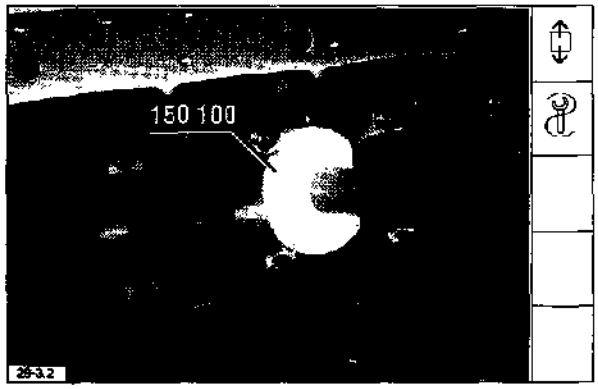

English

4.1 With cylinder liners fit for further use inspect liner collar seating and measure at several points on the circumference.
Dimension „X„ = **9 - 0.02 mm**

Note: Renew cylinder liner in case of damage or dimensional deviation.

5. Inspect liner collar seating and sealing surface for cylinder liners.

Measure liner collar seating
= 8.92 + 0.03 mm per cylinder at several points on the circumference.

Note: Renew crankcase in case of damage or dimensional *deviation.*

If the measured data correspond to the values specified for the liners, the crankcase may be repaired as necessary.

6. Remove screw plugs. Check oil ducts for free passage.

Camshaft bearing bushes

7. Set internal dial gauge:

BFM 1012 to **60 mm**
BFM 1013 to **65 mm**

Español

4.1 En caso de camisas reutilizables, inspeccionar visualmente el asiento de su reborde y efectuar mediciones en varios puntos de su circunferencia.
Medida „X" = **9 - 0,02 mm**

Nota: Al observarse daños o desviaciones dimensionales, es necesario sustituir la camisa afectada por otra nueva.

5. Inspeccionar visualmente el asiento del reborde y la superficie de cierre *para las camisas.*

Medir el asiento del reborde.
= 8,92 + 0,03 mm, de cada cilindro en varios puntos de la circunferencia.

Nota: Al observarse daños o desviaciones dimensionales, es necesario sustituir el bloque motor por otro nuevo.

Si los valores medidos de los cilindros corresponden a los especificados, se reacondicionará el bloque de cilindros en la medida necesaria.

6. Desenroscar los tapones de cierre. Comprobar si los conductos de aceite están despejados.

Casquillos del árbol de levas

7. Ajustar el micrómetro de interiores.

BFM 1012 a **60 mm**
BFM 1013 a **65 mm**

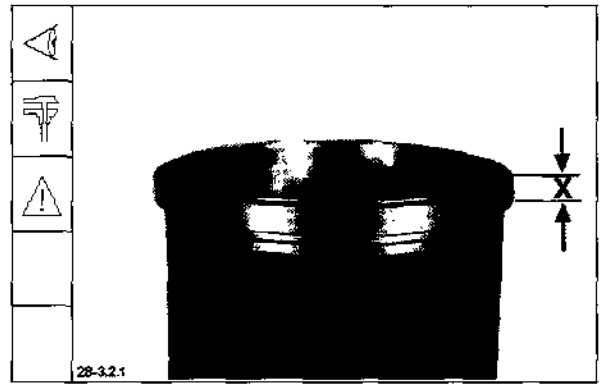

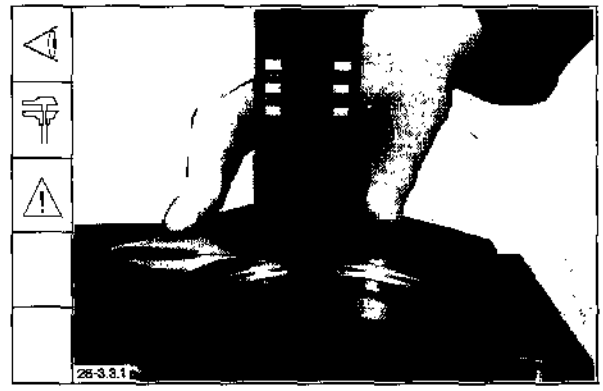

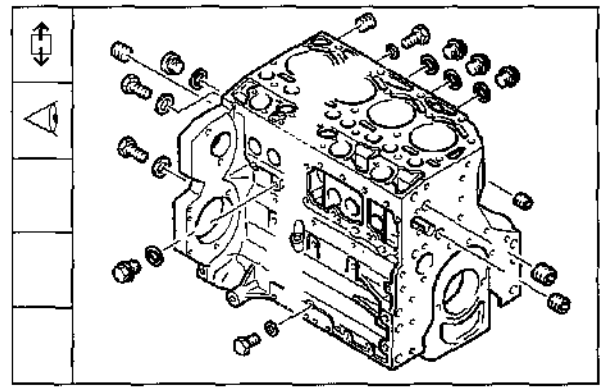

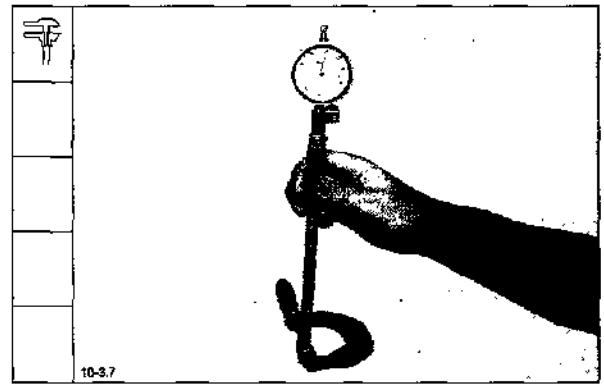

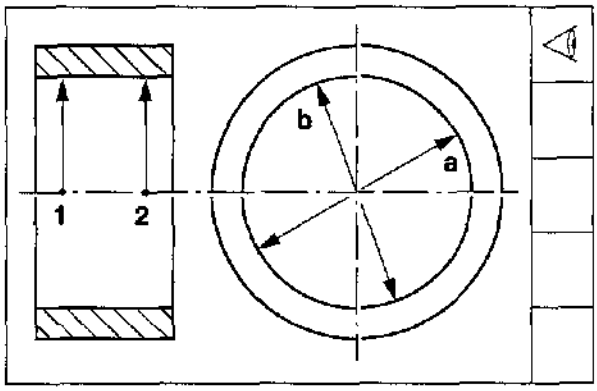

English

8. Schematic for gauging the bearing bushes at points 1 and 2 in planes „a" and „b".

Español

8. Esquema para verificar las medidas de los casquillos, en los puntos 1 y 2 de los planos „a" y „b".

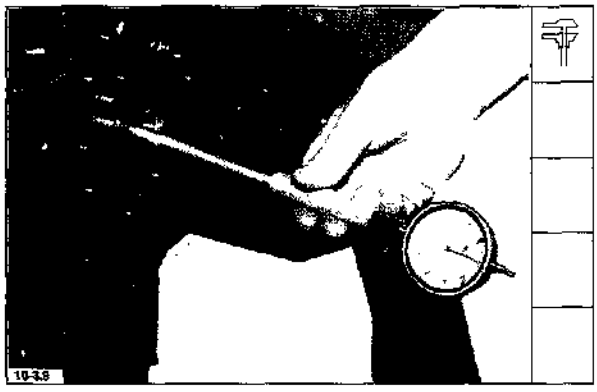

9. Gauge bearing bushes. renew if necessary.

Inner diameter:

BFM 1012	**60 + 0.054 mm**
BFM 1013	**65 + 0.054 mm**

Wear limit:

BFM 1012	**60.080 mm**
BFM 1013	**65.080 mm**

9. Verificar las medidas de los casquillos. sustituyéndolos, si es necesario.

Diámetro interior:

BFM 1012	**60 + 0,054 mm**
BFM 1013	**65 + 0,054 mm**

Límite de desgaste:

BFM 1012	**60,080 mm**
BFM 1013	**65,080 mm**

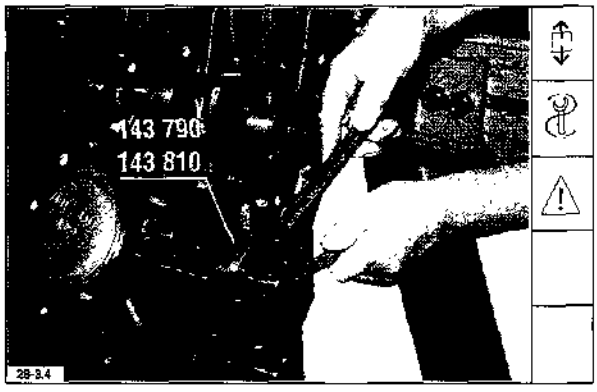

10. Remove bearing bushes.

Note: Mark BFM 1013 bearing bushes prior to removal and adopt marking to new bearing bushes.

10. Desmontar los casquillos.

Nota: Marcar los casquillos BFM 1013 antes de su desmontaje y copiar las marcas a los casquillos nuevos.

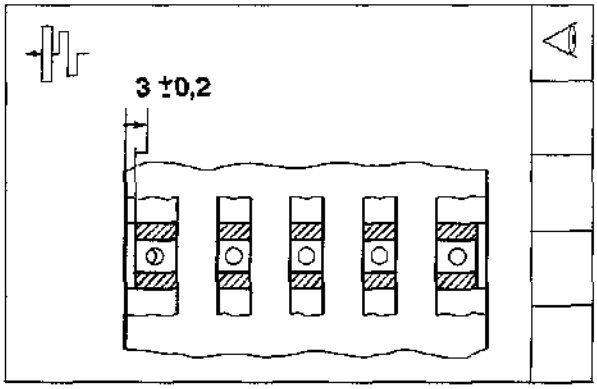

11. Schematic: installation dimensionof BFM 1012 bearing bush at flywheel end.

11. Esquema: Medida de instalación del casquillo lado de volante, BFM 1012.

English

12. Schematic: determining installation position of BFM 1013 bearing bush at flywheel end.

Español

12. Esquema: Instalación orientada del casquillo lado de volante. BFM 1013.

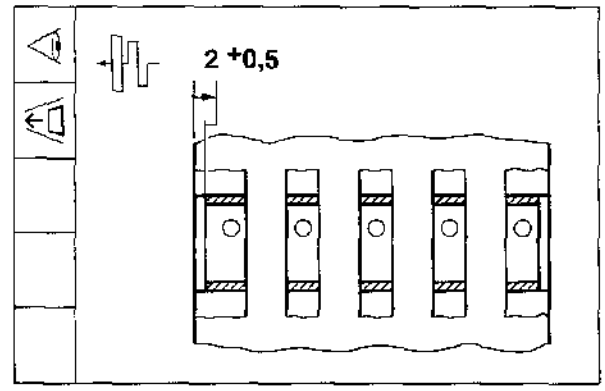

13. Position new bearing bush.

Note: Lube oil bores must be lined up.

13. Posicionar el casquillo nuevo.

Nota: Prestar atención a la coincidencia de los orificios de *lubricación.*

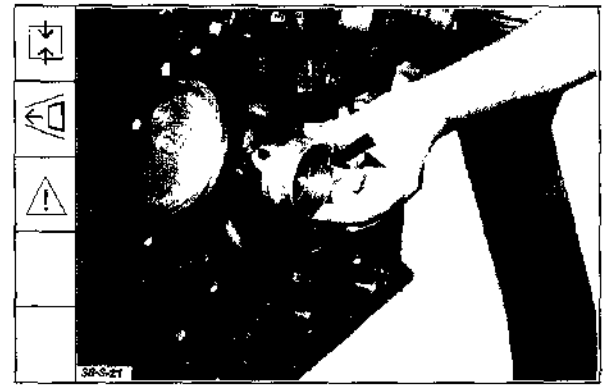

14. Insert bearing bush.

14. Insertar el casquillo de soporte.

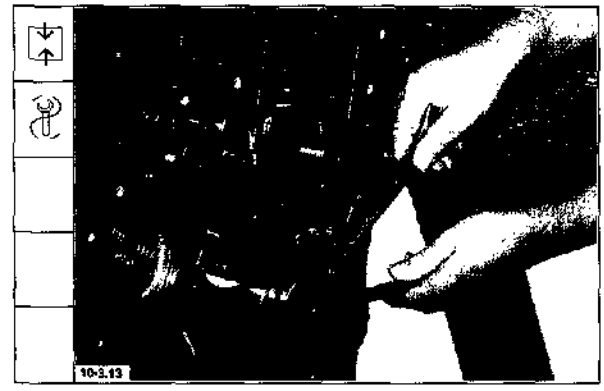

Engine balancer - BFM 1012 bearing bushes

15. Set internal dial gauge to **54 mm**.

Casquillos de soporte para árboles compensadores de masa - BFM 1012

15. Ajustar el micrómetro de interiores a **54 mm**.

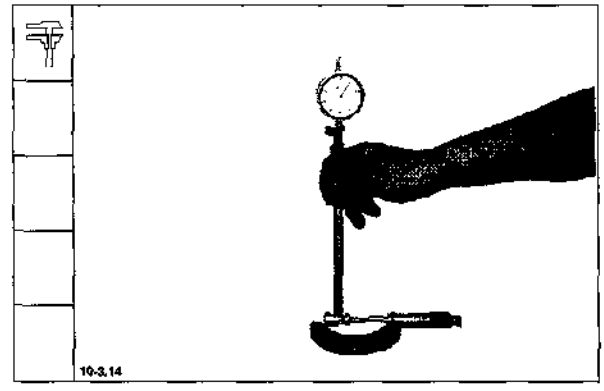

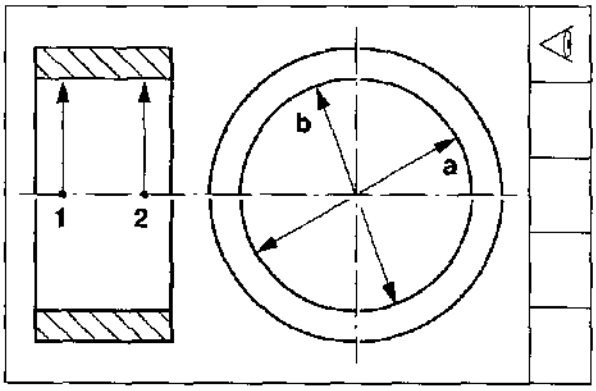

English

16. Schematic for gauging the bearing bushes at points 1 and 2 and in planes „a" and „b".

Español

16. Esquema para verificar las medidas de los casquillos en los puntos 1 y 2 de los planos „a" y „b".

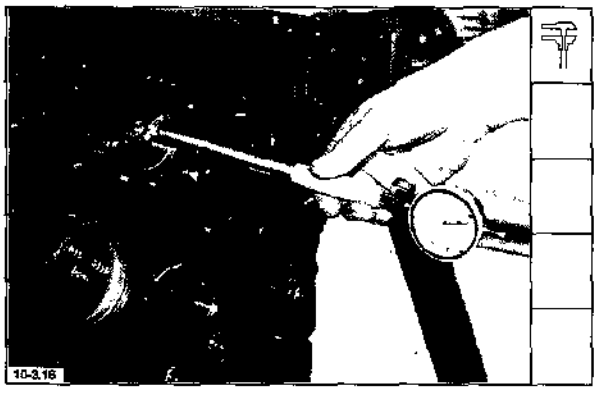

17. Gauge bearing bushes, renew if necessary.

Inner diameter: **54.06 + 0.045 mm**
Wear limit: **54.125 mm**

17. Verificar las medidas de los casquillos, sustituyéndolos, si es necesario.

Diámetro interior: **54,06 + 0,045 mm**
Límite de desgaste: **54,125 mm**

18. Remove bearing bushes.

18. Desmontar los casquillos.

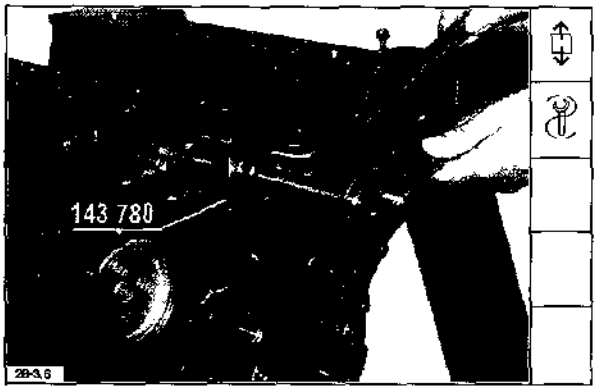

19. Position new bearing bush, mark and make sure that lube oil bores/ centering bores are lined up.

19. Posicionar el casquillo nuevo, marcar y observar la coincidencia de los orificios de lubricación / centraje.

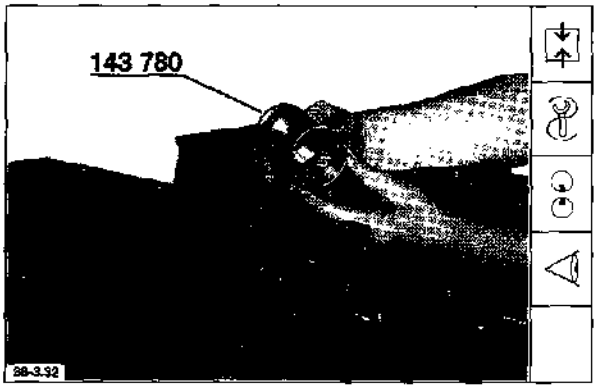

English

20. Insert bearing bush.

Español

20. Insertar el casquillo.

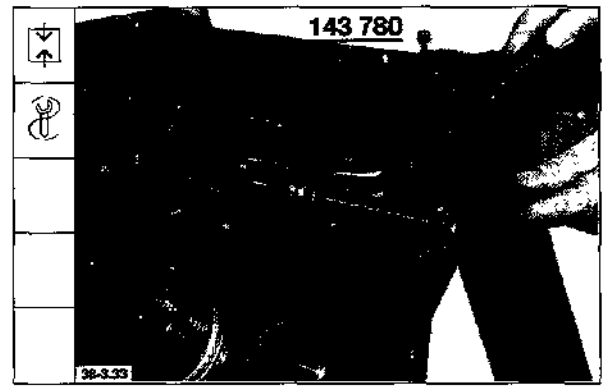

Guide sleeves for control rod

21. With BF4/6M engines drive out guide sleeve at front end.

Manguitos de guía de la cremallera

21. Expulsar el manguito de guía en el lado delantero, en motores BF4/6M.

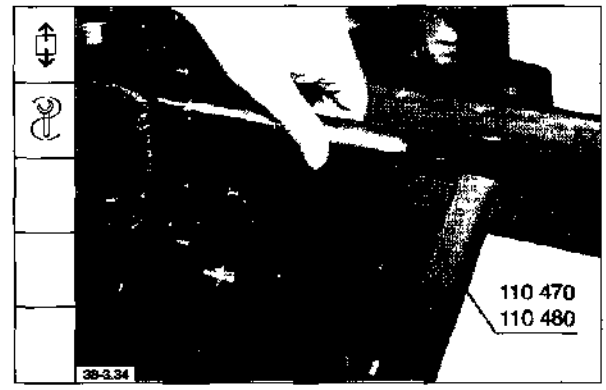

22. With BF6M engines drive out guide sleeve at flywheel end.

22. Expulsar el manguito de guía en el lado de volante, en motores BF6M.

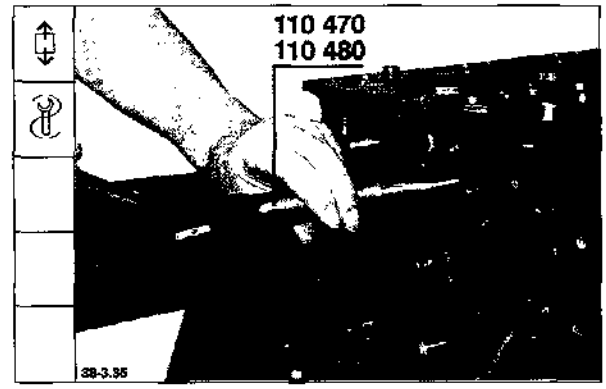

23. Introduce short assembly arbor in centering bore.

23. Introducir un mandril de montaje corto en el dispositivo de centraje.

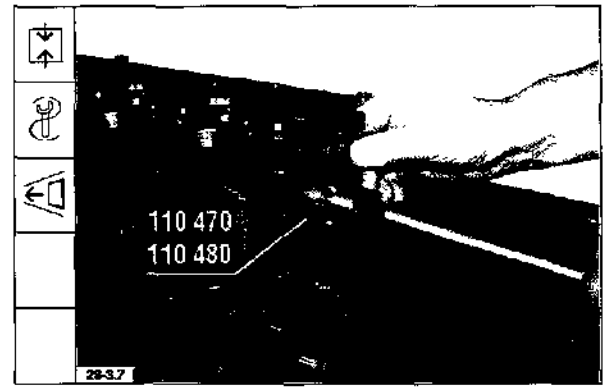

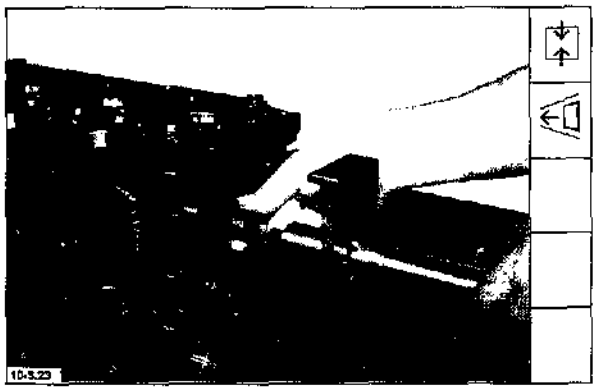

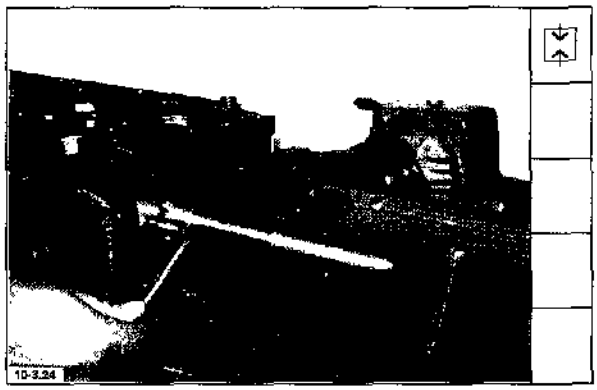

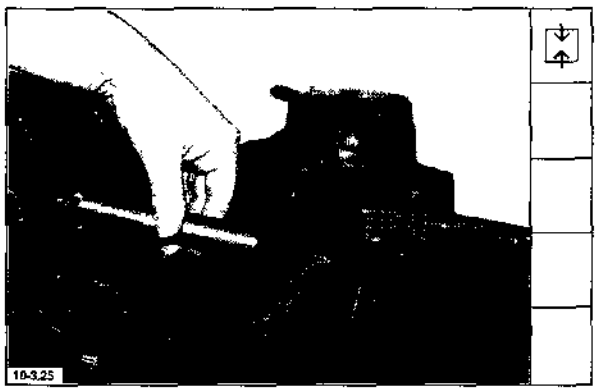

English

24. Position guide sleeve on assembly arbor with chamfer pointing towards crankcase.

25. Secure centering bore with assembly arbor on crankcase.

26. Drive in guide sleeve as far as it will go.

27. With BF6M engines drive in guide sleeve at flywheel end as under items 23-26, using however long assembly arbor.

Español

24. Colocar sobre el mandril de montaje el manguito de guía con el biselado indicando hacia el bloque motor.

25. Bloquear el dispositivo de centraje con el mandril de montaje sobre el bloque motor.

26. Introducir a golpes el manguito de guía hasta el tope.

27. En BF6M: introducir el manguito de guía, lado volante, como descrito en los puntos 23-26, pero utilizando un mandril de montaje largo.

English

Pressure holding valve BFM 1013
(remove if necessary)

28. Bore out bore in pressure holding valve with drill, 6.7 mm dia.

29. Tap thread M8.

30. Screw in extractor and drive out pressure holding valve.

31. Apply locking compound **Deutz DW 71** to new pressure holdingvalve.

Español

Válvula de mantenimiento de presión BFM 1013
(Desmontarla, si es necesario)

28. Abrir con broca de 6.7 mm Ø un taladro en la válvula.

29. Cortar una rosca M8.

30. Enroscar el dispositivo de extracción y extraer la válvula.

31. Aplicar sellante **Deutz DW 71** a la válvula nueva.

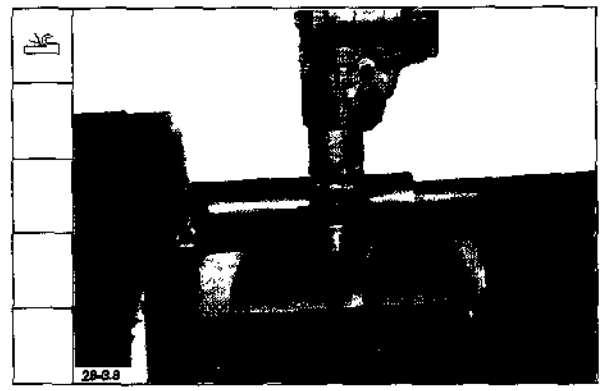

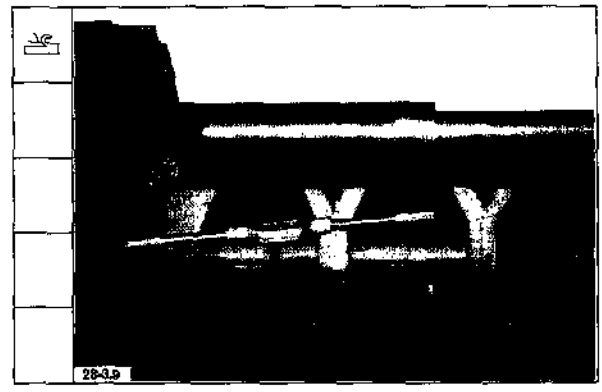

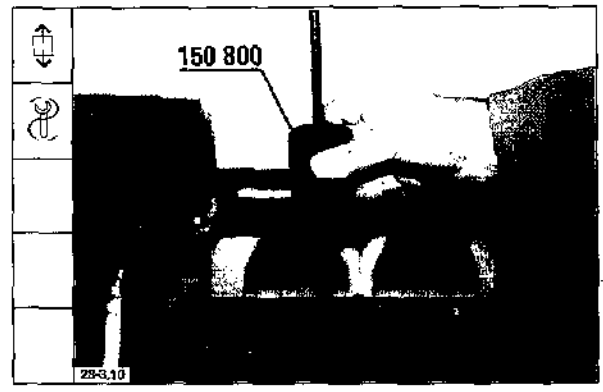

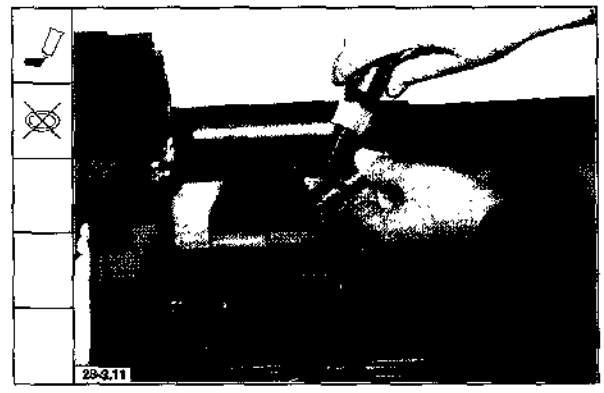

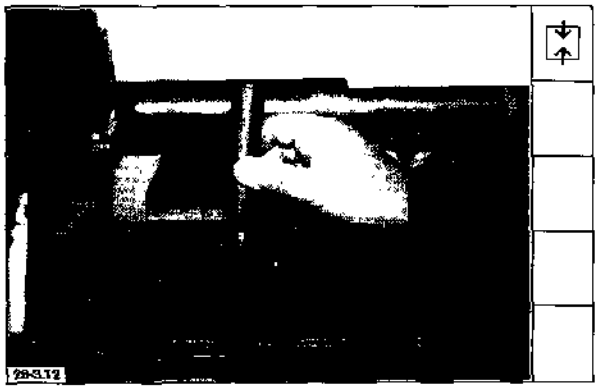

English

32. Drive in pressure holding valve with self-made tool.

Español

32. Introducir a golpes la válvula, utilizando una herramienta de confección propia.

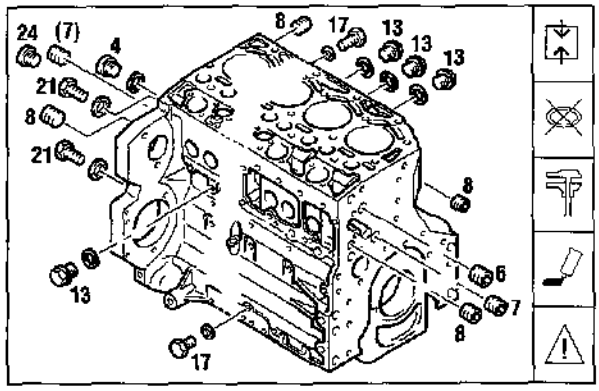

33. Tighten screw plugs as specified. Use new Cu seals for items 4, 13, 17 and 21.
Insert item 24 with locking compound **Deutz DW 72.**

	BFM 1012	BFM 1013
item 4 =	**35 ± 3.5 Nm**	
item 6 =	**95 ± 9.5 Nm**	
item 7 =	**65 ± 6.5 Nm**	
item 8 =	**35 ± 3.5 Nm**	
item 13 =	**35 ± 3.5 Nm**	
item 17 =	**29 Nm**	—
item 21 =	**9 + 4 Nm**	—
item 24 =	—	**10 ± 2.0 Nm**

Note: Always renew items 6.7 and 8 after removal.
Item 7 in brackets () has been superseded by item 24.

33. Apretar los tapones de cierre según pescripción. LostaponesNos4,13, 17 ny 21se proveerán de un anilo nuevo de cobre. Introducir la pieza No.24 con sellante **DEUTZ DW 72.**

	BFM 1012	BFM 1013
No. 4 =	**35 ± 3.5 Nm**	
No. 6 =	**95 ± 9.5 Nm**	
No. 7 =	**65 ± 6.5 Nm**	
No. 8 =	**35 ± 3,5 Nm**	
No. 13 =	**35 ± 3,5 Nm**	
No. 17 =	**29 Nm**	—
No. 21 =	**9 + 4 Nm**	—
No. 24 =	—	**10 ± 2,0 Nm**

Nota: Los tapones Nos. 6 , 7 y 8 tienen que ser sustituidos por otros nuevos tras cada desmontaje. El No. 7 puesto entre paréntis () fue sustituido por el No. 24.

Cylinder liners BFM 1013

34. Make sure that collar seating and sealing surface are absolutely clean.

Camisas de cilindro BFM 1013

34. El asiento del reborde y la superficie de cierre deben estar absolutamente limpios.

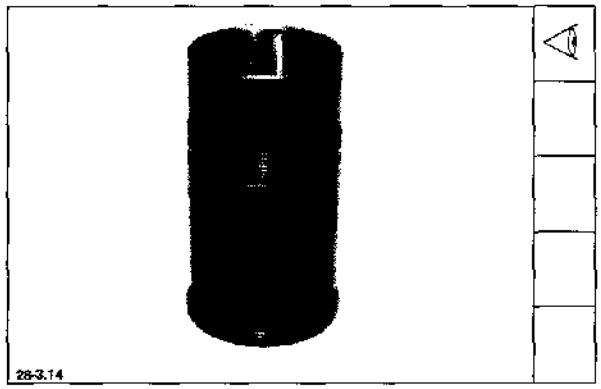

English

35. Fit O-seals.

Note: Prior to assembly oil crankcase and cylinder liner in the area X.

36. Press in cylinder liner as far as it will go.

Español

35. Colocar los anillos tóricos.

Nota: Untar con un poco de aceite el bloque motor y la camisa en la zona X antes del montaje.

36. Introducir a presión la camisa hasta que haga tope.

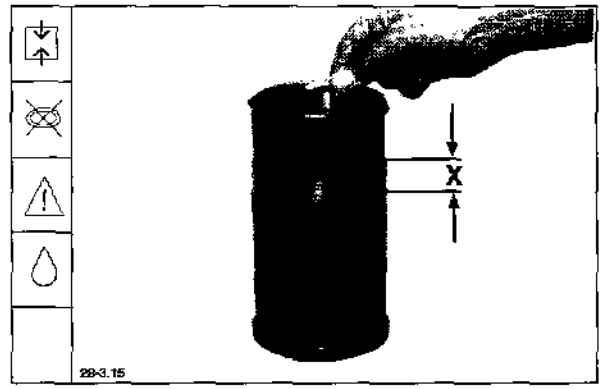

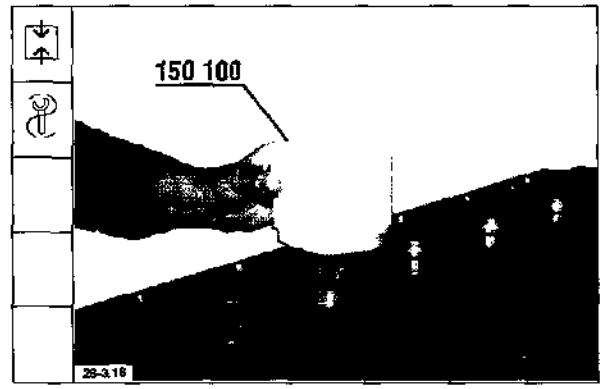

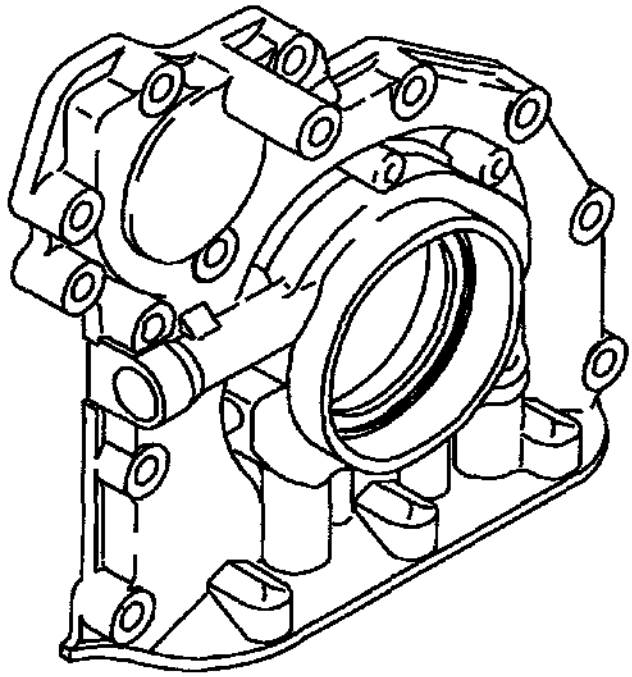

English

Commercial tool required:
Use valve spring assembly lever for pressure control valve on BFM1013.

Special tools required:
Assembly tool BFM 1012 ___ 142 900
BFM 1013 _____ 142 920

Assembly tool for pressure control valve
BFM 1013 _____ 150 110

1. Drive out shaft seal.

2. Inspect front cover, replace if necessary.

Note: Rotors must turn freely.

3. For cleaning front cover remove lube oil pump and pressure control valve.

Unscrew pressure control valve on BFM 1012.

Español

Herramienta comercial:
En BFM 1013, utilizar para la válvula reguladora de presión la palanca de montaje para resortes de válvula.

Herramientas especiales:
Herramienta de montaje
BFM 1012 _____ 142 900
BFM 1013 _____ 142 920
Herramienta de montaje para válvula reguladora depresión
BFM 1013 _____ 150 110

1. Expulsar el réten.

2. Examinar visualmente la tapa delantera, sustituyéndola por otra *nueva en caso necesario.*

Nota: Los rotores deben poderse girar fácilmente.

3. *Para la limpieza de la tapa* delantera, desmontar la bomba de aceite lubricante y la válvula reguladora de presión.

Desenroscar la válvula reguladora de presión BFM 1012

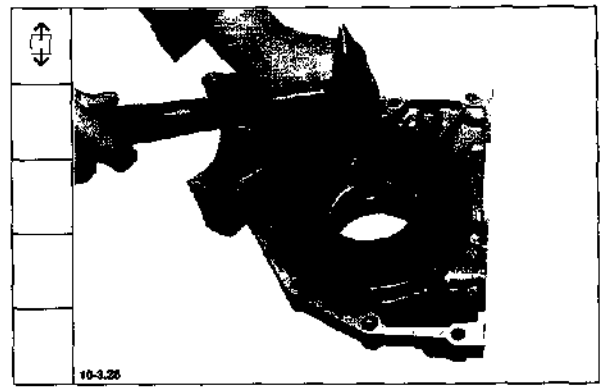

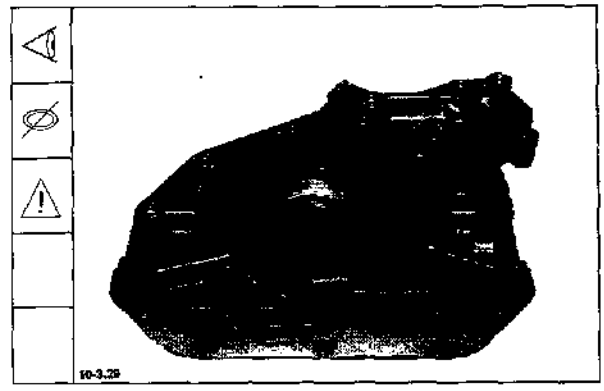

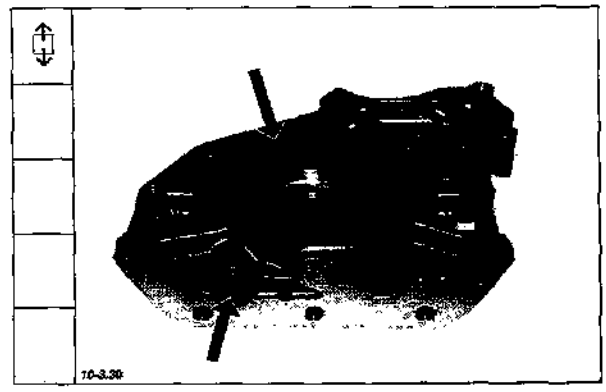

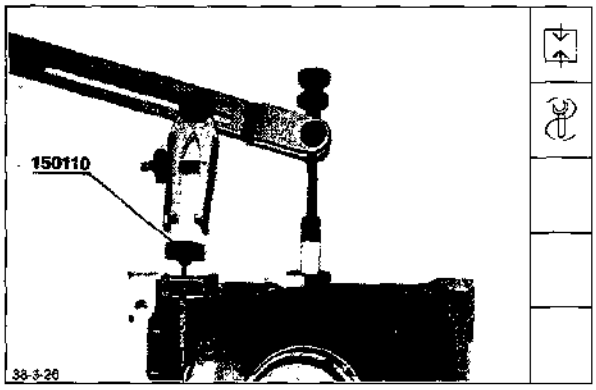

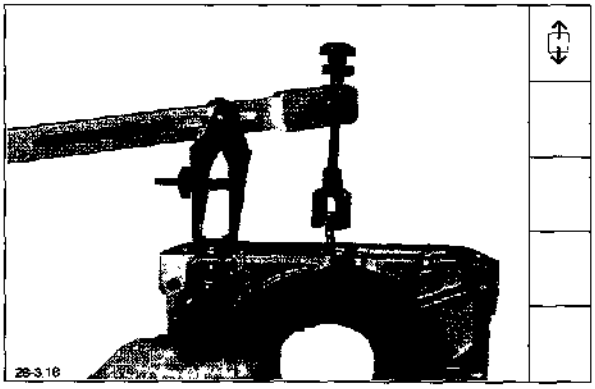

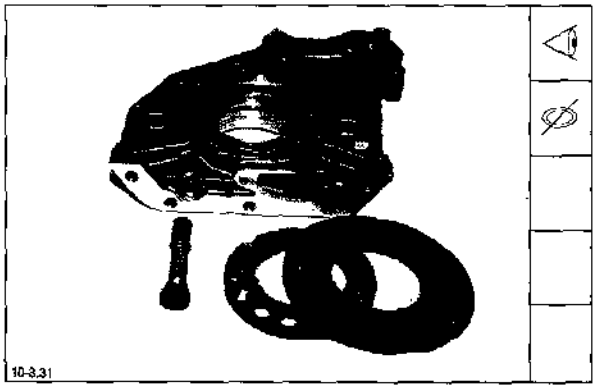

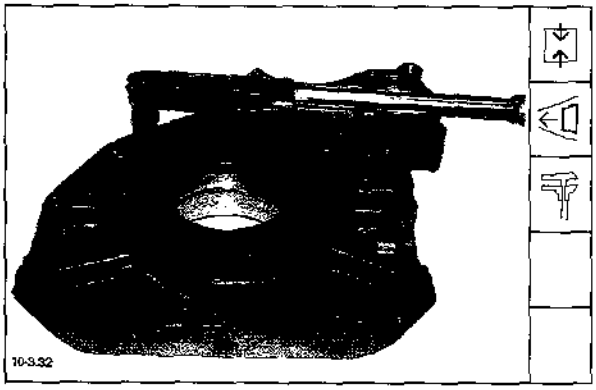

English

3.1 Pressure control valve BFM 1013:
Position assembly tool on compression spring.
Fit valve spring tensioning device.

3.2 Press down compession spring and remove holding plate.

4. Replace complete front cover in case of visible wear or damage to individual components.

5. Install lube oil pump and secure with a torque of **8 - 9 Nm**.

Español

3.1 Válvula reguladora de presión BFM 1013:
Colocar la herramienta de montaje sobre el resorte de presión.
Montar el compresor de resortes de válvula

3.2 Comprimir el resorte de presión y sacar el plato de retención.

4. En caso de visible desgaste o deterioro en las piezas, hay que cambiar la completa tapa delantera.

5. Montar la bomba de aceite lubricante y efectuar el apriete con un par de **8 - 9 Nm**.

English

6. Fit BFM 1012 pressure control valve and tighten with a torque of **40 ± 4 Nm**.

6.1 Fit BFM 1013 pressure control valve:
Press down compression spring and insert holding plate.

Note: Watch out that holding plate is properly seated.

7. Fit shaft seal with assembly tool.

Note: Prior to assembly apply dehydrated lubricant onto shaft seal.

Español

6. Montar la válvula reguladora de presión BFM 1012.

Apretar la válvula con un par de **40 ± 4 Nm**.

6.1 Montar la válvula reguladora de presión BFM 1013:
Comprimir el resorte de presión y colocar el plato de retención.

Nota: Prestar atención a la colocación correcta del plato de retención.

7. Montar el retén mediante el dispositivo de montaje.

Nota: Antes de montar, aplicar al retén lubricante exento de agua.

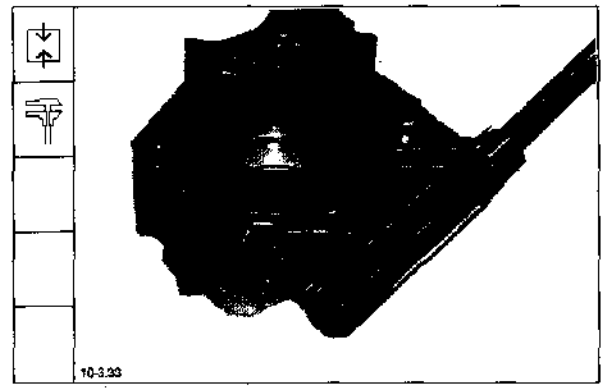

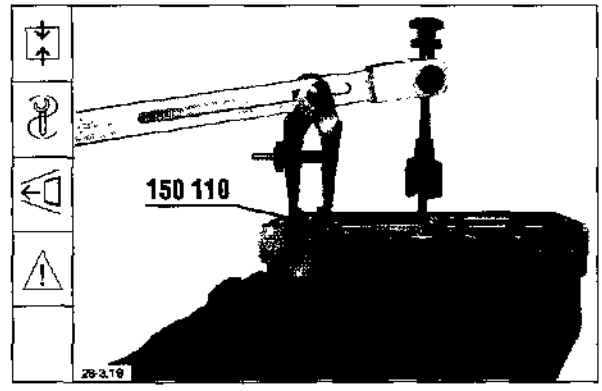

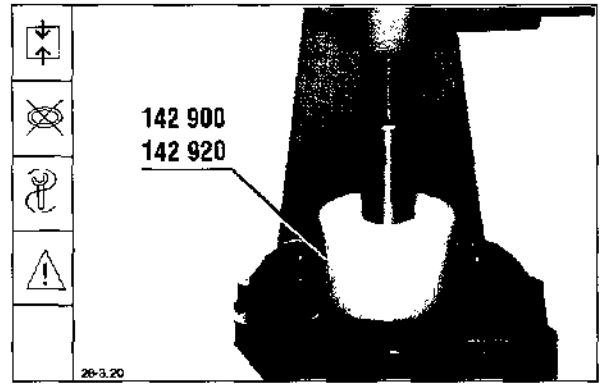

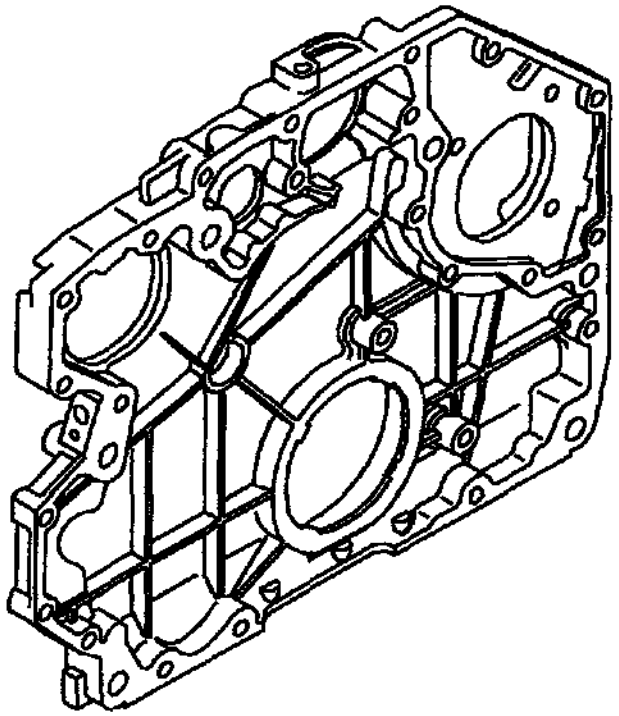

English

Special tool required:

Assembly tool
BFM 1012 _____ 142 890
BFM 1013 _____ 142 910

1. Drive out shaft seal.

2. Press out cover.

Note: *Watch out for spacer sleeves.*

3. Remove speed sensor if any.

Español

Herramientas especiales:

Herramienta de montaje
BFM 1012 _____ 142 890
BFM 1013 _____ 142 910

1. Expulsar el retén.

2. Expulsar la tapa de cierre.

Nota: *Prestar atención a los casquillos distanciadores.*

3. Desmontar el tacogenerador, si lo hay.

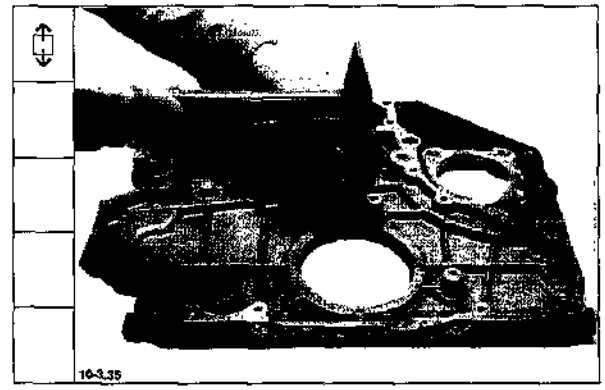

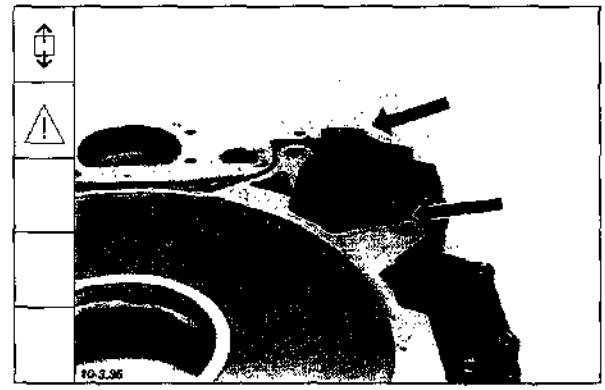

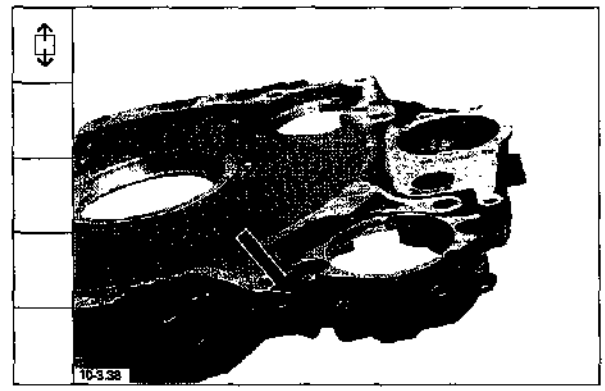

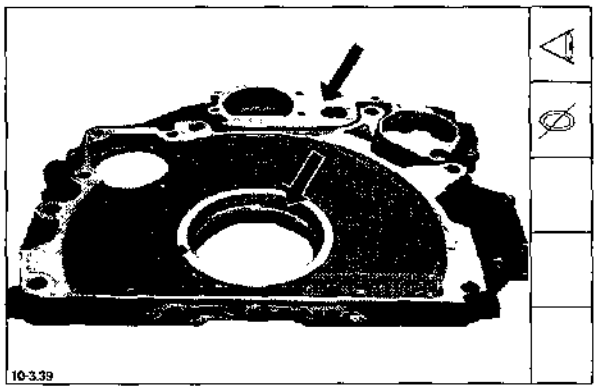

English

4. Inspect timing chest, replace if necessary.

Español

4. Examinar visualmente el cárter de la distribución, sustituyéndolo por otro nuevo en caso necesario.

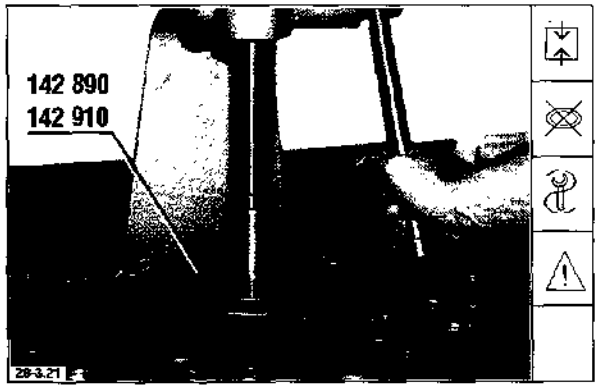

5. Fit shaft seal with assembly tool.

Note: Prior to assembly apply dehydrated lubricant onto shaft seal.

5. Montar el retén, utilizando el dispositivo de montaje.

Nota: El retén debe untarse con lubricante exento de agua antes del montaje.

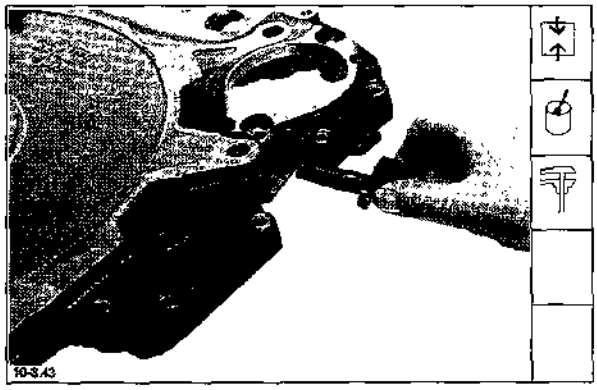

6. Install speed sensor, if any. Tighten bolt with a torque of **9 ± 1 Nm**.

6. Si existe, montar el tacogenerador. Apretar el tornillo con un par de **9 ± 1 Nm**.

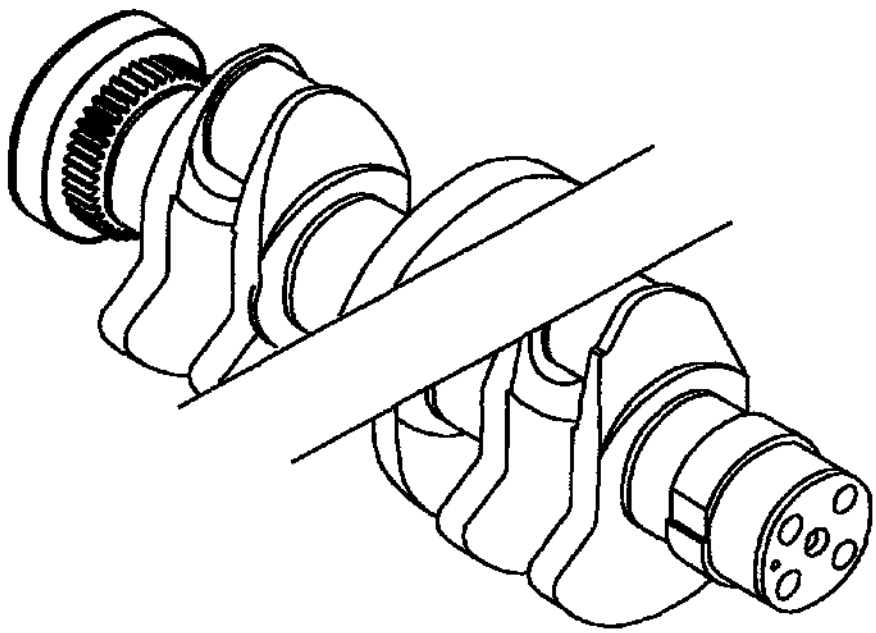

English

BFM 1012 crankshaft

1. Chuck crankshaft up on prism stand.

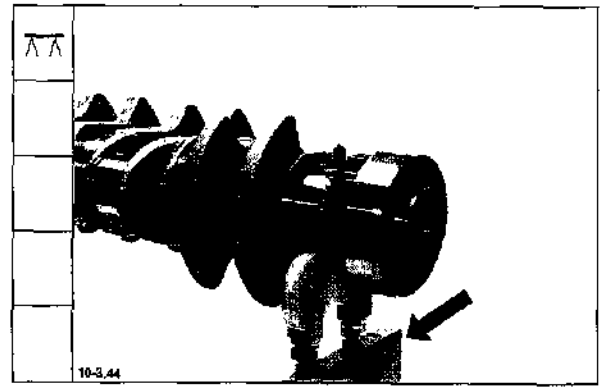

2. Schematic for gauging main bearing journals at points „1" and „2" in planes „a" and „b".

Journal diameter	**74.00**$^{0}_{-0.02}$	**mm**
Each undersiz	**0.25**	**mm**
Limit for undersize	**73.50**$^{0}_{-0.02}$	**mm**
Wear limit:		
Journal ovality	**0.01**	**mm**

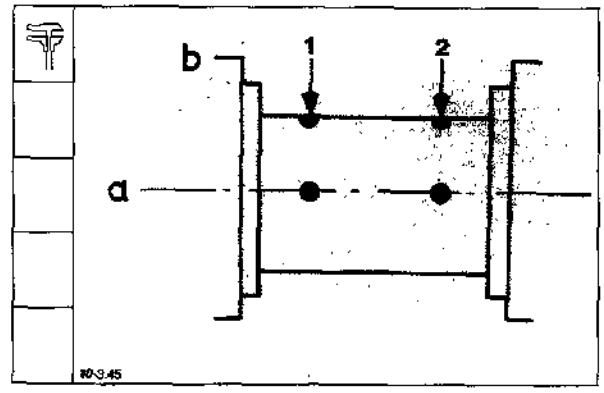

3. Gauge thrust bearing journal width.

Journal width	**36.00**$^{+0.04}$	**mm**
1st oversize stage	**0.4**	**mm**
Limit for oversize	**36.44**	**mm**

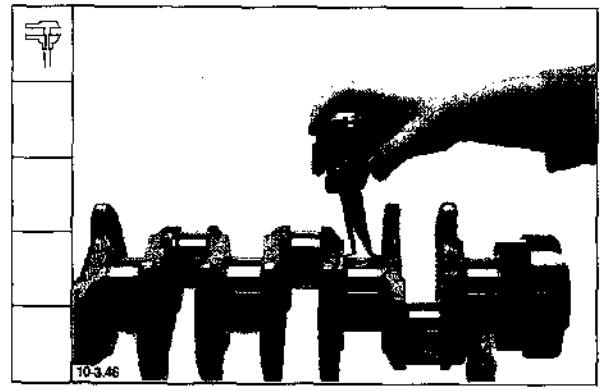

4. Gauge crankpins.

Crankpin diameter	**58.00**$^{0}_{-0.02}$	**mm**
Each undersize	**0.25**	**mm**
Limit for undersize	**57.50**$^{0}_{-0.02}$	**mm**
Wear limit:		
Crankpin ovality	**0.01**	**mm**

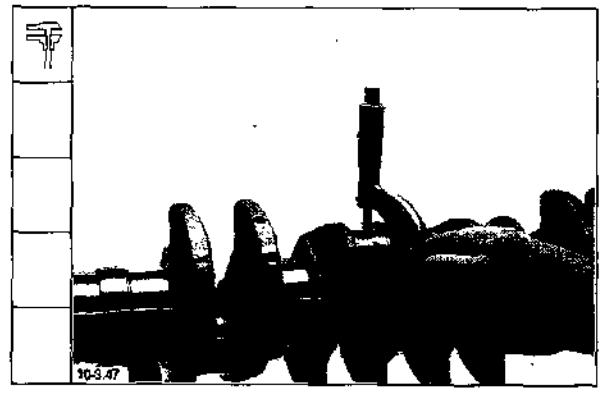

Español

Cigüeñal BFM 1012

1. *Colocar el cigüeñal sobre soportes* prismáticos.

2. Esquema para verificar las medidas de los muñones de apoyo en los *puntos „1" y „2" y en los planos* „a" y „b".

Diámetro de muñón	**74,00**$^{0}_{-0,02}$	**mm**
Cada inframedida	**0,25**	**mm**
Límite de inframedida	**73,50**$^{0}_{-0,02}$	**mm**
Límite de desgaste:		
Ovalización de muñón	**0,01**	**mm**

3. Medir el ancho del muñón del cojinete de empuje.

Ancho de muñón	**36,00**$^{+0.04}$	**mm**
1ª sobremedida	**0,4**	**mm**
Límite de sobrem edida	**36,44**	**mm**

4. Medir las muñequillas.

Diámetro de muñequilla	**58,00**$^{0}_{-0,02}$	**mm**
Cada inframedida	**0,25**	**mm**
Límite de inframedida	**57,50**$^{0}_{-0,02}$	**mm**
Límite de desgaste:		
Ovalización de muñequilla	**0,01**	**mm**

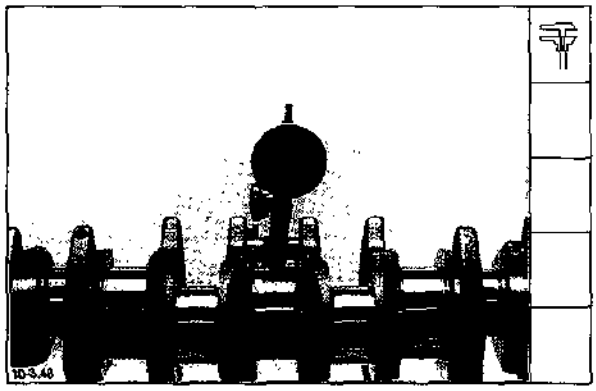

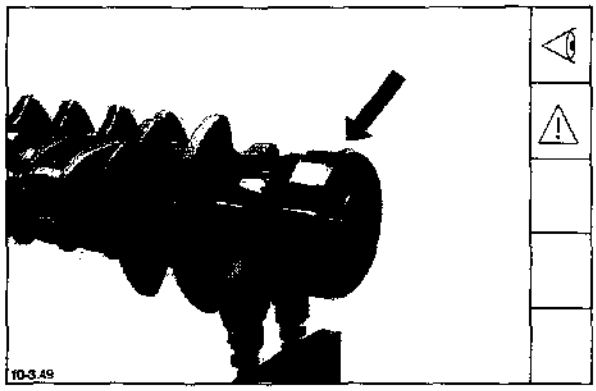

English

5. Check crankshaft for true running.

   Out of roundness max.:
   BF4M = **0.07 mm**
   BF6M = **0.10 mm**

6. Inspect running surfaces of shaft seals.

Note: If the crankshaft is worn, it is possible to purchase an exchange crankshaft from our service centers or to have it repaired.

Español

5. Verificar el giro en redondo del cigüeñal.

   Diferencia máx.:
   BF4M = **0,07 mm**
   BF6M = **0,10 mm**

6. Examinar visualmente las superficies de roce de los retenes del cigüeñal.

Nota: Si el cigüeñal está desgastado, existe la posibilidad de adquirir un cigüeñal reacondicionado o de hacerlo reparar en uno de nuestros Centros de Servicio.

English

BFM 1013 crankshaft

1. Chuck crankshaft up on prism stand.

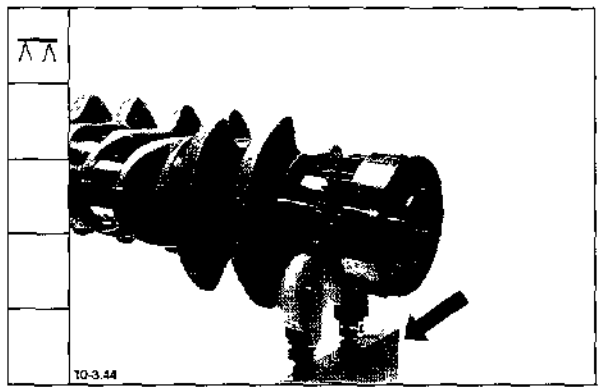

2. Schematic for gauging main bearing journals at points „1" and „2" in planes „a" and „b".

Journal diameter	**85.00** $^{0}_{-0.02}$	**mm**
Each undersize	**0.25**	**mm**
Limit for undersize	**84.50** $^{0}_{-0.02}$	**mm**
Wear limit:		
Journal ovality	**0.01**	**mm**

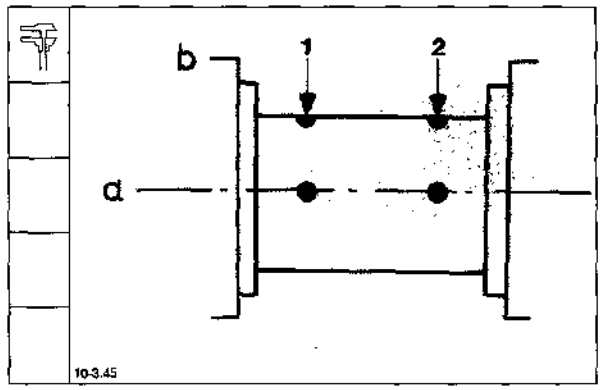

3. Gauge thrust bearing journal width.

Journal width	**38.00** $^{+0.05}$	**mm**
1st oversize stage	**0.4**	**mm**
Limit for oversize	**38.46**	**mm**

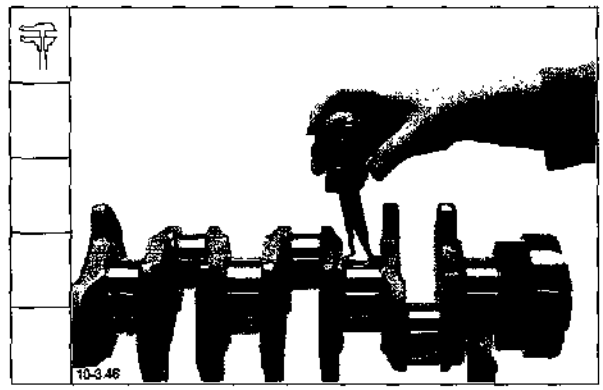

4. Gauge crankpins.

Crankpin diameter	**68.00** $^{0}_{-0.02}$	**mm**
Each undersize	**0.25**	**mm**
Limit for undersize	**67.50** $^{0}_{-0.02}$	**mm**
Wear limit:		
Crankpin ovality	**0.01**	**mm**

Español

Cigüeñal BFM 1013

1. Colocar el cigüeñal sobre soportes prismáticos.

2. Esquema para verificar las medidas de los muñones de apoyo en los puntos „1" y „2" y en los planos „a" y „b".

Diámetro de muñón	**85,00** $^{0}_{-0.02}$	**mm**
Cada inframedida	**0,25**	**mm**
Límite de inframedida	**84,50** $^{0}_{-0.02}$	**mm**
Límite de desgaste:		
Ovalización de muñón	**0,01**	**mm**

3. Medir el ancho del muñón del cojinete de empuje.

Ancho de muñón	**38,00** $^{+0.05}$	**mm**
1ª sobremedida	**0,4**	**mm**
Límite de sobremedida	**38,46**	**mm**

4. Medir las muñequillas.

Diámetro de muñequilla	**68,00** $^{0}_{-0.02}$	**mm**
Cada inframedida	**0,25**	**mm**
Límite de inframedida	**67,50** $^{0}_{-0.02}$	**mm**
Límite de desgaste:		
Ovalización de muñequilla	**0,01**	**mm**

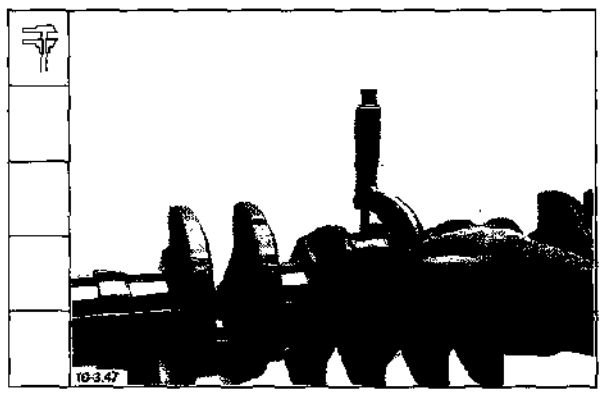

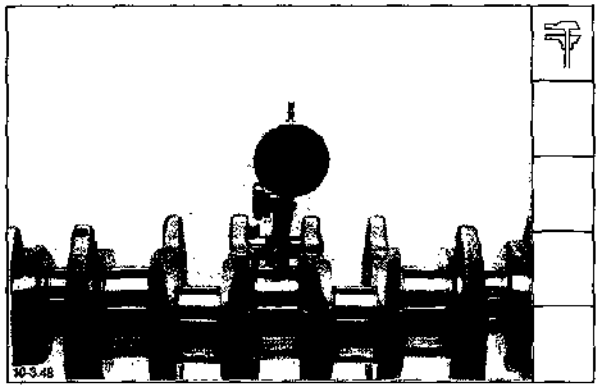

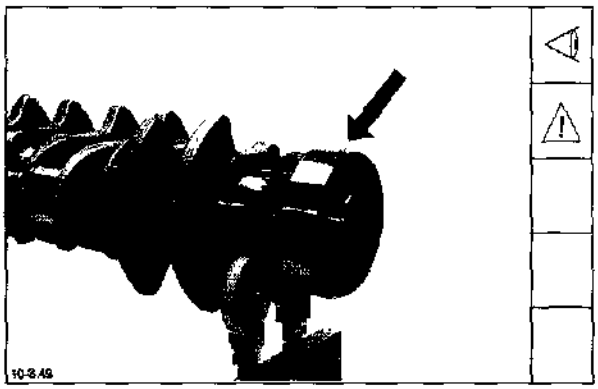

English

5. Check crankshaft for true running.

   Out of roundness max.:
   BF4M = **0.07 mm**
   BF6M = **0.10 mm**

6. Inspect running surfaces of shaft seals.

Note: If the crankshaft is worn, it is possible to purchase an exchange crankshaft from our service centers or to have it repaired.

Español

5. Verificar el giro en redondo del cigüeñal.

   Diferencia máx.:
   BF4M = **0,07 mm**
   BF6M = **0,10 mm**

6. Examinar visualmente las superficies de roce de los retenes del cigüeñal.

Nota: Si el cigüeñal está desgastado, existe la posibilidad de adquirir un cigüeñal reacondicionado o de hacerlo reparar en uno de nuestros Centros de Servicio.

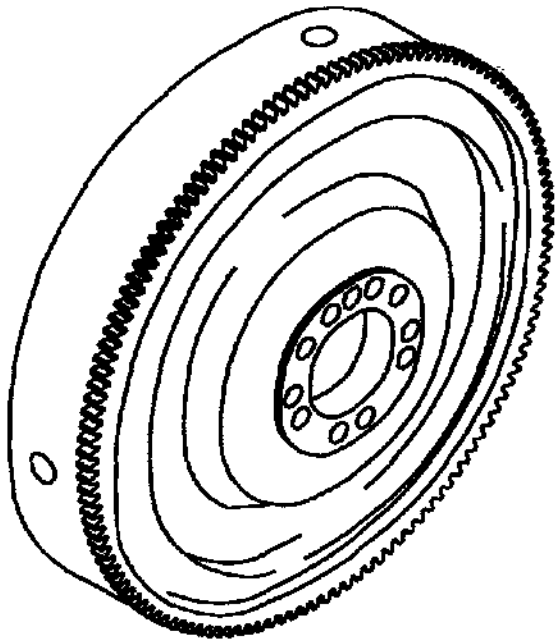

English

1. Drill ring gear apart.

Note: *Make sure not to damage* flywheel.

Español

1. Abrir taladrando la corona dentada.

Nota: *Cuidar de no dañar el volante.*

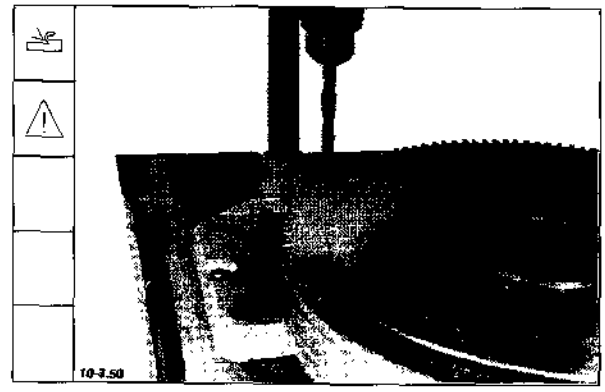

2. Remove ring gear.

2. Quitar la corona.

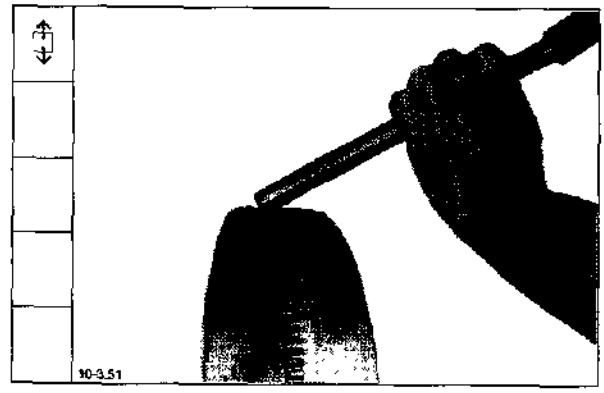

3. Clean flywheel and inspect at supporting flange.

3. Limpiar el volante y examinar visualmente el reborde de apoyo.

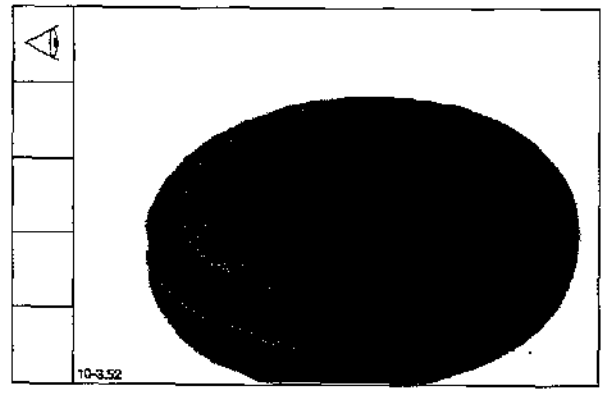

4. Heat ring gear to max. **210°C**. Place ring gear in position and bring to stop at flange.

4. Calentar la corona a **210°C** como máximo. Colocarla en su sitio, dejándola asentada en el reborde.

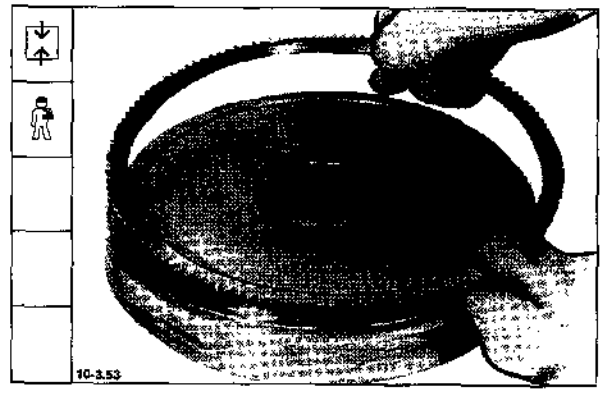

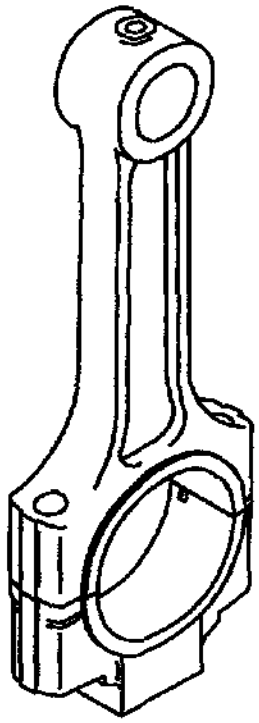

English

Special tool required:

Assembly tool for small end bush

BFM 1012 _____ 131 070
BFM 1013 _____ 131 090

1. Set internal dial gauge:

   BFM 1012 to **34 mm** dia.
   BFM 1013 to **42 mm** dia.

2. Gauge small end bush at points „1" and „2" in planes „a" and „b".

3. Gauge.

   Small end bush pressed in
   Specified value
   BFM 1012 **$34^{+0.035}_{+0.025}$ mm**
   BFM 1013 **$42^{+0.05}_{+0.04}$ mm**

   Wear limit:
   Small end bush clearance **0.08mm**

4. Replace small end bush if necessary.

   Bore for small end bush:
   BFM 1012 = **37 + 0.02 mm**
   BFM 1013 = **45.5 + 0.02 mm**

   Small end bush Outer diameter:

   BFM 1012 **$37^{+0.11}_{+0.07}$ mm**
   BFM 1013 **$45.5^{+0.12}_{+0.08}$ mm**

Español

Herramientas especiales:

Herramienta de montaje para
casquillos de pie de biela
BFM 1012 _____ 131 070
BFM 1013 _____ 131 090

1. Ajustar el micrómetro de interiores

   BFM 1012 a **34 mm**
   BFM 1013 a **42 mm**

2. Verificar las medidas del casquillo de pie de biela en los puntos „1" y „2" de los planos „a" y „b".

3. Verificación.

   Casquillo de pie de biela
   introducido a presión
   Valor teórico:
   BFM 1012 **$34^{+0.035}_{+0.025}$ mm**
   BFM 1013 **$42^{+0.05}_{+0.04}$ mm**

   Límite de desgaste:
   Juego del bulón **0,08 mm**

4. Reemplazar el casquillo de pie de biela, si es necesario.

   Alojamiento para casquillo de pie de biela:
   BFM 1012 **37 + 0,02 mm**
   BFM 1013 **45,5 + 0,02 mm**
   Casquillo de pie de biela diámetro exterior:
   BFM 1012 **$37^{+0.11}_{+0.07}$ mm**
   BFM 1013 **$45,5^{+0.12}_{+0.08}$ mm**

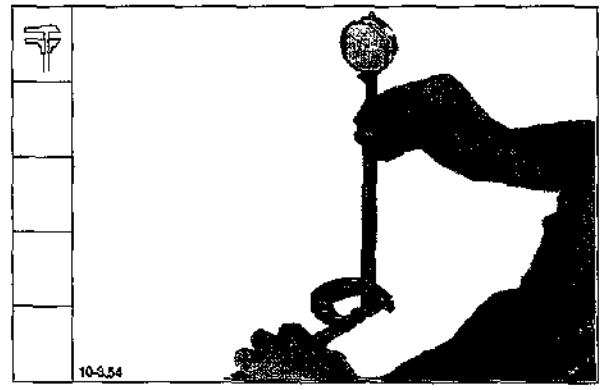

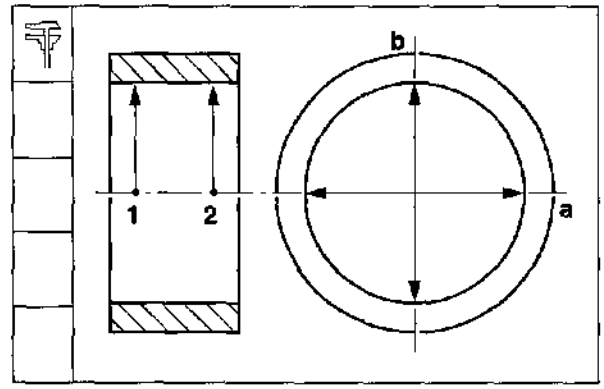

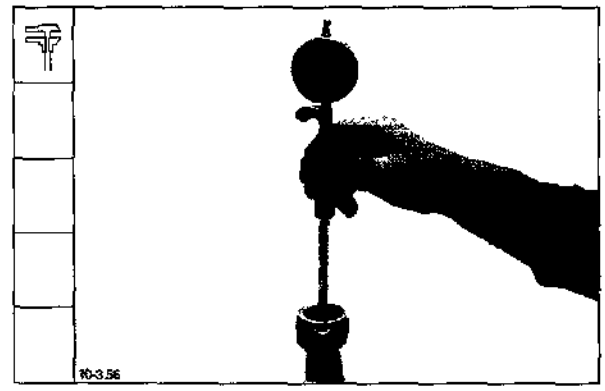

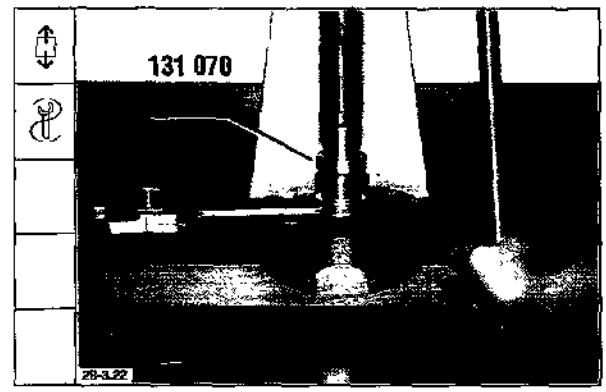

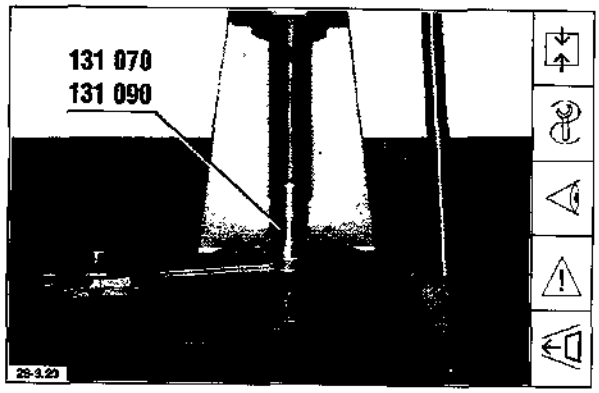

English

5. Press in small end bush flush.

Note: Lube oil bores of small end bush and connecting rod must be in line.

Español

5. Insertar a ras el casquillo de pie de biela.

Nota: Deben coincidir los orificios de lubricación del casquillo de pie de biela y de la biela.

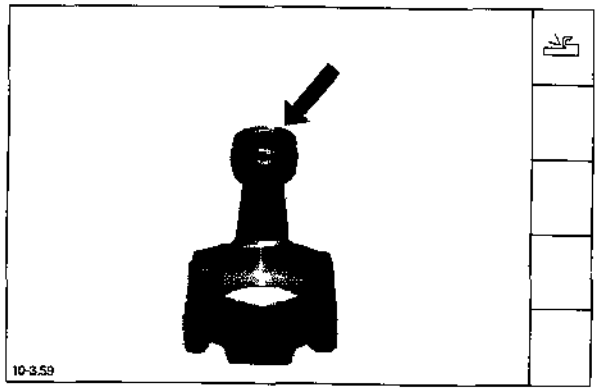

6. After pressing in, precision-bore small end bush on a fine boring mill.

BFM 1012 to	$34^{+0.035}_{+0.025}$ mm
BFM 1013 to	$42^{+0.05}_{+0.04}$ mm

6. Una vez insertado, mecanizar el casquillo de pie de biela en mandrinadora de precisión.

BFM 1012 a	$34^{+0.035}_{+0.025}$ mm
BFM 1013 a	$42^{+0.05}_{+0.04}$ mm

7. Make sure that cap mates with connecting rod.

Note: Make sure that dowel pins are fitted.

7. Elegir la tapa de biela que corresponda.

Nota: Los pasadores de sujeción deben estar en su sitio.

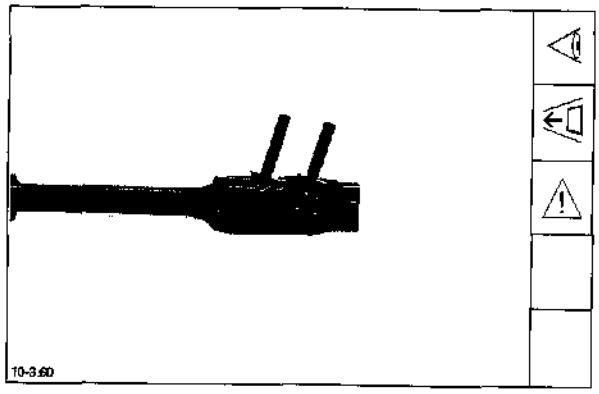

8. Mount bearing cap. Tighten bolts in accordance with specification.

Initial tightening torque:	**30 Nm**
1st tightening angle	**60°**
2nd tightening angle	
BFM 1012	**30°**
BFM 1013	**60°**

8. Montar la tapa de biela. Apretar los tornillos según prescripción.

Apriete inicial:	**30 Nm**
1er ángulo de reapriete	**60°**
2do ángulo de reapriete	
BFM 1012	**30°**
BFM 1013	**60°**

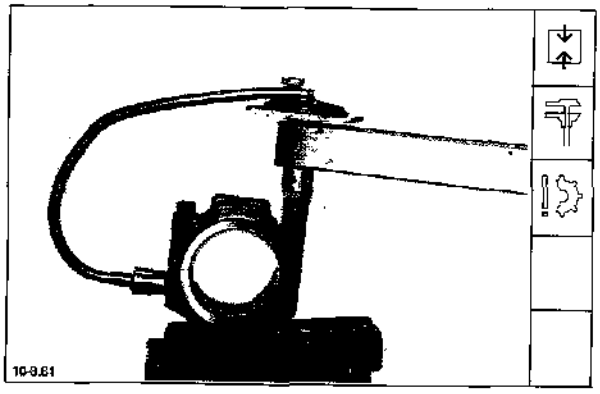

English

9. Set internal dial gauge:
   BFM 1012 to dia. **61.6 mm**
   BFM 1013 to dia. **72.5 mm**

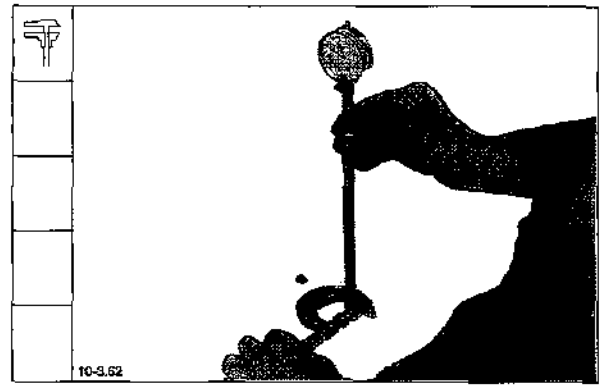

10. Schematic for gauging big end bearing bore at points „1" and „2" in planes „a" and „b".

    Bore for big end bearing:
    BFM 1012 **61.6 + 0.02 mm**
    BFM 1013 **72.5 + 0.02 mm**

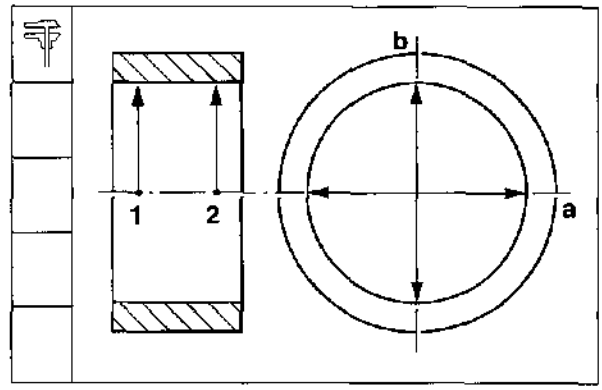

11. If the gauge readings conform to the specified values, the necessary preload will be obtained after fitting the bearing shells.

Note: If the measured values deviate only slightly, additional measurements are to be carried out with new bearing shells fitted.

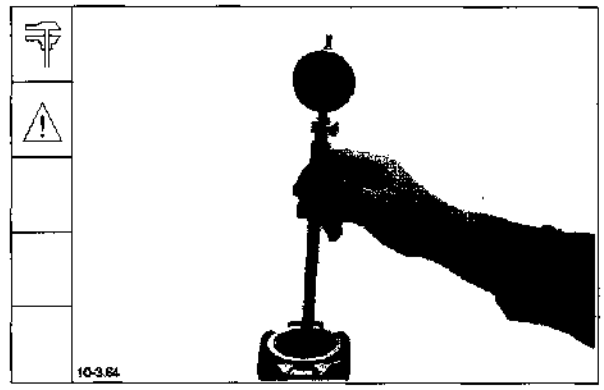

12. Remove bearing cap and fit new bearing shells. Refit bearing cap. Tighten nuts in accordance with specification.

    Initial tightening torque: **30 Nm**
    1st tightening angle **60°**
    2nd tightening angle
    BFM 1012 **30°**
    BFM 1013 **60°**

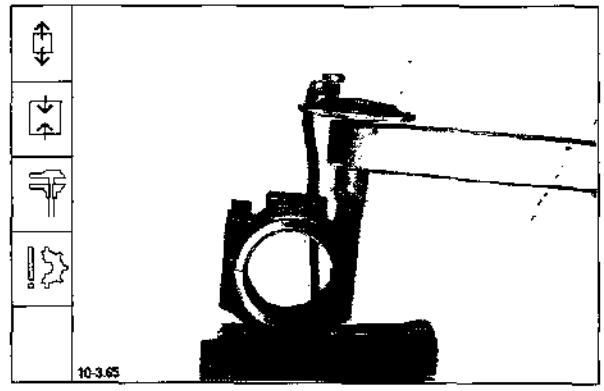

Español

9. Ajustar el micrómetro de interiores.
   BFM 1012 a **61,6 mm**
   BFM 1013 a **72,5 mm**

10. Esquema de medición del alojamiento de los cojinetes de cabeza de biela, en los puntos „1" y „2" de los planos „a" y „b".

    Alojamiento para cojinetes:
    BFM 1012 **61,6 + 0,02 mm**
    BFM 1013 **72,5 + 0,02 mm**

11. Si los valores medidos corresponden a los especificados, los cojinetes tendrán la pretensión necesaria después del montaje.

Nota: Si, en cambio, los valores medidos sólo difieren de forma insignificante, se requieren mediciones adicionales con semicojinetes nuevos.

12. Desmontar la tapa de biela e introducir los semicojinetes nuevos. Volver a montar la tapa de biela. Apretar los tornillos según prescripción.

    Apriete inicial: **30 Nm**
    1er ángulo de reapriete **60°**
    2° ángulo de reapriete
    BFM 1012 **30°**
    BFM 1013 **60°**

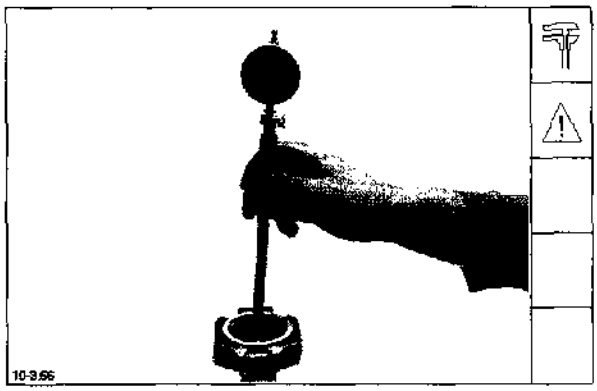

English

13. Set internal dial gauge. Gauge bearing shells at points „1" and „2" in planes „a" and „b".

Big end bearing shells
Inner diameter:
BFM 1012 **58.03-58.07 mm**
BFM 1013 **68.036-68.076 mm**
Each undersize **0.25 mm**

Limit forundersize:
BFM 1012 **57.78-57.82 mm**
BFM 1013 **67.536-67.576 mm**

Wear limit:
Clearance of big end bearing
0.12 mm

Note: If the readings do not exceed bearing tolerances by more than **0.015 mm**, the rod can be used further. If the limit value is exceeded, replace the connecting rod.

14. Check connecting rod without bearing shells on connecting rod tester.

14.1 Parallelism check:

Permissible tolerance a = **0.05 mm**
over a distance of x = **100 mm**

14.2 Squareness check:

Permissible tolerance „A" relative to „B" = **0.05 mm** over a distance of x = **100 mm**

Español

13. Ajustar el micrómetro de interiores. Verificar las medidas de los semicojinetes en los puntos „1" y „2" de los planos „a" y „b".

Semicojinetes de biela,
diámetro interior
BFM 1012 **58,03 - 58,07 mm**
BFM 1013 **68,036 - 68,076 mm**
Cada inframedida **0,25 mm**

Límite de inframedida:
BFM 1012 **57,78 - 57,82 mm**
BFM 1013 **67,536 - 67,576 mm**

Límite de desgaste:
Juego de cojinete de cabeza de biela **0,12 mm**

Nota: Si los valores medidos no sobrepasan las tolerancias de cojinete en más de **0,015 mm**, la biela puede seguir utilizándose. En caso contrario, reemplazar biela.

14. Comprobar la biela desprovista de los semicojinetes sobre un aparato para la comprobación de bielas:

14.1 Prueba del paralelismo:

Diferencia admisible a = **0,05 mm**
con una distancia de x = **100 mm**

14.2 Prueba de la perpendicularidad:

Diferencia admisible „A" con respecto a „B" = **0,05 mm**
con una distancia de x = **100 mm**

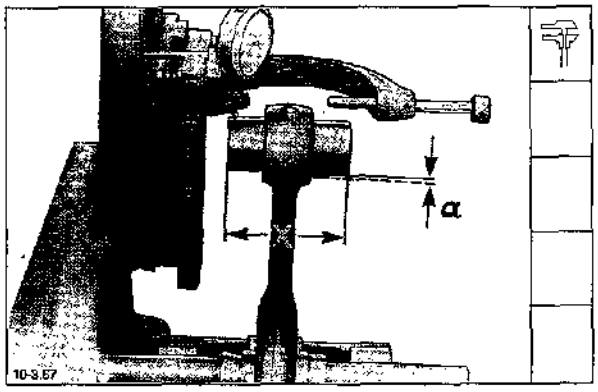

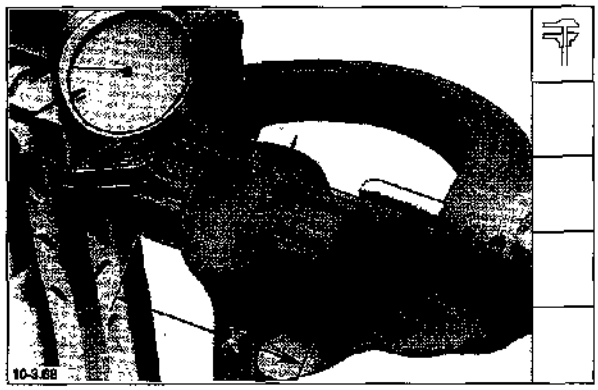

English

Assembling connecting rod with piston

15. Bring one circlip into correct position and fit.
See note.

BFM 1012 piston

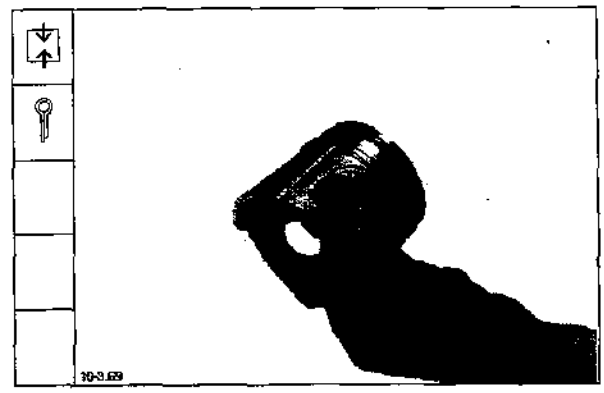

BFM 1013 piston

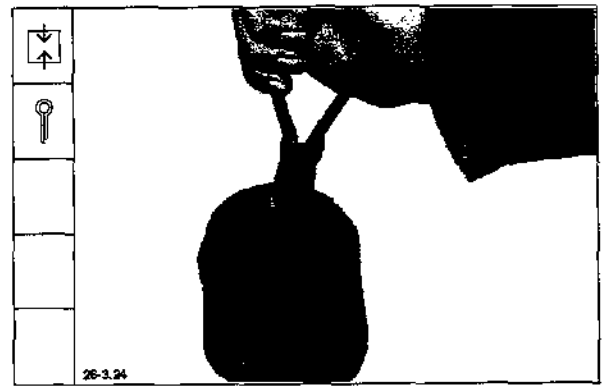

Note: Ring gaps of circlips must face towards piston crown.

16. Install piston together with connecting rod. Flywheel symbol on the piston and dowel pins of the connecting rod must be located on the same side.

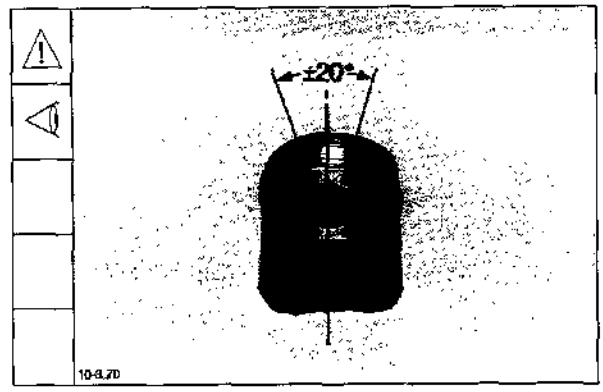

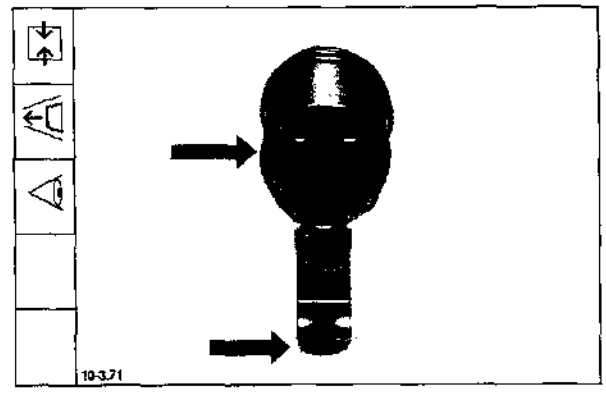

Español

Unión de la biela y pistón

15. Orientar uno de los anillos de retención en la posición en que se monte e introducirlo.
Ver la nota.

Pistón BFM 1012

Pistón BFM 1013

Nota: Los cortes de los anillos de retención deben indicar hacia la cabeza del pistón.

16. Unir el pistón con la biela. El símbolo del volante que figura en el pistón, y los pasadores de ajuste de la biela deben encontrarse en el mismo lado.

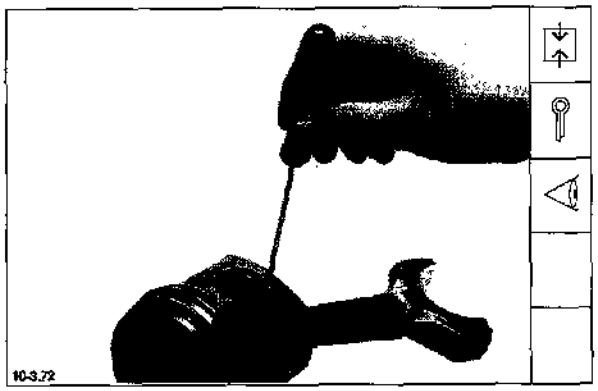

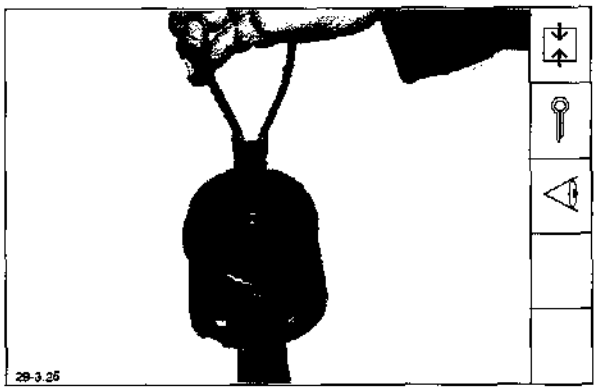

English

17. Bring second circlip into correct position and fit.

BFM 1012 piston

BFM 1013 piston

Español

17. Orientar el segundo anillo de retención e introducirlo.

Pistón BFM 1012

Pistón BFM 1013

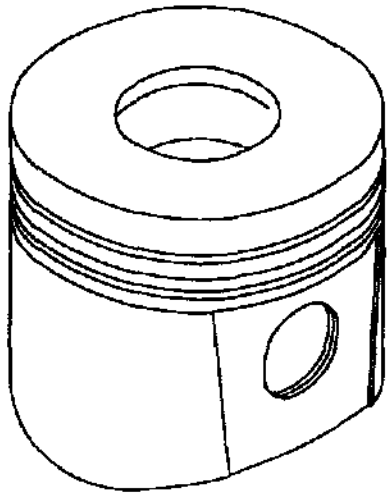

English

Special tools required:

Piston ring pliers: _____ 130 300
Disassembly tool for
piston pin circlip BFM 1012 _ 131 080

BFM 1012

1. Remove circlip with auxiliary tool. Take out piston pin.

Note: Risk of injury when not using auxiliary tool.

BFM 1013

1.1 Remove circlip. Take out piston pin.

2. Adjust piston ring pliers to piston diameter. Remove piston rings.

Español

Herramientas especiales:

Alicates para montar
aros de pistón _____ 130 300
Herramienta para desmontar
el anillo de retención del
bulón de pistón BFM 1012 __ 131 080

BFM 1012

1. Utilizando la herramienta auxiliar, retirar el anillo de retención. Sacar el bulón del pistón.

Nota: Si no se utiliza la herramienta auxiliar, se corre el riesgo de lesionarse.

BFM 1013

1.1 Retirar el anillo de retención. Sacar el bulón del pistón.

2. Ajustar los alicates para aros de pistón al diámetro del pistón. Desmontar los aros.

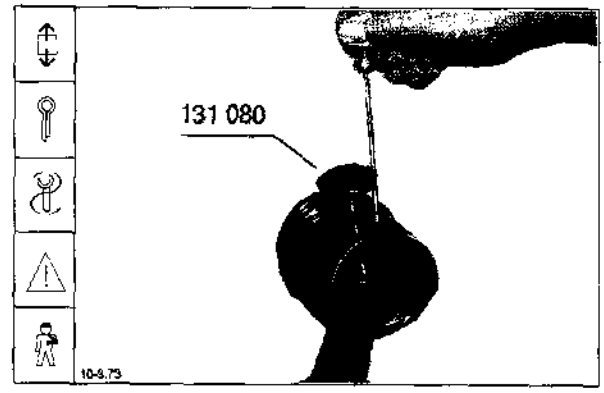

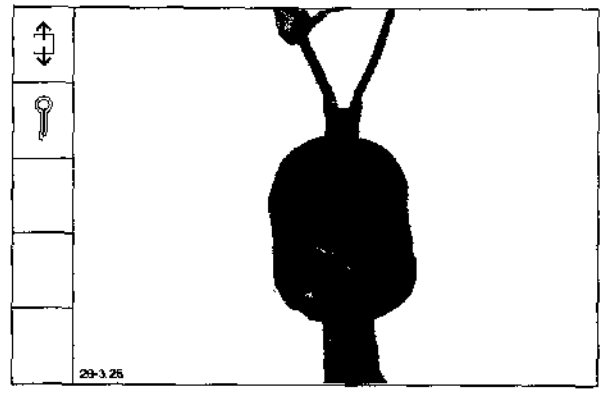

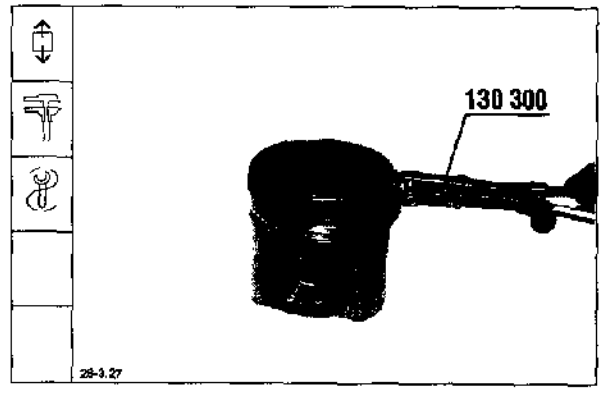

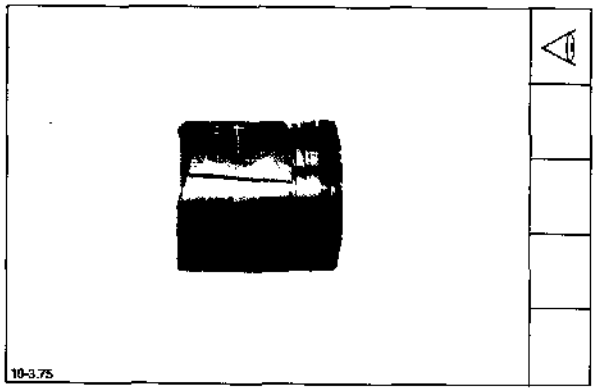

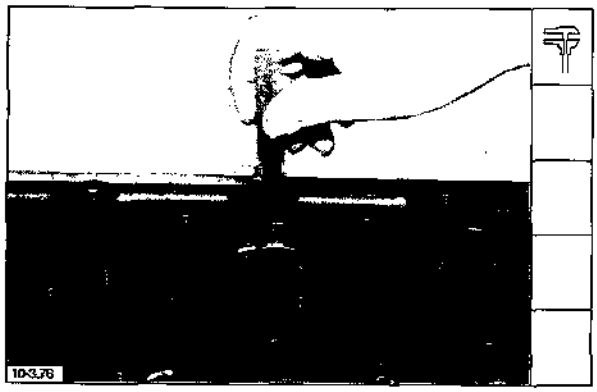

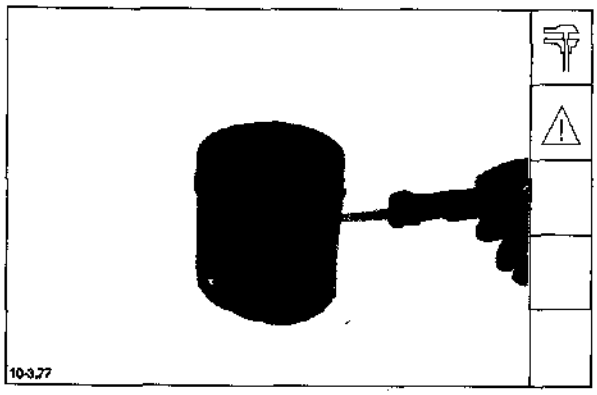

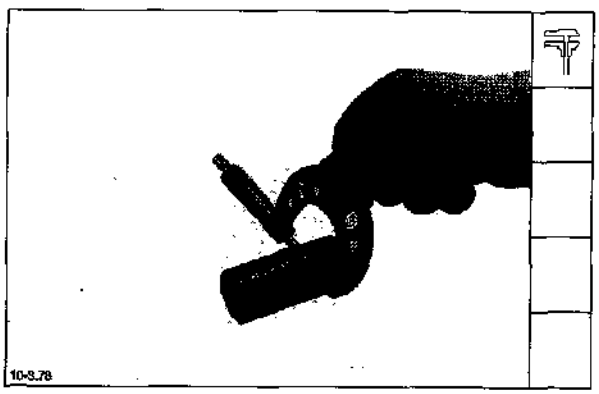

English

3. Clean and inspect piston and ring grooves.

4. Measure ring gap with feeler gauge.

   Wear limits BFM 1012:

1st ring gap	**0.8 mm**
2nd ring gap	**2,5 mm**
3rd ring gap	**1.15 mm**

   Wear limits BFM 1013:

1st ring gap	**0.8 mm**
2nd ring gap	**2.5 mm**
3rd ring gap	**1.15 mm**

5. Measure ring grooves with feeler gauge.

   Note: Measurement to be made with new piston rings.

   Wear limits:

axial play 1st ring	**keystone groove**
axial play 2nd ring	**0.17 mm**
axial play 3rd ring	**0.10 mm**

6. Check piston pin for wear.

   Piston pin diameter:

BFM 1012	**34 - 0.006 mm**
BFM 1013	**42 - 0.006 mm**

Español

3. Limpiar y examinar visualmente el pistón y las ranuras para los aros.

4. Medir la distancia entre las puntas de los aros con una galga de espesores.

   Límites de desgaste BFM 1012:

distancia 1er aro	**0,8 mm**
distancia 2º aro	**2,5 mm**
distancia 3er aro	**1,15 mm**

   Límites de desgaste BFM 1013:

distancia 1er aro	**0,8 mm**
distancia 2º aro	**2,5 mm**
distancia 3er aro	**1,15 m**

5. Medir las ranuras para aros mediante una galga de espesores.

   Nota: Realizar la medición con aros nuevos.

   Límites de desgaste:

juego axial 1er aro	**ranura de doble cuña**
juego axial 2º aro	**0,17 mm**
juego axial 3er aro	**0,10 mm**

6. Verificar el bulón del pistón en cuanto a desgaste.

   Diámetro de bulón:

BFM 1012	**34 - 0,006 mm**
BFM 1013	**42 - 0,006 mm**

English

7. *Order and position of piston rings:*

   1. keystone ring, top facing combustion chamber
   2. tapered compression ring, top facing combustion chamber
   3. bevelled-edge slotted oil control ring

8. Fit piston rings.

Note: Spring gap of bevelled-edge ring to be offset by **180°** relative to ring gap.

Español

7. *Orden de sucesión y posición de* los aros de pistón:

   1. Aro de doble cuña, con „TOP" indicando hacia la cámara de combustión
   2. Aro con bisel de pequeñoángulo. con „TOP" indicando hacia la cámara de combustión.
   3. Aro ranurado de aceite con chaflán

8. Montar los aros de pistón.

Nota: Desplazar el corte del muelle del aro achaflanado ranurado de aceite por **180°** con respecto al corte del aro.

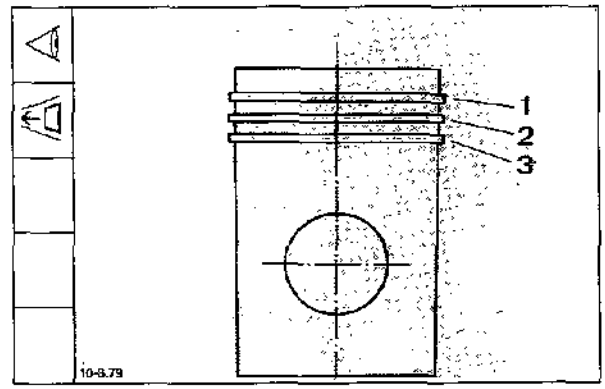

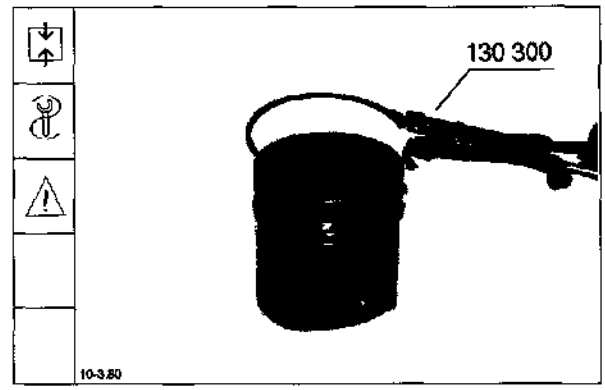

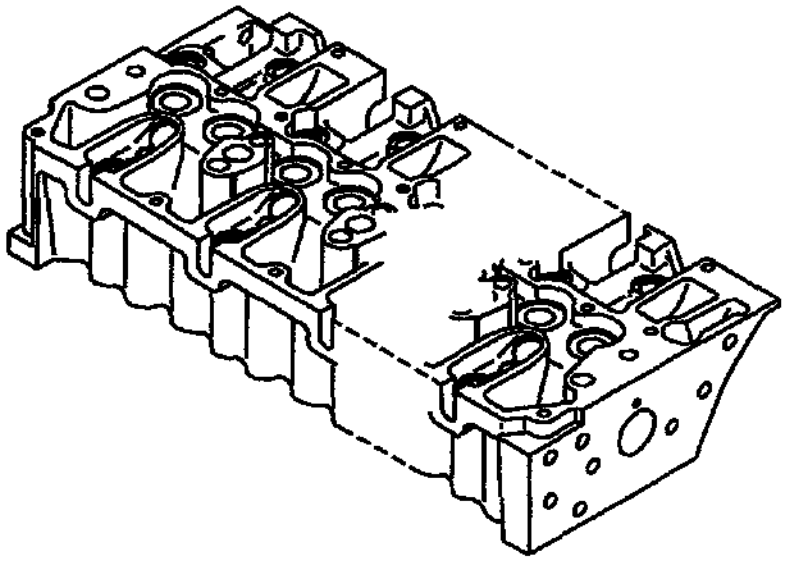

English

Commercial tools required:

Magnetic measuring stand
Valve spring assembly lever ____ 9017
Valve reseating tool

Special tools required:

Clamping stand _____ 120 900
Clamping plate _____ 120 910

1. Mount cylinder head on fixture.

2. Unscrew blanking parts or pencil-type glow plugs if any.

Español

Herramientas comerciales:

Soporte magnético de medición
Palanca para montaje de resortes de válvula _____ 9017
Aparato de rectificado de asientos de válvula

Herramientas especiales:

Soporte de fijación _____ 120 900
Placa de fijación _____ 120 910

1. Montar la culata en el dispositivo.

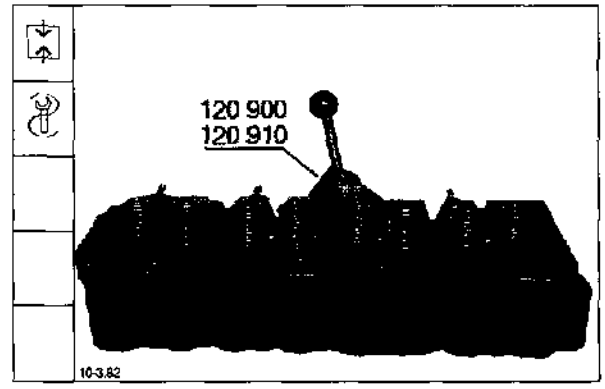

2. Desenroscar las piezas de cierre o, si existen, las bujías de espiga de incandescencia.

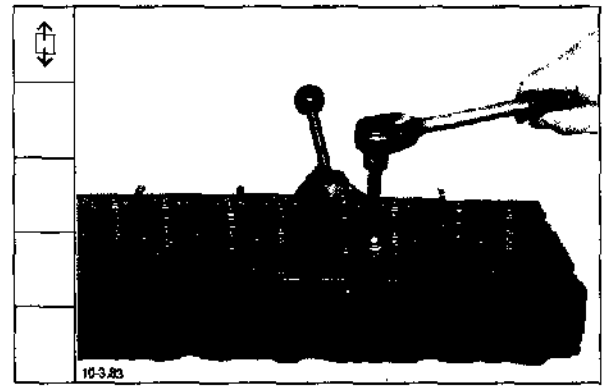

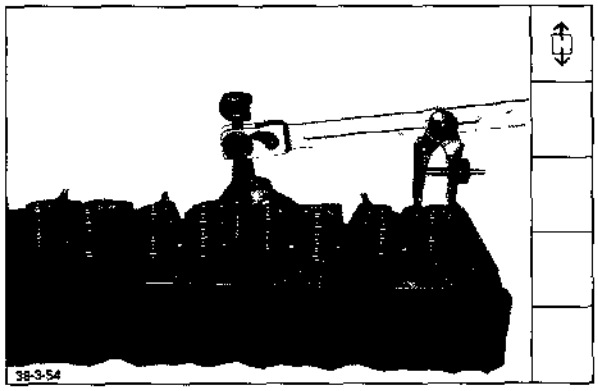

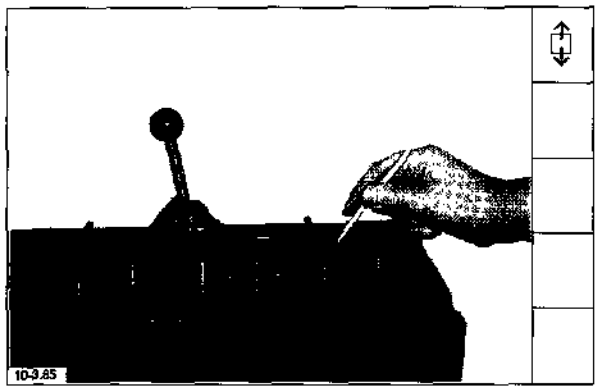

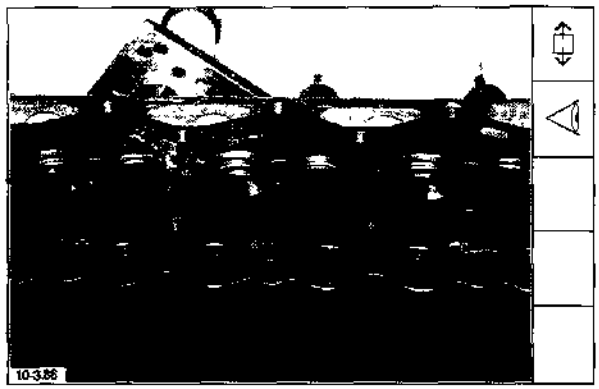

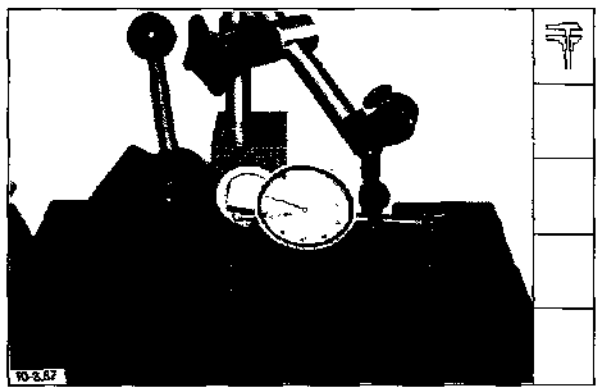

English

3. Remove cone clamp, valve spring cap, valve springs and valves.

4. Remove valve stem seal.

5. Clean cylinder head and inspect for damage.

6. Gauge valve stem clearance.

   Wear limits:

Inlet valve	**0.10 mm**
Exhaust valve	**0.13 mm**

Español

3. Desmontar los semiconos, los platillos de retención de resorte, los resortes y las válvulas.

4. Desmontar la junta del vástago de válvula.

5. Limpiar la culata e inspeccionarla por si hay deterioros.

6. Verificar el huelgo entre el vástago y guía de válvula.

   Límites de desgaste:

Válvula de admisión	**0,10 mm**
Válvula de escape	**0,13 mm**

English

7. Inspect valves and gauge them.

Valve stem diameter: standard

Inlet valve
BFM 1012 **7.98 - 0.015 mm**
BFM 1013 **8.98 - 0.015 mm**

Exhaust valve
BFM 1012 **7.96 - 0.015 mm**
BFM 1013 **8.96 - 0.015 mm**

7.1 Valve rim thickness

Wear limits:
Inlet valve
BFM 1012 **1.8 mm**
BFM 1013 **2.1 mm**
Exhaust valve
BFM 1012 **1.1 mm**
BFM 1013 **1.8 mm**

7.2 Valve disc diameter

Inlet valve
BFM 1012 **41.7 ± 0.1 mm**
BFM 1013 **48.0 ± 0.1 mm**
Exhaust valve
BFM 1012 **35.9 ± 0.1 mm**
BFM 1013 **42.0 ± 0.1 mm**

8. Inspect valve seat inserts and check wear tolerances.

Wear limit of valve, seat width:

Inlet valve
BFM 1012 **2.7 mm**
BFM 1013 **2.8 mm**
Exhaust valve
BFM 1012 **2.1 mm**
BFM 1013 **2.2 mm**

Español

7. Examinar visualmente las válvulas y comprobar sus medidas.

Diámetro del vástago de válvula: normal

Válvula de admisión
BFM 1012 **7,98 - 0,015 mm**
BFM 1013 **8,98 - 0,015 mm**
Válvula de escape
BFM 1012 **7,96 - 0,015 mm**
BFM 1013 **8,96 - 0,015 mm**

7.1 Espesor de borde de la válvula

Límites de desgaste:
Válvula de admisión
BFM 1012 **1,8 mm**
BFM 1013 **2,1 mm**
Válvula de escape
BFM 1012 **1,1 mm**
BFM 1013 **1,8 mm**

7.2 Diámetro de la cabeza de válvula

Válvula de admisión
BFM 1012 **41,7 ± 0,1 mm**
BMF 1013 **48,0 ± 0,1 mm**
Válvula de escape
BFM 1012 **35,9 ± 0,1 mm**
BFM 1013 **42,0 ± 0,1 mm**

8. Examinar visualmente los asientos de válvula. Verificar las medidas de desgaste.

Ancho de asiento, límite de des gaste:
Válvula de admisión
BFM 1012 **2,7 mm**
BFM 1013 **2,8 mm**
Válvula de escape
BFM 1012 **2,1 mm**
BFM 1013 **2,2 mm**

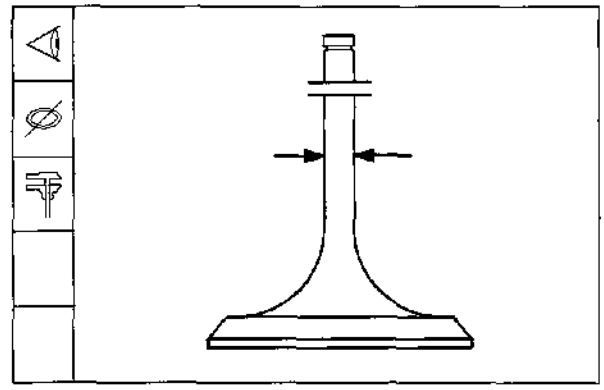

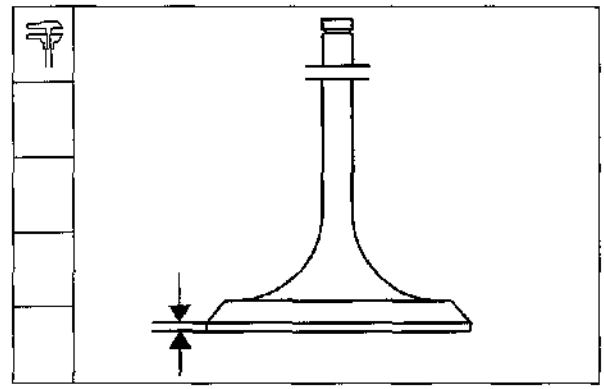

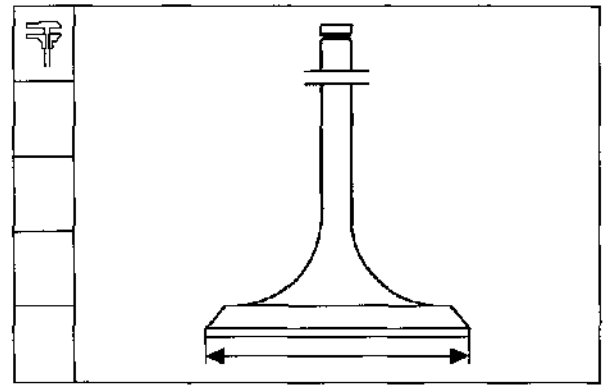

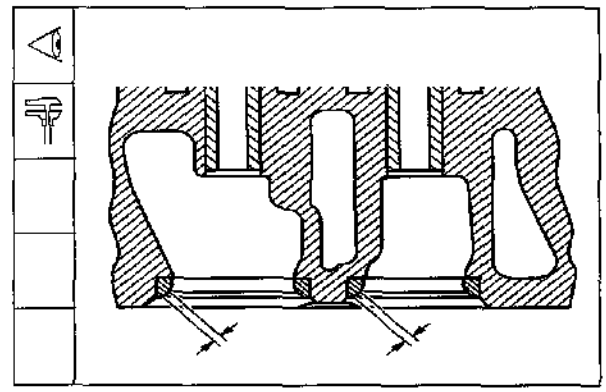

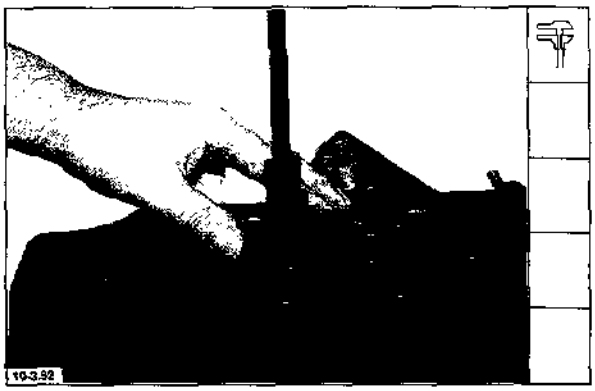

English

9. Gauge valve clearance between valve disc center and cylinder head sealing surface.

   Valve penetration into cylinder head

   Wear limit:
   BFM 1012 **1.4 mm**
   BFM 1013 **1.5 mm**

Español

9. Verificar el retroceso de válvula del centro de la cabeza de válvula hasta la superficie de cierre de culata.

   Retroceso de la válvula

   Límite de desgaste:
   BFM 1012 **1,4 mm**
   BFM 1013 **1,5 mm**

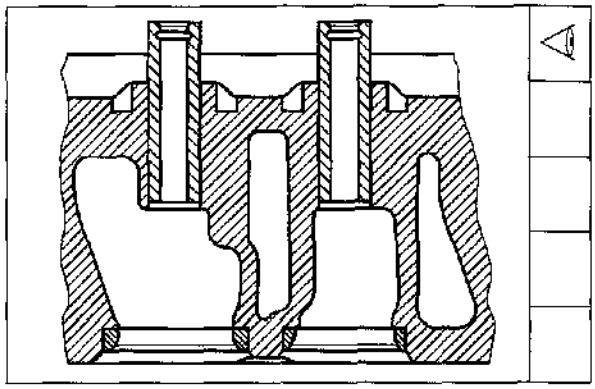

10. If valve seat inserts, valve guides are worn out or cylinder head sealing surface is damaged, it is possible to have the cylinder head repaired in our service centers.

10. Si los asientos de válvula y guías de válvula están desgastados o la superficie de cierre de culata está dañada, es posible hacer reacondicionar la culata ennuestros puntos de servicio.

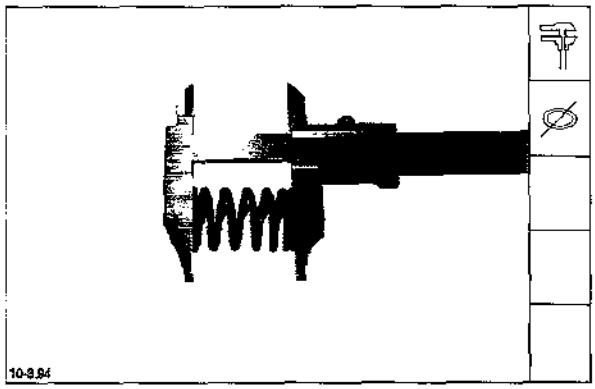

11. Gauge length of valve spring.

    Unloaded length, standard

    BFM 1012 **59 ± 1.9 mm**
    BFM 1013 **64.7 ± 1.3 mm n = 2300**
    BFM 1013 **66.2 mm n = 2600**

11. Verificar la longitud de los resortes de válvula.

    Longitud en estado destensado, normal

    BFM 1012 **59 ± 1,9 mm**
    BFM 1013 **64,7 ± 1,3 mm n = 2300**
    BFM 1013 **66,2 mm n = 2600**

12. Correct valve seat using valve reseating tool.

12. Hacer las correcciones en el asiento de válvula utilizando el aparato de rectificado de asientos de válvula.

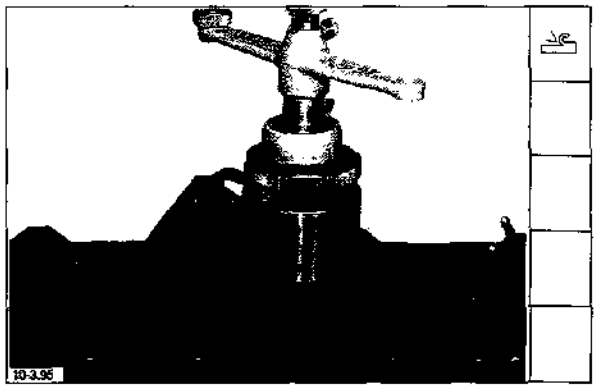

English

13. Reworking valve seat insert

Valve seat angle	Inlet	Exhaust
	30°	45°

Valve seat width max.		
BFM 1012	2.7 mm	2.1 mm
BFM 1012	2.8 mm	2.2 mm

Note: Measure valve penetration into cylinder head once again after reworking of valve seat insert.

14. Insert valve stem seal.

15. Assemble cylinder head:
Position valve spring and valve spring cap.

Note: Oil valve stem of inlet and exhaust valves, especially in the area of keyseats. Press valves into valve stem guide with a slight turn and applying a slight pressure.

With the BFM 1012 engine the narrower coils must face towards cylinder head.

16. Fit valve spring assembly lever, insert cone clamp.

Español

13. Rectificado de asientos de válvula

Angulo de asiento	Admisión	Escape
	30°	45°

Ancho de asiento máx.		
BFM 1012	2,7 mm	2,1 mm
BFM 1012	2,8 mm	2,2 mm

Nota: Una vez rectificado el asiento, se comprobará nuevamente el retroceso de la válvula.

14. Colocar la junta del vástago de válvula.

15. Completar la culata:
colocando el resorte de válvula y su plato de retención.

Nota: Untar con un poco de aceite los vástagos de las válvulas de admisión y de escape, sobre todo en la zona de las escotaduras. Introducir girando con una ligera presión las válvulas en las guías.

En BFM 1012, las espiras más aproximadas deben indicar hacia la culata.

16. Montar la palanca para colocar los resortes de válvula. Introducir los semiconos.

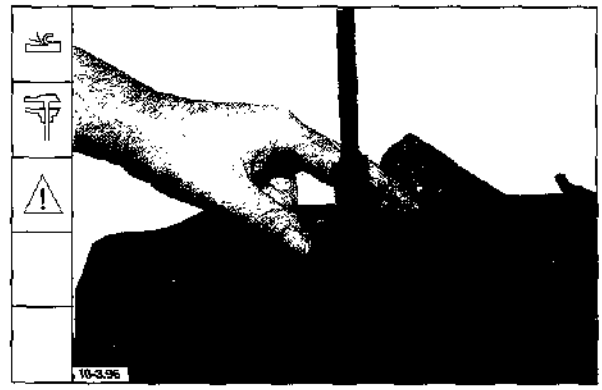

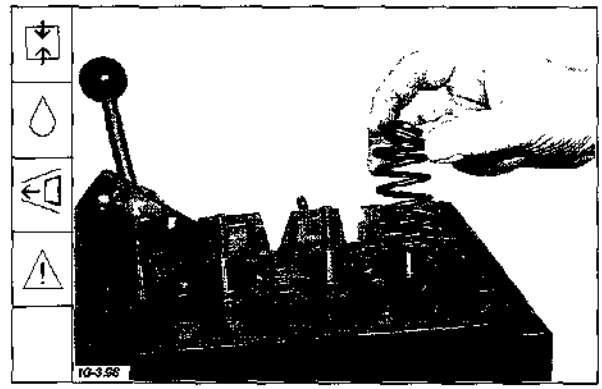

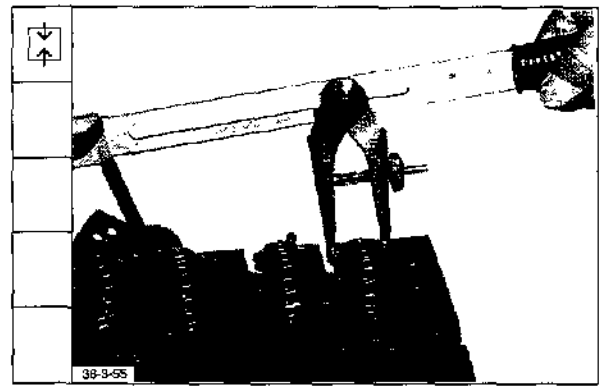

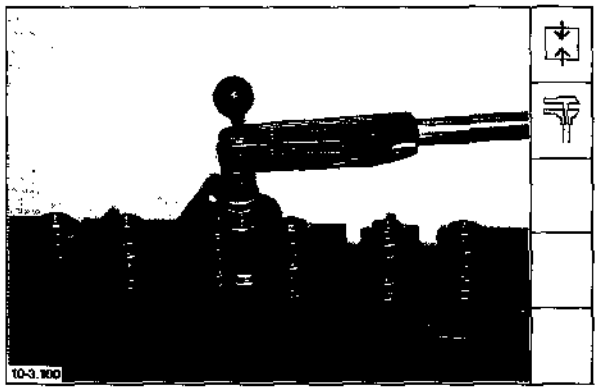

English

17. Fit blanking parts and tighten with a torque of **10 + 5 Nm.**

Español

17. Montar las piezas de cierre y apretar con un par de **10 + 5 Nm.**

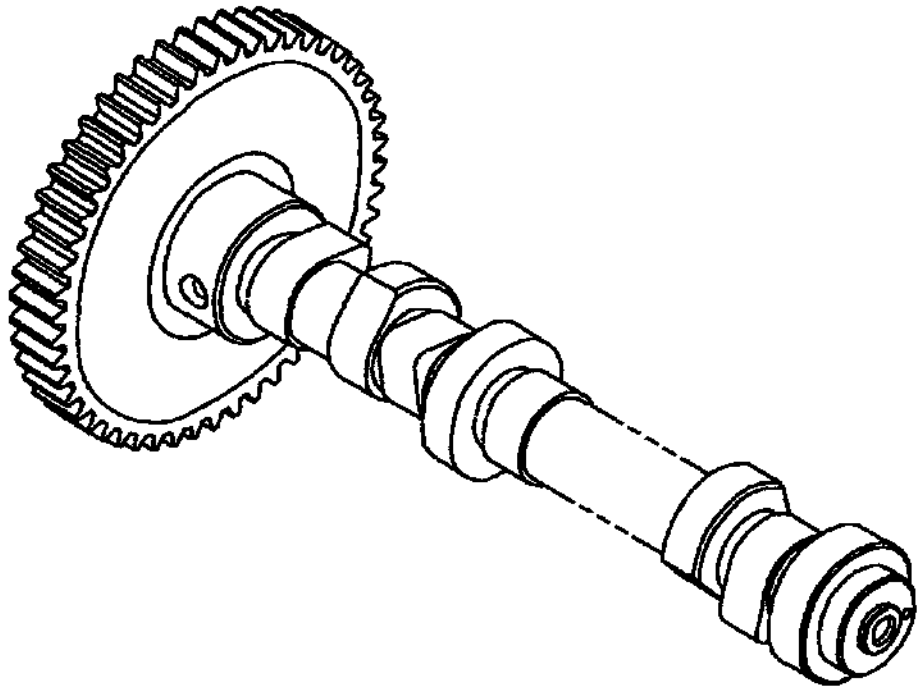

English

1. Inspect cams and bearing journals for wear.

2. Inspect camshaft gear for wear.

Español

1. Examinar visualmente las levas y muñones de apoyo en cuanto a desgaste.

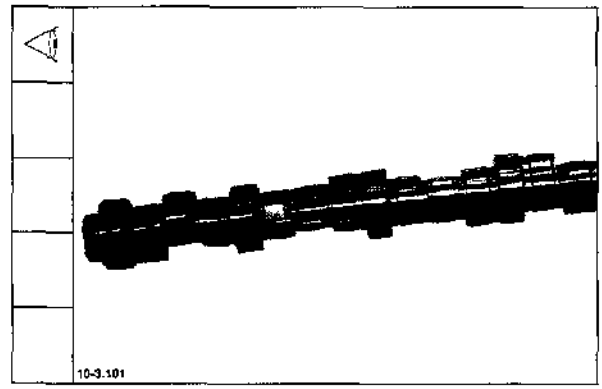

2. Examinar visualmente la rueda dentada del árbol de levas encuanto a desgaste.

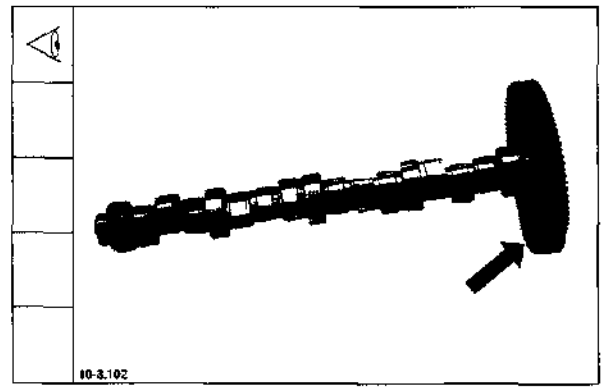

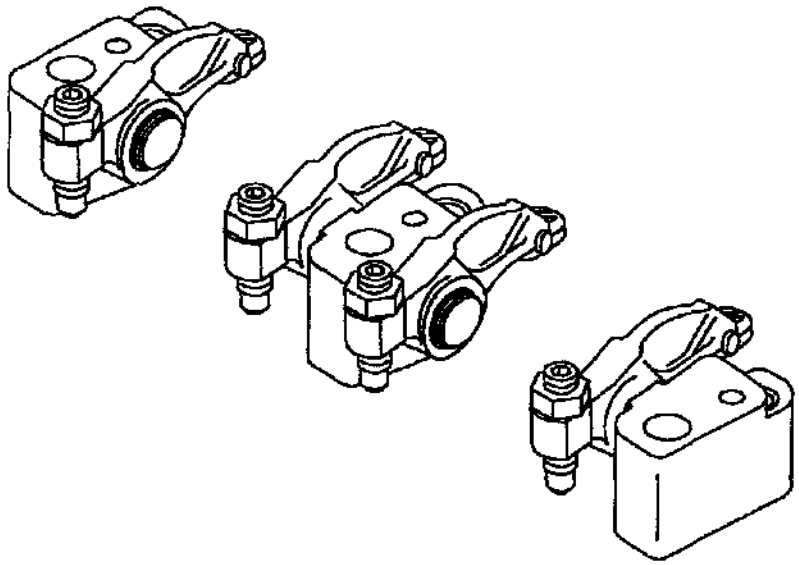

English

1. Dismantle rocker arm bracket.

2. *Check for wear and replace if necessary:*
   - Journals
   - Adjusting screw.
   - Rocker arm contact face
   - Bore

3. Check oil duct for free passage.

4. Reassemble rocker arm bracket. Fit circlips.

Español

1. Desarmar el soporte de balancines.

2. *Examinar en cuanto a desgaste y reemplazar, si es necesario:*
   - los muñones de apoyo.
   - el tornillo de reglaje,
   - la superficie de deslizamiento de balancín y
   - el alojamiento

3. Comprobar si el conducto de aceite está despejado.

4. Rearmar el soporte de balancines. Montar los anillos de retención.

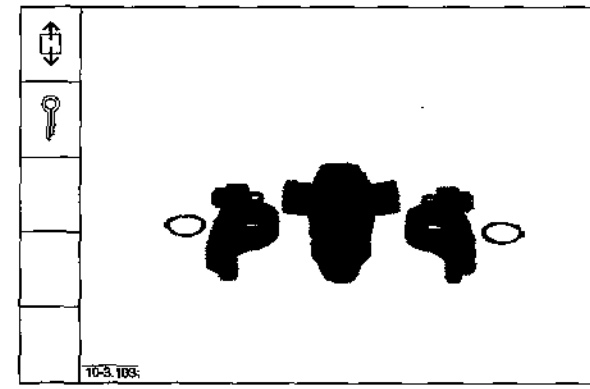

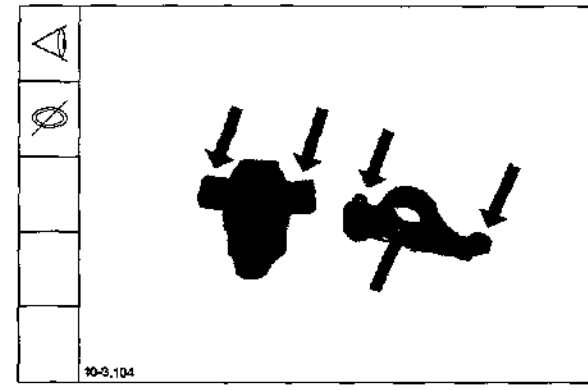

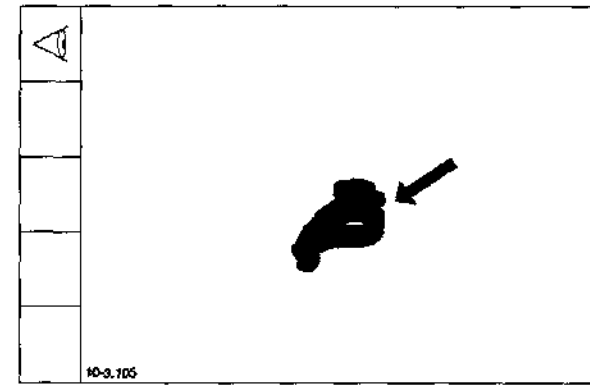

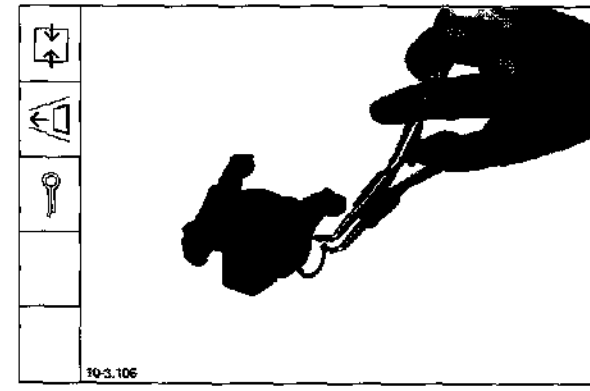

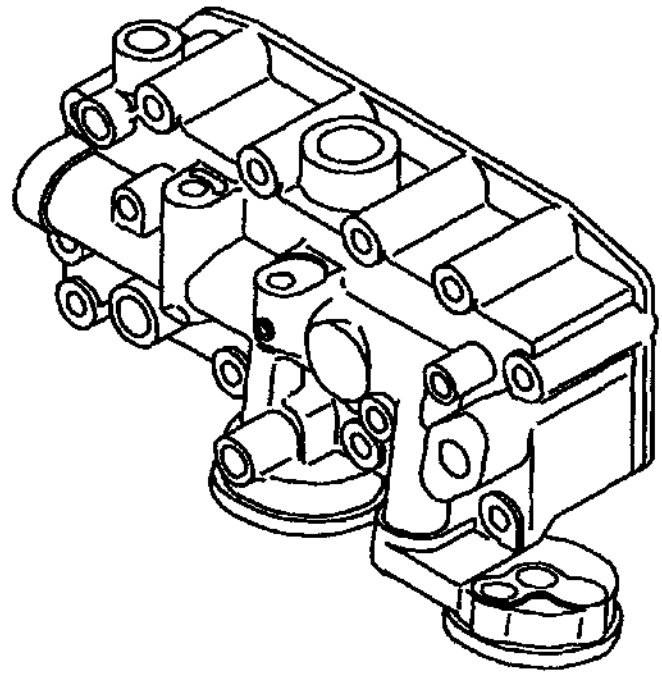

English

BFM 1012

1. Remove lube oil cooler from lube oil cooler housing.

2. Inspect all single parts and replace if necessary.

3. Position new O-seals.

4. Mount lube oil cooler. Tighten fastening bolts together with new Cu seals with a torque of **20 Nm**.

Español

BFM 1012

1. Sacar el refrigerador de aceite lubricante de su caja.

2. Examinar visualmente todas las piezas, sustituyéndolas por otras nuevas, si es necesario.

3. Colocar anillos tóricos nuevos.

4. Volver a montar el refrigerador de aceite. Apretar los tornillos de fijación, provistos de anillos de cobre nuevos, con un par de **20 Nm**.

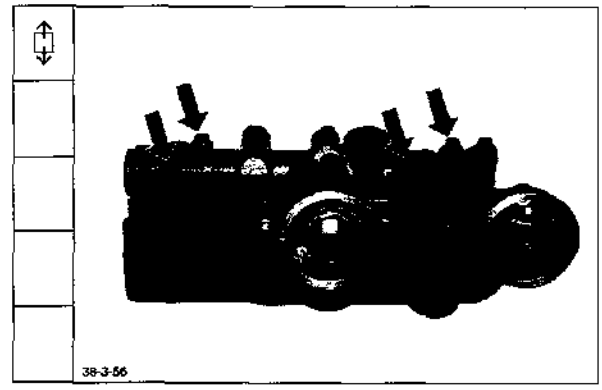

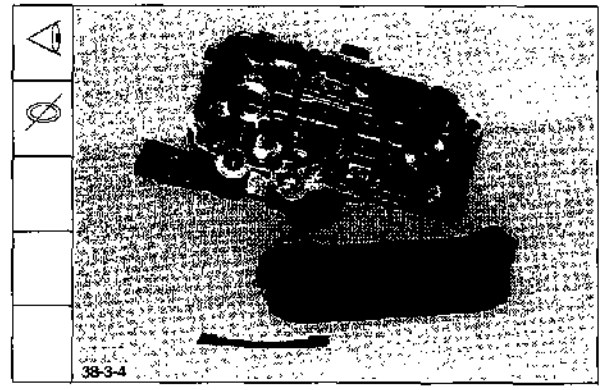

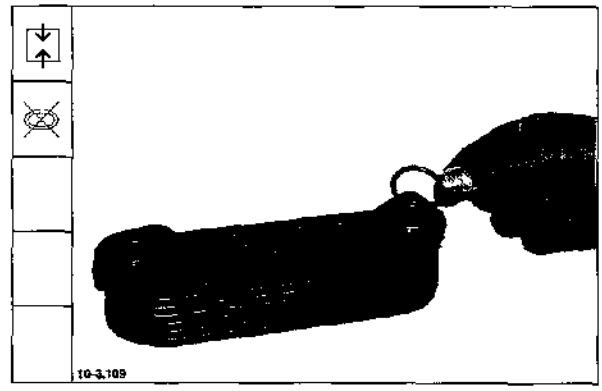

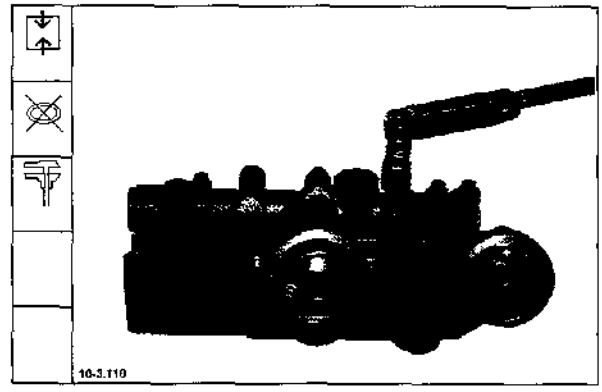

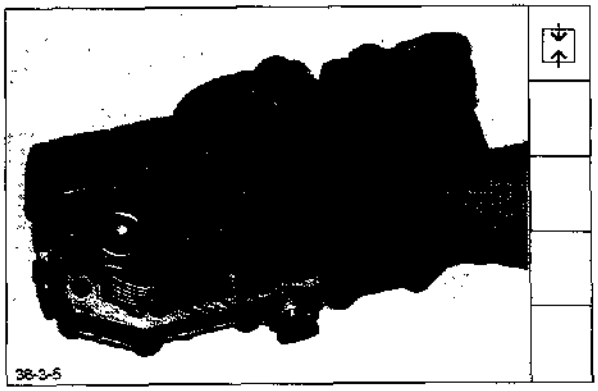

English

5. On **BF4M** insert restrictor plate in oil filter housing.

Español

5. En **BF4M**, instalar la chapa de bloqueo en la caja de filtro de aceite.

nglish

:FM 1013

. Remove screw plug.

2. Remove collar screws.

3. Inspect all single parts and replace if necessary.

4. Place oil cooler into oil cooler housing.

Español

BFM 1013

1. Desmontar los tapones de cierre.

2. Retirar los tornillos de collar.

3. Examinar visualmente todas las piezas, sustituyéndolas, si es necesario.

4. Introducir el refrigerador de aceite en su caja.

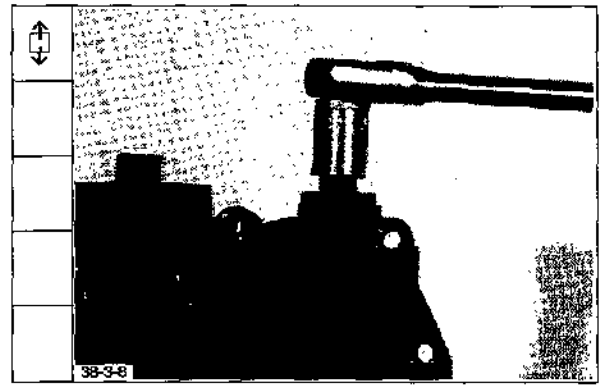

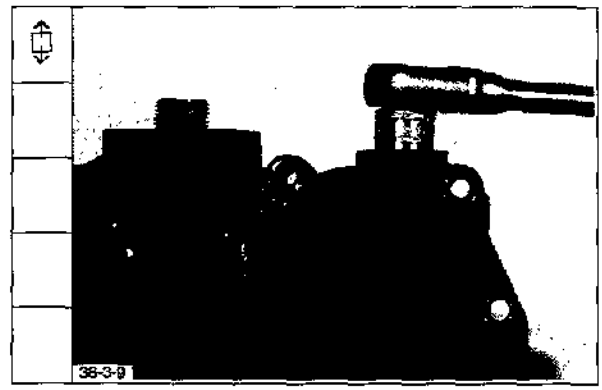

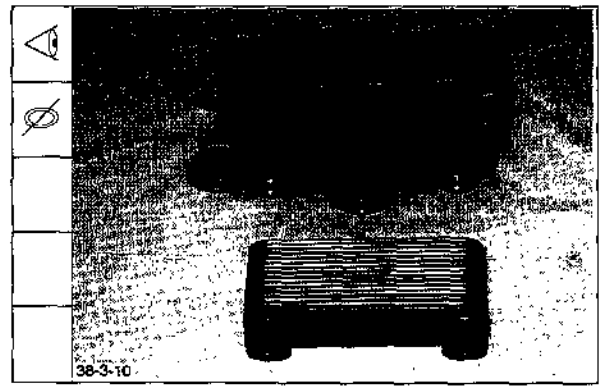

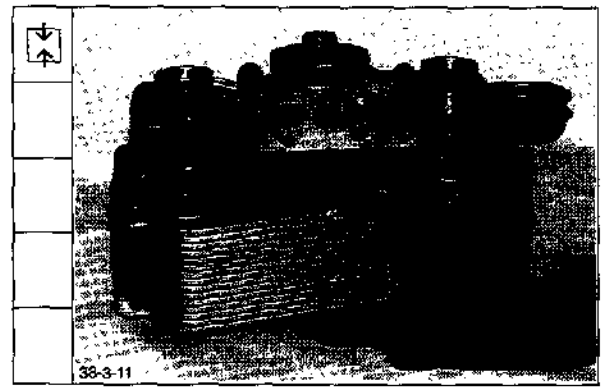

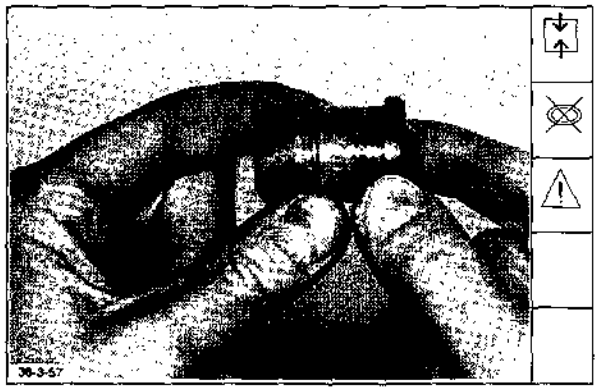

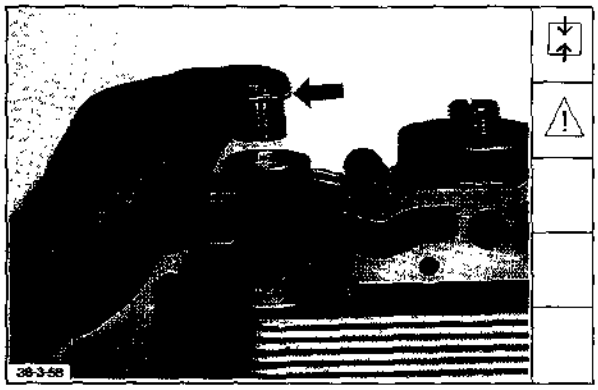

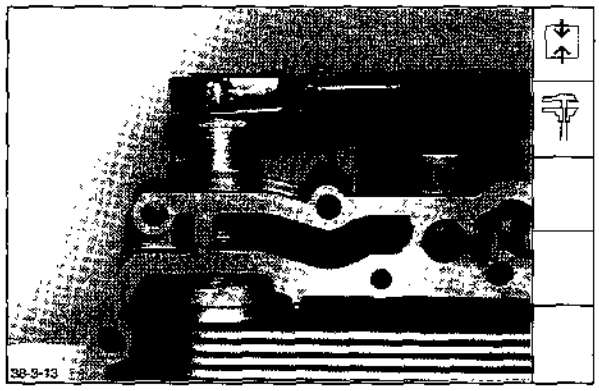

English

5. Fit new sealing ring to collar screw.

Note: Cover thread when fitting sealing rings.

6. Fit collar screws.

Note: Lightly oil sealing rings.

7. Tighten collar screws.
   Tightening specification:
   Initial tightening **80 Nm**
   Final tightening **160 Nm**.

8. Fit new O-seal to screw plug and apply lubricant **AP 25 N**.

Español

5. Montar un anillo de junta nuevo le tornillo de collar.

Nota: Cubrir la rosca para el montaj del anillo de junta.

6. Montar los tornillos de collar.

Nota: Untar con un poco de aceite lo anillos de junta.

7. Apretar los tornillos de collar.
   Prescripción de apriete:
   Apriete inicial **80 N**
   Reapriete **160 N**

8. Montar un anillo tórico nuevo sob el tapón roscado y aplicar deslizante **AP 25 N**.

English

9. Tighten screw plug.
   Tightening specification: **80 Nm.**

10. Insert restrictor plate, if any.

Español

9. Apretar el tapón roscado.
   Prescripción de aprieto: **80 Nm.**

10. Si existe: Instalar la clapeta de cierre.

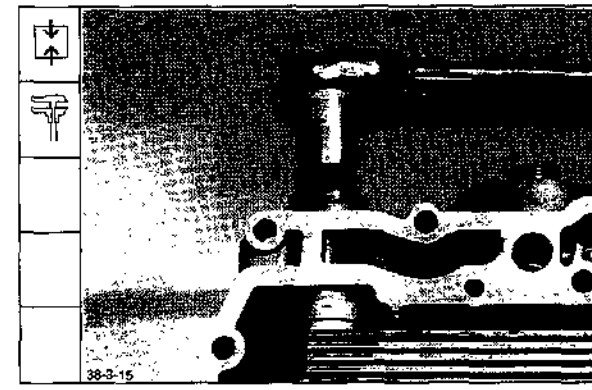

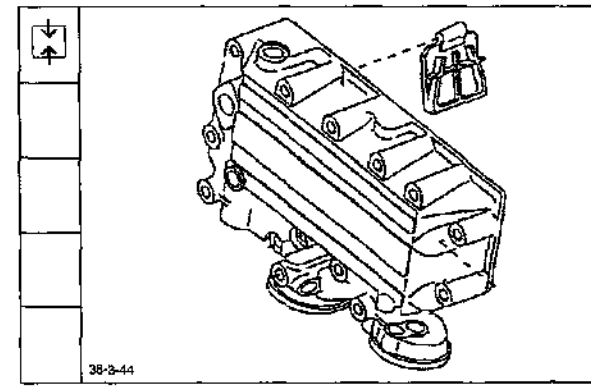

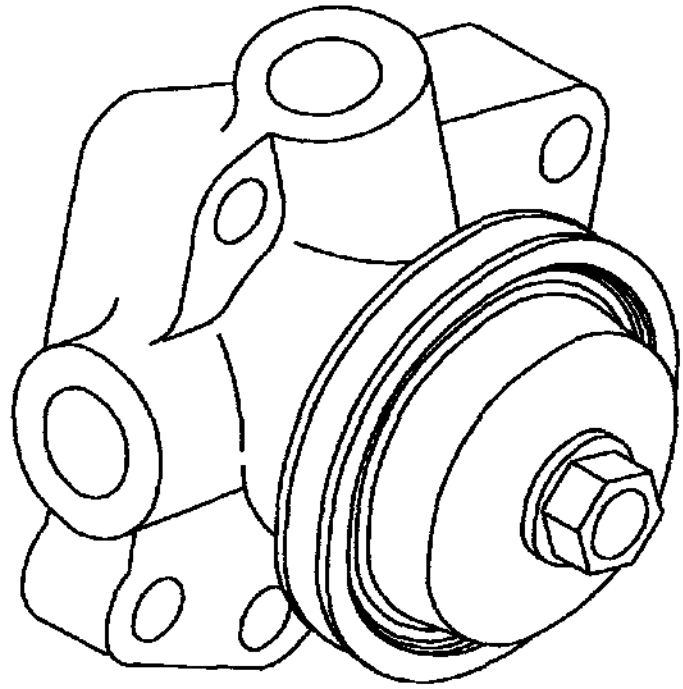

English

1. Remove clamping plate. Inspect fuel pump/clamping plate and replace if necessary.

2. Fit clamping plate and tighten bolts with a torque of **22 ± 2 Nm**.

Español

1. Desmontar la corredera de fijación. Examinar visualmente la bomba de combustible / corredera y reemplazar, si es necesario.

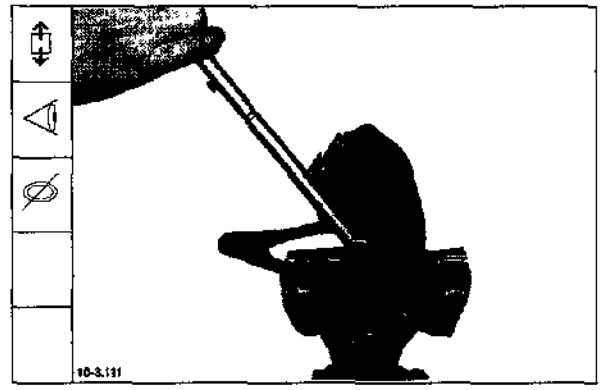

2. Volver a montar la corredera. Apretar los tornillos con un par de **22 ± 2 Nm**.

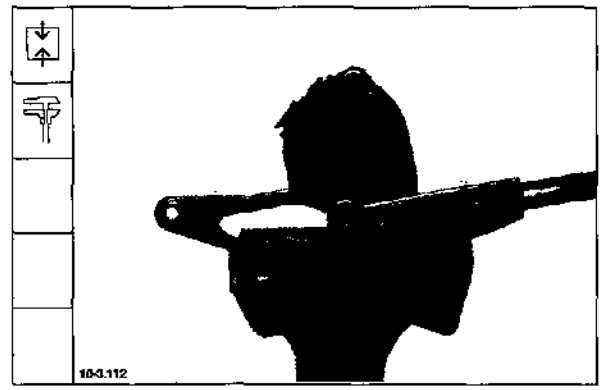

glish

mmercial tool required:
ng socket, serrated, a/flats 15 8012

ecial tool required:
sembly tool _____ 110 110

Unscrew cap nut.

Sequence of parts disassembly

1. Cap nut
2. Injection nozzle
3. Adapter
4. *Thrust pin*
5. Compression spring
6. Shim

Vash all parts in clean diesel fuel and low out with compressed air.

. Nozzle needle and nozzle body are lapped together and must neither *be confused nor exchanged* individually. Do not touch nozzle needles with your fingers. When *nozzle body is held in upright* position, nozzle needle should by its own weight slide down slowly and smoothly on its seating.

Cote: If nozzle needle does not slide down smoothly, wash injection *nozzle again in diesel fuel.* Renew, if necessary. New injection nozzle must likewise be washed in clean diesel fuel.

Español

Herramienta comercial:
Dado de vaso estriado largo, de 15 _____ 8012

Herramienta especial:
Dispositivo de montaje ____ 110 110

1. Desenroscar la tuerca de unión.

2. Secuencia del despiece de componentes

   1. Tuerca de unión
   2. Inyector propiamente dicho
   3. Pieza intermedia
   4. *Perno de presión*
   5. Muelle de presión
   6. Arandela de reglaje

Lavar todas las piezas en combustible diesel limpio y soplarlas con aire comprimido.

3. El cuerpo y la aguja del inyector son piezas perfectamente *hermanadas por lapeado y,* por tanto, no está permitido emparejarlas con otras o *cambiarlas individualmente. No* tocar la aguja con los dedos. Con el cuerpo del inyector en posición vertical, la aguja debe bajar por su propio peso lenta y progresivamente, deslizándose hasta alcanzar su posición final de asiento.

Nota: Si el deslizamiento de la aguja no es progresivo, el inyector debe lavarse otra vez en combustible diesel o cambiarse porotro nuevo, según el caso. Lavar el inyector nuevo igualmente en combustible *diesel limpio.*

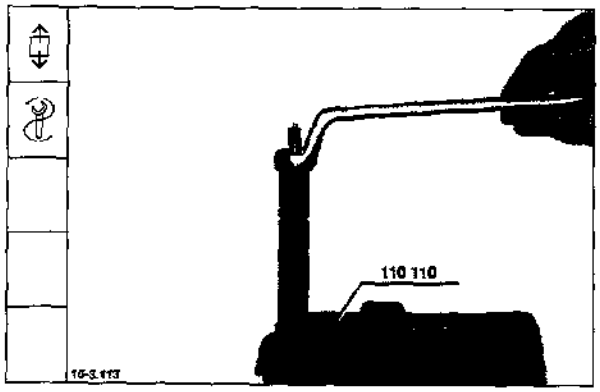

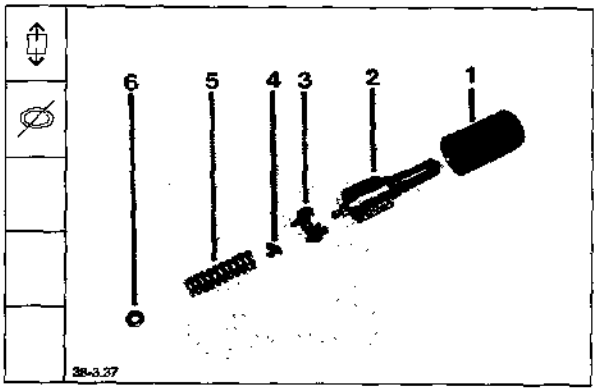

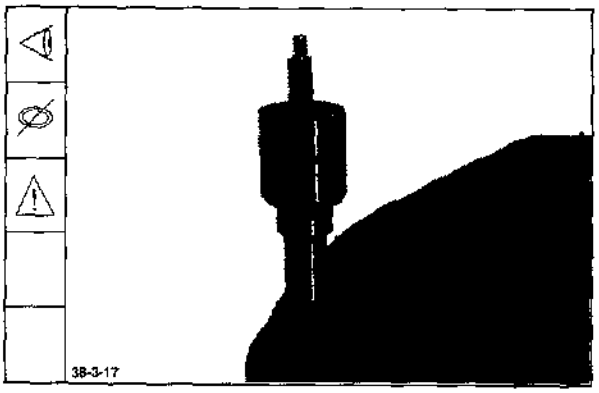

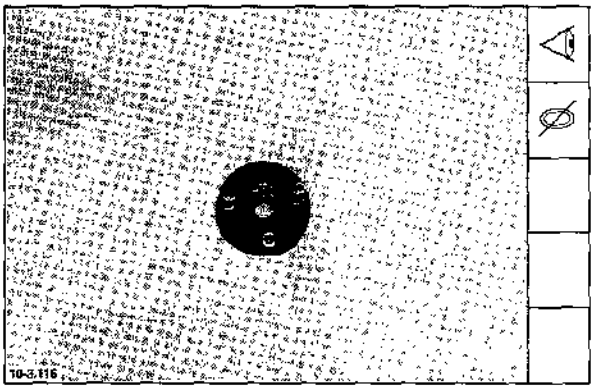

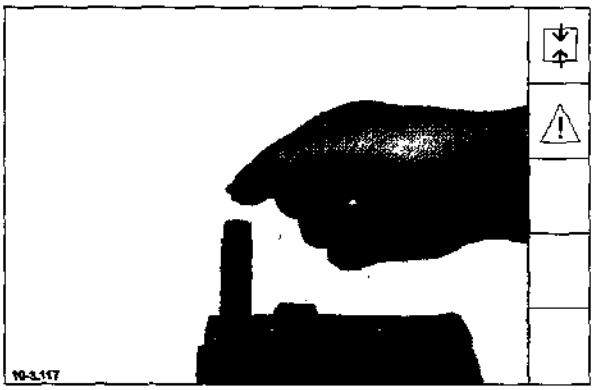

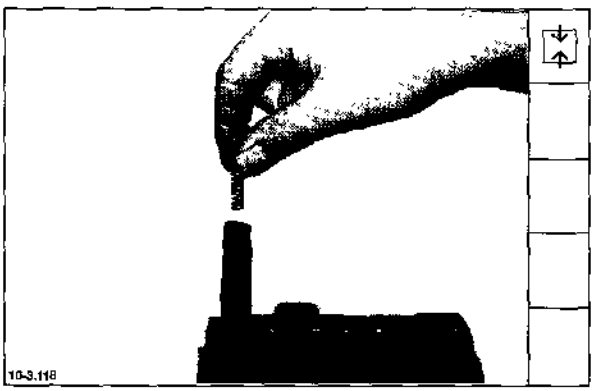

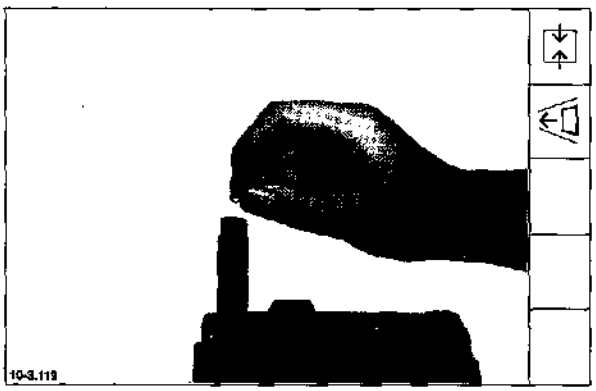

English

4. Check seating surfaces of adapter for wear. Make sure that centering pins are fitted.

5. Insert shim.

Note: The injection pressure is dependent on the shim thickness.

6. Insert compression spring.

7. Insert thrust pin with centering collar facing towards compression spring.

Español

4. Examinar las superficies de asi de la pieza intermedia en cuant desgaste. Las espigas de centr deben estar en su sitio.

5. Colocar la arandela de reglaje.

Nota: La presión de descarga deper del espesor de la arandela de reglaje.

6. Meter el muelle de presión.

7. Introducir el perno de presión co el collarín de centraje indicando hacia el muelle de presión.

nglish

. Insert adapter with centering pins into the bores of the nozzle holder.

ote: The recess points to the thrust pin.

Español

8. Introducir la pieza intermedia con las espigas de centraje en los agujeros del portainyector.

Nota: El rebaje debe indicar hacia el perno de presión.

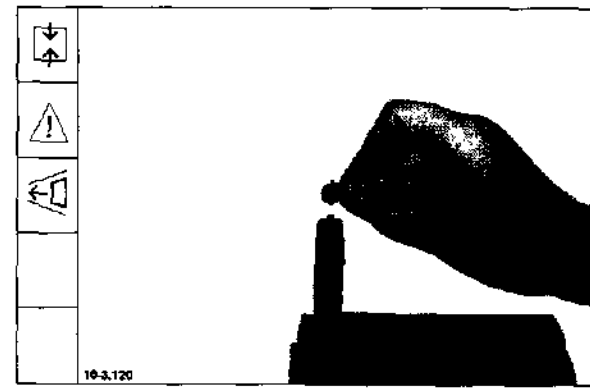

!. Fit injection nozzle with center bores mating with the centering pins of the adapter.

!ote: Take care that nozzle needle does not fall out of nozzle body.

9. Colocar el inyector con los agujeros de centraje sobre las espigas de centraje de la pieza intermedia.

Nota: La aguja no debe caer fuera del cuerpo del inyector.

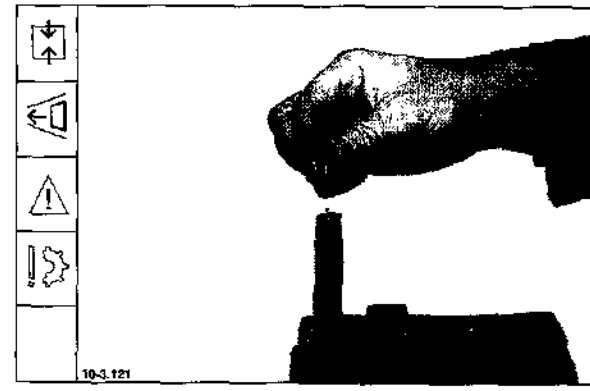

10. Screw on cap nut.

10. Enroscar la tuerca de unión.

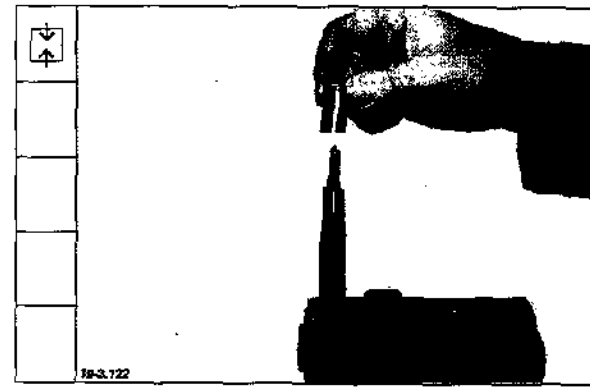

11. *Tighten cap nut with a torque of* **40 - 50 Nm.**

For testing and adjusting injector see chapter 2.

11. *Apretar la tuerca de unión con un* par de **40 - 50 Nm.**

Para la verificación y ajuste del inyector, ver el capítulo 2.

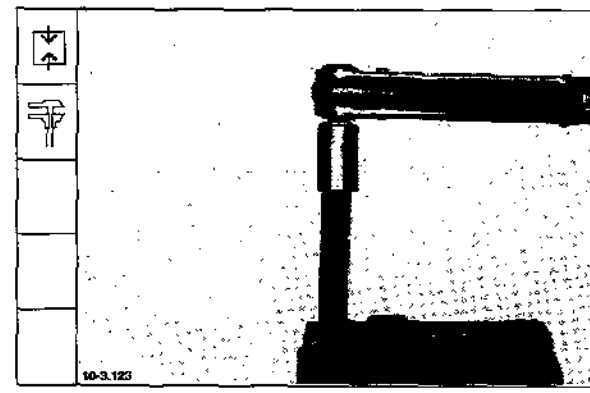

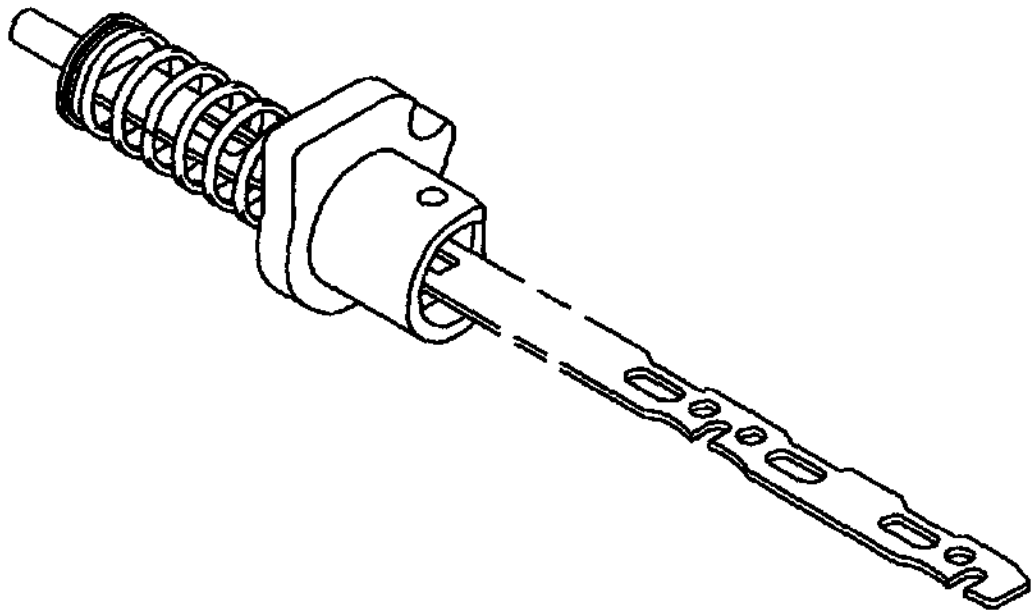

English

1. Inspect control rod and renew any damaged parts.

2. Drill guide sleeve apart at dowel pin and remove.

Note: When disassembling the control rod always renew guide sleeve and dowel pin.

3. Order of assembly

   1. Control rod
   2. Dowel pin
   3. Guide sleeve
   4. Compression spring

4. Watch installation direction of control rod relative to guide sleeve.

Español

1. Examinar visualmente la cremallera y, en su caso, sustituir las piezas defectuosas.

2. Abrir taladrando el manguito de guía en el pasador de sujeción y *retirarlo*.

Nota: El manguito de guía y el pasador de sujeción tienen que ser sustituidos por otros nuevos *tras cada desmontaje de la* cremallera.

3. Secuencia a seguir en el montaje

   1. Cremallera
   2. Pasador de sujeción
   3. Manguito de guía
   4. Muelle de presión

4. Observar el sentido en que se monta la cremallera con respecto al manguito de guía.

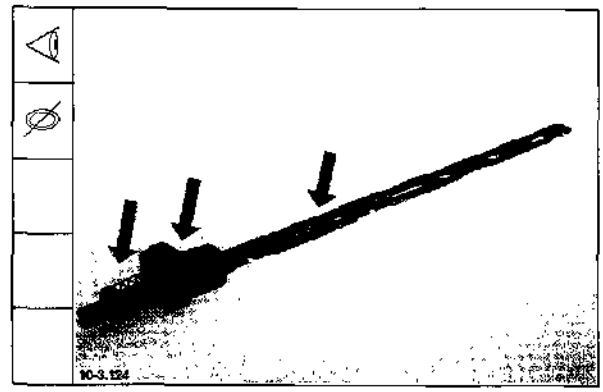

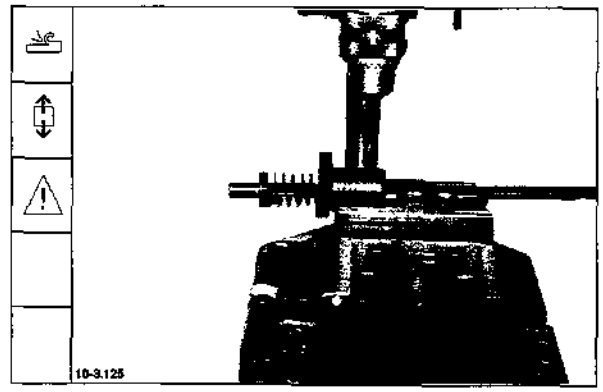

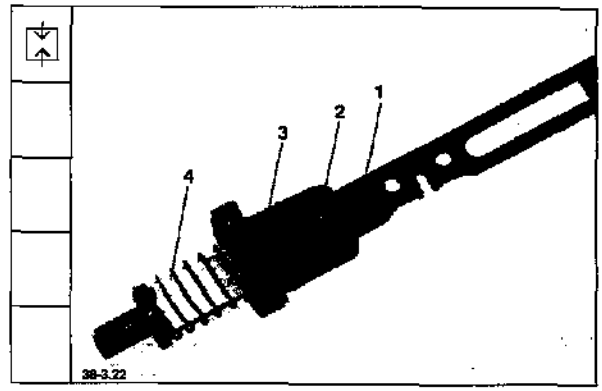

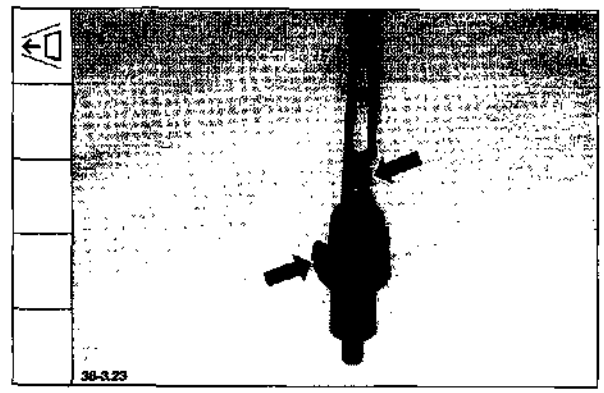

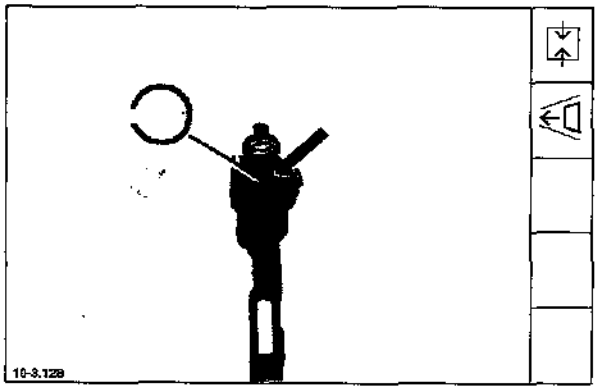

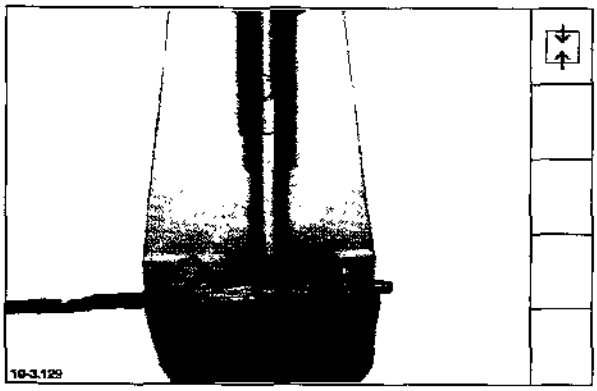

English

5. Insert dowel pin so that opening points in transverse position towards control rod.

6. Press in dowel pin as far as it will go.

Español

5. Poner el pasador de sujeción en su sitio, de forma tal que la abertura quede orientada transversalmente a la cremallera.

6. Introducir a presión el pasador de sujeción hasta que haga tope.

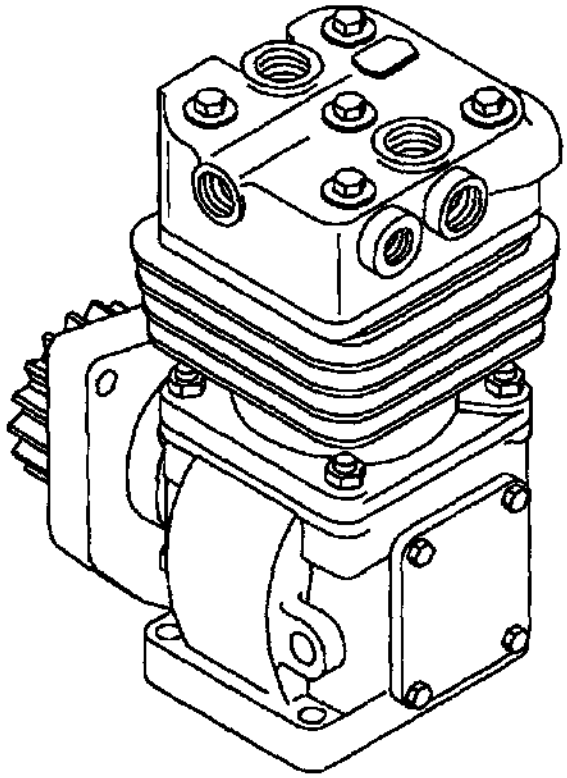

English

Special tool required:

Retainer
for air compressor gear _____ 170 630

Air compressor has been removed.

1. Slide retainer onto gear. Lossen lock nut.

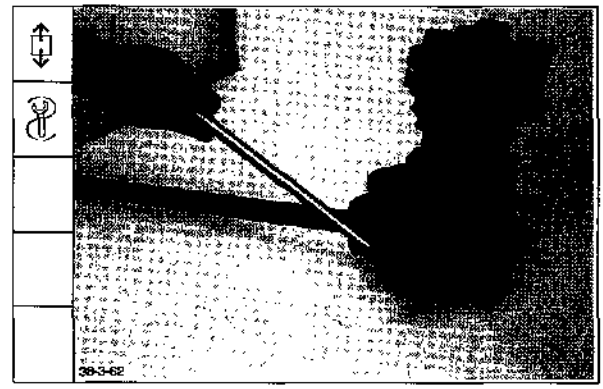

2. Pull off gear with commercial two-armed extractor.

3. Place on gear and start lock nut.

Note: Before fitting gear, make absolutely sure that the cones of gear and shaft are free of lubricant, clean and undamaged.

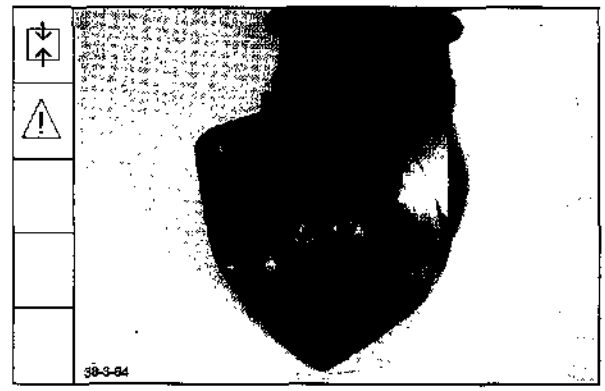

4. Slide retainer onto gear and tighten lock nut with a torque of **200 + 50 Nm**.

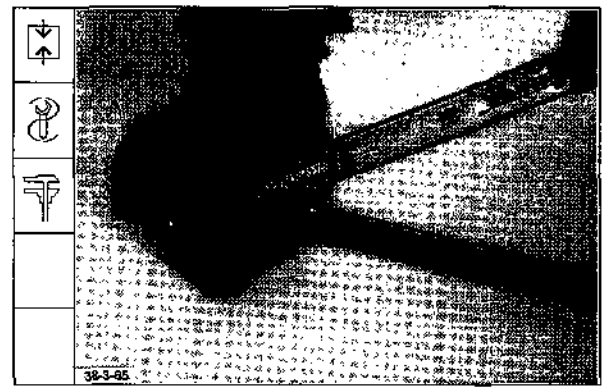

Español

Herramienta especial:

Contrasoporte para la
rueda dentada del
compresor de aire _____ 170 630

El compresor de aire está desmontado.

1. Colocar el contrasoporte sobre la rueda dentada. Soltar la tuerca de fijación.

2. Extraer la rueda dentada utilizando un extractor de dos brazos usual en el comercio.

3. Colocar la rueda dentada y apretar la tuerca de fijación con la mano.

Nota: Antes de montar la rueda dentada es imprescindible observar que los conos de la rueda dentada y eje estén limpios y libres de lubricante y no presenten defectos algunos.

4. Colocar el contrasoporte sobre la rueda dentada y apretar la tuerca de fijación con un par de **200 + 50 Nm**.

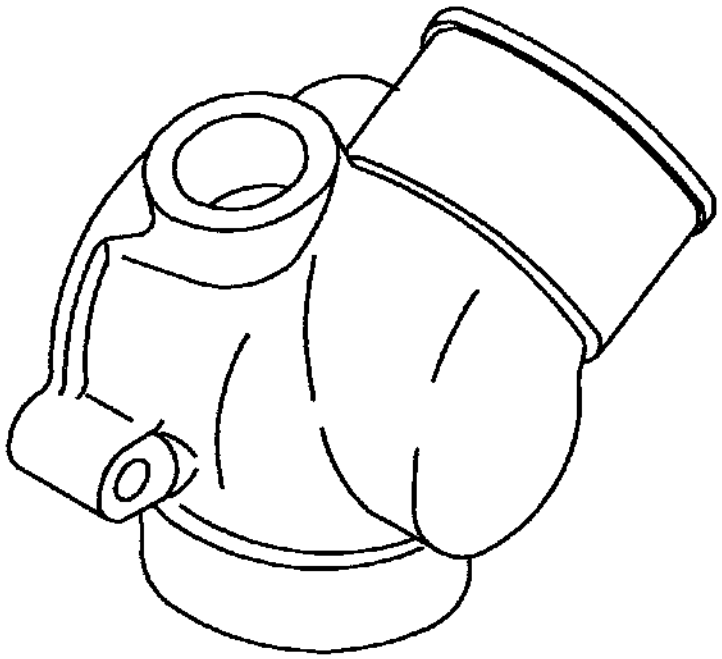

English

Special tool required:

Assembly tool for coolant thermostat _____ 170 090

1. Press down thermostat and take out of thermostat housing.

2. Inspect all single parts and replace if necessary.

3. Press down thermostat and turn into thermostat housing.

Note: Clamping yoke must engage in thermostat housing.

Español

Herramienta especial:

Herramienta de montaje para el termostato de líquido refrigerante _____ 170 090

1. Comprimir el termostato y sacarlo de su caja.

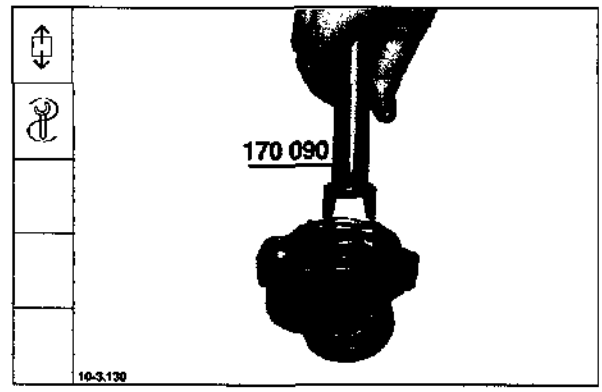

2. Examinar visualmente todas las piezas y reemplazarlas según necesidad.

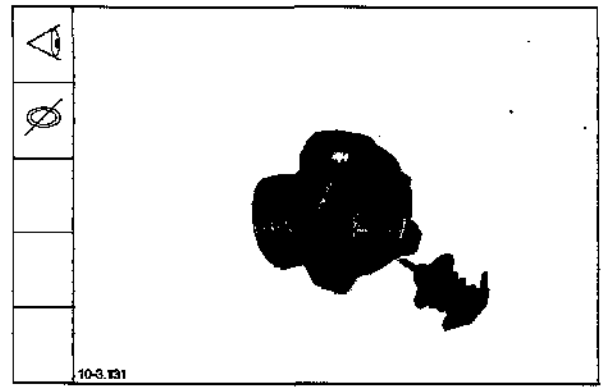

3. Comprimir el termostato e introducirlo girando en su caja.

Nota: El estribo de fijación debe encajar en la caja del termostato.

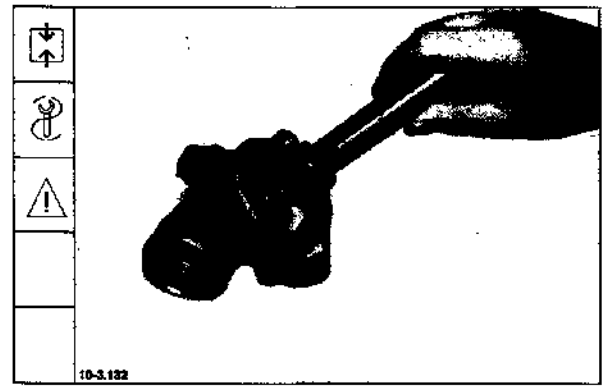

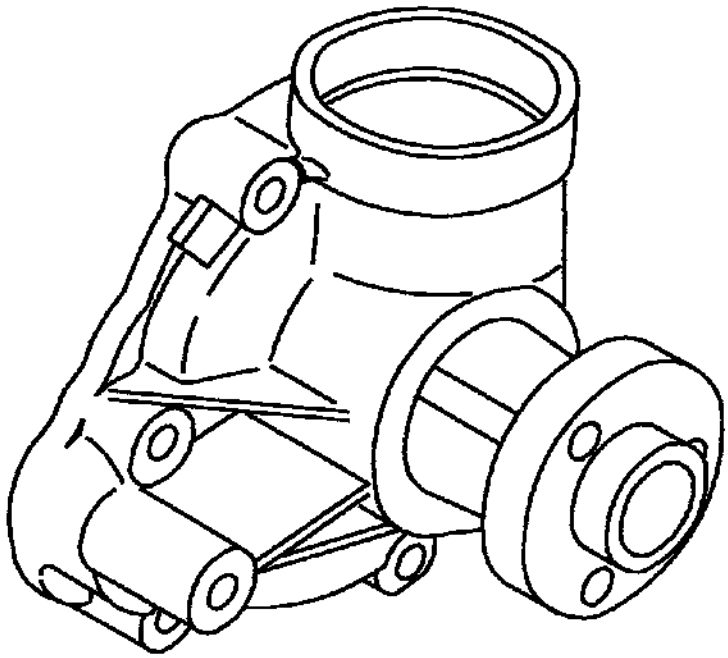

English

1. Remove V-belt pulley.

Español

1. Desmontar la polea acanalada.

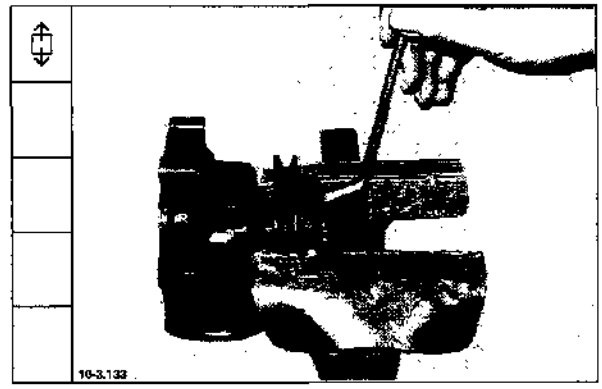

2. Inspect all single parts and replace if necessary.

2. Examinar visualmente todas las piezas y reemplazarlas según necesidad.

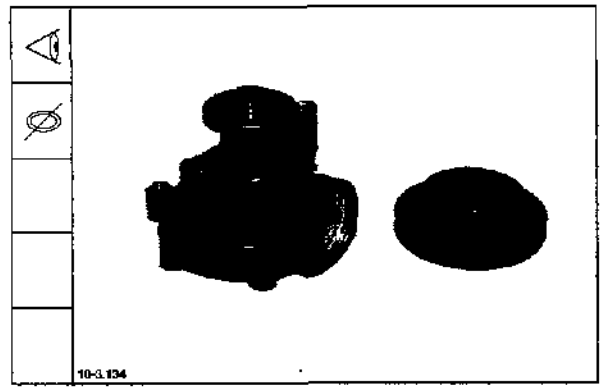

3. Fit V-belt pulley. Tighten bolts with a torque of **21 Nm**.

3. Volver a montar la polea acanalada. Apretar los tornillos con un par de **21 Nm**.

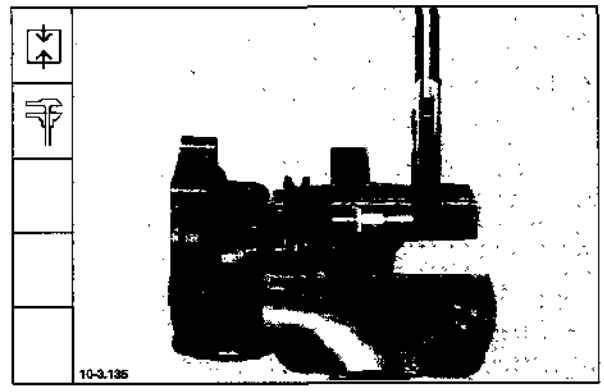

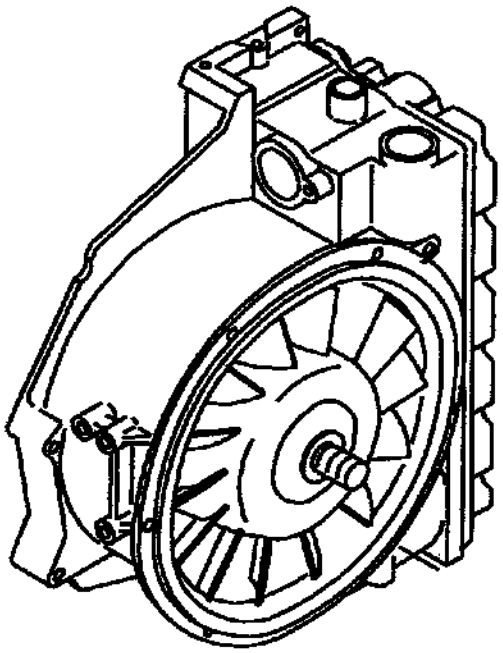

English

Only BFM 1012 documented

Special tool required:

Extractor _____ 150 800

1. Remove cover.

2. Take out circlip for delivery valve. *Remove delivery valve.*

3. *Inspect single parts and replace if* necessary.

Español

Documentado sólo para BFM 1012

Herramienta especial:

Dispositivo de extracción ___ 150 800

1. Desmontar la tapa.

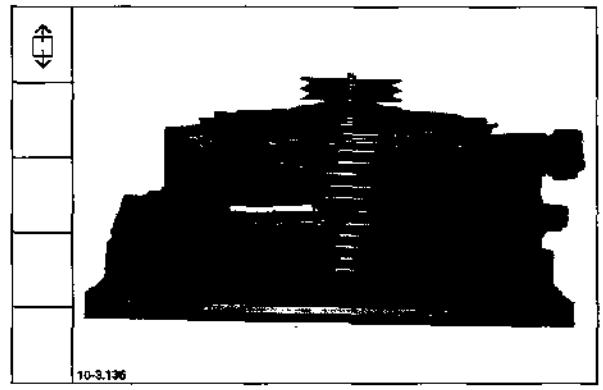

2. Retirar el anillo de retención de la *válvula de presión. Desmontar esta* válvula.

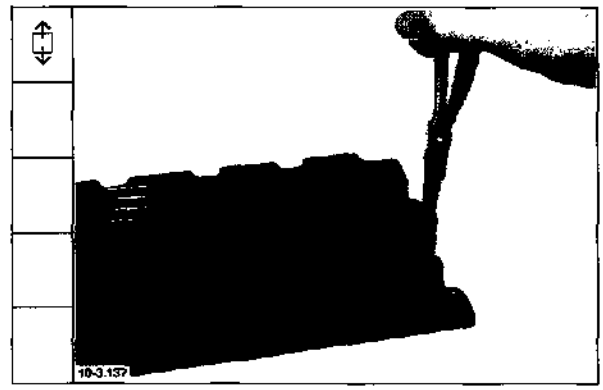

3. *Examinar visualmente las piezas y* reemplazarlas según necesidad.

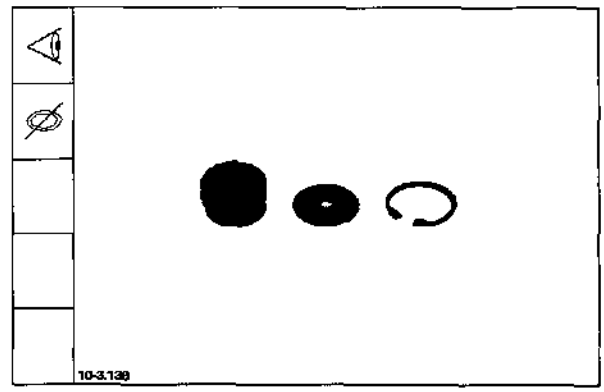

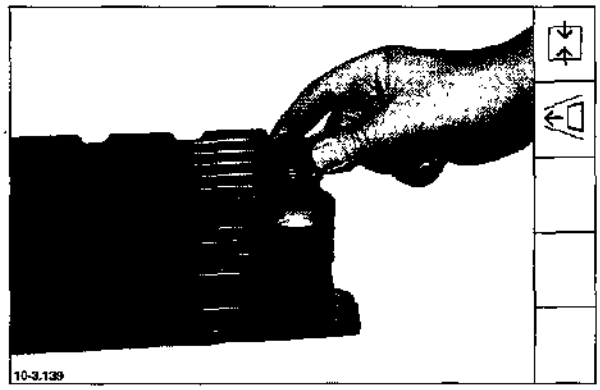

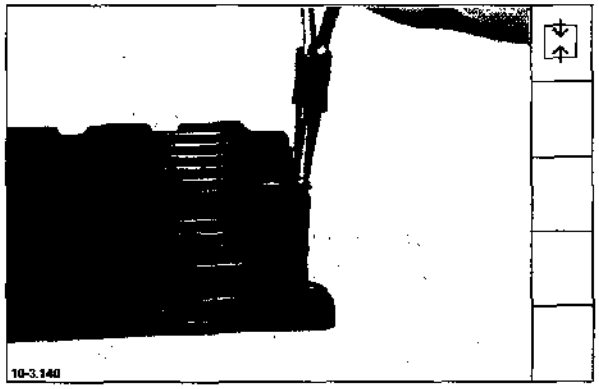

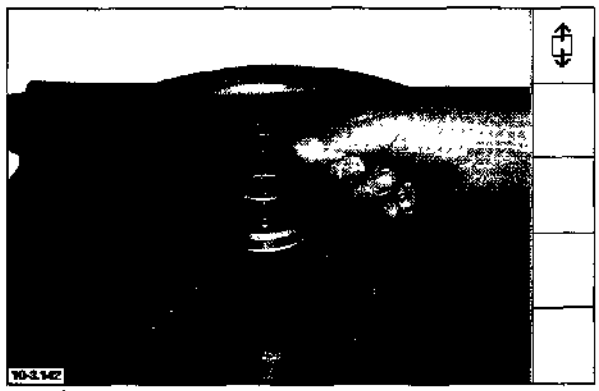

English

4. Insert delivery valve.

5. Insert circlip.

6. Loosen central bolt. Remove V-belt pulley and rotor.

7. Take out thrust piece.

Español

4. Colocar la válvula de presión en su sitio.

5. Montar el anillo de retención.

6. Aflojar la unión roscada central. Retirar la polea acanalada y el rotor.

7. Sacar la pieza de presión.

English

8. Screw on washer using extractor.

Español

8. Atornillar el disco al dispositivo de extracción.

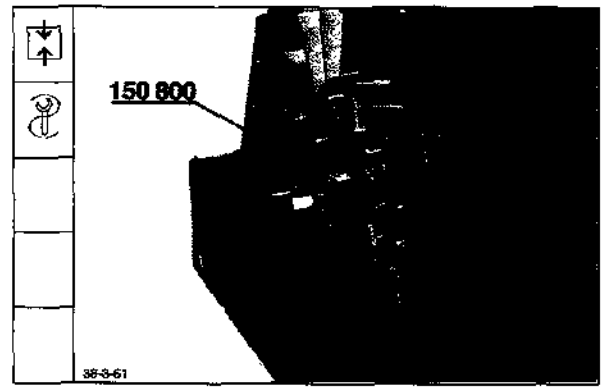

9. Pull ball bearings (2x) together with spacer sleeve completely out of blower carrier.

9. Extraer los cojinetes de bolas (2 pzas.) con el casquillo distanciador por completo del soporte de turbina.

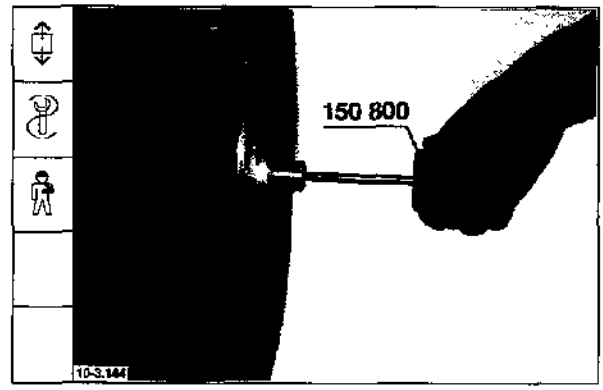

10. Inspect all single parts and replace if necessary.

10. Examinar visualmente todas las piezas y reemplazarlas, según necesidad.

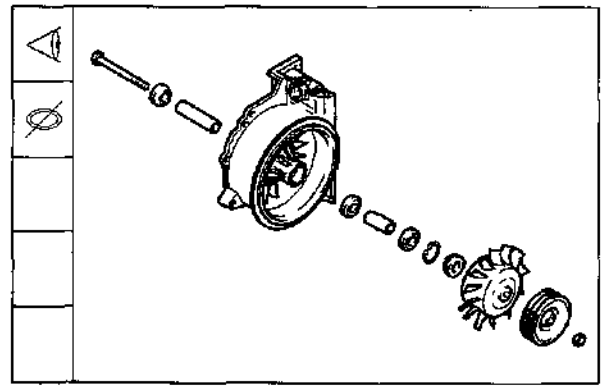

11. Press small ball bearing in over outer race as far as it will go.

11. Introducir a presión el cojinete de bolas pequeño a través del anillo exterior hasta que haga tope.

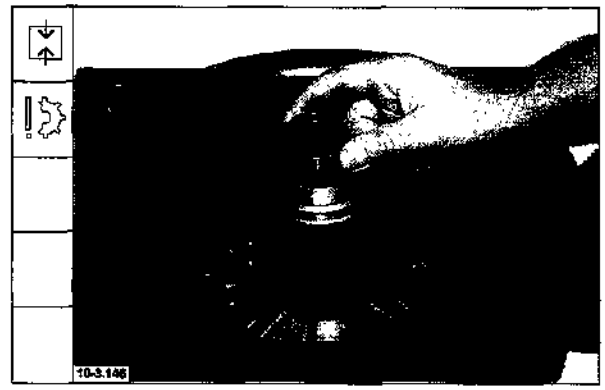

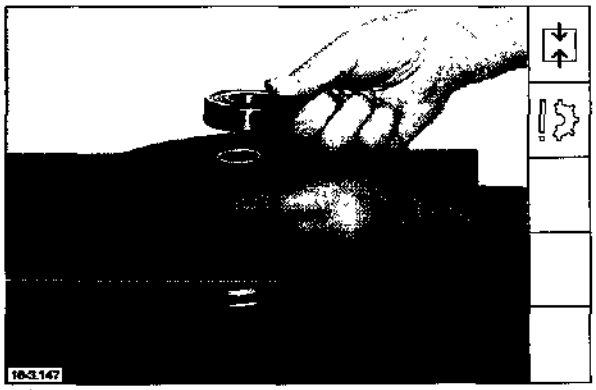

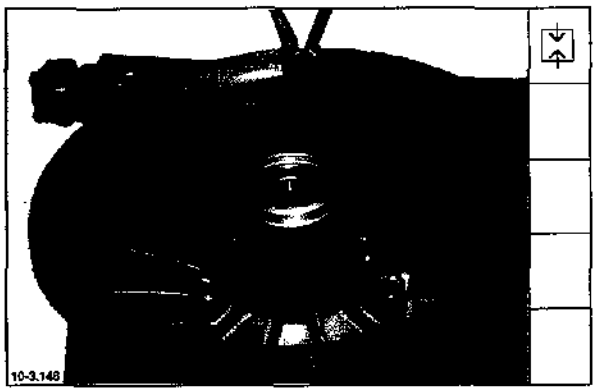

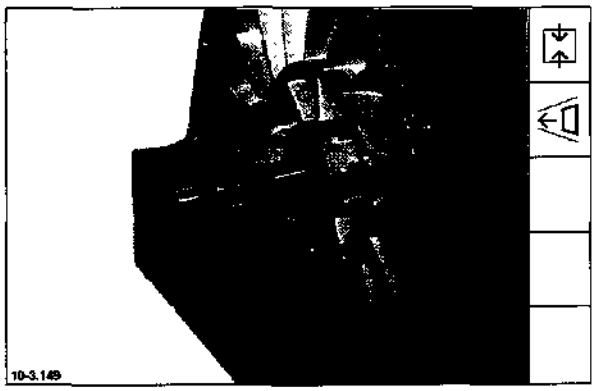

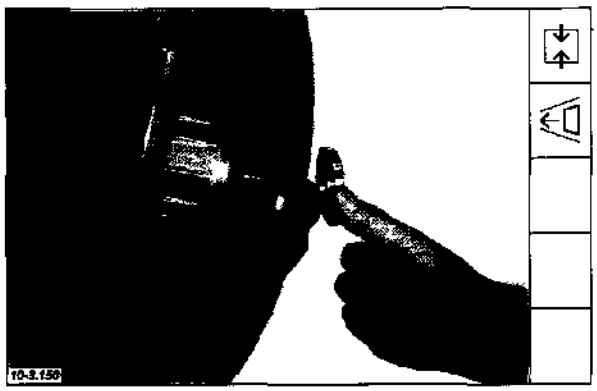

English

12. Insert spacer sleeve. Press large ball bearing in over outer race as far as it will go.

13. Fit circlip.

14. Introduce hollow shaft together with bolt and washer into spacer sleeve.

15. Position thrust piece.

Español

12. Colocar el casquillo distanciador. Introducir a presión el cojinete de bolas grande a través del anillo exterior hasta que haga tope.

13. Montar el anillo de retención.

14. Hacer pasar el eje hueco con el tornillo y la arandela a través del casquillo distanciador.

15. Colocar la pieza de presión.

glish

. Position rotor and V-belt pulley in place.

. *Hold central bolt in place and* tighten new nut with a torque of **120 Nm**.

ote: In each case of repair use new nut of DIN 934-M12-10 quality.

8. Place new gasket in position.

9. Fit cover. Tighten bolts with a torque of **9 Nm**.

Español

16. Colocar el rotor y la polea acanalada.

17. *Retener el tornillo central y apretar* la tuerca nueva con un par de **120 Nm**.

Nota: En cada reparación se exige utilizar una tuerca nueva de la calidad DIN 934-M12-10.

18. Colocar una junta nueva.

19. Montar la tapa. Apretar los tornillos con un par de **9 Nm**.

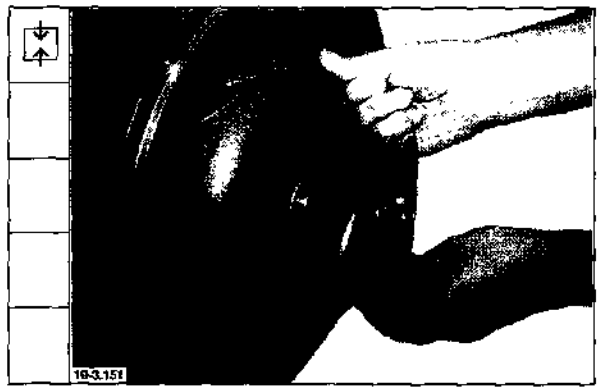

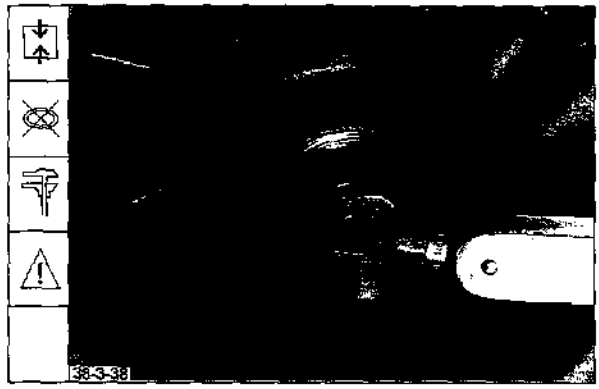

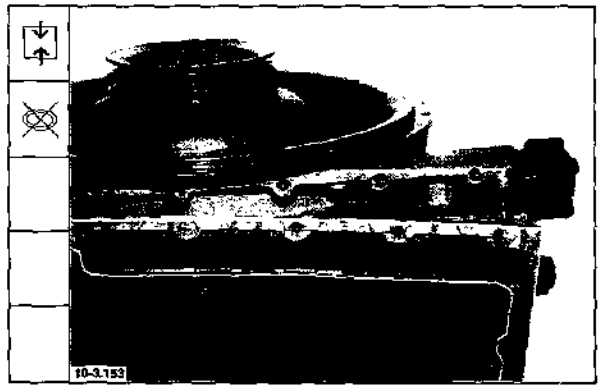

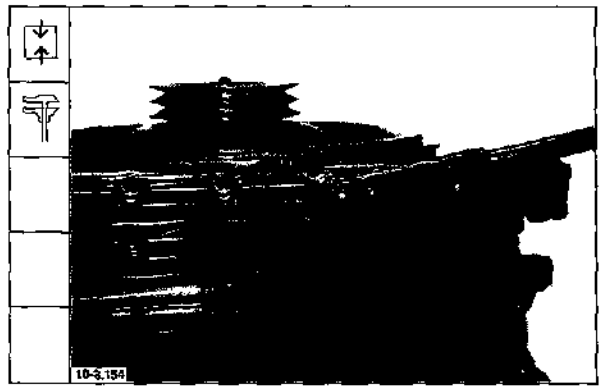

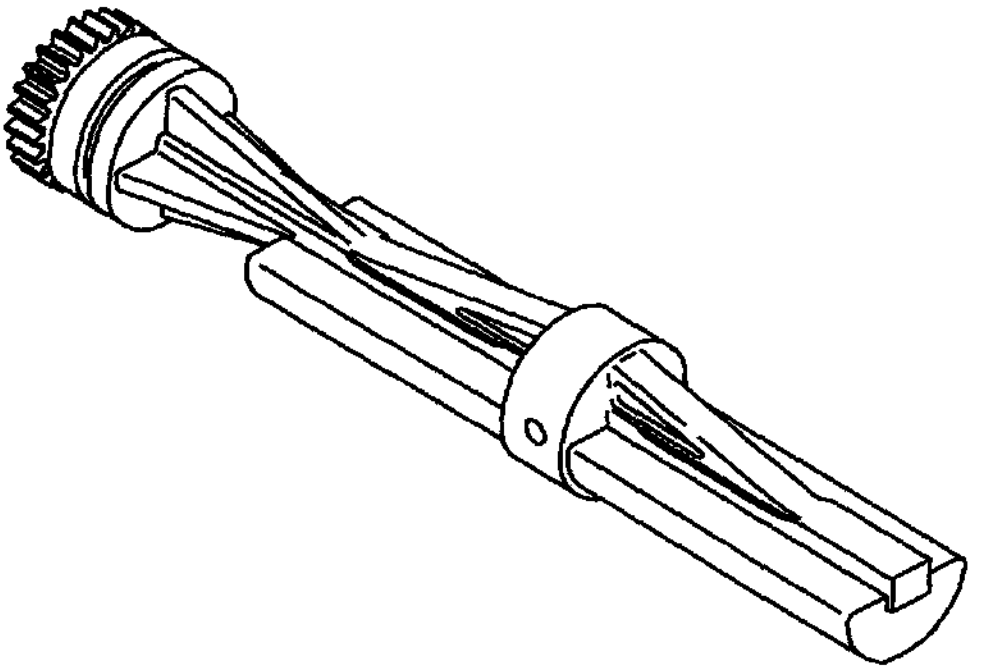

English

BF4M 1012

1. Inspect bearing journals for wear.

2. Inspect gear for wear.

Español

BF4M 1012

1. Examinar visualmente los muñones de soporte en cuanto a desgaste.

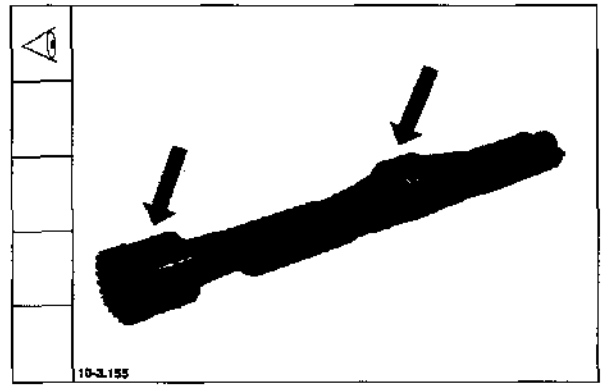

2. Examinar visualmente la rueda dentada en cuanto a desgaste.

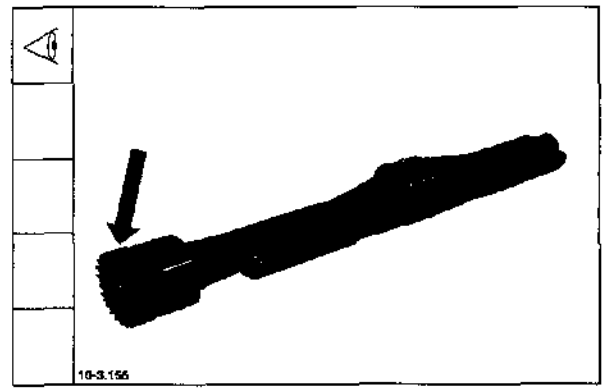

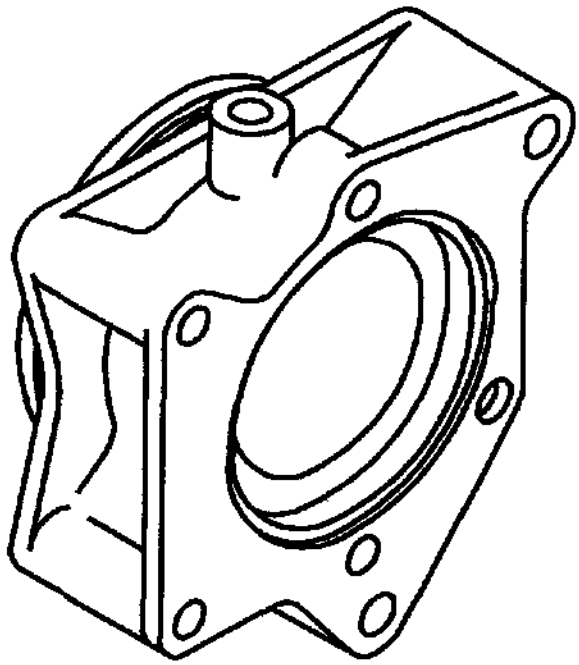

nglish

Special tools required:

Assembly tool for
bearing bushes _____ 143 790
(Use assembly tool for BFM 1012 *camshaft sleeves.*)

1. Remove stop washer.

2. Inspect all single parts and replace/ repair if necessary.

3. Gauge bearing bushes at points „1" and „2" in planes „a" and „b".

Inner diameter:	**60 + 0.054 mm**
Wear limit:	**60 + 0.080 mm**

Español

Herramientas especiales:

Herramienta de montaje para
casquillos de soporte _____ 143 790
(Utilizar la herramienta de montaje para los *casquillos del árbol de levas* BFM 1012.)

1. Desmontar la arandela de tope.

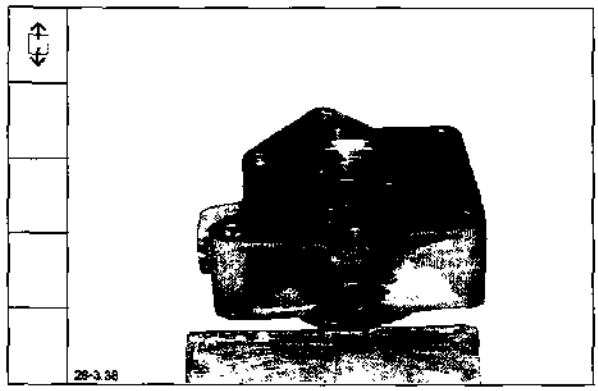

2. Examinar visualmente todas las piezas y reemplazarlas/ reacondionarlas. según necesidad.

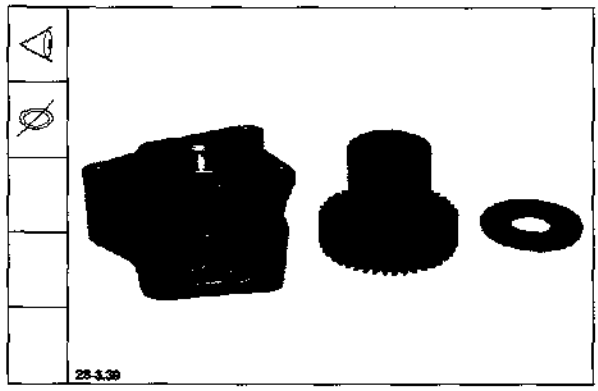

3. Verificar las medidas de los casquillos de soporte en los puntos „1" y „2" de los planos „a" y „b".

Diámetro interior:	**60 + 0,054 mm**
Límite de desgaste:	**60 + 0,080 mm**

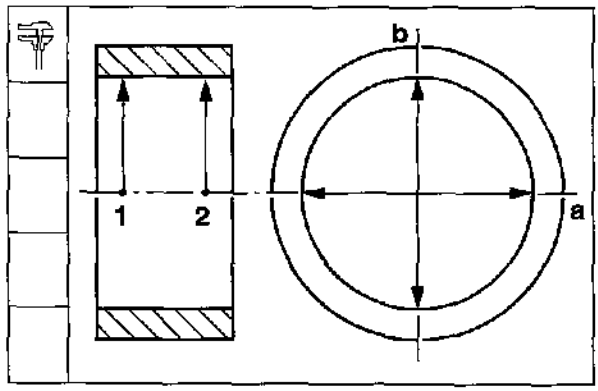

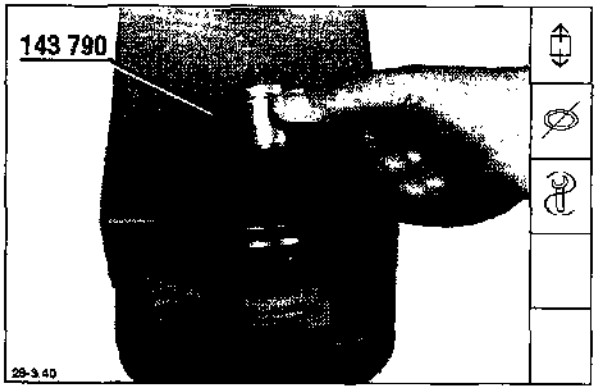

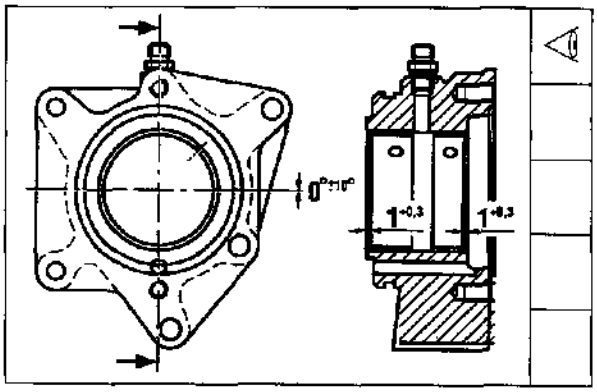

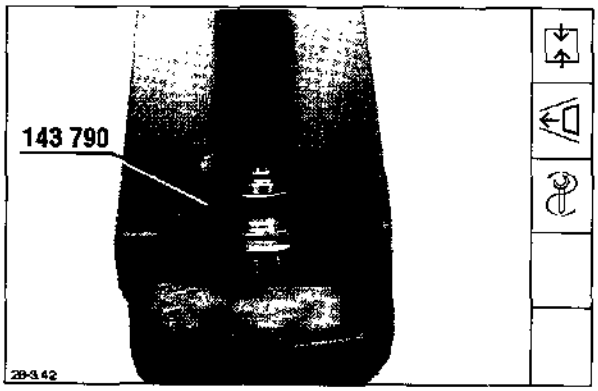

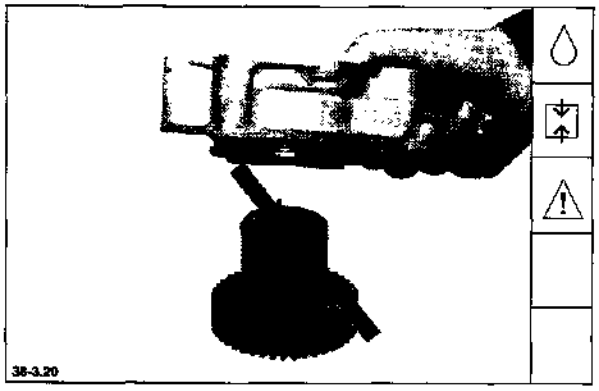

English

4. Renew bushes if necessary.

5. Schematic: Installation dimensions and installation position of bearing bushes.

6. Press in bearing bushes according to schematic, item 5.

7. Lightly oil gear shaft and bushes with motor oil according to classification API-CC or CCMC-D4 and install.

Note: Check bore in hollow shaft and drive shaft for free passage.

Español

4. Sustituir los casquillos, según necesidad.

5. Esquema: Medidas de introducci y posición de montaje de los casquillos de soporte.

6. Introducir a presión los casquillo de soporte, según el esquema de punto 5.

7. Untar el eje de rueda dentada y lo casquillos con un poco de aceite motor según la clasificación API-CC ó CCMC-D4 y montarlos.

Nota: Comprobar los taladros en el e hueco y eje arrastrador para ve si están despejados.

English

8. Position stop washer in place.

9. Tighten bolts with a torque of **8.5 ± 1 Nm**.

10. Fit new O-seal.

Español

8. Colocar la arandela de tope.

9. Apretar los tornillos con un par de **8,5 ± 1 Nm.**

10. Montar un anillo tórico nuevo.

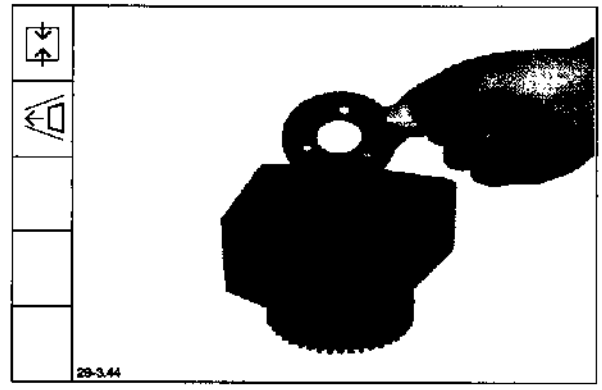

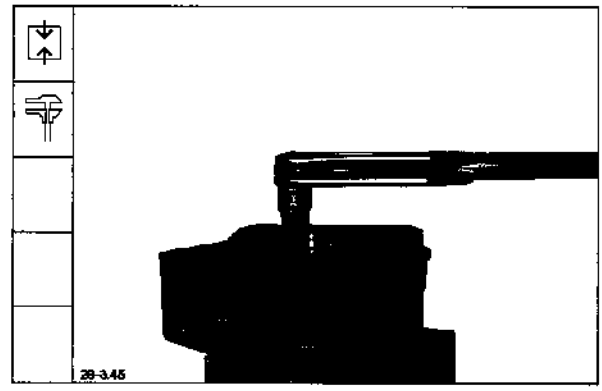

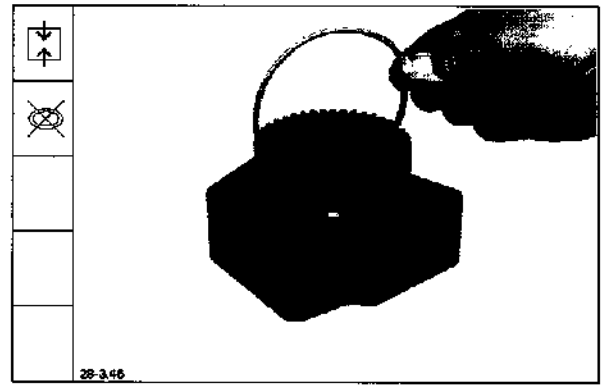

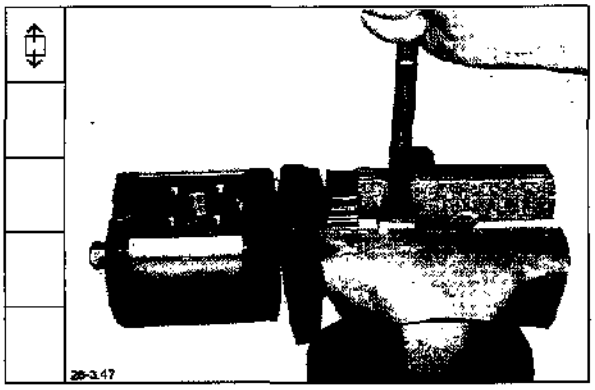

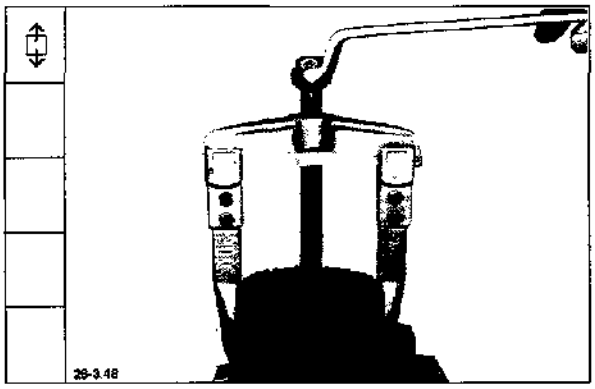

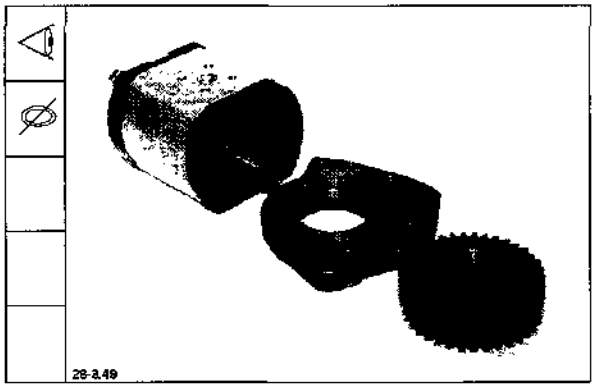

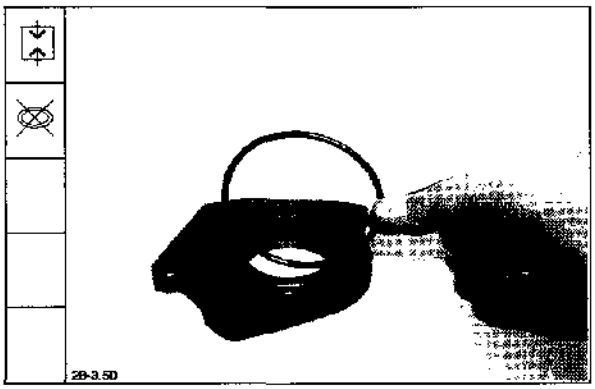

English

1. Remove gear.
2. Pull off gear.
3. Inspect all single parts and replace if necessary.
4. Fit new O-seal.

Español

1. Desmontar la rueda dentada.
2. Extraer la rueda dentada.
3. Examinar visualmente todas las piezas y reemplazarlas, según necesidad.
4. Montar un anillo tórico nuevo.

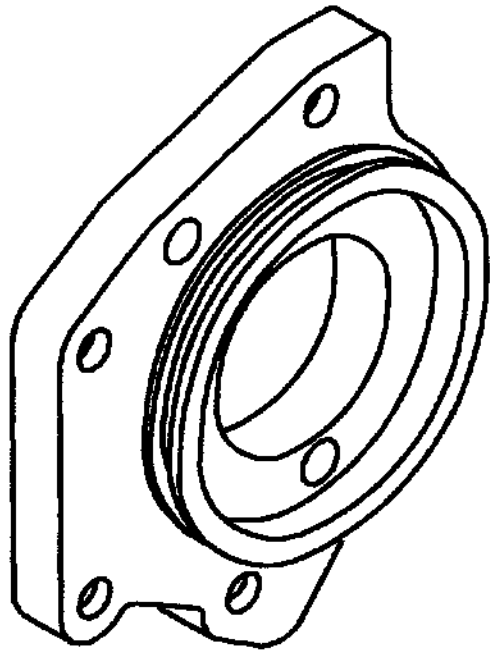

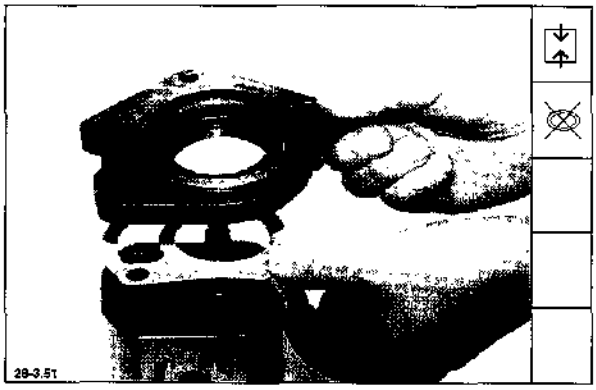

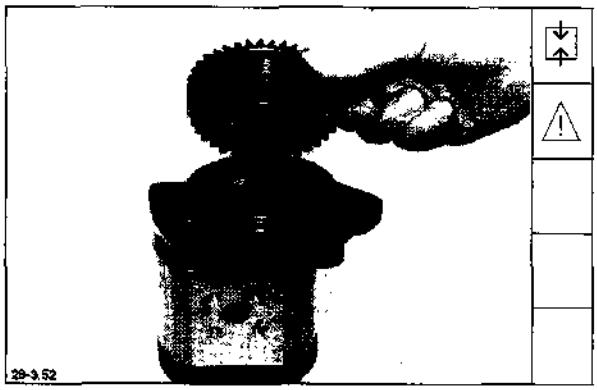

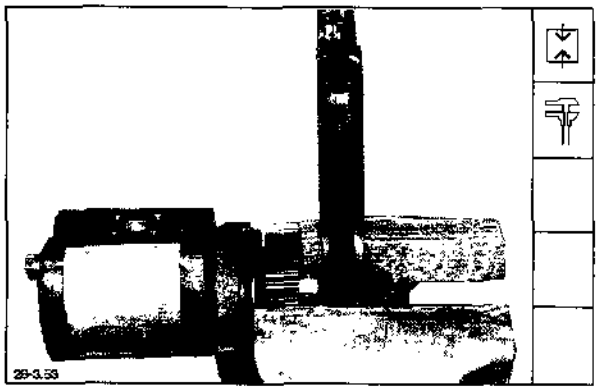

English

5. Place new gasket together with fastening flange on hydraulic pump.

6. Mount gear.

Note: Make sure that key is inserted.

7. Tighten nut with a torque of **80 Nm.**

Español

5. Colocar una junta nueva y la brida de fijación sobre la bomba hidráulica.

6. Montar la rueda dentada.

Nota: Las lengüetas de ajuste deben estar en su sitio.

7. Apretar la tuerca con un par de **80 Nm.**

Disassembly and reassembly of complete engine

Despiece y ensamblado conjunto de moteur

BFM 1012/1013

DEUTZ

Contents

4. Disassembly and reassembly of complete engine

	Page
Dismantling engine	4.00.01 - 4.00.16
Reassembling engine:	
Oil spray nozzles	4.00.17
Tappets/camshaft	4.00.18
Crankshaft bearings	4.00.18 - 4.00.21
Mass balancing shafts BFM 1012	4.00.22 - 4.00.27
Drive gear/governor	4.00.27
Control rod	4.00.27 - 4.00.28
Timing chest cover	4.00.28 - 4.00.29
Front cover	4.00.29 - 4.00.30
Piston with connecting rod	4.00.30 - 4.00.31
Installing injection pump	4.00.32 - 4.00.40
Flywheel/V-belt pulley	4.00.41
Cylinder head	4.00.42 - 4.00.47
Shutdown solenoid	4.00.47
Injector/injection lines	4.00.48 - 4.00.49
Air intake/exhaust manifold	4.00.49 - 4.00.50
Cylinder head cover	4.00.50 - 4.00.51
Lube oil cooler	4.00.51 - 4.00.52
Coolant pump	4.00.52 - 4.00.54
Fuel pump	4.00.54
Oil suction pipe/oil pan	4.00.54 - 4.00.56
Governor	4.00.57 - 4.00.58
Cable harness	4.00.59
Adapter housing	4.00.60
Starter	4.00.61
Breather pipe	4.00.61 - 4.00.62
Öil pressure switch	4.00.62 - 4.00.63
Crankcase breather	4.00.63
Exhaust turbocharger	4.00.64 - 4.00.65
Oil return pipe/pressure oil pipe	4.00.65 - 4.00.68
Intake elbow	4.00.68 - 4.00.70
Charge air elbow BFM 1013	4.00.70 - 4.00.71
Oil dipstick	4.00.71
Alternator	4.00.72
Tensioning V-belt	4.00.72 - 4.00.74
Engine mounting/mounting feet	4.00.74
Removing and refitting components for integrated cooling system, BFM 1012:	
Removing components	4.00.75 - 4.00.82
Refitting components	4.00.83 - 4.00.94
Replacing shaft seals on complete engine	
Timing chest cover flywheel end	4.00.95 - 4.00.96
Front cover	4.00.96 - 4.00.97
Removing and refitting PTOs:	
Removing and refitting air compressor	4.00.99 - 4.00.100
Removing and refitting power steering pump	4.00.101 - 4.00.102
Removing and refitting hydraulic pump	4.00.103
Removing and refitting hydraulic pump together with bracket	4.00.105 - 4.00.107
Replacing injection pumps in case of service	4.00.109 - 4.00.112

4. Despiece y ensamblado, conjunto de motor

	Pàgina
Desarmado del motor	4.00.01 - 4.00.16
Rearmado del motor:	
Toberas de refrigeración de pistón	4.0017
Empujadores / árbol de levas	4.00.18
Apoyos del cigüeñal	4.00.18 - 4.00.21
Arboles compensadores de masa BFM 1012	4.00.22 - 4.00.27
Rueda de accionamiento / regulador	4.00.27
Barra cremallera	4.00.27 - 4.00.28
Tapa del cárter de la distribución	4.00.28 - 4.00.29
Tapa delantera	4.00.29 - 4.00.30
Pistón con biela	4.00.30 - 4.00.31
Montaje de bombas de inyección	4.00.32 - 4.00.40
Volante / polea acanalada	4.00.41
Culata	4.00.42 - 4.00.47
solenoide de parada	4.00.47
Inyector / tuberías de inyección	4.00.48 - 4.00.49
Colector de admisión / colector de escape	4.00.49 - 4.00.50
Tapa de culata	4.00.50 - 4.00.51
Refrigerador de aceite lubricante	4.00.51 - 4.00.52
Bomba de líquido refrigerante	4.00.52 - 4.00.54
Bomba de combustible	4.00.54
Tubo de aspiración de aceite / cárter de aceite	4.00.54 - 4.00.56
Regulador	4.00.57 - 4.00.58
Mazo de cables	4.00.59
Cárter de adaptación	4.00.60
Arrancador	4.00.61
Tubería de ventilación	4.00.61 - 4.00.62
Interrupteur de presiónde aceite	4.00.62 - 4.00.63
Ventilación del cárter del cigüeñal	4.00.63
Turbocompresor	4.00.64 - 4.00.65
Tubo de retorno de aceite / tubería de aceite a presión	4.00.65 - 4.00.68
Codo de aspiración	4.00.68 - 4.00.70
Codo de aire de sobrealimentación BFM 1013	4.00.70 - 4.00.71
Varilla de medición de nivel de aceite	4.00.71
Alternador	4.00.72
Tensado de correas trapezoidales	4.00.72 - 4.00.74
Suspensión del motor / patas de colocación	4.00.74
Desmontaje y remontaje de componentes de la refrigeración integrada - BFM 1012:	
Desmontaje de componentes	4.00.75 - 4.00.82
Remontaje de componentes	4.00.83 - 4.00.94
Cambio de los retenes en el motor completo:	
Tapa del cárter de la distribución, lado volante	4.00.95 - 4.00.96
Tapa delantera	4.00.96 - 4.00.97
Desmontaje y remontaje de accionamientos secundarios:	
Desmontaje y remontaje del compresor de aire	4.00.99 - 4.00.100
Desmontaje y remontaje de la servobomba de dirección	4.00.101 - 4.00.102
Desmontaje y remontaje de la bomba hidráulica	4.00.103
Desmontaje y remontaje de la bomba hidráulica y consola	4.00.105 - 4.00.107
Cambio de las bombas de inyección en el caso de servicio	4.00.109 - 4.00.112

glish

:mantling engine

mmercial tools required:

rx tool kit ——— 8189
rx socket wrench E 14 ——— 8113
rx socket wrench E 18 ——— 8116
rx socket wrench E 20 ——— 8114
ring clamp pliers ——— 9090
ring clamp pliers ——— 9088
xiliary tool for glow
g cable coupler ——— 9115
bra clamp pliers ——— 8011

ecial tools required:

ngine assembly stand
BFM 1012 ——— 6067
BFM 1013 ——— 6066
gled clamping plate BFM 1012
r external cooling system — 6067/118
ngled clamping plate BFM 1012
r integrated cooling system 6067/119
ngled clamping plate
FM 1013 ——— 6066/158
xtractor for injector ——— 110 030
pecial device for
xtractor ——— 150 800
lter cartridges ——— 170 050

he repair procedure outlined in this hapter refers to the standard pecification, i.e. components for ustomizing the engine are not shown.

. Mount angled clamping plate.

Illustration shows BFM 1012.

FM 1012

2. Clamp engine in swivelling assembly stand and align. Tighten bolts.

Drain and catch remaining il and coolant and dispose of n accordance with anti-ollution regulations.

Español

Desarmado del motor

Herramientas comerciales:

Juego de herramientas Torx ——— 8189
Llave de vaso Torx E 14 ——— 8113
Llave de vaso Torx E 18 ——— 8116
Llave de vaso Torx E 20 ——— 8114
Alicates para pinzas elásticas ——— 9090
Alicates para pinzas elásticas ——— 9088
Herramienta auxiliar para
acoplamientos de cables de bujías de
incandescencia ——— 9115
Alicates Cobra ——— 8011

Herramientas especiales:

Caballete de montaje para motor
BFM 1012 ——— 6067
BFM 1013 ——— 6066
Soportes de fijación BFM 1012
para refrigeración externa — 6067/118
Soportes de fijación BFM 1012
para refrigeración integrada 6067/119
Angulares de fijación
BFM 1013 ——— 6066/158
Extractor para inyector ——— 110 030
Dispositivo especial para
dispositivo de extracción ——— 150 800
Cartuchos filtrantes ——— 170 050

Los trabajos de reparación descritos en este capítulo se refieren al volumen de suministro estándar, o sea, no se muestran los componentes adosados que difieren del mismo.

1. Montar los soportes de fijación.

Representado BFM 1012.

BFM 1012

2. Alinear el motor en el caballete de montaje orientable. Apretar los tornillos.

Evacuar el aceite o los restos del mismo y el refrigerante, recogerles y eliminarlos en forma reglamentaria.

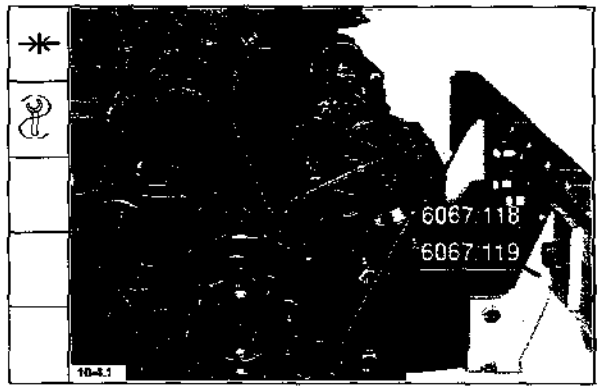

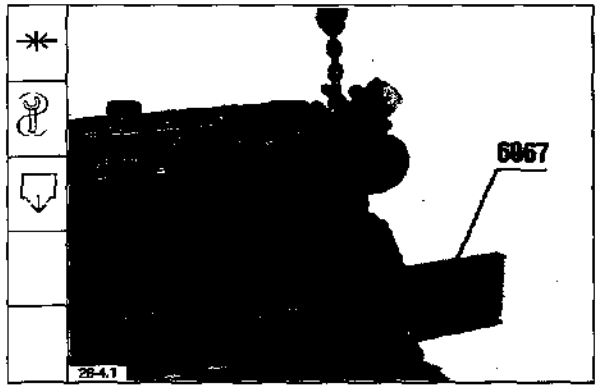

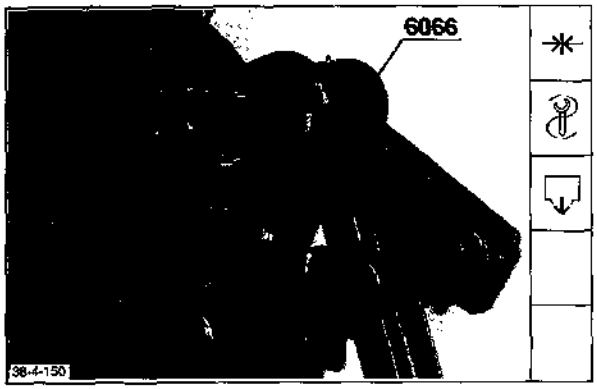

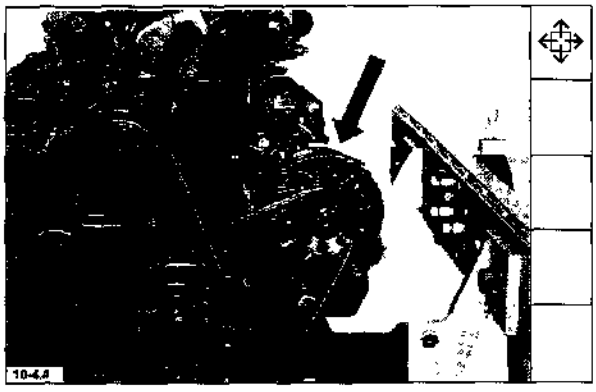

English

BFM 1013

2.1 Clamp engine in double-sided swivelling assembly stand and align.Tighten bolts.

Drain and catch remaining oil and coolant and dispose of in accordance with anti-pollution regulations.

In case of parts assembly and turning of engine by 180° **the pressure control valve is to be removed.**
Catch any remaining oil and coolant and dispose of in accordance with anti-pollution regulations.

3. Remove alternator.

4. Loosen fuel pump. Remove V-belt.

Español

BFM 1013

2.1 Alojar el motor en el caballete d montaje bilateral orientable y alineario. Apretar los tornillos.

Evacuar el aceite o los restos mismo y el refrigerante, recogerlos y eliminarlos en fo reglamentaria.

En caso de despiece parcial y volteo del motor por 180°, hay **retirar la válvula reguladora d presión.**
Recoger y eliminar en forma reglamentaria los restos de ac y el líquido refrigerante.

3. Desmontar el alternador.

4. Aflojar la bomba de combustibl Quitar la correa trapezoidal.

ıglish

Remove bracket.

Remove coolant pipe.

Remove breather pipe using special spring clamp pliers.

. Remove intake hose.

ote: Cover up opening of exhaust turbo charger.

Español

5. Desmontar la consola.

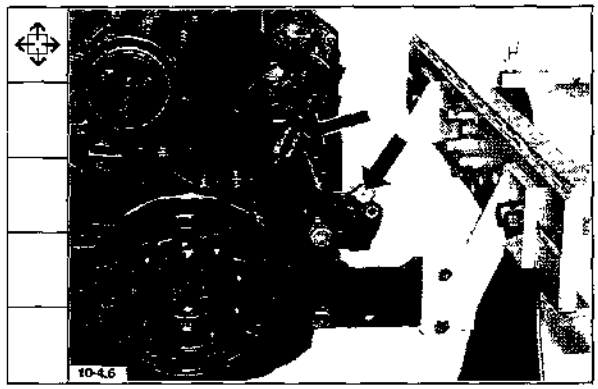

6. Desmontar el tubo de líquido refrigerante.

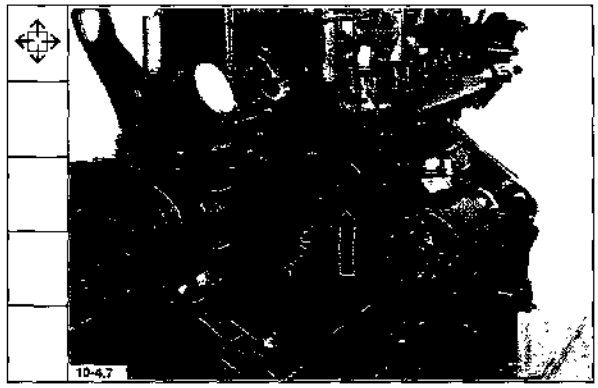

7. Desmontar el tubo de ventilación, utilizando las tenazas especiales para pinzas elásticas.

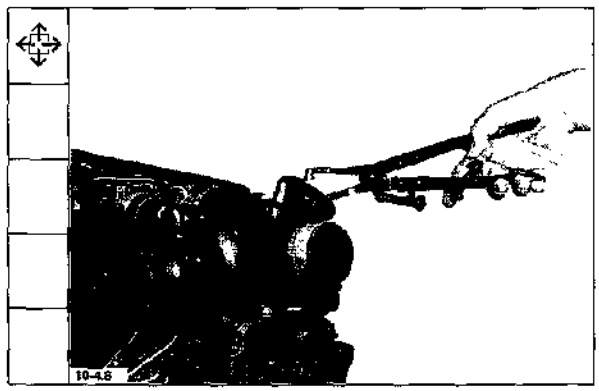

8. Desmontar la manguera de aspiración.

Nota: Cerrar la boca del turbocompresor.

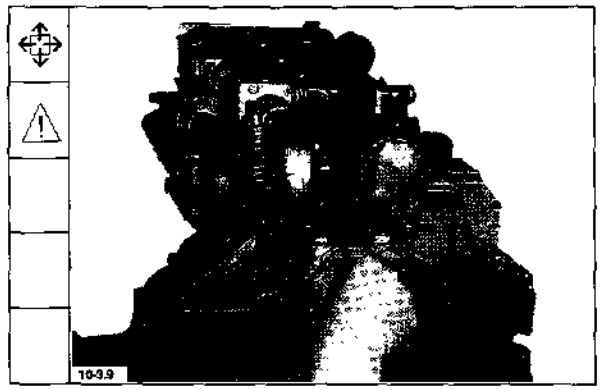

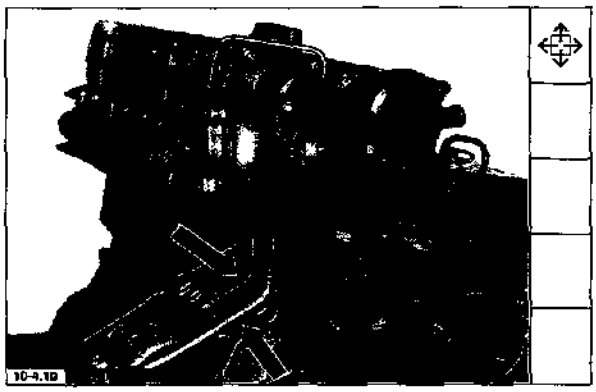

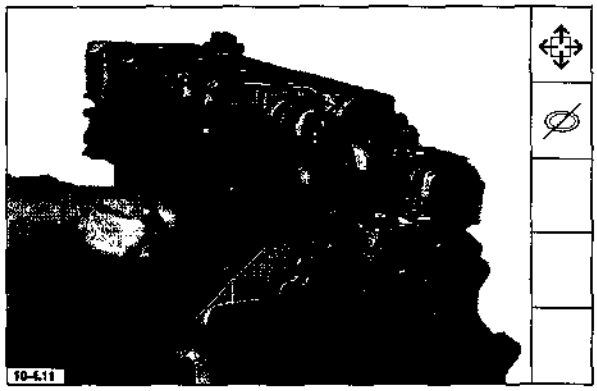

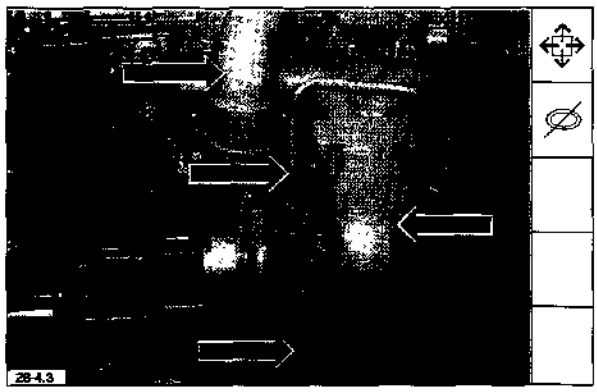

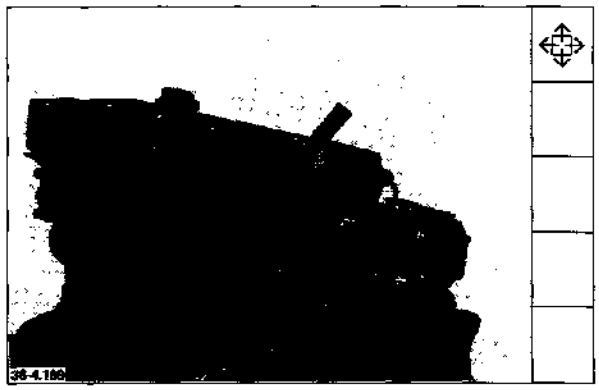

English

9. Remove BFM 1012 oil pressure pipe and oil return pipe.

10. Remove BFM 1012 exhaust turbocharger. Replace damaged turbocharger.

10.1 Remove BFM 1013 oil pressure pipe, oil return pipe, charge air elbow and exhaust turbocharger. Replace damaged turbocharger.

11. Pull out plug-in element

Español

9. En BFM 1012, desmontar la tu de presión de aceite y la tuberí retorno de aceite.

10. En BFM 1012, desmontar el turbocompresor. Si está defectuoso, sustituirlo p otro nuevo.

10.1 En BFM 1013, desmontar la tubería de presión de aceite, la tubería de retorno de aceite, el codo de aire de sobrealimenta y el turbocompresor. Si el turbocompresor está defectuoso, sustituirlo por otro nuevo.

11. Retirar la pieza de enchufe.

nglish

12. Remove pressure control valve together with hose.

13. Remove air pipe to manifold presssure compensator (LDA) and breather pipe.

14. Remove starter.

15. Remove lifting lugs.

Español

12. Desmontar la válvula reguladora de presión en conjunto con la manguera.

13. Desmontar la tubería de aire que va al tope de plena carga dependiente de la presión de sobrealimentación (LDA), y la tubería de ventilación.

14. Desmontar el arrancador.

15. Desmontar las argollas de transporte.

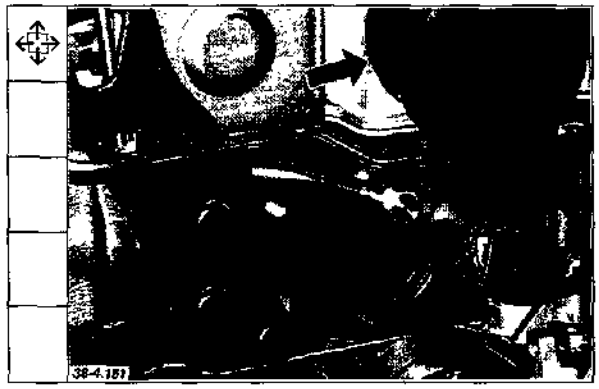

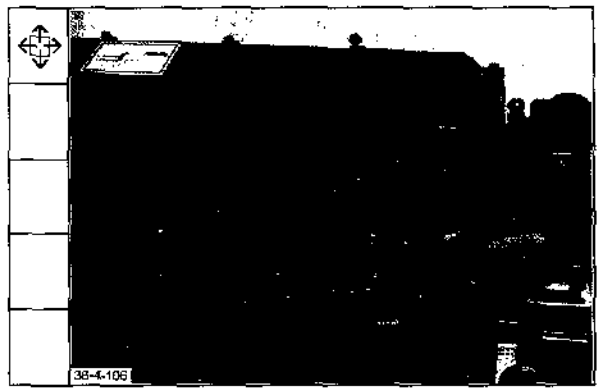

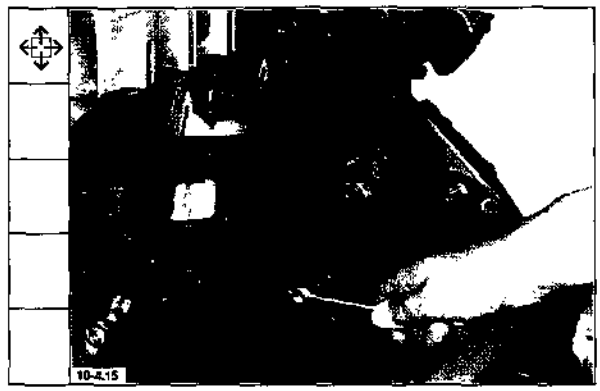

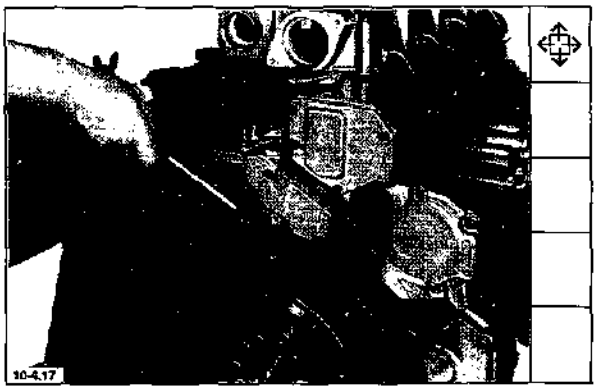

English

16. Remove governor.

Español

16. Desmontar el regulador de velocidad.

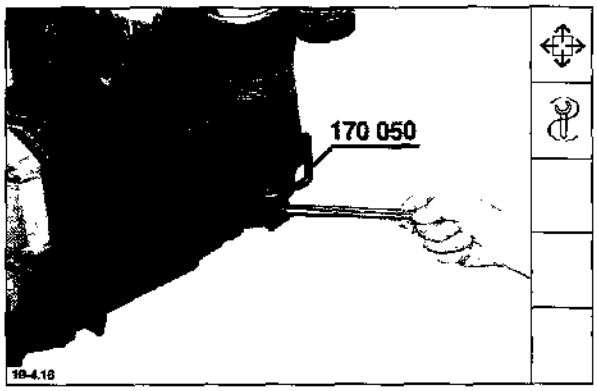

English

17. Remove fuel and oil filter using special device for filter cartridges. **Dispose of remaining oil and fuel in accordance with anti-pollution regulations.**

Español

17. Sirviéndose del dispositivo especial, desmontar el filtro de combustible y el filtro de aceite. **Eliminar el aceite restante y combustible en forma reglamentaria.**

English

18. Remove oil filler neck if any.

Español

18. Desmontar la tubuladura de llena de aceite, si existe.

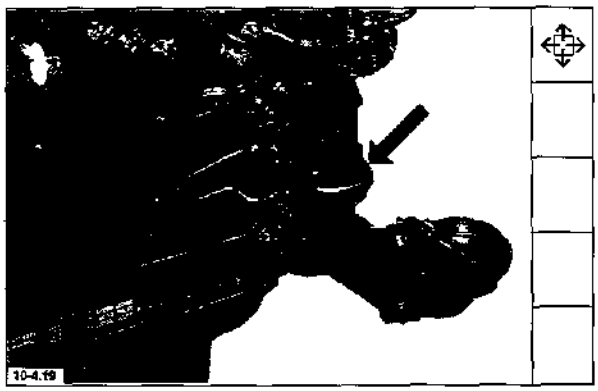

English

19. Remove fuel lines.

Español

19. Desmontar las tuberías de combustible.

English

Note: Use Cobra clamp pliers.

Español

Nota: Utilizar los alicates Cobra.

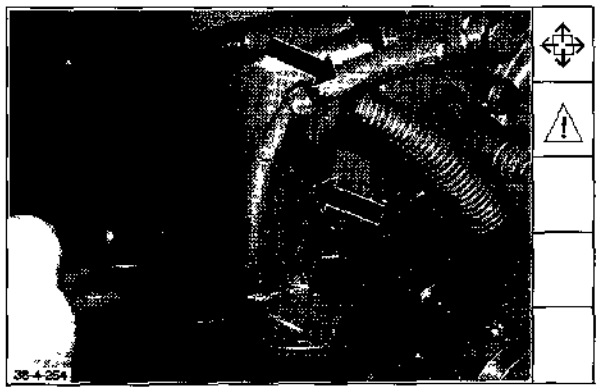

nglish

20. Remove fuel pump with clamping plate.

21. Remove lube oil cooler. Remove also retainer for cable connector if any.

22. Remove coolant pump together with thermostat housing.

23. Disconnect glow plug cable coupler if any. For such purpose introduce auxiliary tool carefully into rubber grommet without turning it in any way and disconnect cable.

Español

20. Desmontar la bomba de combustible en conjunto con la corredera.

21. Desmontar el refrigerador de aceite lubricante.
Desmontar también el soporte para el conectador de cables, si lo hay.

22. Desmontar la bomba de líquido *refrigerante en conjunto con la caja* del termostato.

23. Si existe, separar el acoplamiento de cables de las bujías de incandescencia. Para ello, introducir cuidadosamente, sin movimiento giratorio, la herramienta auxiliar en el manguito de goma y separar los cables.

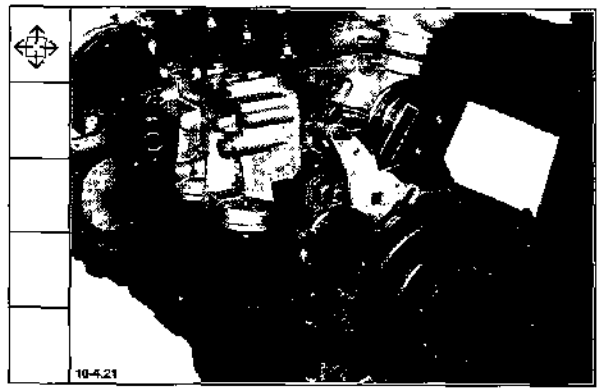

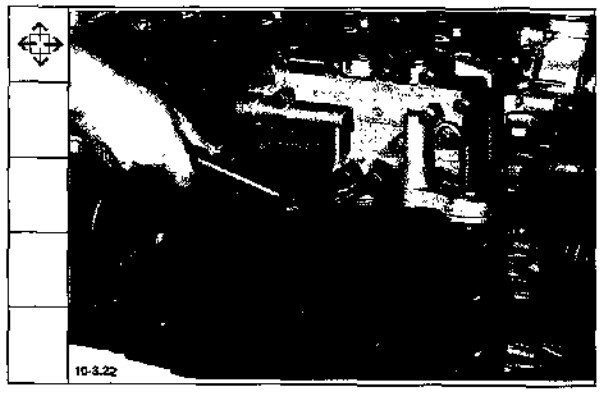

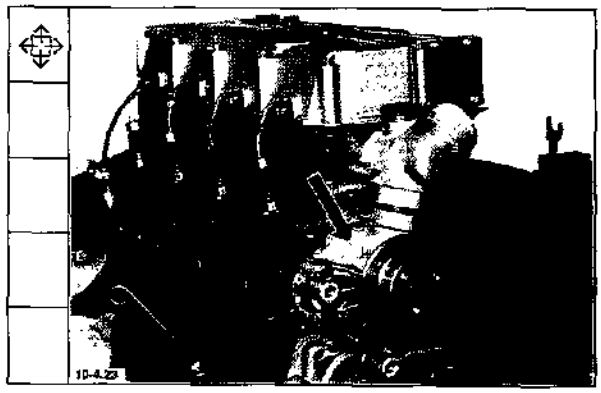

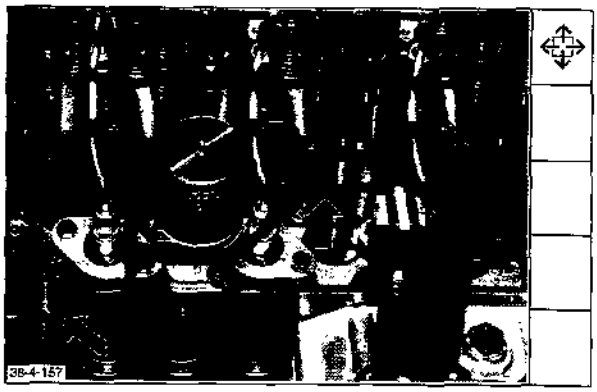

English

24. Remove cylinder head cover. Remove cabling as well if any.

25. Remove backleakage pipe together with overflow valve.

26. Remove shutdown solenoid.

26. Remove injection lines complete with sealing rubber.

Note: Cover up openings.

Español

24. Desmontar la tapa de culata. Retirar también los cables, si existen.

25. Desmontar la tubería de combustible sobrante en conjunt con la válvula de rebose.

26. Desmontar el solenoide de parad

27. Desmontar las tuberías deinyecci con las piezas obturantes de gom

Nota: Cerrar las aberturas.

ıglish

3. Remove injectors.

ote: If sticking, use disassembly tool No. 150 800 with extractor *No. 110 030.*

9. Remove glow plugs if any.

0. Remove rocker arm brackets.

1. Take out pushrods.

Español

28. Desmontar los inyectores.

Nota: En caso de asiento fijo, utilizar el dispositivo de extracción *No. 150 800 con el extractor* No.110 030.

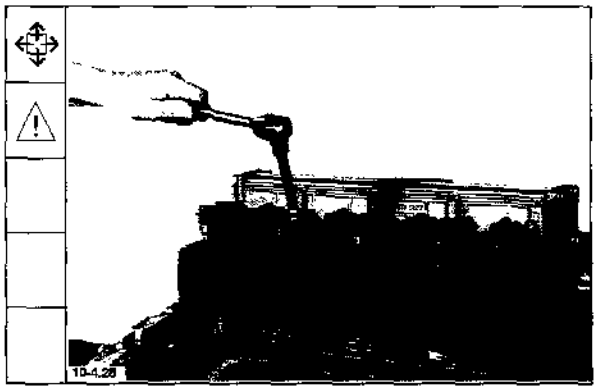

29. Desmontar las bujías de incandescencia, si las hay.

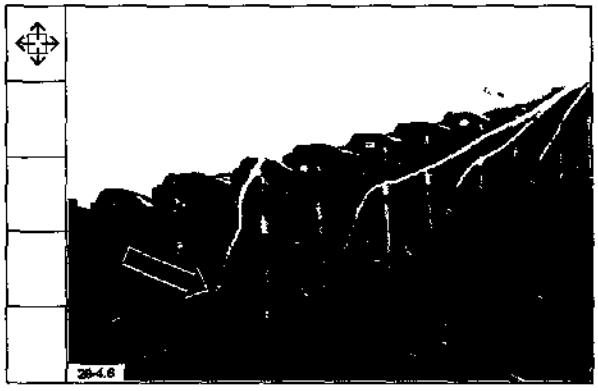

30. Desmontar los soportes de balancines.

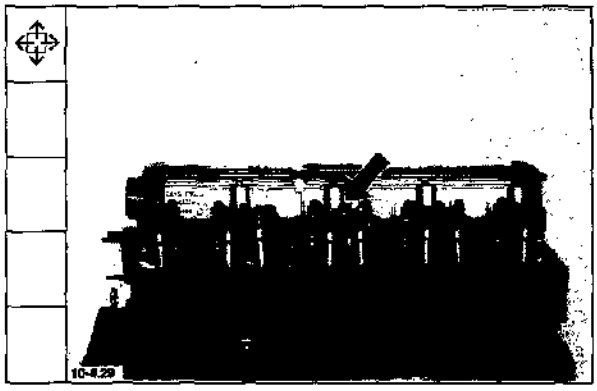

31. Sacar las varillas de empuje.

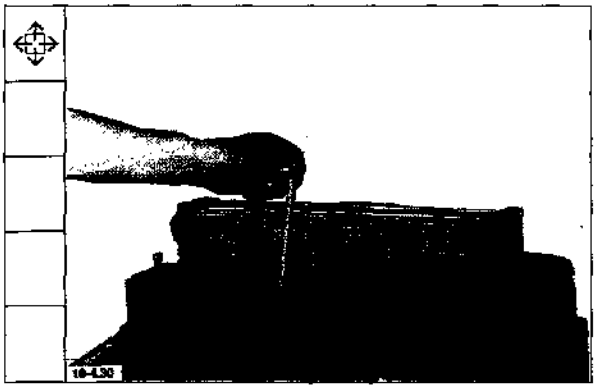

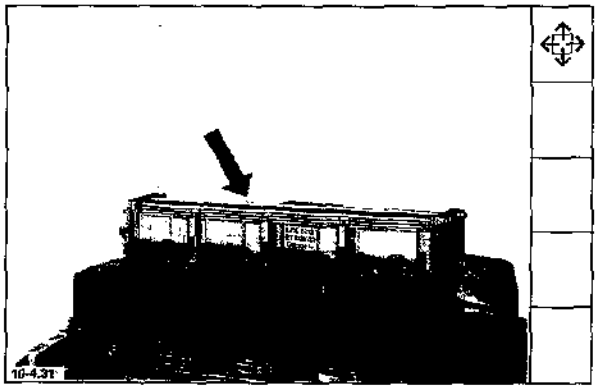

English

32. Remove charge air pipe.

Español

32. Desmontar el conducto de aire sobrealimentación.

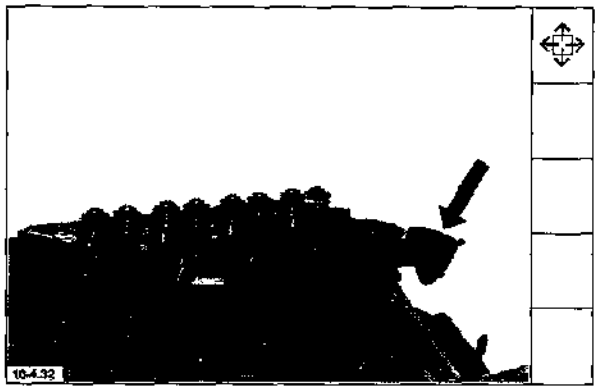

33. Remove exhaust manifold.

33. Desmontar el colector de escap

34. Remove cylinder head. Take off gasket.

Note: Use E14/E18 Torx tool.

34. Desmontar la culata. Retirar la junta.

Nota: Utilizar la herramienta Torx E14 / E18.

35. Remove injection pumps.

Note: Watch out for shims.

35. Desmontar las bombas de i nyección.

Nota: Prestar atención a las arand de reglaje.

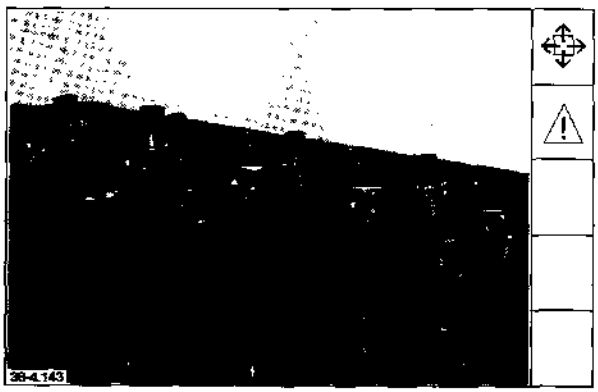

English

36. Take out roller tappets together with shims.

37. Pull out oil dipstick.

38. Remove cover plate.
Turn engine by 180°.

Note: Catch any escaping oil and dispose of in accordance with anti-pollution regulations.

39. Turn engine by 90°. Remove adapter housing.

Note: Use Torx tools E20 and E14.

Español

36. Retirar los empujadores de rodillo con las arandelas de reglaje.

37. Sacar la varilla de medición del nivel de aceite.

38. Desmontar la chapa de recubrimiento.
Girar el motor por 180°.

Nota: Recoger el aceite que sale, eliminándolo en forma reglamentaria.

39. Girar el motor por 90°. Desmontar el cárter de adaptación.

Nota: Utilizar las herramientas Torx E20 y E14.

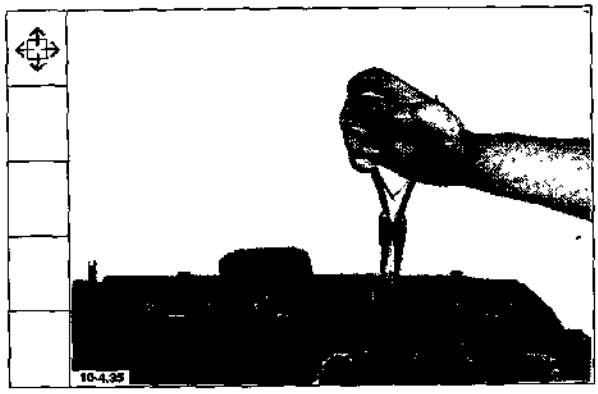

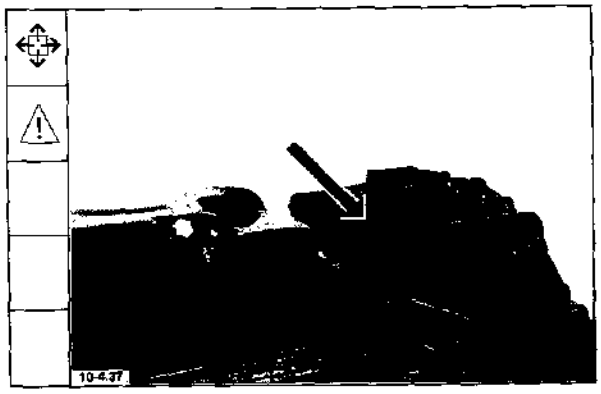

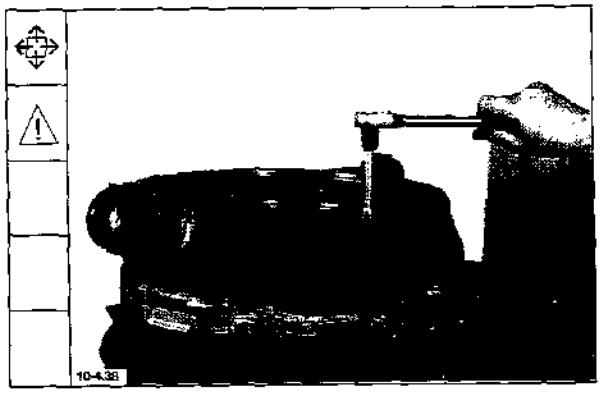

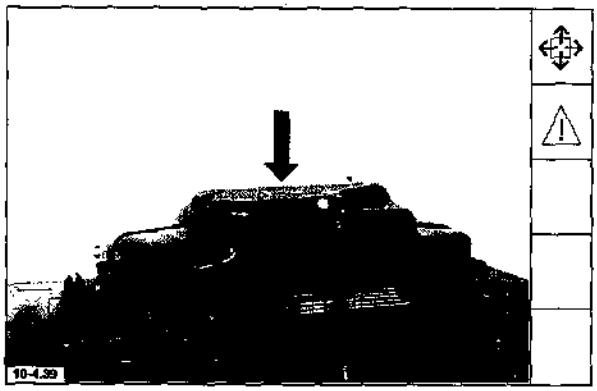

English

40. Turn engine by 90°. Remove oil pan.

Note: Mark installation position of oil sump.

Español

40. Girar el motor por 90°. Desmont el cárter de aceite.

Nota: Marcar la posición de montaj del sumidero de aceite.

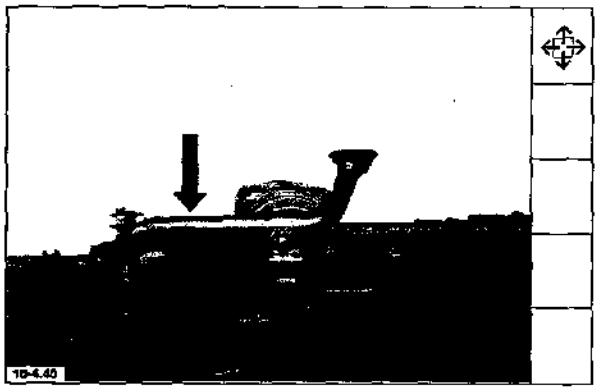

41. Remove oil suction pipe.

41. Desmontar el tubo de aspiración c aceite.

42. Remove piston complete with connecting rod.

42. Desmontar el pistón con la biela.

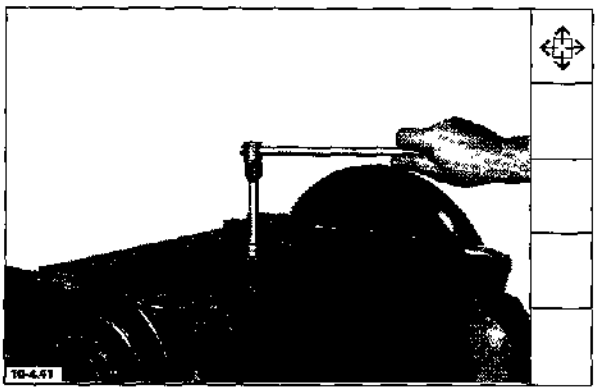

43. Remove V-belt pulley.

Note: Use Torx tool E20.

43. Desmontar la polea acanalada.

Nota: Utilizar la herramienta Torx E20.

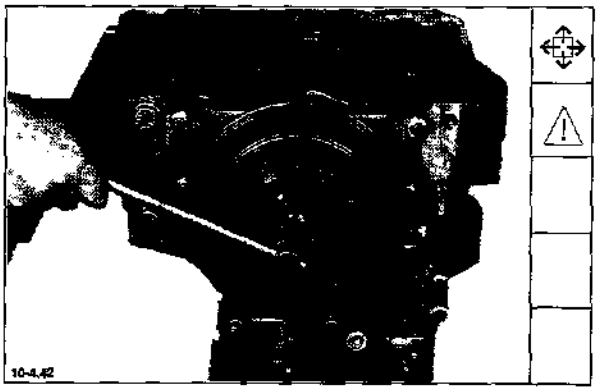

nglish

4. Remove front cover.

Español

44. Desmontar la tapa delantera.

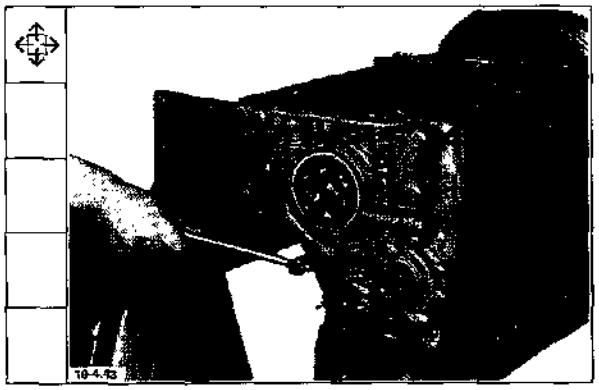

15. Remove flywheel.

45. Desmontar el volante.

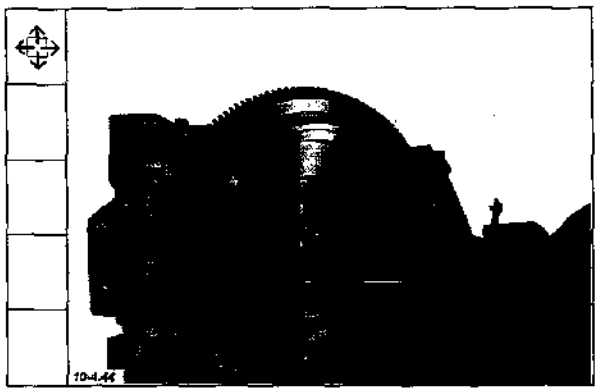

46. Remove timing chest cover.

46. Desmontar la tapa del cárter de la distribución.

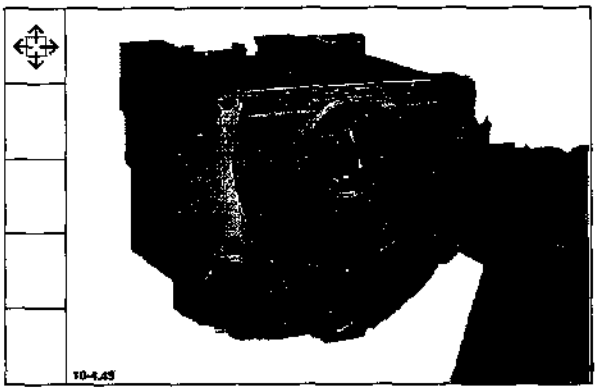

47. Remove main bearing caps.

47. Desmontar las tapas de los cojinetes de apoyo.

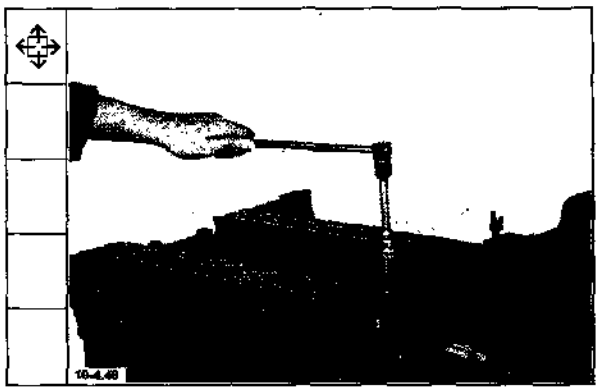

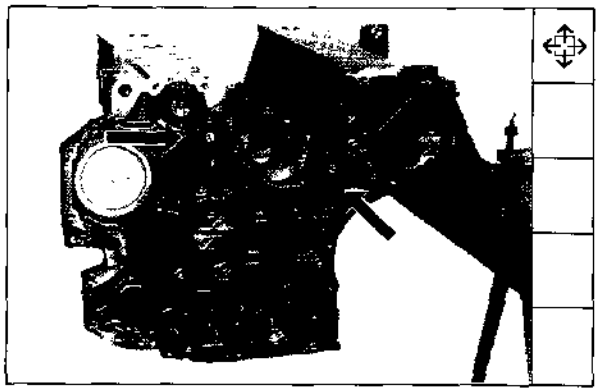

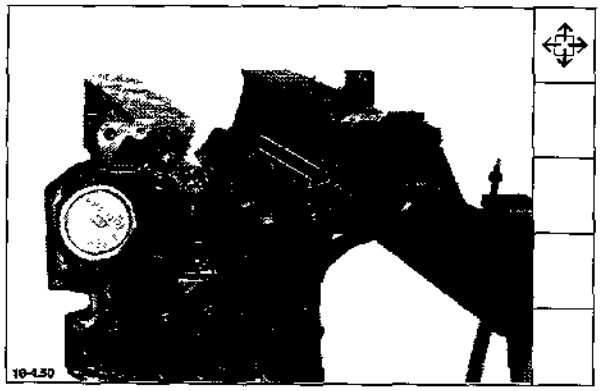

English

48. Lift out crankshaft.

49. Take out thrust rings and bearing shell halves.

50. Remove drive gears for balancing shafts if any.

51. Remove thrust washers for balancing shafts if any.

Español

48. Retirar el cigüeñal.

49. Sacar las arandelas de tope y los semicojinetes.

50. Desmontar las ruedas de accionamiento de los árboles compensadores de masa, si existen.

51. Desmontar las arandelas de tope los árboles compensadores, si existen.

glish

Take out balancing shafts if any.

. Remove drive gear for governor.

. Take out camshaft.

. Remove guide sleeve. Take out control rod.

Español

52. Extraer los árboles compensadores, si existen.

53. Desmontar la rueda de accionamiento del regulador de velocidad.

54. Extraer el árbol de levas.

55. Desmontar el manguito de guía. Sacar la barra cremallera.

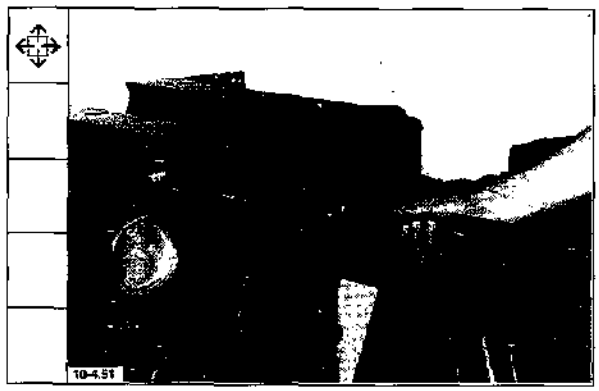

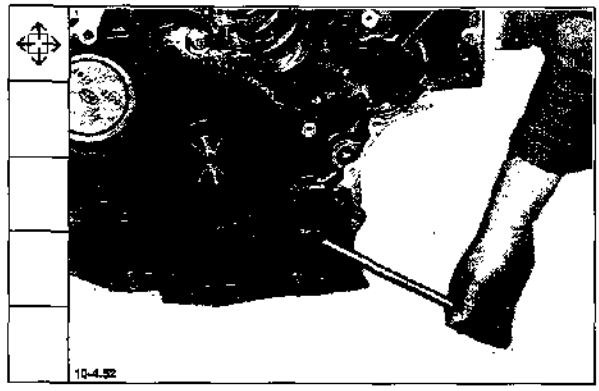

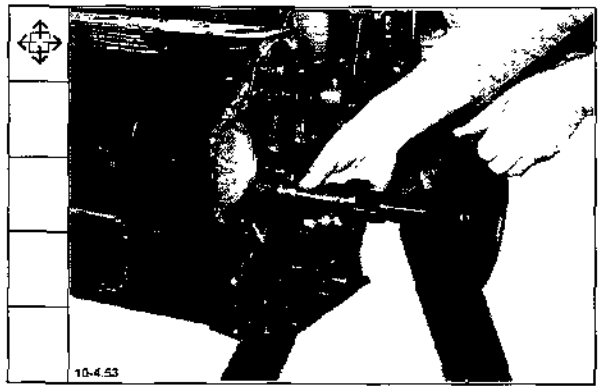

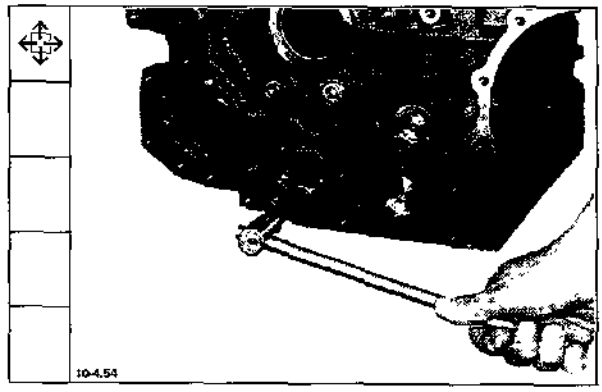

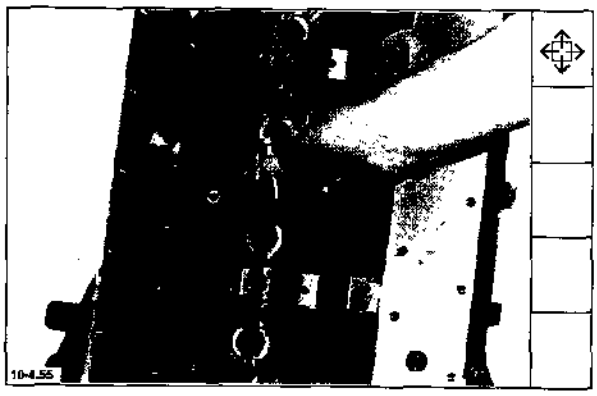

English

56. Take out tappets.

57. Press out oil spray nozzles.
Check oil ducts for free passage.

Español

56. Retirar los empujadores.

57. Sacar a presión las toberas de refrigeración de pistón. Compro si los conductos de aceite están despejados.

nglish

:eassembling engine

:ommercial tools required:

Torx tool set	8189
Torx socket wrench E14	8113
Torx socket wrench E18	8116
Torx socket wrench E20	8114
Hose clamp pliers	9090
Hose clamp pliers	9088
V-belt tension gauge	8115
Serrated wrench for turning *I.P.*	8117
Cobra clamp pliers	8011

Special tools required:

Dial gauge M2T	100 400
Measuring device	100 750
Measuring device BFM 1012	100 780
	100 860
BFM 1013	100 840
Measuring device/locking device for control rod	100 800
Adjusting pin for mass balancing shafts BFM 1012	100 810
Graduated disc	101 020
Adapter for graduated disc	101 030
Pointer	101 300
Piston ring compressor BFM 1012	130 630
BFM 1013	130 640

Oil spray nozzles

1. Press in oil spray nozzles as far as they will go.

Español

Rearmado del motor

Herramientas usuales en el comercio:

Juego de herramientas Torx	8189
Llave de vaso Torx E14	8113
Llave de vaso Torx E18	8116
Llave de vaso Torx E20	8114
Alicates para pinzas elásticas	9090
Alicates para pinzas elásticas	9088
Verificador de tensión para correas trapezoidal	8115
Llave (estrella) de giro para bomba de inyección	8117
Alicates Cobra	8011

Herramientas especiales:

Comparador M2T	100 400
Dispositivo de medición	100 750
Dispositivo de medición BFM 1012	101 780
	100 860
BFM 1013	101 840
Dispositivo de medición/bloqueo para cremallera	100 800
Perno de ajuste para ejes compensadores de masas, BFM 1012	100 810
Disco graduado	101 020
Adaptador para disco graduado	101 030
Indicador	101 300
Compresor de aros de pistón BFM 1012	130 630
BFM 1013	130 640

Toberas de refrigeración de pistón

1. Introducir a presión hasta el tope las toberas de refrigeración de pistón.

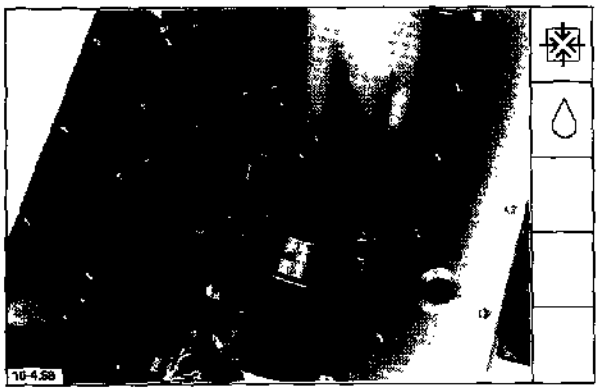

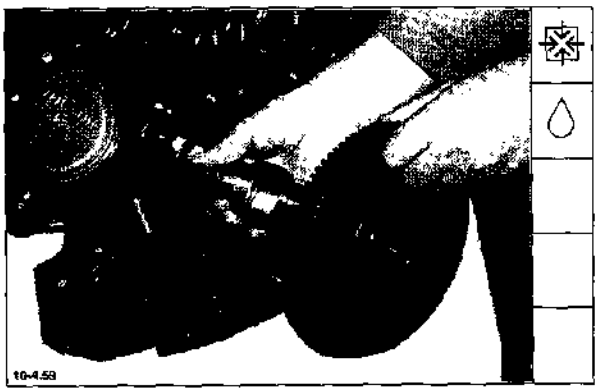

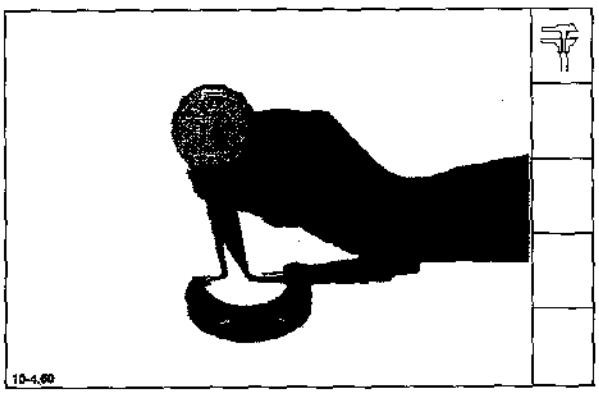

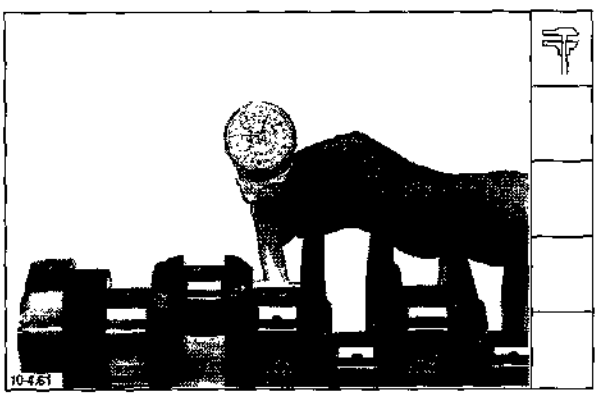

English

Tappets/camshaft

2. Insert tappets.

3. Introduce camshaft.

Crankshaft bearings

4. Set internal gauge:

   BFM 1012 to **36 mm**
   BFM 1013 to **38 mm**

5. Gauge width of crankshaft thrust bearing journal and record. Dimension „a"

   Standard journal width:
   BFM 1012 _____ **36 + 0.04 mm**
   BFM 1013 _____ **38 + 0.06 mm**

   Limit for oversize:
   BFM 1012 _____ **36.4 + 0.04 mm**
   BFM 1012 _____ **38.4 + 0.06 mm**

Español

Empujadores / árbol de levas

2. Introducir los empujadores

3. Introducir el árbol de levas.

Apoyos del cigüeñal

4. Ajustar el micrómetro de interior

   BFM 1012 a **36 mm**
   BFM 1013 a **38 mm**

5. Medir el ancho de muñón del cojinete de empuje del cigüeñal y registrarlo. Medida „a".

   Ancho de muñón normal:
   BFM 1012 _____ **36 + 0,04 m**
   BFM 1013 _____ **38 + 0,06 m**

   Límite de sobremedida:
   BFM 1012 _____ **36,4 + 0,04 m**
   BFM 1013 _____ **38,4 + 0,06 m**

glish

Insert bearing shells.

Español

6. Colocar los semicojinetes.

Insert bearing shells in main bearing caps.

7. Colocar los semicojinetes en las tapas de los cojinetes de apoyo.

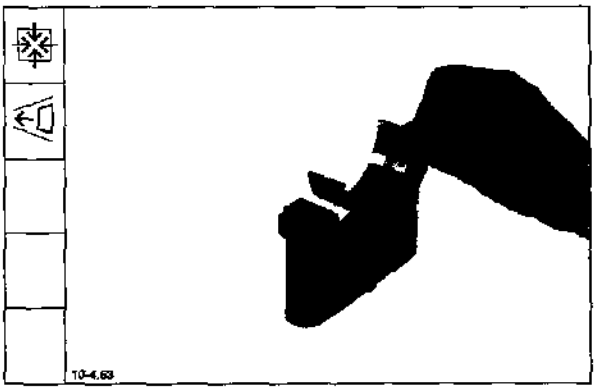

. Place half thrust rings on thrust bearing cap, gauge and record width. *Dimension „b"*

8. Colocar las medias arandelas de tope en la tapa de cojinete de *empuje, medir el ancho y* registrarlo. Medida „b".

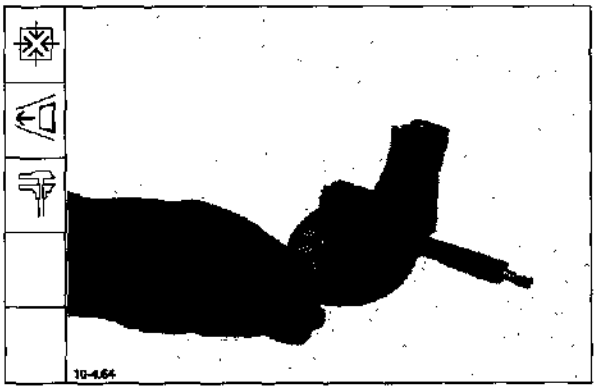

. Determine end float.

xample BFM 1012:
Dimension a = **36.04 mm**
Dimension b = **35.90 mm**
Dimension a - dimension b
= **end float** = **0.14 mm**

ermissible end float for:
BFM 1012 = **0.10 - 0.30 mm**
BFM 1013 = **0.10 - 0.30 mm**

9. Determinar el juego axial.

Ejemplo*BFM 1012:*
medida a = **36,04 mm**
medida b = **35,90 mm**
medida a - medida b = **juego axial**
≈ 0,14 mm

Juego axial admisible para:
BFM 1012 = **0,10 - 0,30 mm**
BFM 1013 = **0,10 - 0,30 mm**

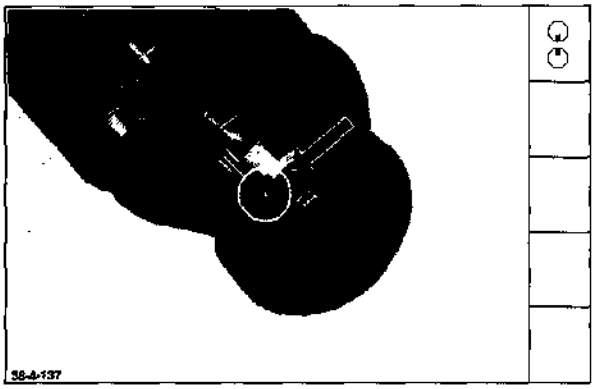

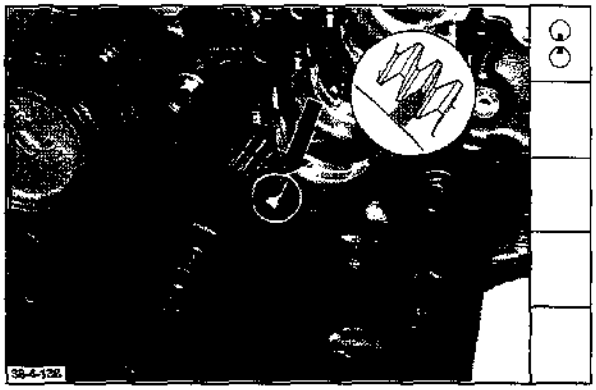

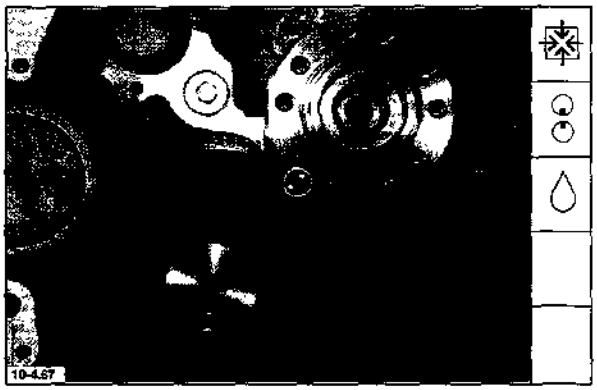

English

10. Mark crankshaft prior to installation.

11. Mark camshaft and place in position.

12. Introduce crankshaft. Marks must be in line.

13. Insert half thrust rings without lug.

Note: Running layer of thrust rings must face towards crankweb.

Español

10. Marcar el cigüeñal antes de proceder a su montaje.

11. Marcar el árbol de levas y posicionarlo.

12. Introducir el cigüeñal. Las marcas deben corresponder en el montaje.

13. Poner las medias arandelas de to sin talón de guía en su sitio.

Nota: La capa de roce de las arandelas debe indicar hacia cara lateral de las manivelas cigüeñal.

nglish

4. Stick half thrust rings with lug to *thrust bearing cap using some* grease.

:ote: Running layer of thrust rings *must face towards crankweb.*

15. Mount thrust bearing cap.

:ote: Bearing cap No. 1 at flywheel end. Bosses must face towards flywheel on BFM 1012.

16. Mount main bearing caps, paying attention to the numbering.

17. Tighten main bearing bolts according to specification.

Initial tightening torque
BFM 1012: _____ **30 Nm**
BFM 1013: _____ **50 Nm**
1st tightening angle _____ **60°**
2nd tightening angle _____ **60°**

Note: Bolts may be used **3x** if evidence can be provided concerning their use.

Español

14. Pegar, mediante grasa, las medias *arandelas de tope con talón de guía* contra la tapa del cojinete de *empuje.*

Nota: La capa de roce de las *arandelas debe indicar hacia la* cara lateral de las manivelas del cigüeñal.

15. Montar la tapa del cojinete de *empuje.*

Nota: La tapa de cojinete No. 1 se encuentra en el lado de volante. En BFM 1012, los salientes deben indicar hacia el volante.

16. Montar las tapas de los cojinetes de apoyo, teniendo en cuenta la numeración.

17. Apretar los tornillos de los cojinetes de apoyo según prescripción.
Apriete inicial
BFM 1012: _____ **30 Nm**
BFM 1013: _____ **50 Nm**
1er reapriete _____ **60°**
2o reapriete _____ **60°**

Nota: Si es comprobable, se pueden utilizar los tornillos **tres veces.**

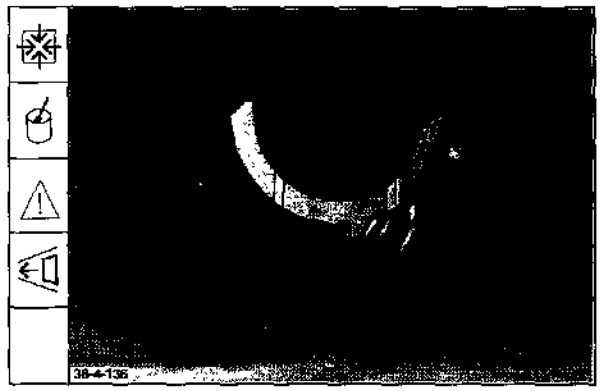

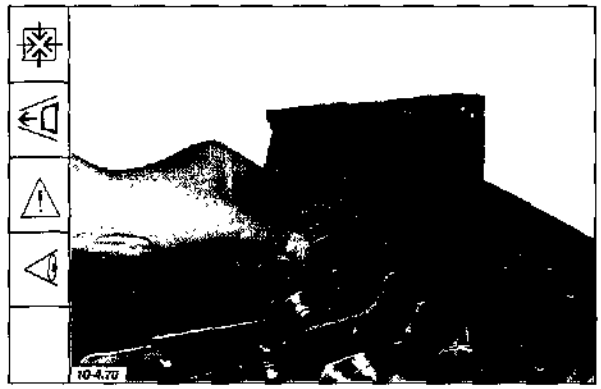

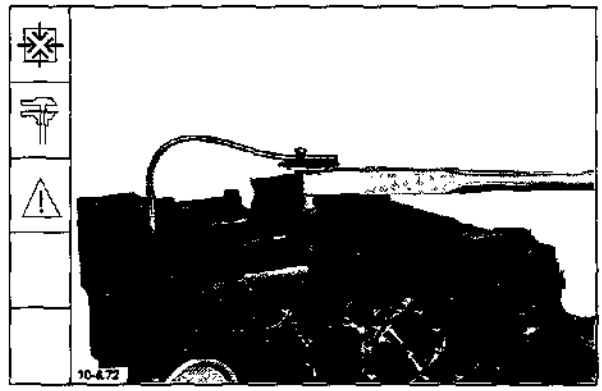

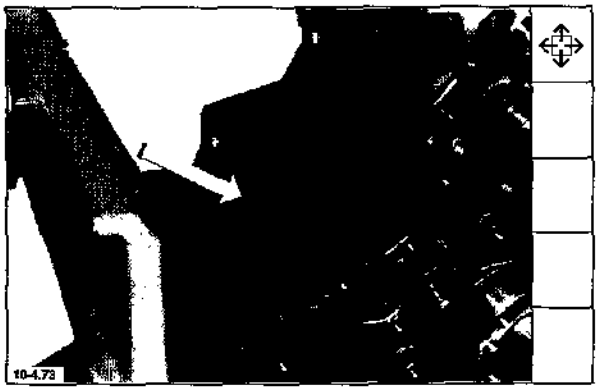

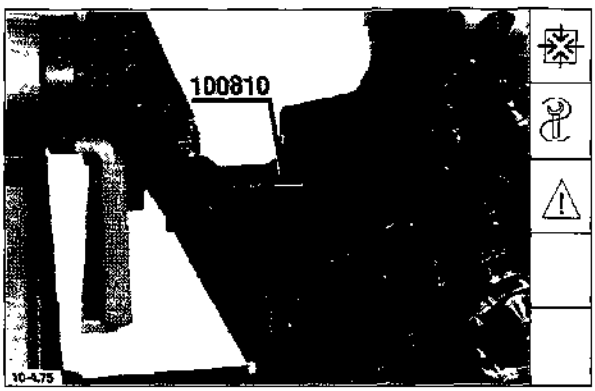

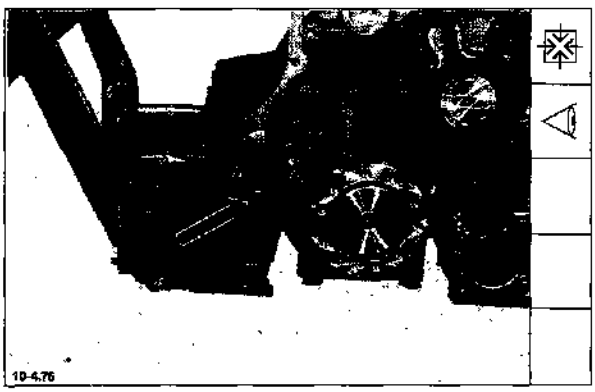

English

Mass balancing shafts BFM 1012
(if any)

Turn engine by 180°.

18. Turn out screw plugs.

19. Introduce mass balancing shaft.

Note: The weights must be positioned towards oil pan sealing surface.

20. Screw adjusting pin for mass balancing shaft into crankcase as far as it will go.

Note: Bore of mass balancing shaft must be in line with bore in crankcase.

21. Fit thrust washer and align relative to shaft axis.

Español

Arboles compensadores de masa BFM 1012
(si existen)

Girar el motor por 180°

18. Desenroscar los tapones de cie

19. Introducir uno de los árboles compensadores de masa.

Nota: Las masas deben estar orientadas hacia la superfici cierre del cárter de aceite.

20. Enroscar el perno de ajuste del árbol compensador de masa en bloque motor hasta que haga to

Nota: El orificio existente en el árb compensador de masa debe coincidir con el del bloque motor.

21. Montar la arandela de tope y alinearla con el eje del árbol.

ish

ighten bolt with a torque of
·9 Nm.

Español

22. Apretar el tornillo con un par de **29 Nm.**

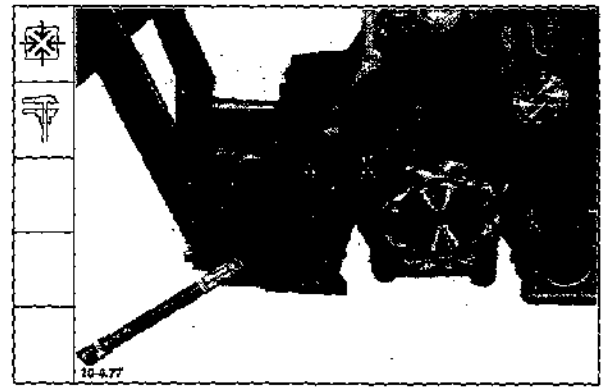

3. Turn crankshaft and bring cyl. 1 to TDC. TDC position is reached when the crankshaft marking coincides with the centerline of crankshaft and camshaft.

23. Girando el cigüeñal, poner el cil. 1 en PMS.Se ha alcanzado el PMS, cuando la marca puesta en el cigüeñal se encuentra en la línea que une los centros del cigüeñal y árbol de levas.

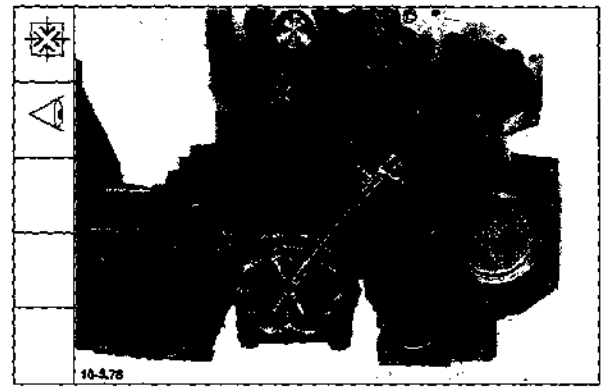

24. Position idler gear and press down lightly until it meshes with the crankshaft gear.

24. Instalar la rueda intermedia y forzarla ligeramente hasta que engrane en la rueda dentada del cigüeñal.

25. Mark opposite teeth.

25. Marcar los dientes que se enfrenten.

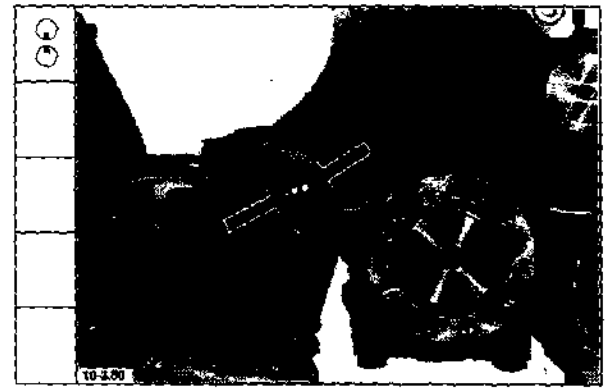

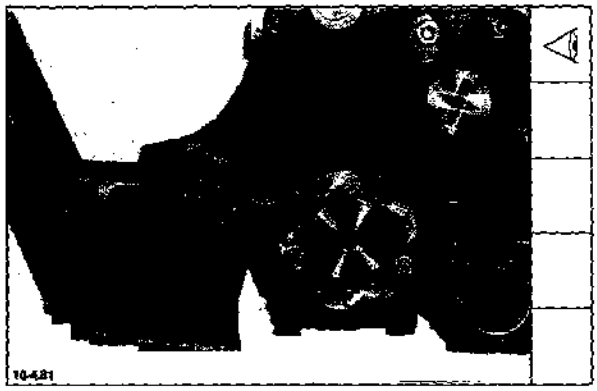

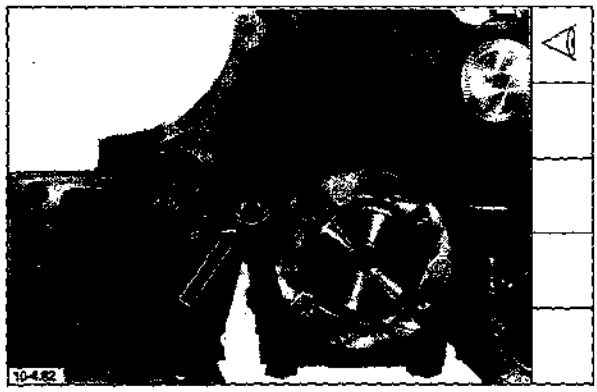

English

26. Turn crankshaft in clockwise direction until 3 teeth have engaged.

27. Turn crankshaft in anti-clockwise direction until bores are in line.

28. Insert bearing journal.

Note: Check whether bearing journal is centered in bore by slightly turning crankshaft back and forth.

29. Insert bolt and tighten with a torque of **29 Nm**.

Español

26. Girar el cigüeñal en sentido hasta que hayan engranado dientes.

27. Girar el cigüeñal en sentido contrario al de las agujas del re hasta que coincidan los orificio

28. Introducir el muñón de soporte.

Nota: Imprimiendo al cigüeñal un ligero movimiento giratorio de vaivén, comprobar si el muñón queda centrado en el orificio.

29. Meter el tornillo y apretarlo con **29 Nm**.

English

30. Introduce 2nd mass balancing shaft.

Note: The weights must be positioned towards oil pan sealing surface.

31. Screw adjusting pin for mass balancing shaft into crankcase as far as it will go.

Note: Bore of mass balancing shaft must be in line with bore in crankcase.

32. Fit thrust washer and align relative to shaft axis.

33. Tighten bolt with a torque of **29 Nm**.

Español

30. Introducir el segundo árbol compensador de masa.

Nota: Las masas deben estar orientadas hacia la superficie de cierre del cárter de aceite.

31. Enroscar el perno de ajuste del árbol compensador de masa en el bloque motor hasta el tope .

Nota: El orificio existente en el árbol compensador de masa debe coincidir con el del bloque motor.

32. Colocar la arandela de tope y alinearla con el eje del árbol.

33. Apretar el tornillo con un par de **29 Nm**.

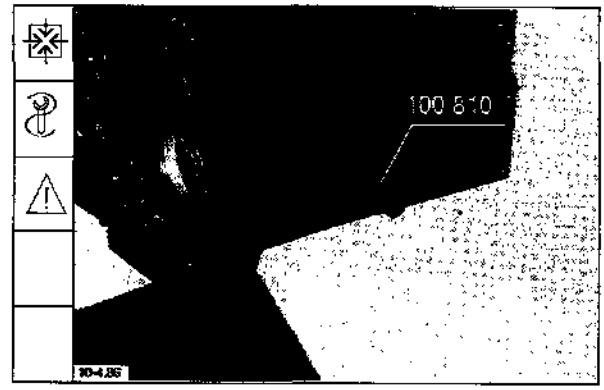

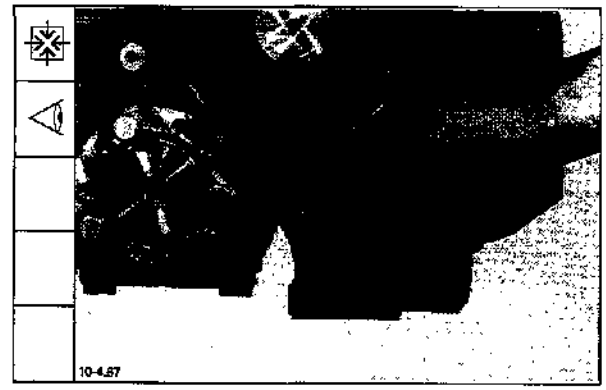

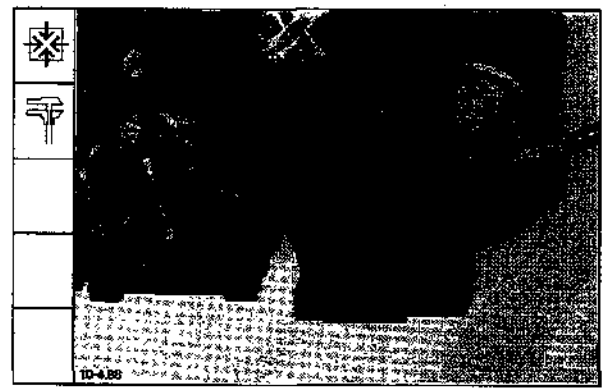

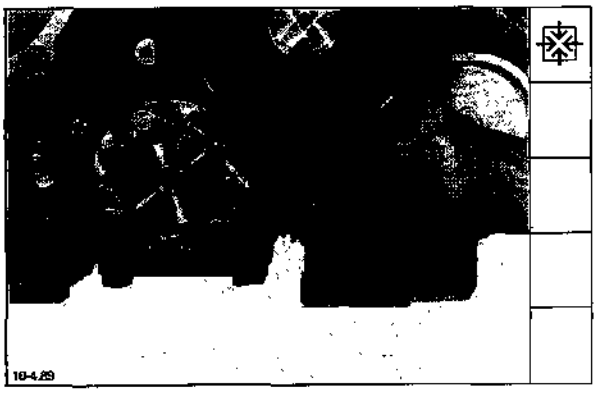

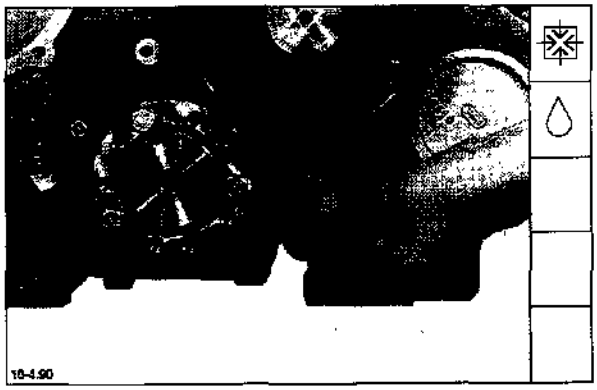

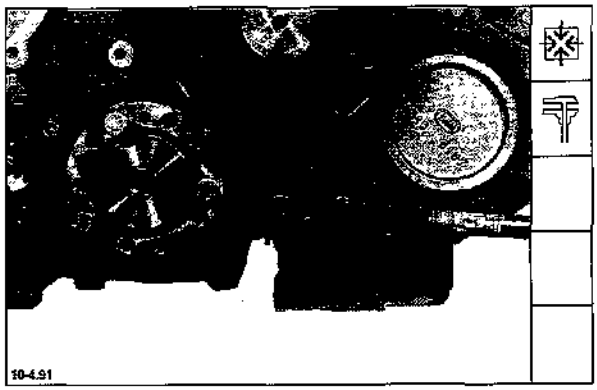

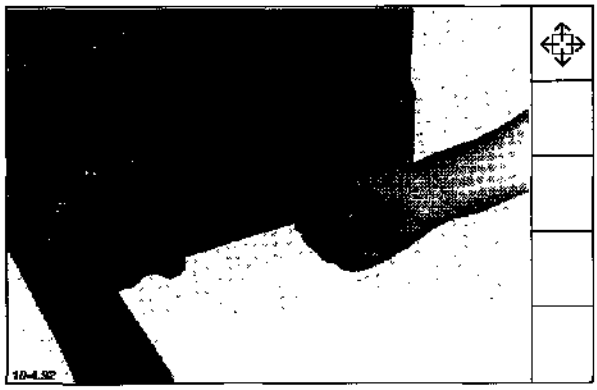

English

34. Insert idler gear so that bores are in line.

35. Insert bearing journal.

36. Insert bolt and tighten with a torque of **29 Nm**.

37. Remove both adjusting pins.

Español

34. Instalar la rueda intermedia, teniendo en cuenta que coincidan los orificios.

35. Introducir el muñón de soporte.

36. Meter el tornillo y apretarlo con un par de **29 Nm**.

37. Retirar ambos pernos de ajuste.

English

38. Cover up bores with new Cu seals.

Español

38. Cerrar los orificios con anillos de cobre nuevos.

Drive gear/governor

39. Insert governor drive gear complete with bearing journal.

Rueda de accionamiento/regulador

39. Instalar la rueda de accionamiento del regulador con el muñón de soporte.

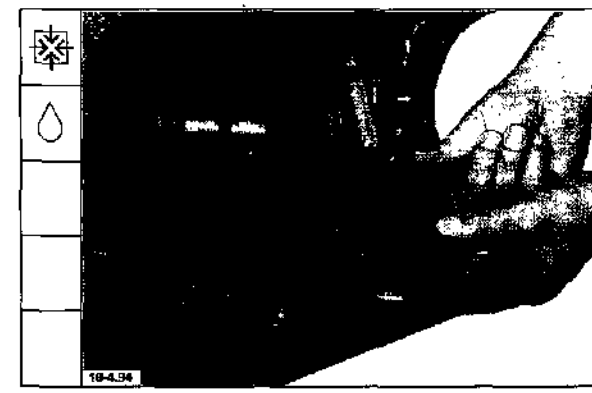

40. Insert bolt and tighten with a torque of **21 Nm**.

40. Meter el tornillo y apretarlo con un par de **21 Nm**.

Control rod

41. Fit control rod complete with guide sleeve.

Barra cremallera

41. Instalar la barra cremallera con el manguito de guía puesto.

English

42. Apply **Deutz DW 71** locking compound to bolt and tighten with a torque of **10 + 2 Nm**.

Español

42. Meter el tornillo con sellante **Deutz DW 71** y apretarlo con un par de **10 + 2 Nm**.

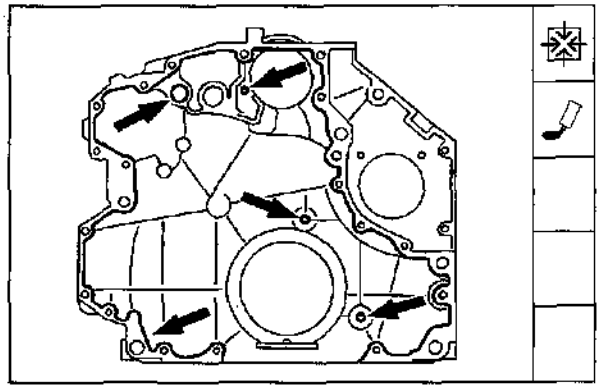

Timing chest cover

43. Apply **Deutz DW 67** sealing compound to sealing surface of timing chest cover.

BFM 1012

BFM 1013

Tapa del cárter de la distribución

43. Aplicar sellante **Deutz DW 67** a la superficie de cierre de la tapa del cárter de la distribución.

BFM 1012

BFM 1013

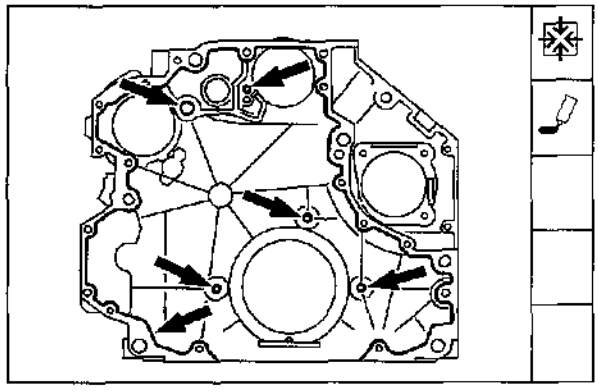

44. Mount timing chest cover. Start bolts and align timing chest cover relative to oil pan sealing surface.

44. Montar la tapa en el cárter de la distribución. Apretar con la mano los tornillos hasta que se apoyen y alinear la tapa con respecto a la superficie de cierre del cárter de aceite.

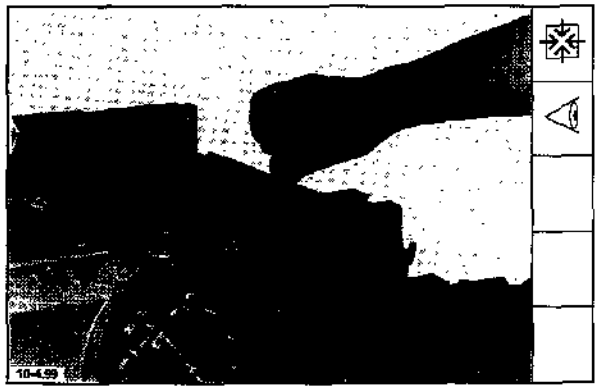

English

45. Tighten bolts with a torque of **21 ± 2 Nm.**

Español

45. Apretar los tornillos con un par de **21 ± 2 Nm.**

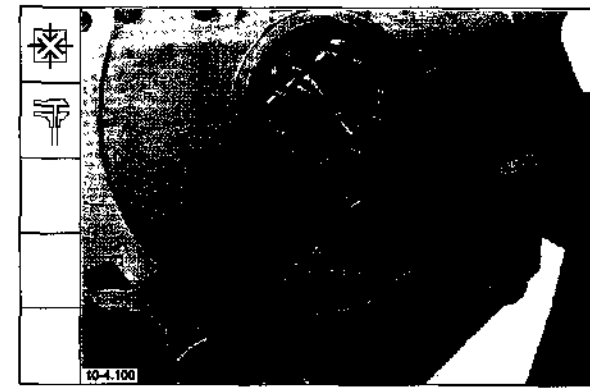

Front cover

46. *Lightly oil rotors in front cover.*

Tapa delantera

46. *Untar con un poco de aceite los rotores en la tapa delantera.*

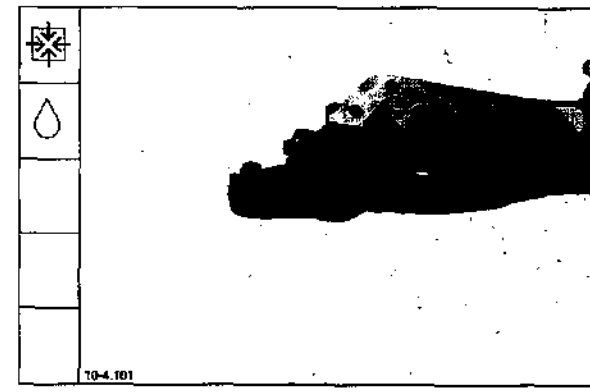

47. Stick gasket to front cover using some grease.

47. Pegar con un poco de grasa la junta en la tapa delantera.

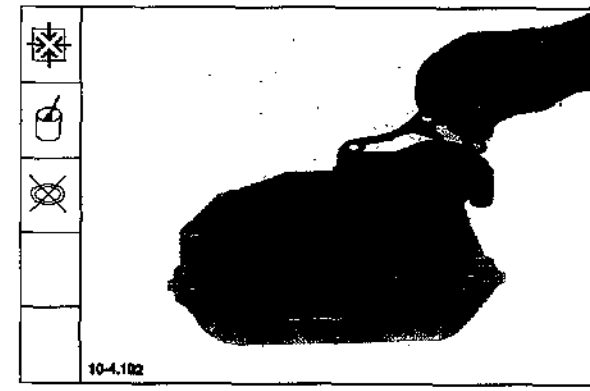

Turn engine by 180°. Oil pan sealing surface must point downward.

Girar el motor por 180°. La superficie de cierre del cárter de aceite tiene que indicar hacia abajo.

48. Position rotor relative crankshaft.

48. Posicionar el rotor con respecto al cigüeñal.

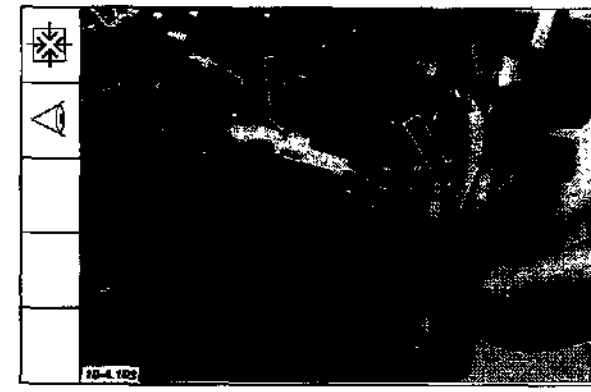

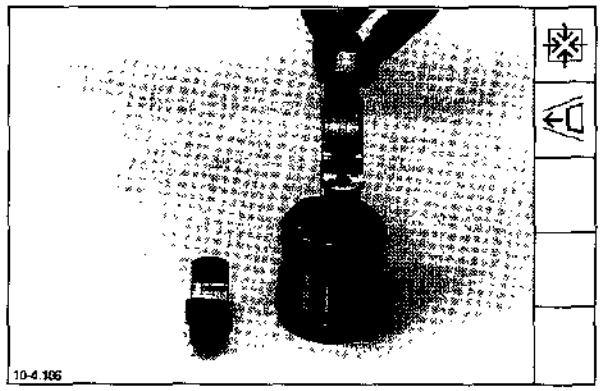

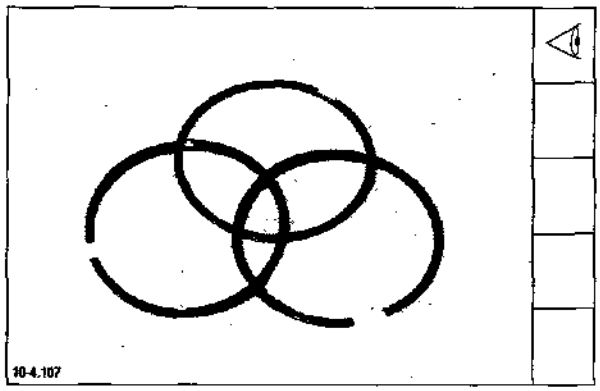

English

49. Mount front cover, press cover upward and align relative to oil pan sealing surface. Start bolts.

50. Tighten bolts for front cover with a torque of **21 ± 2 Nm**.

Piston complete with connecting rod

51. Insert bearing shells in connecting rod.

52. Piston ring gaps must be staggered by **90-120°**.

Español

49. Montar la tapa delantera, presionarla hacia arriba y alinearla con respecto a la superficie de cierre del cárter de aceite. Enroscar los tornillos con la mano hasta que se apoyen.

50. Apretar los tornillos para la tapa delantera con un par de **21 ± 2 Nm**.

Conjunto pistón-biela

51. Insertar los coijnetes en la biela.

52. Cuidar de que los cortes de los aros de pistón estén desplazados entre sí por **90-120°**.

glish

. Introduce piston complete with connecting rod into crankcase with integrated cylinder liners.

ote: *Flywheel symbol must point* towards flywheel.

Español

53. Introducir el pistón completo con la biela en el bloque de motor.

Nota: *El símbolo del volante tiene que* indicar hacia el volante.

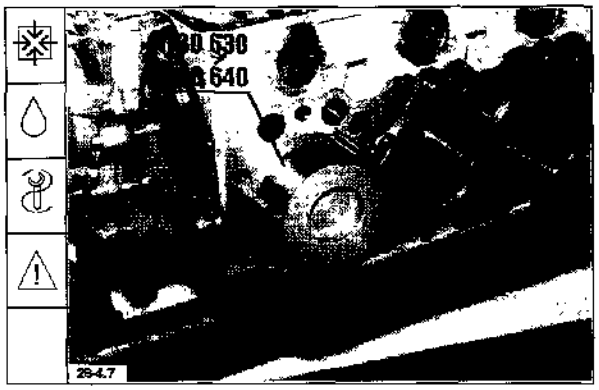

. Press connecting rod against crankpin. Fit pertinent big end bearing cap.

54. Presionando la biela contra su muñequilla, montar la tapa de biela correspondiente.

. Tighten **new conrod bolts** in accordance with specification.

Initial tightening torque ___ **30 Nm**
1st tightening angle _____ **60°**
2nd tightening angle
BFM 1012 _____ **30°**
BFM 1013 _____ **60°**

55. Apretar los **tornillos de biela nuevos**. según prescripción.

Apriete inicial: _____ **30 Nm**
1er ángulo de reapriete _____ **60°**
2º ángulo de reapriete
BFM 1012 _____ **30°**
BFM 1013 _____ **60°**

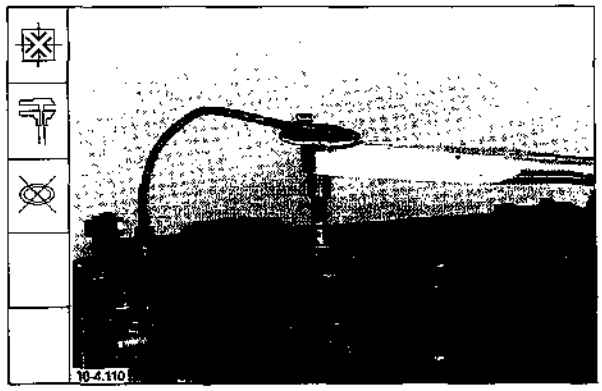

6. Check that connecting rods can be easily moved back and forth on the crankpin.

ote: Turn engine by 180°.

56. Comprobar las bielas para ver si pueden moverse fácilmente sobre sus muñequilla.

Nota: Girar el motor por 180°.

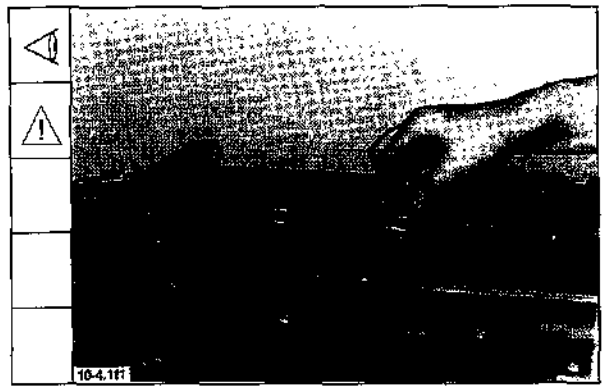

English

Installing injection pumps

Gauging control rod travel without injection pumps installed

57. Fit control rod locking device.

58. Gauge from locking device to stop position of control rod.

58.1 Gauge from locking device tostart position of control rod.

Difference between start and stop positions equals control rod travel.

Example:

stop position =	30.7 mm
start position =	13.4 mm
control rod travel =	**17.3 mm**
Specified dimension =	**17.0 mm**
	- 17.5 mm

59. Turn locking device. Press control rod in stop position by hand with knurled-head setscrew.

Español

Montaje de las bombas de inyecc

Determinación del recorrido de la cremallera sin las bombas de inyección

57. Montar el dispositivo de bloque la cremallera.

58. Medir la distancia entre el dispositivo y la cremallera en posición de parada.

58.1 Medir la distancia entre el dispositivo y la cremallera en posición de arranque.

La diferencia entre ambos valore es el recorrido de la cremallera.

Ejemplo:

Posición de parada =	30,7 m
Posición de arranque =	13,4 m
Recorrido de la cremallera =	**17,3 m**
Valor prescrito =	**17,0 m**
	-17,5 m

59. Girar el dispositivo. Apretando el tornillo de bloqueo, forzar la cremallera para que se sitúe en l posición de parada.

ıglish

). Fit graduated disc to flywheel flange.

1. Fit pointer.

Determining TDC of piston pertaining o injection pump to be timed.

2. Position TDC measuring bar together with spacing washers. Turn crankshaft in direction of engine rotation until pointer of dial gauge has reached its reversal point.
Set dial gauge to „0".

3. Turn crankshaft by about 90° in direction of engine rotation. Thereafter turn again in opposite direction of engine rotation until 8 mm before TDC (reversal point of dial gauge).
Set graduated disc to „0".

Español

60. Fijar el disco graduado a la brida del volante.

61. Montar el indicador.

Determinación del PMS de compresión del pistón que corresponda a la bomba de inyección a ajustar.

62. Colocar la regleta de medición del PMS con las plaquitas distanciadoras. Girar el cigüeñal en el sentido de giro normal del motor hasta que la aguja del comparador haya alcanzado su punto de inversión.
Ajustar el comparador a „0".

63. Girar el cigüeñal unos 90° en sentido contrario al del motor y a continuación otra vez en el sentido de giro normal del mismo hasta 8 mm delante del PMS (punto de inversión del comparador).
Ajustar el disco graduado a „0".

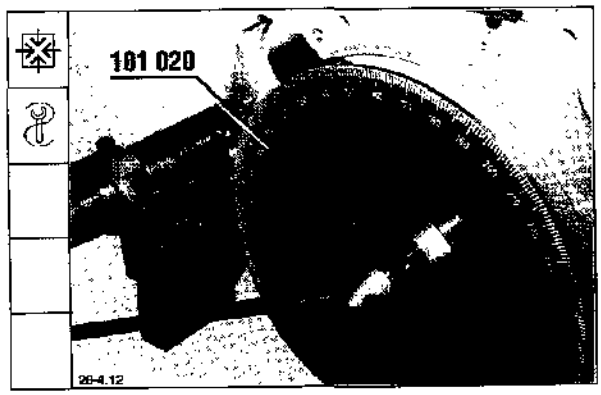

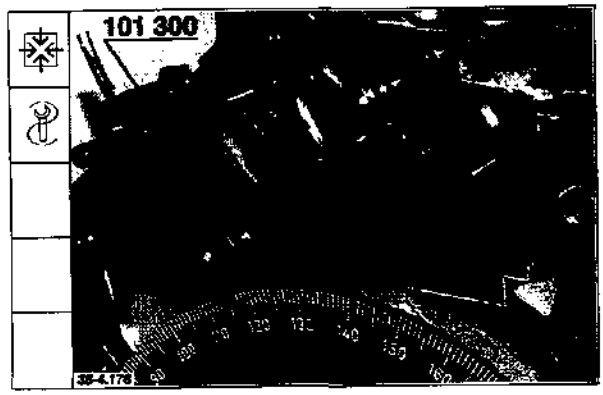

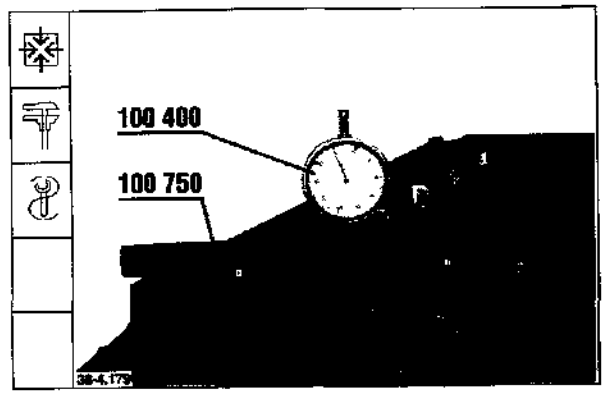

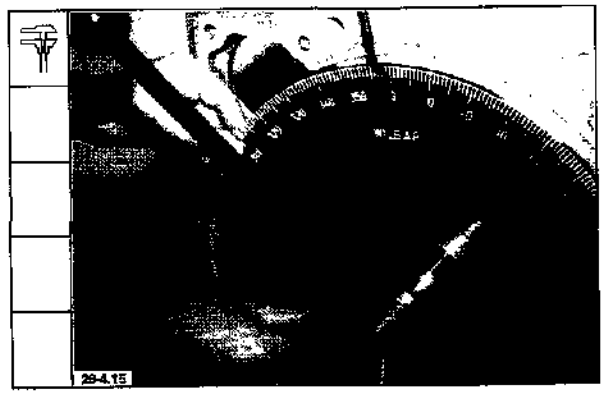

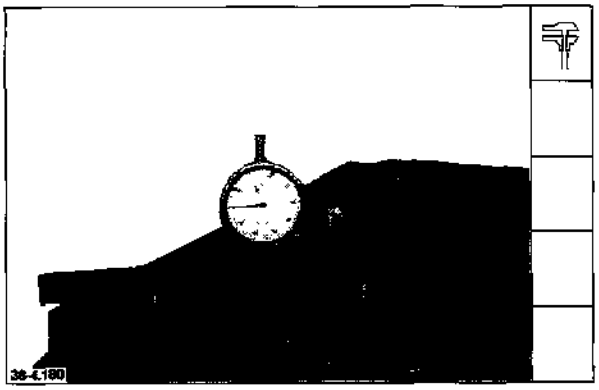

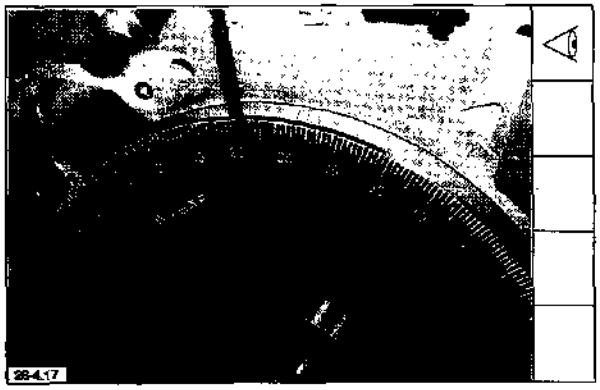

English

64. Turn crankshaft by about 90° in direction of engine rotation. Thereafter turn again in opposite direction of engine rotation until 8 mm before TDC (reversal point of dial gauge). Read off determined value.
Example: 50°

65. Halve the value determined. The halved value equals TDC.

Example: $\frac{0°+50°}{2} = 25°$ ACTUAL value

Turn crankshaft until halved value is reached.

66. Stop turning crankshaft. Loosen 2 knurled-head screws and set graduated disc to „0".

67. Insert roller tappet.

Español

64. Girar el cigüeñal aprox. 90° en sentido de giro normal del moto a continuación de nuevo en seni contrario al mismo hasta 8 mm delante del PMS (punto de inversión del comprador). Toma lectura del valor determinado.
Ejemplo: 50°

65. Dividir el valor determinado por dos. El valor dividido por dos es PMS.

Ejemplo: $\frac{0°+50°}{2} = 25°$ REAL

Girar el árbol de manivela al valor dividido en dos.

66. A partir de ahora, no debe cambiarse la posición del cigüeñ Soltar 2 tornillos de cabeza moleteada y poner el disco graduado en „0".

67. Introducir el empujador de rodil

English

Determining commencement of delivery with Bosch injection pump

The commencement of delivery and since about 07.96 also the type of camshaft are stamped on the rating plate.

68. Set dial gauge of measuring device under preload to 0.

    Set value:
    BFM 1012 **115 mm** (100 780)
    126 mm (100 860)
    BFM 1013 **150 mm** (100 840)

69. Position roller tappet of the injection pump to be timed on base circle. For that purpose turn crankshaft by about 180° opposite to direction of engine rotation.

70. Insert measuring device carefully.

71. Measure dimension „L", and enter in table 1, chapter 1.

    Example:
    BFM 1012 **116.26 mm**
    126.57 mm
    BFM 1013 **152.22 mm**

Español

Determinación del comienzo de alimentación - bomba de inyección Bosch

El comienzo de alimentación y, desde aprox. julio de 1996, también el tipo del árbol de levas figuran en la placa de fabricante.

68. Ajustar el comparador del dispositivo de medición con precarga a „0".
    Medida de ajuste:
    BFM 1012 **115 mm** (100 780)
    126 mm (100 860)
    BFM 1013 **150 mm** (100 840)

69. El empujador de rodillo de labomba de inyección a ajustar debe encontrarse sobre el círculo base. Para ello, girar el cigüeñal aprox. 180° en sentido contrario al de giro normal del motor.

70. Introducir el dispositivo de medición cuidadosamente.

71. Medir el valor „L" y registrarlo en la tabla, ver capítulo 1.

    Ejemplo:
    BFM 1012 **116,26 mm**
    126,57 mm
    BFM 1013 **152,22 mm**

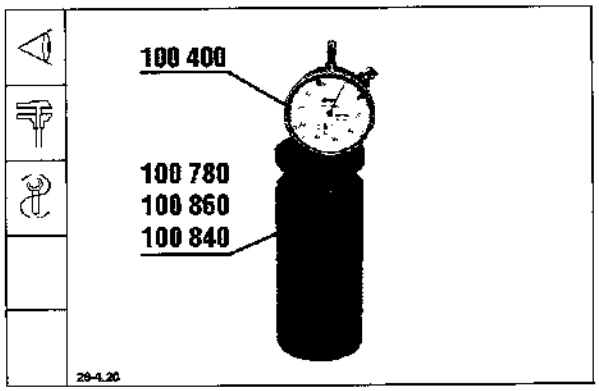

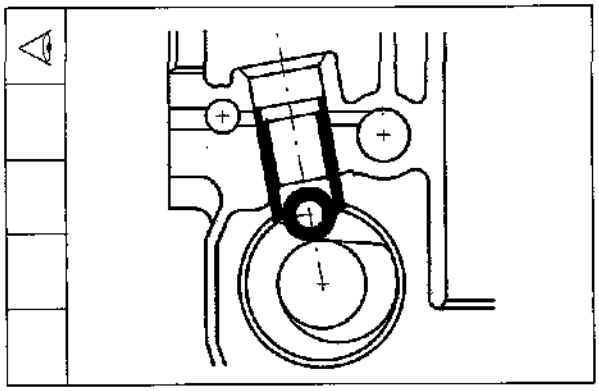

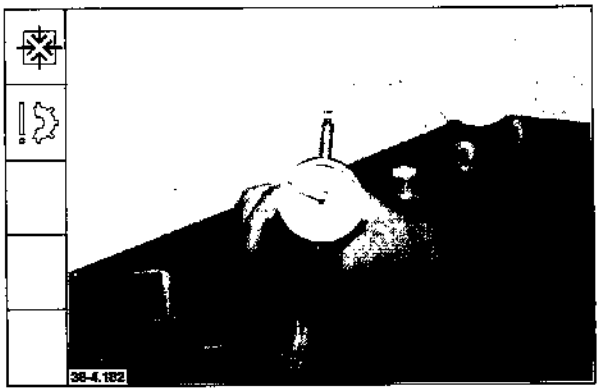

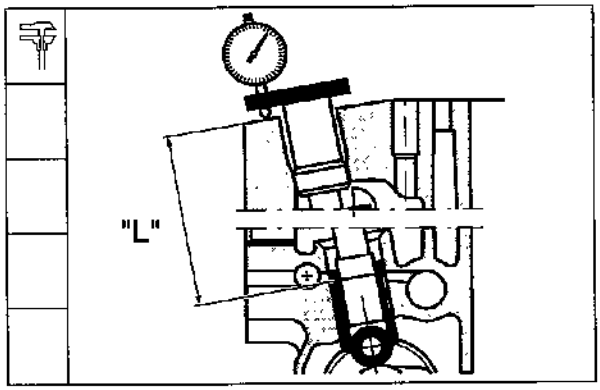

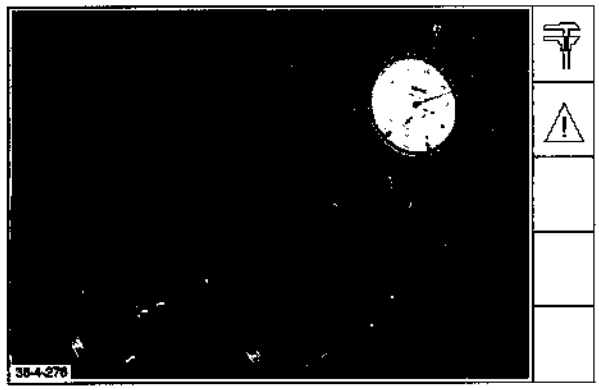

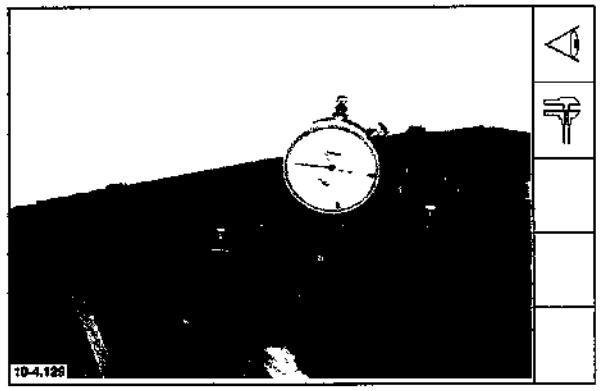

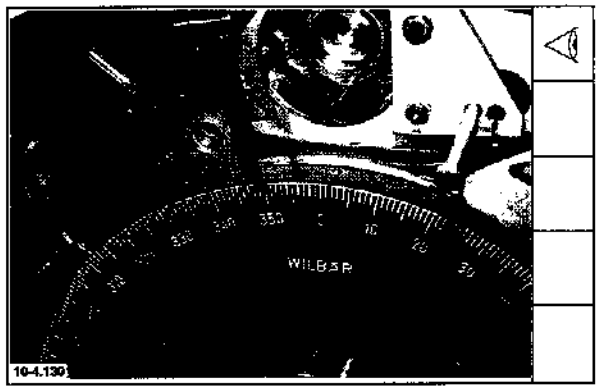

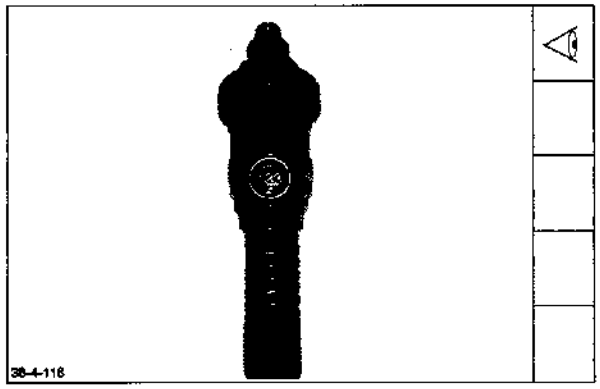

English

72. Set pointer of dial gauge to 0 with outer ring.

Note: The direction of rotation must not be changed anymore when the pre-stroke position has been reached.

73. Turn crankshaft in direction of engine rotation until dial gauge indicates pre-stroke dimension, see table 1.

Example BFM 1012:
Commencement of delivery 9°
Camshaft type C
Pre-stroke **4.63 mm**
Example BFM 1013:
Commencement of delivery 10°
Camshaft type A
Pre-stroke **5.31 mm**

74. Read off ACTUAL commencement of delivery and enter in table, chapter 1.
Example:
BFM 1012 **8°**
BFM 1013 **10°**

75. Read off dimension „A" = code for injection pump length and enter in table, chapter 1.
Example:
BFM 1012 **53**
BFM 1013 **133**

Español

72. Poner la aguja del comparador mediante el anillo exterior en posición „0".

Nota: Para el ajuste de la carrera previa, ya no se debe modificar el sentido de giro.

73. Girar el cigüeñal en el sentido de giro normal del motor hasta que el comparador marque el valor de la carrera previa. Ver tabla 1.

Ejemplo: BFM 1012:
comienzo de alimentación 9°
árbol de levas, tipo C
carrera previa **4,63 mm**
Ejemplo: BFM 1013:
comienzo de alimentación 10°
árbol de levas, tipo A
carrera previa **5,31 mm**

74. Leer el comienzo de alimentación REAL y registrarlo en la tabla, ver capítulo 1.
Ejemplo:
BFM 1012 **8°**
BFM 1013 **10°**

75. Leer el valor „A" = índice de l ongitud de la bomba de inyección y registrarlo en la tabla. vercapítulo1.
Ejemplo:
BFM 1012 **53**
BFM 1013 **133**

English

76. *Remove measuring device.*
Determine shims.
See chapter 1.

77. Position selected shim on roller tappet.

Note: The measuring procedures under items 62-77 is to be carried out for each injection pump.

Injection pump

78. Turn injection pump linkage lever to approx. middle position.

Note: The assembly procedure under items 78-84 is to be carried out for each injection pump.

79. Position roller tappet of relevant cylinder on base circle. Lightly oil receiving bore in crankcase and O-seals of injection pump. Carefully introduce injection pump linkage lever into control rod.

Español

76. *Desmontar el aparato de medición.*
Determinar la arandela de reglaje.
Ver capítulo 1.

77. Colocar la arandela de reglaje determinada sobre el empujador de rodillo.

Nota: Las operaciones de mediciónde punto 62 al punto 77 han de repetirse para cada bomba de inyección.

Bomba de inyección

78. Girar la palanca de dirección de la bomba de inyección aproximadamente a la posición intermedia.

Nota: Realizar La operación de montaje, puntos 78 - 84, para cada bomba de inyección.

79. Colocar el empujador del cilindro correspondiente sobre el circulo base. Untar con un poco de aceite el taladro de alojamiento en el *bloque motor y los anillos tóricos* de la bomba de inyección. Introducir cuidadosamente la palanca de dirección de bomba de inyección en la cremallera.

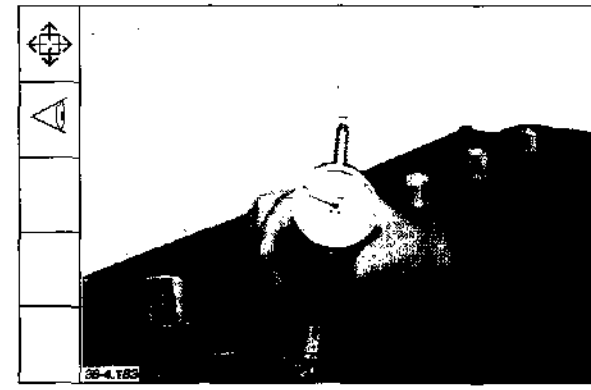

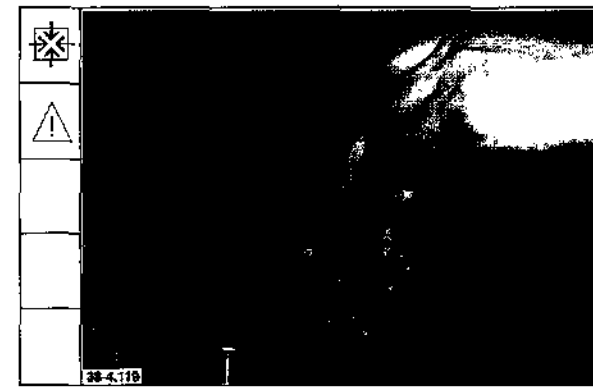

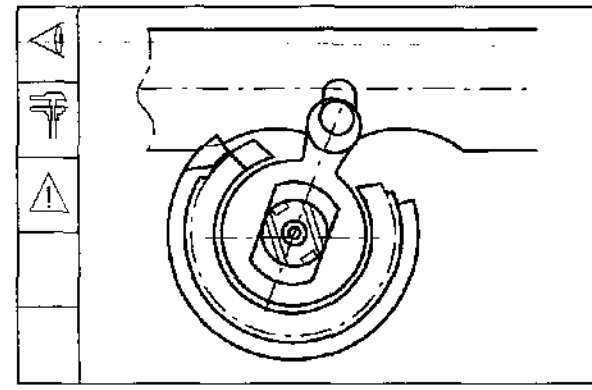

English

80. Position flange.

Note: Chamfer must face injection pump body.

Español

80. Colocar la brida.

Nota: El biselado debe indicar hacia el cuerpo de la bomba inyectora.

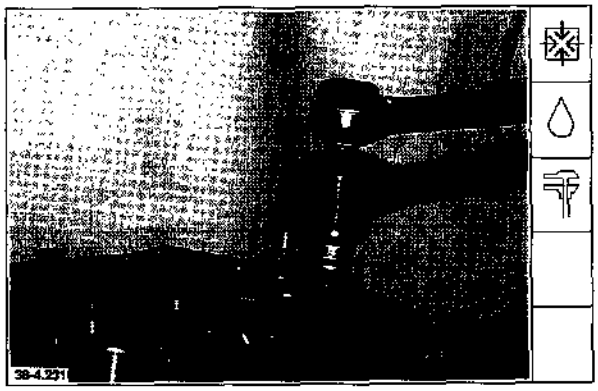

81. Lightly oil bolts and tighten uniformly with a torque of **5 Nm**.

82. Loosen bolts again by **60°**.

81. Untar con un poco de aceite los tornillos y apretarlos uniformemente con un par de **5 Nm**.

82. Volver a aflojar los tornillos **60°**.

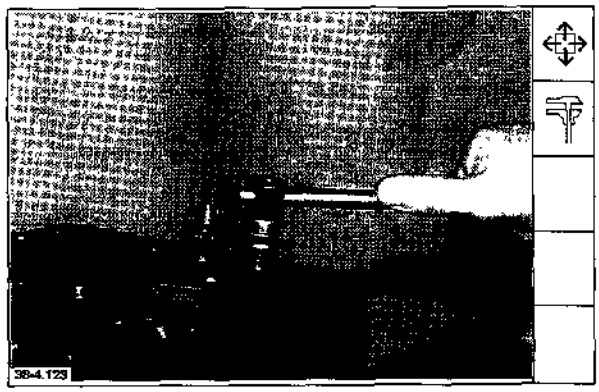

83. Turn injection pump with wrench carefully counter-clockwise until tangible stop.

83. Sirviéndose de la llave de giro, girar la bomba de inyección cuidadosamente en el sentido horario hasta el tope perceptible.

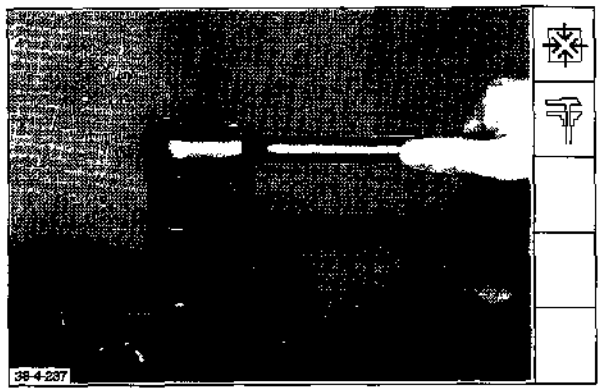

English

84. Tighten bolts by 60° and then alternately with a torque of **7 Nm, 10 Nm** and **30 Nm**.

Note: Start with the outer bolt, remote of the flywheel (see arrow).

Español

84. Apretar los tornillos de nuevo con 60° y apretarlos en escalones con un par de **7 Nm, 10 Nm** y **30 Nm**.

Nota: Comenzar siempre con el tornillo exterior, más alejado del volante (ver la flecha).

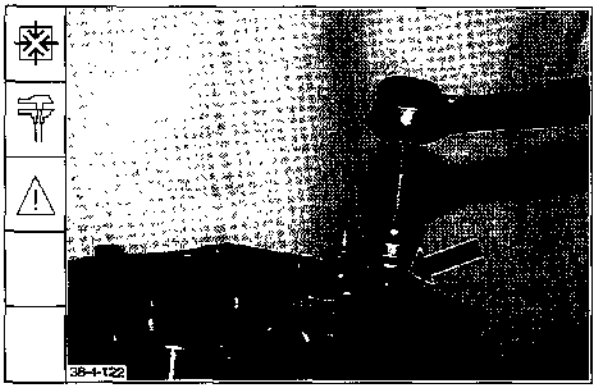

Gauging control rod travel with injection pumps installed

85. Undo setscrew from locking device. Turn locking device.

86. Gauge from locking device to stop position of control rod.

86.1 Gauge from locking device to start position of control rod.

Difference between stop and start positions equals control rod travel.

Example:

stop position	= 30.5 mm
start position	= 13.4 mm
control rod travel	= **17.1 mm**
Min. control rod travel	**16.8 mm**

Determinación del recorrido de la cremallera con las bombas de inyección montadas.

85. Desenroscar del dispositivo el tornillo de bloqueo. Girar el dispositivo.

86. Medir la distancia entre el dispositivo y la cremallera en posición de parada.

86.1 Medir la distancia entre el dispositivo y la cremallera en posición de arranque.

La diferencia entre ambos valores da el recorrido de la cremallera.

Ejemplo:

Posición de parada	= 30,5 mm
Posición de arranque	= 13,4 mm
Recorrido de la cremallera	= **17,1 mm**
Recorrido mínimo de la cremallera	**16,8 mm**

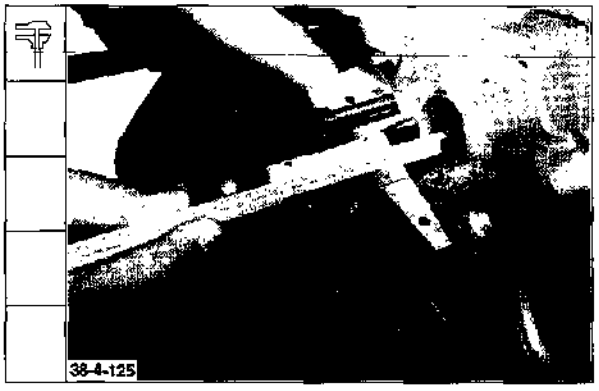

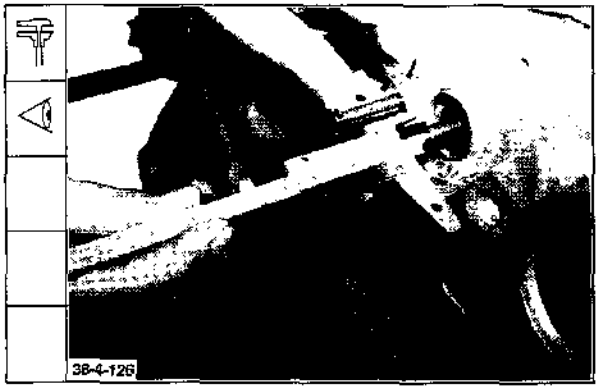

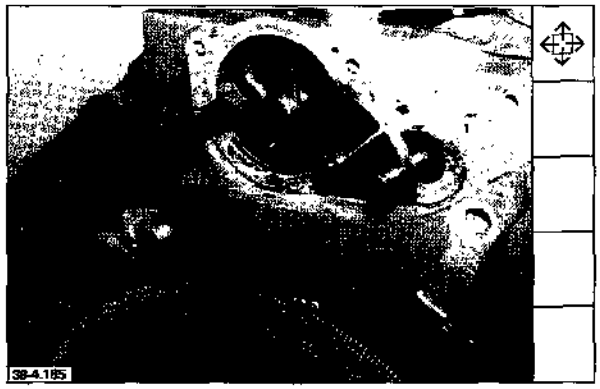

English

87. Remove locking device, pointer and graduated disc.

Checking ease of movement of control rod

88. When slowly introducing the control rod, there must not occur any unequal resistance.
After detaching the control rod, the spring must press it from any position back into its original position

Gauging control rod travel for governor adjustment

89. Gauge control rod travel from surface of timing chest cover to stop position.
It is mandatory to indicate the dimension determined when replacing or repairing the governor.

Español

87. Desmontar el dispositivo de bloqueo, el indicador y el disco graduado.

Comprobar el fácil movimiento de la cremallera

88. Introciendo lentamente la cremallera no se deberá percibir ninguna resistencia desigual.
Al soltar la cremallera deberá volver a su posición de partida desde cualquier posición, por fuerza del resorte.

Determinación del recorrido de la cremallera para la adaptación del regulador

89. Medir el recorrido (medida de retroceso) de la tapa del cárter de la distribución a la posición de parada.
El valor determinado de esta manera, tendrá que ser indicado, imprescindiblemente, para la reparación o sustitución del regulador.

English

Flywheel/V-belt pulley

90. *Position flywheel, using a selfmade guide mandrel. Secure bolts fingertight.*

91. *Retain flywheel. Tighten bolts* according to specification.

Initial tightening torque
Bolts 30 - 45 mm long **20-30 Nm**
Bolts 50 - 85 mm long **30-40 Nm**
1st tightening angle
bolts 30 - 85 mm long _____ **60°**
2nd tightening angle
bolts 30 mm long _____ **30°**
bolts 35-85 mm long _____ **60°**

Note: Bolts may be used **5x** if evidence can be furnished concerning their use.

92. Fit V-belt pulley and retain against flywheel. Tighten bolts according to specifications.

Initial tightening torque **40-50 Nm**
1st tightening angle
bolts 60 mm long _____ **60°**
bolts 80 mm long _____ **60°**

2nd tightening angle
bolts 60 mm long _____ **30°**
bolts 80 mm long _____ **60°**

Note: Use Torx socket wrench E20. Bolts may be used max. **5x** if evidence can be furnished concerning their use.

Español

Volante / polea acanalada

90. Colocar el volante en su sitio, utilizando un mandril de guía de confección propia. Apretar los tornillos a mano.

91. *Retener el volante. Apretar los* Tornillos según prescripción.
Apriete inicial:
tornillos 30 - 45 mm long
_____ **20-30 Nm**
tornillos 50 - 85 mm long
_____ **30-40 Nm**
1er ángulo de reapriete
tornillos 30 - 85 mm long ___ **60°**
2° ángulo de reapriete
tornillos 30 mm long _____ **30°**
tornillos 35 - 85 mm long ___ **60°**

Nota: Los tornillos son reutilizables hasta **5 veces**, siempre que esto se pueda comprobar.

92. Montar la polea acanlada, retenerla en el volante y apretar los tornillos según prescripción.

Apriete inicial: _____ **40-50 Nm**
1er ángulo de reapriete:
tornillos 60 mm long _____ **60°**
tornillos 80 mm long _____ **60°**

2° ángulo de reapriete:
tornillos 60 mm long _____ **30°**
tornillos 80 mm long _____ **60°**

Nota: Utilizar la llave de vaso Torx E20. Los tornillos son reutilizables hasta **5 veces**, siempre que esto se pueda comprobar.

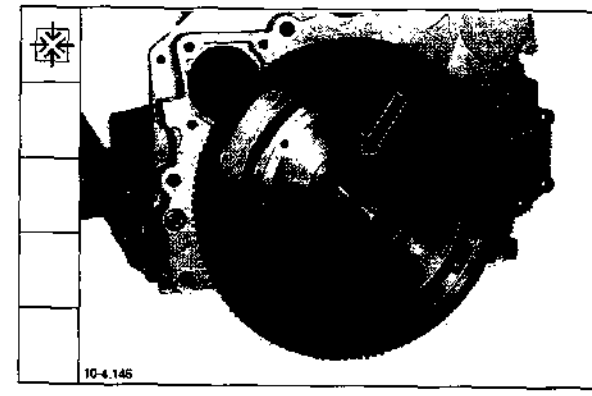

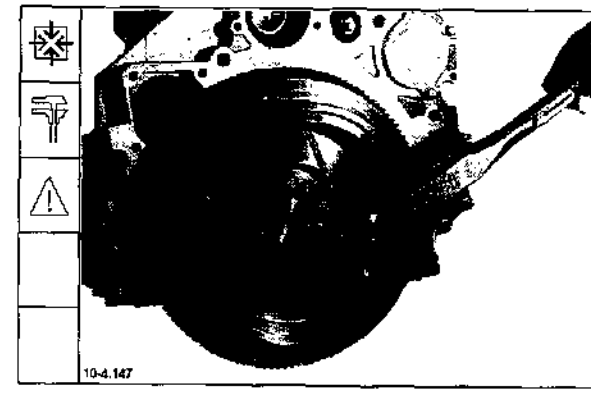

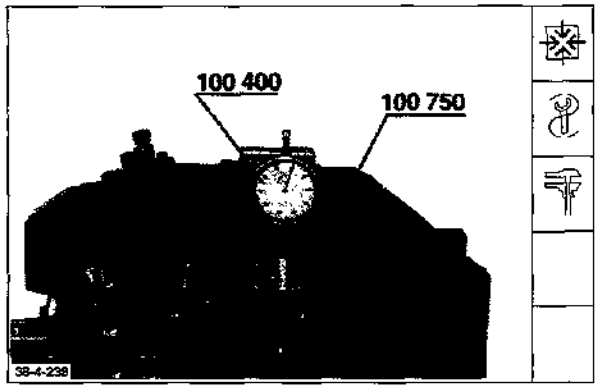

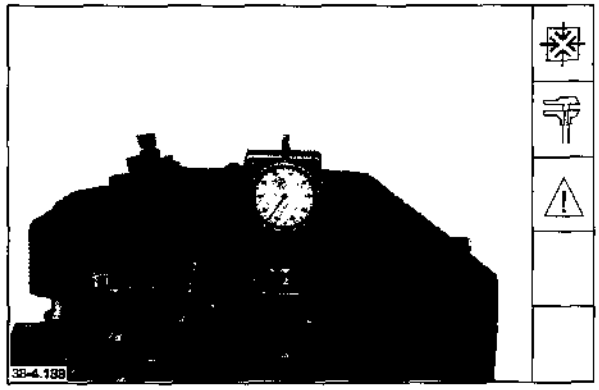

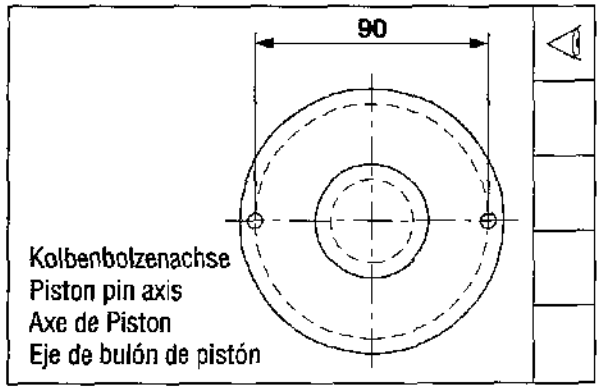

English

Cylinder head

93. Determine cylinder head gasket.

94. Place spacers on sealing surface of crankcase with integrated liners and set dial gauge to „0".

95. Position dial gauge on piston at gauge points and determine max. piston projection.

Note: All pistons must be gauged.

96. Watch gauge points.

BFM 1012	90 mm
BFM 1013	95 mm

Español

Culata

93. Determinar junta de culata.

94. Poner las plaquitas distanciadoras sobre la superficie de cierre del bloque motor y ajustar el comparador a „0".

95. Colocar el comparador sobre el pistón en los puntos de medición y determinar el saliente máximo del pistón.

Nota: Este valor deberá determinarse para todos los pistones.

96. Observar los puntos de medición.

BFM 1012	90 mm
BFM 1013	95 mm

English

97. Compare max. value with table and determine appropriate cylinder head gasket.

BFM 1012

Piston projection	Marking of cylinder head gasket
0.43 - < 0.64 mm	1 hole
0.64 - < 0.74 mm	2 holes
0.74 - 0.85 mm	3 holes

BFM 1013

Piston projection	Marking of cylinder head gasket
0.28 - < 0.54 mm	1 hole
0.54 - < 0.64 mm	2 holes
0.64 - 0.75 mm	3 holes

98. Position cylinder head gasket.

Note: Sealing surfaces for cylinder *head gasket must be clean and* free of oil. Watch out for dowel sleeves.

Español

97. Comparar el valor máximo con la tabla y definir la junta de culata correspondiente.

BFM 1012

Saliente de pistón	Marcación de la junta de culata
0,43 - < 0,64 mm	1 agujero
0,64 - < 0,74 mm	2 agujeros
0,74 - 0,85 mm	3 agujeros

BFM 1013

Saliente de pistón	Marcación de la junta de culata
0,28 - < 0,54 mm	1 agujero
0,54 - < 0,64 mm	2 agujeros
0,64 - 0,75 mm	3 agujeros

98. Colocar la junta de culata.

Nota: Las superficies de cierre para la *junta de culata deben estar* limpias y exentas de aceite. Prestar atención a los casquillos de ajuste.

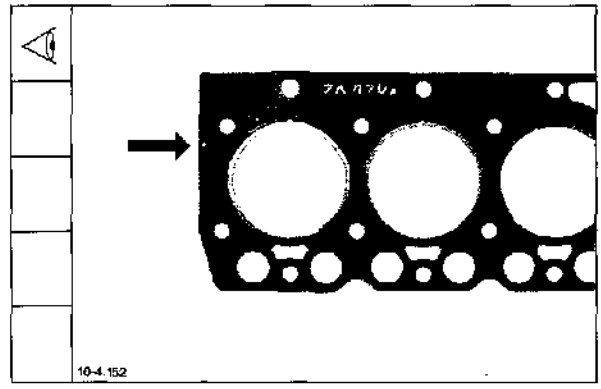

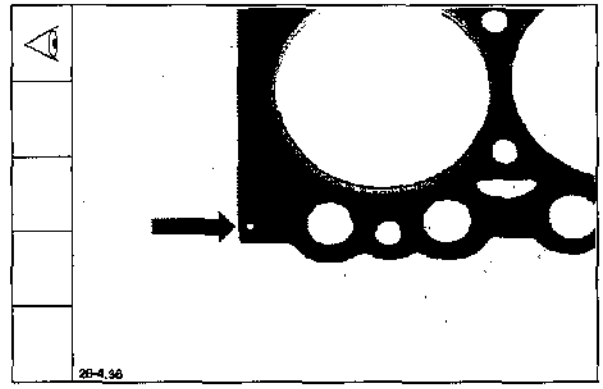

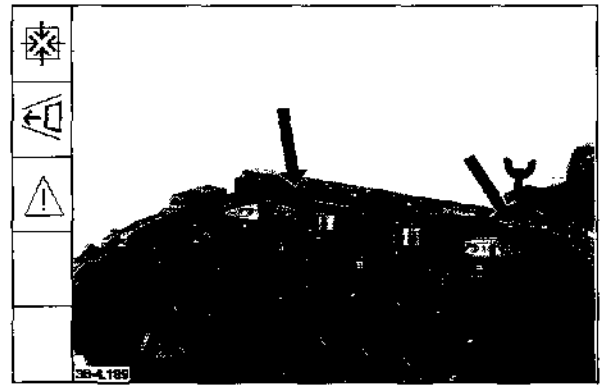

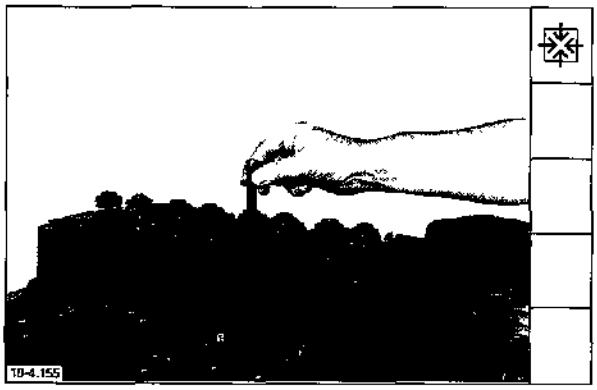

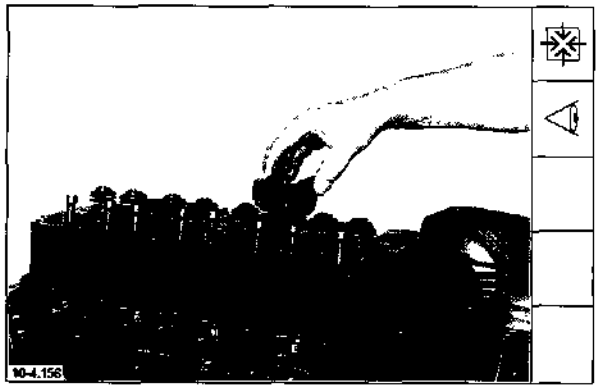

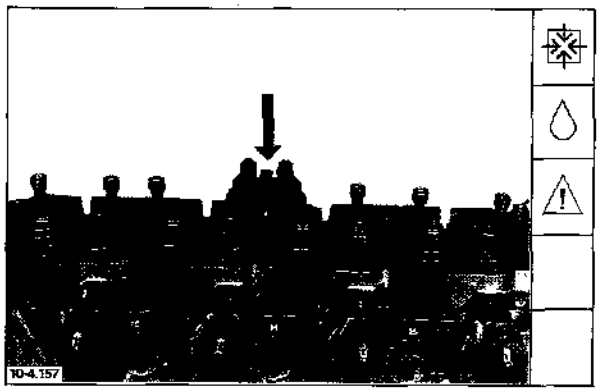

English

Cylinder head with valve gear BFM 1012

99. Position cylinder head. Lightly oil and start short cylinder head bolts.

Note: Cylinder head bolts may be reused max. **5x** if evidenced can be furnished concerning their use.

100. Insert pushrods.

101. Fit rocker arm bracket and align relative to pushrods/valves.

102. Lightly oil and start long cylinder head bolts. Insert and start M8 bolt.

Note: Cylinder head bolts may be reused max. **5x** if evidenced can be furnished concerning their use.

Español

Culata con accionamiento de válvulas, BFM 1012

99. Colocar la culata. Untar con un poco de aceite los tornillos de culata cortos y apretarlos hasta que se apoyen.

Nota: Los tornillos de culata son reutilizables hasta **5 veces**, siempre que esto se pueda comprobar.

100. Introducir las varillas de empuje.

101. Montar el soporte de balancines y alinearlo con respecto a las varillas de empuje / válvulas.

102. Untar con un poco de aceite los tornillos de culata largos y apretarlo hasta que se apoyen. Meter el tornillo M8 y apretarlo hasta que se apoye.

Nota: Si es comprobable, se pueden utilizar los tornillos a lo sumo **5 veces**.

English

103. Tighten M8 bolt with a torque of **21 Nm.**

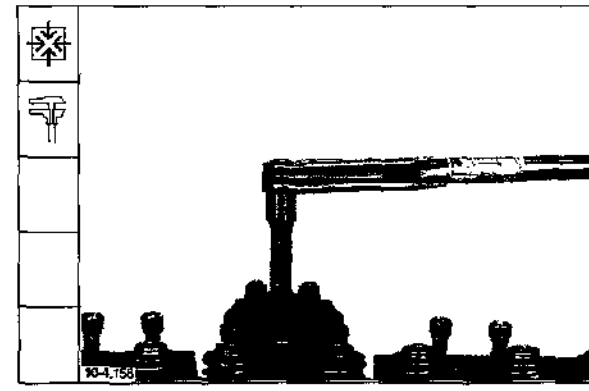

104. Tighten cylinder head bolts according to specification.

Initial tightening torque:
1st stage _____ **30 Nm**
2nd stage _____ **80 Nm**

Tightening angle: _____ **90°**

Note: Observe tightening order for cylinder head bolts. See Specification Data.

Note: Adjust valve clearance - see chapter 2.

Español

103. Apretar el tornillo M8 con un par de **21 Nm.**

104. Apretar los tornillos de culata según prescripción.

Apriete inicial:
1ª fase _____ **30 Nm**
2ª fase _____ **80 Nm**

Reapriete: _____ **90°**

Nota: Observar el orden de sucesión al apretar los tornillos de culata. Ver Datos técnicos.

Nota: Ajustar el juego de válvulas. ver capítulo 2.

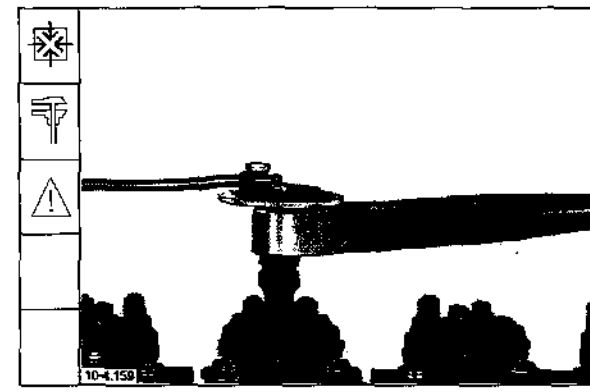

Cylinder head with valve gear BFM 1013

105. Position cylinder head. Lightly oil and start cylinder head bolts.

Note: Cylinder head bolts may beused max. **5x** if *evidence can be* furnished concerning their use.

Culata con accionamiento de válvulas, BFM 1013

105. Colocar la culata. Untar con un poco de aceite los tornillos de culata cortos y apretarlos hasta que se apoyen.

Nota: Los tornillos de culata son *reutilizables hasta* **5 veces,** siempre que esto se pueda comprobar.

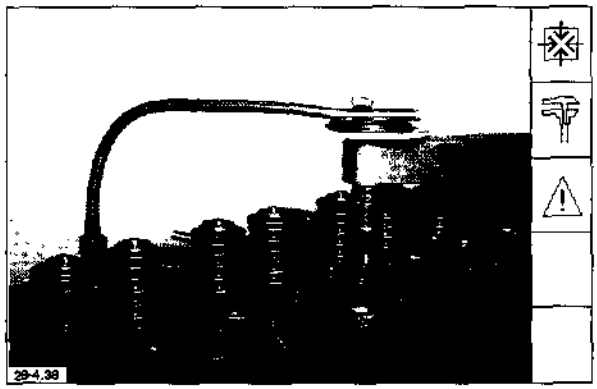

English

106. Tighten cylinder head bolts according to specification.

Initial tightening torque:
1st stage _____ **50 Nm**
2nd stage _____ **130 Nm**
Tightening angle: _____ **90°**

Note: Observe tightening order for cylinder head bolts. See Specification Data.

Español

106. Apretar los tornillos de culata según prescripción.

Apriete inicial:
1ª fase _____ **50 Nm**
2ª fase _____ **130 Nm**
Reapriete: _____ **90°**

Nota: Observar el orden de sucesión al apretar los tornillos de culata. Ver Datos técnicos.

107. Insert pusrods.

107. Introducir las varillas de empuje.

108. Fit rocker arm bracket and align towards pushrods/valves.

108. Montar el soporte de balancines y alinearlo con respecto a las varillas de empuje / válvulas.

109. Tighten bolt with a torque of **21 Nm**.

Note: Adjust valve clearance. see chapter 2.

109. Apretar el tornillo con un par de **21 Nm**.

Nota: Ajustar el juego de válvulas, ver capítulo 2.

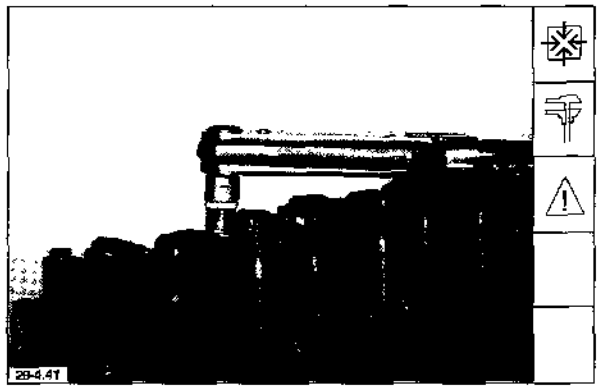

English

110. Fit pencil-type glow plugs or blanking parts.

111. Tighten pencil-type glow plugs or blanking parts with a torque of **20 ± 2 Nm.**

Shutdown solenoid

112. Press control rod into **stop position** *and hold in place. Fit shut-*down solenoid with new O-seal.

Note: Lightly oil O-seal.

113. Tighten bolts with a torque of **21 Nm.**

Español

110. Montar las piezas de cierre o bujías de espiga de incandescencia.

111. Apretar las piezas de cierre o bujías de espiga de incandescencia con un par de **20 ± 2 Nm.**

Solenoide de parada

112. Empujar la barra cremallera en la **posición de parada**, *reteniéndola.* Montar el solenoide de parada con un anillo tórico nuevo.

Nota: Untar con un poco de aceite el anillo tórico.

113. Apretar los tornillos con un par de **21 Nm.**

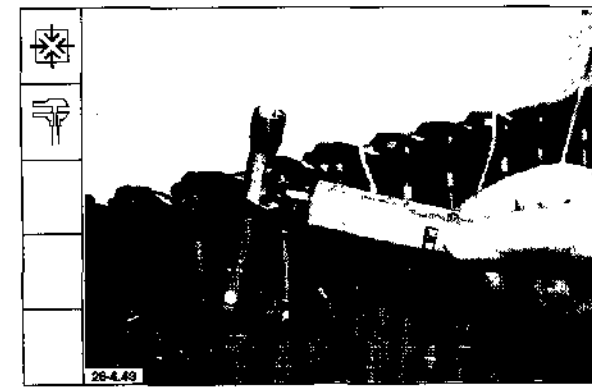

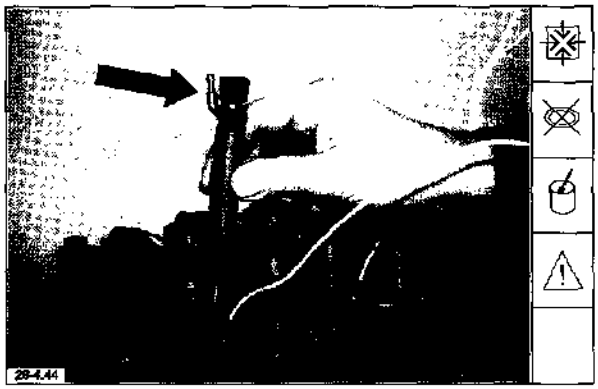

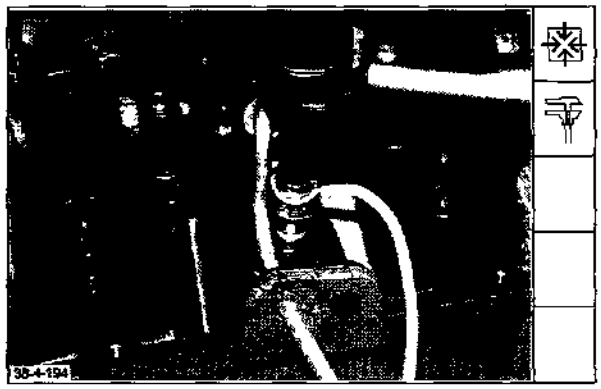

English

Injector/Injection lines

114. Slide new seal over injector using some grease and insert injector.

Note: leakage fuel line connection must face the exhaust side.

115. Position clamping pads. Start bolt.

116. Fit new injection line with sealing rubber. Screw on cap nuts finger-tight.

Note: When fitting the injection lines, the sealing cones must match pecisely.
Rebending is not permissible. The injection lines must not be used twice.

117. Tighten bolt of clamping pads with a torque of **16 + 5 Nm**.

Español

Inyector/tuberías de inyección

114. Colocar la junta nueva con un poco de grasa sobre el inyector e instalar éste.

Nota: El racor de combustible sobrante debe indicar hacia el lado de escape.

115. Colocar las patas de sujeción. Enroscar el tornillo, dejándolo suelto.

116. Montar la tubería de inyección nueva con una junta de goma. Enroscar las tuercas de empalme con la mano.

Nota: Al montar las tuberías de inyección, se deberá cuidar de que los conos de obturación queden asentados unos exactamente sobre los otros.
Es inadmisible corregir el curvado. La tuberías de inyección no deben ser empleadas dos veces.

117. Apretar el tornillo de las patas de sujeción con un par de **16 + 5 Nm**.

nglish

18. Preload cap nuts of injection line on injection pump and injector with a torque of **approx. 5 Nm**. Thereafter tighten cap nuts with a torque of **25 + 3.5 Nm**.

Español

118. Apretar las tuercas de empalmede las tuberías de inyección en la bomba de inyección e inyector inicialmente con un par de aprox. **5 Nm** y, luego, con un par de **25 + 3,5 Nm**.

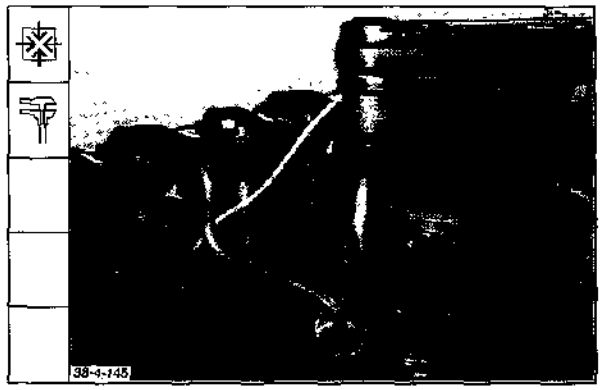

i19. Fit leakage fuel line and introduce through sealing rubber.

Note: Leaage fuel lines must always be replaced.

119. Montar la tubería de combustible sobrante y hacarla pasar a través de las *piezas obturantes de goma*.

Nota: Las tuberías de combustible sobrante deberán ser sustituidas siempre por otras nuevas.

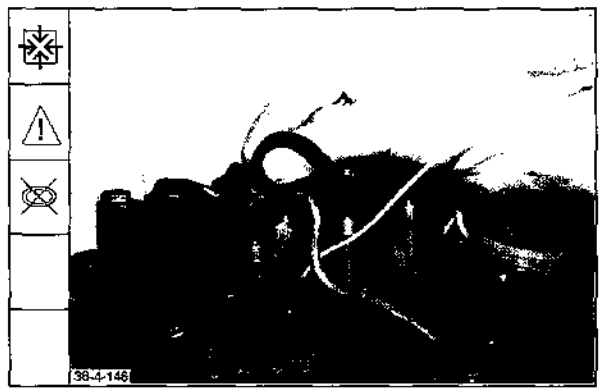

120. Fit overflow valve with new Cu seals and leakage fuel line.Tighten overflow valve with a torque of **30 Nm.**

120. Montar la válvula de rebose provista de juntas de cobre *nuevas y la tubería de* combustible sobrante. Apretar la válvula de rebose con un par de **30 Nm**.

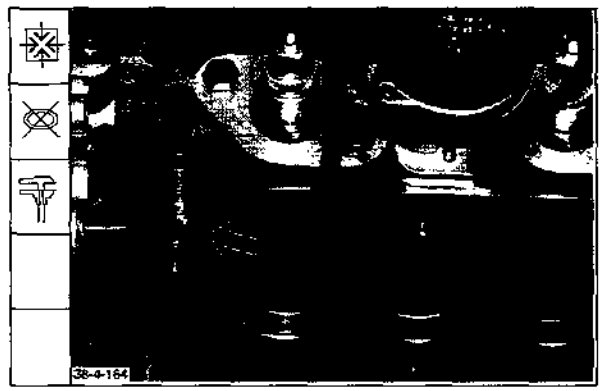

Air intake/exhaust manifold

121. Mount air intake manifold with new gaskets.

Colector de admisión / colector de escape

121. Montar el colector de admisión con juntas nuevas.

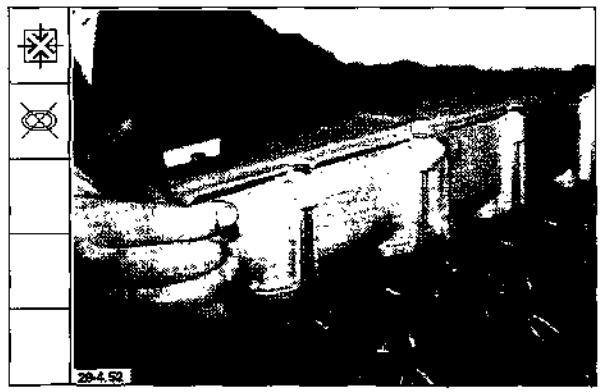

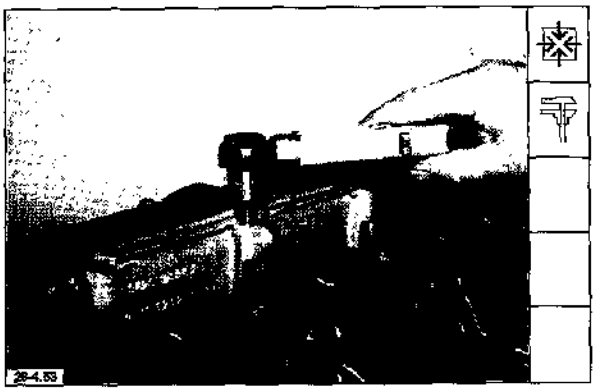

English

122. Tighten bolts for charge air pipe with a torque of **11 ± 1 Nm.**

Español

122. Apretar los tornillos de la tuberi de aire de sobrealimentación co un par de **11 ± 1 Nm.**

123. Mount exhaust manifold with new gaskets.
The gasket bead must point towards the cylinder head.

Note: Apply **Deutz S1** Never Seize paste to studs.

123. Montar el colector de escape co juntas nuevas.
El bordeado de la juntadebe indicar a la culata.

Nota: Aplicar a los espárragos past **Deutz S1** Never Seize.

124. Tighten nuts for exhaust manifold with a torque of **25 ± 2.5 Nm.**

124. Apretar las tuercas del colector escape con un par de **25 ± 2,5 Nm.**

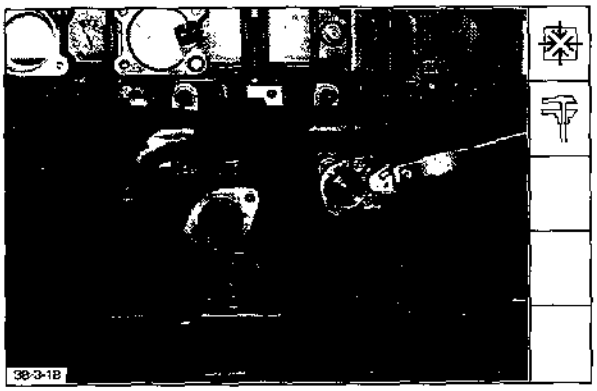

Cylinder head cover

125. Position gasket.

Tapa de culata

125. Colocar la junta.

English

126. Fit cylinder head cover together with cover plate and cable harness. Tighten bolts with a torque of **9 ± 1 Nm.**

Lube oil cooler

127. Mount lube oil cooler with new gasket.

128. Tighten bolts with a torque of **21 ± 2 Nm.**

Note: Fit retainer for cable connector as well if any.

129. Fit both screw plugs with new Cu seals.

Español

126. Montar la tapa de culata con chapa de recubrimiento y mazo de cables. Apretar los tornillos con un par de **9 ± 1 Nm.**

Refrigerador de aceite lubricante

127. Montar el refrigerador de aceite lubricante con una junta nueva.

128. Apretar los tornillos con un par de **21 ± 2 Nm.**

Nota: Si lo hay, montar también el soporte para la conexión de cables.

129. Instalar ambos enchufes con una junta de cobre nuevas.

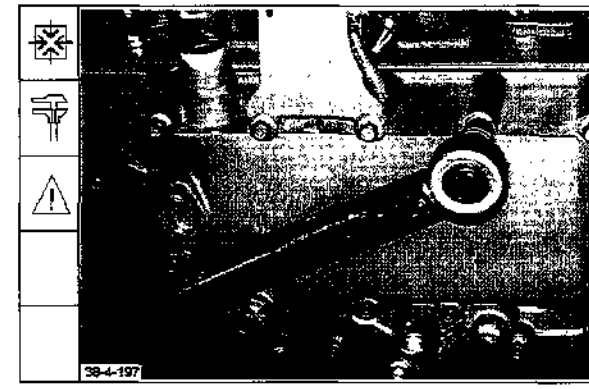

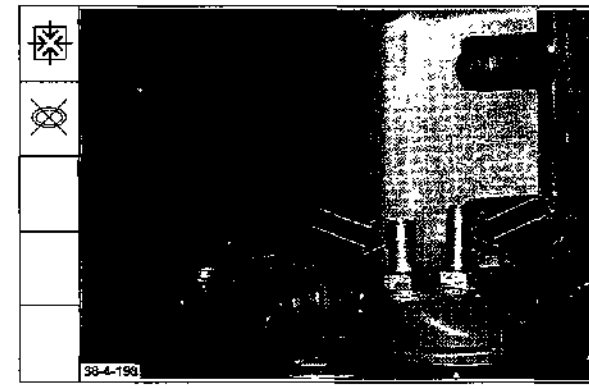

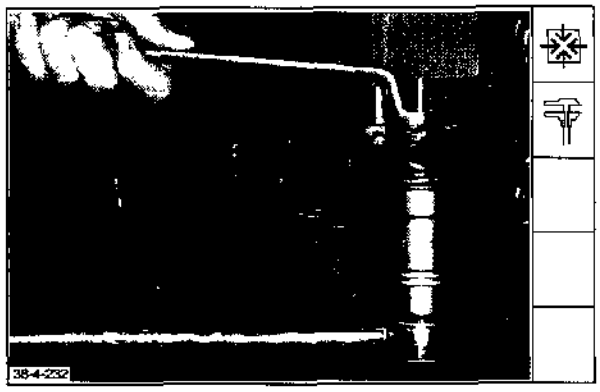

English

130. Tighten nut with a torque of **50 ± 5 Nm.**

Español

130. Apretar la tuerca con un par de **50 ± 5 Nm.**

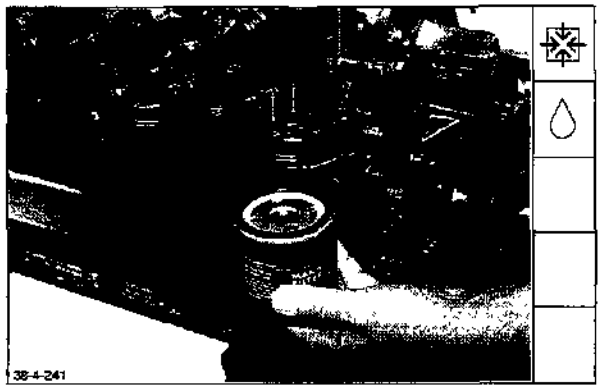

131. Lightly oil fuel filter gasket. Secure fuel filter cartridge fingertight.

131. Untar con un poco de aceite la junta del filtro de combustible. Apretar el cartucho filtrante con la mano.

132. Lightly oil oil filter gasket. Secure oil filter cartridge fingertight.

132. Untar con un poco de aceite la junta del filtro de aceite. Apretar el cartucho filtrante con la mano.

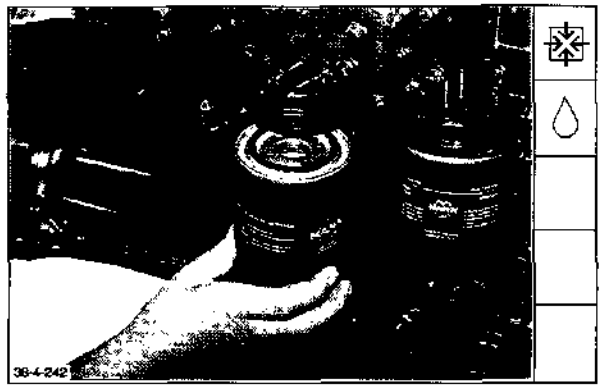

Coolant pump

133. Plug-in element
Slide on O-seals.

Note: Apply lubricant **AP25N** to O-seals.

Bomba de líquido refrigerante

133. Pieza de enchufe.
Colocar anillos tóricos nuevos.

Nota: Aplicar lubricante de montaje **AP25N** a los anillos tóricos.

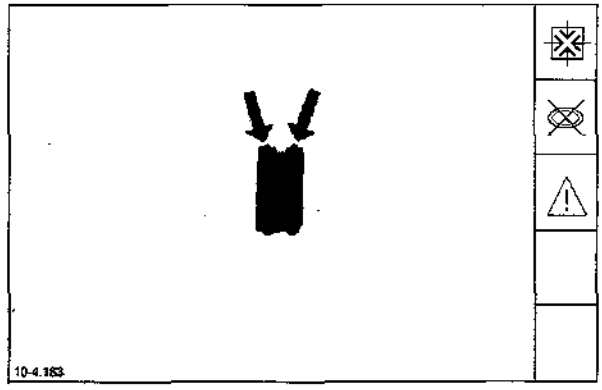

English

134. *Press plug-in element into* thermostat housing and coolant pump.

135. Insert new O-seals into thermostat housing.

Note: Apply lubricant **AP25N** to O-seals.

136. Mount preassembled coolant pump with new gasket.

137. Tighten bolts alternately with a torque of **21 ± 2 Nm.**

Español

134. *Introducir a presión la pieza de* enchufe en la caja del termostato y en la bomba de líquido refrigerante.

135. Montar un anillo tórico nuevo en la caja del termostato.

Nota: Aplicar lubricante de montaje **AP25N** a los anillos tóricos.

136. Montar la bomba de líquido refrigerante premontada, con una junta nueva.

137. Apretar alternativamente los tornillos con un par de **21 ± 2 Nm.**

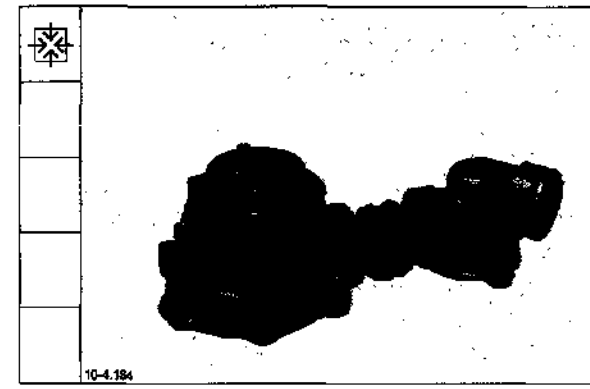

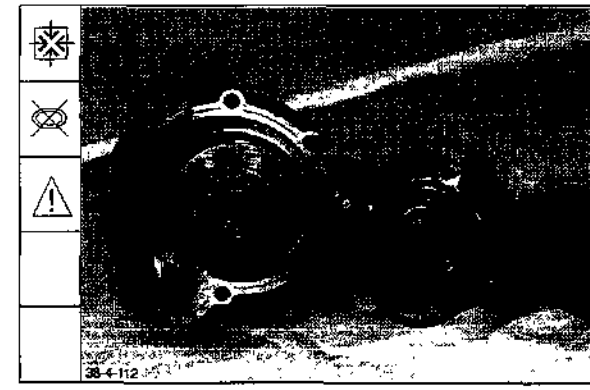

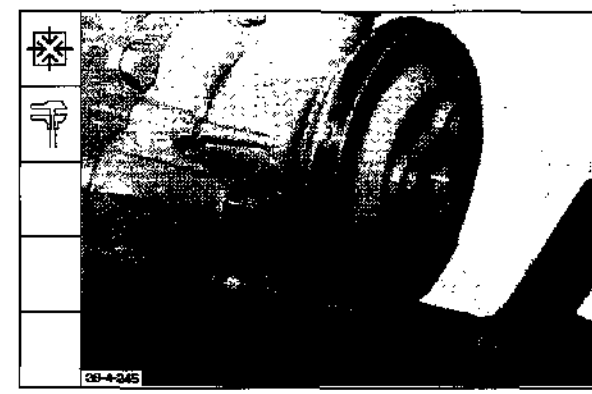

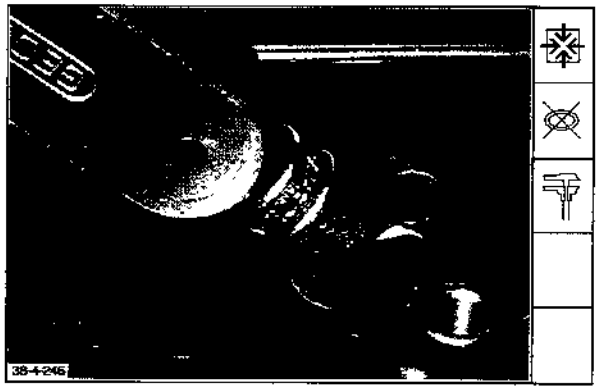

English

138. Fit coolant temperature sensor with new seal and insulating hose, if any, and tighten with a torque of **18 ± 2 Nm.**

Español

138. Apretar con un par de **18 ± 2 Nm** el transmisor de temperatura de refrigerante con una junta nueva y, si existe, manguera aislante.

Fuel pump

139. Fit fuel pump.

Note: Start bolts.

Bomba de combustible

139. Montar la bomba de combustible.

Nota: Apretar ligeramente a mano los tornillos.

140. Fit fuel lines with new Cu seals. Use Cobra clamp pliers.

Note: Attention - thread for feed line connection on fuel pump is **M16x1.5.**

140. Montar las tuberías de combustible con juntas de cobre nuevas. Utilizar los alicates Cobra.

Nota: Atención - la rosca para la unión la tubería de entrada a la bomba de combustible es **M16x1,5.**

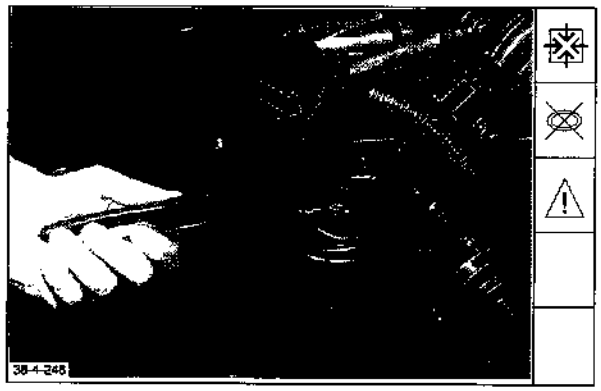

Oil suction pipe/oil pan

141. Turn engine by 180°. Fit oil suction pipe with new gasket.

Note: Fit retainer as well. Do not tighten bolts.

Tubo de aspiración de aceite/cárter de aceite

141. Girar el motor por 180°. Montar el tubo de aspiración de aceite con una junta nueva.

Nota: Montar también el soporte. No apretar los tornillos.

English

142. Order of tightening.

1. Bolts of oval flange
2. Retainer of oil suction pipe with a torque of **21 ± 2 Nm.**

Español

142. Orden de sucesión a seguir para el apriete:

1. Tornillos de la brida ovalada.
2. Soporte del tubo de aspiración de aceite, apretar con un par de **21 ± 2 Nm.**

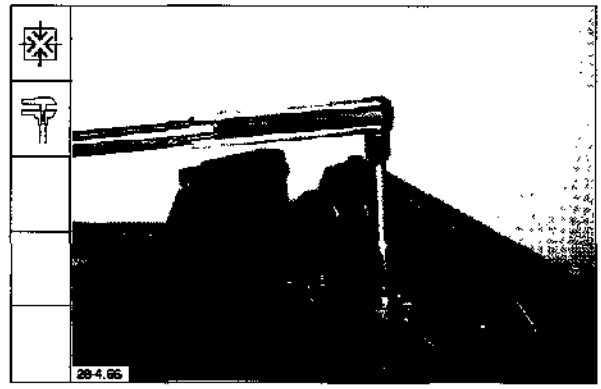

143. Cut off projecting gasket.

143. Cortar lo que sobresale de la junta.

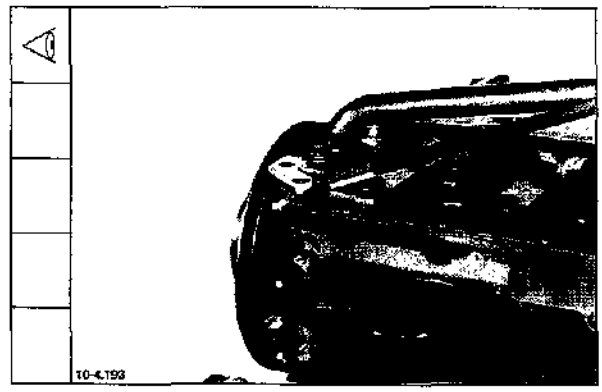

144. Fill up joints of oil pan sealing surface with **Deutz DW 47.**

144. Tapar las juntas de la superficie de cierre del cárter de aceite con **Deutz DW 47.**

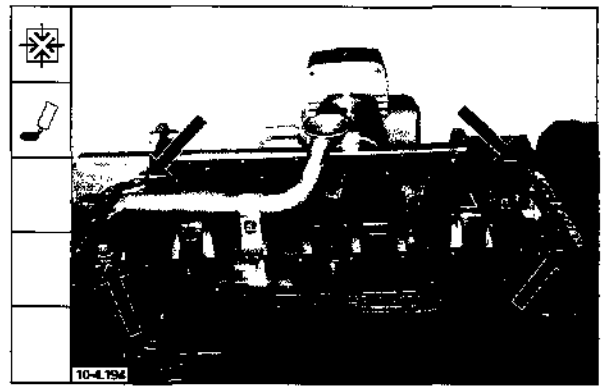

145. Position new gasket on crankcase.

145. Colocar una junta nueva sobre el bloque motor.

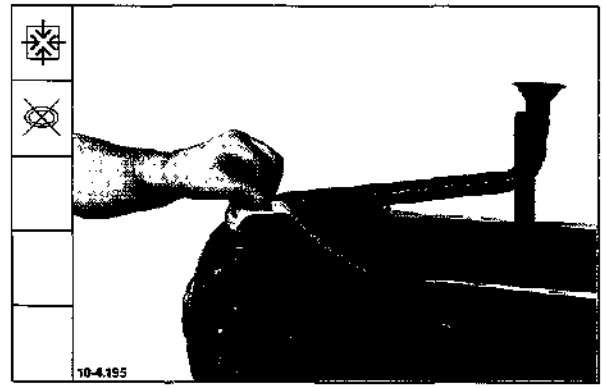

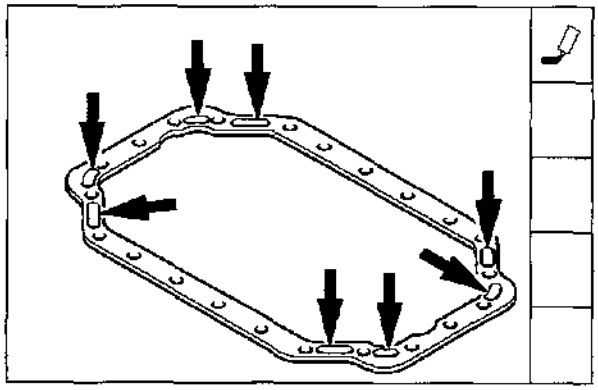

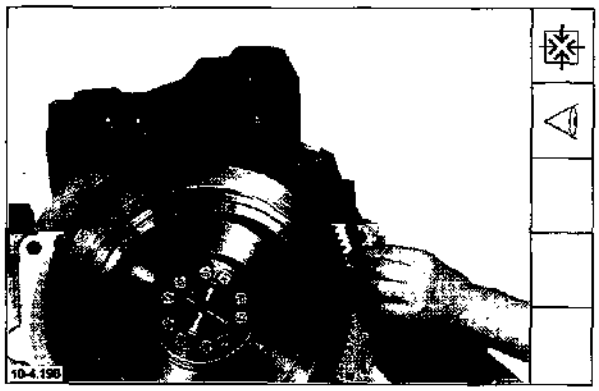

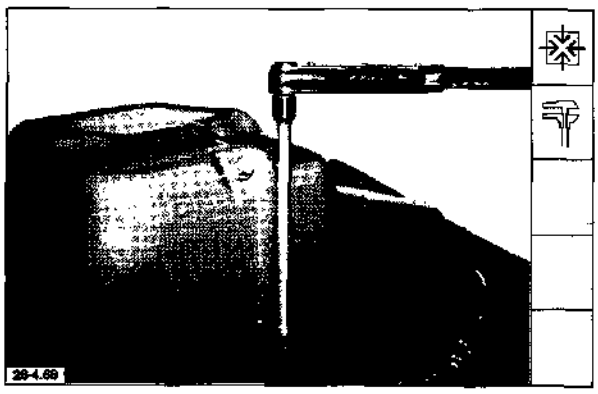

English

146. Fill up all recesses in the gasket for the sheet metal oil pan with **Deutz DW 47.**

147. With sheet metal oil pan:
Mount oil pan.

Note: Watch marked installation position.

148. With cast oil pan:
Mount oil pan and align relative to timing chest cover.

149. Tighten bolts uniformly/alternately with a torque of **21 ± 2 Nm** with sheet metal oil pan or with **29 ± 2 Nm** with cast oil pan.

Español

146. Si el cárter es de chapa:
Rellenar todas las escotaduras de la junta con **Deutz DW 47.**

147. Si el cárter es de chapa:
Montar el cárter.

Nota: Observar la posición marcada para el montaje.

148. Si el cárter es de fundición:
Montar el cárter y alinearlo con respecto a la tapa del cárter de la *distribución.*

149. Apretar uniforme/alternativamente os tornillos con un par de **21 ± 2 Nm** en el caso del cárter de chapa o de **29 ± 2 Nm** en el caso del cárter de fundición.

English

Governor

150. Apply sealing compound **Deutz DW 48** to governor. Sealing string **dia.: 1.5 + 0.5 mm**

Note: Sealing surface must be free of *oil and grease.*

151. Turn engine by 180°, mount governor.

152. Tighten bolts in the order 1-2-3-4-5 with a torque of **17 ± 1.5 Nm.**

153. Fit new O-seal to cover and grease lightly.

Español

Regulador

150. Aplicar sellante **Deutz DW 48** al regulador. Espesor del filo sellante: **ø 1,5 + 0,5 mm**

Nota: La superficie de cierre debe *estar exenta de aceite y de grasa.*

151. Girar el motor 180°. Montar el regulador.

152. Apretar los tornillos con un par de **17 ± 1,5 Nm** en el orden de sucesión 1-2-3-4-5.

153. Montar un anillo tórico nuevo sobre la tapa de cierre y engrasarlo ligeramente.

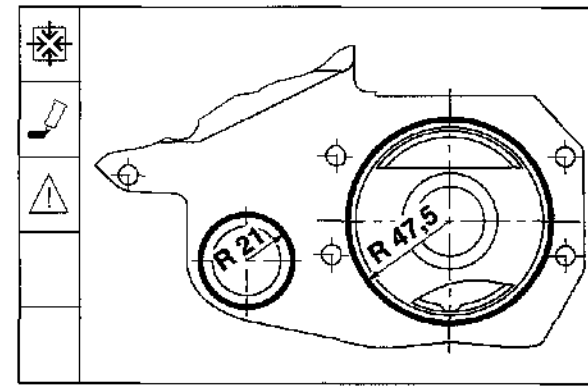

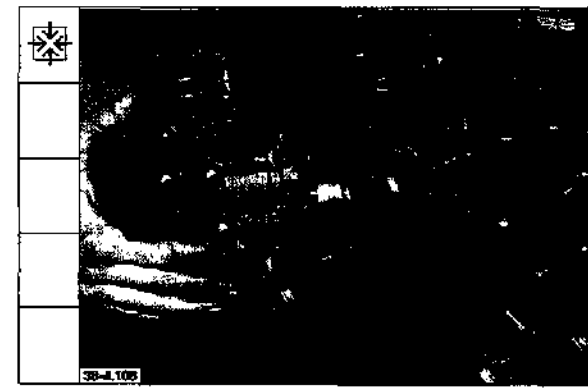

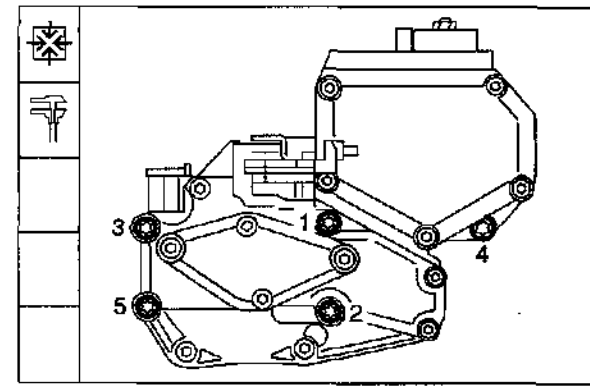

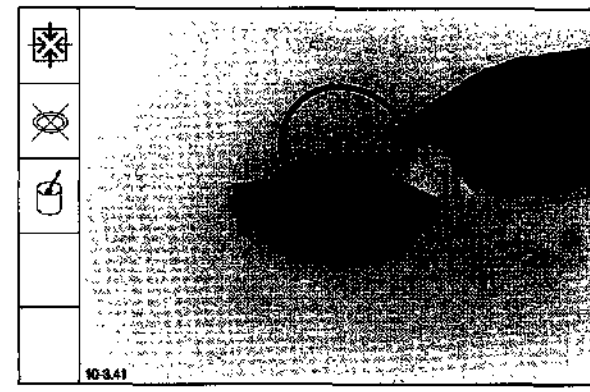

English

154. Fit cover.

Note: Watch out for spacer sleeves.

Español

154. Montar la tapa de cierre.

Nota: Prestar atención a los casquillos distanciadores.

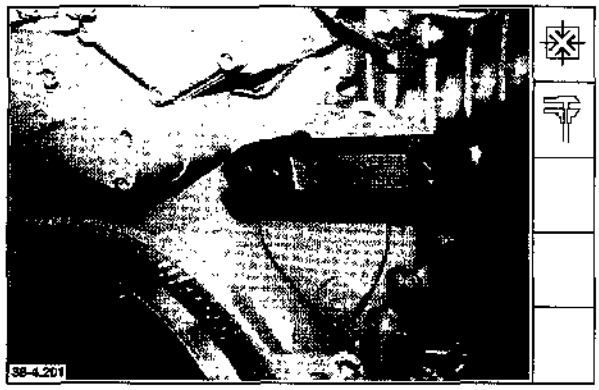

155. Tighten bolts with a torque of **21 ± 2 Nm.**

155. Apretar los tornillos con un par de **21 ± 2 Nm.**

156. Fit retaining plate to governor.

156. Montar la placa de soporte en el regulador.

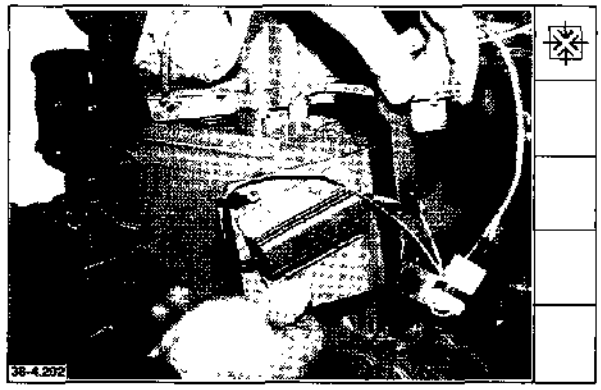

157. Tighten bolts with a torque of **21 ± 2 Nm.**

157. Apretar los tornillos con un par de **21 ± 2 Nm.**

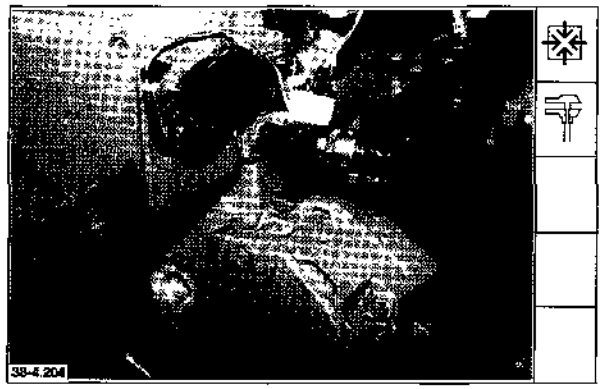

English

Cable harness

158. Fit cable lug to governor.

159. Fit cable lug to shutdown solenoid.

160. Put together glow plug cable couplers.

Español

Mazo de cables

158. Montar el terminal de cable en el regulador.

159. Montar el terminal de cable en el solenoide de parada.

160. Unir las dos partes de los acoplamientos de cables de las bujías de incandescencia.

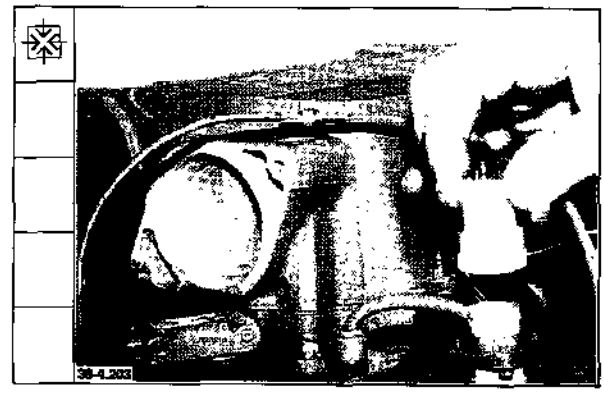

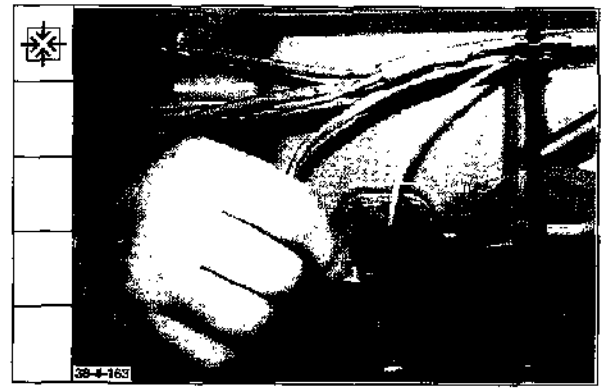

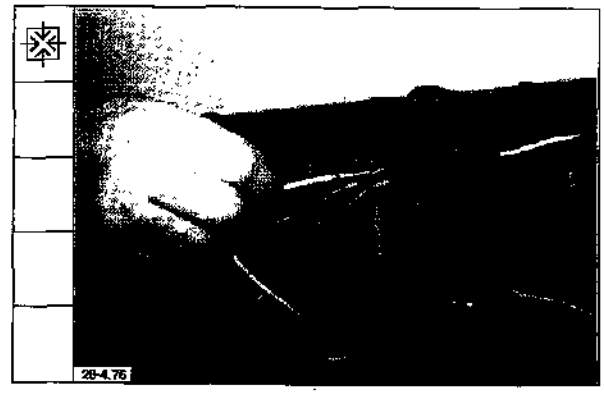

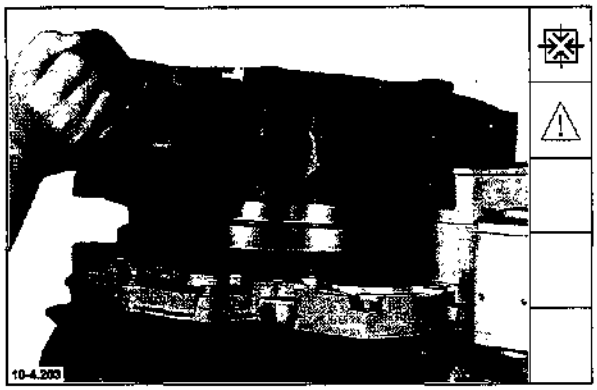

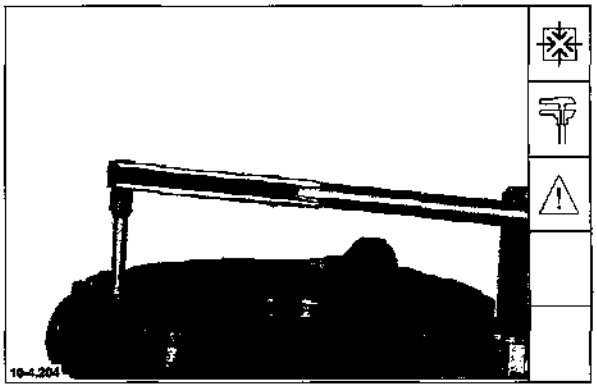

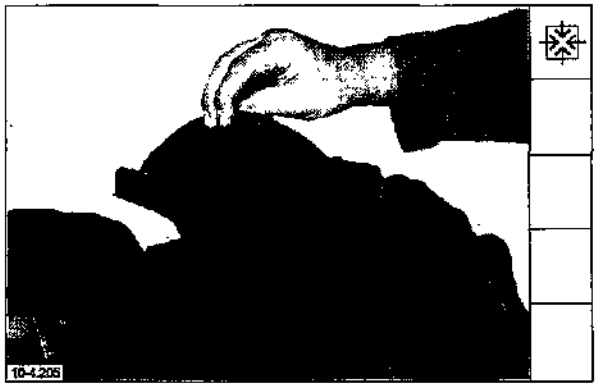

English

Adapter housing
(BFM 1012 shown here)

161. Turn engine by 90°. Mount adapter housing.

Note: Make sure that centering sleeve are fitted.

162. Tighten bolts according to specification.

M 12 = **99 ± 10 Nm**
M 16 = **243 ± 25 Nm**

Note: Use Torx tool.
E 14 long version
E 20 long version

163. Mount cover plate.

Español

Cárter de adaptación
(Representado BFM 1012)

161. Voltear el motor 90°. Montar el cárter de adaptación.

Nota: Los casquillos de centraje deben estar en su sitio.

162. Apretar los tornillos según prescripción:

tornillos M 12 = **99 ± 10 Nm**
tornillos M 16 = **243 ± 25 Nm**

Nota: Utilizar las herramientas Torx.
E 14 - tipo largo
E 20 - tipo largo

163. Montar la chapa de recubrimiento.

English

Starter

164. Mount starter. Tighten bolts with a torque of **70 Nm**.

Note: Tighten collar nut, if any, with a torque of **40 Nm**.

165. Fit cable and fastening clips.

Breather pipe

166. Fit breather pipe with new Cu seals.

167. Tighten bolts for breather pipe with a torque of **11 ± 1 Nm**.

Español

Arrancador

164. Montar el arrancador. Apretar los tornillos con un par de **70 Nm**.

Nota: Apretar la tuerca de collarín, si existe, con un par de **40 Nm**.

165. Montar el cable y las abrazaderas de fijación.

Tubería de ventilación

166. Unir la tubería de ventilación con anillos de junta de cobre nuevos.

167. Apretar el tornillo para la tubería de ventilación con un par de **11 ± 1 Nm**.

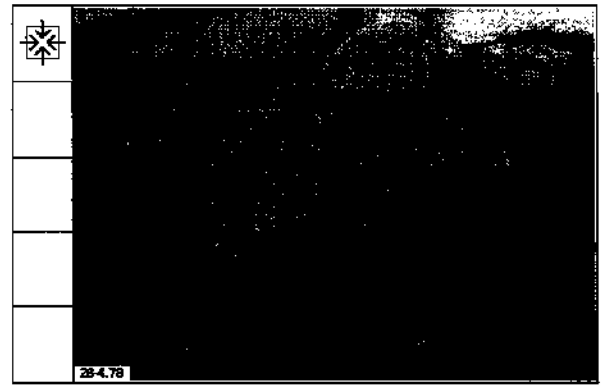

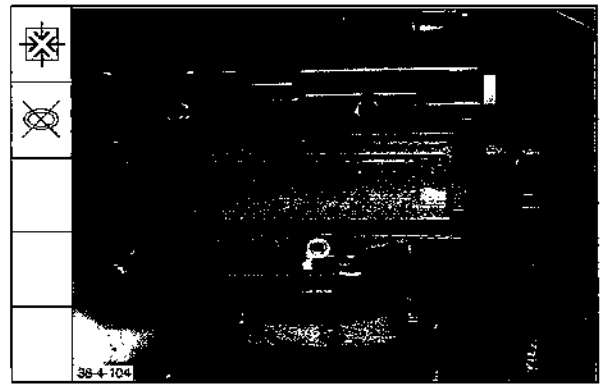

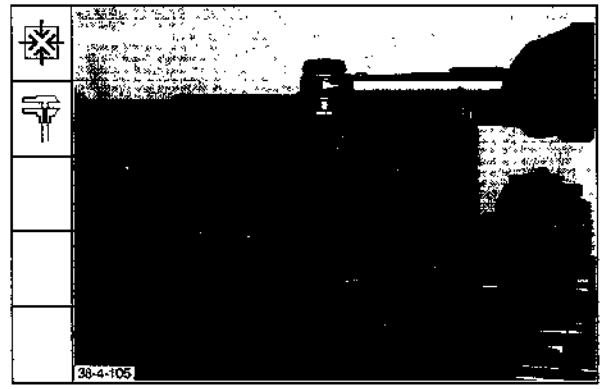

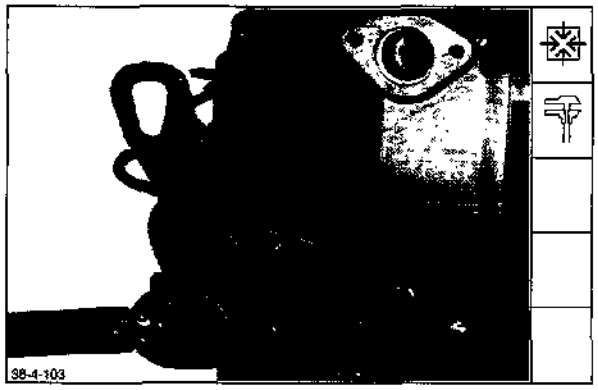

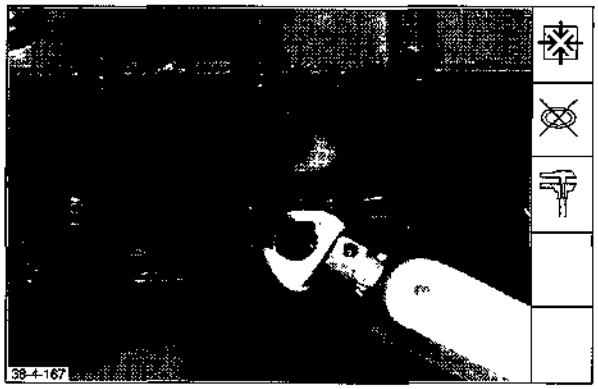

English

168. Fit air pipe to manifolf pressure compensator (LDA)

169. Fit lifting lugs. Tighten bolts with a torque of **47 ± 4 Nm**.

170. Fit cable lug to coolant temperature sensor.

Oil pressure switch

171. Fit oil pressure switch with new Cu seal and tighten with a torque of **18 ± 2 Nm**.

Español

168. Unir la tubería de aire al tope de piena carga dependiente de la presión de sobrealimentación(LDA).

169. Montar las argollas de transporte. Apretar los tornillos con un par de **47 ± 4 Nm**.

170. Montar el terminal de cable en el transmissor de temperatura del liquido refrigerante.

Interruptor de presión de aceite

171. Montar el interruptor de presión de aceite con un anillo de junta de cobre nuevo y apretar con un par de **18 ± 2 Nm**.

English

172. Fit cable lug to oil pressure switch.

Crankcase breather

173. Assemble crankcase breather.

Order of parts assembly:
1 Seal
2 Pressure control valve
3 Rubber sleeve

Note: Pay attention to positioning aids on pressure control valve and rubber sleeve. Slide on rubber sleeve as far as it will go.

174. Press rubber sleeve as far as it will go into timing chest bore. Fit pressure control valve to cylinder head.

Note: Lightly grease receiving bore in cylinder head.

175. Tighten bolts with a torque of **8,5 ± 1 Nm.**

Español

172. Montar el terminal de cable en el interruptor de presión de asceite.

Ventilación del cárter

173. Completar la ventilación del cárter.

Orden del montaje:
1 Junta
2 Válvula reguladora de presión
3 Manguito de goma

Nota: Prestar atención a las ayudas de posicionamiento existentes en la válvula reguladora de presión y en el mangito de goma. Colocar éste hasta el tope.

174. Introducir a presión el manguito de goma hasta el tope en el taladro existente en el cárter de la distribución. Montar la válvula reguladora de presión en la culata.

Nota: Lubricar con un poco de grasa el taladro de alojamiento en la culata.

175. Apretar los tornillos con un par de **8,5 ± 1 Nm.**

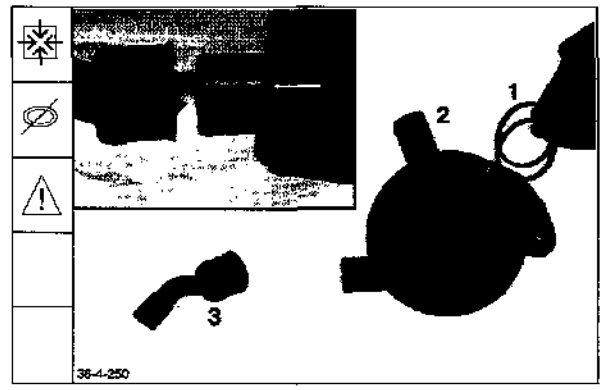

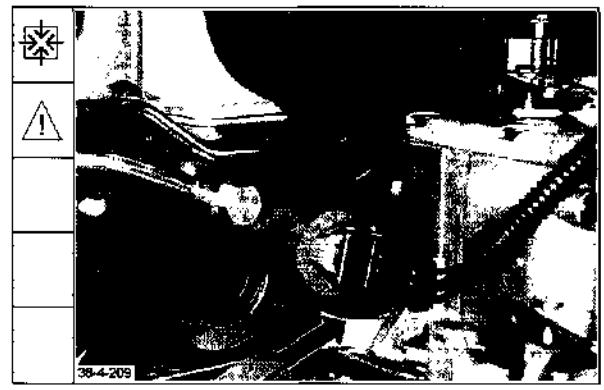

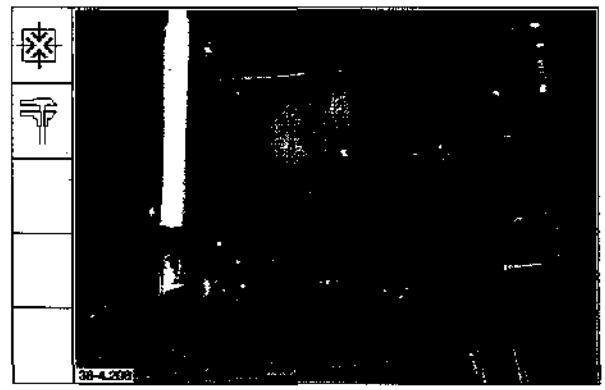

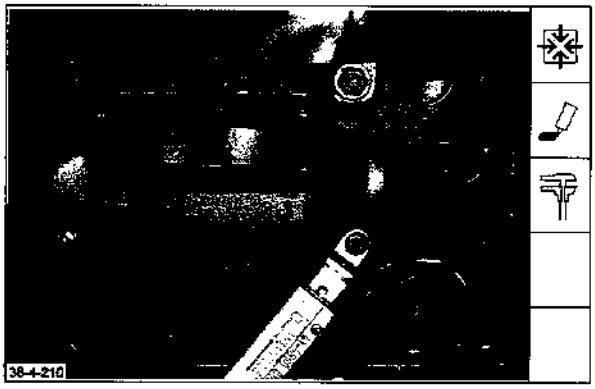

English

Coolant pipe

176. Mount coolant pipe with sealing compound **Deutz DW 67**. Tighten bolts with a torque of **21 ± 2 Nm.**

Español

Tubo de líquido refrigerante

176. Montar el tubo de líquido refrigerante con sellante **Deutz DW 67.** Apretar Los tornillos con un par de **21 ± 2 Nm.**

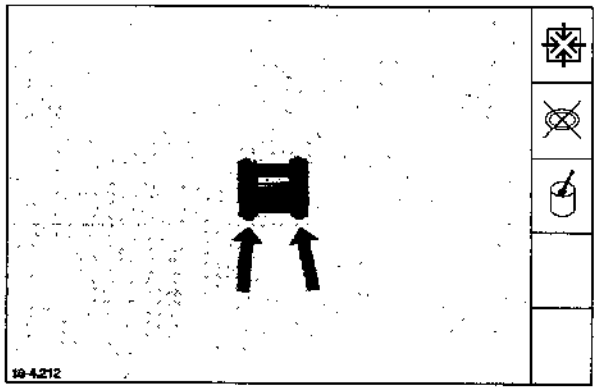

Exhaust turbocharger BFM 1012
Flywheel end

177. Adapter

Slide on new O-seals and grease.

178. Press in adapter as far as it will go.

Turbocompresor, BFM 1012
Lado del volante

177. Pieza intermedia

Colocar los anillos tóricos nuevos y engrasarlos.

178. Introducir a presión la pieza intermedia hasta el tope.

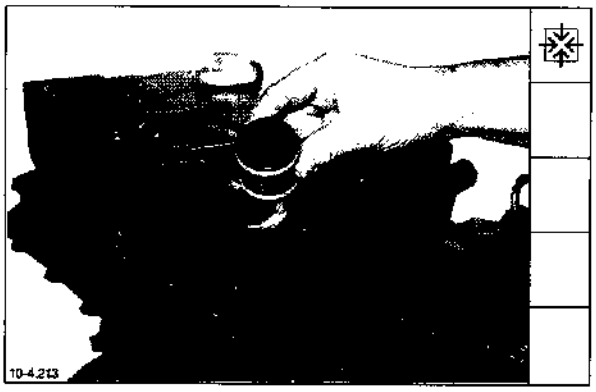

179. Mount exhaust turbocharger with new gasket.

Note: Apply **Deutz S1** Never Seize paste to studs.

179. Montar el turbocompresor con una junta nueva.

Nota: Aplicar a los espárragos pasta **Deutz S1** Never Seize.

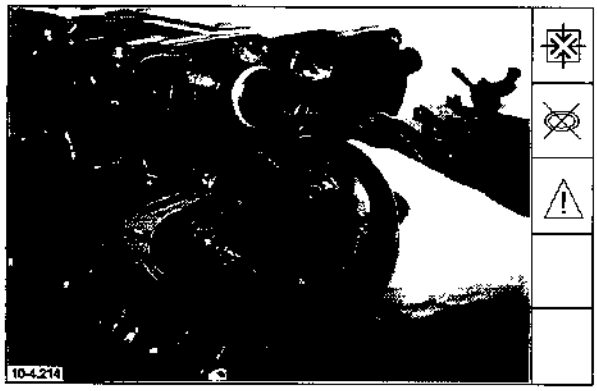

nglish

180. Tighten nuts with a torque of **21 ± 2 Nm.**

Español

180. Apretar las tuercas con un par de **21 ± 2 Nm.**

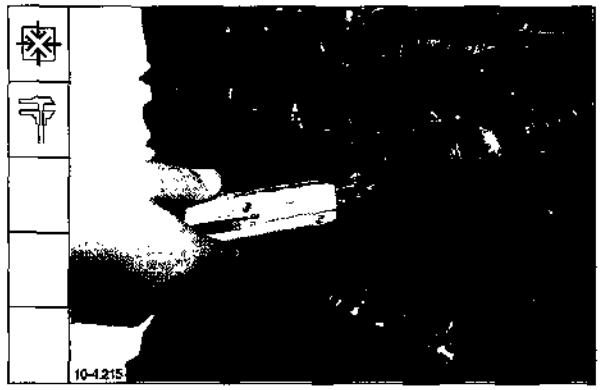

Exhaust turbocharger BFM 1013 Central arrangement

181. Mount exhaust turbocharger with new gasket.

Note: Apply **Deutz S1** Never Seize paste to bolts.

Turbocompresor, BFM 1013 Posición intermedia

181. Montar el turbocompresor con una junta nueva.

Nota: Aplicar a los tornillos pasta **Deutz S1** Never Seize.

182. Tighten bolts according to specification.
Bolts M8 **21 ± 2 Nm**
or
Bolts M10 **40.5 ± 4 Nm**

182. Apretar los tornillos según prescripción.
Tornillos M8 **21 ± 2 Nm**
o
tornillos M10 **40,5 ± 4 Nm**

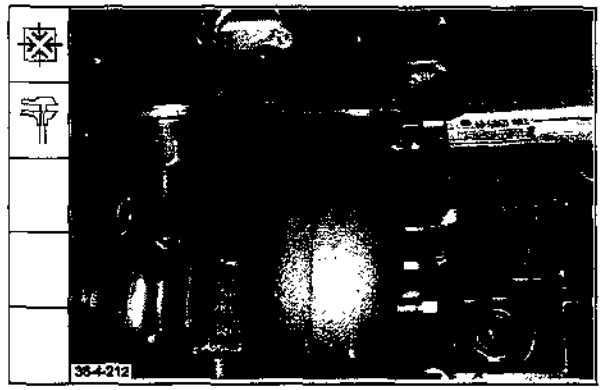

Oil return pipe/pressure oil pipe BFM 1012

183. Slide on new O-seals and grease.

Tubo de retorno de aceite/tubería de aceite a presión, BFM 1012

183. Colocar anillos tóricos nuevos y engrasarlos.

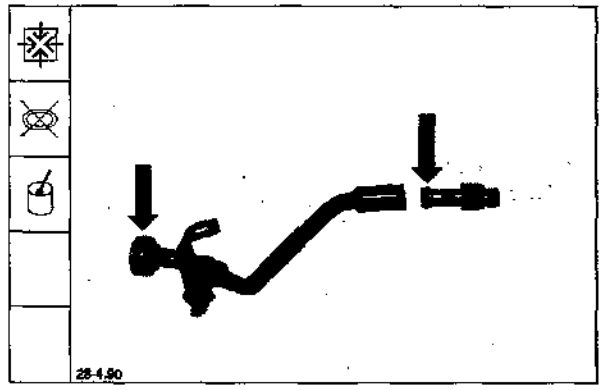

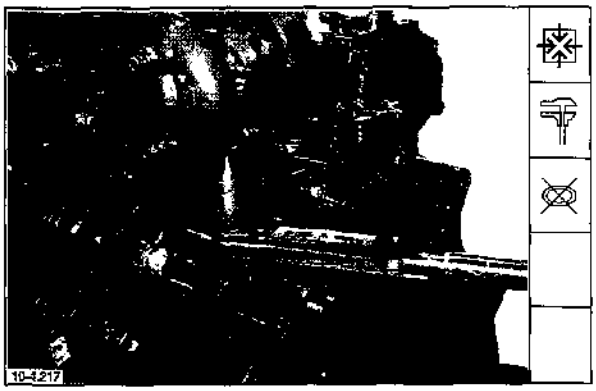

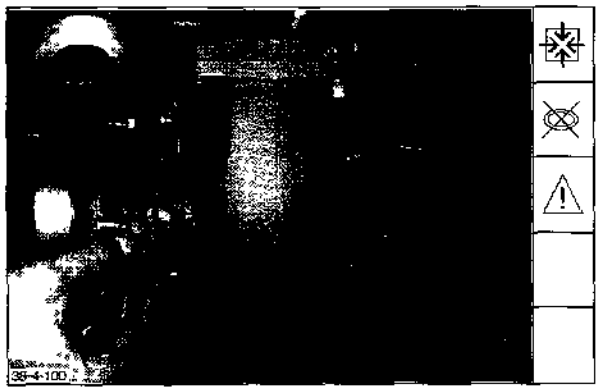

English

184. Tighten screw plug with new Cu seal and a torque of **40 ± 2 Nm.**

185. Mount oil return pipe. Tighten retainer.

186. Mount pressure oil pipe:

Fit banjo bolts with new Cu seals and tighten with a torque of
item 1 **29 ± 3 Nm**
item 2 **39 ± 4 Nm**.

Note: Pre-lubricate turbocharger by spraying a drip of oil into the oil supply bore.

Pressure oil pipe/oil return pipe BFM 1013

187. Mount pressure oil pipe with new gasket.

Note: Pre-lubricatel turbocharger by spraying a drip of oil into the oil supply bore.

Español

184. Apretar el enchufe roscado, provisto de un anillo de junta d cobre nuevo, con un par de **40 ± 2 Nm**.

185. Montar la tubería de de retorno aceite. Atornillar el sujetador.

186. Montar la tubería de aceite a presión:

Enroscar los tornillos racor, provistos de anillos de junta de cobre nuevos, y apretarlos con par de
29 ± 3 Nm = pos. 1
39 ± 4 Nm = pos. 2.

Nota: Preaceitar el turbocompresor proyectando una gota de acei al interior del taladro de alimentación de aceite.

Tubería de aceite a presión/tubo de retorno de aceite BFM 1013

187. Montar la tubería de aceite a presión con una junta nueva.

Nota: Montar la tubería de aceite a presión con una junta nueva.

English

188. Tighten bolts with a torque of **21 ± 2 Nm.**

189. Fit banjo bolt with new Cu seals and tighten with a torque of **39 ± 3 Nm.**

190. Slide on new O-seals and apply dehydrated lubricant.

191. Mount oil return pipe with new gasket.

Note: Apply dehydrated lubricant to receiving bore in crankcase.

Español

188. Apretar los tornillos con un par de **21 ± 2 Nm.**

189. Montar el tornillo racor con anillos de junta de cobre nuevos y apretar con un par de **39 ± 3 Nm.**

190. Colocar anillos tóricos nuevos y untarlos con lubricante de montaje exento de agua.

191. Acoplar el tubo de retorno provisto de una junta nueva.

Nota: Aplicar al alojamiento en el bloque motor lubricante de montaje exento de agua.

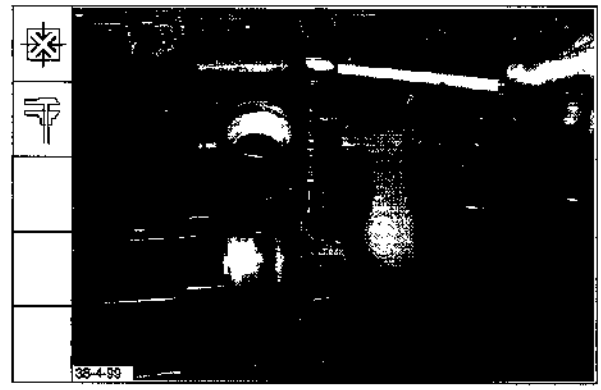

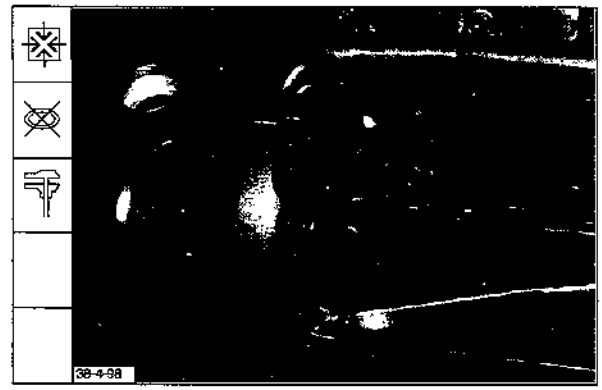

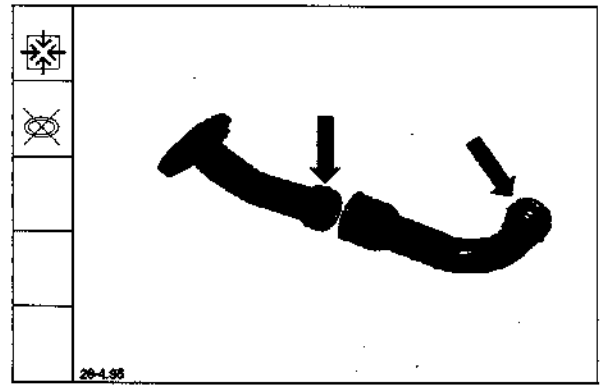

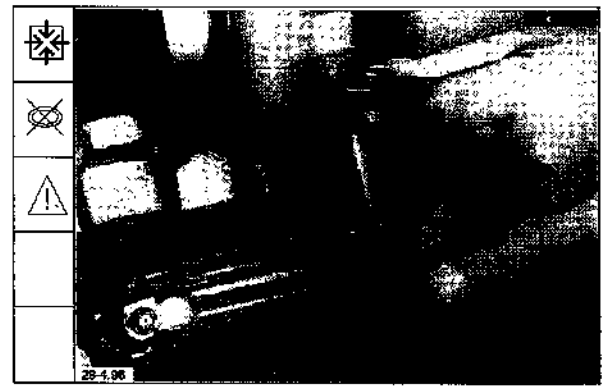

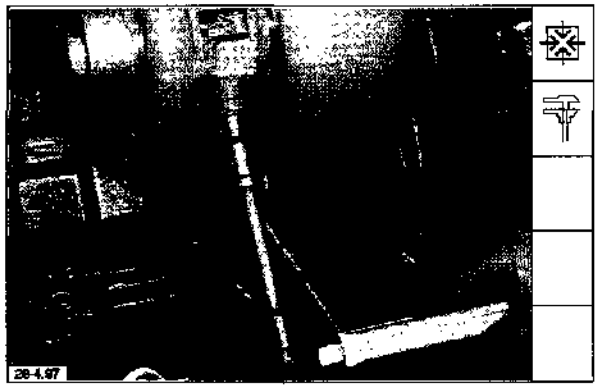

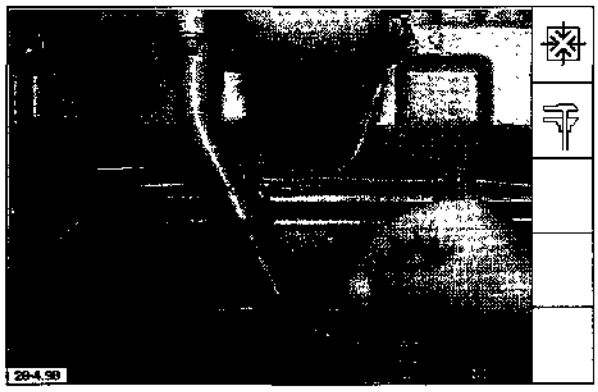

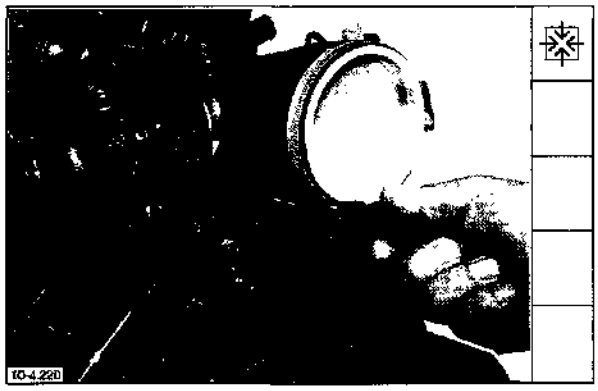

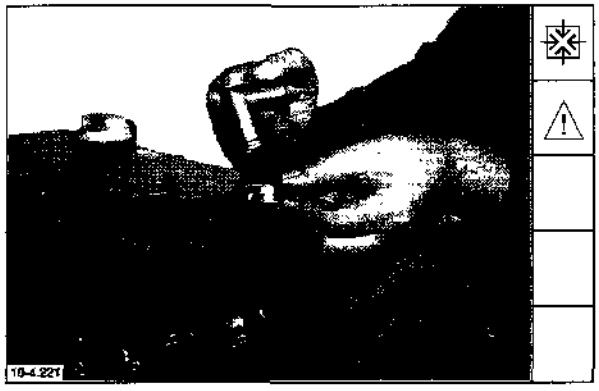

English

192. Tighten bolts with a torque of **21 ± 2 Nm.**

193. Fit clamping yoke. Tighten bolt with a torque of **21 ± 2 Nm.**

Intake elbow BFM 1012

194. Fasten intake elbow (hose) with *hose clip.*

195. Insert elbow nipple with hose clip.

Note: Do not tighten hose clip yet.

Español

192. Apretar los tornillos con un par de **21 ± 2 Nm.**

193. Montar el estribo de sujeción. Apretar el tornillo con un par de **21 ± 2 Nm.**

Codo de aspiración, BFM 1012

194. Fijar el codo de aspiración *(manguera) mediante abrazadera.*

195. Colocar la tubuladura acodada con abrazadera.

Nota: La abrazadera todavía no debe apretarse.

English

196. *Mount breather hose and fasten.* Tighten hose clip.

Intake elbow BFM 1013

197. Mount intake elbow (hose).

Note: Do not tighten hose clip yet.

198. Mount breather pipe with retainer free of stress.

199. Fit spring-loaded clamp.

Note: Use spring clamp pliers.

Español

196. Montar la manguera de purga de aire y fijarla. Apretar la abrazadera.

Codo de aspiración, BFM 1013

197. Montar el codo de aspiración de aire (manguera).

Nota: *La abrazadera todavía no debe apretarse.*

198. Montar sin tensiones la tubería de purga de aire con soporte.

199. *Instalar las pinzas elástica.*

Nota: Utilizar los tornillos para pinzas elásticas.

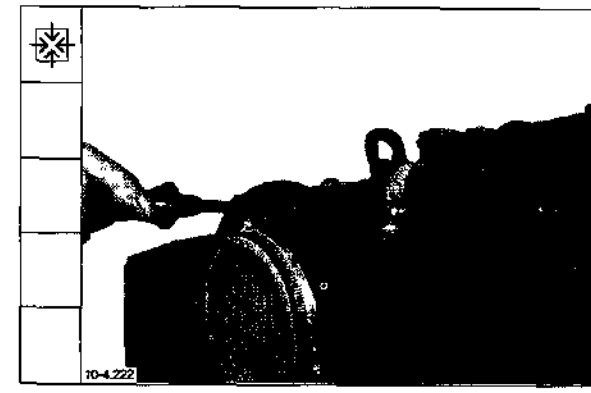

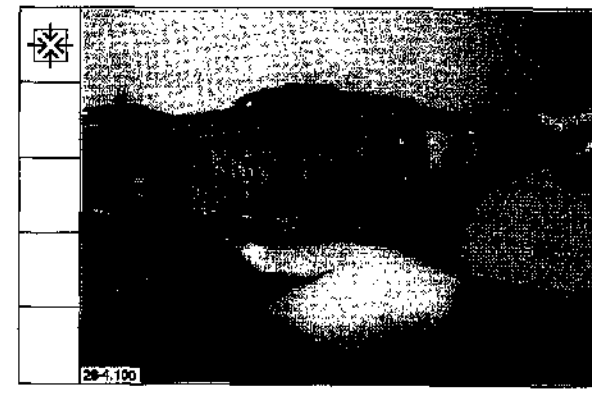

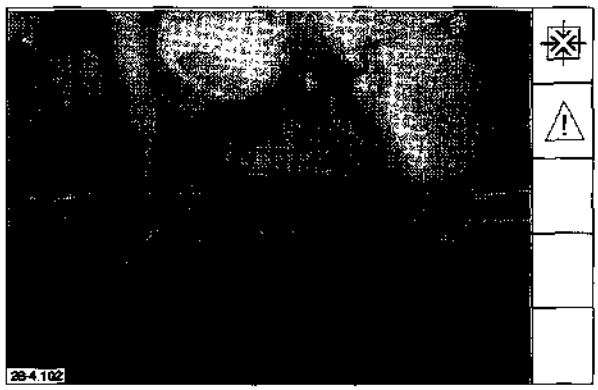

English

200. Fit spring-loaded clamp.

Note: Use spring clamp pliers.

Español

200. Instalar la pinza elástica.

Nota: Utilizar las tenazas especiales para pinzas.

201. Secure hose clip.

201. Apretar la abrazadera de manguera.

Charge air elbow BFM 1013

Codo de aire de sobrealimentación, BFM 1013

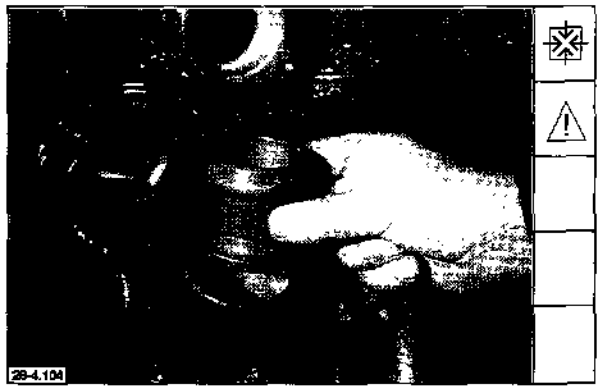

202. Press in plug-in element.

Note: Apply lubricant to sealing section and receiving bore.

202. Introducir a presión la pieza de enchufe.

Nota: Aplicar lubricante de montaje al perfil de cierre y al alojamiento.

203. Mount charge air elbow with new seal.

203. Montar el codo de aire de sobrealimentación provisto de una junta nueva.

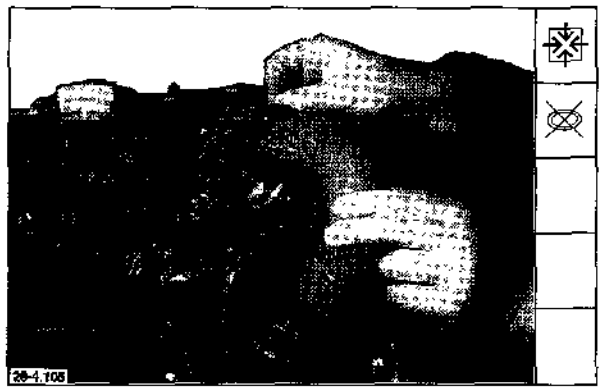

nglish

04. Tighten bolts with a torque of **22 ± 2 Nm**.

Español

204. Apretar los tornillos con un par de **22 ± 2 Nm.**

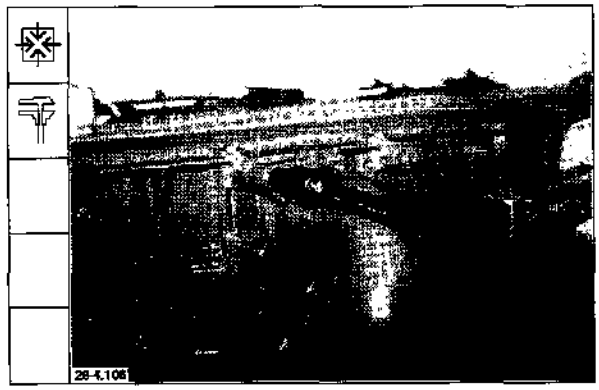

205. Fit oil filler neck, if any, complete with new seal and tighten with a torque of **21 ± 2 Nm**.

205. Si existe, montar la tubuladura de llenado de aceite con una junta nueva y apretar con un par de **21 ± 2 Nm.**

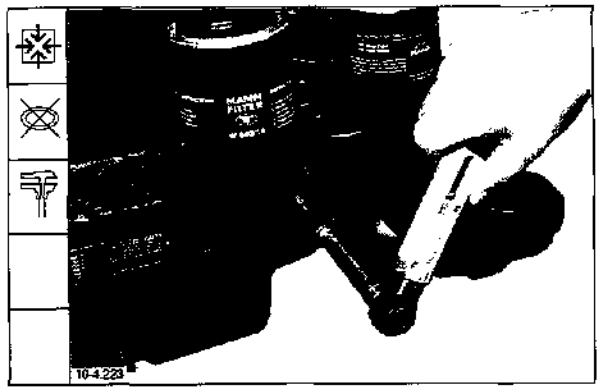

Oil dipstick

Varilla de medición del nivel de aceite

206. Slide on new O-seal.

206. Colocar un anillo tórico nuevo.

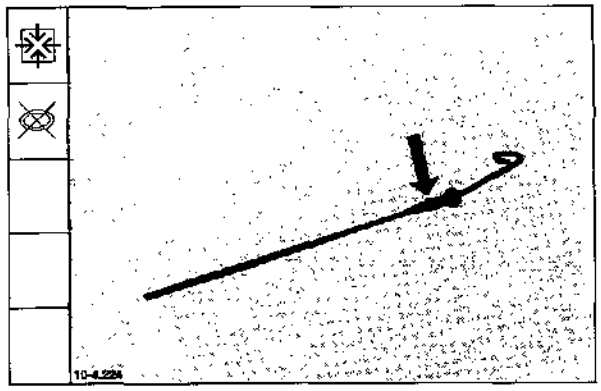

207. Press in oil dipstick as far as it will go.

207. Presionar adentro la varilla de medición hasta que haga tope.

English

Alternator

208. Fit alternator bracket. Tighten bolts with a torque of **21 ± 2 Nm.**

209. Mount alternator. Start hex. bolt.

210. Fit clamping plate together with spacer bushes. Start hex. bolts.

Tensioning V-belt

211. Position V-belt.

Español

Alternador

208. Montar la consola. Apretar los tornillos con un par de **21 ± 2 Nm.**

209. Montar el alternador. Apretar e tornillo hexagonal ligeramente con la mano.

210. Montar la corredera con los casquillos distanciadores. Apre los tornillos hexagonales ligeramente con la mano. ensado de correas trapezoidale

Tensar la correa trapezoidal

211. Colocar la correa trapezoidal.

English

212. Tension V-belt. Tighten bolts with a torque of **21 ± 2 Nm.**

Español

212. Tensar la correa trapezoidal. Apretar los tornillos con un par de **21 ± 2 Nm.**

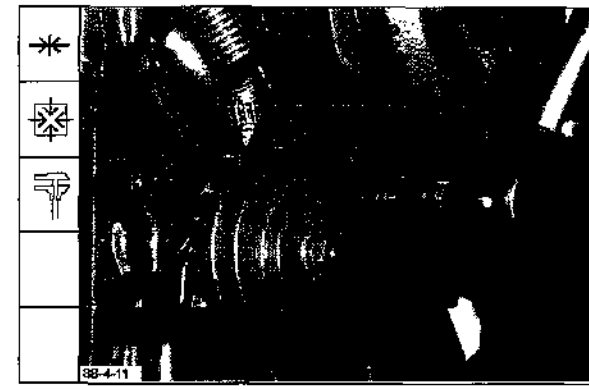

213. Check V-belt tension with belt tension gauge.

Belt back width 10 mm
Initial assembly ____ **450 ± 50 N**
Check value after 15 min.of operation under load **300 ± 50 N**
When reusing belt __ **300 ± 50 N**

Belt back width 13 mm
Initial assembly ____ **550 ± 50 N**
Check value after 15 min.of operation under load **400 ± 50 N**
When reusing belt __ **400 ± 50 N**

213. Comprobar la tensión de la correa utilizando un verificador de tensión.
Ancho de correa 10 mm
Primer montaje ____ **450 ± 50 N**
Control tras una marcha de 15 min. bajo carga **300 ± 50 N**
Para reutilización ___ **300 ± 50 N**

Ancho de correa 13 mm
Primer montaje ____ **550 ± 50 N**
Control tras una marcha de 15 min. bajo carga **400 ± 50 N**
Para reutilización ___ **400 ± 50 N**

214. Position V-belt.

214. Colocar la correa trapezoidal.

215. Tension V-belt. Tighten bolts with a torque of **30 Nm**.

215. Tensar la correa trapezoidal. Apretar los tornillos con un par de **30 Nm**.

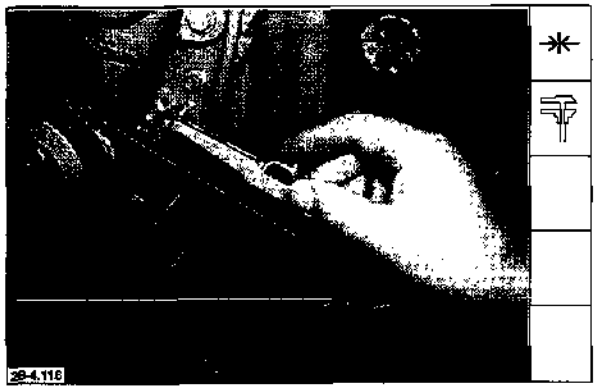

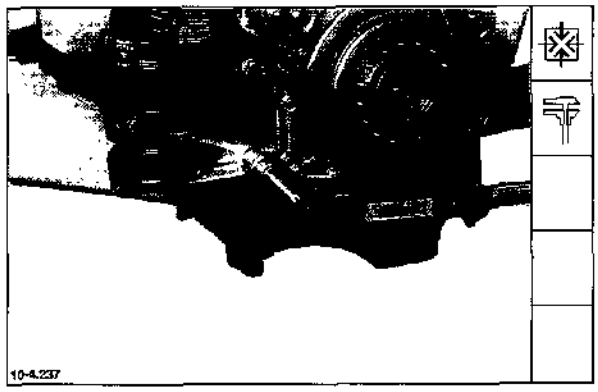

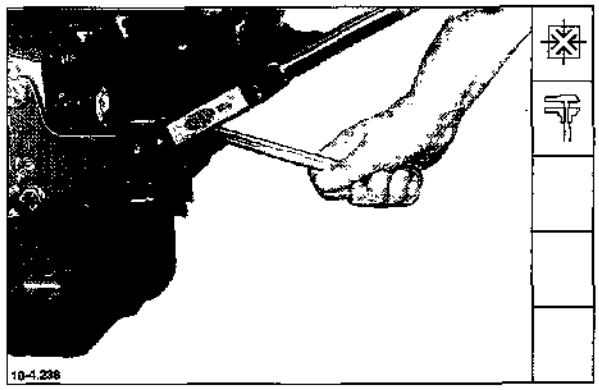

English

216. Check V-belt tension with belt tension gauge.

Initial assembly ___ **450 ± 50 N**
Check value after 15 min. of operation under load **300 ± 50 N**
When reusing belt __**300 ± 50 N**

217. After tensioning of belt tighten remaining bolts and connect cables.

Remove engine from assembly stand.

Engine mounting/mounting feet

218. Fit engine mounting. Tighten bolts with a torque of **260 Nm.**

219. Fit mounting feet. Tighten bolts with a torque of **95 Nm.**

Español

216. Comprobar la tensión de la correa trapezoidal mediante un verificador de tensión.

Primer montaje ___ **450 ± 50 N**
Control tras 15 minutos de marcha bajo carga _____ **300 ± 50 N**
Para reutilización __ **300 ± 50 N**

217. Una vez tensadas las correas, se apretarán los demás tornillos y se conectarán los cables.

Desmontar el motor del cabalete de montaje.

Suspensión del motor / patas de colocación

218. Montar la suspensión del motor. Apretar los tornillos con un par de **260 Nm.**

219. Montar las patas de colocación. Apretar los tornillos con un par de **95 Nm.**

English

Removing and refitting components for integrated cooling system - BFM 1012

The components may differ from the illustrations shown here, depending on the engine scope of supply.

Drain and catch coolant and oil.

Removing components

1. Loosen tension pulley, take off V-belt.

2. Remove tension pulley together with bracket.

3. Remove air guide ring.

Español

Desmontaje y remontaje de componentes de la refrigeración integrada - BFM 1012

Los componentes adosados pueden diferir de los indicados en estas ilustraciones, según el volumen de suministro del motor.

Dejar salir y recoger el líquido refrigerante y aceite.

Desmontaje de elementos

1. Soltar la polea tensora, quitar la correa trapezoidal.

2. Desmontar la polea tensora con consola.

3. Desmontar el aro guía de aire.

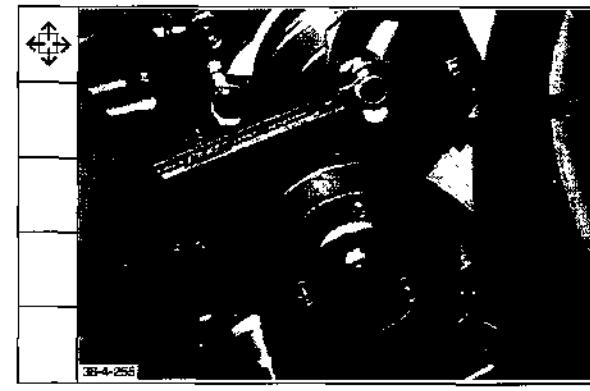

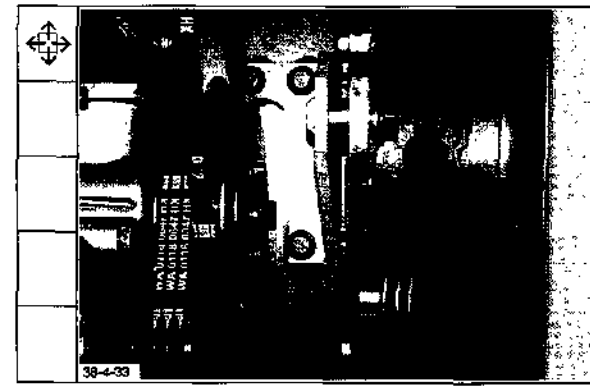

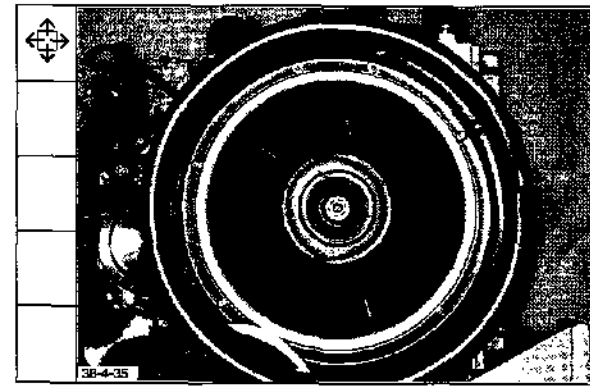

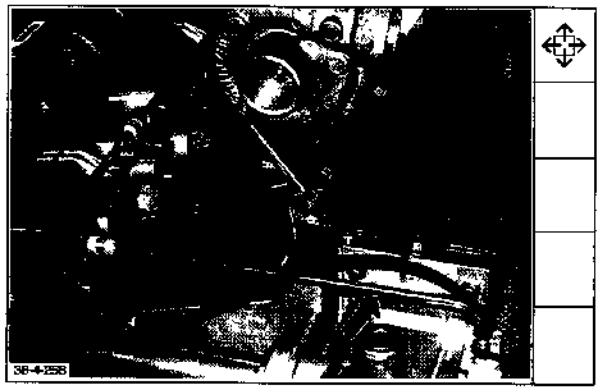

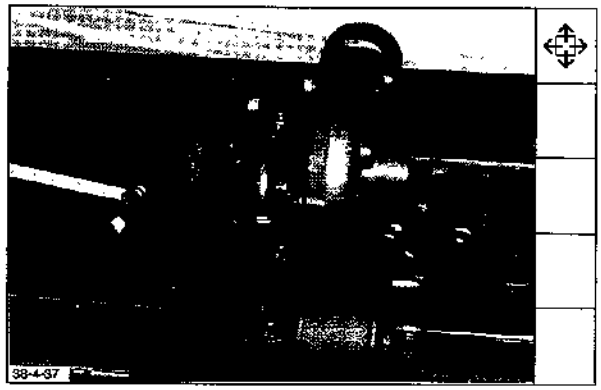

English

4. Loosen alternator and fuel pump, take of V-belt. Remove alternator and fuel pump.

5. Retain V-belt pulley against flywheel. Remove V-belt pulley and vibration damper.

6. Remove breather pipe.

7. Remove inspection hole plate.

Español

4. Soltar el alternador y la bomba de combustible. Quitar la correa trapezoidal. Desmontar el alternador y la bomba de combustible.

5. Retener la polea acanalada en el volante. Desmontar la polea acanalada y el amortiguador de vibraciones.

6. Desmontar la tubería de purga de aire.

7. Desmontar la chapa de la abertura de inspección.

English

8. Remove top cover plate.

9. Remove central cover plate.

10. Remove bottom cover plate.

11. Remove retainer from radiator.

Español

8. Desmontar la chapa de recubrimiento superior.

9. Desmontar la chapa de recubrimiento intermedia.

10. Desmontar la chapa de recubrimiento inferior.

11. Desmontar los soportes del refrigerador de líquido.

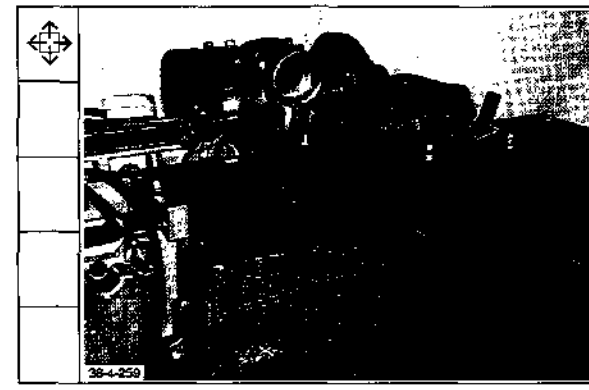

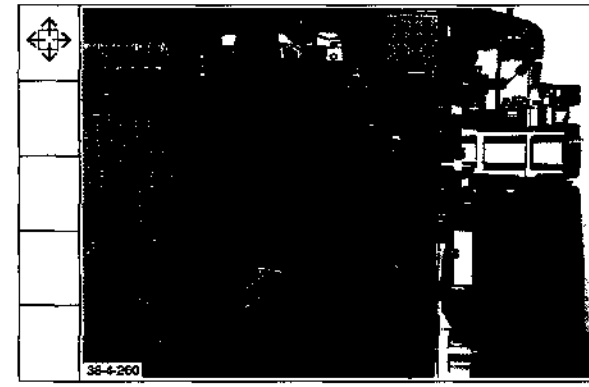

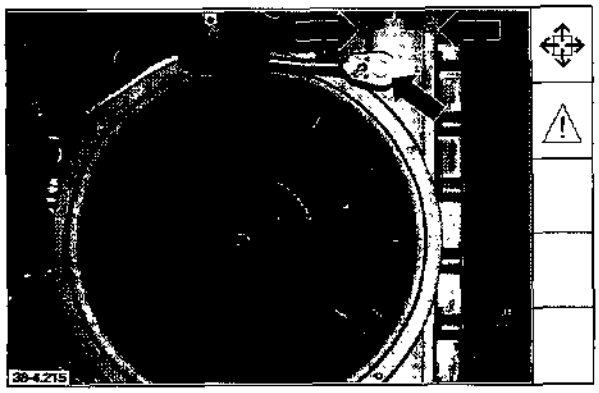

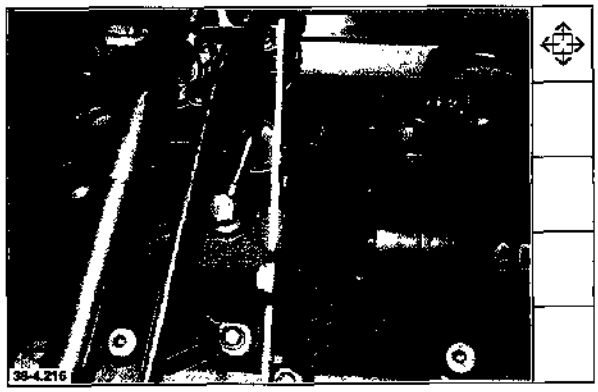

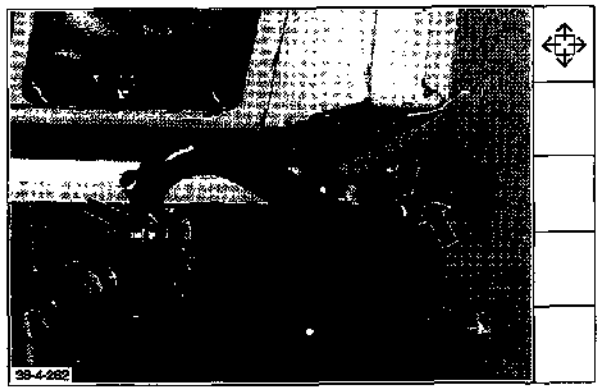

English

12. Remove radiator.

Note: Catch any escaping coolant that has remained in the radiator.

13. Remove retainer.

14. Remove cabling from coolant level switch.

15. Remove cables from starter and terminal stud.

Español

12. Desmontar el refrigerador de líquido.

Nota: Recoger los restos de refrigerante.

13. Desmontar los sujetadores.

14. Desmontar el cable del interruptor de nivel de refrigerante.

15. Desmontar el cable del arrancador y bulón de conexión.

nglish

6. Remove cover plate.

Español

16. Desmontar la chapa final.

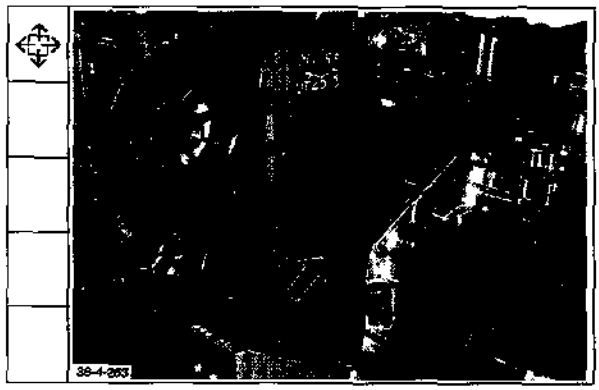

17. Remove oil pressure pipe.

17. Desmontar la tubería de presión de aceite.

18. Remove oil return pipe.

18. Desmontar el tubo de retorno de aceite.

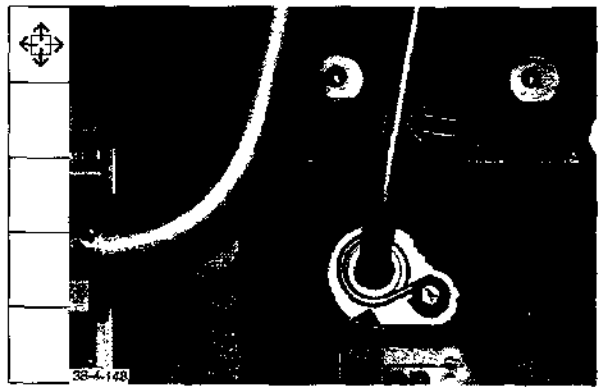

19. Remove cover plate.

19. Desmontar la chapa de recubrimiento.

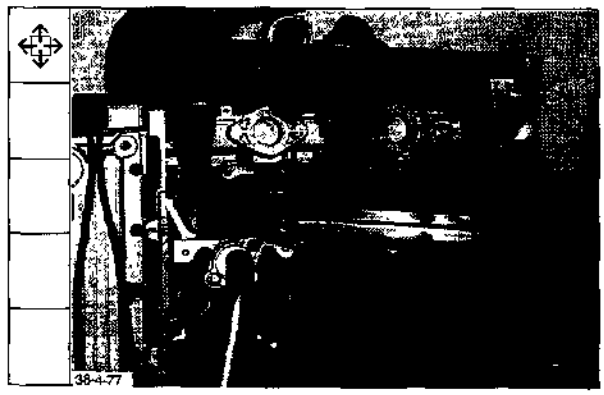

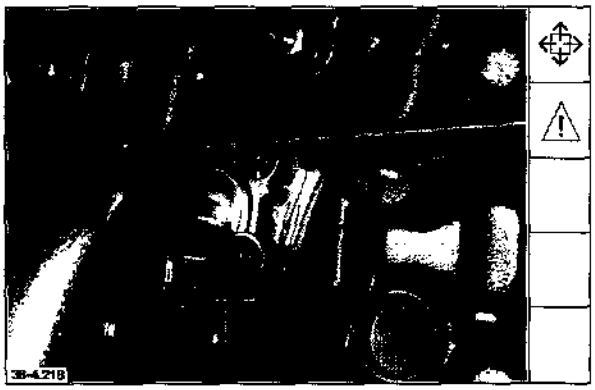

English

20. Unscrew bolts for flange.

Note: Pay attention to position of locking washer.

Español

20. Desenroscar los tornillos para la brida.

Nota: Prestar atención a la posición de la arandela de seguridad.

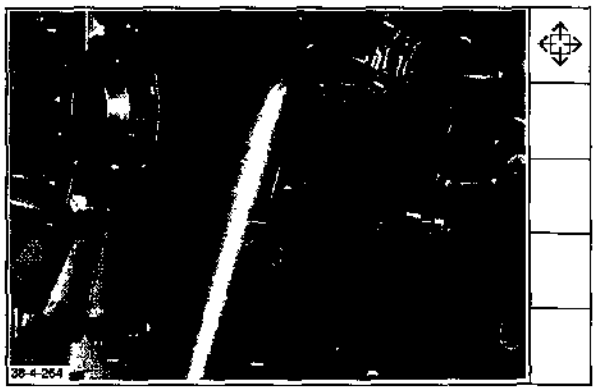

21. Remove coolant pipe.

21. Desmontar la tubería de refrigerante.

22. Remove coolant pipe.

22. Desmontar la tubería de refrigerante.

23. Take off clamping section.

23. Quitar el perfil de apriete.

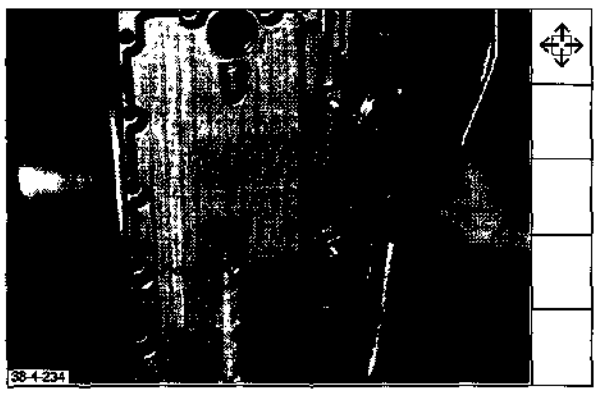

English

24. Remove coolant compensating pipe.

25. Remove complete blower.

Note: Catch any escaping coolant.

26. Detach cable connections.

27. Remove cable harness.

Español

24. Desmontar la tubería de compensación de refrigerante.

25. Desmontar por completo la turbina de refrigeración.

Nota: Recoger el refrigerante quesale.

26. Separar las conexiones de cables.

27. Desmontar el mazo de cables.

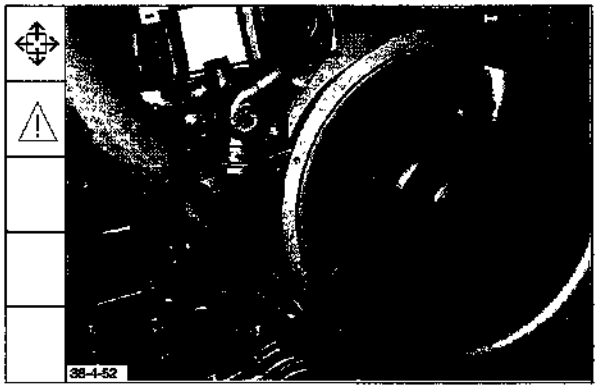

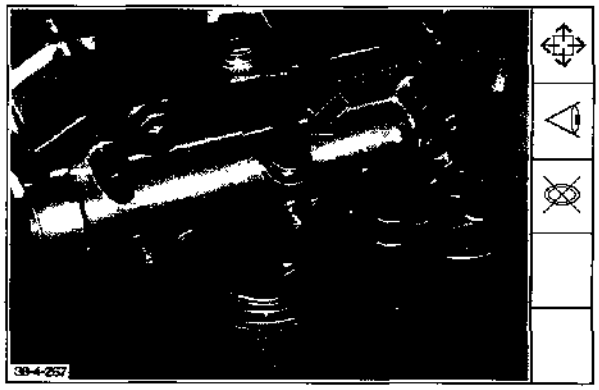

English

28. Remove coolant temperature sensor.

29. Remove oil pressure switch.

    Inspect all components, replace if damaged.

Español

28. Desmontar el transmisor de temperatura de refrigerante.

29. Desmontar el interruptor de presión de aceite.

    Examinar visualmente todos los componentes y sustituir los que estén dafe.

English

Refitting components:

**Oil pressure switch/
Coolant temperature sensor**

30. Fit oil pressure switch with new Cu seal and tighten with a torque of **18 ± 2 Nm.**

31. Fit coolant temperature sensor with new Cu seal and tighten with a *torque of* ***18 ± 2 Nm.***

Cable harness

32. Fit cable harness.

33. Tighten fastening bolts with a torque of **21 ± 2 Nm.**

Español

Montaje de los componentes:

**Interruptor de presión de aceite/
transmisor de temperatura de refrigerante**

30. Montar el interruptor de presión de aceite con un anillo de cobre nuevo y apretar con un par de **18 ± 2 Nm.**

31. Montar el transmisor de temperatura de refrigerante con un *anillo de cobre nuevo y apretar con* un par de **18 ± 2 Nm.**

Mazo de cables

32. Montar el mazo de cables.

33. Apretar los tornillos de fijación con un par de **21 ± 2 Nm.**

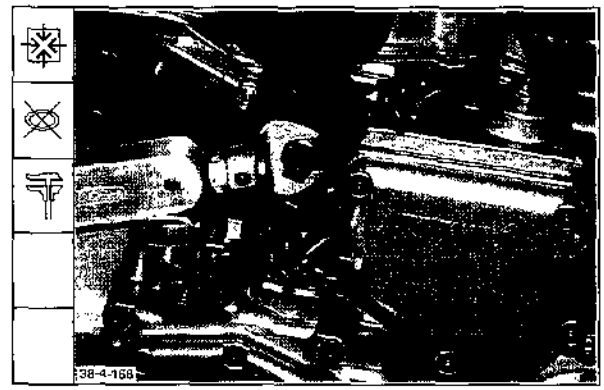

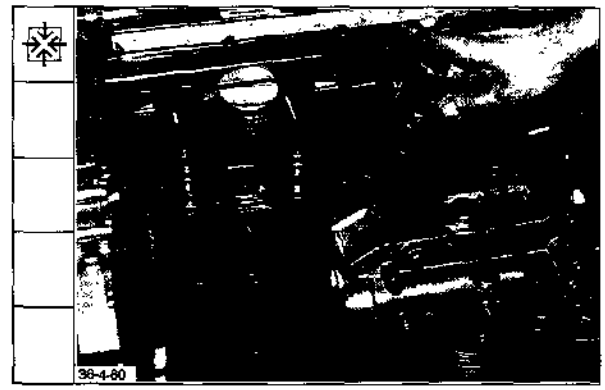

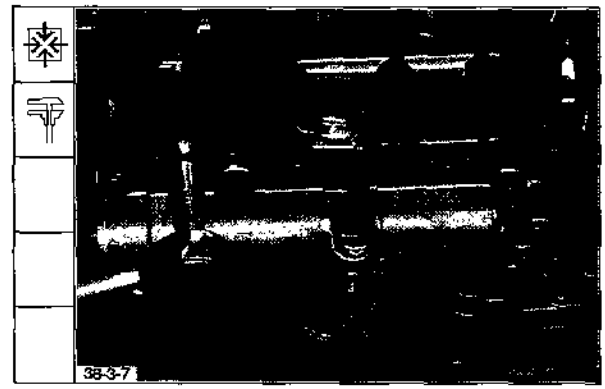

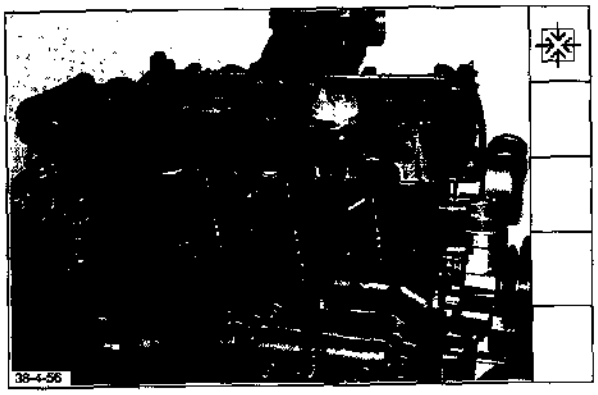

English

34. Lay cable harness and fasten with holding straps.

Español

34. Colocar el mazo de cables y fijarlo con cintas de sujeción.

Blower carrier

35. Fit blower carrier complete with V-belt stop and secure with a torque of **21 ± 2 Nm.**

Soporte de la turbina de refrigeración

35. Montar el soporte de la turbina de refrigeración completo con el tope de correa trapezoidal y apretar con un par de **21 ± 2 Nm.**

36. Fit coolant compensating pipe with new Cu seals.

36. Montar la tubería de compensación de refrigerante con anillos de cobre nuevos.

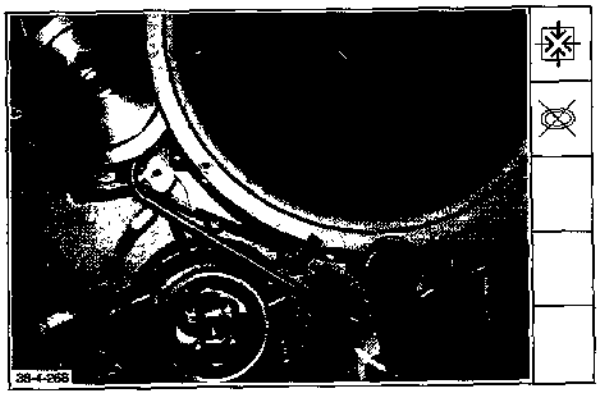

37. Slide on new O-seals.

Note: Apply lubricant **AP 25N** to O-seals.

37. Colocar anillos tóricos nuevos.

Nota: Aplicar lubricante de montaje **AP 25N** a los anillos tóricos.

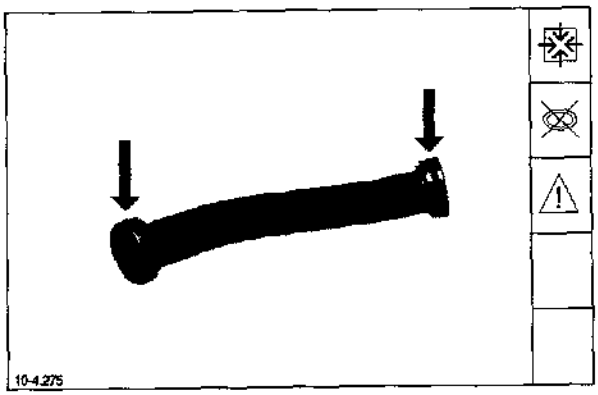

nglish

38. Insert coolant. Tighteen bolts with a torque of **28 Nm**.

Español

38. Colocar el tubo de refrigerante. Apretar los tornillos con un par de **28 Nm**.

Vibration damper/V-belt pulley

39. Fit V-belt pulley and vibration damper.

Amortiguador de vibraciones/polea acanalada

39. Montar la polea acanalada y el amortiguador de vibraciones.

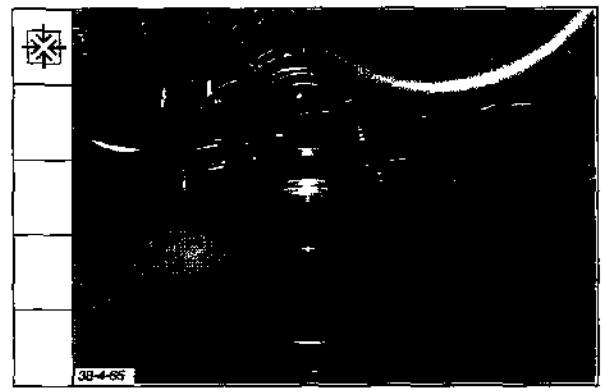

40. Fit V-belt pulley and retain against flywheel. Tighten bolts according to specification.

Initial tightening torque: __ **40-50 Nm**
1st tightening angle
bolts 60 mm long _____ **60°**
bolts 80 mm long _____ **60°**

2nd tightening angle
bolts 60 mm long _____ **30°**
bolts 80 mm long _____ **60°**

Note: Use Torx socket wrench E20. Bolts may be used max. **5x** if evidence can be furnished concerning their use.

41. Fit fuel pump loosely.

40. Montar la polea acanalada y retener en el volante. Apretar los tornillos según prescripción.

Apriete inicial: _____ **40-50 Nm**
1er ángulo de reapriete:
tornillos 60 mm long _____ **60°**
tornillos 80 mm long _____ **60°**

2° ángulo de reapriete:
tornillos 60 mm long _____ **30°**
tornillos 80 mm long _____ **60°**

Nota: Utilizar la llave de vaso Torx E20. Los tornillos son reutilizables hasta **5 veces**, siempre que esto se pueda comprobar.

41. Montar la bomba de combustible, dejándola todavía suelta.

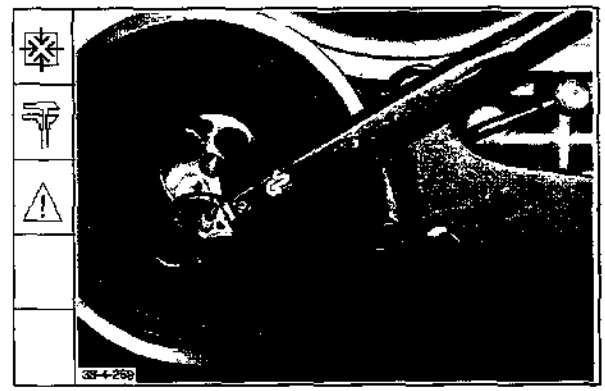

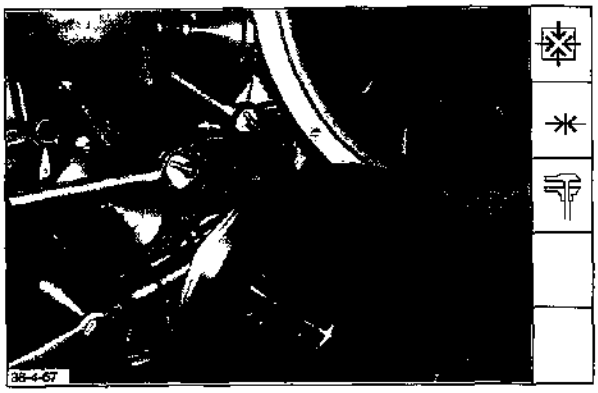

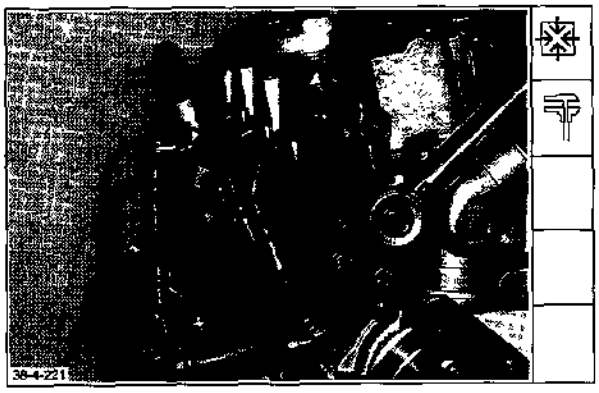

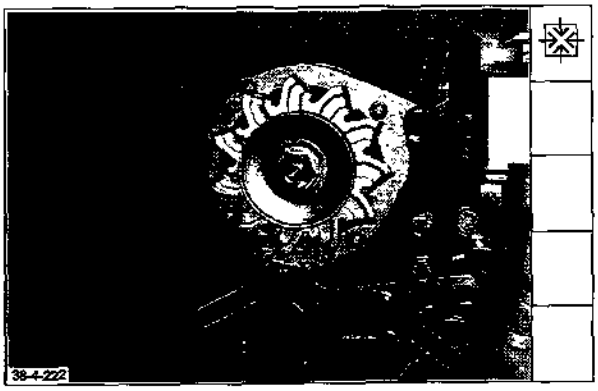

English

42. Position V-Belt in place and tension. Tighten bolts with a torque of **21 ± 2 Nm**.

43. Check V-belt tension with belt tension gauge.

    Belt back width 10 mm
    Initial assembly _____ **450 ± 50 N**
    Check value after 15 min.of operation under load _ **300 ± 50 N**
    When reusing belt ___ **300 ± 50 N**

    Belt back width 13 mm
    Initial assembly **550 ± 50 N**
    Check value after 15 min.of operation under load **400 ± 50 N**
    When reusing belt __ **400 ± 50 N**

44. Fit alternator bracket and secure within a torque of **60 Nm**.

45. Mount alternator. Start bolts.

Español

42. Colocar la correa trapezoidal y tensarla. Apretar los tornillos de fijación con un par de **21 ± 2 Nm**.

43. Comprobar la tensión de la correa utilizando un verificador de tensió

    Ancho de correa 10 mm
    Primer montaje _____ **450 ± 50**
    Control tras una marcha
    15 min. bajo carga ___ **300 ± 50**
    Para reutilización ____ **300 ± 50**

    Ancho de correa 13 mm
    Primer montaje _____ **550 ± 50 N**
    Control tras una marcha
    15 min. bajo carga ___ **400 ± 50 N**
    Para reutilización ____ **400 ± 50 N**

44. Montar la consola del alternator y apretar con un par de **60 Nm**.

45. Montar el alternador. Enroscar los tornillos con la mano hasta que se apoyen con su cabeza.

English

46. *Position V-belt in place and* tension. Tighten bolts with a torque of **31 Nm**. Turn belt drive 2-3 revolutions.

47. Check V-belt tension with belt tension gauge.

    Initial assembly _____ **450 ± 50 N**
    Check value after 15 min.of operation under load _ **300 ± 50 N**
    When reusing belt ___ **300 ± 50 N**

48. Fit air guide ring. Tighten bolts and nuts with a torque of **11 Nm**.

49. Fit tension pulley together with bracket and secure with a torque of **29 Nm**.

Español

46. *Colocar la correa trapezoidal y* tensarla. Apretar los tornillos con un par de **31 Nm**. Darle a la polea acanalada 2 a 3 vueltas.

47. Comprobar la tensión de la correa utilizando un verificador de tensión.

    Premer montaje _____ **450 ± 50 N**
    Controle tras una marcha de 15 min. bajo carga _ **300 ± 50 N**
    para reutilización ____ **300 ± 50 N**

48. Montar el aro guía de aire. Apretar los tornillos y tuercas con un par de **11 Nm**.

49. Montar la polea tensora con consola y apretar con un par de **29 Nm**.

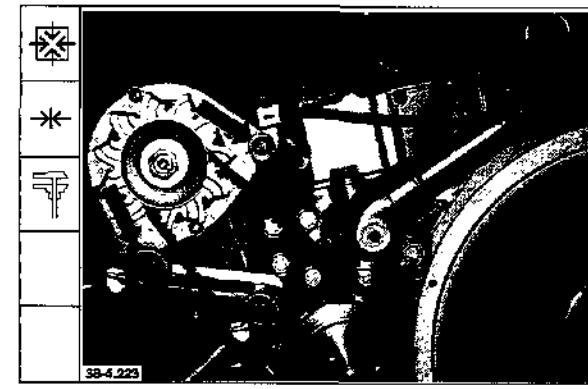

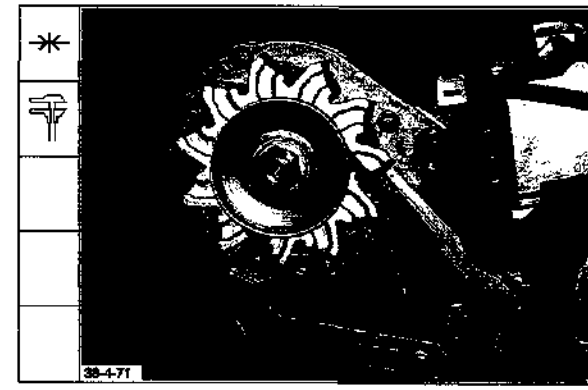

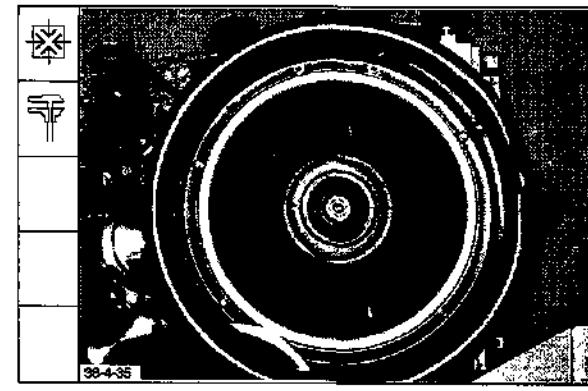

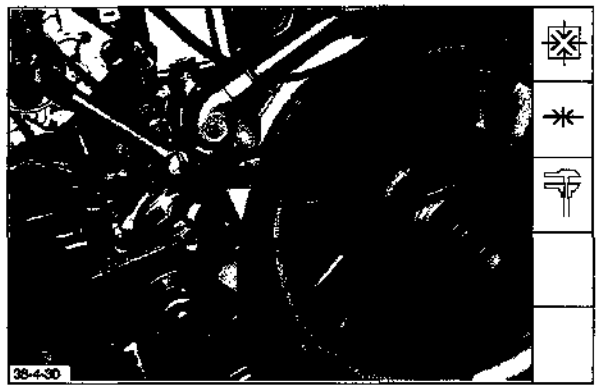

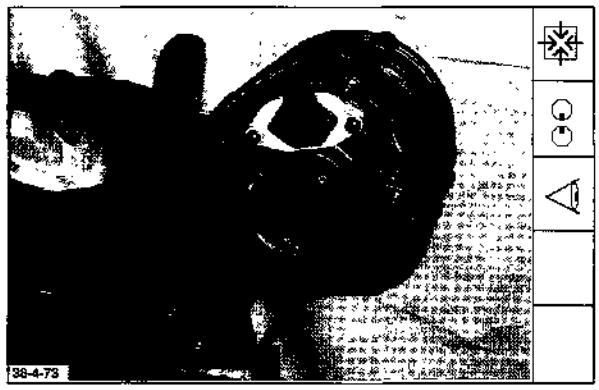

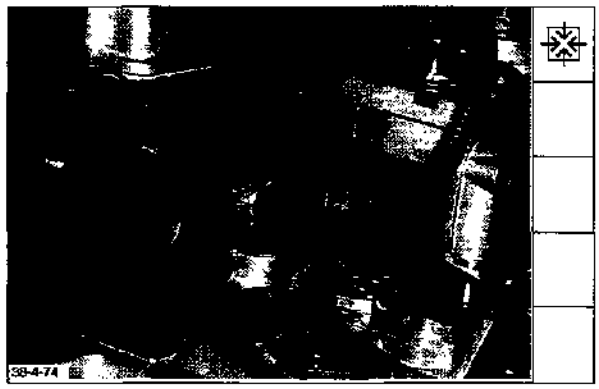

English

49.1 Position V-belt in place and tension. Tighten bolts with a torque of **29 Nm**.

50. Check V-belt tension with belt tension gauge.

Initial assembly ____ **450 ± 50 N**
Check value after 15 min.of operation under load _ **300 ± 50 N**
When reusing belt __ **300 ± 50 N**

51. Fit cable.

52. Fit cable for coolant temperature sensor.

Español

49.1 Colocar la correa trapezoidal y tensarla. Apretar los tornillos con un par de **29 Nm**.

50. Comprobar la tensión de la correa utilizando un verificador de tensión.

Primer montaje _____ **450 ± 50 N**
Control tras 15 minutos de marcha bajo carga _ **300 ± 50 N**
Para reutilización ____ **300 ± 50 N**

51. Montar el cable.

52. Montar el cable para el transmisor de temperatura de refrigerante.

English

Coolant pipe

53. Slide on new O-seals.

Note: Apply lubricant **AP 25 N** to O-seals

54. Preassemle coolant pipe with flange.

55. Apply sealing compound **DEUTZ DW 67** to flange sealing surface. Fit coolant pipe.

56. Tighten bolts with a torque of **28 Nm**.

Note: Pay attention to correct position of locking washer.

Español

Tubo de refrigerante

53. Colocar anillos tóricos nuevos.

Nota: Aplicar deslizante de montaje **AP 25 N** a los anillos tóricos.

54. Preensamblar el tubo de refrigerante con la brida.

55. Aplicar a la superficie de cierre de la brida pasta sellante **DEUTZ DW 67**. Montar el tubo de refrigerante.

56. Apretar los tornillos con un par de **28 Nm**.

Nota: Pretar atención a la correcta posición de la arandela de seguridad.

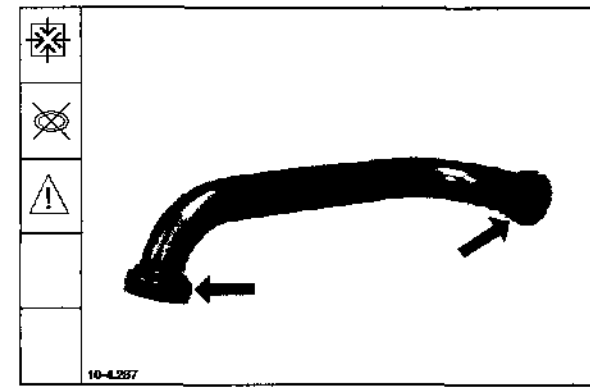

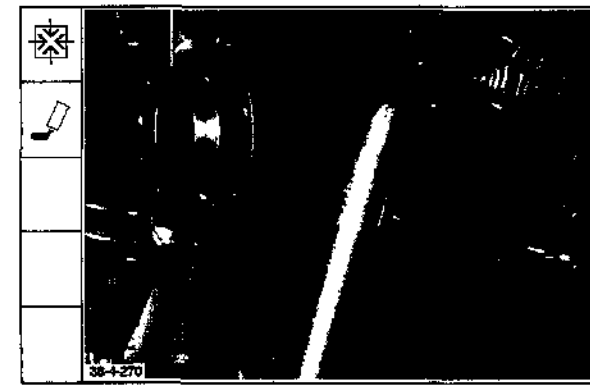

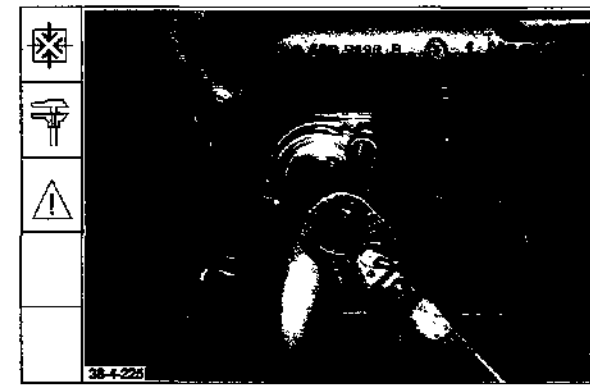

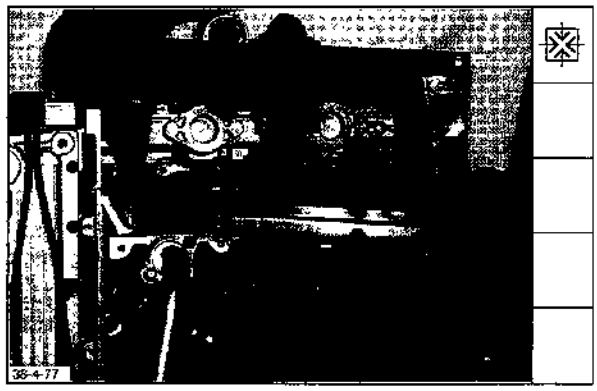

English

Panelling

57. Fit cover plate.

Español

Chapas

57. Montar la chapa de recubrimiento.

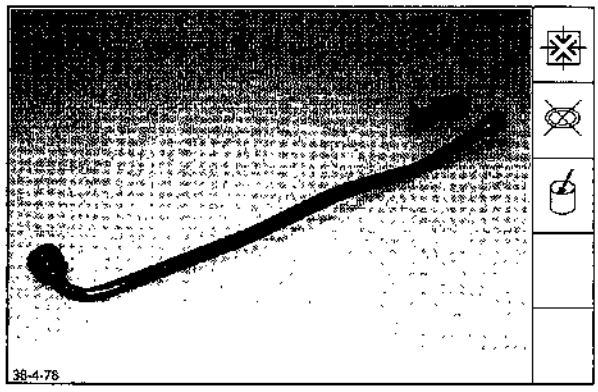

Oil return pipe/pressure oil pipe

58. Slide on new O-seals and grease.

Tubo de retorno de aceite/tubería de aceite a presión

58. Colocar anillos tóricos nuevos y engrasarlos con grasa.

59. Tighten screw plug with new Cu seal with a torque of **40 ± 2 Nm**.

59. Apretar los enchufes roscados, provistos de un anillo de junta de cobre nuevo, con un par de **40 ± 2 Nm**.

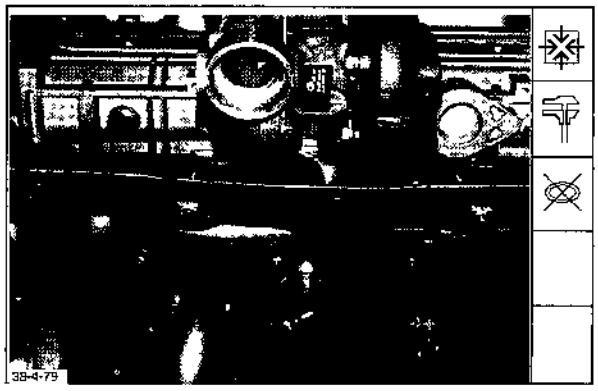

60. Fit oil return pipe and retainer. Tighten bolt with a torque of **22 ± 2 Nm**.

60. Montar la tubería de retorno de aceite y los sujetadores. Apretar los tornillos de fijación con par de **22 ± 2 Nm**.

nglish

61. Fit pressure oil pipe. Tighten banjo bolts with new Cu seals and with a torque of
item 1 **29 ± 3 Nm**
item 2 **39 ± 4 Nm**.

Español

61. Montar la tubería de aceite a presión:
Enroscar los tornillos racor, provistos de anillos de junta de cobre nuevos, y apretarlos con un par de
29 ± 3 Nm = pos. 1
39 ± 4 Nm = pos. 2.

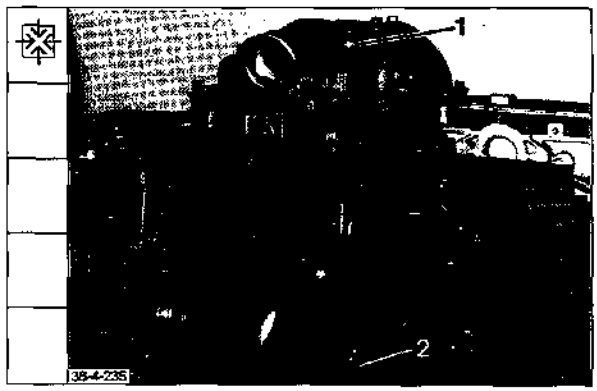

62. Fit cover plate.

62. Montar la chapa final.

63. Fit cable to starter and terminal stud.

Tightening specifications:
Hex. nut on terminal stud
35 ± 4 Nm
Hex. nut on starter (terminal 30)
28 ± 2 Nm

63. Unir el cable al arrancador y bulón de conexión.

Prescripción de apriete:
Tuerca hexagonal en el bulón de conexión **35 ± 4 Nm**
Tuerca hexagonal en el arrancador (borne 30) **28 ± 2 Nm.**

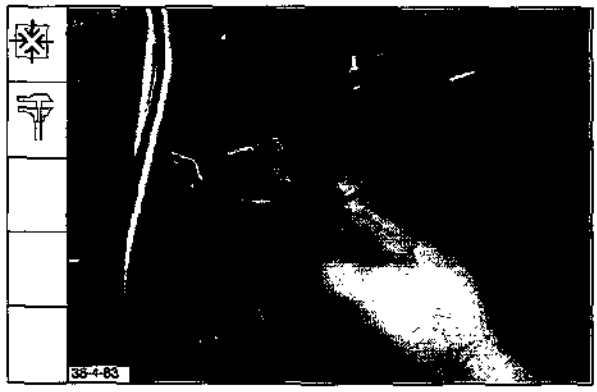

64. Introduce cable harness through cover plate. Fit rubber grommet.

64. Hacer pasar el mazo de cables a través de la chapa de recubrimiento. Montar el pasacables.

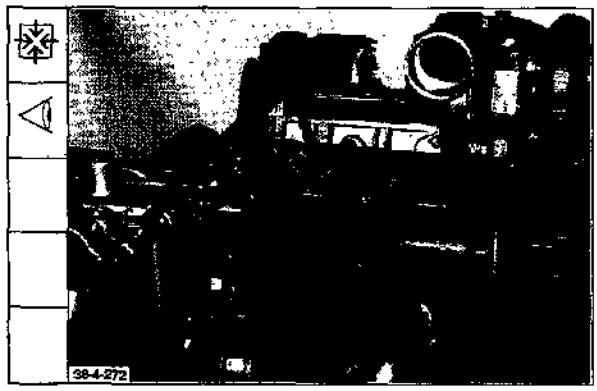

English

65. Install level switch with new rubber sleeve. Tighten bolt with a torque of **28 Nm**.

66. Fit cabling with fixing strap and holder. Tighten bolts with a torque of **9 Nm**.

67. Fit clamping section.

Radiator

68. Insert new O-seals for radiator.

Español

65. Instalar el interruptor de nivel co un manguito de goma nuevo. Apretar el tornillo con un par de **28 Nm**.

66. Montar los cables con atacables sujetadores. Apretar los tornillos con un par **9 Nm**.

67. Colocar anillos tóricos nuevos p el refrigerador de líquido.

Refrigerador de líquido

68. Colocar anillos tóricos nuevos p el refrigerador de líquido.

English

69. Fit retainer for radiator.
Tighten bolts with a torque of **21 Nm**.

70. Mount radiator. Tighten bolts with a torque of **9 ± 1 Nm**.

71. Fit cover plate.

72. Fit cover plate.

Español

69. Montar los soportes para el refrigerador.
Apretar los tornillos con un par de **21 Nm**.

70. Montar el refrigerador. Apretar los tornillos de fijación con un par de **9 ± 1 Nm**.

71. Montar la chapa de recubrimiento.

72. Montar la chapa de recubrimiento.

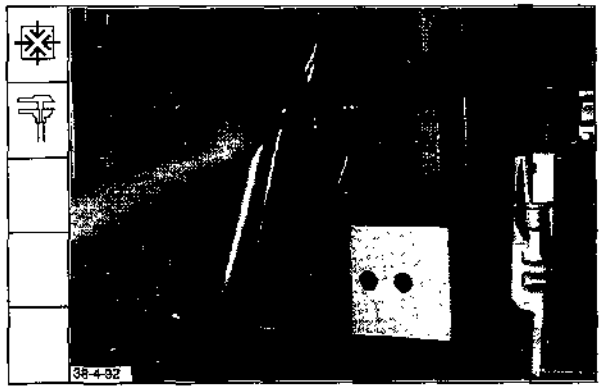

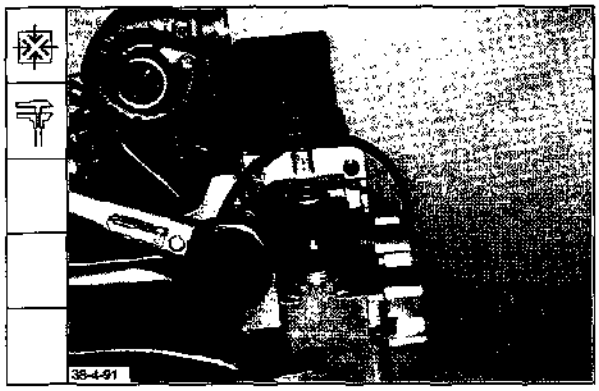

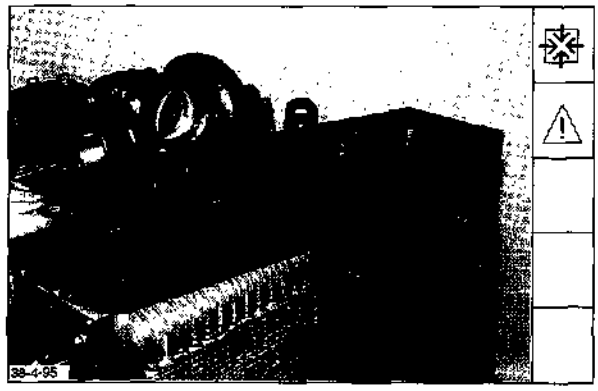

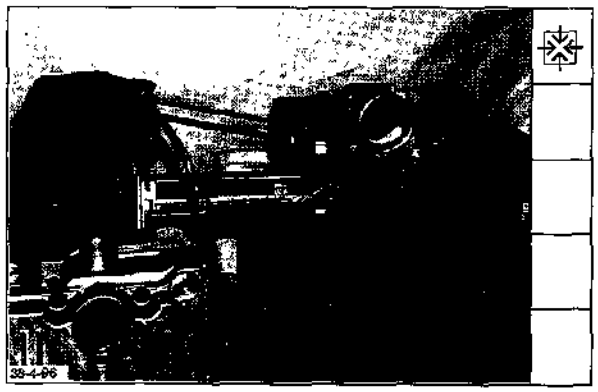

English

73. Fit cover plate.

Note: Do not tighten bolts yet.

74. Fit breather pipe with new Cu seals. Tighten retainer together with cover plate.

75. Fit inspection hole cover plate.

Español

73. Montar la chapa de recubrimiento.

Nota: Los tornillos todavia no deben appretarse.

74. Montar la tubería de ventilación con anillos de cobre nuevos. Apretar el sujetador junto con la chapa de recubrimiento.

75. Montar la chapa de la abuerta de inspección.

nglish

Replacing shaft seals on complete engine

Special tools required:

Extractor for
shaft seals _____ 142 710
Assembly tool, rear
BFM 1012 _____ 142 890
BFM 1013 _____ 142 910
Assembly tool, front
BFM 1012 _____ 142 900
BFM 1013 _____ 142 920

- Timing chest cover flywheel end -

Flywheel has been removed.

1. *Press extractor into shaft seal.*

2. Lift shaft seal with extractor out of timing chest cover.

3. Fit guide sleeve.

Español

Cambio de los retenes en el motor *completo*

Herramientas especiales:

Dispositivo de extracción
para retenes _____ 142 710
Dispositivo de montaje, atrás
BFM 1012 _____ 142 890
BFM 1013 _____ 142 910
Dispositivo de montaje, delante
BFM 1012 _____ 142 900
BFM 1013 _____ 142 920

- Tapa del cárter de la distribución, *lado de volante* -

El volante está desmontado.

1. *Introducir a presión el gancho* extractor en el retén.

2. Haciendo palanquilla con el dispositivo de extracción, sacar el retén de su alojamiento en la tapa del cárter de la distribución.

3. Montar la consola.

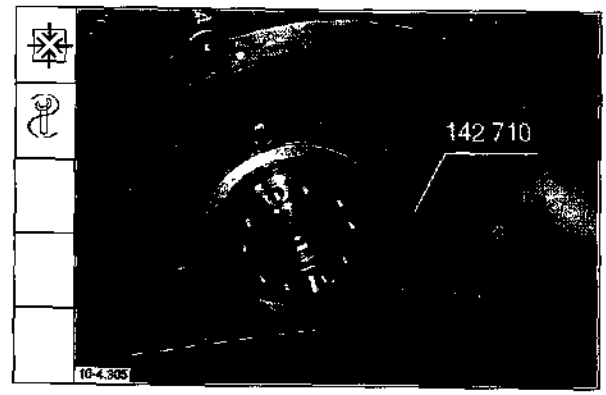

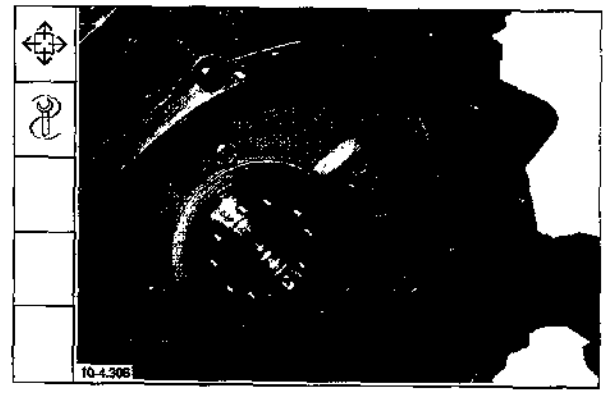

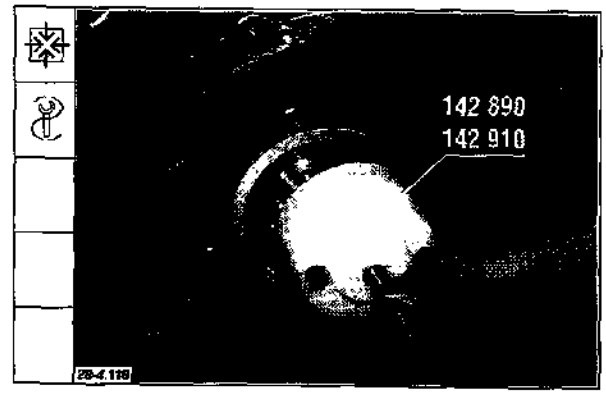

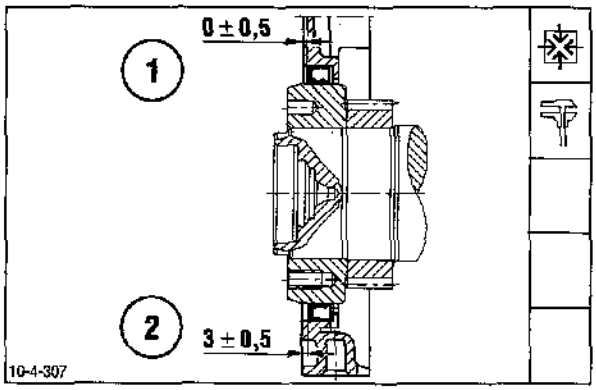

English

4. Pay attention to the installation depth.

   Item 1 installation depth initial assembly
   Item 2 maximum installation depth

Español

4. Observar la profundidad de montaje.

   Pos. 1 Profundidad de montaje primer montaje
   Pos. 1 Profundidad máxima de montaje

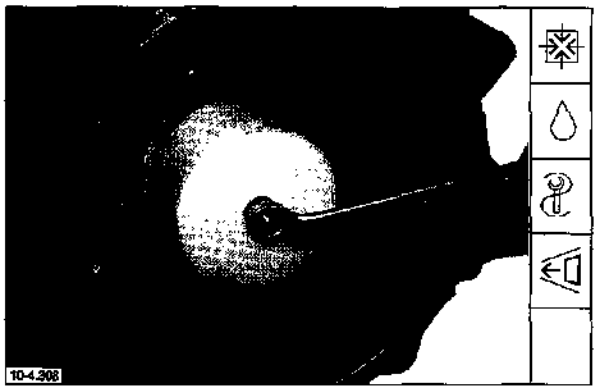

4.1 Oil sealing lips. Fit shaft seal with assembly tool. Sealing lip faces crankshaft.

4.1 Aceitar los labios obturantes. Montar el retén mediante el dispositivo de montaje a presión. El labio indica hacia el cigüeñal.

- Front cover -

V-belt pulley has been removed.

1. Press extractor into shaft seal.

- Tapa delantera -

La polea acanalada está desmontada.

1. Introducir a presión el gancho extractor en el retén.

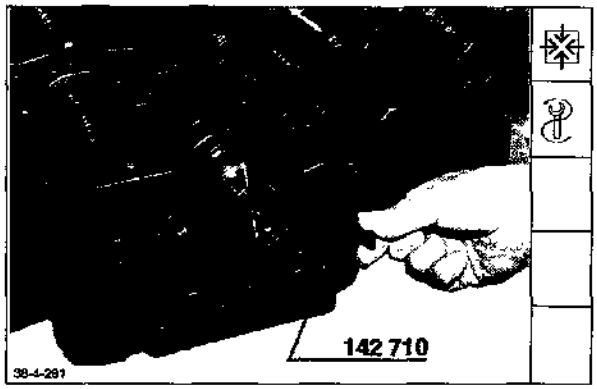

2. Lift shaft seal with extractor out of front cover.

2. Haciendo palanquilla con el dispositivo extractor, sacar el retén de la tapa delantera.

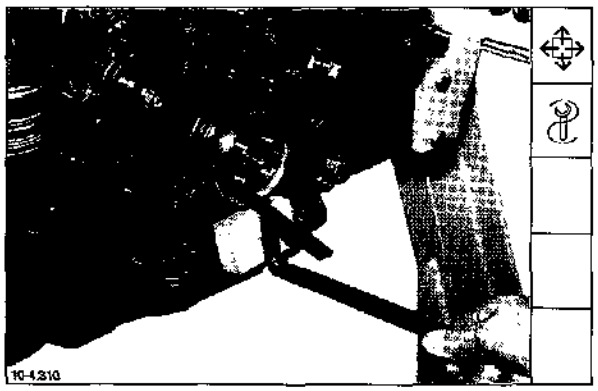

ıglish

Fit guide sleeve.

. Pay attention to the installation depth.

Item 1 installation depth initial assembly
Item 2 maximum installation depth

ı.1 Oil sealing lips. Fit shaft seal with assembly tool. Sealing lip faces crankshaft.

Español

3. Montar el manguito de guía.

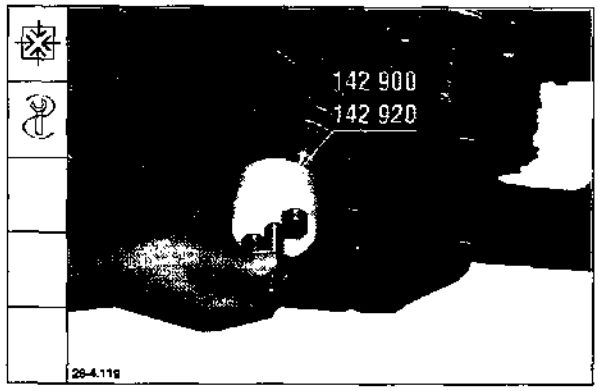

4. Observar la profundidad de montaje.

Pos. 1 Profundidad de montaje primer montaje
Pos. 1 Profundidad máxima de montaje

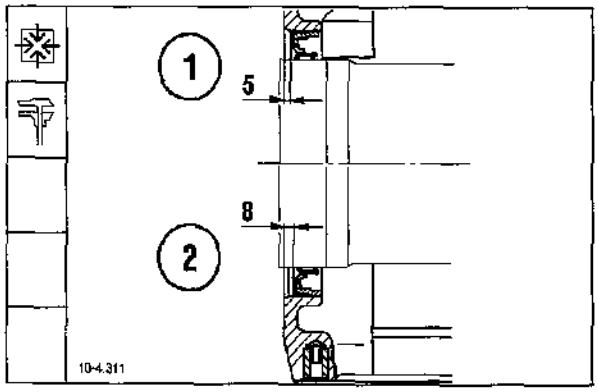

4.1 Aceitar los labios de obturantes. *Montar el retén mediante el* dispositivo correspondiente. El labio indica hacia el cigüeñal.

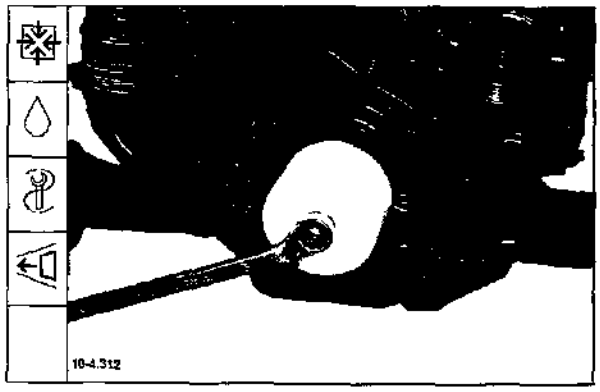

English

Removing and refitting air compressor

1. Remove air compressor and oil pressure pipes.

Note: Inspect all single parts and replace if necessary.

2. Fit new O-seal.

3. Fit oil pressure pipe together with new Cu seals prior to mounting air compressor.

Note: Do not yet tighten banjo bolt.

4. Mount air compressor.
Insert bolts with locking compound **Deutz DW 72** and tighten with a torque of **61 ±6 Nm**.

Español

Desmontaje y remontaje del compresor de aire.

1. Desmontar el compresor de aire y las tuberías de presión de aceite.

Nota: Examinar visualmente todas las piezas y reemplazarlas según necesidad.

2. Montar un aro tórico nuevo.

3. Montar la tubería de presión de aceite con juntas de cobre nuevas antes de adosar el compresor.

Nota: El tornillo racor todavía no debe apretarse.

4. Montar el compresor de aire.
Meter los tornillos con sellante **DEUTZ DW 72** y apretar con un par de **61 ±6 Nm**.

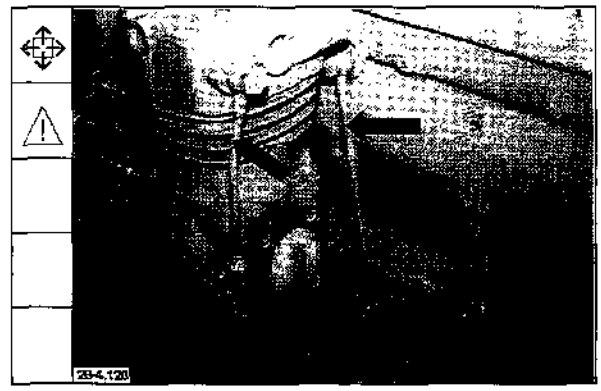

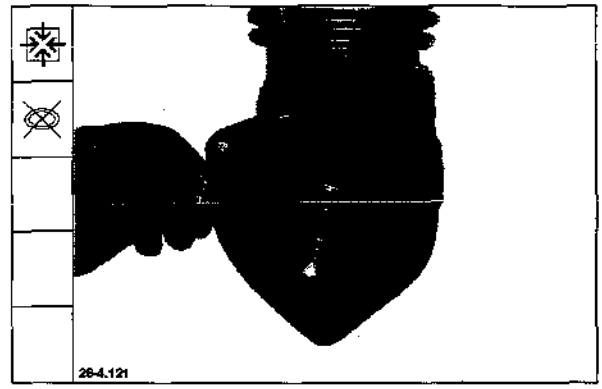

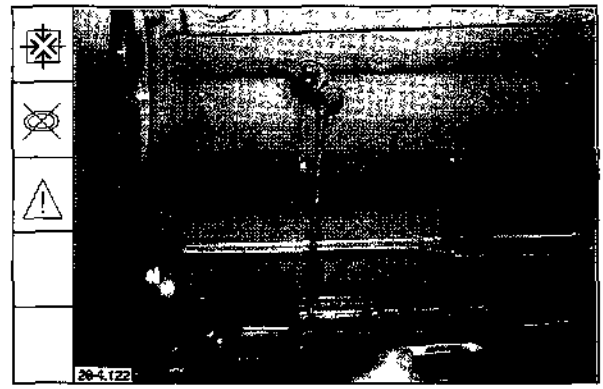

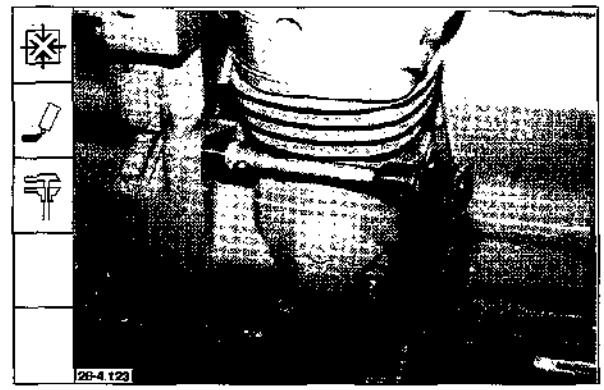

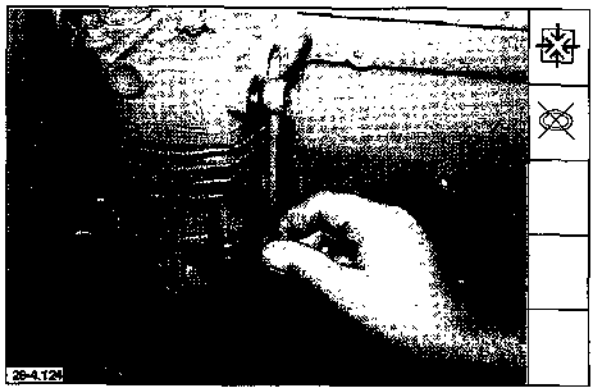

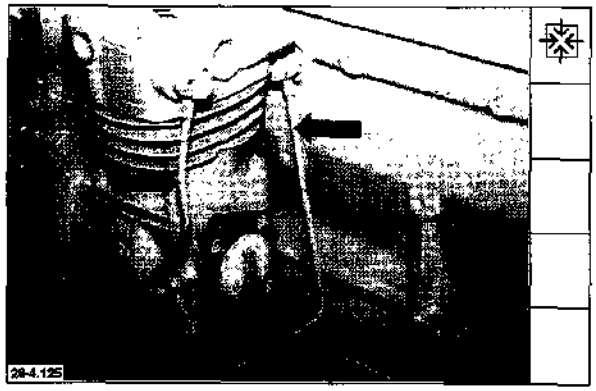

English

5. Fit 2nd oil pressure pipe with new Cu seals.

6. Secure oil pressure pipes on crankcase and air compressor.

Español

5. Montar la segunda tubería de presión de aceite con juntas de cobre nuevas.

6. Apretar la tuberías de presión de aceite en el bloque motor y en el compresor de aire

English

Removing and refitting power steering pump

1. Fit power steering pump. Take off driver disc.

Note: Inspect all single parts and replace if necesarry.

2. Fit driver disc.

3. Fit new O-seal and apply dehydated lubricant.

4. Fit power steering pump and make sure that drivers engage in driver disc.

Español

Desmontaje y remontaje de la servobomba de dirección.

1. Desmontar la servobomba de dirección. Retirar el disco arrastrador.

Nota: Examinar visualmente todas las piezas y reemplazarlas según necesidad.

2. Instalar el disco arrastrador.

3. Montar un anillo tórico nuevo y untarlo con lubricante exento de agua.

4. Montar la servobomba de dirección, prestando anteción a que los arrastradores entren en el disco arrastrador.

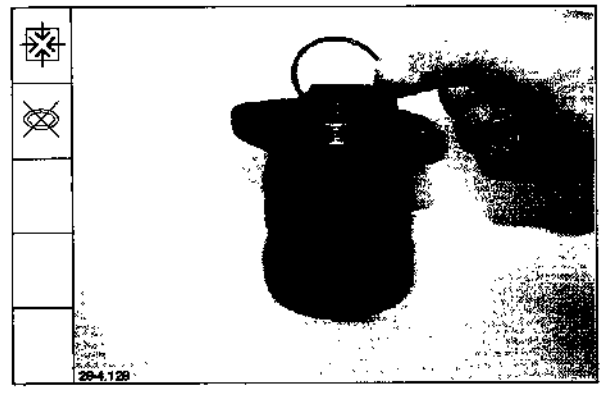

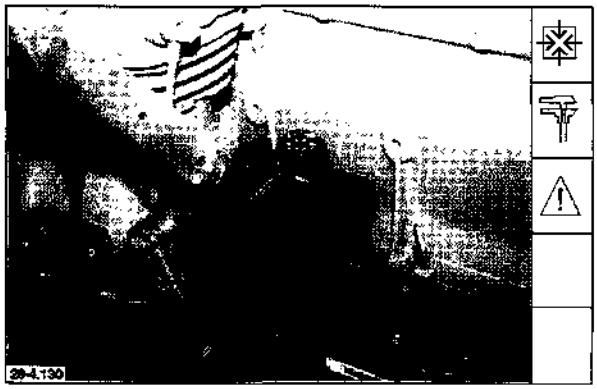

English

5. Tighten bolts with a torque of **43.5 ± 4 Nm.**

Note: Watch out for special washers.

Español

5. Apretar los tornillos con un par de **43,5 ± 4 Nm.**

Nota: Tener en cuenta las arandelas especiales.

English

Removing and refitting hydraulic pump

1. Unscrew bolts from hydraulic pump.

2. Unscrew bolts from guide flange. Remove hydraulic pump complete with *guide flange*.

Note: Inspect all single parts and replace if necessary.

3. Mount preassembled hydraulic pump together with guide flange. Tighten guide flange bolts with a torque of **21 ± 2 Nm.**

Note: Apply dehydrated lubricant to seal/receiving bore.

4. Move gasket into installation position. Tighten hydraulic pump bolts with a torque of **50 ± 10 Nm.**

Español

Desmontaje y remontaje de la bomba hidráulica.

1. Desenroscar los tornillos de la bomba hidráulica.

2. Desenroscar los tornillos de la brida de guía. *Retirar la bomba hidráulica* completamente con la brida de guía.

Nota: Examinar visualmente todas las piezas y reemplazarlas según necesidad.

3. Montar la bomba hidráulica premontada, con la brida de guía. Apretar los tornillos de la brida de guía con un par de **21 ± 2 Nm.**

Nota: Aplicar lubricante exento de *agua al anillo tórico/* alojamiento.

4. Colocar la junta en su posición de montaje. Apretar los tornillos de la bomba hidráulica con un par de **50 ± 10 Nm.**

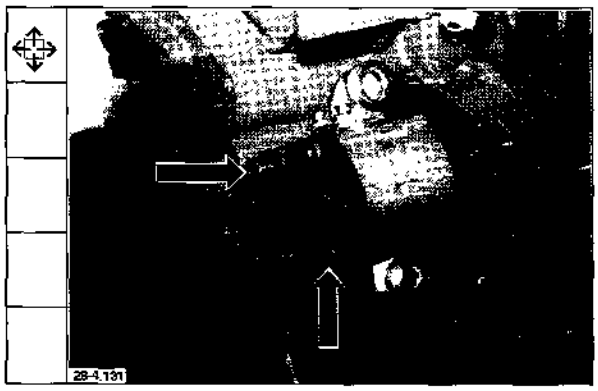

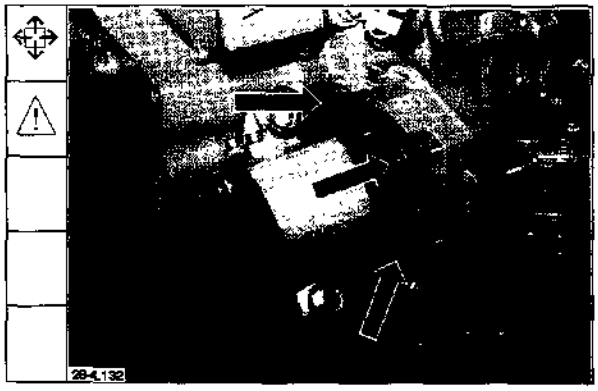

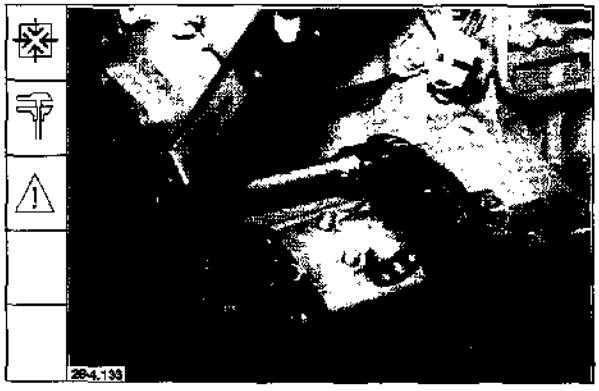

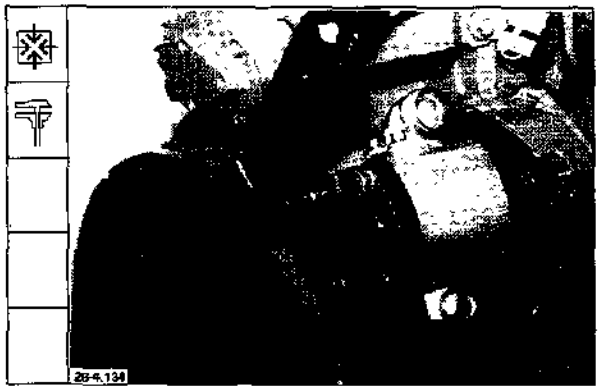

English

Removing and refitting hydraulic pump together with bracket

1. Remove oil pressure pipe

2. Remove hydraulic pump.

3. Remove bracket.

Note: Inspect all single parts and replace if necessary. Renew gaskets. Check bore in hollow shaft and drive shaft for free passage.

4. Fit preassembled bracket.

Note: Lightly oil O-seal/bore.

Español

Desmontaje y remontaje de la bomba hidráulica y consola

1. Desmontar la tubería de presión de aceite.

2. Desmontar la bomba hidráulica.

3. Desmontar la consola.

Nota: Inspeccionar todas las piezas visualmente, sustituyéndolas en caso necesario. Renovar las juntas. Comprobar los taladros en el eje hueco y eje arrastrador para ver si están despejados.

4. Montar la consola premontada.

Nota: Untar con un poco de aceite el *anillo tórico/alojamiento.*

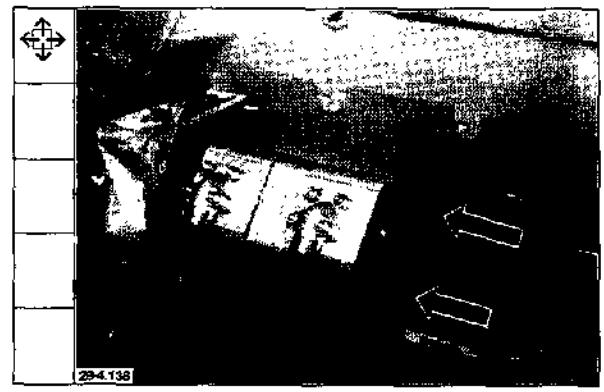

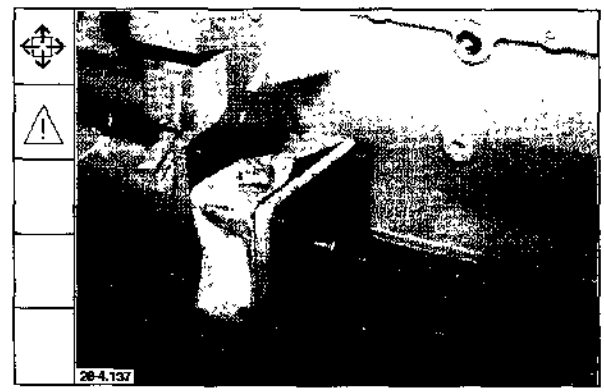

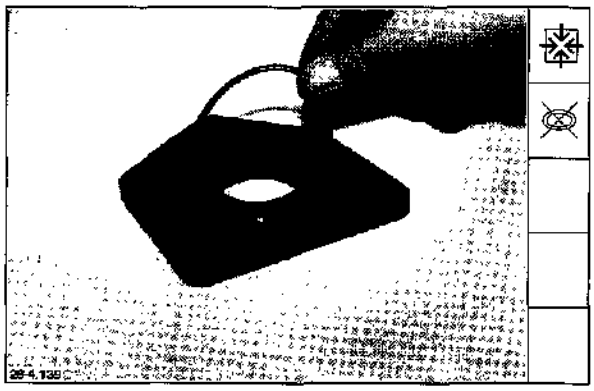

English

5. Position new O-seal on fastening flange.

Español

5. Colocar un anillo tórico nuevo sobre la brida de fijación.

6. Fit fastening flange. Tighten bolts according to specification.

   Bolts M 8 = **21 ± 2 Nm**
   Bolts M 10= **40.5 ± 4 Nm**

Note: Bolts M10 are micro-encapsulated. Their re-use is not permissible.

6. Montar la brida de fijación. Apretar los tornillos según prescripción.
   Tornillos M8 = **21 ± 2 Nm**
   Tornillos M10 = **40,5 ± 4 Nm**

Nota: Los tornillos M10 tienen un recubrimiento sellante. Es inadmisible volver a utilizarlos.

7. Insert guide bush.

Note: Watch out for circlip in the middle of guide bush.

7. Introducir el manguito de guía.

Nota: Prestar atención al anillo de retención en medio del manguito de guía.

8. Position new gasket. Mount hydraulic pump.

8. Colocar una junta nueva. Montar la bomba hidráulica.

English

9. Tighten bolts with a torque of **50 ± 10 Nm.**

10. Fit oil pressure pipe with new Cu seals.

Español

9. Apretar los tornillos de fijación con un par de **50 ± 10 Nm.**

10. Montar la tubería de presión de aceite con juntas de cobre nuevas.

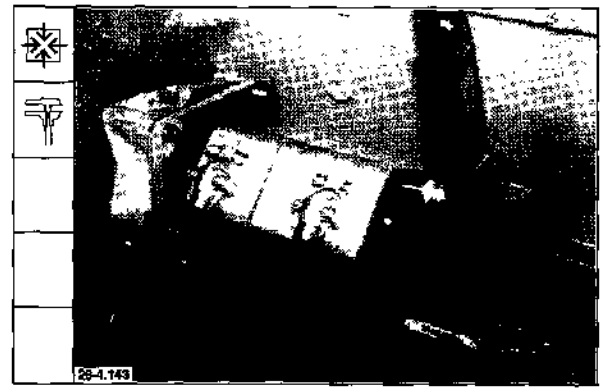

English

Replacing injection pump in case of service

This repair method only refers to the replacement of injection pumps. If other components are to be replaced as well, e.g. roller tappets, governor, etc., proceed according to chapter 4 „Installing injection pump".

Special tool required:

Press-on device for
control rod _____ 100 830
Extracting device _____ 150 800
Extractor for injector _____ 110 030

1. Remove crankcase breather and cylinder head cover.

2. Pull off cable plug.
   Remove shutdown solenoid or screw plug.

3. Press control rod with shutdown lever into stop position. Insert press-on device and screw on.

Español

Cambio de las bombas de inyección en el caso de servicio

Este método de reparación sólo está pensado para el cambio de las bombas de inyección. Si adicionalmente han de cambiarse otras piezas, como el empujador de rodillo, regulador, etc., se procederá como se indica en el capítulo 4 „Montaje de bombas de inyección".

Herramientas especiales:

Dispositivo de presión para
la cremallera _____ 100 830
Dispositivo de extracción ___ 150 800
Extractor para inyector ____ 110 030

1. Desmontar la ventilación del cárter y la tapa de culata.

2. Sacar el enchufe de cable.
   Desmontar el solenoide de parada o el tapón de cierre.

3. Presionar la barra cremallera mediante la palanca de parada en posición de parada. Introducir el dispositivo de presión y atornillarlo.

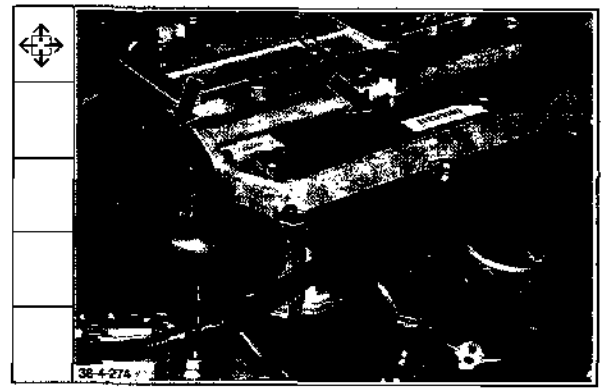

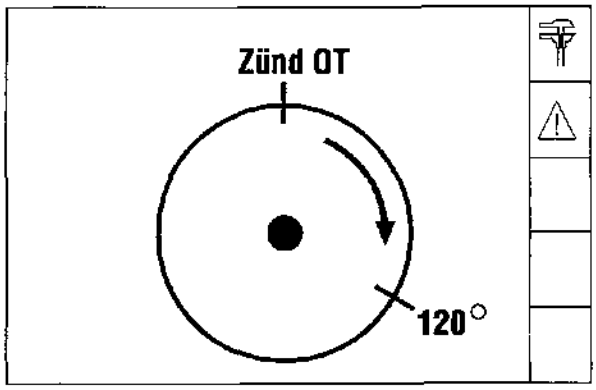

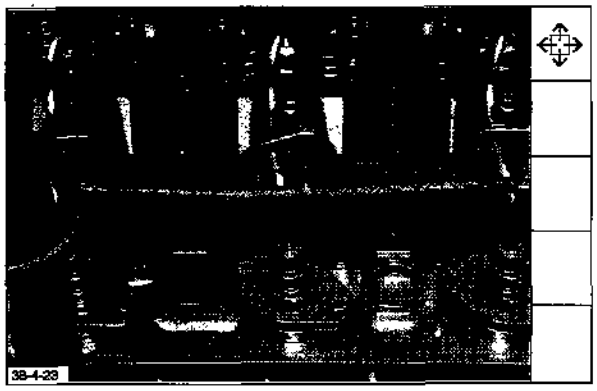

English

4. Press control rod with knurled-head setscrew into stop position.

Note: Tighten knurled-head setscrew by hand.

5. Move cylinder of injection pump to be removed to firing TDC.
Turn crankshaft about **120°** against direction of engine rotation.

Note: Flywheel is faced on the illustration at the left.

6. Remove injection line and injection pump.

7. Carefully take out shim using bar magnet.

Note: Determine new shim, see page 1.00.15 for BFM 1012, page 1.00.17 for BFM 1013.

Español

4. Presionar la cremallera en posición de parada con ayuda del tornillo de cabeza moleteada, de bloqueo.

Nota: Apretar con la mano el tornillo de cabeza moleteada, de bloqueo.

5. Poner el cilindro que corresponda a la bomba de inyección a desmontar, en el PMS de compresión.
Girar el cigüeñal aprox. **120°** en sentido opuesto al de giro normal del motor.

Nota: Representado con dirección de la mirada al volante.

6. Desmontar la tubería de inyección y la bomba de inyección.

7. Retirar la arandela de reglaje cuidadosamente mediante el imán de barra.

Nota: Determinar la arandela de reglaje nueva:
para BFM 1012 ver pág. 1.00.15
para BFM 1013 ver pág. 1.00.17

English

8. Position new shim previously determined on roller tappet.

Note: See page 4.00.37 items 78 - 84 for installation of injection pump.

9. Remove injector.

Note: If jammed, use extracting device No. 150 800 together with extractor No. 110 030.

See page 4.00.48 from items 114 for fitting injector and injection line.

10. Turn back knurled-head setscrew. Remove press-on device.

Note: Check whether control rod moves easily from stop to start position. For this purpose actuate shutdown lever of governor.

11. Press control rod with shutdown lever into stop position. Fit shutdown solenoid with new O-seal.

Note: Lightly oil O-seal.

Español

8. Colocar la arandela de reglaje determinada sobre el empujador de rodillo.

Nota: Para el montaje de la bomba de inyección, ver la pág. 4.00.37 a partir del punto 78 - 84.

9. Desmontar el inyector.

Nota: Si está fijo, utilizar el dispositivo de extracción No. 150 800 con extractor No. 110 030.

Montar el inyector y la tubería de inyección, ver pág. 4.00.48, a partir del punto 114.

10. Girar hacia atrás el tornillo de cabeza moleteada, de bloqueo. Desmontar el dispositivo de presión.

Nota: Comprobar la facilidad de movimiento de la cremallera entre la posición de parada y la de arranque, lo que se hace accionando la palanca de parada del regulador.

11. Sirviéndose de la palanca de parada, llevar la cremallera a la posición de parada. Incorporar el solenoide de parada con un anillo tórico nuevo.

Nota: Untar con un poco de aceite el anillo tórico.

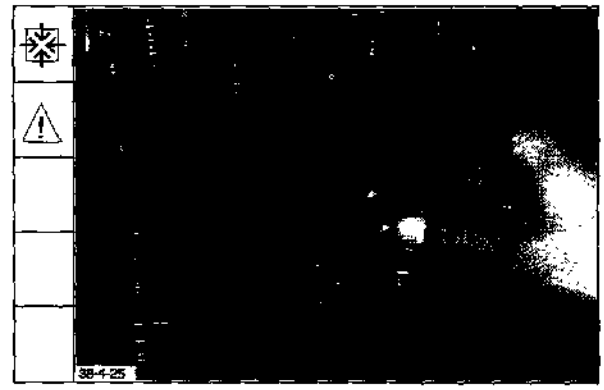

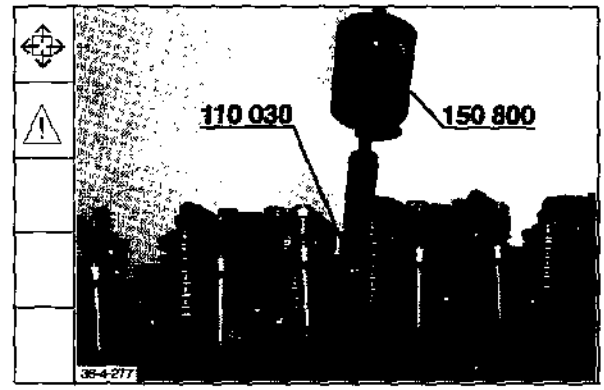

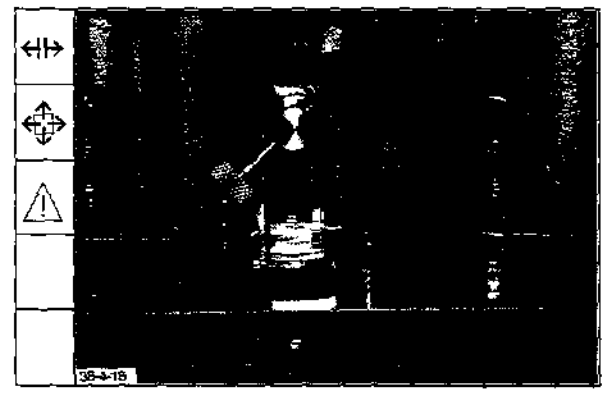

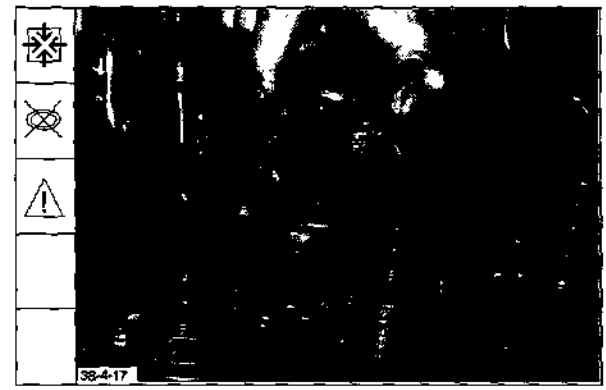

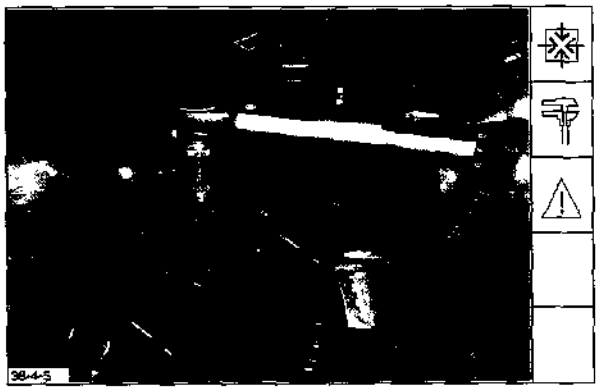

English

12. Tighten bolts with a torque of **21 Nm**. Fit cable plug.

13. Fit cylinder head cover. Tighten *bolts with a torque of* **9 ± 1 Nm.**

Note: Renew gasket if necessary.

14. *Lightly oil O-seal. Fit crankcase* breather. Tighten bolts with a torque of **9 ± 1 Nm.**

Note: Renew O-seal if necessary.

Español

12. Apretar los tornillos de fijación con un par de **21 Nm**. Montar el enchufe de cable.

13. Montar la tapa de culata. Apretar *los tornillos de fijación con un par* de **9 ± 1 Nm**.

Nota: De ser necesario, sustituir la junta por otra nueva.

14. *Untar con un poco de aceite el* anillo tórico. Montar la ventilación del cárter.

Nota: De ser necesario, sustituir el anillo tórico por otro nuevo.

Tools

Herramientas

BFM 1012/1013

DEUTZ

Please order all your special tools direct from
Messr.Wilbär, D-42826 Remscheid, Postfach 14 05 80, Fax 02191 / 8 10 92

Rogamos dirigir todos los pedidos de herramientas especiales directamente
a la casa Wilbär, D-42826 Remscheid, Postfach 14 05 80, Fax 02191 / 8 10 92

Workshop Manual BFM 1012/E, BFM 1013/E

English	Español	No.	BFM 1012	BFM 1013
Pressure Pump for coolant leakage	Bomba de presión para pruebas de estanqueidad sistema de liquido refrigerante	8002 030-1306	●	●
Compression tester	Compresímetro	8005 030-1056	●	●
Nozzle tester	Comprobador para inyectors	8008 003-3345	●	●
Cobra clamp pliers	Alicates Cobra	8011 030-1254	●	●

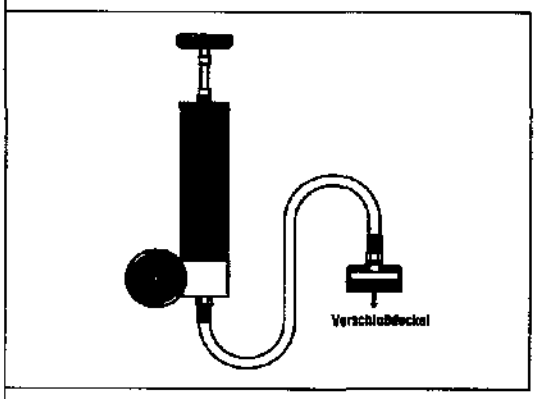

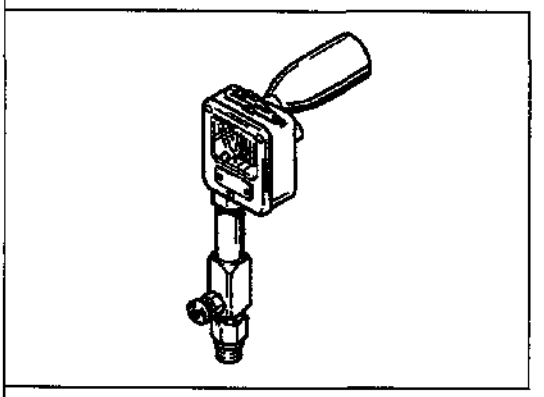

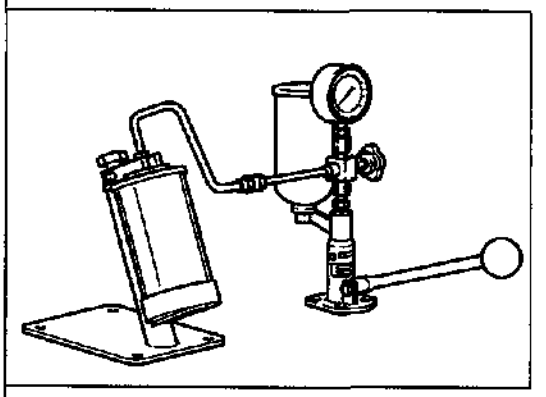

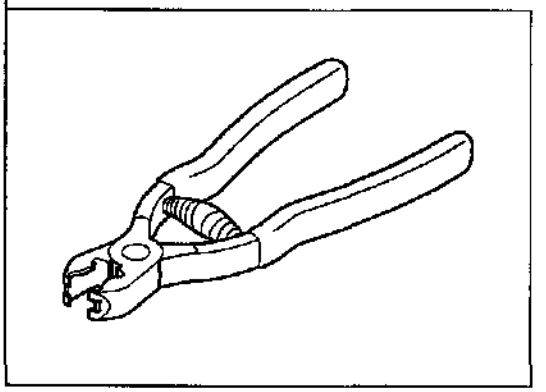

Workshop Manual BFM 1012/E, BFM 1013/E

	BFM 1012	BFM 1013	No.	English / Español
	●	●	8012 030-1206	Socket a/flats 15, long version for injector (Cap nut) Dado de vaso de 15, tipo largo, para inyectores (tuerca de unión)
	●	●	8112 030-1091	Screw driver socket Punta recambiable de destornillador
	●	●	8113 030-1186	
		●	8116 030-1230	Torx sockets long version
	●	●	8114 030-1189	Llaves de caja Torx, tipo largo
	●	●	8115 030-1191	V-belt tension gauge Verificador de tensión para correas trapezoidales

English Español	No.	BFM 1012	BFM 1013
Serrated wrench for turning injection pump Llave de estrella para giro de bombas de inyección	8117 030-1236	●	●
Torx tool kit Juego de herramientas TorxTorx-Werkzeugsatz	8189 030-1089	●	●
Valve spring assembly lever Palanca de montaje para muelles de válvula	9017 030-1088	●	●
Spring clamp pliers Tenazas para pinzas elásticas.	9088 030-1085	●	●

	BFM 1012	BFM 1013	No.	English	Español
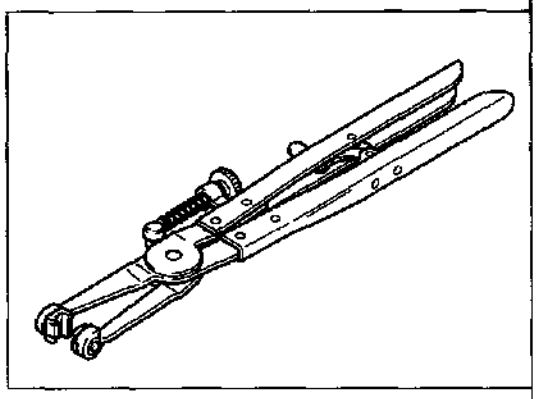	●	●	9090 030-1208	Spring clamp pliers	Tenazas para pinzas elásticas
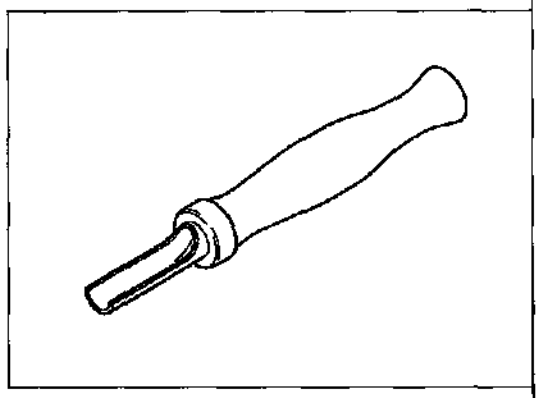	●	●	9115 030-1209	Auxiliary tool for glow plug cable coupler	Herramienta auxiliar para acoplamiento de cables de bujías de incandescencia

Workshop Manual BFM 1012/E, BFM 1013/E

English Español	No.	BFM 1012	BFM 1013
Connector for compression tester Pieza de empalme para el compresímetro	100 110 030-1192	●	●
Turning gear Dispositivo de viraje	100 320 030-1307	●	●
Turning gear Dispositivo de viraje	100 330 030-1308	●	●
Dial gauge M2T with locking ring Comparador M2T con anillo de fijación	100 400 003-0543	●	●

Workshop Manual BFM 1012/E, BFM 1013/E

	BFM 1012	BFM 1013	No.	English / Español
	●	●	100 750 030-1187	Measuring bar with spacers for gauging TDC and piston projection Regleta de medición con plaquitas distanciadoras *para la medición del PMS y saliente de pistón*
	●		100 780 030-1211	
	●		100 860 030-1269	Measuring device for base circle measurement „injection pump and commencement of delivery“
		●	100 840 030-1234	Dispositivo para la medición del círculo base „bomba de inyección y comienzo de alimentación“
	●	●	100 800 030-1212	Measuring device for measuring and locking control rod Dispositivo para la medición y bloqueo de la barra cremallera
	●		100 810 030-1213	Adjusting pin for mass balancing shafts Pernos de ajuste para ejes compensadores de masa „MAG“.

English Español	No.	BFM 1012	BFM 1013
Press-on device for control rod Dispositivo de presión para la cremallera	**100 830** **030-1235**	●	●
Graduated disc 360° with device for fastening to flywheel for TDC and COD setting Disco graduado 360° con los elementos de fijación al volante para el ajuste del PMS y comienzo de alimentación (FB)	**101 020** **030-1214**	●	●
Adapter for graduated disc Adaptador para el disco graduado	**101 030** **030-1238**	●	●
Extractor for injectors, to be used with tool 150 800 Extractor para inyectores, en combinación con herramienta 150 800	**110 030** **003-0463**	●	●

	BFM 1012	BFM 1013	No.	English	Español
	●	●	110 110 030-1215	Dolly for injector a/flats 11	Dispositivo de montaje de para inyectores, de 11
	●	●	110 470 030-1217 110 480 030-1237	Assembly tool for control rod sleeves	Herramienta de montaje para manguitos de la barra cremallera
	●	●	120 900 030-1260	Swivelling clamping stand for cylinder head	Soporte de fijación para culatas
	●	●	120 910 003-0794	Clamping plate for 120 900	Placa de fijación para 120 900

English Español	No.	BFM 1012	BFM 1013
Piston ring pliers Alicates para colocar aros de pistón	130 300 003-0496	●	●
Piston ring compressor Fleje compresor de aros de pistón	130 630 030-1188	●	
	130 640 030-1241		●
Assembly tool for small end bush Dispositivo de montaje para casquillos de pie de biela	131 070 030-1218	●	
	131 090 030-1242		●
Disassembly tool for piston pin circlip Dispositivo de desmontaje para el anillo de retención de bulones de pistón	131 080 030-1219	●	

BFM 1012	BFM 1013	No.	English	Español
●	●	142 710 030-1035	Puller (hook) for front and rear crankshaft seals	Dispositivo de desmontaje (ganchos) para los retenes delantero y trasero del cigüeñal
●		142 890 030-1220		
	●	142 910 030-1239	Assembly tool for rear crankshaft seal	Dispositivo de montaje para el retén trasero del cigüeñal
●		142 900 030-1221		
	●	142 920 030-1240	Assembly tool for front crankshaft seal	Dispositivo de montaje para el retén delantero del cigüeñal
●		143 780 030-1222	Assembly tool for engine balancer bushes	Herramienta de montaje para casquillos de compensación de masa „MAG“

English Español	No.	BFM 1012	BFM 1013
Assembly tool for camshaft sleeves Herramienta de montaje para casquillos de árbol de levas	143 790 030-1223	●	
	143 810 030-1243		●
Assembly tool for cylinder liner Herramienta de montaje para camisas de cilindro	150 100 030-1244		●
Assembly tool for pressure control valve Herramienta de montaje para la válvula reguladora de presión	150 110 030-1245		●
Extractor Dispositivo de extracción	150 880 003-0536	●	●

	BFM 1012	BFM 1013	No.	English	Español
	●	●	170 050 003-0476	Special device for screwing off filter cartridge	Herramienta especial para desenroscar cartuchos filtrantes
	●	●	170 090 030-1224	Assembly tool for coolant thermostat	Dispositivo de montaje para el termostato de líquido refrigerante
	●	●	170 630 030-1346	Dolly for air compressor gear	Dispositivo de retención para la rueda dentada del compressor de aire
		●	6066 030-1061	Engine assembly stand for double-sided chucking	Cabellete de montaje para fijación bilateral del motor

English Español	No.	BFM 1012	BFM 1013
1 Set of angled clamping plates for double-sidet chucking 1 juego de angulares para fijación bilateral	6066/158 030-1246		●
Engine assembly stand for one-sidet chucking Caballete de montaje para fijación unilateral del motor	6067 030-1067	●	
1 Set of angled clamping plates for engine with external cooling system. 1 juego de angulares de fijación para el motor con refrigeración externa	6067/118 030-1190	●	
1 Set of angled clamping plates for for engine with integrated cooling system 1 juego de angulares de fijación para el motor con refrigeración integrada	6067/119 030-1210	●	

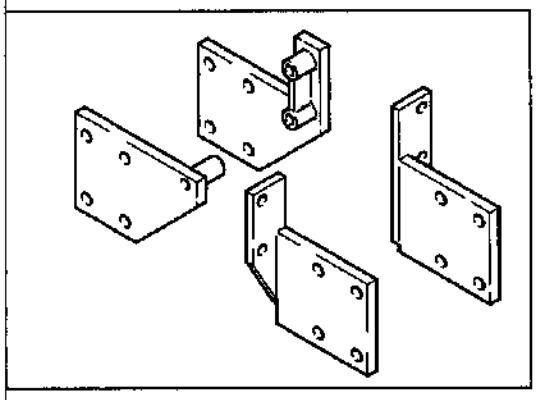

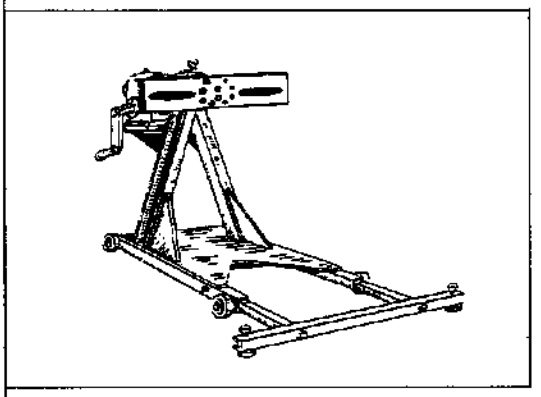

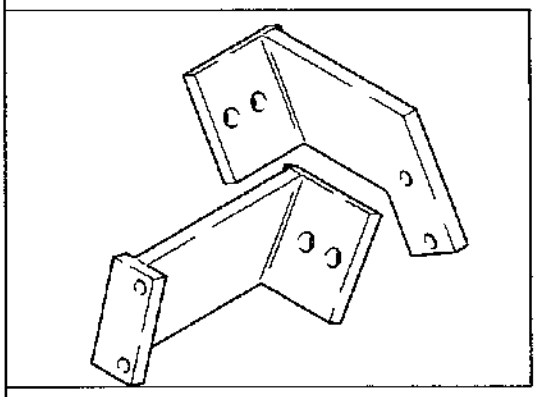

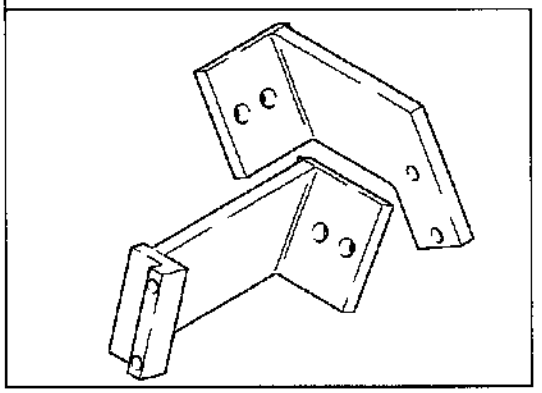

Ersatzteilnummernliste
Spare Parts Number List
Liste des Numéros de Pièces de Rechange
Lista de Números de Piezas de Repuesto

KHD
DEUTZ SERVICE

DEUTZ AG

BF6M 1013 CP

Motor-Nr. 0 151 807

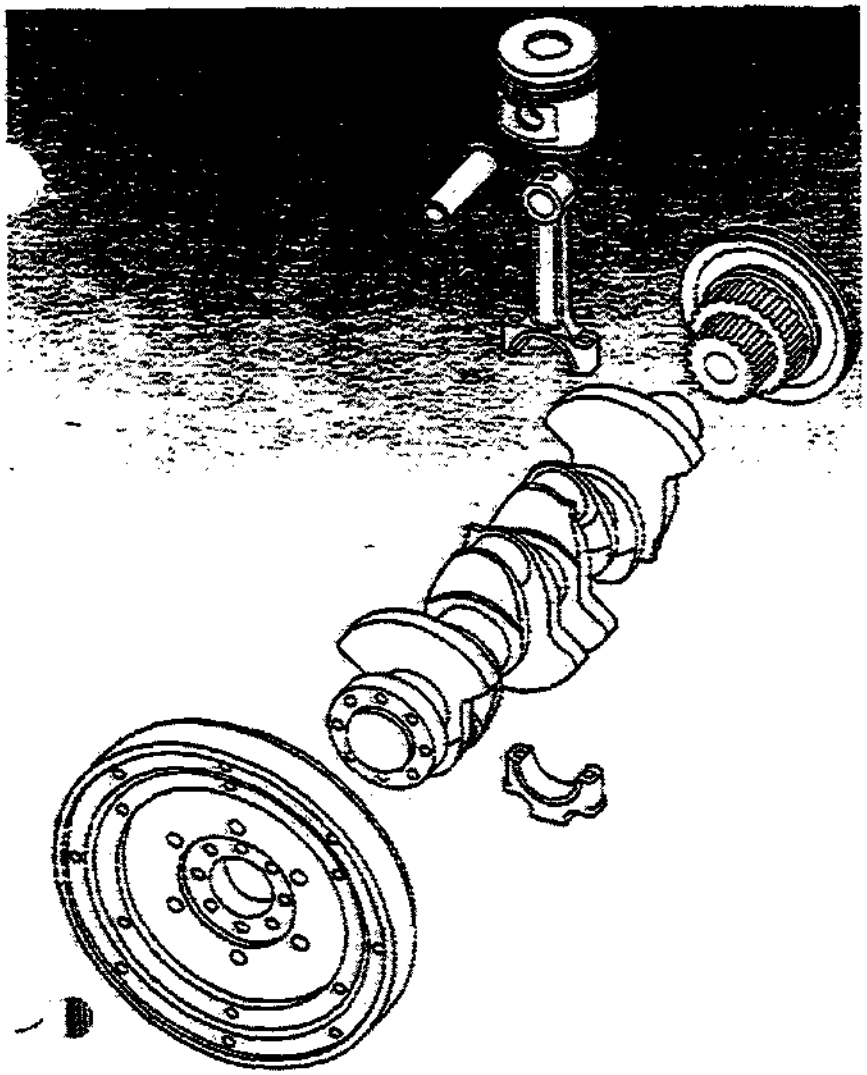

Impressum:
DEUTZ SERVICE INTERNATIONAL GmbH
Deutz-Mülheimer Straße 107
Postfach 80 05 09
D-51057 Köln

Tel. (02 21) 8 22-0
Telex 8 812-241
Fax (02 21) 8 22-53 58

Printed in Germany
Inhalt und Gestaltung:
Servicedokumentation

Alle Rechte vorbehalten

Die in dieser Ersatzteilliste aufgeführten Bauteile sind nur für Reparatur von Motoren der Marke DEUTZ der bezeichneten Baureihe zu verwenden (bestimmungsgemäßer Gebrauch).
Über den fachgerechten Einbau von Ersatzteilen informieren die Betriebsanleitung (Wartungsarbeiten) und das Werkstatthandbuch (Reparaturarbeiten) ausführlich. Für Schäden oder Verletzungen von Personen, die aus der Nichtbeachtung der entsprechenden Anleitung führen, übernimmt der Hersteller keine Haftung.

The parts contained in this Catalogue are typespecific and shall be used only for repairing engines belonging to the DEUTZ engine family given on the cover.
Full particulars for the correct installation of parts are to be found in the relevant Operating (maintenance work) and Workshop Manual (repair). The engine builder shall not be liable for any damage or injury resulting from non-compliance with guidelines given in the manuals.

Le présent Catalogue de pièces de rechange énumère des composants à utiliser uniquement à des fins de réparation pour moteurs DEUTZ de la série indiquée (utilisation spécifique).
Les constructions de service (travaux d'entretien) et le Manuel d'atelier (travaux de réparation) donne d'amples informations sur le montage approprié des pièces. Le fabricant décline toute responsabilité découlant de dommages ou de blessures de personnes résultant de non-respect des présentes instructions.

Los componentes indicados en esta Lista de Repuestos se emplearán exclusivamente para la reparación de motores DEUTZ de la serie indicada (uso conforme a las prescripciones).
Respecto al montaje pericial de repuestos véanse los Manuales de Instrucciones (trabajos de mantenimiento) y el Manual de Taller (trabajos reparación). El fabricante no responde de daños o lesiones de personas resultantes por inobservancia del correspondiente Manual.

FUNK MANUFACTURING COMPANY

FUNK POWER

PARTS LIST

SPEC Y215176 MODEL 2263E14WB

PHONE: (316) 252-3400 FAX: (316) 252-3252 / BOX 577 / COFFEYVILLE, KANSAS 67337

FUNK MANUFACTURING

This parts list is divided into two sections, which are Bill of Material and drawing documents. The drawings are listed either in build level sequence directly associated to B/M levels or in alpha-numerical order. The drawing documents can be found in the back of the parts book following the B/M.

The B/M represents the stage or levels at which the transmission is assembled. These levels also refer to the reference numbers on the supporting drawings.

The drawings which support these build levels can be found in the information narrative on the right side of the B/M. The drawing will be listed as "asm per" followed by a drawing number, or if it uses the drawing number of the component part number it will be listed as a "drawing" in the narrative. When the word "drawing" appears in the information narrative, you will only find a drawing in the book if the component parts are serviceable.

To determine the part number of the required part, look through the drawings and locate the part needed. Then note the drawing number in the lower right hand corner and the reference number of the particular part required. Now go to the B/M listing and find that drawing number appears in the "asm per" narrative or in the component part column when "drawing" is used as the narrative. Now the part number can be determined by dropping down to the next build level and matching the reference number noted from the drawing with the right hand portion of the reference number on the Bill of Material.

EXAMPLE:

1	(1st level)	XXXXXXX	ASM FRT CVR SERV	1.00
			**ASM PER XXXXXXXX	
1-1	(2nd level)	XXXXXXX	ASM FRT CVR SERV	1.00
			REPL XXXXX FOR SERV.	
			**ASM PER XXXXXXXX	
			N/A XXXXX & XXXXX SEL	
1-1-1	(3rd level)	XXXXXXX	CVR.FRT ASM SERV	1.00
			REPL XXXXX FOR SERV.	
			**ASM PER XXXXXXXX	
			N/A XXXXX & XXXXX SEL	
			(NON SERVICEABLE DETAILS)	
1-1-2	(3rd level)	XXXXXXX	SEAL RING	1.00
1-1-3	(3rd level)	XXXXXXX	COVER, OIL PASSAGE	1.00
1-1-4	(3rd level)	XXXXXXX	CAPSCREW	3.00
1-1-5	(3rd level)	XXXXXXX	ASM, VLV CONV	1.00
			DRAWING (NON SERVICEABLE	
			DETAILS ASM DWG NOT INCL)	
1-1-6	(3rd level)	XXXXXXX	PLUG PIPE	1.00
3	(1st level)	XXXXXXX	CONV. ASM 12.75	1.00
			DRAWING	
3-1	(2nd level)	XXXXXXX	IMPELLER CONVERTER	1.00
3-2	(2nd level)	XXXXXXX	HUB, IMPELLER	1.00
3-3	(2nd level)	XXXXXXX	O RING	1.00
3-4	(2nd level)	XXXXXXX	CAPSCREW	12.00

** SUPPORT DRAWING

REPORT: BA96A MULTI-LEVEL REFERENCE BILL OF MATERIAL PAGE 1
PRINTED: 03/29/94 EFFECTIVE AS OF 03/29/94

ITEM NUMBER.: YZ15176 ENG. RELEASE NUMBER:
DESCRIPTION.: 2263E14NB ENG. RELEASE DATE. : 03/11/94

NARRATIVES: SAE 2; 6/3, R-5.2,3.53,2.94,2.1,1.41,.8;
R 5.2,3.53,1.41; 1400AAB;CMP FLG ENG &
OPP ENG SIDE W/BRAKE MT @ 3:00;
W/NO SPIN; ENG: DEUTZ BF6M1013
** TS#2CBAAC

REFERENCE NO.	COMPONENT ITEM	DESCRIPTION	QTY.	U/M	CHANGE DATE	CH CD
	YZ15176	2263E14NB	1.000			
0	YZ15176A	C/S 2263E14NB	1.000	EA	03/11/94	1
		SAE 2; 6/3, R-5.2,3.53,2.94,2.1,1.41,.8;				
		R-5.2,3.53,1.41; 1400AAB;CMP FLG ENG &				
		OPP ENG SIDE W/BRAKE MT @ 3:00;				
		W/NO SPIN; ENG: DEUTZ BF6M1013				
		**STAMP ID TAG SPEC YZ15176A				
0-0	22XXE14XB	MODEL PAGE	1.000	EA	03/11/94	1
		**ASM PER A22E148 DWG				
0-1	40A2350	GRP FRT CVR	1.000	EA	03/11/94	1
		SAE 2,W/STD CONV				
		** ASM PER 4005028; N/A 40A2329				
0-1-1	4005041	ASM FRT CVR	1.000	EA	07/31/84	1
		SAE 2 HSG W/30T INP W/O LOCKUP				
		W/AUX "C" W/O DISC ENG & MIDSHIP				
		** ASM PER 4005019, N/A 40A2350				
0-1-1-1	4005025	ASM FRT CVR	1.000	EA	08/01/94	2
		** SAE 2 HSG STD				
		** ASM PER 4005026, N/A 4005018				
		**SERVICE W/YZ4102607				
		**OBS REPL BY YZ4102583 FOR PROD & SERV				
		**EFF PER ECN 940148 DETAIL PARTS IN ASM				
		**ARE SERVICEABLE				
0-1-1-1-1	YZ100770	COVER, FRONT	1.000	EA	11/11/91	1
		**OBS REPL BY YZ4102535 FOR PRODUCTION				
		**SERVICE WITH YZ4102583 ELF PER				
		**ECN 940148				
0-1-1-1-2	F74000110	BALL	2.000	EA	06/27/84	1
0-1-1-1-3	F74000160	BALL	1.000	EA	06/27/84	1
0-1-1-1-4	4102019	PLUGED ORIFICE	4.000	EA	01/06/92	1
0-1-1-1-5	YZ4102533	ASM VLV CONV REL	1.000	EA	02/21/94	1
		** REPLACED 40A1554				
0-1-1-1-6	F1900016	PLUG,PIPE	1.000	EA	06/27/84	1
0-1-1-1-7	4005295	SLEV. DOOR, FRT CVR	3.000	EA	08/26/85	1
0-1-1-1-8	40A6337	ASM, TUBE	1.000	EA	06/27/84	1
0-1-1-1-9	F3302012	MALE ELBOW	2.000	EA	06/27/84	1
0-1-1-1-10	40A6533	ASM TUBE	1.000	EA	06/27/84	1
0-1-1-1-11	F330204	MALE ELBOW	1.000	EA	06/27/84	1
0-1-1-1-12	4003454	MALE CONNECTOR	1.000	EA	06/27/84	1
0-1-1-1-13	YZ101113	PLATE, COVER	1.000	EA	07/[illegible]/91	1
0-1-1-1-14	F85116	PLUG	1.000	EA	07/[illegible]/85	1
0-1-1-1-15	YZ100814	PLATE, COVER	1.000	EA	11/11/91	1
0-1-1-1-16	F1121010	CAPSCREW	10.000	EA	11/11/91	1
0-1-1-1-17	F1001010	CAPSCREW	2.000	EA	08/20/92	1

ITEM NUMBER.: Y715176 ENG. RELEASE NUMBER:
DESCRIPTION.: 2263E14NB ENG. RELEASE DATE..: 03/11/94

NARRATIVES: SAE 2; 6/3, F-5.2,3.53,2.94,2.1,1.41,.8;
R-5.2,3.53,1.41; 1400AAB;CMP FLG ENG &
OPP ENG SIDE W/BRAKE MT @ 3:00;
W/NO SPIN; ENG: DEUTZ BF6M1013
** TS#2CDAAC

REFERENCE NO.	COMPONENT ITEM	DESCRIPTION	QTY.	U/M	CHANGE DATE	CU CD
0-1-1-1-18	F17001N	WASHER,FLAT	2.000	EA	04/06/92	1
0-1-1-1-19	F16200	LOCKWASHER	2.000	EA	04/06/92	1
0-1-1-2	F40109H	BEARING	2.000	EA	07/27/84	1
0-1-1-3	40A6539	GEAR 33T	2.000	EA	07/27/84	1
		** REPL 40A6325 & X9639 FOR PROD				
		** SERV W/40A6545 KIT WHEN USING 40A6536				
		** SERV W/40A6546 KIT WHEN USING 40A6530				
		** PER ECNS 45421 & 45315				
0-1-1-4	4102115	SHF AUX	1.000	EA	10/07/87	1
0-1-1-5	F40109	BEARING	2.000	EA	07/27/84	1
0-1-1-6	F39000300	SNAP RING	2.000	EA	07/27/84	1
0-1-1-7	40A6538	SHF AUX	1.000	EA	07/27/84	1
		** REPL 40A6324 & X9634 FOR PROD				
		** SERV W/40A6546 KIT; ECN 45426 & 45314				
0-1-1-8	F40307H	BEARING	1.000	EA	07/27/84	1
0-1-1-9	40A6541	GEAR, IDLER	1.000	EA	07/27/84	1
		** REPL X9638 & 40A6333 FOR PROD				
		** SERV W/ 40A6547; ECN 45420 & 45316				
0-1-1-10	40A6537	SHF IDLER	1.000	EA	07/27/84	1
		** REPL 40A6332 & X9634 FOR PROD				
		** SERV W/ 40A6547 KIT; ECN 45428&45313				
0-1-1-11	F40307	BEARING	1.000	EA	07/27/84	1
0-1-1-12	F39000315	SNAP RING	1.000	EA	07/27/84	1
0-1-1-13	F100308	CAPSCREW	1.000	EA	07/27/84	1
0-1-1-15	4006906	COVER,SAE A	1.000	EA	07/27/84	1
0-1-1-16	4102114	TUBE, STATOR	1.000	EA	10/07/87	1
0-1-1-17	40A6329	PLT. CVR.	1.000	EA	07/27/84	1
0-1-1-18	F1200320	CAPSCREW	6.000	EA	07/27/84	1
0-1-1-19	F40016	BEARING	2.000	EA	07/27/84	1
0-1-1-20	4102118	GEAR IMP HUB	1.000	EA	10/07/87	1
0-1-1-21	F37020162	O RING ARP162	1.000	EA	07/27/84	1
0-1-1-22	40A6326	RETAINER, BEARING	1.000	EA	07/27/84	1
0-1-1-23	F1002012	CAPSCREW	6.000	EA	02/23/85	1
0-1-1-24	F65274	OIL SEAL	1.000	EA	07/27/84	1
0-1-1-25	4005013	GRP, INP SHF 30T	1.000	EA	07/27/84	1
		2000 SERIES 30T INP SAE 2 HSG ONLY				
		USE WITH ENGINE OR MIDSHIP MOUNT				
		** ASM PER 4005016 DWG; N/A 4005018				
0-1-1-25-1	4005015	SHF INP 30T	1.000	EA	06/27/84	1
		**DWG,SAE #2 HSG. W/O LOCKUP				
0-1-1-25-2	4003455	BALL BRG	1.000	EA	06/27/84	1
0-1-1-25-3	40A2185	RET BRG	1.000	EA	06/27/84	1
0-1-1-25-4	F1003012	CAPSCREW	3.000	EA	06/27/84	1
0-1-1-25-5	F39030177	SNAP RING	1.000	EA	06/27/84	1

ITEM NUMBER.: YZ15176 ENG. RELEASE NUMBER:
DESCRIPTION.: 2263E14NS ENG. RELEASE DATE..: 03/11/94

NARRATIVES: SAE 2; 6/3, F-5.2,3.53,2.94,2.1,1.41,.8;
R-5.2,3.53,1.41; 1400AAB;CMP FLO ENG &
OPP ENG SIDE W/BRAKE MT @ 3:00;
W/NO SPIN; ENG: DEUTZ BF6M1013
** TS#2CDAAC

REFERENCE NO.	COMPONENT ITEM	DESCRIPTION	QTY.	U/M	CHANGE DATE	CH CD
0-1-1-25-6	4012328	RING SEAL	1.000	EA	06/27/84	1
0-1-2	4A1050	PLATE, IDENT	1.000	EA	11/11/91	1
0-1-3	F310063	SCREW, DRIVE	2.000	EA	02/19/88	1
0-1-4	F68105	BREATHER, 0 PSI	1.000	EA	06/27/88	1
0-1-5	F190042	PLUG,PIPE	2.000	EA	11/18/86	1
0-1-6	F1100948	CAPSCREW	1.000	EA	07/31/84	1
0-1-7	F1100940	CAPSCREW	3.000	EA	07/31/84	1
0-1-8	F1005056	CAPSCREW	1.000	EA	07/31/84	1
0-1-9	F1005088	CAPSCREW	1.000	EA	07/31/84	1
0-1-10	F1005032	CAPSCREW	1.000	EA	07/31/84	1
0-1-11	F1005024	CAPSCREW	3.000	EA	07/31/84	1
0-2	YZ102546	GRP, DR PLY	1.000	EA	03/11/94	1
		*A ASM PER YZ101971 DWG.				
0-2-1	YZ101551	PLATE, DRIVE	1.000	EA	01/12/93	1
0-2-2	4046750	RING	1.000	EA	01/12/93	1
0-2-3	F1003012	CAPSCREW	12.000	EA	01/12/93	1
0-3	YZ4145257	ASM CONV 14 AAB	1.000	EA	03/11/94	1
		2000 SERIES; ENG OR MIDSHIP MNT; W/O LOCKUP; FIXED STATOR; 14AAB CONV "C" SPLINE; #2 HSG ONLY				
		**ASM PER YZ4145260; N/A 4045742 SEL				
0-3-1	4045356	IMPELLER A	1.000	EA	08/09/93	1
0-3-2	4045918	TURBINE A	1.000	EA	08/09/93	1
0-3-3	4045362	STATOR B	1.000	EA	08/09/93	1
0-3-4	4045939	HUB, IMP	1.000	EA	08/09/93	1
0-3-5	4005035	CVR CONV 14"	1.000	EA	08/09/93	1
0-3-6	4145171	GRP HUB ASM	1.000	EA	08/09/93	1
		FOR 14" CONV ASM; "C" SPL SERIES				
		*ASM PER 4145169				
0-3-6-1	F3702058	O RING APPROX	1.000	EA	11/05/87	1
0-3-6-2	F1002010	CAPSCREW	12.000	EA	11/05/87	1
0-3-6-3	J09851	BEARING NEEDLE THRUST	3.000	EA	01/22/93	
		*REPLACED F3513A90				
0-3-6-4	4045901	WASHER THRUST	6.000	EA	11/05/87	1
0-3-6-9	4003456	RETAINING RING	2.000	EA	11/05/87	1
0-3-6-10	4045906	HUB TURBINE	1.000	EA	11/05/87	1
0-3-6-11	F4603012	BEARING	1.000	EA	11/05/87	1
0-3-6-12	4045370	SEAL, RING	1.000	EA	11/05/87	1
0-3-6-13	F1003020H8	CAPSCREW	24.000	EA	11/05/87	1
0-3-6-14	F1300500U	HEX NUT	24.000	EA	11/05/87	1
0-3-6-15	4003690	WASHER,SEAL	12.000	EA	11/05/87	1
0-3-6-16	4045503	WASHER SPLI	24.000	EA	11/05/87	1
0-3-6-17	4000497	RING SEAL	1.000	EA	11/05/87	1
0-3-6-18	[illegible]	HUB STATOR [illegible]	1.000	EA	11/05/87	1

ITEM NUMBER.: YZ15176 ENG. RELEASE NUMBER:
DESCRIPTION.: 2263F14NB ENG. RELEASE DATE .: 03/11/94

NARRATIVES: SAE 2; 6/3, F-5.2,3.53,2.94,2.1,1.41,.8;
R-5.2,3.53,1.41; 1400AAB;CMP FLG ENG &
OPP ENG SIDE W/BRAKE MT @ 3:00;
W/NO SPIN; ENG: DEUTZ BF6M1013
#* TS#2CDAAC

REFERENCE NO.	COMPONENT ITEM	DESCRIPTION	QTY.	U/M	CHANGE DATE	CH CD
0-4	40A2345	GRP GR RATIO	1.000	EA	03/11/94	1
		2000 SERIES, 5.2:1 RATIO				
		#* N/A 40A2330 SEL				
0-4-1	YZ102403	ASM CLU 1ST	1.000	EA	01/04/93	
		#* ASM PER 4005851; N/A 40A2226				
0-4-1-1	40A2216	ASM SHF CLU 1ST	1.000	EA	11/05/92	1
0-4-1-2	40A2565	SEAL LIP	2.000	EA	11/05/92	1
0-4-1-3	4102398	RING BACK-UP	2.000	EA	11/05/92	1
0-4-1-4	F37020144	O RING ARP144	2.000	EA	11/05/92	1
0-4-1-5	40A2034	PSTN CLU	2.000	EA	11/05/92	1
0-4-1-6	40A6261	SPR CLU RTN	2.000	EA	11/05/92	1
0-4-1-7	40A2038	RET SPR	2.000	EA	11/05/92	1
0-4-1-8	4005523	PL. CLU	20.000	EA	11/05/92	1
0-4-1-9	40121323	PLATE CLUTCH SEP	20.000	EA	11/05/92	1
0-4-1-10	YZ100356	RETAINER, CLUTCH PLATE	2.000	EA	11/05/92	1
0-4-1-11	4012303	RING SNAP	2.000	EA	11/05/92	1
0-4-1-12	40A2211	ASM GR 1ST	1.000	EA	05/19/94	2
		#*OBS FOR PROD & SERV REPL BY YZ4102506				
		#*EFF PER ECN [illegible]				
0-4-1-13	F41210	BEARING	2.000	EA	11/05/92	1
0-4-1-14	F39000354	SNAP RING	2.000	EA	04/15/94	2
0-4-1-15	F81696	RETAINING RING	1.000	EA	11/05/92	1
0-4-1-16	YZ4102506	GEAR & HUB	1.000	EA	11/23/93	1
0-4-1-17	4003704	BRG., BALL	1.000	EA	11/05/92	1
0-4-1-19	4003444	BRG., BALL	1.000	EA	11/05/92	1
		## REPL X9485 FOR PROD & SERV ECN 44041				
0-4-1-20	F81675	RETAINING RING	1.000	EA	11/05/92	1
0-4-1-21	F621208R	BEARING	2.000	EA	11/05/92	1
0-4-1-22	4081113	SEAL RING	3.000	EA	11/05/92	1
0-4-1-23	F81750	RETAINING RING	2.000	EA	11/05/92	1
0-4-2	YZ102404	ASM CLU 2ND	1.000	EA	01/04/93	1
		#* ASM PER 40A2406 DWG; N/A 40A2226				
0-4-2-1	40A2218	ASM SHF CLU 2ND	1.000	EA	11/05/92	1
0-4-2-2	40A2565	SEAL LIP	2.000	EA	11/05/92	1
0-4-2-3	4102398	RING BACK-UP	2.000	EA	11/05/92	1
0-4-2-4	F37020144	O RING ARP144	2.000	EA	11/05/92	1
0-4-2-5	40A2034	PSTN CLU	2.000	EA	11/05/92	1
0-4-2-6	40A6261	SPR CLU RTN	2.000	EA	11/05/92	1
0-4-2-7	40A2038	RET SPR	2.000	EA	11/05/92	1
0-4-2-8	4005523	PL. CLU	20.000	EA	11/05/92	1
0-4-2-9	40121323	PLATE CLUTCH SEP	20.000	EA	11/05/92	1
0-4-2-10	YZ100356	RETAINER, CLUTCH PLATE	2.000	EA	11/05/92	1
0-4-2-11	4012303	RING SNAP	2.000	EA	11/05/92	1
0-4-2-12	YZ4102504	GEAR & HUB	1.000	EA	12/06/93	1

ITEM NUMBER.: YZ15176 ENG. RELEASE NUMBER:
DESCRIPTION.: 2263E14NB ENG. RELEASE DATE..: 03/11/94

NARRATIVES: SAE 2; 4/3, F-5,2,A 53,2.94,2.1,1.41,.8;
R-5.2,3.53,1.41; 1400AAB;CMP FLG ENG &
OPP ENG SIDE W/BRAKE MT @ 3:00;
W/NO SPIN; ENG: DEUTZ BF6M1013
** TS#2CBAAC

REFERENCE NO.	COMPONENT ITEM	DESCRIPTION	QTY.	U/M	CHANGE DATE	CD
0-4-2-13	F40110	BEARING	2.000	EA	11/05/92	1
0-4-2-15	F81696	RETAINING RING	1.000	EA	11/05/92	1
0-4-2-16	4003497	BRG	1.000	EA	11/05/92	1
0-4-2-17	F621214E	BEARING	1.000	EA	11/05/92	1
0-4-2-18	YZ4102503	GEAR & HUB ASM	1.000	EA	02/24/94	1
0-4-2-19	F621208R	BEARING	2.000	EA	11/05/92	1
0-4-2-20	4081113	SEAL RING	3.000	EA	11/05/92	1
0-4-2-21	F81750	RETAINING RING	2.000	EA	11/05/92	1
0-4-3	YZ102415	ASM CLU 3RD	1.000	EA	01/04/93	1
		**ASM PER 40A2407 DWG,N/A 40A2226				
0-4-3-1	40A2219	ASM SHF CLU 3RD	1.000	EA	11/06/92	1
0-4-3-2	40A2565	SEAL LIP	2.000	EA	11/06/92	1
0-4-3-3	4102378	RING BACK-UP	2.000	EA	11/06/92	1
0-4-3-4	F37020144	O RING AMP144	2.000	EA	11/06/92	1
0-4-3-5	40A2034	PSTN CLU	2.000	EA	11/06/92	1
0-4-3-6	40A6261	SPR CLU RTN	2.000	EA	11/06/92	1
0-4-3-7	40A2038	RET SPR	2.000	EA	11/06/92	1
0-4-3-8	4005523	PLT CLU	20.000	EA	11/06/92	1
0-4-3-9	40121323	PLATE CLUTCH DEP	20.000	EA	11/06/92	1
0-4-3-10	YZ100156	RETAINER, CLUTCH PLATE	2.000	EA	11/06/92	1
0-4-3-11	4012383	RING SNAP	2.000	EA	11/06/92	1
0-4-3-12	YZ4102497	GEAR & HUB	1.000	EA	02/08/94	1
		** REPLACED 4003214				
0-4-3-13	F40110	BEARING	2.000	EA	11/06/92	1
0-4-3-15	F81696	RETAINING RING	1.000	EA	11/06/92	1
0-4-3-16	4003497	BRG	1.000	EA	11/06/92	1
0-4-3-17	F621216F	BEARING	1.000	EA	11/06/92	1
0-4-3-18	YZ4102495	GEAR & HUB	1.000	EA	02/01/94	1
		** REPLACED 4003010				
0-4-3-19	F621208R	BEARING	2.000	EA	11/06/92	1
0-4-3-20	4081113	SEAL RING	3.000	EA	11/06/92	1
0-4-3-21	F81750	RETAINING RING	2.000	EA	11/06/92	1
0-5	YZ101590	GRP, NO SPIN	1.000	EA	03/11/94	1
		2000 SERIES NO SPIN				
		**ASM PER YZ101547 DWG; N/A 40A2067 SEL.				
		**SERVICE W/YZ102061				
0-5-1	YZ101458	SHF OUT	1.000	EA	12/16/91	1
0-5-2	40A2201	HUB DR	1.000	EA	12/16/91	1
0-5-3	YZ101549	ASM, SHAFT OUTPUT	1.000	EA	12/16/91	1
0-5-3-1	YZ101457	SHF OUT	1.000	EA	11/22/91	1
0-5-3-2	F4601612	BEARING	1.000	EA	11/22/91	1
0-5-3-3	F4602414	BRG NDL	1.000	EA	11/22/91	1
0-5-4	F58098	BRG CON	1.000	EA	12/16/91	1
0-5-5	F58584	BRG CNP	1.000	EA	12/16/91	1

ITEM NUMBER.: YZ15176 ENG. RELEASE NUMBER:
DESCRIPTION.: 2263E14NB ENG. RELEASE DATE. : 03/11/94

NARRATIVES: SAE 2; 6/8, F-5.2,3.53,2.94,2.1,1.41,.8;
R-5.2,3.53,1.41; 1400AAB;CMP FLG ENG &
OPP ENG SIDE W/BRAKE MT @ 3:00;
W/NO SPIN; ENG: DEUTZ BF6M1013
** TS#2CDAAC

REFERENCE NO.	COMPONENT ITEM	DESCRIPTION	QTY.	U/M	CHANGE DATE	CH CD
0-5-6	40A2282	RET BRG	1.000	EA	12/16/91	1
0-5-7	F65121	OIL SEAL	1.000	EA	12/16/91	1
0-5-8	F37020159	O RING ARP159	1.000	EA	12/16/91	1
0-5-9	F1003014	CAPSCREW	6.000	EA	12/16/91	1
0-5-10	40A2286	ASM BFL	1.000	EA	12/16/91	1
0-5-11	F1002532	CAPSCREW	2.000	EA	12/16/91	1
0-5-12	F18002	WASHER	2.000	EA	12/16/91	1
0-5-13	F21026	PLUG,EXPANSION	1.000	EA	12/16/91	1
0-5-14	F22012	PLUG,EXPANSION	1.000	EA	12/16/91	1
0-5-15	YZ101461	SPACER SPK RET	2.000	EA	12/16/91	1
0-5-16	40A2280	HSG NO-SPIN	1.000	EA	12/16/91	1
0-5-17	F1100416	CAPSCREW	4.000	EA	12/16/91	1
0-5-18	F58001	BRG CON	2.000	EA	12/16/91	1
0-5-19	F58701	BRG CUP	1.000	EA	12/16/91	1
0-5-20	4006727	ASM,NO-SPIN	1.000	EA	12/16/91	1
		**DRAWING				
0-5-21	F58100	BRG CON	1.000	EA	12/16/91	1
0-5-22	F58585	BRG CUP	1.000	EA	12/16/91	1
0-5-23	F1900316	PLUG,PIPE	1.000	EA	12/16/91	1
0-6	40A2231	GRP FLG CON	1.000	EA	03/11/94	1
		ENG SIDE OUT 1ST 7/16P 1.70 THRU 2.5 HUB				
		**ASM PER 40A2415 DWG;N/A 40A2197 SEL				
0-6-1	40A2208	FLG, COMP	1.000	EA	08/27/82	1
0-6-2	F37040326	O RING ARP326	1.000	EA	04/17/89	1
0-6-3	4010464	WA, YOKE	1.000	EA	08/27/82	1
0-6-4	F1007520NC	CAPSCREW	1.000	EA	10/02/87	1
0-7	YZ101397	GRP CASE MAIN	1.000	EA	03/11/94	1
		2000 SERIES LONG DROP W/DIPSTICK				
		FOR MANUAL VALVE USE W/DEERE MAG PICKUP				
		**ASM PER YZ101399 DWG; N/A 40A2002 SEL				
0-7-1	YZ101241	CASE MAIN	1.000	EA	09/05/91	1
		SERV W/ YZ101397 FOR ENG OR MID SUP MNT				
		SERV W/ YZ101246 FOR REMOTE OR HYD MNT				
0-7-2	F74000120	BALL, STEEL	1.000	EA	09/05/91	1
0-7-3	F2104330	EXP.PLUG	2.000	EA	09/05/91	1
0-7-4	F1900120SVS	PLUG,PIPE	3.000	EA	09/05/91	1
0-7-5	F190034	PLUG,PIPE	2.000	EA	09/05/91	1
0-7-6	4001123	BUSHING,LOCATING	1.000	EA	09/05/91	1
0-7-7	40A2033	TUBE DUCT	1.000	EA	09/05/91	1
0-7-8	4003302	CLAMP TUBE	1.000	EA	09/05/91	1
0-7-9	F100100	CAPSCREW	1.000	EA	09/05/91	1
0-7-11	40A6020	GRP,SUCTION SCREEN	1.000	EA	09/05/91	1
		** SERV W/40A6020SA				
0-7-11-1	40A6016	ASM,SUCTION SCREEN	1.000	EA	08/01/89	1

ITEM NUMBER.: YZ15176 ENG. RELEASE NUMBER:
DESCRIPTION.: 2263E14N8 ENG. RELEASE DATE.: 03/11/94

NARRATIVES: SAE 2; 6/3, F-5.2,3.53,2.94,2.[illegible],1.41,.8;
R-5.2,3.53,1.41; 1400AAB;CMP FLG ENG &
OPP ENG SIDE W/BRAKE MT @ [illegible];
W/NO SPIN; ENG: DEUTZ [illegible]6M1013
** TS#2CDAAC

REFERENCE NO.	COMPONENT ITEM	DESCRIPTION	QTY.	U/M	CHANGE DATE	CO
0-7-11-2	4006404	GASKET	1.000	EA	03/01/90	1
0-7-12	4101088	GASKET,MAIN HRG	1.000	EA	09/05/91	1
0-7-13	4102007	DIPSTICK	1.000	EA	09/05/91	1
0-7-14	40A2166	TUBE DIPSTICK	1.000	EA	09/05/91	1
0-7-15	YZ101113	PLATE, COVER	1.000	EA	09/05/91	1
0-7-16	F1001010	CAPSCREW	2.000	EA	08/20/92	1
0-7-18	40A2040	SHIM PACK	1.000	EA	09/05/91	1
		** DRAWING				
		SERV W/40A2040A				
0-7-18-0	40A2040A	SHIM - .005	3.000	EA	02/12/82	1
0-7-18-0	40A2040B	SHIM - .007	4.000	EA	02/12/82	1
0-7-18-0	40A2040C	SHIM - .0[illegible]	[illegible]	EA	02/12/82	1
0-7-19	F1007516	CAPSCREW	1.000	EA	01/10/[illegible]	1
0-7-25	F17001N	WASHER,FLAT	2.000	EA	04/06/92	1
0-7-26	F16200	LOCKWASHER	2.000	EA	04/06/92	1
0-8	YZ100597	SPR VLV ELEC	1.000	EA	03/11/94	1
		6/3; [illegible] MODULATED VLV; 6 SOL;				
		W/O LOCKUP CONV;				
		12V COIL [illegible]WEATHERPACK CONNECTORS				
		** ASM PER YZ100598, N/A 40A2[illegible] SEL				
		**SERVICE W/YZ4102542				
0-8-1	YZ100594	ASM VLV ELEC	1.000	EA	10/01/90	1
		2X6U ENG, MIDSHIP & REMOTE MODELS, 6 SOL				
		W/OR W/O LOCKUP;W/OR W/O MOD: 12V;2 WIRE				
		W/ WEATHERPACK CONNECTORS				
		**ASM PER YZ100596, N/A YZ100597 SNP				
		**SERVW/YZ101419 ELEC VLV ASM				
0-8-1-1	40A2520	BODY, VALVE	1.000	EA	10/01/90	1
0-8-1-2	F7400070	BALL	1.000	EA	10/01/90	1
0-8-1-3	40A2510	WASHER	1.000	EA	10/01/90	1
0-8-1-4	40A2563	SPR, REG (OUTER)	1.000	EA	10/01/90	1
0-8-1-5	40A2564	SPG, REG (INNER)	1.000	EA	10/01/90	1
0-8-1-6	40B1065	PSTN ACCUM	1.000	EA	10/01/90	1
0-8-1-7	F2710182	PIN, DOWEL	1.000	EA	10/01/90	1
0-8-1-8	4001081	VALVE DUMP	1.000	EA	10/01/90	1
0-8-1-9	4001074	SPR DUMP VLV	1.000	EA	10/01/90	1
0-8-1-10	F3706091[illegible]	O RING ARP91[illegible]	1.000	EA	10/01/90	1
0-8-1-11	4001080	PLUG DUMP VALVE	1.000	EA	10/01/90	1
0-8-1-12	40A2511	SHIM SPG	3.000	EA	10/01/90	1
0-8-1-13	40A2512	SPOOL REG	1.000	EA	10/01/90	1
0-8-1-14	40A1335	PLATE, ORIFICE	1.000	EA	10/01/90	1
0-8-1-15	F3900051	SNAP RING	1.000	EA	10/01/90	1
0-8-1-16	F37060910	O RING ARP910	1.000	EA	10/01/90	1
0-8-1-17	4001[illegible]	PLUG	1.000	EA	10/01/90	1

ITEM NUMBER.: YZ15176 ENG. RELEASE NUMBER:
DESCRIPTION.: 2263E14NB ENG. RELEASE DATE..: 03/11/94

NARRATIVES: SAE 2; 6/3, F-5.2,3.53,2.94,2.1,1.41,.8;
R 5.2,3.53,1.41; 1400AAB;CMP FLG ENG &
OPP ENG SIDE W/BRAKE MT @ 3:00;
W/NO SPIN; ENG: DEUTZ BF6M1013
#* TS#2CDAAC

REFERENCE NO.	COMPONENT ITEM	DESCRIPTION	QTY.	U/M	CHANGE DATE	CH CU
0-8-1-18	4102315	ASM PLGR & SPOOL	6.000	EA	10/01/90	1
		SERV W/4102315A				
0-8-1-22	40A2269	SPRING SOL	6.000	EA	10/01/90	1
0-8-1-23	4005293	CORE ASM	6.000	EA	10/01/90	1
0-8-1-24	F37060912	O RING ARP912	6.000	EA	10/01/90	1
0-8-1-25	YZ100593	ASM, PIN & COIL,12V	6.000	EA	10/01/90	1
0-8-1-27	F7824320511	STOP NUT, TUTN	6.000	EA	10/01/90	1
0-8-1-28	F190042	PLUG,PIPE	6.000	EA	10/01/90	1
0-8-1-29	YZ100454	KIT, CONN 2 WIRE	6.000	EA	10/01/90	1
		2 WIRE CONN ;N/A 40A2342				
		#*SERV W/YZ100837 KIT				
0-8-1-29-1	R78060	SLEEVE CONTACT	2.000	EA	06/11/90	1
		SHIPPED LOOSE				
0-8-1-29-2	R78059	SEAL CABLE	2.000	EA	06/11/90	1
		SHIPPED LOOSE				
0-8-2	F1100324	CAPSCREW SOC HD	4.000	EA	10/01/90	1
0-8-3	F1100340	CAPSCREW SOC HD	7.000	EA	10/01/90	1
0-8-4	F17030516	WASHER,FLAT	12.000	EA	10/01/90	1
0-8-5	4004247E	PLUG ORIFICE	1.000	EA	10/01/90	1
0-8-6	4002807	GSKT VLV BODY	1.000	EA	10/01/90	1
0-8-7	F1100344	CAPSCREW SOC HD	1.000	EA	10/01/90	1
0-8-8	YZ100210	DWG, CONN KIT	1.000	EA	12/08/92	1
		SHIPPED LOOSE				
0-9	40A2061	GRP BRK RET	1.000	EA	03/11/94	1
		USED W/DISC BRK				
		#*ASM PER 40A2419 DWG;N/A 40A2062 SEL.				
0-9-1	40A2275	RET BRG	1.000	EA	12/21/82	1
0-9-2	F65121	OIL SEAL	1.000	EA	04/22/82	1
0-9-3	F37020155	O RING ARP155	1.000	EA	04/22/82	1
0-10	40A2240	GRP CPN BRK FLG	1.000	EA	03/11/94	1
		1610 FLG, W/BRAKE; 1ST 8/16P				
		#* ASM PER 40A2424 DWG, N/A 40A2196 SEL				
0-10-1	YZ101669	FLG CPN	1.000	EA	02/24/92	1
0-10-2	F37040326	O RING ARP326	1.000	EA	04/17/89	1
0-10-3	4010464	WA, YOKE	1.000	EA	08/27/82	1
0-10-4	F1007520H8	CAPSCREW	1.000	EA	10/20/82	1
0-10-5	F1003528	CAPSCREW	8.000	EA	08/27/82	1
0-10-6	F13006000	HEX NUT	8.000	EA	08/27/82	1
0-10-7	F16202	LOCKWASHER	8.000	EA	08/27/82	1
0-10-8	4012821	WASHER CLIPPED	8.000	EA	08/27/82	1
0-11	40A2352	GRP PUMP CHRG	1.000	EA	03/11/94	1
		SAE #2 HSG ONLY;W/O DISC;GEAR PUMP				
		SERV W/YZ4102525				
		#*ASM PER 40A2425 DWG; N/A 40A2333 SEL				

ITEM NUMBER.: YZ15176 ENG. RELEASE NUMBER:
DESCRIPTION.: 2263E14NB ENG. RELEASE DATE..: 03/11/94

NARRATIVES: SAE 2; 6/3, F-5.2,3.53,2.94,2.1,1.41,.8;
R-5.2,3.53,1.41; 1400AAB;CMP FLG ENG &
OPP ENG SIDE W/BRAKE MT @ 3:00;
W/NO SPIN; ENG: DEUTZ BF6M1013
** TS#2C0AAC

REFERENCE NO.	COMPONENT ITEM	DESCRIPTION	QTY.	U/M	CHANGE DATE	CH CD
0-11-1	4102064	ASM PUMP CHRG	1.000	EA	03/30/87	1
		SAE #2 HSG ONLY;W/O DISC;GEAR PUMP				
		**ASM PER 4102063 DWG;N/A 40A2352 GRP.				
0-11-1-1	YZ4102523	PUMP CHARGE	1.000	EA	09/20/93	1
		** REPLACES 40A2361				
0-11-1-5	F300848V	SCREW,SET	1.000	EA	07/25/88	1
0-11-1-6	F2101880	CUP PLUG	1.000	EA	01/03/91	1
0-11-2	4101133	GSKT PUMP	1.000	EA	08/03/87	1
0-11-3	F1003052	CAPSCREW	1.000	EA	04/19/83	1
0-11-4	F1003080	CAPSCREW	1.000	EA	09/29/83	1
0-11-5	40A2373	STUD	1.000	EA	04/19/83	
0-11-6	F15003	STARWASHER	4.000	EA	04/19/83	1
0-11-7	F13005001	HEX NUT	2.000	EA	04/19/83	1
0-11-8	40A2374	STUD	1.000	EA	04/19/83	1
0-11-9	F37030210E	O RING	1.000	EA	04/17/89	1
0-11-10	R66408	PLUG,SHIPPING	2.000	EA	02/11/91	1
0-12	40A2507	HDW PUMP A	1.000	EA	03/11/94	1
		LH AUX A PUMP W/O DISC				
		** ASM PER 40A2450; N/A 40A2072 SEL				
		** 1 PER 4001576 & F2518714				
0-12-1	F37030250	O RING ARP250	1.000	EA	04/17/89	1
0-12-2	4001576	ASM SLEEVE	1.000	EA	08/15/83	1
		SHIPPED LOOSE				
0-12-3	F2518714	PIN,ROLL	1.000	EA	08/15/83	1
		SHIPPED LOOSE				
0-12-4	4001575	ADAP PLT HYD PUMP	1.000	EA	08/15/83	1
0-12-5	F16204	LOCKWASHER	4.000	EA	08/15/83	1
0-12-6	F1005080	CAPSCREW	4.000	EA	08/15/83	1
		1/2 13 X 1 1/4				
0-12-7	F37030420	O RING ARP042	1.000	EA	02/11/84	1
		SHIPPED LOOSE				
0-12-8	F20300	PLUG,SHIPPING	4.000	EA	08/15/83	1
		SAE #4, 3-1/4" OD, PLASTIC COVER				
0-13	40A2071A	HDW CVR PLT	1.000	EA	03/11/94	1
		W/O DISC;W/O AUX PUMP;CVR PLT ONLY				
		**ASM PER 40A2430;N/A 40A2300 SEL				
0-13-1	4102254	PLT, CVR "C"	1.000	EA	08/08/88	1
0-13-2	F37030250	O RING ARP250	1.000	EA	04/17/89	1
0-13-3	F1005016	CAPSCREW	4.000	EA	12/20/83	1
0-13-4	F16204	LOCKWASHER	4.000	EA	12/20/83	1
0-101	40A2278	GRP, BRAKE DISK	1.000	EA	03/11/94	1
		14" DIA DISK W/1 MECH CALPR MTD 3:00				
		** ASM PER 40A2438; N/A 40A2037 SEL				
		SERV W/40A2580A				

ITEM NUMBER.: YZ15176 ENG. RELEASE NUMBER:
DESCRIPTION.: 226SF14NS ENG. RELEASE DATE..: 03/11/94

NARRATIVES: SAE 2; 6/2, F-5.2,3.53,2.94,2.1,1.41,.8;
R-5.2,3.53,1.41; 1400AA8;CMP FLG ENG &
OPP ENG SIDE W/BRAKE MT @ 3:00;
W/NO SPIN; ENG: DEUTZ BF6M1013
** TS#2CDAAC

REFERENCE NO.	COMPONENT ITEM	DESCRIPTION	QTY.	U/M	CHANGE DATE	CD
0-101-1	4003783	ASM CALIPER	1.000	EA	06/22/84	1
0-101-2	4001362	DISK BRAKE 14" DIA. X 3/8 BRAKE DISK.	1.000	EA	12/17/82	1
0-101-3	4002655	ASM SUPT BRKT [illegible]	1.000	EA	12/17/82	1
0-101-4	F2400175	PIN,CLEVIS	2.000	EA	12/17/82	1
0-101-5	4061311	RETAINER,PIN	1.000	EA	12/17/82	1
0-101-6	F16204	LOCKWASHER	4.000	EA	12/17/82	1
0-101-7	F1005032	CAPSCREW	4.000	EA	12/17/82	1
0-105	4003487	ASM, FILTER & BASE	1.000	EA	03/11/94	1
0-105-1	4003488	BASE FILTER SHIPPED LOOSE	1.000	EA	07/26/87	1
0-105-2	4003489	FILTER ELEMENT SHIPPED LOOSE	1.000	EA	10/12/87	1
0-106	YZ4102612	[illegible]	1.000	EA	04/13/94	1

I T E M S L I S T E D B E L O W S H I P T O

PARTS	DESCRIPTION	TOTAL QTY.
F2518716	PIN,ROLL	1.000
F37010042	O RING ARP042	1.000
R78059	SEAL CABLE	12.000
R78060	SLEEVE CONTACT	12.000
YZ100210	DUG, CONN KIT	1.000
40A2507	HDW PUMP A	1.000
	1 PER 4001576 & F2518716	
4001576	ASM SLEEVE	1.000
4003483	FILTER ELEMENT	1.000
4003488	BASE FILTER	1.000

********** END OF REPORT **********

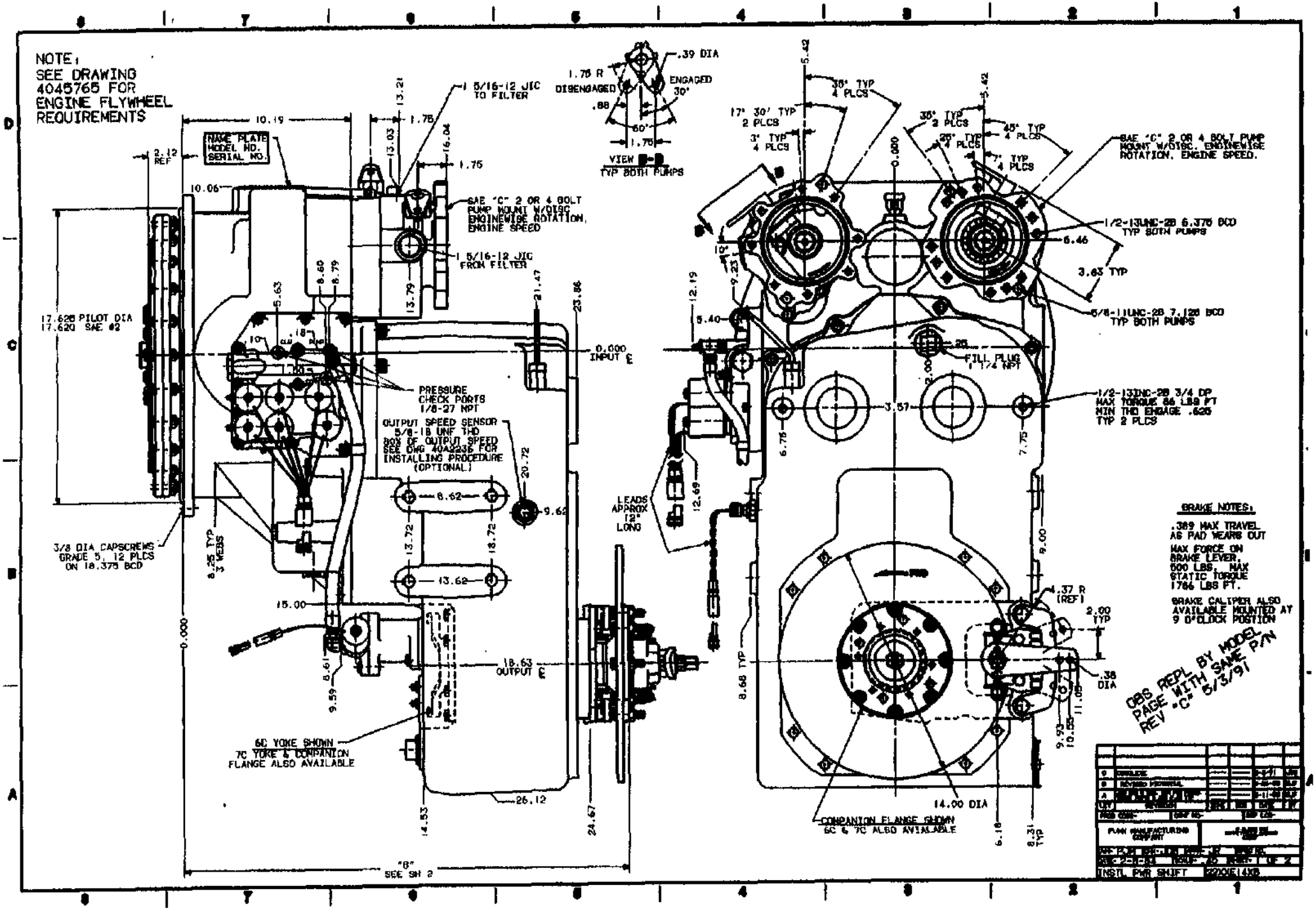
NOTE:
SEE DRAWING 4045765 FOR ENGINE FLYWHEEL REQUIREMENTS
NAME PLATE MODEL NO. SERIAL NO.
1 5/16-12 JIC TO FILTER
SAE "C" 2 OR 4 BOLT PUMP MOUNT W/DISC ENGINEWISE ROTATION, ENGINE SPEED
1 5/16-12 JIC FROM FILTER
17.626 PILOT DIA 17.620 SAE #2
3/8 DIA CAPSCREWS GRADE 5, 12 PLCS ON 18.375 BCD
PRESSURE CHECK PORTS 1/8-27 NPT
OUTPUT SPEED SENSOR 5/8-18 UNF THD 80% OF OUTPUT SPEED SEE DWG 40A2236 FOR INSTALLING PROCEDURE (OPTIONAL)
0.000 INPUT ℄
18.63 OUTPUT ℄
6C YOKE SHOWN 7C YOKE & COMPANION FLANGE ALSO AVAILABLE
"B" SEE SH 2
VIEW B-B TYP BOTH PUMPS
.39 DIA
1.78 R DISENGAGED
ENGAGED 30°
35° TYP 4 PLCS
17° 30' TYP 2 PLCS
3° TYP 4 PLCS
35° TYP 2 PLCS
45° TYP 4 PLCS
25° TYP 4 PLCS
7° TYP 4 PLCS
SAE "C" 2 OR 4 BOLT PUMP MOUNT W/DISC. ENGINEWISE ROTATION, ENGINE SPEED.
1/2-13UNC-2B 6.375 BCD TYP BOTH PUMPS
3.63 TYP
5/8-11UNC-2B 7.125 BCD TYP BOTH PUMPS
FILL PLUG 1 1/4 NPT
1/2-13UNC-2B 3/4 DP MAX TORQUE 86 LBS FT MIN THD ENGAGE .625 TYP 2 PLCS
LEADS APPROX 12" LONG
14.00 DIA
COMPANION FLANGE SHOWN 6C & 7C ALSO AVAILABLE
.38 DIA
4.37 R (REF)
2.00 TYP
BRAKE NOTES:
.369 MAX TRAVEL AS PAD WEARS OUT
MAX FORCE ON BRAKE LEVER, 600 LBS, MAX STATIC TORQUE 1786 LBS FT.
BRAKE CALIPER ALSO AVAILABLE MOUNTED AT 9 O'CLOCK POSITION
OBS REPL BY MODEL PAGE WITH SAME P/N REV "C" 5/3/91
PUMP MANUFACTURING COMPANY
INSTL PWR SHIFT

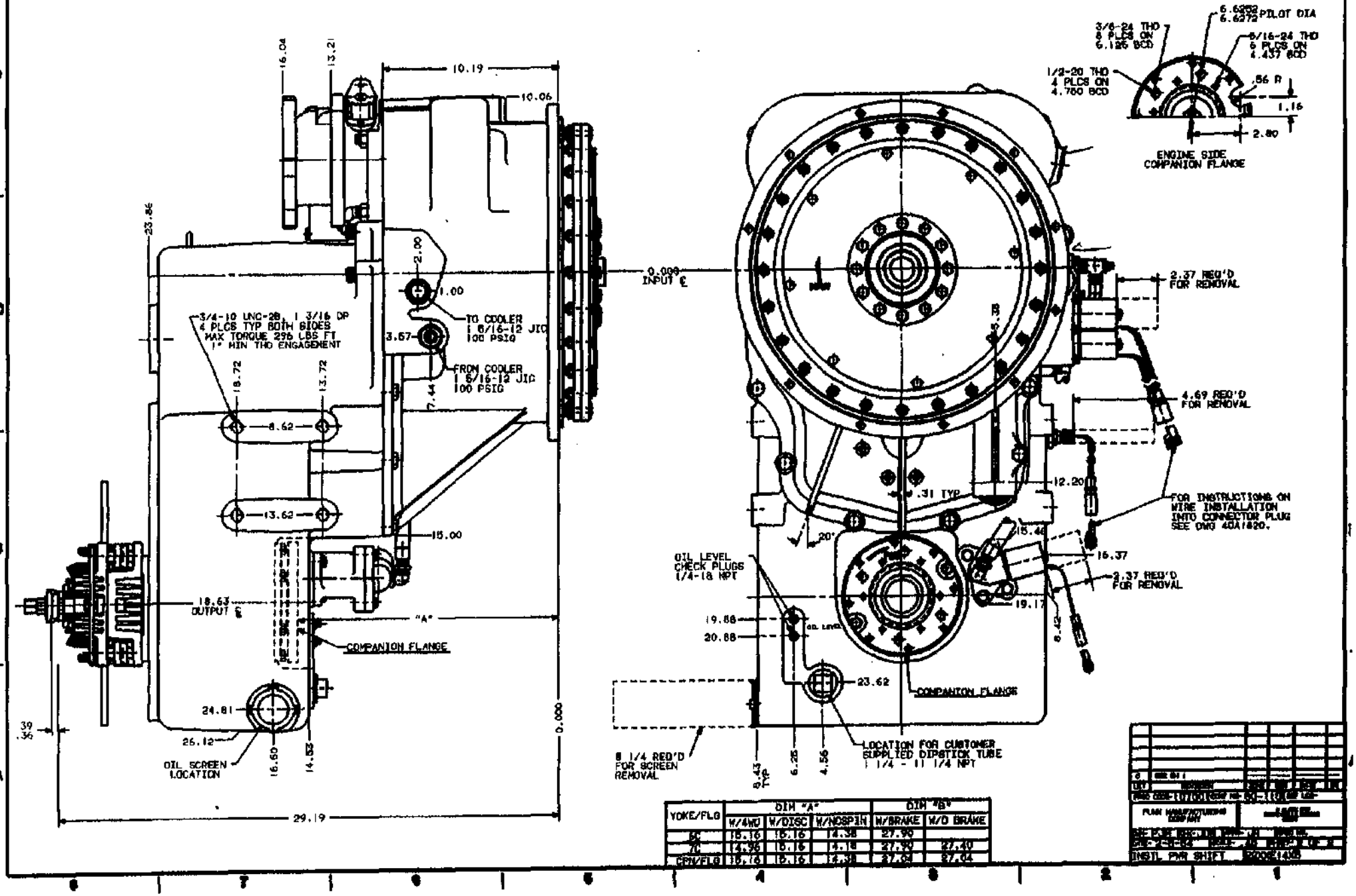

YOKE/FLG	DIM "A"			DIM "B"	
	W/4WD	W/DISC	W/NOSPIN	W/BRAKE	W/O BRAKE
5C	15.16	15.16	14.38	27.90	
7C	14.95	15.16	14.18	27.90	27.40
CPM/FLG	15.16	15.16	14.38	27.04	27.04

INSTL PWR SHIFT

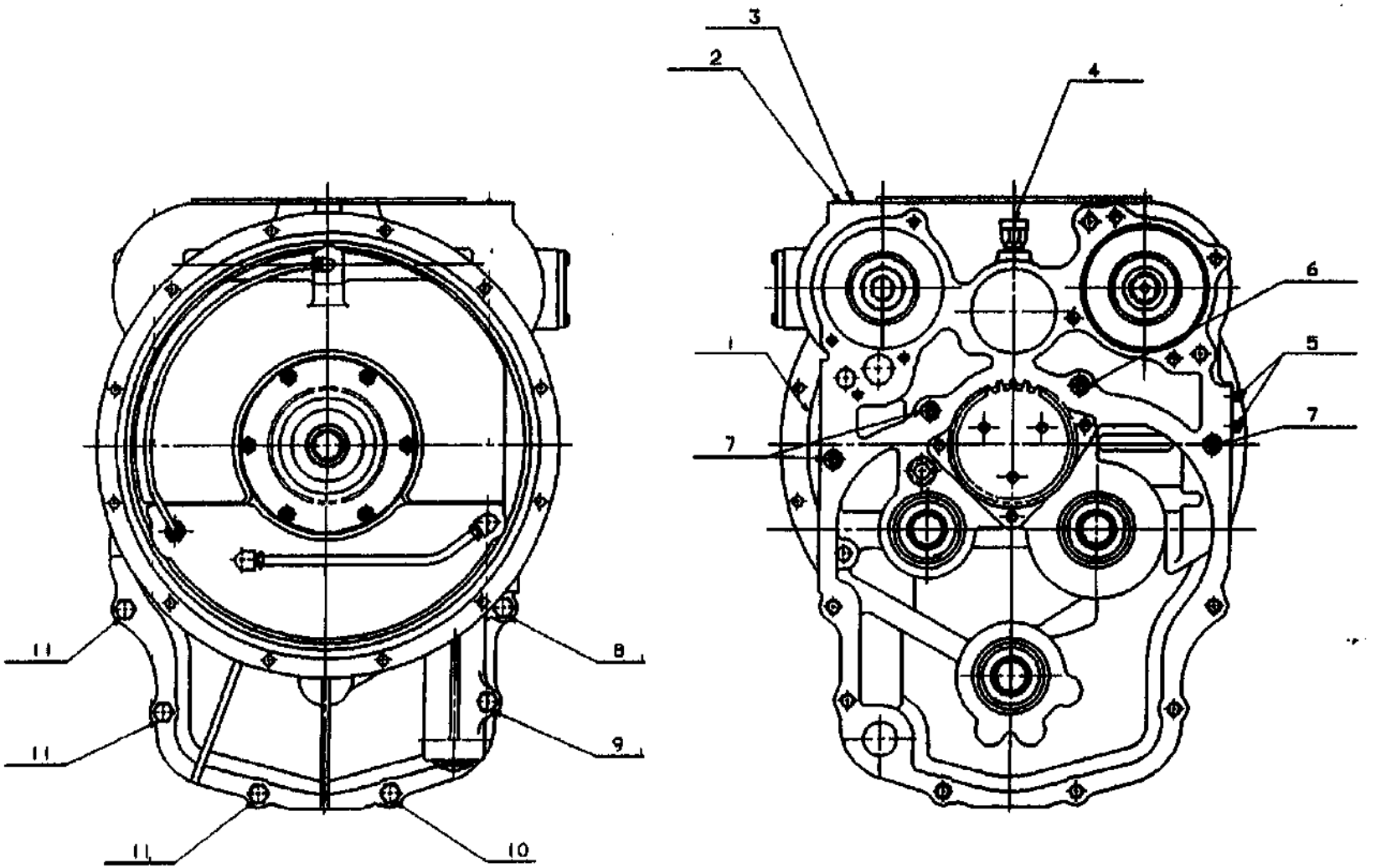

4006027 40A2350	NOTES: SAE # 2 HSG ENG & MIDSHIP W/INP SHF W/O LOCK UP W/AUX"C" PUMP W/ OR W/O DISC 2000 SERIES	NOTES:			FUNK MANUFACTURING COMPANY	
					DRN- SJF	BASEC REF# 1
					DATE- 6-21-84	
					CHK- JJV	DESCR GRP FRT CVR
					SHEET- 1 OF 1	PART# 4006028

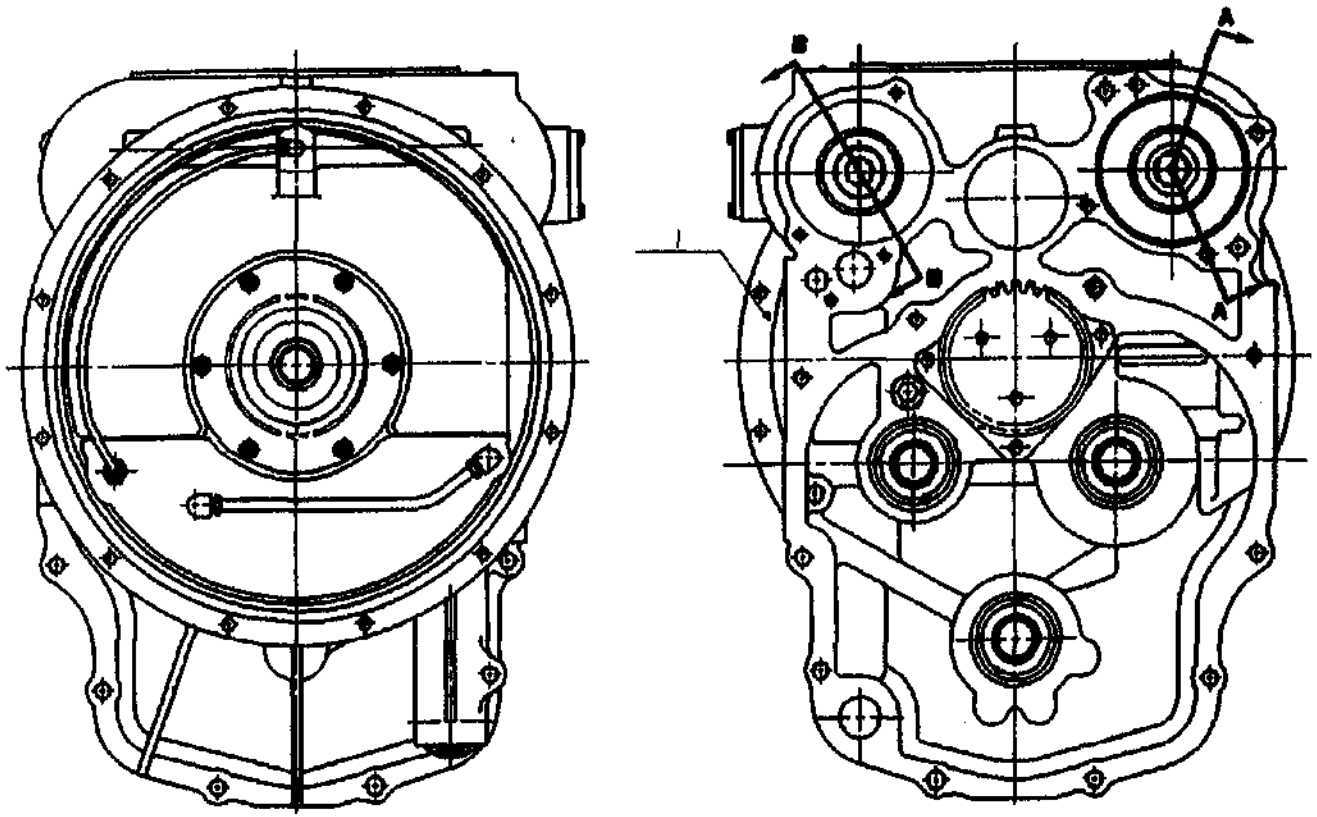

THIS DWG REQUIRES THE FOLLOWING E/W:

4005016
4005041
4005042
4005043

NOTES:

NOTES:
2000 SERIES SAE #2 HSG
W/AUX "C" PUMP W/ OR W/O DISC
W/ OR W/O LOCK UP

REF # 25
APPLY LOCTITE # 262 ON THREADS OF CAPCREWS
WHEN INSTALLING ASM INTO HOUSING.

FUNK MANUFACTURING COMPANY

DWG- B.J
DATE- 8-13-84
CHK- JV
SHEET- 1 OF 2

BASIC REF# 1-1

DESCR DWG ASM FRT C
PART# 4005019

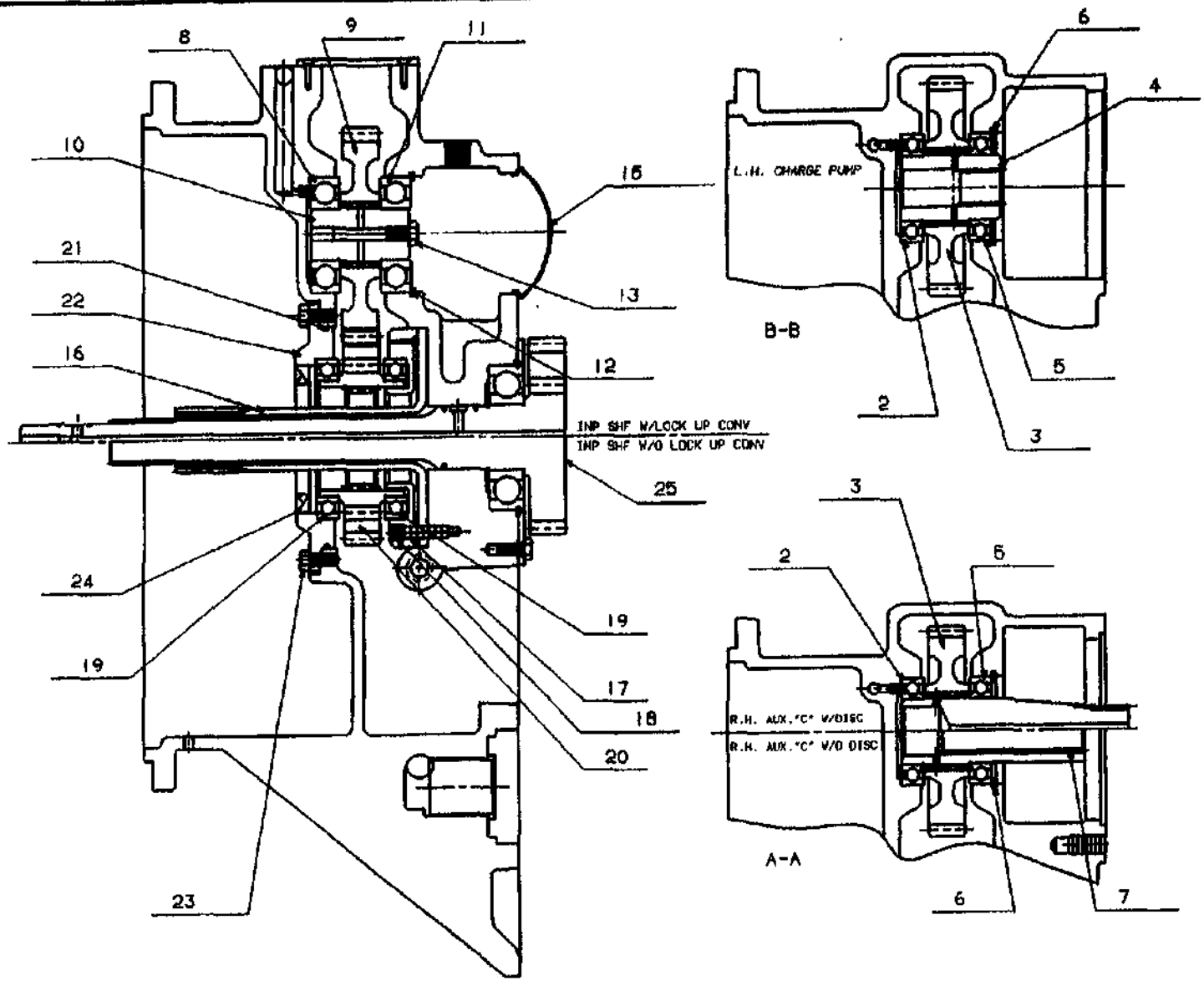

NOTES:

NOTES:
REF #15
APPLY LOCTITE #262 TO SAE "A" COVER PILOT DIA
AT INSTALLATION.

REF #23
APPLY LOCTITE #242

FUNK MANUFACTURING COMPANY				
DWN- SJF				
DATE- 6-13-84	BASIC REF# 1-1			
CHK- JV	DESCR DWG ASM FRT CVR			
SHEET- 2 OF 2	PART# 4000019			

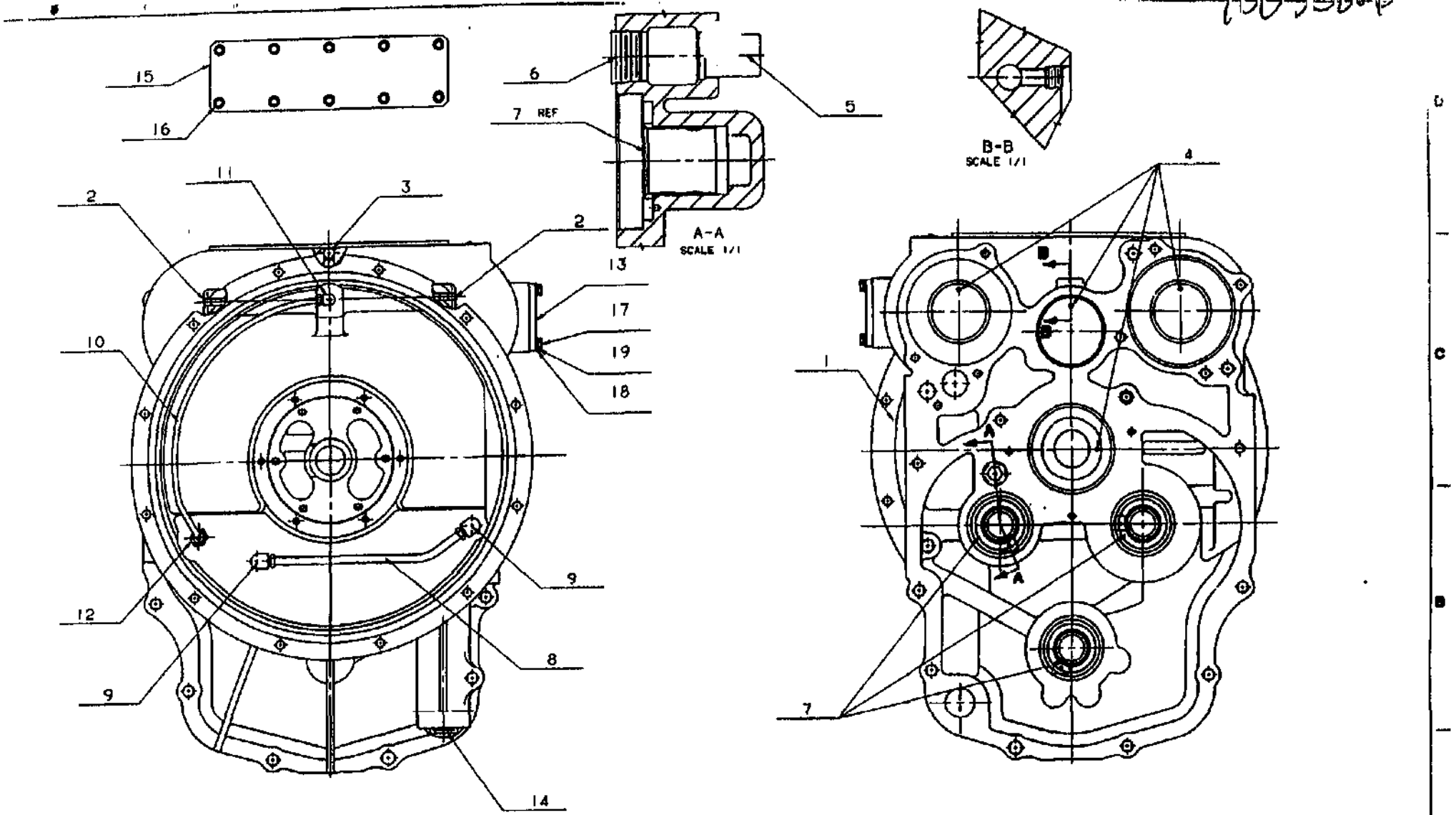

NOTES:
SAE #2 STD HBG
REF#6...APPLY SLICTITE THREAD COMPOUND.
REF#5...PRESS VALVE ASM. INTO BORE UNTIL VALVE SEAT SHOULDERS AGAINST BOTTOM OF BORE
REF# 8, 9, 10, 11, & 12...APPLY RED LOCTITE #262
REF# 15...APPLY SILICON SEALER

NOTES:
REF # 2 & 3
PRESS BALLS FLUSH TO 1/64 BELOW
REF # 7
ALIGN INDEX MARK OF SLEEVE TO CENTER OF LOCATING HOLE MARKED
REF #12 APPLY #730 WTV SILICONE SEALER OR EQUIVALENT
REF #11 TORQUE CAPSCREWS TO 90-110 LBS-IN

LET	REVISION	ZONE	DATE	BY
K	[illegible]		[illegible]	[illegible]
J	[illegible]		[illegible]	[illegible]
H	[illegible]		[illegible]	[illegible]
G	[illegible]		[illegible]	[illegible]
E	[illegible]		[illegible]	[illegible]
D	[illegible]		[illegible]	[illegible]
C	REVISE FORMAT		[illegible]	[illegible]

FUNK MANUFACTURING COMPANY

DWN- S.J.F
DATE- 6/21/84
CHK- JJV
SHEET- 1 OF 1
BASIC REF# 1-1-1
DESCR ASM FRT CVR
PART# 1005026

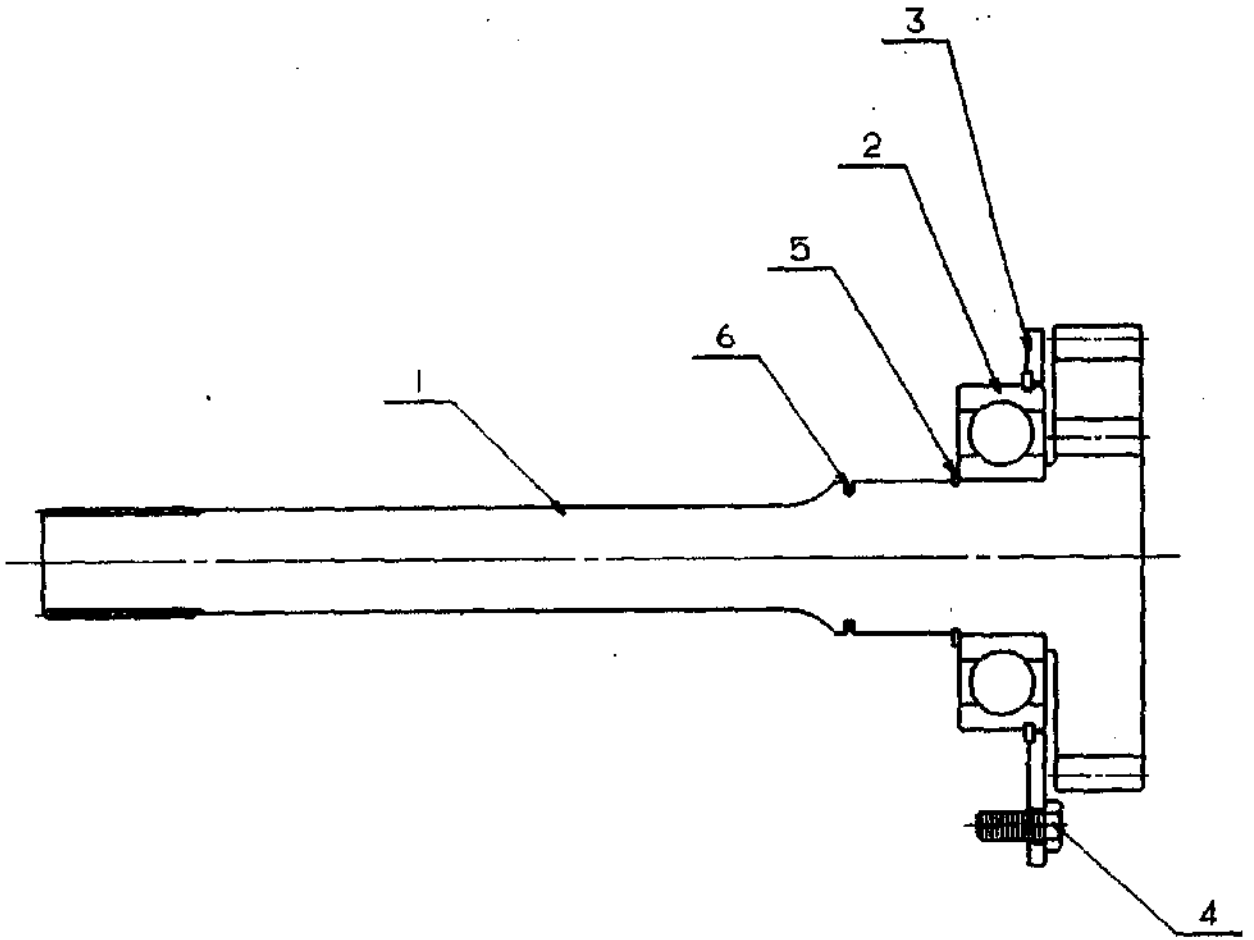

THIS DWG REPRESENTS THE FOLLOWING S/N:
4005013

NOTES:

LET	REVISION	ZONE	DATE	BY
A	REVISE FORMAT	----	2-29-88	JOS

FLINK
P.O. BOX 577
COFFEYVILLE, KANSAS
67337

DWN- SJF
DATE- 6-11-84
CHK- JJV
SHEET- 1 OF 1

BASIC REF# 1-1-25
DESCR GRP INP SHF
PART# 4005016

YZ101971

1 OF 2

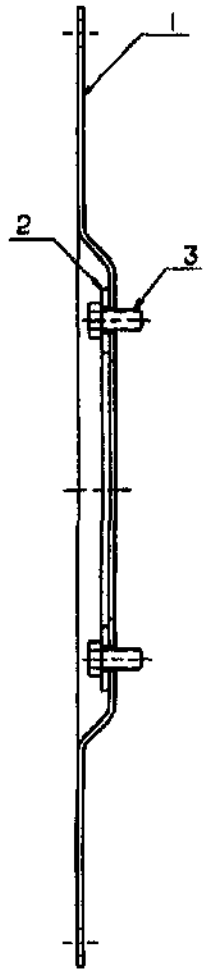

THIS DWG REPRESENTS THE FOLLOWING S/N:

YZ101688

NOTES:

TORQUE ALL FASTENERS PER JDS-047
WITHIN 20% WRENCHING ACCURACY

REF #3.....50Nm

NOTES:

DWN D. VOTH	FUNK MANUFACTURING COMPANY CONVERSVILLE, KANSAS SUBSIDIARY OF DEERE & COMPANY	
CHK J. WILMOTH		
APPROVED: JDS-005 GENERAL TOLERANCES	DATE APVD 22APR92	GRP, DRIVE PLATE
JDS-0113 DRAFTING	APP LOC 1008	
PART NO. 16100	JCT / YZ	D DF250 / YZ101971 / YZ40
CONT. NO. 9100-1448		SCALE 1:1 / METRIC / SHEET 1/2

YZ'01971
2 OF 2

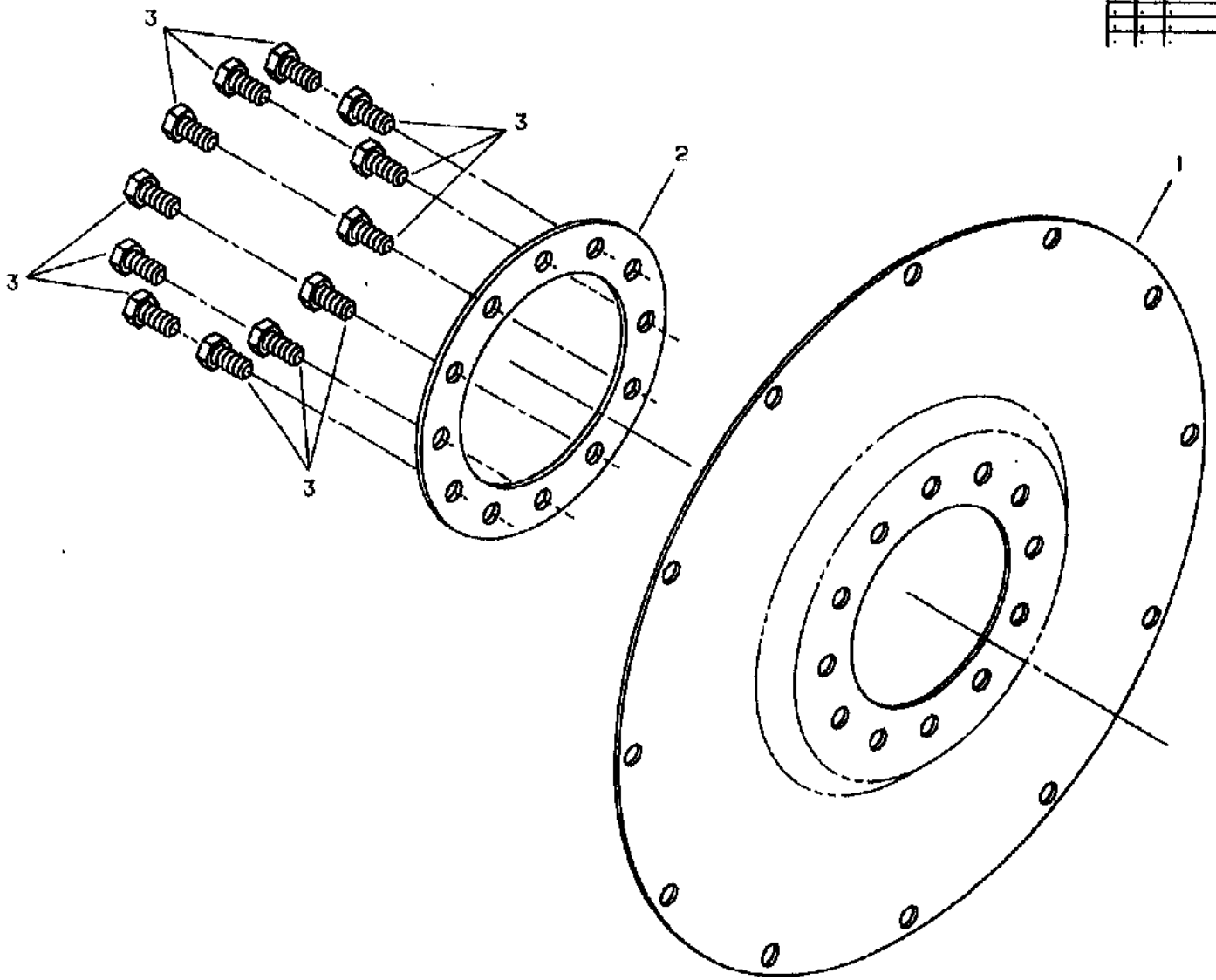

THIS DWG REPRESENTS THE FOLLOWING S/N:
Z101686

NOTES:
TORQUE ALL FASTENERS PER JDS-047
WITHIN 20% WRENCHING ACCURACY

REF #3.....50Nm

NOTES:

REFERENCES:
JDS-005 GENERAL TOLERANCES
JDS-0113 DRAFTING

DRAWN	B. FERGUSON
CHK	J. WILMOTH
APPD	J. THOMAS
DATE APPD	30.JUL.92
REP LAB	
APPD	JCT
DWG SIZE	YZ
SCALE	NONE
	METRIC
	2/2

FUNK MANUFACTURING COMPANY
COFFEYVILLE, KANSAS
SUBSIDIARY OF DEERE & COMPANY

GRP, DRIVE PLATE

D	DF260	YZ101971	YZ40

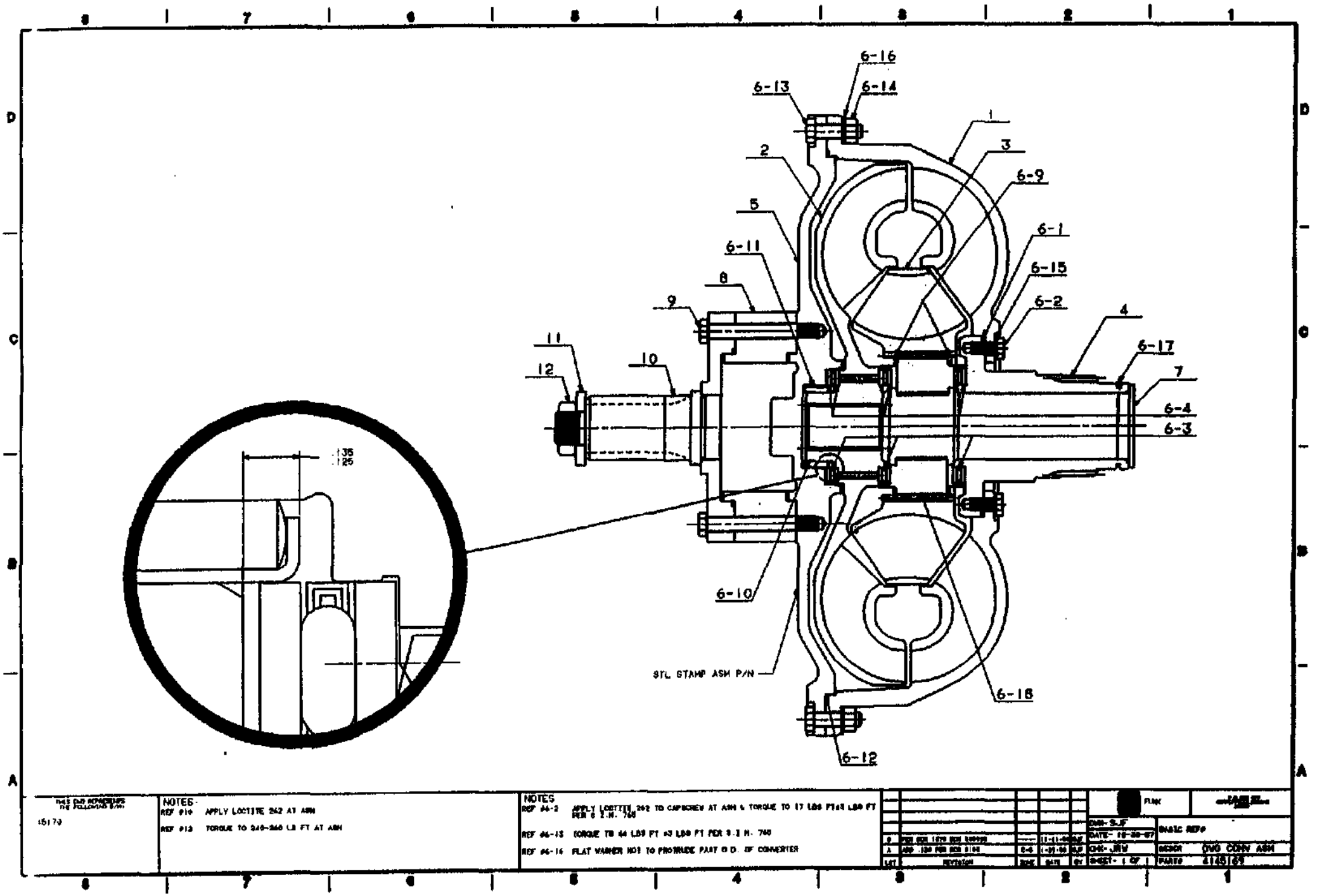
6-16
6-13
6-14
1
2
3
6-9
5
6-1
6-11
6-15
8
6-2
9
4
11
6-17
10
12
7
6-4
6-3
.135
.125
6-10
STL STAMP ASM P/N
6-18
6-12
NOTES
REF #10 APPLY LOCTITE 242 AT ASM
REF #12 TORQUE TO 240-260 LB FT AT ASM
NOTES
REF #6-2 APPLY LOCTITE 242 TO CAPSCREW AT ASM & TORQUE TO 17 LBS FT±3 LBS FT PER S.I.M. 760
REF #6-13 TORQUE TO 44 LBS FT ±3 LBS FT PER S.I.M. 760
REF #6-16 FLAT WASHER NOT TO PROTRUDE PAST O.D. OF CONVERTER
REVISION
DWG- SJF
DATE- 10-30-87
CHK- JRW
SHEET- 1 OF 1
BASIC REF#
DESCR DWG CONV ASM
PART# 4145169

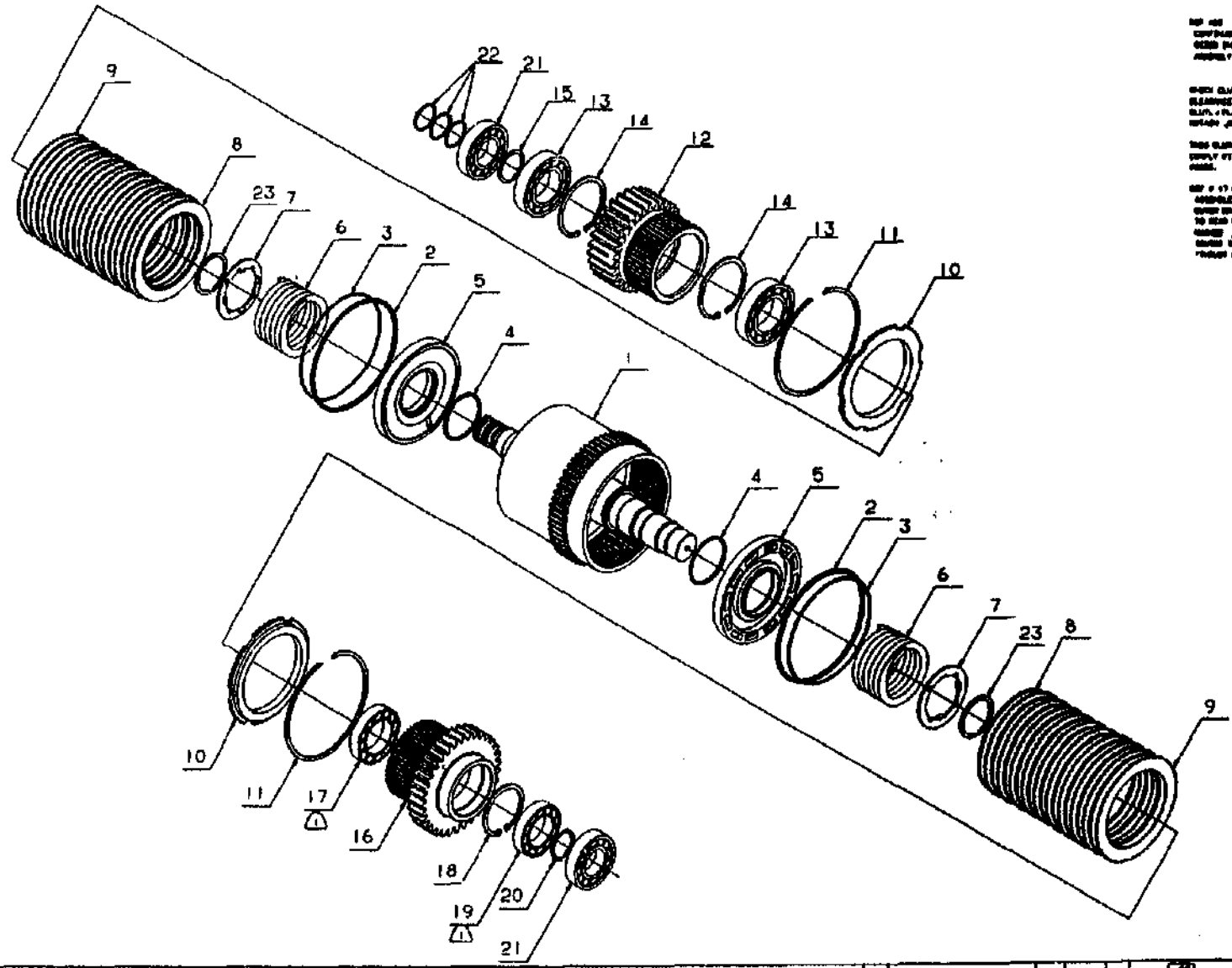

NOTES:

NOTES:

NOTES:

40A2223
4006839

LET	REVISION	ZONE	DATE	BY
C	OPERATOR AND DIRECTORS	---	11-19-86	JDB
B	REVISE FORMAT	---	3-3-86	JDB
A	CORRECTED END PROTOTYPE	8-CE	6-13-86	RLB

DWN- JW
DATE- 8-1-86
CHK- JT
SHEET- 1 OF 1

BASIC REF: 4-2
DESIGN ASM CLU 1ST
PART# 4006851

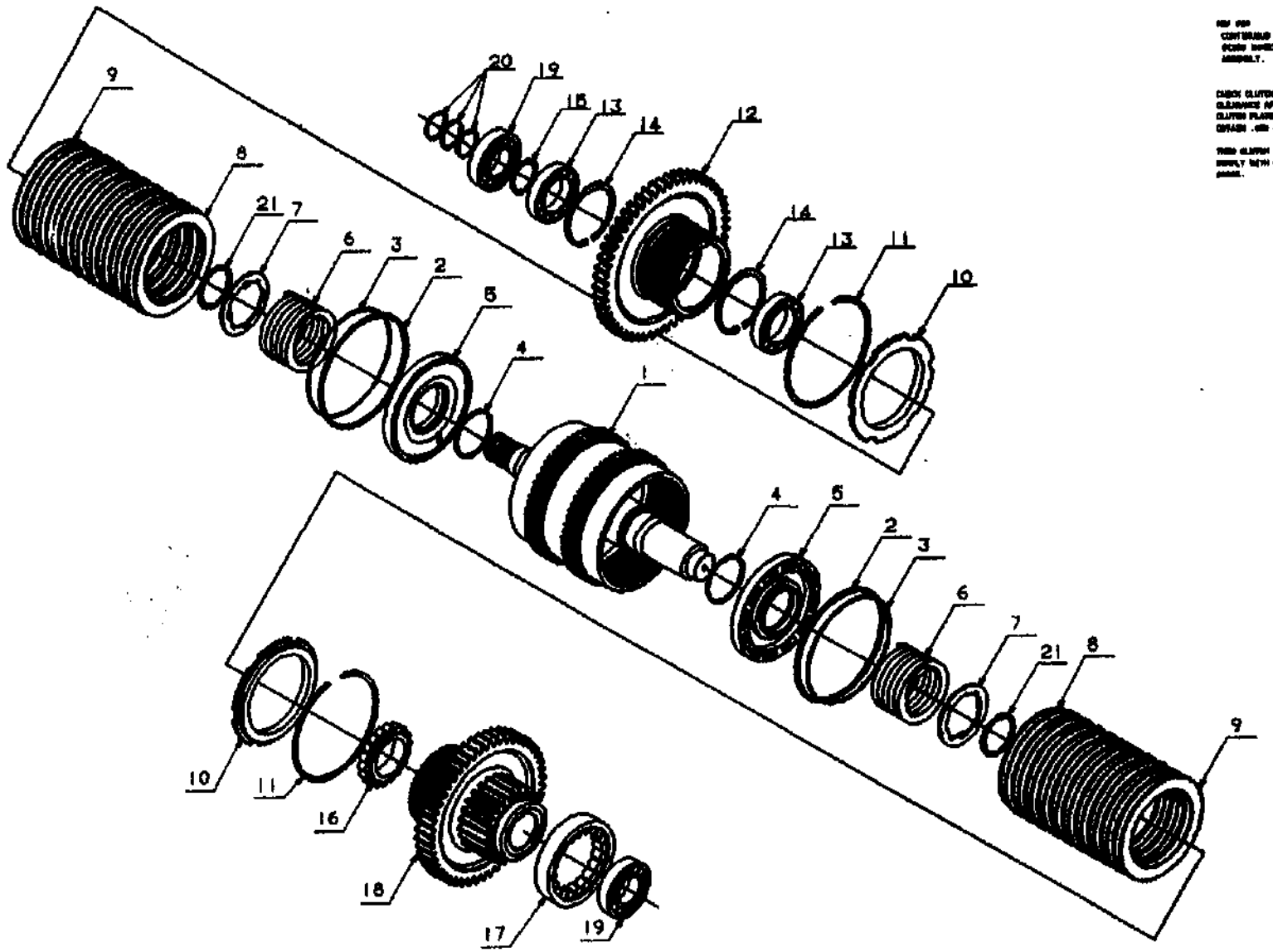

NOTES:

NOTES:

NOTES:

E	REF 4-3 WAS 4-9	A1	9-10-97	[illegible]	FUNK MANUFACTURING COMPANY
D	[illegible]	—	[illegible]	[illegible]	DWN- SJF
C	REVISE PRIMARY	—	9-17-99	[illegible]	DATE- 6-10-93
B	REVISE STACK-UP CLEARANCE NOTE	B1	[illegible]	[illegible]	CHK- JV
A	ADD ADAPTER	A2	1-31-94	JV	SHEET- 1 OF 1
LET	REVISION	ZONE	DATE	BY	

DESIGN AGM CLU SND

PART# 40A2406

A2076
A2224

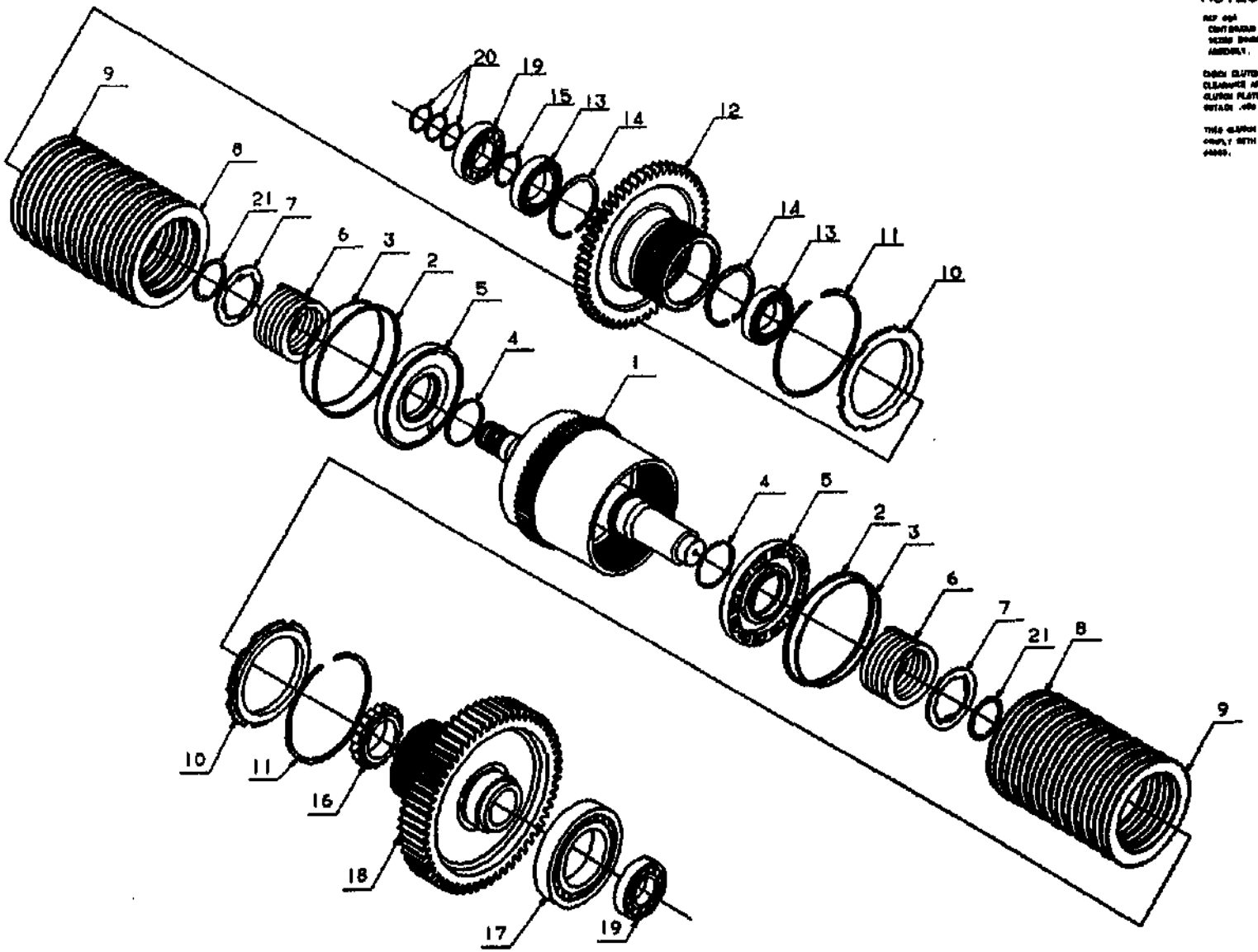

NOTES:

[illegible]

[illegible]

[illegible]

D	[illegible]	—	[illegible]	[illegible]	DWN-SJF	BASIC REF# 4-4
C	[illegible]	—	[illegible]	[illegible]	DATE- 6-13-83	
B	[illegible]	[illegible]	[illegible]	[illegible]	CHK-JV	DESIGN ASM CLU 3RD
A	[illegible]	[illegible]	[illegible]	[illegible]	SHEET- 1 OF 1	PART# [illegible]
LET	REVISION	ZONE	DATE	BY		

THIS DWG NO REMOVES THE FOLLOWING S/N:

4[illegible] 2220
4[illegible] 2070

NOTES.

NOTES

ASM N ES

1)
PRESS BEARING CUPS (#19) INTO GEAR (#2) & RETAINER (#16).

2)
SPLINE NO-SPIN ASM. (#20) INTO GEAR (#2).

3)
INSTALL RETAINER (#16).

4)
INSTALL CAPSCREWS WITH LOCTITE #262 & TORQUE TO 27 ± LBS. FT. PER S.I.M. 765.

5)
REMOVE WASHERS & BOLT HOLDING NO-SPIN ASM. (#20) TOGETHER, LETTING SPRINGS PUSH RETAINERS OUT AGAINST BEARING CUPS (#19).

6)
INSTALL TROUGH (#10) INTO MAIN HOUSING WITH CAPSCREWS (#11) & WASHERS (#12) APPLY LOCTITE #262 UNDER HEAD OF CAPSCREWS.

7)
PLACE NO-SPIN GEAR ASM. INTO TROUGH LOCATED IN MAIN HOUSING.

8)
INSTALL BEARINGS (#3-2 & #3-3) INTO SHAFT (#3-1). INSTALL SPRING RETAINER (#15) & BEARING CONES (#18 & #21) ON SHAFT (#3-1). INSTALL THIS SHAFT ASSEMBLY THROUGH ENGINE SIDE OUTPUT BORE INTO NO-SPIN ASM.

9)
INSTALL BEARING CUP (#22), OIL S (#7), & O-RING (#8) INTO BEARING RETAINER (#6) & INSTALL THIS ASM. INTO ENGINE SIDE OUTPUT BORE, THEN INSTALL RETAINER CAPSCREWS (#9).

10)
INSTALL SPRING RETAINER (#15) & BEARING CONES (#18 & #4) ONTO SHAFT (#1) & INSTALL THIS ASM. THROUGH OPPOSITE ENGINE SIDE OUTPUT BORE INTO NO-SPIN ASM.

11)
INSTALL BEARING CUP (#5) & SEAL (#2 OF REFERENCE GROUP 9) INTO OUTPUT BEARING RETAINER (#1 OF REFERENCE GROUP 9). DO NOT INSTALL O-RING AT THIS TIME.

12)
INSTALL OPPOSITE ENGINE SIDE BEARING RETAINER ONTO TRANSMISSION WITH TWO CAPSCREWS (OMIT "O" RING).

13)
PUSH RETAINER INWARD & TIGHTEN CAPSCREWS FINGER TIGHT.

14)
TO SEAT ALL COMPONENTS TIGHTEN EACH CAPSCREW TO 175 IN. LB. IN (3) EVEN STEPS. (50, 125, & 175 IN. LB.) ROTATE SHAFT AT EACH STEP. THEN LOOSEN BOTH CAPSCREWS BACK DOWN TO FINGER TIGHT.

15)
LOCK-UP OUTPUT GEAR WITH FIXTURE TO PREVENT ROTATION.

16)
TIGHTEN EACH CAPSCREW TO 60 IN. LB. & ROTATE EACH OUTPUT SHAFT.

17)
TIGHTEN EACH CAPSCREW TO 100 IN. LB. & ROTATE EACH OUTPUT SHAFT.

18)
MEASURE THE SHIM GAP WITH TAPER GAGE AT EACH CAPSCREW LOCATION. (PLACE EDGE OF TAPER GAGE ON CAPSCREW FOR A GUIDE)

19)
MAKE AN AVERAGE OF THE TWO READINGS. EXAMPLE: .040"+.047"=(.087/2)=.0435"

20)
ADD .018" TO THE SHIM GAP FOUND IN STEP #8.

21)
INSTALL "O" RING ON RETAINER, APPLY CORRECT SHIM PACK (FROM STEP #9) & TORQUE CAPSCREWS.

22)
CHECK BEARING SETTING WITH DIAL INDICATOR. SHOULD BE IN RANGE OF .0025" PRE-LOAD TO .0025" END-PLAY.

23)
INSTALL EXPANSION & CUP PLUGS (#13 & 14) USING LOCTITE # 262 ON O.D. OF PLUGS.

24)
INSTALL PIPE PLUG (#23) USING SLICTITE THREAD COMPOUND.

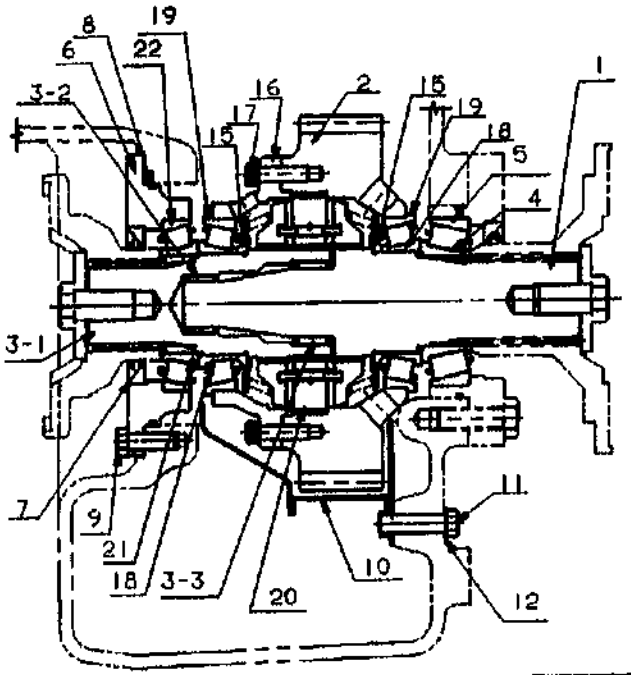

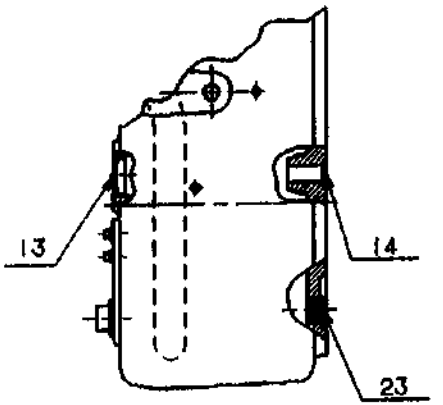

THIS DWG REPRESENTS THE FOLLOWING B-M: YZ101590	NOTES:					FUNK MANUFACTURING COMPANY	
						DWN- TEW / DATE- 11-26-91	BASIC REF# 5
						CHK- SJF	DESCR GRP NO-SPIN
		LST	REVISION	ZONE	DATE	BY SHEET- 1 OF 1	PART# YZ101647

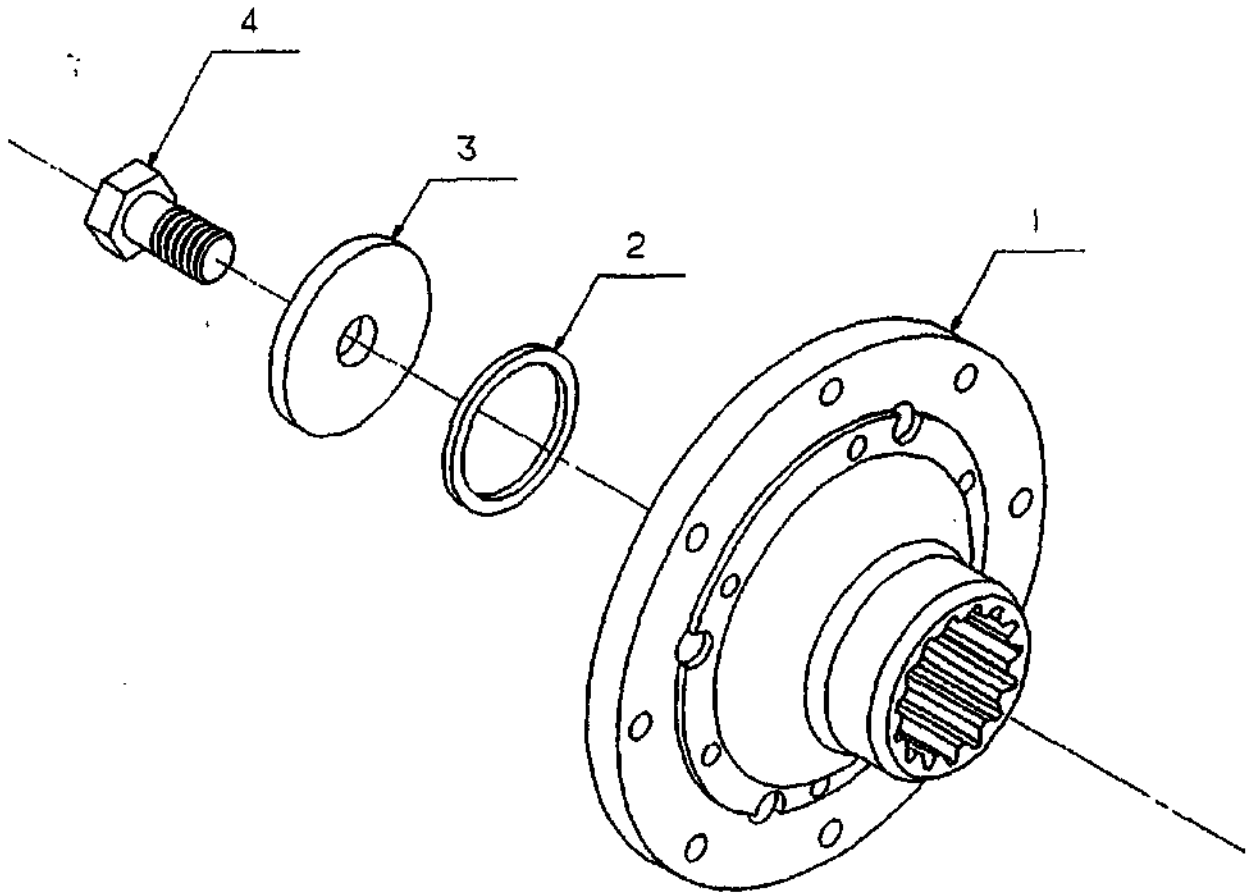

THIS DWG REPRESENTS THE FOLLOWING B/M

40A2231

NOTES:
REF #4
LOCTITE 242

LET	REVISION	ZONE	DATE	BY
C	REDRAWN AS ISOMETRIC	---	12-13-88	JOS
B	REVISE REF #4 PER ECN 51898	---	3-14-88	JOS
A	REVISE FORMAT	---	2-17-88	JOS

FUNK

P.O. BOX 377
COFFEYVILLE, KANSAS
67337

DWN- SJF
DATE- 7-6-83
CHK- JJV
SHEET- 1 OF- 1

BASIC REF# 6
DESCR GRP FLG CPN
PART# 40A2415

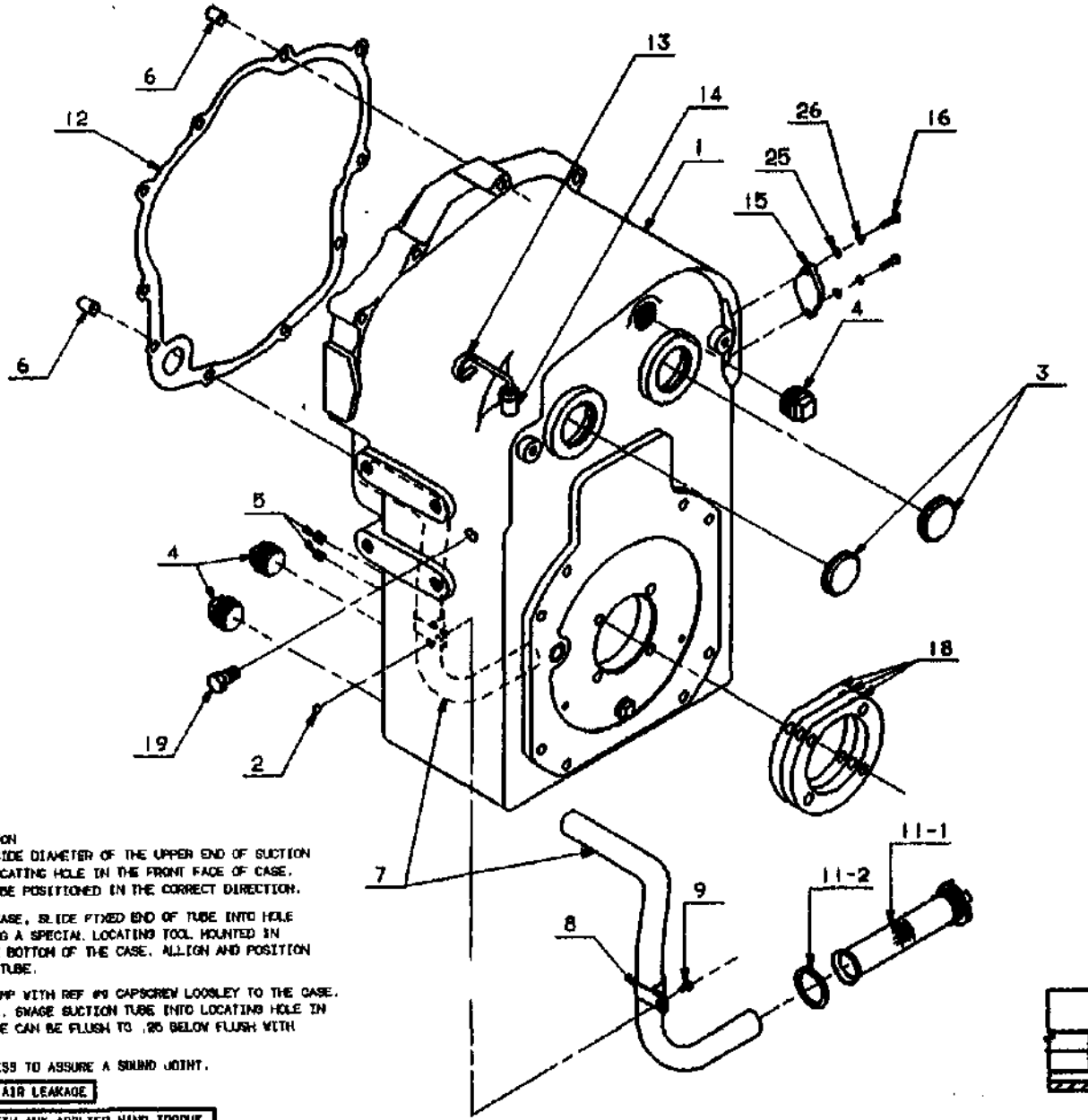

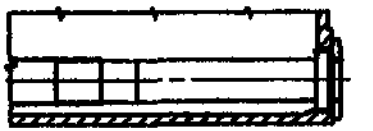

NOTE:

REF #7 SUCTION TUBE INSTALLATION
APPLY LOCTITE #609 TO THE OUTSIDE DIAMETER OF THE UPPER END OF SUCTION TUBE AND INSIDE DIAMETER OF LOCATING HOLE IN THE FRONT FACE OF CASE.
PLACE TUBE CLAMP ON SUCTION TUBE POSITIONED IN THE CORRECT DIRECTION.

PLACE SUCTION TUBE INTO MAIN CASE, SLIDE FIXED END OF TUBE INTO HOLE IN FRONT FACE OF HOUSING. USING A SPECIAL LOCATING TOOL MOUNTED IN THE SUCTION SCREEN HOLE IN THE BOTTOM OF THE CASE. ALLIGN AND POSITION THE BOTTOM END OF THE SUCTION TUBE.

ATTACH REF #8 SUCTION TUBE CLAMP WITH REF #9 CAPSCREW LOOSLEY TO THE CASE. USING APPROPRIATE SWAGING TOOL. SWAGE SUCTION TUBE INTO LOCATING HOLE IN FRONT FACE OF CASE. END OF TUBE CAN BE FLUSH TO .25 BELOW FLUSH WITH FRONT FACE OF CASE.

CHECK TUBE AFTER SWAGING PROCESS TO ASSURE A SOUND JOINT.

SWAGE JOINT MUST NOT HAVE ANY AIR LEAKAGE

SWAGE JOINT MUST NOT ROTATE WITH ANY APPLIED HAND TORQUE.

FINISH TIGHTENING REF #8 CLAMP WITH REF #9 CAPSCREW TO CASE.

THIS DWG REPRESENTS THE FOLLOWING B/M:

YZ101399

NOTES:

REF #3 - APPLY LOCTITE #262 TO O.D. OF EXPANSION PLUGS AT ASM
REF #5 & 19 - APPLY LA-CO SLIC-TITE PASTE W/TEFLON HVY DUTY THD SEALING COMPOUND TO THDS DURING ASM
REF #15 - APPLY #732 RTV SILICONE SEALER OR EQUIVALENT
REF #16 - TORQUE CAPSCREWS 98 TO 116 LBS IN

LET	REVISION	ZONE	DATE	BY
A	ADD REF NO 26 & 28 ECN 920044 REV SUCTION TUBE ASM NOTES		02FEB92	TKH

FUNK MANUFACTURING COMPANY

P.O. BOX 577 COFFEYVILLE, KANSAS 67337

DWN- SLM
DATE- 1-7-92
CHK- SJF
SHEET- 1 OF 1

BASIC REF# 7
DESCR DWG GRP MAIN CASE
PART# YZ101399

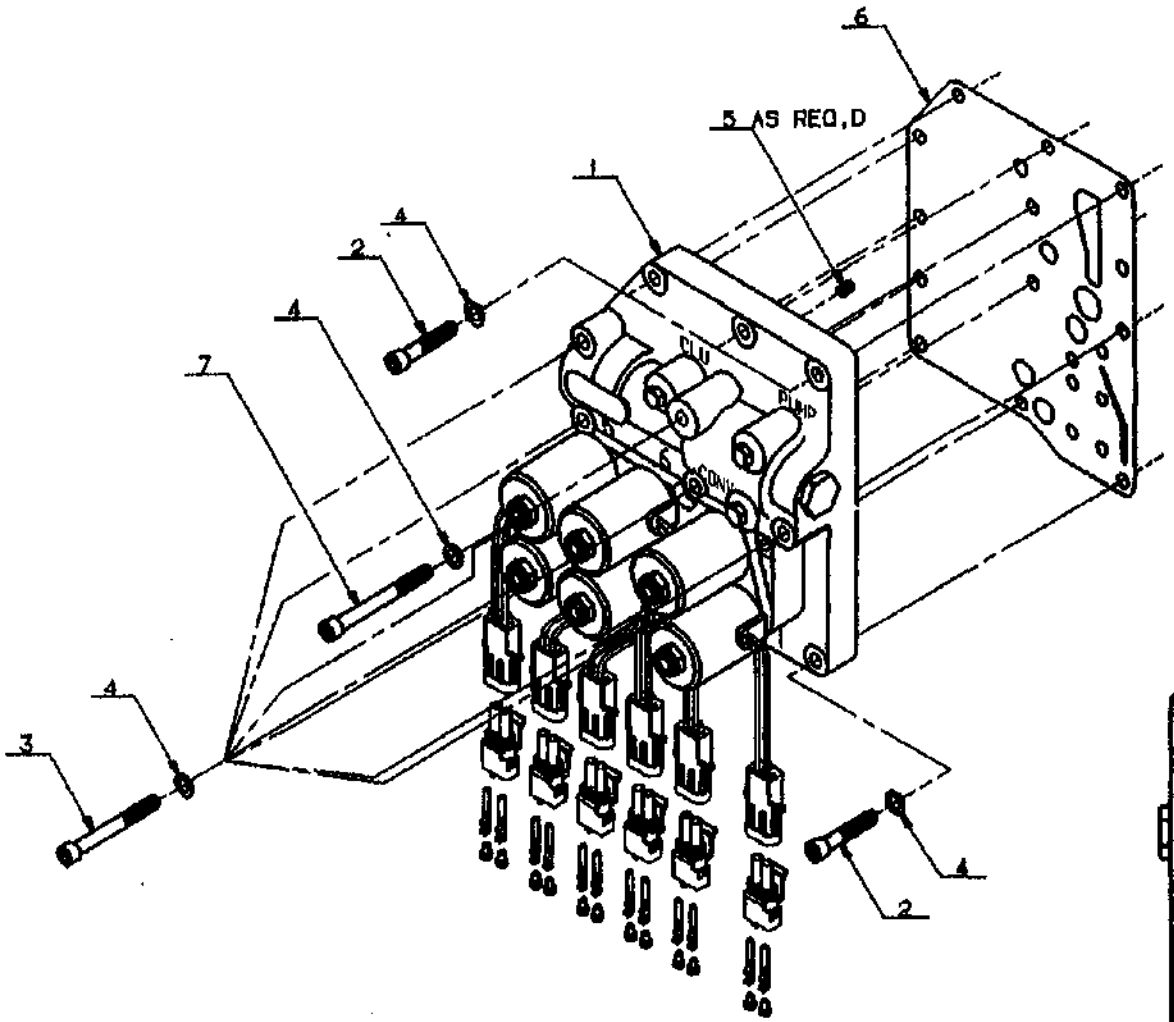

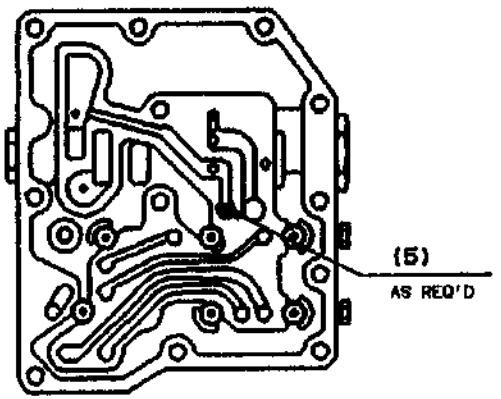

THIS DWG REPRESENTS THE FOLLOWING B/M:

Z100663	YZ100605
Z100676	YZ100615
Z100677	YZ100617
Z100597	YZ100678

NOTES:
24V CONNECTOR PIN "A" (GREEN WIRE) IS POSITIVE (+)
24V CONNECTOR PIN "B" (BLACK WIRE) IS NEGATIVE (-)
12V CONNECTOR PIN "A" (RED WIRE) IS POSITIVE (+)
12V CONNECTOR PIN "B" (BLACK WIRE) IS NEGATIVE (-)

LET	REVISION	ZONE	DATE	BY

FUNK MANUFACTURING COMPANY

DWN- JDS	BASIC REF# 8
DATE- 10/26/90	
CHK- SJF	DESCR DWG GRP VLV ELEC
SHEET- 1 OF 1	PART# YZ100598

REF #8
BALL TO BE INSTALLED FLUSH TO .03 BELOW

REF #14
SHIM MAIN REGULATOR WITH REF #12 SHIMS AS REQ'D PER APPLICABLE TEST SPEC AND MODEL.

REF #27
TORQUE STOP NUT TO 30-35 LBS. IN.

REF #28
APPLY LOCTITE THREAD COMPOUND TO THREADS OF PLUGS AT ASM.

REF #29
TO INSTALL SOCKET INTO CONNECTOR:
PUSH PIN INTO CONNECTOR FROM THE REAR UNTIL LOCKED IN PLACE.
FIRMLY SEAT SEALS. USING PACKARD CABLE SEAL, INSERT TOOL P/N 12033495. CLOSE FIRMLY SEAT SEALS. USING PACKARD CABLE

TO REMOVE SOCKET FROM CONNECTOR:
INSERT REMOVAL TOOL P/N 12014012 INTO CONNECTOR ON THE SIDE OPPOSITE THE WIRE. THE TOOL MUST REMAIN IN PLACE WHILE THE WIRE IS PULLED GENTLY FROM THE REAR OF THE CONNECTOR.

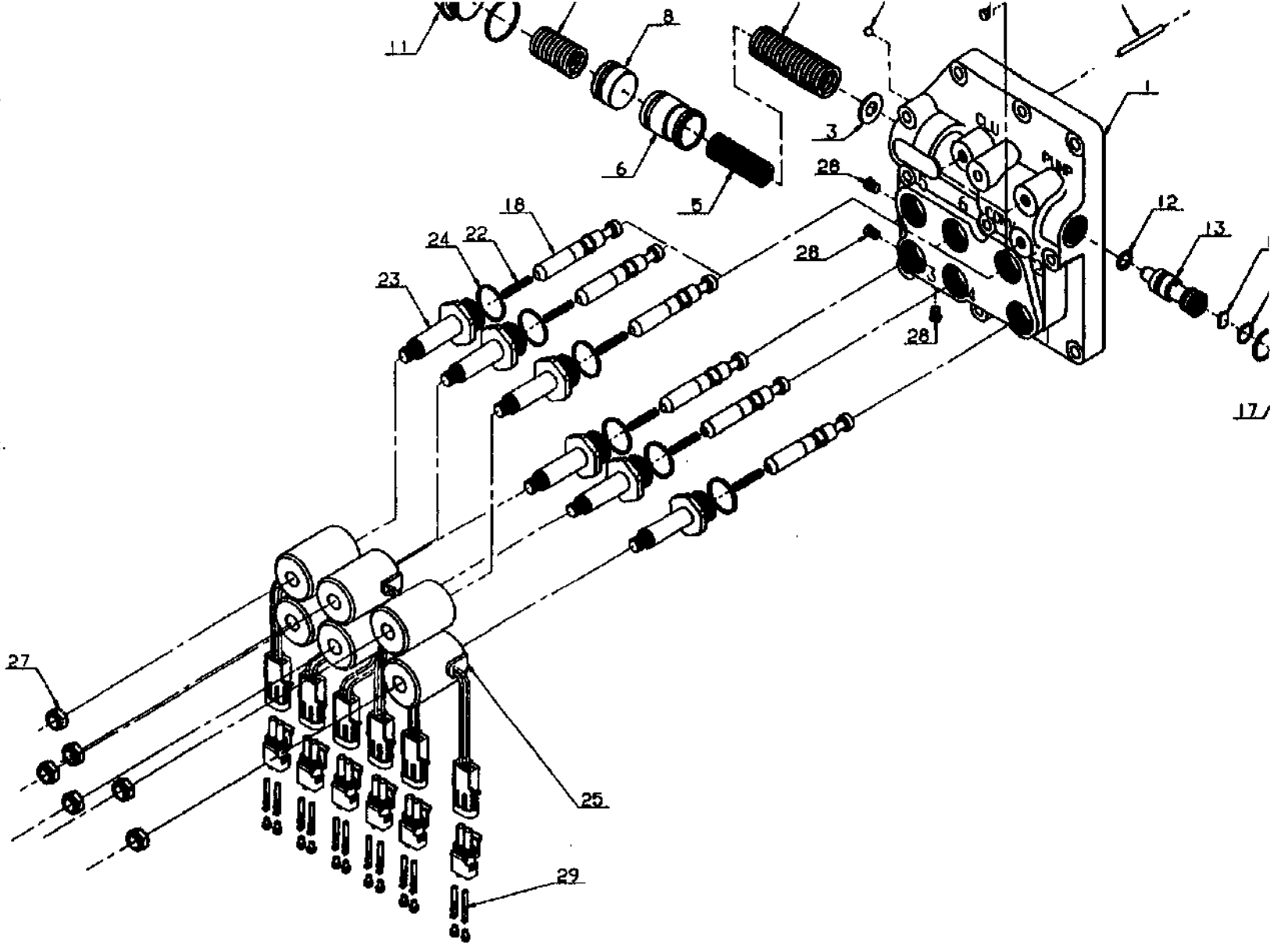

THIS DWG REPRESENTS THE FOLLOWING B/M:

12+00594
12 00634
12 00664

NOTES:
24V CONNECTOR PIN "A" (GREEN WIRE) IS POSITIVE (+)
24V CONNECTOR PIN "B" (BLACK WIRE) IS NEGATIVE (-)
12V CONNECTOR PIN "A" (RED WIRE) IS POSITIVE (+)
12V CONNECTOR PIN "B" (BLACK WIRE) IS NEGATIVE (-)

LET	REVISION	ZONE	DATE	BY

FUNK MANUFACTURING COMPANY

DWN- JOS
DATE- 10/26/90
CHK- SJF
SHEET- 1 OF 1

BASIC REF# 8-
DESCR DWG ASM VLV E
PART# YZ100596

4 3 2 1

ES:
/2
ALL TO BE INSTALLED FLUSH TO .03
BELOW FLUSH.

REF #14
SHIM MAIN REGULATOR WITH REF #12
SHIMS AS REQ'D PER APPLICABLE TEST
SPEC AND MODEL.

REF #27
TORQUE STOP NUT TO 30-35 LBS. IN.

REF #28
APPLY SLICTITE THREAD COMPOUND TO
THREADS OF PLUGS AT ASM.

REF #29
TO INSTALL SOCKET INTO CONNECTOR:
PUSH PIN INTO CONNECTOR FROM THE REAR
UNTIL LOCKED IN PLACE.
FIRMLY SEAT SEALS, USING PACKARD CABLE
SEAL INSERT TOOL P/N 12033490. CLOSE
FIRMLY SEAT SEALS, USING PACKARD CABLE

TO REMOVE SOCKET FROM CONNECTOR:
INSERT REMOVAL TOOL P/N 12014012 INTO
CONNECTOR ON THE SIDE OPPOSITE THE WIRE.
THE TOOL MUST REMAIN IN PLACE WHILE
THE WIRE IS PULLED GENTLY FROM THE
REAR OF THE CONNECTOR.

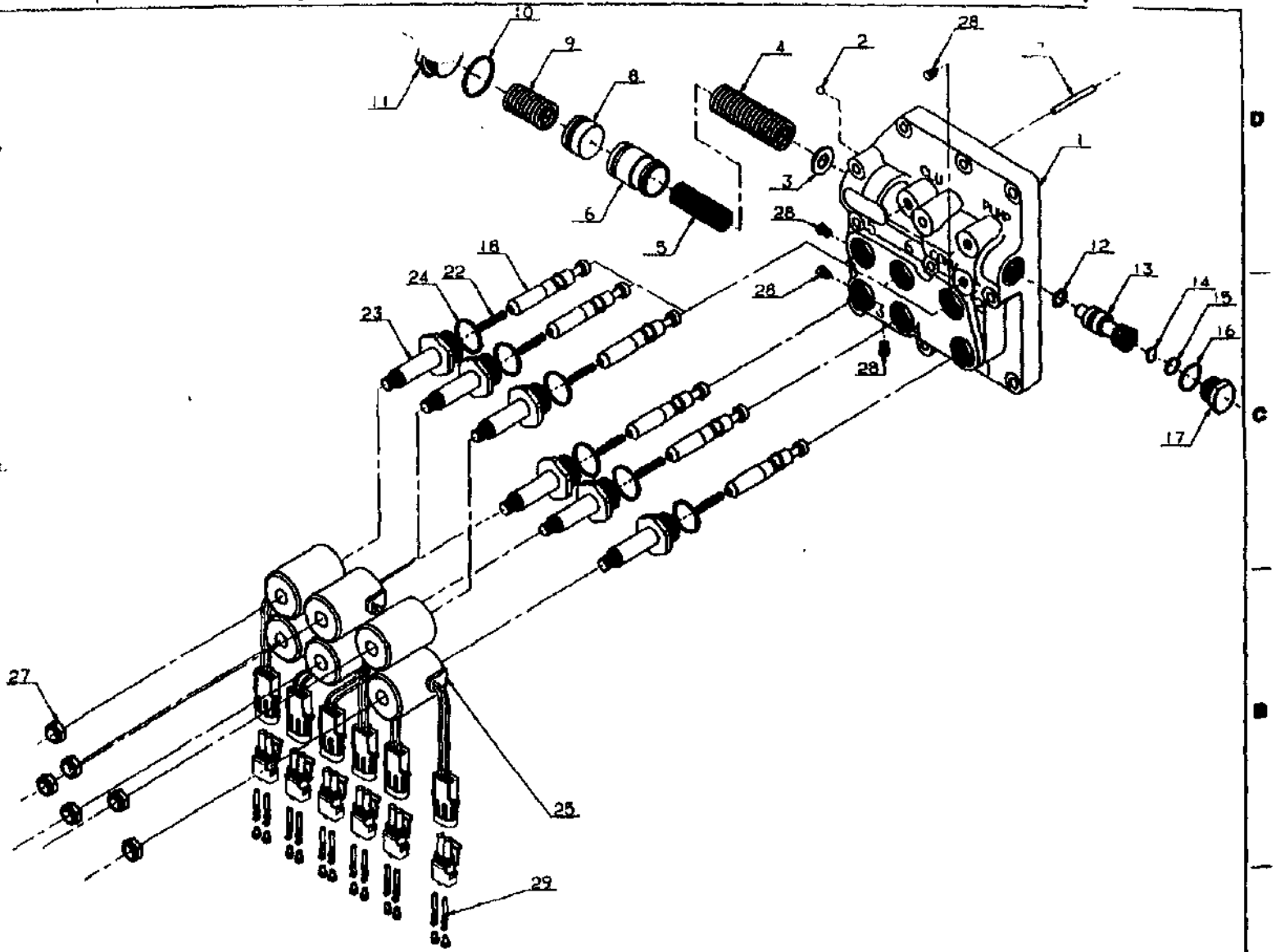

THIS DWG REPRESENTS
THE FOLLOWING B/M:

YZ100594
YZ100604
YZ100664

NOTES:
24V CONNECTOR PIN "A" (GREEN WIRE) IS POSITIVE (+)
24V CONNECTOR PIN "B" (BLACK WIRE) IS NEGATIVE (-)
12V CONNECTOR PIN "A" (RED WIRE) IS POSITIVE (+)
12V CONNECTOR PIN "B" (BLACK WIRE) IS NEGATIVE (-)

LET	REVISION	ZONE	DATE	BY

FUNK MANUFACTURING COMPANY

P.O. BOX 977
COFFEYVILLE, KANSAS
67337

DWN- JOS	BASIC REF# 8-1
DATE- 10/26/90	
CHK- SJF	DESCR DWG ASM VLV ELEC
SHEET- 1 OF 1	PART# YZ100596

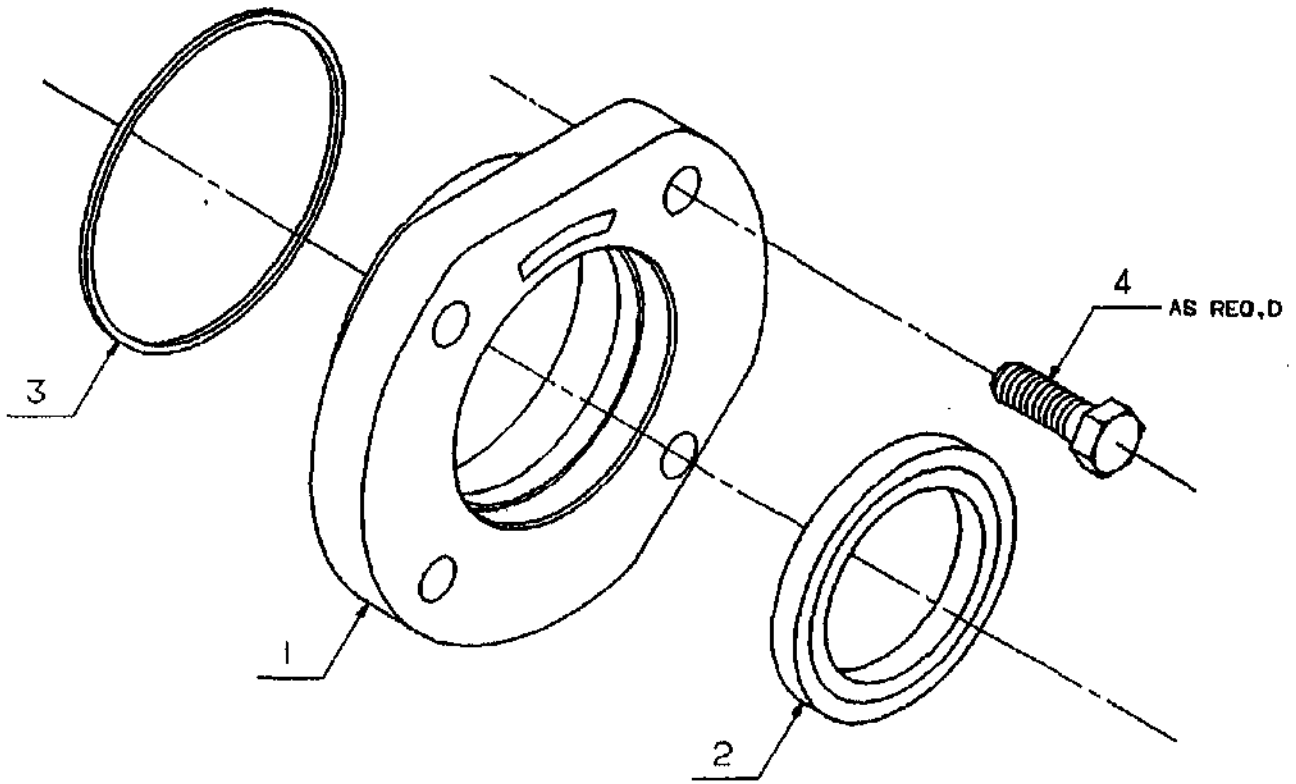

THIS DWG REPRESENTS THE FOLLOWING B/M

40A2056
40A2061

NOTES:

LET	REVISION	ZONE	DATE	BY
B	REDRAWN AS ISOMETRIC	---	12-16-88	JOS
A	REVISE FORMAT	---	2-17-88	JOS

FUNK

P.O. BOX 877
COFFEYVILLE, KANSAS
67337

DWN- SJF
DATE- 7-6-83
CHK- JJV
SHEET- 1 OF 1

BASIC REF# 9
DESCR GRP OUT RET
PART# 40A2419

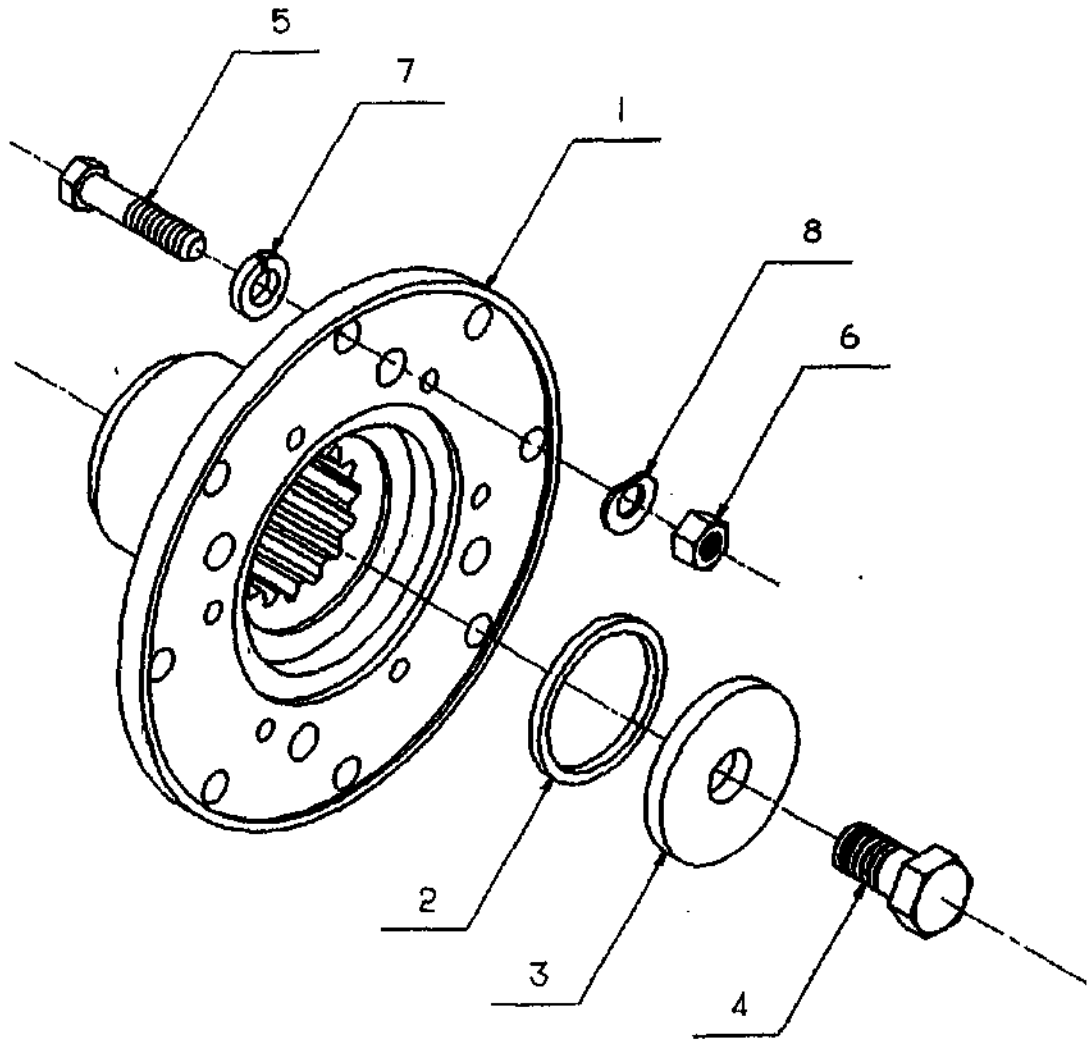

THIS DWG REPRESENTS THE FOLLOWING B/M

40A2240
A102442

NOTES:
REF #4
LOCTITE 242

LET	REVISION	ZONE	DATE	BY
D	PER DCR #2322 ECN #890041	---	6-12-89	SJF
C	REDRAWN AS ISOMETRIC	---	2-6-89	JOS
B	REVISE REF #4 PER ECN 51898	---	3-14-88	JOS
A	REVISE FORMAT	---	2-17-88	JOS

FUNK MANUFACTURING COMPANY

P.O. BOX 877 COFFEYVILLE, KANSAS 67337

DWN- SJF
DATE- 7-6-83
CHK- JJV
SHEET- 1 OF 1

BASIC REF# 10
DESCR GRP FLG CPN
PART# 40A2424

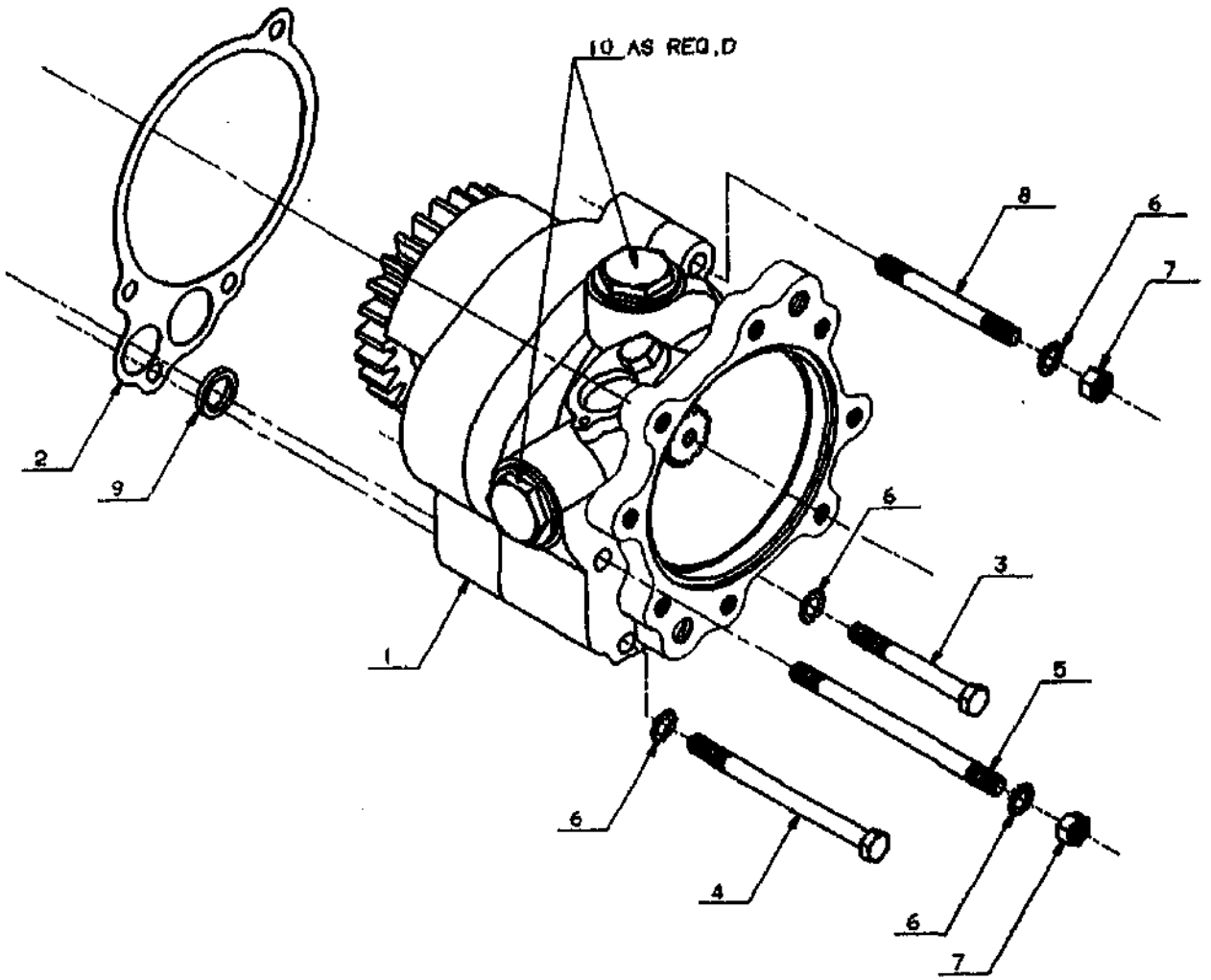

THIS DWG REPRESENTS THE FOLLOWING B/M:

40A2059
40A2352
4005318

NOTES:
GEAR PUMP USED ON 2000 SERIES
SAE #2 OR #3 HSG W/O DISC
40A2059 CHARGE PUMP USED WITH SAE # 3 HSG.
40A2352 CHARGE PUMP USED WITH SAE # 2 HSG.
4005318 CHARGE PUMP USED WITH SAE # 2 HSG.

LET	REVISION	ZONE	DATE	BY
G	PER DCR# 3406 ECN# 900424	-----	9-7-90	DGV
E	REDRAWN AS ISOMETRIC	-----	3-17-89	JOB
D	REVISE FORMAT	-----	2-17-88	JOB
C	REVISED & REDRAWN	-----	4-2-87	JJV
B	REVISE PICTORIAL	-----	3-02-86	SJF
A	REVISE PER ECN #49753	-----	2-18-85	TRH

FUNK MANUFACTURING COMPANY

DWN- SJF
DATE- 6-22-83
CHK- JJV
SHEET- 1 OF 1

BASIC REF# 11
DESCR GRP CHRG PUMP
PART# 40A2425

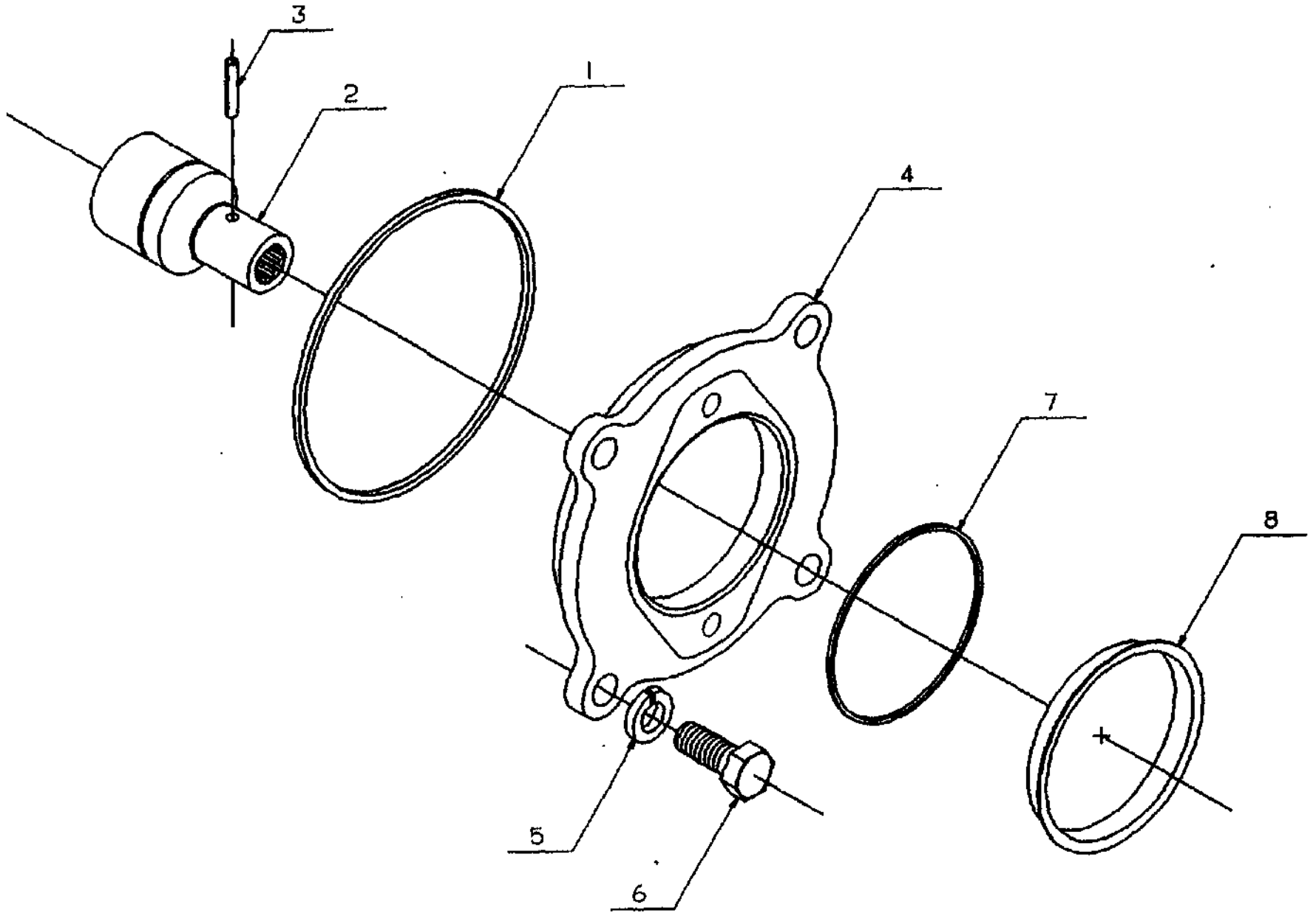

THIS DWG REPRESENTS THE FOLLOWING B/M:

40A2507

NOTES:
REF # 2 & 3
THESE ITEMS SHIP LOOSE.

LET	REVISION	ZONE	DATE	BY
B	REDRAWN AS ISOMETRIC	---	6-28-88	JCS
A	REVISE FORMAT	---	2-18-88	JCS

FUNK

DWN- SJF
DATE- 9-26-83
CHK- JJV
SHEET- 1 OF 1

BASIC REF# 12
DESCR GRP HDW PUMP "A"
PART# 40A2450

UNA2432

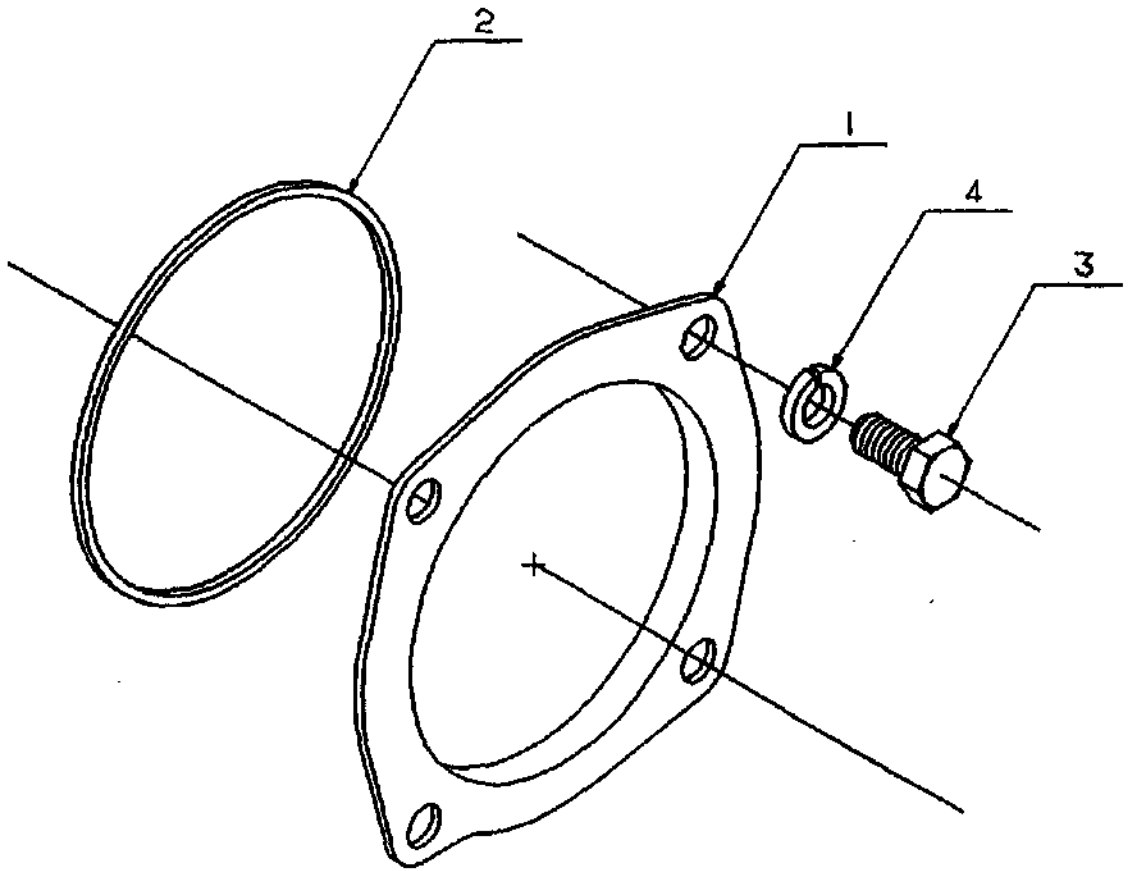

THIS DWG REPRESENTS THE FOLLOWING S/N:

4001842
40A2071A

NOTES:

LET	REVISION	ZONE	DATE	BY
C	REVISE PICTORIAL	---	8-26-89	JOB
B	REDRAWN AS ISOMETRIC	---	8-13-86	JOB
A	REVISE FORMAT	---	8-18-86	JOB

[redacted] FUNK

DWN- SJF
DATE- 6-23-83
CHK- JJV
SHEET- 1 OF 1

BASIC REF# 13
DESCR GRP CVR PLT
PART# 40A2432

ASM. NOTES

REMOVE THE SHORT CENTER CAPSCREW THAT COMES WITH THE CALIPER ASM. (REF. #1).
SLIDE CALIPER ASM. OVER DISK AND PLACE CLEVIS PINS (REF. #4) THRU CALIPER AND SUPPORT BRACKET (REF. #3)
REPLACE THE WASHER AND CAPSCREW FROM CALIPER ASM. THRU HOLE IN CLEVIS PIN RETAINER (REF. #5).
WITH PIN RETAINER NEXT TO THE CALIPER CASTING AND THE WASHER BETWEEN THE PIN RETAINER AND THE CAPSCREW HEAD, TORQUE CAPSCREW INTO CALIPER CASTING 30 TO 35 LBS. FT. TO LOCK CAPSCREW.

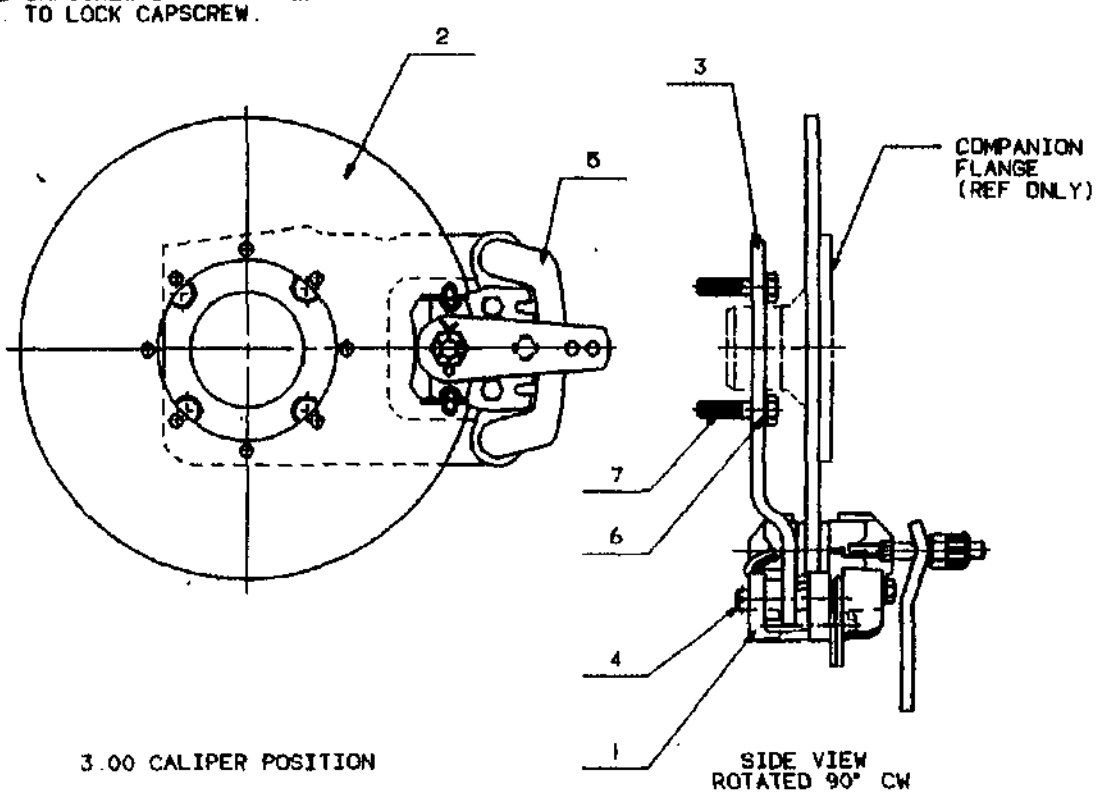

THIS DWG REPRESENTS THE FOLLOWING B/W 40A2288	NOTES:				FUNK	P.O. BOX 677 COFFEYVILLE, KANSAS 67337
					DWN- SJF	BASIC REF# 101
					DATE- 7-13-83	
B	REVISE FORMAT	---	2-17-88	JDS	CHK- JJV	DESCR GRP BRK DISK
A	ADD ASM NOTE & REMOVE REF #8 & #9 PER ECN 43226	---	7-3-84	SJF	SHEET- 1 OF 1	PART# 40A2438
LET	REVISION	ZONE	DATE	BY		

CUSTOMER SERVICE DEPARTMENT

NETWORK: Pitts Engine and Transmission in Miami, Florida and Palmer Johnson Distributors in White Bear Lake, Minnesota has successfully been connected to the Funk Network System. We are now in the process to finish connecting the remaining Service Centers within the United States and Canada. The Funk Network System has proven to be a very valuable tool for our service parts business.

FNH FORECAST: At the request of John Slater, we have submitted our forecast for PDC to the Ag factory which will carry us through the end of the year for Ford New Holland service demands. FNH submitted their forecast to Jim Kneedler on their projected usage for the rest of the year and this information, in turn, aided in our decision on adjusting our forecast. This forecast will apply to the 8000 Series only, and we will also need to look at the AGCO 8800 Series as well.

NEW ORDERS & BACKLOG REPORT
MARCH, 1993

	BEGINNING BACKLOG	NET NEW ORDERS	SHIPMENTS	ENDING BACKLOG
ENGINE DRIVEN	9,086	1,731	2,497	8,320
HMD	1,741	598	748	1,591
PUMP DRIVES	1,350	890	674	1,566
CUSTOM	0	0	0	0
MISC	0	0	0	0
TOTAL UNITS	12,177	3,219	3,919	11,477
PARTS	972	1,125	869	1,228
TOTAL UNITS/PARTS	13,149	4,344	4,788	12,705

FILL RATIO / ON-TIME SHIPMENTS

Shipments	Fill Ratio	On-Time Shipments	Adjusted On-Time
U[illegible]TS	97%	65%	58%
PARTS	79%	57%	84%

GT50C
GT50D2

FUNK
MANUFACTURING
COMPANY
Subsidiary of Deere & Company

FUNK POWER

MODEL
2000

SHIFT-O-MATIC

MODEL 2000
SERVICE MANUAL
P/N 4003557

TABLE OF CONTENTS

Parts Ordering Instructions	Page 1
Rules of Operation	Page 2
Service	Page 3
Extended Storage	Page 6
Voltage Requirements	Page 9
Pressure and Flow Requirements	Page 9
Setting the Clutch Pressure	Page 10
Trouble Shooting	Page 11
Flywheel Dimensional Checks	Page 16
Checking for Correct Pilot Sleeve	Page 17
Installing the Converter into Transmission	Page 17
Installing Transmission to Engine	Page 18

PARTS ORDERING INSTRUCTIONS

Should repair parts be required, please specify the model, specification and serial numbers of your unit as well as the name and number of the parts accompanying your purchase order.

This information tag is attached to your unit:

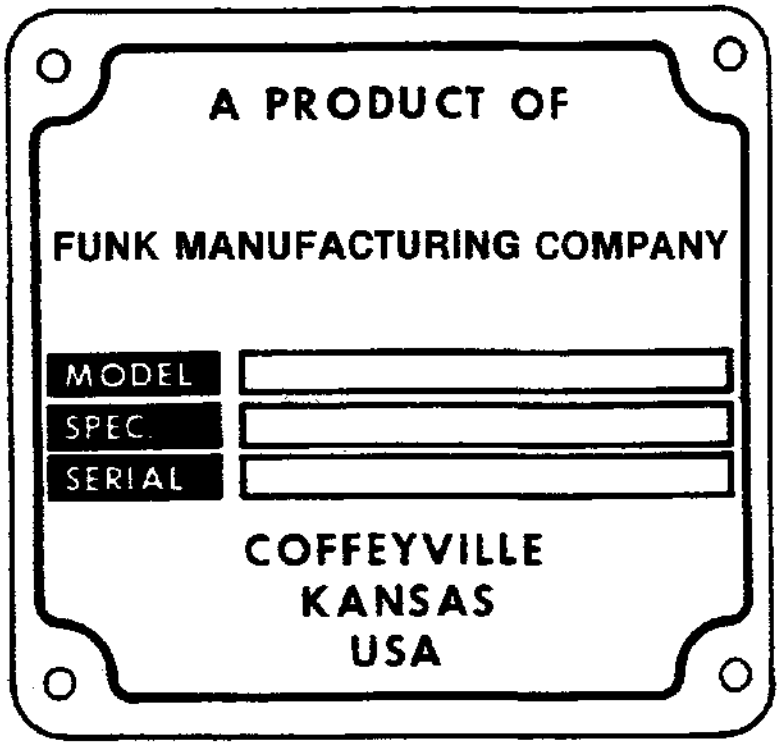

You may write to:

Funk Manufacturing Company
Attn: Parts Department
Industrial Park, Highway 169 North
P.O. Box 577
Coffeyville, Kansas 67337-0577

or Telephone:

Area Code (316) 251-3400
Ask for Parts Department

or FAX:
(316) 252-3252 For Service or Parts

Thank You
Funk Manufacturing Company

DESCRIPTION

The Series 2000 Shift-O-Matic is a six speed forward, three speed reverse transmission. However, several different ranges can be achieved such as: 4-1, 5-1, 3-3, etc.

Forward motion, reverse motion, and the speeds are obtained through the use of electrically controlled solenoids and hydraulically actuated multiple disc clutches. These clutches are power absorbing members that can be engaged at full engine power. Shifting under full engine power makes this a full powershift for the forward and reverse motion in all speeds.

The clutches in these units are hydraulically applied and spring released. Because the clutches are hydraulically controlled, there is automatic compensation for normal wear, which eliminates the need for adjustment. Each clutch uses a composition friction plate and a polished steel reaction plate.

The power from the engine is transmitted to the Shift-O-Matic through a torque converter. The use of the torque converter has two distinct advantages: (1) The converter is essentially a fluid drive, there being no direct mechanical connection between the engine and transmission assembly. This feature creates a very smooth and shock-free drive eliminating engine stalling. (2) The converter multiplies torque during heavy pull-down loads. When loads are light, the converter transmits the engine power directly at almost engine speed, and there is no torque multiplication. The net result is an action like a transmission, with infinitely variable and automatic speed ratios. The need for shifting gears, although present, is greatly reduced.

OPERATION

Like all mechanical equipment, the Shift-O-Matic Drive will need attention and servicing. Routine checks will help prevent down time. The operator can aid in preventative maintenance by reporting weak or borderline malfunctions.

Because the unit operates "in" oil and "by" oil, most of the maintenance is concerned with oil replenishment and oil cleanliness. The type of service and operating conditions shall determine the maintenance interval. However, as previously stated, it is especially important that the oil be kept clean.

RULES OF OPERATION

1. Check the oil level daily, with the engine at idle speed, the Shift-O-Matic in neutral, and the transmission oil temperature 160-200°F(71-93.5°C). Make sure the area around the dipstick is clean before removing.
2. The Shift-O-Matic should always be in the neutral position before starting the engine, or when the vehicle is parked and the engine is running.
3. If the vehicle is to be towed, it will be necessary to run the engine at idle speed to lubricate the clutches.

RULES OF OPERATION (cont.)

4. If the engine cannot be run, towing must be limited to 3 mph and one mile (maximum total). If these conditions are to be exceeded, then the drive lines must be disconnected, and towing then, is permissible at speeds not to exceed the vehicle manufacturer recommended speeds.
5. If the oil temperature gauge, which is the converter oil out temperature, rises to 250°F(121.1°C) or the warning light comes on, stop the vehicle immediately. Shift to neutral and run the engine at 1000-1200 rpm. The temperature should drop rapidly to the engine water temperature, or if an air to oil exchanger is used, the temperature should drop rapidly to ambient air temperature across the heat exchanger. If the temperature does not drop, trouble is indicated. The trouble should be determined before the vehicle is operated again. Overheating generally occurs due to working in too high of a gear ratio.
6. Do not shut off the engine when unit is overheating, if the cooling system is known to be in working order.

SERVICE

1. When servicing the unit for the first time after vehicle installation and/or after repair, the unit is filled as follows:

A. Fill the unit with 4 gallons (15.1 liters) of the recommended lubricant.
B. Start the engine and run at idle speed to let the converter and oil lines fill.
C. With the engine at idle speed, finish filling the unit to the full level. The amount needed will vary with each application.

Note: The oil level is always checked with the engine running at idle speed, the Shift-O-Matic in neutral, and transmission oil temperature 160-200°F(71-93.5°C). In some applications that use an air to oil heat exchanger, the transmission temperature will be below the temperature recommended for checking oil level. Due to the expansion of oil as it heats up it is important that the oil level be checked at the recommended temperature.

CAUTION: DO NOT OVERFILL THE TRANSMISSION

SERVICE (cont.)

2. Lubrication Recommendations, Series Shift-O-Matic Transmissions (powershift).

Recommended Oils: Commercial Powershift Transmissions

Prevailing Ambient Temperature	Oil Specifications
Above -23°C(-10°F)	Hydraulic Transmission Fluid Type C-3(Except Grade 30)
Below-23°C(-10°F)	Hydraulic Transmission Fluid Type C-3(Except Grade 30) Auxiliary preheat required to raise temperature in the sump to above -23°(-10°F)
Above 0°C(32°F)	Hydraulic Transmission Fluid Type C-3 or C-3 Grade 30

CAUTION: FUNK MANUFACTURING DOES NOT RECOMMEND THE USE OF ANY HYDRAULIC TRANSMISSION FLUID THAT USES AN "EP" (Extreme Pressure) ADDITIVE.

Recommended lubricant and Filter Change Intervals

A. Recommendations utilizing the Funk Filter with the bypass indicator inoperative or not connected:

1. The lubricant and filter should be changed after the first 20 hours of transmission operation. After the initial lubricant and filter change, it is recommended that the filter be changed every 200 hours of operation and the lubricant be changed every 600 hours of operation.

B. The following recommendations apply if the bypass indicator is connected and operative:

NOTE: The lubricant and filter should be changed after the first 20 hours of transmission operation.

1. The filter should be changed when the bypass indicator signals the vehicle operator.

2. The lubricant change interval shall be every other filter change but not to exceed 1200 hours.

NOTE: In cold weather operation and/or initial startup (when the transmission oil is cold) the oil will have a higher visocosity which may allow the filter to bypass intermittently. When this happens, the filter bypass indicator will be activated.

If this happens, check the converter out oil temperature. If the temperature is in the normal working range, the filter should be changed. If the converter out oil temperature is below the normal working range, stop the machine and warm the oil up to the normal working range

by stalling the converter, and observing the bypass indicator to be deactivated as the oil warms up. If this disarms the system, work the transmission in a higher gear to keep the converter out oil temperature in the normal working range. If this does not disarm the system, change the filter.

WARNING: WHEN STALLING THE CONVERTER MAKE SURE THE TRANSMISSION IS IN HIGH GEAR, THE VEHICLE BRAKES SET, AND THE IMMEDIATE AREA IS CLEAR OF PERSONNEL AND OBSTRUCTIONS. DO NOT EXCEED 30 SECONDS OR 250°F CONVERTER OUT OIL TEMPERATURE, WHICHEVER COMES FIRST, AT FULL GOVERNED ENGINE RPM STALL SPEED.

Note: The preceeding lubricant change recommendations can be neglected if a lubricant analysis indicates that the following limits are not exceeded:

PRESENCE OF	LIMIT
a. Glycol (Anti-freeze)	0% by volume
b. Water(after transmission operation @150-250°F(75.5-121°C)lubricant temperature)	.05% by volume
c. Increased viscosity @ 100°F(37.5°C)	Increase of 40% over new lubricant value
d. Total acid number(TAN) per ASTM D664	Increase of 3.0 over new lubricant value

Note: The above recommendation is void if the oil shows signs of contamination or the effects of a high operating temperature as evidenced by a strong burnt odor. If this condition is evident, the oil and filter should be changed immediately.

C. Recommendations associated with the use of filter assemblies other than Funk part number filter assemblies shall be provided by the Funk Engineering Department.

3. When changing the oil, the dirty oil should be drained while the unit is warm, examining for contamination as described above.

4. Clean the suction screen thoroughly before reinstalling.

PRESERVATION OF TRANSMISSION AND RELATED COMPONENTS FOR EXTENDED STORAGE

This procedure applies to those transmissions and components that have been tested according to Funk Manufacturing test specifications and have had the fluid drained from them prior to shipment.

The following will protect the unit or component items from internal rust and/or corrosion damage for approximately one (1) year, provided they are stored under shelter.

A. INTERNAL PRESERVATION

1. Seal ALL openings with moisture-proof covers or tape.

2. Spray (4) ounces of atomized NOX RUST VCI No. 10 oil into drain hole. This fluid is covered and approved per (MIL-P-46002 and MIL-I-23310).

B. EXTERNAL PRESERVATION

1. Dip, spray, or brush ALL exposed unpainted surfaces with NOX RUST X-110. This includes shafts, flanges, seals, etc.

   Note: NOX RUST is purchased from:

   Daubert Chemical Company
   1200 Jorie Blvd.
   Oak Brook, IL 60521

C. RESTORING UNITS TO SERVICE

1. Wash off ALL external grease with solvent.

2. Remove covers or tape from all openings.

3. Fill the unit with Funk Manufacturing approved transmission fluid.

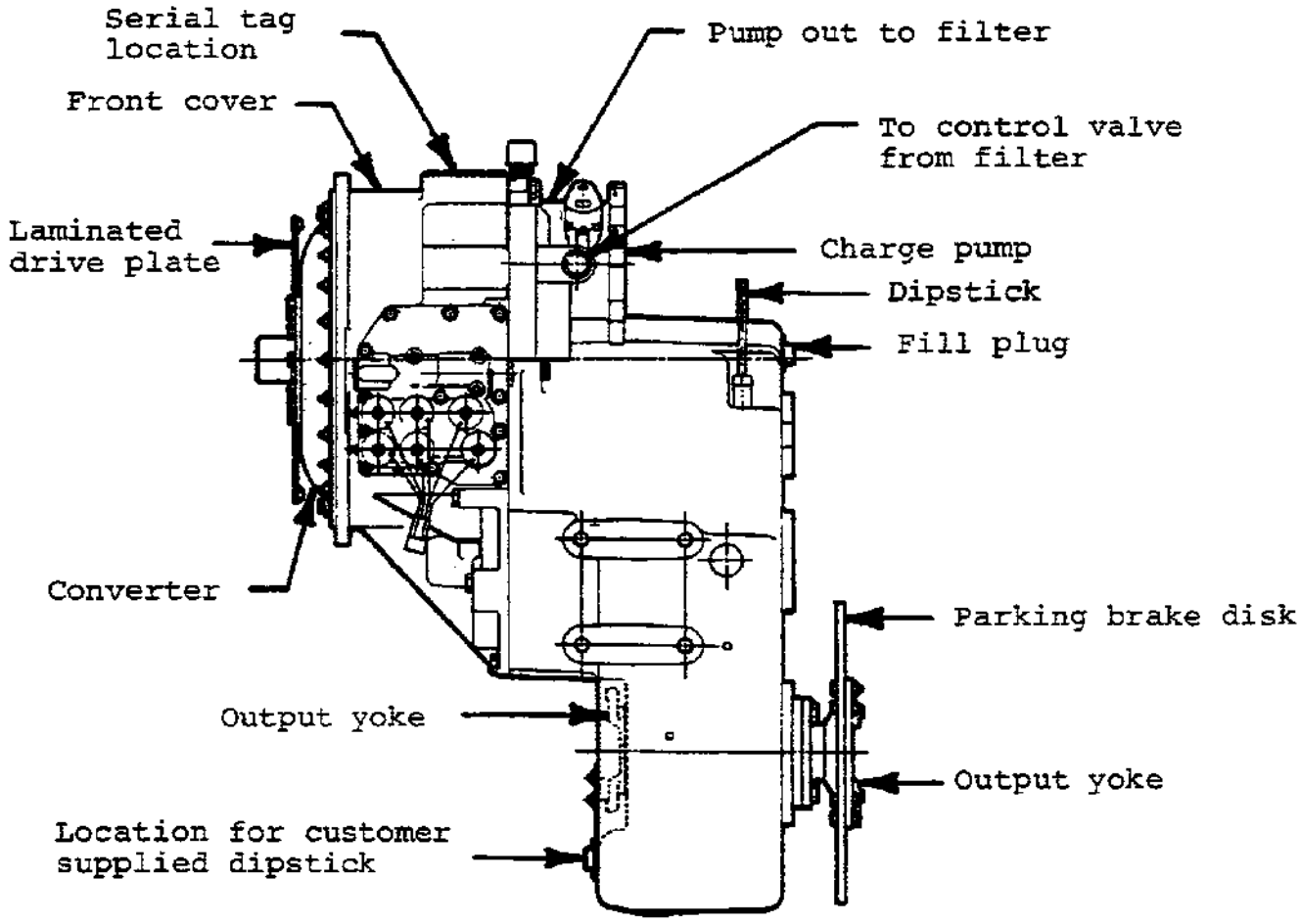
Serial tag location
Pump out to filter
Front cover
To control valve from filter
Laminated drive plate
Charge pump
Dipstick
Fill plug
Converter
Parking brake disk
Output yoke
Output yoke
Location for customer supplied dipstick

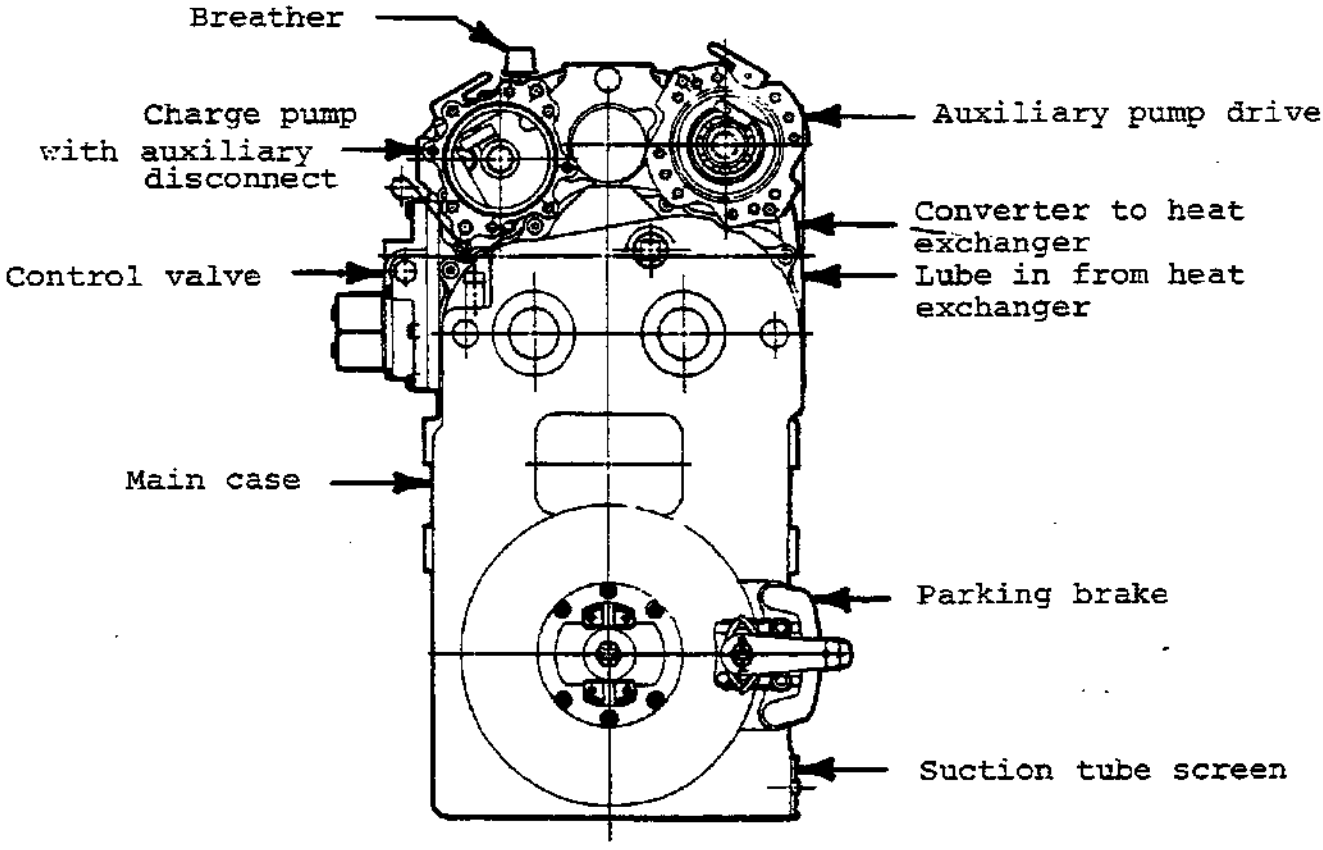
Breather
Charge pump with auxiliary disconnect
Auxiliary pump drive
Converter to heat exchanger
Control valve
Lube in from heat exchanger
Main case
Parking brake
Suction tube screen

SOLENOID #

GEAR	1	2	3	4	5	6	
F 1st	X					X	8.20
F 2nd	X				X		4.64
F 3rd		X				X	3.53
F 4th		X			X		2.00
F 5th			X			X	1.41
F 6th			X		X		.80
R1	X			X			8.20
R2		X		X			3.53
R3			X	X			1.41

8.2:1 Low Ratio

SOLENOID #

GEAR	1	2	3	4	5	6	
F 1st	X					X	5.20
F 2nd		X				X	3.53
F 3rd	X				X		2.94
F 4th		X			X		2.00
F 5th			X			X	1.41
F 6th			X		X		.80
R1	X			X			5.20
R2		X		X			3.53
R3			X	X			1.41

5.2:1 Low Ratio

To troubleshoot the electric circuit of the valve, the above charts show what solenoids are charged when that gear is selected. The transmission ratio must be known.

LONG DROP
OUTPUT CCW
(SAME AS ENGINE)
3 - 3
SOLENOID #

	1	2	3	5	6
F1	X			X	
F2		X		X	
F3			X	X	
R1	X				X
R2		X			X
R3			X		X

SHORT DROP
OUTPUT CCW
(SAME AS ENGINE)
3 - 3
SOLENOID #

	1	2	3	5	6
F1	X				X
F2		X			X
F3			X		X
R1	X			X	
R2		X		X	
R3			X	X	

The model 2000 with 3 forward and 3 reverse speeds, that utilizes directional headset gears on 1st and 2nd stage shafts.

Note: #4 Solenoid is not utilized in this model of the 3-3.

Note: #6 Solenoid is for forward clutch in short drop which gives the transmission output shaft enginewise rotation. #5 Solenoid is for forward clutch in long drop which gives the transmission output shaft enginewise rotation. In some vehicles, forward and reverse solenoids may be reversed depending on transmission location direction and or axle rotation.

CLUTCH SOLENOID VOLTAGE REQUIREMENTS

NOTE: Checks should be At the valve.

* This coil must be used with a Funk approved electronic control module.

NOMINAL VOLTAGE	6V*	12V	24V
ALLOWABLE VOLTAGE	4.8-7.2V	9-14V	23-26V
CURRENT DRAW		2 AMPS	1 AMP
CURRENT DRAW MAX.	3.2	2.29 AMPS	1.4 AMPS
RESISTANCE	1.72 OHM ± 4%	6.3 OHM ± 3%	24 OHM ± 3%

PRESSURE AND FLOW CHECKS

Note: All pressure and flow tests must be accomplished at 2000 rpm at a converter out temperature of 105-125°F (40.6-51.7°C).

Port #1 is for clutch pressure, which should be 240-260 psi(1655-1790 kPa). (Page 10)
Port #2 is for pump pressure which will be higher than clutch pressure but, is not to exceed clutch pressure by more than 15 psi (105 kPa). (Page 10)
Port #3 is for converter in pressure which is not to exceed 85 psi (585 kPa), at operating temperature. (Page 10)

Note: Initial start up and in cold weather operation until the transmission is warmed up, pressures above 85 psi (585 kPa) can be expected.

Refer to page 7 for location of the following:

Pump out flow at 2000 rpm, 105-125°F(40.6-51.7°C) is 19.6 gpm (74.5 Lpm)

Converter out flow at 2000 rpm, 105-125°F(40.6-51.7°C) is 17 gpm (64.6 Lpm)

Converter out pressure at full throttle stall is not to be less than 35 psi (241 kPa) at 180-200°F(82.2-93.3°C).

WARNING: WHEN STALLING THE CONVERTER MAKE SURE THE TRANSMISSION IS IN HIGH GEAR, THE VEHICLE BRAKES SET, AND THE IMMEDIATE AREA IS CLEAR OF PERSONNEL AND OBSTRUCTIONS. DO NOT EXCEED 30 SECONDS OR 250°F CONVERTER OUT OIL TEMPERATURE, WHICHEVER COMES FIRST, AT FULL GOVERNED ENGINE RPM STALL SPEED.

Note: Full throttle stall speeds will vary depending on the engine and torque converter being used. Check with the vehicle manufacturer for the stall speed.

Lube in pressure at 2000 rpm, 105-125°F(40.6-51.7°C) is not to exceed 25 psi(170 kPa) or be less than 10 psi(70 kPa).

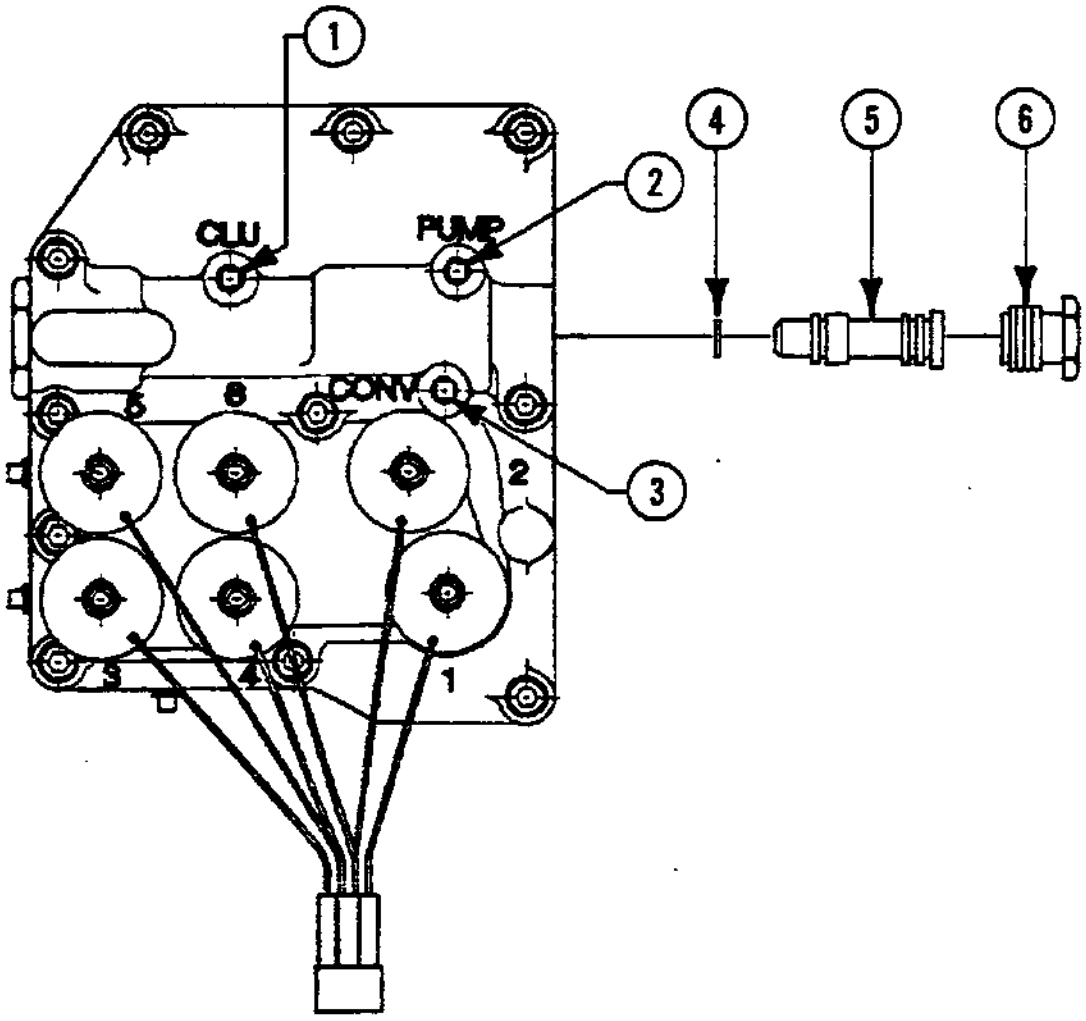

SETTING THE CLUTCH PRESSURE

Note: On initial assembly of the pressure regulator, install (2) .030 shims.

To adjust the clutch pressure, remove the regulator cap #4, and the pressure regulator #5. The shims #6 will be installed inside the valve body against the spring retainer cap.

With the transmission in neutral, the engine speed at idle (750 rpm minimum), and the converter out oil temperature at 105-125°F(40.6-51.7°C), the clutch pressure should be 200 psi (1380 kPa) minimum. If the clutch pressure is below 200 psi (1380 kPa) add (1) .030 shim.

Advance the engine speed to 2000 rpm, with the same temperatures and check the clutch pressure to be 240-260 psi(1655-1790 kPa).

If the clutch pressure is below 240 psi(1655 kPa) add(1)or(2).015 shims, to achieve the 240 psi (1655 kPa) minimum pressure.

If the clutch pressure is above 260 psi (1790 kPa) remove(1).030 shim and install (1) .015 shim.

Note: A maximum of 5 shims may be used.

POWERSHIFT TROUBLE SHOOTING

PROBLEM	POSSIBLE CAUSE	REMEDY
1. Erratic oil pressure	A. Low oil level	A. Add oil to proper level
	*B. Pump gasket not sealing	B. Replace gasket
	*C. "O"ring on sump tube not sealing	C. Replace "O"ring
	*D. Oil passage cover plate leaking in front cover	D. Replace seal, apply sealant per instructions in assembly manual.
	E. Foreign object in suction port	E. Remove object and check for other contamination.

*Some indications of a suction leak are:

1. Erratic oil pressure (rapid fluctuation of gauges)
2. Pump and filter hoses jumping
3. Excessive air entrainment in the transmission oil
4. A long prime time (time elapsed from engine start to an indication of pump pressure)

*Note: To determine if a suction leak exists, fill the transmission completely full of transmission fluid. Then start the engine to see if there is an indication of erratic oil pressure. If none, a suction leak probably exists.

CAUTION: DO NOT NEGLECT TO DRAIN THE TRANSMISSION BACK TO THE CORRECT LEVEL AFTER THE TEST. FAILURE TO DO SO WILL RESULT IN POOR PERFORMANCE AND OVERHEATING.

2. Excessive oil pressure	A. Excessive amount of regulator valve shims	A. Install correct amount of shims
	B. Sticking main regulator valve	B. Check main regulator for contamination and clean orifice
	C. Faulty spring	C. Change spring
3. Low oil pressure in all gears	A. Sticking main regulator valve	A. Clean main regulator valve
	B. Oil pressure set too low	B. Add shims (5 maximum)
	C. "O"ring on charge pump mount defective	C. Replace "O"ring
	D. Charge pump defective	D. Replace pump
	E. Internal Disconnect seal damaged or installed incorrectly.	E. Replace seal and install correctly

POWERSHIFT TROUBLE SHOOTING (cont.)

PROBLEM	POSSIBLE CAUSE	REMEDY
4. Low pressure in one gear but all right in other gears	A. Contaminated solenoid valve spool	A. Disassemble and clean entire control valve. Replace filter and transmission fluid.
	B. Broken wire to one solenoid, or dirty connection	B. Repair wire (see solenoid chart for electrical valves and locations.)
	C. Broken seal ring on input end of clutch assembly	C. Replace seal ring
	D. Outer or inner piston seal leaking	D. Replace seals

CAUTION: IF A SOLENOID IS REMOVED FROM THE VALVE IT HAS TO BE RE-INSTALLED IN THE SAME LOCATION.

Note: To determine the defective clutch is simply a matter of elimination. For example, if the gear selected uses solenoids 6 and 3, and low pressure is indicated, select another clutch that uses one of those solenoids. If pressure is good, then the solenoid or clutch not selected is the one that is bad. To confirm that this is the faulty circuit, select another clutch that uses this solenoid, to assure that the discrepency is actually in this solenoid or clutch.

EXAMPLE:

CLUTCH SELECTED	INDICATION	
Uses solenoids 6&3	Low Pressure	Solenoid or clutch 6 or 3 is defective.
Uses solenoids 5&3	Pressure O.K.	Solenoid or clutch 6 is defective
Uses solenoids 6&2	Low Pressure	Confirms solenoid or clutch 6 is defective

5. Vehicle will not move but all pressures are normal.	A. Voltage to wrong solenoids on controlve valve - see schematic	A. Check wiring and connecters
	B. No voltage to all solenoids	B. Check wiring, controller and connecters
	C. Voltage to all solenoids	C. Check wiring and controller
	D. Solenoid valve spool stuck	D. Inspect, clean and replace if necessary. Replace oil & filter.

POWERSHIFT TROUBLE SHOOTING (cont.)

PROBLEM	POSSIBLE CAUSE	REMEDY
6. Low or no converter pressure	A. Converter bypass valve defective	A. Replace converter bypass valve
	B. Converter hub seal ring not sealing.	B. Replace seal ring
	C. Converter bypass valve pipe plug left out	C. Install plug(see assembly manual)
7. Filter or filter oil lines blow out	A. Hose bends too sharp	A. Reroute hoses
	B. Defective hose	B. Replace hose
	C. Main regulator valve stuck	C. Clean valve and change filter & oil.
8. Clutch selected pressure does not return to normal	A. Contaminated solenoid valve spool	A. Clean valve and replace oil & filter
	B. Accumulator spring too strong	B. Replace spring
	C. Primary pump defective	C. Replace primary pump
	D. Excessive internal leakage to clutch	D. Inspect seal ring, piston seals, and all sealing surfaces(See assembly manual)
9. Excessive noise	A. Charge pump defective	A. Replace pump
	B. Excessive backlash in gear train	B. Replace bearings and inspect for defective gears
	C. Auxiliary driven pump bad	C. Remove pump and check for noise.
10. Blows oil out of breather or dipstick tube	A. Transmission over filled with oil	A. Establish proper oil level(check front seal on auxiliary driven hydraulic pump if installed)
	B. Converter seal ring broken	B. Remove transmission and install new seal ring on converter hub
11. Transmission overheating	A. Converter stalling	A. Shift to lower gear
	B. Oil level too high	B. Establish proper oil level(check front seal on auxiliary driven hydraulic pump, if installed)
	C. Engine overheating	C. Check engine coolant
	D. Water lines defective on heat exch.	D. Replace lines
	E. Heat exchanger dirty	E. Clean heat exchanger
	F. Clutch slipping	F. Check clutch pressure

POWERSHIFT TROUBLE SHOOTING (cont.)

PROBLEM	POSSIBLE CAUSE	REMEDY
12. Transmission pressure checks okay, but has no power and possibly overheating	A. Converter sprag clutch damaged or installed wrong	A. Disassemble converter and inspect(see assembly manual for correct installation.)
	B. Converter relief valve broken	B. Replace relief valve
13. Oil leaking from engine flywheel and/or weep hole in transmission bell housing	A. Converter front cover seal leaking	A. Replace seal
	B. Converter hub seal or "o" ring damaged	B. Replace seal
	C. Bearing retainer plate gasket leaking	C. Replace gasket
	D. Converter not properly positioned within bell housing, causing converter and seal to leak	D. Check engine flywheel offset dimensions and converter pilot bushing length against vehicle manufacture standards.

INTERNAL DISCONNECT MODELS ONLY

14. 4 Wheel drive will not engage	A. Solenoid stuck open. Voltage applied all the time	A. Repair or replace solenoid. Check wiring diagram and connecters.
	B. Damaged or missing spring.	B. Replace or install spring.
	C. Bleed port blocked	C. Check for proper installation of gasket and solenoid cap or contamination.
15. 4 wheel drive will not disengage.	A. No power to solenoid, solenoid inoperative	A. Check for electric power to solenoid - check wiring and connecters-replace solenoid
	B. Check valve installed backwards	B. Install check valve properly
	C. Piston seal damaged or installed backwards	C. Replace seal or install properly.

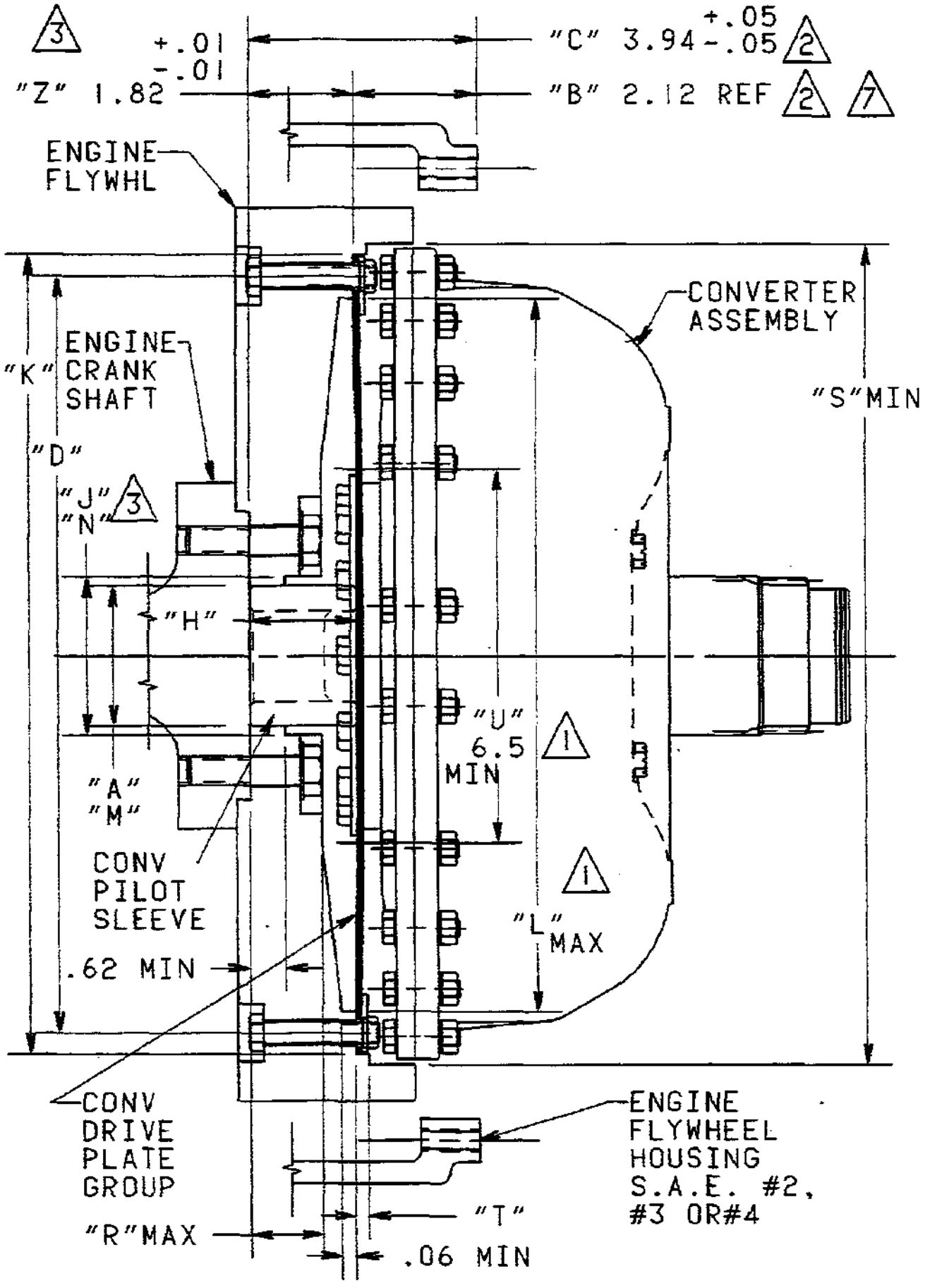
3
+.01
-.01
"Z" 1.82
"C" 3.94 +.05 -.05 2
"B" 2.12 REF 2 7
ENGINE FLYWHL
CONVERTER ASSEMBLY
ENGINE CRANK SHAFT
"K"
"D"
"S"MIN
"J" "N" 3
"H"
"U" 6.5 MIN 1
"A" "M"
CONV PILOT SLEEVE
1
"L" MAX
.62 MIN
CONV DRIVE PLATE GROUP
ENGINE FLYWHEEL HOUSING S.A.E. #2, #3 OR#4
"T"
"R"MAX
.06 MIN

This section needs to be used, when the following conditions occur:

*1. An oil leak coming from the weep hole in the transmission bell housing.

*2. An oil leak coming from the drain hole (if any) in the engine flywheel housing.

3. If the drive plate and/or converter have been changed to a different size or part number.

4. If the engine flywheel, or flywheel housing has been changed.

5. If the engine has been changed.

*Also see the trouble shooting section under "Oil leaking from engine flywheel housing and/or weep hole in transmission bell housing".

DIMENSIONAL CHECK

Note: Refer to Page 15 for location of dimensions.

⚠1. Flywheels with dimension "K" must comply with dimensions "S" & "T" (as listed for each Funk converter size), and dimensions "L", "R", and "U" will have to clear the drive plate and converter assemblies.

⚠2. Check the flywheel for the following dimensions:

1. "C" dimension (3.94 ± .05) from the flywheel housing mounting face to the pilot bore positive stop.

2. "Z" dimension (1.82 ± .01) from the flywheel mounting face to the pilot bore positive stop.

3. "B" dimension (2.12 ref) the flywheel offset.

4. Engines with dimensions "C"(3.94 ±.05) "Z"(2.83 ± .01) and "B" (1.56 ref.) requires a .56 thick housing adapter.

⚠3. Standard length pilot sleeves - dimension "H", are set up for dimension "Z" (1.82 ± .01) from the flywheel mounting face to the pilot bore positive stop.

1. Engines with dimension "Z"(2.83 ± .01) requires a .56 longer standard sleeve.

2. The use of a flywheel that has a shoulder as a positive stop will have to comply with dimension "N"(minimum) to clear the shoulder on the sleeve, dimension "J".

CHECKING FOR THE CORRECT PILOT SLEEVE LENGTH

1. Take dimension "Z" - which is from the flywheel mounting face to the pilot bore positive stop, or to the positive stop shoulder in the flywheel.

2. Place the pilot sleeve on the converter front cover pilot knob and push back to the front cover. Measure from the drive plate face (that will be mounted up to the flywheel), out to the end of the sleeve, or to the positive stop shoulder.

3. The sleeve length (2) should be equal to or .10" longer than the pilot depth (1) ref "Z" in the flywheel.

   The shoulder length (2) should be equal to or .10" longer than the shoulder depth (1) in the flywheel to properly locate the converter.

4. Check the diameter of the flywheel pilot bore dimension "M" and converter pilot sleeve dimension "A" for a proper fit. There should be .0005 to .003 diametric clearance. Flywheels that do not fit within this tolerance will require a special sleeve to accurately pilot the converter assembly. If the above dimensions check out, the assembly can continue.

5. Check the engine crankshaft endplay. It should comply with the engine manufacturer's tolerance.

CONVERTER ASSEMBLY INSTALLATION INTO TRANSMISSION IF SEPARATED FROM TRANSMISSION

6. Place a light coat of grease on the converter impeller hub gear, and the converter hub seal ring. Also apply a light coat of grease on the transmission input shaft splines, stator support tube splines, and the converter hub oil seal.

7. Support the converter assembly so that it can be positioned directly in line with the transmission input shaft centerline. Carefully insert the converter into the transmission keeping the input shaft centered in the hub bore. Push the converter assembly in slowly to feel when the splines and/or gear teeth begin to engage. If the converter assembly stops at this point, rock it back and forth and turn the converter slightly to allow the splines and/or gears to line up.

   CAUTION: DO NOT AT ANY TIME FORCE THE CONVERTER IN, AS DAMAGE WILL RESULT.

   When all splines and teeth are lined up, the converter assembly will slide easily into place, to the "B" dimension.

8. Place a light coat of grease on the converter assembly pilot sleeve I.D. and O.D.. Install the pilot sleeve on the converter pilot knob.

9. A 3/8-24 thread stud(with a screwdriver slot) threaded into the drive plate, from the engine side, will help in aligning the drive plate to the flywheel.

INSTALLING THE TRANSMISSION TO THE ENGINE

1. Rotate the engine flywheel until one of the thru drilled holes is aligned with the flywheel housing access hole.

2. Support the transmission assembly so that it can be positioned directly in line with the engine crankshaft. Align the pilot sleeve with the flywheel pilot bore, and align the stud(protruding from drive plate face) with one of the thru holes in the flywheel.

3. Push the transmission up to the engine.

   CAUTION: IF THE TRANSMISSION DOES NOT CLOSE UP TO THE FLYWHEEL, DO NOT PROCEED. FORCING THE TRANSMISSION UP TO THE ENGINE WITH THE ASSEMBLY BOLTS COULD PRELOAD THE ENGINE CRANKSHAFT AND CAUSE ENGINE AND/OR TRANSMISSION PROBLEMS LATER. REMOVE THE TRANSMISSION AND CHECK PREVIOUS ASSEMBLY STEPS AS LISTED TO DETERMINE WHERE THE PROBLEM IS AND TAKE CORRECTIVE ACTION BEFORE PROCEEDING.

4. Bolt up the transmission to the engine flywheel housing.

5. Attach the drive plate to the flywheel, using 3/8-24 UNF grade 5 or 8 capscrews (provided by customer) length to be .5" longer than dimension through flywheel.

   One by one, install the capscrews and hand tighten thru the engine flywheel housing access hole, removing the alignment stud when it is encountered. After all the capscrews have been installed, tighte the capscrews to final torque of 35 lbs.ft. for grade 5 or 50 lbs.ft. for grade 8.

6. Recheck the engine crankshaft endplay and compare it with the endplay from assembly step no. 5. No endplay could mean that the crankshaft has been preloaded at assembly with the transmission. The engine and transmission should not be run until a reason for the preload is determined.

7. Reinstall the access hole cover.

INDEX

A

Air Cleaner 1-3-7, 1-4-1, 1-4-3, 1-5-3, 2-1-2, 4-4-89
Air Intake and Exhaust System 4-4-2, 4-4-87
Air Intake System 1-1-3, 1-1-4
Alpha-Numeric Index 4-1-1, 4-3-1, 4-3-3, 4-3-4, 4-3-5, 4-3-6, 4-3-7
4-3-8, 4-3-9, 4-3-10, 4-3-11, 4-3-12, 4-3-13, 4-3-14, 4-3-15, 4-3-16, 4-3-17, 4-3-18, 4-3-19, 4-3-20, 4-3-21, 4-3-22, 4-3-23, 4-3-24, 4-3-25, 4-3-26, 4-3-27

B

Batteries 1-4-2, 1-4-3, 1-5-1, 1-5-2, 1-5-4, 1-5-5, 2-2-3, 2-2-4
Bearing 4-4-31, 4-4-35, 4-4-39, 4-4-41, 4-4-71, 4-4-115, 4-4-117
Bearings 1-3-2
Body 1-1-10, 1-5-1, 1-5-4, 2-3-1
Brake Assembly 4-4-1, 4-4-52, 4-4-53, 4-4-54, 4-4-55, 4-4-58, 4-4-59

C

Chassis 1-3-7, 1-3-9, 2-3-1, 3-2-1, 3-2-4, 3-2-5, 3-2-6, 4-4-45
Compressor 1-5-2
Control Panel 1-1-10, 1-1-14, 1-4-2, 1-4-3, 1-5-3, 1-5-4, 4-4-2, 4-4-9, 4-4-94, 4-4-95, 4-4-96
Controls and Indicators 1-1-5, 1-1-10, 1-1-12, 1-1-14, 1-2-1, 1-2-7
1-2-8, 1-2-9, 1-2-10, 1-2-11, 1-2-12, 1-3-2, 4-4-95
Cooling 1-1-3, 1-1-5, 1-1-6, 1-2-4, 1-3-3, 1-4-1
1-4-3, 1-5-3, 2-1-4, 3-2-2, 4-1-1, 4-4-2, 4-4-21, 4-4-81, 4-4-82, 4-4-83, 2. 4
Cooling System 1-1-5, 1-1-6, 1-3-3, 1-4-1, 1-4-3, 1-5-3
2-1-4, 3-2-2, 4-1-1, 4-4-2, 4-4-21, 4-4-81, 4-4-82, 4-4-83
Cooling System Components 4-4-2, 4-4-81

D

Description 1-1-1, 1-1-11, 1-3-7, 1-3-9, 4-1-1, 4-1-2, 4-1-3, 4-4-5, 4-4-6, 4-4-9, 4-4-10
4-4-13, 4-4-15, 4-4-17, 4-4-21, 4-4-23, 4-4-25, 4-4-27, 4-4-29, 4-4-31, 4-4-33, 4-4-35, 4-4-37, 4-4-39, 4-4-41, 4-4-45, 4-4-47, 4-4-49, 4-4-51, 4-4-53, 4-4-55, 4-4-57, 4-4-59, 4-4-63, 4-4-65, 4-4-67, 4-4-69, 4-4-71, 4-4-77, 4-4-79, 4-4-83, 4-4-85, 4-4-89, 4-4-91, 4-4-95, 4-4-96, 4-4-99, 4-4-101, 4-4-105, 4-4-106, 4-4-107, 4-4-115, 4-4-117, 4-4-119, 4-4-121, 4-4-123, 4-4-124
Drum 1-3-3, 4-4-53, 4-4-55

E

Electrical Parts 4-4-2, 4-4-65, 4-4-105, 4-4-106, 4-4-107
Electrical System 1-1-3, 1-1-10, 1-3-3, 2-3-1, 4-4-2, 4-4-93
Electrical System Components 4-4-2, 4-4-93

INDEX (CONT.)

E (CONT.)

Engine 1-1-1, 1-1-3, 1-1-5, 1-1-7, 1-1-10, 1-1-11, 1-1-12, 1-1-13, 1-1-14, 1-2-1, 1-2-2, 1-2-3 1-2-4, 1-2-5, 1-2-8, 1-2-10, 1-2-12, 1-3-1, 1-3-2, 1-3-3, 1-3-4, 1-3-5, 1-3-7, 1-3-9, 1-4-1, 1-4-2, 1-4-3, 1-5-1, 1-5-2, 1-5-3, 1-5-4, 1-5-5, 2-1-3, 2-2-1, 2-2-3, 2-2-4, 2-2-6, 2-3-3, 3-1-1, 3-2-1, 3-2-2, 3-2-3, 3-2-4, 3-2-7, 4-1-1, 4-1-3, 4-4-1, 4-4-2, 4-4-5, 4-4-20, 4-4-21, 4-4-22, 4-4-23, 4-4-25, 4-4-65, 4-4-68, 4-4-69, 4-4-75, 4-4-78, 4-4-79, 4-4-81, 4-4-82, 4-4-83, 4-4-84, 4-4-85, 4-4-87, 4-4-95, 4-4-96, 4-4-98, 4-4-99, 4-4-105, 4-4-106, 4-4-107
Engine Coolant Heater 1-1-14, 1-2-1, 1-2-2, 4-4-2, 4-4-84, 4-4-85
Engine Fuel/Water Separator and Fuel Heater 1-1-12
Engine Lube Oil 1-2-9, 1-3-3, 1-3-5, 4-4-1, 4-4-78
Engine Mounted Electrical Components 4-4-2, 4-4-98, 4-4-99
Engine Starting and Battery Charging Circuits 1-1-10
Ether Aid 3-2-3, 4-4-69
Ether Injection 1-1-11, 1-3-9, 2-2-4, 3-2-3
Ether Injection Circuit 1-1-11
Exhaust System 1-1-4, 1-5-3, 2-3-1, 4-4-2, 4-4-87, 4-4-90, 4-4-91

F

Factory Assistance 2-2-1
Figure and Index Number Column 4-1-2
Fuel Filter/Water Separator 4-4-1, 4-4-64, 4-4-65, 4-4-66, 4-4-67
Fuel System 1-1-3, 1-5-3, 2-2-4, 2-3-1, 4-4-1, 4-4-61, 4-4-62, 4-4-63, 4-4-64, 4-4-65
Fuel System Components 4-4-1

G

Generator 2-3-1, 4-4-2, 4-4-109
Ground Power Unit 1-3-1
Group Index 4-1-2, 4-4-1

H

High Coolant Temperature 1-1-12, 4-4-99
How to Locate Parts 4-1-2
How to Order Parts 4-1-3
Hub 1-3-7, 4-4-1, 4-4-34, 4-4-35, 4-4-40, 4-4-41

I

Inspection 1-4-2, 2-1-1, 2-1-3, 2-3-3
Instrument Panel 1-3-3
Introduction 1-1-1, 1-3-1, 1-4-1, 2-1-1, 2-2-1, 2-3-1, 4-1-1, 4-3-1
Inventory 1-4-2

INDEX (CONT.)

L

Low Oil Pressure 1-1-11, 1-2-9, 4-4-106
Lubrication 1-1-3, 1-1-4, 1-3-4, 2-1-1, 2-3-1, 4-4-1, 4-4-75
Lubrication System 1-1-3, 1-1-4, 2-3-1, 4-4-1, 4-4-75

M

Maintenance 1-2-2, 1-4-3, 1-5-1, 1-5-2, 1-5-5, 2-1-1, 2-1-3, 2-1-4, 2-2-1, 2-2-2
2-2-5, 2-3-1, 2-3-2, 2-3-3, 2-3-4, 3-1-1, 3-2-1, 3-2-5, 3-2-6, 4-1-1
Maintenance Instructions 1-5-5, 2-1-1, 2-2-1, 2-2-2, 2-3-1, 2-3-2, 2-3-3, 2-3-4, 3-1-1
Manufacturer's Code 4-1-1, 4-1-2, 4-1-3
Manufacturer's Codes 4-2-1, 4-2-3
Manufacturer's Data 2-1-1
Marking 1-4-2
Markings 1-4-3

N

Notification 1-4-2

O

Operation 1-1-1, 1-1-4, 1-1-10, 1-2-1, 1-2-2, 1-2-3, 1-2-4, 1-4-3, 1-5-1, 1-5-4
1-5-5, 2-2-4, 2-2-7, 2-2-8, 3-2-4
Overhaul 3-1-1

P

Panel Lights 1-2-2, 1-2-9
Parking Brake 1-1-9, 1-1-11, 1-2-1, 1-2-3, 1-2-4, 1-2-7, 1-2-9, 1-2-11, 2-1-2, 2-3-3
3-2-3, 4-4-1, 4-4-56, 4-4-57, 4-4-58, 4-4-59, 4-4-105, 4-4-106
Parts 1-1-1, 1-4-2, 1-5-3, 3-1-2, 4-1-1, 4-1-2
4-1-3, 4-3-1, 4-4-1, 4-4-2, 4-4-5, 4-4-9, 4-4-13, 4-4-15, 4-4-21, 4-4-25, 4-4-32, 4-4-33, 4-4-65,
4-4-67, 4-4-78, 4-4-79, 4-4-85, 4-4-89, 4-4-91, 4-4-105, 4-4-106, 4-4-107, 4-4-115, 4-4-117
Parts List 4-1-1, 4-1-2
Preparing Unit for Service 1-4-2
Preventive Maintenance Schedule 2-1-1, 2-1-2, 2-1-3

R

Radiator 1-1-5, 1-2-2, 1-4-3, 1-5-3, 2-1-4, 3-2-2, 4-4-5, 4-4-83
Receiving Equipment 1-4-2
Regulator 1-3-2, 4-4-105
Rust and Corrosion Inhibitors 1-3-9

INDEX (CONT.)

S

Service 1-1-1, 1-1-3, 1-1-10, 1-2-4, 1-2-9, 1-3-3, 1-3-4, 1-4-2, 1-5-2
1-5-4, 1-5-5, 2-1-2, 2-1-3, 2-2-1, 2-2-3, 2-2-4, 2-3-1, 2-3-3, 3-2-4, 3-2-6, 4-1-3, 4-2-3
Shipping 1-4-1
Shutdown Lamp 1-2-5, 1-2-10
Specification Tables 1-3-1
Specifications 1-3-1, 1-3-2, 1-3-3, 1-3-4, 1-3-5
Storage 1-4-1, 1-5-1, 1-5-2, 1-5-4

T

Test 2-2-3, 2-2-4
Testing 2-2-4
Throttle 3-2-2, 4-4-1, 4-4-70, 4-4-71
Tie-Down Points 1-4-1
Trailer 1-4-1
Troubleshooting 2-2-1, 2-2-5, 2-2-6, 2-2-7, 2-2-8, 2-2-9, 3-1-1
Troubleshooting Tables 2-2-1, 3-1-1

V

Voltage Regulator 4-4-105

W

Warning Beacons 1-4-2
Warning Lamp 1-1-12, 1-2-10

CHAPTER 4

PARTS

TABLE OF CONTENTS

SECTION/ PARAGRAPH	DESCRIPTION	PAGE
1	PARTS LIST	4-1-1
1.1	INTRODUCTION.	4-1-1
1.2	PARTS LIST.	4-1-1
1.2.2	Figure and Index Number Column.	4-1-3
1.2.3	Part Number Column.	4-1-3
1.2.4	Manufacturer's Code.	4-1-3
1.2.5	Description Column.	4-1-3
1.2.6	Quantity Column.	4-1-3
1.3	HOW TO LOCATE PARTS.	4-1-3
1.4	HOW TO ORDER PARTS.	4-1-4
2	MANUFACTURER'S CODES	4-2-1
3	ALPHA-NUMERIC INDEX	4-3-1
3.1	INTRODUCTION.	4-3-1
4	GROUP INDEX	4-4-1
1	TOW TRACTOR ASSEMBLY	4-4-3
1.1	TOW TRACTOR OVERALL VIEW	4-4-4
1.2	OPERATOR'S COMPARTMENT	4-4-8
1.3	CAB MODEL 416 (OPTION)	4-4-12
1.4	CAB MODEL 846 (OPTION)	4-4-14
1.5	CAB MODEL 812 (OPTION)	4-4-16
2	DRIVE LINE	4-4-19
2.1	ENGINE AND TRANSMISSION ASSEMBLY	4-4-20
2.2	ENGINE AND TRANSMISSION CONNECTION	4-4-22
2.3	DRIVE LINE ASSEMBLY	4-4-24
2.4	STEERABLE AXLE HOUSING	4-4-26
2.5	STEERABLE AXLE DIFFERENTIAL	4-4-28
2.6	STEERABLE AXLE STEERING PARTS	4-4-30
2.7	STEERABLE AXLE PLANETARY HUB REDUCERS	4-4-32
2.8	RIGID AXLE HOUSING	4-4-34
2.9	RIGID AXLE DIFFERENTIAL	4-4-36
2.10	RIGID AXLE PLANETARY HUB REDUCERS	4-4-38

3 BRAKE SYSTEM COMPONENTS 4-4-43
3.1 BRAKE LINKAGE AND MASTER CYLINDER/HYDRAULIC BOOSTER 4-4-42
3.2 BRAKE HYDRAULIC BOOSTER ASSEMBLY 4-4-44
3.3 BRAKE SYSTEM HYDRAULIC BOOSTER CIRCUIT 4-4-46
3.4 HYDRAULIC BRAKE SYSTEM 4-4-48
3.5 FRONT BRAKE ASSEMBLY 4-4-50
3.6 REAR BRAKE ASSEMBLY 4-4-52
3.7 PARKING BRAKE LINKAGE 4-4-54
3.8 PARKING BRAKE ASSEMBLY 4-4-56

4 FUEL SYSTEM 4-4-61
4.1 FUEL SYSTEM WITH FUEL FILTER/WATER SEPARATOR (OPTION) 4-4-60
4.2 ETHER ENGINE STARTING AID (OPTION) 4-4-62
4.3 THROTTLE CONTROL 4-4-64

5 GOVERNOR ADJUSTMENT (NOT USED REFER TO GROUP 4) 4-4-67

6 LUBRICATION SYSTEM FOR ENGINE AND TRANSMISSION 4-4-69
6.1 TRANSMISSION LUBE OIL SYSTEM 4-4-70
6.2 ENGINE LUBE OIL SYSTEM 4-4-72

7 ENGINE COOLING SYSTEM COMPONENTS 4-4-75
7.1 ENGINE COOLING SYSTEM 4-4-76

8 ENGINE AIR INTAKE AND EXHAUST SYSTEM 4-4-79
8.1 AIR INLET ASSEMBLY 4-4-80
8.2 EXHAUST SYSTEM 4-4-82

9 ELECTRICAL SYSTEM COMPONENTS 4-4-85
ELECTRICAL MATERIAL LIST AND EQUIPMENT LOCATION,
GT50 TOW TRACTOR WITH DEUTZ 12941092

10 GENERATOR (NOT USED) 4-4-95

11 NOT USED 4-4-97

12 STEERING SYSTEM COMPONENTS 4-4-99
12.1 STEERING COLUMN 4-4-100
12.2 HYDRAULIC STEERING VALVE ASSEMBLY 4-4-102
12.3 HYDRAULIC FILTER ASSEMBLY 4-4-104
12.4 HYDRAULIC STEERING PUMP 4-4-106
12.5 HYDRAULIC STEERING SYSTEM 4-4-108

SECTION 1

PARTS LIST

1.1 INTRODUCTION.

1.1.1 This parts breakdown is prepared to help you locate parts which may be required in maintenance. An Alpha-Numeric Index is included in Section 3 of this chapter.

CAUTION

FOR YOUR OWN PROTECTION, DO NOT USE SUBSTITUTE PARTS WITHOUT APPROVAL OF STEWART & STEVENSON SERVICES.

1.2 PARTS LIST.

1.2.1. The Parts List illustrates, and identifies components, assemblies, subassemblies sub-subassemblies, and detailed parts required for maintenance of the equipment. Illustrations supplement the Parts List. The Parts List is presented in tabular form. The columns, reading from left to right, are headed: Figure & Index Number, Part Number, Manufacturer's Code, Description, and Quantity (Table 1.1).

TABLE 1.1 PARTS LIST (EXAMPLE)

FIG. & INDEX NO.	PART NO.	MFR. CODE	DESCRIPTION	QTY.
4.1			COOLING SYSTEM	
-1	12903953	81381	Engine and Transmission Assembly	1
	8923595	81381	Pulley	1
			ATTACHING PARTS	
-2	No Number	COML	Nut, Hex Lock, 5/16-24, Steel, Cadmium Plated *****	AR
-3	9N3654	11083	Pump, Water	REF

1.2.2 Figure and Index Number Column.

(a) The first item in the figure and Index Number column is the figure number of the illustration. Each subsequent dash number corresponds to the illustration's number.

(b) Identical parts occurring in the same illustration are illustrated and indexed but once,except when identical parts need to be identified for clarity. Then, the identical parts are assigned the same index number. Identical parts occurring in other illustrations are identified and listed for that illustration.

1.2.3 Part Number Column. NO NUMBER appearing in the Part Number column indicates that the part or assembly is of common usage and usually can be purchased locally.

1.2.4 Manufacturer's Code. The Manufacturers' Code column lists the five-number code assigned the manufacturers in the Federal Supply Codes for Manufacturers Handbook. This number represents the name and address of the vendor. Refer to Section 2 for the list of code numbers referenced to each manufacturer's name and address. If COML appears as a Manufacturer's Code, the item is of common usage and usually can be purchased locally.

1.2.5 Description Column.

(a) The Description column gives the names of parts assigned by the manufacturer, plus any additional modifiers necessary to ensure identification of the parts. Items which are part of an assembly are preceded by one dot. Each dot associates the part to the previously listed index without a dot. Items which are part of a subassembly are preceded by two dots, which associate the part to the previously listed item with one dot. Attaching parts are listed beneath the item they attach. They are captioned, ATTACHING PARTS, and are followed by the separation symbol ***** to distinguish them from subsequent listings.

(b) Items that are available commercially also are identified in this column; e.g., "Nut, Hex, Lock, 5/16-24, Steel, Cadmium Plated".

1.2.6 Quantity Column. The Quantity column indicates the number of units per component, assembly, sub-assembly, and/or sub-subassembly. The quantity required for one item is given except when identical parts are used. When items are listed for reference purposes, "REF" is used in the quantity column. This indicates that the item appears elsewhere in the manual where the units per assembly are given. "AR" in the quantity column stands for "As Required".

1.3 HOW TO LOCATE PARTS.

1.3.1 Parts may be readily located in this IPB, as follows: Refer to the Group Index, Chapter 4, Section 4. Determine the group number in which the part appears and refer to the group in the Parts List. Illustrations are included to aid you in identifying parts.

1.4 HOW TO ORDER PARTS.

1.4.1 Place parts orders with Stewart & Stevenson Services, P.O. 1637, Houston, Texas 77251-1637. or Stewart & Stevenson Services, P. O. Box 47343, Dallas, Texas 75247. Stewart & Stevenson maintains a large stock of repair parts to assure prompt delivery of needed parts.

1.4.2 To ensure fast delivery when ordering parts, list the quantity, part number, manufacturer's code, complete description of the needed part(s), and the serial number of the tractor or engine.

1.4.3 In case of difficulty, wire or write Stewart & Stevenson Services, Inc., P. O. Box 1637, Houston, Texas 77251-1637. Be sure to list the equipment model and serial numbers, rating, specific nature of the problem, and the suspected area of malfunction.

1.4.4 For emergency assistance, call:

For Airline Parts: 800-231-8181
(Texas Residents: (713) 923-2161; ask for Airlines Parts Department)

For Airline Service: 800-527-3246; Stewart & Stevenson Warranty Department
(Texas Residents: (713) 923-2161; ask for Warranty Department)

SECTION 2

MANUFACTURER'S CODES

CODE	NAME AND ADDRESS	CODE	NAME AND ADDRESS
06970	Cablecraft, Inc. 2011 South Mildred Street Tacoma, WA 98466 206-475-1080	55752	Racor Industries 3400 Finch Rd. P. O. Box 3208 Modesto, CA 95353 800-344-3286
09990	Parker-Hannifin Filter Div. 1618 Metamora Elyria, OH 43540 419-644-4311	57733	Stewart-Warner Corp. 1826 Diversey Parkway Chicago, IL 60614 312-883-6000
13445	Cole-Hersee Co. 20 Old Colony Ave. Boston, MA 02172 617-268-2100	60180	Martin Cab Div. Martin Sheet Metal, Inc. 7108 Madison Ave. Cleveland, OH 44102 216-651-3882
14894	Allied Industries, Bendix 1094 Bendix Drive P. O. Box 1632 Jackson, TN 38301 901-423-1300	62445	Deutz Inc. Engine Division 7585 Ponce de Leon St. Atlanta, GA 404-449-6140
16764	Delco-Remy Division General Motors Corp. 2401 Columbus Ave. Anderson, IN 46011 800-428-6427	76462	Delco Moraine Div. General Motors Corp. 1420 Wisconsin Blvd. Dayton, OH 45401 1513-455-5909
23826	Furnas Elect. Co. 1004 McKee St. Batavia, IL 60510 708-879-6000		
27191	Cutler-Hammer, Inc. Ind. Systems Div. 4265 N. 30th Street Milwaukee, 1WI		

SECTION 2

MANUFACTURER'S CODES (Cont'd)

CODE	NAME AND ADDRESS	CODE	NAME AND ADDRESS
76700	Nelson Muffler Div. Nelson Industries, Inc. 856 Fair St. P.O. Box 428 Strouton, WI 53589 600-871-4373	85814	Nason Company P.O. Box 505 West Union, SC 29696 803-638-9521
79470	The Wetherhead Co. 300 East 131st St. Cleveland, OH 44108 216-292-7100	96105	Funk Transmission Industrial Park P.O. Box 577 Coffeyville, KS 67337 316-251-3400
79780	Rockwell International S.O.M.A. Axle Service Center 7975 Dixie Hwy. Florence, KY 41042 606-231-8181	96151	Eaton Corp. Fluid Power Division 15151 Hwy. 5 Eden Prairie, MN 55343 612-937-9800
81381	Stewart & Stevenson Services, Inc. P. O. Box 1637 Houston, TX 77001 800-231-8181		

SECTION 3

ALPHA-NUMERIC INDEX

3.1 INTRODUCTION.

3.1.1 The Alpha-Numeric Index (Table 3.1) consists of four columns: FIGURE & INDEX NUMBER, PART NUMBER, QUANTITY, and AIRLINE PART NUMBER.

3.1.2 The Figure & Index Number matches each part number with the exact figure and callout number that depicts that part. The number before the dash indicates the figure number and the number after the dash is the callout number on the figure. For example, if number 2.1-7 is listed, refer to Figure 2.1 and locate item 7.

3.1.3 The Part Number column lists the part number assigned or used by Stewart & Stevenson for stocking or ordering purposes.

3.1.4 The Quantity column lists the amount of parts used in that particular listing. REF (reference) indicates the quantity of that part has been listed in another Figure and Index column.

3.1.5 The Airline Part Number is provided for the customer's use only, and has therefore been left blank.

TABLE3.1 ALPHA-NUMERIC INDEX

FIGURE & INDEX NO.	PART NUMBER	QUANTITY	AIRLINE PART NO.
4.1-2	02380-17	1	
4.2-2	02380-17	1	
9.4-R1	02380-17	1	
3.7-6	103495	2	
12.4-26	104-34A	2	
4.5-4	104036	2	
12.4-10	104X41A	2	
4.3-3	11-1606	1	
4.3-12	11005B	1	
4.3-8	11007	1	
4.3-6	11025C	1	
4.3-4	11026C	1	
4.3-5	11027	1	
4.3-7	11028B	1	
4.3-17	11037A	1	
9.4-K6	1116781	1	
4.3-16	1123B	1	
4.3-2	11340	1	
4.3-13	11350	1	
4.3-15	11542	4	
1.1	1157	2	
12.4-14	115X37	2	
12.4-27	116-2	4	
3.7-3	116535	2	
9.4-K3	1116781	1	
12.4-13	116X35	4	
4.3-1	11780	1	
12.4-22	117X154	1	
12.4-5	117X183	2	
4.3-14	11888	1	
12.4-15	118X35	2	
12.5-3	12-F50F50S	1	
1.1-9	12870043-14	1	
4.5-5	12871041		
3.7-21	12871041	1	
3.7-7	12871041	2	
1.2-9	12871519	1	
3.1-21	12881300-30	1	
1.5-1	12881355	1	
2.4	12881437	1	
1.1	12881437	1	

TABLE 3.1 ALPHA-NUMERIC INDEX (CONT.)

FIGURE & INDEX NO.	PART NUMBER	QUANTITY	AIRLINE PART NO.
3.7-10	12881526	1	
3.7-8	12881784	1	
3.7-9	12881785	1	
3.7-2	12881786-1	1	
1.1	12882462	2	
2.2-2	12882602	8	
2.3	12882602	8	
1.1	12882751	2	
12.5-32	12883378	2	
1.2-5	12883513	1	
1.2-14	12883514	1	
1.1-2	12884541	1	
3.7-11	12885050	1	
2.3-2	12890597	4	
1.1-22	12890597	REF	
3.4-18	12890715	1	
4.2-12	12891094	1	
4.2-8	12891095	1	
1.1-23	12893102	1	
2.3-14	12893102	1	
2.3-10	12893103	1	
1.1-24	12893103	1	
1.4-1	12893246	1	
1.2-35	12893969	1	
1.2-33	12893992	1	
1.2-13	12900120	1	
2.3	12902834	1	
2.3-1	12902835	4	
1.1-25	12902835	4	
3.6-39	12903405	1	
3.5-38	12903405	1	
3.5	12903406	1	
3.6	12903406	1	
1.2	12903968	1	
12.5-12	12904102	1	
12.5-13	12904103	1	
3.3-9	12904104	1	
12.5-23	12904105	1	
12.5-20	12904107	1	
2.1	12904136	1	
1.1-3	12904288	1	

TABLE 3.1 ALPHA-NUMERIC INDEX (CONT.)

FIGURE & INDEX NO.	PART NUMBER	QUANTITY	AIRLINE PART NO.
1.1	12910384	1	
3.4-10	131X4	2	
12.1-5	14092	2	
12.2-28	15	1	
12.2-23	15006	1	
12.2-17	15048	1	
4.3-18	155020	1	
12.5-8	16-12-F5OGS	1	
6.1-4	16-F50F50-S	1	
8.2-5	17010	1	
3.2-2	18000641	1	
3.2-15	18001601	1	
3.2-7	18001602	1	
3.2-19	18002229	2	
3.2-23	18002774	1	
3.2-20	18002858	1	
3.2-16	18002912	1	
3.2	1800415A	1	
3.2-3	18004548	1	
3.2	18004797	1	
3.2-18	18006974	1	
9.4-B2	18006974	1	
3.2-1	18006994	1	
3.2	18007368	1	
12.2-26	18026	1	
9.1-36	1892164	1	
1.1-15	1892164	1	
1.2-3	1892164	1	
9.4-H1	1892164	1	
4.3-9	19001	1	
4.3-11	19002	1	
2.2-1	1B5170	1	
9.4-CR2,4,5	1N3212	3	
7.1-7	20206	1	
12.1	204-1007-003	1	
4.3-10	2020SM-OR	1	
12.2-11	20599	1	
12.5-6	2062-24-20	1	
1.2	206612-1	1	
12.2-8	21046-1	4	

TABLE 3.1 ALPHA-NUMERIC INDEX (CONT.)

FIGURE & INDEX NO.	PART NUMBER	QUANTITY	AIRLINE PART NO.
12.1-12	21047-1	2	
12.2-14	21124	1	
12.1-2	21138	1	
12.1-13	21141	1	
12.1-1	21142-1	1	
12.1	21143	1	
12.1	21144	2	
12.1-7	21146	1	
12.1-9	21149	1	
12.1-10	21151	1	
12.1	21173	1	
12.5-24	22-5-12-10	1	
3.3-3	2236179	1	
3.1-1	2236179	1	
1.2-10	2236179	1	
3.1	22387	1	
3.4-1	2239179	1	
9.4-DS7	2603	1	
9.4-DS15,16	2603	2	
9.4-DS8	2603	1	
1.1-26	2603	2	
1.1-27	2603	2	
3.2-14	2620426	1	
3.2-8	2620427	1	
3.2-12	2620428	1	
3.2-21	2620429	1	
3.2-13	2620430	1	
3.2-10	2623020	1	
3.2-22	2623111	1	
9.1-37	2702	1	
1.2-6	2702	1	
1.1-11	28093	2	
4.5	2A076	1	
8.1-9	2B2695	6	
9.1-27	3032	1	
12.4-28	34X143	4	
12.4-16	34X144	8	
12.2-22	370	6	

TABLE 3.1 ALPHA-NUMERIC INDEX (CONT.)

FIGURE & INDEX NO.	PART NUMBER	QUANTITY	AIRLINE PART NO.
2.3	3819	1	
2.3	3861	1	
2.3	3884	1	
3.8-2	4001362	2	
3.8-3	4002655	1	
3.8-1	4003259	1	
6.1	4003483	1	
2.1-4	4003483	1	
3.8-10	4010486	1	
3.8-14	4012821	8	
1.2-12	4041014	1	
3.8-5	4041311	1	
1.3-25	416-301	1	
1.3-26	416-302	1	
1.3-27	416-304	1	
1.3-17	416-401	1	
1.3-18	416-402	1	
1.3-14	416-404	1	
1.3-8	416-5000	1	
1.3-11	416-5002	1	
1.3-13	416-5003	1	
1.3-12	416-504	1	
1.3-19	416-6000	1	
1.3-24	416-6002	1	
1.3-20	416-6003	1	
1.3-23	416-604	1	
1.3-2	416-7001-IB	1	
1.3-4	416-7001-OB	1	
1.3-3	416-7002-IB	1	
1.3-5	416-7002-OB	1	
1.3-6	416-801-L	1	
1.3-15	416-801-R	1	
1.3-7	416-802-L	1	
1.3-16	416-802-R	1	
1.3-9	416-A5001	1	
1.3-10	416-A502	1	
1.3-21	416-A6001	1	
1.3-22	416-A602	1	
1.1-10	460MED	AR	
2.3	5-279X	2	
2.3	5-279X	2	
12.1-4	5028	1	

TABLE 3.1 ALPHA-NUMERIC INDEX (CONT.)

FIGURE & INDEX NO.	PART NUMBER	QUANTITY	AIRLINE PART NO.
12.1-3	5029	1	
8.1-5	5118393	4	
12.2-1	5126	1	
12.2	5140	2	
4.5-6	5147345	2	
3.4-8	5188	2	
12.2-5	5213	1	
12.1-11	5244-1	1	
12.1-6	5245	1	
12.1-8	5259-1	1	
12.2-7	5389-13	7	
1.2	54012-1	1	
12.2-2	5414	1	
3.2-5	5471970	1	
3.2-9	5472234	1	
3.2-6	5472238	1	
3.2-4	5472239	1	
3.2-24	5473592	1	
3.2-11	5473593	1	
3.2-17	547386	1	
9.4-S6	54LA81	1	
3.7-16	54LA81	1	
12.2-14	5542	2	
12.2-15	5543	1	
12.2-16	5544	1	
12.2-19	5651	1	
12.2-3	5663-1	2	
1.1-17	56AB170	2	
1.1-16	56AD169	2	
1.2-32	57AB8348	1	
1.1-21	592614C1	1	
2.11	5MRA8290FH	1	
2.8	5MRDIA8353FH	1	
4.5	5P0537	1	
1.1	60-5001	1	
9.4-DS9	60002Y	1	
9.4-DS10	60002Y	1	
1.1-14	60002Y	2	
1.2-34	6046K31	2	
7.1-23	60574	10	
1.1	60578	12	
3.7-18	60606	2	
4.5-9	60608	2	

TABLE 3.1 ALPHA-NUMERIC INDEX (CONT.)

FIGURE & INDEX NO.	PART NUMBER	QUANTITY	AIRLINE PART NO.
4.5-3	60608	4	
1.2-18	60608	8	
1.2-22	60608	4	
12.2-4	622	1	
1.1	64-101	1	
12.2-18	6419	1	
12.2-20	6420	1	
12.2-21	6421	1	
12.2-6	6481	1	
1.1	6500	2	
12.4-25	655273	1	
12.4-23	655287	1	
12.4-24	655288	1	
12.4-21	656241	1	
12.4-18	656559	1	
12.4-11	656928	1	
12.4-8	656934	1	
12.4-7	656934	1	
12.4-12	656941	1	
12.4-6	659942	1	
1.2	66102-2	7	
1.2	66258-1	2	
9.4	67	1	
9.2-13	67487	1	
12.4-9	675512	1	
12.4-2	675549	1	
9.1-18	67646	1	
9.1-20	67646	1	
9.4-S11	67646	1	
9.4-K4	12940344	1	
9.4-K1	12940344	1	
12.4-29	68051	1	
12.4-4	695639	1	
12.4-19	695947	1	
9.4-BT1A,B	69802	2	
4.5-14	6N3646	1	
8.1-2	70459A	1	
3.1-5	71063	2	
3.1-7	71068	2	
12.4-1	725321	1	
3.7-13	73756	2	

TABLE 3.1 ALPHA-NUMERIC INDEX (CONT.)

FIGURE & INDEX NO.	PART NUMBER	QUANTITY	AIRLINE PART NO.
4.5-7	73759	2	
3.7-14	73761	2	
3.7-19	73769	2	
3.7-22	73781	2	
2.3-13	73790	8	
3.1-4	73790	6	
12.5-44	73790	2	
4.5-12	73792	1	
3.7-12	73794	2	
2.4-2	73796	8	
2.4-9	73796	20	
7.1-30	73798	10	
4.5-13	73802	1	
3.1-13	73807	3	
1.2-25	73812	4	
3.1-3	73815	4	
8.2-8	73815	2	
3.1-8	73816	2	
12.5-45	73826	2	
1.2-23	73837	4	
2.4-8	74030	20	
1.2-4	7404900	1	
3.1-6	74323	2	
2.3-6	74574	24	
2.3	74626	19	
7.1-32	74626	10	
2.2-3	74626	19	
8.2-7	74774	2	
7.1-21	75470	4	
2.4-1	75801	8	
3.4-12	75826	1	
3.4-14	75827	4	
3.1-10	75835	7	
3.2	75860	1	
1.2-7	75860	1	
3.3-1	75860	1	
3.1-2	75860	1	
4.5-2	76094	2	
4.5-1	76101	1	
1.2-28	76101	1	
3.1-15	76109	1	
9.4-FL1	76459	1	

TABLE 3.1 ALPHA-NUMERIC INDEX (CONT.)

FIGURE & INDEX NO.	PART NUMBER	QUANTITY	AIRLINE PART NO.
1.2	76459	1	
9.1	76459	1	
9.1-22	76473	1	
9.1-19	76473	1	
9.1-21	76473	1	
9.4-S19	76473	1	
9.4-S9	76473	1	
9.4-S20	76473	1	
9.1-24	76481	1	
9.4-DS11	76481	1	
9.1-25	76481	1	
9.4-S12	76481	1	
9.1-23	76481	1	
9.1-26	76481	1	
9.4-DS13	76481	1	
9.4-DS17	76482	1	
9.4-DS1	76482	1	
9.1	76482	1	
9.4	76482	1	
4.2-7	76563	1	
1.1-4	76563	1	
4.1-7	76563	1	
7.1-35	76600	10	
12.4-20	766033	1	
12.4-17	766049	1	
1.2-26	76640	4	
1.2-24	76640	4	
7.1-16	76641	4	
12.5-39	76923	2	
12.5-41	76925	1	
12.5-40	76926	1	
12.5-10	76927	1	
12.5-11	76932	1	
12.5-9	76953	1	
12.5-33	76956	2	
12.5-21	76958	2	
7.1-31	76966	2	
6.1-2	76966	2	

TABLE 3.1 ALPHA-NUMERIC INDEX (CONT.)

FIGURE & INDEX NO.	PART NUMBER	QUANTITY	AIRLINE PART NO.
6.1-3	76966	2	
12.5-2	76967	1	
2.4-4	77141	2	
2.4-5	77160	2	
3.4-9	7731	2	
4.3-19	77639	1	
4.5-10	77747	2	
1.2-31	77790	1	
12.5-43	77790	1	
12.1	77790	1	
1.2-2	77791	1	
9.4-S5	77793	1	
9.4-F3	77949	1	
4.3-20	77950	1	
9.4-F2,4	77950	1	
9.4-F1	77951	1	
3.4-4	78228	2	
9.4-S10,17	78237	2	
3.4-20	78237	1	
3.4-5	78237	1	
3.1-14	78286	1	
1.2-20	78290	1	
1.2-17	78291	1	
3.3-2	78305	1	
12.5-42	78341	1	
1.2-30	78341	1	
12.2	78341	1	
2.4-6	78343	6	
2.4-7	78345	20	
1.1	78383	1	
9.1-4	78780	1	
9.1-6	78781	1	
9.1-8	78782	1	
3.1-12	78830	1	
8.1-1	79021-N	1	
7.1-3	79386	2	
7.1-15	79578	4	
9.2-12	79647	1	
3.1-17	80952	3	
1.5-13	812-301-LL	1	
1.5-11	812-301-LR	1	
1.5-2	812-301-UL	1	

TABLE 3.1 ALPHA-NUMERIC INDEX (CONT.)

FIGURE & INDEX NO.	PART NUMBER	QUANTITY	AIRLINE PART NO.
1.5-4	812-301-UR	1	
1.5-14	812-302-LL	1	
1.5-12	812-302-LR	1	
1.5-3	812-302-UL	1	
1.5-5	812-302-UR	1	
1.5-23	812-304	1	
1.5-8	812-401	1	
1.5-6	812-401	1	
1.5-9	812-402	1	
1.5-7	812-402	1	
1.5-10	812-404	1	
1.5	812-500-L	1	
1.5	812-5000	1	
1.5	812-5002	1	
1.5	812-5003	1	
1.5	812-502-L	1	
1.5	812-504	1	
1.5-17	812-600-L	1	
1.5-15	812-6000	1	
1.5-16	812-6002	1	
1.5-19	812-6003	1	
1.5-18	812-602-L	1	
1.5-20	812-604	1	
1.5-24	812-801-L	1	
1.5	812-801-R	1	
1.5-25	812-802-L	1	
1.5	812-802-R	1	
1.5	812-804-L	1	
1.5	812-804-R	1	
1.5	812-A5001	1	
1.5	812-A502	1	
1.5-21	812-A6001	1	
1.5-22	812-A602	1	
3.1-19	81451	2	
7.1-29	81586	2	
7.1-12	81586	6	
7.1-37	81681	2	
2.3-8	83320	1	
2.1-5	83320	1	
6.1-5	83327	1	
12.5-7	83502	1	
12.5-1	83503	1	
12.4	83503	1	

TABLE 3.1 ALPHA-NUMERIC INDEX (CONT.)

FIGURE & INDEX NO.	PART NUMBER	QUANTITY	AIRLINE PART NO.
12.4-3	835304	1	
12.2	838	1	
2.3-3	83931	1	
3.1-9	84159	1	
2.4-3	84233	16	
7.1-8	84236	2	
12.2-10	843	1	
12.2-9	844	1	
12.5-4	84541	1	
3.3-11	84541	1	
4.1-1	84542	1	
4.2-1	84542	1	
1.4-25	846-301-L	1	
1.4-27	846-301-R	1	
1.4-26	846-302-L	1	
1.4-28	846-302-R	1	
1.4-29	846-304	1	
1.4-17	846-401	1	
1.4-18	846-402	1	
1.4-14	846-404	1	
1.4-8	846-5000	1	
1.4-11	846-5002	1	
1.4-13	846-5003	1	
1.4-12	846-504	1	
1.4-19	846-6000	1	
1.4-24	846-6002	1	
1.4-20	846-6003	1	
1.4-23	846-604	1	
1.4-2	846-7001-IB	1	
1.4-4	846-7001-OB	1	
1.4-3	846-7002-IB	1	
1.4-5	846-7002-OB	1	
1.4-6	846-801-L	1	
1.4-15	846-801-R	1	
1.4-7	846-802-L	1	
1.4-16	846-802-R	1	
1.4-9	846-A5001	1	
1.4-10	846-A502	1	
1.4-21	846-A6001	1	
1.4-22	846-A602	1	
12.5-14	84634	1	
12.5-31	84726	2	
12.5-15	84903	1	

TABLE 3.1 ALPHA-NUMERIC INDEX (CONT.)

FIGURE & INDEX NO.	PART NUMBER	QUANTITY	AIRLINE PART NO.
3.7-4	85062	1	
3.1-20	85062	2	
3.3-10	85164	1	
12.3	85164	1	
12.5-16	85164	1	
1.2-16	85165	2	
1.2-15	85175	1	
3.7-1	85175	1	
1.2-21	85176	1	
2.3-11	85213	1	
2.3-5	85214	1	
2.4-11	85338	6	
1.2-27	85342	1	
3.4-16	85386	1	
1.1-13	85401	2	
9.4-DS6	85401	1	
9.4-DS5	85401	1	
12.5-46	85421	4	
12.5-29	85426	1	
3.1-11	85504	1	
4.5-8	85566	1	
12.2-27	857	1	
12.5-34	85739	2	
12.5-30	85740	2	
12.5-26	85743	1	
3.3-7	85745	1	
12.5-5	85745	1	
3.3-8	85747	1	
3.3-6	85761	2	
12.5-28	85762	2	
12.5-27	85763	1	
12.5-25	85764	1	
3.4-13	85818	2	
3.4-2	85822	1	
3.4-3	85823	1	
3.4-6	85835	1	
3.4-7	85836	1	
3.4-17	85840	1	
3.7-5	85868	1	
3.4-11	85875	1	
3.4-15	85882	4	
3.4-19	85889	1	
12.2-25	859	1	

TABLE 3.1 ALPHA-NUMERIC INDEX (CONT.)

FIGURE & INDEX NO.	PART NUMBER	QUANTITY	AIRLINE PART NO.
6.1-6	85905	1	
1.2-29	85967	1	
3.1-18	85967	1	
12.5-19	86054	1	
12.5-18	86063	1	
12.5-17	86069	2	
6.1-7	86083	2	
3.7-17	86453	1	
4.5-11	86456	1	
4.1-5	86514	1	
2.3-4	86546	16	
1.1	86581	2	
2.3-12	86611	8	
1.2-8	86707	1	
1.1-18	86773	12	
1.1	12912686	2	
1.1-28	12912685	2	
1.3-1	88713	1	
1.1	89369	2	
3.2	89458	1	
9.1-35	900	1	
1.2-1	900	1	
12.3-1	900028	1	
12.3	900445	4	
1.1	9016W	2	
3.3-4	90324	1	
3.3-5	90325	1	
12.5-37	90326	1	
12.5-38	90327	1	
12.5-36	90328	1	
12.5-35	90329	1	
4.3-21	9040-10-8	2	
12.3-15	924302	1	
12.3-9	924319	1	
12.3-13	924433	2	
12.3-14	924450	1	
12.5	924450	1	
12.3-4	924634	1	
12.3-17	924695	4	
12.3-18	924754	4	
12.3-20	924776	1	
12.3-8	924776	1	

TABLE 3.1 ALPHA-NUMERIC INDEX (CONT.)

FIGURE & INDEX NO.	PART NUMBER	QUANTITY	AIRLINE PART NO.
12.3-16	924782	1	
12.3-19	924861	4	
12.3-12	924913	1	
12.3-2	924928	1	
12.3-6	924948	2	
12.3-11	925972	1	
12.3	926126	2	
12.3	926179	1	
12.3-7	926582	1	
12.3-3	926633	12	
2.4-10	94435	8	
9.1-14	94508	1	
9.4-M1	94508	1	
4.1-4	94978	1	
4.2-4	94978	1	
9.1-30	95665	1	
9.1-31	95665	1	
8.1-6	97098	2	
3.8-15	98-09436	1	
1.2-19	98049	1	
1.1-5	98205	1	
1.1-12	99019	1	
8.1-10	9M1974	6	
9.2-8	9N0683	1	
2.9-4	A75000598	1	
2.10-9	A75650088	1	
2.6-9	A75650088	1	
2.11-4	A75650151	1	
2.8-4	A75650151	1	
2.10-10	A75650169	1	
2.6-10	A75650169	1	
2.8-5	A75650594	1	
2.11-5	A75650594	1	
2.7-16	A75700690	1	
2.10-1	A86004123	1	
2.6-1	A86004123	1	
2.6-11	A86010008	1	
2.10-11	A86010008	1	
2.10-13	A86010009	1	
2.6-13	A86010009	1	
2.6-14	A86010012	1	
2.10-14	A86010012	1	
2.7-6	A86020076	2	

TABLE 3.1 ALPHA-NUMERIC INDEX (CONT.)

FIGURE & INDEX NO.	PART NUMBER	QUANTITY	AIRLINE PART NO.
2.9-1	A87027007	1	
2.5-1	A87029503	1	
2.6-2	A88100010	1	
2.10-2	A88100010	1	
2.6-8	A88110068	1	
2.10-8	A88110068	1	
2.6-12	A88130017	1	
2.10-12	A88130017	1	
2.10-17	A88140076	1	
2.6-17	A88140076	1	
2.11-18	A88350092	4	
2.8-18	A88350092	4	
2.8-1	A88401317	1	
2.11-1	A88401317	1	
2.11-6	A88412020	1	
2.8-6	A88412020	1	
2.11-16	A88423304	1	
2.8-16	A88423304	1	
2.8-17	A88434041	1	
2.11-17	A88434041	1	
2.7-3	A88500290	1	
2.7-2	A88510243	1	
2.7-4	A88510244	2	
2.7-10	A88550164	1	
1.1-7	AD-100	1	
1.1	BB50	2	
9.1-3	CABE0027	1	
9.1-5	CABE0027	1	
9.1-7	CABE0028	1	
1.3	CABE0028-01	1	
1.4	CABE0028-01	1	
1.4	CABE0028-03	1	
1.3	CABE0028-03	1	
1.3	CABE018-04	1	
1.4	CABE018-04	1	
1.3	CABEOO28	1	
1.4	CABEOO28	1	
1.3	CABW0044	1	
1.4	CABW0044	1	
1.3	CABWOOO8	1	
1.4	CABWOOO8	1	
3.7-20	CP103	1	
3.7-15	CS541	1	

TABLE 3.1 ALPHA-NUMERIC INDEX (CONT.)

FIGURE & INDEX NO.	PART NUMBER	QUANTITY	AIRLINE PART NO.
7.1-25	DB-1231	1	
12.5-22	DB-1231	1	
9.1-33	DF/12V	1	
9.1-32	DL/12V	1	
9.4-DS14	DL-13	1	
9.1-11	DL-13	1	
3.6-36	E50000187	10	
2.11-2	E50000187	10	
2.8-2	E50000187	10	
3.5-35	E50000187	10	
3.6-31	E72012017	1	
3.5-31	E72012017	1	
2.7-1	E74015005	1	
2.5-4	E75000612	1	
2.11-11	E75101174	1	
3.6-38	E75230509	10	
2.11-25	E75230509	10	
2.8-25	E75230509	10	
3.5-37	E75230509	10	
2.9-6	E75500381	3	
2.5-6	E75500381	3	
2.10-7	E75500427	1	
2.6-7	E75500427	1	
3.5-32	E75500639	3	
3.6-32	E75500639	3	
2.8-22	E75500703	1	
2.11-22	E75500703	1	
2.9-7	E75501304	14	
2.8-23	E75501386	8	
2.11-23	E75501386	8	
2.7-7	E75501903	2	
3.6-37	E75501988	10	
3.5-36	E75501988	10	
2.8	E75501988	10	
2.11-28	E75502016	3	
2.6-21	E75502062	2	
2.10-21	E75502062	2	
3.5-7	E75502112	2	
3.6-7	E75502112	2	
3.6-30	E75502124	15	
2.10-3	E75502646	4	
2.6-3	E75502646	4	
2.7-9	E75502752	8	

TABLE 3.1 ALPHA-NUMERIC INDEX (CONT.)

FIGURE & INDEX NO.	PART NUMBER	QUANTITY	AIRLINE PART NO.
2.9-8	E75502830	1	
2.9-5	E75502834	14	
2.5-5	E75502834	3	
2.7-15	E75502994	1	
2.8-19	E75503017	1	
2.11-19	E75503017	1	
2.8-24	E75503039	1	
2.9-3	E75503039	2	
2.5-3	E75503039	2	
2.11-24	E75503039	1	
3.5-30	E75503069	15	
2.5-2	E75503173	1	
2.9-2	E75503173	1	
2.11-21	E75503178	1	
2.8-21	E75503178	1	
3.6-35	E75503336	15	
2.8-14	E75503408	1	
2.11-14	E75503408	1	
2.10-16	E75503484	1	
2.6-16	E75503484	1	
2.7-5	E75503486	2	
3.6-34	E75503488	1	
3.5-34	E75503488	1	
2.6-4	E75600337	4	
2.10-4	E75600337	4	
2.7-12	E75700593	1	
2.7	E75700594	1	
3.6-26	E75700596	1	
3.5-26	E75700596	1	
3.6-13	E75700625	2	
3.5-13	E75700625	2	
2.7-13	E75700688	1	
2.7-14	E75700689	1	
3.5-5	E75700741	10	
3.6-5	E75700741	10	
3.6-1	E75701050	1	
3.5-1	E75701050	1	
2.7-11	E75701059	1	
3.5-24	E75750027	4	
3.6-24	E75750027	4	
3.6-22	E75750042	6	
3.5-22	E75750042	6	
3.5-4	E75750042	2	

TABLE 3.1 ALPHA-NUMERIC INDEX (CONT.)

FIGURE & INDEX NO.	PART NUMBER	QUANTITY	AIRLINE PART NO.
3.6-4	E75750042	2	
3.6-9	E75750051	2	
3.5-9	E75750051	2	
3.6-12	E75750055	2	
3.5-12	E75750055	2	
3.6-17	E75750057	1	
3.5-17	E75750057	1	
3.5-20	E75750058	1	
3.6-20	E75750058	1	
3.6-19	E75750059	1	
3.5-19	E75750059	1	
3.5-18	E75750060	1	
3.6-18	E75750060	1	
3.5-23	E75750063	2	
3.6-23	E75750063	2	
3.6-16	E75750071	2	
3.5-16	E75750071	2	
3.6-11	E75750073	2	
3.5-11	E75750073	2	
3.6-25	E75750090	1	
3.5-25	E75750090	1	
3.6-27	E75750095	1	
3.5-27	E75750095	1	
3.5-29	E75750096	2	
3.6-29	E75750096	2	
3.5-3	E75750159	1	
3.6-3	E75750159	1	
3.5-15	E75750162	2	
3.6-15	E75750162	2	
3.5-14	E75750163	1	
3.6-14	E75750163	1	
3.5-21	E75750209	1	
3.6-21	E75750209	1	
3.5-28	E75750249	1	
3.6-28	E75750249	1	
3.5-10	E75750345	1	
3.6-10	E75750345	1	
3.6-2	E75750346	1	
3.5-2	E75750346	1	
3.6-8	E75750347	2	
3.5-8	E75750347	2	
3.6-6	E75750348	1	
3.5-6	E75750348	1	

TABLE 3.1 ALPHA-NUMERIC INDEX (CONT.)

FIGURE & INDEX NO.	PART NUMBER	QUANTITY	AIRLINE PART NO.
2.11-8	E79001048	1	
2.8-8	E79001048	1	
2.8-15	E86030100	1	
2.11-15	E86030100	1	
2.6-20	E88100008	1	
2.10-20	E88100008	1	
2.6-5	E88100014	1	
2.10-5	E88100014	1	
2.10-6	E88100015	1	
2.6-6	E88100015	1	
2.10-18	E88140025	1	
2.6-18	E88140025	1	
2.10-19	E88140038	1	
2.6-19	E88140038	1	
2.11-12	E88350006	1	
2.8-12	E88350006	1	
2.11-10	E88350016	1	
2.8-10	E88350016	1	
2.8-9	E88350017	1	
2.11-9	E88350017	1	
2.8-20	E88350086	1	
2.11-20	E88350086	1	
2.8-13	E88350142	1	
2.11-13	E88350142	1	
2.8-7	E88350180	1	
2.11-7	E88350180	1	
2.8-11	E88350189	1	
2.11-27	E88504017	1	
2.7-8	E88510208	1	
2.11-26	E88700556	1	
3.5-33	E88900122	1	
3.6-33	E88900122	1	
3.8-8	F1003036	1	
3.8-11	F1003528	8	
3.8-7	F1005032	4	
3.8-12	F1300600	8	
3.8-13	F16202	8	
3.8-6	F16204	4	
3.8-4	F2400775	2	
3.8-9	F79104	1	
2.11-3	G75503596	1	
2.8-3	G75503596	1	
1.1-8	GH180C	1	

TABLE 3.1 ALPHA-NUMERIC INDEX (CONT.)

FIGURE & INDEX NO.	PART NUMBER	QUANTITY	AIRLINE PART NO.
9.1-1	HEAT0014	1	
9.1-28	HV210669	1	
9.1-29	HV210669	1	
9.4-K5	KUP14D1512	1	
2.7	MRDIA-8353FH	1	
12.3-10	N72350	1	
12.3-5	N72350	2	
4.1-3	P14-8341	2	
4.2-3	P14-8341	2	
9.4-K2	PM17DY12	1	
8.1	Q01444	1	
8.1-4	Q06324	1	
8.1	Q19270	1	
8.1-3	Q27271	2	
8.1	Q66993	1	
3.1-16	TR-8	1	
12.3-21	V72010	2	
1.1	WP1	1	

SECTION 4

GROUP INDEX

GROUP 1	TOW TRACTOR ASSEMBLY	4-4-3
1.1	TOW TRACTOR OVERALL VIEW	4-4-4
1.2	OPERATOR'S COMPARTMENT	4-4-8
1.3	CAB MODEL 416 (OPTION)	4-4-12
1.4	CAB MODEL 846 (OPTION)	4-4-14
1.5	CAB MODEL 812 (OPTION)	4-4-16
GROUP 2	DRIVE LINE	4-4-19
2.1	ENGINE AND TRANSMISSION ASSEMBLY	4-4-20
2.2	ENGINE AND TRANSMISSION CONNECTION	4-4-22
2.3	DRIVE LINE ASSEMBLY	4-4-24
2.4	STEERABLE AXLE HOUSING	4-4-26
2.5	STEERABLE AXLE DIFFERENTIAL	4-4-28
2.6	STEERABLE AXLE STEERING PARTS	4-4-30
2.7	STEERABLE AXLE PLANETARY HUB REDUCERS	4-4-32
2.8	RIGID AXLE HOUSING	4-4-34
2.9	RIGID AXLE DIFFERENTIAL	4-4-36
2.10	RIGID AXLE PLANETARY HUB REDUCERS	4-4-38
GROUP 3	BRAKE SYSTEM COMPONENTS	4-4-41
3.1	BRAKE LINKAGE AND MASTER CYLINDER/HYDRAULIC BOOSTER	4-4-42
3.2	BRAKE HYDRAULIC BOOSTER ASSEMBLY	4-4-44
3.3	BRAKE SYSTEM HYDRAULIC BOOSTER CIRCUIT	4-4-46
3.4	HYDRAULIC BRAKE SYSTEM	4-4-48
3.5	FRONT BRAKE ASSEMBLY	4-4-50
3.6	REAR BRAKE ASSEMBLY	4-4-52
3.7	PARKING BRAKE LINKAGE	4-4-54
3.8	PARKING BRAKE ASSEMBLY	4-4-56
GROUP 4	FUEL SYSTEM COMPONENTS	4-4-59
4.1	FUEL SYSTEM WITH FUEL FILTER/WATER SEPARATOR (OPTION)	4-4-60
4.2	ETHER ENGINE STARTING AID (OPTION)	4-4-62
4.3	THROTTLE CONTROL	4-4-64
GROUP 5	GOVERNOR ADJUSTMENT (NOT USED REFER TO GROUP 4)	4-4-67
GROUP 6	LUBRICATION SYSTEM FOR ENGINE AND TRANSMISSION	4-4-69
6.1	TRANSMISSION LUBE OIL SYSTEM	4-4-70
6.2	ENGINE LUBE OIL SYSTEM	4-4-72

GROUP 7	ENGINE COOLING SYSTEM COMPONENTS	4-4-75
7.1	ENGINE COOLING SYSTEM	4-4-76
GROUP 8	ENGINE AIR INTAKE AND EXHAUST SYSTEM	4-4-79
8.1	AIR INLET ASSEMBLY	4-4-80
8.2	EXHAUST SYSTEM	4-4-82
GROUP 9	ELECTRICAL SYSTEM COMPONENTS	4-4-85
9.1	OPERATOR CONTROL PANEL ASSEMBLY	4-4-86
9.2	ELECTRICAL PARTS	4-4-90
GROUP 10	GENERATOR (NOT USED)	4-4-96
GROUP 11	NOT USED	4-4-98
GROUP 12	STEERING SYSTEM COMPONENTS	4-4-100
12.1	STEERING COLUMN	4-4-101
12.2	HYDRAULIC STEERING VALVE ASSEMBLY	4-4-103
12.3	HYDRAULIC FILTER ASSEMBLY	4-4-105
12.4	HYDRAULIC STEERING PUMP	4-4-107
12.5	HYDRAULIC STEERING SYSTEM	4-4-109