Doosan Infracore

DX225LC

Serial Number 5001 to 5432

Parts Manual

K1015437CEF-1
July 1, 2009

WARNING!

California Proposition 65

Engine Exhaust, some of its constituents, and certain vehicle components contain or emit chemicals known to the State of California to cause cancer and birth defects or other reproductive harm.

WARNING!

California Proposition 65

Battery posts, terminals and related accessories contain lead and lead compounds, chemicals known to the State of California to cause cancer and birth defects or other reproductive harm. WASH HANDS AFTER HANDLING.

DX225LC

Parts Manual

K1015437CEF-1

Serial Number 5001 to 5432

July 1, 2009

Doosan reserves the right to improve its products continuously, delivering the best possible product to the marketplace. These improvements can be implemented at any time with no obligation to change materials previously sold. It is recommended that consumers periodically contact their distributors for most recent documentation on purchased equipment.

This documentation may include attachments and optional equipment not available in your machine's package. Please call your distributor for additional items that you may require.

Illustrations used throughout this manual are used only as a representation of the actual piece of equipment, and may vary from the actual item.

Copyright 2008 Doosan

Product Label

Instructions

Trim Out The Label Along The Lines And Insert Into Pocket On The Binder Spine

DX225LC

Serial Number 5001 to 5432

Pub.No. K1015437CEF-1

DOOSAN

Pub. No. K1015437CEF-1

CONTENTS

● ENGINE PARTS

Fig.	011	CYLINDER BLOCK	BLOC CYLINDRE	011-1
	012	TIMING GEAR CASE	CARTER DE DISTRIBUTION	012-1
	013	FLYWHEEL HOUSING	CARTER DE VOLANT MOTEUR	013-1
	014	OIL SEAL	JOINT	014-1
	015	BREATHER	CONDUIT DE VENTILATION	015-1
	016	DRIVING SYSTEM	SYSTEME D'CENTRAINEMENT	016-1
	017	CYLINDER HEAD	CULLASSE	017-1
	018	CYLINDER HEAD COVER	COUVERTURE DE CULASSE	018-1
	019	TIMING SYSTEM	SYSTEME DE SYNCHRONISATION	019-1
	020	OIL PUMP	POMPE A HUILE	020-1
	021	OIL FILTER & OIL COOLER	FILTRE D'HUILE	021-1
	022	OIL PAN	CARTER D'HUILE	022-1
	023	THERMOSTAT	THERMOSTAT	023-1
	024	WATER PUMP	SYSTEME DE REFROIDSSEMENT	024-1
	025	COOLING FAN	VENTILATEUR	025-1
	026	INTAKE & EXHAUST MANIFOLD	D'ADMISSION ET D'ECHAPPEMENT	026-1
	027	TURBO CHARGER	CHARGEUR DE TURBO	027-1
	028	INJECTOR	INJECTEUR	028-1
	029	INJECTION PIPE	PIPE D'INJECTION	029-1
	030	INJECTION PUMP	POMPE D'INJECTION	030-1
	031	ENGINE CONTROL	COMMANDE REGIME MOTEUR	031-1
	032	FUEL SYSTEM	INJECTEUR ET POMPE-INJECTEUR	032-1
	033	ALTERNATOR MOUNTING	ALTERNATEUR	033-1
	034	LIFTING HOOK	CROCHET DE LEVAGE	034-1
	035	STARTER	DEMARREUR	035-1
	036	SENSOR	CAPTEUR	036-1
	037	WIRE HARNESS	JAGUE DE NIVEAU	037-1
	038	ENGINE MOUNTING	MOTEUR	038-1
	039	AIR COMPRESSOR	COMPRESSEUR D'AIR	039-1
	040	OVERHAUL GASKET KIT - ALL	KIT DE GARNITURE DE REVISION	040-1

041	OVERHAUL GASKET KIT - TOP	KIT DE GARNITURE DE REVISION	041-1

● BODY PARTS

Fig. 1100	MAIN FRAME	BATI PRINCIPAL	1100-1
1110	COUNTER WEIGHT	MASSE D'EQUILIBRAGE	1110-1
1120	ENGINE MOUNTING	MOTEUR	1120-1
1130	RADIATOR MOUNTING	SUPPORT DE RADIATEUR	1130-1
1140	RADIATOR	RADIATEUR	1140-1
1150	MUFFLER	SILENCIEUX	1150-1
1160	CAC PIPING	CHARGEE DE REFROIDISSEUR D'CAIR	1160-1
1170	AIR CLEANER	FILTRE A AIR	1170-1
1180	PUMP MOUNTING	POMPE	1180-1
1190	SWING MOTOR	MOTEUR D'ORIENTATION	1190-1
1200	FUEL TANK	RESERVOIR DE GAZOLE	1200-1
1210	FUEL PIPING	CONDUITES DE GAZOLE	1210-1
1220	OIL TANK	RESERVOIR D'HUILE	1220-1
1230	OIL COOLER PIPING(1)	CONDUITES DE HUILE	1230-1
1240	OIL COOLER PIPING(2)	CONDUITES DE HUILE	1240-1
1250	OIL COOLER PIPING(3)	CONDUITES DE HUILE	1250-1
1260	MAIN PIPING(1)	CONDUITES DE BATI PRINCIPAL	1260-1
1270	MAIN PIPING(2)	CONDUITES DE BATI PRINCIPAL	1270-1
1280	PILOT PIPING(1)	CONDUITES DE PILOTE	1280-1
1290	PILOT PIPING(2)	CONDUITES DE PILOTE	1290-1
1300	PILOT PIPING(3)	CONDUITES DE PILOTE	1300-1
1310	PILOT PIPING(4)	CONDUITES DE PILOTE	1310-1
1320	PILOT PIPING(5)	CONDUITES DE PILOTE	1320-1
1330	PILOT PIPING(6)	CONDUITES DE PILOTE	1330-1
1340	PILOT PIPING(7)	CONDUITES DE PILOTE	1340-1
1350	PILOT PIPING(8)	CONDUITES DE PILOTE	1350-1
1360	CONTROL STAND - L.H.	CONSOLE DE COMMANDE	1360-1
1370	CONTROL STAND - R.H.	CONSOLE DE COMMANDE	1370-1
1380	SEAT SLIDING PLATE	POSEZ GLISSER LE PLAT	1380-1
1390	SEAT PLATE	POSEZ LE PLAT	1390-1
1400	SEAT MOUNTING	SIEGE LE SUPPORT	1400-1
1410	SEAT	SIEGE	1410-1
1420	DUCT COVER	CONDUITES COUVERCLE	1420-1

1430	HEATER COVER	BOITIES DE CHAUFFAGE	1430-1
1440	CABIN MOUNTING	SUPPORT DE CABINE	1440-1
1450	CABIN(1)	CABINE	1450-1
1460	CABIN(2)	CABINE	1460-1
1470	CABIN(3)	CABINE	1470-1
1480	CABIN(4)	CABINE	1480-1
1485	HANDLE - CABIN	HANDLE	1485-1
1490	FLOOR MAT	PLANCHER	1490-1
1500	FLOOR PLATE	TOLE DE PLANCHER	1500-1
1510	HANDLE ASS'Y	HANDLE	1510-1
1520	ROOF COVER	COUVERCLE	1520-1
1530	FOOT REST - L.H.	REPOS DE PIED	1530-1
1540	FOOT REST - R.H.	REPOS DE PIED	1540-1
1550	SUPPORT	SUPPORT	1550-1
1560	BAFFLE	COUVERCLE	1560-1
1570	SIDE DOOR - L.H	ENSEMBLE DE PORTE	1570-1
1580	SIDE DOOR - R.H	ENSEMBLE DE PORTE	1580-1
1590	BATTERY COVER	COUVERCLE	1590-1
1600	COVER	COUVERCLE	1600-1
1610	ENGINE COVER	COUVERTURE DE MOTEUR	1610-1
1620	ACOUSTIC FOAM	ENSEMBLE DE EPONGE	1620-1
1630	UNDER COVER	TOLES IMFERIEVRES	1630-1
1640	LUBRICATION PIPING	LUBRIFICATION	1640-1
1650	ELECTRIC BOX ASS'Y	EQUIPMENT ELECTRIQUE	1650-1
1660	ELECTRIC PARTS - CONTROL STAND	PIECES ELECTRIQUES	1660-1
1670	ELECTRIC PARTS - CABIN	PIECES ELECTRIQUES	1670-1
1680	ELECTRIC PARTS - RELATED	PIECES ELECTRIQUES	1680-1
1690	ELECTRIC PARTS - ENGINE	PIECES ELECTRIQUES	1690-1
1700	ALTERNATOR MOUNTING	ALTERNATEUR	1700-1
1710	ELECTRIC PARTS - WORKING LAMP	EQUIPMENT ELECTRIQUE	1710-1
1720	ELECTRIC WIRING	POSE DE FILES ELECTRIQUES	1720-1
1730	HEATER PIPING	CONDUITES DE CHAUFFAGE	1730-1
1740	AIRCON UNIT	REFRIGERATION	1740-1
1750	AIRCONDITIONER	REFRIGERATION	1750-1

● TRACK PARTS

Fig. 2100	TRACK FRAME	TRAIN DE ROULEMENT	2100-1
2110	TRAVEL DEVICE	SYSTEME D'TRANSLATION	2110-1
2120	IDLER	BARBOTIN	2120-1
2130	TRACK SPRING	TENDEUR DE CHENILLE	2130-1
2140	UPPER ROLLER	GALET SUPERIEUR	2140-1
2150	LOWER ROLLER	GALET INFERIEUR	2150-1
2160	CENTER JOINT	JOINT CENTRAL	2160-1
2161	CENTER JOINT	JOINT CENTRAL	2161-1
2170	SEALED TRACK SHOE-600G	ENSEMBLE MAILLON DE CHAINES	2170-1
2171	SEALED TRACK SHOE-600G	ENSEMBLE MAILLON DE CHAINES	2171-1
2180	TRAVEL PIPING	CONDUITES DE TRANSLATION	2180-1

● FRONT PARTS

Fig. 3100	BOOM - 5.9m	ENSEMBLE FLECHE	3100-1
3110	ARM - 3.0m	BALANCIER	3110-1
3120	BUCKET ASS'Y - 0.95m³	ENSEMBLE DE GODET	3120-1
3130	BOOM PIPING	CONDUITES DE FLECHE	3130-1
3140	LUBRICATION PIPING - BOOM	LUBRIFICATION	3140-1
3150	ARM PIPING	CONDUITES DE BALANCIER	3150-1
3160	LUBRICATION PIPING - ARM 3.0m	LUBRIFICATION	3160-1
3161	LUBRICATION PIPING - ARM 3.0m	LUBRIFICATION	3161-1

● HYDRAULIC PARTS

Fig. 4100	MAIN PUMP	POMPE	4100-1
4110	REGULATOR	REGULATEUR	4110-1
4120	GEAR PUMP	POMPE	4120-1
4130	SWING MOTOR	MOTEUR D'ORIENTATION	4130-1
4140	SWING REDUCTION GEAR	REDEUTEUR D'ORIENTATION	4140-1
4150	TRAVEL MOTOR	MOTEUR DE TRANSLATION	4150-1
4160	TRAVEL REDUCTION GEAR	BOITE REDUCTEUR	4160-1
4170	CONTROL VALVE(1)	DISTRIBUTEUR	4170-1
4180	CONTROL VALVE(2)	DISTRIBUTEUR	4180-1
4190	CONTROL VALVE(3)	DISTRIBUTEUR	4190-1
4200	REMOTE CONTROL VALVE	VANNE DE COMMAND A DISTANCE	4200-1
4210	PEDAL VALVE	VANNE	4210-1
4211	PEDAL VALVE	VANNE	4211-1

4220	SOLENOID VALVE	VANNE	4220-1
4230	BOOM CYLINDER - L.H.	VERIN DE FLECHE	4230-1
4240	BOOM CYLINDER - R.H.	VERIN DE FLECHE	4240-1
4250	ARM CYLINDER	VERIN DE BALANCIER	4250-1
4260	BUCKET CYLINDER - ARM 3.0m/3.5m	VERIN DE GODET	4260-1
4270	BUCKET CYLINDER - ARM 2.5m	VERIN DE GODET	4270-1
4280	BUCKET CYLINDER - ARM 2.0m	VERIN DE GODET	4280-1
4290	BOOM CYLINDER - L.H (LOCK VALVE)	VERIN DE FLECHE	4290-1
4300	BOOM CYLINDER - R.H (LOCK VALVE)	VERIN DE FLECHE	4300-1
4310	ARM CYLINDER - LOCK VALVE	VERIN DE BALANCIER	4310-1
4320	GEAR PUMP-ROTATION	POMPE	4320-1
4330	PEDAL VALVE - TWO WAY	VANNE DE PEDALE	4330-1
4340	ARTI. BOOM CYLINDER	VERIN DE ARTICULAIRE FLECHE	4340-1
4350	ARM CYLINDER - ARTI. BOOM	VERIN DE BALANCIER	4350-1
4360	ARTI BOOM CYLINDER - LOCK VALVE	VERIN DE ARTICULAIRE FLECHE	4360-1
4370	ARM CYLINDER - ARTI BOOM(LOCK V/V)	VERIN DE BALANCIER	4370-1
4380	CONTROL VALVE-ARTI.BOOM	TIROIRS DE COMMANDE	4380-1

● OTHER PARTS

Fig. 5100	TOOLS	OUTILLAGE	5100-1
5110	SPARE PARTS	PIECES DE RECHANGE	5110-1
5120	NAME PLATE - CABIN(EXPORT)	PLAQUE D'IDENTIFICATION	5120-1
5130	DECAL - EXPORT	DECALQUE	5130-1
5140	NAME PLATE - CABIN(EUROPE)	PLAQUE D'IDENTIFICATION	5140-1
5150	DECAL - EUROPE	DECALQUE	5150-1
5160	DECAL - LIFTING CAPA	DECAL	5160-1

● OPTION PARTS

Fig. 6100	FUEL FILLER PUMP	POMPE	6100-1
6110	MAIN PIPING - ONE WAY	CONDUITES DE BATI PRINCIPAL	6110-1
6120	ONE WAY PIPING - WITH FILTER	TUYAUTERIE A SENS UNIQUE	6120-1
6130	MAIN PIPING - TWO WAY	CONDUITES DE BATI PRINCIPAL	6130-1
6140	TWO WAY PIPING - WITH FILTER	TUYAUTERIE DE DEUX MANIERES	6140-1
6150	PILOT PIPING - ONE & TWO WAY	CONDUITES DE PILOTE	6150-1
6160	PILOT PIPING(1) - TWO WAY	CONDUITES DE PILOTE	6160-1
6170	PILOT PIPING(2) - TWO WAY	CONDUITES DE PILOTE	6170-1

6180	BOOM PIPING - BOOM 5.9m(ONE & TWO WAY)	CONDUITES DE FLECHE	6180-1
6190	ARM PIPING - ONE & TWO WAY(ARM 3.0m)	CONDUITES DE BALANCIER	6190-1
6200	ARM PIPING - ARM 3.0m(CLAMSHELL)	CONDUITES DE BALANCIER	6200-1
6210	MAIN PIPING - QUICK CLAMP	CONDUITES DE BATI PRINCIPAL	6210-1
6220	ELECTRIC PARTS-QUICK CLAMP	BRIDE RAPIDE	6220-1
6230	BOOM PIPING - BOOM 5.9m(QUICK CLAMP)	CONDUITES DE FLECHE	6230-1
6240	ARM PIPING - ARM 3.0m(QUICK CLAMP)	CONDUITES DE BALANCIER	6240-1
6250	SUN ROOF COVER	COUVERTURE DE TOIT DU SOLEIL	6250-1
6260	RAIN SHIELD	BOUCLIER DE PLUIE	6260-1
6270	RAIN SHIELD & LAMP MOUNTING	BOUCLIER ET DE LAMPE DE PLUIE	6270-1
6280	CABIN LOWER GUARD	LA CARLINGUE ABAISSENT LA GARDE	6280-1
6290	WINDOW GUARD	GARDE DE FENETRE	6290-1
6300	FLOOR MAT - TWO WAY	PLANCHER	6300-1
6310	FLOOR MAT - ROTATING	PLANCHER	6310-1
6320	FLOOR MAT - TWO WAY & ROTATING	PLANCHER	6320-1
6330	TRACK FRAME - NARROW	TRAIN DE ROULEMENT	6330-1
6340	TRAVEL PIPING - NARROW TRACK	CONDUITES DE TRANSLATION	6340-1
6350	TRACK SHOE ASS'Y - 700G	MAILLON DE CHAINE	6350-1
6351	TRACK SHOE ASS'Y - 700G	MAILLON DE CHAINE	6351-1
6360	TRACK SHOE ASS'Y - 800G	MAILLON DE CHAINE	6360-1
6361	TRACK SHOE ASS'Y - 800G	MAILLON DE CHAINE	6361-1
6370	TRACK SHOE ASS'Y - 900G	MAILLON DE CHAINE	6370-1
6371	TRACK SHOE ASS'Y - 900G	MAILLON DE CHAINE	6371-1
6380	SWING ALARM	AVERTISSEUR	6380-1
6390	PATTERN CHANGE PIPING(1)	TUYAUTERIE DE CHANGEMENT DE MODELE	6390-1
6400	PATTERN CHANGE PIPING(2)	TUYAUTERIE DE CHANGEMENT DE MODELE	6400-1
6410	LOCK VALVE PIPING - BOOM	CONDUITES DE VERROU VANNE	6410-1
6420	BOOM PIPING - LOCK VALVE	DONDUITER DE FLECHE	6420-1
6430	PILOT PIPING - ARM LOCK V/V	CONDUITES DE PILOTE	6430-1
6440	ARM PIPING - LOCK VALVE	CONDUITES DE BALANCIER	6440-1
6450	MAIN PIPING-ROTATING	CONDUITES DE BATI PRINCIPAL	6450-1
6460	PILOT PIPING(1) - ROTATING	CONDUITES DE PILOTE	6460-1
6470	PILOT PIPING(2) - ROTATING	CONDUITES DE PILOTE	6470-1
6480	BOOM PIPING - BOOM 5.9m(ROTATING)	CONDUITES DE FLECHE	6480-1
6490	ARM PIPING - ROTATING(ARM 3.0m)	CONDUITES DE BALANCIER	6490-1
6500	BUCKET ASS'Y - 0.47m³	ENSEMBLE DE GODET	6500-1

6510	BUCKET ASS'Y - 0.72m³	ENSEMBLE DE GODET	6510-1
6520	BUCKET ASS'Y - 0.8m³	ENSEMBLE DE GODET	6520-1
6530	BUCKET ASS'Y - 0.92m³	ENSEMBLE DE GODET	6530-1
6540	BUCKET ASS'Y - 1.0m³	ENSEMBLE DE GODET	6540-1
6550	BUCKET ASS'Y - 1.1m³	ENSEMBLE DE GODET	6550-1
6560	BUCKET ASS'Y - 1.22m³	ENSEMBLE DE GODET	6560-1
6570	BOOM - 5.3m	ENSEMBLE FLECHE	6570-1
6580	BOOM PIPING - BOOM 5.3m	CONDUITES DE FLECHE	6580-1
6590	LUBRICATION PIPING - BOOM 5.3m	LUBRIFICATION	6590-1
6600	BOOM PIPING - BOOM 5.3m(ONE & TWO WAY)	CONDUITES DE FLECHE	6600-1
6610	ARM PIPING - LOCK VALVE (BOOM 5.3m)	CONDUITES DE BALANCIER	6610-1
6620	BOOM PIPING - BOOM 5.3m(ROTATING)	CONDUITES DE FLECHE	6620-1
6630	ARM - 2.0m	BALANCIER	6630-1
6640	ARM PIPING - ARM 2.0m	CONDUITES DE BALANCIER	6640-1
6650	LUBRICATION PIPING - ARM 2.0m	LUBRIFICATION	6650-1
6651	LUBRICATION PIPING - ARM 2.0m	LUBRIFICATION	6651-1
6660	ARM PIPING - ARM 2.0m(ONE & TWO WAY)	CONDUITES DE BALANCIER	6660-1
6670	ARM PIPING - ARM 2.0m(QUICK CLAMP)	CONDUITES DE BALANCIER	6670-1
6680	ARM PIPING - ARM 2.0m(CLAMSHELL)	CONDUITES DE BALANCIER	6680-1
6690	ARM PIPING - ARM 2.0m(ROTATING)	CONDUITES DE BALANCIER	6690-1
6700	ARM - 2.5m	BALANCIER	6700-1
6710	ARM PIPING - ARM 2.5m	CONDUITES DE BALANCIER	6710-1
6720	LUBRICATION PIPING - ARM 2.5m	LUBRIFICATION	6720-1
6721	LUBRICATION PIPING - ARM 2.5m	LUBRIFICATION	6721-1
6730	ARM PIPING - ARM 2.5m(ONE & TWO WAY)	CONDUITES DE BALANCIER	6730-1
6740	ARM PIPING - ARM 2.5m(QUICK CLAMP)	CONDUITES DE BALANCIER	6740-1
6750	ARM PIPING - ARM 2.5m(CLAMPSHELL)	CONDUITES DE BALANCIER	6750-1
6751	ARM PIPING - ARM 2.5m(CLAMPSHELL)	CONDUITES DE BALANCIER	6751-1
6760	ARM PIPING - ARM 2.5m(ROTATING)	CONDUITES DE BALANCIER	6760-1
6770	ARM - 3.5m	BALANCIER	6770-1
6780	ARM PIPING - ARM 3.5m	CONDUITES DE BALANCIER	6780-1
6790	LUBRICATION PIPING - ARM 3.5m	LUBRIFICATION	6790-1
6791	LUBRICATION PIPING - ARM 3.5m	LUBRIFICATION	6791-1
6800	ARM PIPING - ARM 3.5m(ONE & TWO WAY)	CONDUITES DE BALANCIER	6800-1
6810	ARM PIPING - ARM 3.5m(QUICK CLAMP)	CONDUITES DE BALANCIER	6810-1
6820	ARM PIPING - ARM 3.5m(CLAMSHELL)	CONDUITES DE BALANCIER	6820-1

6830	ARM PIPING - ARM 3.5m(ROTATING)	CONDUITES DE BALANCIER	6830-1
6840	BUCKET ASS'Y - 0.67m³(36") - SIDE PIN	ENSEMBLE DE GODET	6840-1
6850	BUCKET ASS'Y - 0.8m³(42") - SIDE PIN	ENSEMBLE DE GODET	6850-1
6860	BUCKET ASS'Y - 0.95m³(48") - SIDE PIN	ENSEMBLE DE GODET	6860-1
6870	BUCKET ASS'Y - 1.1m³(54") - SIDE PIN	ENSEMBLE DE GODET	6870-1
6880	BUCKET ASS'Y - 1.17m³(57") - SIDE PIN	ENSEMBLE DE GODET	6880-1
6890	BUCKET ASS'Y - 1.31m³(63") - SIDE PIN	ENSEMBLE DE GODET	6890-1
6900	ALTERNATOR - 80A	ALTERNATEUR	6900-1
6910	CD PLAYER	PLAQUEUR DE CD	6910-1
6920	FUEL HEATER	RECHAUFFEUR DE CARBURANT	6920-1
6930	TRAVEL ALARM	ALARME DE VOYAGE	6930-1
6940	WORKING LAMP - 2 LAMP	AVERTISSEUR RELAIS	6940-1
6950	WORKING LAMP - 4 LAMP	AVERTISSEUR RELAIS	6950-1
6960	WORKING LAMP - REAR	AVERTISSEUR RELAIS	6960-1
6970	ROTATING BEACON	FEU DE CIRCULATION	6970-1
6980	ROTATING BEACON MOUNTING	SUPPORT TOURNANT DE BALISE	6980-1
6990	ROTATING BEACON(TELESCOPIC) WITH LAMP	FEU DE CIRCULATION	6990-1
7000	ROTATING BEACON(TELESCOPIC) W/O LAMP	FEU DE CIRCULATION	7000-1
7010	OVERLOAD WARNING	AVERTISSEMENT DE SURCHARGE	7010-1
7020	LOWER WIPER	ABAISSEZ L'ESSUIE-GLACE	7020-1
7030	WORKING LAMP(2-LAMP)	LAMPE FONCTIONNANTE	7030-1
7040	WORKING LAMP(4-LAMP)	LAMPE FONCTIONNANTE	7040-1
7050	ROTATING BEACON-WITH FOGS	FEU DE CIRCULATION	7050-1
7060	TROPICAL PARTS	PIECES TROPICALES	7060-1
7070	RADIO	RADIO	7070-1
7080	ACOUSTIC FOAM - NOISE KIT	MOUSSE ACOUSTIQUE - KIT DE BRUIT	7080-1
7090	MAIN PIPING - ARTI. BOOM	CONDUITES DE BATI PRINCIPAL	7090-1
7100	PILOT PIPING(1) - ARTI. BOOM	CONDUITES DE PILOTE	7100-1
7110	PILOT PIPING(2) - ARTI. BOOM	CONDUITES DE PILOTE	7110-1
7115	FLOOR MAT - THREE PEDAL	PLANCHER	7115-1
7120	ARTI. BOOM	PERCHE ASS'Y D'ARTI	7120-1
7130	ARTI. BOOM PIPING	PERCHE ASS'Y D'ARTI	7130-1
7140	LUBRICATION PIPING - LOWER BOOM	LUBRIFICATION	7140-1
7150	LUBRICATION PIPING - UPPER BOOM	LUBRIFICATION	7150-1
7160	MAIN PIPING - ONE WAY(ARTI. BOOM)	CONDUITES DE BATI PRINCIPAL	7160-1
7170	MAIN PIPING - TWO WAY(ARTI. BOOM)	CONDUITES DE BATI PRINCIPAL	7170-1

7180	ARTI. BOOM PIPING - ONE & TWO WAY	PERCHE ASS'Y D'ARTI	7180-1
7190	MAIN PIPING - ROTATING(ARTI. BOOM)	CONDUITES DE BATI PRINCIPAL	7190-1
7200	PILOT PIPING - ARTI. & ROTATING	CONDUITES DE PILOTE	7200-1
7210	ARTI. BOOM PIPING - ROTATING	PERCHE ASS'Y D'ARTI	7210-1
7220	MAIN PIPING - QUICK CLAMP(ARTI. BOOM)	CONDUITES DE BATI PRINCIPAL	7220-1
7230	ARTI. BOOM PIPING - QUICK FIT	PERCHE ASS'Y D'ARTI	7230-1
7240	LOCK VALVE PIPING - ARTI. BOOM	CONDUITES DE VERROU VANNE	7240-1
7250	ARTI. BOOM PIPING - LOCK VALVE	PERCHE ASS'Y D'ARTI	7250-1
7260	ARTI. ARM PIPING - LOCK VALVE	CONDUITES DE VERROU VANNE	7260-1
7270	WORKING LAMP - ARTI. BOOM	AVERTISSEUR RELAIS	7270-1

● **WORLDWIDE NETWORK**

DATE	AUG. 28, 2009
3rd EDITION	

Fig. 011 CYLINDER BLOCK
BLOC CYLINDRE

Serial No. ;

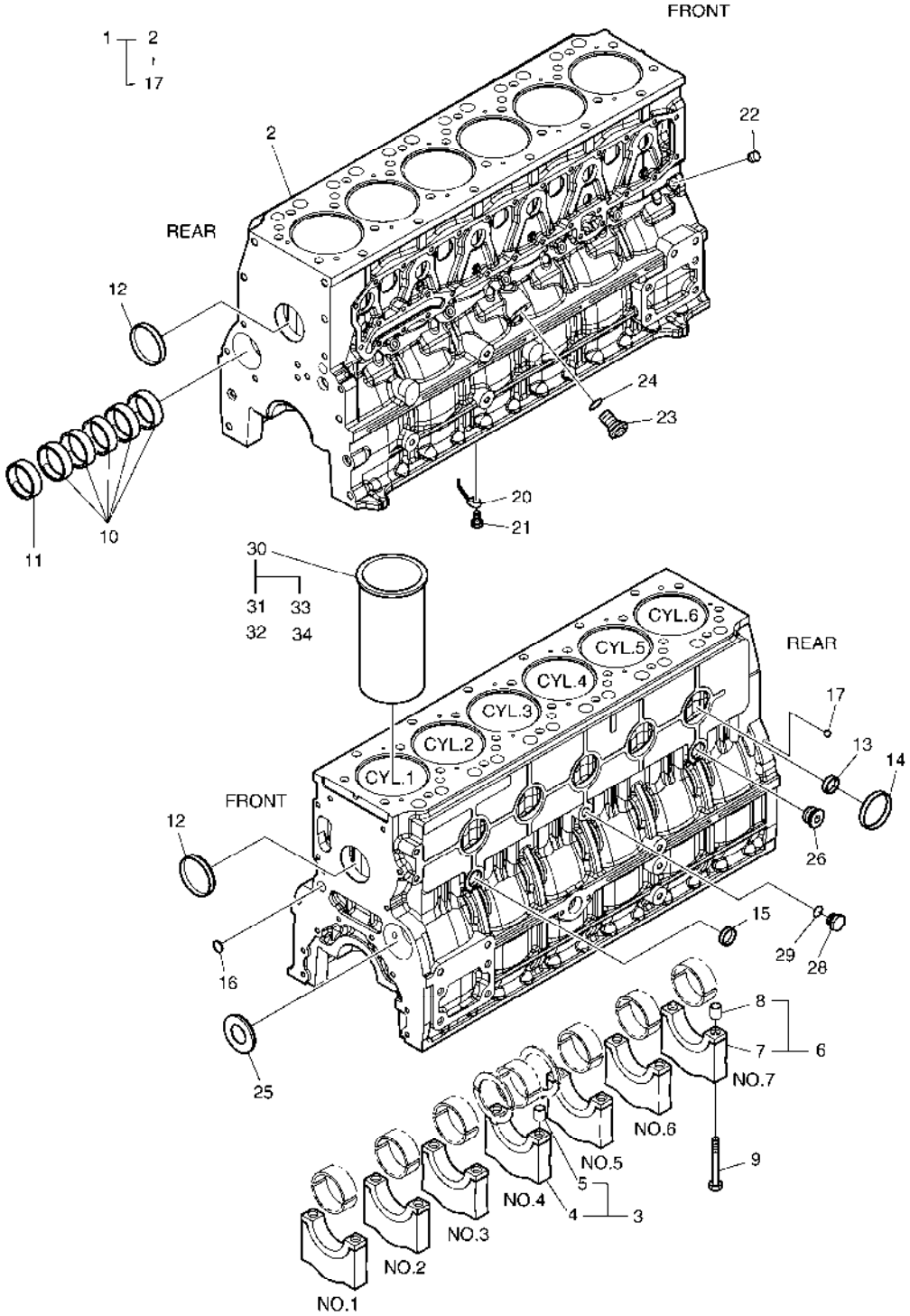

DATE	AUG. 28, 2009
3rd EDITION	

Fig. 011 CYLINDER BLOCK BLOC CYLINDRE

Serial No. ;

Key No.	Part No.	Description	Description	Q'ty	S.C	Serial No.	ICA	Replaceable part	
								Part No.	Q'ty
011 -1	65.01101-6085B	CYLINDER BLOCK ASS'Y	BLOC CYLINDRE	1		-070611	I	65.01101-6092A	1
	65.01101-6092A	CYLINDER BLOCK ASS'Y	BLOC CYLINDRE	1		070612-			
2	65.01101-0054	CYLINDER BLOCK	BLOC CYLINDRE	1	D	-070611			
	65.01101-0054A	CYLINDER BLOCK	BLOC CYLINDRE	1	D	070612-			
3	65.01105-6005B	BEARING CAP ASS'Y(No:3)	CHAPEAU DE PALIER	1	D				
4	65.01105-1051B	CAP;BEARING	CHAPEAU	1	D				
5	65.91710-0001	RING. STOPPER. BRG CAP	BAGUE D'ETANCHEITE	2					
6	65.01105-6006B	BEARING CAP ASS'Y	CHAPEAU DE PALIER	6	D				
7	65.01105-1052B	CAP;BEARING	CHAPEAU	1	D				
8	65.91710-0001	RING. STOPPER. BRG CAP	BAGUE D'ETANCHEITE	2					
9	65.90020-0066A	BOLT;BRG CAP	BOULON A 6 PANS	14					
10	65.04410-0021A	BUSH;CAMSHAFT	BUISSON	6	B				
11	65.04410-0022	BUSH;CAMSHAFT	BUISSON	1	B				
12	65.90302-0009	PLUG;CORE	BOUCHON B28D	2					
13	65.90302-0042	PLUG;CORE	BOUCHON B28D	8					
14	65.90302-0034	PLUG;CORE	BOUCHON DE DESSABLAG	5					
15	65.90302-0041	PLUG;CORE	BOUCHON B28D	1					
16	65.91606-0041	PLUG;CORE	BOUCHON	2					
17	06.31641-0618	BALL;STEEL	BILLE	1					
20	65.01601-5020	NOZZLE;OIL SPRAY	INJECTEUR	6					
21	65.05401-5031	RELIEF VALVE ASS'Y	SOULAGEMENT VANNE	6					
22	65.90320-0022	PLUG SCREW PT1/8	VIS DE REGLAGE	7					
23	65.05401-5002F	RELIEF VALVE ASS'Y	SOULAGEMENT VANNE	1		-070416	Y	65.05401-5002G	1
	65.05401-5002G	RELIEF VALVE ASS'Y	SOULAGEMENT VANNE	1		070417-			
24	06.56021-0102	O-RING	JOINT TORIQUE	1					
25	65.91605-0002	COVER;CORE HOLE	COUVERCLE	1					
26	65.90310-0134	SCREW;PLUG	VIS	1					
28	65.90310-0135	PLUG;SCREW	BOUCHON A VIS	1					
29	06.56190-0705	RING;SEAL	ENSEMBLE BAGUE D'ETAN	1					
30	65.01201-0075A	CYLINDER LINER-GRADE	VIS DE REGLAGE	6	D				
31	65.01201-0076	LINER;CYLINDER-1A	CHEMISE DE CYLINDRE	6					
32	65.01201-0077	LINER;CYLINDER-1B	CHEMISE DE CYLINDRE	6					
33	65.01201-0078	LINER;CYLINDER-2A	CHEMISE DE CYLINDRE	6					
34	65.01201-0079	LINER;CYLINDER-2B	CHEMISE DE CYLINDRE	6					

DATE	AUG. 28, 2009
3rd EDITION	

Fig. 012 TIMING GEAR CASE
CARTER DE DISTRIBUTION

Serial No. ;

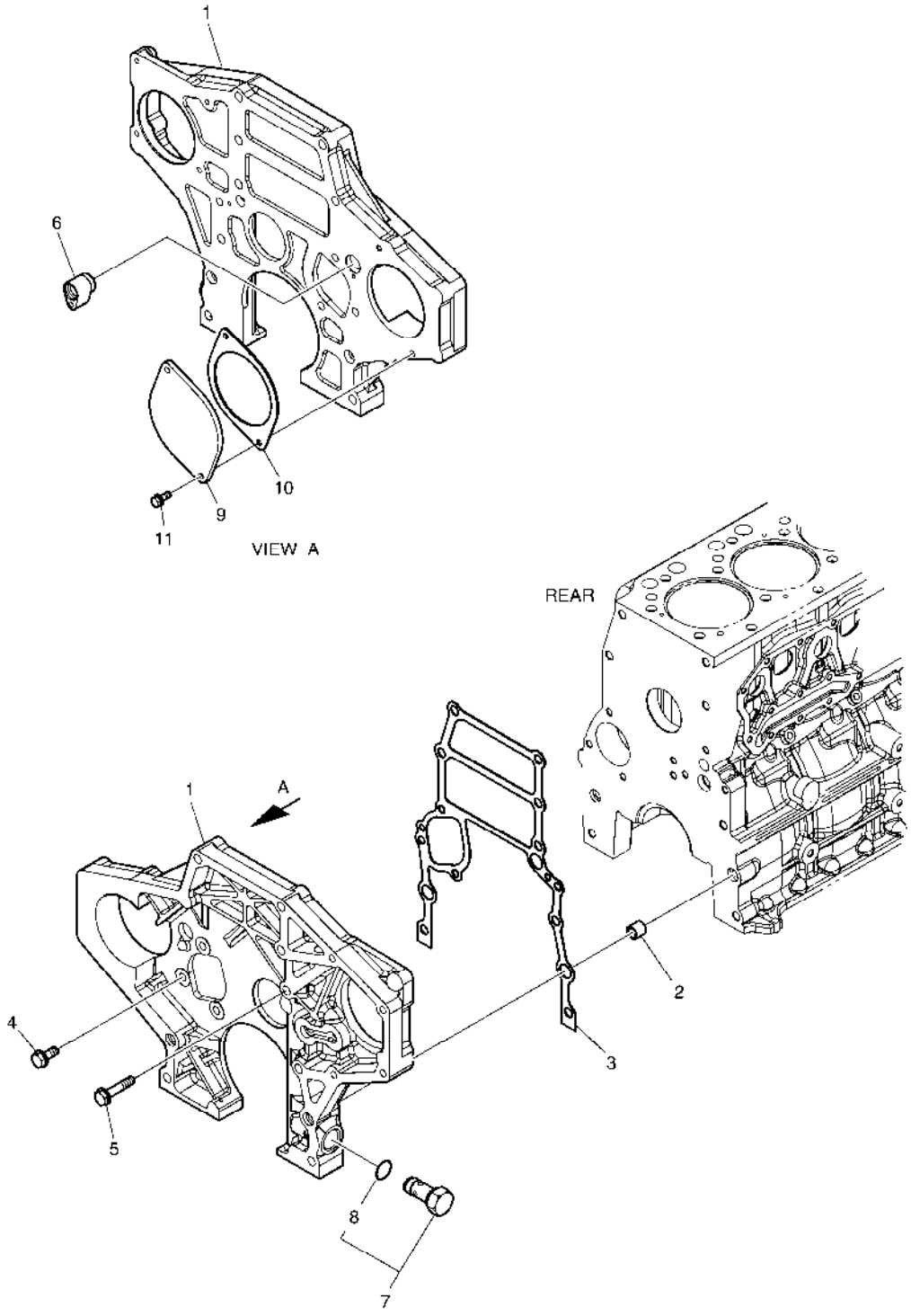

DATE	AUG. 28, 2009
3rd EDITION	

Fig. 012 TIMING GEAR CASE CARTER DE DISTRIBUTION

Serial No. ;

Key No.	Part No.	Description	Description	Q'ty	S.C	Serial No.	ICA	Replaceable part	
								Part No.	Q'ty
012 -1	65.01304-0029	CASE;TIMING GEAR	CARTER	1		-070515	Y	65.01304-0029A	1
	65.01304-0029A	CASE;TIMING GEAR	CARTER	1		070516-			
2	65.91710-0016	RING;STOPPER	RESSORT	2					
3	65.01903-0034	GASKET	JOINT	1					
4	65.90020-0063B	BOLT;HEX M10X25	BOULON A 6 PANS	3					
5	65.90020-0080	BOLT;COLLARED HEX.	BOULON A 6 PANS	1					
6	65.98130-0241	ADAPTER	ADAPTEUR	1					
7	65.05401-5032	RELIEF VALVE ASS'Y	SOULAGEMENT VANNE	1		-090319	Y	65.05401-5032A	1
	65.05401-5032A	RELIEF VALVE ASS'Y	SOULAGEMENT VANNE	1		090320-			
8	65.96501-0074	O-RING	JOINT TORIQUE	1					
9	65.91601-0011	COVER	COUVERCLE	1					
10	65.38901-0018A	GASKET;PTO	JOINT	1					
11	06.01943-3318	BOLT ASS'Y M12X1.5X35	BOULON A 6 PANS	2					

DATE	AUG. 28, 2009
3rd EDITION	

Fig. 013 FLYWHEEL HOUSING
CARTER DE VOLANT MOTEUR

Serial No. ;

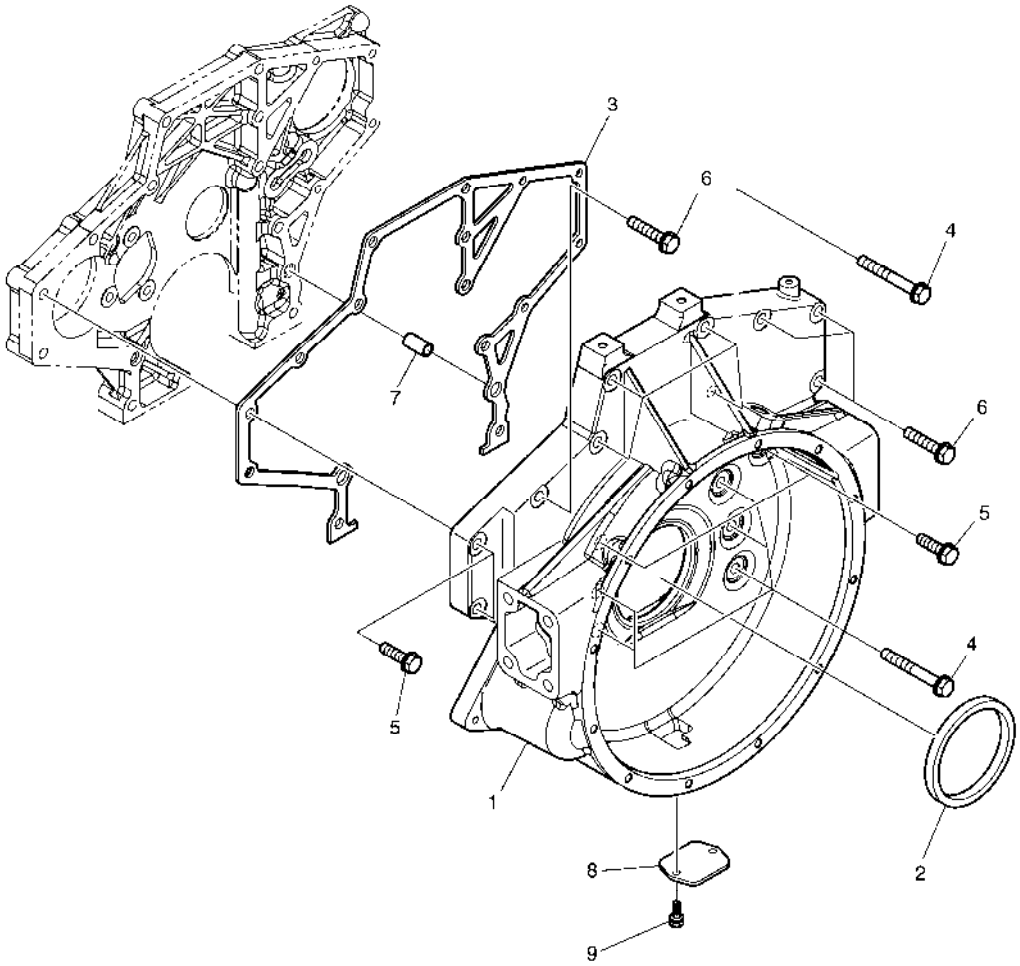

DATE	AUG. 28, 2009
3rd EDITION	

Fig. 013 FLYWHEEL HOUSING
CARTER DE VOLANT MOTEUR

Serial No. ;

Key No.	Part No.	Description	Description	Q'ty	S.C	Serial No.	ICA	Replaceable part	
								Part No.	Q'ty
013 -1	65.01401-0253A	HOUSING;FLYWHEEL	BOITIER	1		-070312	Y	65.01401-0253B	1
	65.01401-0253B	HOUSING;FLYWHEEL	BOITIER	1		070313-			
2	65.01510-0040	SEAL;OIL	JOINT D'HUILE	1					
3	65.01904-0032	GASKET	JOINT	1					
4	65.90020-0100	BOLT	BOULON A 6 PANS	9					
5	65.90020-0101	BOLT	BOULON A 6 PANS	4					
6	65.90020-0105	BOLT	BOULON A 6 PANS	4					
7	65.91710-0009	RING;STOPPER	RESSORT	2					
8	65.01414-0004A	COVER;TIMING POINT HOLE	COUVERCLE	1					
9	06.01923-3111	BOLT M8X16	BOULON A 6 PANS	2					

DATE	AUG. 28, 2009
3rd EDITION	

Fig. 014 OIL SEAL JOINT

Serial No. ;

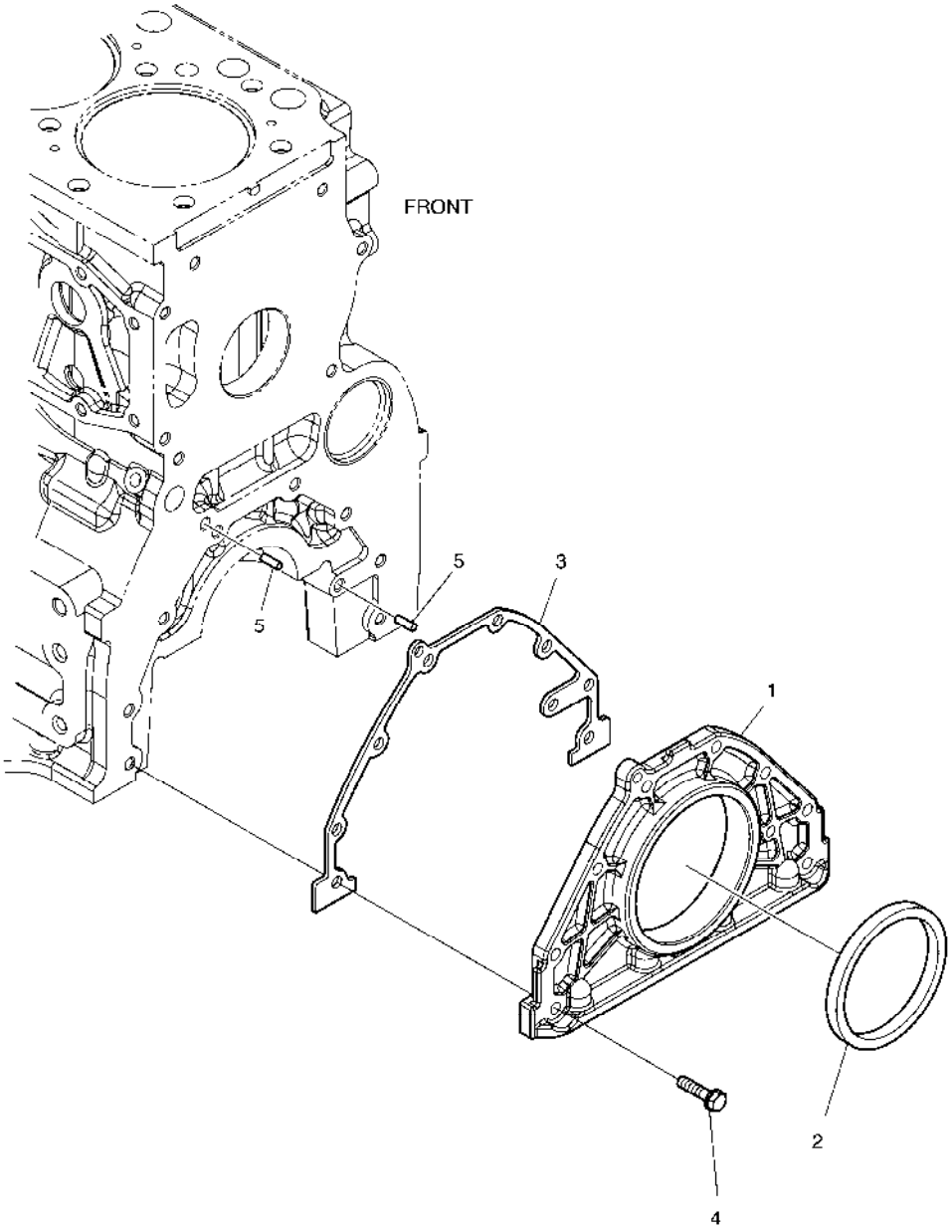

DATE	AUG. 28, 2009
3rd EDITION	

Fig. 014 OIL SEAL JOINT

Serial No. ;

Key No.	Part No.	Description	Description	Q'ty	S.C	Serial No.	ICA	Replaceable part	
								Part No.	Q'ty
014 -1	65.01501-5003A	COVER;SEALING	COUVERCLE	1					
2	65.01510-0157	SEAL;OIL	JOINT	1					
3	65.01905-0009	GASKET	JOINT	1					
4	06.01923-3116	BOLT ASS`Y M8X28	BOULON A 6 PANS	8					
5	06.22022-1063	PIN	GOUJON D'ASSEMBLAGE	2					

DATE	AUG. 28, 2009
3rd EDITION	

Fig. 015 BREATHER
CONDUIT DE VENTILATION

Serial No. ;

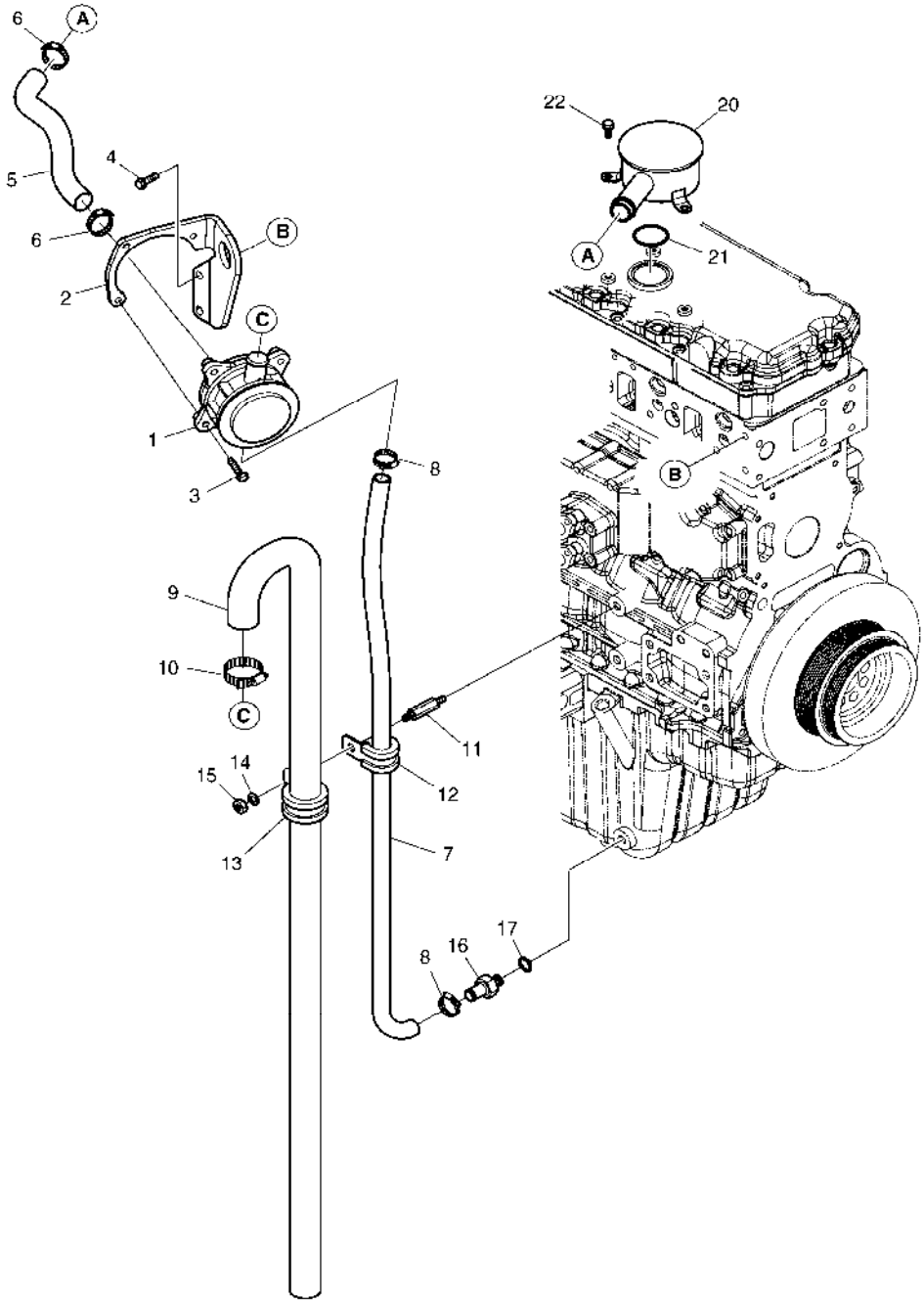

DATE	AUG. 28, 2009
3rd EDITION	

Fig. 015 BREATHER
CONDUIT DE VENTILATION

Serial No. ;

Key No.	Part No.	Description	Description	Q'ty	S.C	Serial No.	ICA	Replaceable part	
								Part No.	Q'ty
015 -1	65.01801-5100	HOUSING;BREATHER	LOGEMENT DE RENIFLARD	1					
2	65.01840-0017	BRACKET;BREATHER PIPE	SUPPORT	1					
3	06.01923-3114	BOLT ASS`Y M8X22	BOULON A 6 PANS	3					
4	06.01924-3217	BOLT ASS'Y M10X30	BOULON A 6PANS	2					
5	65.96301-0478	HOSE;RUBBER	TUYAU FLEXIBLE	1					
6	06.67020-0105	CLAMP	COLLIER	2					
7	65.96301-0455A	HOSE;RUBBER	TUYAU FLEXIBLE	1					
8	65.97440-0005	CLAMP;HOSE	COLLIER	2		-070419	Y	65.97402-0025	2
	65.97402-0025	CLAMP;HOSE	COLLIER	2		070420-			
9	65.96301-0441	HOSE;RUBBER	TUYAU CAOUTCHOUC	1		-061220	Y	65.96301-0441A	1
	65.96301-0441A	HOSE;RUBBER	TUYAU FLEXIBLE	1		061221-			
10	06.67020-0105	CLAMP	COLLIER	1					
11	65.90201-0122	BOLT;STUD	BOULON A 6 PANS	1					
12	65.97401-5024	CLIP;PIPE	ATTACHE	2					
13	65.97401-5019	CLIP;PIPE	ATTACHE	1					
14	06.16731-2107	WASHER	RONDELLE ELASTIQUE	1					
15	06.11063-8214	NUT	ECROU 6 PANS	1					
16	65.98131-0119	NIPPLE	GRAISSEUR	1					
17	06.56190-0719	RING;SEAL	BAGUE D'ETANCHEITE	1					
20	65.01801-5043A	HOUSING;BREATHER	LOGEMENT DE RENIFLARD	1					
21	65.96501-0033B	O-RING	JOINT TORIQUE	1					
22	06.01923-3111	BOLT M8X16	BOULON A 6 PANS	3					

DATE	AUG. 28, 2009
3rd EDITION	

Fig. 016 DRIVING SYSTEM
SYSTEME D'CENTRAINEMENT

Serial No. ;

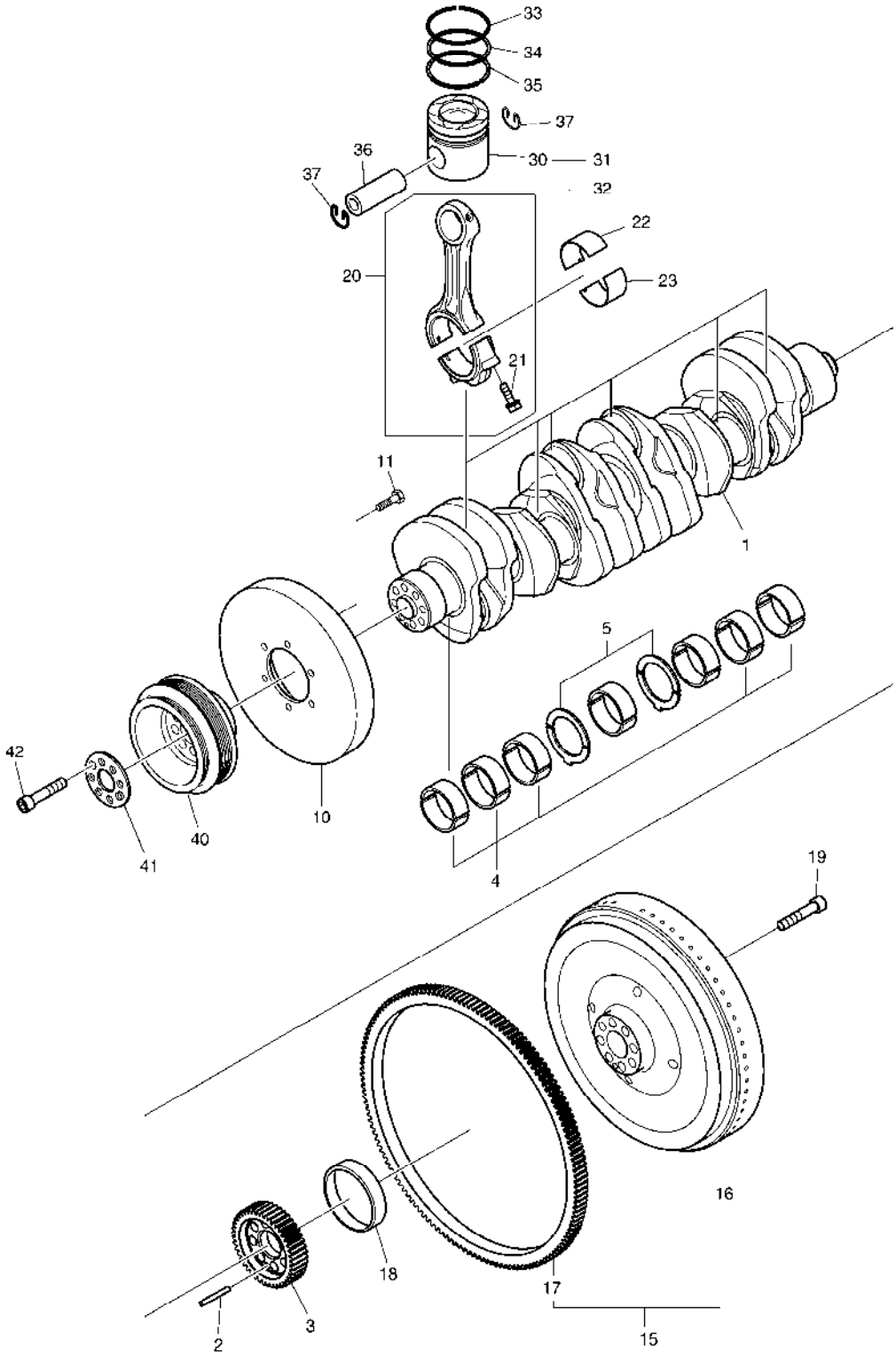

DATE	AUG. 28, 2009
3rd EDITION	

Fig. 016 DRIVING SYSTEM SYSTEME D'CENTRAINEMENT

Serial No. ;

Key No.	Part No.	Description	Description	Q'ty	S.C	Serial No.	ICA	Replaceable part	
								Part No.	Q'ty
016 -1	65.02101-0069A	SHAFT;CRANK	VILEBREQUIN	1					
2	06.22022-1018	PIN;DOWEL 8M6X45	GOUJON	1					
3	65.02115-0016	GEAR;CRANKSHAFT	PIGNON	1					
4	65.01110-6140	METAL;MAIN	PALIER	7		-070316	Y	65.01110-6140A	7
	65.01110-6140A	METAL;MAIN	PALIER	7		070317-			
5	65.01150-6008	WASHER;THRUST	RONDELLE DE BUTEE	2					
10	65.02201-0002	DAMPER;VIBRATION	AMORTISSEUR DE VIBRAT	1					
11	65.90020-0062B	BOLT;HEX M10X20	BOULON A 6 PANS	6					
15	65.02301-5148A	FLYWHEEL ASS'Y	VOLANT	1					
16	65.02301-0291A	FLYWHEEL	ENSEMBLE VOLANT	1					
17	65.02310-0006	GEAR;RING	ENGRENAGE	1					
18	65.02130-0004	BUSH;DRIVING	BUISSON	1					
19	65.90020-0123	BOLT;COLLARED HEX.	BOULON A 6 PANS	8		-071120	Y	65.90020-0140A	8
	65.90020-0140A	BOLT;COLLARED HEX.	BOULON A 6 PANS	8		071121-			
20	65.02401-6032B	CONNECTING ROD ASS'Y	BIELLE ASS'Y	6					
21	65.02411-0009	BOLT;CONNECTING ROD	VIS DE BIELLE	2					
22	65.02410-0040	METAL;CON-ROD(STD)	PALIER	6					
	65.02410-0041	METAL;CON-ROD(0.25)	PALIER	6	US				
	65.02410-0042	METAL;CON-ROD(0.50)	PALIER	6	US				
23	65.02410-0050	METAL;CON-ROD(STD)	PALIER	6					
	65.02410-0051	METAL;CON-ROD(0.25)	PALIER	6	US				
	65.02410-0052	METAL;CON-ROD(0.50)	PALIER	6	US				
30	65.02501-0476	PISTON - GRADE	PISTON	6	D				
31	65.02501-0477	PISTON;A GRADE	PISTON	6					
32	65.02501-0478	PISTON;B GRADE	PISTON	6					
33	65.02503-0132A	RING;PISTON	BAGUE D'ETANCHEITE	6					
34	65.02503-0133A	RING;PISTON	BAGUE D'ETANCHEITE	6					
35	65.02503-0134	RING;PISTON	BAGUE D'ETANCHEITE	6					
36	65.02502-0017A	PIN;PISTON	AXE DE PISTON	6					
37	06.29020-0125	RING;LOCK	BAGUE	12					
40	65.02601-0225B	PULLEY;V-BELT	POULIE DE COURROIE TRA	1					
41	65.90701-0099	WASHER	CALE	1					
42	06.02106-0723	BOLT;SOCKET	BOULON	8					

DATE	AUG. 28, 2009
3rd EDITION	

Fig. 017 CYLINDER HEAD CULLASSE

Serial No. ;

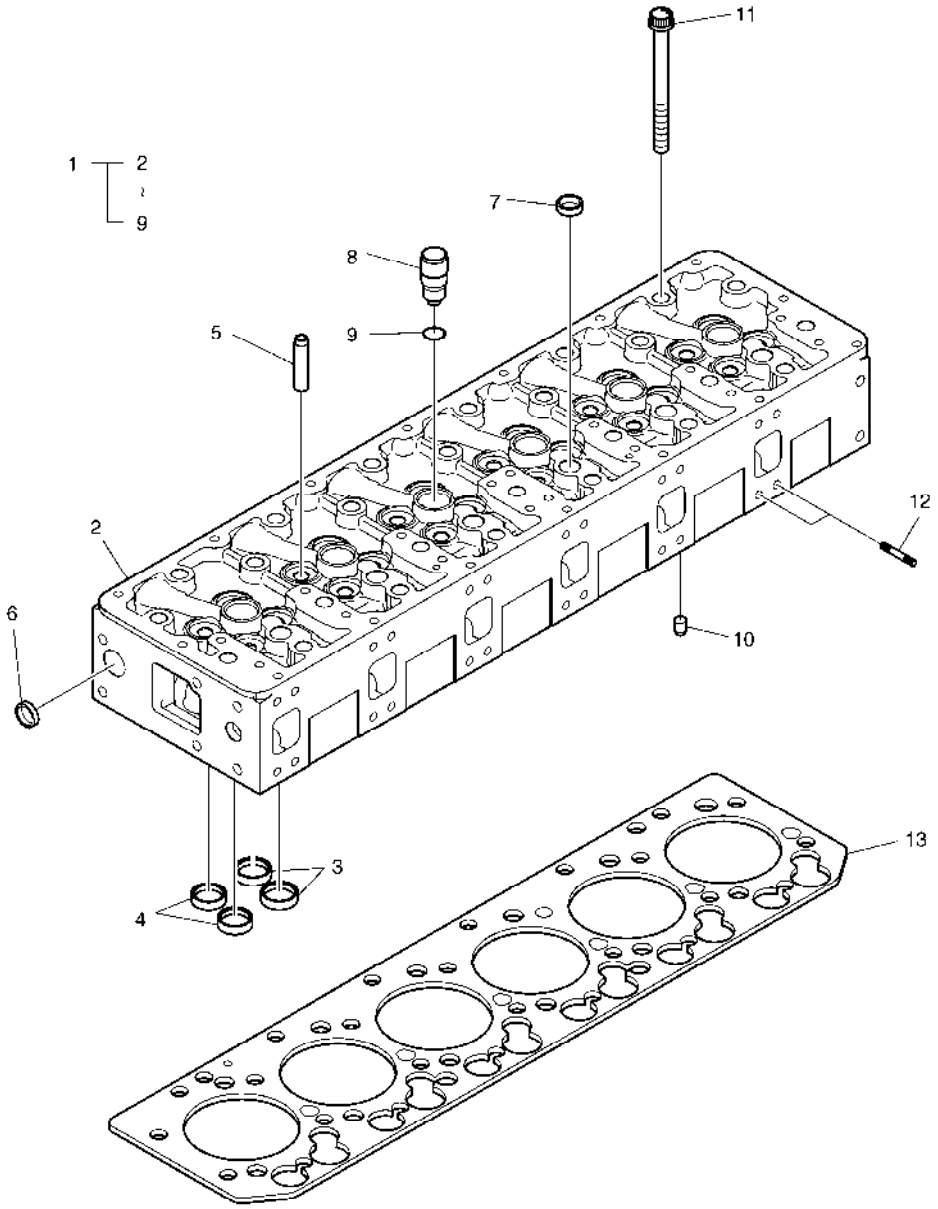

DATE	AUG. 28, 2009
3rd EDITION	

Fig. 017 CYLINDER HEAD CULLASSE

Serial No. ;

Key No.	Part No.	Description	Description	Q'ty	S.C	Serial No.	ICA	Replaceable part	
								Part No.	Q'ty
017 -1	65.03101-6090E	CYLINDER HEAD ASS'Y	CULLASSE	1		-061201	Y	65.03101-6090F	1
	65.03101-6090F	CYLINDER HEAD ASS'Y	CULLASSE	1		061202-			
2	65.03101-1068C	CYLINDER HEAD	CULLASSE	1	D				
3	65.03203-1062	SEAT;VALVE	SIEGE	12	B				
4	65.03203-1063	SEAT;VALVE	SIEGE	12	B				
5	65.03201-1016A	GUIDE;VALVE	GUIDE-SOUPAPE	24	B	-061201	Y	65.03201-1016B	24
	65.03201-1016B	GUIDE;VALVE	GUIDE-SOUPAPE	24	B	061202-			
6	65.90302-0048	CORE;PLUG	BOUCHON DE DESSABLAG	10					
7	65.90302-0029	PLUG;CORE	CONSOLE	21					
8	65.03205-0006A	BUSH;INJECTION NOZZLE	COUSSINET	6					
9	65.96501-0088	O-RING	JOINT TORIQUE	6					
10	65.91030-0005	PIN;FIX	GOUJON	2					
11	65.90021-0009	BOLT;COLLARED DUO.	BOULON A 6 PANS	26					
12	65.90201-0134	BOLT;STUD	GOUJON	24					
13	65.03901-0071	GASKET;CYLINDER HEAD	JOINT	1					

DATE	AUG. 28, 2009
3rd EDITION	

Fig. 018 CYLINDER HEAD COVER COUVERTURE DE CULASSE

Serial No. ;

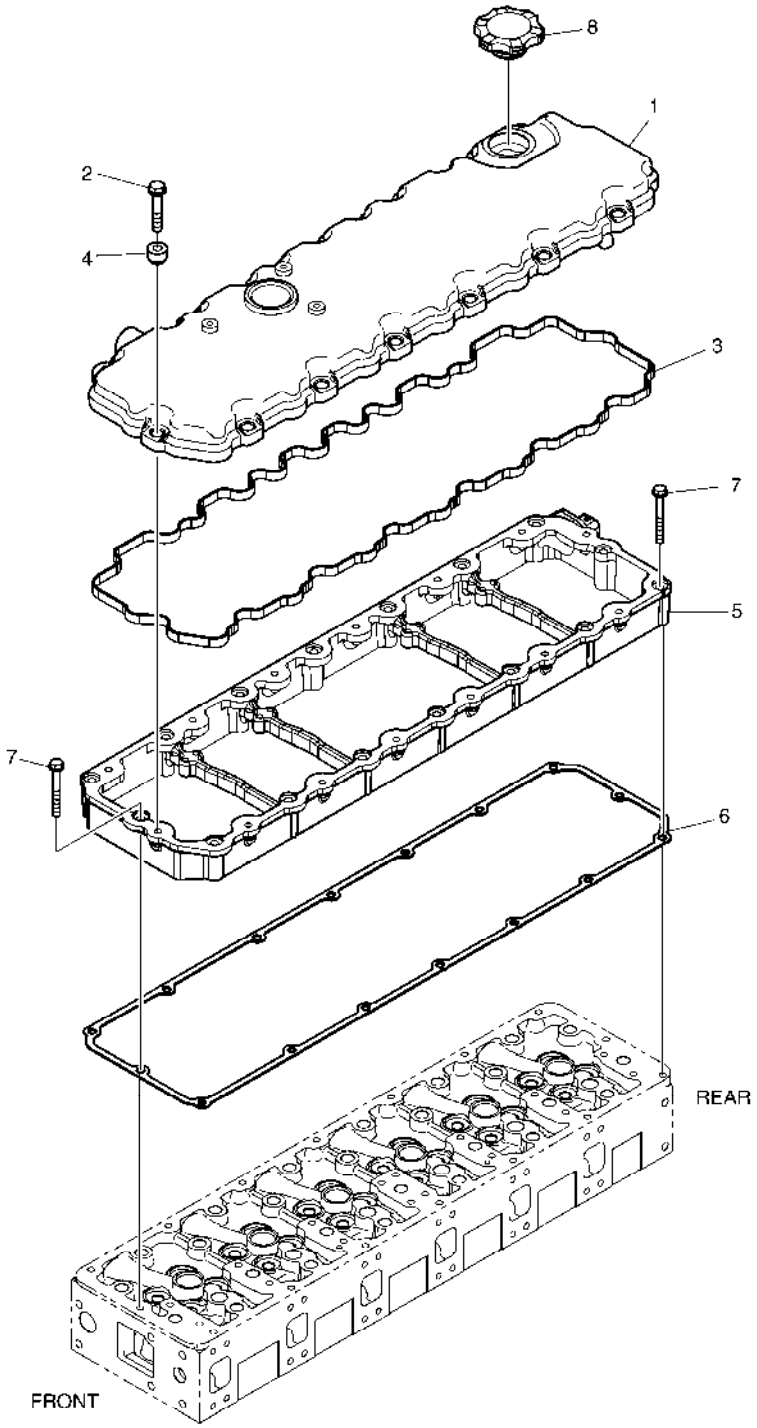

DATE	AUG. 28, 2009
3rd EDITION	

Fig. 018 CYLINDER HEAD COVER COUVERTURE DE CULASSE

Serial No. ;

Key No.	Part No.	Description	Description	Q'ty	S.C	Serial No.	ICA	Replaceable part	
								Part No.	Q'ty
018 -1	65.03401-5010	COVER;CYLINDER HEAD	COUVRE-CULASSE	1		-070705	Y	65.03401-5010B	1
	65.03401-5010B	COVER;CYLINDER HEAD	COUVRE-CULASSE	1		070706-			
2	65.90020-0109	BOLT;COLLARED HEX.	BOULON A 6 PANS	14					
3	65.03905-0037A	GASKET;CYL. HEAD COVER	JOINT	1					
4	65.03905-5002	PACKING;CYLHEAD COVER	JOINT	14					
5	65.03402-0008A	COVER;INTERMEDIATE	COUVERCLE	1		-070326	Y	65.03402-0008B	1
	65.03402-0008B	COVER;INTERMEDIATE	COUVERCLE	1		070327-	I	65.03402-0009	1
	65.03402-0009	COVER;INTERMEDIATE	COUVERCLE	1		080321-			
6	65.03905-0041	GASKET;CYL. HEAD COVER	JOINT	1					
7	65.90020-0138	BOLT;COLLARED HEX.	BOULON A 6 PANS	16					
8	65.01810-5011	CAP;OIL FILLER	VIBREUR	1					

DATE	AUG. 28, 2009
3rd EDITION	

Fig. 019 TIMING SYSTEM
SYSTEME DE SYNCHRONISATION

Serial No. ;

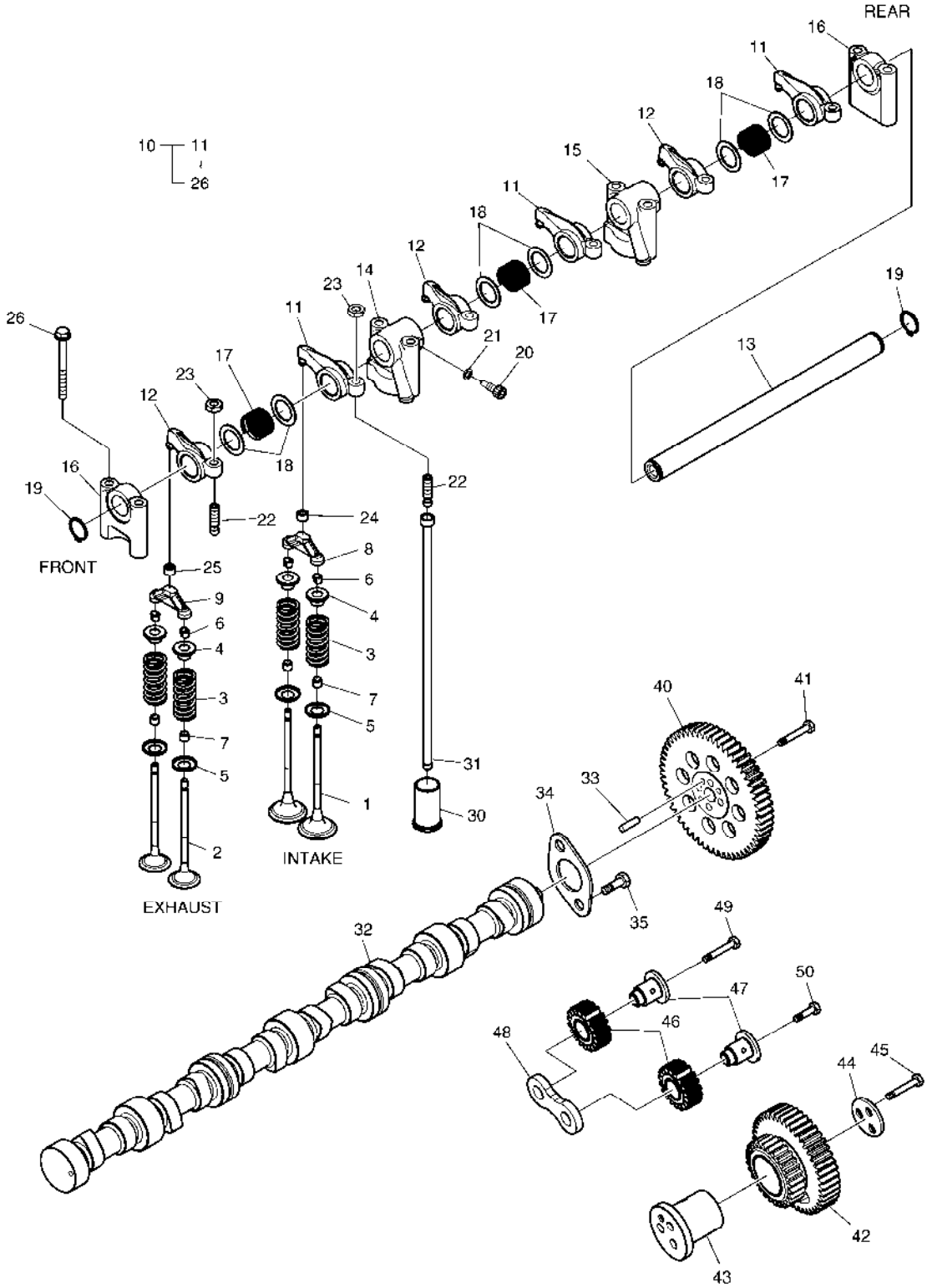

DATE	AUG. 28, 2009
3rd EDITION	

Fig. 019 TIMING SYSTEM
SYSTEME DE SYNCHRONISATION

Serial No. ;

Key No.	Part No.	Description	Description	Q'ty	S.C	Serial No.	ICA	Replaceable part	
								Part No.	Q'ty
019 -1	65.04101-0065B	VALVE;INTAKE	SOUPAPE D'ADMISSION	12					
2	65.04101-0066B	VALVE;EXHAUST	VANNE	12					
3	65.04102-0024	SPRING;VALVE	JOINT TORIQUE	24					
4	65.04103-0018	PLATE;VALVE SPRING	PLAQUE	24					
5	65.90701-0098	WASHER	CALE	24					
6	65.04104-0009	COTTER;VALVE	COTTER;VALVE	48					
7	65.04902-0016	SEAL;VALVE STEM	JOINT	24					
8	65.04130-0009A	CALIPER;INTAKE	ETRIER	6					
9	65.04130-0011	CALIPER;EXHAUST	ETRIER	6					
10	65.04200-6038A	ROCKER ARM S/F ASS'Y	AXE DE BRAS DE CULBUTE	2		-071121	Y	65.04200-6038C	2
	65.04200-6038C	ROCKER ARM S/F ASS'Y	AXE DE BRAS DE CULBUTE	2		-081016	I	65.04200-6038D	2
	65.04200-6038D	ROCKER ARM S/F ASS'Y	BRAS DE CULBUTEUR	2		081017-			
11	65.04201-5042A	ROCKER ARM;INTAKE	BRAS DE CULBUTEUR	3		-071121	Y	65.04201-5042C	3
	65.04201-5042C	ROCKER ARM;INTAKE	BRAS DE CULBUTEUR	3		071122-			
12	65.04201-5043A	ROCKER ARM;EXHAUST	BRAS DE CULBUTEUR	3		-071121	Y	65.04201-5043C	3
	65.04201-5043C	ROCKER ARM;EXHAUST	BRAS DE CULBUTEUR	3		071122-			
13	65.04203-5020A	SHAFT;ROCKER ARM	AXE DU CULBUTEUR	1					
14	65.04202-0033	BRACKET;ROCKER ARM	SUPPORT	1					
15	65.04202-0034	BRACKET;ROCKER ARM	SUPPORT	1					
16	65.04202-0035	BRACKET;ROCKER ARM	SUPPORT	2					
17	65.97601-0124	SPRING;COMPESSION	RESSORT	3					
18	65.90701-0136B	WASHER	RONDELLE	6					
19	06.29010-0120	RING;SNAP	CIRCLIP	2					
20	65.90030-0018	BOLT;SOCKET	BOULON	1					
21	06.16110-0106	WASHER	RONDELLE ELASTIQUE	1					
22	65.04205-0014	SCREW;ADJUST	VIS	6					
23	65.90501-0003	NUT	ECROU	6					
24	65.04209-0005	CAP;ADJUST SCREW (INTAKE)	CHAPEAU	3		-071121	I	65.04209-5002	3
	65.04209-5002	CAP;INTAKE	CHAPEAU	3		071122-			
25	65.04209-0006	CAP;EXHAUST	CHAPEAU	3					
26	65.90020-0120	BOLT;COLLARED HEX.	BOULON A 6 PANS	8					
30	65.04301-5003B	TAPPET;VALVE	TRINGLERIE	12		-070226	Y	65.04301-5003C	12
	65.04301-5003C	TAPPET;VALVE	TRINGLERIE	12		070227-			
31	65.04302-5015	ROD;PUSH	TIGE DE POUSSOIR	12					
32	65.04401-0045A	CAMSHAFT	EQUIPAGE MOBILE	1					
33	06.22022-1016	PIN;DOWEL	GOUPILLE D'AJUSTAGE	1					
34	65.90720-0032	WASHER;THRUST	RONDELLE DE BUTEE	1					
35	06.01913-2911	BOLT ASS'Y M6X16	BOULON A 6 PANS	2					

DATE	AUG. 28, 2009
3rd EDITION	

Fig. 019 TIMING SYSTEM
SYSTEME DE SYNCHRONISATION

Serial No. ;

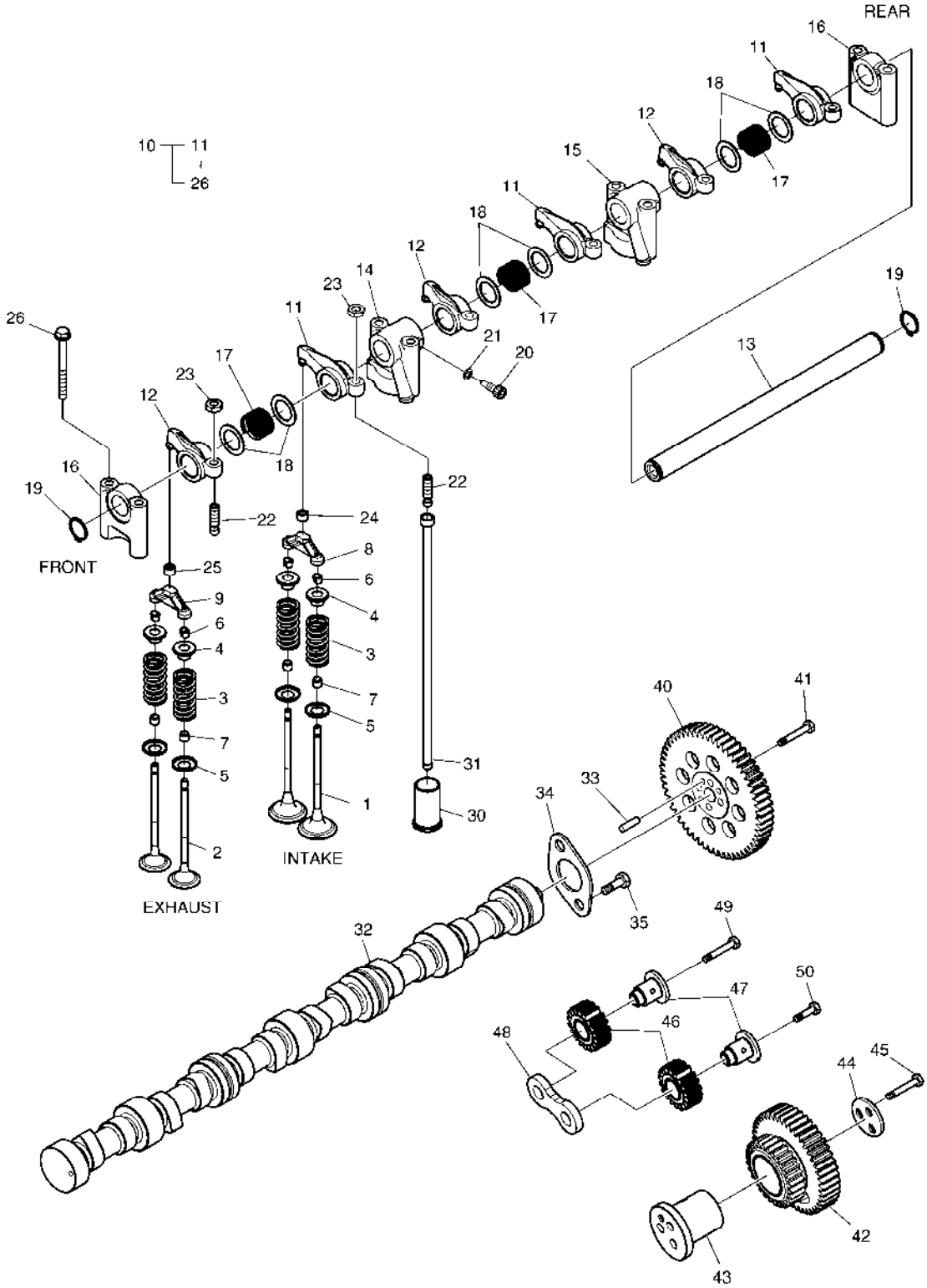

DATE	AUG. 28, 2009
3rd EDITION	

Fig. 019 TIMING SYSTEM
SYSTEME DE SYNCHRONISATION

Serial No. ;

Key No.	Part No.	Description	Description	Q'ty	S.C	Serial No.	ICA	Replaceable part	
								Part No.	Q'ty
019 -40	65.04501-0017	GEAR;CAM SHAFT	PIGNON	1					
41	65.90020-0117	BOLT;COLLARED HEX.	BOULON A 6 PANS	4					
42	65.04505-5018	GEAR;IDLE	PIGNON	1					
43	65.04506-0016	PIN;IDLE GEAR	GOUPILLE	1					
44	65.90720-0034B	WASHER;THRUST	RONDELLE DE BUTEE	1					
45	65.90020-0118	BOLT;COLLARED HEX.	BOULON A 6 PANS	3					
46	65.11301-5002	GEAR;DRIVE;INJECTION	PIGNON	2					
47	65.04506-0015	PIN;IDLE GEAR	GOUPILLE	2					
48	65.90720-0033A	WASHER;THRUST	RONDELLE DE BUTEE	1					
49	65.90020-0118	BOLT;COLLARED HEX.	BOULON A 6 PANS	1					
50	65.90020-0119	BOLT;COLLARED HEX.	BOULON A 6 PANS	1					

DATE	AUG. 28, 2009
3rd EDITION	

Fig. 020 OIL PUMP
POMPE A HUILE

Serial No. ;

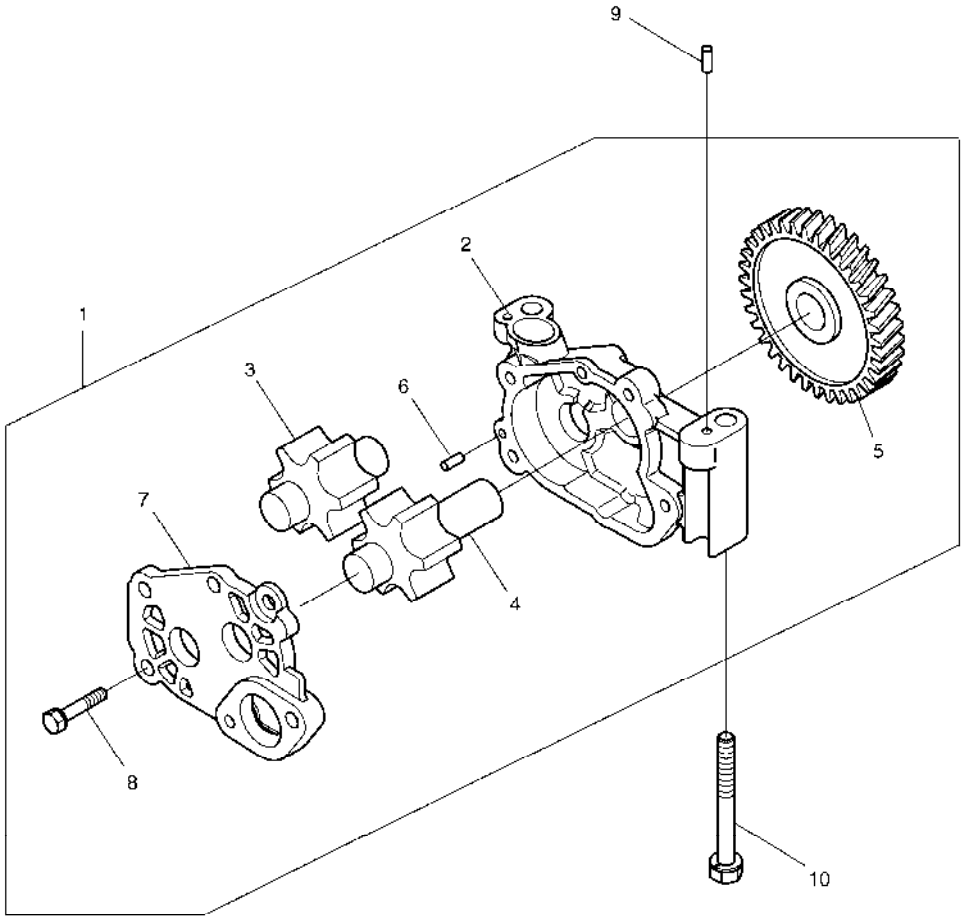

DATE	AUG. 28, 2009
3rd EDITION	

Fig. 020 OIL PUMP POMPE A HUILE

Serial No. ;

Key No.	Part No.	Description	Description	Q'ty	S.C	Serial No.	ICA	Replaceable part	
								Part No.	Q'ty
020 -1	65.05100-6063	OIL PUMP ASS'Y	ENSEMBLE POMPE A HUILE	1		-071108	Y	65.05100-6063A	1
	65.05100-6063A	OIL PUMP ASS'Y	ENSEMBLE POMPE A HUILE	1		071109-			
2	65.05102-0030	HOUSING;OIL PUMP	BOITIER POMPE A HUILE	1	D				
3	65.05104-0022	GEAR;OIL PUMP	POMPE A HUILE	1					
4	65.05104-0023	GEAR;OIL PUMP	POMPE A HUILE	1					
5	65.05201-0016	GEAR;DRIVE;OIL PUMP	PIGNON	1					
6	06.22022-0907	DOWEL PIN 6M6X10	GOUPILLE D'AJUSTAGE	1					
7	65.05103-0034	COVER;OIL PUMP	COUVERCLE	1					
8	06.01913-3114	BOLT ASS`Y M8X22	BOULON A 6 PANS	4					
9	06.22022-0909	PIN DOWEL 6M6X14	GOUPILLE	2					
10	65.90020-0085	BOLT;COLLARED HEX.	BOULON A 6 PANS	2					

DATE	AUG. 28, 2009
3rd EDITION	

Fig. 021 OIL FILTER & OIL COOLER FILTRE D'HUILE

Serial No. ;

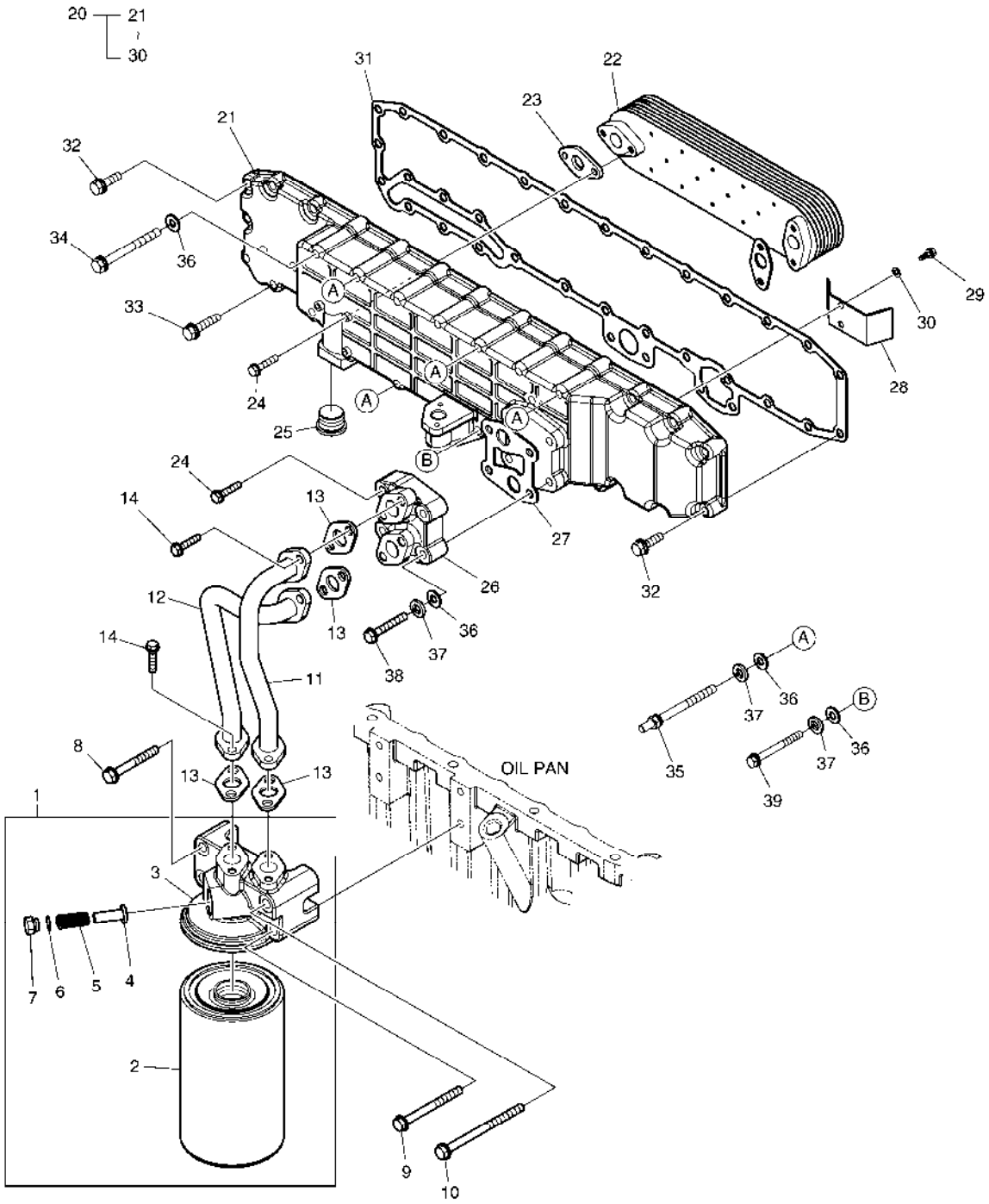

DATE	AUG. 28, 2009
3rd EDITION	

Fig. 021 OIL FILTER & OIL COOLER FILTRE D'HUILE

Serial No. ;

Key No.	Part No.	Description	Description	Q'ty	S.C	Serial No.	ICA	Replaceable part	
								Part No.	Q'ty
021 -1	65.05501-7089	OIL FILTER ASS'Y	FILTRE D'HUILE	1		-071119	Y	65.05501-7089A	1
	65.05501-7089A	OIL FILTER ASS'Y	FILTRE D'HUILE	1		071120-			
2	65.05510-5032	FILTER;OIL	FILTRE D'HUILE	1		-071119	Y	65.05510-5032A	1
	65.05510-5032A	FILTER;E/G OIL	FILTRE D'HUILE	1		071120-			
3	65.05503-5056	HEAD;OIL FILTER	CULASSE	1					
4	65.05518-0006	VALVE	VANNE	1					
5	65.97601-0075	SPRING	RESSORT	1					
6	06.56190-0726	SEAL;RING	BAGUE D'ETANCHEITE	1					
7	65.90310-0065	SCREW;PLUG	VIS	1					
8	06.01923-3222	BOLT ASS'Y	BOULON A 6 PANS	2					
9	06.01923-3225	BOLT ASS'Y M10X70	BOULON A 6 PANS	1					
10	06.01923-3228	BOLT ASS'Y M10X85	BOULON A 6 PANS	1					
11	65.05701-5573A	PIPE;OIL	CONDUITES DE HUILE	1		-070416	Y	65.05701-5573B	1
	65.05701-5573B	PIPE;OIL	CONDUITES DE HUILE	1		070417-			
12	65.05701-5574	PIPE;OIL	CONDUITES DE HUILE	1					
13	65.05903A0001	GASKET	JOINT	4					
14	06.01913-3114	BOLT ASS`Y M8X22	BOULON A 6 PANS	8					
20	65.05601-7079B	OIL COOLER ASS'Y	ENSEMBLE REFROIDISSEU	1					
21	65.05604-0030A	HOUSING;OIL COOLER	CARTER	1					
22	65.05606-5032A	ELEMENT;OIL COOLER	ELEMENT	1					
23	65.05902-0022	GASKET;OIL COOLER	JOINT	2					
24	06.01923-3119	BOLT ASS'Y M8X40	BOULON A 6 PANS	6					
25	65.54109-0005A	SCREW PLUG M22X1.5	VIS	1					
26	65.05607-5003	FLANGE;OIL COOLER	BRIDE	1					
27	65.05901-0031	GASKET;OIL FILTER	JOINT	1					
28	65.05610-0007A	GUIDER;WATER FLOW	GUIDE	1					
29	06.02097-8306	BOLT;SOCKET	BOULON	2					
30	06.16731-2105	WASHER	RONDELLE ELASTIQUE	2					
31	65.05902-0023	GASKET;OIL COOLER	JOINT	1					
32	06.01923-3117	BOLT ASS`Y M8X30	BOULON 6 PANS	12					
33	06.01923-3119	BOLT ASS'Y M8X40	BOULON A 6 PANS	8					
34	06.01913-3128	BOLT M8X85	BOULON A 6 PANS	7					
35	65.90201-0135	BOLT;STUD	GOUJON	4					
36	06.15010-2311	WASHER	RONDELLE	14					
37	06.16731-2107	WASHER	RONDELLE ELASTIQUE	7					
38	06.01013-9127	BOLT M8X120	BOULON A 6 PANS	2					
39	06.01913-3129	BOLT ASS'Y M8X90	BOULON A 6 PANS	1					

DATE	AUG. 28, 2009
3rd EDITION	

Fig. 022 OIL PAN CARTER D'HUILE

Serial No. ;

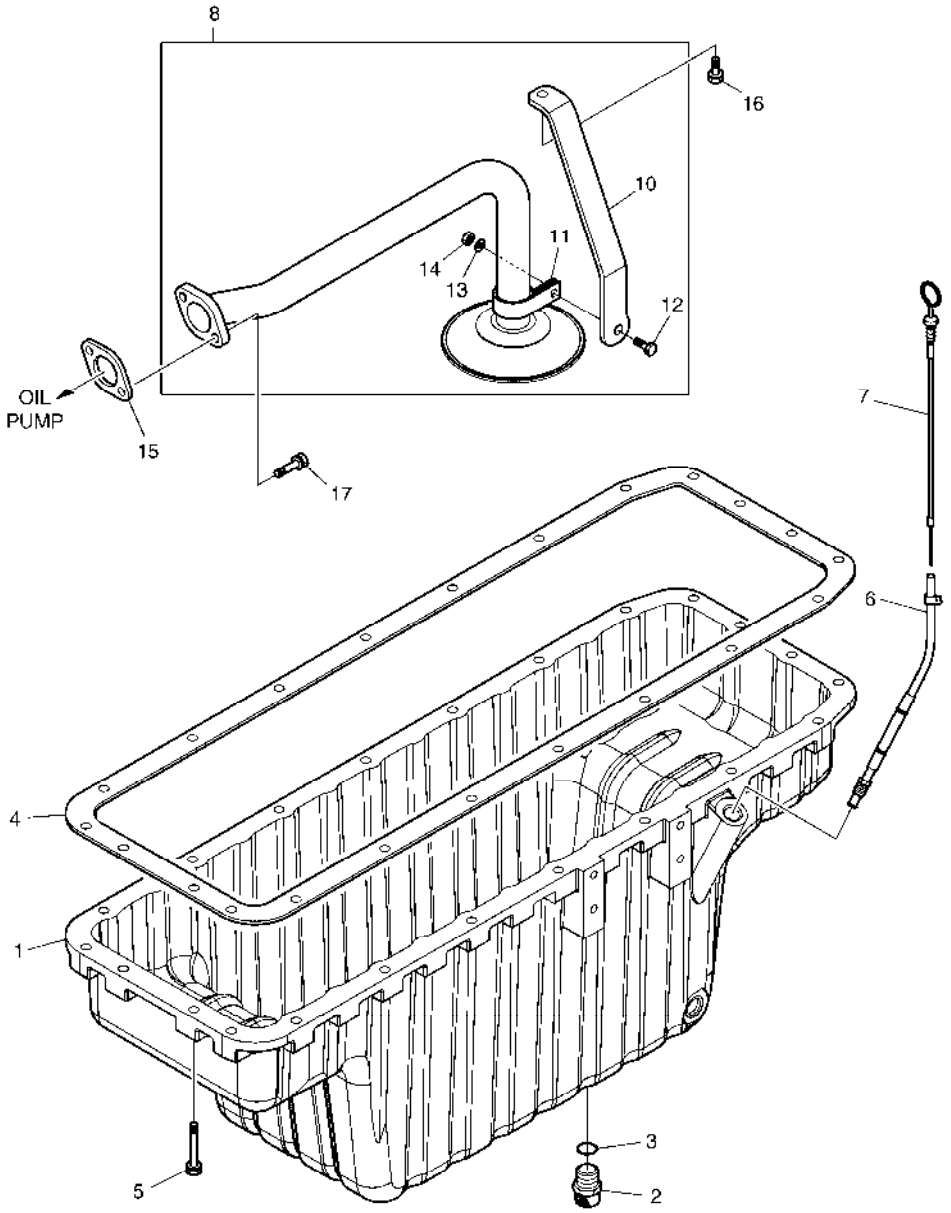

DATE	AUG. 28, 2009
3rd EDITION	

Fig. 022 OIL PAN
CARTER D'HUILE

Serial No. ;

Key No.	Part No.	Description	Description	Q'ty	S.C	Serial No.	ICA	Replaceable part	
								Part No.	Q'ty
022 -1	65.05801-5244	PAN;OIL	CARTER MOTEUR	1					
2	65.98125-5022A	JOINT;DRAIN	JOINT	1					
3	06.56190-0732	SEAL;RING	CONTACT DE NIVEAU D'HU	1					
4	65.05904-0035	GASKET;OIL PAN	JOINT	1					
5	06.01923-3120	BOLT ASS`Y M8X45	BOULON A 6 PANS	22					
6	65.05806-5118	TUBE;OIL LEVEL GAUGE	TUBE	1		-070201	Y	65.05806-5118A	1
	65.05806-5118A	TUBE;OIL LEVEL GAUGE	TUBE	1		070202-			
7	65.05805-5233B	OIL LEVEL GAUGE	INDICATEUR DE NIVEAU D	1			Y	65.05805-5233C	1
	65.05805-5233C	OIL LEVEL GAUGE	INDICATEUR DE NIVEAU D	1					
8	65.05701-6121	OIL PIPE ASS'Y	CONDUITES DE HUILE	1					
10	65.05740-0041	BRACKET;OIL SUCT.PIPE	SUPPORT	1					
11	65.97401-0137	CLIP;PIPE	ATTACHE	1					
12	06.01283-7115	BOLT M8X25	BOULON A 6 PANS	1					
13	06.15010-2311	WASHER	RONDELLE	1					
14	65.90510-0012	NUT	ECROU	1					
15	65.05901-0032	GASKET	JOINT	1					
16	06.01913-3115	BOLT ASS`Y M8X25	BOULON A 6 PANS	1					
17	06.01913-3119	BOLT ASS`Y M8X40	BOULON A 6 PANS	2					

DATE	AUG. 28, 2009
3rd EDITION	

Fig. 023 THERMOSTAT
THERMOSTAT

Serial No. ;

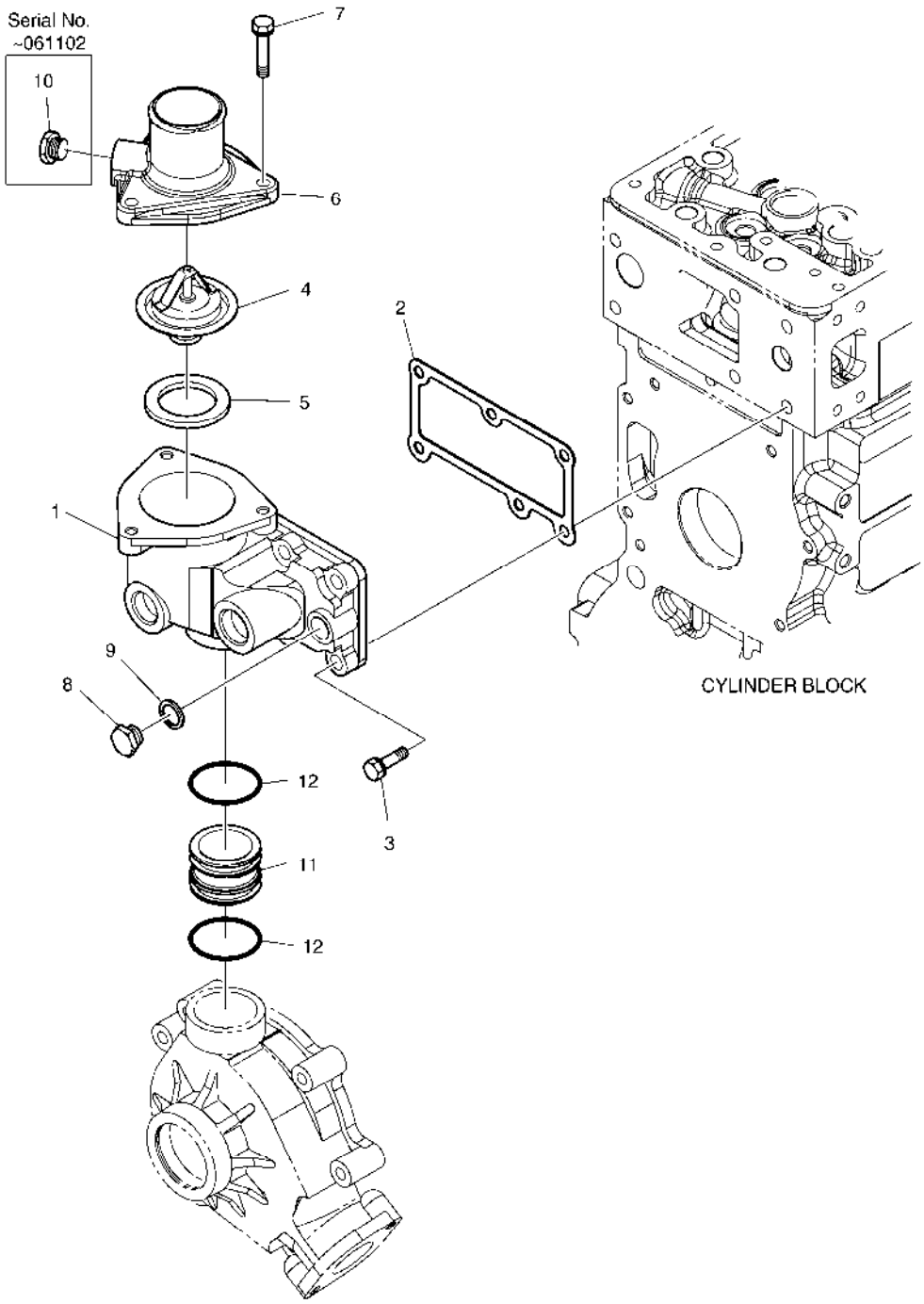

DATE	AUG. 28, 2009
3rd EDITION	

Fig. 023 THERMOSTAT THERMOSTAT

Serial No. ;

Key No.	Part No.	Description	Description	Q'ty	S.C	Serial No.	ICA	Replaceable part	
								Part No.	Q'ty
023 -1	65.06404-0039A	HOUSING;THERMOSTAT	LOGEMENT	1					
2	65.06904-0020	GASKET;THERMOSTAT	JOINT	1		-070315	Y	65.06904-0021	1
	65.06904-0021	GASKET;THERMOSTAT	JOINT	1		070316-			
3	06.01923-3218	BOLT ASS`Y M10X35	BOULON A 6 PANS	6					
4	65.06402-5015	THERMOSTAT	FILTRE	1					
5	65.06904-0003	GASKET;THERMOSTAT	JOINT	1					
6	65.06405-0012A	OUTLET;WATER	SORTIE A EAU	1		-061102	Y	65.06405-0039	1
	65.06405-0039	OUTLET;WATER	SORTIE DE L'EAU	1		061103-			
7	06.01923-3114	BOLT ASS`Y M8X22	BOULON A 6 PANS	3					
8	06.08092-2405	PLUG SCREW M16 X 1.5	BOUCHON A VIS	1					
9	06.56190-0709	SEAL;RING	BAGUE D'ETANCHEITE	1					
10	65.90320-0019	PLUG SCREW PT3/8	VIS	1		-061102			
11	65.06301-0257	PIPE;COOLING WATER	CONDUITE D'EAU DE REFF	1					
12	65.96501-0099A	O-RING	JOINT TORIQUE	2					

DATE	AUG. 28, 2009
3rd EDITION	

Fig. 024 WATER PUMP
SYSTEME DE REFROIDSSEMENT

Serial No. ;

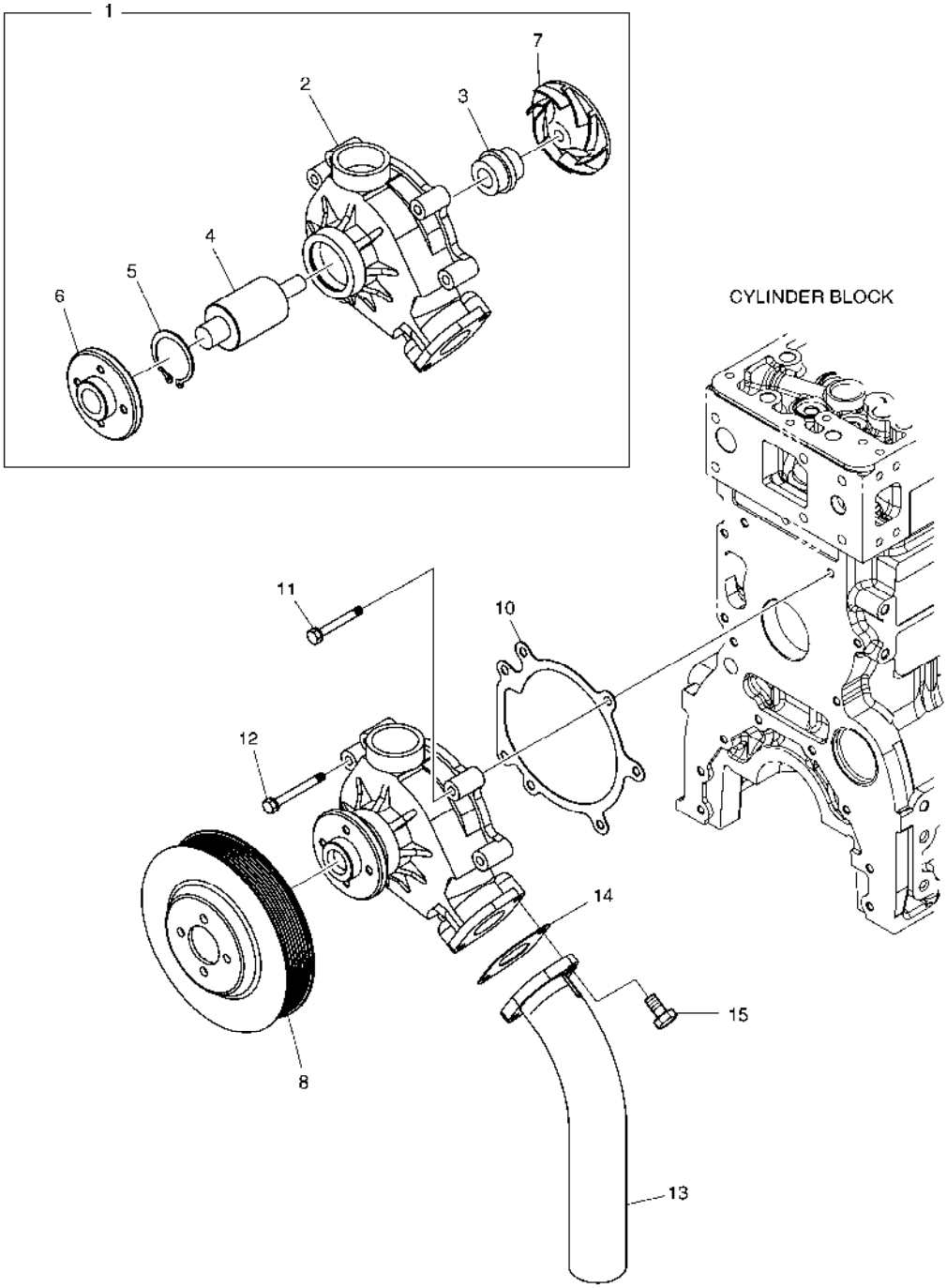

DATE	AUG. 28, 2009
3rd EDITION	

Fig. 024 WATER PUMP
SYSTEME DE REFROIDSSEMENT

Serial No. ;

Key No.	Part No.	Description	Description	Q'ty	S.C	Serial No.	ICA	Replaceable part	
								Part No.	Q'ty
024 -1	65.06500-6178B	WATER PUMP ASS'Y	ENSEMBLE POMPE A EAU	1		-070227	I	65.06500-6271A	1
	65.06500-6271A	WATER PUMP ASS'Y	ENSEMBLE POMPE A EAU	1		070228-			
2	65.06501-0099A	HOUSING;WATER PUMP	BOITIER	1	D	-070227			
	65.06501-0300	HOUSING;WATER PUMP	BOITIER	1	D	070228-			
3	65.06520-6007	SEAL;MECHANICAL	JOINT	1		-070227			
	65.06520-6008	SEAL;MECHANICAL	JOINT	1		070228-			
4	65.93410-0027	BEARING	PALIER	1					
5	06.29020-0132	SNAP RING 55X2	BAGUE ELASTIQUE	1					
6	65.06504-0033	HUB;V-BELT PULLEY	MOYEU	1					
7	65.06506-0029A	IMPELLER;WATER PUMP	TURBINE	1		-070227			
	65.06506-0032	IMPELLER;WATER PUMP	TURBINE	1		070228-			
8	65.06503-0113	PULLEY;V-BELT	POULIE DE COURROIE TRA	1					
10	65.06901-0042	GASKET;WATER PUMP	JOINT	1					
11	06.01913-3120	BOLT ASS'Y M8X45	BOULON A 6 PANS	5					
12	06.01913-3121	BOLT ASS`Y M8X50	BOULON A 6 PANS	2					
13	65.06301-0258A	PIPE;COOLING WATER	CONDUITE D'EAU DE REFR	1					
14	65.06903-0029	GASKET;WATER PIPE	JOINT	1					
15	06.01913-3117	BOLT ASS`Y M8X30	BOULON A 6 PANS	2					

DATE	AUG. 28, 2009
3rd EDITION	

Fig. 025 COOLING FAN VENTILATEUR

Serial No. ;

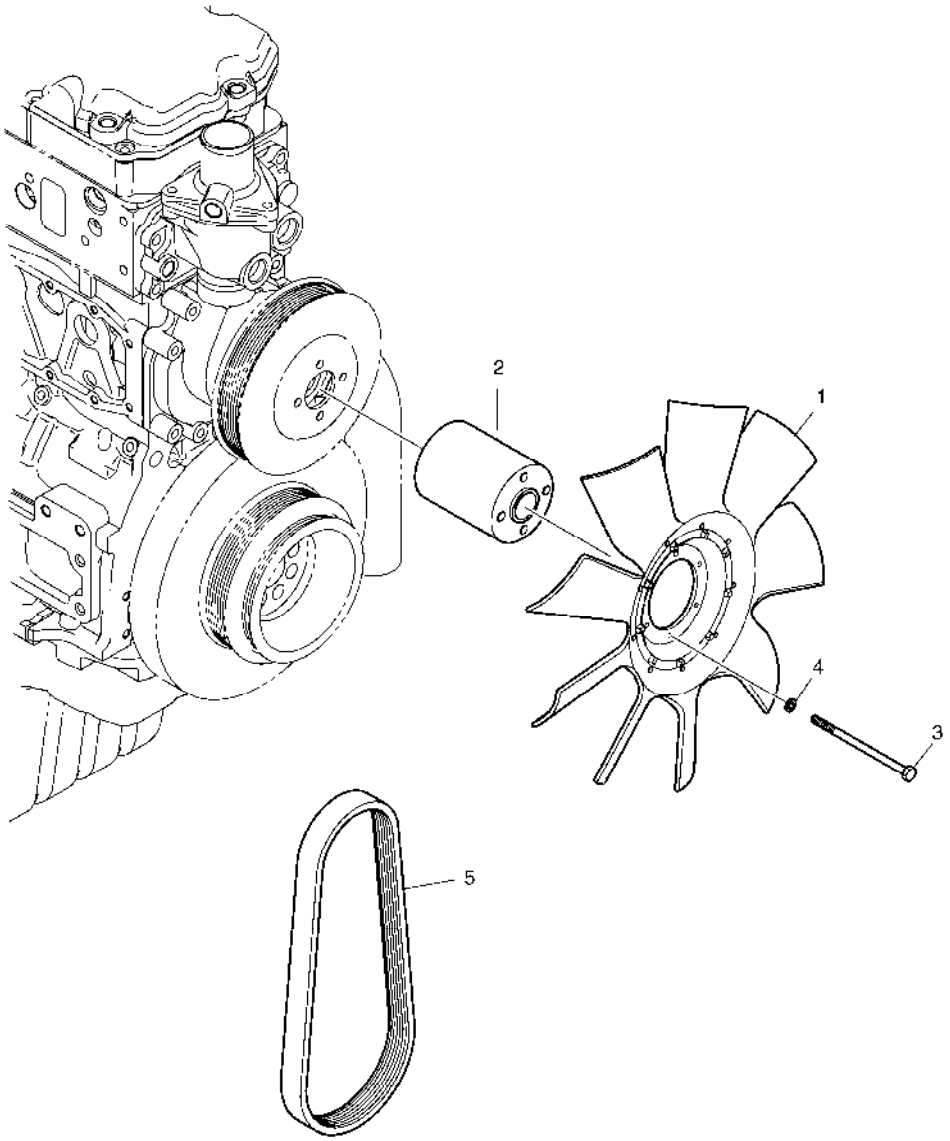

DATE	AUG. 28, 2009
3rd EDITION	

Fig. 025 COOLING FAN VENTILATEUR

Serial No. ;

Key No.	Part No.	Description	Description	Q'ty	S.C	Serial No.	ICA	Replaceable part	
								Part No.	Q'ty
025 -1	65.06601-5075	FAN;COOLING	VENTILATEUR	1					
2	65.06611-0132	FLANGE;FAN	BRIDE	1		-080718	Y	65.06611-0116	1
	65.06611-0116	FLANGE;FAN	BRIDE	1		080719-			
3	06.01013-9130	BOLT M8X150	BOULON A 6 PANS	4					
4	06.16731-2107	WASHER	RONDELLE ELASTIQUE	4					
5	65.96801-0194	BELT;FAN	COURROIE	1					

DATE	AUG. 28, 2009
3rd EDITION	

Fig. 026 INTAKE & EXHAUST MANIFOLD D'ADMISSION ET D'ECHAPPEMENT

Serial No. ;

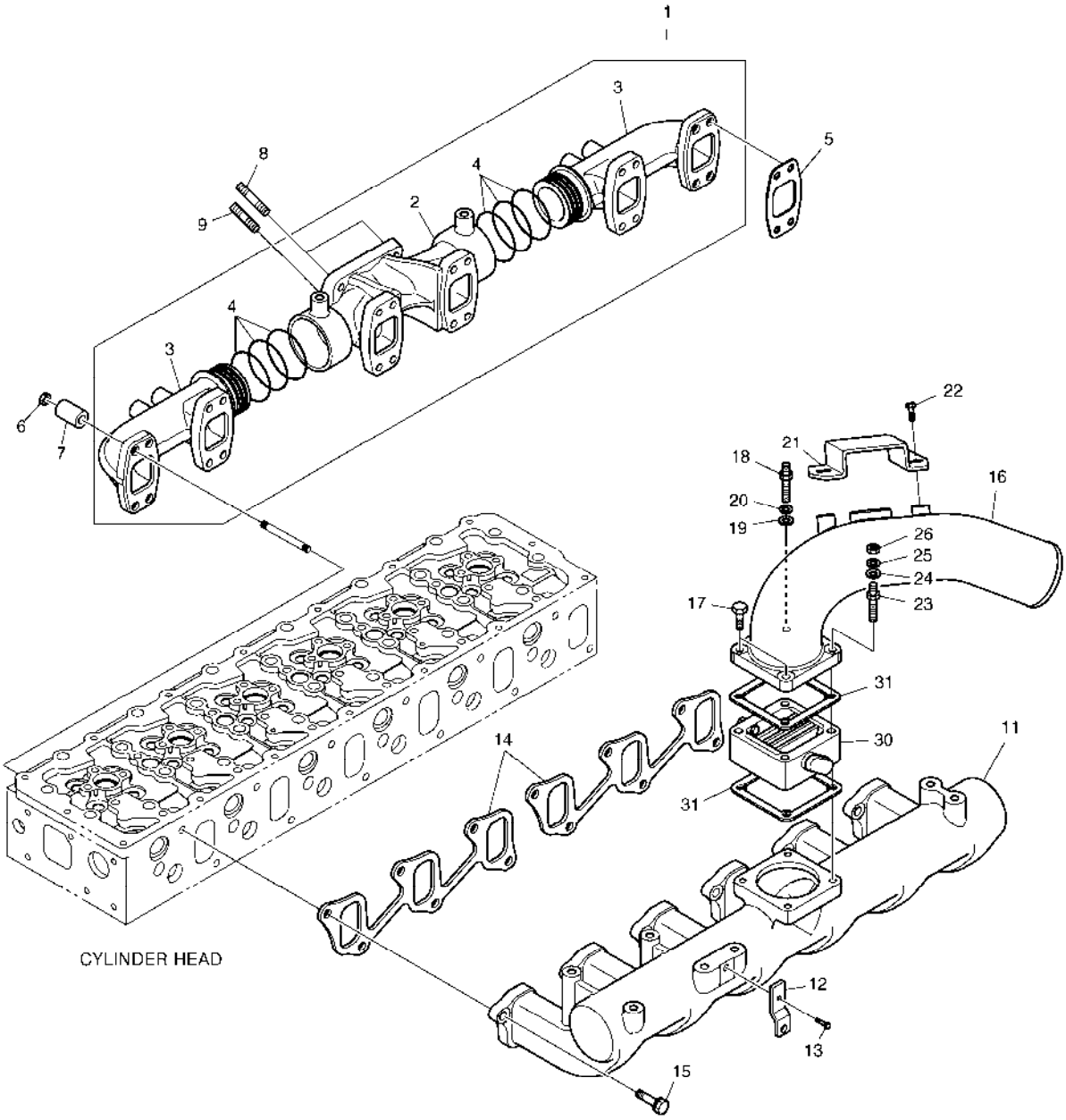

DATE	AUG. 28, 2009
3rd EDITION	

Fig. 026 INTAKE & EXHAUST MANIFOLD D'ADMISSION ET D'ECHAPPEMENT

Serial No. ;

Key No.	Part No.	Description	Description	Q'ty	S.C	Serial No.	ICA	Replaceable part	
								Part No.	Q'ty
026 -1	65.08100-6088A	EXHAUST MANIFOLD ASS'Y	TUBULURE D'ECHAPPEME	1		-070418	I	65.08100-6088B	1
	65.08100-6088B	EXHAUST MANIFOLD ASS'Y	TUBULURE D'ECHAPPEME	1		070419-			
2	65.08101-0263	MANIFOLD;EXHAUST	TUBULURE D'ECHAPPEME	1					
3	65.08101-0264	MANIFOLD;EXHAUST	TUBULURE D'ECHAPPEME	2		-070418	T	65.08101-0264A	1
	65.08101-0264A	MANIFOLD;EXHAUST	TUBULURE D'ECHAPPEME	2		070419-			
4	65.96507-0059	RING;SEAL	BAGUE D'ETANCHEITE	6		-070418			
	65.96507-0059	RING;SEAL	BAGUE D'ETANCHEITE	8		070419-			
5	65.08901-0045	GASKET;EXHAUST MANIFOLD	JOINT	6					
6	65.90535-0003	NUT	ECROU	24					
7	65.91701-0086	SPACER	BAGUE D'ECARTEMENT	24					
8	65.90201-0073	BOLT;STUD	BOULON DE GOUJON	2					
9	65.90201-0076	BOLT;STUD	BOULON DE GOUJON	2					
11	65.08201-5075	MANIFOLD;INTAKE	COLLECTEUR	1					
12	65.12303-0009	BRACKET;FUEL PIPE	SUPPORT	1					
13	06.01913-3213	BOLT ASS'Y M10X20	BOULON A 6 PANS	1					
14	65.08902-0030A	GASKET;INTAKE MANIFOLD	JOINT	2					
15	06.01923-3218	BOLT ASS`Y M10X35	BOULON A 6 PANS	12					
16	65.08202-0185	STAKE;INTAKE	TUBULURE D'ADIMISSION	1					
17	06.01923-3125	BOLT ASS`Y M8X70	BOULON A 6 PANS	2					
18	65.90201-0136	BOLT;STUD	GOUJON	1					
19	06.15010-2311	WASHER	RONDELLE	1					
20	06.16731-2107	WASHER	RONDELLE ELASTIQUE	1					
21	65.08204-0004	COVER	COUVERCLE	1		-070126	Y	65.08204-0004A	1
	65.08204-0004A	COVER	COUVERCLE	1		070127-			
22	06.01923-2910	BOLT ASS'Y M6X12	BOULON A 6 PANS	2					
23	06.06125-8716	BOLT;STUD M8X70	BOULON A 6 PANS	1					
24	06.15010-2311	WASHER	RONDELLE	1					
25	06.16731-2107	WASHER	RONDELLE ELASTIQUE	1					
26	06.11063-8214	NUT	ECROU 6 PANS	1					
30	65.26803-7028B	AIR HEATER	RECHAUFFEUR D'AIR	1					
31	65.09904-0008	GASKET;AIR HEATER	JOINT	2					

DATE	AUG. 28, 2009
3rd EDITION	

Fig. 027 TURBO CHARGER
CHARGEUR DE TURBO

Serial No. ;

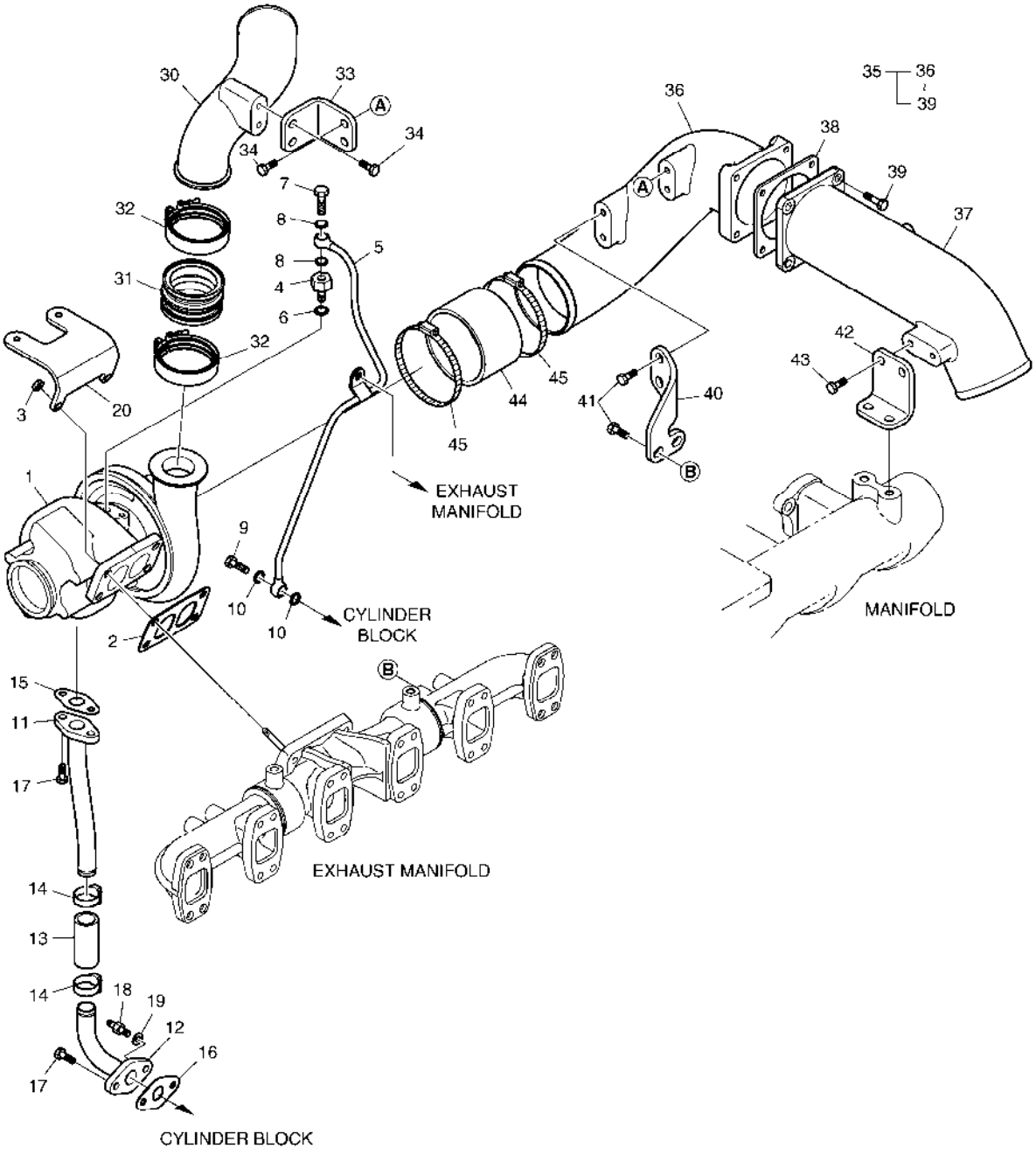

DATE	AUG. 28, 2009
3rd EDITION	

Fig. 027 TURBO CHARGER CHARGEUR DE TURBO

Serial No. ;

Key No.	Part No.	Description	Description	Q'ty	S.C	Serial No.	ICA	Replaceable part	
								Part No.	Q'ty
027 -1	65.09100-7110	TURBOCHARGER ASS'Y	TURBOCOMPRESSEUR	1					
2	65.09901-0018A	GASKET	JOINT	1					
3	65.90535-0001	NUT	ECROU 6 PANS	4					
4	65.98130-0200A	ADAPTER	ADAPTEUR	1					
5	65.05701-5567	PIPE;OIL	CONDUITES DE HUILE	1					
6	06.56190-0709	SEAL;RING	BAGUE D'ETANCHEITE	1					
7	06.78144-2403	HOLLOW SCREW M12X1.5	VIS CREUSE	1					
8	06.56190-0704	SEAL RING A12X18	BAGUE D'ETANCHEITE	2					
9	06.78144-2403	HOLLOW SCREW M12X1.5	VIS CREUSE	1					
10	06.56190-0704	SEAL RING A12X18	BAGUE D'ETANCHEITE	2					
11	65.05701-5568	PIPE;OIL	CONDUITES DE HUILE	1					
12	65.05701-5569	PIPE;OIL	CONDUITES DE HUILE	1					
13	65.96301-0327A	HOSE;RUBBER	TUYAU FLEXIBLE	1					
14	06.67020-0104	CLAMP;HOSE	COLLIER	2					
15	65.96601-0067	GASKET;T/C OIL RETURN	JOINT	1					
16	65.96601-0052	GASKET;PIPE-BLOCK	JOINT	1					
17	06.01913-3114	BOLT ASS`Y M8X22	BOULON A 6 PANS	3					
18	65.90201-0075	BOLT;SPACER	BOUCHON	1					
19	06.16731-2107	WASHER	RONDELLE ELASTIQUE	1					
20	65.09140-0005	BRACKET	SUPPORT	1					
30	65.09411-5113	PIPE;INLET	TUYAU	1					
31	65.96301-6003	HOSE;RUBBER	TUYAU FLEXIBLE	1					
32	65.97450-5003	CLAMP	COLLIER	2					
33	65.09440-0058	BRACKET	SUPPORT	1					
34	06.01923-3215	BOLT ASS`Y M10X25	BOULON A 6 PANS	4					
35	65.09411-7012	INLET PIPE ASS'Y	TUYAU D'ADMISSION	1					
36	65.09411-5104	INLET	PRISE	1					
37	65.09411-5102	INLET	PRISE	1					
38	65.09904-0009	GASKET;AIR PIPE	JOINT	1					
39	06.01923-3218	BOLT ASS`Y M10X35	BOULON A 6 PANS	4					
40	65.09440-0057	BRACKET	SUPPORT	1					
41	06.01923-3215	BOLT ASS`Y M10X25	BOULON A 6 PANS	4					
42	65.09440-0056	BRACKET	SUPPORT	1					
43	06.01923-3215	BOLT ASS`Y M10X25	BOULON A 6 PANS	4					
44	65.96301-0035	HOSE;RUBBER	TUYAU FLEXIBLE	1					
45	06.67020-0116	CLAMP;HOSE	TUYAU FLEXIBLE	2					

DATE	AUG. 28, 2009
3rd EDITION	

Fig. 028 INJECTOR INJECTEUR

Serial No. ;

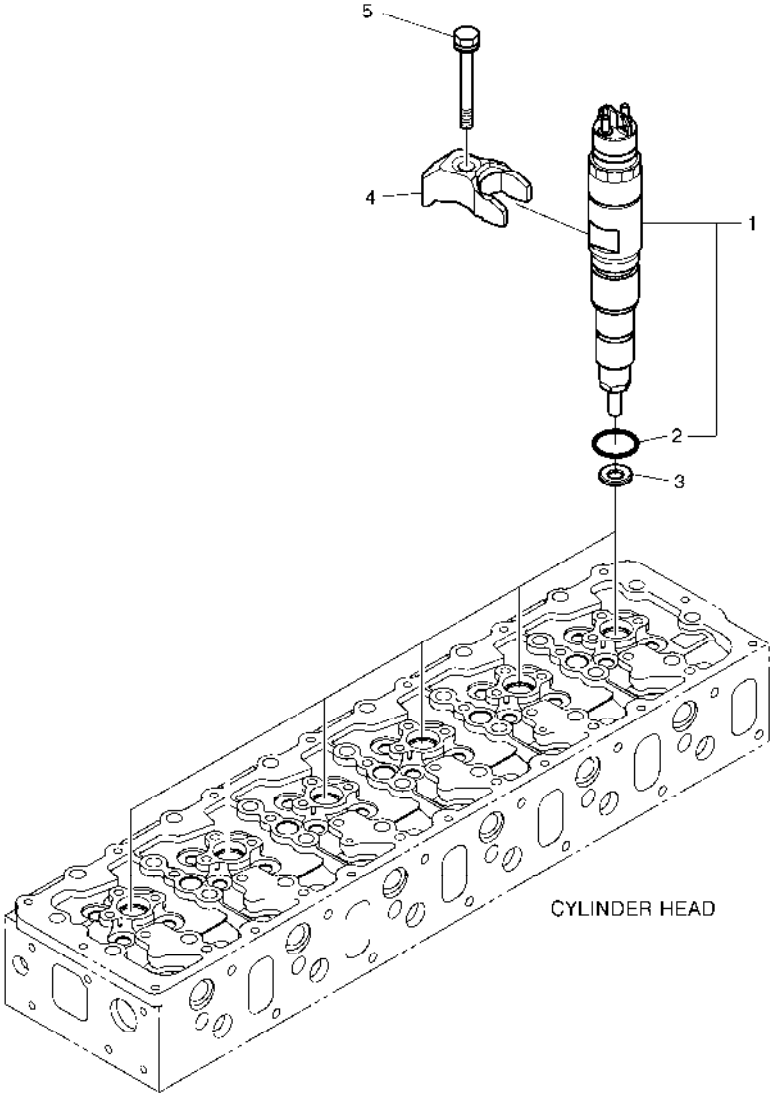

DATE	AUG. 28, 2009
3rd EDITION	

Fig. 028 INJECTOR INJECTEUR

Serial No. ;

Key No.	Part No.	Description	Description	Q'ty	S.C	Serial No.	ICA	Replaceable part	
								Part No.	Q'ty
028 -1	65.10401-7004A	INJECTOR ASS'Y	INDICATEUR	6					
2	65.96501-0437	O-RING	JOINT TORIQUE	1					
3	65.96507-0053	RING;SEAL	BAGUE	6					
4	65.10205-0006	FIXTURE	SUPPORT	6		-070611	Y	65.10205-0006A	6
	65.10205-0006A	FIXTURE	SUPPORT	6		070612-			
5	65.90020-0136	BOLT;COLLARED HEX.	BOULON A 6 PANS	6					

DATE	AUG. 28, 2009
3rd EDITION	

Fig. 029 INJECTION PIPE
PIPE D'INJECTION

Serial No. ;

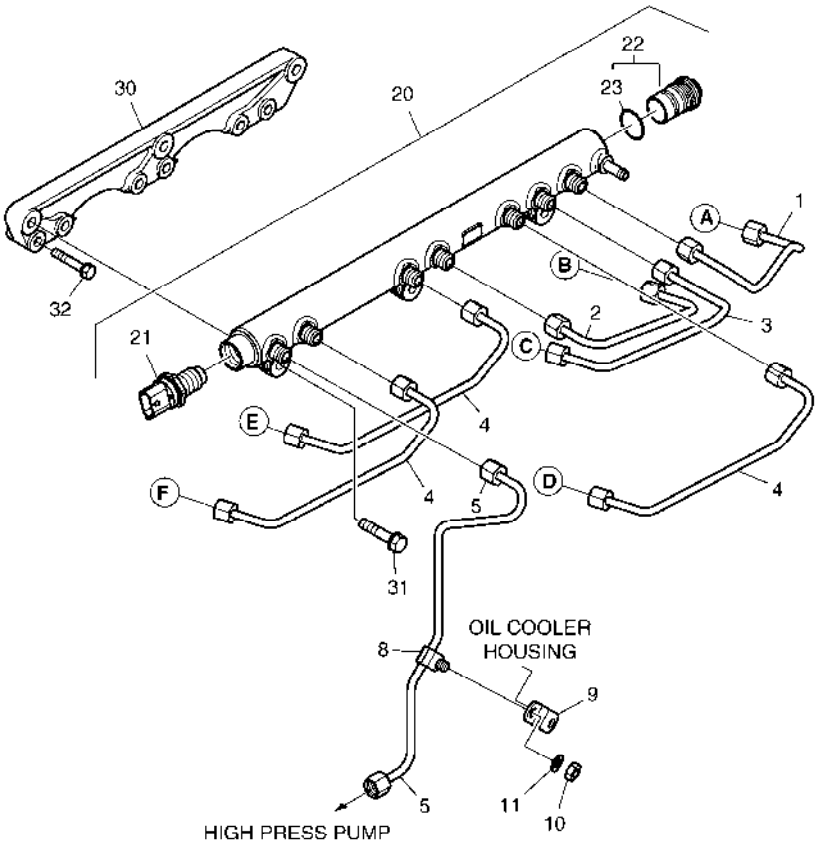

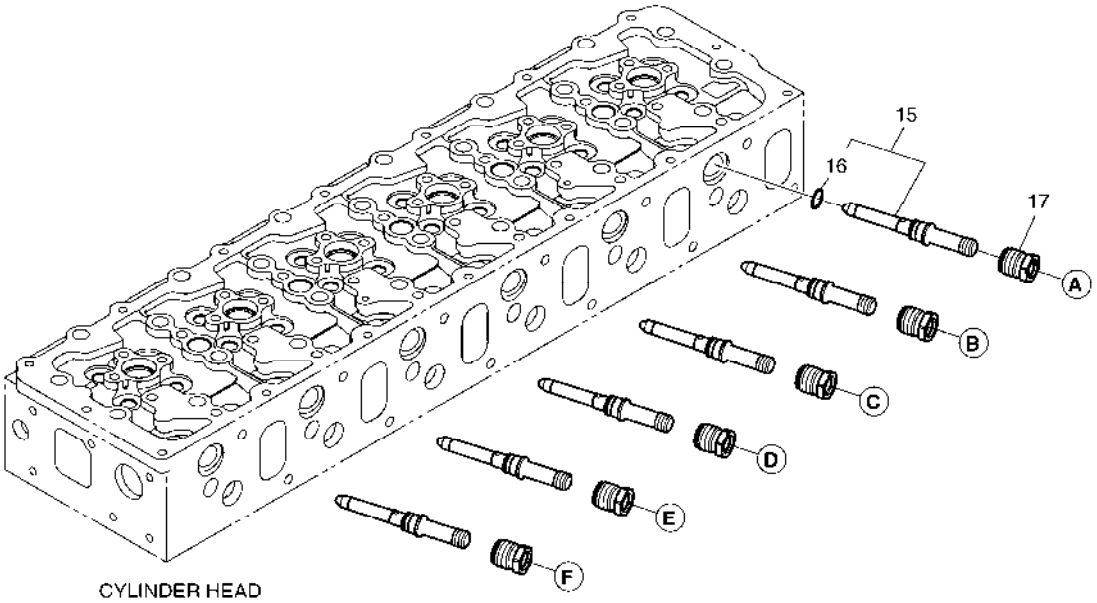

DATE	AUG. 28, 2009
3rd EDITION	

Fig. 029 INJECTION PIPE
PIPE D'INJECTION

Serial No. ;

Key No.	Part No.	Description	Description	Q'ty	S.C	Serial No.	ICA	Replaceable part	
								Part No.	Q'ty
029 -1	65.10301-6191	PIPE;INJECTION	TUYAU D'INJECTEUR	1					
2	65.10301-6192	PIPE;INJECTION	TUYAU D'INJECTEUR	1					
3	65.10301-6193	PIPE;INJECTION	TUYAU D'INJECTEUR	1					
4	65.10301-6194	PIPE;INJECTION	TUYAU D'INJECTEUR	3					
5	65.10301-6195	PIPE;INJECTION	TUYAU D'INJECTEUR	1					
8	65.97401-6039	CLIP;PIPE	CLIP DE FIXATION	1					
9	65.97480-0220	HOLDER	SUPPORT	1					
10	06.11063-8214	NUT	ECROU 6 PANS	1					
11	06.16731-2107	WASHER	RONDELLE ELASTIQUE	1					
15	65.10410-6003A	H.P.CONNECTOR	CONNECTEUR	6					
16	65.96501-0438	O-RING	JOINT TORIQUE	1					
17	65.10415-0001	NUT	ECROU	6					
20	65.10601-6004A	COMMON RAIL ASS'Y	CHEMIN DE FER	1					
21	65.27114-5002	SENSOR;RAIL PRESSURE	SENSER;RAIL	1					
22	65.52122-6002	VALVE;PRESSURE LIMITING	VANNE	1					
23	65.96501-0431	O-RING	JOINT TORIQUE	1					
30	65.10610-0003	BRACKET;MOUNTING	SUPPORT	1					
31	06.01913-3118	BOLT ASS'Y M8X35	BOULON A 6 PANS	3					
32	06.01913-3119	BOLT ASS`Y M8X40	BOULON A 6 PANS	6					

DATE	AUG. 28, 2009
3rd EDITION	

Fig. 030 INJECTION PUMP
POMPE D'INJECTION

Serial No. ;

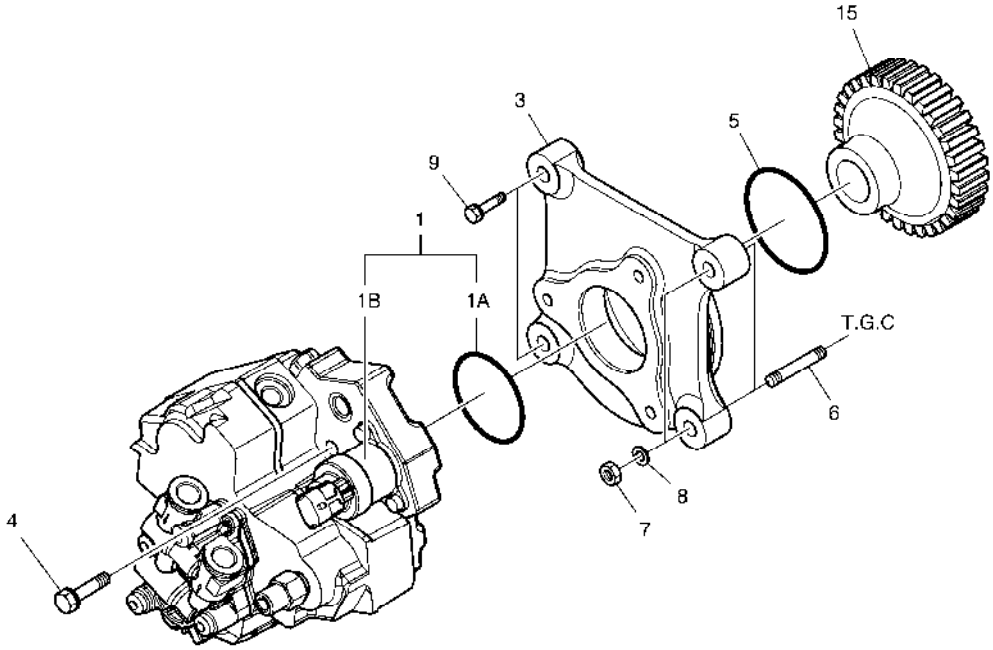

DATE	AUG. 28, 2009
3rd EDITION	

Fig. 030 INJECTION PUMP POMPE D'INJECTION

Serial No. ;

Key No.	Part No.	Description	Description	Q'ty	S.C	Serial No.	ICA	Replaceable part	
								Part No.	Q'ty
030 -1	65.10501-7005A	PUMP;HIGH PRESSURE	POMPE	1					
1A	65.96501-0439	. O-RING	. JOINT TORIQUE	1		090722-			
1B	800215-00004	. FLOW METER,FUEL	. COMPTEUR DE DEBIT	1		090722-			
3	65.11304-0001	FLANGE;INJECTION PUMP	BRIDE	1					
4	65.90020-0121	BOLT;COLLARED HEX.	BOULON A 6 PANS	3					
5	06.56020-0115	O-RING	JOINT TORIQUE	1					
6	06.06125-8709	BOLT;STUD M8X35	GOUJON	2					
7	06.11063-8214	NUT	ECROU 6 PANS	2					
8	06.16731-2107	WASHER	RONDELLE ELASTIQUE	2					
9	06.01923-3118	BOLT ASS`Y M8X35	BOULON 6 PANS	2					
15	65.11301-0038	GEAR;PUMP DRIVE	PIGNON	1					

DATE	AUG. 28, 2009
3rd EDITION	

Fig. 031 ENGINE CONTROL
COMMANDE REGIME MOTEUR

Serial No. ;

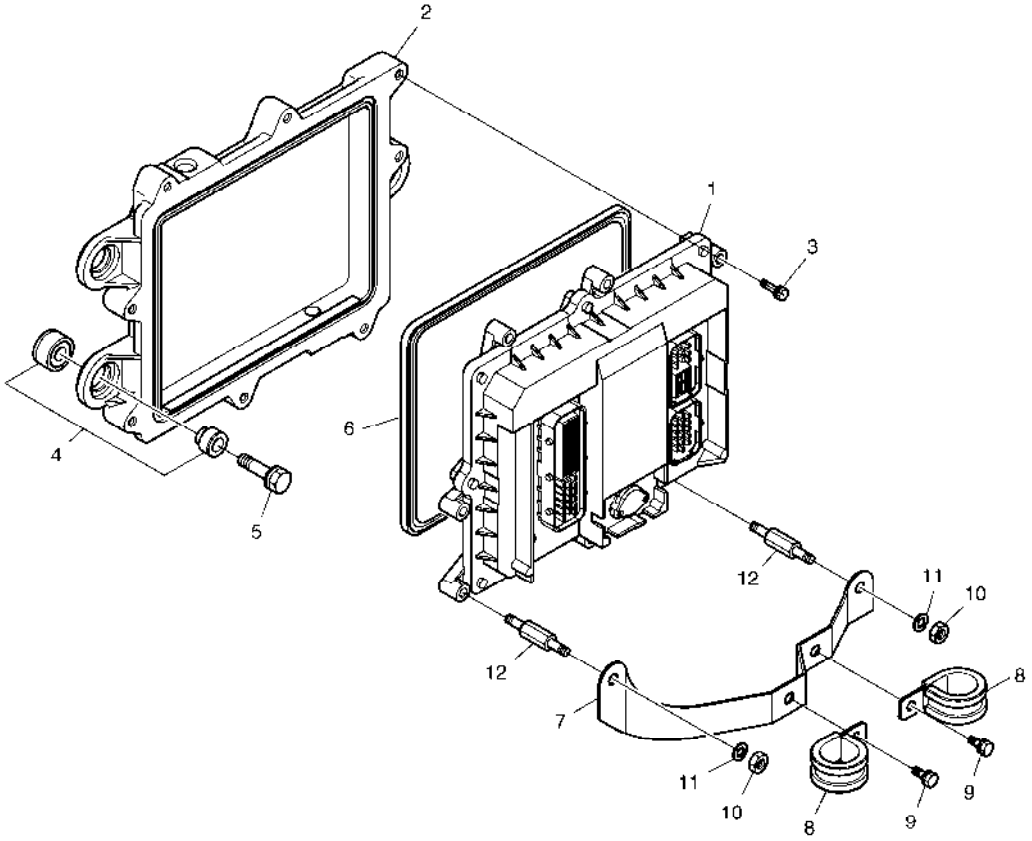

DATE	AUG. 28, 2009
3rd EDITION	

Fig. 031 ENGINE CONTROL
COMMANDE REGIME MOTEUR

Serial No. ;

Key No.	Part No.	Description	Description	Q'ty	S.C	Serial No.	ICA	Replaceable part	
								Part No.	Q'ty
031 -1	65.99497-8642	E.C.U	E.C.U	1					
2	65.11210-0003A	PLATE;ECU	PLAQUE	1		-071023	Y	65.11210-0003B	1
	65.11210-0003B	PLATE;ECU	PLAQUE	1		071024-			
3	06.01923-2917	BOLT ASS`Y M6X30	BOULON A 6 PANS	6					
4	65.96210-6001A	RUBBER;CUSHION	CUSHION;RUBBER	3					
5	65.90020-0095	BOLT;COLLARED HEX.	BOULON A 6 PANS	3					
6	65.96501-0102	PACKING	RONDELLE D'ETANCHEITE	1					
7	65.29150-5006	BRACKET	SUPPORT	1					
8	65.97401-0188	CLIP;PIPE	ATTACHE	2					
9	06.01923-2911	BOLT ASS`Y M6X16	ENSEMBLE BOULON	2					
10	06.11063-8212	NUT	ECROU	2					
11	06.16731-2106	WASHER	RONDELLE ELASTIQUE	2					
12	65.90441-0066	BOLT;SPACER	BOULON A 6 PANS	2					

DATE	AUG. 28, 2009
3rd EDITION	

Fig. 032 FUEL SYSTEM
INJECTEUR ET POMPE-INJECTEUR

Serial No. ;

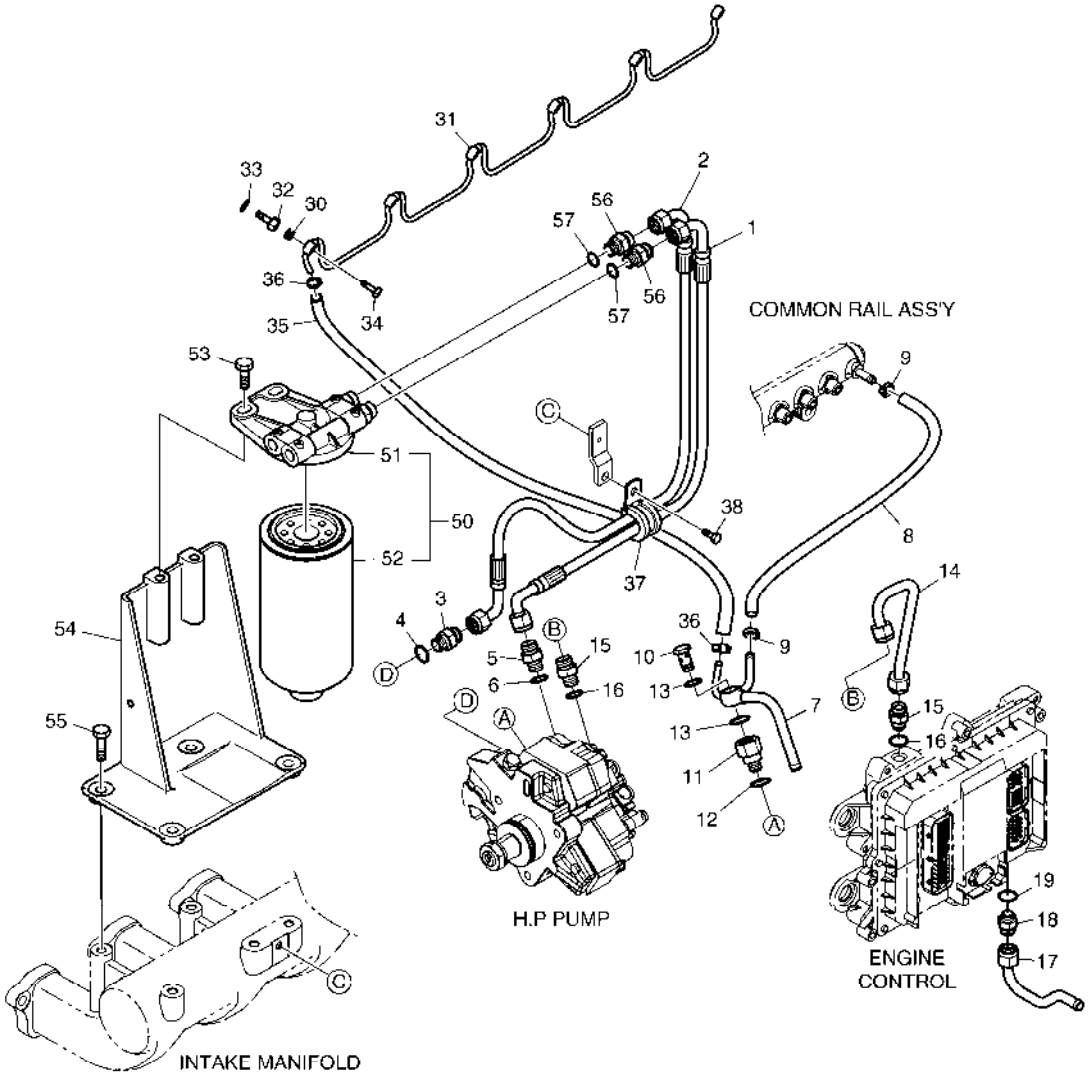

DATE	AUG. 28, 2009
3rd EDITION	

Fig. 032 FUEL SYSTEM INJECTEUR ET POMPE-INJECTEUR

Serial No. ;

Key No.	Part No.	Description	Description	Q'ty	S.C	Serial No.	ICA	Replaceable part Part No.	Q'ty
032 -1	65.96340-5079	HOSE;FUEL	TUYAU FLEXIBLE	1					
2	65.96340-5080	HOSE;FUEL	TUYAU FLEXIBLE	1					
3	65.98130-0211	ADAPTER	ADAPTEUR	1					
4	06.56190-0704	SEAL RING A12X18	BAGUE D'ETANCHEITE	1					
5	65.98130-0229	ADAPTER	RACCORD ADAPTATEUR	1					
6	06.56190-0706	SEAL RING A14X20	BAGUE D'ETANCHEITE	1		-061213	I	65.96507-0043	1
	65.96507-0043	SEAL RING A14X20	BAGUE D'ETANCHEITE	1		061214-			
7	65.12301-5291	PIPE;FUEL	CONDUITE	1					
8	65.96330-0018	HOSE;RUBBER;RING JOIN	TUYAU CAOUTCHOUC	1		-080825	Y	65.96330-0018B	1
	65.96330-0018B	HOSE;RUBBER;RING JOIN	TUYAU FLEXIBLE	1		080826-			
9	65.97440-0045	CLAMP;HOSE	COLLIER	2					
10	06.78144-2204	HOLLOW SCREW NW10	VIS CREUSE	1					
11	65.98130-0159A	ADAPTER	ADAPTEUR	1					
12	06.56190-0704	SEAL RING A12X18	BAGUE D'ETANCHEITE	1					
13	06.56190-0706	SEAL RING A14X20	BAGUE D'ETANCHEITE	2		-061213	I	65.96507-0043	2
	65.96507-0043	SEAL RING A14X20	BAGUE D'ETANCHEITE	2		061214-			
14	65.12301-5289	PIPE;FUEL	CONDUITE	1					
15	65.98130-0229	ADAPTER	RACCORD ADAPTATEUR	2		-071017	I	06.78190-0206	2
	06.78190-0206	CONNECTION;SCREW	VIS	2		071018-			
16	06.56190-0706	SEAL RING A14X20	BAGUE D'ETANCHEITE	2		-071017	I	65.96507-0043	2
	65.96507-0043	SEAL RING A14X20	BAGUE D'ETANCHEITE	2		071018-			
17	65.12301-5268	PIPE;FUEL	CONDUITE	1					
18	65.98130-0229	ADAPTER	RACCORD ADAPTATEUR	1					
19	06.56190-0706	SEAL RING A14X20	BAGUE D'ETANCHEITE	1		-061213	I	65.96507-0043	1
	65.96507-0043	SEAL RING A14X20	BAGUE D'ETANCHEITE	1		061214-			
30	65.96507-0055	RING;SEAL	BAGUE	6					
31	65.12301-5288A	PIPE;FUEL	CONDUITE	1		-070316	Y	65.12301-5288B	1
	65.12301-5288B	PIPE;FUEL	CONDUITE	1		070317-			
32	65.98130-0154	ADAPTER	ADAPTEUR	6					
33	06.56180-0712	RING;SEAL	BAGUE D'ETANCHEITE	6					
34	65.98150-0042A	HOLLOW SCREW	VIS CREUSE	6					
35	65.96301-0462	HOSE;RUBBER	TUYAU FLEXIBLE	1		-081013	Y	65.96301-0462A	1
	65.96301-0462A	HOSE;RUBBER	TUYAU FLEXIBLE	1		081014-			
36	65.97440-0045	CLAMP;HOSE	COLLIER	2		-071025	Y	65.97402-0003	2
	65.97402-0003	CLAMP;HOSE	COLLIER	2		071026-			
37	65.97401-5019	CLIP;PIPE	ATTACHE	1					
38	06.01923-3111	BOLT M8X16	BOULON A 6 PANS	1					
50	65.12501-7042A	FUEL FILTER ASS'Y	ENSEMBLE FILTRE A GAZO	1		-071130	Y	65.12501-7042B	1

Fig. 032 FUEL SYSTEM INJECTEUR ET POMPE-INJECTEUR

Serial No. ;

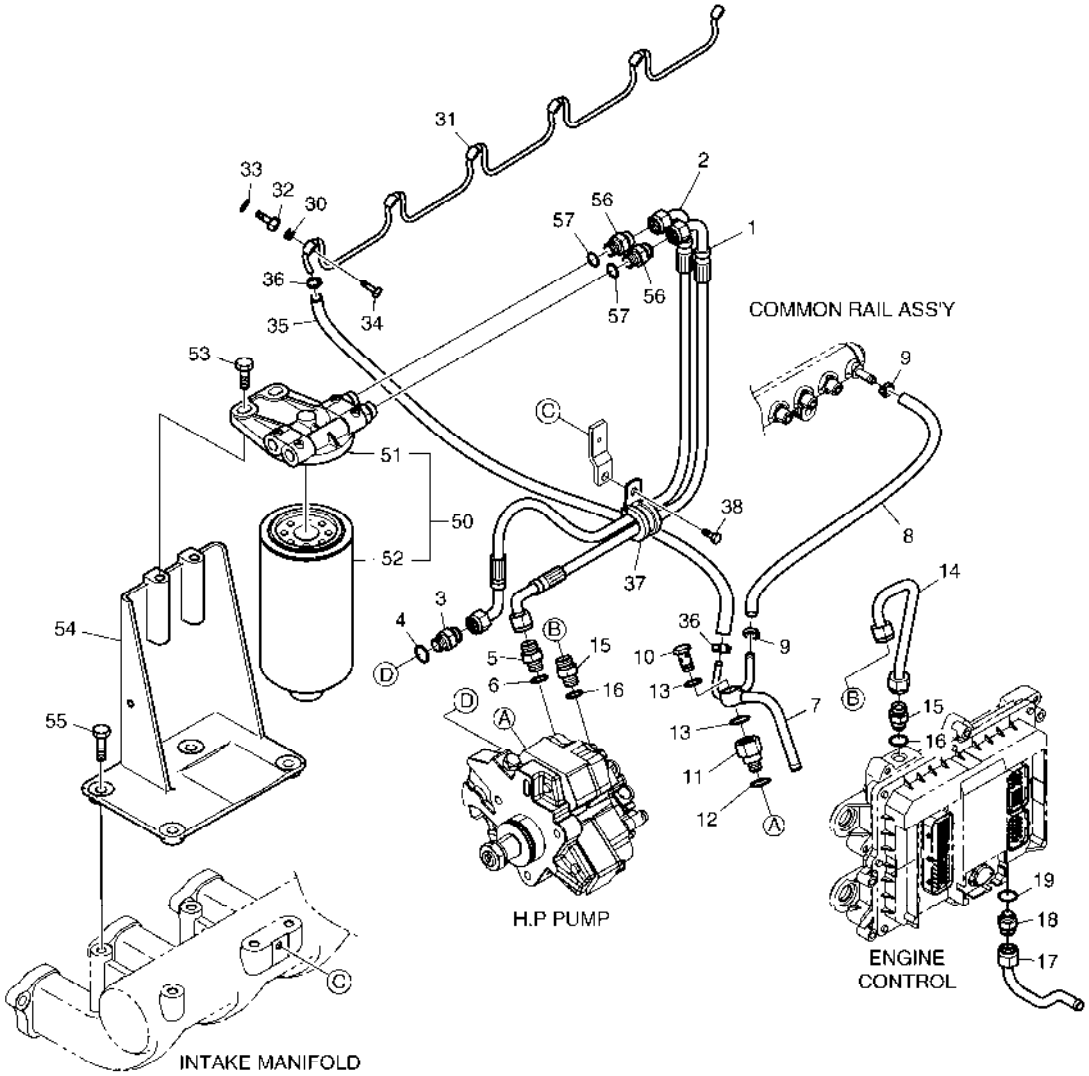

DATE	AUG. 28, 2009
3rd EDITION	

Fig. 032 FUEL SYSTEM INJECTEUR ET POMPE-INJECTEUR

Serial No. ;

Key No.	Part No.	Description	Description	Q'ty	S.C	Serial No.	ICA	Replaceable part	
								Part No.	Q'ty
032 -	65.12501-7042B	FUEL FILTER ASS'Y	ENSEMBLE FILTRE A GAZO	1		-080819	Y	65.12501-7042C	1
	65.12501-7042C	FUEL FILTER ASS'Y	REMPLISSEUR DE CARBUI	1		080820-			
51	65.12504-5027	COVER;FUEL FILTER	COUVERCLE	1		-071130	I	65.12504-5028	1
	65.12504-5028	HEAD;FUEL FILTER	COUVERCLE	1		071131-			
52	65.12503-5026	FILTER;E/G FUEL	FILTRE A GAZOLE	1		-080819	Y	65.12503-5026A	1
	65.12503-5026A	FILTER;E/G FUEL	FILTRE	1		080820-			
53	06.01923-3217	BOLT ASS`Y M10X30	BOULON A 6 PANS	2					
54	65.12540-0057B	BRACKET;FUEL FILTER	SUPPORT	1		-061108	Y	65.12540-0057C	1
	65.12540-0057C	BRACKET;FUEL FILTER	SUPPORT	1		-070324	T	65.12540-0061	1
	65.12540-0061	BRACKET;FUEL FILTER	SUPPORT	1		070325-			
55	06.01913-3216	BOLT M10X28	BOULON A 6 PANS	4		-070324			
	06.01913-3217	BOLT M10X30	BOULON A 6 PANS	4		070325-			
56	65.98130-0229	ADAPTER	RACCORD ADAPTATEUR	2					
57	06.56190-0706	SEAL RING A14X20	BAGUE D'ETANCHEITE	2		-071114	I	65.96507-0043	2
	65.96507-0043	SEAL RING A14X20	BAGUE D'ETANCHEITE	2		071115-			

DATE	AUG. 28, 2009
3rd EDITION	

Fig. 033 ALTERNATOR MOUNTING ALTERNATEUR

Serial No. ;

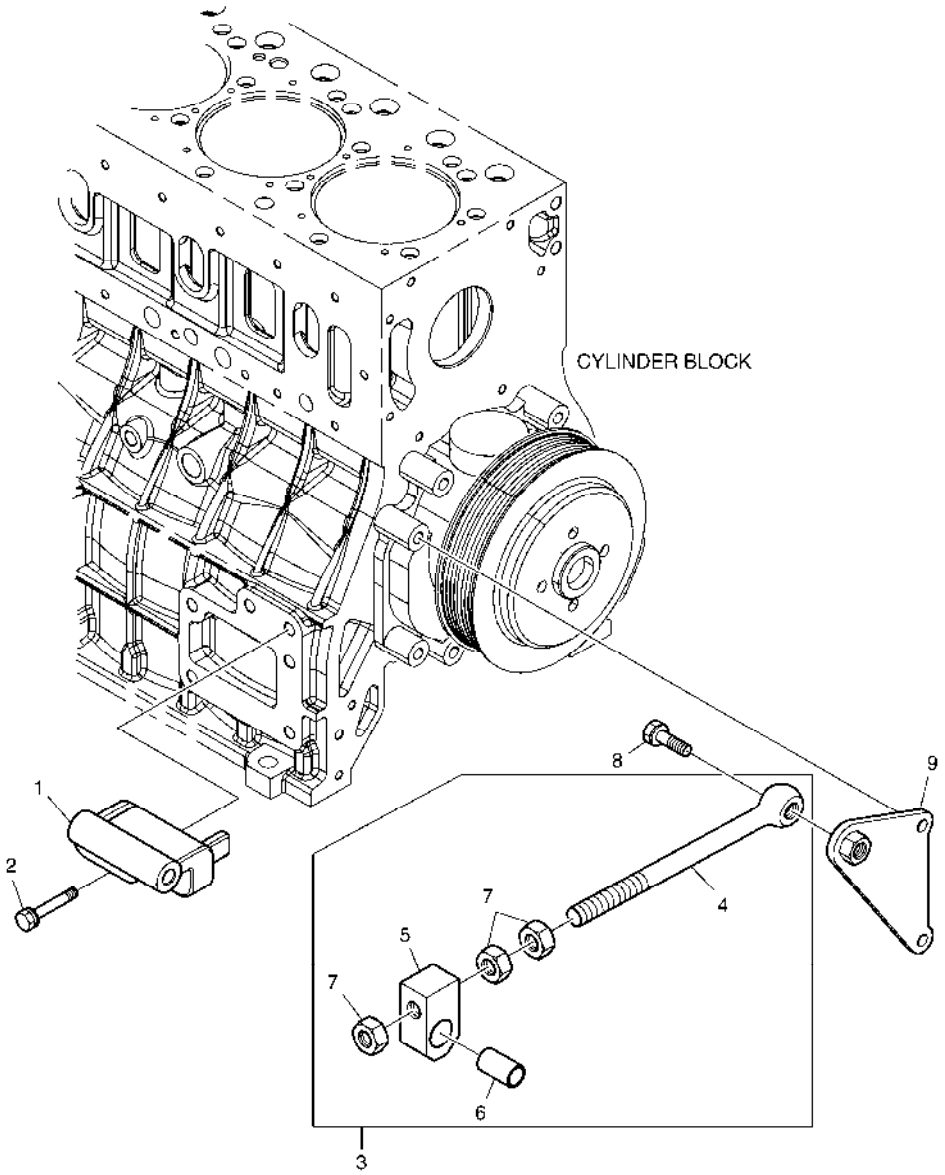

DATE	AUG. 28, 2009
3rd EDITION	

Fig. 033 ALTERNATOR MOUNTING ALTERNATEUR

Serial No. ;

Key No.	Part No.	Description	Description	Q'ty	S.C	Serial No.	ICA	Replaceable part	
								Part No.	Q'ty
033 -1	65.19102-0096	BRACKET;ALTERNATOR	SUPPORT	1		-071220	Y	65.19102-0103	1
	65.19102-0103	BRACKET;ALTERNATOR	SUPPORT	1		071221-			
2	06.01943-3323	BOLT ASS'Y M12X1.5X60	BOULON 6 PANS	2					
3	65.19103-6010A	EYE BOLT ASS'Y	BOULON A 6PANS	1					
4	65.90441-0009A	EYE BOLT	BOUCHON A VIS	1	D				
5	65.19107-0001A	PIECE;GUIDE	GUIDE	1	D				
6	65.93020-0055	BUSH	AMPOULE	1	D				
7	06.11063-9217	NUT	ECROU 6 PANS	3					
8	06.01943-3319	BOLT ASS`Y M12X1.5X40	BOULON 6 A PANS	1					
9	65.19103-5049	SUPPORT;ALTERNATOR	SUPPORT D'ALTERNATEU	1					

DATE	AUG. 28, 2009
3rd EDITION	

Fig. 034 LIFTING HOOK CROCHET DE LEVAGE

Serial No. ;

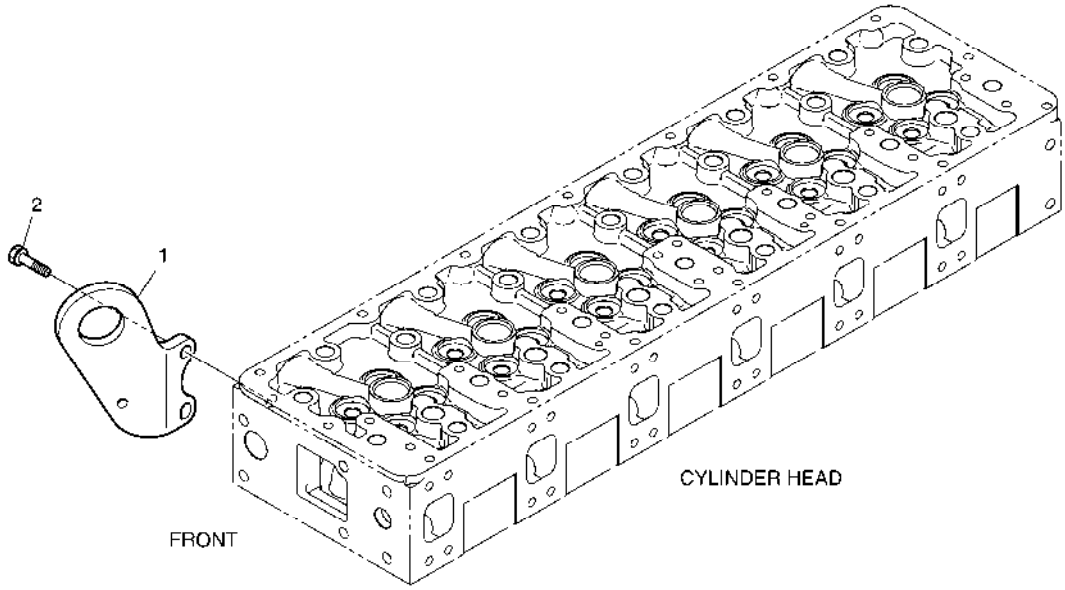

DATE	AUG. 28, 2009
3rd EDITION	

Fig. 034 LIFTING HOOK CROCHET DE LEVAGE

Serial No. ;

Key No.	Part No.	Description	Description	Q'ty	S.C	Serial No.	ICA	Replaceable part	
								Part No.	Q'ty
034 -1	65.19202-0057A	HOOK;LIFTING	CROCHET	1					
2	06.01924-3217	BOLT ASS'Y M10X30	BOULON A 6PANS	2					

DATE	AUG. 28, 2009
3rd EDITION	

Fig. 035 STARTER DEMARREUR

Serial No. ;

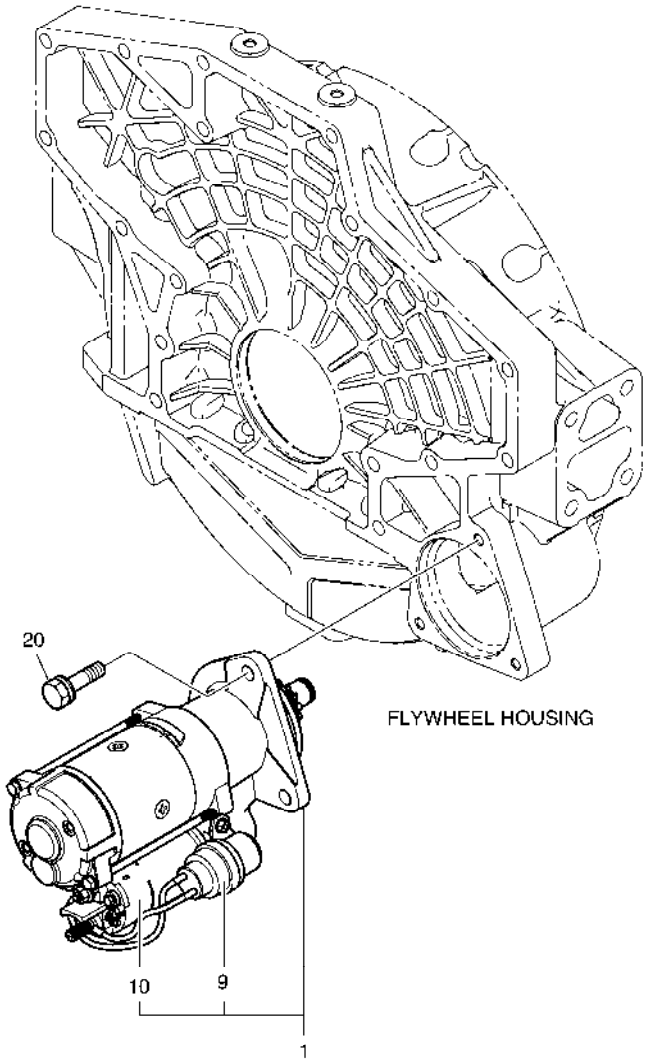

DATE	AUG. 28, 2009
3rd EDITION	

Fig. 035 STARTER DEMARREUR

Serial No. ;

Key No.	Part No.	Description	Description	Q'ty	S.C	Serial No.	ICA	Replaceable part	
								Part No.	Q'ty
035 -1	65.26201-7075A	STARTER	D'MARREUR	1		-080421	I	65.26201-7093	1
	65.26201-7093	STARTER	COMMANDE DEMARREUR	1		080422-			
9	65.26212-0006	RELAY;MAGNETIC	RELAIS	1		080325-			
10	65.26214-0004	SWITCH;MAGNETIC	COMMUTEZ MAGNETIQUE	1		071130-			
20	06.01953-3318	BOLT ASS`Y M12X1.5X35	BOULON A 6 PANS	3					

DATE	AUG. 28, 2009
3rd EDITION	

Fig. 036 SENSOR CAPTEUR

Serial No. ;

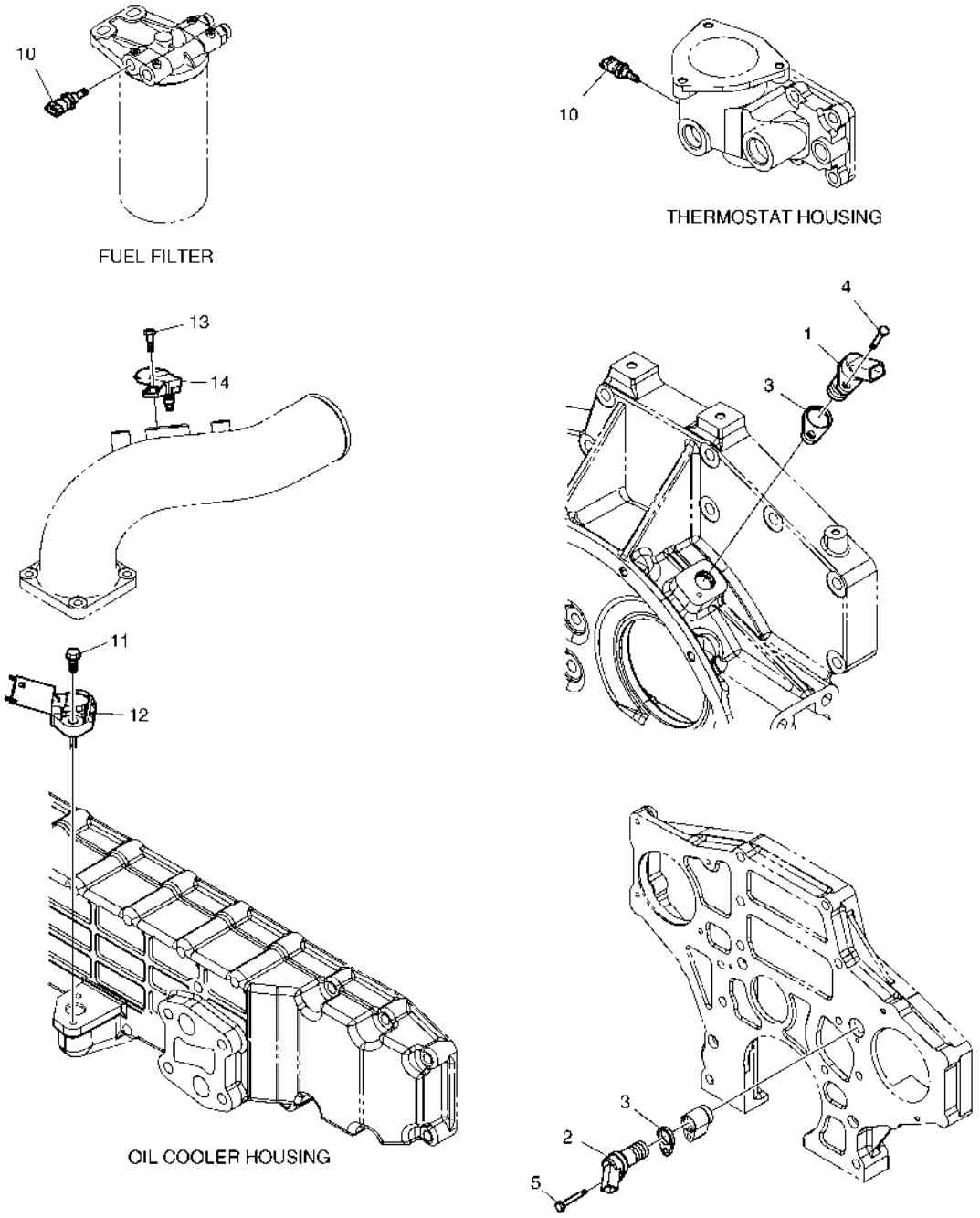

DATE	AUG. 28, 2009
3rd EDITION	

Fig. 036 SENSOR CAPTEUR

Serial No. ;

Key No.	Part No.	Description	Description	Q'ty	S.C	Serial No.	ICA	Replaceable part	
								Part No.	Q'ty
036 -1	65.27103-7014	SENSOR	CAPTEUR	1					
2	65.27103-7014	SENSOR	CAPTEUR	1					
3	65.11308-0005	SHIM	ENTERTOISE	2	R				
	65.11308-0006	SHIM	ENTERTOISE	2	R				
	65.11308-0007	SHIM	ENTERTOISE	2	R				
	65.11308-0008	SHIM	ENTERTOISE	2	R				
4	06.01923-2913	BOLT ASS`Y M6X20	BOULON A 6 PANS	1					
5	06.01923-2919	BOLT ASS'Y M6X40	BOULON A 6 PANS	1					
10	65.27423-7003	SENSOR;WATER TEMP	CAPTEUR	2					
11	06.01923-2913	BOLT ASS`Y M6X20	BOULON A 6 PANS	2					
12	65.27427-7001	SENSOR;OIL PRESSURE	CAPTEUR	1					
13	06.01923-2913	BOLT ASS`Y M6X20	BOULON A 6 PANS	1					
14	65.27444-7001	SENSOR;BOOST PRESSURE	CAPTEUR	1					

DATE	AUG. 28, 2009
3rd EDITION	

Fig. 037 WIRE HARNESS JAGUE DE NIVEAU

Serial No. ;

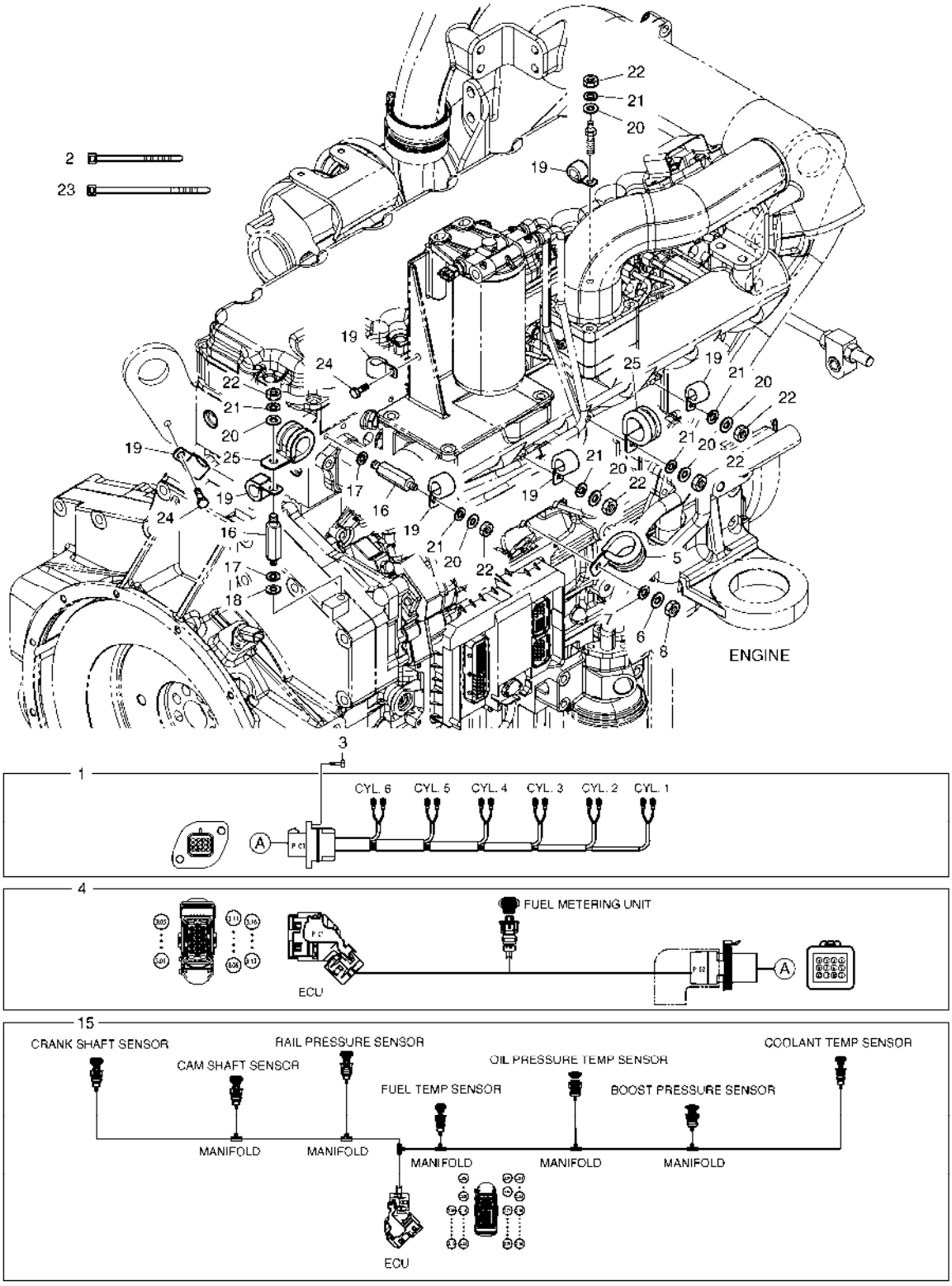

DATE	AUG. 28, 2009
3rd EDITION	

Fig. 037 WIRE HARNESS JAGUE DE NIVEAU

Serial No. ;

Key No.	Part No.	Description	Description	Q'ty	S.C	Serial No.	ICA	Replaceable part	
								Part No.	Q'ty
037 -1	65.29101-6184B	WIRE;ELECTRIC	FIL	1		-070512	Y	65.29101-6184C	1
	65.29101-6184C	WIRE;ELECTRIC	FIL	1		070513-			
2	65.97460-0008	BAND;TENSION	JAGUE DE NIVEAU	5					
3	06.01913-2911	BOLT ASS'Y M6X16	BOULON A 6 PANS	2					
4	65.29101-6201A	WIRE;ELECTRIC	FIL	1		-081104	Y	65.29101-6201C	1
	65.29101-6201C	WIRE;ELECTRIC	FIL	1		081105-			
5	65.97401-0188	CLIP;PIPE	ATTACHE	1					
6	06.15010-2311	WASHER	RONDELLE	1					
7	06.16731-2107	WASHER	RONDELLE ELASTIQUE	1					
8	06.11063-8214	NUT	ECROU 6 PANS	1					
15	65.29101-6209	WIRE;ELECTRIC	FIL	1		-081104	Y	65.29101-6209B	1
	65.29101-6209B	WIRE;ELECTRIC	FIL	1		081105-			
16	65.90201-0128	BOLT;STUD	BOULON A 6 PANS	2					
17	06.16731-2107	WASHER	RONDELLE ELASTIQUE	2					
18	06.15010-2311	WASHER	RONDELLE	1					
19	65.97401-0196	CLIP;PIPE	ATTACHE	7					
20	06.15010-2311	WASHER	RONDELLE	6					
21	06.16731-2107	WASHER	RONDELLE ELASTIQUE	6					
22	06.11063-8214	NUT	ECROU 6 PANS	6					
23	65.97460-0005	BAND;TENSION	ATTACHE DE TUYAU	2					
24	06.01923-3111	BOLT M8X16	BOULON A 6 PANS	2					
25	65.97401-5024	CLIP;PIPE	ATTACHE	2					

DATE	AUG. 28, 2009
3rd EDITION	

Fig. 038 ENGINE MOUNTING MOTEUR

Serial No. ;

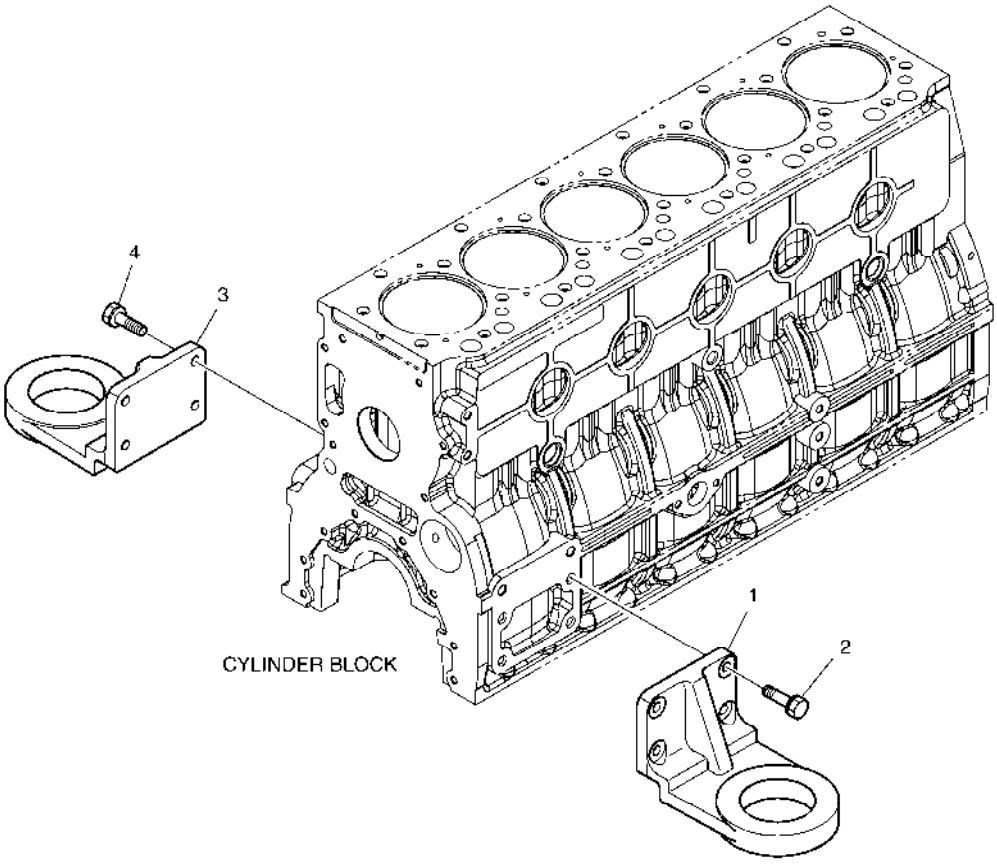

DATE	AUG. 28, 2009
3rd EDITION	

Fig. 038 ENGINE MOUNTING MOTEUR

Serial No. ;

Key No.	Part No.	Description	Description	Q'ty	S.C	Serial No.	ICA	Replaceable part	
								Part No.	Q'ty
038 -1	65.41530-0185	BRACKET;FRONT MOUNTING	SUPPORT	1					
2	06.01924-3217	BOLT ASS'Y M10X30	BOULON A 6PANS	4					
3	65.41530-0185	BRACKET;FRONT MOUNTING	SUPPORT	1					
4	06.01924-3217	BOLT ASS'Y M10X30	BOULON A 6PANS	4					

DATE	AUG. 28, 2009
3rd EDITION	

Fig. 039 AIR COMPRESSOR COMPRESSEUR D'AIR

Serial No. ;

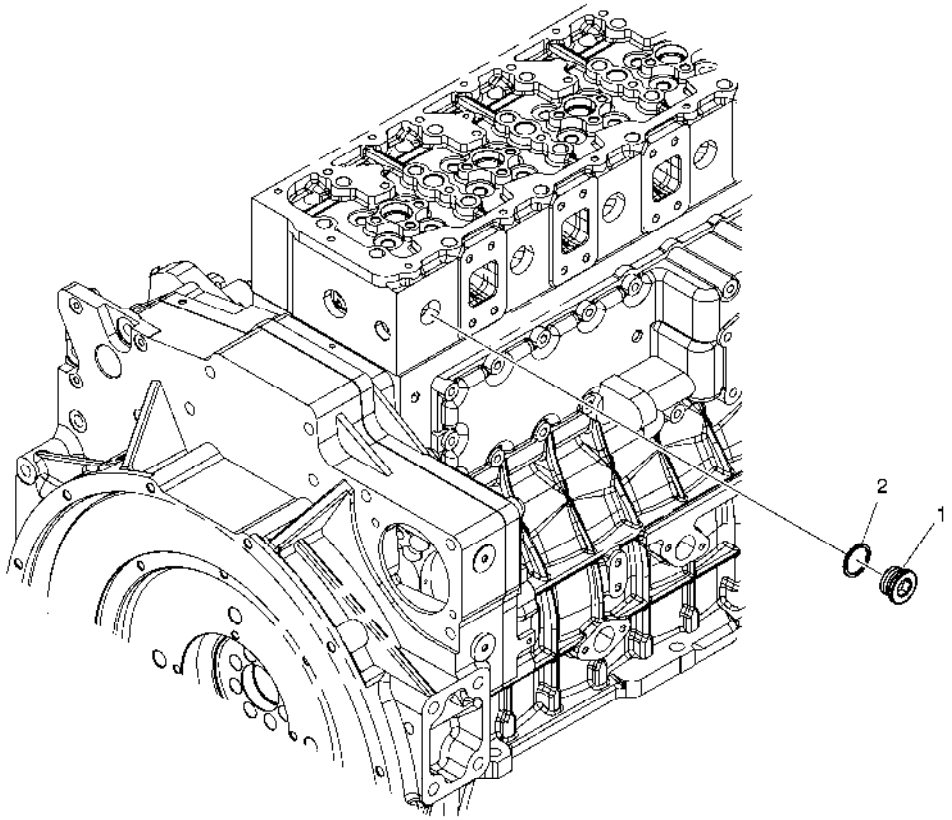

DATE	AUG. 28, 2009
3rd EDITION	

Fig. 039 AIR COMPRESSOR COMPRESSEUR D'AIR

Serial No. ;

Key No.	Part No.	Description	Description	Q'ty	S.C	Serial No.	ICA	Replaceable part	
								Part No.	Q'ty
039 -1	65.90310-0135	PLUG;SCREW	BOUCHON A VIS	1					
2	06.56190-0705	RING;SEAL	ENSEMBLE BAGUE D'ETAN	1					

DATE	AUG. 28, 2009
3rd EDITION	

Fig. 040 OVERHAUL GASKET KIT - ALL
KIT DE GARNITURE DE REVISION

Serial No. ;

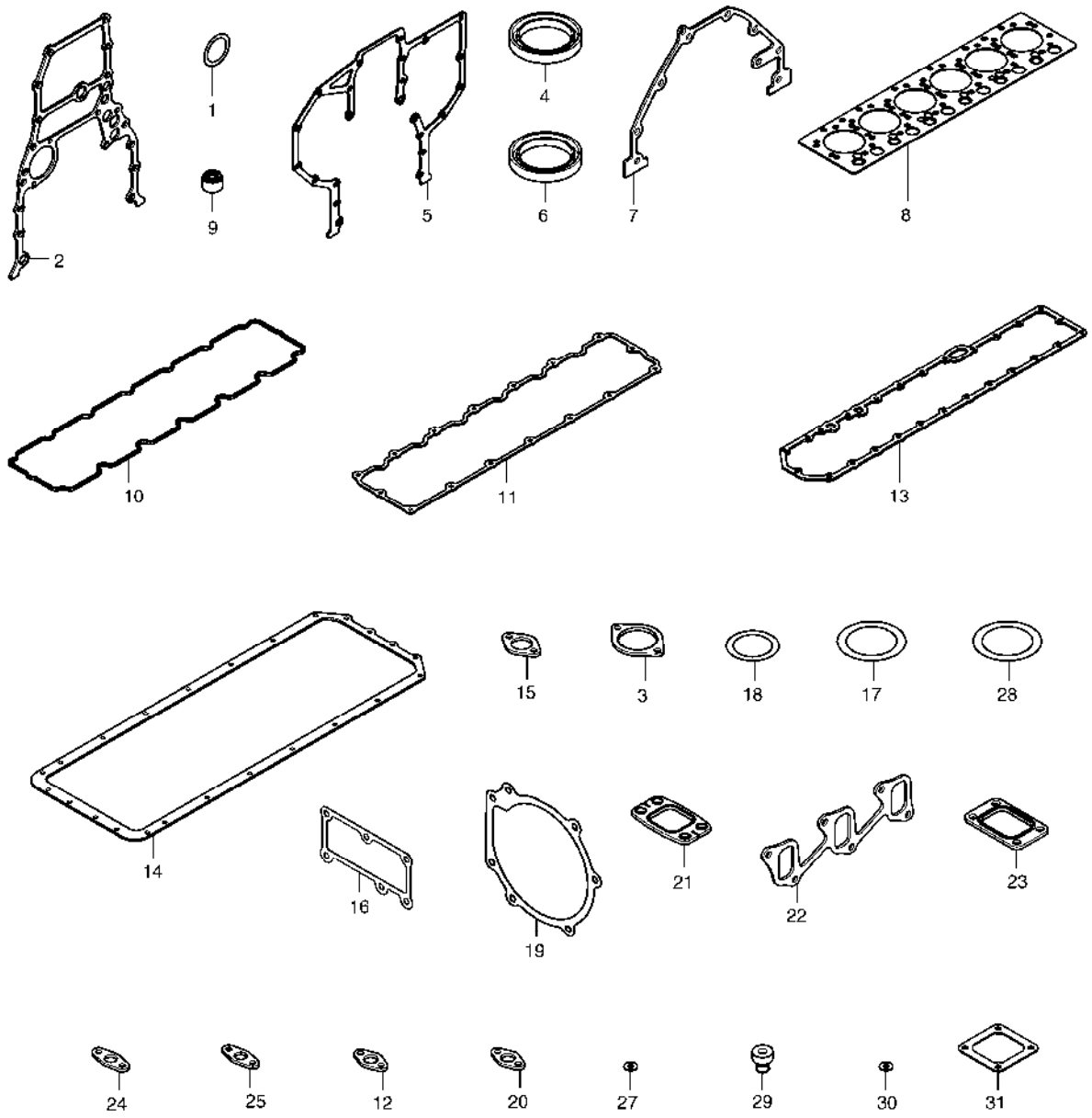

DATE	AUG. 28, 2009
3rd EDITION	

Fig. 040 OVERHAUL GASKET KIT - ALL
KIT DE GARNITURE DE REVISION

Serial No. ;

Key No.	Part No.	Description	Description	Q'ty	S.C	Serial No.	ICA	Replaceable part	
								Part No.	Q'ty
040 --	65.99601-8071	ALL OVERHAUL GASKET KIT	TOUS REVISENT LE KIT DE	1					
1	06.56021-0102	O-RING	JOINT TORIQUE	1					
2	65.01903-0034	GASKET	JOINT	1					
3	65.38901-0018A	GASKET;PTO	JOINT	1					
4	65.01510-0040	SEAL;OIL	JOINT D'HUILE	1					
5	65.01904-0032	GASKET	JOINT	1					
6	65.01510-0157	SEAL;OIL	JOINT	1					
7	65.01905-0009	GASKET	JOINT	1					
8	65.03901-0071	GASKET;CYLINDER HEAD	JOINT	1					
9	65.03905-5002	PACKING;CYLHEAD COVER	JOINT	14					
10	65.03905-0037A	GASKET;CYL. HEAD COVER	JOINT	1					
11	65.03905-0041	GASKET;CYL. HEAD COVER	JOINT	1					
12	65.05903A0001	GASKET	JOINT	4					
13	65.05902-0023	GASKET;OIL COOLER	JOINT	1					
14	65.05904-0035	GASKET;OIL PAN	JOINT	1					
15	65.05901-0027	GASKET;OIL FILTER	JOINT	1					
16	65.06904-0020	GASKET;THERMOSTAT	JOINT	1		-070315	I	65.06904-0021	1
	65.06904-0021	GASKET;THERMOSTAT	JOINT	1		070316-			
17	65.06904-0003	GASKET;THERMOSTAT	JOINT	1					
18	65.96501-0099A	O-RING	JOINT TORIQUE	2					
19	65.06901-0042	GASKET;WATER PUMP	JOINT	1					
20	65.06903-0029	GASKET;WATER PIPE	JOINT	1					
21	65.08901-0045	GASKET;EXHAUST MANIFOLD	JOINT	6					
22	65.08902-0030A	GASKET;INTAKE MANIFOLD	JOINT	2					
23	65.09901-0018A	GASKET	JOINT	1					
24	65.96601-0067	GASKET;T/C OIL RETURN	JOINT	1					
25	65.96601-0052	GASKET;PIPE-BLOCK	JOINT	1					
27	65.96507-0053	RING;SEAL	BAGUE	6					
28	06.56020-0115	O-RING	JOINT TORIQUE	1					
29	65.96210-6001A	RUBBER;CUSHION	CUSHION;RUBBER	3					
30	06.56180-0712	RING;SEAL	BAGUE D'ETANCHEITE	18					
31	65.09904-0008	GASKET;AIR HEATER	JOINT	2					

DATE	AUG. 28, 2009
3rd EDITION	

Fig. 041 OVERHAUL GASKET KIT - TOP
KIT DE GARNITURE DE REVISION

Serial No. ;

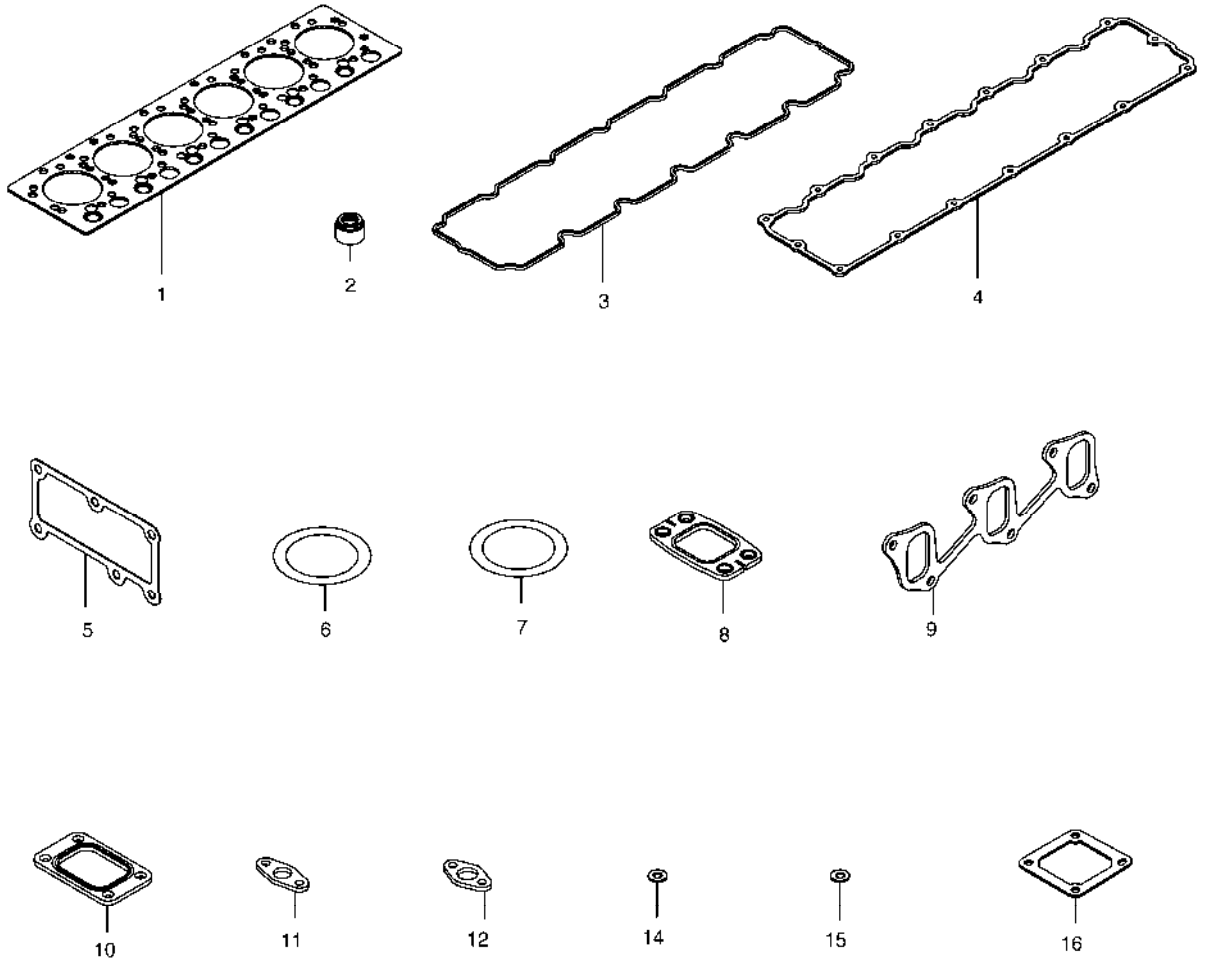

DATE	AUG. 28, 2009
3rd EDITION	

Fig. 041 OVERHAUL GASKET KIT - TOP
KIT DE GARNITURE DE REVISION

Serial No. ;

Key No.	Part No.	Description	Description	Q'ty	S.C	Serial No.	ICA	Replaceable part	
								Part No.	Q'ty
041 --	65.99605-8042	TOP OVERHAUL GASKET KIT	TOUS REVISENT LE KIT DE	1					
1	65.03901-0071	GASKET;CYLINDER HEAD	JOINT	1					
2	65.03905-5002	PACKING;CYLHEAD COVER	JOINT	14					
3	65.03905-0037A	GASKET;CYL. HEAD COVER	JOINT	1					
4	65.03905-0041	GASKET;CYL. HEAD COVER	JOINT	1					
5	65.06904-0020	GASKET;THERMOSTAT	JOINT	1		-070315	I	65.06904-0021	1
	65.06904-0021	GASKET;THERMOSTAT	JOINT	1		070316-			
6	65.06904-0003	GASKET;THERMOSTAT	JOINT	1					
7	65.96501-0099A	O-RING	JOINT TORIQUE	2					
8	65.08901-0045	GASKET;EXHAUST MANIFOLD	JOINT	6					
9	65.08902-0030A	GASKET;INTAKE MANIFOLD	JOINT	2					
10	65.09901-0018A	GASKET	JOINT	1					
11	65.96601-0067	GASKET;T/C OIL RETURN	JOINT	1					
12	65.96601-0052	GASKET;PIPE-BLOCK	JOINT	1					
14	65.96507-0053	RING;SEAL	BAGUE	6					
15	06.56180-0712	RING;SEAL	BAGUE D'ETANCHEITE	18					
16	65.09904-0008	GASKET;AIR HEATER	JOINT	2					

DATE	AUG. 28, 2009
3rd EDITION	

Fig. 1100 MAIN FRAME BATI PRINCIPAL

Serial No. ;

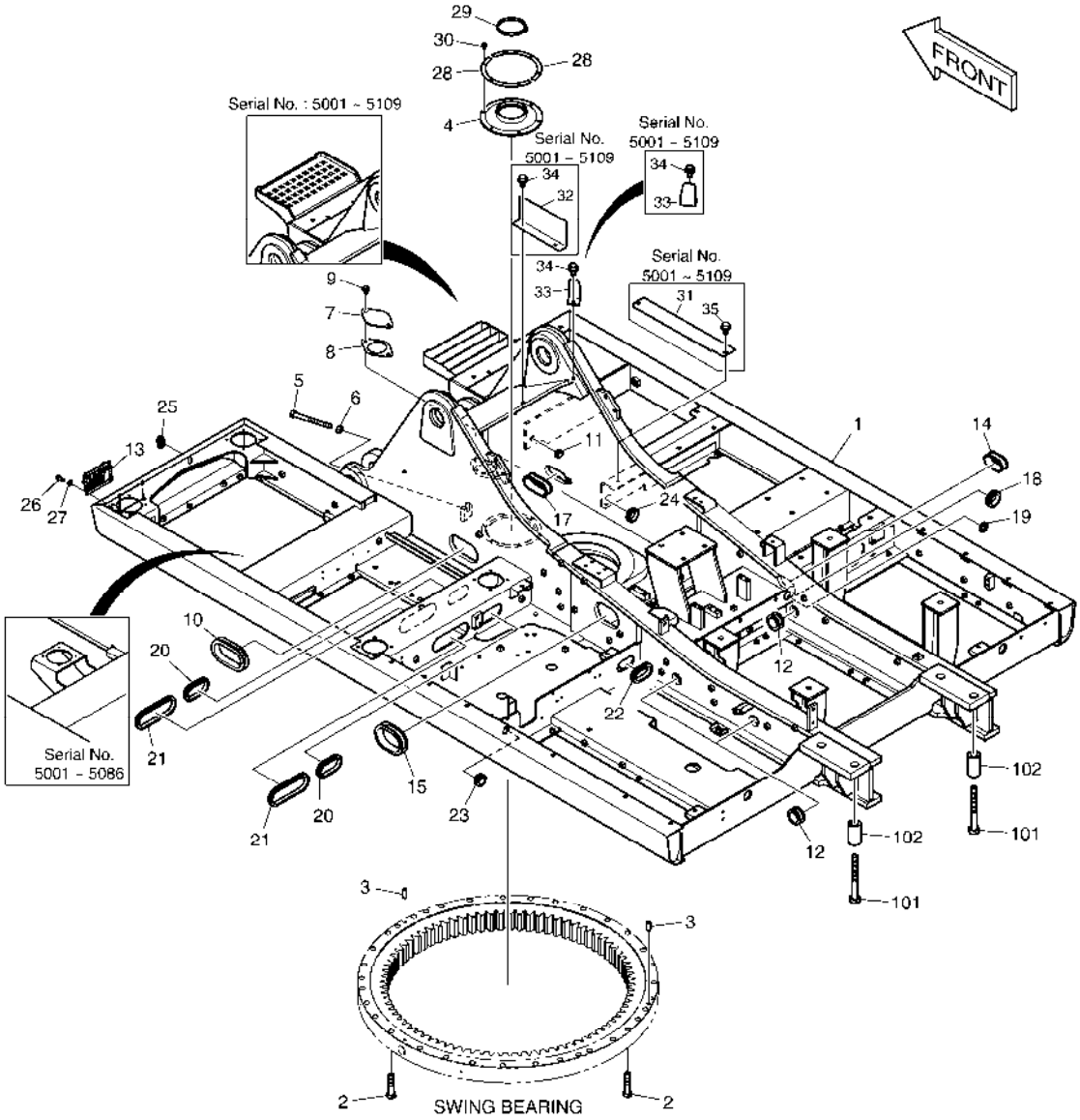

DATE	AUG. 28, 2009
3rd EDITION	

Fig. 1100 MAIN FRAME BATI PRINCIPAL

Serial No. ;

Key No.	Part No.	Description	Description	Q'ty	S.C	Serial No.	ICA	Replaceable part	
								Part No.	Q'ty
1100 --	K1009662N	MAIN FRAME ASS'Y	ARMATURE PRINCIPALE	-	D				
1	K1009668E	FRAME;MAIN	ARMATURE PRINCIPALE	1		5001-5027	I	K1009668H	1
	K1009668H	FRAME;MAIN	ARMATURE PRINCIPALE	1		5028-5086			
	K1009668J	FRAME;MAIN	ARMATURE PRINCIPALE	1		5087-5108	I	K1009668M	1
	K1009668M	FRAME;MAIN	ARMATURE PRINCIPALE	1		5109-5111			
	K1009668N	FRAME;MAIN	ARMATURE PRINCIPALE	1		5112-			
2	S0775666	BOLT	BOULON	35					
3	2123-1107D7	PIN;KNOCK	GOUPILLE	2					
4	160-00068	COVER;RUBBER	COUVERCLE	1		5001-5111			
	160-00068A	COVER;RUBBER	COUVERCLE	1		5112-			
5	S0572166	BOLT	BOULON A 6 PANS	1					
6	S4013133	NUT	ECROU	1					
7	621-02938B	COVER	COUVERCLE	1					
8	180-00463	PACKING	RONDELLE D'ETANCHEITE	1					
9	DS0025023	BOLT;SET	BOULON A 6 PANS	2					
10	2160-1201D11	BUSHING;RUBBER	GARNISSAGE CAOUTCHOU	1					
11	2160-1004D48	BUSHING;RUBBER	GARNISSAGE CAOUTCHOU	1					
12	2160-1004D62	BUSHING;RUBBER	DOUILLE EN CAOUTCHOU	3					
13	621-02800	GUARD;LAMP	GARDE	1					
14	2160-1201D13	BUSHING;RUBBER	DOUILLE	1					
15	DS7601024	BUSHING;RUBBER	DOUILLE	1					
17	2160-1201D24	BUSHING;RUBBER	DOUILLE EN CAOUTCHOU	1					
18	2160-1004D34	BUSHING;RUBBER	MANCHON CAOUTCHOUC	1					
19	2160-1004D35	BUSHING;RUBBER	DOUILLE EN CAOUTCHOU	1					
20	DS7601020	BUSHING;RUBBER	DOUILLE EN CAOUTCHOU	2					
21	DS7601021	BUSHING;RUBBER	DOUILLE EN CAOUTCHOU	2					
22	2160-1201D12	BUSHING;RUBBER	MANCHON	1					
23	2160-1004D44	BUSHING;RUBBER	GARNISSAGE CAOUTCHOU	1					
24	2160-1004D58	GROMMET	MANCHON CAOUTCHOUC	1					
25	160-00081	CAP	CHAPEAU	1					
26	2120-2166D5	BOLT	BOULON A 6 PANS	4					
27	2114-1898D14	WASHER;PLAIN	RONDELLE	4					
28	191-02990B	PLATE	PLAQUE	2		5001-5111			
	191-02990C	PLATE	PLAQUE	2		5112-			
29	S8470165	CLAMP;HOSE	COLLIER DE LA CONDUITE	1					
30	K1001029	BOLT	BOULON A 6 PANS	6		5001-5111			
	K1049858	BOLT	BOULON	6		5112-			
31	K1000968B	PLATE	PLAQUE	1		5001-5109			

DATE	AUG. 28, 2009
3rd EDITION	

Fig. 1100 MAIN FRAME BATI PRINCIPAL

Serial No. ;

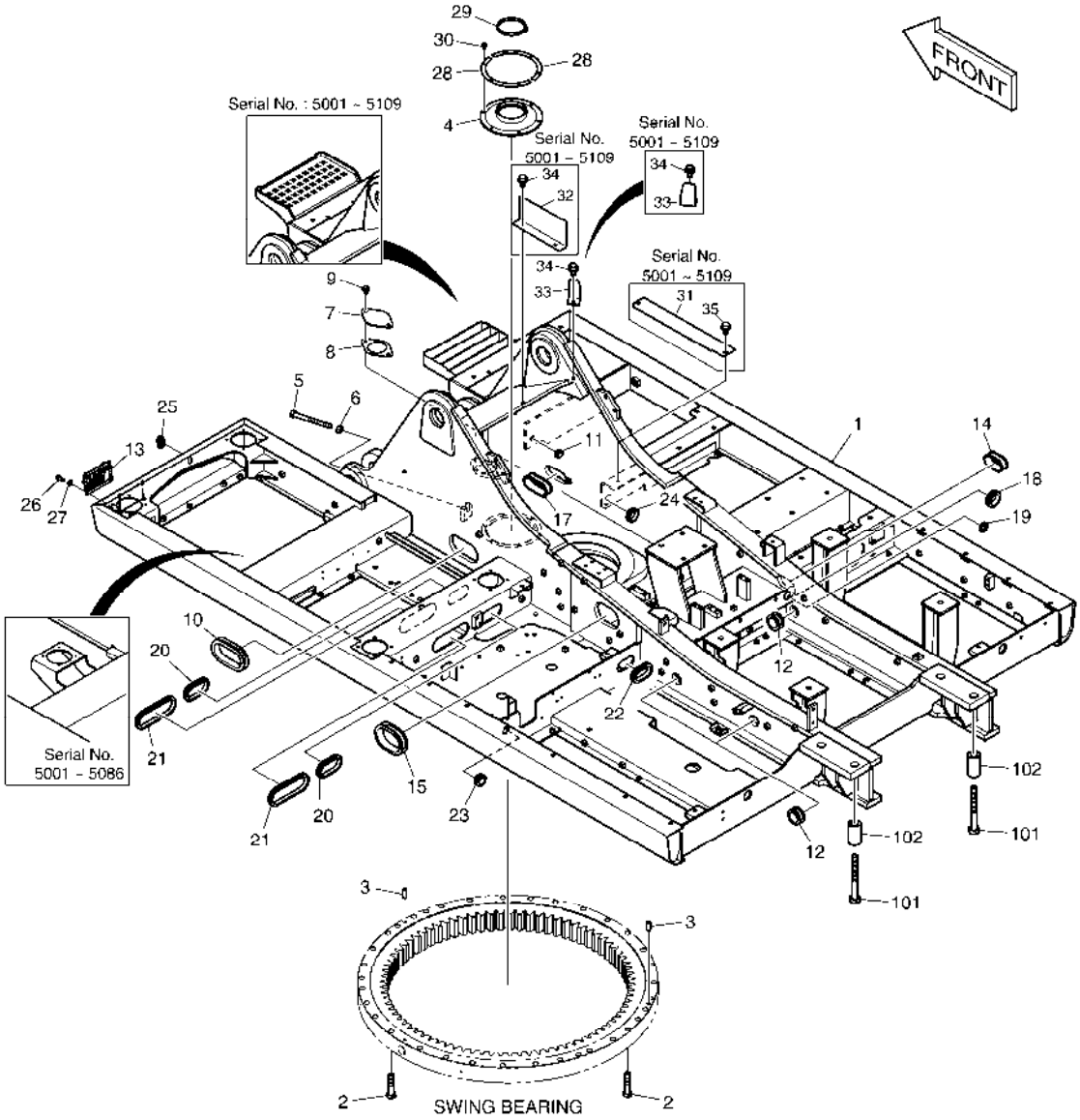

DATE	AUG. 28, 2009
3rd EDITION	

Fig. 1100 MAIN FRAME BATI PRINCIPAL

Serial No. ;

Key No.	Part No.	Description	Description	Q'ty	S.C	Serial No.	ICA	Replaceable part	
								Part No.	Q'ty
1100 -32	191-02987B	PLATE	PLAQUE	1		5001-5109			
33	195-02623B	BRACKET	SUPPORT	1					
34	DS0025015	BOLT;SET	BOULON A 6 PANS	3		5001-5109			
	DS0025015	BOLT;SET	BOULON A 6 PANS	1		5110-			
35	DS0025014	BOLT;SET	BOULON A 6 PANS	2		5001-5109			
101	2120-2137A	BOLT	BOULON	4					
102	2114-1817	SPACER	BAGUE	4					

DATE	AUG. 28, 2009
3rd EDITION	

Fig. 1110 COUNTER WEIGHT MASSE D'EQUILIBRAGE

Serial No. ;

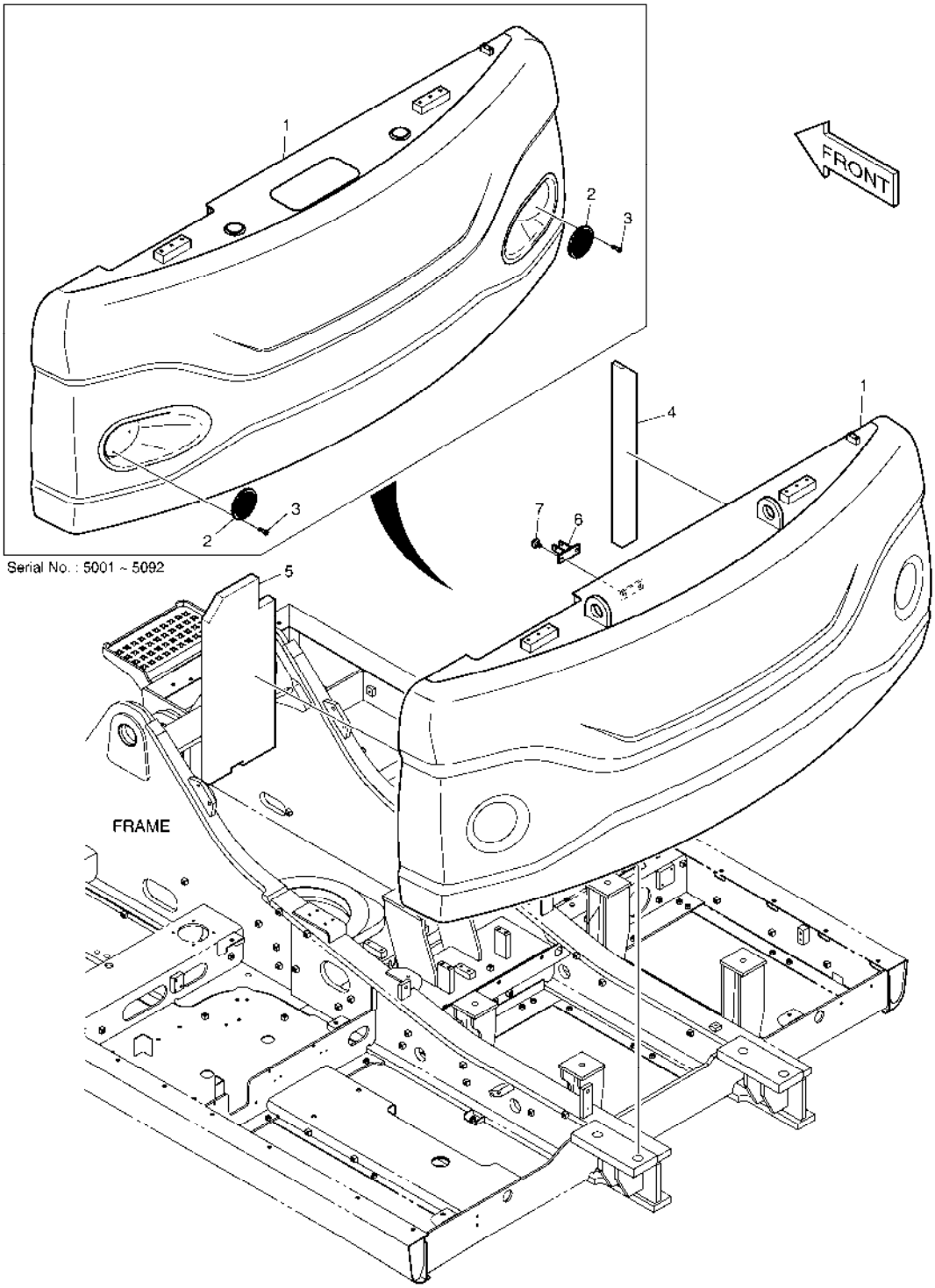

DATE	AUG. 28, 2009
3rd EDITION	

Fig. 1110 COUNTER WEIGHT MASSE D'EQUILIBRAGE

Serial No. ;

Key No.	Part No.	Description	Description	Q'ty	S.C	Serial No.	ICA	Replaceable part	
								Part No.	Q'ty
1110 --	K1010302E	COUNTER WEIGHT	MASSE D'EQUILIBRAGE	1					
1	K1010303B	COUNTER WEIGHT;4.7ton	MASSE D'EQUILIBRAGE	1		5001-5092	I	K1010303C	1
	K1010303C	WEIGHT;COUNTER	MASSE D'EQUILIBRAGE	1		5093-			
2	190-01107B	REFLECTOR	REDUCTEUR	2		5001-5092			
3	S3450343	SCREW	VIS	6		5001-5092			
4	K1002730A	FOAM	EPONGE	1					
5	K1011180	FOAM	EPONGE	1					
6	K1029630	BRACKET	SUPPORT	1					
7	DS0025015	BOLT;SET	BOULON A 6 PANS	2					

DATE	AUG. 28, 2009
3rd EDITION	

Fig. 1120 ENGINE MOUNTING MOTEUR

Serial No. ;

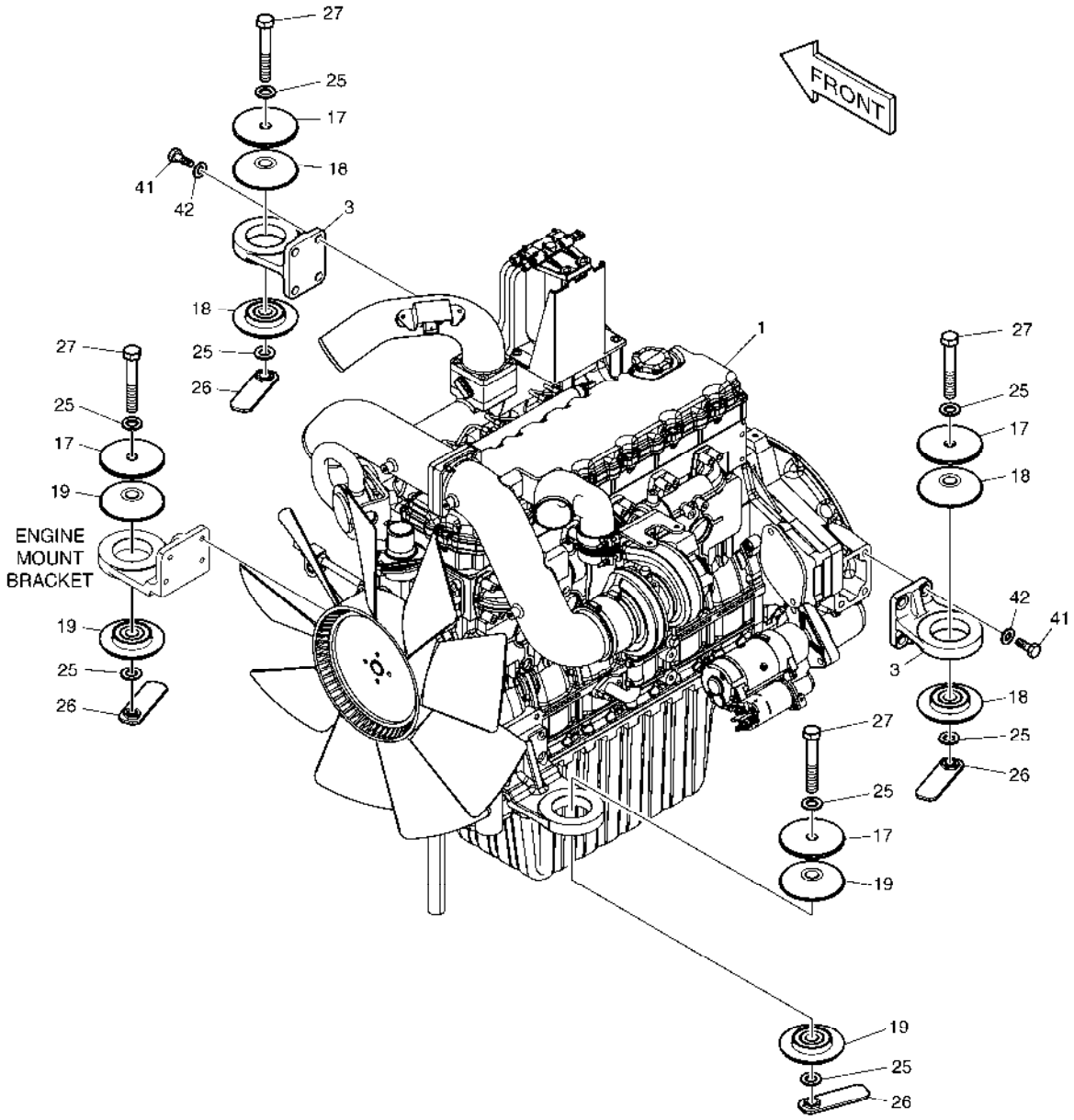

DATE	AUG. 28, 2009
3rd EDITION	

Fig. 1120 ENGINE MOUNTING MOTEUR

Serial No. ;

Key No.	Part No.	Description	Description	Q'ty	S.C	Serial No.	ICA	Replaceable part	
								Part No.	Q'ty
1120 --	K1009984K	ENGINE ASS'Y	ENSEMBLE MOTEUR	-	D				
1	K1009985	ENGINE	MOTEUR	1					
3	K1005228	BRACKET;ENGINE MOUNT	SUPPORT	2		5001-5110	I	K1037354A	2
	K1037354A	BRACKET;ENGINE MOUNT	SUPPORT	2		5111-			
17	2114-1929	WASHER	RONDELLE PLATE	4					
18	161-00548	RUBBER	CAOUTCHOUC	4					
19	161-00550	RUBBER	CAOUTCHOUC	4					
25	2114-9012A	WASHER;HARD	RONDELLE	8					
26	195-02643C	SUPPORT;NUT	SUPPORT	4					
27	S0771466	BOLT	BOULON A 6 PANS	4					
41	S0521566	BOLT	BOULON A 6 PANS	8					
42	S5102903	WASHER	RONDELLE	8					

DATE	AUG. 28, 2009
3rd EDITION	

Fig. 1130 RADIATOR MOUNTING SUPPORT DE RADIATEUR

Serial No. ;

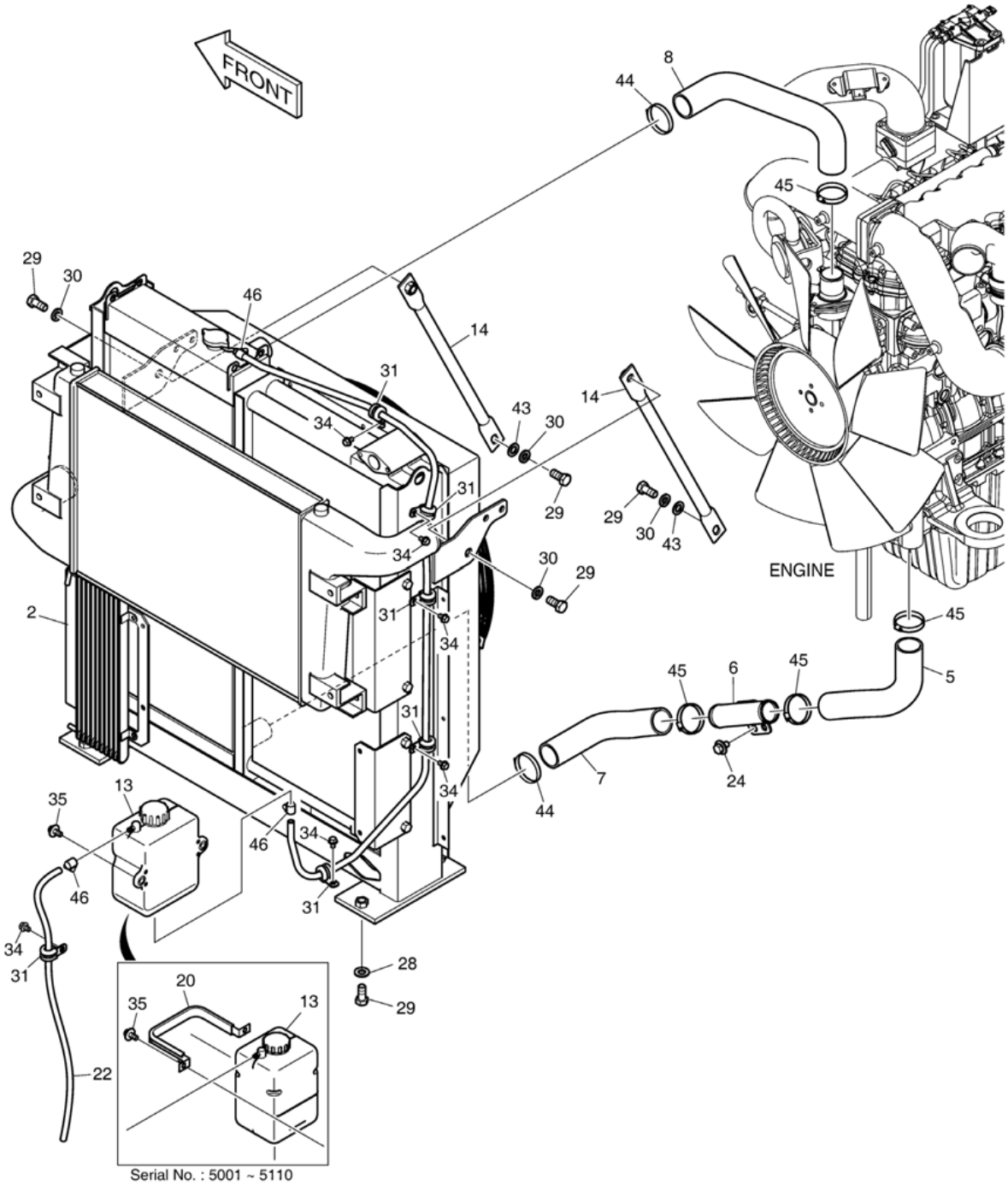

DATE	AUG. 28, 2009
3rd EDITION	

Fig. 1130 RADIATOR MOUNTING SUPPORT DE RADIATEUR

Serial No. ;

Key No.	Part No.	Description	Description	Q'ty	S.C	Serial No.	ICA	Replaceable part	
								Part No.	Q'ty
1130 --	K1009984K	ENGINE ASS'Y	ENSEMBLE MOTEUR	-	D				
2	K1018750A	RADIATOR ASS'Y	ENSEMBLE RADIATEUR	1		5001-5109	I	K1018750B	1
	K1018750B	RADIATOR ASS'Y	ENSEMBLE RADIATEUR	1		5110-			
5	K1015391	HOSE;WATER	TUYAU FLEXIBLE	1					
6	K1011607	PIPE;WATER	TUYAU	1					
7	K1023258	HOSE;WATER	TUYAU FLEXIBLE	1					
8	K1023259	HOSE;WATER	TUYAU FLEXIBLE	1		5001-5108	I	K1023259A	1
	K1023259A	HOSE;WATER	TUYAU FLEXIBLE	1		5109-			
13	K1003180A	TANK;RESERVE	RESERVOIR	1		5001-5110			
	K1038409	TANK;RESERVE	RESERVOIR	1		5111-			
14	K1015048	STAY	SEJOUR	2					
20	K1000722A	CLAMP	COLLIER	1		5001-5110			
22	K1004515	HOSE	TUYAU FLEXIBLE	1					
24	DS0025019	BOLT;SET	BOULON A 6 PANS	2					
28	2114-1816A	WASHER	RONDELLE	4					
29	S0521366	BOLT	BOULON A 6 PANS	8					
30	S5102903	WASHER	RONDELLE	4					
31	124-00208D2	CLIP	AGRAFE	6					
34	K1001029	BOLT	BOULON A 6 PANS	6					
35	DS0025014	BOLT;SET	BOULON A 6 PANS	2		5001-5110			
	DS0025017	BOLT;SET	BOULON A 6 PANS	2		5111-			
43	S5010913	WASHER	RONDELLE PLATE	2					
44	S8470085	CLAMP	COLLIER	2					
45	S8470075	CLAMP;HOSE	COLLIER	4					
46	S8450012	CLAMP	COLLIER	3					

DATE	AUG. 28, 2009
3rd EDITION	

Fig. 1140 RADIATOR RADIATEUR

Serial No. ;

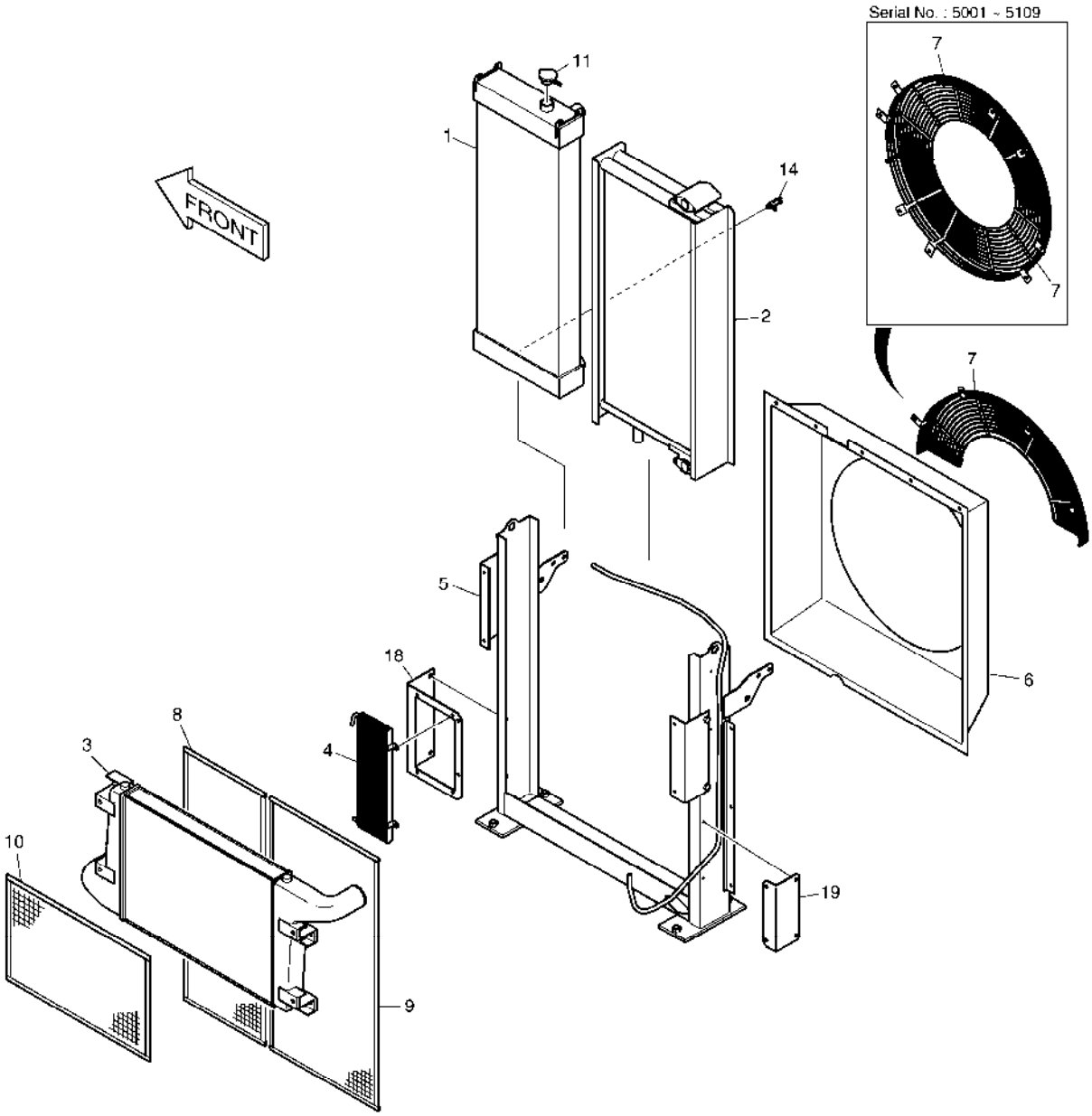

DATE	AUG. 28, 2009
3rd EDITION	

Fig. 1140 RADIATOR RADIATEUR

Serial No. ;

Key No.	Part No.	Description	Description	Q'ty	S.C	Serial No.	ICA	Replaceable part	
								Part No.	Q'ty
1140 --	K1018750A	RADIATOR ASS'Y	ENSEMBLE RADIATEUR	1		5001-5109	I	K1018750B	1
	K1018750B	RADIATOR ASS'Y	ENSEMBLE RADIATEUR	1		5110-			
1	K9004544	RADIATOR	RADIATEUR	1					
2	K9004545	OIL COOLER	REFROIDISSEUR D'HUILE	1					
3	K9004546	CAC ASS'Y	CHARGEE	1		5001-5109	I	K9004546A	1
	K9004546A	CAC ASS'Y	CHARGEE	1		5110-			
4	K9004547	COOLER;FUEL	REFROIDISSEUR	1					
5	-	FRAME	CHASSIS	1	D				
6	K9004548	SHROUD	MONTURE	1					
7	K9004549	GUARD;FAN	GARDE	2		5001-5109	I	K9006401	1
	K9006401	GUARD;FAN	GARDE	1		5110-			
8	K9004550	WIRE NET	FIL	1					
9	K9004551	WIRE NET	FIL	1					
10	K9004552	WIRE NET	FIL	1					
11	K1010769	CAP;PRESSURE	CHAPEAU	1					
14	K9003878	COCK ASS'Y	ROBINET DE PURGE	1					
18	K9004553	BRACKET	SUPPORT	1					
19	K9004554	BRACKET	SUPPORT	1					

DATE	AUG. 28, 2009
3rd EDITION	

Fig. 1150 MUFFLER SILENCIEUX

Serial No. ;

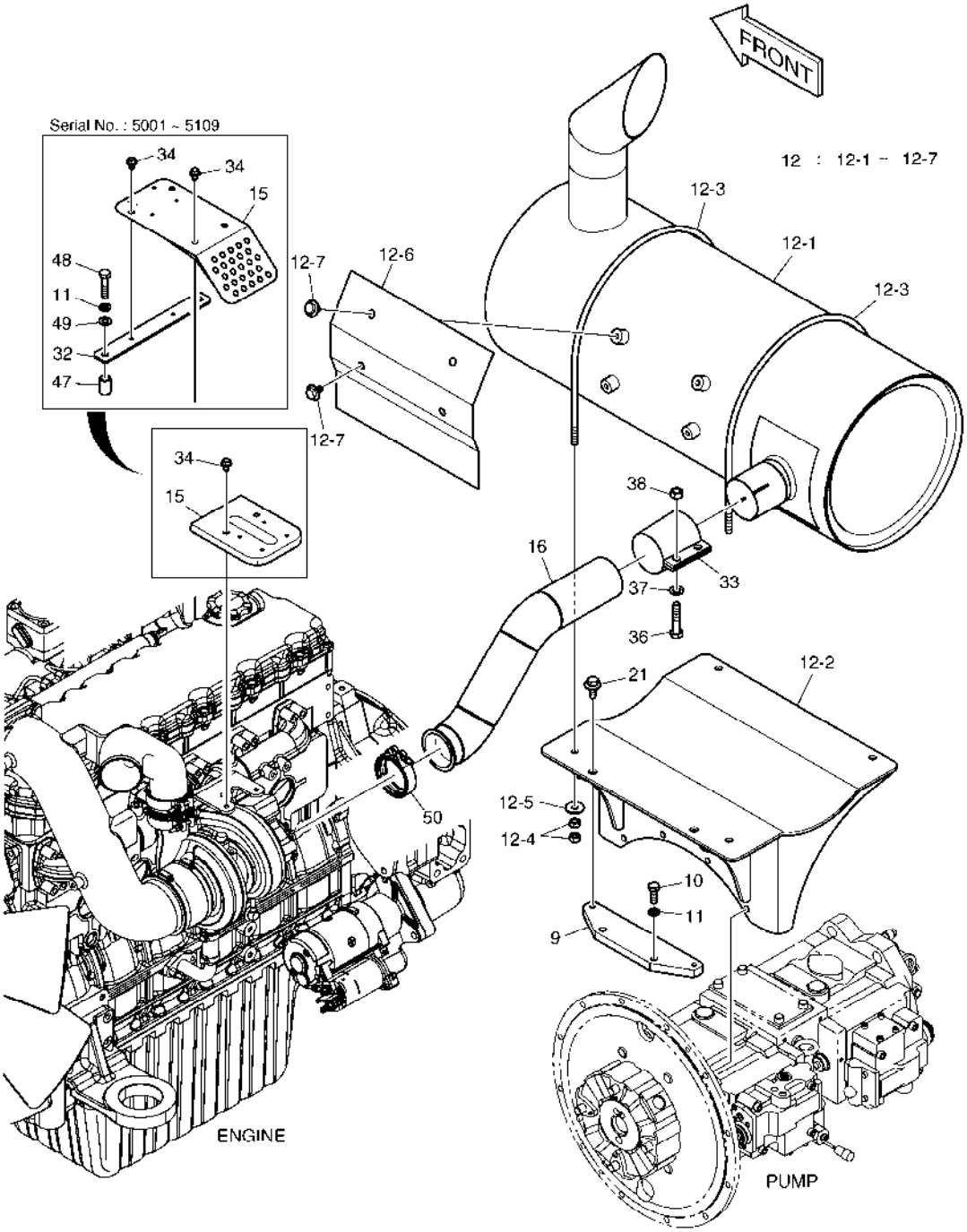

DATE	AUG. 28, 2009
3rd EDITION	

Fig. 1150 MUFFLER SILENCIEUX

Serial No. ;

Key No.	Part No.	Description	Description	Q'ty	S.C	Serial No.	ICA	Replaceable part	
								Part No.	Q'ty
1150 --	K1009984K	ENGINE ASS'Y	ENSEMBLE MOTEUR	-	D				
9	K1011605	PLATE	PLAQUE	1					
10	S0558166	BOLT	BOULON A 6 PANS	2					
11	S5102603	WASHER	RONDELLE ELASTIQUE	4		5001-5109			
	S5102603	WASHER	RONDELLE ELASTIQUE	2		5110-			
12	K1010447B	MUFFLER SUB ASS'Y	SILENCIEUX	1					
12-1	K1010448A	. MUFFLER	. SILENCIEUX	1					
12-2	K1010449	. BRACKET;MUFFLER	. SUPPORT	1					
12-3	K1023547	. BOLT;U	. BOULON A 6 PANS	2					
12-4	S4012633	. NUT	. ECROU	8					
12-5	2114-1058D10	. WASHER	. RONDELLE PLATE	4					
12-6	K1011606A	. PLATE;INSULATION	. PLAQUE	1					
12-7	DS0025014	. BOLT;SET	. BOULON A 6 PANS	4					
15	K1015292A	COVER	COUVERCLE	1		5001-5109			
	K1037930	COVER;TURBO CHARGER	COUVERCLE	1		5110-			
16	K1010452C	PIPE;EXHAUST	TUYAU	1					
21	DS0025016	BOLT;SET	BOULON A 6 PANS	2					
32	K1015293	PLATE	PLAQUE	1		5001-5109			
33	124-00310A	CLAMP	COLLIER	1		5001-5098	I	2124-1592A	1
	2124-1592A	CLAMP	ATTACHE DE TUYAU	1		5099-			
34	K1001029	BOLT	BOULON A 6 PANS	4		5001-5109			
	K1001029	BOLT	BOULON A 6 PANS	2		5110-			
36	S0515866	BOLT	BOULON	2					
37	S5010713	WASHER;PLAIN	RONDELLE	2					
38	S4012733	NUT	ECROU	2					
47	K1015294	SPACER	BAGUE D'ECARTEMENT	2		5001-5109			
48	S0558466	BOLT	BOULON A 6 PANS	2		5001-5109			
49	S5010613	WASHER;PLAIN	RONDELLE PLATE	2		5001-5109			
50	K1024182	CLAMP;HOSE	COLLIER	1					

DATE	AUG. 28, 2009
3rd EDITION	

Fig. 1160 CAC PIPING
CHARGEE DE REFROIDISSEUR D'CAIR

Serial No. ;

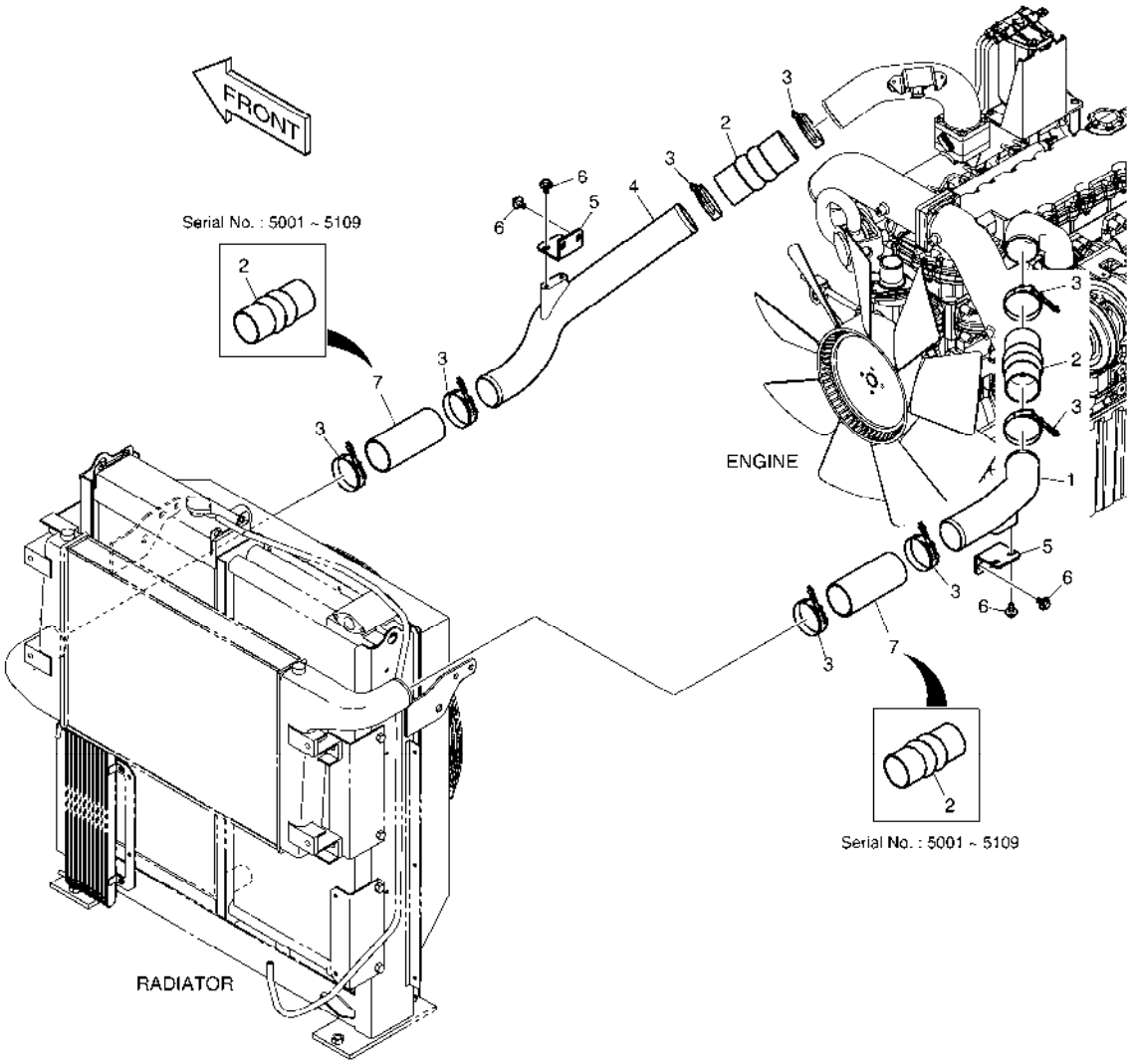

DATE	AUG. 28, 2009
3rd EDITION	

Fig. 1160 CAC PIPING
CHARGEE DE REFROIDISSEUR D'CAIR

Serial No. ;

Key No.	Part No.	Description	Description	Q'ty	S.C	Serial No.	ICA	Replaceable part	
								Part No.	Q'ty
1160 --	K1010223C	CAC PIPING	CHARGEE DE REFROIDISS	-	D				
1	K1015051	PIPE;AIR	TUYAU	1					
2	K1012214	HOSE;CAC	TUYAU FLEXIBLE	4		5001-5105	I	K1038559	4
	K1038559	HOSE;AIR	TUYAU FLEXIBLE	4		5106-5109			
	K1038559	HOSE;AIR	TUYAU FLEXIBLE	2		5110-			
3	124-00194	CLAMP	COLLIER	8					
4	K1015052	PIPE;AIR	TUYAU	1					
5	195-01620	BRACKET	SUPPORT	2					
6	DS0025017	BOLT;SET	BOULON A 6 PANS	8					
7	K1046005	HOSE;AIR	TUYAU FLEXIBLE	2		5110-			

DATE	AUG. 28, 2009
3rd EDITION	

Fig. 1170 AIR CLEANER FILTRE A AIR

Serial No. ;

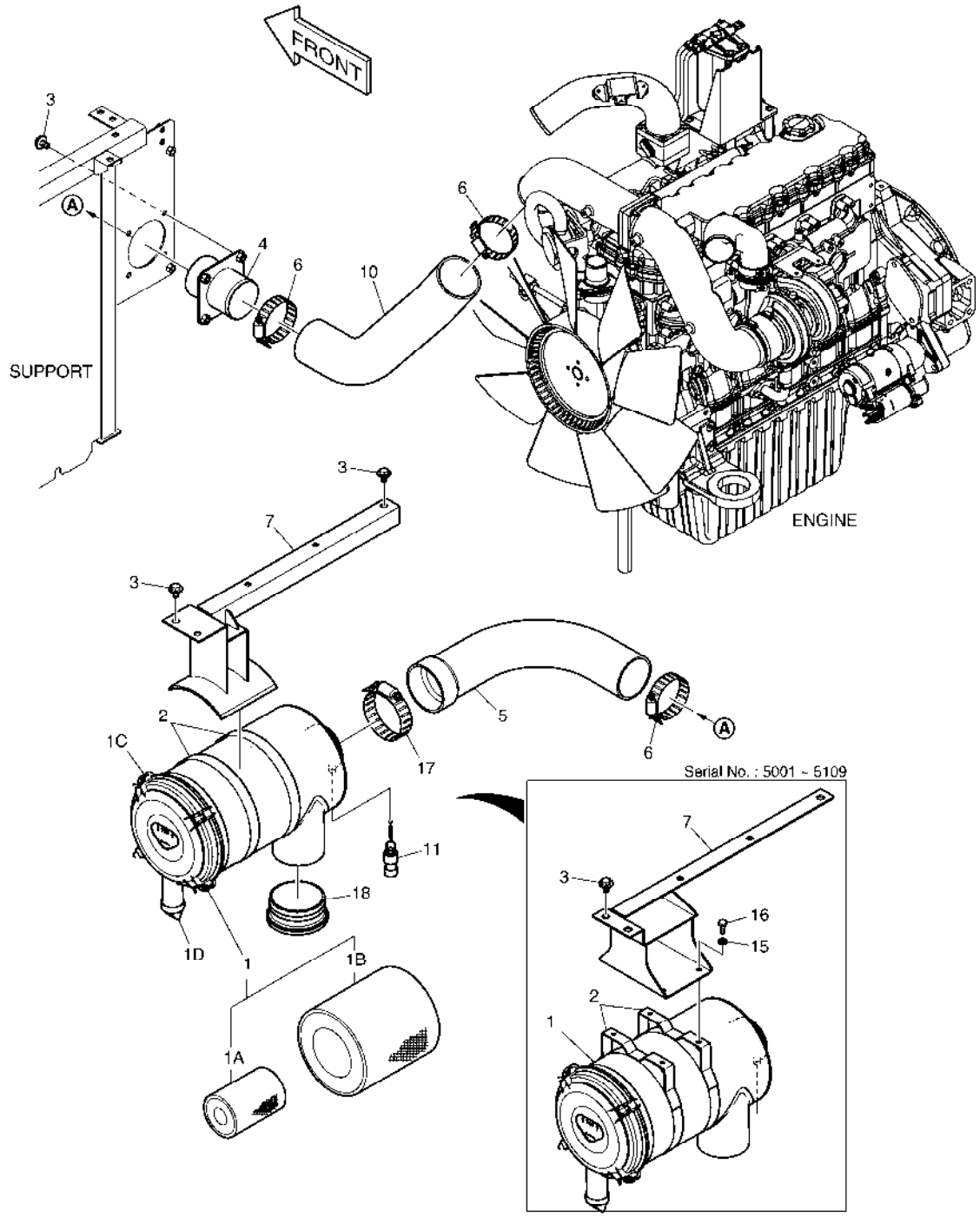

DATE	AUG. 28, 2009
3rd EDITION	

Fig. 1170 AIR CLEANER FILTRE A AIR

Serial No. ;

Key No.	Part No.	Description	Description	Q'ty	S.C	Serial No.	ICA	Replaceable part	
								Part No.	Q'ty
1170 --	K1010224B	AIR CLEANER	FILTRE A AIR	-	D				
1	204-00067	AIR CLEANER	ENSEMBLE FILTRE A AIR	1					
1A	474-00039	. ELEMENT;INNER	. ELEMENT	1					
1B	474-00040	. ELEMENT;OUTER	. ELEMENT	1					
1C	204-00075	. COVER	. COUVERCLE	1					
1D	204-00070	. VALVE;VACUATOR	. VANNE	1					
2	124-00298A	BAND;AIR CLEANER	ATTACHE	2		5001-5109			
	124-00298B	BAND;AIR CLEANER	ATTACHE	2		5110-			
3	DS0025015	BOLT;SET	BOULON A 6 PANS	7					
4	K1010415A	PIPE;AIR	TUYAU	1					
5	K1010388A	HOSE;AIR	TUYAU FLEXIBLE	1					
6	S8510118	CLAMP;HOSE	COLLIER	3					
7	195-03434B	SUPPORT	SUPPORT	1		5001-5109	I	195-03434E	1
	195-03434E	SUPPORT	SUPPORT	1		5110-			
10	K1010396A	HOSE;AIR	TUYAU FLEXIBLE	1					
11	170-00004	INDICATOR;DUST	INDICATEUR	1					
15	S5010613	WASHER;PLAIN	RONDELLE PLATE	4		5001-5109			
16	S0512066	BOLT	BOULON A 6 PANS	4		5001-5109			
17	S8510143	CLAMP;HOSE	COLLIER	1					
18	K1003618	CAP;RAIN	CHAPEAU	1					

DATE	AUG. 28, 2009
3rd EDITION	

Fig. 1180 PUMP MOUNTING POMPE

Serial No. ;

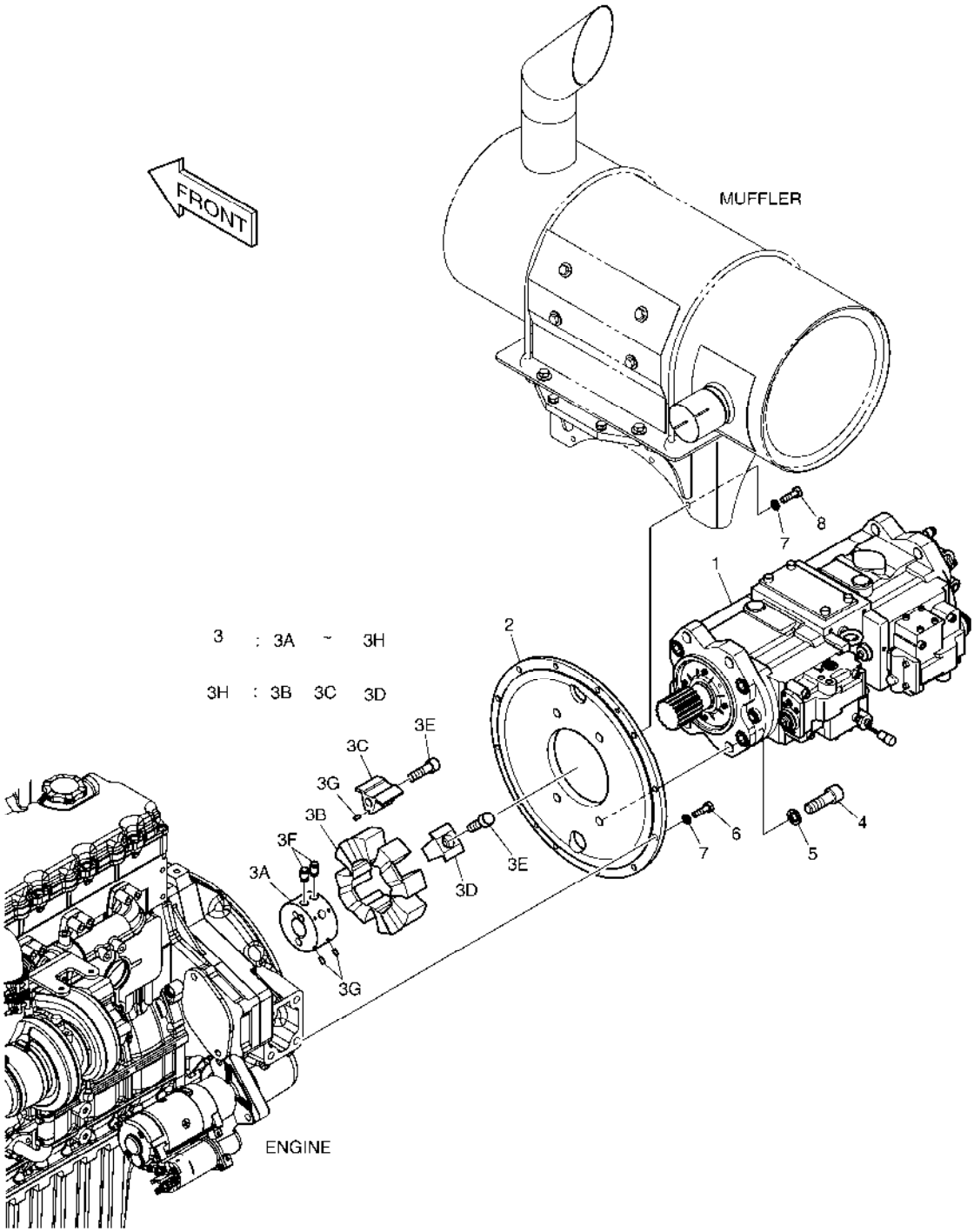

DATE	AUG. 28, 2009
3rd EDITION	

Fig. 1180 PUMP MOUNTING POMPE

Serial No. ;

Key No.	Part No.	Description	Description	Q'ty	S.C	Serial No.	ICA	Replaceable part	
								Part No.	Q'ty
1180 --	K1010225B	PUMP MOUNTING	POMPE	-	D				
1	K1025496	MAIN PUMP	CONDUITES DE BATI PRIN	1					
2	K1010227A	COVER;PUMP	COUVERCLE	1					
3	2414-9041	COUPLING	FIXATION DE POMPE	1					
3A	-	. HUB	. MOYEU	1	D				
3B	2474-7009	. ELEMENT	. ELEMENT	1					
3C	-	. INSERT(A)	. INSERTION	4	D				
3D	-	. INSERT(R)	. INSERTION	4	D				
3E	K9000422	. SET;SOCKET BOLT	. BOULON DE PLOT	1					
3F	-	. BOLT;CLAMPING	. BOULON	2	D				
3G	-	. PIN;SPRING	. GOUPILLE	12	D				
3H	2474-7009K	. ELEMENT KIT	. KIT DE ELEMENT	1					
4	S2227866	BOLT;SOCKET	BOULON A 6 PANS CREUX	4					
5	S5111103	WASHER;SPRING	RONDELLE ELASTIQUE	4					
6	S0558266	BOLT	BOULON	8					
7	S5102603	WASHER	RONDELLE ELASTIQUE	12					
8	S0558466	BOLT	BOULON A 6 PANS	4					

DATE	AUG. 28, 2009
3rd EDITION	

Fig. 1190 SWING MOTOR
MOTEUR D'ORIENTATION

Serial No. ;

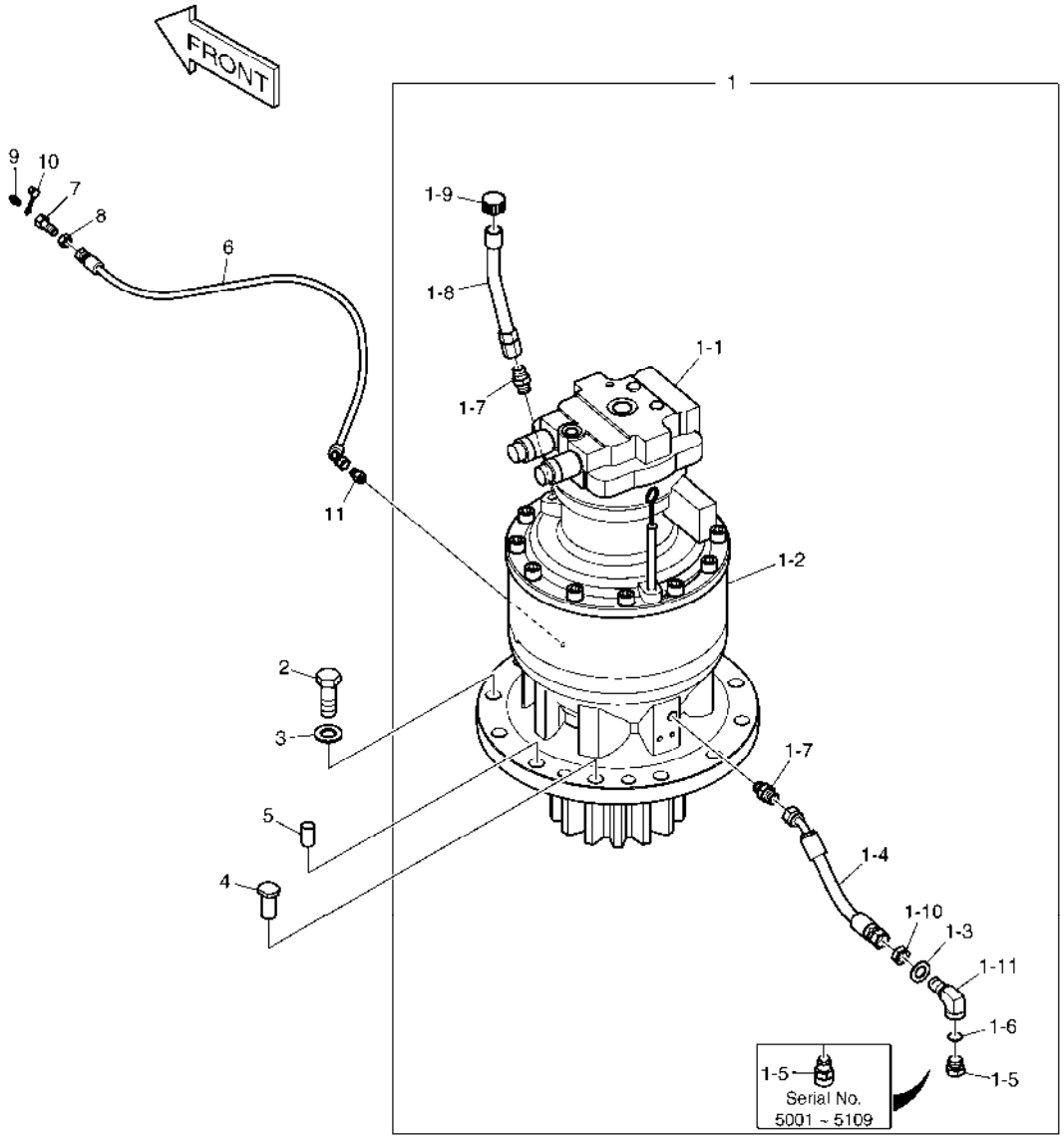

DATE	AUG. 28, 2009
3rd EDITION	

Fig. 1190 SWING MOTOR MOTEUR D'ORIENTATION

Serial No. ;

Key No.	Part No.	Description	Description	Q'ty	S.C	Serial No.	ICA	Replaceable part	
								Part No.	Q'ty
1190 --	K1010120C	SWING DEVICE	COMMUTATEUR	-	D				
1	K1010121B	SWING DEVICE ASS'Y	COMMUTATEUR	1		5001-5109	I	K1010121C	1
	K1010121C	SWING DEVICE ASS`Y	COMMUTATEUR	1		5110-			
1-1	K1007950A	. MOTOR;SWING	. COMMUTATEUR	1					
1-2	K1004037A	. REDUCTION GEAR;SWING	. BOITE REDUCTEUR	1					
1-3	S5011113	. WASHER;PLAIN	. RONDELLE	1					
1-4	DS2054338	. HOSE	. TUYAU FLEXIBLE	1					
1-5	426-00278	. VALVE;DRAIN	. VANNE	1		5001-5109			
	2181-1950D7	. PLUG	. BOUCHON	1		5110-			
1-6	S8000181	. O-RING	. JOINT TORIQUE	1					
1-7	2181-1110D3	. ADAPTER	. ADAPTEUR	2					
1-8	140-00805	. PIPE	. CONDUITE	1					
1-9	2119-1063B	. CAP	. CHAPEAU	1					
1-10	121-00010D3	. NUT	. ECROU	1					
1-11	181-00717	. ELBOW	. COUDE	1					
2	S0774766	BOLT M24X2.0X70	BOULON A 6 PANS	12					
3	2114-1831A	WASHER;HARDEN	RONDELLE	12					
4	2123-1717B	PIN;KNOCK	GOUPILLE	2					
5	198-00028	CAP	CHAPEAU	2					
6	2184-1060D53	HOSE	TUYAU FLEXIBLE	1					
7	181-00103	REDUCER	REDUCTEUR	1					
8	121-00006	NUT	ECROU	1					
9	S6710041	NIPPLE;GREASE	GRAISSEUR	1					
10	160-00020	CAP;GREASE NIPPLE	CHAPEAU	1					
11	2181-4112	ADAPTER	ADAPTEUR	1					

DATE	AUG. 28, 2009
3rd EDITION	

Fig. 1200 FUEL TANK
RESERVOIR DE GAZOLE

Serial No. ;

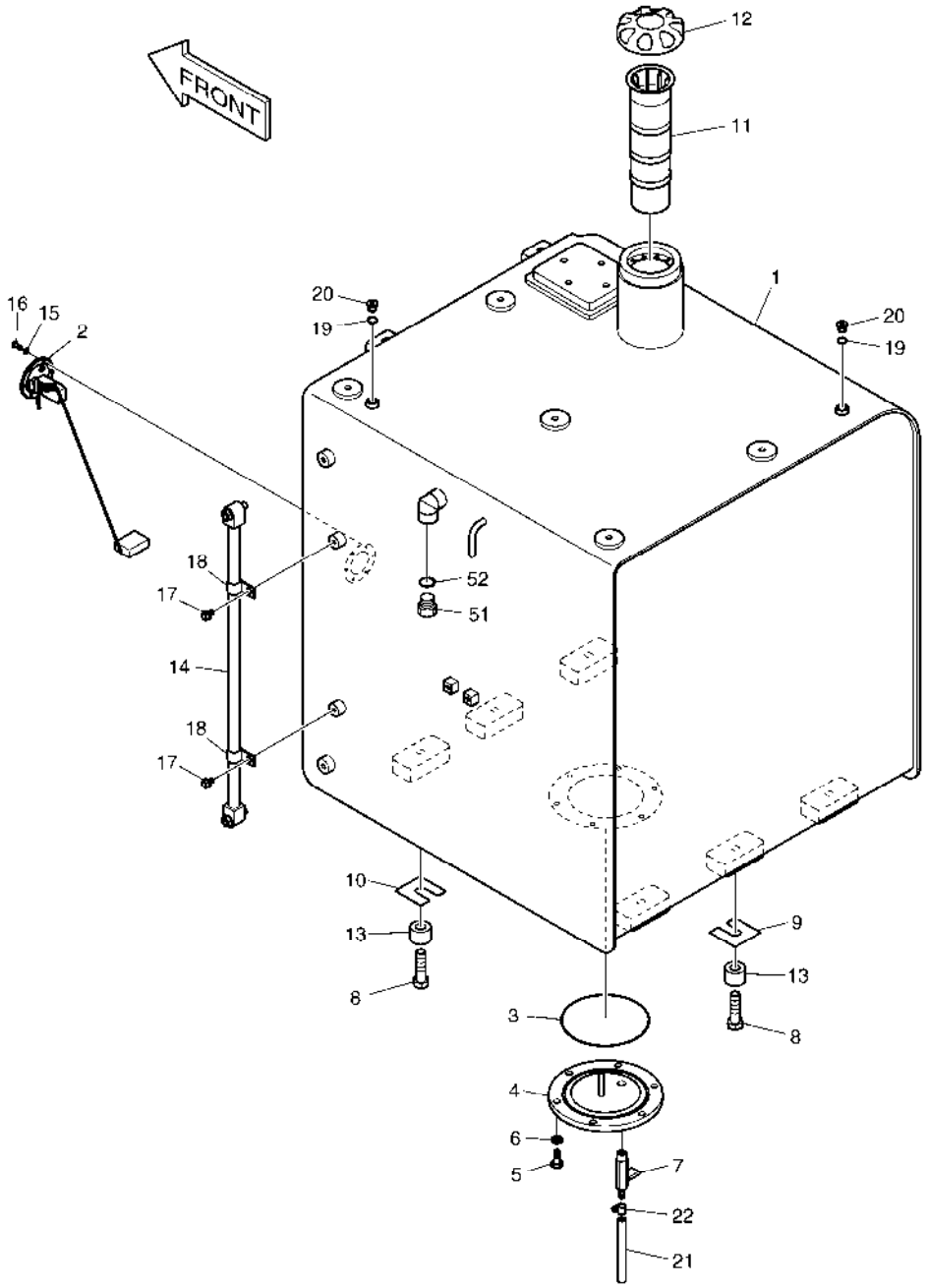

DATE	AUG. 28, 2009
3rd EDITION	

Fig. 1200 FUEL TANK RESERVOIR DE GAZOLE

Serial No. ;

Key No.	Part No.	Description	Description	Q'ty	S.C	Serial No.	ICA	Replaceable part	
								Part No.	Q'ty
1200 --	K1010196H	FUEL TANK ASS'Y	RESERVOIR D'GAZOLE	-	D				
1	K1010197B	TANK;FUEL	RESERVOIR A GAZOLE	1		5001-5107	I	K1010197E	1
	K1010197E	TANK;FUEL	RESERVOIR A GAZOLE	1		5108-5110	I	K1010197G	1
	K1010197G	TANK;FUEL	RESERVOIR A GAZOLE	1		5111-			
2	547-00026	SENDER;FUEL	SIEGE	1					
3	S8011450	O-RING	JOINT TORIQUE	1					
4	473-00033	COVER	COUVERCLE	1					
5	S0512066	BOLT	BOULON A 6 PANS	6					
6	S5102603	WASHER	RONDELLE ELASTIQUE	6					
7	186-00017A	COCK;DRAIN	ROBINET	1					
8	S0565466	BOLT	BOULON A 6 PANS	6					
9	114-00522	SHIM	CALE	3					
10	114-00523	SHIM	CALE	3					
11	471-00105A	FILTER;FUEL STRAINER	FILTRE	1					
12	K1004266	CAP;FUEL	CHAPEAU	1					
13	114-00425	SPACER	BAGUE D'ECARTEMENT	6					
14	119-00014AD1	GAUGE;LEVEL	INDICATEUR DE NIVEAU	1					
15	S5100203	WASHER;SPRING	RONDELLE ELASTIQUE	6					
16	S3450833	SCREW	VIS	6					
17	K1001029	BOLT	BOULON A 6 PANS	2					
18	DS2802021	CLIP	ATTACHE	2					
19	S8000111	O-RING	JOINT TORIQUE	2					
20	2181-1890D2	PLUG	BOUCHON	2					
21	DS2105053	HOSE	TUYAU FLEXIBLE	1					
22	S8450012	CLAMP	COLLIER	1					
51	2181-1950D7	PLUG	BOUCHON	1					
52	S8000181	O-RING	JOINT TORIQUE	1					

DATE	AUG. 28, 2009
3rd EDITION	

Fig. 1210 FUEL PIPING
CONDUITES DE GAZOLE

Serial No. ;

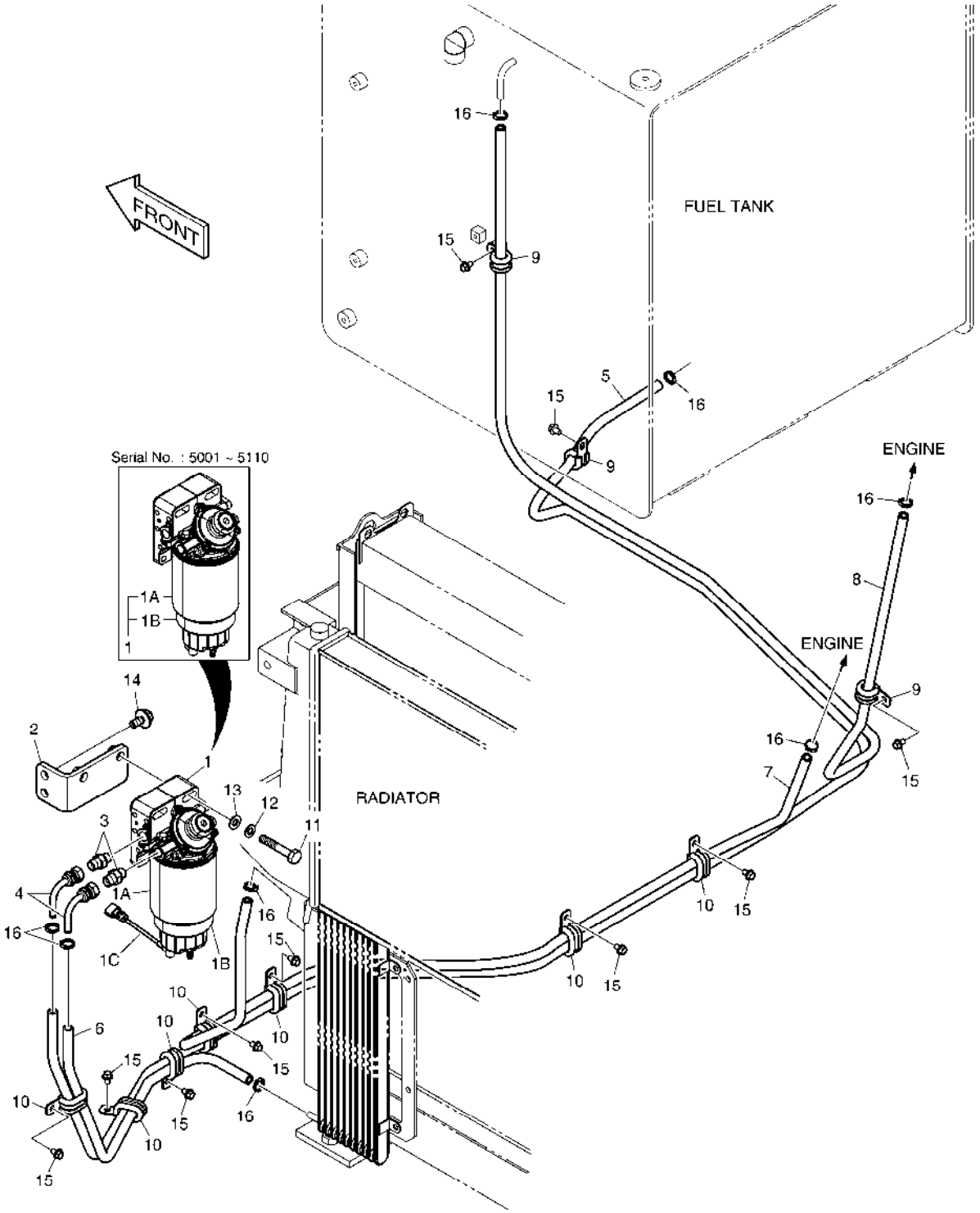

DATE	AUG. 28, 2009
3rd EDITION	

Fig. 1210 FUEL PIPING CONDUITES DE GAZOLE

Serial No. ;

Key No.	Part No.	Description	Description	Q'ty	S.C	Serial No.	ICA	Replaceable part	
								Part No.	Q'ty
1210 --	K1010244B	FUEL PIPING	TUYAUTERIE DE CARBUR/	-	D				
1	K1006520	PRE FUEL FILTER ASS`Y	PRE FILTRE D'ESSENCE	1		5001-5110	I	K1044605	1
	K1044605	PRE FUEL FILTER ASS'Y	PRE FILTRE D'ESSENCE	1		5111-			
1A	K1006530	. FILTER;PRE FUEL	. FILTRE	1					
1B	K1006973	. BOWL	. CUVETTE	1		5001-5110			
	K1046352	. BOWL	. CUVETTE	1		5111-			
1C	K1046350	. SENSOR;WATER	. CAPTEUR	1		5111-			
2	K1011345	BRACKET	SUPPORT	1					
3	DS2479004	ADAPTER	ADAPTEUR	2					
4	K1002864	ELBOW	COUDE	2					
5	DS2105060	HOSE;FUEL	TUYAU FLEXIBLE	1					
6	DS2105047	HOSE;FUEL	TUYAU FLEXIBLE	1					
7	DS2105018	HOSE	TUYAU FLEXIBLE	1					
8	DS2105020	HOSE;FUEL	TUYAU FLEXIBLE	1					
9	124-00208D3	CLIP	ATTACHE	3					
10	124-00209D1	CLIP	ATTACHE	7					
11	S0561266	BOLT	BOULON	2					
12	S5102703	WASHER;SPRING	RONDELLE ELASTIQUE	2					
13	S5010713	WASHER;PLAIN	RONDELLE	2					
14	DS0025018	BOLT;SET	BOULON A 6 PANS	2					
15	K1001029	BOLT	BOULON A 6 PANS	10					
16	S8450012	CLAMP	COLLIER	8					

DATE	AUG. 28, 2009
3rd EDITION	

Fig. 1220 OIL TANK RESERVOIR D'HUILE

Serial No. ;

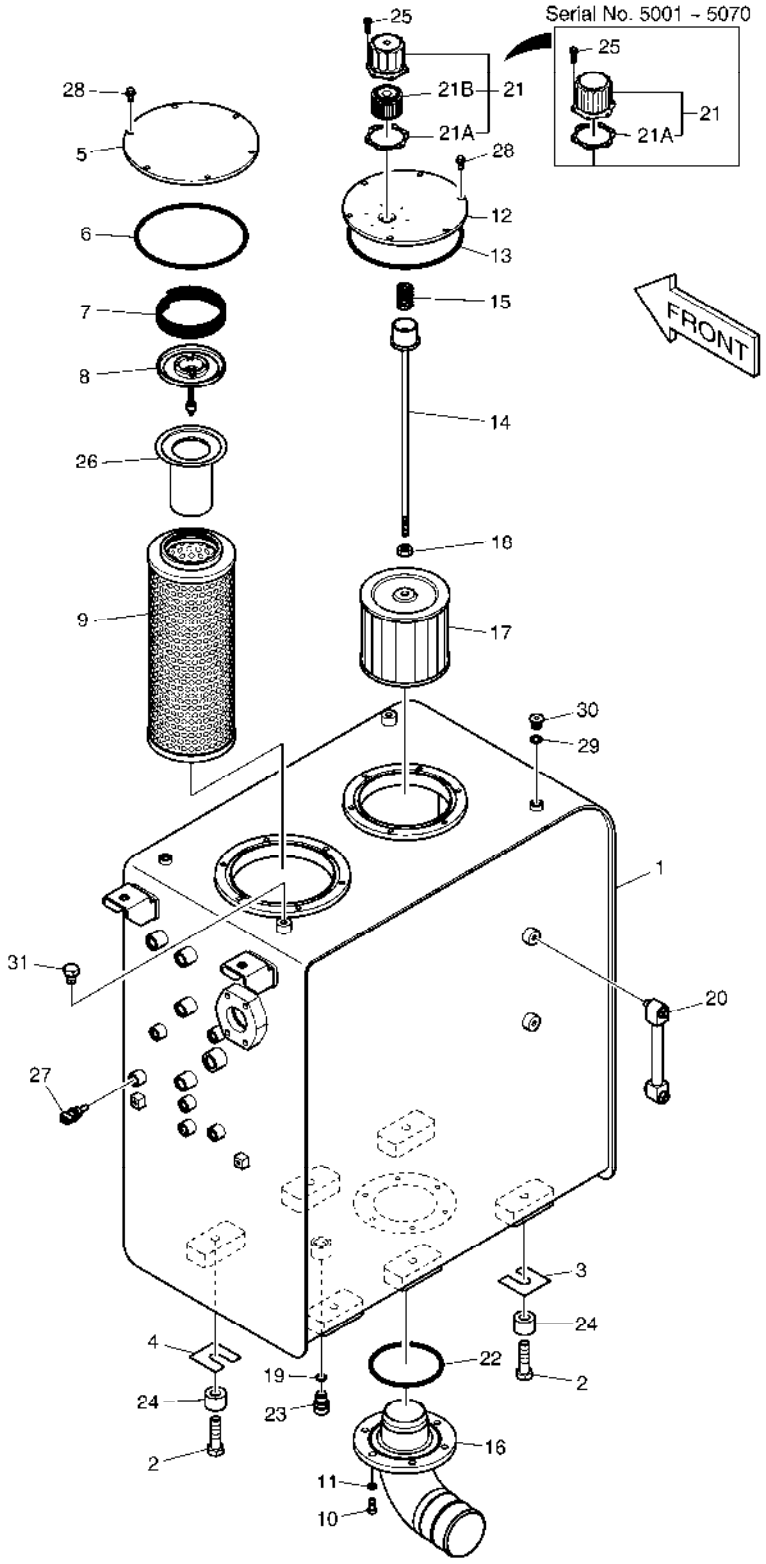

DATE	AUG. 28, 2009
3rd EDITION	

Fig. 1220 OIL TANK RESERVOIR D'HUILE

Serial No. ;

Key No.	Part No.	Description	Description	Q'ty	S.C	Serial No.	ICA	Replaceable part	
								Part No.	Q'ty
1220 --	K1010202H	OIL TANK ASS'Y	ENSEMBLE RESERVOIR D'	-	D				
1	K1010203C	TANK;OIL	RESERVOIR D'HUILE	1		5001-5107			
	K1010203G	TANK;OIL	RESERVOIR D'HUILE	1		5108-			
2	S0565466	BOLT	BOULON A 6 PANS	6					
3	114-00522	SHIM	CALE	3					
4	114-00523	SHIM	CALE	3					
5	K1011675	COVER	COUVERCLE	1		5001-5109	I	K1011675A	1
	K1011675A	COVER	COUVERCLE	1		5110-			
6	S8011850	O-RING	JOINT TORIQUE	1					
7	2129-1393	SPRING	RESSORT	1					
8	2426-1175	VALVE;BY-PASS	VANNE	1					
9	474-00055	ELEMENT;RETURN FILTER	ELEMENT	1					
10	S0512066	BOLT	BOULON A 6 PANS	6					
11	S5102603	WASHER	RONDELLE ELASTIQUE	6					
12	473-00052	COVER	COUVERCLE	1					
13	S8011650	O-RING	JOINT TORIQUE	1					
14	136-00002	ROD	TIGE	1					
15	2129-1008	SPRING;COMPRESS	RESSORT	1					
16	K1000269A	PIPE;SUCTION	PIPE;OIL	1					
17	2474-9016A	FILTER;SUCTION	ELEMENT FILTRANT	1					
18	S4012733	NUT	ECROU	1					
19	S8000181	O-RING	JOINT TORIQUE	1					
20	119-00025B	GAUGE;LEVEL	INDICATEUR DE NIVEAU	1					
21	422-00027A	BREATHER;AIR	RENIFLARD	1		5001-5070	I	K1012685A	1
21A	180-00200	. PACKING	. JOINT	1		5001-5070	I	K9005662	1
21	K1012685A	BREATHER;AIR	RENIFLARD D'AIR	1		5071-			
21A	K9005662	. GASKET	. JOINT	1		5071-			
21B	K1029257	. ELEMENT;AIR BREATHER	. ELEMENT	1		5071-			
22	S8011200	O-RING	JOINT TORIQUE	1					
23	426-00278	VALVE;DRAIN	VANNE	1		5001-5109			
	2181-1950D7	PLUG	BOUCHON	1		5110-			
24	114-00425	SPACER	BAGUE D'ECARTEMENT	6					
25	2120-2166D41	BOLT;SOCKET M5X0.8X8	BOULON A 6 PANS CREUX	6					
26	471-00127	STRAINER;BY-PASS	FILTRE	1					
27	K1003296	SENSOR;HYD. OIL TEMP	CAPTEUR	1					
28	K1007957	BOLT;SET	BOULON	12					
29	S8000111	O-RING	JOINT TORIQUE	2					
30	2181-1890D2	PLUG	BOUCHON	2					

DATE	AUG. 28, 2009
3rd EDITION	

Fig. 1220 OIL TANK RESERVOIR D'HUILE

Serial No. ;

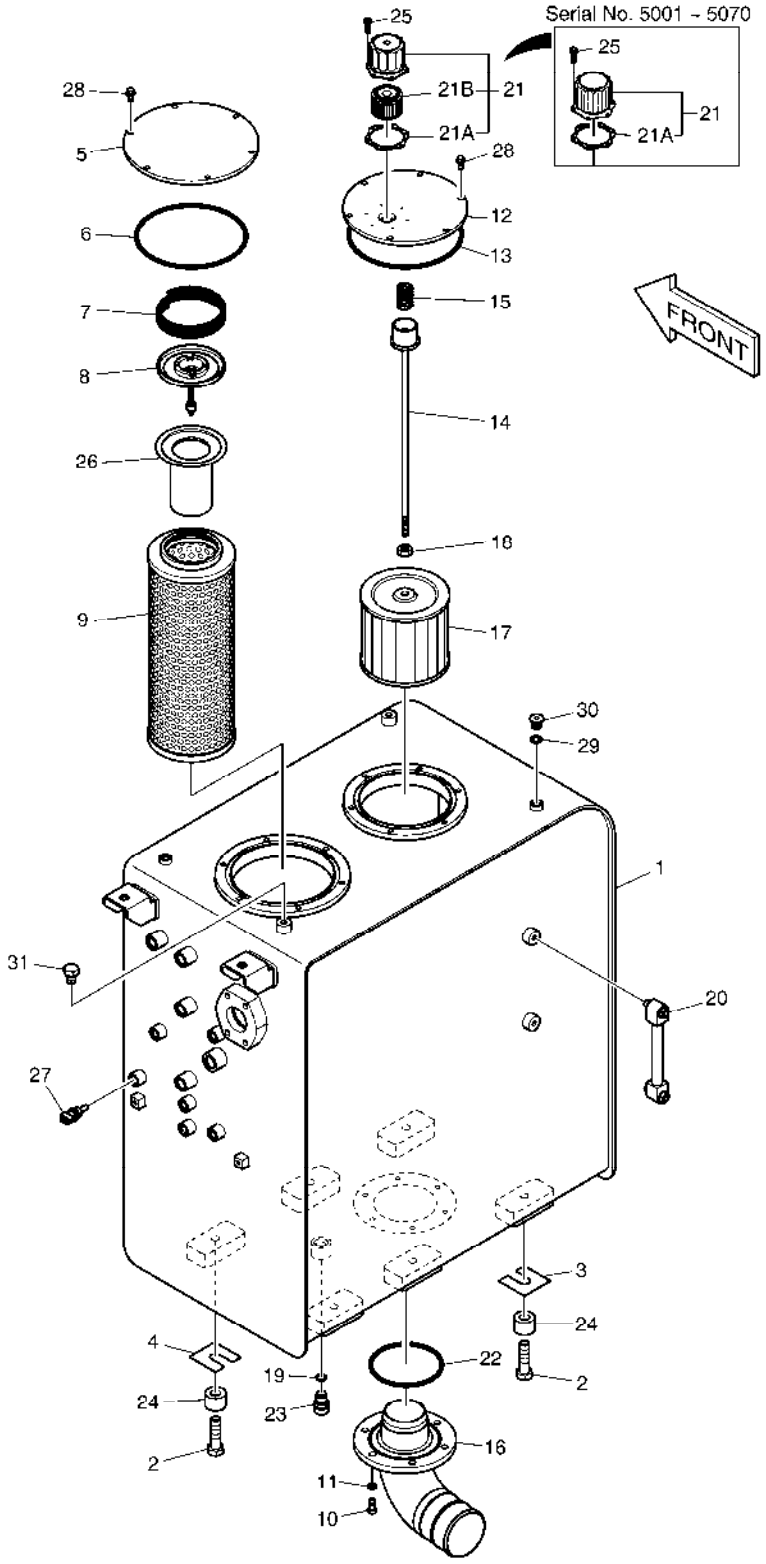

DATE	AUG. 28, 2009
3rd EDITION	

Fig. 1220 OIL TANK RESERVOIR D'HUILE

Serial No. ;

Key No.	Part No.	Description	Description	Q'ty	S.C	Serial No.	ICA	Replaceable part	
								Part No.	Q'ty
1220 -31	S0514666	BOLT M12X1.75x16	BOULON A 6 PANS	2					

DATE	AUG. 28, 2009
3rd EDITION	

Fig. 1230 OIL COOLER PIPING(1) CONDUITES DE HUILE

Serial No. ;

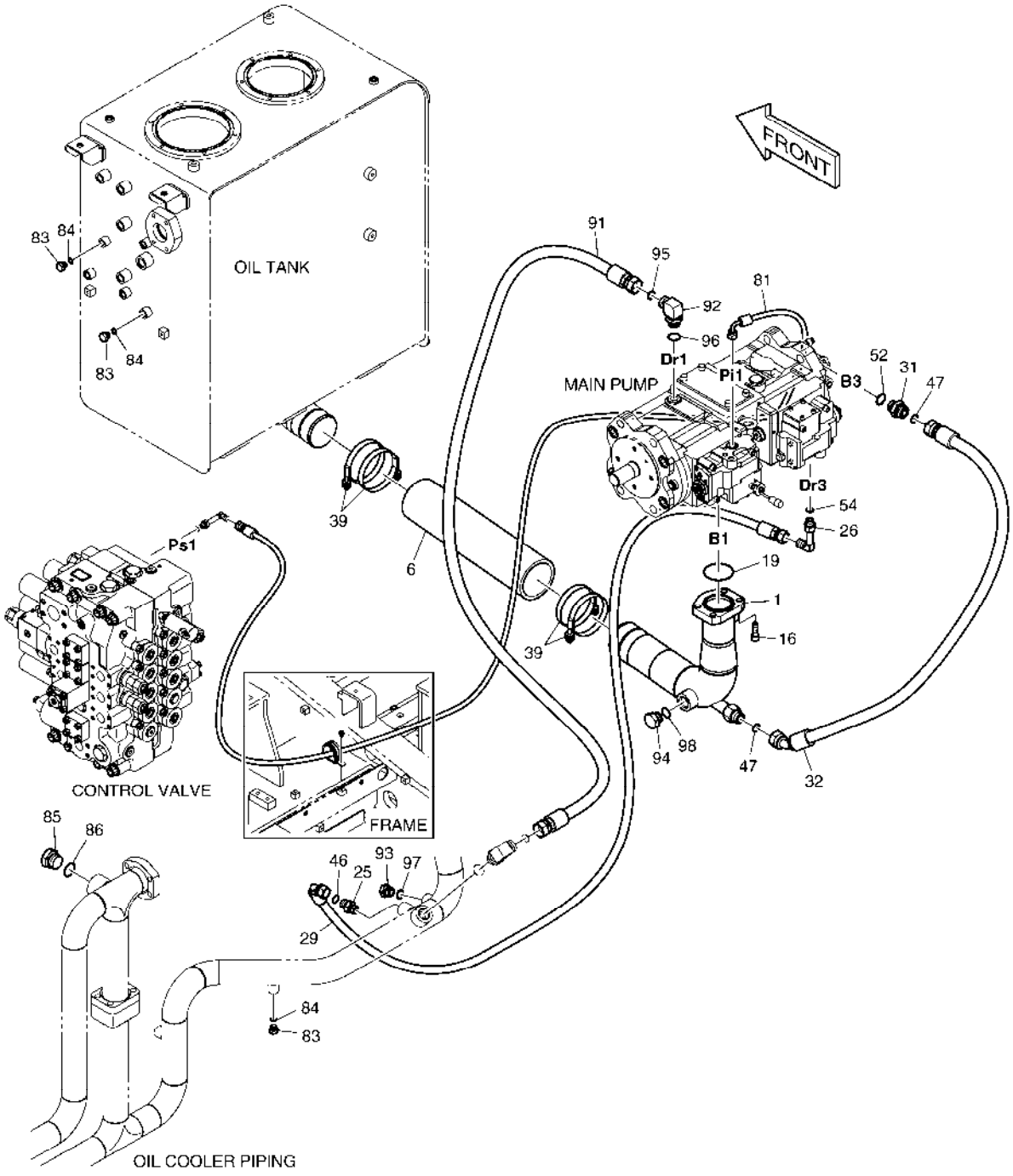

DATE	AUG. 28, 2009
3rd EDITION	

Fig. 1230 OIL COOLER PIPING(1) CONDUITES DE HUILE

Serial No. ;

Key No.	Part No.	Description	Description	Q'ty	S.C	Serial No.	ICA	Replaceable part	
								Part No.	Q'ty
1230 --	K1009806E	OIL COOLER PIPING	CONDUITES	-	D				
1	K1010122A	PIPE;SUCTION	TUYAU	1					
6	2185-1737D9	HOSE	TUYAU FLEXIBLE	1					
16	S2215366	BOLT	BOULON A 6 PANS CREUX	4					
19	2180-1026D31	O-RING	JOINT TORIQUE	1					
25	2181-1126D6	ADAPTER	ADAPTEUR	1					
26	2181-1702D36	ELBOW	COUDE	1					
29	DS2055986	HOSE	TUYAU FLEXIBLE	1					
31	2181-4133D5	ADAPTER	ADAPTEUR	1					
32	DS2012066	HOSE	TUYAU FLEXIBLE	1					
39	S8500118	CLAMP;HOSE	COLLIER	4					
46	S8000181	O-RING	JOINT TORIQUE	1					
47	S8030121	O-RING	JOINT TORIQUE	2					
52	S8000241	O-RING	JOINT TORIQUE	1					
54	S8000141	O-RING	JOINT TORIQUE	1					
81	DS2093073	HOSE	TUYAU FLEXIBLE	1					
83	2181-1950D1	PLUG	BOUCHON	3					
84	S8000111	O-RING	JOINT TORIQUE	3					
85	2181-1950D9	PLUG	BOUCHON	1					
86	S8000291	O-RING	JOINT TORIQUE	1					
91	DS2011112	HOSE	TUYAU FLEXIBLE	1					
92	2181-2294D2	ELBOW	COUDE	1					
93	2181-1950D3	PLUG	BOUCHON	1					
94	2181-1950D15	PLUG	BOUCHON	1					
95	S8030121	O-RING	JOINT TORIQUE	1					
96	S8000241	O-RING	JOINT TORIQUE	1					
97	S8000181	O-RING	JOINT TORIQUE	1					
98	S8000231	O-RING	JOINT TORIQUE	1					

DATE	AUG. 28, 2009
3rd EDITION	

Fig. 1240 OIL COOLER PIPING(2) CONDUITES DE HUILE

Serial No. ;

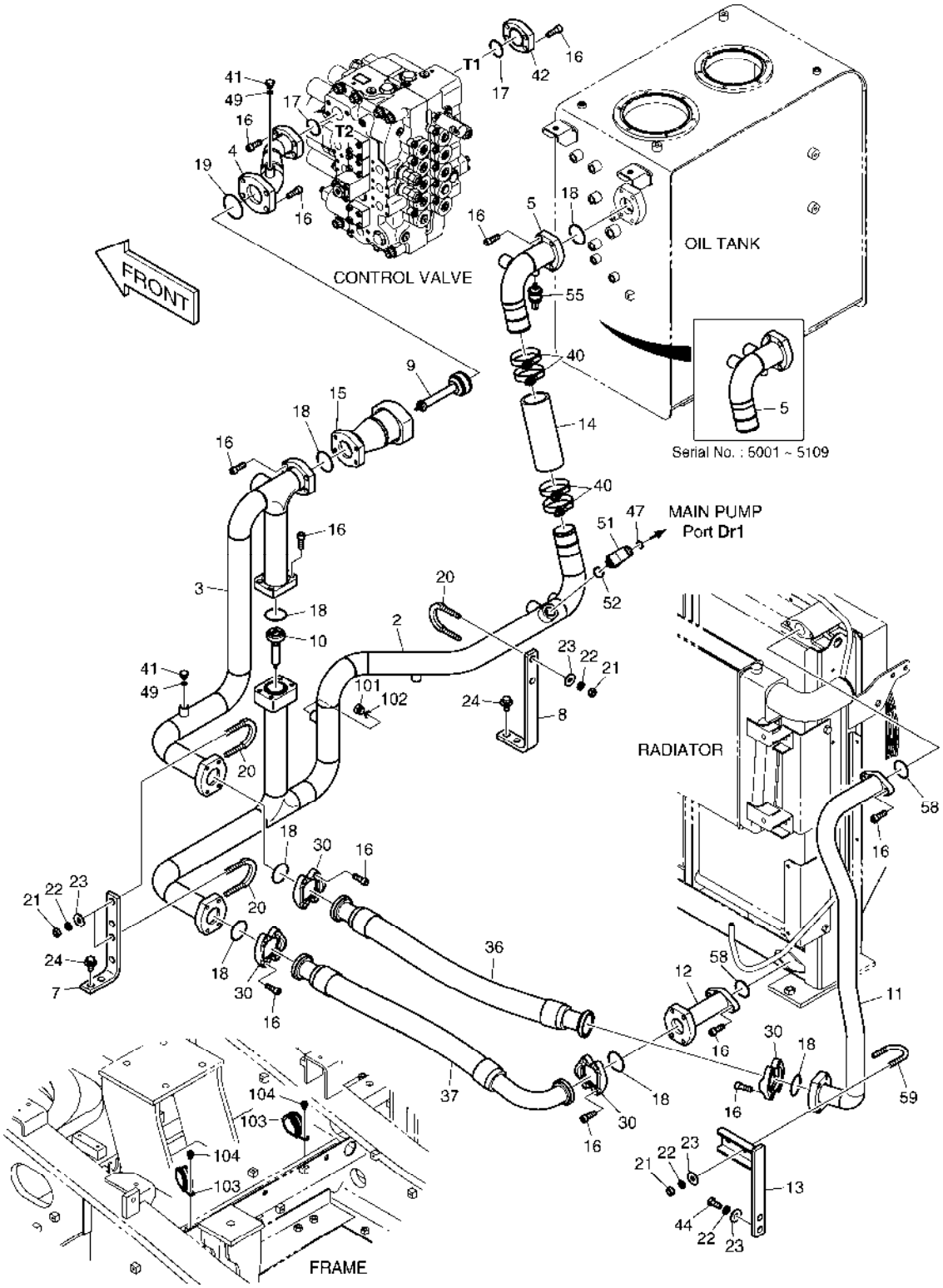

DATE	AUG. 28, 2009
3rd EDITION	

Fig. 1240 OIL COOLER PIPING(2) CONDUITES DE HUILE

Serial No. ;

Key No.	Part No.	Description	Description	Q'ty	S.C	Serial No.	ICA	Replaceable part	
								Part No.	Q'ty
1240 --	K1009806H	OIL COOLER PIPING	CONDUITES	-	D	5001-5123			
	420212-00036	PIPING,OIL COOLER	CONDUITES	-	D	5124-			
2	K1010123B	PIPE	TUYAU	1		5001-5123	I	420207-00021	1
	420207-00021	PIPE	CLIP	1		5124-			
3	K1010124A	PIPE	TUYAU	1					
4	K1010125A	PIPE	TUYAU	1					
5	K1010126A	PIPE	TUYAU	1		5001-5033	I	K1010126B	1
	K1010126B	PIPE	TUYAU	1		5034-5109			
	K1010126C	PIPE	TUYAU	1		5110-			
7	195-02735B	PLATE	PLAQUE	1					
8	K1010432	PLATE	PLAQUE	1					
9	K1002341	VALVE;BYPASS	VANNE	1					
10	K1007197	VALVE;BYPASS	VANNE	1					
11	K1023513	PIPE	TUYAU	1					
12	K1023514	PIPE	TUYAU	1					
13	K1002639B	BRACKET	SUPPORT	1					
14	2185-1776D1	HOSE	TUYAU FLEXIBLE	1					
15	K1000644B	PIPE	TUYAU	1					
16	S2215366	BOLT	BOULON A 6 PANS CREUX	44					
17	2180-1026D24	O-RING	JOINT TORIQUE	2					
18	2180-1026D27	O-RING	JOINT TORIQUE	7					
19	2180-1026D31	O-RING	JOINT TORIQUE	1					
20	120-00258A	BOLT;U	BOULON U	3					
21	S4012733	NUT	ECROU	8					
22	S5102703	WASHER;SPRING	RONDELLE ELASTIQUE	10					
23	2114-1058D30	WASHER;PLAIN	RONDELLE	10					
24	DS0025018	BOLT;SET	BOULON A 6 PANS	4					
30	4215-1003D6	FLANGE;SPLIT	FLASQUE	8					
36	DS2038183	HOSE	TUYAU FLEXIBLE	1					
37	DS2040513	HOSE	TUYAU FLEXIBLE	1					
40	S8500092	CLAMP;HOSE	COLLIER	4					
41	2181-1950D1	PLUG	BOUCHON	2					
42	2181-2157D6	FLANGE;COVER	BRIDE	1					
44	S0515266	BOLT	BOULON A 6 PANS	2					
47	S8030121	O-RING	JOINT TORIQUE	1					
49	S8000111	O-RING	JOINT TORIQUE	2					
51	2181-2294D2	ELBOW	COUDE	1					
52	S8000241	O-RING	JOINT TORIQUE	1					

DATE	AUG. 28, 2009
3rd EDITION	

Fig. 1240 OIL COOLER PIPING(2) CONDUITES DE HUILE

Serial No. ;

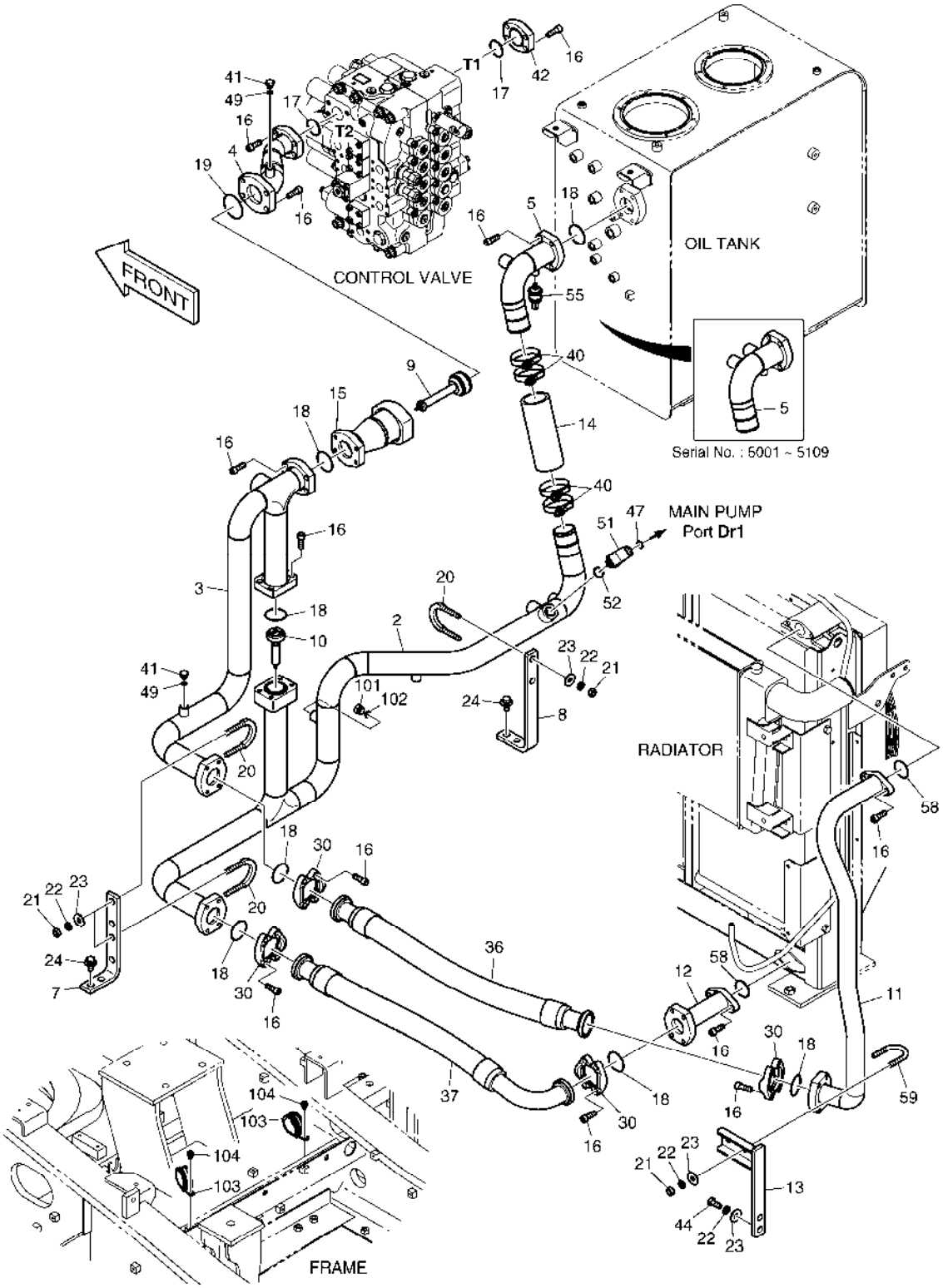

DATE	AUG. 28, 2009
3rd EDITION	

Fig. 1240 OIL COOLER PIPING(2) CONDUITES DE HUILE

Serial No. ;

Key No.	Part No.	Description	Description	Q'ty	S.C	Serial No.	ICA	Replaceable part	
								Part No.	Q'ty
1240 -55	549-00095	SWITCH;PRESSURE	COMMUTATEUR	1					
58	2180-1026D28	O-RING	JOINT TORIQUE	2					
59	2120-1413D12	U-BOLT	BOULON A 6 PANS	1					
101	2181-1950D2	PLUG	BOUCHON	1					
102	S8000141	O-RING	JOINT TORIQUE	1					
103	124-00208D7	CLIP	AGRAFE	2					
104	K1001029	BOLT	BOULON A 6 PANS	2					

DATE	AUG. 28, 2009
3rd EDITION	

Fig. 1250 OIL COOLER PIPING(3) CONDUITES DE HUILE

Serial No. ;

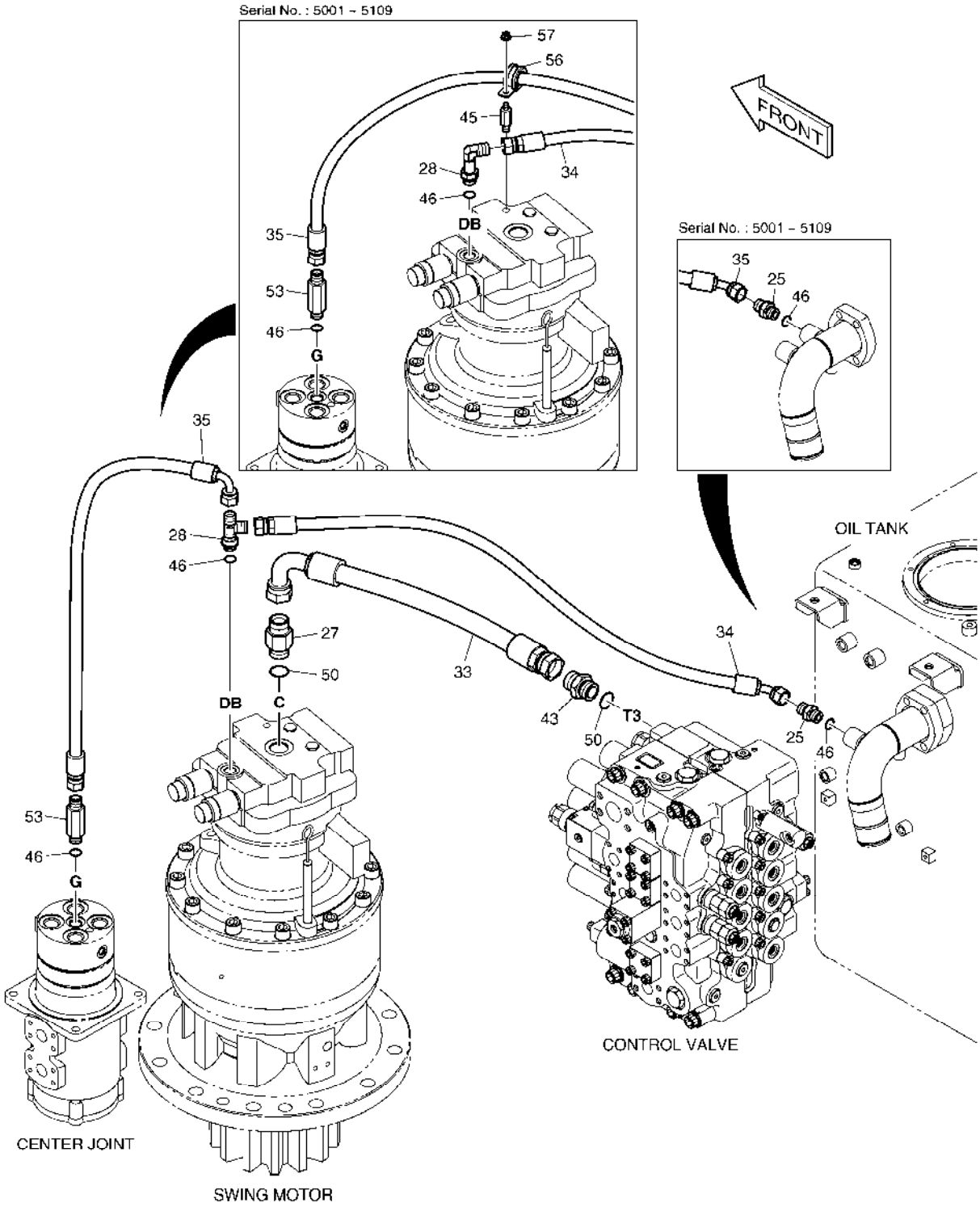

DATE	AUG. 28, 2009
3rd EDITION	

Fig. 1250 OIL COOLER PIPING(3) CONDUITES DE HUILE

Serial No. ;

Key No.	Part No.	Description	Description	Q'ty	S.C	Serial No.	ICA	Replaceable part	
								Part No.	Q'ty
1250 --	K1009806H	OIL COOLER PIPING	CONDUITES	-	D				
25	2181-1126D6	ADAPTER	ADAPTEUR	2		5001-5109			
	2181-1126D6	ADAPTER	ADAPTEUR	1		5110-			
27	DS2213168	ADAPTER	ADAPTEUR	1					
28	2181-1702D34	ELBOW	COUDE	1		5001-5109			
	2181-1951D5	TEE	TE	1		5110-			
33	DS2055948	HOSE	TUYAU FLEXIBLE	1					
34	DS2054384	HOSE	TUYAU FLEXIBLE	1					
35	DS2054340	HOSE	TUYAU FLEXIBLE	1		5001-5109			
	DS2055976	HOSE	TUYAU FLEXIBLE	1		5110-			
43	2181-1126D25	ADAPTER	ADAPTEUR	1					
45	120-00114D7	BOLT;STUD	BOULON A 6 PANS	1		5001-5109			
46	S8000181	O-RING	JOINT TORIQUE	4		5001-5109			
	S8000181	O-RING	JOINT TORIQUE	3		5110-			
50	S8000291	O-RING	JOINT TORIQUE	2					
53	2181-1126D113	ADAPTER PFO1/2-PF1/2	ADAPTEUR	1					
56	124-00208D4	CLIP	ATTACHE	1		5001-5109			
57	2121-1305	NUT	ECROU	1		5001-5109			

DATE	AUG. 28, 2009
3rd EDITION	

Fig. 1260 MAIN PIPING(1)
CONDUITES DE BATI PRINCIPAL

Serial No. ;

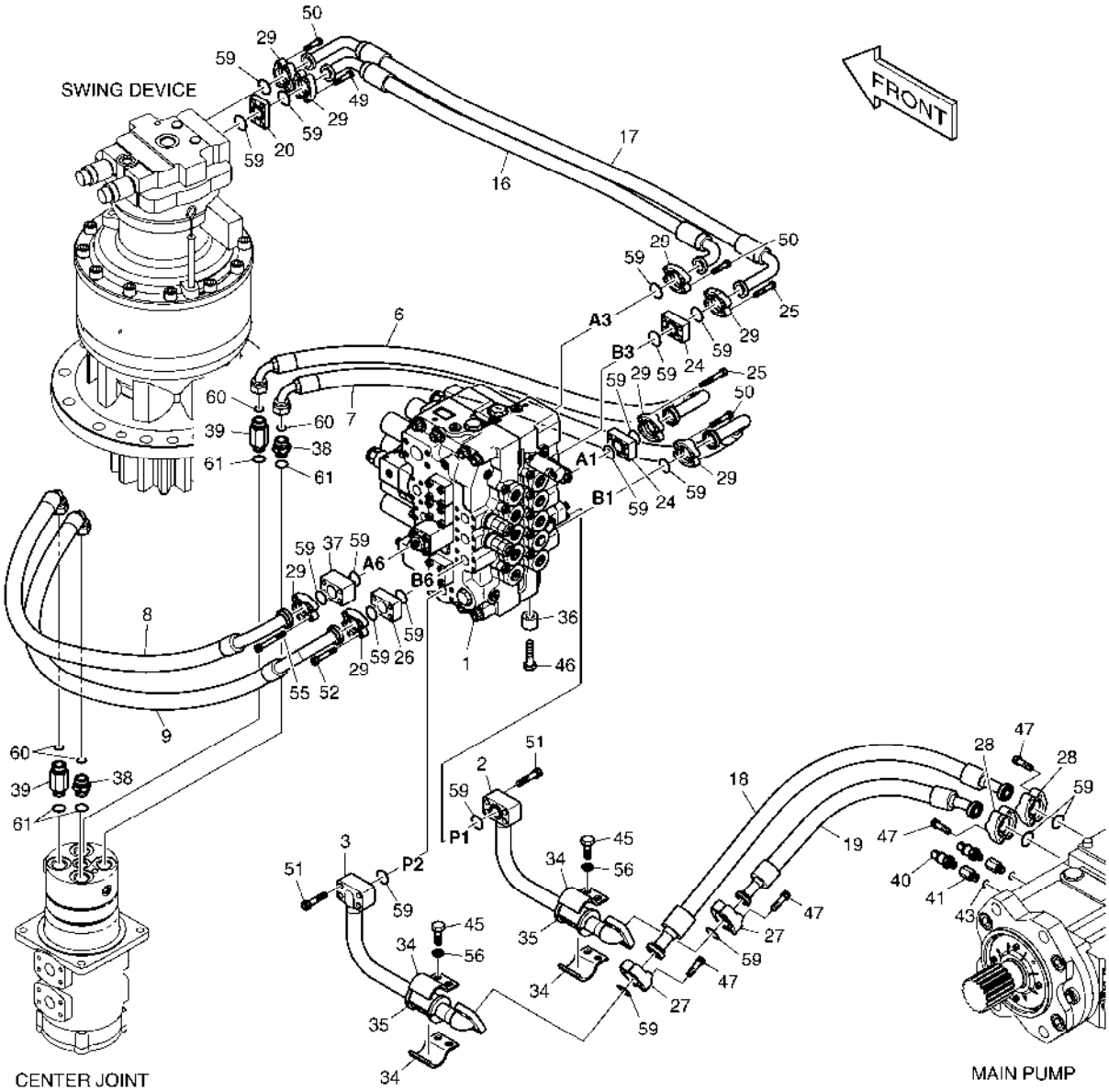

DATE	AUG. 28, 2009
3rd EDITION	

Fig. 1260 MAIN PIPING(1) CONDUITES DE BATI PRINCIPAL

Serial No. ;

Key No.	Part No.	Description	Description	Q'ty	S.C	Serial No.	ICA	Replaceable part	
								Part No.	Q'ty
1260 --	K1009800H	MAIN PIPING	TUYAUTERIE PRINCIPALE	-	D				
1	K1005097A	VALVE;CONTROL	VANNE	1					
2	K1010189A	PIPE	TUYAU	1					
3	K1010190A	PIPE	TUYAU	1					
6	DS2026173	HOSE	TUYAU FLEXIBLE	1					
7	DS2026174	HOSE	TUYAU FLEXIBLE	1					
8	DS2026175	HOSE	TUYAU FLEXIBLE	1					
9	DS2026176	HOSE	TUYAU FLEXIBLE	1					
16	DS2045429	HOSE	TUYAU FLEXIBLE	1					
17	DS2045428	HOSE	TUYAU FLEXIBLE	1					
18	DS2097007	HOSE	TUYAU FLEXIBLE	1		5001-5086	I	DS2097018	1
	DS2097018	HOSE	TUYAU FLEXIBLE	1		5087-			
19	DS2097008	HOSE	TUYAU FLEXIBLE	1		5001-5086	I	DS2097019	1
	DS2097019	HOSE	TUYAU FLEXIBLE	1		5087-			
20	423-00199	BLOCK;SPACER	BLOC	1					
24	2181-2169	BLOCK;SPACER	BLOC	2					
25	S2212666	BOLT	BOULON A 6 PANS CREUX	8					
26	2423-1407	BLOCK;SPACER	BLOC	1					
27	2181-9081	FLANGE;SPLIT	BRIDE	4					
28	2181-9084A	FLANGE;SPLIT	FLASQUE EN DEUX PARTIE	4					
29	2181-9078	FLANGE	BRIDE	16					
34	124-00218	CLAMP	COLLIER	4					
35	161-00281	RUBBER	CAOUTCHOUC	2					
36	114-00425	SPACER	BAGUE D'ECARTEMENT	4					
37	2181-2614	BLOCK;SPACER	BLOC	1					
38	2181-2627D1	ADAPTER	ADAPTEUR	2					
39	2181-2627D3	ADAPTER	ADAPTEUR	2					
40	2547-9045	SENSOR;PRESSURE	CAPTEUR	2					
41	DS2242015	REDUCER	REDUCTEUR	2					
43	S8000141	O-RING	JOINT TORIQUE	2					
45	S0562766	BOLT	BOULON A 6 PANS	4					
46	S0565466	BOLT	BOULON A 6 PANS	4					
47	S2215466	BOLT;SOCKET	BOULON A 6 PANS CREUX	16					
49	S2212466	BOLT;SOCKET M10X1.5X40	BOULON A 6 PANS CREUX	4					
50	S2212266	BOLT;SOCKET	BOULON A 6 PANS CREUX	12					
51	S2215766	BOLT;SOCKET M12X1.75X55	BOULON A 6 PANS CREUX	8					
52	S2212866	BOLT;SOCKET	BOULON A 6 PANS CREUX	4					
55	S2213066	BOLT;SOCKET M10X1.5X70	BOULON A 6 PANS CREUX	4					

Fig. 1260 MAIN PIPING(1) CONDUITES DE BATI PRINCIPAL

Serial No. ;

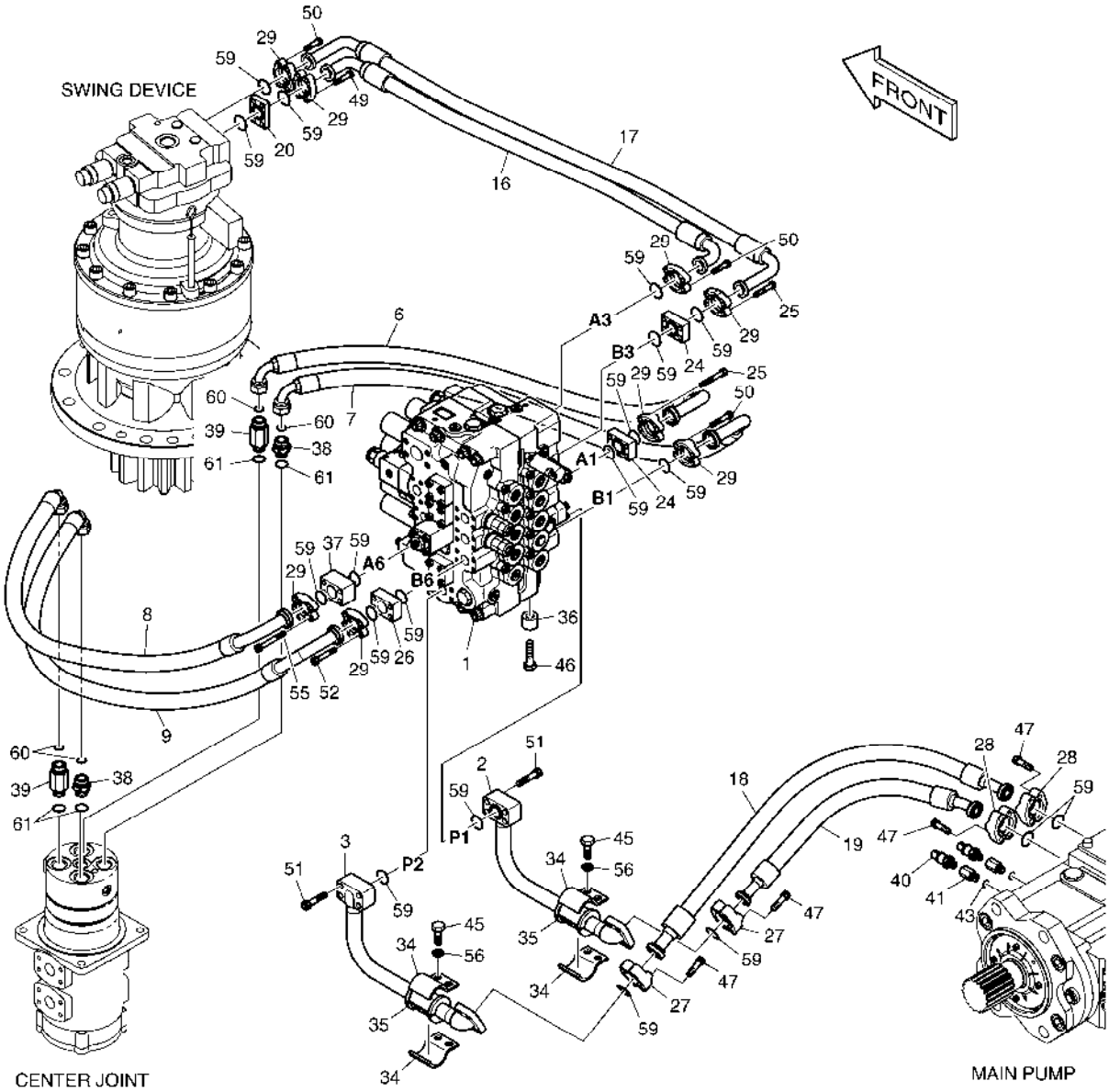

DATE	AUG. 28, 2009
3rd EDITION	

Fig. 1260 MAIN PIPING(1) CONDUITES DE BATI PRINCIPAL

Serial No. ;

Key No.	Part No.	Description	Description	Q'ty	S.C	Serial No.	ICA	Replaceable part	
								Part No.	Q'ty
1260 -56	S5102803	WASHER;SPRING	RONDELLE ELASTIQUE	4					
59	2180-1026D19	O-RING	JOINT TORIQUE	19					
60	S8030121	O-RING	JOINT TORIQUE	4					
61	S8000231	O-RING	JOINT TORIQUE	4					

DATE	AUG. 28, 2009
3rd EDITION	

Fig. 1270 MAIN PIPING(2)
CONDUITES DE BATI PRINCIPAL

Serial No. ;

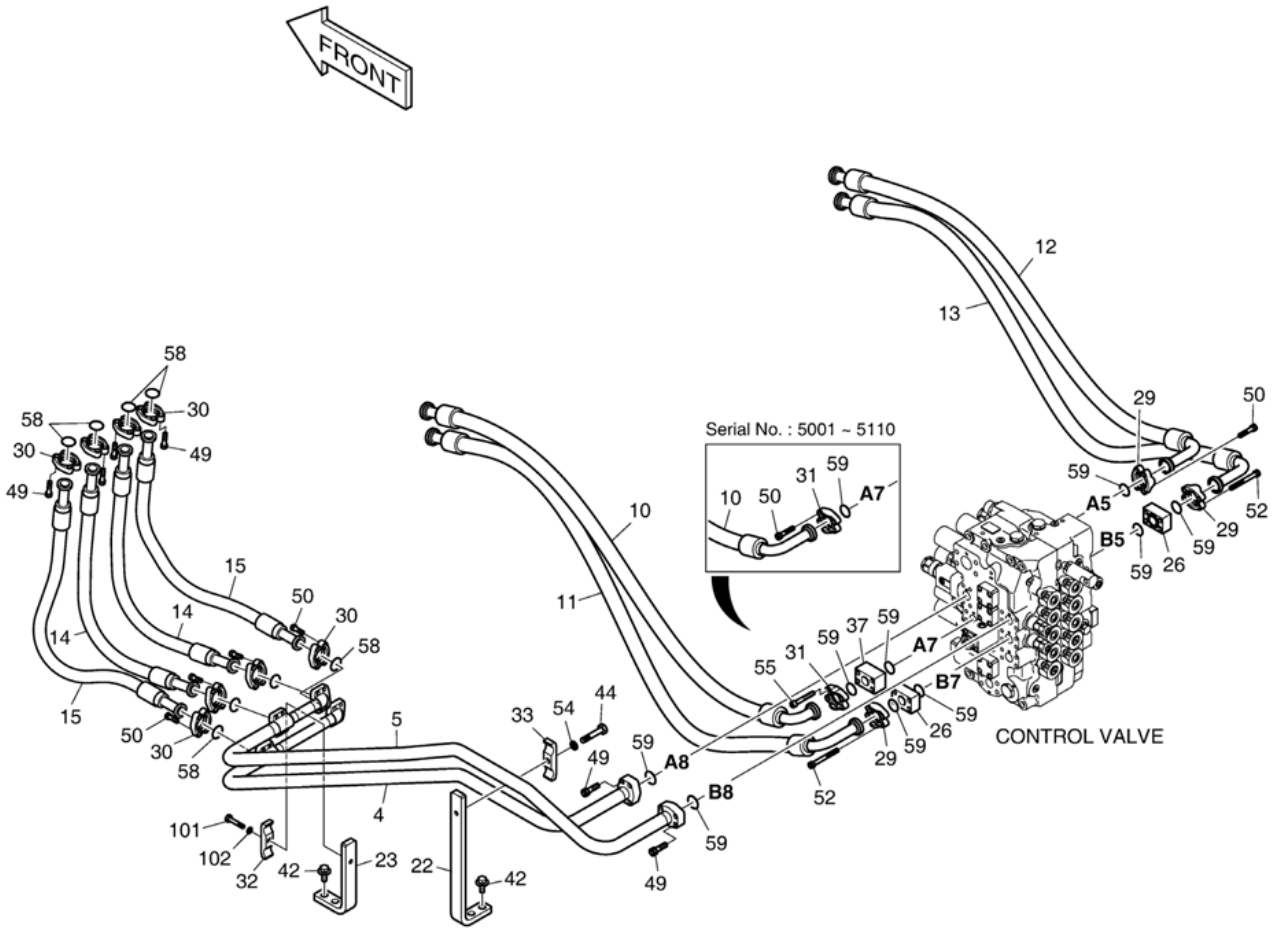

DATE	AUG. 28, 2009
3rd EDITION	

Fig. 1270 MAIN PIPING(2) CONDUITES DE BATI PRINCIPAL

Serial No. ;

Key No.	Part No.	Description	Description	Q'ty	S.C	Serial No.	ICA	Replaceable part	
								Part No.	Q'ty
1270 --	K1009800J	MAIN PIPING	TUYAUTERIE PRINCIPALE	-	D				
4	K1010191A	PIPE	TUYAU	1					
5	K1010192A	PIPE	TUYAU	1					
10	DS2040533	HOSE	TUYAU FLEXIBLE	1		5001-5110			
	DS2040725	HOSE	TUYAU FLEXIBLE	1		5111-			
11	DS2040473	HOSE	TUYAU FLEXIBLE	1					
12	DS2040534	HOSE	TUYAU FLEXIBLE	1					
13	DS2040535	HOSE	TUYAU FLEXIBLE	1					
14	DS2038202	HOSE	TUYAU FLEXIBLE	2					
15	DS2038145	HOSE	TUYAU FLEXIBLE	2					
22	K1010483	BRACKET	SUPPORT	1					
23	K1010484	BRACKET	SUPPORT	1					
26	2423-1407	BLOCK;SPACER	BLOC	2					
29	2181-9078	FLANGE	BRIDE	6					
30	2181-9079	FLANGE	FLASQUE EN DEUX PARTIE	16					
31	2181-9083	FLANGE;SPLIT	BRIDE	2					
32	2124-1025D6	CLAMP;PIPE	COLLIER	1					
33	2124-1025D5	CLAMP;PIPE	ATTACHE DE TUBE	1					
37	2181-2614	BLOCK;SPACER	BLOC	1		5111-			
42	DS0025020	BOLT;SET	BOULON A 6 PANS	4					
44	S0561066	BOLT	BOULON	1					
49	S2212466	BOLT;SOCKET M10X1.5X40	BOULON A 6 PANS CREUX	24					
50	S2212266	BOLT;SOCKET	BOULON A 6 PANS CREUX	24		5001-5110			
	S2212266	BOLT;SOCKET	BOULON A 6 PANS CREUX	20		5111-			
52	S2212866	BOLT;SOCKET	BOULON A 6 PANS CREUX	8					
54	S5102703	WASHER;SPRING	RONDELLE ELASTIQUE	1					
55	S2213066	BOLT;SOCKET M10X1.5X70	BOULON A 6 PANS CREUX	4		5111-			
58	2180-1026D2	O-RING	JOINT TORIQUE	8					
59	2180-1026D19	O-RING	JOINT TORIQUE	8		5001-5110			
	2180-1026D19	O-RING	JOINT TORIQUE	9		5111-			
101	S0560866	BOLT	BOULON	1					
102	S5102703	WASHER;SPRING	RONDELLE ELASTIQUE	1					

DATE	AUG. 28, 2009
3rd EDITION	

Fig. 1280 PILOT PIPING(1) CONDUITES DE PILOTE

Serial No. ;

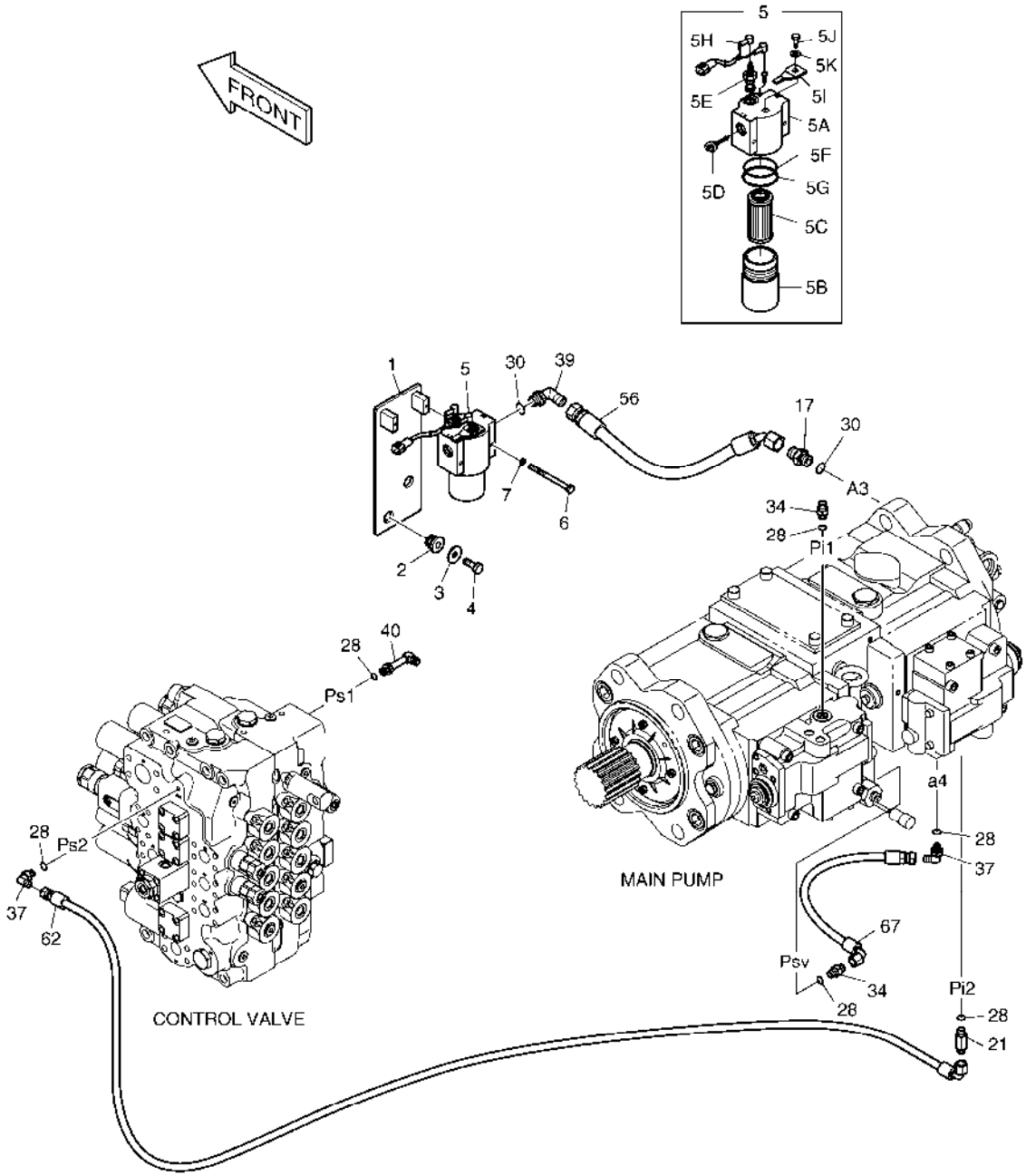

DATE	AUG. 28, 2009
3rd EDITION	

Fig. 1280 PILOT PIPING(1) CONDUITES DE PILOTE

Serial No. ;

Key No.	Part No.	Description	Description	Q'ty	S.C	Serial No.	ICA	Replaceable part	
								Part No.	Q'ty
1280 --	K1009807E	PILOT PIPING(1)	CIRCUIT DE PILOTE	-	D				
1	195-01601	BRACKET	SUPPORT	1					
2	198-00016	RUBBER	CAOUTCHOUC	2					
3	2114-1058D10	WASHER	RONDELLE PLATE	2					
4	S0512266	BOLT	BOULON A 6 PANS	2					
5	471-00075A	FILTER;PILOT	FILTRE	1					
5A	-	. HEAD	. COUVERCLE	1	D				
5B	2472-7003	. CASE	. CARTER	1					
5C	2471-1154	. ELEMENT;FILTER(PILOT)	. ELEMENT FILTRANT	1					
5D	2426-1237	. VALVE;BY-PASS	. VANNE	1					
5E	2471-1155A	. INDICATOR	. FILTRE DE GAZOLE	1					
5F	Y-3738-04	. RING;BACK UP	. JOINT TORIQUE	1					
5G	Y-3738-05	. O-RING	. BAGUE D`ETANCHEITE	1					
5H	530-00236	. HARNESS;PILOT FILTER	. FAISCEAU	1					
5I	2197-1661	. BRACKET	. SUPPORT	1					
5J	S0508653	. BOLT	. BOULON A 6 PANS	1					
5K	S5102503	. WASHER	. RONDELLE ELASTIQUE	1					
6	S0553766	BOLT	BOULON A 6 PANS	2					
7	S5102303	WASHER;SPRING	RONDELLE ELASTIQUE	2					
17	2181-1126D6	ADAPTER	ADAPTEUR	1					
21	2181-1126D34	ADAPTER	ADAPTEUR	1					
28	S8000111	O-RING	JOINT TORIQUE	7					
30	S8000181	O-RING	JOINT TORIQUE	2					
34	2181-1126D14	ADAPTER	ADAPTEUR	2					
37	2181-1702D4	ELBOW(1/4)	COUDE	2					
39	2181-1702D2	ELBOW	COUDE	1					
40	2181-1702D56	ELBOW	COUDE	1					
56	DS2054341	HOSE	TUYAU FLEXIBLE	1					
62	DS2093073	HOSE	TUYAU FLEXIBLE	1					
67	DS2093180	HOSE	TUYAU FLEXIBLE	1					

DATE	AUG. 28, 2009
3rd EDITION	

Fig. 1290 PILOT PIPING(2) CONDUITES DE PILOTE

Serial No. ;

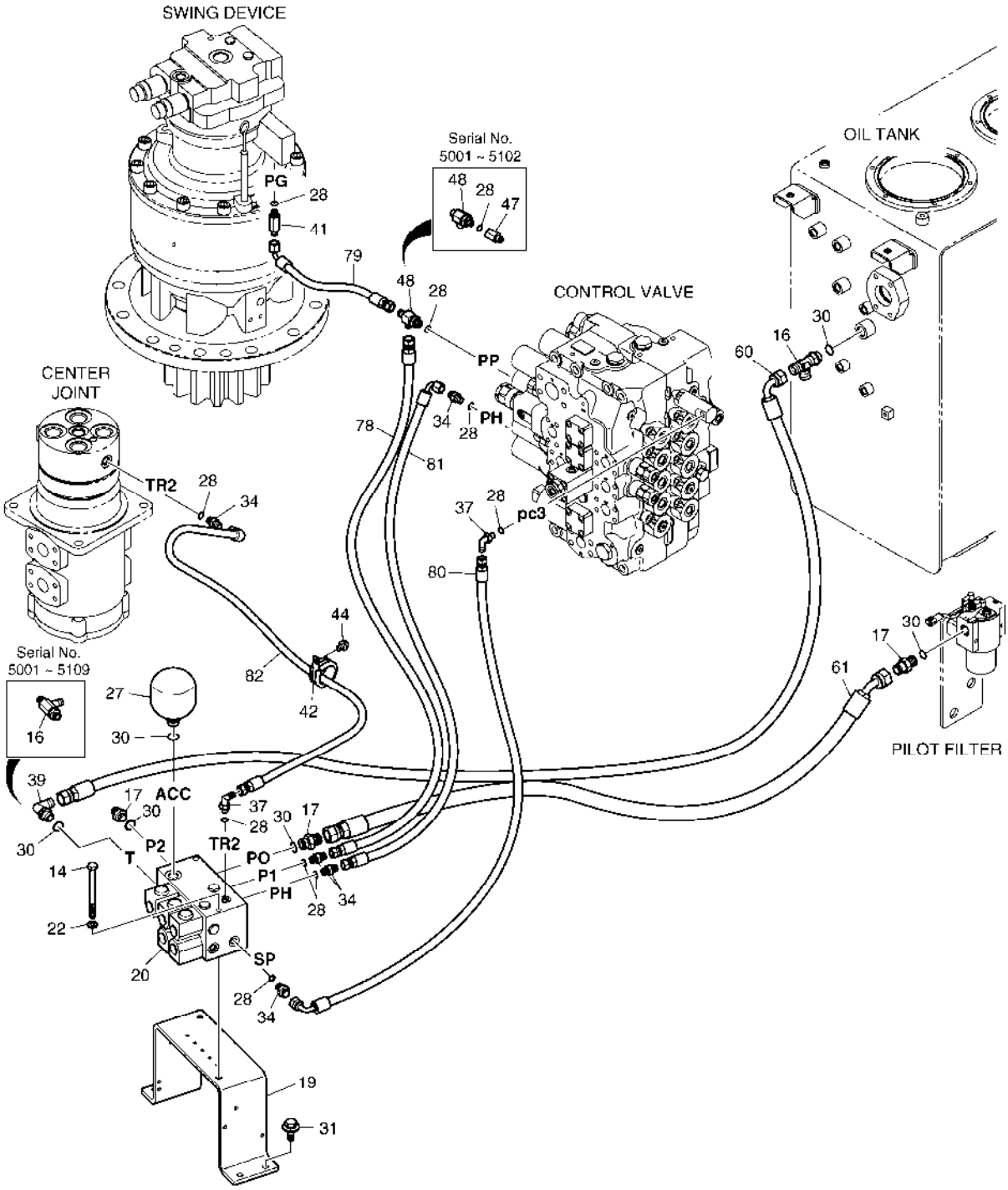

DATE	AUG. 28, 2009
3rd EDITION	

Fig. 1290 PILOT PIPING(2) CONDUITES DE PILOTE

Serial No. ;

Key No.	Part No.	Description	Description	Q'ty	S.C	Serial No.	ICA	Replaceable part	
								Part No.	Q'ty
1290 --	K1009807J	PILOT PIPING(1)	CIRCUIT DE PILOTE	-	D				
14	S0560066	BOLT	BOULON A 6 PANS	2					
16	2181-1951D5	TEE	TE	2		5001-5109			
19	K1013608	BRACKET	SUPPORT	1					
17	2181-1126D6	ADAPTER	ADAPTEUR	3					
20	K1012576	VALVE;SOLENOID	VANNE SOLENOIDE	1					
22	S5102603	WASHER	RONDELLE ELASTIQUE	2					
27	2460-9057A	ACCUMULATOR	RESERVOIR	1					
28	S8000111	O-RING	JOINT TORIQUE	10		5001-5102			
	S8000111	O-RING	JOINT TORIQUE	9		5103-			
30	S8000181	O-RING	JOINT TORIQUE	6					
31	DS0025016	BOLT;SET	BOULON A 6 PANS	4					
34	2181-1126D14	ADAPTER	ADAPTEUR	5					
37	2181-1702D4	ELBOW(1/4)	COUDE	2					
39	2181-1702D2	ELBOW	COUDE	2		5110-			
41	2181-1126D34	ADAPTER	ADAPTEUR	1					
42	124-00208D7	CLIP	AGRAFE	1					
44	K1001029	BOLT	BOULON A 6 PANS	1					
47	471-00118	FILTER;REDUCER	FILTRE	1		5001-5102			
48	2181-1951D1	TEE	TE	1		5001-5102			
	K1038032	TEE	TE	1		5103-			
60	DS2055825	HOSE	TUYAU FLEXIBLE	1					
61	DS2054355	HOSE	TUYAU FLEXIBLE	1					
78	DS2094041	HOSE	TUYAU FLEXIBLE	1		5001-5107			
	DS2094032	HOSE	TUYAU FLEXIBLE	1		5108-			
79	DS2093254	HOSE	TUYAU FLEXIBLE	1		5001-5102			
	DS2093035	HOSE	TUYAU FLEXIBLE	1		5103-			
80	DS2093346	HOSE	TUYAU FLEXIBLE	1					
81	DS2093249	HOSE	TUYAU FLEXIBLE	1					
82	DS2093101	HOSE	TUYAU FLEXIBLE	1					

DATE	AUG. 28, 2009
3rd EDITION	

Fig. 1300 PILOT PIPING(3) CONDUITES DE PILOTE

Serial No. ;

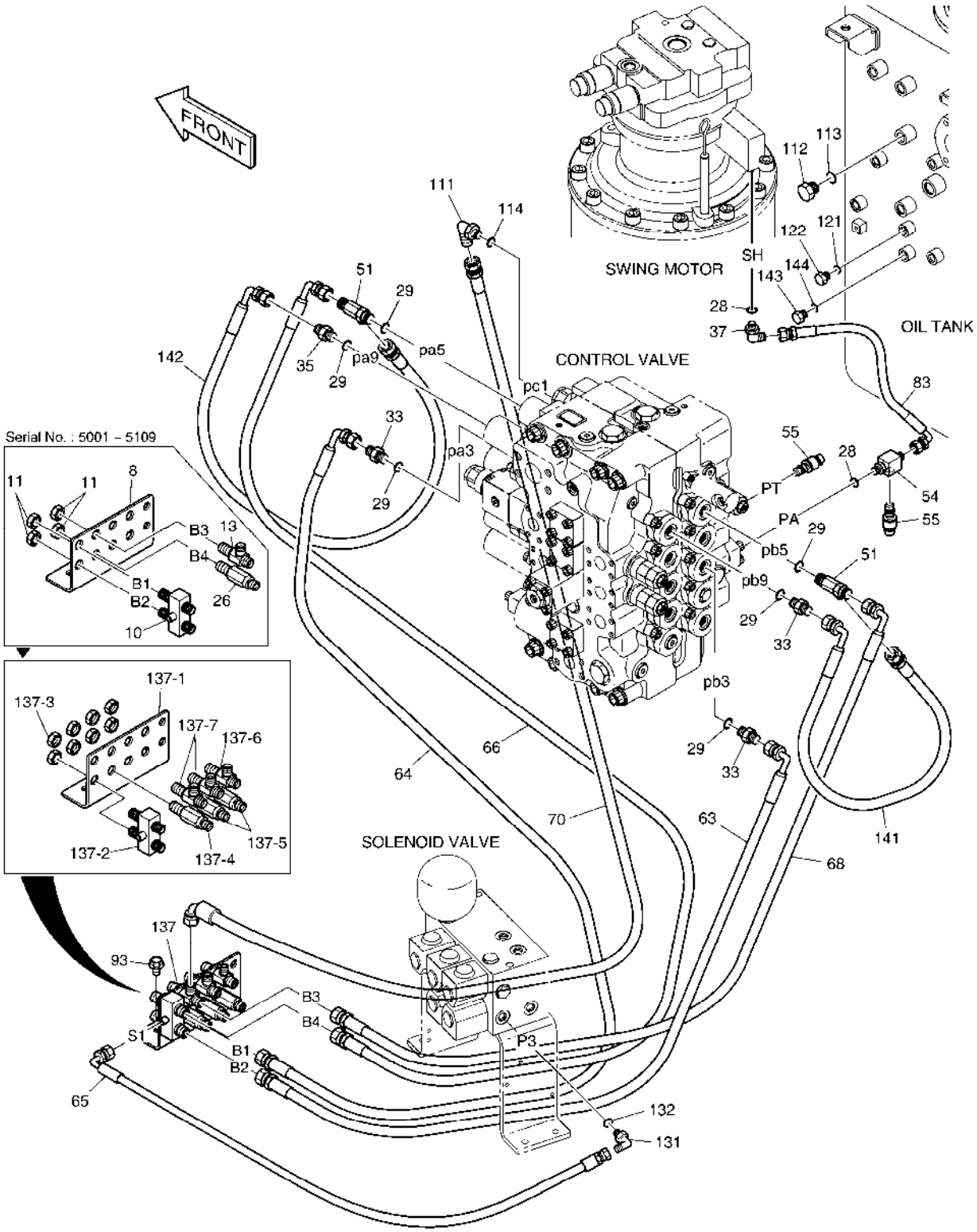

DATE	AUG. 28, 2009
3rd EDITION	

Fig. 1300 PILOT PIPING(3) CONDUITES DE PILOTE

Serial No. ;

Key No.	Part No.	Description	Description	Q'ty	S.C	Serial No.	ICA	Replaceable part	
								Part No.	Q'ty
1300 --	K1009807G	PILOT PIPING(1)	CIRCUIT DE PILOTE	-	D				
8	K1000354	BRACKET;JOINT	SUPPORT	1		5001-5109			
10	420-00307	VALVE;SHUTTLE	VANNE	1		5001-5109			
11	121-00010D1	NUT	ECROU	4		5001-5109			
13	181-00086D2	TEE	TE	1		5001-5109			
26	420-00352D1	VALVE;SHOCKLESS	VANNE	1		5001-5109			
28	S8000111	O-RING	JOINT TORIQUE	3					
29	S8000141	O-RING	JOINT TORIQUE	5					
33	181-00144D5	ADAPTER	ADAPTEUR	2					
35	2181-1126D7	ADAPTER	ADAPTEUR	2					
37	2181-1702D4	ELBOW(1/4)	COUDE	1					
51	2181-1951D16	TEE	TE	2					
54	2181-2635	TEE	ADAPTEUR	1					
55	2549-9112	SWITCH;PRESSURE	INTERRUPTEUR	2					
63	DS2093153	HOSE	TUYAU FLEXIBLE	1					
64	DS2093063	HOSE	TUYAU FLEXIBLE	1					
65	DS2093200	HOSE	TUYAU FLEXIBLE	1					
66	DS2093242	HOSE	TUYAU FLEXIBLE	1					
68	DS2093152	HOSE	TUYAU FLEXIBLE	1					
70	DS2093225	HOSE	TUYAU FLEXIBLE	1					
83	DS2093102	HOSE	TUYAU FLEXIBLE	1					
93	DS0025017	BOLT;SET	BOULON A 6 PANS	2					
111	2181-1702D3	ELBOW	COUDE	1					
112	2181-1950D2	PLUG	BOUCHON	1					
113	S8000141	O-RING	JOINT TORIQUE	1					
114	S8000111	O-RING	JOINT TORIQUE	1					
121	S8000111	O-RING	JOINT TORIQUE	1					
122	2181-1950D1	PLUG	BOUCHON	1					
131	2181-1702D4	ELBOW(1/4)	COUDE	1					
132	S8000111	O-RING	JOINT TORIQUE	1					
137	K1038028	JOINT PLATE SUB ASS`Y	SOUS-MARIN COMMUN AS	1		5110-			
137-1	K1000354	. BRACKET;JOINT	. SUPPORT	1		5110-			
137-2	420-00307	. VALVE;SHUTTLE	. VANNE	1		5110-			
137-3	121-00010D1	. NUT	. ECROU	8		5110-			
137-4	420-00352D1	. VALVE;SHOCKLESS	. VANNE	1		5110-			
137-5	DS2410009	. ADAPTER	. ADAPTEUR	2		5110-			
137-6	181-00086D1	. TEE	. TE	1		5110-			
137-7	181-00086D2	. TEE	. TE	2		5110-			

DATE	AUG. 28, 2009
3rd EDITION	

Fig. 1300 PILOT PIPING(3) CONDUITES DE PILOTE

Serial No. ;

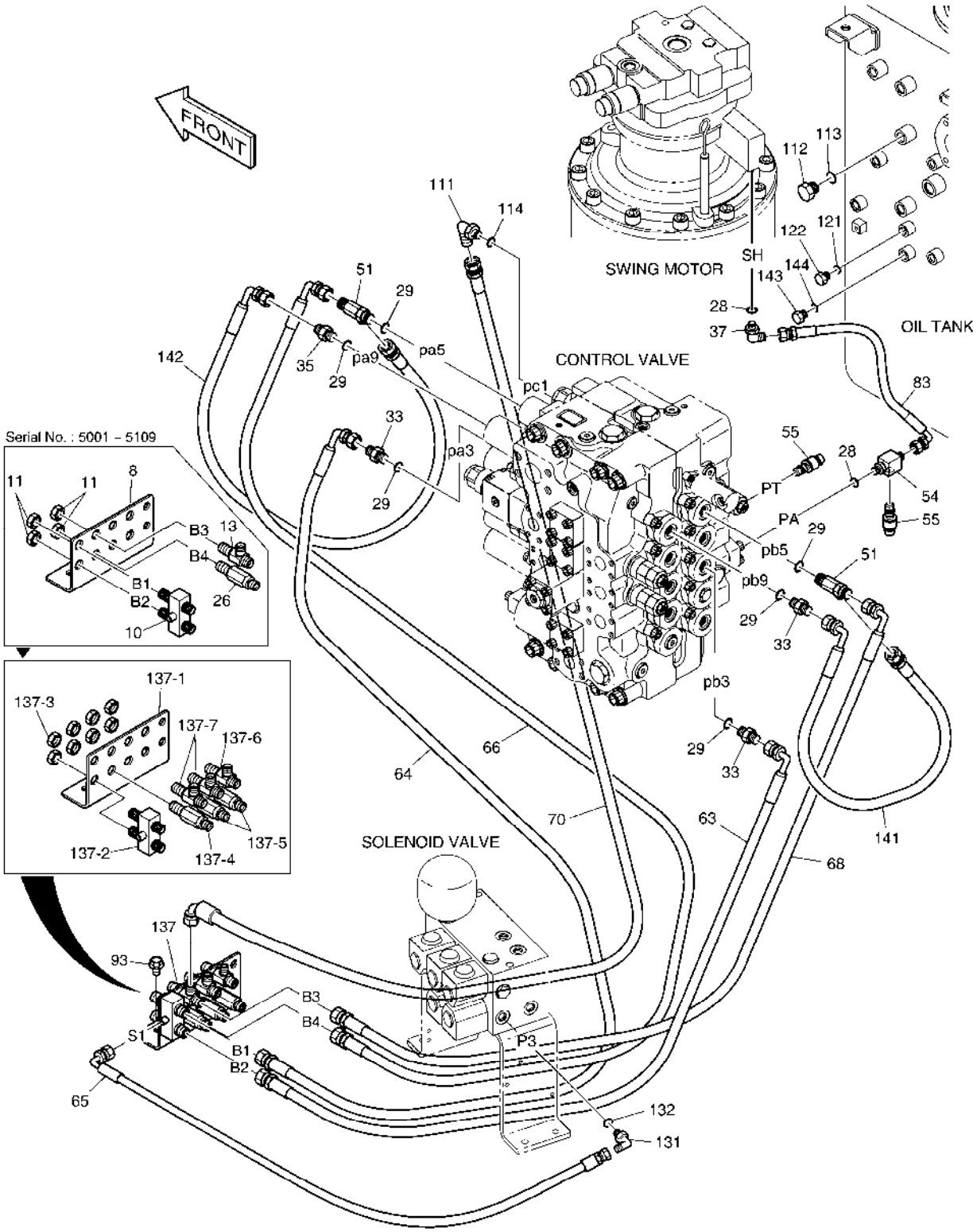

DATE	AUG. 28, 2009
3rd EDITION	

Fig. 1300 PILOT PIPING(3) CONDUITES DE PILOTE

Serial No. ;

Key No.	Part No.	Description	Description	Q'ty	S.C	Serial No.	ICA	Replaceable part	
								Part No.	Q'ty
1300 -141	DS2093029	HOSE	TUYAU FLEXIBLE	1					
142	DS2093029	HOSE	TUYAU FLEXIBLE	1					
143	2181-1950D1	PLUG	BOUCHON	1		5108-			
144	S8000111	O-RING	JOINT TORIQUE	1		5108-			

DATE	AUG. 28, 2009
3rd EDITION	

Fig. 1310 PILOT PIPING(4) CONDUITES DE PILOTE

Serial No. ;

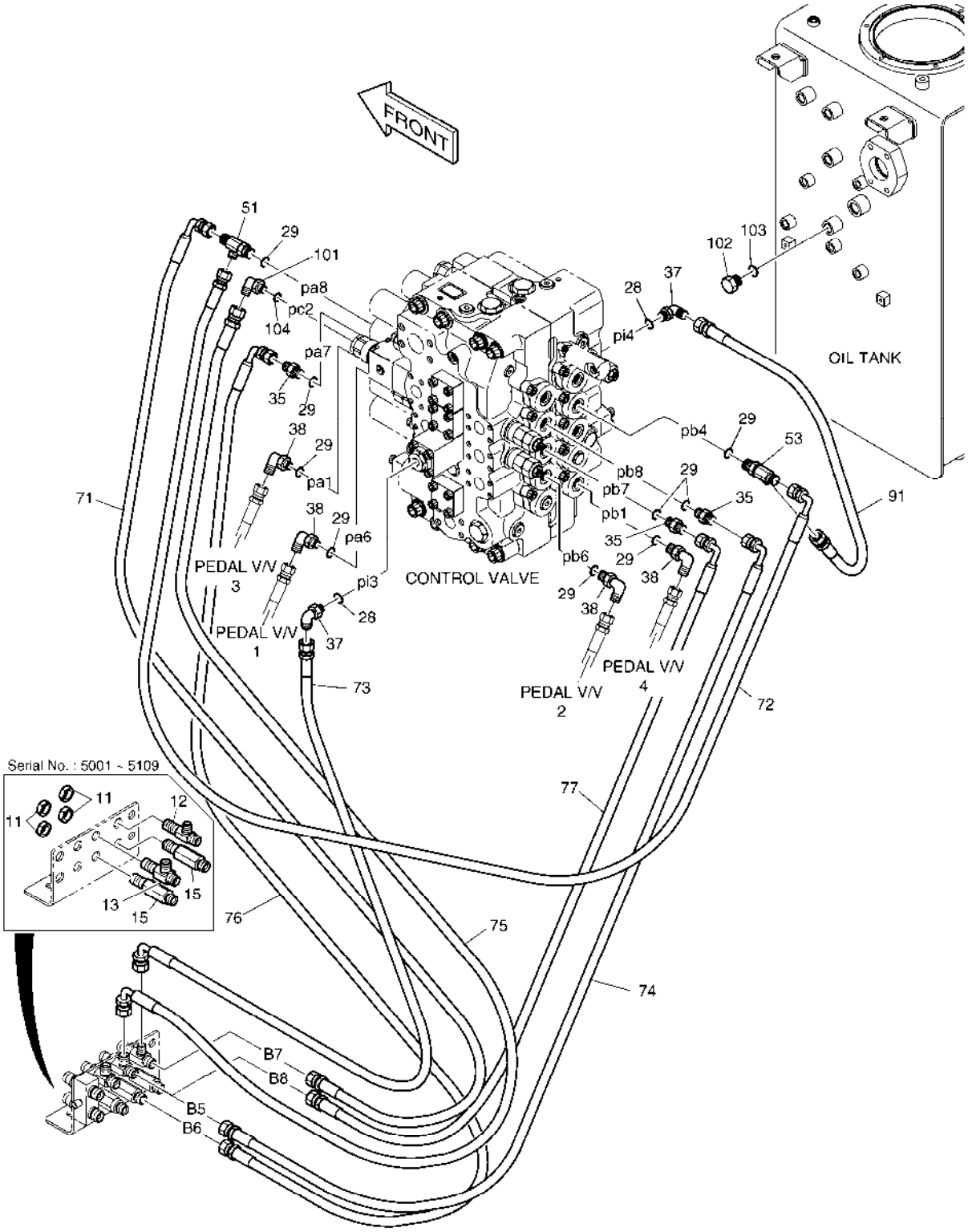

DATE	AUG. 28, 2009
3rd EDITION	

Fig. 1310 PILOT PIPING(4) CONDUITES DE PILOTE

Serial No. ;

Key No.	Part No.	Description	Description	Q'ty	S.C	Serial No.	ICA	Replaceable part	
								Part No.	Q'ty
1310 --	K1009807G	PILOT PIPING(1)	CIRCUIT DE PILOTE	-	D				
11	121-00010D1	NUT	ECROU	4		5001-5109			
12	181-00086D1	TEE	TE	1		5001-5109			
13	181-00086D2	TEE	TE	1		5001-5109			
15	DS2410009	ADAPTER	ADAPTEUR	2		5001-5109			
28	S8000111	O-RING	JOINT TORIQUE	2					
29	S8000141	O-RING	JOINT TORIQUE	9					
35	2181-1126D7	ADAPTER	ADAPTEUR	3					
37	2181-1702D4	ELBOW(1/4)	COUDE	2					
38	2181-1702D10	ELBOW	COUDE	4					
51	2181-1951D16	TEE	TE	1					
53	2181-1951D11	TEE	TE	1					
71	DS2093243	HOSE	TUYAU FLEXIBLE	1					
72	DS2093327	HOSE	TUYAU FLEXIBLE	1					
73	DS2093058	HOSE	TUYAU FLEXIBLE	1					
74	DS2093243	HOSE	TUYAU FLEXIBLE	1					
75	DS2093246	HOSE	TUYAU FLEXIBLE	1					
76	DS2093247	HOSE	TUYAU FLEXIBLE	1					
77	DS2093003	HOSE	TUYAU FLEXIBLE	1					
91	DS2094010	HOSE	TUYAU FLEXIBLE	1					
101	2181-1702D3	ELBOW	COUDE	1					
102	2181-1950D2	PLUG	BOUCHON	1					
103	S8000141	O-RING	JOINT TORIQUE	1					
104	S8000111	O-RING	JOINT TORIQUE	1					

DATE	AUG. 28, 2009
3rd EDITION	

Fig. 1320 PILOT PIPING(5) CONDUITES DE PILOTE

Serial No. ;

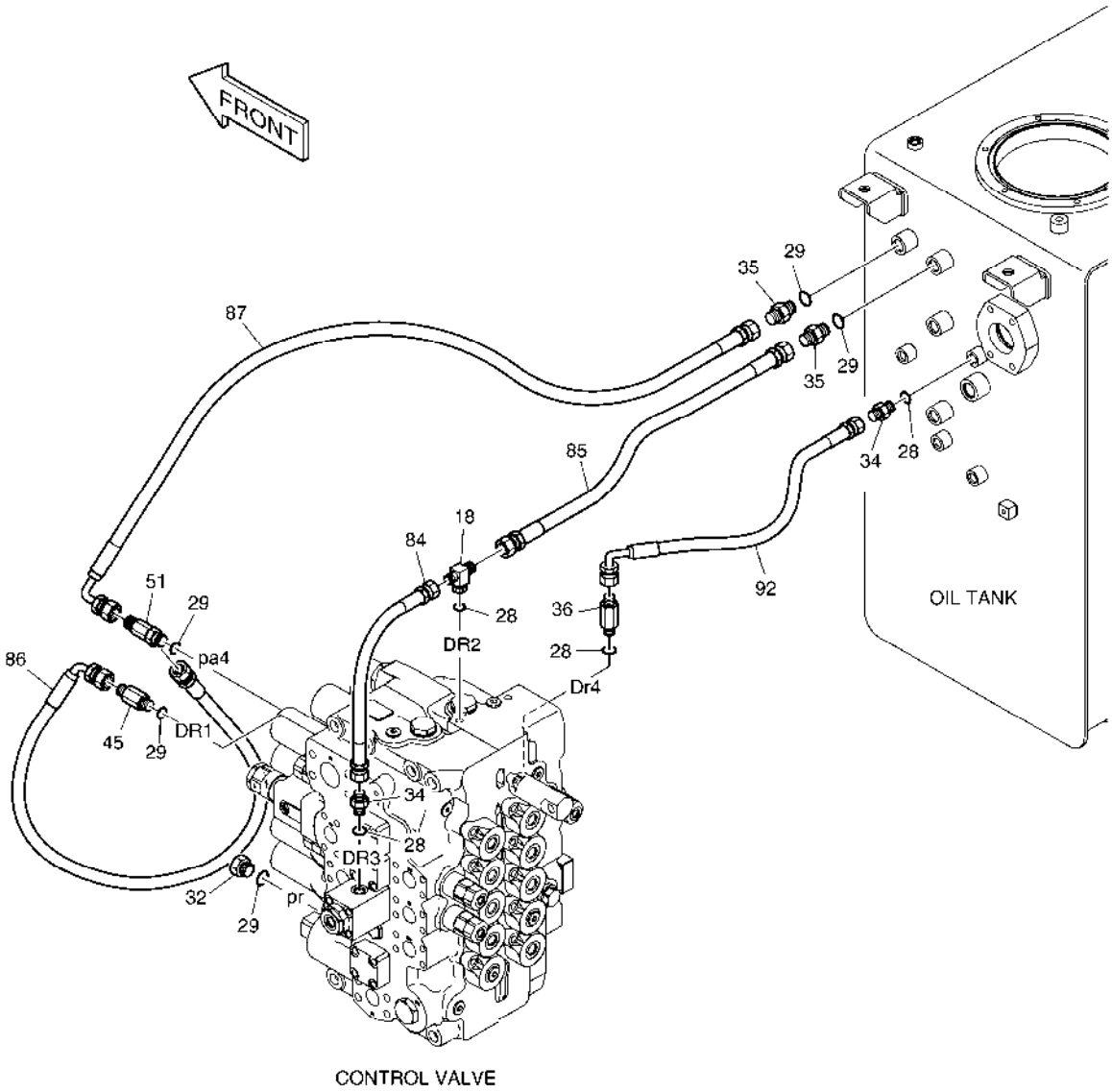

DATE	AUG. 28, 2009
3rd EDITION	

Fig. 1320 PILOT PIPING(5) CONDUITES DE PILOTE

Serial No. ;

Key No.	Part No.	Description	Description	Q'ty	S.C	Serial No.	ICA	Replaceable part	
								Part No.	Q'ty
1320 --	K1009807E	PILOT PIPING(1)	CIRCUIT DE PILOTE	-	D				
18	DS2347033	TEE	TE	1					
28	S8000111	O-RING	JOINT TORIQUE	4					
29	S8000141	O-RING	JOINT TORIQUE	5					
32	2181-1950D2	PLUG	BOUCHON	1					
34	2181-1126D14	ADAPTER	ADAPTEUR	2					
35	2181-1126D7	ADAPTER	ADAPTEUR	2					
36	2181-1126D75	ADAPTER	ADAPTEUR	1					
45	2181-1126D27	ADAPTER	ADAPTEUR	1					
51	2181-1951D16	TEE	TE	1					
84	DS2094048	HOSE	TUYAU FLEXIBLE	1					
85	DS2094088	HOSE	TUYAU FLEXIBLE	1					
86	DS2093029	HOSE	TUYAU FLEXIBLE	1					
87	DS2093250	HOSE	TUYAU FLEXIBLE	1					
92	DS2093251	HOSE	TUYAU FLEXIBLE	1					

DATE	AUG. 28, 2009
3rd EDITION	

Fig. 1330 PILOT PIPING(6) CONDUITES DE PILOTE

Serial No. ;

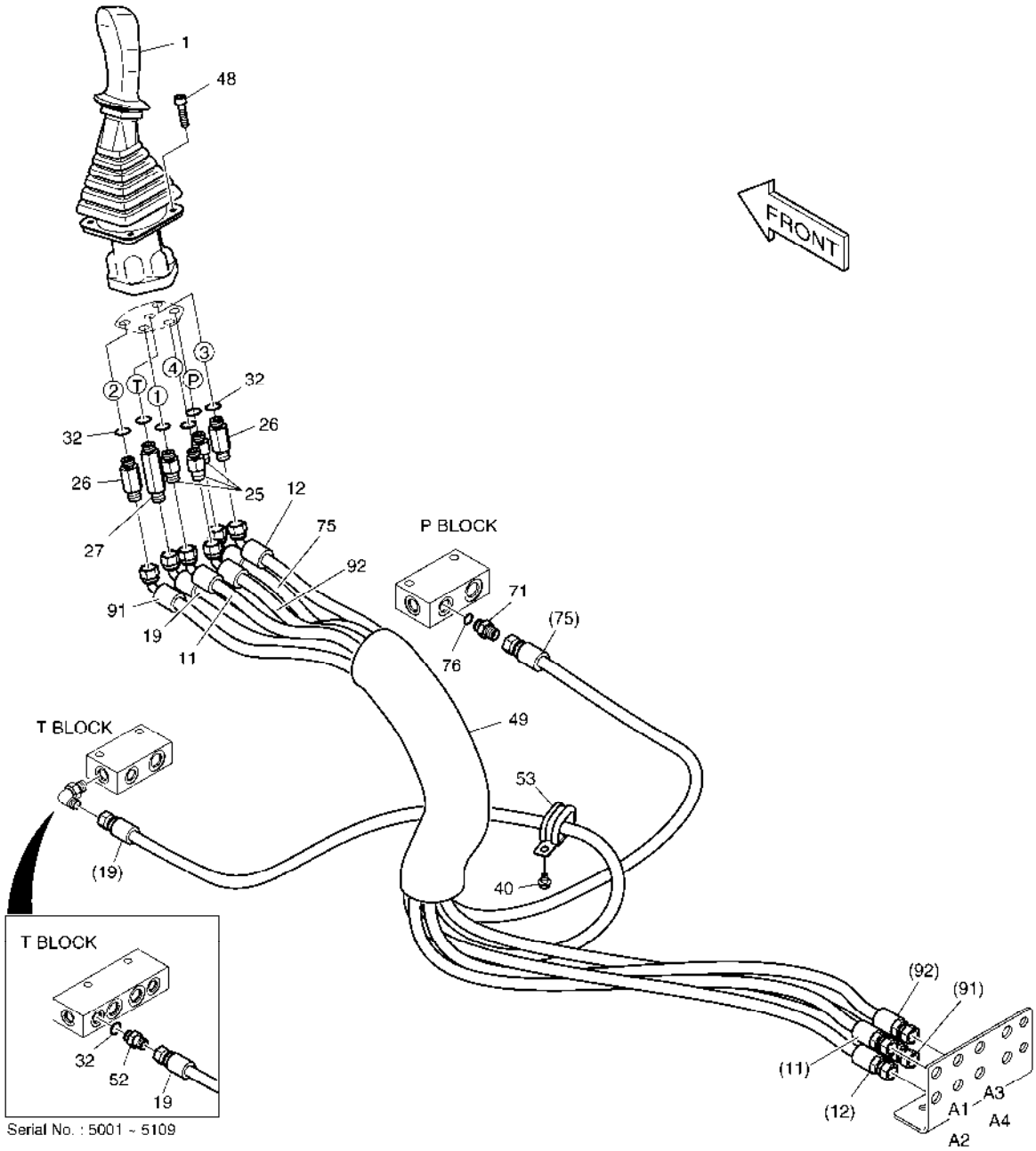

DATE	AUG. 28, 2009
3rd EDITION	

Fig. 1330 PILOT PIPING(6) CONDUITES DE PILOTE

Serial No. ;

Key No.	Part No.	Description	Description	Q'ty	S.C	Serial No.	ICA	Replaceable part	
								Part No.	Q'ty
1330 --	K1009824E	PILOT PIPING	CIRCUIT DE PILOTE	-	D				
1	K1000556G	VALVE;REMOCON(L.H)	MANETTE DE CONTROLE	1		5001-5109	I	K1000556H	1
	K1000556H	REMOTE CONTROL VALVE(L.H)	MANETTE DE CONTROLE	1		5110-			
11	DS2095001	HOSE	TUYAU FLEXIBLE	1					
12	DS2095001	HOSE	TUYAU FLEXIBLE	1					
19	DS2095004	HOSE	TUYAU FLEXIBLE	1					
25	DS2213165	ADAPTER	ADAPTEUR	3					
26	2181-1126D27	ADAPTER	ADAPTEUR	2					
27	2181-1126D28	ADAPTER	ADAPTEUR	1					
32	S8000141	O-RING	JOINT TORIQUE	7		5001-5109			
	S8000141	O-RING	JOINT TORIQUE	6		5110-			
40	K1001029	BOLT	BOULON A 6 PANS	1					
48	S2204866	BOLT;SOCKET	BOULON A 6 PANS CREUX	4					
49	K1003945	PROTECTOR	PROTECTEUR	1					
52	2181-1126D7	ADAPTER	ADAPTEUR	1		5001-5109			
53	124-00209D8	CLIP	AGRAFE	1					
71	2181-1126D7	ADAPTER	ADAPTEUR	1					
75	DS2095003	HOSE	TUYAU FLEXIBLE	1					
76	S8000141	O-RING	JOINT TORIQUE	1					
91	DS2095001	HOSE	TUYAU FLEXIBLE	1					
92	DS2095001	HOSE	TUYAU FLEXIBLE	1					

DATE	AUG. 28, 2009
3rd EDITION	

Fig. 1340 PILOT PIPING(7) CONDUITES DE PILOTE

Serial No. ;

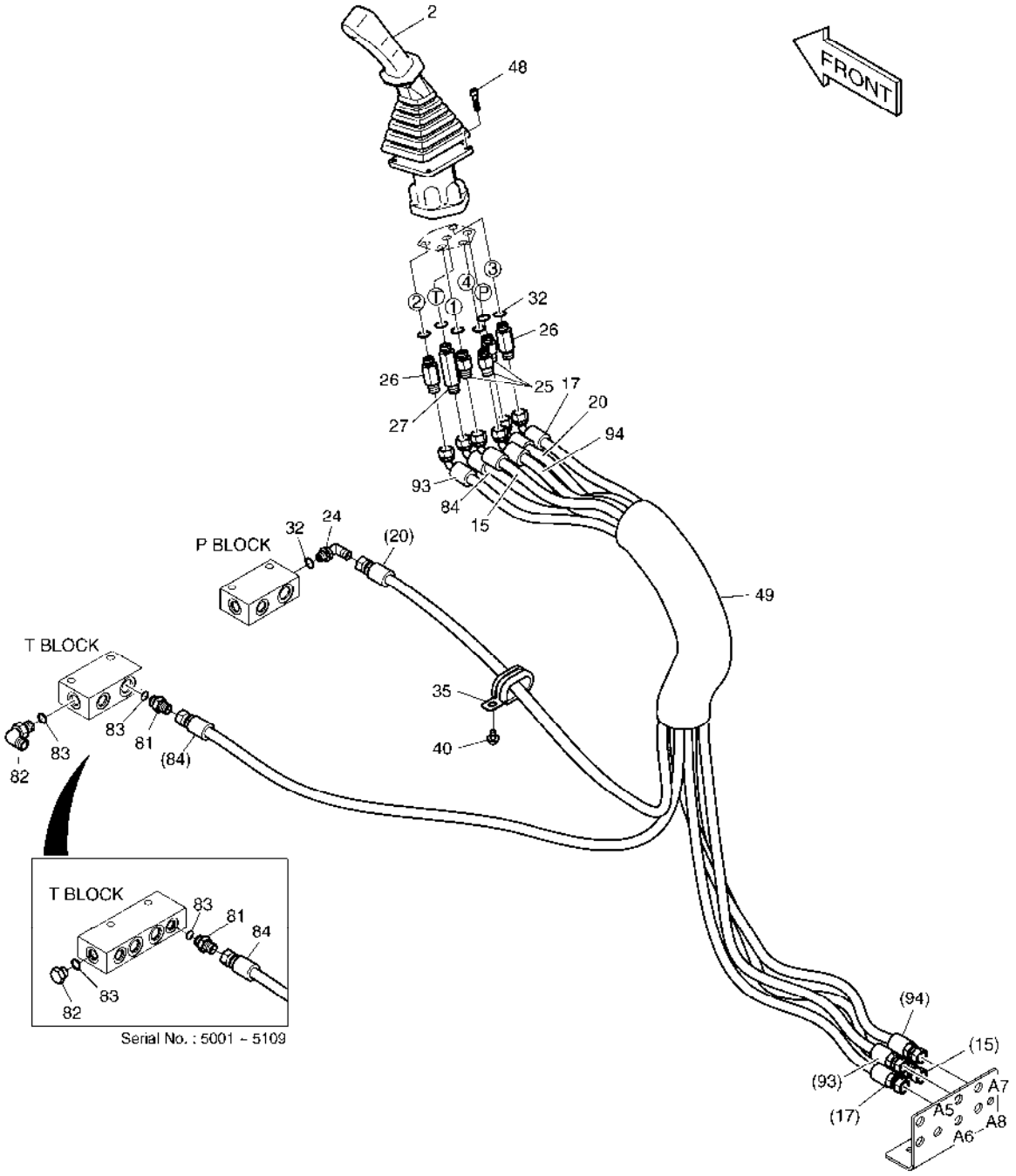

DATE	AUG. 28, 2009
3rd EDITION	

Fig. 1340 PILOT PIPING(7) CONDUITES DE PILOTE

Serial No. ;

Key No.	Part No.	Description	Description	Q'ty	S.C	Serial No.	ICA	Replaceable part	
								Part No.	Q'ty
1340 --	K1009824C	PILOT PIPING	CIRCUIT DE PILOTE	-	D				
2	K1000555G	VALVE;REMOCON(R.H)	MANETTE DE CONTROLE	1		5001-5109	I	K1000555H	1
	K1000555H	REMOTE CONTROL VALVE(R.H)	MANETTE DE CONTROLE	1		5110-			
15	DS2095001	HOSE	TUYAU FLEXIBLE	1					
17	DS2095001	HOSE	TUYAU FLEXIBLE	1					
20	DS2095002	HOSE	TUYAU FLEXIBLE	1					
24	2181-1702D5	ELBOW	COUDE	1					
25	DS2213165	ADAPTER	ADAPTEUR	3					
26	2181-1126D27	ADAPTER	ADAPTEUR	2					
27	2181-1126D28	ADAPTER	ADAPTEUR	1					
32	S8000141	O-RING	JOINT TORIQUE	8					
35	124-00209D2	CLIP	AGRAFE	1					
40	K1001029	BOLT	BOULON A 6 PANS	1					
48	S2204866	BOLT;SOCKET	BOULON A 6 PANS CREUX	4					
49	K1003945	PROTECTOR	PROTECTEUR	1					
81	2181-1126D7	ADAPTER	ADAPTEUR	1					
82	2181-1950D2	PLUG	BOUCHON	1		5001-5109			
	2181-1702D5	ELBOW	COUDE	1		5110-			
83	S8000141	O-RING	JOINT TORIQUE	2					
84	DS2095003	HOSE	TUYAU FLEXIBLE	1					
93	DS2095001	HOSE	TUYAU FLEXIBLE	1					
94	DS2095001	HOSE	TUYAU FLEXIBLE	1					

DATE	AUG. 28, 2009
3rd EDITION	

Fig. 1350 PILOT PIPING(8) CONDUITES DE PILOTE

Serial No. ;

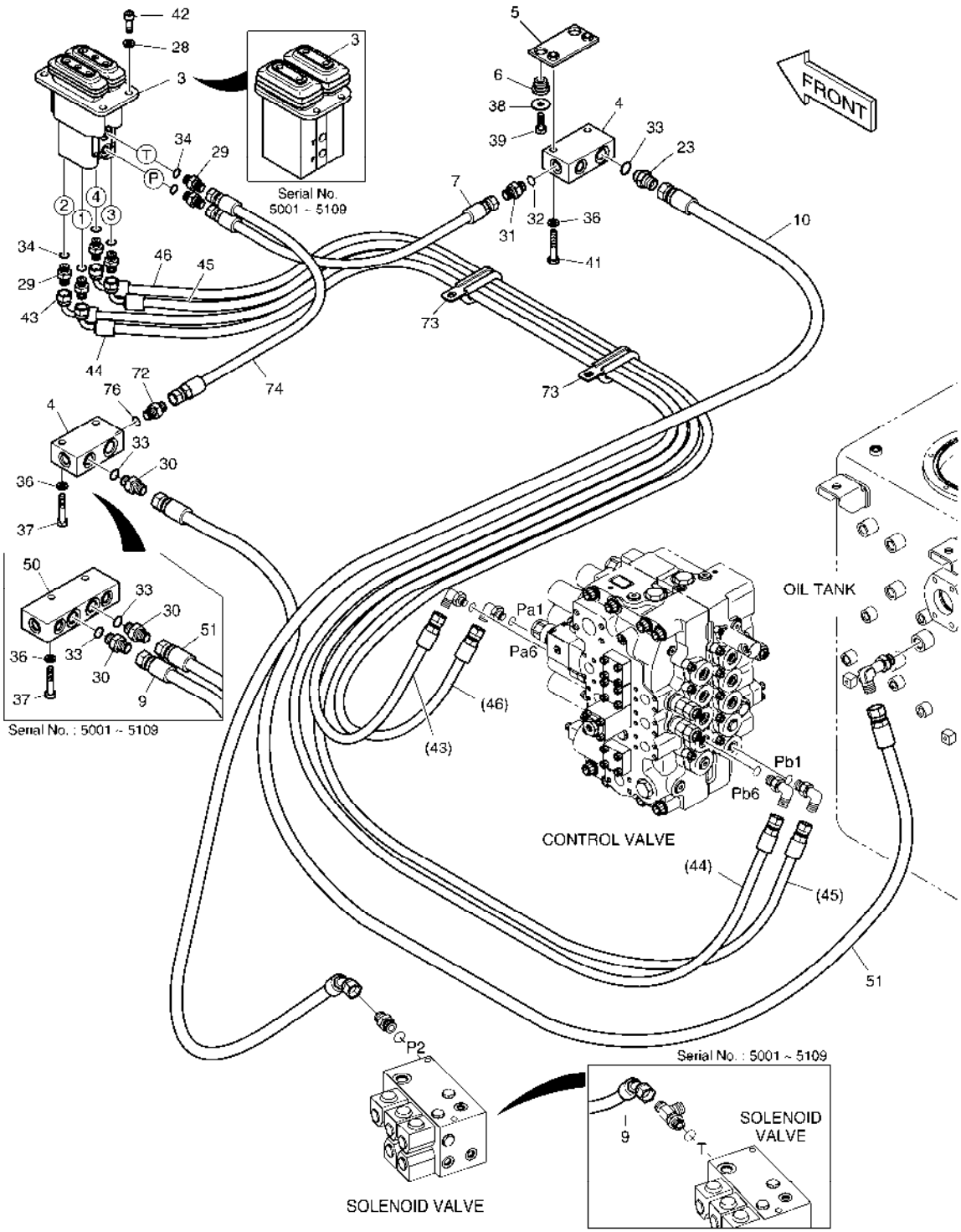

DATE	AUG. 28, 2009
3rd EDITION	

Fig. 1350 PILOT PIPING(8) CONDUITES DE PILOTE

Serial No. ;

Key No.	Part No.	Description	Description	Q'ty	S.C	Serial No.	ICA	Replaceable part	
								Part No.	Q'ty
1350 --	K1009824C	PILOT PIPING	CIRCUIT DE PILOTE	-	D				
3	420-00467	VALVE;PEDAL	VANNE	1		5001-5109			
	420-00467A	VALVE;PEDAL	VANNE	1		5110-			
4	2423-1470	BLOCK	BLOC	1		5001-5109			
	2423-1470	BLOCK	BLOC	2		5110-			
5	621-02151	PLATE	PLAQUE	1					
6	198-00016	RUBBER	CAOUTCHOUC	2					
7	DS2094006	HOSE	TUYAU FLEXIBLE	1					
9	DS2054336	HOSE	TUYAU FLEXIBLE	1		5001-5109			
10	DS2054356	HOSE	TUYAU FLEXIBLE	1					
23	2471-1135	FILTER;ADAPTER	FILTRE	1					
28	S5110603	WASHER;SPRING	RONDELLE ELASTIQUE	4					
29	2181-1126D14	ADAPTER	ADAPTEUR	6					
30	2181-1126D6	ADAPTER	ADAPTEUR	2		5001-5109			
	2181-1126D6	ADAPTER	ADAPTEUR	1		5110-			
31	2181-1126D36	ADAPTER	ADAPTEUR	1					
32	S8000141	O-RING	JOINT TORIQUE	1					
33	S8000181	O-RING	JOINT TORIQUE	3		5001-5109			
	S8000181	O-RING	JOINT TORIQUE	2		5110-			
34	S8000111	O-RING	JOINT TORIQUE	6					
36	S5102603	WASHER	RONDELLE ELASTIQUE	4					
37	S0558666	BOLT	BOULON	2					
38	2114-1058D10	WASHER	RONDELLE PLATE	2					
39	S0512266	BOLT	BOULON A 6 PANS	2					
41	S0558766	BOLT	BOULON A 6 PANS	2					
42	S2212266	BOLT;SOCKET	BOULON A 6 PANS CREUX	4					
43	DS2093282	HOSE	TUYAU FLEXIBLE	1					
44	DS2093169	HOSE	TUYAU FLEXIBLE	1					
45	DS2093282	HOSE	TUYAU FLEXIBLE	1					
46	DS2093282	HOSE	TUYAU FLEXIBLE	1					
50	K1007042	BLOCK	BLOC	1		5001-5109			
51	DS2053870	HOSE	TUYAU FLEXIBLE	1					
72	2181-1126D36	ADAPTER	ADAPTEUR	1					
73	124-00209D3	CLIP	ATTACHE	2					
74	DS2094006	HOSE	TUYAU FLEXIBLE	1					
76	S8000141	O-RING	JOINT TORIQUE	1					

DATE	AUG. 28, 2009
3rd EDITION	

Fig. 1360 CONTROL STAND - L.H.
CONSOLE DE COMMANDE

Serial No. ;

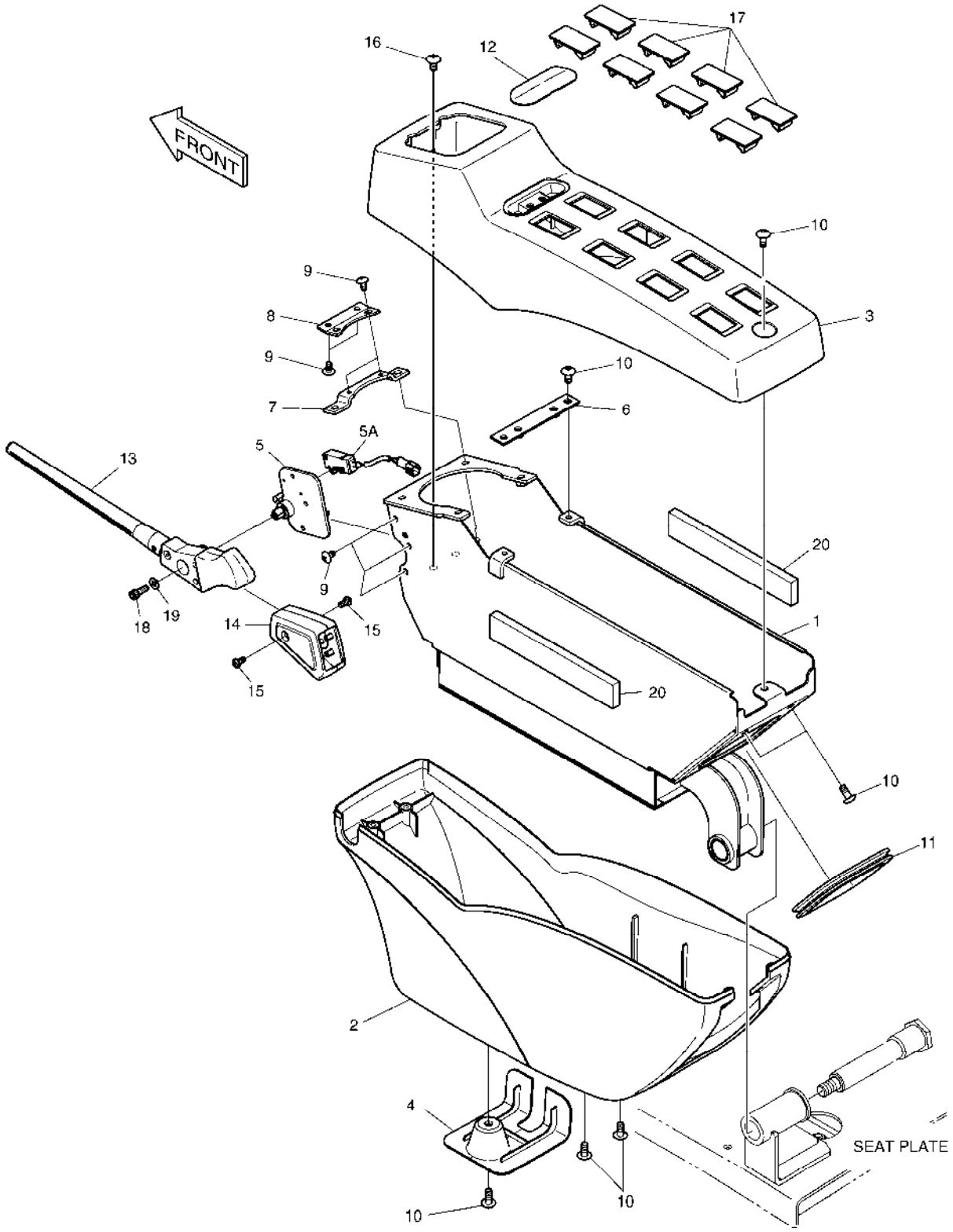

DATE	AUG. 28, 2009
3rd EDITION	

Fig. 1360 CONTROL STAND - L.H. CONSOLE DE COMMANDE

Serial No. ;

Key No.	Part No.	Description	Description	Q'ty	S.C	Serial No.	ICA	Replaceable part Part No.	Q'ty
1360 --	K1002202H	CONTROL STAND L.H.	PANNEAU	-	D				
1	195-02753C	BRACKET;STAND LH	SUPPORT	1					
2	621-02901B	COVER;STAND LH LOWER	COUVERCLE	1					
3	621-03012E	COVER;STAND LH UPPER	COUVERCLE	1		5001-5086			
	621-03012G	COVER;STAND LH UPPER	COUVERCLE	1		5087-			
4	621-03014B	COVER;STAND LOW	COUVERCLE	1					
5	195-02868C	BRACKET;SAFETY	SUPPORT	1					
5A	549-00089	. SWITCH;MICRO	. INTERRUPTEUR	1					
6	621-02957A	PLATE;STAND MOUNT	PLAQUE	1		5001-5107	I	621-02957B	1
	621-02957B	PLATE;STAND MOUNT	PLAQUE	1		5108-			
7	159-00290A	PLATE	PLAQUE	1		5001-5107	I	159-00290B	1
	159-00290B	PLATE	PLAQUE	1		5108-			
8	159-00287A	PLATE;COVER MOUNT	PLAQUE	1		5001-5107	I	159-00287B	1
	159-00287B	PLATE;COVER MOUNT	PLAQUE	1		5108-			
9	2120-2166D53	SCREW	VIS	7					
10	2120-2166D10	SCREW M6X1.0X14	VIS	10					
11	K1001023	STRIP;WEATHER	TAMPON	1					
12	621-03733B	COVER	COUVERCLE	1		5001-5086			
	621-03733C	COVER	COUVERCLE	1		5087-			
13	K1000840	LEVER	LEVIER	1		5001-5107	I	K1000840A	1
	K1000840A	LEVER	LEVIER	1		5108-			
14	K1000842A	COVER	COUVERCLE	1					
15	S3450823	SCREW	VIS	2					
16	2120-2166D52	BOLT	VIS	2					
17	621-02801	COVER;SWITCH	COUVERCLE	8					
18	S2202966	BOLT;SOCKET	BOULON DE PLOT	1					
19	2114-1898D4	WASHER	RONDELLE	1					
20	K1010466	FOAM	EPONGE	2					

DATE	AUG. 28, 2009
3rd EDITION	

Fig. 1370 CONTROL STAND - R.H.
CONSOLE DE COMMANDE

Serial No. ;

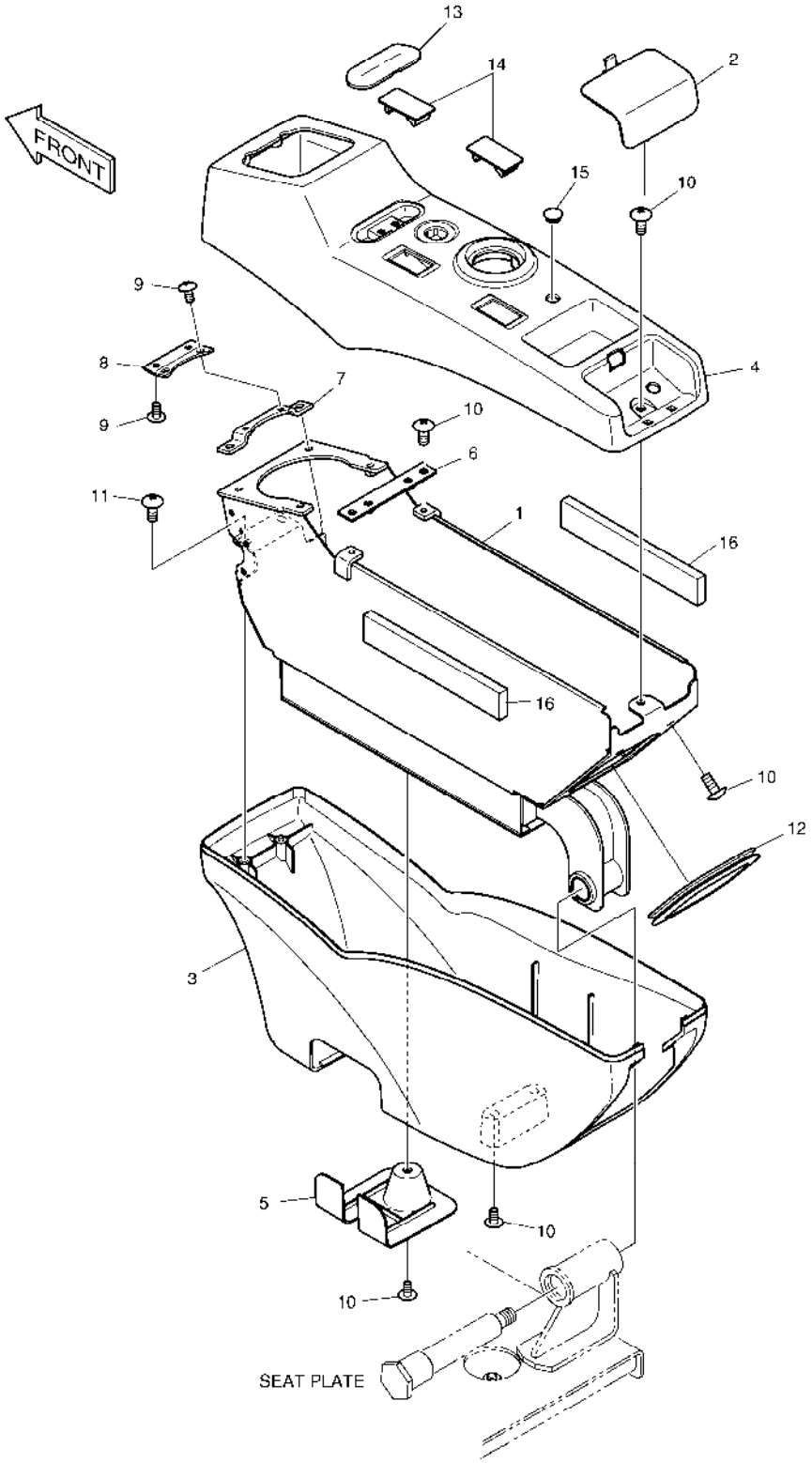

DATE	AUG. 28, 2009
3rd EDITION	

Fig. 1370 CONTROL STAND - R.H. CONSOLE DE COMMANDE

Serial No. ;

Key No.	Part No.	Description	Description	Q'ty	S.C	Serial No.	ICA	Replaceable part	
								Part No.	Q'ty
1370 --	K1005468E	CONTROL STAND-R.H.	CONSOLE DE COMMANDE	-	D				
1	195-02755C	BRACKET;R.H.	SUPPORT	1					
2	621-02926C	COVER;SWITCH	COUVERCLE	1		5001-5086			
	621-02926E	COVER;SWITCH	COUVERCLE	1		5087-			
3	621-02900B	COVER;STAND LOWER	COUVERCLE	1					
4	K1005343B	COVER;STAND RH UPPER	COUVERCLE	1		5001-5086			
	K1005343C	COVER	COUVERCLE	1		5087-			
5	621-03014B	COVER;STAND LOW	COUVERCLE	1					
6	621-02957A	PLATE;STAND MOUNT	PLAQUE	1		5001-5107	I	621-02957B	1
	621-02957B	PLATE;STAND MOUNT	PLAQUE	1		5108-			
7	159-00290A	PLATE	PLAQUE	1		5001-5107	I	159-00290B	1
	159-00290B	PLATE	PLAQUE	1		5108-			
8	159-00287A	PLATE;COVER MOUNT	PLAQUE	1		5001-5107	I	159-00287B	1
	159-00287B	PLATE;COVER MOUNT	PLAQUE	1		5108-			
9	2120-2166D53	SCREW	VIS	4					
10	2120-2166D10	SCREW M6X1.0X14	VIS	10					
11	2120-2166D52	BOLT	VIS	2					
12	K1001023	STRIP;WEATHER	TAMPON	1					
13	621-03733B	COVER	COUVERCLE	1		5001-5086			
	621-03733C	COVER	COUVERCLE	1		5087-			
14	621-02801	COVER;SWITCH	COUVERCLE	2					
15	K1006995	CAP	CHAPEAU	1					
16	K1010466	FOAM	EPONGE	2					

DATE	AUG. 28, 2009
3rd EDITION	

Fig. 1380 SEAT SLIDING PLATE POSEZ GLISSER LE PLAT

Serial No. ;

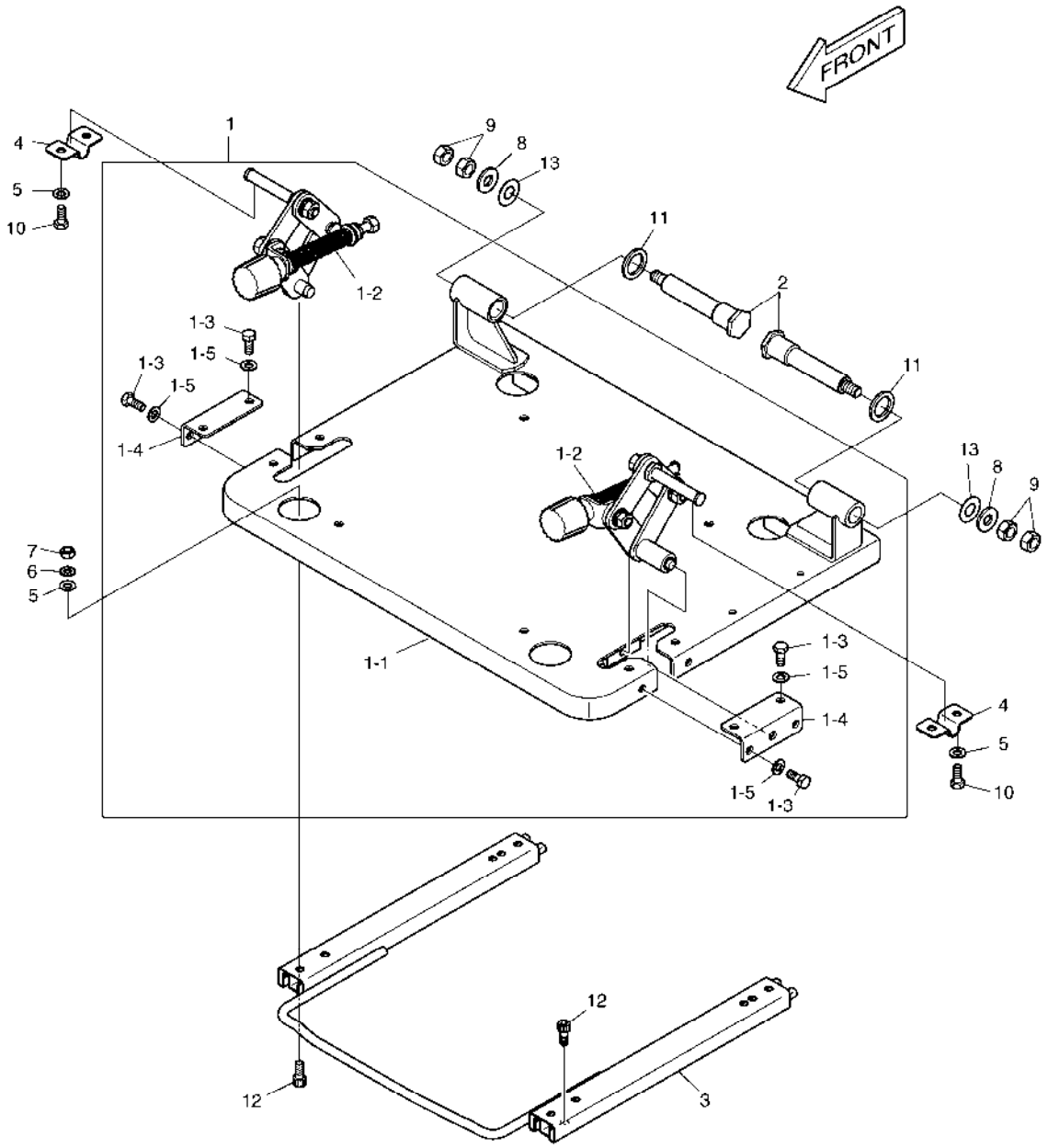

DATE	AUG. 28, 2009
3rd EDITION	

Fig. 1380 SEAT SLIDING PLATE POSEZ GLISSER LE PLAT

Serial No. ;

Key No.	Part No.	Description	Description	Q'ty	S.C	Serial No.	ICA	Replaceable part	
								Part No.	Q'ty
1380 --	K1002204C	SEAT PLATE ASS`Y	SIEGE	-	D				
1	621-03011E	SEAT PLATE ASS`Y	SIEGE	1					
1-1	621-02895C	. PLATE;SEAT MOUNT	. PLAQUE	1					
1-2	195-02904C	. STAND TILT BRACKET ASS`Y	. ENSEMBLE GODET	1					
1-3	2120-2166D5	. BOLT	. BOULON A 6 PANS	8					
1-4	621-02925A	. PLATE	. PLAQUE	2					
1-5	2114-1898D14	. WASHER;PLAIN	. RONDELLE	8					
2	123-00524B	PIN;TILT STAND	GOUJON	2					
3	K1003381	RAIL	RAIL	1		5001-5109	I	K1040096	1
	K1040096	RAIL	RAIL	1		5110-			
4	621-03005A	PLATE	PLAQUE	2					
5	2114-1898D14	WASHER;PLAIN	RONDELLE	8					
6	2114-2031D4	WASHER;SPRING	RONDELLE ELASTIQUE	4					
7	2121-1311D2	NUT	ECROU	4					
8	2114-1898D17	WASHER M12	RONDELLE	2					
9	2121-1311D1	NUT	ECROU	4					
10	2120-2166D5	BOLT	BOULON A 6 PANS	4					
11	2114-1898D18	WASHER	RONDELLE	2					
12	S2208866	BOLT;SOCKET	BOULON DE PLOT	8					
13	114-00590	WASHER	RONDELLE	2					

DATE	AUG. 28, 2009
3rd EDITION	

Fig. 1390 SEAT PLATE POSEZ LE PLAT

Serial No. ;

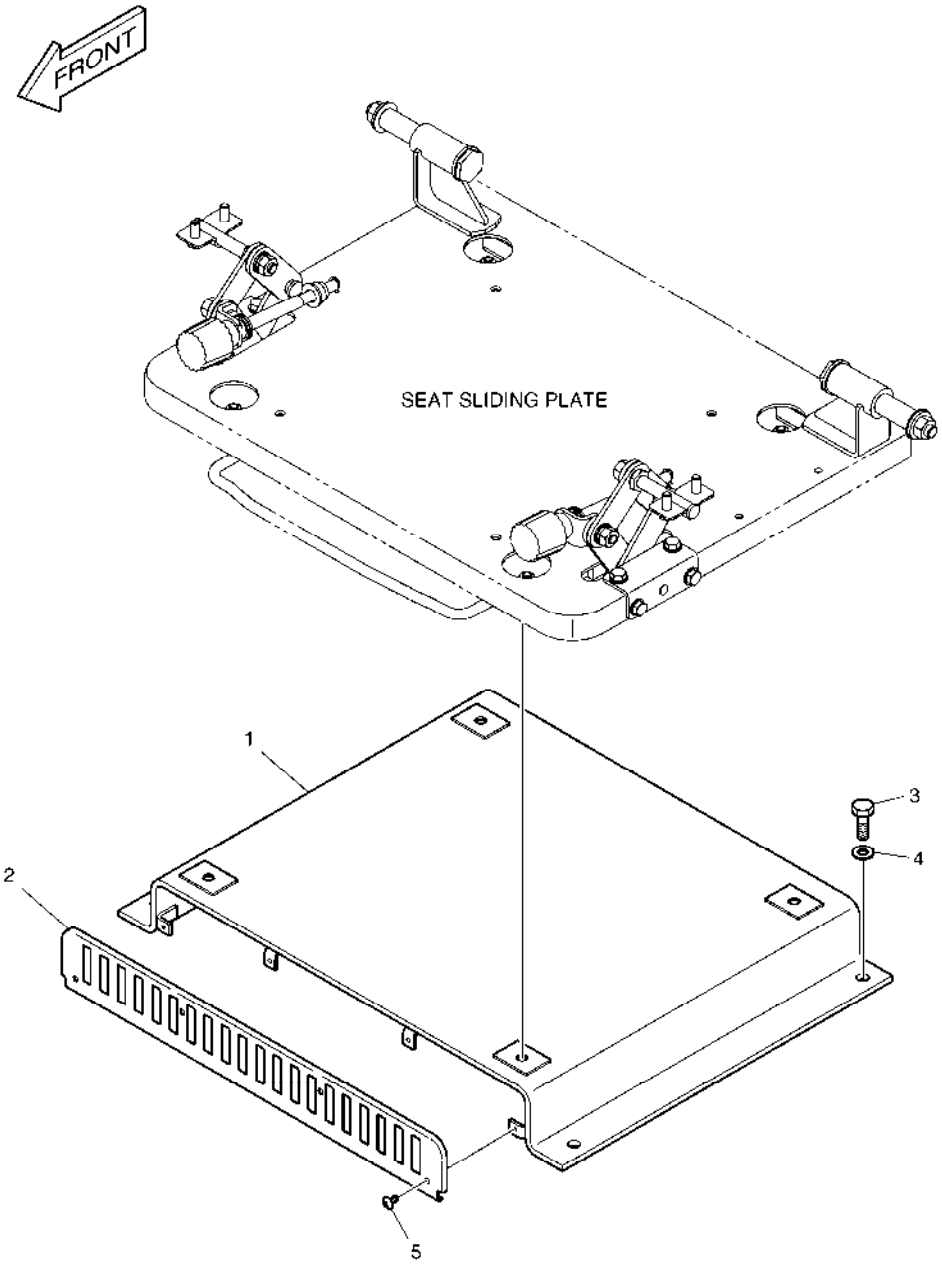

DATE	AUG. 28, 2009
3rd EDITION	

Fig. 1390 SEAT PLATE
POSEZ LE PLAT

Serial No. ;

Key No.	Part No.	Description	Description	Q'ty	S.C	Serial No.	ICA	Replaceable part	
								Part No.	Q'ty
1390 --	K1002229A	SEAT PLATE	SIEGE	-	D				
1	K1002230A	BRACKET;SEAT LOWER	SUPPORT	1					
2	K1002231A	PLATE;COVER	PLAQUE	1					
3	2120-2166D10	SCREW M6X1.0X14	VIS	4					
4	2114-1898D15	WASHER;PLAIN	RONDELLE	4					
5	2120-2166D53	SCREW	VIS	4					

DATE	AUG. 28, 2009
3rd EDITION	

Fig. 1400 SEAT MOUNTING SIEGE LE SUPPORT

Serial No. ;

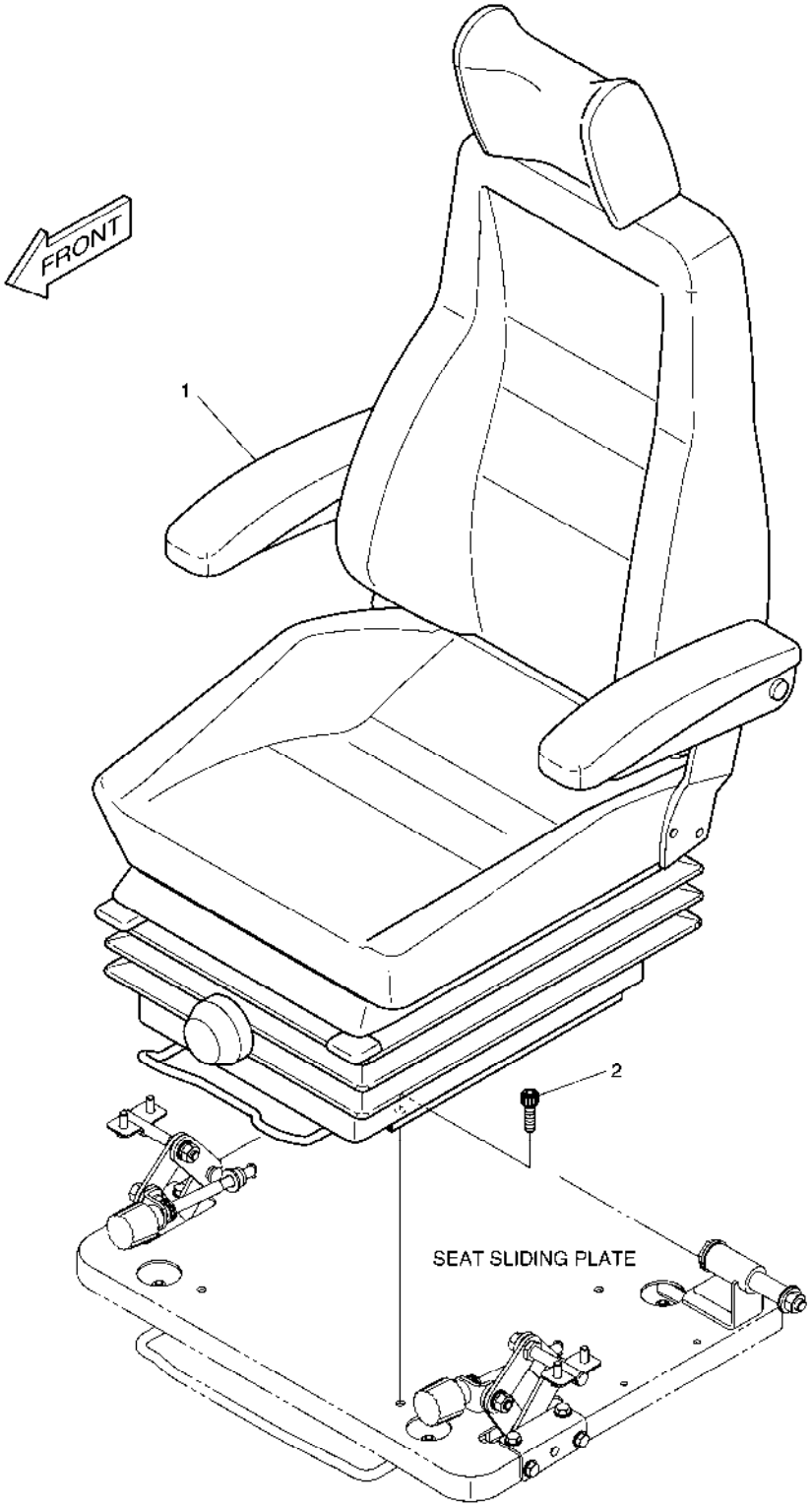

DATE	AUG. 28, 2009
3rd EDITION	

Fig. 1400 SEAT MOUNTING SIEGE LE SUPPORT

Serial No. ;

Key No.	Part No.	Description	Description	Q'ty	S.C	Serial No.	ICA	Replaceable part	
								Part No.	Q'ty
1400 --	K1002084A	SEAT MOUNTING	SIEGE	-	D				
1	901-00045	SEAT ASS`Y	SIEGE	1					
2	S2208866	BOLT;SOCKET	BOULON DE PLOT	4					

DATE	AUG. 28, 2009
3rd EDITION	

Fig. 1410 SEAT SIEGE

Serial No. ;

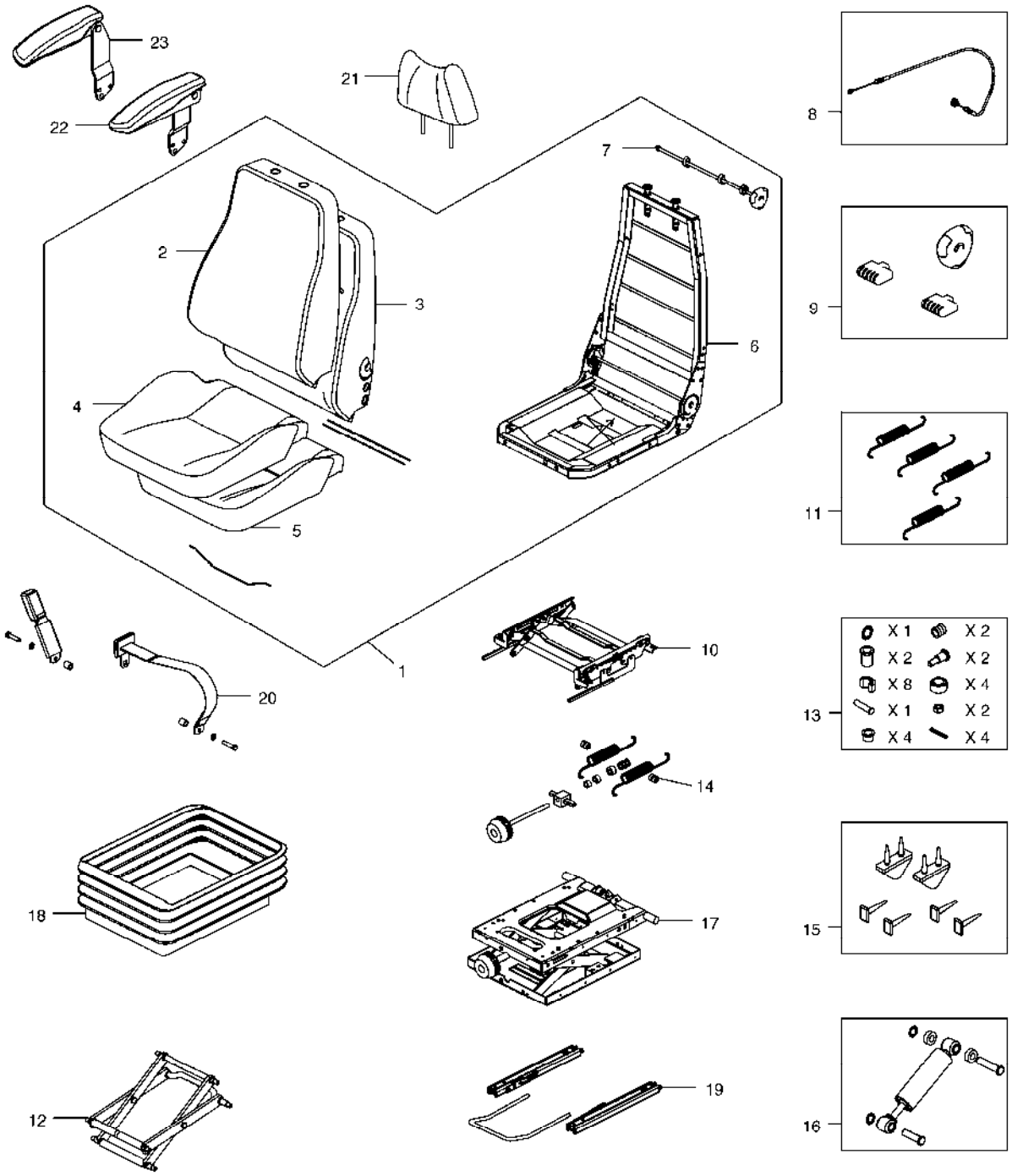

DATE	AUG. 28, 2009
3rd EDITION	

Fig. 1410 SEAT SIEGE

Serial No. ;

Key No.	Part No.	Description	Description	Q'ty	S.C	Serial No.	ICA	Replaceable part	
								Part No.	Q'ty
1410 --	901-00045	SEAT ASS`Y	SIEGE	1					
1	K9001695	UPPER ASS`Y	SUPERIEUR	1					
2	K9001201	BACK COVER	COUVERTURE ARRIERE	1					
3	K9001202	BACK FOAM	MOUSSE ARRIERE	1					
4	K9001203	SEAT COVER	SIEGE	1					
5	K9001204	SEAT FOAM	SIEGE	1					
6	-	FRAME	CHASSIS	1	D				
7	K9001206	LUMBAR KIT	KIT LOMBAIRE	1					
8	K9001207	CABLE;ADJUST	CABLE	1					
9	2.172-00003	HANDLE	POIGNEE	1					
10	K9001208	HEIGHT RISER	RECHAUFFEUR	1					
11	K9001209	HEIGHT RISER SPRING KIT	RECHAUFFEUR	1					
12	K9001210	LEVER/CENTRE PIVOT KIT	LEVIER	1					
13	K9001211	BEARING KIT	PALIER	1					
14	K9001212	WEIGHT ADJUST KIT	LE POIDS AJUSTENT LE KIT	1					
15	K9001213	UPSTOP/BUMP STOP KIT	KIT	1					
16	K9001214	DAMPER KIT	REGISTRE	1					
17	K9001215	SUSPENSION ASS`Y	SUSPENSION	1					
18	K9001216	SUSPENSION COVER	SUSPENSION	1					
19	K9001217	SLIDING RAIL ASS`Y	GLISSEMENT DU RAIL ASS	1					
20	K9001218	BELT;SEAT	COURROIE	1					
21	K9001219	HEAD REST	SIEGE	1					
22	K9001220	ARM REST-L.H	REPOSER	1					
23	K9001221	ARM REST-R.H	REPOSER	1					

DATE	AUG. 28, 2009
3rd EDITION	

Fig. 1420 DUCT COVER
CONDUITES COUVERCLE

Serial No. ;

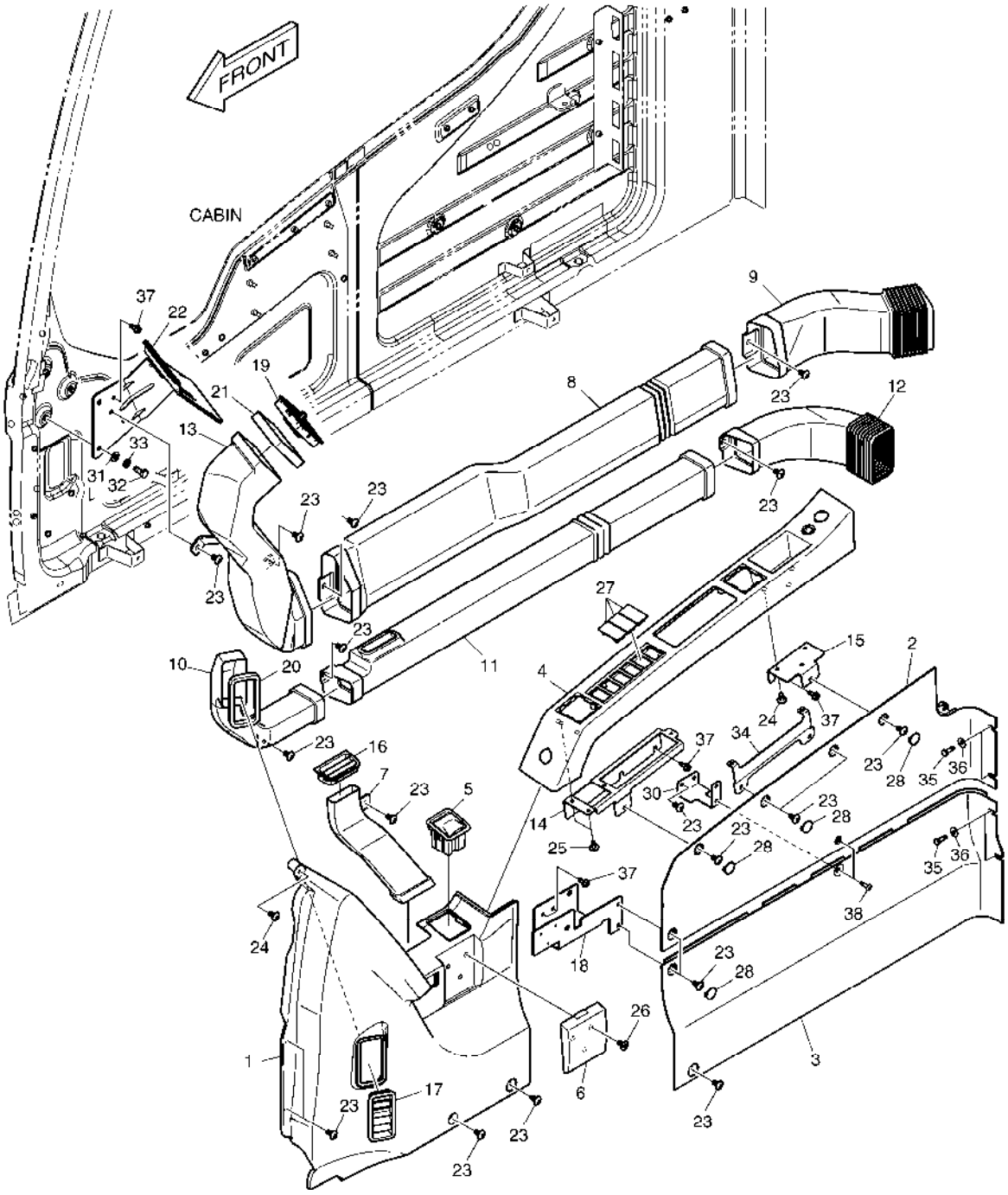

DATE	AUG. 28, 2009
3rd EDITION	

Fig. 1420 DUCT COVER CONDUITES COUVERCLE

Serial No. ;

Key No.	Part No.	Description	Description	Q'ty	S.C	Serial No.	ICA	Replaceable part Part No.	Q'ty
1420 --	621-02902J	SIDE COVER ASS`Y	COUVERCLE	-	D				
1	621-02903C	COVER;SIDE FRONT	COUVERCLE	1					
2	621-02905C	COVER;SIDE MID UPPER	COUVERCLE	1					
3	621-02904C	COVER;SIDE MID LOWER	COUVERCLE	1					
4	621-02909E	COVER;SWITCH	COUVERCLE	1		5001-5086			
	621-02909G	COVER;SWITCH	COUVERCLE	1		5087-			
5	906-00002A	ASHTRAY ASM	CENDRIER	1					
6	621-02908B	HOLDER;CUP	POSSESSEUR	1					
7	213-00035B	DUCT;DEFROSTER SIDE	COUVERCLE	1					
8	213-00030B	DUCT;FACE MID	COUVERCLE	1					
9	213-00031E	DUCT;FACE REAR	COUVERCLE	1					
10	213-00032B	DUCT;DEFROSTER FRONT	COUVERCLE	1					
11	213-00033B	DUCT;DEFROSTER MID	COUVERCLE	1					
12	213-00034E	DUCT;DEFROSTER REAR	COUVERCLE	1					
13	213-00029C	DUCT;FACE FRONT	COUVERCLE	1					
14	195-02768C	BRACKET;SWITCH COVER FRO	SUPPORT	1		5001-5107	I	195-02768E	1
	195-02768E	BRACKET;SWITCH	SUPPORT	1		5108-			
15	195-02769C	BRACKET;SWITCH COVER REA	SUPPORT	1		5001-5107	I	195-02769E	1
	195-02769E	BRACKET;SWITCH	SUPPORT	1		5108-			
16	415-00046B	LOUVER DEF SIDE	COUVERCLE	1					
17	415-00045B	LOUVER DEF FRONT	COUVERCLE	1					
18	195-02770C	BRACKET;CUP HOLDER	SUPPORT	1		5001-5107	I	195-02770E	1
	195-02770E	BRACKET;CUP	SUPPORT	1		5108-			
19	415-00044B	LOUVER FACE	COUVERCLE	1					
20	K1001068	FOAM	EPONGE	1					
21	K1001069A	FOAM	EPONGE	1					
22	195-02858C	BRACKET;MONITOR	SUPPORT	1		5001-5107	I	195-02858E	1
	195-02858E	BRACKET;MONITOR	SUPPORT	1		5108-			
23	2120-2166D52	BOLT	VIS	22					
24	2120-2166D53	SCREW	VIS	4					
25	S3654523	SCREW	VIS	4					
26	2120-2166D23	SCREW	VIS	3					
27	621-02801	COVER;SWITCH	COUVERCLE	3					
28	621-03734A	COVER	COUVERCLE	6					
30	K1005007A	PLATE	PLAQUE	1					
31	2114-1898D14	WASHER;PLAIN	RONDELLE	3					
32	2120-2166D5	BOLT	BOULON A 6 PANS	3					
33	2114-2031D4	WASHER;SPRING	RONDELLE ELASTIQUE	3					

DATE	AUG. 28, 2009
3rd EDITION	

Fig. 1420 DUCT COVER
CONDUITES COUVERCLE

Serial No. ;

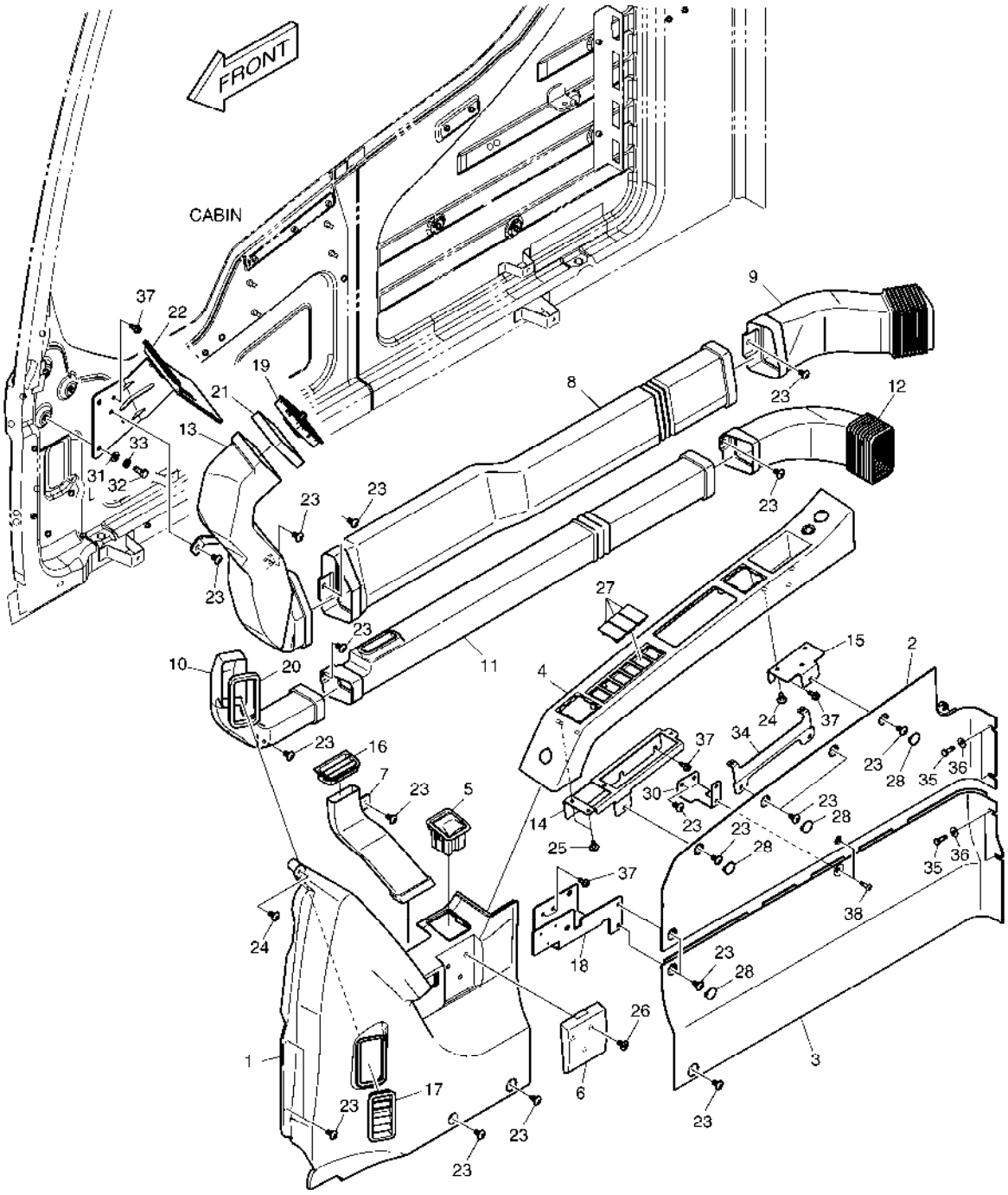

DATE	AUG. 28, 2009
3rd EDITION	

Fig. 1420 DUCT COVER
CONDUITES COUVERCLE

Serial No. ;

Key No.	Part No.	Description	Description	Q'ty	S.C	Serial No.	ICA	Replaceable part	
								Part No.	Q'ty
1420 -34	K1009627	PLATE	PLAQUE	1					
35	2120-2166D36	BOLT	BOULON A 6 PANS	4					
36	2114-1898D5	WASHER M6	RONDELLE	4					
37	K1010304	BOLT;FLANGE	BOULON A 6 PANS	8					
38	2120-2166D57	BOLT;GREEN	BOULON A 6 PANS	2					

DATE	AUG. 28, 2009
3rd EDITION	

Fig. 1430 HEATER COVER BOITIES DE CHAUFFAGE

Serial No. ;

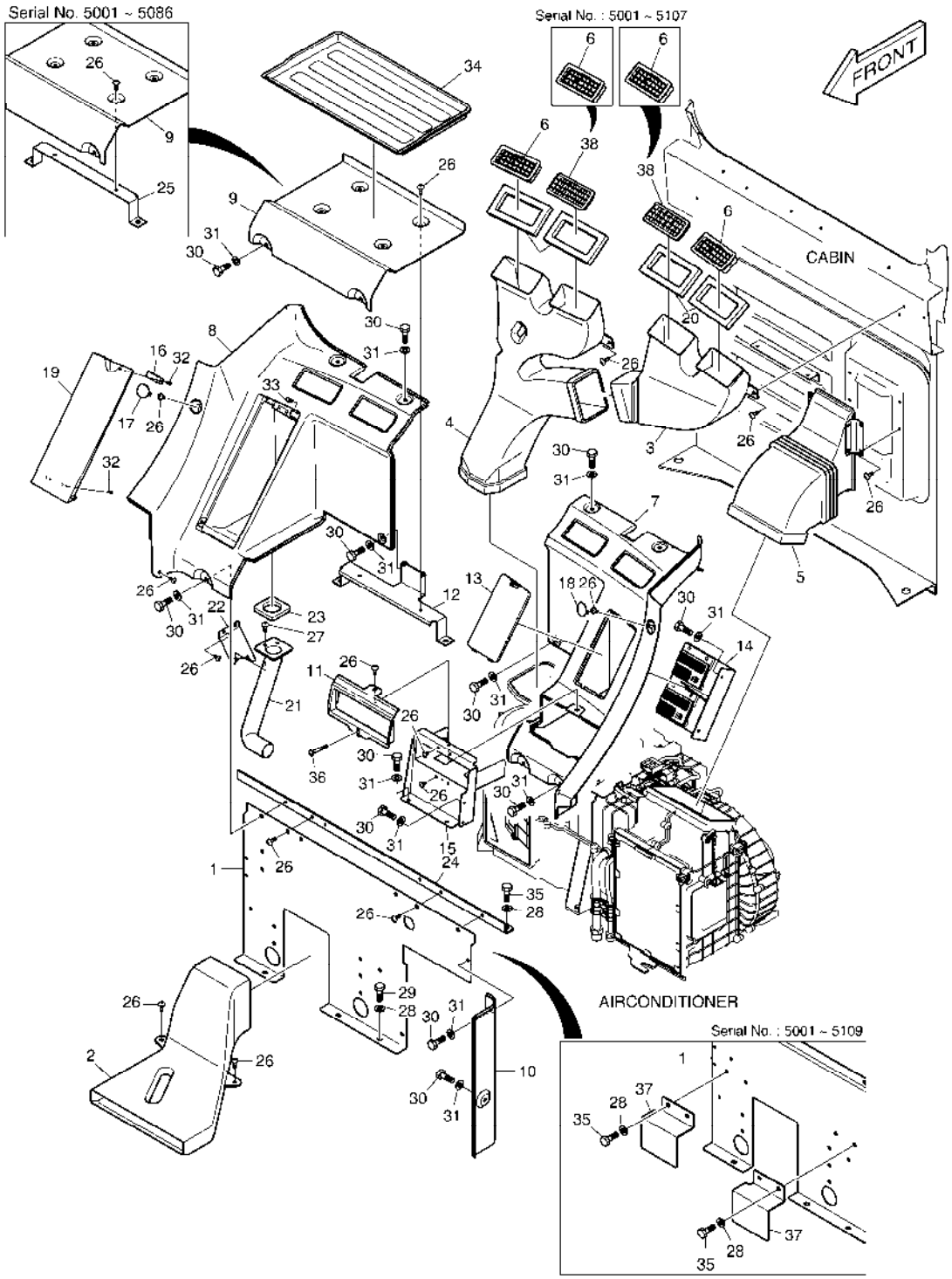

DATE	AUG. 28, 2009
3rd EDITION	

Fig. 1430 HEATER COVER BOITIES DE CHAUFFAGE

Serial No. ;

Key No.	Part No.	Description	Description	Q'ty	S.C	Serial No.	ICA	Replaceable part	
								Part No.	Q'ty
1430 --	621-02896K	HEATER COVER	BOITIES DE CHAUFFAGE	-	D				
1	621-02894E	COVER;REAR LOWER	COUVERCLE	1		5001-5109			
	621-02894G	COVER;REAR LOWER	COUVERCLE	1		5110-			
2	213-00036B	DUCT;FOOT	COUVERCLE	1					
3	213-00037B	DUCT;REAR(L.H.)	COUVERCLE	1					
4	213-00038B	DUCT;REAR(R.H.)	COUVERCLE	1					
5	213-00039B	DUCT;AIR INLET	COUVERCLE	1					
6	415-00043B	NOZZLE;REAR	INJECTEUR	4		5001-5107			
	415-00043B	NOZZLE;REAR	INJECTEUR	2		5108-			
7	621-02913C	COVER;REAR(L.H.)	COUVERCLE	1					
8	621-02914C	COVER;REAR(R.H.)	COUVERCLE	1					
9	621-02915B	COVER;REAR CENTER	COUVERCLE	1					
10	621-02907B	COVER;SIDE REAR(L.H.)	COUVERCLE	1					
11	621-02917C	COVER;STEREO UP	COUVERCLE	1					
12	K1001295A	PLATE	PLAQUE	1		5001-5107	I	K1001295B	1
	K1001295B	PLATE	PLAQUE	1		5108-			
13	621-02919B	COVER;FUSE	COUVERCLE	1					
14	195-02771B	BRACKET;FUSE BOX	SUPPORT	1		5001-5107	I	195-02771C	1
	195-02771C	BRACKET;FUSE BOX	SUPPORT	1		5108-			
15	195-02772E	BRACKET;STEREO	SUPPORT	1		5001-5107	I	195-02772G	1
	195-02772G	BRACKET;STEREO	SUPPORT	1		5108-			
16	2125-1095A	CATCH;MAGNETIC	LOQUET	1					
17	K1005344A	COVER	COUVERCLE	1					
18	K1005345A	COVER;HOLE	COUVERCLE	1					
19	621-02920C	COVER;BOX	COUVERCLE	1					
20	K1001310	FOAM	EPONGE	4					
21	213-00040A	DUCT;AIR BOX	COUVERCLE	1					
22	195-02774	BRACKET;AIR DUCT MOUNT	SUPPORT	1		5001-5107	I	195-02774A	1
	195-02774A	BRACKET;AIR DUCT MOUNT	SUPPORT	1		5108-			
23	161-00622	FOAM;AIR SEAL	EPONGE	1					
24	195-02785C	BRACKET;CROSS BAR	SUPPORT	1		5001-5107	I	195-02785E	1
	195-02785E	BRACKET;CROSS BAR	SUPPORT	1		5108-			
25	195-02790B	BRACKET	SUPPORT	1		5001-5086			
26	2120-2166D10	SCREW M6X1.0X14	VIS	21		5001-5086			
	2120-2166D10	SCREW M6X1.0X14	VIS	19		5087-			
27	2120-2166D53	SCREW	VIS	2					
28	2114-1898D14	WASHER;PLAIN	RONDELLE	9		5001-5109			
	2114-1898D14	WASHER;PLAIN	RONDELLE	5		5110-			

DATE	AUG. 28, 2009
3rd EDITION	

Fig. 1430 HEATER COVER BOITIES DE CHAUFFAGE

Serial No. ;

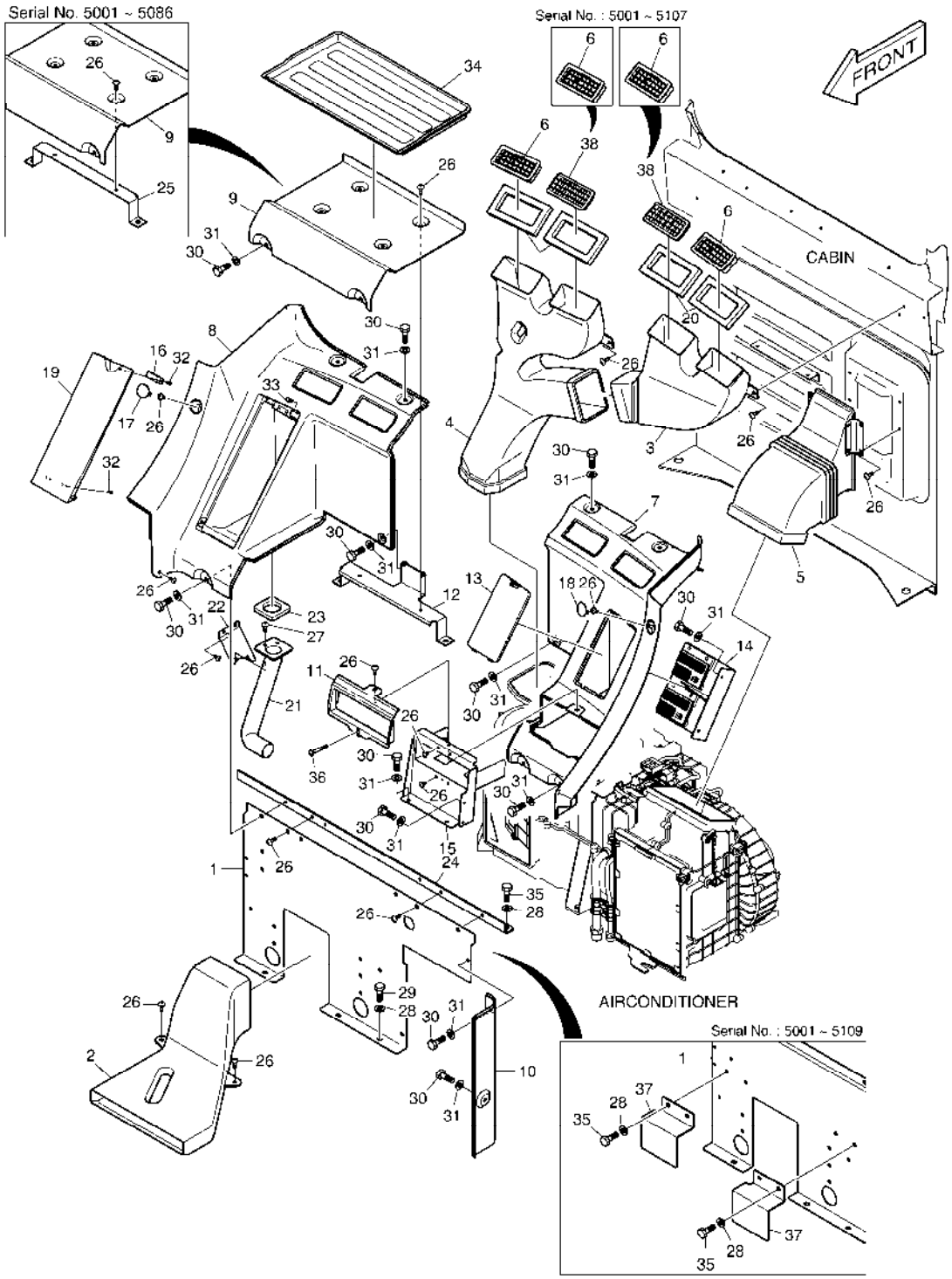

DATE	AUG. 28, 2009
3rd EDITION	

Fig. 1430 HEATER COVER BOITIES DE CHAUFFAGE

Serial No. ;

Key No.	Part No.	Description	Description	Q'ty	S.C	Serial No.	ICA	Replaceable part	
								Part No.	Q'ty
1430 -29	2120-2166D12	BOLT;HEX	BOULON A 6 PANS	3					
30	2120-2166D36	BOLT	BOULON A 6 PANS	19					
31	2114-1898D5	WASHER M6	RONDELLE	19					
32	S3644163	SCREW	VIS	8					
33	K1002385	STOPPER	CHAPEAU	2					
34	161-00624	PAD;FOAM	CAOUTCHOUC	1					
35	2120-2166D5	BOLT	BOULON A 6 PANS	6		5001-5109			
	2120-2166D5	BOLT	BOULON A 6 PANS	2		5110-			
36	2120-2166D58	BOLT	BOULON	1					
37	K1017271	PLATE	PLAQUE	2		5001-5109			
38	K1043726	NOZZLE;REAR	INJECTEUR	2		5108-			

DATE	AUG. 28, 2009
3rd EDITION	

Fig. 1440 CABIN MOUNTING SUPPORT DE CABINE

Serial No. ;

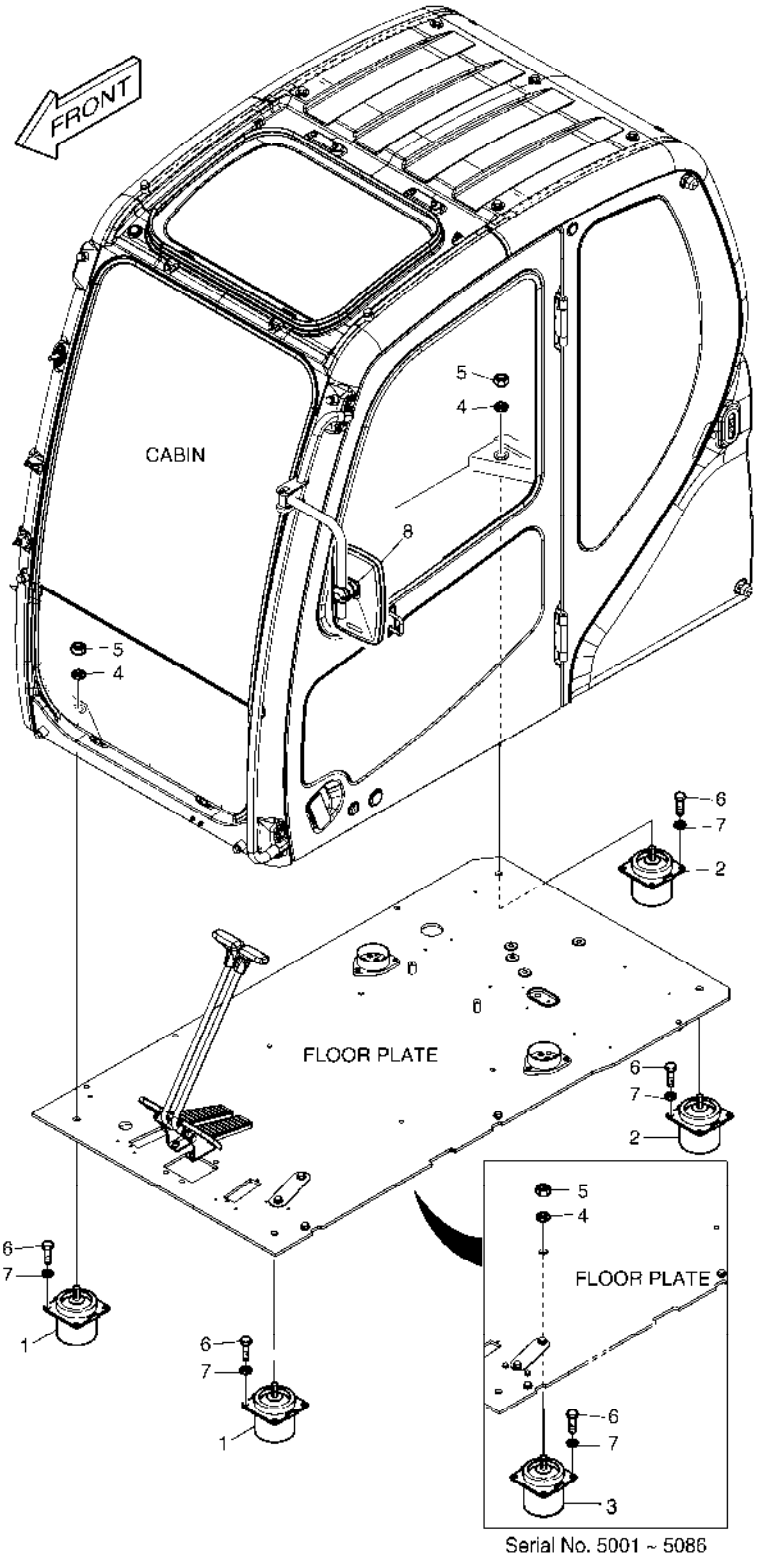

DATE	AUG. 28, 2009
3rd EDITION	

Fig. 1440 CABIN MOUNTING SUPPORT DE CABINE

Serial No. ;

Key No.	Part No.	Description	Description	Q'ty	S.C	Serial No.	ICA	Replaceable part	
								Part No.	Q'ty
1440 --	621-03223	CABIN MOUNT	SUPPORT DE CABINE	-	D				
1	2161-9057	CABIN MOUNT;FRONT	SUPPORT	2					
2	2161-9058	CABIN MOUNT;REAR	SUPPORT	2					
3	K1000043	RUBBER;CABIN MOUNT	CAOUTCHOUC	1		5001-5086			
4	2114-1058D2	WAHSER	RONDELLE	5		5001-5086			
	2114-1058D2	WAHSER	RONDELLE	4		5087-			
5	2121-9007	NUT	ECROU	5		5001-5086			
	2121-9007	NUT	ECROU	4		5087-			
6	2120-2166D2	BOLT	BOULON A 6 PANS	20		5001-5086			
	2120-2166D2	BOLT	BOULON A 6 PANS	16		5087-			
7	2114-1898D1	WASHER	RONDELLE	20		5001-5086			
	2114-1898D1	WASHER	RONDELLE	16		5087-			
8	903-00068	MIRROR;SIDE	RETROVISEUR	1		5001-5103	I	K1040606	1
	K1040606	MIRROR;SIDE	RETROVISEUR	1		5104-			

DATE	AUG. 28, 2009
3rd EDITION	

Fig. 1450 CABIN(1) CABINE

Serial No. ;

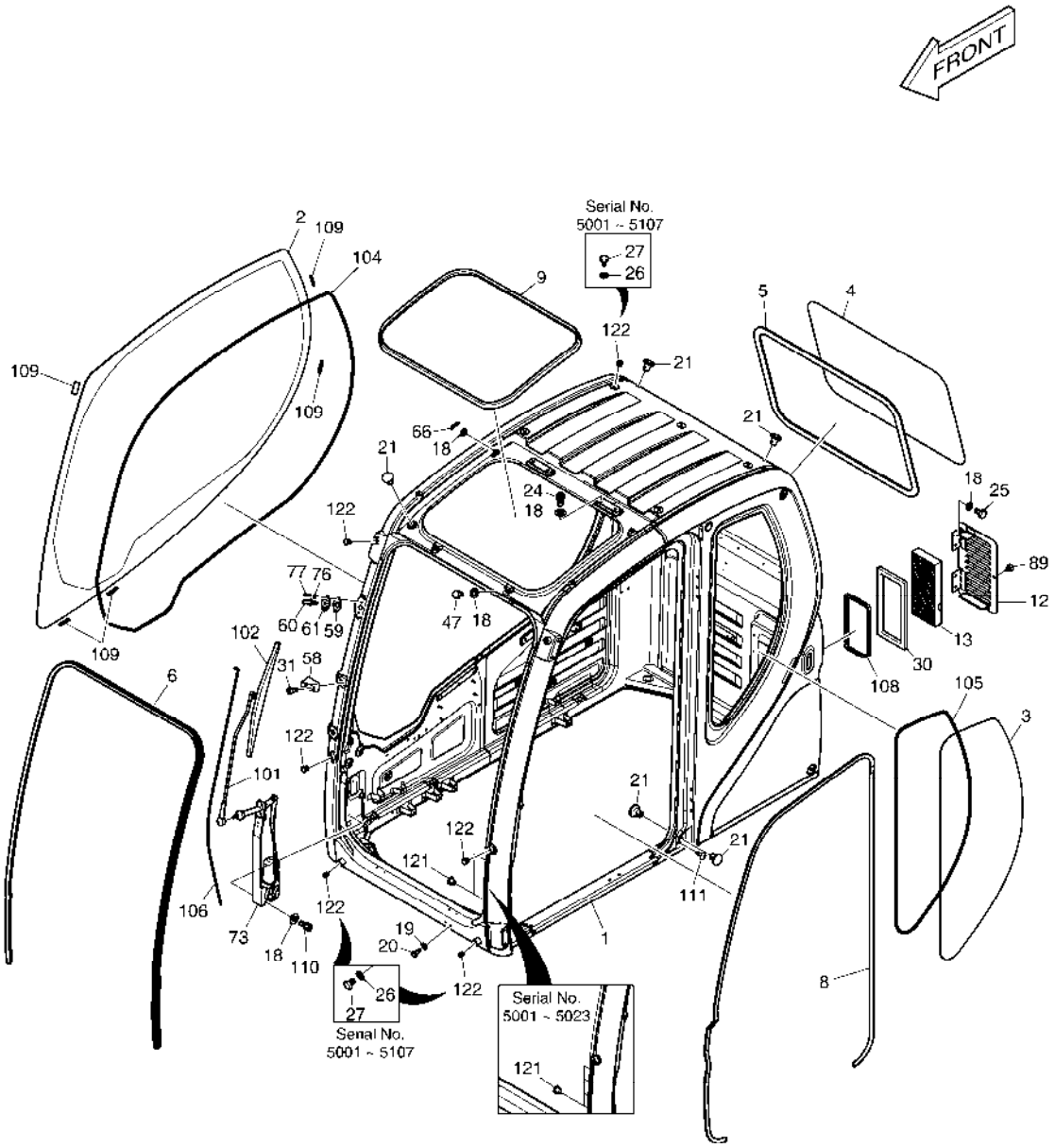

DATE	AUG. 28, 2009
3rd EDITION	

Fig. 1450 CABIN(1) CABINE

Serial No. ;

Key No.	Part No.	Description	Description	Q'ty	S.C	Serial No.	ICA	Replaceable part	
								Part No.	Q'ty
1450 --	622-00351H	CABIN ASS`Y	CABINE	1		5001-5023	I	622-00351J	1
	622-00351J	CABIN ASS`Y	CABINE	1		5024-5101	I	622-00351K	1
	622-00351K	CABIN ASS`Y	CABINE	1		5102-5107	I	622-00351M	1
	622-00351M	CABIN ASS`Y	CABINE	1		5108-			
1	-	BODY;CABIN	CARTER	1	D				
2	903-00072A	GLASS;RH	VITRE	1					
3	903-00073A	GLASS;LH REAR	VITRE	1					
4	903-00075	GLASS;REAR	VITRE	1					
5	198-00054A	TRIM;REAR GLASS	CANAL	1					
6	162-00035A	STRIP;WEATHER	TAMPON	1					
8	162-00039A	STRIP;BODY	TAMPON	1					
9	162-00038	TRIM;ROOF	CANAL	1					
12	621-02864	COVER;FRESH AIR ASM	COUVERCLE	1					
13	471-00119	FILTER;FRESH AIR	FILTRE	1					
18	2114-1898D14	WASHER;PLAIN	RONDELLE	15					
19	2114-1898D3	WASHER;PLAIN	RONDELLE	2					
20	2120-2166D28	BOLT;HEX.	BOULON A 6 PANS	2					
21	2160-1310	BUSHING;RUBBER	GARNISSAGE CAOUTCHOU	5					
24	S2208561	BOLT;SOCKET	BOULON A 6 PANS	4					
25	2120-2166D12	BOLT;HEX	BOULON A 6 PANS	4					
26	2114-1898D6	WASHER;PLAIN	RONDELLE	13		5001-5107			
27	2120-2166D37	BOLT	BOULON A 6 PANS	13		5001-5107			
30	161-00640A	SPONGE	EPONGE	1					
31	2120-2166D7	SCREW	VIS	2					
47	2120-2166D5	BOLT	BOULON A 6 PANS	2					
58	195-02729	BRACKET;BLADE	SUPPORT	1					
59	161-00598A	RUBBER;WASHER NOZZLE	RUBBER;WASHER NOZZLE	1					
60	554-00005	NOZZLE;WASHER	INJECTEUR	1					
61	621-02837A	COVER;WASHER NOZZLE	COUVERCLE	1					
66	123-00523	PIN;GAS-SPRING	GOUJON	2					
73	538-00011	MOTOR;WIPER	MOTEUR	1					
76	2114-1898D13	WASHER;PLAIN	RONDELLE PLATE	2					
77	2120-2166D26	SCREW	VIS	2					
89	K1003427	BOLT;KNOB	BOULON A 6 PANS	1					
101	541-00015	ARM;WIPER	BALANCIER	1					
102	507-00006	BLADE;WIPER	LAME	1					
104	K1002635	DAMPER	AMORTISSEUR	1					
105	K1002636	DAMPER	AMORTISSEUR	1					

DATE	AUG. 28, 2009
3rd EDITION	

Fig. 1450 CABIN(1) CABINE

Serial No. ;

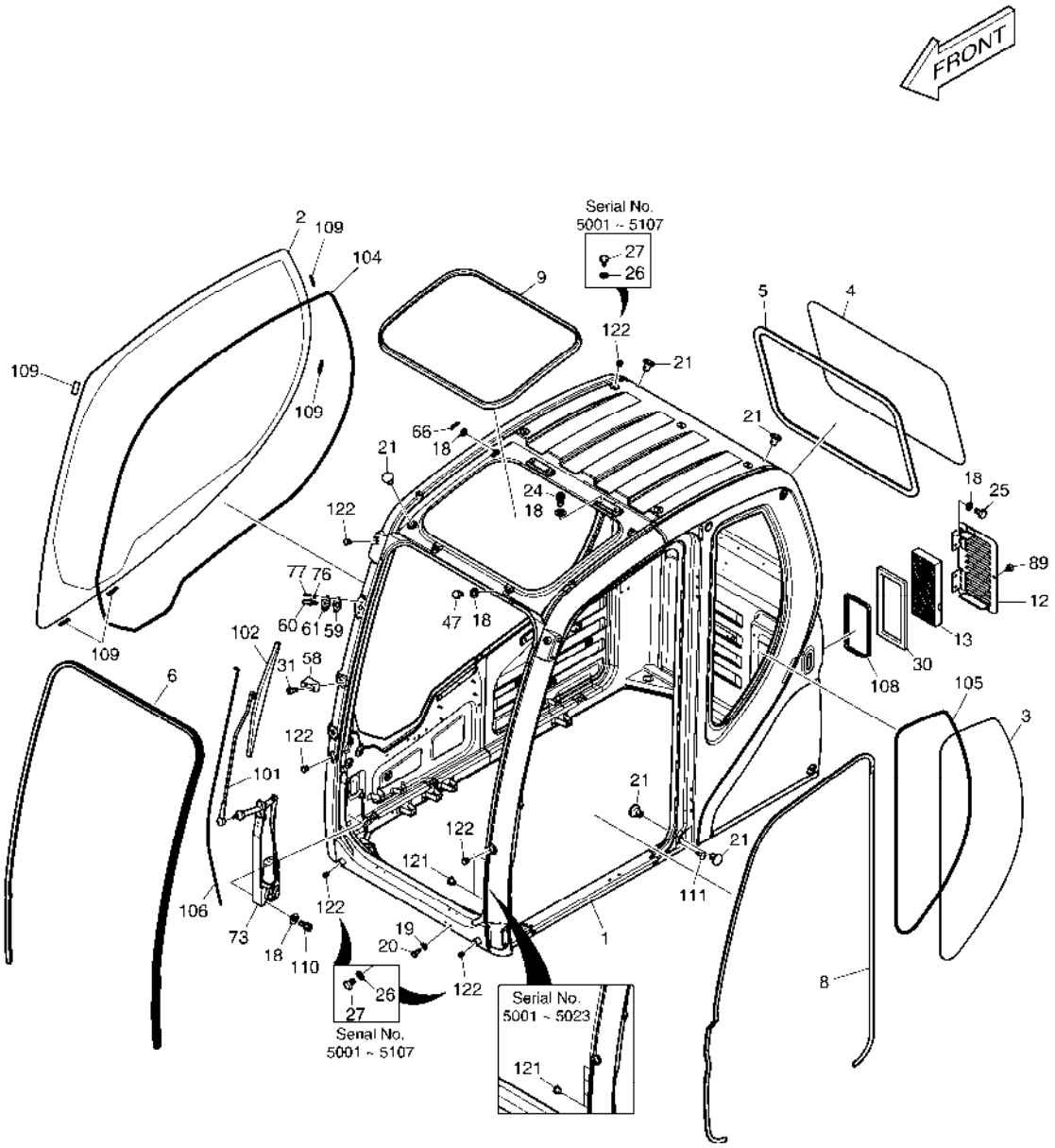

DATE	AUG. 28, 2009
3rd EDITION	

Fig. 1450 CABIN(1) CABINE

Serial No. ;

Key No.	Part No.	Description	Description	Q'ty	S.C	Serial No.	ICA	Replaceable part	
								Part No.	Q'ty
1450 -106	2185-1660	HOSE	TUYAU FLEXIBLE	1					
108	K1004061	FOAM	EPONGE	1					
109	K1003522	STOPPER	CHAPEAU	5					
110	S2208466	BOLT;SOCKET	BOULON A 6 PANS CREUX	3					
111	2120-2166D53	SCREW	VIS	1					
121	160-00074A	CAP	CHAPEAU	4		5001-5023			
	160-00074A	CAP	CHAPEAU	2		5024-			
122	160-00075A	CAP	CHAPEAU	13		5108-			

DATE	AUG. 28, 2009
3rd EDITION	

Fig. 1460 CABIN(2) CABINE

Serial No. ;

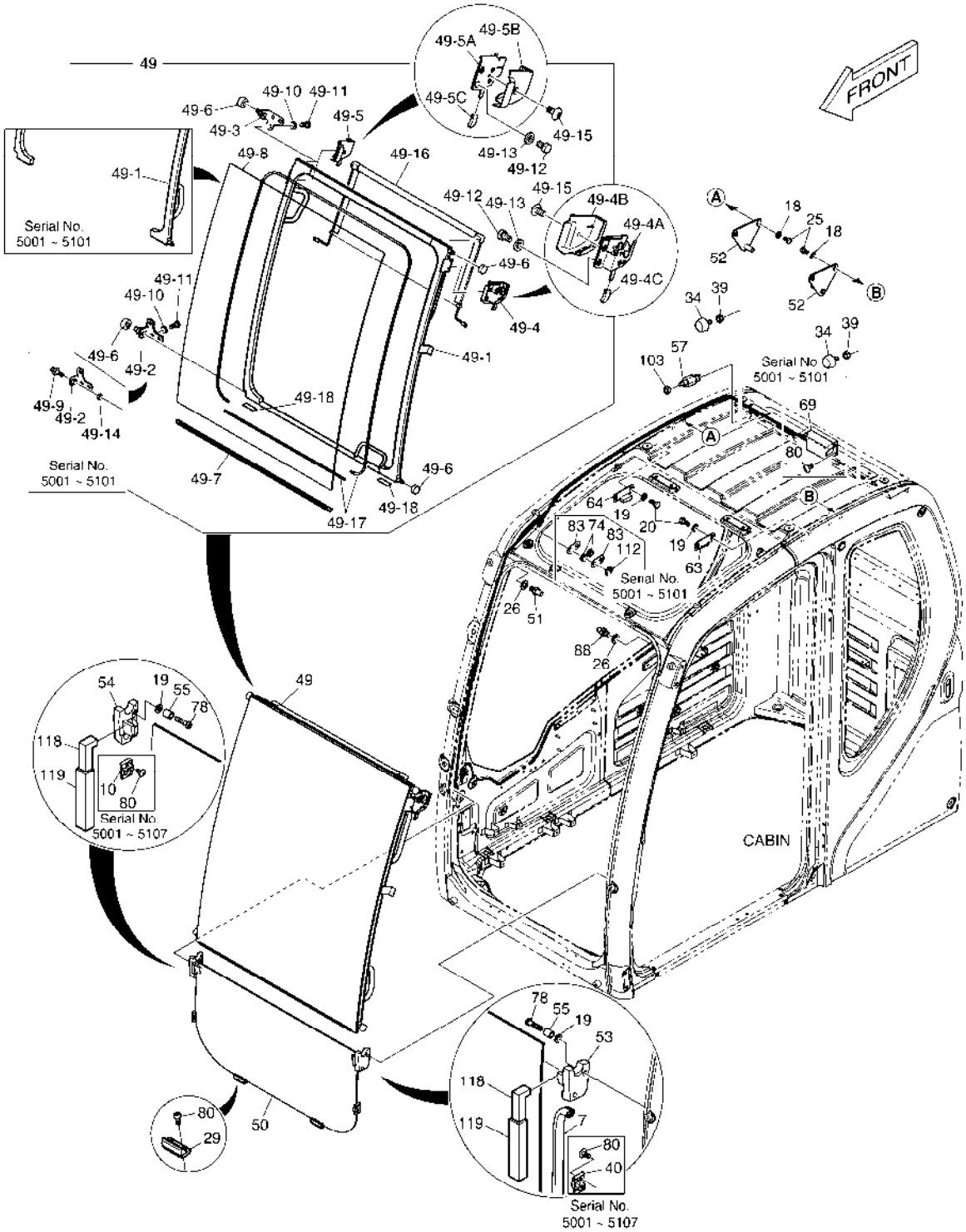

DATE	AUG. 28, 2009
3rd EDITION	

Fig. 1460 CABIN(2) CABINE

Serial No. ;

Key No.	Part No.	Description	Description	Q'ty	S.C	Serial No.	ICA	Replaceable part Part No.	Q'ty
1460 --	622-00351H	CABIN ASS`Y	CABINE	1		5001-5023	I	622-00351J	1
	622-00351J	CABIN ASS`Y	CABINE	1		5024-5101	I	622-00351K	1
	622-00351K	CABIN ASS`Y	CABINE	1		5102-5107	I	622-00351M	1
	622-00351M	CABIN ASS`Y	CABINE	1		5108-			
7	162-00034B	STRIP;WEATHER	TAMPON	1					
10	416-00018A	STOPPER;GLASS LOWER RH	TAQUET D'ARRET	1		5001-5107			
18	2114-1898D14	WASHER;PLAIN	RONDELLE	4					
19	2114-1898D3	WASHER;PLAIN	RONDELLE	8					
20	2120-2166D28	BOLT;HEX.	BOULON A 6 PANS	4					
25	2120-2166D12	BOLT;HEX	BOULON A 6 PANS	4					
26	2114-1898D6	WASHER;PLAIN	RONDELLE	2					
29	416-00019B	STOPPER;LOWER	TAQUET D'ARRET	2					
34	161-00195	STOPPER	TAQUET D`ARRET	2					
39	2121-1311D4	NUT	ECROU	2					
40	416-00020	STOPPER;GLASS LOWER LH	TAQUET D'ARRET	1		5001-5107			
49	622-00359H	DOOR;SLIDE	VERROU	1		5001-5023	I	622-00359J	1
	622-00359J	DOOR;SLIDE	VERROU	1		5024-5101	I	622-00359K	1
	622-00359K	DOOR;SLIDE	VERROU	1		5102-			
49-1	622-00360G	. PANEL ASS`Y	. PANNEAU	1		5001-5023	I	622-00360H	1
	622-00360H	. PANEL ASS`Y	. PANNEAU	1		5024-5101			
	K1033991	. PANEL ASS`Y	. PANNEAU	1		5102-			
49-2	195-02739B	. BRACKET;RH LOWER ROLLER	. SUPPORT	1		5001-5101	I	195-02739C	1
	195-02739C	. BRACKET;RH LOWER ROLLER	. SUPPORT	1		5102-			
49-3	195-02740C	. BRACKET;RH ROLLER UPPER	. SUPPORT	1		5001-5101	I	195-02740E	1
	195-02740E	. BRACKET;RH ROLLER UPPER	. SUPPORT	1		5102-			
49-4	125-00096A	. CATCH ASS`Y;SLIDE DOOR LH	. LOQUET	1					
49-4A	125-00073B	.. CATCH;LH	.. LOQUET	1					
49-4B	621-03724	.. COVER;CATCH LH	.. COUVERCLE	1					
49-4C	133-00248	.. KNOB;SLIDE DOOR CATCH	.. BOUTON	1					
49-5	125-00097A	. CATCH ASM;SLIDE DOOR RH	. LOQUET	1					
49-5A	125-00074B	.. CATCH;RH	.. LOQUET	1					
49-5B	621-03725	.. COVER;CATCH RH	.. COUVERCLE	1					
49-5C	133-00248	.. KNOB;SLIDE DOOR CATCH	.. BOUTON	1					
49-6	270-00054B	. ROLLER	. PLAIER	4					
49-7	505-00016B	. BAR	. CAOUTCHOUC	1		5001-5101			
	K1036331	. BAR	. CAOUTCHOUC	1		5102-			
49-8	903-00076B	. GLASS;FRONT UPPER	. VITRE	1		5001-5101	I	K1033880	1
	K1033880	. GLASS;FRONT UPPER	. VITRE	1		5102-			

DATE	AUG. 28, 2009
3rd EDITION	

Fig. 1460 CABIN(2) CABINE

Serial No. ;

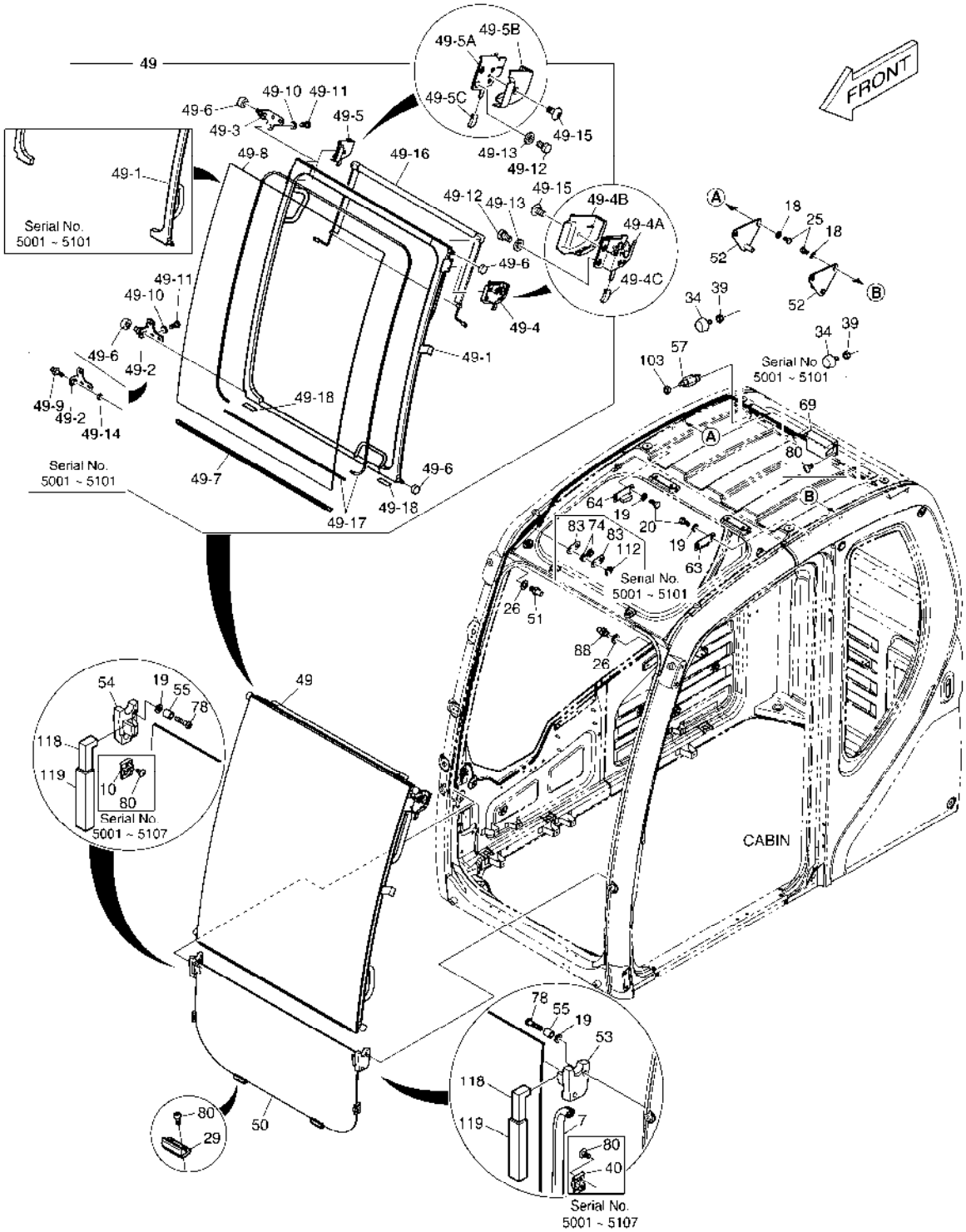

DATE	AUG. 28, 2009
3rd EDITION	

Fig. 1460 CABIN(2) CABINE

Serial No. ;

Key No.	Part No.	Description	Description	Q'ty	S.C	Serial No.	ICA	Replaceable part	
								Part No.	Q'ty
1460 -49-9	123-00522B	. PIN;SLIDE ROLLER RH LOWER	. GOUPILLE	1		5001-5101			
49-10	2114-1898D3	. WASHER;PLAIN	. RONDELLE	6					
49-11	2120-2166D28	. BOLT;HEX.	. BOULON A 6 PANS	6					
49-12	2120-2166D12	. BOLT;HEX	. BOULON A 6 PANS	4					
49-13	2114-1898D2	. WASHER	. RONDELLE	4					
49-14	2121-1311D2	. NUT	. ECROU	1		5001-5101			
49-15	2120-2166D52	. BOLT	. VIS	2					
49-16	474-00044A	. SUN SCREEN;FRONT	. LE SOLEIL	1					
49-17	K1002638A	. DAMPER	. REGISTRE	1		5001-5101	I	K1036967	1
	K1036967	. DAMPER	. REGISTRE	1		5102-			
49-18	K1006368	. RUBBER	. CAOUTCHOUC	2					
50	903-00074A	GLASS;FRONT LOWER	VITRE	1					
51	142-00128B	STRIKER;RH	FRAPPER	1					
52	142-00127C	STRIKER;SLIDE DOOR REAR	FRAPPER	2					
53	116-00089B	STOPPER;RUBBER LH	TAQUET D'ARRET	1					
54	116-00090B	STOPPER;RUBBER RH	TAQUET D'ARRET	1					
55	2140-1338	PIPE;SPACER	CONDUITE	4					
57	549-00086	SWITCH;SLIDE	INTERRUPTEUR	1					
63	161-00618B	STOPPER;SLIDE DOOR OPEN(L.	TAQUET D'ARRET	1					
64	161-00619B	STOPPER;SLIDE DOOR OPEN(R	TAQUET D`ARRET	1					
69	129-00155	SPRING;ASSIST	RESSORT	1		5001-5101			
74	270-00062A	ROLLER;ASSIST CABLE	GALET	2		5001-5101			
78	S3450993	SCREW	VIS	4					
80	2120-2166D52	BOLT	VIS	10		5001-5101			
	2120-2166D52	BOLT	VIS	8		5102-5107			
	2120-2166D52	BOLT	VIS	4		5108-			
83	191-03734A	PLATE;WASHER	PLAQUE	2		5001-5101			
88	K1003284	STRIKER;LH	FRAPPER	1					
103	S4034833	NUT	ECROU	1					
112	S6540600	RING;RETAINING	BAGUE	2		5001-5101			
118	K1027768	FOAM	EPONGE	2					
119	K1027769	FOAM	EPONGE	2					

DATE	AUG. 28, 2009
3rd EDITION	

Fig. 1470 CABIN(3) CABINE

Serial No. ;

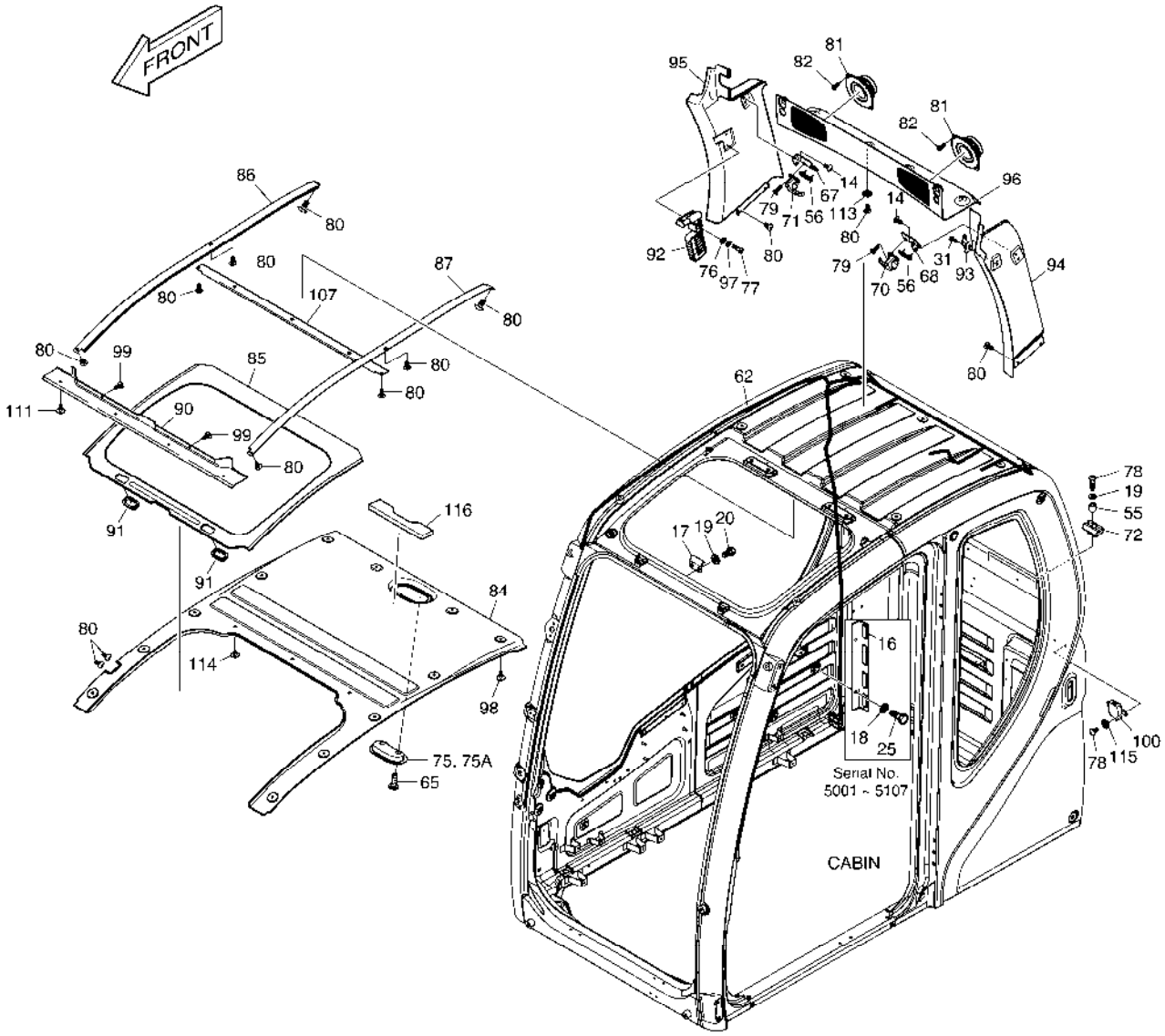

DATE	AUG. 28, 2009
3rd EDITION	

Fig. 1470 CABIN(3) CABINE

Serial No. ;

Key No.	Part No.	Description	Description	Q'ty	S.C	Serial No.	ICA	Replaceable part	
								Part No.	Q'ty
1470 --	622-00351H	CABIN ASS`Y	CABINE	1		5001-5023	I	622-00351J	1
	622-00351J	CABIN ASS`Y	CABINE	1		5024-5101	I	622-00351K	1
	622-00351K	CABIN ASS`Y	CABINE	1		5102-5107	I	622-00351M	1
	622-00351M	CABIN ASS`Y	CABINE	1		5108-			
14	2120-2166D10	SCREW M6X1.0X14	VIS	4					
16	191-03179A	PLATE;CONNECTOR	PLAQUE	1		5001-5107			
17	191-03166C	STRIKER PLATE ROOF	TOIT DE PLAT DE BUTEE	1					
18	2114-1898D14	WASHER;PLAIN	RONDELLE	2		5001-5107			
19	2114-1898D3	WASHER;PLAIN	RONDELLE	4					
20	2120-2166D28	BOLT;HEX.	BOULON A 6 PANS	2					
25	2120-2166D12	BOLT;HEX	BOULON A 6 PANS	2		5001-5107			
31	2120-2166D7	SCREW	VIS	1					
55	2140-1338	PIPE;SPACER	CONDUITE	2					
56	K1000794	STOPPER;RUBBER	TAQUET D'ARRET	2					
62	530-00417B	HARNESS;CABIN	FAISCEAU	1					
65	S3458843	SCREW	VIS	2					
67	621-03113B	PLATE;STOPPER (R.H)	TAQUET D'ARRET	1					
68	621-03114B	PLATE;STOPPER (L.H)	TAQUET D'ARRET	1					
70	125-00077	LOCK;REAR GLASS (L.H)	SERRURE	1					
71	125-00078	LOCK;REAR GLASS (R.H)	SERRURE	1					
72	2161-2212	STOPPER;RUBBER	TAQUET D'ARRET	2					
75	534-00079	ROOM LAMP	LAMPE DE PIECE	1					
75A	2515-1021D1	. BULB	. AMPOULE	1					
76	2114-1898D13	WASHER;PLAIN	RONDELLE PLATE	2					
77	2120-2166D26	SCREW	VIS	2					
78	S3450993	SCREW	VIS	4					
79	S3452853	SCREW	VIS	4					
80	2120-2166D52	BOLT	VIS	20					
81	2541-9020	SPEAKER	HAUT-PARLEUR	2					
82	S3450833	SCREW	VIS	8					
84	161-00609C	PAD;ROOF REAR	CAOUTCHOUC	1		5001-5101			
	161-00609E	PAD;ROOF REAR	CAOUTCHOUC	1		5102-			
85	161-00610C	PAD;ROOF CENTER	CAOUTCHOUC	1		5001-5023	I	161-00610E	1
	161-00610E	PAD;ROOF CENTER	CAOUTCHOUC	1		5024-			
86	359-00022A	RAIL;ROOF PANEL RH	CHEMIN DE FER	1					
87	359-00021A	RAIL;ROOF PANEL LH	CHEMIN DE FER	1					
90	161-00613B	PAD;ROOF FRONT	CAOUTCHOUC	1					
91	172-00055A	HANDLE;ROOF	POIGNEE	2					

DATE	AUG. 28, 2009
3rd EDITION	

Fig. 1470 CABIN(3) CABINE

Serial No. ;

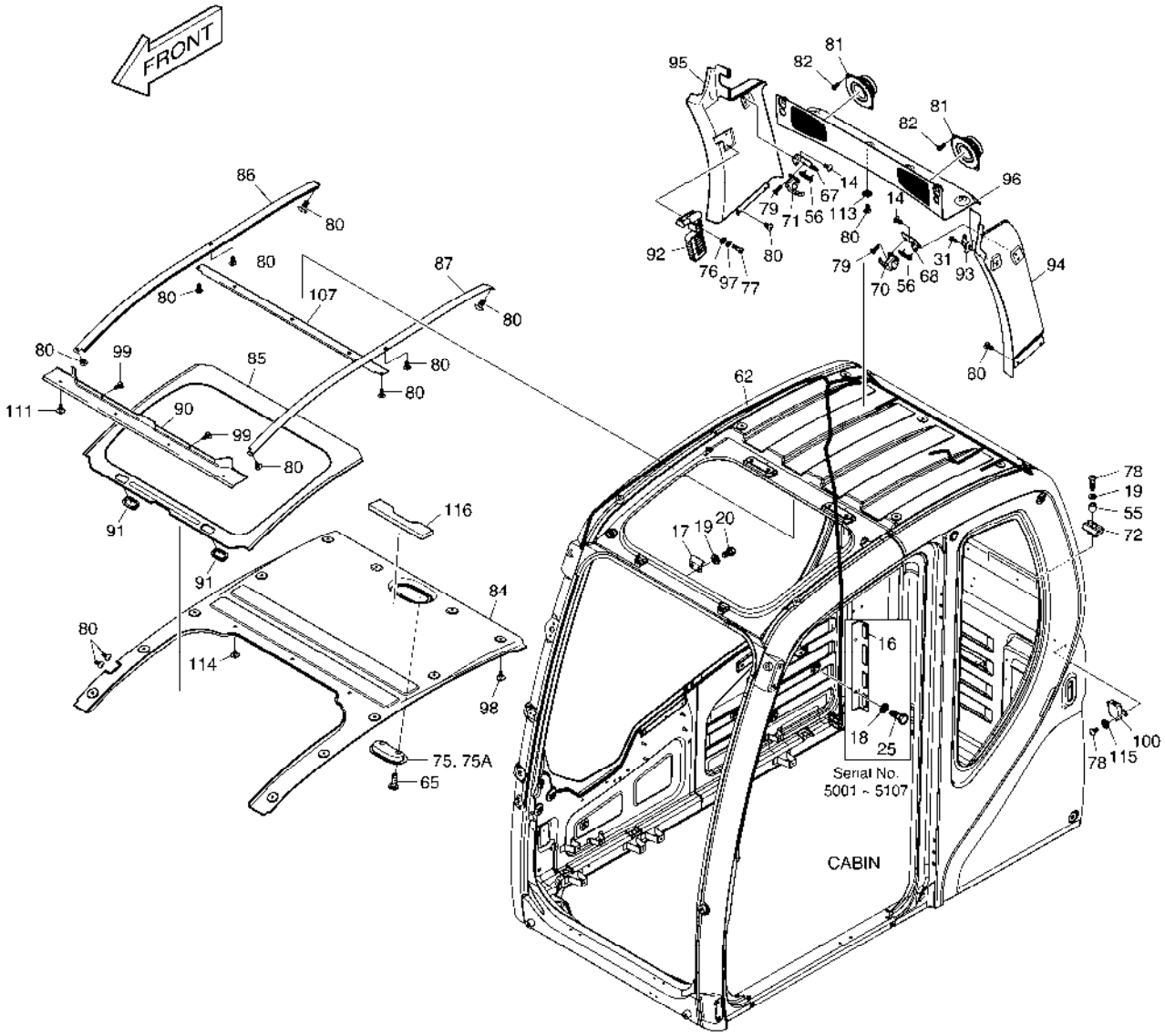

DATE	AUG. 28, 2009
3rd EDITION	

Fig. 1470 CABIN(3) CABINE

Serial No. ;

Key No.	Part No.	Description	Description	Q'ty	S.C	Serial No.	ICA	Replaceable part	
								Part No.	Q'ty
1470 -92	2199-9058	HAMMER	MARTEAU	1					
93	2150-1133	HOOK;COAT	CROCHET	1					
94	621-02910C	COVER;PILLAR LH	COUVERCLE	1					
95	621-02911C	COVER;PILLAR RH	COUVERCLE	1					
96	621-02912B	COVER;REAR UPPER	COUVERCLE	1					
97	2114-2031D1	WASHER;SPRING	RONDELLE ELASTIQUE	2					
98	K1006936	SCRIVET	RIVET	12					
99	2120-2166D18	SCREW	VIS	2					
100	K1002641	MODULE ASS`Y	MODULE	1					
107	K1003676B	PLATE	PLAQUE	1					
111	2120-2166D53	SCREW	VIS	4					
113	2114-1898D5	WASHER M6	RONDELLE	4					
114	K1006933	SCRIVET	RIVET	3					
115	S5010313	WASHER	RONDELLE	2					
116	K1010839	FORM	EPONGE	1					

DATE	AUG. 28, 2009
3rd EDITION	

Fig. 1480 CABIN(4) CABINE

Serial No. ;

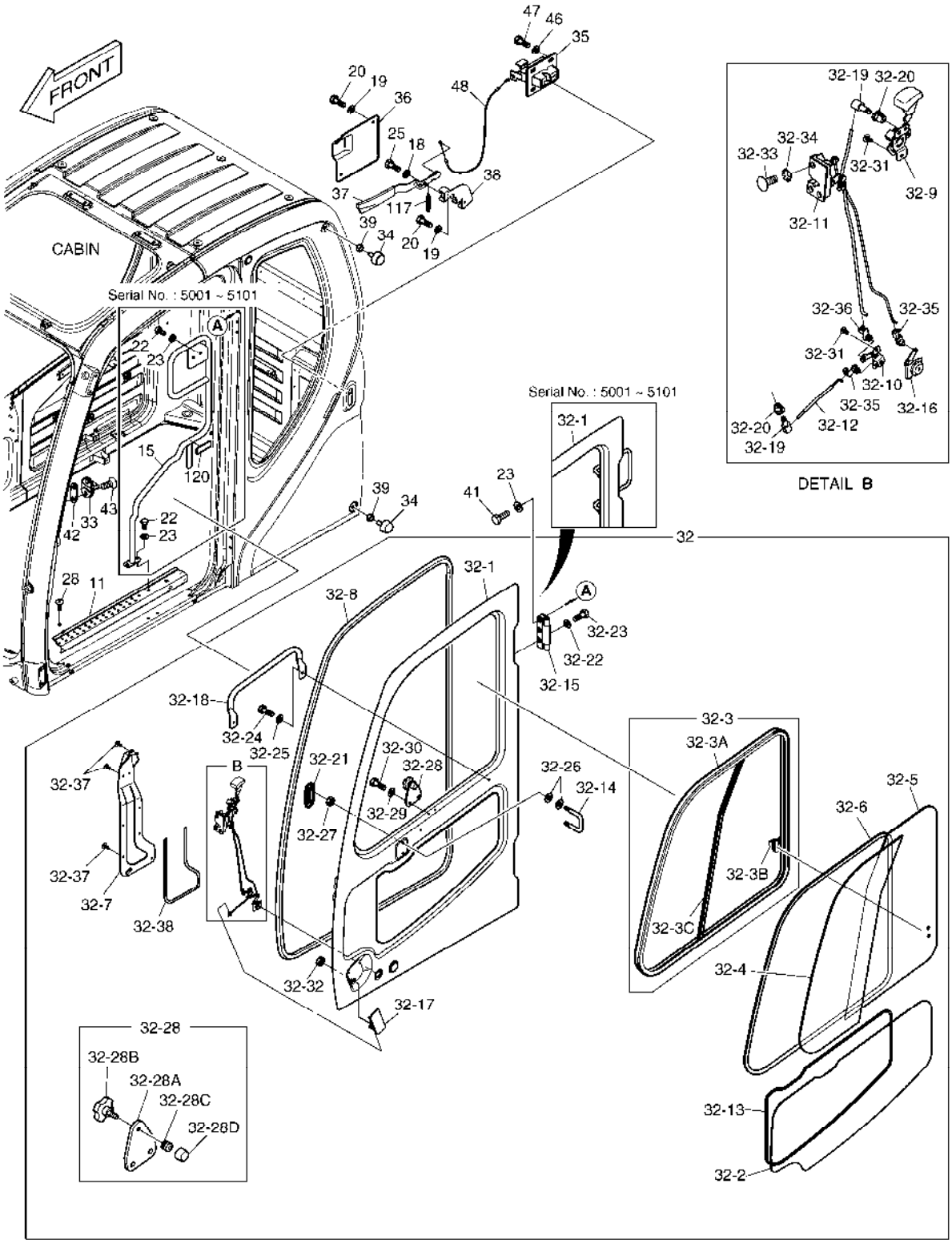

DATE	AUG. 28, 2009
3rd EDITION	

Fig. 1480 CABIN(4) CABINE

Serial No. ;

Key No.	Part No.	Description	Description	Q'ty	S.C	Serial No.	ICA	Replaceable part	
								Part No.	Q'ty
1480 --	622-00351H	CABIN ASS`Y	CABINE	1		5001-5023	I	622-00351J	1
	622-00351J	CABIN ASS`Y	CABINE	1		5024-5101	I	622-00351K	1
	622-00351K	CABIN ASS`Y	CABINE	1		5102-5107	I	622-00351M	1
	622-00351M	CABIN ASS`Y	CABINE	1		5108-			
11	625-00159B	STEP;CABIN DOOR	MARCHER	1					
15	172-00052E	HANDLE;INNER	POIGNEE	1		5001-5101			
18	2114-1898D14	WASHER;PLAIN	RONDELLE	1					
19	2114-1898D3	WASHER;PLAIN	RONDELLE	4					
20	2120-2166D28	BOLT;HEX.	BOULON A 6 PANS	4					
22	2120-2166D4	BOLT	BOULON A 6 PANS	4		5001-5101			
23	2114-1898D15	WASHER;PLAIN	RONDELLE	10		5001-5101			
	2114-1898D15	WASHER;PLAIN	RONDELLE	6		5102-			
25	2120-2166D12	BOLT;HEX	BOULON A 6 PANS	1					
28	2120-2150D3	SCREW	BOULON A 6 PANS	4					
32	622-00353G	DOOR ASS`Y	VERROU	1		5001-5101	I	622-00353H	1
	622-00353H	DOOR ASS`Y	VERROU	1		5102-5107	I	622-00353J	1
	622-00353J	DOOR ASS`Y	VERROU	1		5108-			
32-1	-	. DOOR;BODY	. DIODE	1	D				
32-2	903-00069A	. GLASS;DOOR LOWER	. VITRE	1					
32-3	622-00355A	. SASH ASS`Y	. CHASSIS	1					
32-3A	622-00356	.. FRAME ASS`Y;SASH	.. BATI	1					
32-3B	2123-6119	.. LOCK;SASH	.. VERROU	1					
32-3C	162-00033A	.. BAR;CENTER	.. CAOUTCHOUC	1					
32-4	903-00070B	. GLASS;SASH FRONT	. VITRE	1					
32-5	903-00071B	. GLASS;SASH REAR	. VITRE	1					
32-6	161-00623	. TRIM	. ATTACHE	1					
32-7	621-02869B	. COVER;LOCK	. COUVERCLE	1		5001-5107	I	621-02869C	1
	621-02869C	. COVER;LOCK	. COUVERCLE	1		5108-			
32-8	198-00053A	. RUBBER TRIM;DOOR INNER	. CAOUTCHOUC	1					
32-9	133-00221	. LEVER ASS`Y;INNER HANDLE	. LEVIER	1					
32-10	137-00092	. LINK;DOOR INNER	. PIECE DE JONCTION	1					
32-11	125-00072	. CATCH ASS`Y;DOOR INNER	. LOQUET	1					
32-12	136-00055A	. ROD;OUTER HANDLE TO LINK	. TIGE	1					
32-13	K1002637	. DAMPER	. REGISTRE	1					
32-14	2150-1132A	. HOOK;CATCH DOOR	. CROCHET	1					
32-15	K1027765	. HINGE ASS`Y;DOOR	. PAUMELLE	2					
32-16	K1003900	. KEY ASS`Y;DOOR	. CLE	1					
32-17	2172-9021	. HANDLE;OUTER	. POIGNEE	1					

DATE	AUG. 28, 2009
3rd EDITION	

Fig. 1480 CABIN(4) CABINE

Serial No. ;

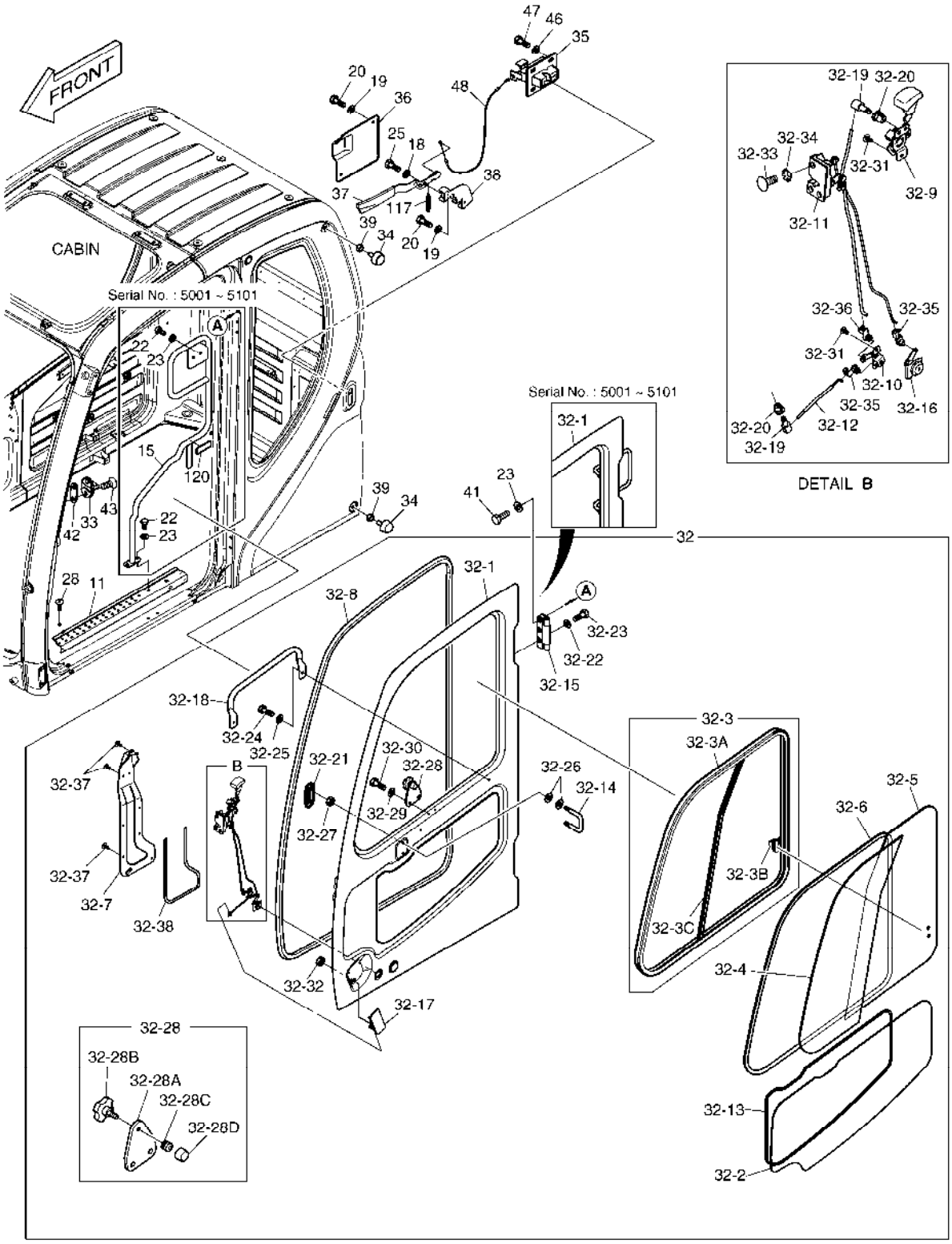

DATE	AUG. 28, 2009
3rd EDITION	

Fig. 1480 CABIN(4) CABINE

Serial No. ;

Key No.	Part No.	Description	Description	Q'ty	S.C	Serial No.	ICA	Replaceable part Part No.	Q'ty
1480 -32-18	145-00124A	. STAY	. ENTRETOISE	1					
32-19	2123-2247	. PIN	. GOUJON	2					
32-20	2124-1689A	. SNAP	. TIGE	2					
32-21	621-02867A	. COVER;DOOR INNER	. COUVERCLE	1					
32-22	2114-1898D15	. WASHER;PLAIN	. RONDELLE	6					
32-23	2120-2166D1	. BOLT	. BOULON A 6 PANS	6					
32-24	2120-2166D5	. BOLT	. BOULON A 6 PANS	2					
32-25	2114-1898D2	. WASHER	. RONDELLE	2					
32-26	2891-1311	. PLATE	. PLAQUE	4					
32-27	S4012533	. NUT	. ECROU	2					
32-28	161-00621B	. STOPPER;RUBBER	. TAQUET D'ARRET	1					
32-28A	191-03283	.. PLATE;STOPPER	.. TAQUET D'ARRET	1					
32-28B	4132-1138	.. KNOB	.. BOSSE	1					
32-28C	161-00620	.. RUBBER;STOPPER	.. CAOUTCHOUC	1					
32-28D	116-00092A	.. STOPPER	.. TAQUET D'ARRET	1					
32-29	2114-1898D3	. WASHER;PLAIN	. RONDELLE	2					
32-30	2120-2166D28	. BOLT;HEX.	. BOULON A 6 PANS	2					
32-31	2120-2166D52	. BOLT	. VIS	5					
32-32	S4012333	. NUT	. ECROU	2					
32-33	2120-2150D3	. SCREW	. BOULON A 6 PANS	3					
32-34	S5210303	. WASHER;TOOTHED	. RONDELLEELASTIQUE	3					
32-35	124-00010	. CLIP;ROD	. ATTACHE	2					
32-36	124-00344	. CLIP;ROD	. ATTACHE	1					
32-37	2120-2166D53	. SCREW	. VIS	8					
32-38	K1006370	. FOAM	. EPONGE	1					
33	2142-9005	STRIKER;DOOR	FRAPPER	1					
34	161-00195	STOPPER	TAQUET D`ARRET	2					
35	2125-9055	LOCK;BACK	LOQUET	1					
36	621-02849A	COVER;BACK LOCK INNER	COUVERCLE	1					
37	133-00220E	LEVER;BACK LOCK	LEVIER	1					
38	195-02719B	BRACKET;BACK LOCK	SUPPORT	1		5001-5107	I	195-02719C	1
	195-02719C	BRACKET;BACK LOCK	SUPPORT	1		5108-			
39	2121-1311D4	NUT	ECROU	2					
41	2120-2166D1	BOLT	BOULON A 6 PANS	6					
42	2114-1856	SHIM;STRIKER	CALE	1					
43	2120-2150D1	BOLT	BOULON A 6 PANS	2					
46	2114-1898D2	WASHER	RONDELLE	4					
47	2120-2166D5	BOLT	BOULON A 6 PANS	4					

DATE	AUG. 28, 2009
3rd EDITION	

Fig. 1480 CABIN(4) CABINE

Serial No. ;

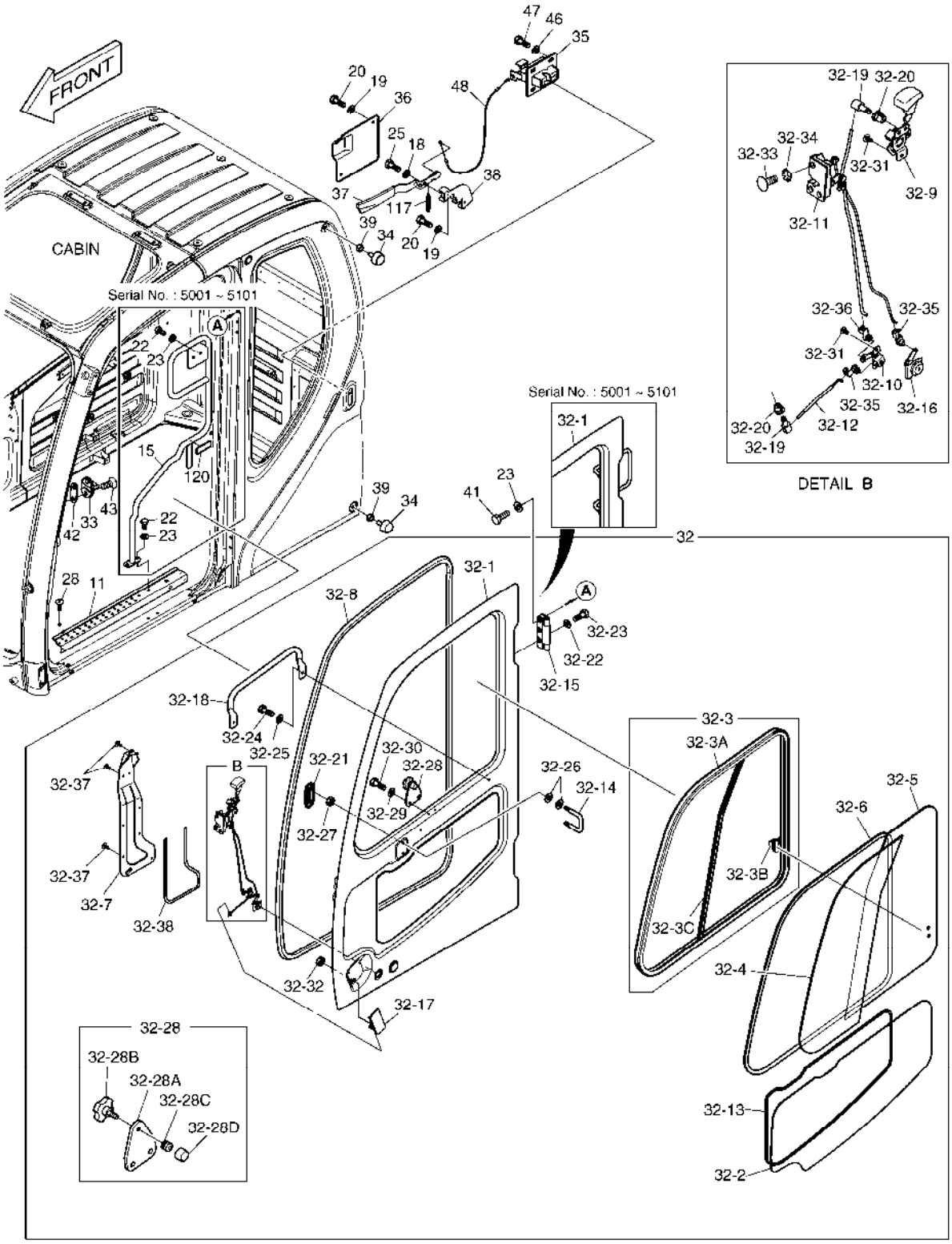

DATE	AUG. 28, 2009
3rd EDITION	

Fig. 1480 CABIN(4) CABINE

Serial No. ;

Key No.	Part No.	Description	Description	Q'ty	S.C	Serial No.	ICA	Replaceable part	
								Part No.	Q'ty
1480 -48	2127-1002A	CABLE;BACK LOCK	CABLE	1					
117	2129-1446	SPRING	RESSORT	1					
120	K1006368	RUBBER	CAOUTCHOUC	1		5001-5101			

Fig. 1485 HANDLE - CABIN HANDLE

Serial No. ; 5102 ~

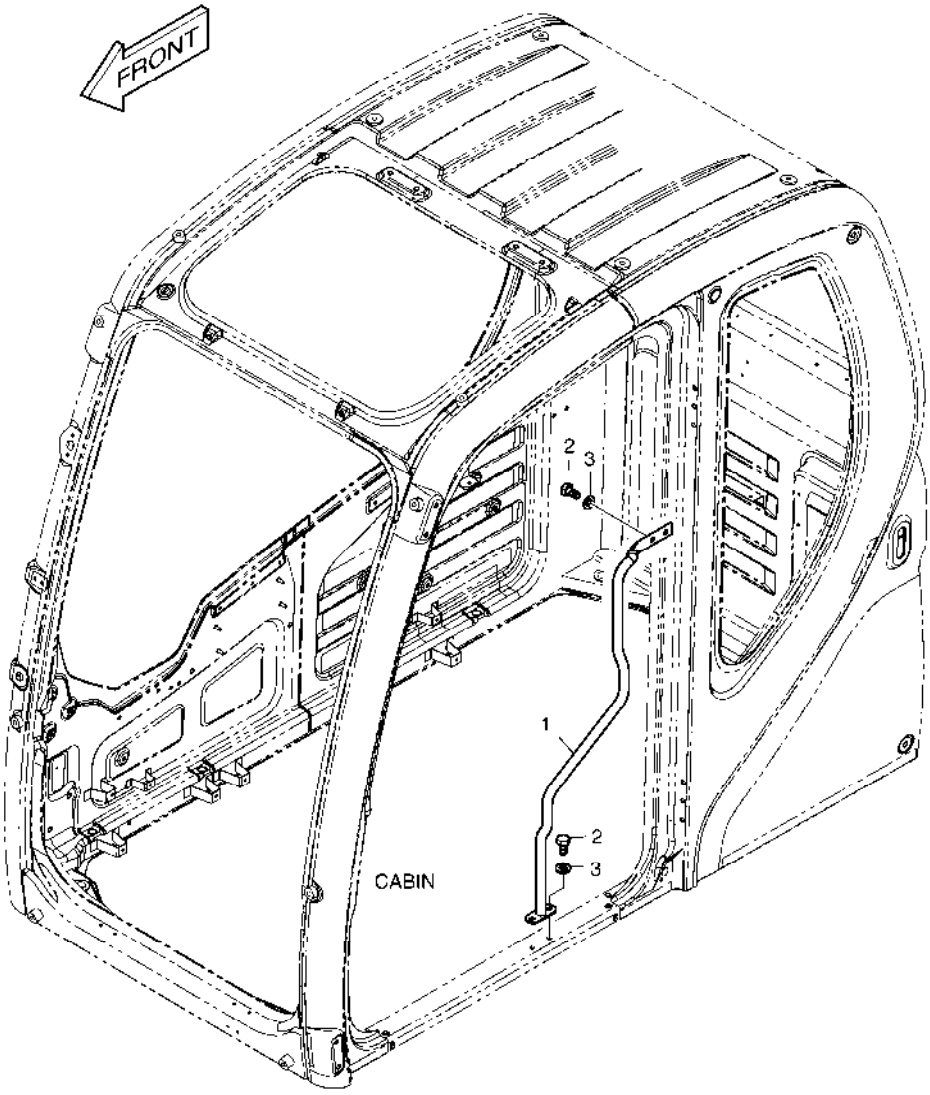

DATE	AUG. 28, 2009
3rd EDITION	

Fig. 1485 HANDLE - CABIN HANDLE

Serial No. ; 5102 ~

Key No.	Part No.	Description	Description	Q'ty	S.C	Serial No.	ICA	Replaceable part	
								Part No.	Q'ty
1485 --	K1038240	HANDLE ASS`Y	HANDLE	-	D	5102-			
1	K1038247	HANDLE	HANDLE	1					
2	2120-2166D4	BOLT	BOULON A 6 PANS	4					
3	2114-1898D15	WASHER;PLAIN	RONDELLE	4					

DATE	AUG. 28, 2009
3rd EDITION	

Fig. 1490 FLOOR MAT PLANCHER

Serial No. ;

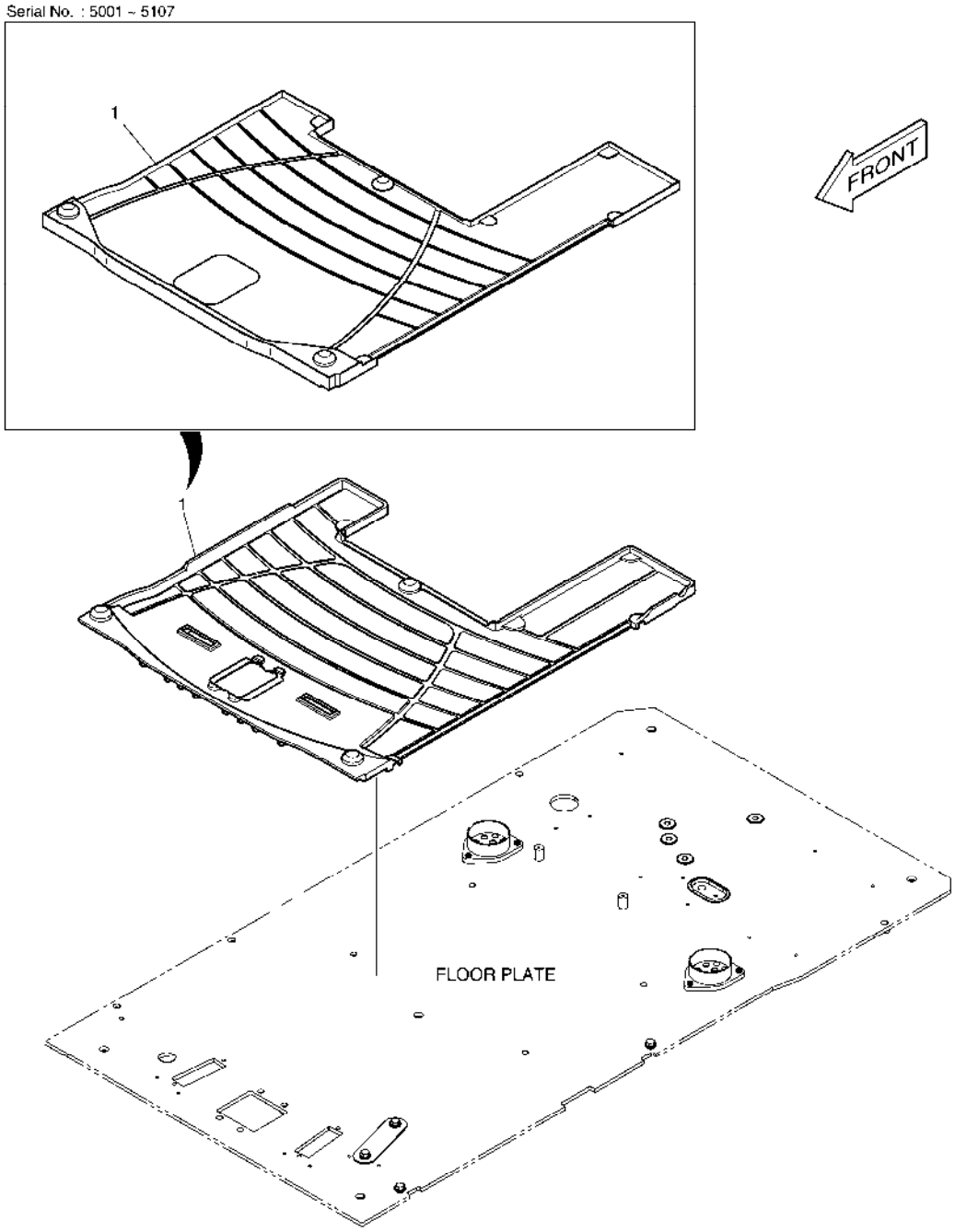

DATE	AUG. 28, 2009
3rd EDITION	

Fig. 1490 FLOOR MAT PLANCHER

Serial No. ;

Key No.	Part No.	Description	Description	Q'ty	S.C	Serial No.	ICA	Replaceable part	
								Part No.	Q'ty
1490 -1	K1002081A	MAT;FLOOR	PLAQUE	1		5001-5107			
	K1002081B	MAT;FLOOR	PLAQUE	1		5108-			

DATE	AUG. 28, 2009
3rd EDITION	

Fig. 1500 FLOOR PLATE TOLE DE PLANCHER

Serial No. ;

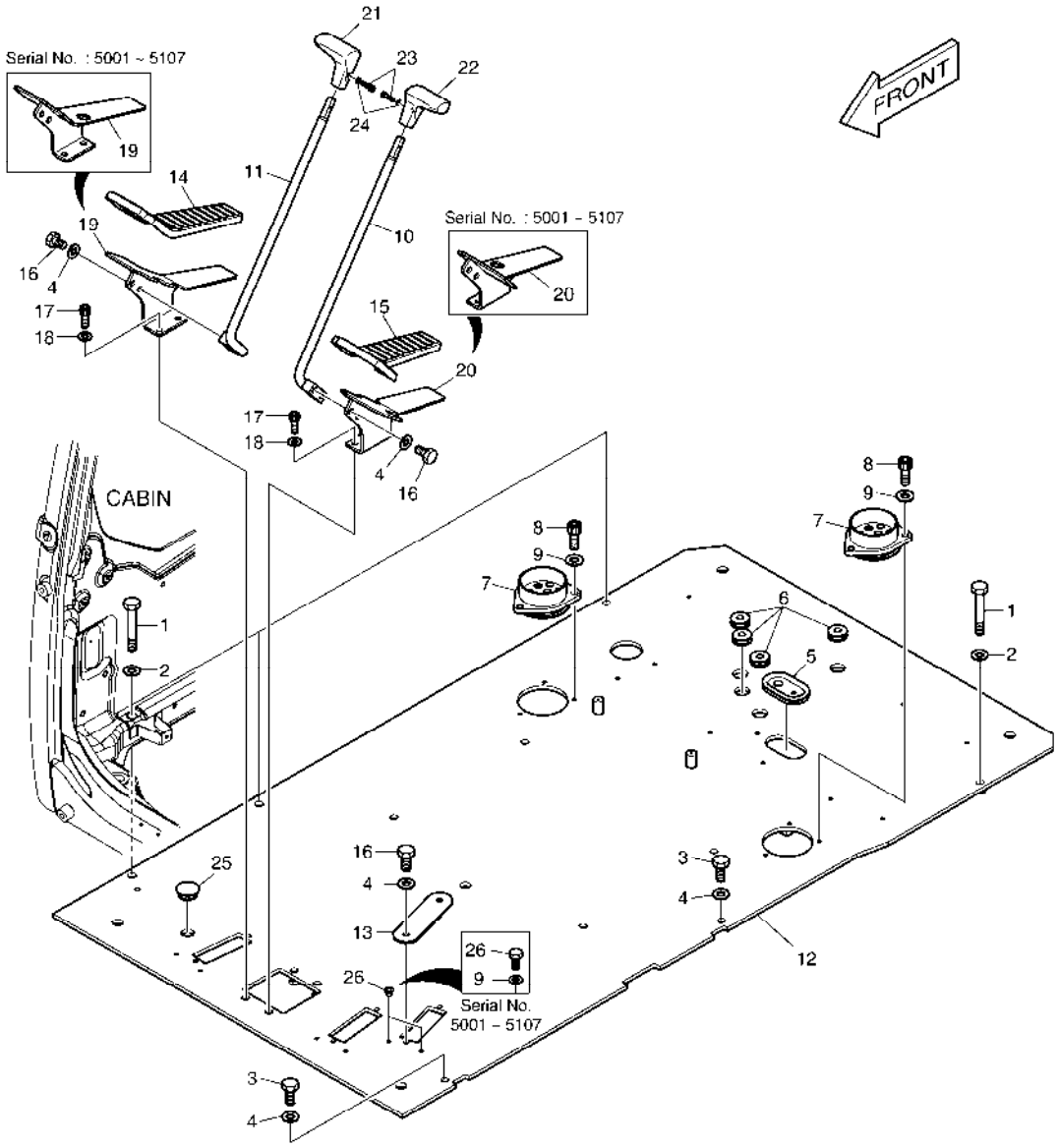

DATE	AUG. 28, 2009
3rd EDITION	

Fig. 1500 FLOOR PLATE TOLE DE PLANCHER

Serial No. ;

Key No.	Part No.	Description	Description	Q'ty	S.C	Serial No.	ICA	Replaceable part Part No.	Q'ty
1500 --	622-00426G	FLOOR PLATE ASS`Y	TOLE DE PLANCHER	-	D				
1	2120-2166D55	BOLT	BOULON	4					
2	2114-1898D17	WASHER M12	RONDELLE	4					
3	2120-2166D1	BOLT	BOULON A 6 PANS	2					
4	2114-1898D1	WASHER	RONDELLE	8					
5	160-00071	BUSHING;RUBBER	DOUILLE EN CAOUTCHOU	1					
6	160-00072	BUSHING;RUBBER	DOUILLE EN CAOUTCHOU	4					
7	160-00080A	BUSHING;RUBBER	DOUILLE EN CAOUTCHOU	2		5001-5107	I	160-00080B	2
	160-00080B	BUSHING;RUBBER	DOUILLE EN CAOUTCHOU	2		5108-			
8	S2208866	BOLT;SOCKET	BOULON DE PLOT	6					
9	2114-1898D14	WASHER;PLAIN	RONDELLE	8		5001-5107			
	2114-1898D14	WASHER;PLAIN	RONDELLE	6		5108-			
10	133-00229A	LEVER;TRAVEL (L.H)	LEVIER	1					
11	133-00230A	LEVER;TRAVEL (R.H)	LEVIER	1					
12	621-02892G	PLATE;FLOOR	PLAQUE	1		5001-5107	I	621-02892J	1
	621-02892J	PLATE;FLOOR	PLAQUE	1		5108-			
13	621-01507	PLATE	PLAQUE	1		5001-5107	I	621-01507A	1
	621-01507A	PLATE	PLAQUE	1		5108-			
14	161-00381	RUBBER;PEDAL(R.H)	CAOUTCHOUC	1					
15	161-00382	RUBBER;PEDAL(L.H)	CAOUTCHOUC	1					
16	2120-2166D4	BOLT	BOULON A 6 PANS	6					
17	S2211866	BOLT;SOCKET	BOULON A 6 PANS CREUX	4					
18	S5110603	WASHER;SPRING	RONDELLE ELASTIQUE	4					
19	195-01683A	BRACKET;PEDAL(R.H)	SUPPORT	1		5001-5107	I	K1039515	1
	K1039515	BRACKET;PEDAL(R.H)	SUPPORT	1		5108-			
20	195-01684A	BRACKET;PEDAL(L.H)	SUPPORT	1		5001-5107	I	K1039514	1
	K1039514	BRACKET;PEDAL(L.H)	SUPPORT	1		5108-			
21	2132-1134B	GRIP;LEVER(R.H)	POIGNEE	1					
22	2132-1133B	GRIP;LEVER(L.H)	POIGNEE	1					
23	S2201766	BOLT	BOULON DE PLOT	2					
24	S5000113	WASHER;PLAIN	RONDELLE PLATE	2					
25	2161-2487	CAP;RUBBER	ARRET	1					
26	2120-2166D12	BOLT;HEX	BOULON A 6 PANS	2		5001-5107			
	160-00073A	CAP	CHAPEAU	2		5108-			

DATE	AUG. 28, 2009
3rd EDITION	

Fig. 1510 HANDLE ASS'Y HANDLE

Serial No. ;

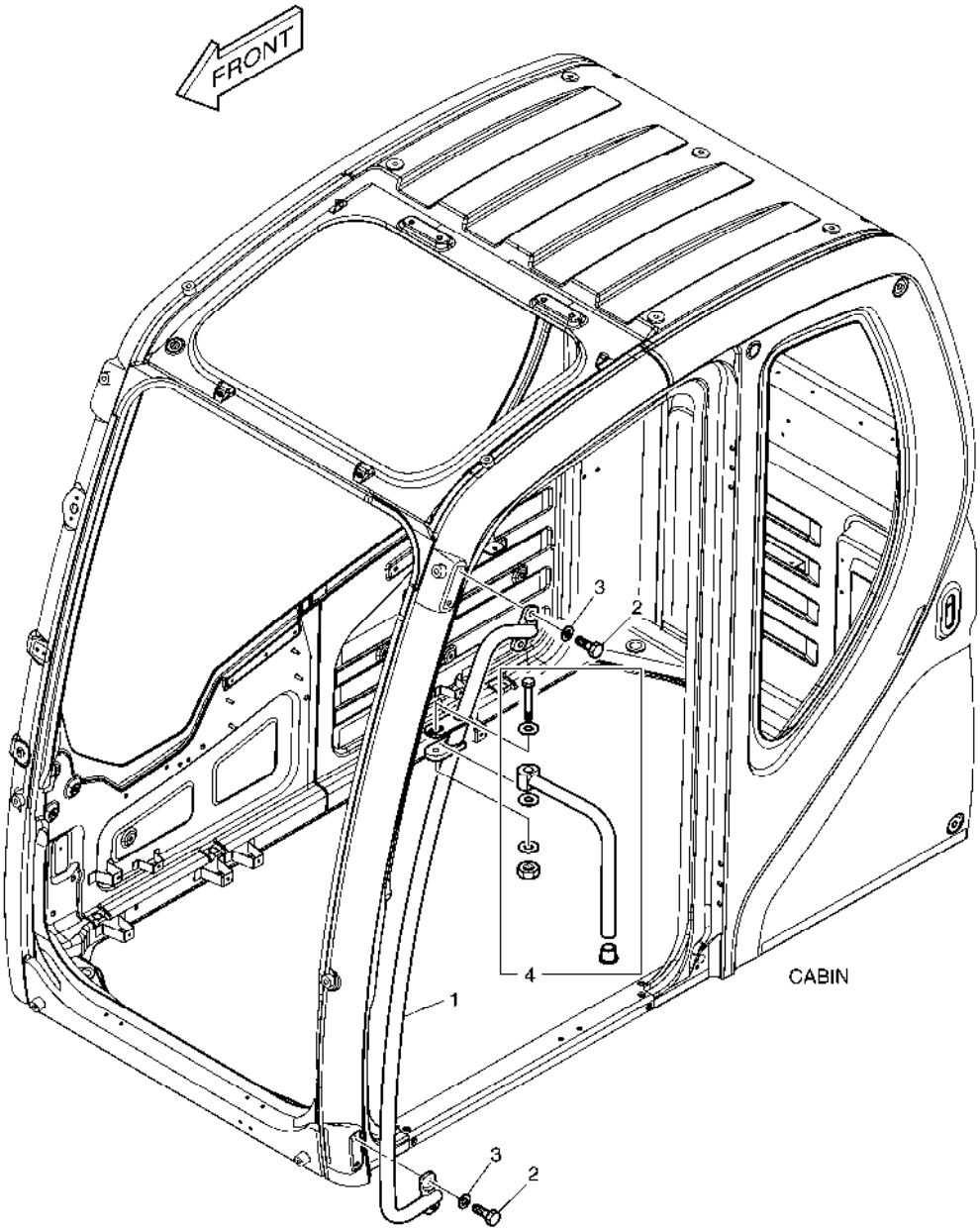

DATE	AUG. 28, 2009
3rd EDITION	

Fig. 1510 HANDLE ASS'Y HANDLE

Serial No. ;

Key No.	Part No.	Description	Description	Q'ty	S.C	Serial No.	ICA	Replaceable part	
								Part No.	Q'ty
1510 --	172-00372A	HANDLE ASS`Y	HANDLE	-	D				
1	172-00053B	HANDLE;OUTER	POIGNEE	1					
2	2120-2166D2	BOLT	BOULON A 6 PANS	4					
3	2114-1898D15	WASHER;PLAIN	RONDELLE	4					
4	K1004272	STAY;MIRROR	ENTRETOISE	1					

DATE	AUG. 28, 2009
3rd EDITION	

Fig. 1520 ROOF COVER COUVERCLE

Serial No. ;

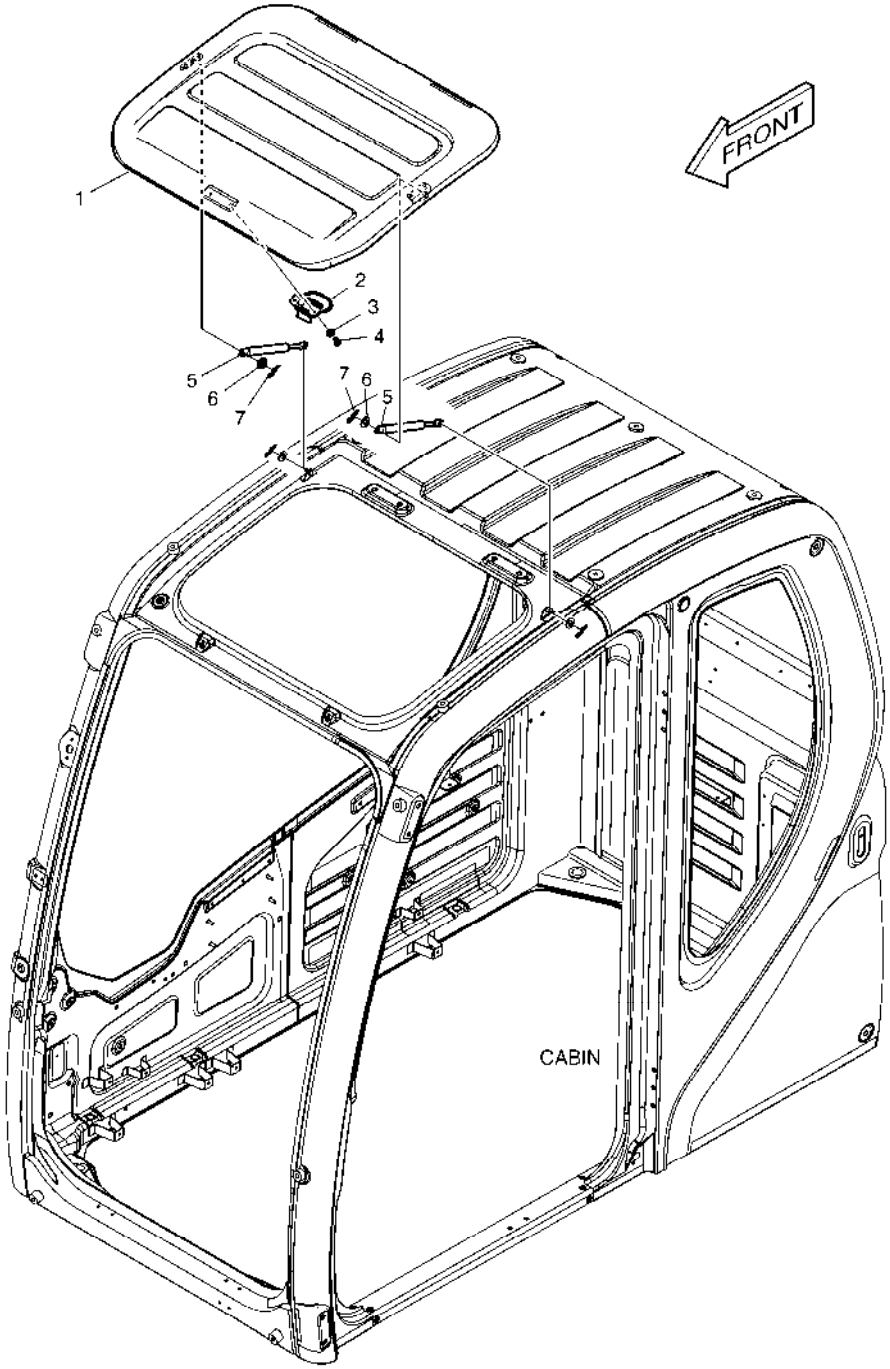

DATE	AUG. 28, 2009
3rd EDITION	

Fig. 1520 ROOF COVER COUVERCLE

Serial No. ;

Key No.	Part No.	Description	Description	Q'ty	S.C	Serial No.	ICA	Replaceable part	
								Part No.	Q'ty
1520 --	621-03732C	ROOF COVER ASS`Y	COUVERCLE	-	D				
1	621-03727B	COVER;ROOF	COUVERCLE	1					
2	123-00516B	LOCK ASS`Y;ROOF COVER	SERRURE	1					
3	2114-1898D3	WASHER;PLAIN	RONDELLE	2					
4	2120-2166D9	SCREW	VIS	2					
5	DS1003009	GAS-SPRING	GOUJON	2					
6	2114-1898D14	WASHER;PLAIN	RONDELLE	2					
7	123-00523	PIN;GAS-SPRING	GOUJON	2					

DATE	AUG. 28, 2009
3rd EDITION	

Fig. 1530 FOOT REST - L.H. REPOS DE PIED

Serial No. ;

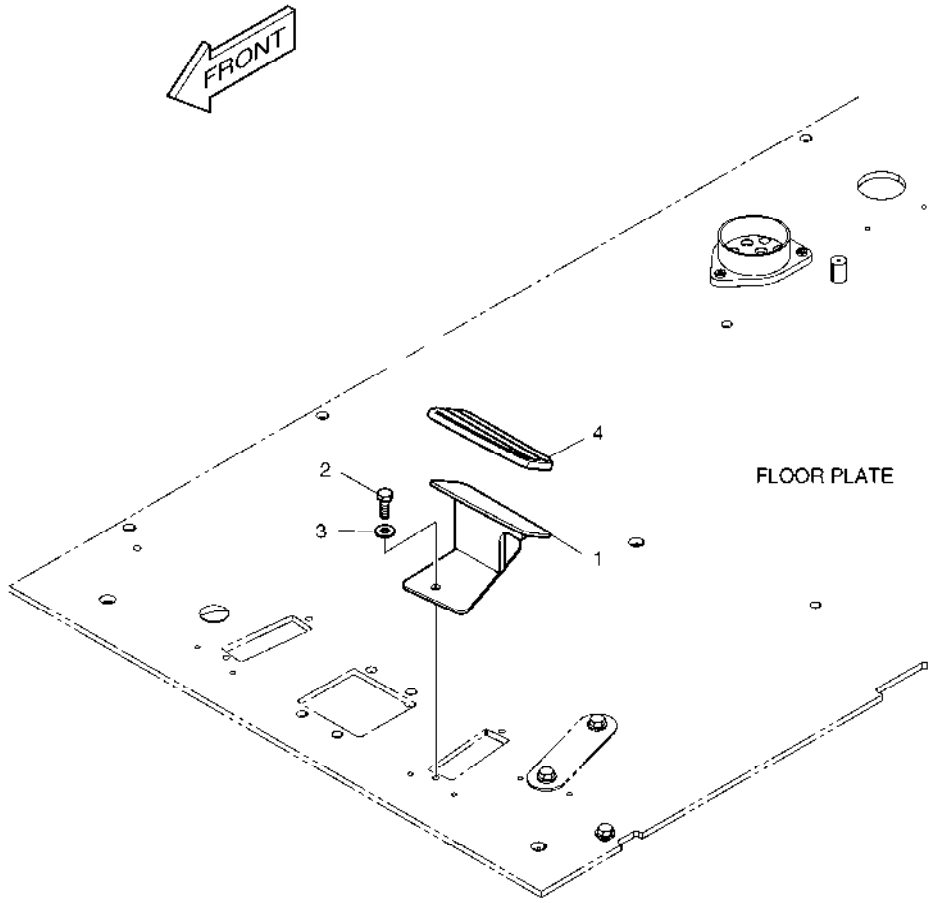

DATE	AUG. 28, 2009
3rd EDITION	

Fig. 1530 FOOT REST - L.H. REPOS DE PIED

Serial No. ;

Key No.	Part No.	Description	Description	Q'ty	S.C	Serial No.	ICA	Replaceable part	
								Part No.	Q'ty
1530 --	K1002082	FOOT REST(L.H)	REPOS DE PIED	-	D				
1	195-02949A	BRACKET;FOOT REST(L.H)	SUPPORT	1					
2	2120-2166D1	BOLT	BOULON A 6 PANS	2					
3	2114-1898D1	WASHER	RONDELLE	2					
4	2160-1345	COVER;FOOT REST	COUVERCLE	1					

DATE	AUG. 28, 2009
3rd EDITION	

Fig. 1540 FOOT REST - R.H.
REPOS DE PIED

Serial No. ;

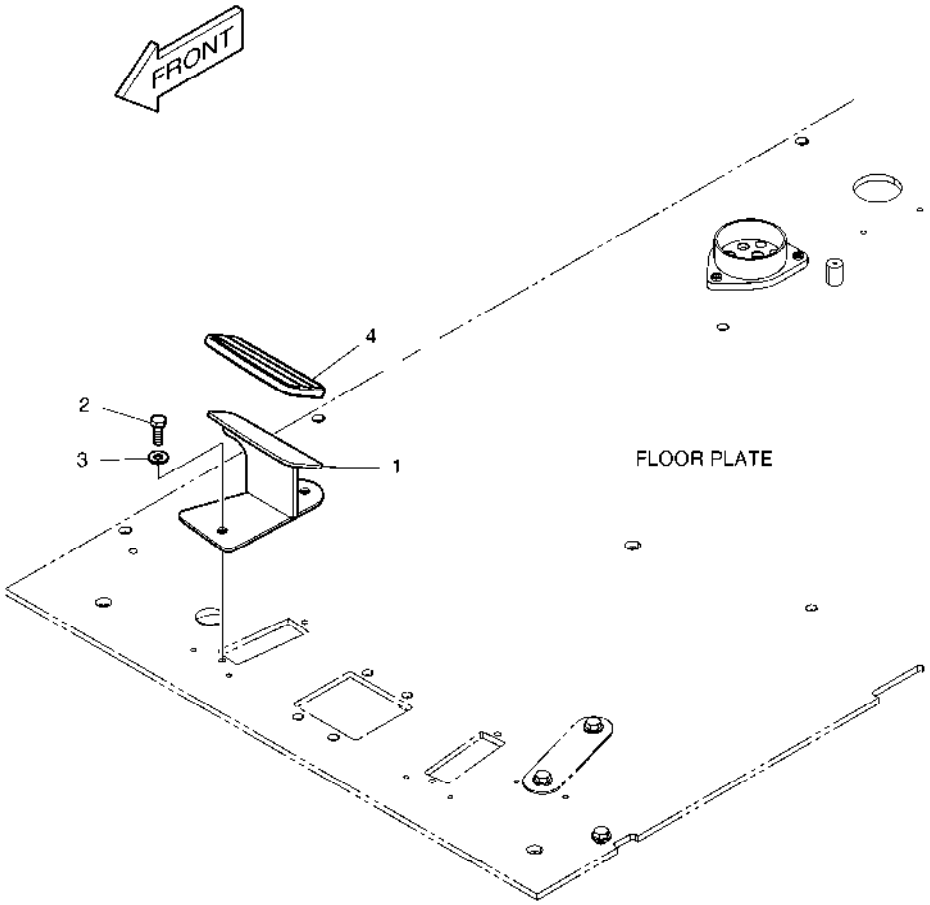

DATE	AUG. 28, 2009
3rd EDITION	

Fig. 1540 FOOT REST - R.H.
REPOS DE PIED

Serial No. ;

Key No.	Part No.	Description	Description	Q'ty	S.C	Serial No.	ICA	Replaceable part	
								Part No.	Q'ty
1540 --	K1002083	FOOT REST(R.H)	REPOS DE PIED	-	D				
1	195-02948A	BRACKET;FOOT REST(R.H)	SUPPORT	1					
2	2120-2166D1	BOLT	BOULON A 6 PANS	2					
3	2114-1898D1	WASHER	RONDELLE	2					
4	2160-1346	COVER;FOOT REST	COUVERCLE	1					

DATE	AUG. 28, 2009
3rd EDITION	

Fig. 1550 SUPPORT SUPPORT

Serial No. ;

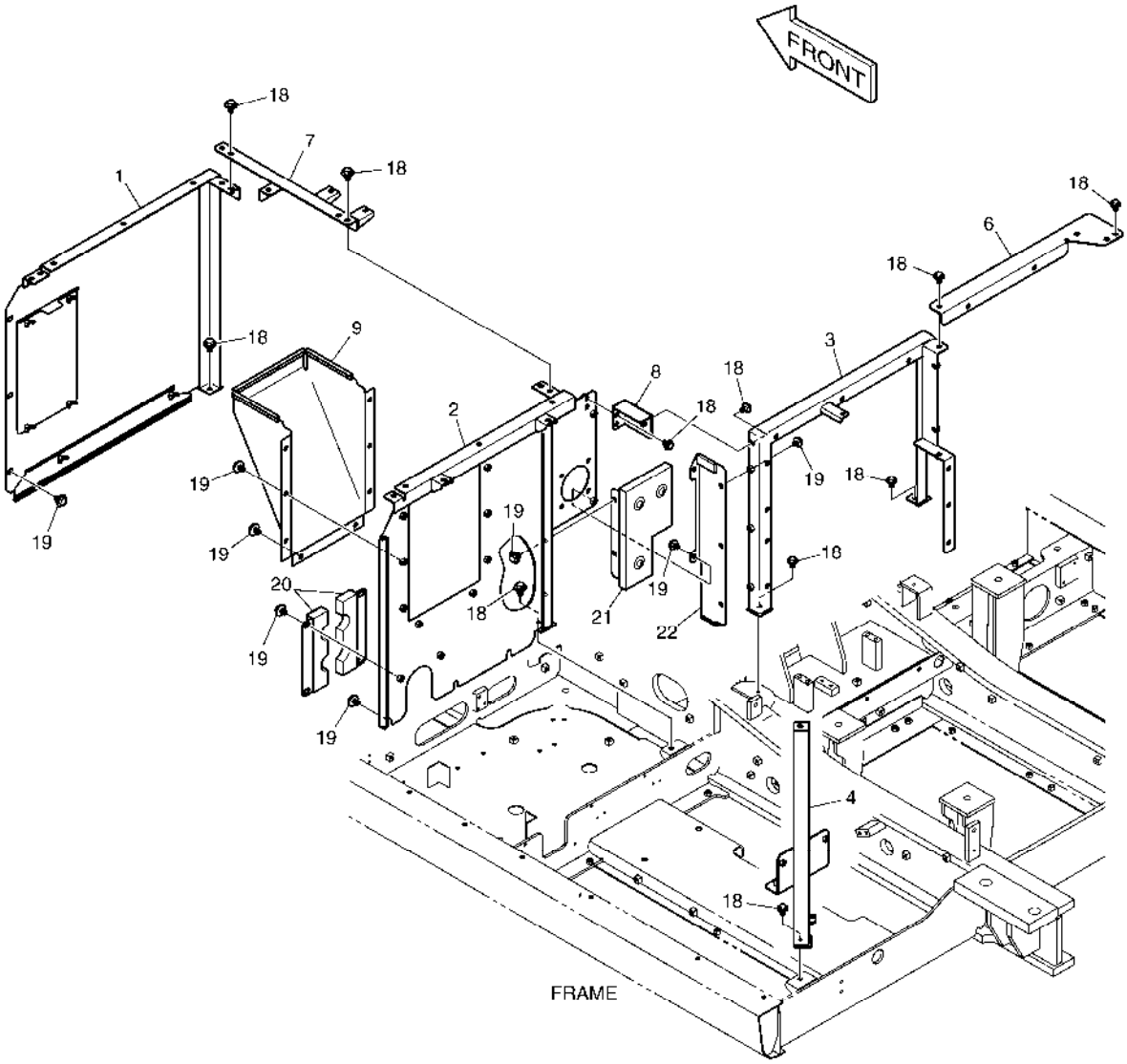

DATE	AUG. 28, 2009
3rd EDITION	

Fig. 1550 SUPPORT SUPPORT

Serial No. ;

Key No.	Part No.	Description	Description	Q'ty	S.C	Serial No.	ICA	Replaceable part	
								Part No.	Q'ty
1550 --	K1010236E	SUPPORT&BAFFLE	SUPPORT	-	D				
1	195-02742H	SUPPORT	SUPPORT	1					
2	K1010397C	SUPPORT	LAMPE	1					
3	K1010398C	SUPPORT	LAMPE	1					
4	K1011182A	SUPPORT	LAMPE	1					
6	K1010400A	SUPPORT	LAMPE	1					
7	K1010399B	SUPPORT	LAMPE	1					
8	K1010421B	SUPPORT	LAMPE	1					
9	621-03655A	COVER;BAFFLE	COUVERCLE	1					
18	DS0025015	BOLT;SET	BOULON A 6 PANS	15					
19	DS0025022	BOLT;SET	BOULON A 6 PANS	25					
20	K1011137	COVER	COUVERCLE	2					
21	K1010872	COVER;BAFFLE	COUVERCLE	1					
22	K1010873A	COVER;BAFFLE	COUVERCLE	1					

DATE	AUG. 28, 2009
3rd EDITION	

Fig. 1560 BAFFLE COUVERCLE

Serial No. ;

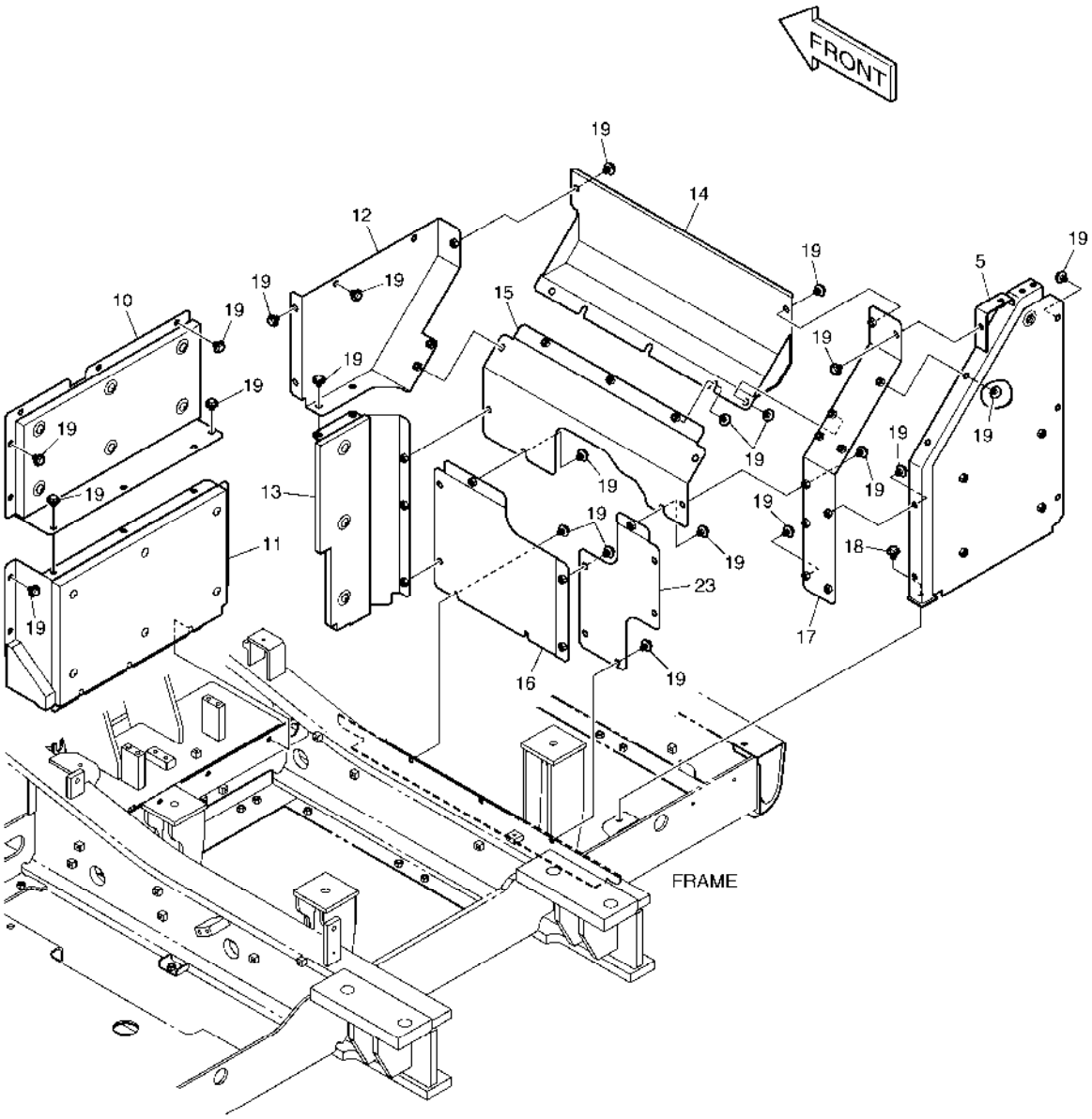

DATE	AUG. 28, 2009
3rd EDITION	

Fig. 1560 BAFFLE COUVERCLE

Serial No. ;

Key No.	Part No.	Description	Description	Q'ty	S.C	Serial No.	ICA	Replaceable part	
								Part No.	Q'ty
1560 --	K1010236G	SUPPORT&BAFFLE	SUPPORT	-	D				
5	K1010401A	SUPPORT	LAMPE	1		5001-5108	I	K1010401C	1
	K1010401C	SUPPORT	LAMPE	1		5109-			
10	K1010567	COVER;BAFFLE	COUVERCLE	1					
11	K1010568B	COVER;BAFFLE	COUVERCLE	1					
12	K1010569	COVER;BAFFLE	COUVERCLE	1					
13	K1010570A	COVER;BAFFLE	COUVERCLE	1					
14	K1010571	COVER;BAFFLE	COUVERCLE	1					
15	K1010572B	COVER;BAFFLE	COUVERCLE	1					
16	K1010573A	COVER;BAFFLE	COUVERCLE	1					
17	K1010574A	COVER;BAFFLE	COUVERCLE	1					
18	DS0025015	BOLT;SET	BOULON A 6 PANS	1					
19	DS0025022	BOLT;SET	BOULON A 6 PANS	53					
23	K1016321	COVER;BAFFLE	COUVERCLE	1					

DATE	AUG. 28, 2009
3rd EDITION	

Fig. 1570 SIDE DOOR - L.H ENSEMBLE DE PORTE

Serial No. ;

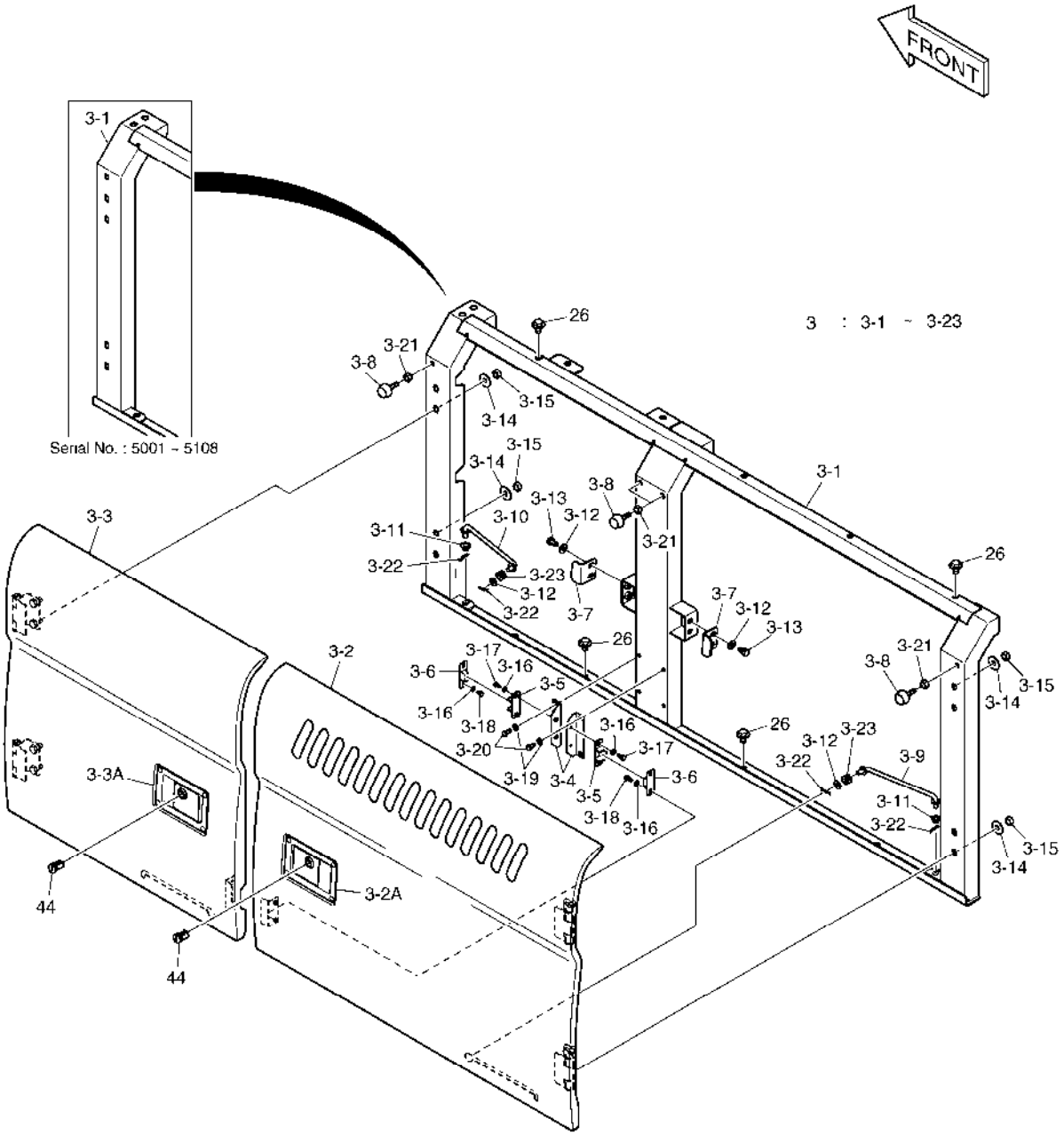

DATE	AUG. 28, 2009
3rd EDITION	

Fig. 1570 SIDE DOOR - L.H ENSEMBLE DE PORTE

Serial No. ;

Key No.	Part No.	Description	Description	Q'ty	S.C	Serial No.	ICA	Replaceable part Part No.	Q'ty
1570 --	K1010733P	COVER ASS'Y	COUVERCLE	-	D				
3	K1010737C	SIDE DOOR ASS'Y (L.H)	PORTE	1		5001-5108	I	K1010737E	1
	K1010737E	SIDE DOOR ASS'Y (L.H)	PORTE	1		5109-			
3-1	K1010738A	. SUPPORT(L.H)	. SUPPORT	1		5001-5108	I	K1010738C	1
	K1010738C	. SUPPORT(L.H)	. SUPPORT	1		5109-			
3-2	621-02724G	. DOOR;SIDE	. DIODE	1					
3-2A	125-00034A	.. LOCK	.. VERROU	1					
3-3	K1010739A	. DOOR(L.H)	. DIODE	1					
3-3A	125-00035A	.. LOCK	.. VERROU	1					
3-4	2116-1522	. PLATE	. PLAQUE	2					
3-5	2161-9052	. STOPPER;PLATE	. ARRET	2					
3-6	2161-9053	. STOPPER;RUBBER	. ARRET	2					
3-7	621-02726A	. PLATE;LOCK	. PLAQUE	2					
3-8	K1001260A	. STOPPER;RUBBER	. CAOUTCHOUC	4					
3-9	623-00074B	. STAY	. ENTRETOISE	1					
3-10	623-00075B	. STAY	. ENTRETOISE	1					
3-11	K1000602	. BUSHING	. DOUILLE	2					
3-12	2114-1058D45	. WASHER	. RONDELLE	6					
3-13	S0511866	. BOLT	. BOULON A 6 PANS	4					
3-14	2114-1058D30	. WASHER;PLAIN	. RONDELLE	8					
3-15	S4012733	. NUT	. ECROU	8					
3-16	S5010313	. WASHER	. RONDELLE	8					
3-17	S0504553	. BOLT	. BOULON A 6 PANS	4					
3-18	S0504453	. BOLT	. BOULON A 6 PANS	4					
3-19	S5010513	. WASHER	. RONDELLE	4					
3-20	S0508753	. BOLT M8X1.25X18	. BOULON A 6 PANS	4					
3-21	S4012633	. NUT	. ECROU	4					
3-22	2705-9002	. PIN;LOCK	. GOUPILLE DE BLOCAGE	4					
3-23	K1008335	. BUSHING	. DOUILLE	2					
26	DS0025015	BOLT;SET	BOULON A 6 PANS	8					
44	K1004630	KEY;CYLINDER	□匙	2					

DATE	AUG. 28, 2009
3rd EDITION	

Fig. 1580 SIDE DOOR - R.H ENSEMBLE DE PORTE

Serial No. ;

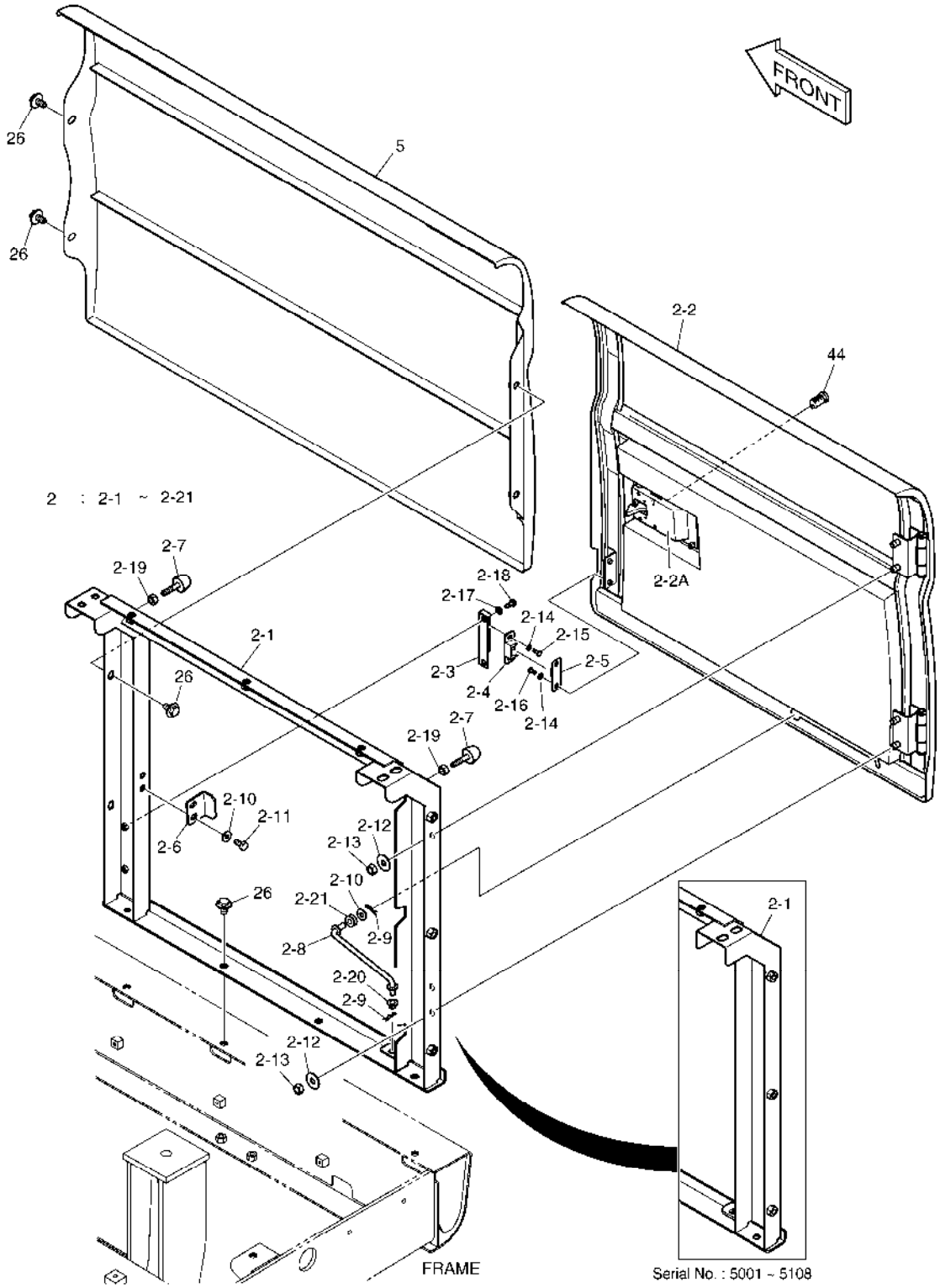

DATE	AUG. 28, 2009
3rd EDITION	

Fig. 1580 SIDE DOOR - R.H ENSEMBLE DE PORTE

Serial No. ;

Key No.	Part No.	Description	Description	Q'ty	S.C	Serial No.	ICA	Replaceable part	
								Part No.	Q'ty
1580 --	K1010733P	COVER ASS'Y	COUVERCLE	-	D				
2	K1015319A	SIDE DOOR ASS'Y (R.H)	PORTE	1		5001-5108	I	K1015319C	1
	K1015319C	SIDE DOOR ASS'Y (R.H)	PORTE	1		5109-			
2-1	K1015320	. SUPPORT(R.H)	. SUPPORT	1		5001-5108	I	K1015320B	1
	K1015320B	. SUPPORT(R.H)	. SUPPORT	1		5109-			
2-2	K1015321A	. SIDE DOOR	. PORTE	1					
2-2A	125-00035A	.. LOCK	.. VERROU	1					
2-3	2116-1522	. PLATE	. PLAQUE	1					
2-4	2161-9052	. STOPPER;PLATE	. ARRET	1					
2-5	2161-9053	. STOPPER;RUBBER	. ARRET	1					
2-6	621-02726A	. PLATE;LOCK	. PLAQUE	1					
2-7	K1001260A	. STOPPER;RUBBER	. CAOUTCHOUC	2					
2-8	623-00075B	. STAY	. ENTRETOISE	1					
2-9	2705-9002	. PIN;LOCK	. GOUPILLE DE BLOCAGE	2					
2-10	2114-1058D45	. WASHER	. RONDELLE	3					
2-11	S0511853	. BOLT M10X1.5X20	. BOULON A 6 PANS	2					
2-12	2114-1058D30	. WASHER;PLAIN	. RONDELLE	4					
2-13	S4012733	. NUT	. ECROU	4					
2-14	S5010313	. WASHER	. RONDELLE	4					
2-15	S0504553	. BOLT	. BOULON A 6 PANS	2					
2-16	S0504453	. BOLT	. BOULON A 6 PANS	2					
2-17	S5010513	. WASHER	. RONDELLE	2					
2-18	S0508753	. BOLT M8X1.25X18	. BOULON A 6 PANS	2					
2-19	S4012633	. NUT	. ECROU	2					
2-20	K1000602	. BUSHING	. DOUILLE	1					
2-21	K1008335	. BUSHING	. DOUILLE	1					
5	621-02683G	COVER;TANK	COUVERCLE	1					
26	DS0025015	BOLT;SET	BOULON A 6 PANS	8					
44	K1004630	KEY;CYLINDER	□匙	1					

DATE	AUG. 28, 2009
3rd EDITION	

Fig. 1590 BATTERY COVER COUVERCLE

Serial No. ;

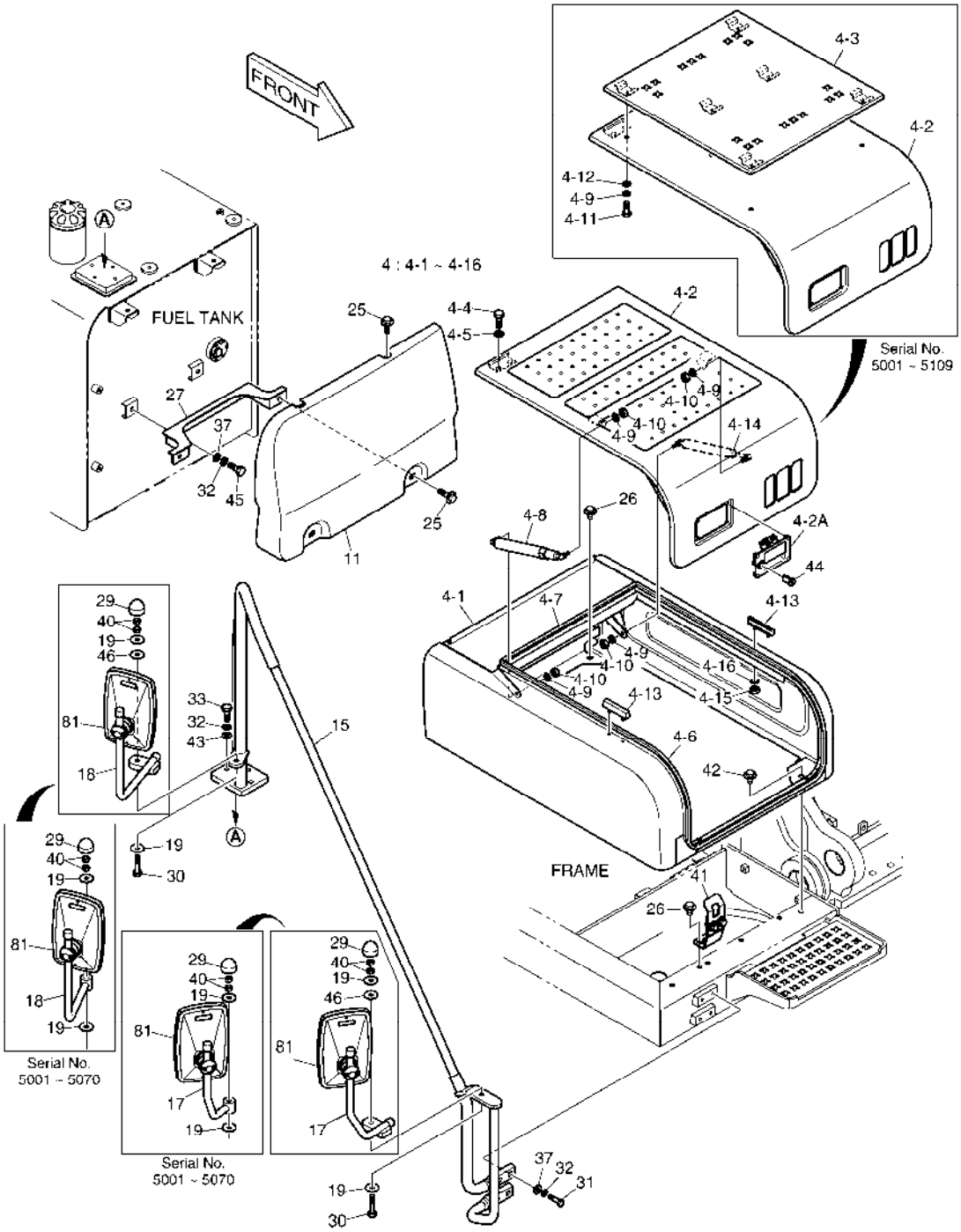

DATE	AUG. 28, 2009
3rd EDITION	

Fig. 1590 BATTERY COVER COUVERCLE

Serial No. ;

Key No.	Part No.	Description	Description	Q'ty	S.C	Serial No.	ICA	Replaceable part Part No.	Q'ty
1590 --	K1010733U	COVER ASS`Y	COUVERCLE	-	D				
4	621-03656C	BATTERY COVER ASS'Y	COUVERCLE	1		5001-5109	I	K1039067A	1
	K1039067A	BATTERY COVER ASS'Y	COUVERCLE	1		5110-5110	I	K1039067C	1
	K1039067C	BATTERY COVER ASS`Y	COUVERCLE	1		5111-			
4-1	-	. BATTERY COVER	. COUVERCLE	1	D				
4-2	621-03659C	. COVER	. COUVERCLE	1		5001-5109	I	K1038697A	1
	K1038697A	. COVER	. COUVERCLE	1		5110-5110	I	K1038697B	1
	K1038697B	. COVER	. COUVERCLE	1		5111-			
4-2A	125-00071B	.. LATCH;FRONT	.. LATCH;FRONT	1					
4-3	621-03660	. COVER	. COUVERCLE	1		5001-5109			
4-4	S0512066	. BOLT	. BOULON A 6 PANS	4					
4-5	S5010613	. WASHER;PLAIN	. RONDELLE PLATE	4					
4-6	-	. RUBBER	. CAOUTCHOUC	1	D				
4-7	-	. RUBBER	. CAOUTCHOUC	1	D				
4-8	K1005181	. CYLINDER;GAS	. CYLINDRE	1					
4-9	S5102503	. WASHER	. RONDELLE ELASTIQUE	10		5001-5109			
	S5102503	. WASHER	. RONDELLE ELASTIQUE	4		5110-			
4-10	S4012533	. NUT	. ECROU	4					
4-11	S0508866	. BOLT	. BOULON A 6 PANS	6		5001-5109			
4-12	2114-1058D29	. WASHER	. RONDELLE	6		5001-5109			
4-13	K1005305A	. STOPPER;RUBBER	. TAQUET D'ARRET	2					
4-14	DS1001061	. CYLINDER;GAS	. CYLINDRE	1					
4-15	S4012333	. NUT	. ECROU	4					
4-16	S5102303	. WASHER;SPRING	. RONDELLE ELASTIQUE	4					
11	621-03657B	COVER;TANK	COUVERCLE	1					
15	K1013266	STAY	ENTRETOISE	1		5001-5029	I	K1013266A	1
	K1013266A	STAY	ENTRETOISE	1		5030-5095	I	K1013266B	1
	K1013266B	STAY	ENTRETOISE	1		5096-			
17	K1013269	STAY;MIRROR	ENTRETOISE	1		5001-5070	I	K1038110A	1
	K1038110A	STAY;MIRROR	ENTRETOISE	1		5071-			
18	K1013290	STAY;MIRROR	ENTRETOISE	1		5001-5070	I	K1038107A	1
	K1038107A	STAY;MIRROR	ENTRETOISE	1		5071-			
19	2114-1058D68	WASHER	RONDELLE	6		5001-5070			
	2114-1058D68	WASHER	RONDELLE	4		5071-			
25	DS0025014	BOLT;SET	BOULON A 6 PANS	4					
26	DS0025015	BOLT;SET	BOULON A 6 PANS	4					
27	195-02706C	BRACKET	SUPPORT	1					
29	161-00580	CAP;RUBBER	CHAPEAU	2					

DATE	AUG. 28, 2009
3rd EDITION	

Fig. 1590 BATTERY COVER COUVERCLE

Serial No. ;

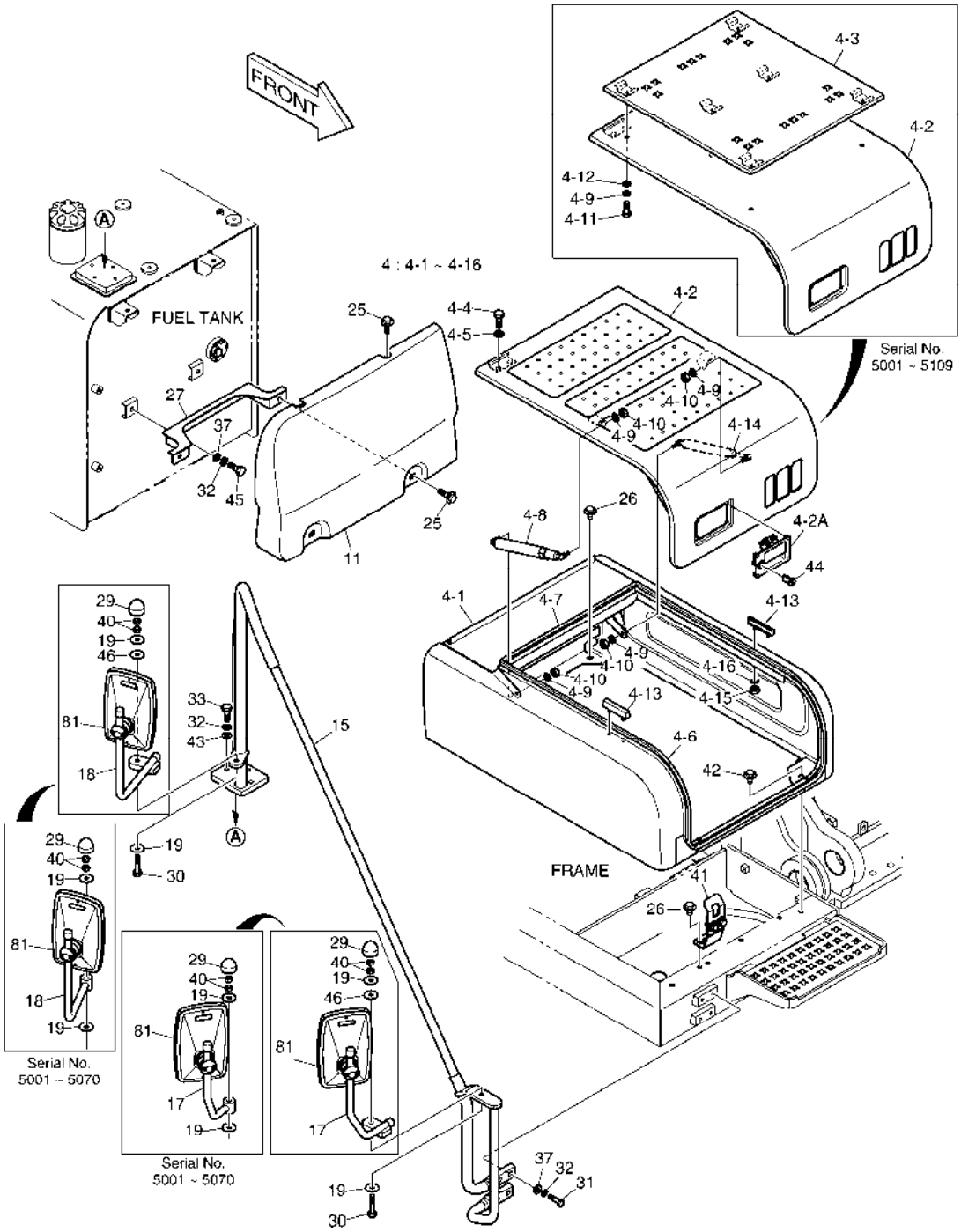

DATE	AUG. 28, 2009
3rd EDITION	

Fig. 1590 BATTERY COVER COUVERCLE

Serial No. ;

Key No.	Part No.	Description	Description	Q'ty	S.C	Serial No.	ICA	Replaceable part	
								Part No.	Q'ty
1590 -30	S0561466	BOLT	BOULON	2		5001-5070			
	S0561066	BOLT	BOULON	2		5071-			
31	S0560666	BOLT	BOULON A 6 PANS	4					
32	S5102703	WASHER;SPRING	RONDELLE ELASTIQUE	10					
33	S0560566	BOLT	BOULON A 6 PANS	4					
37	2114-1154	WASHER	RONDELLE	6					
40	S4012733	NUT	ECROU	4					
41	195-02624C	BRACKET	SUPPORT	1					
42	DS0025027	BOLT;SET	BOULON A 6 PANS	2					
43	S5010713	WASHER;PLAIN	RONDELLE	4					
44	K1004630	KEY;CYLINDER	□匙	1					
45	S0515166	BOLT	BOULON	2					
46	2114-1058D54	WASHER	RONDELLE	2		5071-			
81	903-00068	MIRROR;SIDE	RETROVISEUR	2		5001-5103	I	K1040606	2
	K1040606	MIRROR;SIDE	RETROVISEUR	2		5104-			

DATE	AUG. 28, 2009
3rd EDITION	

Fig. 1600 COVER COUVERCLE

Serial No. ;

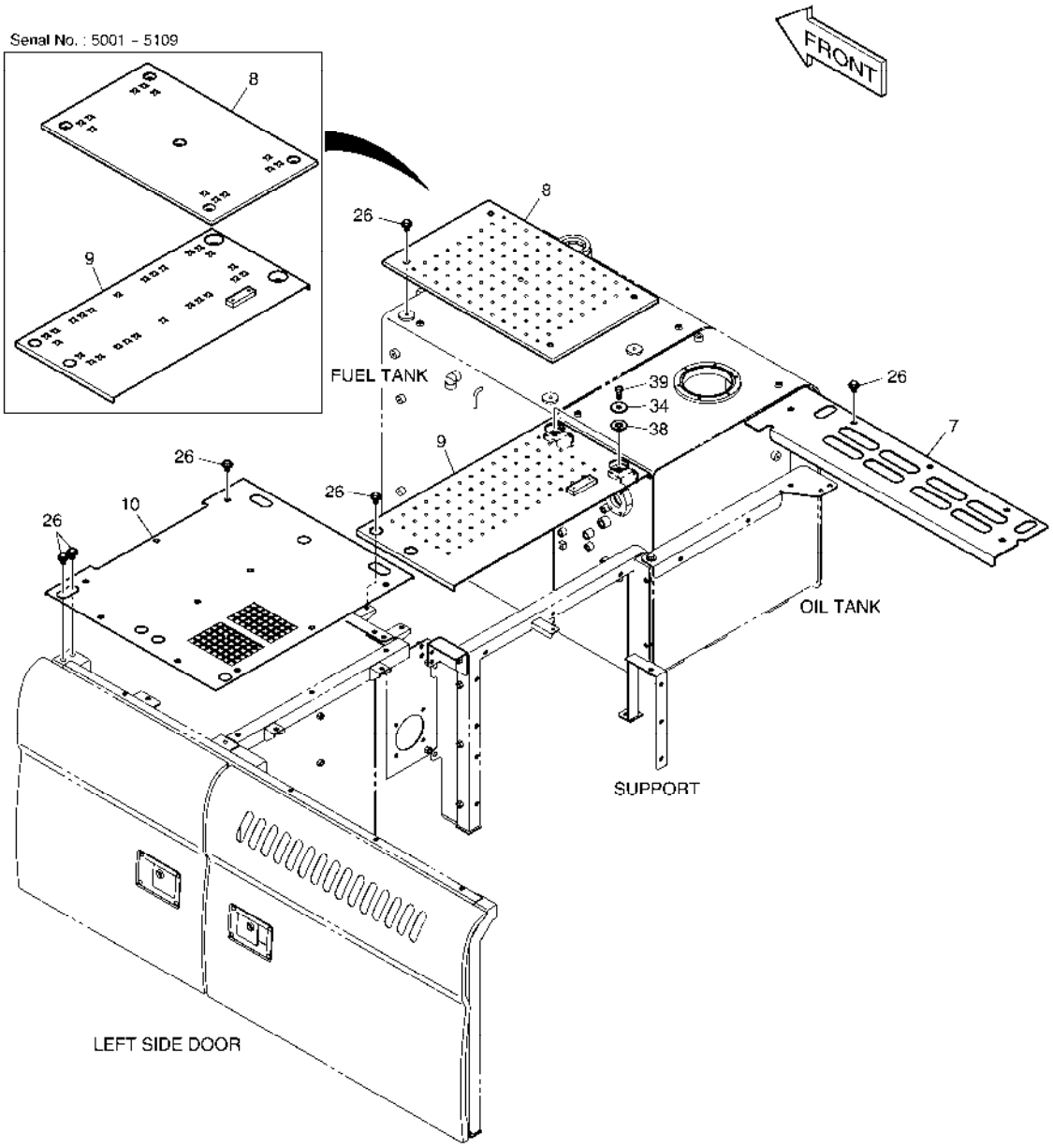

DATE	AUG. 28, 2009
3rd EDITION	

Fig. 1600 COVER COUVERCLE

Serial No. ;

Key No.	Part No.	Description	Description	Q'ty	S.C	Serial No.	ICA	Replaceable part	
								Part No.	Q'ty
1600 --	K1010733Q	COVER ASS`Y	COUVERCLE	-	D				
7	K1010742A	COVER	COUVERCLE	1					
8	K1010743	COVER	COUVERCLE	1		5001-5109	I	K1010743B	1
	K1010743B	COVER	COUVERCLE	1		5110-			
9	K1010744	COVER	COUVERCLE	1		5001-5109	I	K1010744A	1
	K1010744A	COVER	COUVERCLE	1		5110-			
10	K1010745B	COVER	COUVERCLE	1					
26	DS0025015	BOLT;SET	BOULON A 6 PANS	33					
34	114-00529	SPACER	BAGUE D'ECARTEMENT	2					
38	K1002943	RUBBER	CAOUTCHOUC	2					
39	S0515266	BOLT	BOULON A 6 PANS	2					

DATE	AUG. 28, 2009
3rd EDITION	

Fig. 1610 ENGINE COVER
COUVERTURE DE MOTEUR

Serial No. ;

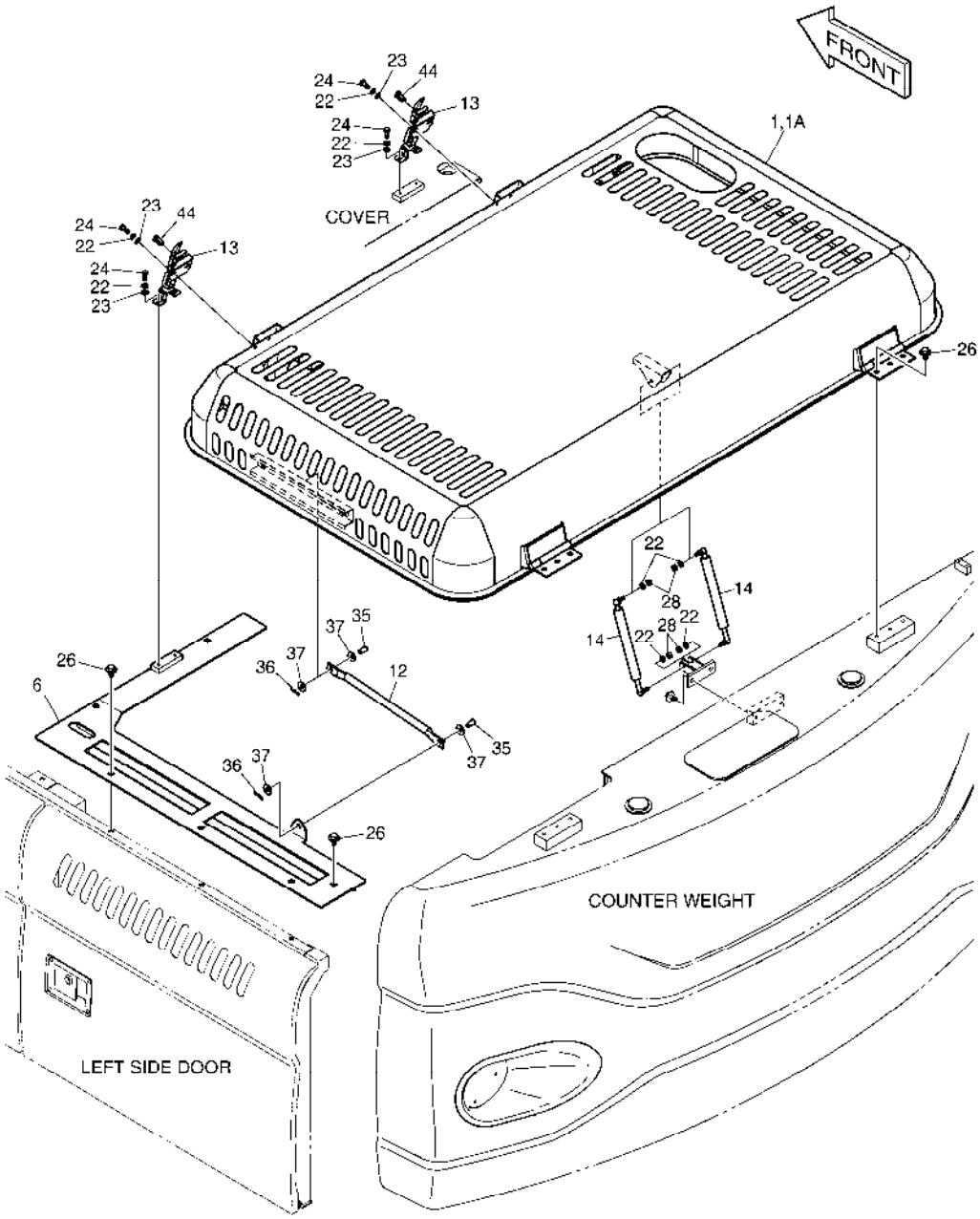

DATE	AUG. 28, 2009
3rd EDITION	

Fig. 1610 ENGINE COVER COUVERTURE DE MOTEUR

Serial No. ;

Key No.	Part No.	Description	Description	Q'ty	S.C	Serial No.	ICA	Replaceable part	
								Part No.	Q'ty
1610 --	K1010733J	COVER ASS`Y	COUVERCLE	-	D				
1	K1015049	ENGINE COVER ASS`Y	MOTEUR	1					
1A	1.162-00001	. RUBBER;CUSHION	. CAOUTCHOUC	1					
6	K1010741A	COVER	COUVERCLE	1					
12	145-00070B	STAY	ENTRETOISE	1					
13	125-00075A	CATCH	CROCHET	2					
14	2440-9142	SPRING;GAS	RESSORT	2					
22	S5102503	WASHER	RONDELLE ELASTIQUE	12					
23	S5010513	WASHER	RONDELLE	8					
24	S0508866	BOLT	BOULON A 6 PANS	8					
26	DS0025015	BOLT;SET	BOULON A 6 PANS	12					
28	S4012533	NUT	ECROU	4					
35	2123-1057D47	PIN	GOUPILLE	2					
36	2705-9002	PIN;LOCK	GOUPILLE DE BLOCAGE	2					
37	2114-1154	WASHER	RONDELLE	4					
44	K1004630	KEY;CYLINDER	□匙	2					

DATE	AUG. 28, 2009
3rd EDITION	

Fig. 1620 ACOUSTIC FOAM ENSEMBLE DE EPONGE

Serial No. ;

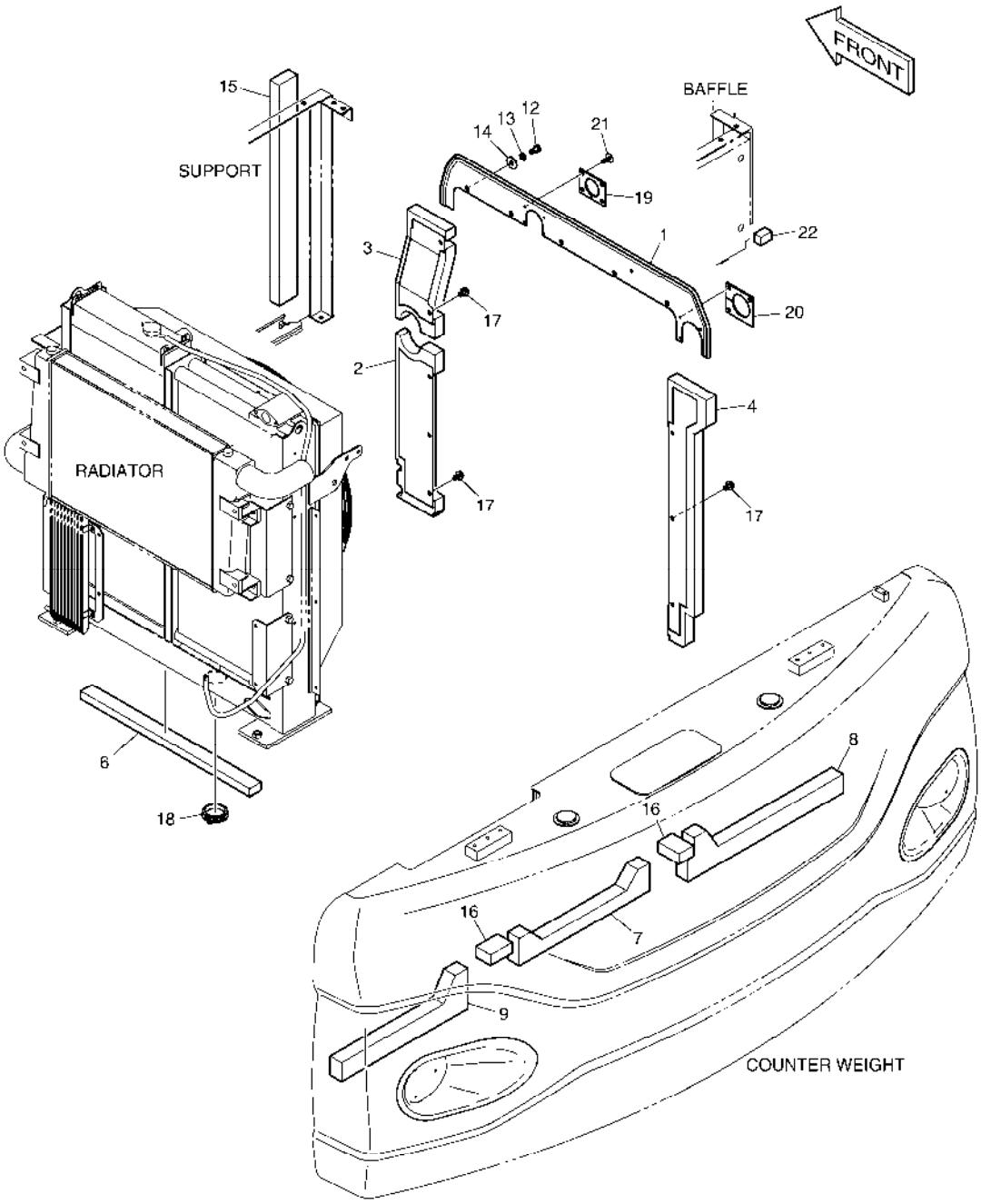

DATE	AUG. 28, 2009
3rd EDITION	

Fig. 1620 ACOUSTIC FOAM ENSEMBLE DE EPONGE

Serial No. ;

Key No.	Part No.	Description	Description	Q'ty	S.C	Serial No.	ICA	Replaceable part	
								Part No.	Q'ty
1620 --	K1011763B	ACOUSTIC FOAM	ENSEMBLE DE EPONGE	-	D				
1	K1023516	COVER;BAFFLE	COUVERCLE	1					
2	K1015055	COVER;BAFFLE	COUVERCLE	1					
3	K1015056	COVER;BAFFLE	COUVERCLE	1					
4	K1015057	COVER;BAFFLE	COUVERCLE	1					
6	K1015058	FOAM	EPONGE	1					
7	K1011174	FOAM	EPONGE	1					
8	K1011175	FOAM	EPONGE	1					
9	K1011176	FOAM	EPONGE	1					
12	S0508666	BOLT	BOULON A 6 PANS	5					
13	S5102503	WASHER	RONDELLE ELASTIQUE	5					
14	2114-1058D29	WASHER	RONDELLE	5					
15	161-00614	FOAM	EPONGE	1					
16	K1011181	FOAM	EPONGE	2					
17	K1001029	BOLT	BOULON A 6 PANS	8					
18	K1007044	BUSHING	DOUILLE	1					
19	K1000500	RUBBER	CAOUTCHOUC	1					
20	K1015071	PLATE;RUBBER	PLAQUE	1					
21	124-00070	CLIP;TREE	ATTACHE	7					
22	K1025511	FOAM	EPONGE	1					

DATE	AUG. 28, 2009
3rd EDITION	

Fig. 1630 UNDER COVER TOLES IMFERIEVRES

Serial No. ;

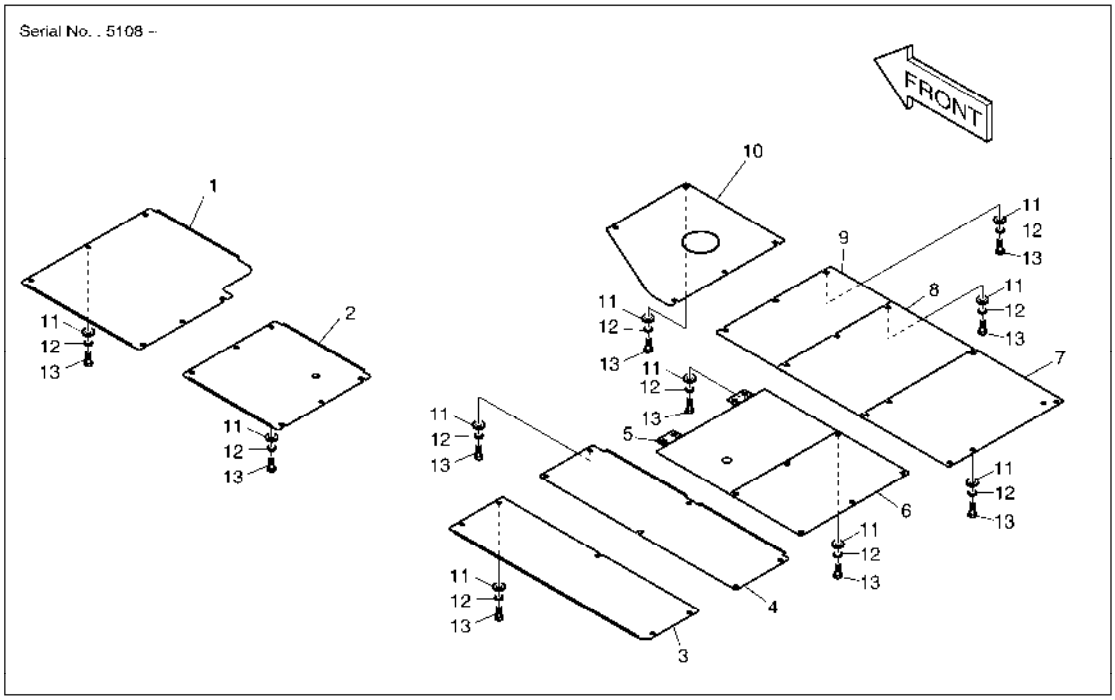

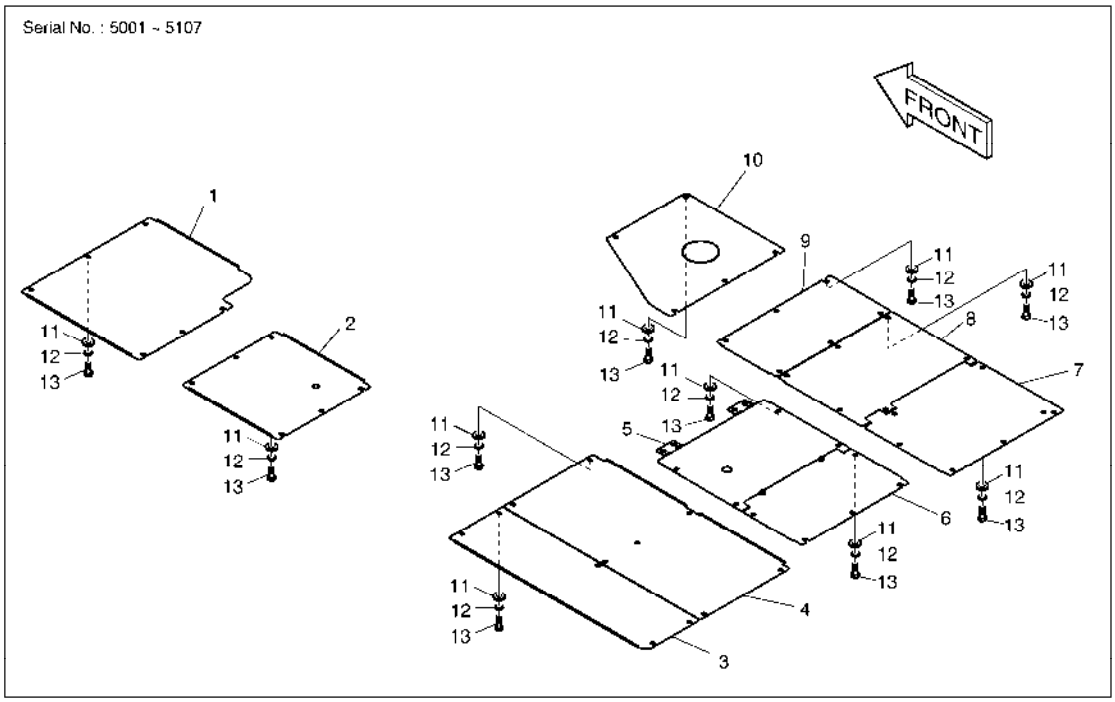

DATE	AUG. 28, 2009
3rd EDITION	

Fig. 1630 UNDER COVER TOLES IMFERIEVRES

Serial No. ;

Key No.	Part No.	Description	Description	Q'ty	S.C	Serial No.	ICA	Replaceable part	
								Part No.	Q'ty
1630 --	K1010802C	UNDER COVER ASS'Y	COUVERCLE	-	D				
1	K1010804	COVER;UNDER	COUVERCLE	1					
2	K1010805A	COVER;UNDER	COUVERCLE	1					
3	K1010806A	COVER;UNDER	COUVERCLE	1					
4	K1010807B	COVER;UNDER	COUVERCLE	1		5001-5107			
	K1010807C	COVER;UNDER	COUVERCLE	1		5108-			
5	K1010808A	COVER;UNDER	COUVERCLE	1		5001-5107			
	K1010808B	COVER;UNDER	COUVERCLE	1		5108-			
6	K1010809A	COVER;UNDER	COUVERCLE	1		5001-5107			
	K1010809B	COVER;UNDER	COUVERCLE	1		5108-			
7	K1010810A	COVER;UNDER	COUVERCLE	1		5001-5107			
	K1010810B	COVER;UNDER	COUVERCLE	1		5108-			
8	K1010811A	COVER;UNDER	COUVERCLE	1		5001-5107			
	K1010811B	COVER;UNDER	COUVERCLE	1		5108-			
9	K1010812A	COVER;UNDER	COUVERCLE	1		5001-5107			
	K1010812B	COVER;UNDER	COUVERCLE	1		5108-			
10	K1010813	COVER;UNDER	COUVERCLE	1					
11	DS0401188	WASHER;PLAIN	RONDELLE PLATE	62		5001-5107			
	DS0401188	WASHER;PLAIN	RONDELLE PLATE	50		5108-			
12	S5102703	WASHER;SPRING	RONDELLE ELASTIQUE	62		5001-5107			
	S5102703	WASHER;SPRING	RONDELLE ELASTIQUE	50		5108-			
13	S0560466	BOLT	BOULON	62		5001-5107			
	S0560466	BOLT	BOULON	50		5108-			

DATE	AUG. 28, 2009
3rd EDITION	

Fig. 1640 LUBRICATION PIPING LUBRIFICATION

Serial No. ;

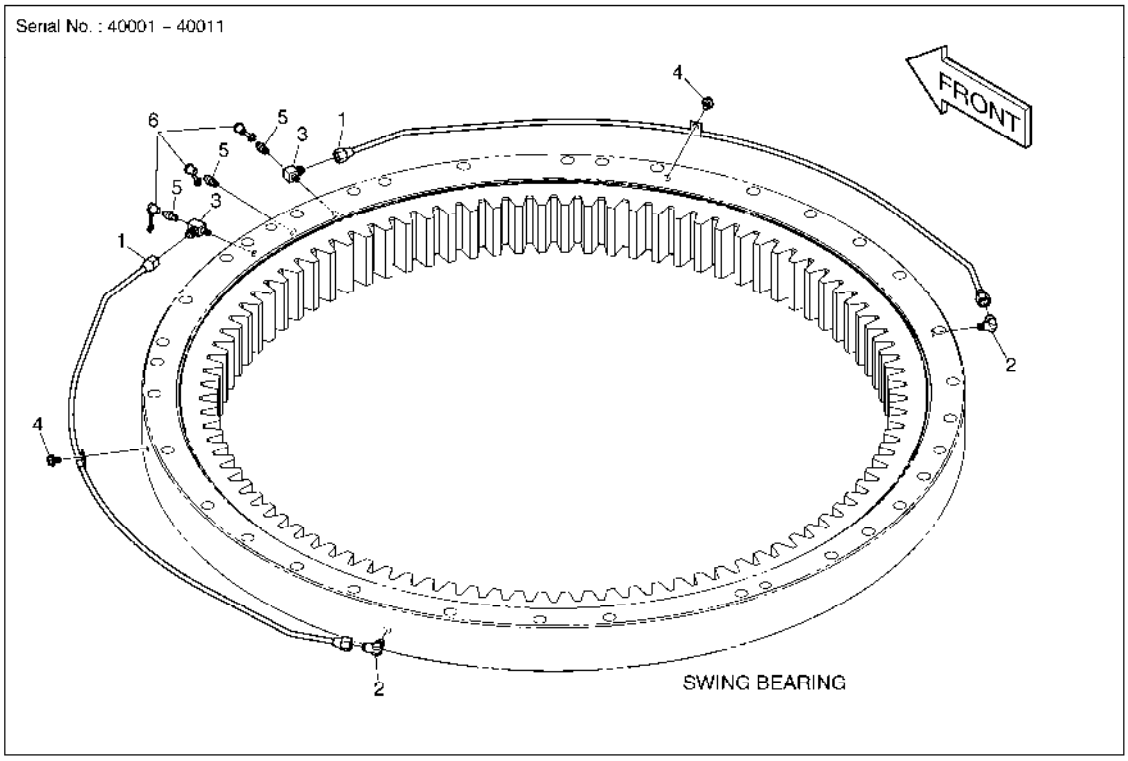

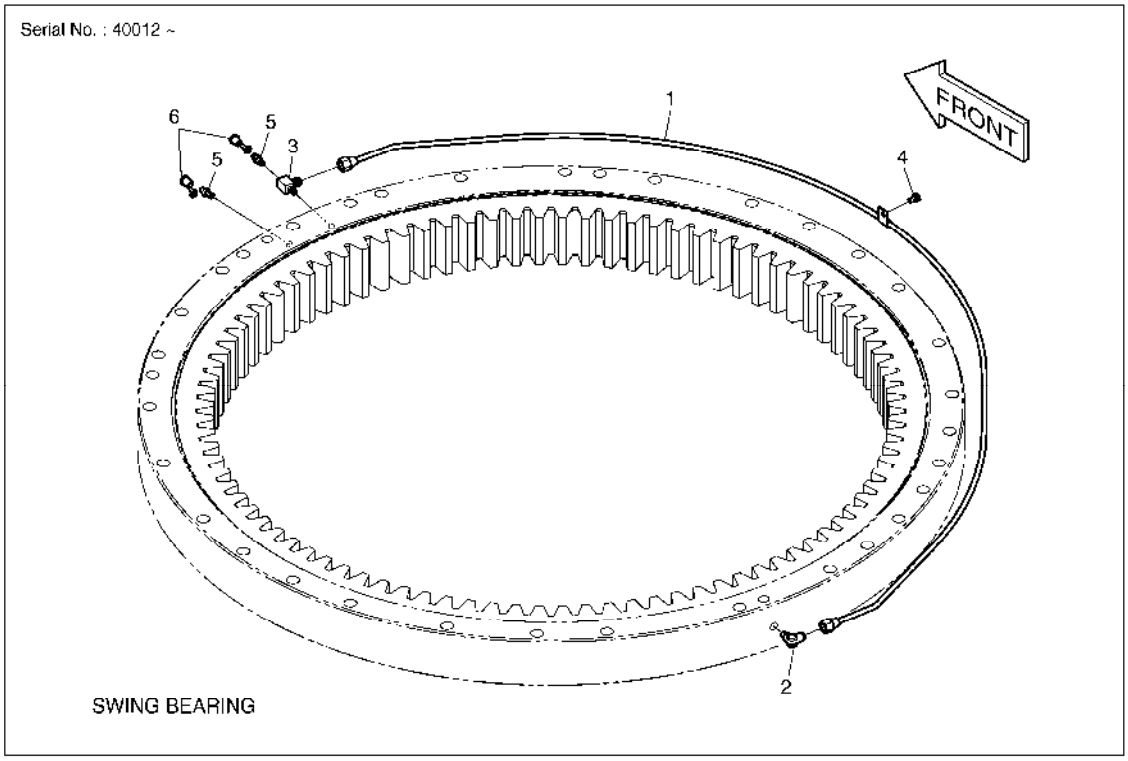

DATE	AUG. 28, 2009
3rd EDITION	

Fig. 1640 LUBRICATION PIPING LUBRIFICATION

Serial No. ;

Key No.	Part No.	Description	Description	Q'ty	S.C	Serial No.	ICA	Replaceable part	
								Part No.	Q'ty
1640 --	K1010691A	LUBRICATION PIPING	LUBRIFICATION	-	D				
1	K1010692	PIPE;GREASE	CONDUITE	2		5001-5109			
	K1010692A	PIPE;GREASE	CONDUITE	1		5110-			
2	2181-1925	ELBOW	COUDE	1		5001-5109			
	2181-1925	ELBOW	COUDE	1		5110-			
3	2181-2527	TEE	TE	2		5001-5109			
	2181-2527	TEE	TE	1		5110-			
4	K1001029	BOLT	BOULON A 6 PANS	2		5001-5109			
	K1001029	BOLT	BOULON A 6 PANS	1		5110-			
5	S6710042	NIPPLE;GREASE	GRAISSEUR	3		5001-5109			
	S6710042	NIPPLE;GREASE	GRAISSEUR	2		5110-			
6	160-00020	CAP;GREASE NIPPLE	CHAPEAU	3		5001-5109			
	160-00020	CAP;GREASE NIPPLE	CHAPEAU	2		5110-			

DATE	AUG. 28, 2009
3rd EDITION	

Fig. 1650 ELECTRIC BOX ASS'Y
EQUIPMENT ELECTRIQUE

Serial No. ;

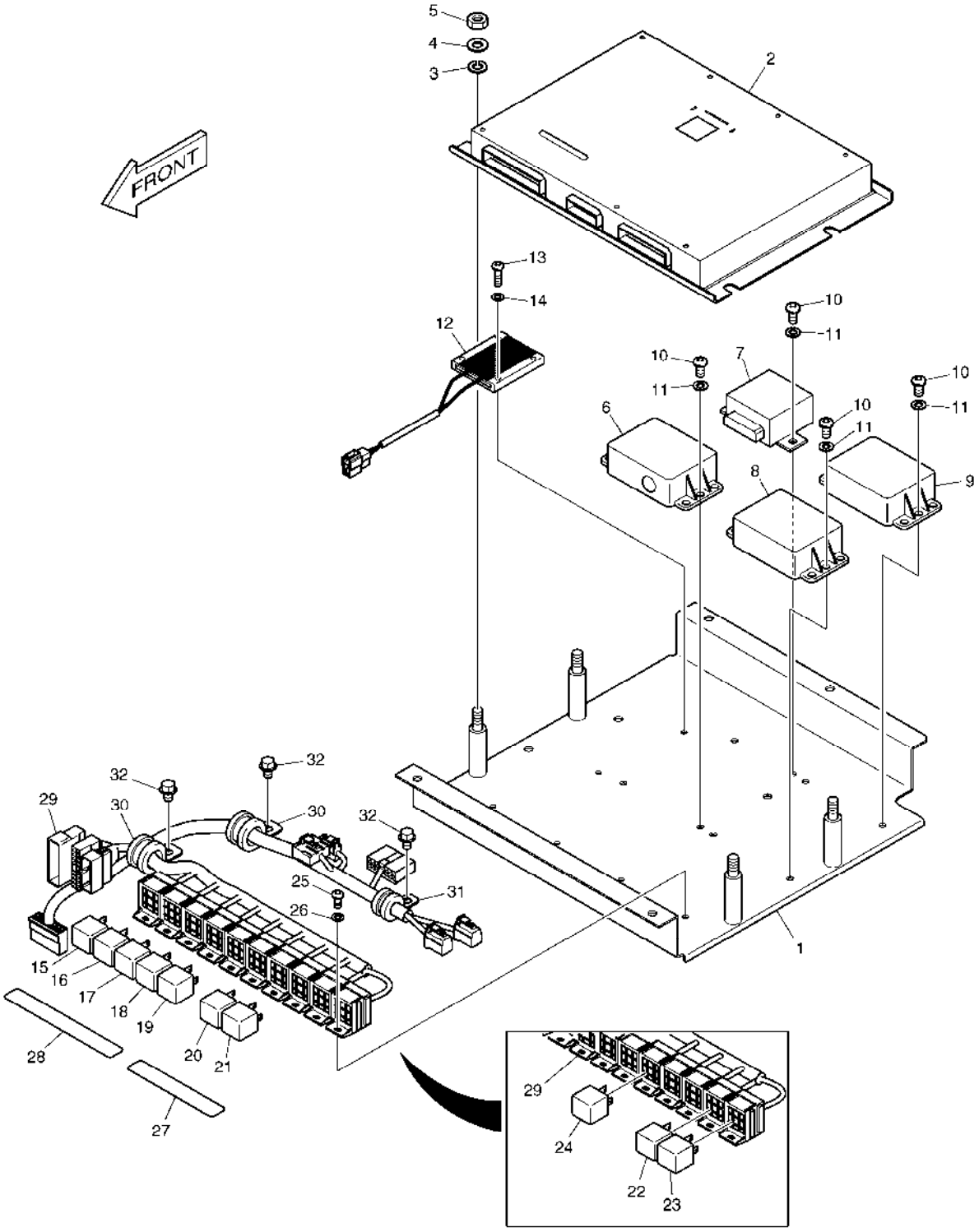

DATE	AUG. 28, 2009
3rd EDITION	

Fig. 1650 ELECTRIC BOX ASS'Y EQUIPMENT ELECTRIQUE

Serial No. ;

Key No.	Part No.	Description	Description	Q'ty	S.C	Serial No.	ICA	Replaceable part	
								Part No.	Q'ty
1650 --	K1012148	ELECTRIC BOX ASS'Y	EQUIPMENT ELECTRIQUE	1		5001-5028			
	K1012148A	ELECTRIC BOX ASS'Y	EQUIPMENT ELECTRIQUE	1		5029-5086			
	K1012148B	ELECTRIC BOX ASS'Y	EQUIPMENT ELECTRIQUE	1		5087-5109			
	K1012148C	ELECTRIC BOX ASS'Y	EQUIPMENT ELECTRIQUE	1		5110-			
1	621-02955B	PLATE;ELECTRIC BOX	PLAQUE	1		5001-5086	I	621-02955C	1
	621-02955C	PLATE;ELECTRIC BOX	PLAQUE	1		5087-			
2	K1016015	CONTROLLER;EPOS	PANNEAU	1		5001-5028			
	K1016015A	CONTROLLER;EPOS	PANNEAU	1		5029-5109			
	K1016015B	CONTROLLER;EPOS	PANNEAU	1		5110-			
3	S5010613	WASHER;PLAIN	RONDELLE PLATE	4					
4	S5102603	WASHER	RONDELLE ELASTIQUE	4					
5	S4012633	NUT	ECROU	4					
6	2543-9015	CONTROLLER;STARTER	COMMANDE DEMARREUR	1					
7	543-00106	CONTROLLER;WIPER	COMMANDE	1					
8	2531-1003	CONVERTER;DC-DC	CONVERTEUR	1					
9	2531-1003	CONVERTER;DC-DC	CONVERTEUR	1					
10	S3450953	SCREW	VIS	8					
11	S5102303	WASHER;SPRING	RONDELLE ELASTIQUE	8					
12	545-00011	RESISTOR;AUXILIARY	RESISTOR;AUXILIARY	1					
13	S3450863	SCREW	VIS	2					
14	S5100203	WASHER;SPRING	RONDELLE ELASTIQUE	2					
15	2544-9033	RELAY	RELAIS AVERTISSEUR	1					
16	2544-9033	RELAY	RELAIS AVERTISSEUR	1					
17	2544-9033	RELAY	RELAIS AVERTISSEUR	1					
18	2544-9033	RELAY	RELAIS AVERTISSEUR	1					
19	2544-9033	RELAY	RELAIS AVERTISSEUR	1					
20	2544-9033	RELAY	RELAIS AVERTISSEUR	1					
21	2544-9033	RELAY	RELAIS AVERTISSEUR	1					
22	2544-9033	RELAY	RELAIS AVERTISSEUR	1		5001-5086			
23	2544-9033	RELAY	RELAIS AVERTISSEUR	1		5001-5086			
24	2544-9033	RELAY	RELAIS AVERTISSEUR	1		5001-5086			
25	S3450833	SCREW	VIS	4					
26	S5100203	WASHER;SPRING	RONDELLE ELASTIQUE	4					
27	190-01192D9	PLATE;NAME(RELAY)	PLAQUE D'IDENTIFICATION	1					
28	190-01192D2	PLATE;NAME(RELAY)	PLAQUE D'IDENTIFICATION	1					
29	530-00412G	HARNESS;ELECTRIC BOX	FAISCEAU	1					
30	124-00208D3	CLIP	ATTACHE	2					
31	124-00208D2	CLIP	AGRAFE	1					

DATE	AUG. 28, 2009
3rd EDITION	

Fig. 1650 ELECTRIC BOX ASS'Y EQUIPMENT ELECTRIQUE

Serial No. ;

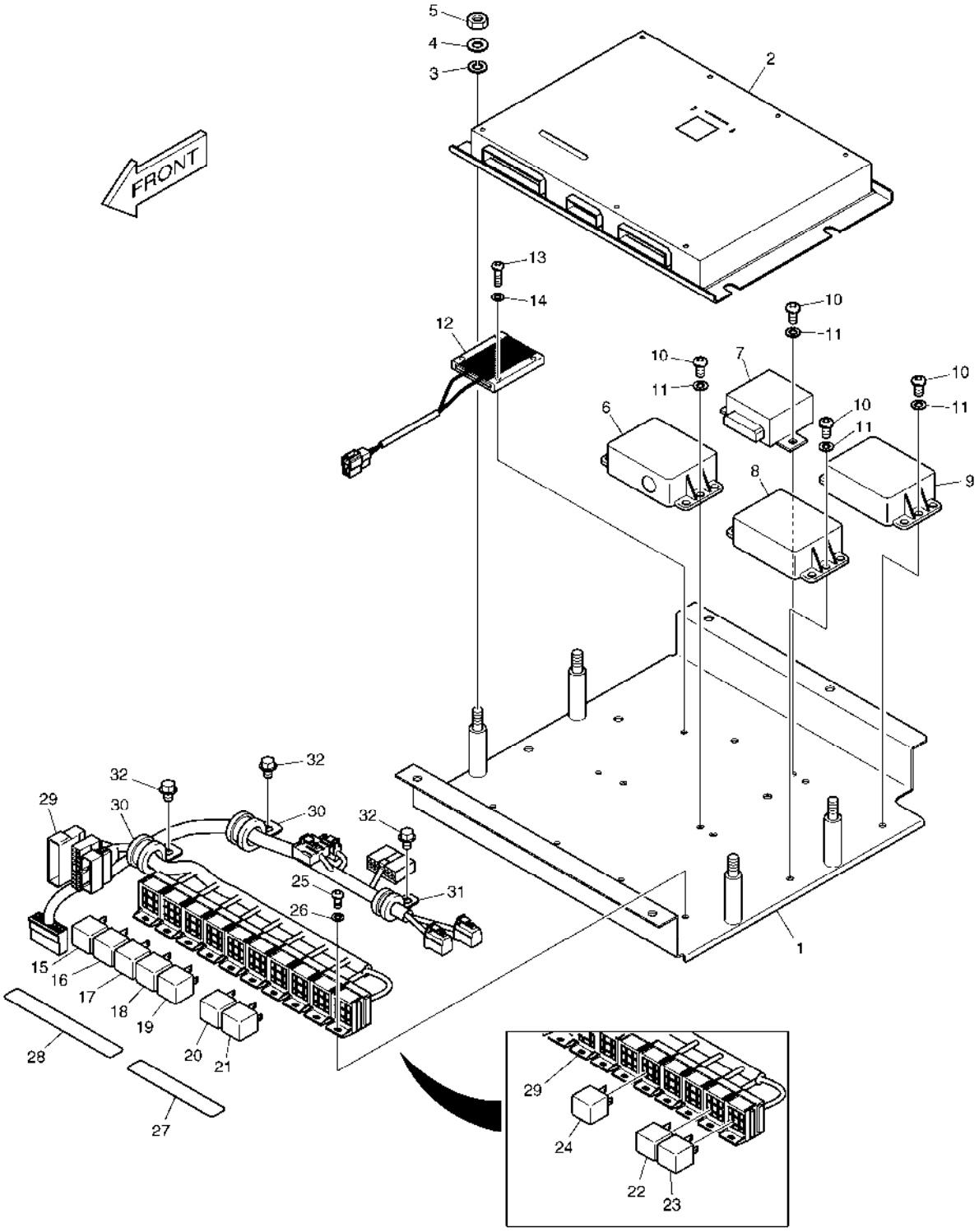

DATE	AUG. 28, 2009
3rd EDITION	

Fig. 1650 ELECTRIC BOX ASS'Y
EQUIPMENT ELECTRIQUE

Serial No. ;

Key No.	Part No.	Description	Description	Q'ty	S.C	Serial No.	ICA	Replaceable part	
								Part No.	Q'ty
1650 -32	K1001029	BOLT	BOULON A 6 PANS	3					

DATE	AUG. 28, 2009
3rd EDITION	

Fig. 1660 ELECTRIC PARTS - CONTROL STAND
PIECES ELECTRIQUES

Serial No. ;

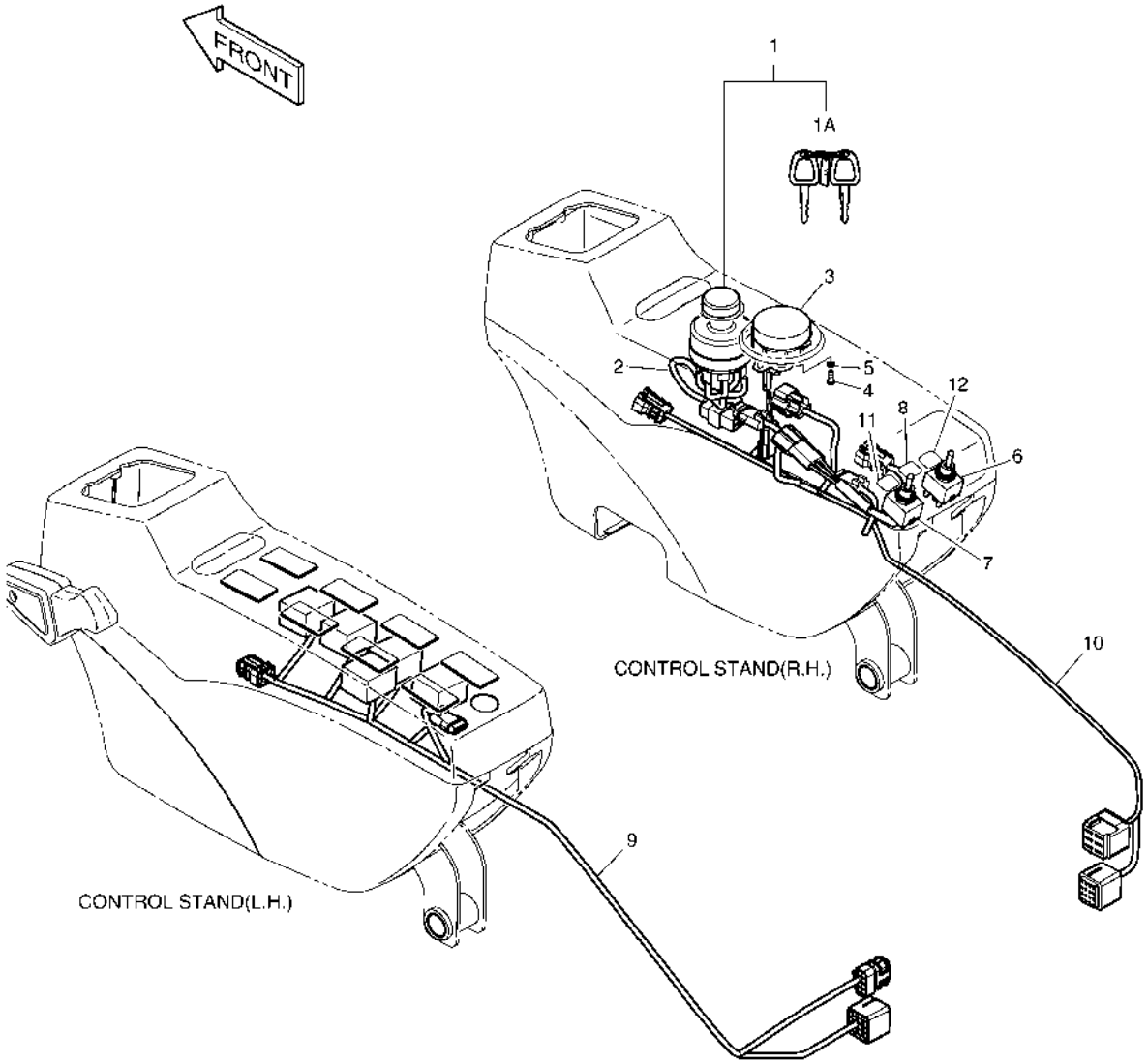

DATE	AUG. 28, 2009
3rd EDITION	

Fig. 1660 ELECTRIC PARTS - CONTROL STAND
PIECES ELECTRIQUES

Serial No. ;

Key No.	Part No.	Description	Description	Q'ty	S.C	Serial No.	ICA	Replaceable part	
								Part No.	Q'ty
1660 --	K1012150B	ELECTRIC PARTS-CONTROL ST	EQUIPMENT ELECTRIQUE	-	D				
1	K1001858A	SWITCH;STARTER	INTERRUPTEUR	1					
1A	K1009605B	. KEY;STARTER	. CLE	2					
2	530-00150	HARNESS;STARTER SWITCH	FAISCEAU	1		5001-5109			
3	K1013846	DIAL;ENGINE CONTROL	CADRAN	1					
4	S3450583	SCREW	VIS	2					
5	S5100103	WASHER;SPRING	RONDELLE ELASTIQUE	2					
6	549-00090	SWITCH;TOGGLE	INTERRUPTEUR	1		5001-5086			
	549-00090A	SWITCH;TOGGLE	INTERRUPTEUR	1		5087-			
7	K1001702	SWITCH;TOGGLE	INTERRUPTEUR	1		5001-5086			
	K1001702A	SWITCH;TOGGLE	INTERRUPTEUR	1		5087-			
8	K1004427	PLATE;NAME	PLAQUE D'IDENTIFICATION	1					
9	530-00415C	HARNESS;STAND(LH)	FAISCEAU	1		5001-5109			
	K1030275	HARNESS;STAND(LH)	FAISCEAU	1		5110-			
10	530-00414C	HARNESS;STAND(RH)	FAISCEAU	1		5001-5109			
	K1030574	HARNESS;STAND(RH)	FAISCEAU	1		5110-			
11	K1004425	PLATE;NAME	PLAQUE D'IDENTIFICATION	1					
12	K1004426	PLATE;NAME	PLAQUE D'IDENTIFICATION	1					

DATE	AUG. 28, 2009
3rd EDITION	

Fig. 1670 ELECTRIC PARTS - CABIN
PIECES ELECTRIQUES

Serial No. ;

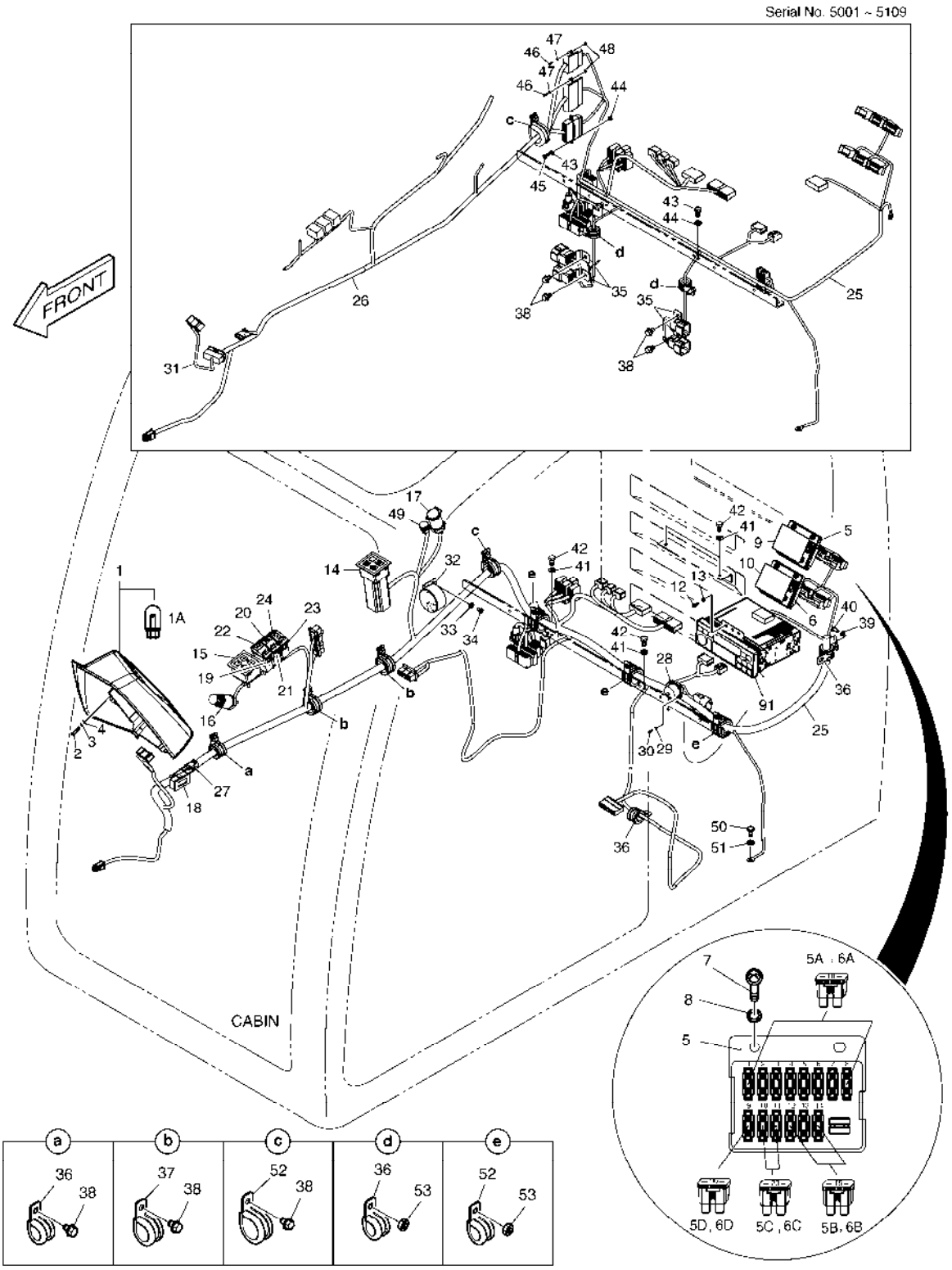

DATE	AUG. 28, 2009
3rd EDITION	

Fig. 1670 ELECTRIC PARTS - CABIN PIECES ELECTRIQUES

Serial No. ;

Key No.	Part No.	Description	Description	Q'ty	S.C	Serial No.	ICA	Replaceable part	
								Part No.	Q'ty
1670 --	K1012149G	ELECTRIC PARTS-CABIN	EQUIPMENT ELECTRIQUE	-	D				
1	539-00076C	PANEL;GAUGE	PANNEAU	1		5001-5086	I	539-00076E	1
	539-00076E	PANEL;GAUGE	PANNEAU	1		5087-5109			
	539-00076G	PANEL;GAUGE	PANNEAU	1		5110-			
1A	515-00012A	. BULB	. AMPOULE	6					
2	S3450863	SCREW	VIS	4					
3	S5100203	WASHER;SPRING	RONDELLE ELASTIQUE	4					
4	S5000213	WASHER;PLAIN M5	RONDELLE	4					
5	K1001263A	BOX;FUSE	FUSIBLE	1					
5A	2527-1016	. FUSE;BLADE 10A	. LAME DE FUSIBLE	8					
5B	2527-1017	. FUSE;BLADE 15A	. LAME DE FUSIBLE	3					
5C	2527-1018	. FUSE;BLADE 20A	. FUSIBLE	2					
5D	2527-1025	. FUSE;BLADE 30A	. FUSIBLE	1					
6	K1001263A	BOX;FUSE	FUSIBLE	1					
6A	2527-1016	. FUSE;BLADE 10A	. LAME DE FUSIBLE	8					
6B	2527-1017	. FUSE;BLADE 15A	. LAME DE FUSIBLE	3					
6C	2527-1018	. FUSE;BLADE 20A	. FUSIBLE	2					
6D	2527-1025	. FUSE;BLADE 30A	. FUSIBLE	1					
7	S3450983	SCREW	VIS	4					
8	S5102303	WASHER;SPRING	RONDELLE ELASTIQUE	4					
9	K1008019D3	PLATE;NAME	PLAQUE D'IDENTIFICATION	1					
10	K1008019D4	PLATE;NAME	PLAQUE D'IDENTIFICATION	1					
12	S3450833	SCREW	VIS	4					
13	S5100203	WASHER;SPRING	RONDELLE ELASTIQUE	4					
14	543-00095	PANEL ASS`Y;WIPER CONTROL	PANNEAU	1					
15	543-00096	RADIO CONTROL PANEL ASS`Y	PANNEAU	1					
16	545-00001	LIGHTER;CIGAR	ALLUME-CIGARE	1					
17	527-00006	SOCKET;12V POWER	CLE A DOUILLE	1					
18	2528-9040	METER;HOUR	TOTALISATEUR HORAIRE	1					
19	549-00103	SWITCH;ROCKER(2STEP)	INTERRUPTEUR	1					
20	K1002406D11	ACTUATOR;SWITCH	ACTUATOR;SWITCH	1					
21	549-00103	SWITCH;ROCKER(2STEP)	INTERRUPTEUR	1					
22	K1002406D12	ACTUATOR;SWITCH	ACTUATOR;SWITCH	1					
23	K1006572	SWITCH;BREAKER/SHEAR SELE	AVERTISSEUR	1					
24	K1002406D21	ACTUATOR;SWITCH	ACTUATOR;SWITCH	1					
25	530-00411G	HARNESS;CABIN	FAISCEAU	1		5001-5109			
	K1030336A	HARNESS;CABIN	FAISCEAU	1		5110-			
26	530-00413C	HARNESS;SWITCH BOX	FAISCEAU	1		5001-5109			

DATE	AUG. 28, 2009
3rd EDITION	

Fig. 1670 ELECTRIC PARTS - CABIN
PIECES ELECTRIQUES

Serial No. ;

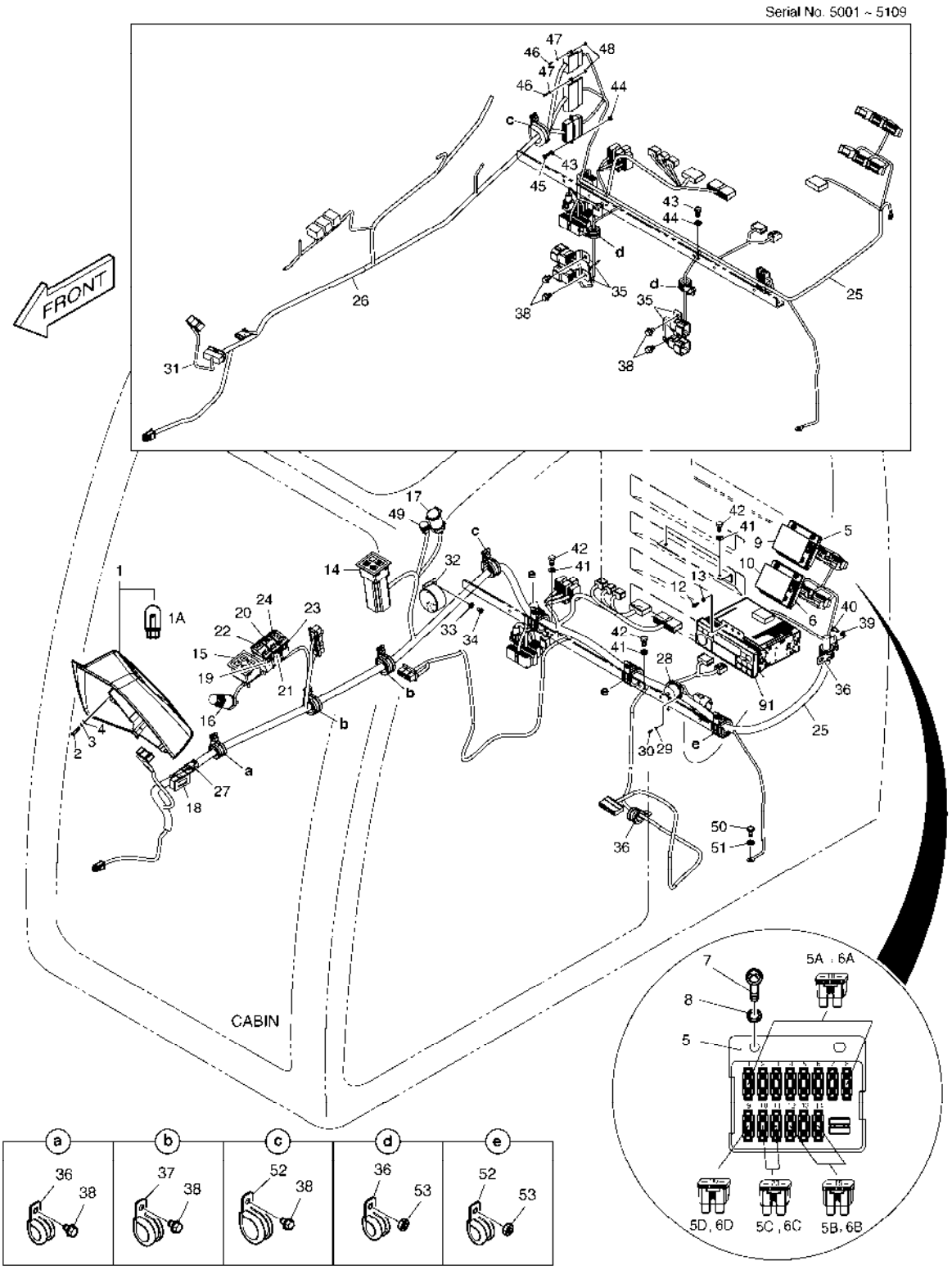

DATE	AUG. 28, 2009
3rd EDITION	

Fig. 1670 ELECTRIC PARTS - CABIN
PIECES ELECTRIQUES

Serial No. ;

Key No.	Part No.	Description	Description	Q'ty	S.C	Serial No.	ICA	Replaceable part	
								Part No.	Q'ty
1670 -27	530-00434B	HARNESS;HOUR METER JOINT	FAISCEAU	1					
28	530-00435A	HARNESS;CHECK CONNECTOR	FAISCEAU	1		5001-5086	I	530-00435B	1
	530-00435B	HARNESS;CHECK CONNECTOR	FAISCEAU	1		5087-			
29	S5100003	WASHER;SPRING	RONDELLE ELASTIQUE	4					
30	S3450343	SCREW	VIS	4					
31	530-00416B	HARNESS;GAUGE PANEL JOINT	FAISCEAU	1		5001-5109			
32	2516-1116	BUZZER;PILOT	VIBREUR ARRIERE	1					
33	S5102303	WASHER;SPRING	RONDELLE ELASTIQUE	2					
34	S3450943	SCREW	VIS	2					
35	2197-1661	BRACKET	SUPPORT	4		5001-5109			
36	124-00208D3	CLIP	ATTACHE	4		5001-5109			
	124-00208D3	CLIP	ATTACHE	2		5110-			
37	124-00208D4	CLIP	ATTACHE	2					
38	K1001029	BOLT	BOULON A 6 PANS	8		5001-5109			
	K1001029	BOLT	BOULON A 6 PANS	4		5110-			
39	S5102303	WASHER;SPRING	RONDELLE ELASTIQUE	1					
40	S3450953	SCREW	VIS	1					
41	S5102503	WASHER	RONDELLE ELASTIQUE	4					
42	S0508653	BOLT	BOULON A 6 PANS	4					
43	S5100203	WASHER;SPRING	RONDELLE ELASTIQUE	2		5001-5109			
44	S4012203	NUT	ECROU	2		5001-5109			
45	S3450833	SCREW	VIS	2		5001-5109			
46	S3450343	SCREW	VIS	4		5001-5109			
47	S5100003	WASHER;SPRING	RONDELLE ELASTIQUE	4		5001-5109			
48	S4012003	NUT	ECROU	4		5001-5109			
49	547-00023	SENSOR;SUN	CAPTEUR	1					
50	S0508653	BOLT	BOULON A 6 PANS	1					
51	S5102503	WASHER	RONDELLE ELASTIQUE	1					
52	124-00208D5	CLIP	ATTACHE	4					
53	2121-1305	NUT	ECROU	5		5001-5109			
	2121-1305	NUT	ECROU	3		5110-			
91	K1026654	CAR STEREO	RELAIS AVERTISSEUR	1					

DATE	AUG. 28, 2009
3rd EDITION	

Fig. 1680 ELECTRIC PARTS - RELATED PIECES ELECTRIQUES

Serial No. ;

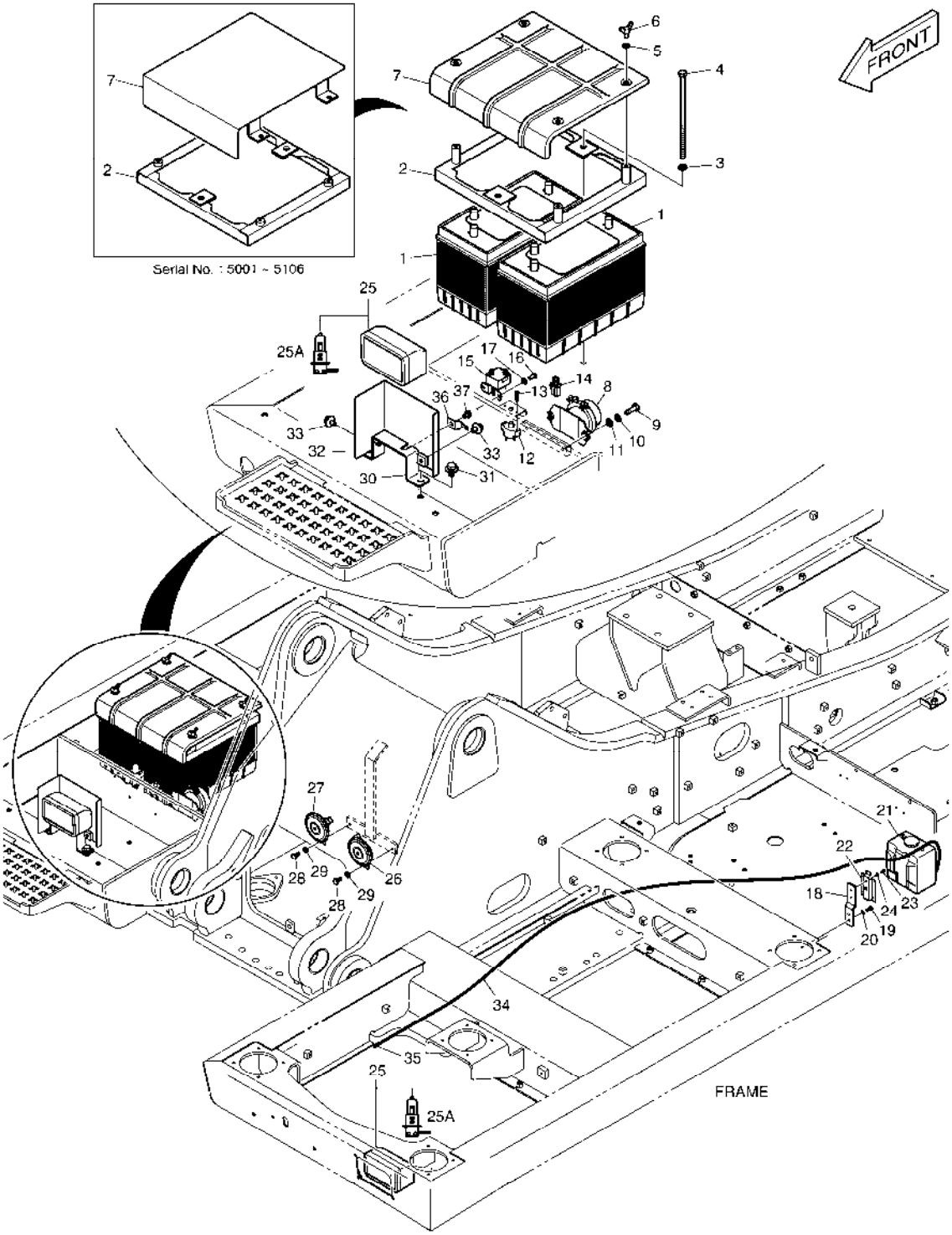

DATE	AUG. 28, 2009
3rd EDITION	

Fig. 1680 ELECTRIC PARTS - RELATED PIECES ELECTRIQUES

Serial No. ;

Key No.	Part No.	Description	Description	Q'ty	S.C	Serial No.	ICA	Replaceable part	
								Part No.	Q'ty
1680 --	K1012152A	ELECTRIC PARTS;CHASSIS	EQUIPMENT ELECTRIQUE	-	D				
1	506-00006	BATTERY	BATTERIE	2					
2	K1010776A	BRACKET	SUPPORT	1		5001-5106			
	K1039521A	BRACKET	SUPPORT	1		5107-			
3	S5102603	WASHER	RONDELLE ELASTIQUE	2					
4	DS0001079	BOLT	BOULON	2					
5	S5102503	WASHER	RONDELLE ELASTIQUE	4					
6	S3050863	BOLT;WING	BOULON A 6 PANS	4					
7	K1010777	COVER	COUVERCLE	1		5001-5106			
	K1039068	COVER	COUVERCLE	1		5107-			
8	2544-9024	RELAY;BATTERY	RELAIS BATTERIE	1					
9	S0509066	BOLT	BOULON A 6 PANS	2					
10	S5102503	WASHER	RONDELLE ELASTIQUE	2					
11	S5010503	WASHER	RONDELLE PLATE	2					
12	2527-9004	BREAKER;CIRCUIT	COUPE-CIRCUIT	1					
13	2120-1354	SCREW	VIS	2					
14	2527-1023A	LINK;FUSIBLE	FUSIBLE	1					
15	2544-1022	RELAY;STARTER	RELAIS DEMARREUR	1					
16	S0504453	BOLT	BOULON A 6 PANS	2					
17	S5102303	WASHER;SPRING	RONDELLE ELASTIQUE	2					
18	K1007668	BRACKET	SUPPORT	1					
19	S0508666	BOLT	BOULON A 6 PANS	2					
20	S5102503	WASHER	RONDELLE ELASTIQUE	2					
21	K1000789	TANK;RESERVE	RESERVOIR DE RESEVE	1					
22	2195-1534	BRACKET	SUPPORT	1					
23	S0504453	BOLT	BOULON A 6 PANS	2					
24	S5102303	WASHER;SPRING	RONDELLE ELASTIQUE	2					
25	534-00085	LAMP;HEAD	LAMPE	2					
25A	2515-1016D4	. BLUB;HALOGEN	. AMPOULE	1					
26	516-00014	HORN;HIGH	AVERTISSEUR	1					
27	516-00015	HORN;LOW	AVERTISSEUR	1					
28	S0508666	BOLT	BOULON A 6 PANS	2					
29	S5102503	WASHER	RONDELLE ELASTIQUE	2					
30	195-02622C	BRACKET	SUPPORT	1					
31	DS0025019	BOLT;SET	BOULON A 6 PANS	2					
32	621-02643B	PLATE	PLAQUE	1					
33	DS0025013	BOLT;SET	BOULON A 6 PANS	2					
34	4185-1777	HOSE;WATER	TUYAU FLEXIBLE	1					

DATE	AUG. 28, 2009
3rd EDITION	

Fig. 1680 ELECTRIC PARTS - RELATED PIECES ELECTRIQUES

Serial No. ;

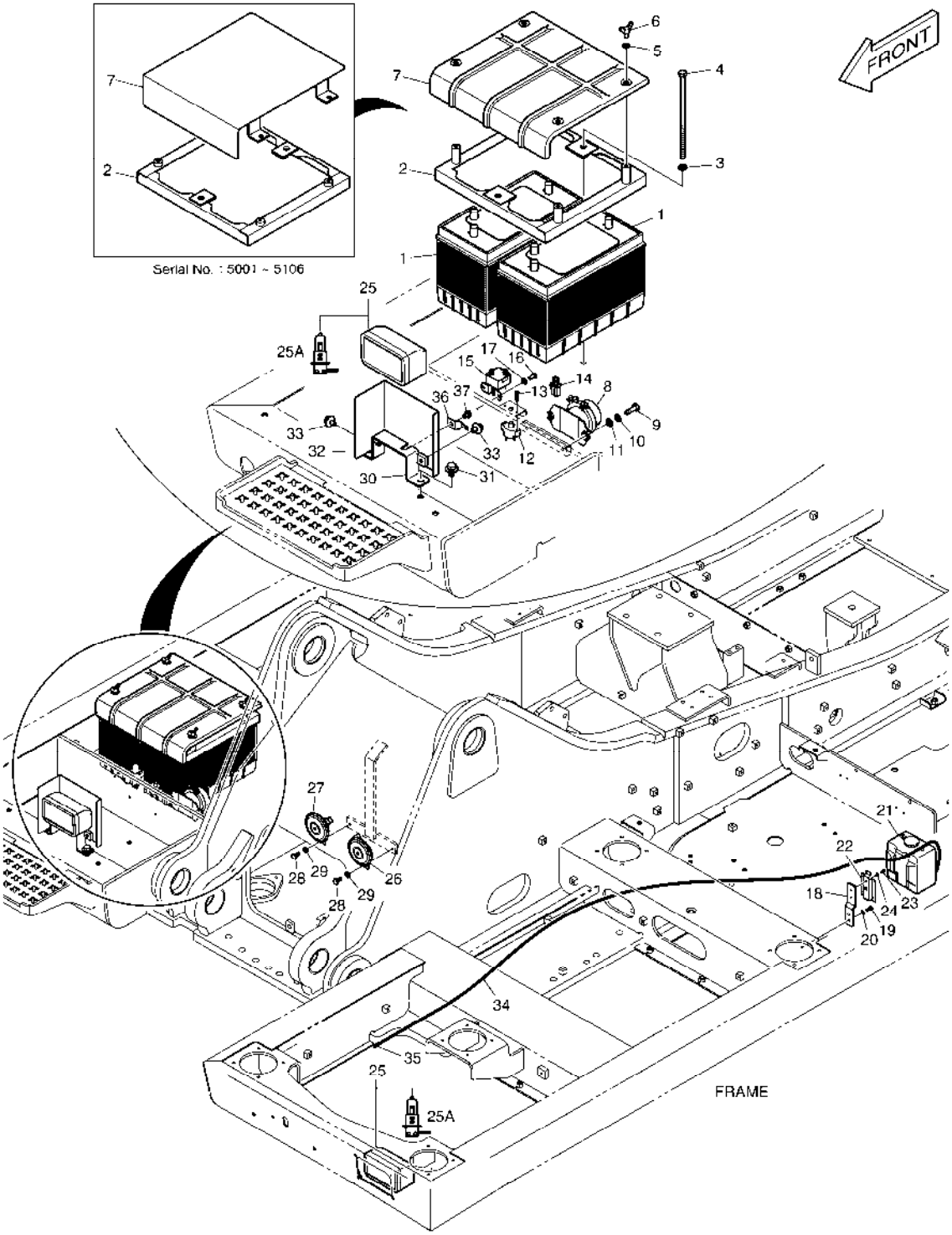

DATE	AUG. 28, 2009
3rd EDITION	

Fig. 1680 ELECTRIC PARTS - RELATED PIECES ELECTRIQUES

Serial No. ;

Key No.	Part No.	Description	Description	Q'ty	S.C	Serial No.	ICA	Replaceable part	
								Part No.	Q'ty
1680 -35	2415-1018	ADAPTER;HOSE	RACCORD ADAPTEUR	1					
36	2197-1661	BRACKET	SUPPORT	1					
37	K1001029	BOLT	BOULON A 6 PANS	1					

DATE	AUG. 28, 2009
3rd EDITION	

Fig. 1690 ELECTRIC PARTS - ENGINE
PIECES ELECTRIQUES

Serial No. ;

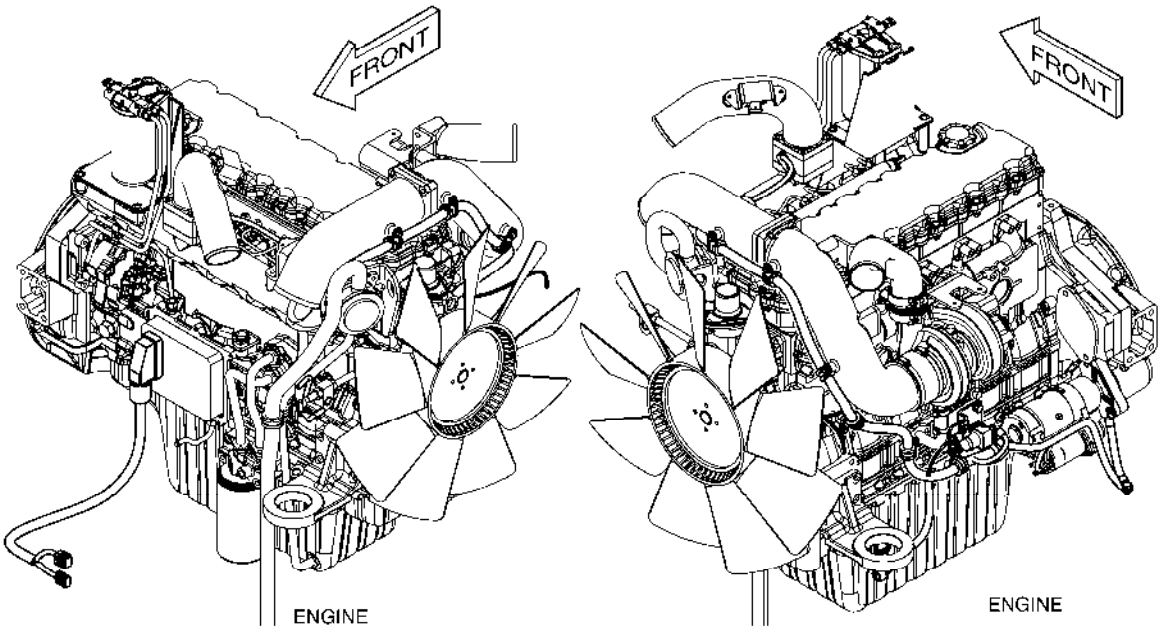

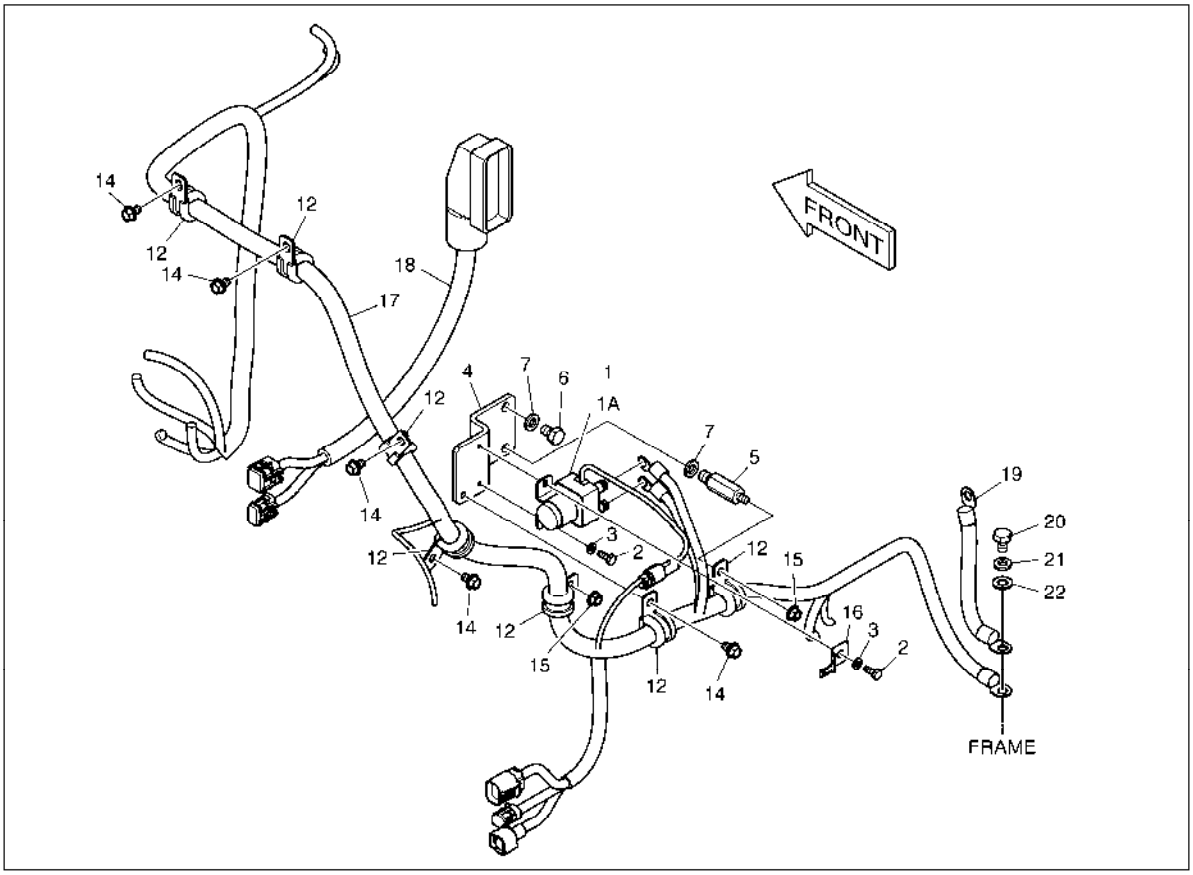

DATE	AUG. 28, 2009
3rd EDITION	

Fig. 1690 ELECTRIC PARTS - ENGINE PIECES ELECTRIQUES

Serial No. ;

Key No.	Part No.	Description	Description	Q'ty	S.C	Serial No.	ICA	Replaceable part	
								Part No.	Q'ty
1690 --	K1012153B	ELECTRIC ASS'Y;ENGINE	EQUIPMENT ELECTRIQUE	-	D	5001-5124			
	300619-00124	ELECTRIC ASSY;ENGINE	EQUIPMENT ELECTRIQUE	-	D	5125-			
1	544-00007	RELAY;PREHEAT	RELAIS	1					
1A	527-00005	. FUSE;PREHEAT RELAY	. FUSIBLE	1					
2	S0504453	BOLT	BOULON A 6 PANS	2					
3	S5102303	WASHER;SPRING	RONDELLE ELASTIQUE	2					
4	K1015201	BRACKET;PREHEAT RELAY	SUPPORT	1					
5	120-00246	BOLT;STUD	BOULON DE GOUJON	1					
6	S0511666	BOLT	BOULON	1					
7	S5102603	WASHER	RONDELLE ELASTIQUE	2					
12	124-00208D3	CLIP	ATTACHE	7					
14	K1001029	BOLT	BOULON A 6 PANS	5					
15	2121-1305	NUT	ECROU	2					
16	2197-1661	BRACKET	SUPPORT	1					
17	K1008448B	HARNESS;ENGINE	FAISCEAU	1		5001-5124	I	310207-00130	1
	310207-00130	HARNESS,ENGINE	FAISCEAU	1		5125-			
18	K1016089	HARNESS;JOINT(ECU)	FAISCEAU	1					
19	553-00001D4	CABLE;E/G EARTH	CABLE	1					
20	S0511653	BOLT	BOULON A 6 PANS	1					
21	S5102603	WASHER	RONDELLE ELASTIQUE	1					
22	S5010613	WASHER;PLAIN	RONDELLE PLATE	1					

DATE	AUG. 28, 2009
3rd EDITION	

Fig. 1700 ALTERNATOR MOUNTING ALTERNATEUR

Serial No. ;

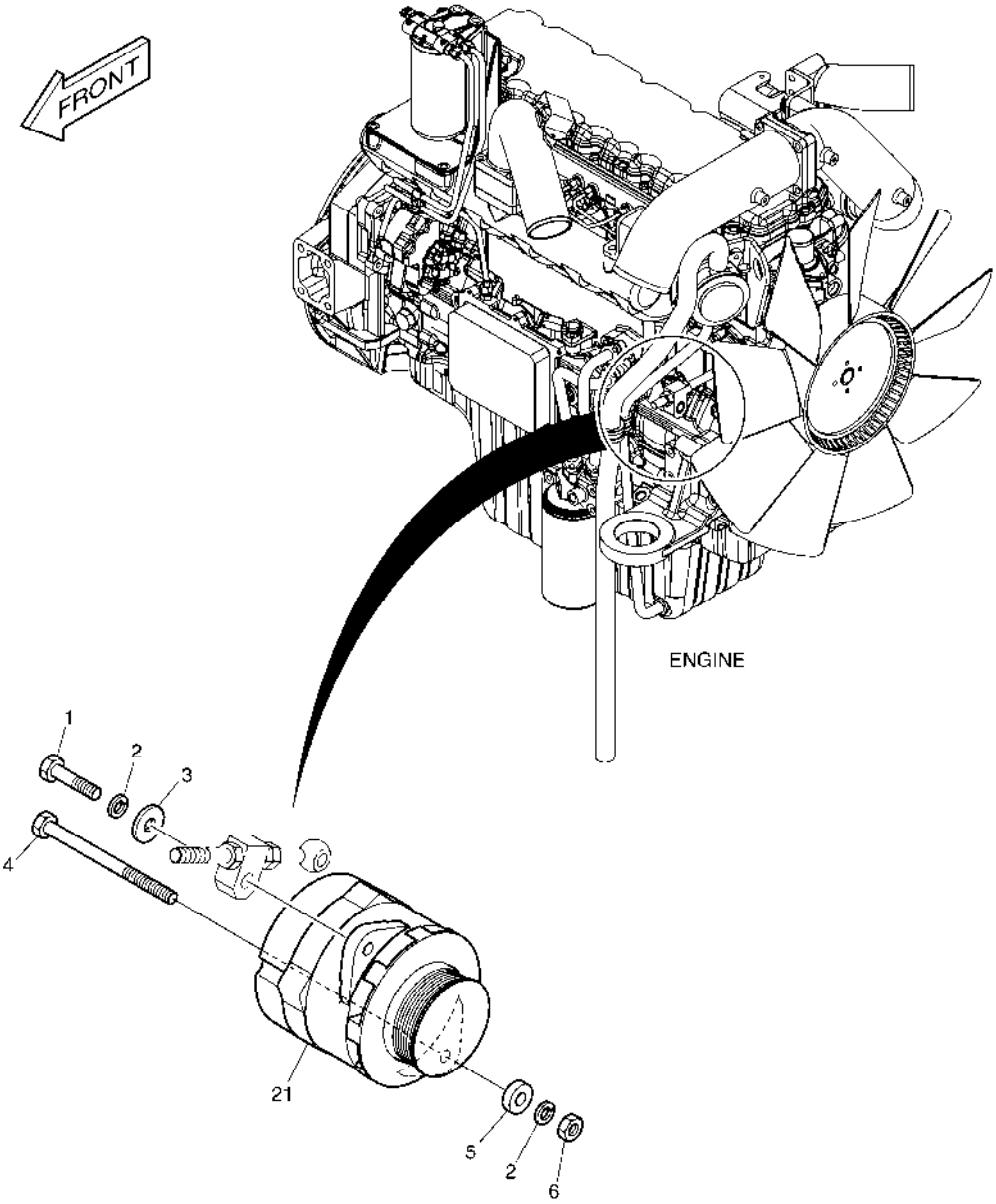

DATE	AUG. 28, 2009
3rd EDITION	

Fig. 1700 ALTERNATOR MOUNTING ALTERNATEUR

Serial No. ;

Key No.	Part No.	Description	Description	Q'ty	S.C	Serial No.	ICA	Replaceable part	
								Part No.	Q'ty
1700 --	K1008713	ALTERNATOR MOUNTING	SUPPORT D'ALTERNATEU	-	D				
1	S0760853	BOLT	BOULON A 6 PANS	1					
2	S5102703	WASHER;SPRING	RONDELLE ELASTIQUE	2					
3	2114-1058D54	WASHER	RONDELLE	1					
4	S0562653	BOLT M12X1.75X160	BOULON A 6 PANS	1					
5	2114-1058D70	WASHER	RONDELLE	1					
6	S4012733	NUT	ECROU	1					
21	K1010702	ALTERNATOR 60A	ALTERNATEUR	1					

Fig. 1710 ELECTRIC PARTS - WORKING LAMP
EQUIPMENT ELECTRIQUE

Serial No. ;

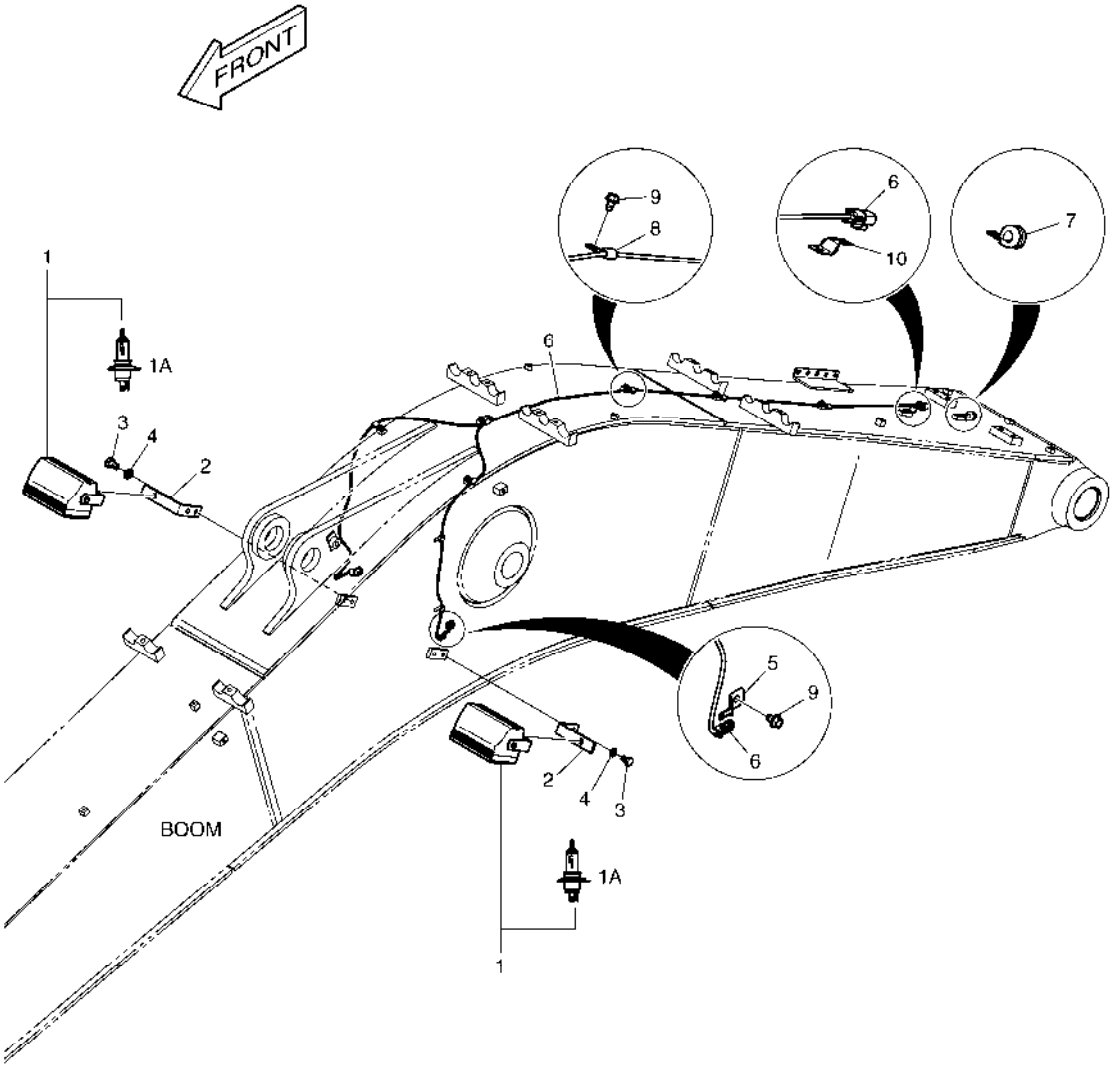

DATE	AUG. 28, 2009
3rd EDITION	

Fig. 1710 ELECTRIC PARTS - WORKING LAMP
EQUIPMENT ELECTRIQUE

Serial No. ;

Key No.	Part No.	Description	Description	Q'ty	S.C	Serial No.	ICA	Replaceable part	
								Part No.	Q'ty
1710 --	K1012154	ELECTRIC PARTS;WORKING LAM	EQUIPMENT ELECTRIQUE	-	D				
1	534-00064	LAMP ASSY;WORKING	LAMPE	2					
1A	2515-1022D1	. BULB;HALOGEN	. AMPOULE	1					
2	2195-2394B	BRACKET	SUPPORT	2					
3	S0514853	BOLT	BOULON A 6 PANS	4					
4	S5102703	WASHER;SPRING	RONDELLE ELASTIQUE	4					
5	2197-1661	BRACKET	SUPPORT	2					
6	530-00418D6	HARNESS;WORKING LAMP	FAISCEAU	1					
7	124-00208D2	CLIP	AGRAFE	1					
8	2124-1509D1	CLIP	ATTACHE	6					
9	K1001029	BOLT	BOULON A 6 PANS	8					
10	2197-1660	BRACKET;HOUSING	SUPPORT	1					

DATE	AUG. 28, 2009
3rd EDITION	

Fig. 1720 ELECTRIC WIRING
POSE DE FILES ELECTRIQUES

Serial No. ;

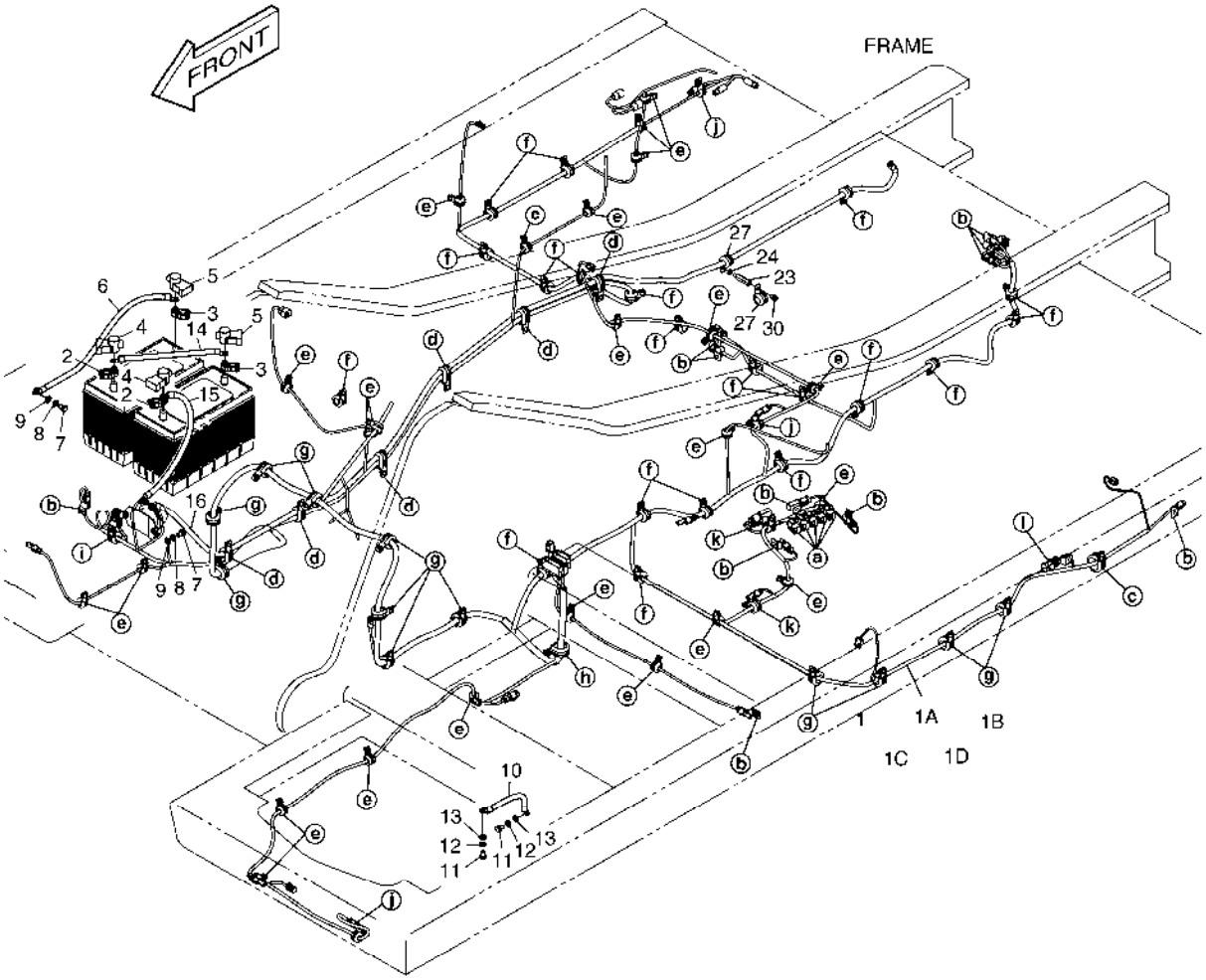

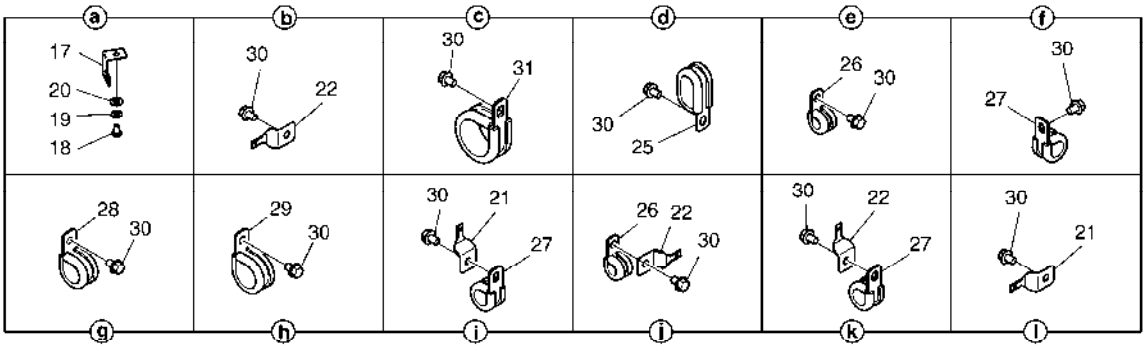

DATE	AUG. 28, 2009
3rd EDITION	

Fig. 1720 ELECTRIC WIRING
POSE DE FILES ELECTRIQUES

Serial No. ;

Key No.	Part No.	Description	Description	Q'ty	S.C	Serial No.	ICA	Replaceable part	
								Part No.	Q'ty
1720 --	K1012155B	ELECTRIC WIRING	POSE DE FILES ELECTRIQU	-	D				
1	K1012479A	HARNESS;MAIN	FAISCEAU	1		5001-5109			
	K1012479B	HARNESS;MAIN	FAISCEAU	1		5110-			
1A	2548-1027	. DIODE	. DIODE	4					
1B	548-00003A	. DIODE	. DIODE	1					
1C	K1000814	. DIODE	. DIODE	1					
1D	K1000815	. DIODE	. DIODE	1					
2	2550-1014D1	TERMINAL;BATTERY(+)	COSSE DE BATTERIE(+)	2					
3	2550-1014D2	TERMINAL;BATTERY(-)	COSSE DE BATTERIE	2					
4	2160-1212	CAP;BATT. TML (+)	CHAPEAU DE CAOUTCHOU	2					
5	2160-1213	CAP;BATT. TML (-)	BOUCHON	2					
6	2553-1275D78	CABLE;PUMP-BATT RELAY	CABLE	1					
7	S0511653	BOLT	BOULON A 6 PANS	2					
8	S5102603	WASHER	RONDELLE ELASTIQUE	2					
9	S5010613	WASHER;PLAIN	RONDELLE PLATE	2					
10	2553-1275D5	CABLE;EARTH	CABLE	1		5001-5086			
	2553-1275D39	CABLE;EARTH	CABLE	1		5087-			
11	S0511653	BOLT	BOULON A 6 PANS	2					
12	S5102603	WASHER	RONDELLE ELASTIQUE	2					
13	S5010613	WASHER;PLAIN	RONDELLE PLATE	2					
14	2553-1275D6	CABLE;BATT-BATT	CABLE BATTERIE A BATTE	1					
15	2553-1275D69	CABLE;BATTERY RELAY	CABLE	1					
16	2553-1275D81	CABLE;BATT RY-STARTER	CABLE	1					
17	2195-3500	BRACKET	SUPPORT	5					
18	S0504453	BOLT	BOULON A 6 PANS	5					
19	S5102303	WASHER;SPRING	RONDELLE ELASTIQUE	5					
20	S5010313	WASHER	RONDELLE	5					
21	2197-1660	BRACKET;HOUSING	SUPPORT	3					
22	2197-1661	BRACKET	SUPPORT	15					
23	2181-2187	BOLT;STUD	BOULON DE GOUJON	1					
24	S5102503	WASHER	RONDELLE ELASTIQUE	1					
25	124-00209D1	CLIP	ATTACHE	6					
26	124-00208D2	CLIP	AGRAFE	27					
27	124-00208D3	CLIP	ATTACHE	25					
28	124-00208D4	CLIP	ATTACHE	12					
29	124-00208D5	CLIP	ATTACHE	1					
30	K1001029	BOLT	BOULON A 6 PANS	83					
31	124-00208D6	CLIP	ATTACHE	1					

DATE	AUG. 28, 2009
3rd EDITION	

Fig. 1730 HEATER PIPING
CONDUITES DE CHAUFFAGE

Serial No. ;

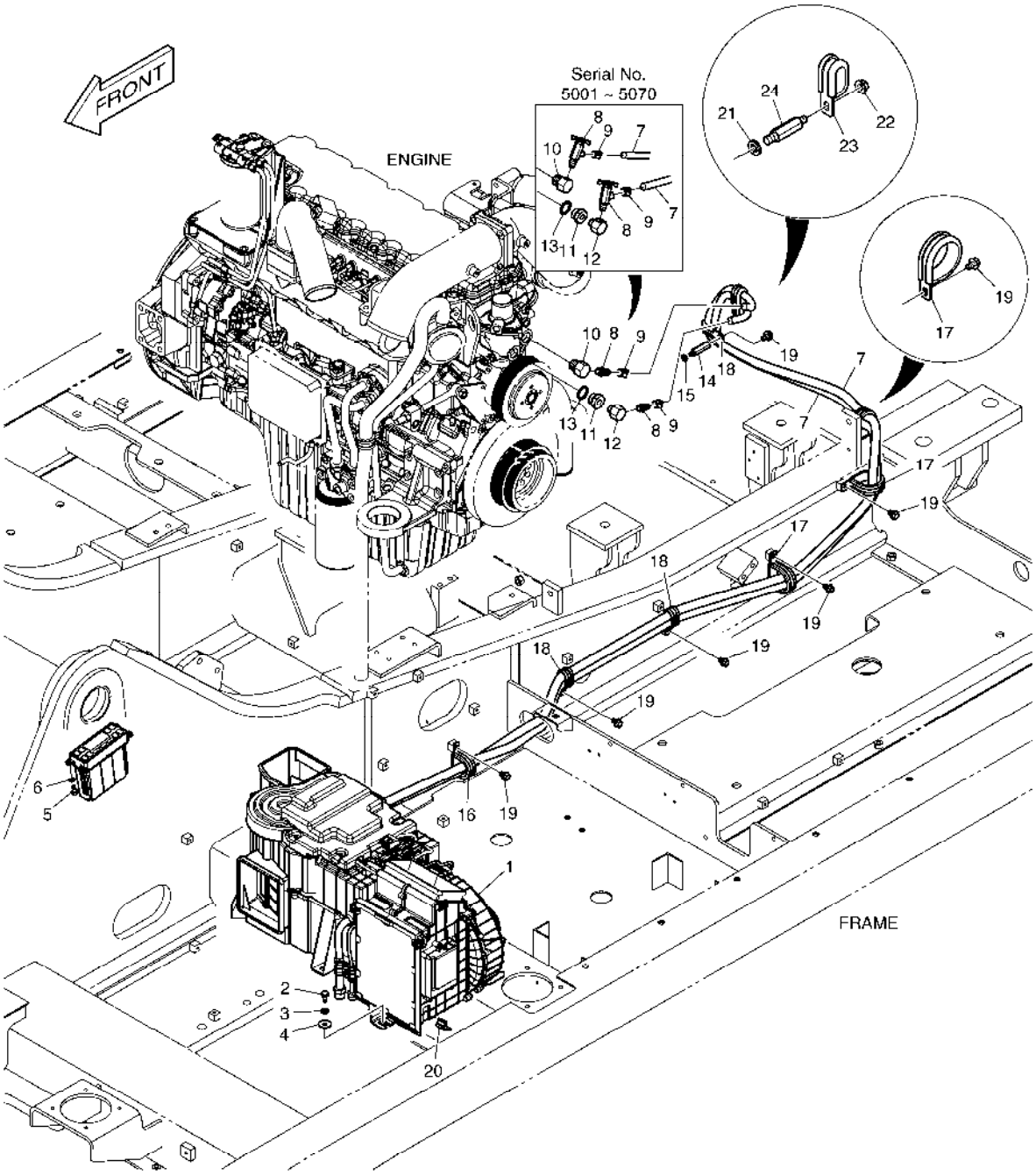

DATE	AUG. 28, 2009
3rd EDITION	

Fig. 1730 HEATER PIPING CONDUITES DE CHAUFFAGE

Serial No. ;

Key No.	Part No.	Description	Description	Q'ty	S.C	Serial No.	ICA	Replaceable part	
								Part No.	Q'ty
1730 --	K1012162B	AIR CONDITIONER	REFRIGERATION	-	D				
1	920-00127A	UNIT;AIR CON. & HEATING	CLE A MOLETTE	1					
2	S0508653	BOLT	BOULON A 6 PANS	6					
3	S5102503	WASHER	RONDELLE ELASTIQUE	6					
4	2114-1058D29	WASHER	RONDELLE	6					
5	S3450833	SCREW	VIS	4					
6	S5000213	WASHER;PLAIN M5	RONDELLE	4					
7	2185-1308D7	HOSE;RUBBER	TUYAU FLEXIBLE	2					
8	2186-9003	VALVE	VANNE	2		5001-5070			
	2181-2774	NIPPLE;HOSE	GRAISSEUR	2		5071-			
9	S8450016	CLAMP	COLLIER	4					
10	2181-1159	ADAPTER	ADAPTEUR	1					
11	2181-1160A	ADAPTER	ADAPTEUR	1					
12	2181-1161A	ADAPTER	ADAPTEUR	1					
13	S8180411	SEAL;COPPER	BAGUE D'ETANCHEITE	1					
14	2120-2187	BOLT;STUD	BOULON A 6 PANS	1					
15	S5102503	WASHER	RONDELLE ELASTIQUE	1					
16	124-00208D7	CLIP	AGRAFE	2					
17	124-00208D9	CLIP	AGRAFE	3					
18	124-00209D1	CLIP	ATTACHE	3					
19	K1001029	BOLT	BOULON A 6 PANS	8					
20	547-00024A	SENSOR;AMBENT	CAPTEUR	1					
21	S5102603	WASHER	RONDELLE ELASTIQUE	1					
22	2121-1305	NUT	ECROU	1					
23	124-00209D1	CLIP	ATTACHE	1					
24	120-00246	BOLT;STUD	BOULON DE GOUJON	1					

DATE	AUG. 28, 2009
3rd EDITION	

Fig. 1740 AIRCON UNIT REFRIGERATION

Serial No. ;

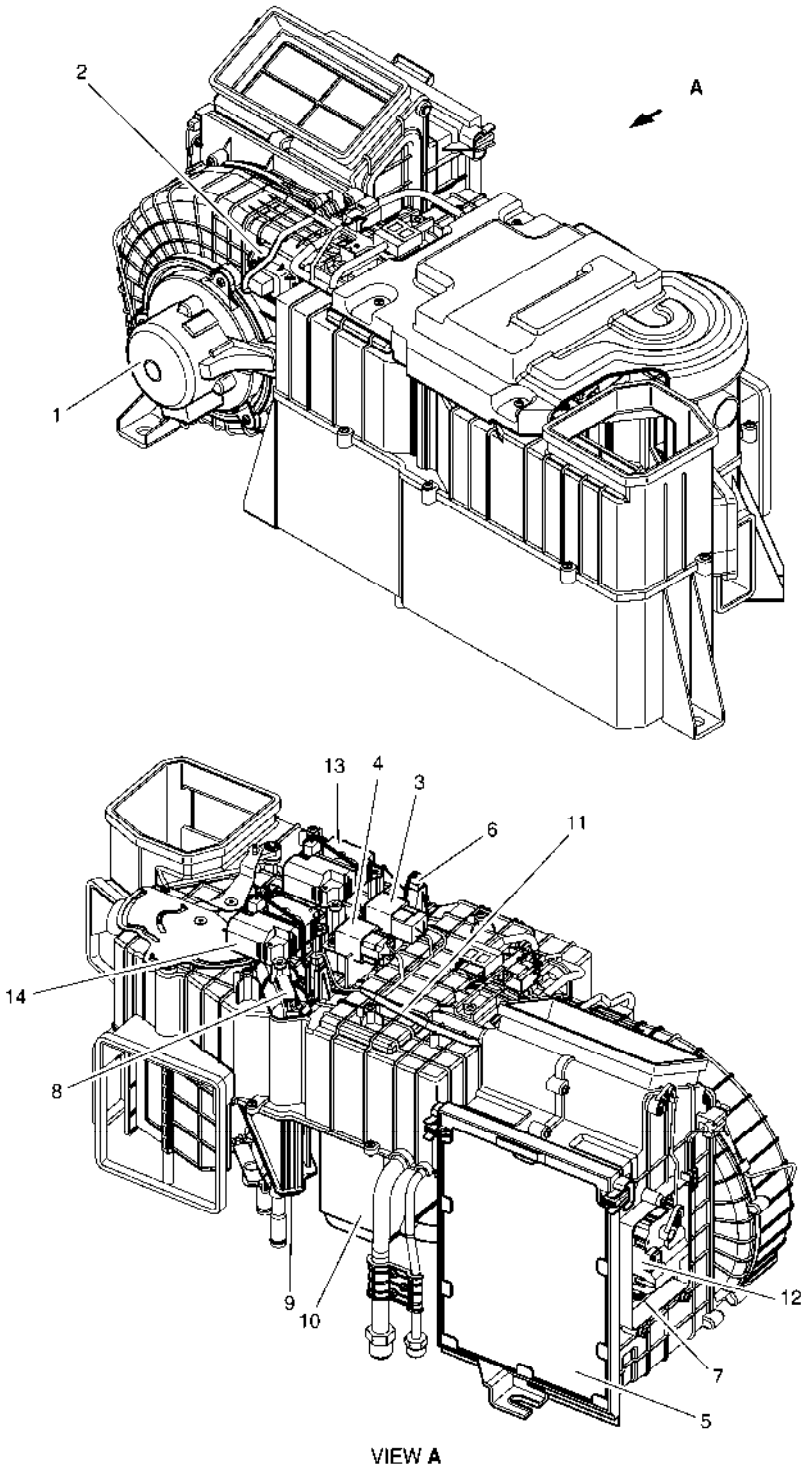

DATE	AUG. 28, 2009
3rd EDITION	

Fig. 1740 AIRCON UNIT REFRIGERATION

Serial No. ;

Key No.	Part No.	Description	Description	Q'ty	S.C	Serial No.	ICA	Replaceable part	
								Part No.	Q'ty
1740 --	920-00127A	UNIT;AIR CON. & HEATING	CLE A MOLETTE	1					
1	K1002206	MOTOR;BLOWER;24V	MOTEUR	1					
2	K1002207	POWER FET	FET DE PUISSANCE	1					
3	K1002208	RELAY;BLOWER 24V	RELAIS	1					
4	K1002209	RELAY;AIRCON 24V	RELAIS	1					
5	K1002210	FILTER;AIR CON.	FILTRE	1					
6	K1002211	SENSOR;TEMP EVAPORATOR	CAPTEUR	1					
7	K1002212	SENSOR;TEMPERATURE	CAPTEUR	1					
8	K1002213	SENSOR;WATER TEMPERATUR	CAPTEUR	1					
9	K1002214	CORE;HEATER	CORE;HEATER	1					
10	K1002215	EVAPORATOR	CHAUFFAGE	1					
11	K1002216	HARNESS;AIR CONDITIONER	FAISCEAU	1					
12	K1002217	ACTUATOR;INTAKE	DECLENCHEURE	1					
13	K1002218	ACTUATOR;AIR MIX	DECLENCHEURE	1					
14	K1002219	ACTUATOR;MODE	DECLENCHEURE	1					

DATE	AUG. 28, 2009
3rd EDITION	

Fig. 1750 AIRCONDITIONER REFRIGERATION

Serial No. ;

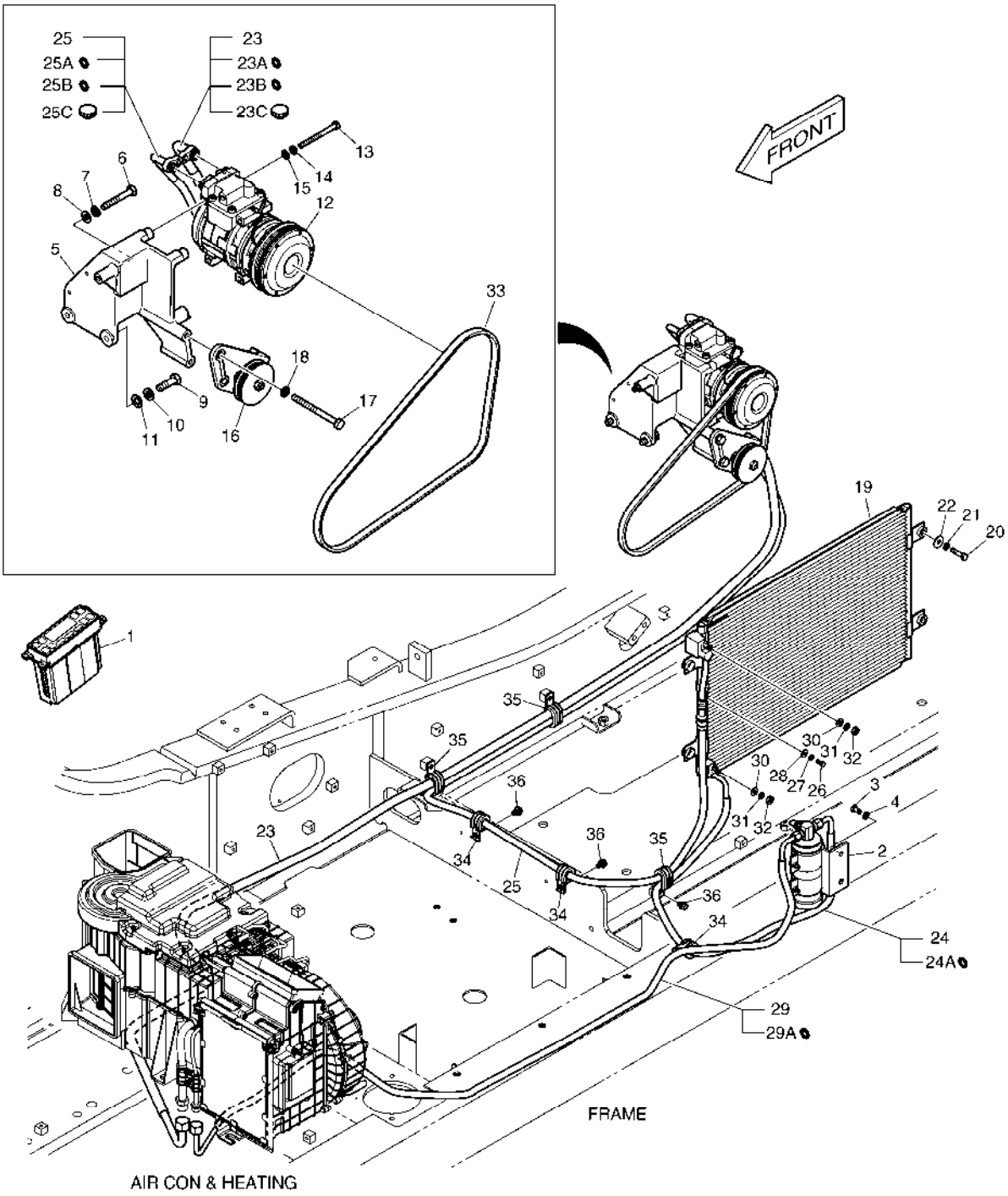

DATE	AUG. 28, 2009
3rd EDITION	

Fig. 1750 AIRCONDITIONER REFRIGERATION

Serial No. ;

Key No.	Part No.	Description	Description	Q'ty	S.C	Serial No.	ICA	Replaceable part	
								Part No.	Q'ty
1750 --	K1012163B	ASSEMBLY;AIR CONDITIONER	CONDITIONNEUR D'ASSEM	-	D				
1	543-00107	CONTROL PANEL;AIR CON	PANNEAU	1					
2	2204-6039A	RECEIVER DRIER	RESERVOIR DESSICATEUR	1					
3	S0508666	BOLT	BOULON A 6 PANS	2					
4	S5102503	WASHER	RONDELLE ELASTIQUE	2					
5	K1008482B	BRACKET;COMPRESSOR	SUPPORT	1		5001-5106	I	K1037356A	1
	K1037356A	BRACKET;COMPRESSOR	SUPPORT	1		5107-			
6	S0558966	BOLT	BOULON	1					
7	S5102603	WASHER	RONDELLE ELASTIQUE	1					
8	S5010613	WASHER;PLAIN	RONDELLE PLATE	1					
9	S0715463	BOLT	BOULON	2					
10	S5102703	WASHER;SPRING	RONDELLE ELASTIQUE	2					
11	S5010713	WASHER;PLAIN	RONDELLE	2					
12	2208-6013B	COMPRESSOR	COMPRESSEUR	1					
13	S0557166	BOLT	BOULON	4					
14	S5102503	WASHER	RONDELLE ELASTIQUE	4					
15	S5010513	WASHER	RONDELLE	4					
16	2107-6006	PULLEY ASS`Y;IDLE	ENSEMBLE POULIE FOU	1					
17	S0512066	BOLT	BOULON A 6 PANS	2					
18	S5102603	WASHER	RONDELLE ELASTIQUE	2					
19	520-00004	CONDENSER;AIR CON	CONDENSER;AIRCON	1					
20	S0509366	BOLT	BOULON	4					
21	S5102503	WASHER	RONDELLE ELASTIQUE	4					
22	2114-1058D29	WASHER	RONDELLE	4					
23	K1012476A	HOSE;SUCTION	TUYAU FLEXIBLE	1					
23A	2180-6086	. O-RING;SUCTION(COMP)	. JOINT TORIQUE	1					
23B	K1011385	. O-RING;EVAPORATOR	. JOINT TORIQUE	1					
23C	1.161-00019	. CAP;CHECK PORT(L)	. CHAPEAU	1					
24	185-00386B	HOSE;LIQUID(1)	TUYAU FLEXIBLE	1					
24A	K1011388	. O-RING	. JOINT TORIQUE	2					
25	K1016112	HOSE;DISCHARGE	TUYAU FLEXIBLE	1					
25A	2180-6088	. O-RING;DISCHARGE(COMP)	. JOINT TORIQUE	1					
25B	K1011384	. O-RING;CONDENSER	. JOINT TORIQUE	1					
25C	1.161-00018	. CAP;CHECK PORT(H)	. CHAPEAU	1					
26	S0504666	BOLT	BOULON	1					
27	S5010303	WASHER	RONDELLE	1					
28	2114-1058D52	WASHER	RONDELLE	1					
29	185-00387A	HOSE;LIQUID(2)	TUYAU FLEXIBLE	1					

DATE	AUG. 28, 2009
3rd EDITION	

Fig. 1750 AIRCONDITIONER REFRIGERATION

Serial No. ;

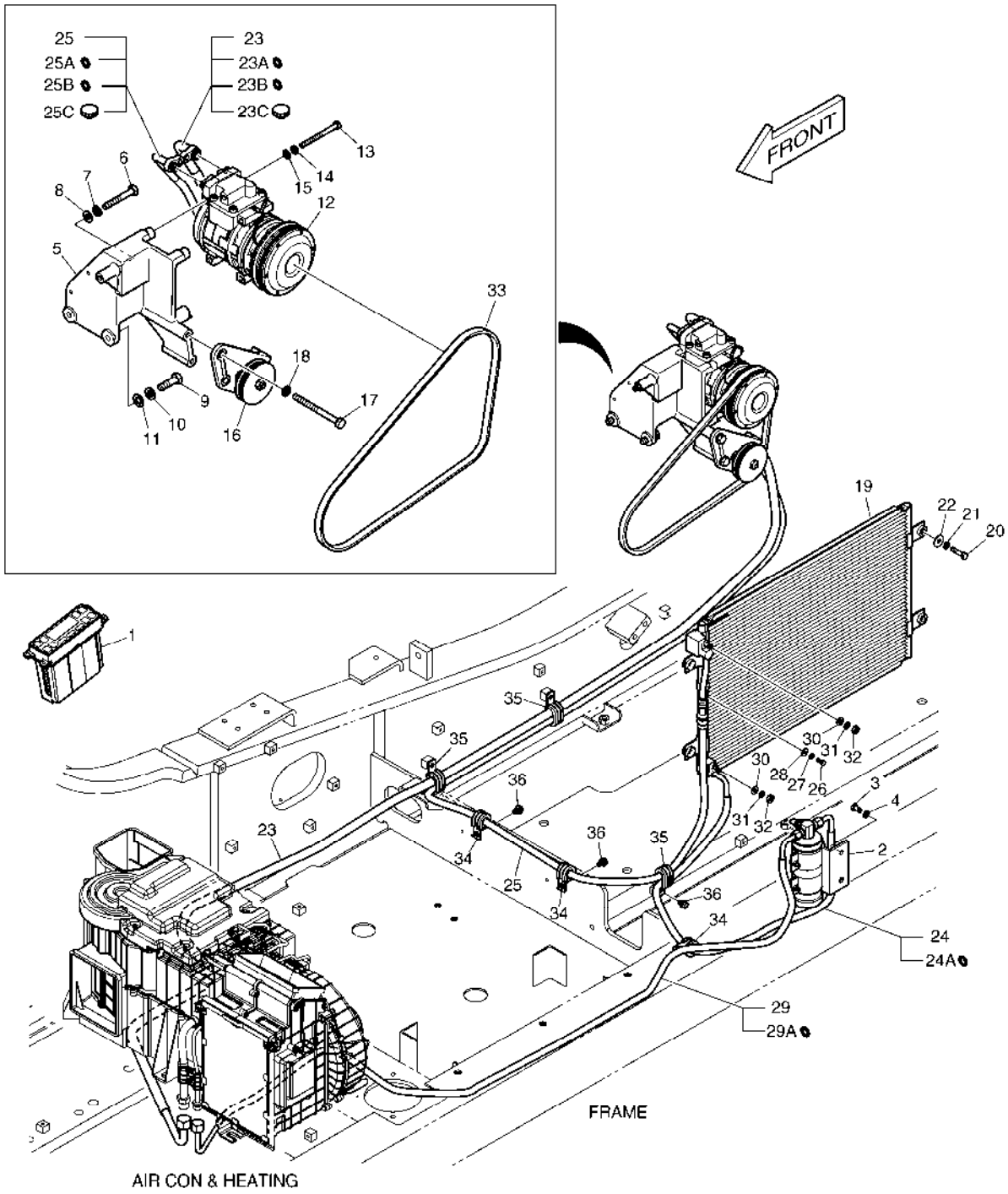

DATE	AUG. 28, 2009
3rd EDITION	

Fig. 1750 AIRCONDITIONER REFRIGERATION

Serial No. ;

Key No.	Part No.	Description	Description	Q'ty	S.C	Serial No.	ICA	Replaceable part	
								Part No.	Q'ty
1750 -29A	K1011388	. O-RING	. JOINT TORIQUE	2					
30	S5000313	WASHER;PLAIN	RONDELLE	2					
31	S5102303	WASHER;SPRING	RONDELLE ELASTIQUE	2					
32	S4012303	NUT	ECROU	2					
33	2106-1019D25	V-BELT;POLY(4PK-1210L)	COURROIE	1					
34	124-00208D3	CLIP	ATTACHE	3					
35	124-00209D1	CLIP	ATTACHE	3					
36	K1001029	BOLT	BOULON A 6 PANS	3					

DATE	AUG. 28, 2009
3rd EDITION	

Fig. 2100 TRACK FRAME
TRAIN DE ROULEMENT

Serial No. ;

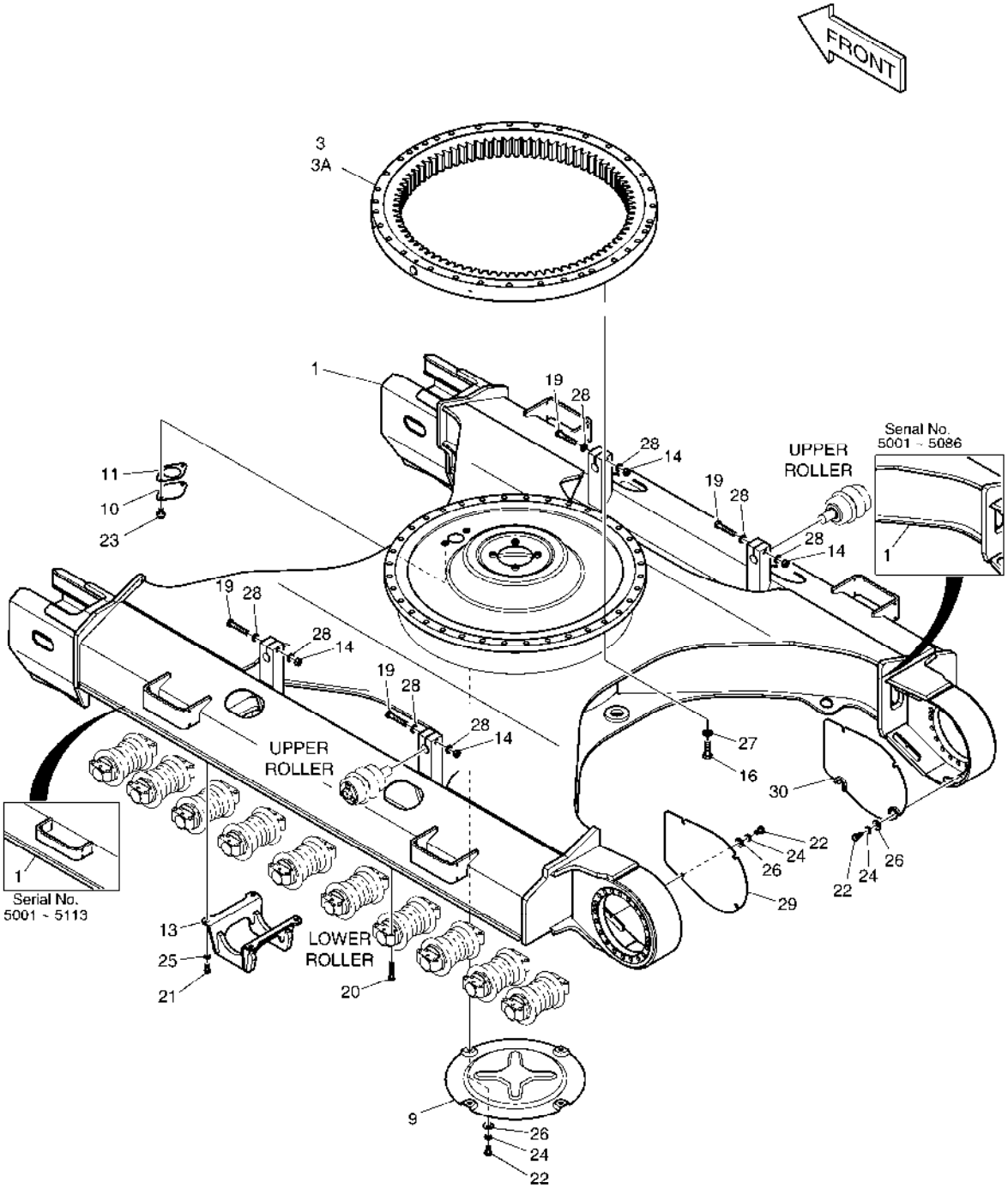

DATE	AUG. 28, 2009
3rd EDITION	

Fig. 2100 TRACK FRAME TRAIN DE ROULEMENT

Serial No. ;

Key No.	Part No.	Description	Description	Q'ty	S.C	Serial No.	ICA	Replaceable part	
								Part No.	Q'ty
2100 --	K1010173L	TRACK ASS`Y	TRAIN DE ROULEMENT	-	D				
1	K1010183B	TRACK ASS'Y	TRAIN DE ROULEMENT	1		5001-5086	I	K1010183C	1
	K1010183C	TRACK ASS'Y	TRAIN DE ROULEMENT	1		5087-5109	I	K1010183E	1
	K1010183E	TRACK ASS'Y	TRAIN DE ROULEMENT	1		5110-5113	I	K1010183G	1
	K1010183G	TRACK FRAME	TRAIN DE ROULEMENT	1		5114-			
3	K1010505	BEARING;SWING	ROULEMENT	1					
3A	180-00297D3	. SEAL	. JOINT	2					
9	K1004271	COVER;UNDER	COUVERCLE	1					
10	621-02938B	COVER	COUVERCLE	1					
11	180-00463	PACKING	RONDELLE D'ETANCHEITE	1					
13	K1025523	GUARD;TRACK	GARDE	4					
14	S4013133	NUT	ECROU	4					
16	S0574966	BOLT M24X3.0X80	BOULON A 6 PANS	36					
19	S0571166	BOLT	BOULON A 6 PANS	4					
20	S0766066	BOLT M16X1.5X90	BOULON A 6 PANS	80					
21	S0721466	BOLT M16X1.5X40	BOULON A 6 PANS	16					
22	S0515066	BOLT M12X25	BOULON A 6 PANS	12					
23	DS0025016	BOLT;SET	BOULON A 6 PANS	2					
24	S5102703	WASHER;SPRING	RONDELLE ELASTIQUE	12					
25	S5102903	WASHER	RONDELLE	16					
26	2114-1058D72	WASHER;PLAIN	RONDELLE PLATE	12					
27	2114-1831A	WASHER;HARDEN	RONDELLE	36					
28	2114-9012A	WASHER;HARD	RONDELLE	8					
29	K1010683	COVER;MOTOR(L.H)	COUVERCLE	1					
30	K1011420	COVER;MOTOR(R.H)	COUVERCLE	1					

DATE	AUG. 28, 2009
3rd EDITION	

Fig. 2110 TRAVEL DEVICE SYSTEME D'TRANSLATION

Serial No. ;

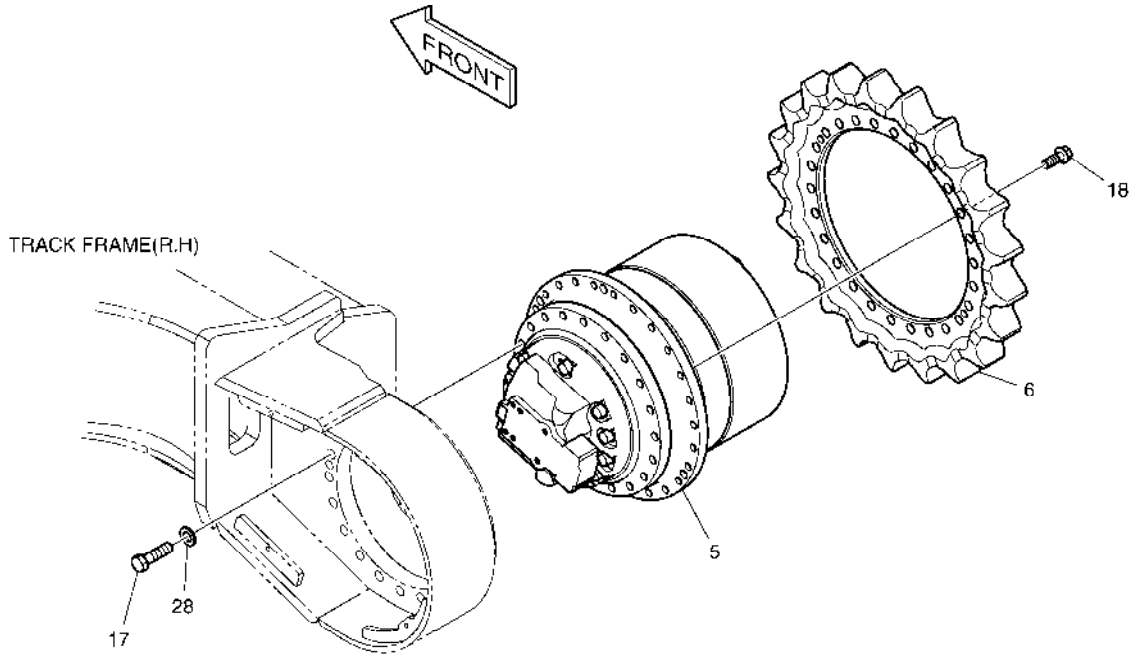

DATE	AUG. 28, 2009
3rd EDITION	

Fig. 2110 TRAVEL DEVICE SYSTEME D'TRANSLATION

Serial No. ;

Key No.	Part No.	Description	Description	Q'ty	S.C	Serial No.	ICA	Replaceable part	
								Part No.	Q'ty
2110 --	K1010173E	TRACK ASS`Y	TRAIN	-	D				
5	K1011413A	TRAVEL DEVICE	MOTEUR DE TRANSLATIOI	2					
6	K1010542	SPROCKET	COURONNE DENTEE	2					
17	S0570366	BOLT M20X2.5X75	BOULON A 6 PANS	40					
18	K1010544	BOLT;FLANGE	BOULON A 6 PANS	52					
28	2114-9012A	WASHER;HARD	RONDELLE	40					

DATE	AUG. 28, 2009
3rd EDITION	

Fig. 2120 IDLER BARBOTIN

Serial No. ;

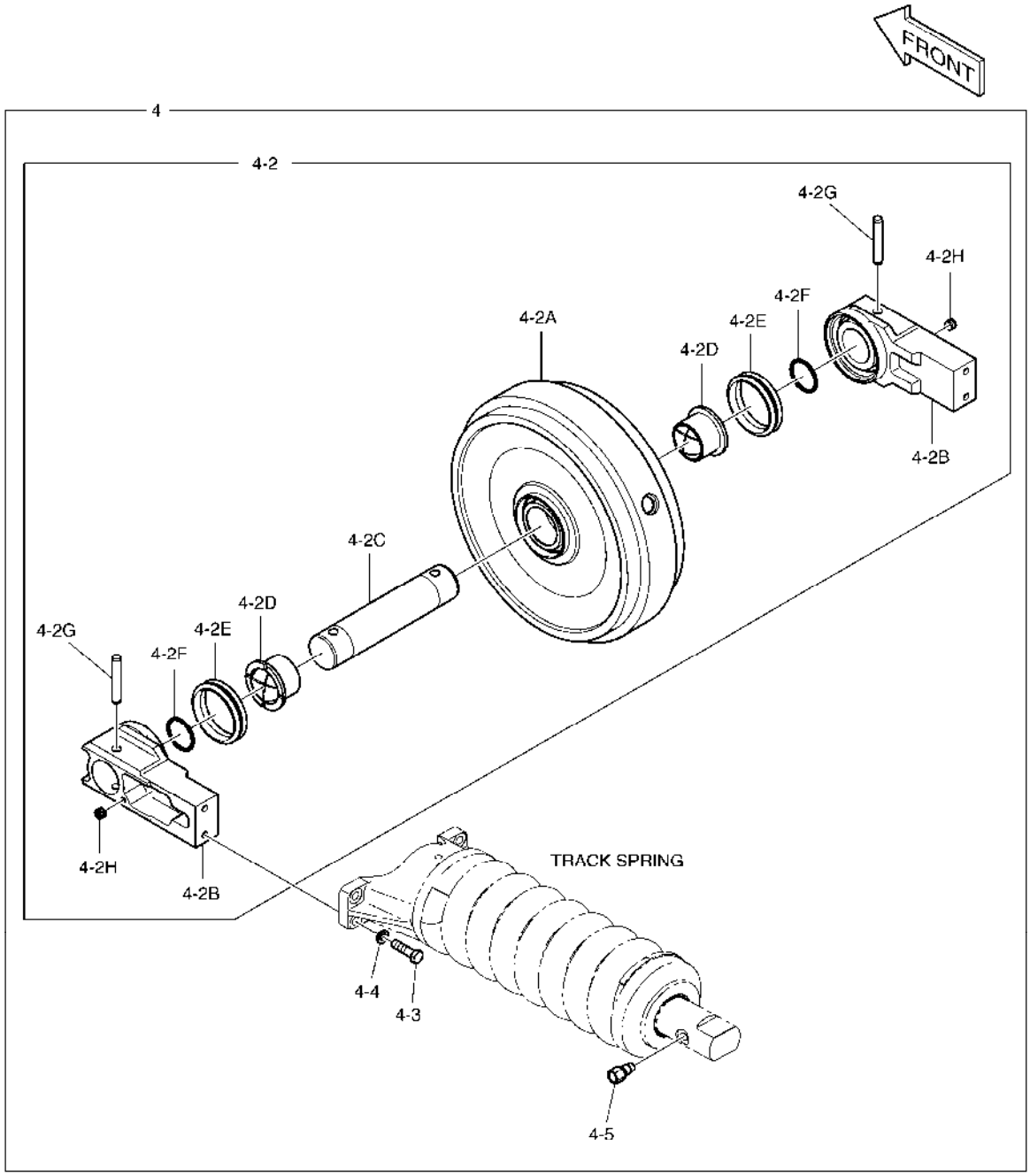

DATE	AUG. 28, 2009
3rd EDITION	

Fig. 2120 IDLER BARBOTIN

Serial No. ;

Key No.	Part No.	Description	Description	Q'ty	S.C	Serial No.	ICA	Replaceable part	
								Part No.	Q'ty
2120 --	K1010173E	TRACK ASS`Y	TRAIN	-	D				
4	K1010511B	ADJUSTER ASS`Y	SUPPORT	2					
4-2	K1011790	. IDLER ASS`Y	. ENSEMBLE BARBOTIN	1					
4-2A	-	.. BODY	.. CARTER	1	D				
4-2B	K1011891	.. SUPPORT	.. SUPPORT	2					
4-2C	K1011892	.. SHAFT	.. AXE	1					
4-2D	K1011893	.. BUSHING	.. DOUILLE	2					
4-2E	K1011894	.. SEAL;FLOATING	.. JOINT	2					
4-2F	S8010700	.. O-RING	.. JOINT TORIQUE	2					
4-2G	K1011895	.. PIN	.. GOUJON	2					
4-2H	2181-1116D2	.. PLUG	.. BOUCHON	2					
4-3	S0565466	. BOLT	. BOULON A 6 PANS	4					
4-4	S5102903	. WASHER	. RONDELLE	4					
4-5	422-00055	. VALVE;GREASE	. VANNE	1					

DATE	AUG. 28, 2009
3rd EDITION	

Fig. 2130 TRACK SPRING TENDEUR DE CHENILLE

Serial No. ;

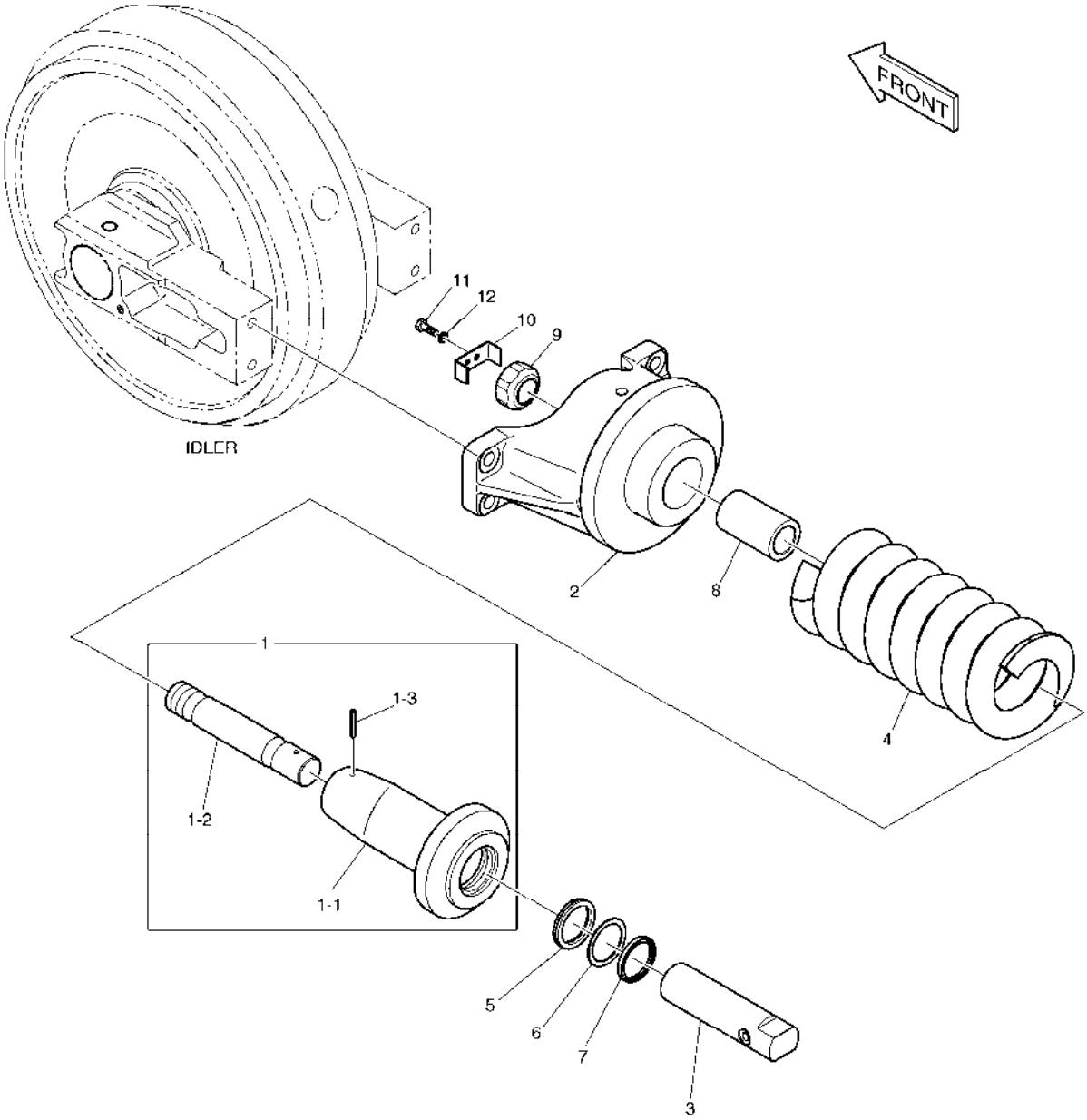

DATE	AUG. 28, 2009
3rd EDITION	

Fig. 2130 TRACK SPRING TENDEUR DE CHENILLE

Serial No. ;

Key No.	Part No.	Description	Description	Q'ty	S.C	Serial No.	ICA	Replaceable part	
								Part No.	Q'ty
2130 --	K1010512A	TRACK SPRING	TENDEUR DE CHENILLE	2		5001-5109	I	K1010512B	2
	K1010512B	TRACK SPRING	TENDEUR DE CHENILLE	2		5110-			
1	K1011848A	CYLINDER BODY ASS`Y	CYLINDRE	1					
1-1	K1011865A	. BODY	. CARROSSERIE	1					
1-2	K1011866A	. SHAFT	. ARBRE	1					
1-3	S5741270	. PIN;SPRING	. GOUJON	1					
2	K1011849A	BRACKET	SUPPORT	1		5001-5109	I	K1011849B	1
	K1011849B	BRACKET	SUPPORT	1		5110-			
3	444-00009B	PISTON ROD	TIGE	1					
4	K1011853	SPRING	RESSORT	1					
5	-	PACKING	EMBALLAGE	1	K				
6	-	RING;BACK UP	ANNEAU DE SOUTIEN	1	K				
7	-	SEAL;DUST	PARE-POUSSIERES	1	K				
8	K1011855A	SPACER	ENTERTOISE	1		5001-5109	I	K1011855B	1
	K1011855B	SPACER	ENTERTOISE	1		5110-			
9	K1011858A	NUT	ECROU	1		5001-5109	I	K1011858B	1
	K1011858B	NUT	ECROU	1		5110-			
10	K1011860A	PLATE	PLAQUE	1					
11	S0515263	BOLT;HEX	BOULON A 6 PANS	2					
12	S5102703	WASHER;SPRING	RONDELLE ELASTIQUE	2					
*	274-00009KT	SEAL KIT;TRACK SPRING	KIT DE JOINT	1					

DATE	AUG. 28, 2009
3rd EDITION	

Fig. 2140 UPPER ROLLER GALET SUPERIEUR

Serial No. ;

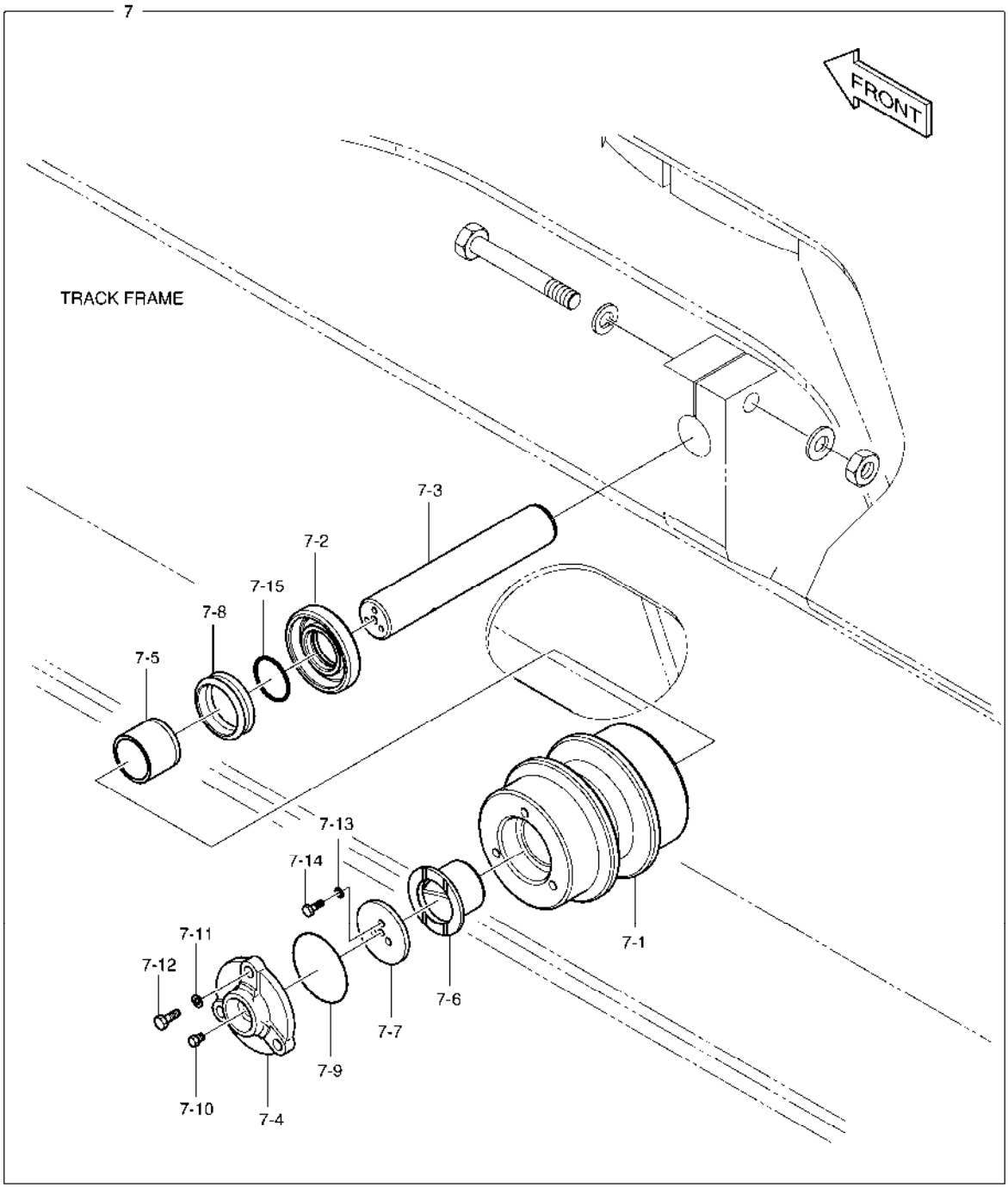

DATE	AUG. 28, 2009
3rd EDITION	

Fig. 2140 UPPER ROLLER GALET SUPERIEUR

Serial No. ;

Key No.	Part No.	Description	Description	Q'ty	S.C	Serial No.	ICA	Replaceable part	
								Part No.	Q'ty
2140 --	K1010173G	TRACK ASS`Y	TRAIN	-	D				
7	270-00064	ROLLER;UPPER	GALET	4		5001-5099	I	270-00064A	4
	270-00064A	ROLLER;UPPER	GALET	4		5100-			
7-1	-	. BODY ASS`Y	. CARTER	1	D				
7-2	115-00136	. RING;THRUST	. BAGUE	1					
7-3	112-00091	. SHAFT	. ARBRE	1		5001-5099	I	112-00091A	1
	112-00091A	. SHAFT	. ARBRE	1		5100-			
7-4	2229-1003A	. COVER	. COUVERCLE	1		5001-5099	I	2229-1003B	1
	2229-1003B	. COVER	. COUVERCLE	1		5100-			
7-5	2110-1005	. BUSHING	. MANCHON	1		5001-5099			
	K1036461	. BUSHING	. DOUILLE	1		5100-			
7-6	2110-1004	. BUSHING	. MANCHON	1		5001-5099			
	K1036462	. BUSHING	. DOUILLE	1		5100-			
7-7	2114-1019A	. WASHER	. RONDELLE	1					
7-8	2180-9021	. SEAL;GROUP	. ETANCHEITE	1		5001-5099	I	2180-9005B	1
	2180-9005B	. SEAL;FLOATING	. JOINT A FACE FROTTANT	1		5100-			
7-9	2180-1026D3	. O-RING	. JOINT TORIQUE	1					
7-10	2181-1133	. PLUG	. BOUCHON	1					
7-11	S5102702	. WASHER;SPRING	. RONDELLE ELASTIQUE	3					
7-12	S0715351	. BOLT M8X1.25X35	. BOULON A 6 PANS	3					
7-13	S5102503	. WASHER	. RONDELLE ELASTIQUE	3					
7-14	S0508861	. BOLT M8X1.25X20	. BOULON A 6 PANS	3					
7-15	S8000460	. O-RING	. JOINT TORIQUE	1					

DATE	AUG. 28, 2009
3rd EDITION	

Fig. 2150 LOWER ROLLER GALET INFERIEUR

Serial No. ;

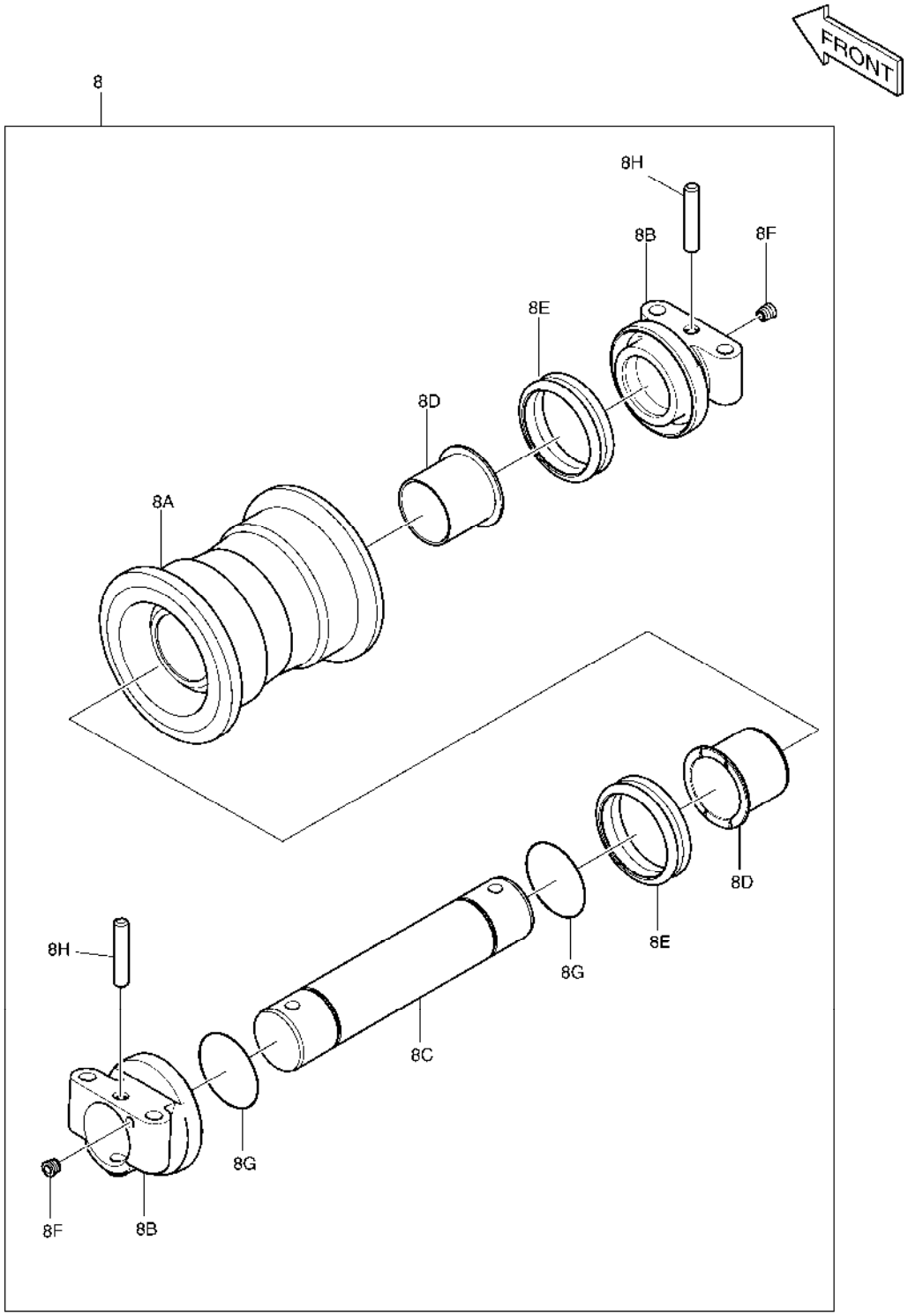

DATE	AUG. 28, 2009
3rd EDITION	

Fig. 2150 LOWER ROLLER GALET INFERIEUR

Serial No. ;

Key No.	Part No.	Description	Description	Q'ty	S.C	Serial No.	ICA	Replaceable part	
								Part No.	Q'ty
2150 --	K1010173G	TRACK ASS`Y	TRAIN	-	D				
8	K1011713	ROLLER;LOWER	GALET	20		5001-5109	I	K1000976B	2
	K1000976B	ROLLER;LOWER	GALET	20		5110-			
8A	-	. BODY;ROLLER	. GALET	1	D				
8B	K1011294A	. COLLAR	. BRIDE	2					
8C	220-00050	. SHAFT	. ARBRE	1					
8D	K1011738	. BUSHING	. DOUILLE	2					
8E	2180-9149A	. SEAL;GROUP	. JOINT	2		5001-5109	I	K1036458	2
	K1036458	. SEAL;GROUP	. BAGUE D'ETANCHEITE	2		5110-			
8F	2181-1116D2	. PLUG	. BOUCHON	2					
8G	S8010650	. O-RING	. JOINT TORIQUE	2					
8H	2123-1719	. PIN	. BROCHE	2					

DATE	AUG. 28, 2009
3rd EDITION	

Fig. 2160 CENTER JOINT
JOINT CENTRAL

Serial No. ; 5001 ~ 5109

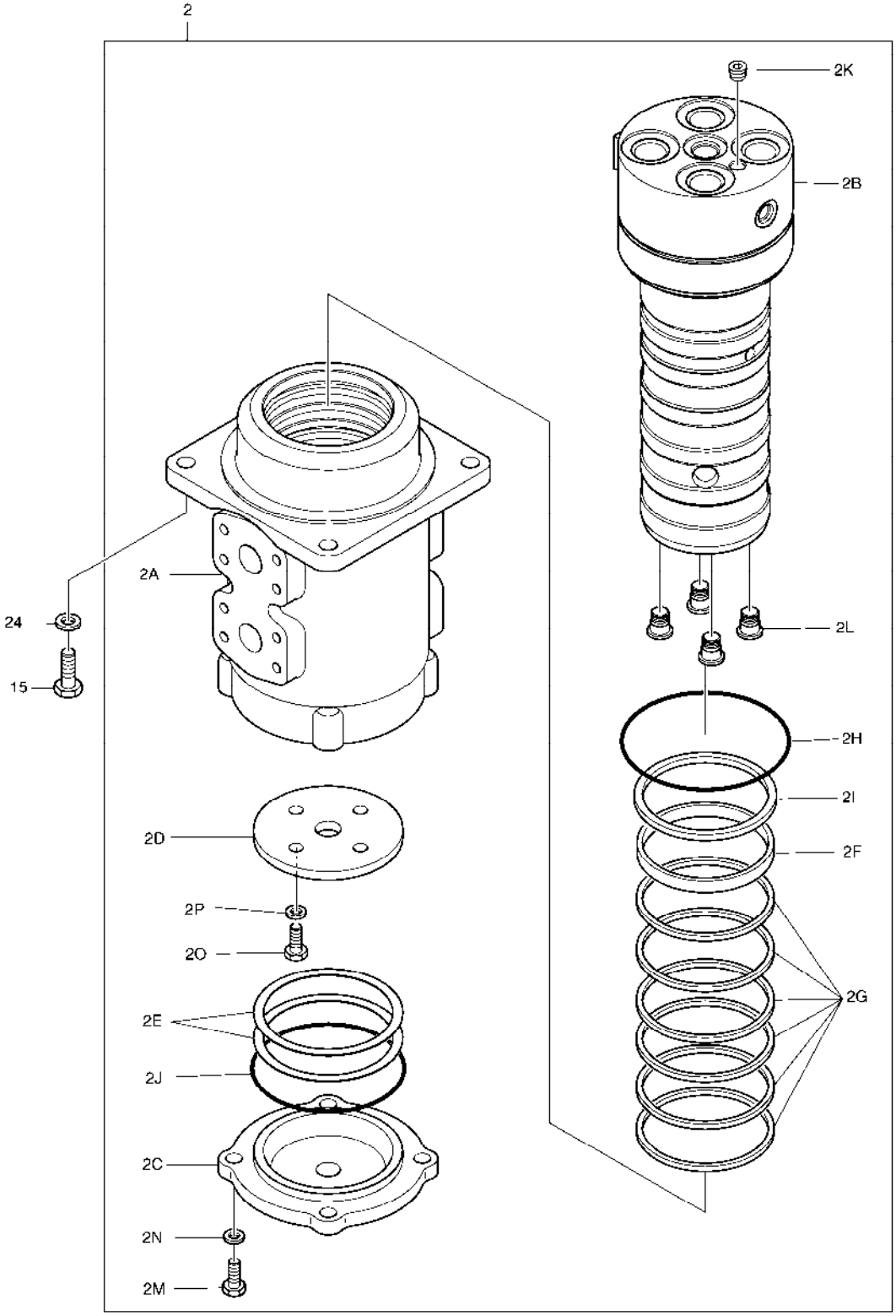

DATE	AUG. 28, 2009
3rd EDITION	

Fig. 2160 CENTER JOINT / JOINT CENTRAL

Serial No. ; 5001 ~ 5109

Key No.	Part No.	Description	Description	Q'ty	S.C	Serial No.	ICA	Replaceable part	
								Part No.	Q'ty
2160 --	K1010173E	TRACK ASS`Y	TRAIN	-	D				
2	480-00018C	JOINT;CENTER	JOINT CENTRAL	1					
2A	481-00002	. HUB	. MOYEU	1					
2B	483-00002	. SPINDLE	. TOUPIE	1					
2C	482-00003	. COVER	. COUVERCLE	1					
2D	114-00583	. SPACER	. ENTERTOISE	1					
2E	114-00584	. SHIM	. CALE	2					
2F	-	. RING;WEAR	. SEGMENT D'USURE	1	K				
2G	-	. SEAL;SLIPPER	. JOINT	6	K				
2H	S8001200	. O-RING	. JOINT TORIQUE	1	K				
2I	S8001001	. O-RING	. JOINT TORIQUE	1	K				
2J	S8011201	. O-RING	. JOINT TORIQUE	1	K				
2K	2181-1116D2	. PLUG	. BOUCHON	1					
2L	-	. PLUG;PF	. BOUCHON	4	D				
2M	S0515253	. BOLT M12X1.75X30	. BOULON A 6 PANS	4					
2N	S5102703	. WASHER;SPRING	. RONDELLE ELASTIQUE	4					
2O	S0512053	. BOLT	. BOULON A 6 PANS	4					
2P	S5102603	. WASHER	. RONDELLE ELASTIQUE	4					
15	S0515366	BOLT	BOULON A 6 PANS	4					
24	S5102703	WASHER;SPRING	RONDELLE ELASTIQUE	4					
*	480-00018KT	SEAL KIT;CENTER JOINT	KIT DE JOINT	1					

DATE	AUG. 28, 2009
3rd EDITION	

Fig. 2161 CENTER JOINT
JOINT CENTRAL

Serial No. ; 5110 ~

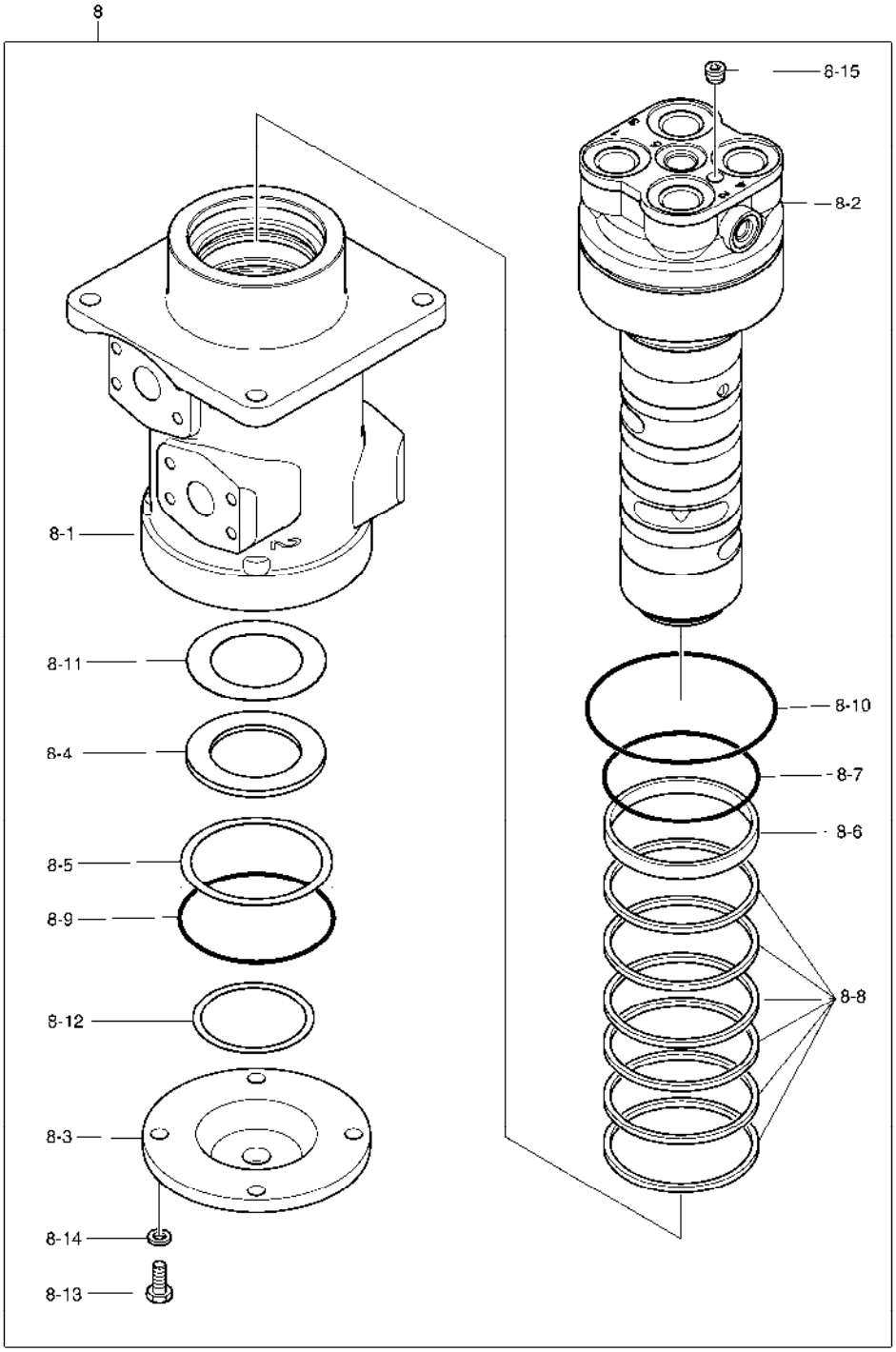

DATE	AUG. 28, 2009
3rd EDITION	

Fig. 2161 CENTER JOINT / JOINT CENTRAL

Serial No. ; 5110 ~

Key No.	Part No.	Description	Description	Q'ty	S.C	Serial No.	ICA	Replaceable part	
								Part No.	Q'ty
2161 -8	K1038790	JOINT;CENTER	JOINT CENTRAL	1					
8-1	K1038791	. HUB	. MOYEU	1					
8-2	K1038792	. SPINDLE	. TOUPIE	1					
8-3	K1038793	. COVER	. COUVERCLE	1					
8-4	K1038794	. SPACER	. ENTERTOISE	1					
8-5	S6500600	. RING;RETAINER	. BAGUE	1					
8-6	-	. RING;WEAR	. SEGMENT D'USURE	1	K				
8-7	S8000901	. O-RING	. JOINT TORIQUE	1	K				
8-8	-	. SEAL;SLIPPER	. JOINT	6	K				
8-9	S8011000	. O-RING	. JOINT TORIQUE	1	K				
8-10	S8001050	. O-RING	. JOINT TORIQUE	1	K				
8-11	K9006884	. SHIM	. CALE	1					
8-12	K9006883	. SHIM	. CALE	1					
8-13	S0515253	. BOLT M12X1.75X30	. BOULON A 6 PANS	4					
8-14	S5102703	. WASHER;SPRING	. RONDELLE ELASTIQUE	4					
8-15	2181-1116D2	. PLUG	. BOUCHON	1					
*	K1038790KT	SEAL KIT;CENTER JOINT	KIT DE JOINT	1					

DATE	AUG. 28, 2009
3rd EDITION	

Fig. 2170 SEALED TRACK SHOE-600G
ENSEMBLE MAILLON DE CHAINES

Serial No. ; 5001 ~ 5108

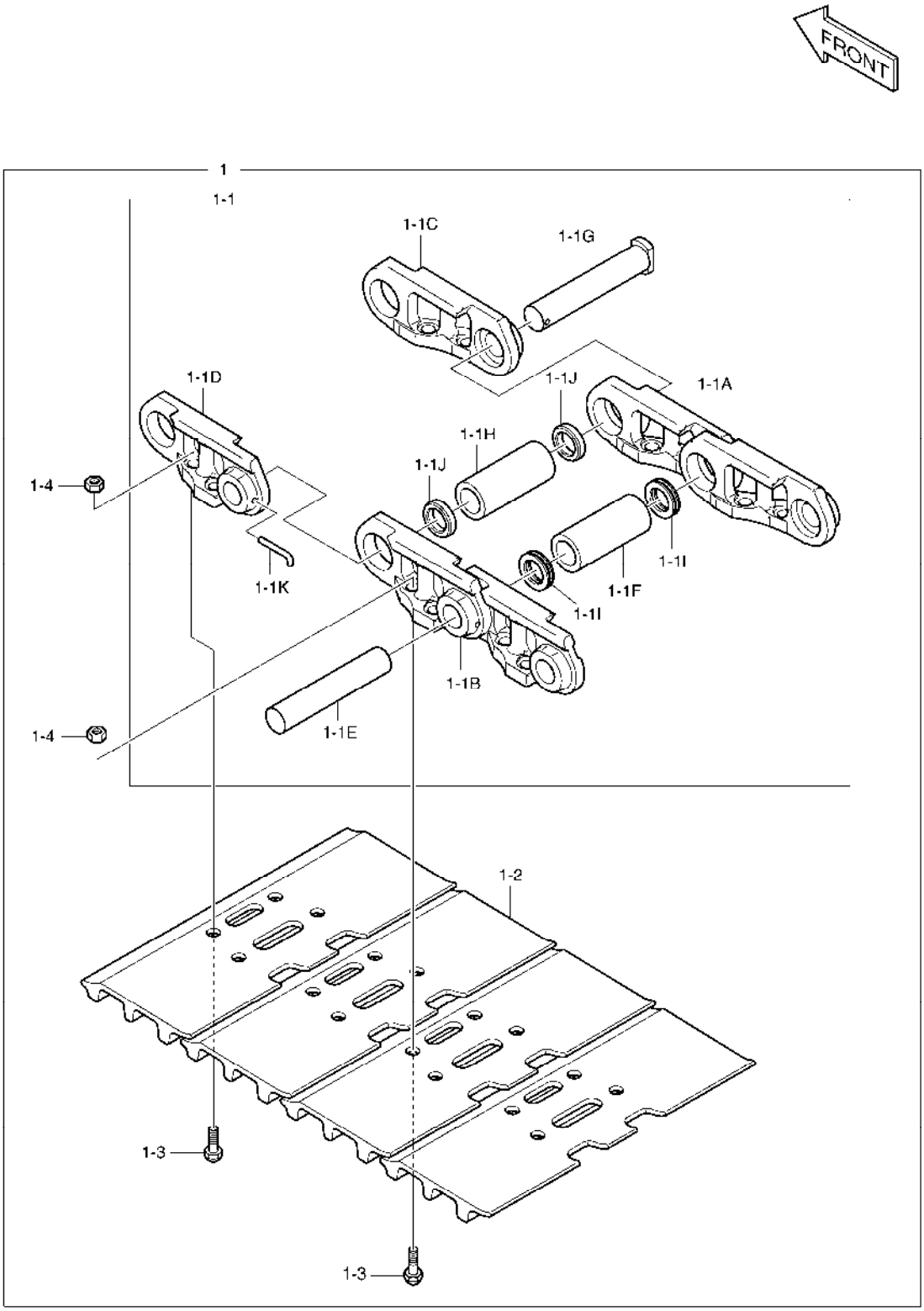

DATE	AUG. 28, 2009
3rd EDITION	

Fig. 2170 SEALED TRACK SHOE-600G ENSEMBLE MAILLON DE CHAINES

Serial No. ; 5001 ~ 5108

Key No.	Part No.	Description	Description	Q'ty	S.C	Serial No.	ICA	Replaceable part	
								Part No.	Q'ty
2170 -1	K1011514	TRACK SHOE ASS'Y-600G	TRAIN A MAILLON	2		5001-5108			
1-1	K1011519	. TRACK LINK ASS'Y	. ENSEMBLE MAILLON DE C	1					
1-1A	2272-6104R	.. LINK;TRACK(RH)	.. PIECE DE JONCTION	50					
1-1B	2272-6104L	.. LINK;TRACK(LH)	.. PIECE DE JONCTION	50					
1-1C	2272-6105R	.. LINK;MASTER(RH)	.. PIECE DE JONCTION	1					
1-1D	2272-6105L	.. LINK;MASTER(LH)	.. PIECE DE JONCTION	1					
1-1E	2123-6060	.. PIN	.. GOUPILLE	50					
1-1F	110-00226	.. BUSHING	.. DOUILLE	50					
1-1G	2123-6061	.. PIN;MASTER	.. BROCHE	1					
1-1H	2110-6052	.. BUSHING;MASTER	.. MANCHON	1					
1-1I	180-00441	.. SEAL;DUST	.. JOINT	100					
1-1J	2114-6035	.. SPACER	.. ENTERTOISE	2					
1-1K	2123-6062	.. PIN;SMALL	.. GOUPILLE	1					
1-2	2273-6040D1	. SHOE 600mm	. SABOT	51					
1-3	2120-6017	. BOLT	. BOULON A 6 PANS	204					
1-4	2121-6017	. NUT	. ECROU	204					

DATE	AUG. 28, 2009
3rd EDITION	

Fig. 2171 SEALED TRACK SHOE-600G
ENSEMBLE MAILLON DE CHAINES

Serial No. ; 5109 ~

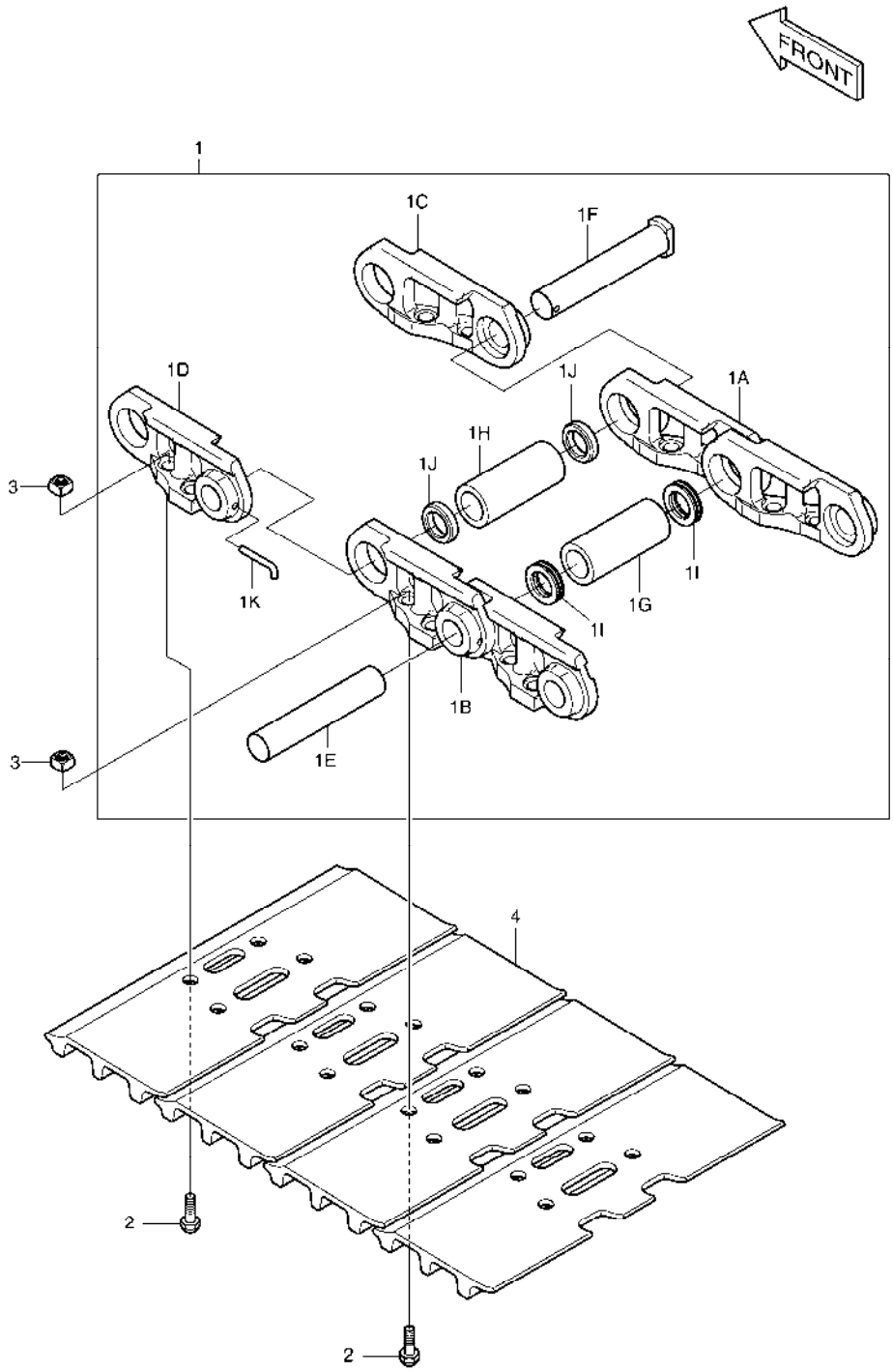

DATE	AUG. 28, 2009
3rd EDITION	

Fig. 2171 SEALED TRACK SHOE-600G ENSEMBLE MAILLON DE CHAINES

Serial No. ; 5109 ~

Key No.	Part No.	Description	Description	Q'ty	S.C	Serial No.	ICA	Replaceable part	
								Part No.	Q'ty
2171 --	K1046447	TRACK SHOE ASS`Y	MAILLON DE CHAINE	2		5109-			
1	K1038366	TRACK LINK ASS`Y	ENSEMBLE MAILLON DE CI	1					
1A	K1038367	. LINK;TRACK(RH)	. PIECE DE JONCTION	50					
1B	K1038368	. LINK;TRACK(LH)	. PIECE DE JONCTION	50					
1C	K1038429	. LINK;MASTER(RH)	. PIECE DE JONCTION	1					
1D	K1038430	. LINK;MASTER(LH)	. PIECE DE JONCTION	1					
1E	K1038369	. PIN	. BROCHE	50					
1F	K1038370	. PIN;MASTER	. BROCHE PRINCIPALE	1					
1G	K1038371	. BUSHING	. DOUILLE	50					
1H	K1038372	. BUSHING;MASTER	. DOUILLE	1					
1I	K1038373	. SEAL;DUST	. JOINT	100					
1J	K1038374	. SPACER	. ENTERTOISE	2					
1K	K1038376	. PIN;SMALL	. GOUJON	1					
2	K1038377	BOLT	BOULON A 6 PANS	204					
3	K1038378	NUT	ECROU	204					
4	K1038379	SHOE 600mm	SABOT	51					

DATE	AUG. 28, 2009
3rd EDITION	

Fig. 2180 TRAVEL PIPING
CONDUITES DE TRANSLATION

Serial No. ;

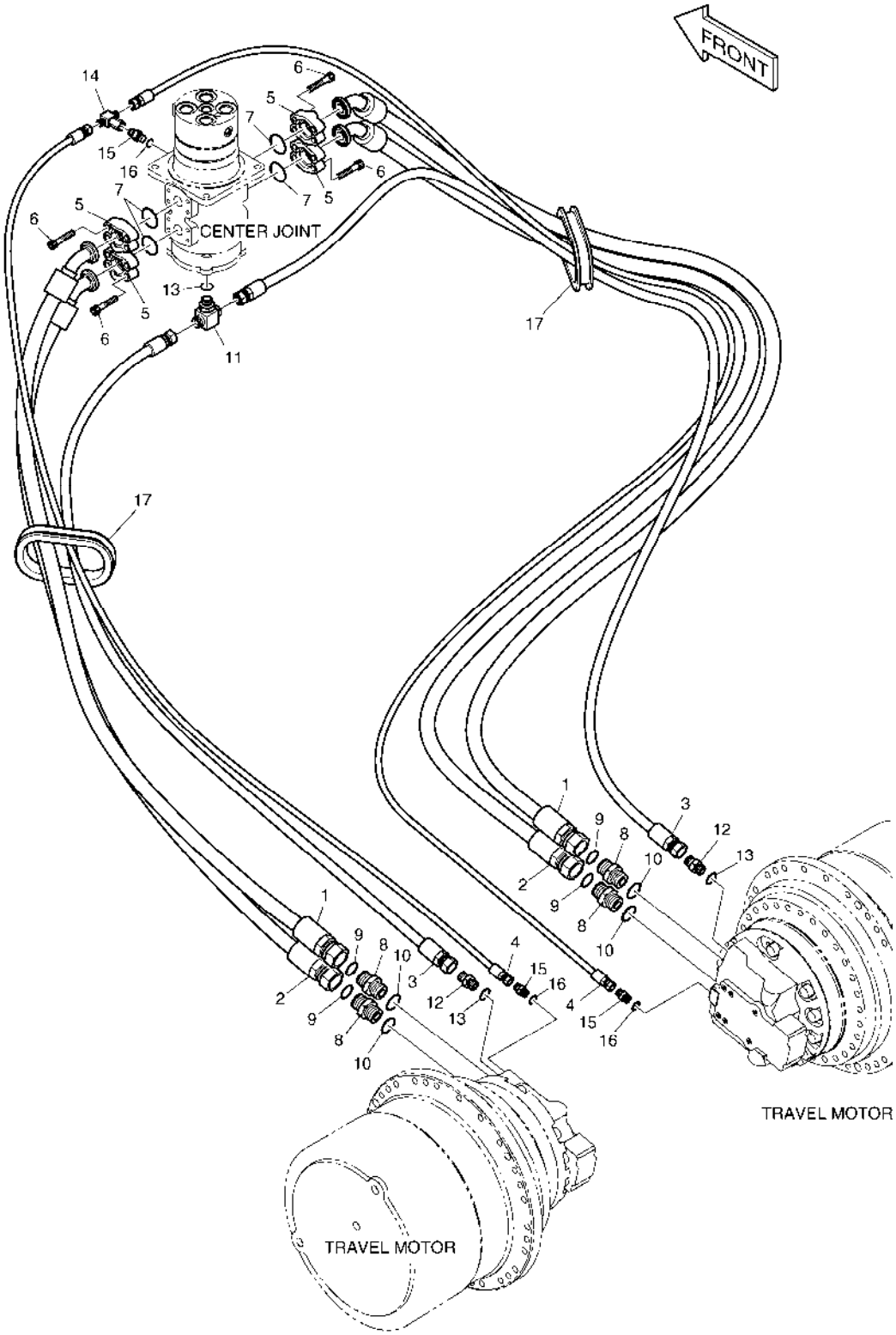

DATE	AUG. 28, 2009
3rd EDITION	

Fig. 2180 TRAVEL PIPING CONDUITES DE TRANSLATION

Serial No. ;

Key No.	Part No.	Description	Description	Q'ty	S.C	Serial No.	ICA	Replaceable part	
								Part No.	Q'ty
2180 --	K1010175	UNDER CARRIAGE PIPING	SOUS LA TUYAUTERIE DE	-	D				
1	DS2017045	HOSE	TUYAU FLEXIBLE	2					
2	DS2017046	HOSE	TUYAU FLEXIBLE	2					
3	DS2053389	HOSE	TUYAU FLEXIBLE	2					
4	DS2094064	HOSE	TUYAU FLEXIBLE	2					
5	2181-9081	FLANGE;SPLIT	BRIDE	8					
6	S2215466	BOLT;SOCKET	BOULON A 6 PANS CREUX	16					
7	2180-1026D19	O-RING	JOINT TORIQUE	4					
8	DS2232003	ADAPTER	ADAPTEUR	4					
9	S8030121	O-RING	JOINT TORIQUE	4					
10	S8000291	O-RING	JOINT TORIQUE	4					
11	2181-2281D10	TEE	TE	1					
12	2181-1126D6	ADAPTER	ADAPTEUR	2					
13	S8000181	O-RING	JOINT TORIQUE	3					
14	2181-4125	TEE	TE	1					
15	2181-1126D14	ADAPTER	ADAPTEUR	3					
16	S8000111	O-RING	JOINT TORIQUE	3					
17	2160-1172	BUSHING;RUBBER	MANCHON CAOUTCHOUC	2					

DATE	AUG. 28, 2009
3rd EDITION	

Fig. 3100 BOOM - 5.9m ENSEMBLE FLECHE

Serial No. ;

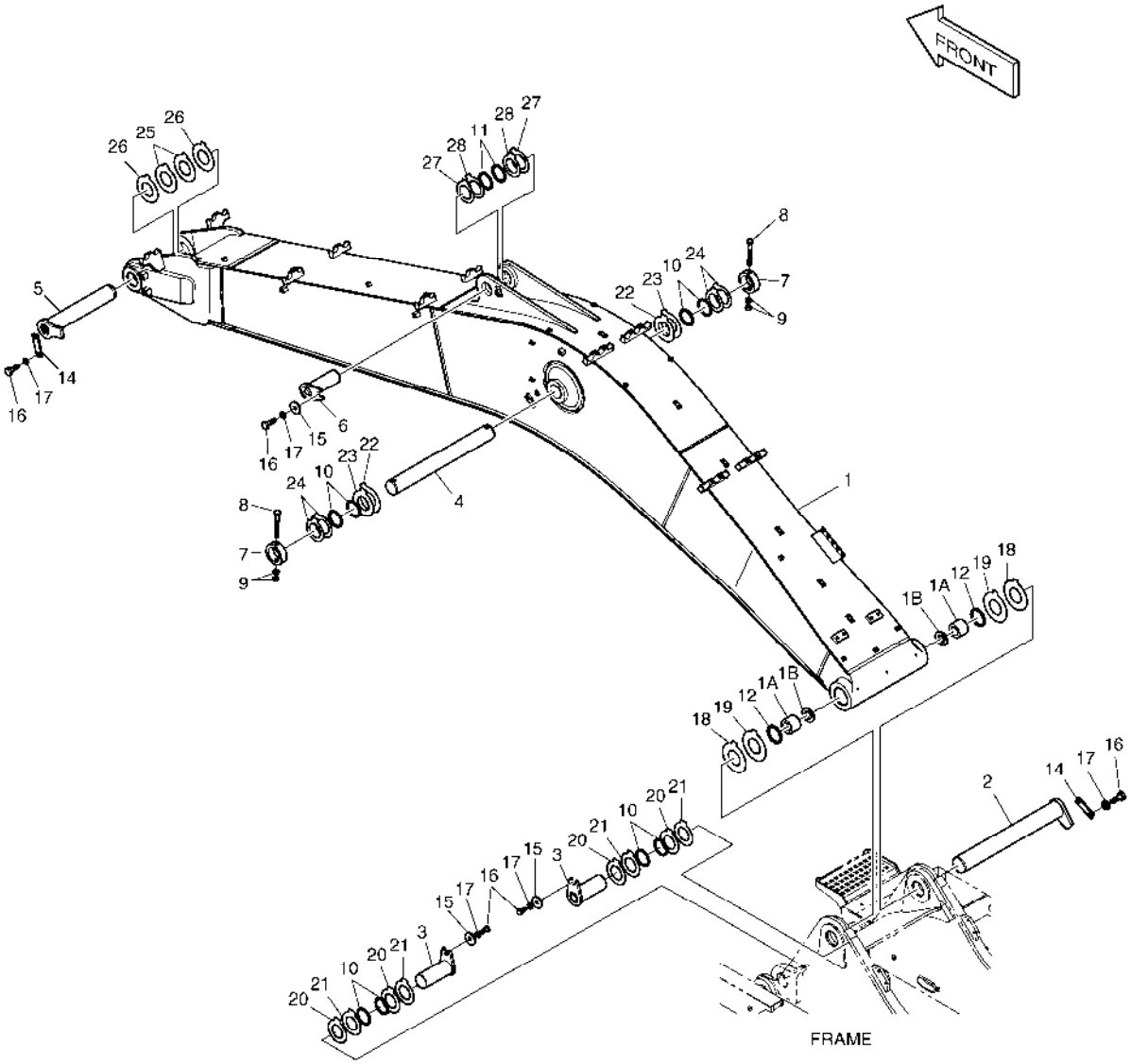

DATE	AUG. 28, 2009
3rd EDITION	

Fig. 3100 BOOM - 5.9m ENSEMBLE FLECHE

Serial No. ;

Key No.	Part No.	Description	Description	Q'ty	S.C	Serial No.	ICA	Replaceable part Part No.	Q'ty
3100 --	K1008550G	BOOM ASS'Y	ENSEMBLE FLECHE	-	D				
1	K1008551A	BOOM;MACH 5.9m	BOOM;MACH	1		5001-5033	I	K1008551B	1
	K1008551B	BOOM;MACH 5.9m	BOOM;MACH	1		5034-5109	I	K1008551C	1
	K1008551C	BOOM;MACH 5.9m	BOOM;MACH	1		5110-			
1A	K1010027	. BUSHING	. DOUILLE	2					
1B	2180-1106BD14	. SEAL;DUST	. PARE-POUSSIERES	2					
2	K1010021	PIN;BOOM FOOT	GOUPILLE	1		5001-5105	I	K1010021A	1
	K1010021A	PIN;BOOM FOOT	GOUPILLE	1		5106-			
3	K1011056	PIN;BOOM CYL HEAD	GOUPILLE	2		5001-5105	I	K1011056A	2
	K1011056A	PIN;BOOM CYL HEAD	GOUPILLE	2		5106-			
4	K1010023	PIN;BOOM CENTER	GOUPILLE	1		5001-5105	I	K1010023B	1
	K1010023B	PIN;BOOM CENTER	GOUPILLE	1		5106-			
5	2123-2185E	PIN	GOUJON	1		5001-5105	I	2123-2185G	1
	2123-2185G	PIN	GOUPILLE	1		5106-			
6	2123-2187C	PIN	GOUJON	1		5001-5105	I	2123-2187E	1
	2123-2187E	PIN	GOUPILLE	1		5106-			
7	2116-1527A	STOPPER	TAQUET D'ARRET	2					
8	S0571866	BOLT M20X2.5X170	BOULON A 6 PANS	2					
9	S4013133	NUT	ECROU	4					
10	2180-1106BD6	SEAL;DUST	PARE-POUSSIERES	8					
11	2180-1106BD24	SEAL;DUST	PARE-POUSSIERES	2					
12	2180-1106BD14	SEAL;DUST	PARE-POUSSIERES	2					
14	621-03710A	PLATE;STOPPER	PLAQUE	2					
15	2116-1060D6	STOPPER	TAQUET D'ARRET	3					
16	S0521366	BOLT	BOULON A 6 PANS	7					
17	S5102903	WASHER	RONDELLE	7					
18	DS7752046	SHIM	CALE	2					
19	DS7752066	SHIM 2.0t	CALE	2					
20	DS7752061	SHIM 1.0t	CALE	4					
21	DS7752062	SHIM 1.6t	CALE	4					
22	DS7752015	SHIM	CALE	2					
23	DS7752016	SHIM	CALE	2					
24	DS7752014	SHIM	CALE	4					
25	DS7752017	SHIM	CALE	2					
26	DS7752018	SHIM	CALE	2					
27	DS7752012	SHIM	CALE	2					
28	DS7752013	SHIM	CALE	2					

DATE	AUG. 28, 2009
3rd EDITION	

Fig. 3110 ARM - 3.0m BALANCIER

Serial No. ;

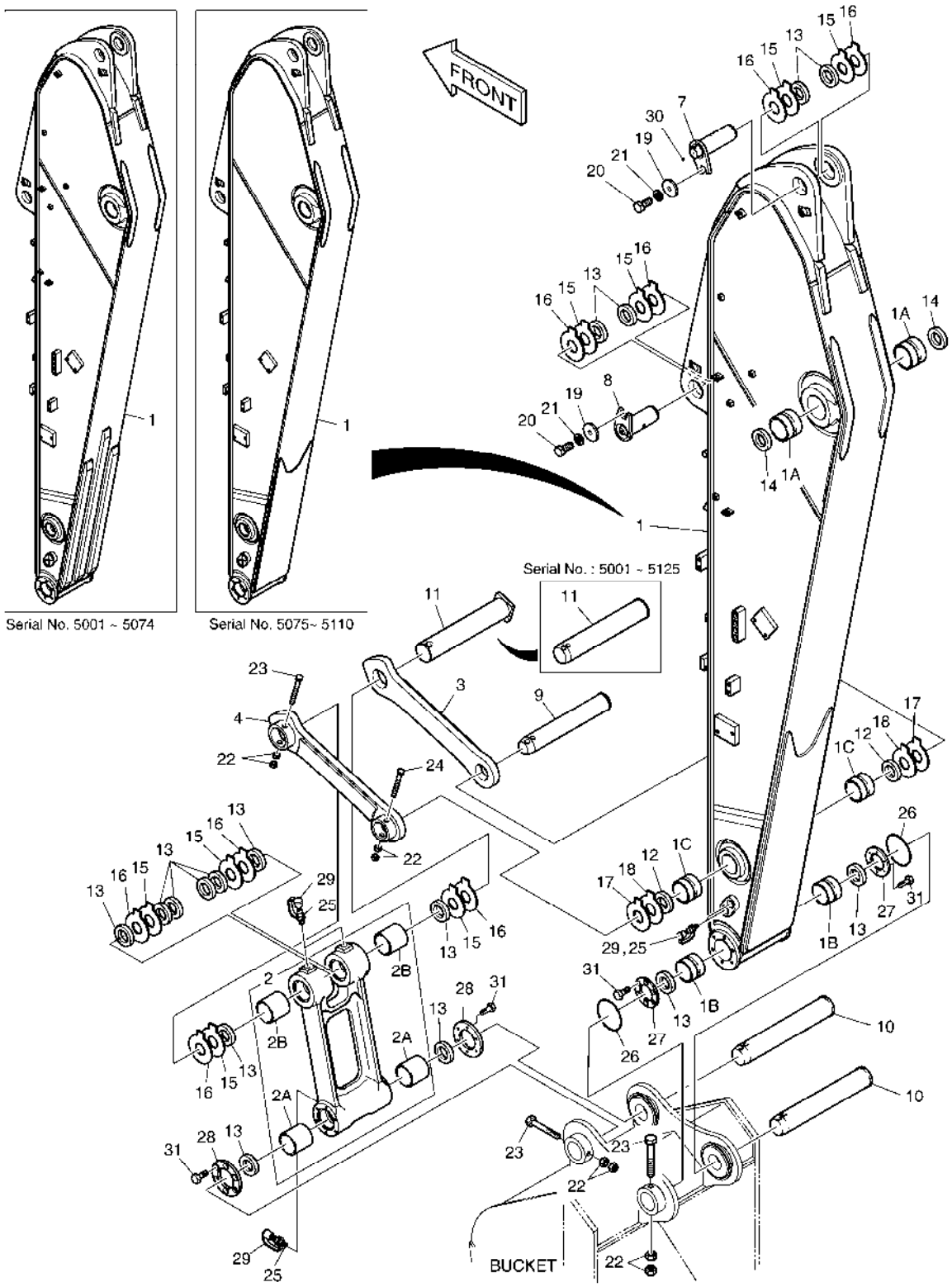

DATE	AUG. 28, 2009
3rd EDITION	

Fig. 3110 ARM - 3.0m BALANCIER

Serial No. ;

Key No.	Part No.	Description	Description	Q'ty	S.C	Serial No.	ICA	Replaceable part Part No.	Q'ty
3110 --	K1008558M	ARM ASS'Y	BALANCIER	-	D	5001-5125			
	230201-00100	ARM ASSY;3.0M_STD	BALANCIER	-	D	5126-			
1	K1008559A	ARM SUB ASS'Y-3.0m	ENSEMBLE BALANCIER	1		5001-5074			
	K1008559C	ARM SUB ASS'Y-3.0m	ENSEMBLE BALANCIER	1		5075-5105	I	K1008559G	1
	K1008559G	ARM SUB ASS'Y-3.0m	ENSEMBLE BALANCIER	1		5106-5110			
	K1008559H	ARM SUB ASS'Y-3.0m	ENSEMBLE BALANCIER	1		5111-			
1A	110-00252	. BUSHING	. DOUILLE	2					
1B	K1000733	. BUSHING	. DOUILLE	2					
1C	K1000734	. BUSHING	. DOUILLE	2					
2	K1002294	PUSH LINK ASS`Y	ENSEMBLE DE ARTICULAT	1					
2A	110-00249	. BUSHING	. DOUILLE	2					
2B	K1000735	. BUSHING	. DOUILLE	2					
3	K1010024	LINK;GUIDE(R.H)	ARTICULATION	1		5001-5108	I	K1010024A	1
	K1010024A	LINK;GUIDE(R.H)	ARTICULATION	1		5109-5125	Y	101540-00006	1
	101540-00006	LINK,GUIDE(R.H)	ARTICULATION	1		5126-			
4	K1010025	LINK;GUIDE(L.H)	ARTICULATION	1		5001-5108	I	K1010025A	1
	K1010025A	LINK;GUIDE(L.H)	ARTICULATION	1		5109-			
7	K1002128	PIN	GOUPILLE	1		5001-5105			
	2123-2187E	PIN	GOUPILLE	1		5106-5110	I	K1046927	1
	K1046927	PIN	GOUPILLE	1		5111-			
8	K1002130	PIN	GOUPILLE	1		5001-5105			
	2123-2182E	PIN	GOUPILLE	1		5106-5110	I	K1002130A	1
	K1002130A	PIN	GOUPILLE	1		5111-			
9	K1007255	PIN	GOUPILLE	1		5001-5105	I	K1007255A	1
	K1007255A	PIN	GOUPILLE	1		5106-			
10	2123-2192C	PIN	GOUJON	2		5001-5105	I	2123-2192E	2
	2123-2192E	PIN	GOUPILLE	2		5106-			
11	K1007256	PIN	GOUPILLE	1		5001-5105	I	K1007256A	1
	K1007256A	PIN	GOUPILLE	1		5106-5125	Y	120501-00130	1
	120501-00130	PIN;BUCKET CYL ROD	GOUPILLE	1		5126-			
12	2180-1106BD4	SEAL;DUST	PARE-POUSSIERES	2					
13	2180-1106BD24	SEAL;DUST	PARE-POUSSIERES	14					
14	2180-1106BD6	SEAL;DUST	PARE-POUSSIERES	2					
15	DS7752012	SHIM	CALE	8					
16	DS7752013	SHIM	CALE	8					
17	DS7752006	SHIM	CALE	2					
18	DS7752007	SHIM	CALE	2					
19	2116-1060D6	STOPPER	TAQUET D'ARRET	2					

Fig. 3110 ARM - 3.0m BALANCIER

Serial No. ;

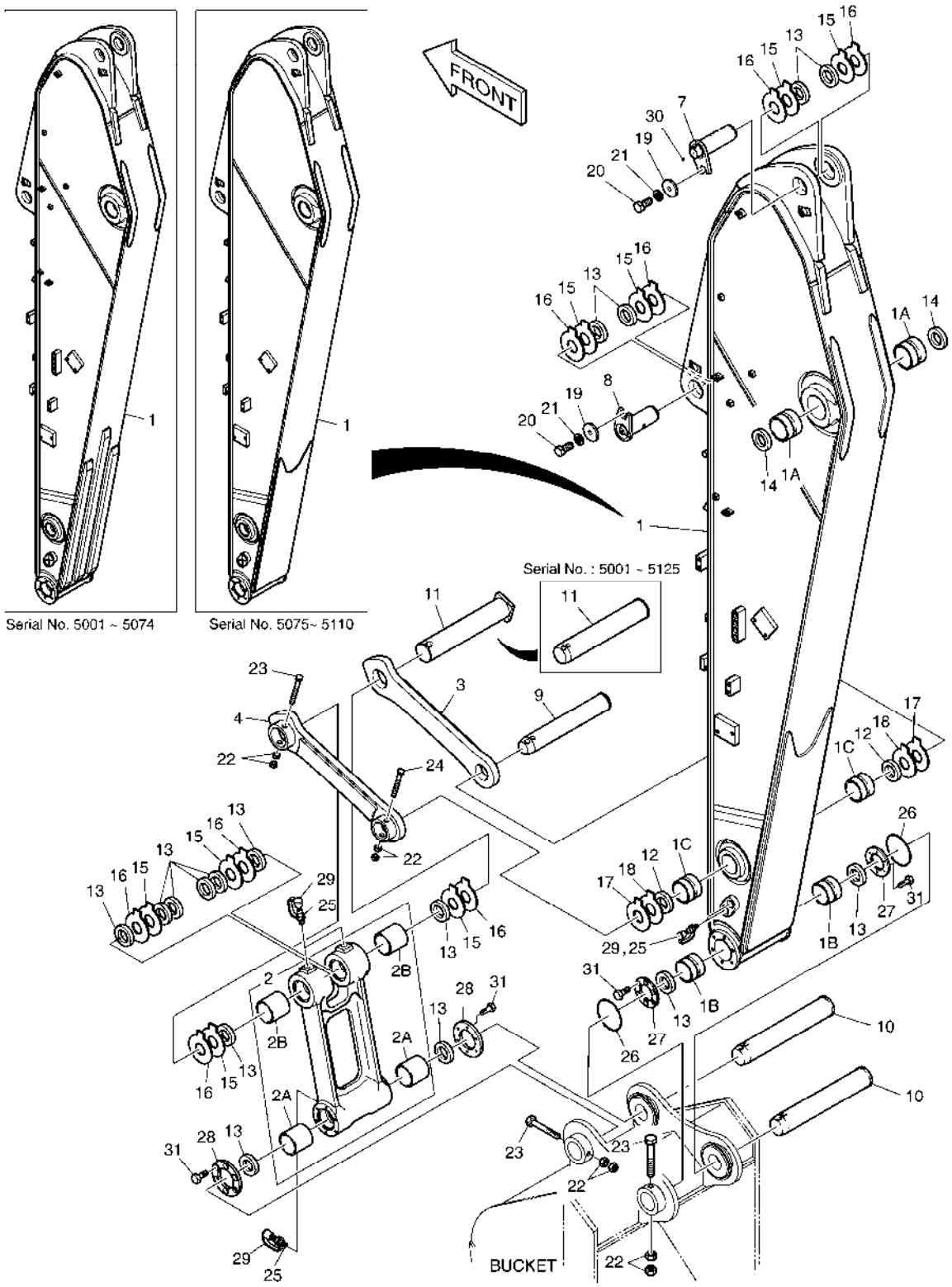

DATE	AUG. 28, 2009
3rd EDITION	

Fig. 3110 ARM - 3.0m BALANCIER

Serial No. ;

Key No.	Part No.	Description	Description	Q'ty	S.C	Serial No.	ICA	Replaceable part	
								Part No.	Q'ty
3110 -20	S0521366	BOLT	BOULON A 6 PANS	2					
21	S5102903	WASHER	RONDELLE	2					
22	S4012933	NUT	ECROU	8					
23	DS0001084	BOLT	BOULON A 6 PANS	3					
24	DS0001083	BOLT	BOULON A 6 PANS	1					
25	S6710041	NIPPLE;GREASE	GRAISSEUR	5					
26	180-00077D5	O-RING	JOINT TORIQUE	2					
27	K1000911	SPACER	BAGUE D'ECARTEMENT	2					
28	K1000912A	SPACER	BAGUE D'ECARTEMENT	2		5001-5108	I	K1000912B	2
	K1000912B	SPACER	BAGUE D'ECARTEMENT	2		5109-			
29	160-00020	CAP;GREASE NIPPLE	CHAPEAU	5					
30	2181-1116D1	PLUG	BOUCHON	1		5001-5074			
31	S0712066	BOLT	BOULON A 6 PANS	24					

DATE	AUG. 28, 2009
3rd EDITION	

Fig. 3120 BUCKET ASS'Y - 0.95m³ ENSEMBLE DE GODET

Serial No. ;

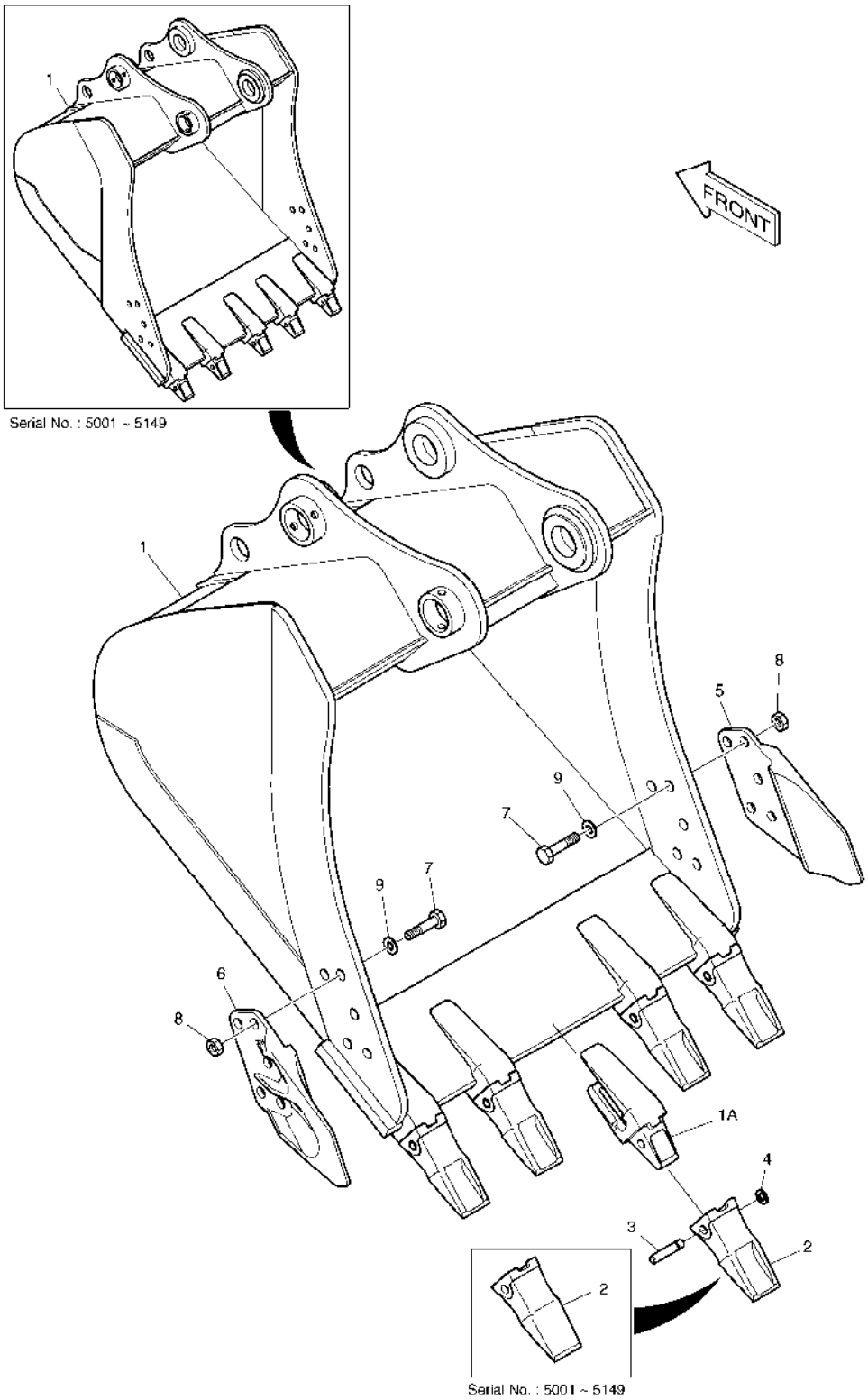

DATE	AUG. 28, 2009
3rd EDITION	

Fig. 3120 BUCKET ASS'Y - 0.95m³ ENSEMBLE DE GODET

Serial No. ;

Key No.	Part No.	Description	Description	Q'ty	S.C	Serial No.	ICA	Replaceable part	
								Part No.	Q'ty
3120 --	K1008566	BUCKET ASS'Y-0.95㎥	ENSEMBLE GODET	1		5001-5041	I	K1008566A	1
	K1008566A	BUCKET ASS'Y-0.95㎥	ENSEMBLE GODET	1		5042-5109	I	K1008566E	1
	K1008566E	BUCKET ASS'Y-0.95㎥	ENSEMBLE GODET	1		5110-			
1	K1008567	BUCKET-0.95㎥	GODET	1		5001-5041	I	K1008567A	1
	K1008567A	BUCKET-0.95㎥	GODET	1		5042-5109	I	K1008567E	1
	K1008567E	BUCKET-0.95㎥	GODET	1		5110-			
1A	2713-1218	. ADAPTER;TOOTH	. DENT DE ADAPTEUR	5		5001-5109	I	2713-1218A	5
	2713-1218A	. ADAPTER;TOOTH	. DENT DE ADAPTEUR	5		5110-			
2	K1000344	POINT;TOOTH	DENT	5		5001-5109	I	K1038006A	5
	K1038006A	TOOTH	DENT	5		5110-			
3	2705-1020	PIN;LOCKING	GOUPILLE DE BLOCAGE	5					
4	2114-1848A	WASHER;LOCKING	RONDELLE	5					
5	2713-1059A	CUTTER;SIDE(R.H)	COIN DE GODET DROIT	1					
6	2713-1060A	CUTTER;SIDE(L.H)	COIN DE GODET GAUCHE	1					
7	S0574761	BOLT	BOULON A 6 PANS	10					
8	S4013333	NUT	ECROU	10					
9	2114-1831A	WASHER;HARDEN	RONDELLE	10					

DATE	AUG. 28, 2009
3rd EDITION	

Fig. 3130 BOOM PIPING CONDUITES DE FLECHE

Serial No. ;

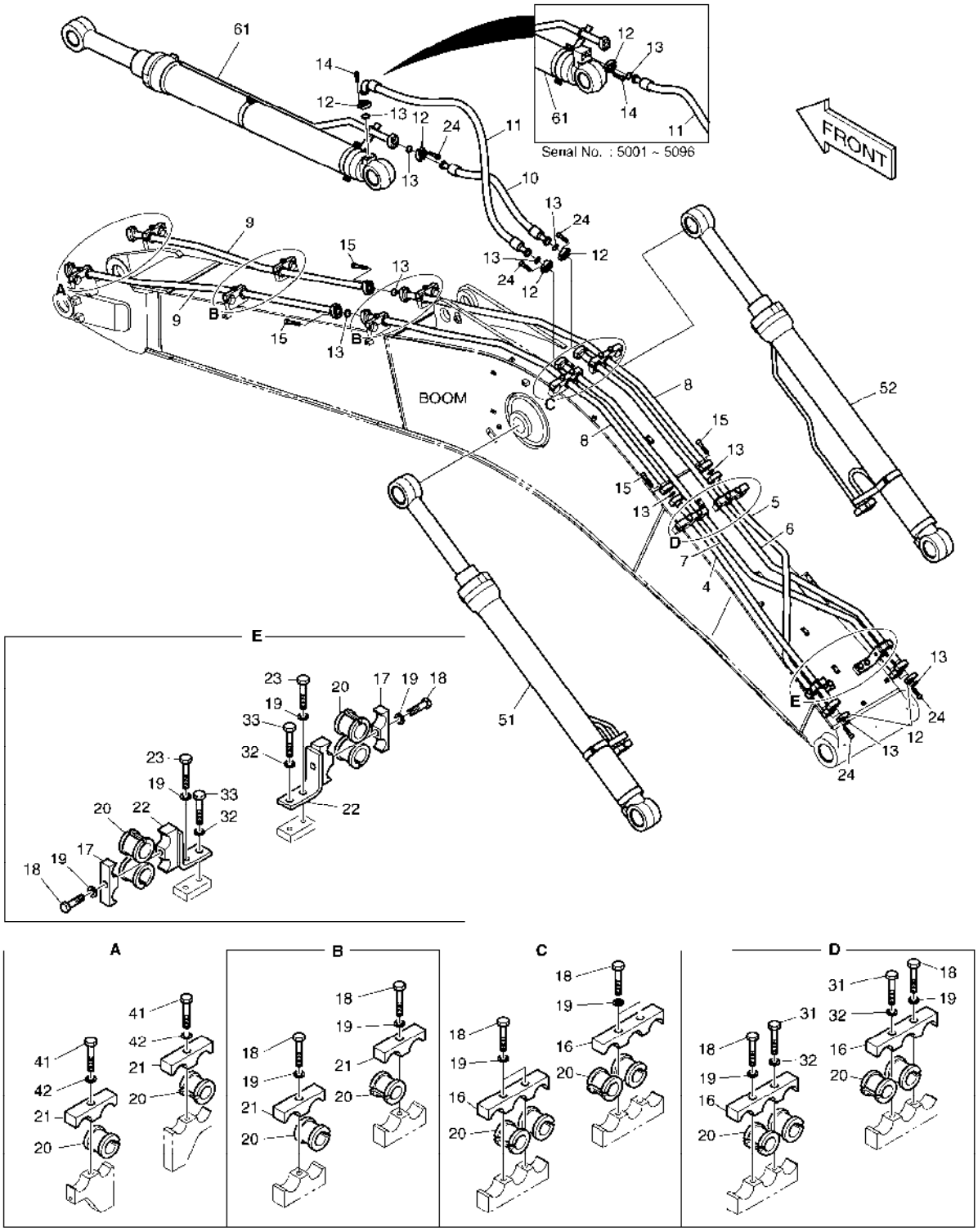

DATE	AUG. 28, 2009
3rd EDITION	

Fig. 3130 BOOM PIPING CONDUITES DE FLECHE

Serial No. ;

Key No.	Part No.	Description	Description	Q'ty	S.C	Serial No.	ICA	Replaceable part	
								Part No.	Q'ty
3130 --	K1011025B	BOOM PIPING	CONDUITES DE FLECHE	-	D				
4	K1011029A	PIPE	TUYAU	1					
5	K1011030A	PIPE	TUYAU	1					
6	K1011031A	PIPE	TUYAU	1					
7	K1011032A	PIPE	TUYAU	1					
8	K1011033A	PIPE	TUYAU	2					
9	K1011034A	PIPE	TUYAU	2					
10	DS2038210	HOSE	TUYAU FLEXIBLE	1					
11	DS2038210	HOSE	TUYAU FLEXIBLE	1		5001-5096			
	DS2040650	HOSE	TUYAU FLEXIBLE	1		5097-			
12	2181-9078	FLANGE	BRIDE	16					
13	2180-1026D19	O-RING	JOINT TORIQUE	12					
14	S2212266	BOLT;SOCKET	BOULON A 6 PANS CREUX	4					
15	S2212666	BOLT	BOULON A 6 PANS CREUX	16					
16	K1010537	CLAMP;PIPE	COLLIER	4					
17	K1010535	CLAMP;PIPE	COLLIER	2					
18	S0565466	BOLT	BOULON A 6 PANS	12					
19	S5102903	WASHER	RONDELLE	14					
20	K1010532	RUBBER;PIPE	CAOUTCHOUC	18					
21	K1010538	CLAMP;PIPE	COLLIER	6					
22	K1010541	BRACKET	SUPPORT	2					
23	S0521366	BOLT	BOULON A 6 PANS	2					
24	S2212466	BOLT;SOCKET M10X1.5X40	BOULON A 6 PANS CREUX	28					
31	S0565466	BOLT	BOULON A 6 PANS	2					
32	S5102903	WASHER	RONDELLE	4					
33	S0521366	BOLT	BOULON A 6 PANS	2					
41	S0565466	BOLT	BOULON A 6 PANS	2					
42	S5102903	WASHER	RONDELLE	2					
51	K1011026	CYLINDER;BOOM(L.H)	VERIN DE FLECHE	1					
52	K1011027	CYLINDER;BOOM(R.H)	VERIN DE FLECHE	1					
61	K1011028	CYLINDER;ARM	VERIN DE BALANCIER	1		5001-5096			
	K1011028A	CYLINDER;ARM	VERIN DE BALANCIER	1		5097-			

DATE	AUG. 28, 2009
3rd EDITION	

Fig. 3140 LUBRICATION PIPING - BOOM LUBRIFICATION

Serial No. ;

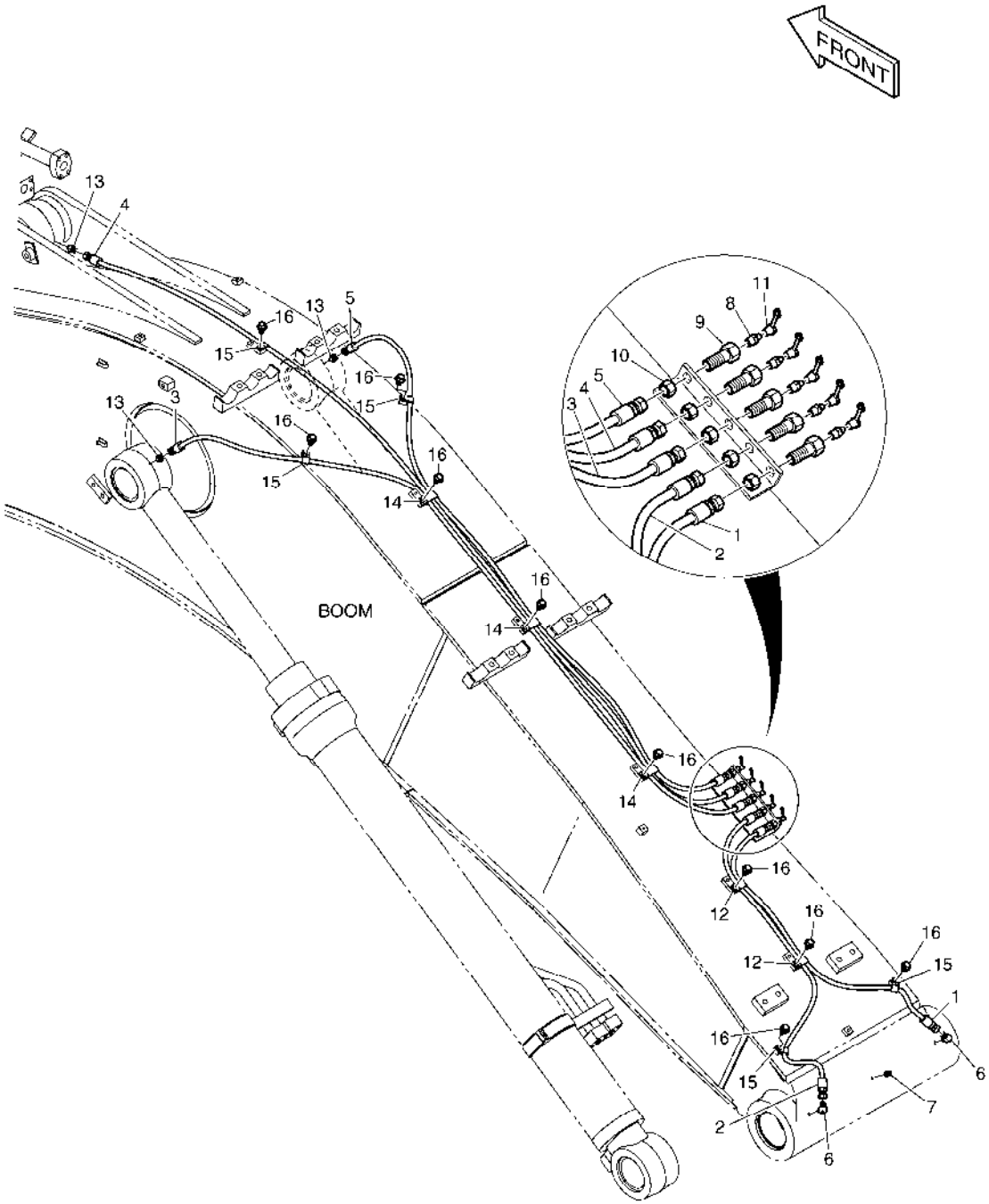

DATE	AUG. 28, 2009
3rd EDITION	

Fig. 3140 LUBRICATION PIPING - BOOM LUBRIFICATION

Serial No. ;

Key No.	Part No.	Description	Description	Q'ty	S.C	Serial No.	ICA	Replaceable part	
								Part No.	Q'ty
3140 --	K1011045A	LUBRICATION PIPING-BOOM	LUBRIFICATION	-	D				
1	DS2053886	HOSE	TUYAU FLEXIBLE	1					
2	2184-1045D128	HOSE PF1/4-1080L	TUYAU FLEXIBLE	1					
3	DS2053864	HOSE	TUYAU FLEXIBLE	1					
4	2184-1045D135	HOSE	TUYAU FLEXIBLE	1					
5	DS2053867	HOSE	TUYAU FLEXIBLE	1					
6	2181-1186D12	ELBOW	COUDE	2					
7	S3524403	PLUG	BOUCHON	1					
8	S6710041	NIPPLE;GREASE	GRAISSEUR	5					
9	181-00103	REDUCER	REDUCTEUR	5					
10	121-00006	NUT	ECROU	5					
11	160-00020	CAP;GREASE NIPPLE	CHAPEAU	5					
12	124-00199D5	CLIP	AGRAFE	2					
13	2181-4112	ADAPTER	ADAPTEUR	3					
14	124-00199D4	CLIP	CLIP	3					
15	2124-1353D2	CLIP	CLIP	5					
16	K1001029	BOLT	BOULON A 6 PANS	10					

DATE	AUG. 28, 2009
3rd EDITION	

Fig. 3150 ARM PIPING
CONDUITES DE BALANCIER

Serial No. ;

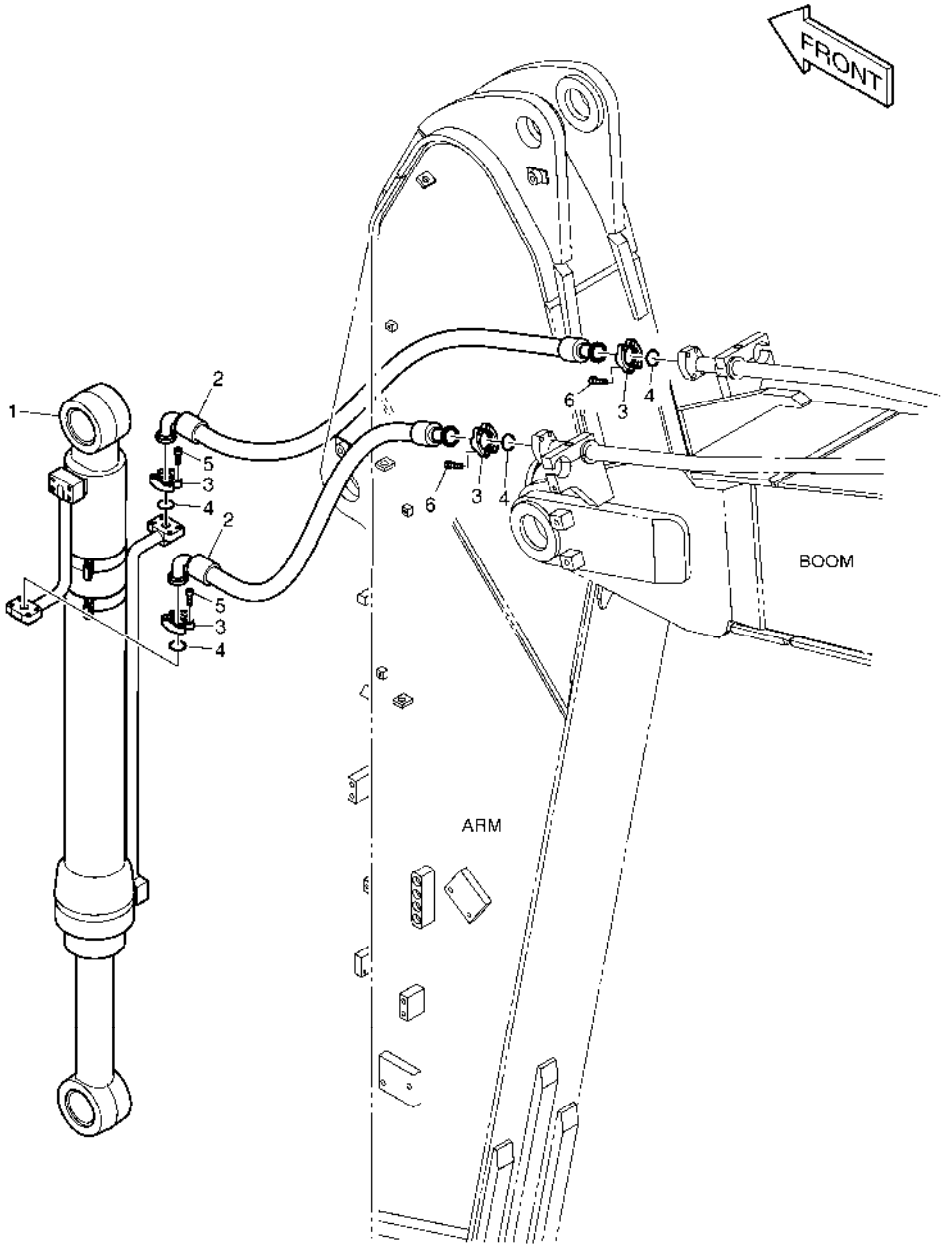

DATE	AUG. 28, 2009
3rd EDITION	

Fig. 3150 ARM PIPING CONDUITES DE BALANCIER

Serial No. ;

Key No.	Part No.	Description	Description	Q'ty	S.C	Serial No.	ICA	Replaceable part	
								Part No.	Q'ty
3150 --	K1011043A	ARM PIPING	CONDUITES DE BALANCIE	-	D				
1	K1011044	CYLINDER;BUCKET	VERIN DE GODET	1		5001-5093	I	K1011044A	1
	K1011044A	CYLINDER;BUCKET	VERIN DE GODET	1		5094-			
2	2184-1100D78	HOSE	TUYAU FLEXIBLE	2					
3	2181-9078	FLANGE	BRIDE	8					
4	2180-1026D19	O-RING	JOINT TORIQUE	4					
5	S2212266	BOLT;SOCKET	BOULON A 6 PANS CREUX	8					
6	S2212466	BOLT;SOCKET M10X1.5X40	BOULON A 6 PANS CREUX	8					

DATE	AUG. 28, 2009
3rd EDITION	

Fig. 3160 LUBRICATION PIPING - ARM 3.0m LUBRIFICATION

Serial No. ; 5001 ~ 5074

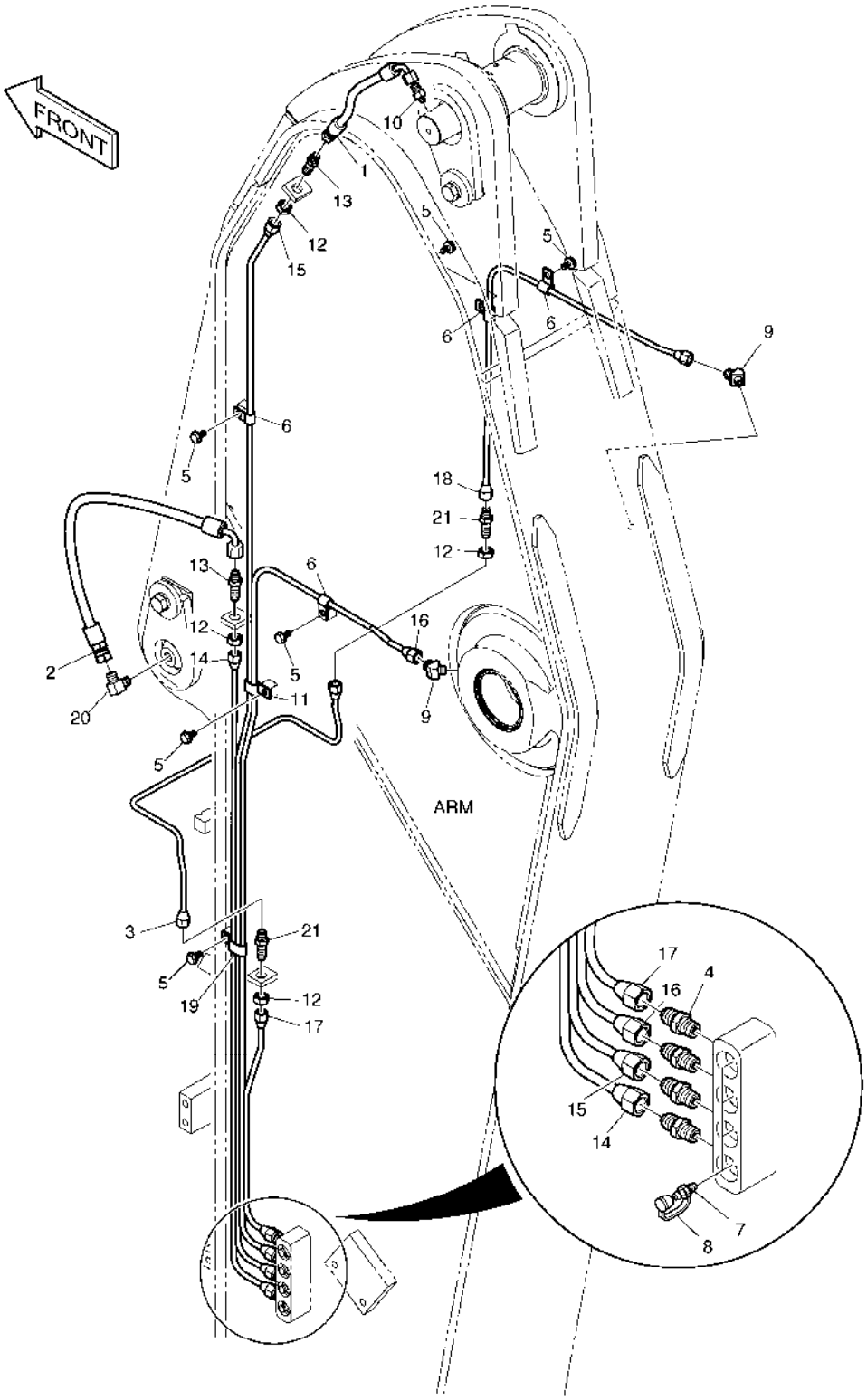

DATE	AUG. 28, 2009
3rd EDITION	

Fig. 3160 LUBRICATION PIPING - ARM 3.0m LUBRIFICATION

Serial No. ; 5001 ~ 5074

Key No.	Part No.	Description	Description	Q'ty	S.C	Serial No.	ICA	Replaceable part	
								Part No.	Q'ty
3160 --	K1011046	LUBRICATION PIPING-ARM	LUBRIFICATION	-	D	5001-5074			
1	DS2055699	HOSE	TUYAU FLEXIBLE	1					
2	DS2055699	HOSE	TUYAU FLEXIBLE	1					
3	K1011047	ADAPTER	ADAPTEUR	1					
4	2181-1184	ADAPTER	ADAPTEUR	4					
5	K1001029	BOLT	BOULON A 6 PANS	6					
6	DS2802023	CLIP	CLIP	4					
7	S6710041	NIPPLE;GREASE	GRAISSEUR	4					
8	160-00020	CAP;GREASE NIPPLE	CHAPEAU	4					
9	K1010730	ELBOW	COUDE	2					
10	2181-4112	ADAPTER	ADAPTEUR	1					
11	DS2805007	CLIP	CLIP	1					
12	S4032833	NUT	ECROU	3					
13	2181-1923D12	ADAPTER	ADAPTEUR	2					
14	K1011048	PIPE	TUYAU	1					
15	K1011049	PIPE	TUYAU	1					
16	K1011050	PIPE	TUYAU	1					
17	K1006209	PIPE	CONDUITE	1					
18	K1011058	PIPE	TUYAU	1					
19	DS2805008	CLIP	CLIP	1					
20	2181-1111D11	ELBOW	COUDE	1					
21	DS2225009	ADAPTER	ADAPTEUR	2					

DATE	AUG. 28, 2009
3rd EDITION	

Fig. 3161 LUBRICATION PIPING - ARM 3.0m LUBRIFICATION

Serial No. ; 5111 ~

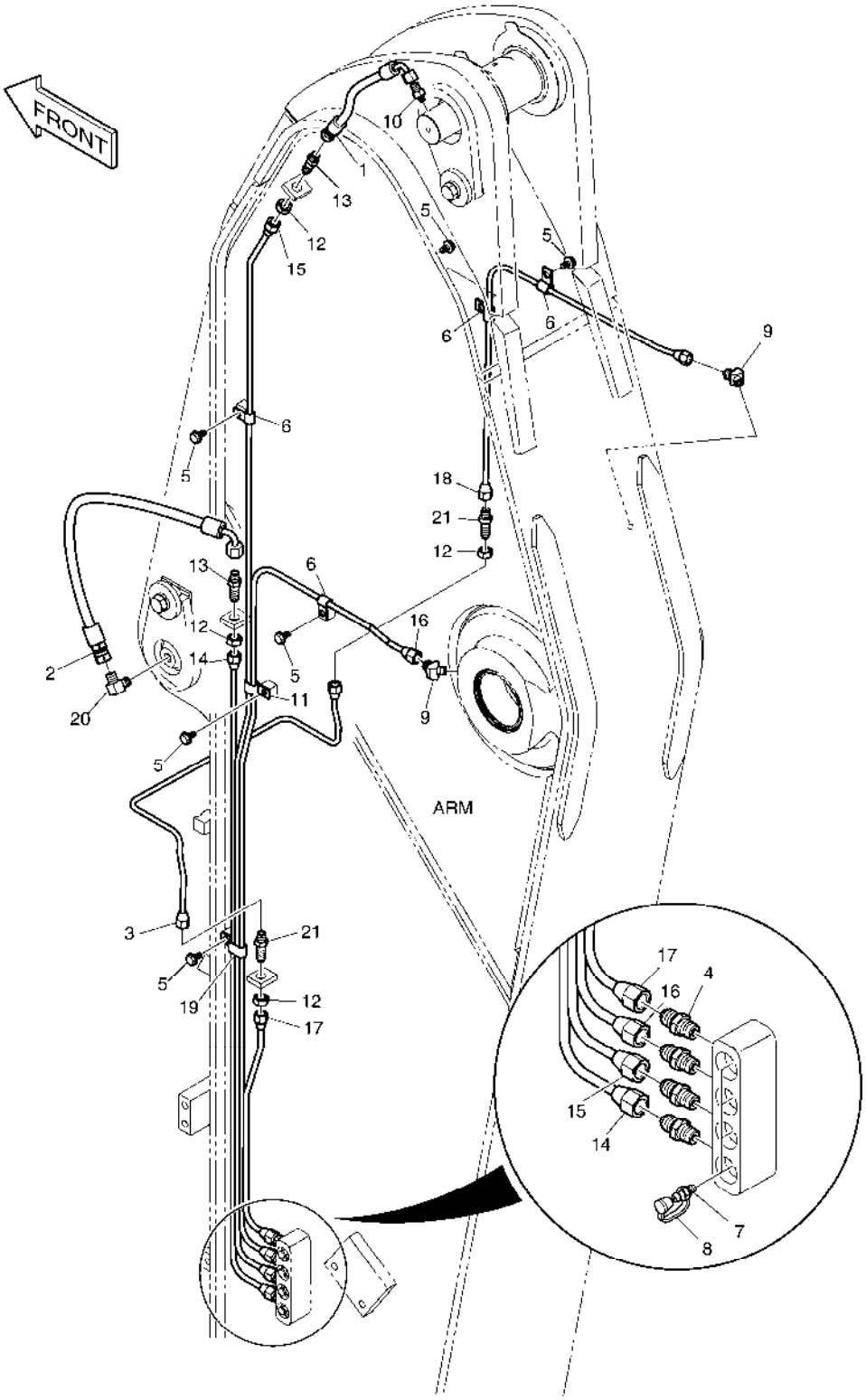

DATE	AUG. 28, 2009
3rd EDITION	

Fig. 3161 LUBRICATION PIPING - ARM 3.0m LUBRIFICATION

Serial No. ; 5111 ~

Key No.	Part No.	Description	Description	Q'ty	S.C	Serial No.	ICA	Replaceable part	
								Part No.	Q'ty
3161 --	K1011046A	LUBRICATION PIPING-ARM	LUBRIFICATION	-	D	5111-			
1	DS2055699	HOSE	TUYAU FLEXIBLE	1					
2	DS2055699	HOSE	TUYAU FLEXIBLE	1					
3	K1011047A	PIPE	TUYAU	1					
4	2181-1184	ADAPTER	ADAPTEUR	4					
5	K1001029	BOLT	BOULON A 6 PANS	6					
6	DS2802023	CLIP	CLIP	4					
7	S6710041	NIPPLE;GREASE	GRAISSEUR	4					
8	160-00020	CAP;GREASE NIPPLE	CHAPEAU	4					
9	K1010730	ELBOW	COUDE	2					
10	2181-4112	ADAPTER	ADAPTEUR	1					
11	DS2805007	CLIP	CLIP	1					
12	S4032833	NUT	ECROU	3					
13	2181-1923D12	ADAPTER	ADAPTEUR	2					
14	K1011048	PIPE	TUYAU	1					
15	K1011049	PIPE	TUYAU	1					
16	K1011050	PIPE	TUYAU	1					
17	K1006209	PIPE	CONDUITE	1					
18	K1011058	PIPE	TUYAU	1					
19	DS2805008	CLIP	CLIP	1					
20	2181-1111D11	ELBOW	COUDE	1					
21	DS2225009	ADAPTER	ADAPTEUR	2					

DATE	AUG. 28, 2009
3rd EDITION	

Fig. 4100 MAIN PUMP POMPE

Serial No. ;

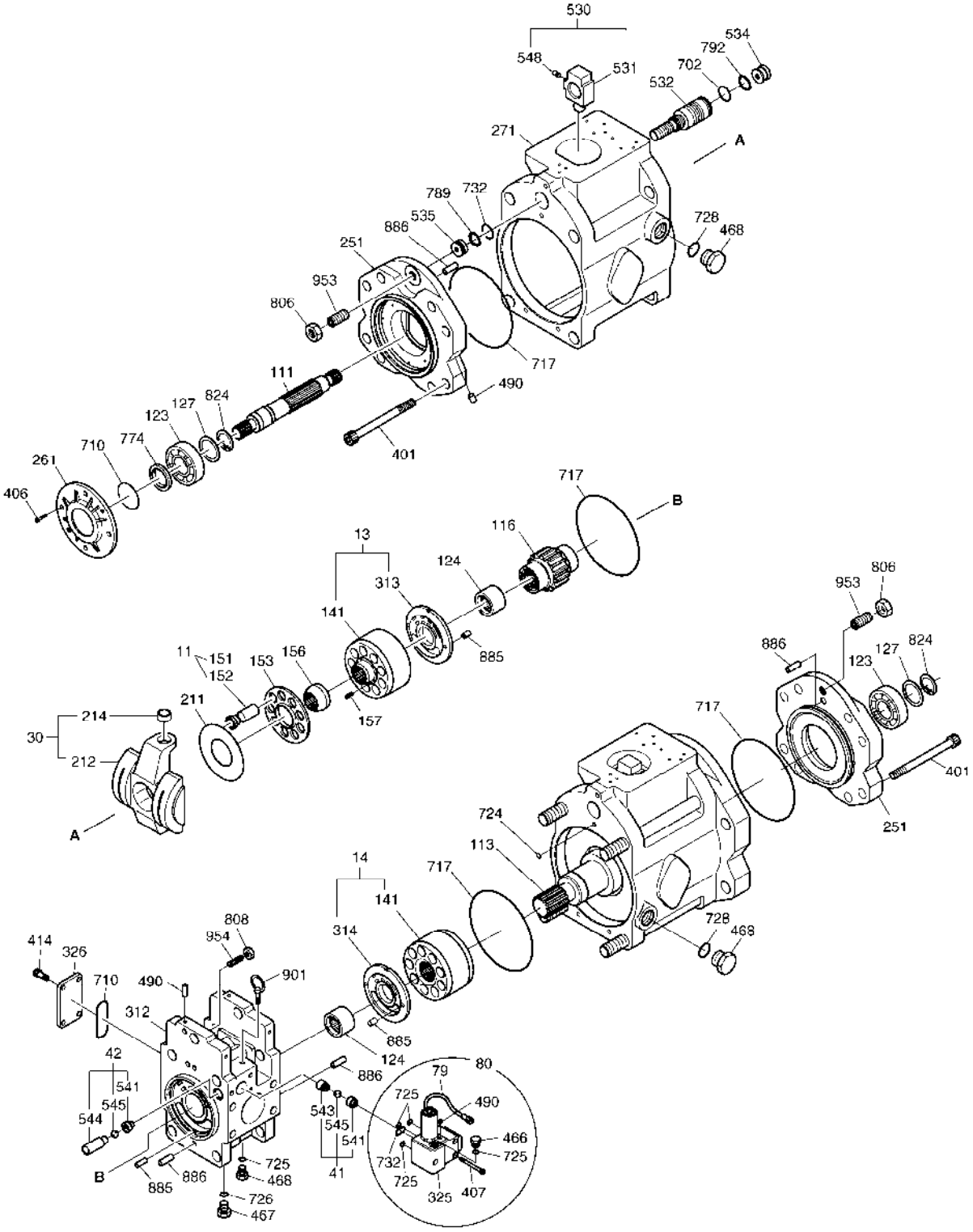

DATE	AUG. 28, 2009
3rd EDITION	

Fig. 4100 MAIN PUMP POMPE

Serial No. ;

Key No.	Part No.	Description	Description	Q'ty	S.C	Serial No.	ICA	Replaceable part	
								Part No.	Q'ty
4100 --	K1025496	MAIN PUMP	CONDUITES DE BATI PRIN	1					
111	2.405-00121	SHAFT;DRIVE(F)	ARBRE	1					
113	1.405-00064	SHAFT;DRIVE(R)	ARBRE	1					
116	2.403-00020	GEAR;1st	PIGNON	1					
123	1.109-00111	BEARING;ROLLER	PALIER	2					
124	K9004880	BEARING;NEEDLE	PALIER	2					
127	2.109-00228	SPACER;BEARING	BAGUE D'ECARTEMENT	4					
13	K9004839	CYLINDER ASS'Y(R)	CYLINDRE	1					
141	1.451-00045	BLOCK;CYLINDER	BLOC	1	D				
313	K9004385	PLATE;VALVE(R)	PLAQUE	1	D				
14	K9004867	CYLINDER ASS'Y(L)	CYLINDRE	1					
141	1.451-00045	BLOCK;CYLINDER	BLOC	1	D				
314	K9004872	PLATE;VALVE(L)	PLAQUE	1	D				
11	K9004869	PISTON ASS'Y	PISTON	2					
151	-	PISTON	PISTON	9	D				
152	-	SHOE	SABOT	9	D				
153	1.412-00098	PLATE;SET	PLAQUE	2					
156	1.110-00101	BUSH	BAGUE	2					
157	1.131-00127	SPRING;CYLINDER	RESSORT	18					
211	1.412-00110	PLATE;SHOE	PLAQUE	2					
30	2.412-00276	SWASH PLATE ASS'Y	CLAPOTIS	2					
212	1.412-00139	PLATE;SWASH	PLAQUE	1	D				
214	2.408-00088	BUSH;TILTING	DOUILLE	1	D				
80	K9001178	PROPORTIONAL REDUCING VAL	VALVE REDUCTRICE PROP	1					
79	K9001179	E.P.P.R VALVE	VANNE	1					
79-1	2180-1217D13	. O-RING	. JOINT TORIQUE	1					
79-2	2180-1217D14	. O-RING	. JOINT TORIQUE	1					
79-3	2180-1217D15	. O-RING	. JOINT TORIQUE	1					
325	1.402-00097	CASING;VALVE	CARTER	1					
407	S2205861	SCREW	VIS	3					
466	2181-1950D1	PLUG	BOUCHON	1					
490	2.181-00214	PLUG	BOUCHON	3					
725	S8000115	O-RING	JOINT TORIQUE	4					
732	S8000165	O-RING	JOINT TORIQUE	1					
251	2.197-00012	SUPPORT	SUPPORT	2					
261	2.430-00365	COVER;SEAL(F)	COUVERCLE	1					
271	K9005964	CASING;PUMP	CARTER	2					
312	K9001181	BLOCK;VALVE	BLOC	1					

DATE	AUG. 28, 2009
3rd EDITION	

Fig. 4100 MAIN PUMP POMPE

Serial No. ;

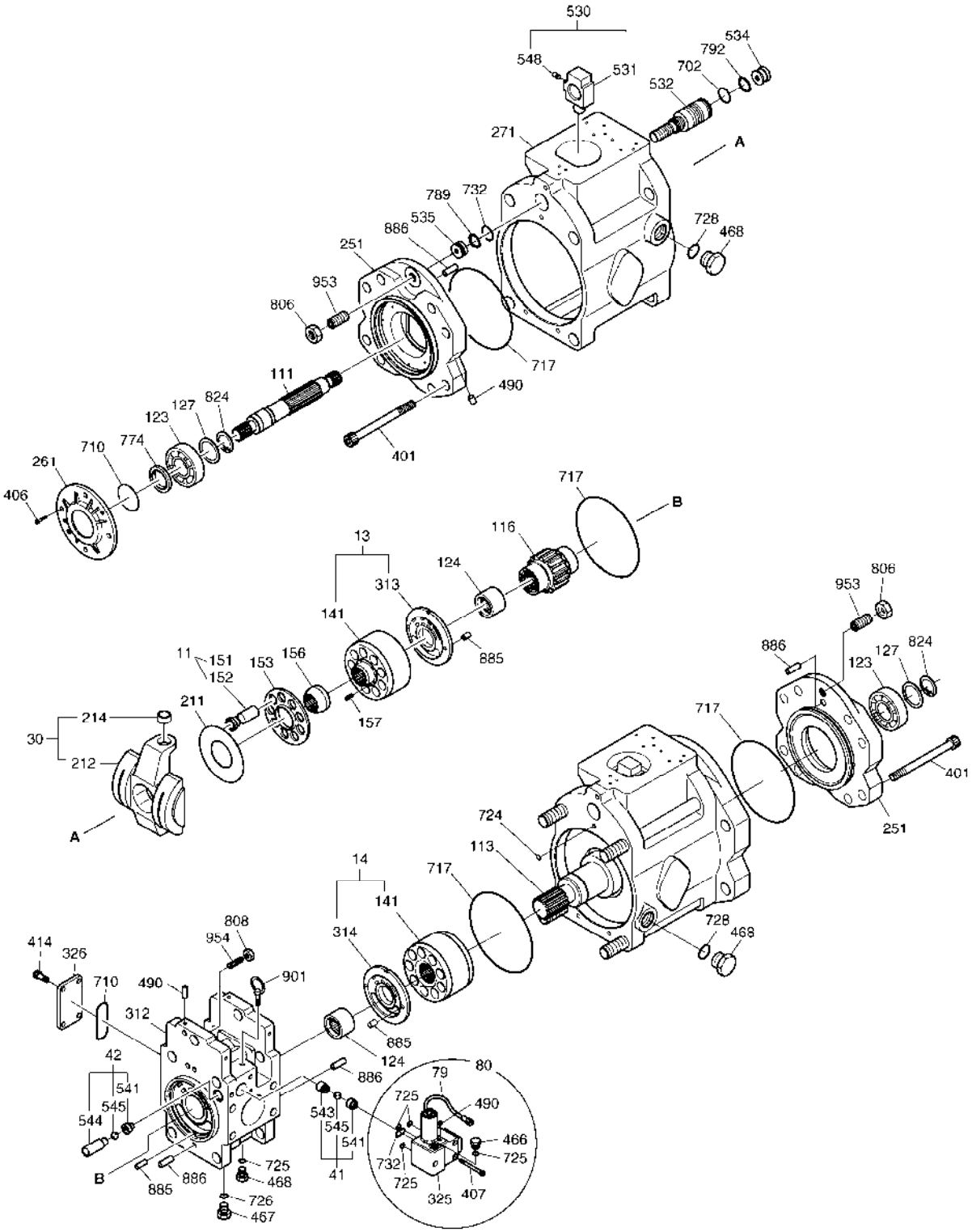

DATE	AUG. 28, 2009
3rd EDITION	

Fig. 4100 MAIN PUMP POMPE

Serial No. ;

Key No.	Part No.	Description	Description	Q'ty	S.C	Serial No.	ICA	Replaceable part	
								Part No.	Q'ty
4100 -326	K9001182	COVER;SEAL(F)	COUVERCLE	1					
401	S2229071	BOLT;SOCKET	BOULON A 6 PANS CREUX	8					
406	S2208871	BOLT;SOCKET	BOULON A 6 PANS CREUX	4					
414	S2211861	BOLT;SOCKET M10X1.5X20	BOULON A 6 PANS CREUX	4					
466	2181-1950D1	PLUG	BOUCHON	2					
467	2181-1950D2	PLUG	BOUCHON	2					
468	2181-1950D5	PLUG PF3/4	BOUCHON	4					
490	2.181-00214	PLUG	BOUCHON	27					
530	2.123-00095	TILTING PIN ASS'Y	GOUPILLE	2					
531	2.123-00254	PIN;TILTING	GOUPILLE	1	D				
548	2.123-00154	PIN;FEED BACK	GOUPILLE	1	D				
532	1.409-00209	PISTON	PISTON	2					
534	K9004873	STOPPER(L)	TAQUET D'ARRET	2					
535	1.416-00021	STOPPER(S)	TAQUET D'ARRET	2					
41	K9001183	CHECK VALVE ASS`Y(1)	VANNE	2					
541	K9001184	SEAT	SIEGE	2	D				
543	K9001185	STOPPER;1	ARRET	2	D				
545	S6250131	BALL;STEEL	BILLE	2	D				
42	K9001186	CHECK VALVE ASS`Y(2)	VANNE	2					
541	K9001184	SEAT	SIEGE	2	D				
544	K9001187	STOPPER;1	ARRET	2	D				
545	S6250131	BALL;STEEL	BILLE	2	D				
702	S8010355	O-RING	JOINT TORIQUE	2	K				
710	S8010955	O-RING	JOINT TORIQUE	2	K				
717	S8011455	O-RING	JOINT TORIQUE	4	K				
724	S8000085	O-RING	JOINT TORIQUE	16	K				
725	S8000115	O-RING	JOINT TORIQUE	6	K				
726	S8000145	O-RING	JOINT TORIQUE	2	K				
728	S8000245	O-RING	JOINT TORIQUE	4	K				
732	S8000185	O-RING	JOINT TORIQUE	2	K				
774	K9004879	SEAL;OIL	JOINT	1	K				
789	S8060181	RING;BACKUP	BAGUE D'ETANCHEITE	2	K				
792	S8090350	RING;BACK-UP	BAGUE D'ETANCHEITE	2	K				
806	S4012931	NUT	ECROU	2					
808	S4015130	NUT	ECROU	2					
824	S6500400	RING;RETAINING	BAGUE	2					
885	2.123-00067	PIN;VALVE PLATE	GOUJON	2					
886	S5740870	PIN;SPRING	GOUJON	4					

DATE	AUG. 28, 2009
3rd EDITION	

Fig. 4100 MAIN PUMP POMPE

Serial No. ;

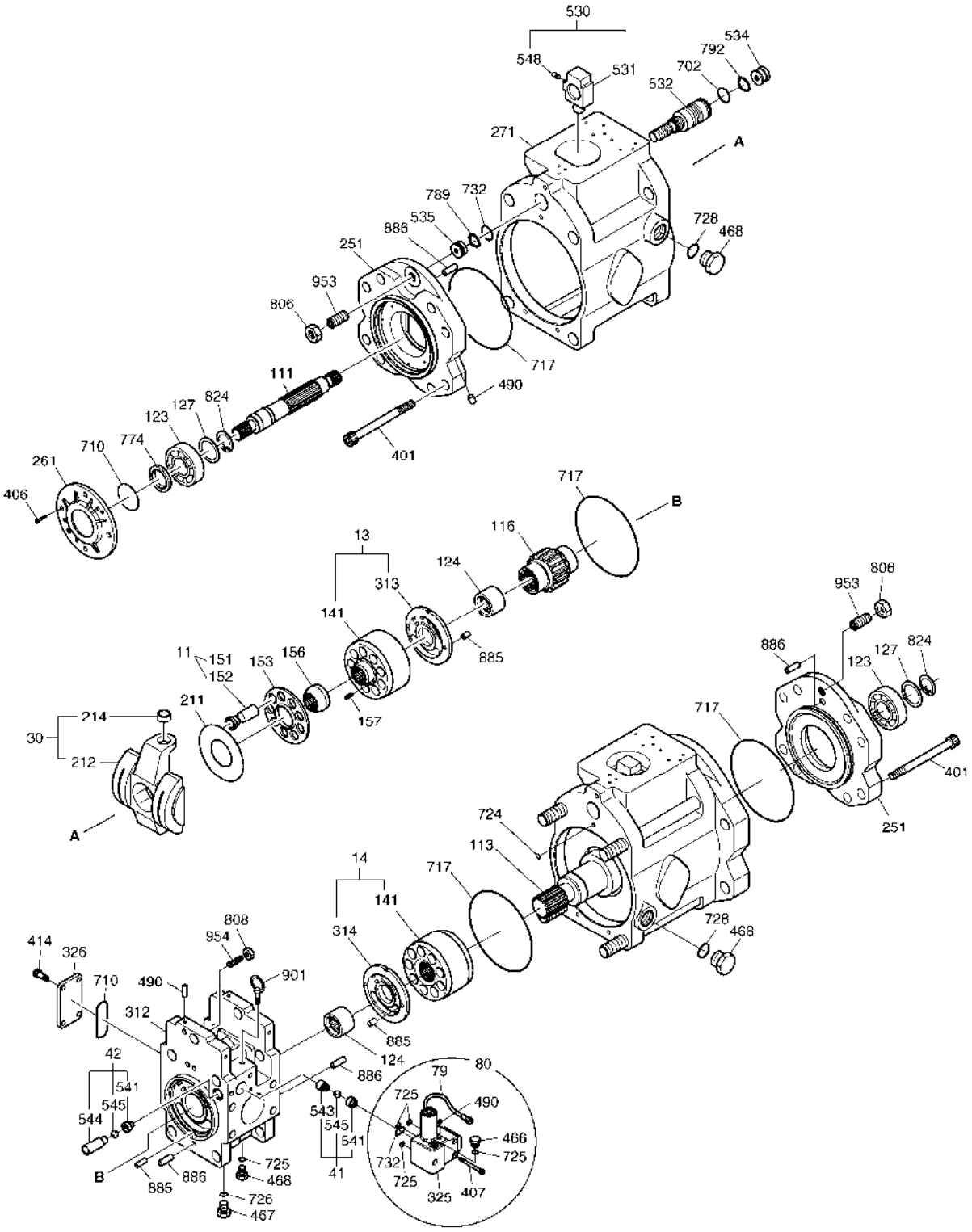

DATE	AUG. 28, 2009
3rd EDITION	

Fig. 4100 MAIN PUMP POMPE

Serial No. ;

Key No.	Part No.	Description	Description	Q'ty	S.C	Serial No.	ICA	Replaceable part	
								Part No.	Q'ty
4100 -901	S3140025	BOLT;EYE	BOULON A 6 PANS	2					
953	S3527808	SCREW;SET M16X30L	VIS	2					
954	1.120-00071	SCREW	VIS	2					
*	K9004882	SEAL KIT;PUMP	KIT DE JOINT	1					

DATE	AUG. 28, 2009
3rd EDITION	

Fig. 4110 REGULATOR REGULATEUR

Serial No. ;

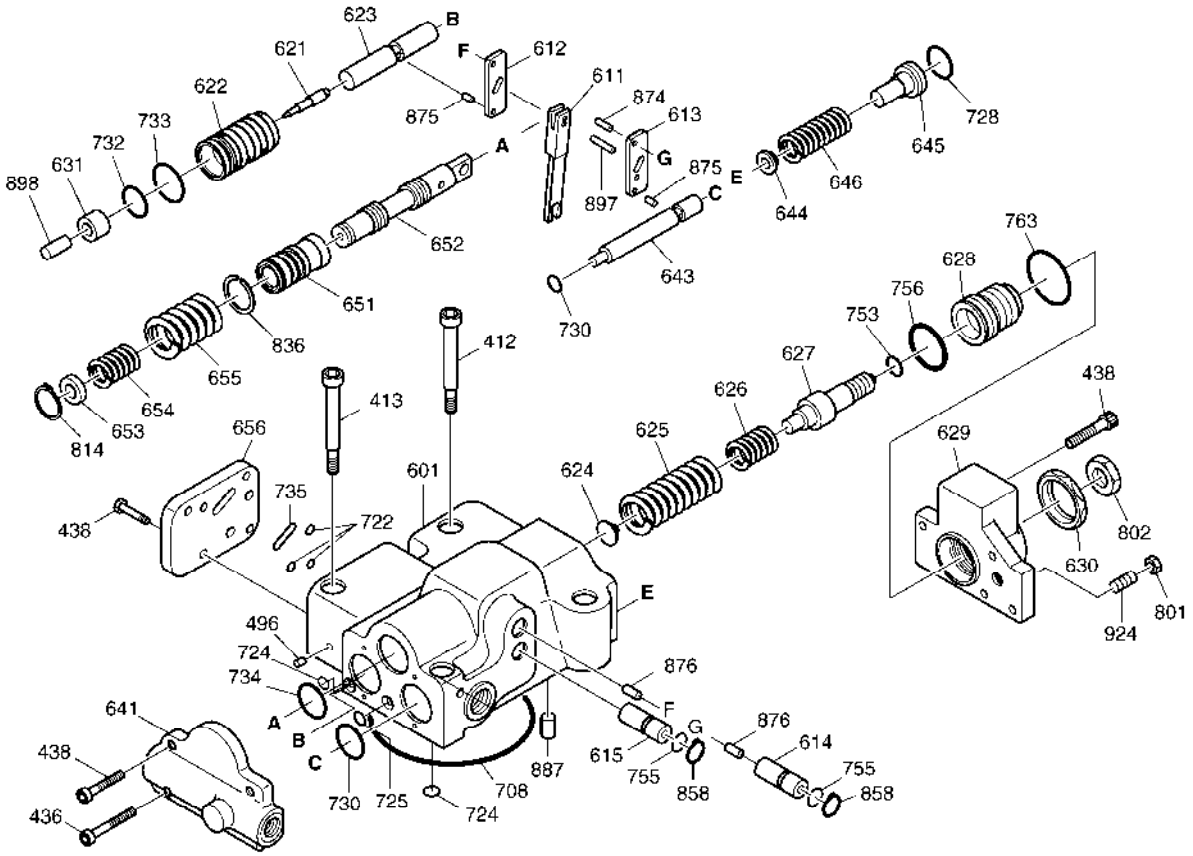

DATE	AUG. 28, 2009
3rd EDITION	

Fig. 4110 REGULATOR REGULATEUR

Serial No. ;

Key No.	Part No.	Description	Description	Q'ty	S.C	Serial No.	ICA	Replaceable part	
								Part No.	Q'ty
4110 --	K9004877	REGULATOR ASS'Y	REDUCTEUR	2					
412	S2209661	BOLT	BOULON A 6 PANS CREUX	2					
413	S2210071	BOLT;SOCKET	BOULON DE PLOT	2					
436	S2205261	BOLT;WRENCH M6X1.0X30	BOULON A 6 PANS CREUX	2					
438	S2204861	BOLT	BOULON A 6 PANS CREUX	10					
496	2.181-00214	PLUG	BOUCHON	5					
601	1.402-00062	CASING	CARTER	1	D				
611	1.357-00015	LEVER;FEED BACK	LEVIER	1	D				
612	1.357-00006	LEVER(1)	LEVIER	1	D				
613	1.357-00009	LEVER(2)	LEVIER	1	D				
614	1.181-00095	PLUG;CENTER	BOUCHON	1	D				
615	1.181-00091	PLUG;ADJUST	BOUCHON	1	D				
621	1.409-00190	PISTON	PISTON	1	D				
622	1.402-00037	CASE;PISTON	CARTER	1	D				
623	1.428-00209	ROD	TIGE	1	D				
624	1.427-00016	SEAT;SPRING(C)	SIEGE	1	D				
625	K9004875	SPRING;OUTER	RESSORT	1	D				
626	2.131-00388	SPRING;INNER	RESSORT	1	D				
627	K9004874	STEM;ADJUST(C)	TIGE	1	D				
628	K9004794	SCREW;ADJUST(C)	VIS	1	D				
629	1.430-00049	COVER(C)	COUVERCLE	1	D				
630	1.121-00045	NUT;LOCK	ECROU	1	D				
631	K9004876	SLEEVE;PF	DOUILLE	1	D				
641	1.430-00066	COVER;PILOT	COUVERCLE	1	D				
643	1.409-00205	PISTON;PILOT	PISTON	1	D				
644	1.427-00017	SEAT;SPRING(Q)	SIEGE	1	D				
645	2.115-00441	STEM;ADJUST(Q)	TIGE	1	D				
646	2.131-00401	SPRING;PILOT	RESSORT	1	D				
651	1.425-00005	SLEEVE	DOUILLE	1	D				
652	1.424-00021	SPOOL	PLUNGEUR	1	D				
653	1.131-00167	SEAT;SPRING	SIEGE	1	D				
654	1.131-00161	SPRING;RETURN	RESSORT	1	D				
655	1.131-00173	SPRING;SET	RESSORT	1	D				
656	1.430-00029	COVER;BLOCK	COUVERCLE	1	D				
708	S8010755	O-RING 1BG-75	JOINT TORIQUE	1	K				
722	S8000065	O-RING P6	JOINT TORIQUE	3	K				
724	S8000085	O-RING	JOINT TORIQUE	9	K				
725	S8000105	O-RING P10	JOINT TORIQUE	1	K				

DATE	AUG. 28, 2009
3rd EDITION	

Fig. 4110 REGULATOR REGULATEUR

Serial No. ;

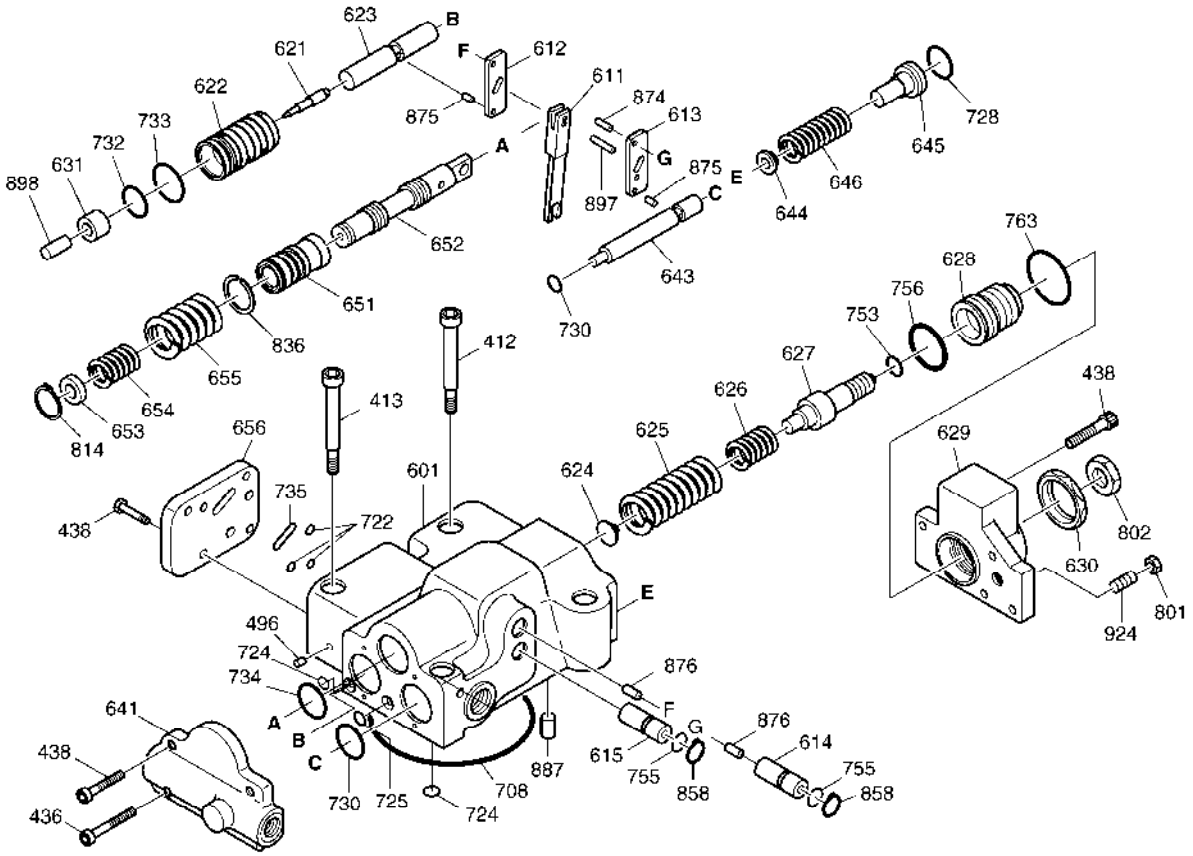

DATE	AUG. 28, 2009
3rd EDITION	

Fig. 4110 REGULATOR REGULATEUR

Serial No. ;

Key No.	Part No.	Description	Description	Q'ty	S.C	Serial No.	ICA	Replaceable part	
								Part No.	Q'ty
4110 -728	S8000185	O-RING	JOINT TORIQUE	1	K				
730	S8000225	O-RING P22	JOINT TORIQUE	1	K				
732	S8000165	O-RING	JOINT TORIQUE	1	K				
733	S8000205	O-RING	JOINT TORIQUE	1	K				
734	S8010255	O-RING P25	JOINT TORIQUE	1	K				
735	S8002725	O-RING P12.5	JOINT TORIQUE	1	K				
753	K9004878	O-RING	JOINT TORIQUE	1	K				
755	S8000115	O-RING	JOINT TORIQUE	2	K				
756	S8000265	O-RING P26	JOINT TORIQUE	1	K				
763	S8010355	O-RING	JOINT TORIQUE	1	K				
801	S4012531	NUT M8	ECROU	1					
802	K9004800	NUT	ECROU	1					
814	S6500100	RING;SNAP	BAGUE	1					
836	1.115-00111	RING;SNAP	BAGUE	1	D				
858	S6510150	RING;SNAP	BAGUE	2					
874	1.123-00030	PIN	GOUPILLE	1	D				
875	1.123-00031	PIN	GOUPILLE	2	D				
876	1.123-00039	PIN	GOUPILLE	2	D				
887	1.123-00032	PIN	GOUPILLE	1	D				
897	1.123-00040	PIN	GOUPILLE	1	D				
898	K9004881	PIN	GOUPILLE	1	D				
924	S3524008	SCREW;SET	VIS	1					

DATE	AUG. 28, 2009
3rd EDITION	

Fig. 4120 GEAR PUMP POMPE

Serial No. ;

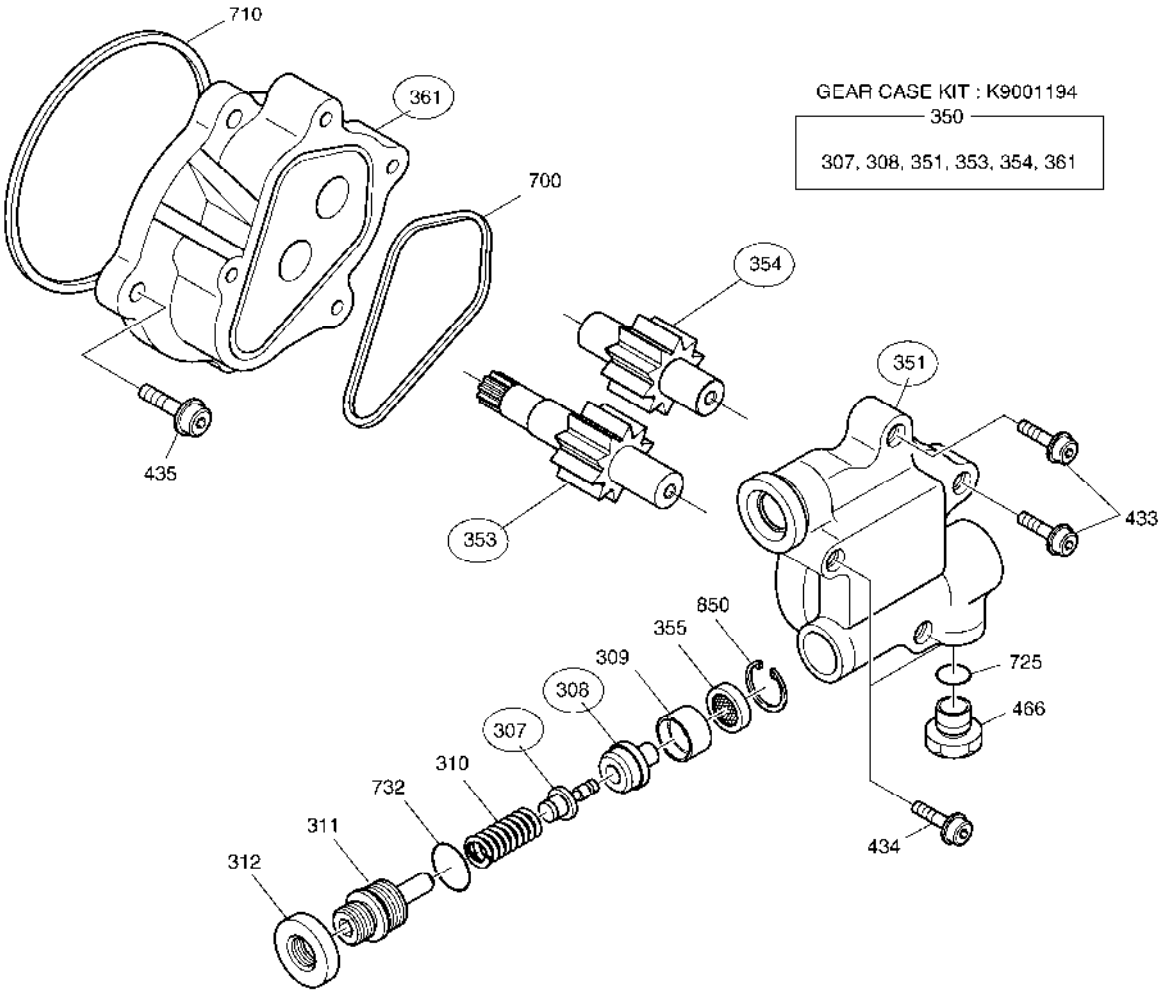

DATE	AUG. 28, 2009
3rd EDITION	

Fig. 4120 GEAR PUMP POMPE

Serial No. ;

Key No.	Part No.	Description	Description	Q'ty	S.C	Serial No.	ICA	Replaceable part	
								Part No.	Q'ty
4120 --	K9001192	GEAR PUMP	PIGNON	1					
307	1.426-00007	POPPET	POUPEE	1	K				
308	1.427-00005	SEAT	SIEGE	1	K				
309	1.115-00142	RING	ANNEAU	1					
310	K9001193	SPRING	RESSORT	1					
311	1.120-00078	SCREW	VIS	1					
312	2.121-00170	NUT;LOCK	ECROU	1					
351	1.402-00026	CASE;GEAR	CARTER	1	K				
353	2.403-00123	GEAR;DRIVE	PIGNON	1	K				
354	2.403-00130	GEAR;DRIVEN	PIGNON	1	K				
355	2.471-00004	FILTER	FILTRE A GAZOLE	1					
361	1.402-00019	CASE;FRONT	CARTER	1	K				
433	2.181-00089	SOCKET;FLANGE	CLE A DOUILLE	2					
434	2.181-00090	SOCKET;FLANGE	CLE A DOUILLE	2					
435	1.229-00035	SOCKET;FLANGE	CLE A DOUILLE	4					
466	2181-1950D1	PLUG	BOUCHON	1					
700	2.115-00119	RING	ANNEAU	1					
710	S8010955	O-RING	JOINT TORIQUE	1					
725	S8000111	O-RING	JOINT TORIQUE	1					
732	S8000161	O-RING	JOINT TORIQUE	1					
850	S6510180	RING;SNAP	BAGUE	1					
350	K9001194	KIT;GEAR CASE (307,308,351,353,	KIT D'ETANCHEITE	1					

DATE	AUG. 28, 2009
3rd EDITION	

Fig. 4130 SWING MOTOR MOTEUR D'ORIENTATION

Serial No. ;

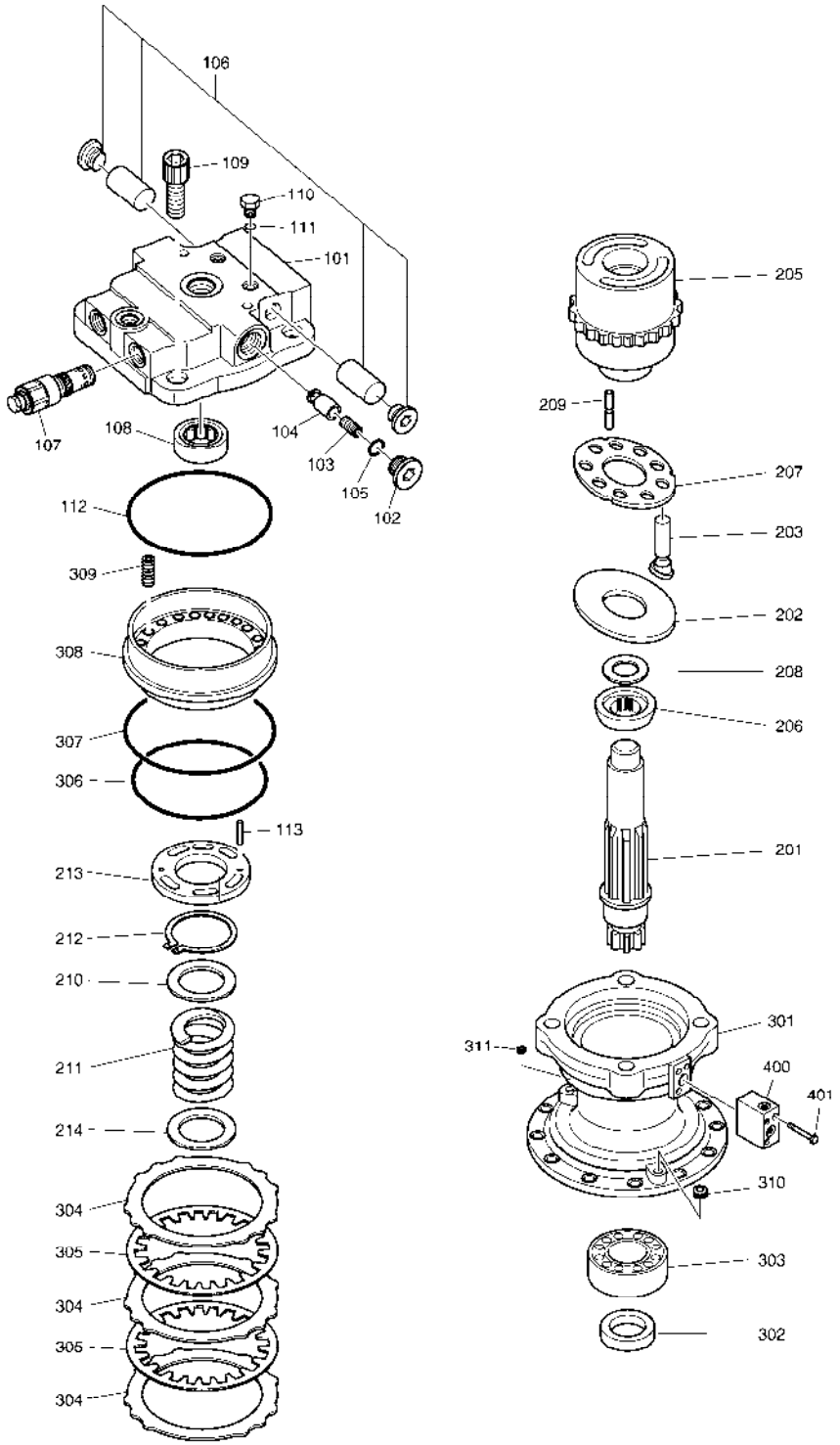

DATE	AUG. 28, 2009
3rd EDITION	

Fig. 4130 SWING MOTOR MOTEUR D'ORIENTATION

Serial No. ;

Key No.	Part No.	Description	Description	Q'ty	S.C	Serial No.	ICA	Replaceable part	
								Part No.	Q'ty
4130 --	K1007950A	MOTOR;SWING	COMMUTATEUR	1					
101	-	CASING;VALVE	CARTER	1	D				
102	2.121-00009	PLUG	BOUCHON	2					
103	K9001840	SPRING	RESSORT	2					
104	K9001841	PLUNGER	PLONGEUR	2					
105	S8000341	O-RING	JOINT TORIQUE	2	K				
106	1.420-00016	VALVE;SWING REACTION	ROTATION SANS REACTIO	1					
107	420-00195	VALVE;RELIEF	CLAPET DE RECHARGE	2					
108	K9004567	BEARING;ROLLER	ROULEMENT	1					
109	S2230561	BOLT;SOCKET	BOULON A 6 PANS CREUX	4					
110	2181-1950D1	PLUG	BOUCHON	3					
111	S8000111	O-RING	JOINT TORIQUE	3	K				
112	2180-1217D158	O-RING	JOINT TORIQUE	1	K				
113	S5741162	PIN;SPRING	GOUJON	2					
201	K9004561	SHAFT;DRIVE	ARBRE MOTEUR	1					
202	K9004556	PLATE;SHOE	PLAQUE	1					
203	K9004568	PISTION ASS'Y	PISTION ASS'Y	1					
205	K9004570	BLOCK;CYLINDER	BLOC-CYLINDRES	1					
206	K9004571	BUSH;SPHERICAL	DOUILLE	1					
207	K9004555	PLATE;RETAINER	PLAQUE	1					
208	K9004558	SPACER	DOUILLE D'ECARTEMENT	1					
209	K9004560	ROD;PUSH	TIGE DE POUSSOIR	12					
210	K9004557	SPACER	DOUILLE D'ECARTEMENT	1					
211	K9004564	SPRING	RESSORT	1					
212	S6510620	RING;SNAP	BAGUE	1					
213	K9004563	PLATE;VALVE	PLAQUE	1					
214	K9004559	SPACER	DOUILLE D'ECARTEMENT	1					
301	-	CASING	CARTER	1	D				
302	K9004565	SEAL;OIL	JOINT	1	K				
303	K9004566	BEARING;ROLLER	ROULEMENT	1					
304	412-00036	PLATE;SEPARATOR	PLAQUE	3					
305	412-00037	PLATE;FRICTION	PLAQUE	2					
306	2180-1217D156	O-RING	JOINT TORIQUE	1	K				
307	2180-1217D159	O-RING	JOINT TORIQUE	1	K				
308	K9004562	PISTON;BRAKE	PISTON	1					
309	129-00062	SPRING;BRAKE	RESSORT	20					
310	2181-1116D5	PLUG;PT	BOUCHON	2					
311	2181-1116D2	PLUG	BOUCHON	1					

DATE	AUG. 28, 2009
3rd EDITION	

Fig. 4130 SWING MOTOR MOTEUR D'ORIENTATION

Serial No. ;

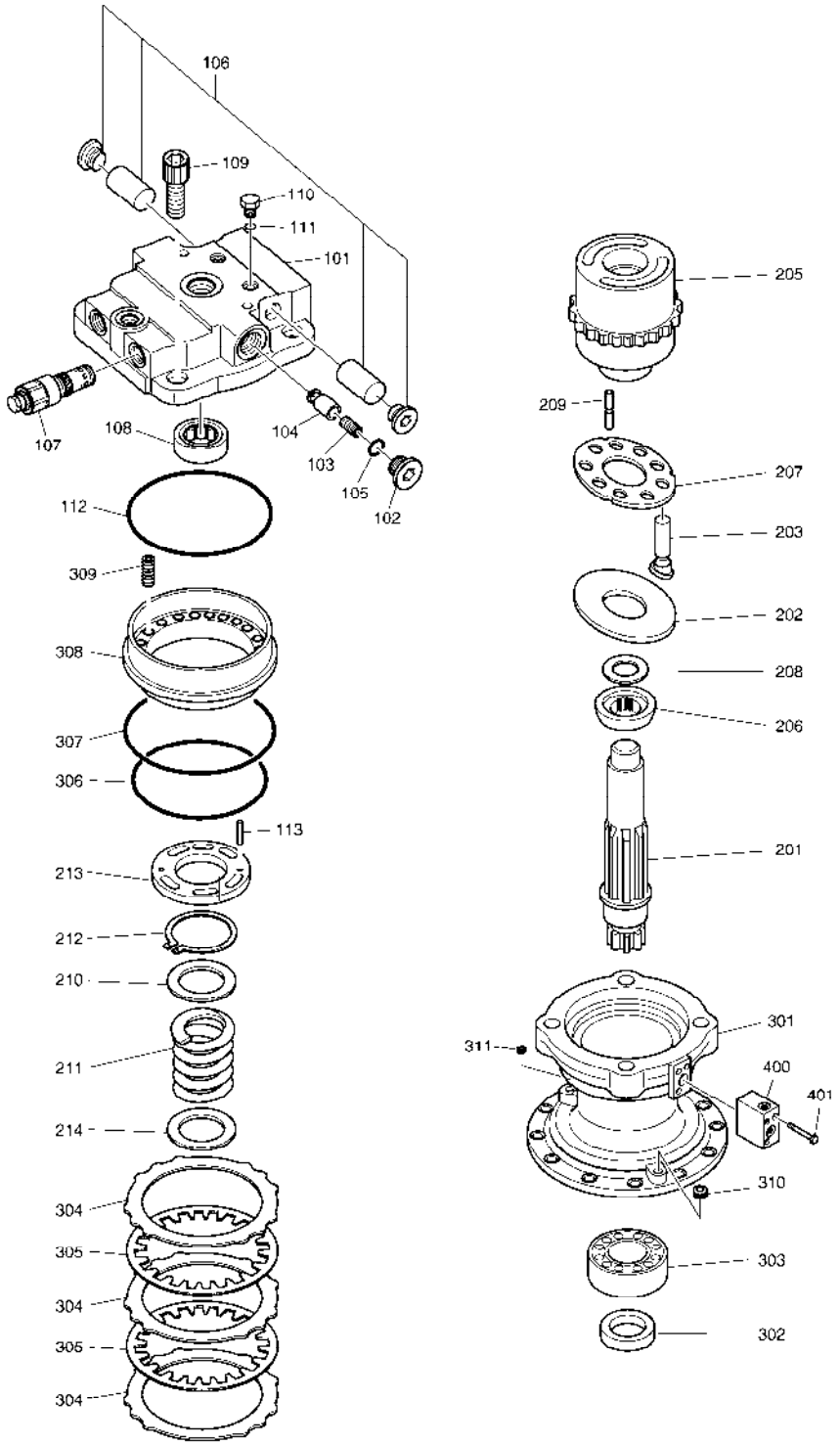

DATE	AUG. 28, 2009
3rd EDITION	

Fig. 4130 SWING MOTOR MOTEUR D'ORIENTATION

Serial No. ;

Key No.	Part No.	Description	Description	Q'ty	S.C	Serial No.	ICA	Replaceable part	
								Part No.	Q'ty
4130 -400	K9004569	VALVE;BRAKE	VANNE	1					
401	S2206261	BOLT;SOCKET	BOULON A 6 PANS CREUX	3					
*	K9004885	SEAL KIT;SWING MOTOR	JOINT	1					

DATE	AUG. 28, 2009
3rd EDITION	

Fig. 4140 SWING REDUCTION GEAR REDEUTEUR D'ORIENTATION

Serial No. ;

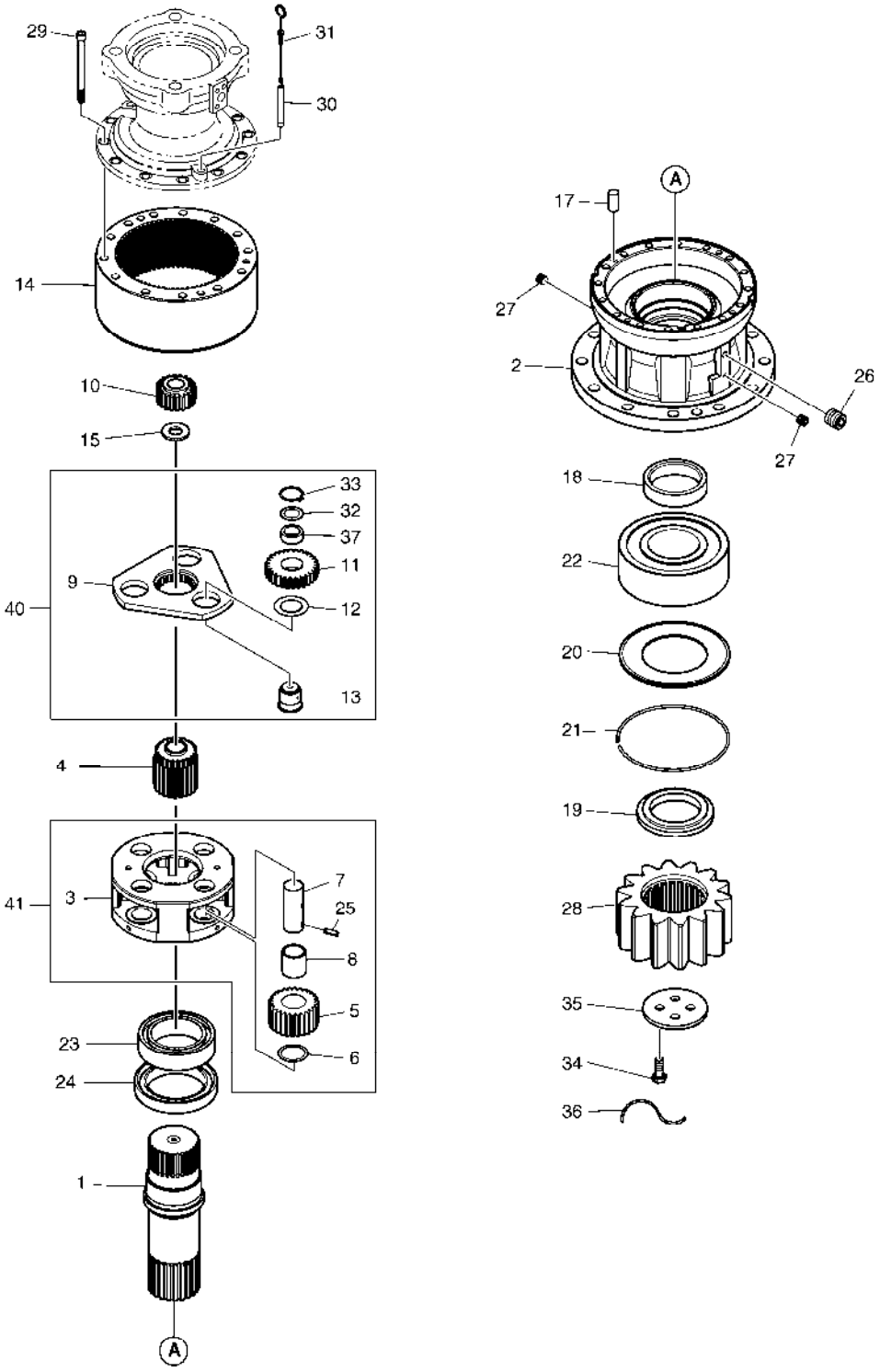

DATE	AUG. 28, 2009
3rd EDITION	

Fig. 4140 SWING REDUCTION GEAR REDEUTEUR D'ORIENTATION

Serial No. ;

Key No.	Part No.	Description	Description	Q'ty	S.C	Serial No.	ICA	Replaceable part	
								Part No.	Q'ty
4140 --	K1004037A	REDUCTION GEAR;SWING	BOITE REDUCTEUR	1					
1	K1004038B	SHAFT	ARBRE	1					
2	K1002539A	CASE	CARTER	1					
3	K1002540A	CARRIER NO.2	PORTEUR	1					
4	K1002541A	GEAR;SUN NO.2	PIGNON	1					
5	K1002542	GEAR;PLANET NO.2	PIGNON	4					
6	K1002543	PLATE;SIDE NO.2	PLAQUE	4					
7	K1002544	PIN	GOUPILLE	4					
8	K1002545	BUSH	DOUILLE	4					
9	K1002546	CARRIER NO.1	SUPPORT	1					
10	K1004040B	GEAR;SUN NO.1	PIGNON	1					
11	K1002548	GEAR;PLANET NO.1	PIGNON	3					
12	K1002549	PLATE;SIDE	PLAQUE	3					
13	K1002550	PIN	GOUPILLE	3					
14	K1006981	GEAR;RING	PIGNON	1					
15	K1002552	PLATE;THRUST	PLAQUE	1					
17	K1003384A	PIN;LOCK	GOUPILLE	4					
18	K1002554A	SPACER	DOUILLE D'ECARTEMENT	1					
19	K1004041A	COLLAR	COLLIER	1					
20	K1002556	PLATE	PLAQUE	1					
21	K1002558	RING;LOCK	BAGUE	1					
22	K1002559	BEARING	ROULEMENT	1					
23	K1003682A	BEARING	ROULEMENT	1					
24	K1005719	SEAL;OIL	JOINT	1					
25	S5741361	PIN;SPRING	BROUCHE	4					
26	2181-1116D4	PLUG(B)	BOUCHON	1					
27	S5810010	PLUG	BOUCHON	3					
28	K1004042A	GEAR;PINION	PIGNON	1					
29	S2226671	BOLT;SOCKET	BOULON A 6 PANS CREUX	12					
30	140-01343A	PIPE	CONDUITE	1					
31	119-00020	BAR;LEVEL	JAGUE DE NIVEAU	1					
32	K1002567	PLATE;SIDE	PLAQUE	3					
33	S6500600	RING;RETAINER	BAGUE	3					
34	2120-1363	BOLT	BOULON A 6 PANS	4					
35	2403-1039A	PLATE;LOCK	COUVERCLE	1					
36	2126-9001	WIRE	CABLE	1					
37	K1003386	BUSH	DOUILLE	3					
40	K9004901	CARRIER NO.1 ASS'Y	PORTEUR	1					

DATE	AUG. 28, 2009
3rd EDITION	

Fig. 4140 SWING REDUCTION GEAR REDEUTEUR D'ORIENTATION

Serial No. ;

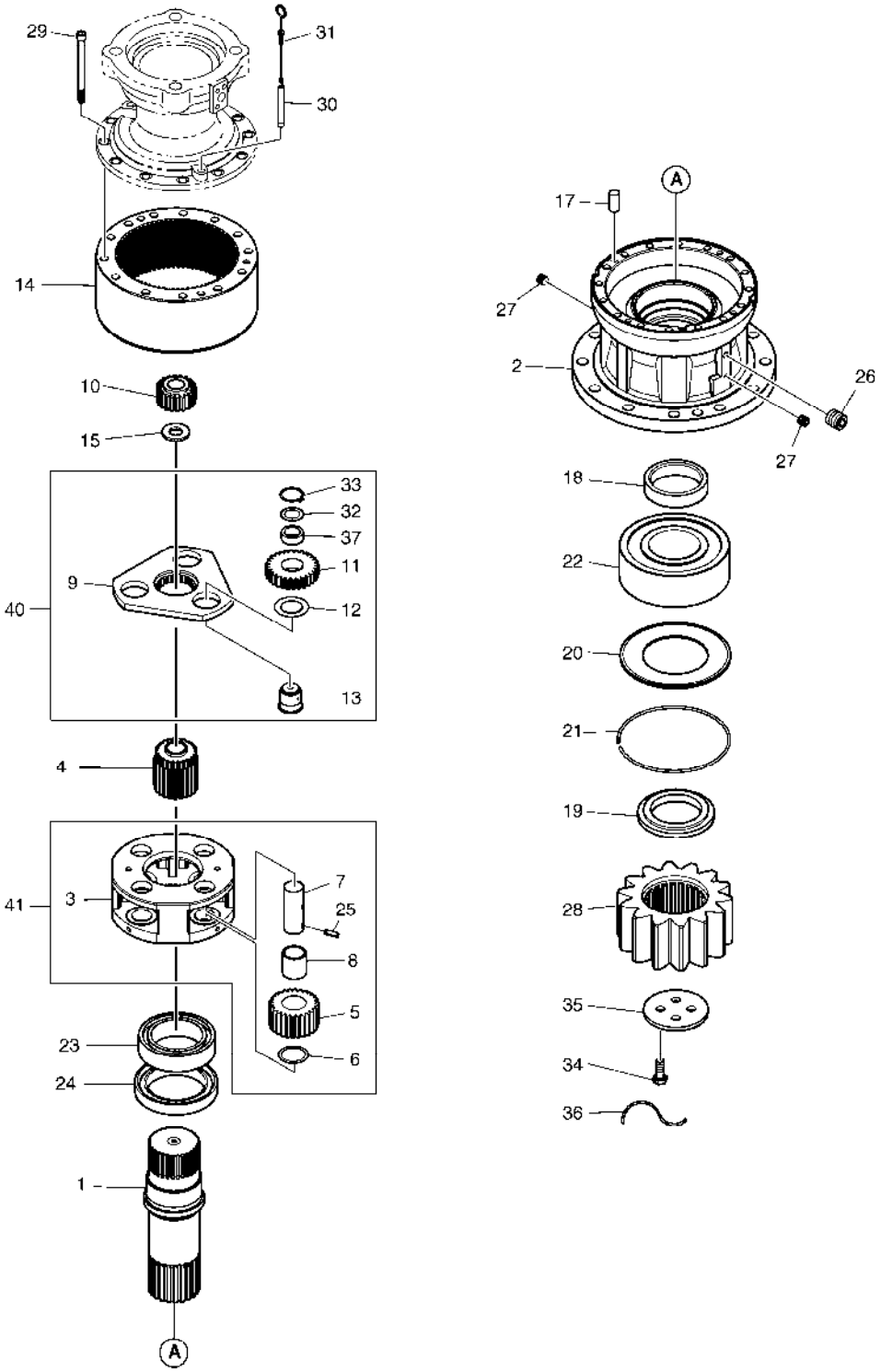

DATE	AUG. 28, 2009
3rd EDITION	

Fig. 4140 SWING REDUCTION GEAR REDEUTEUR D'ORIENTATION

Serial No. ;

Key No.	Part No.	Description	Description	Q'ty	S.C	Serial No.	ICA	Replaceable part	
								Part No.	Q'ty
4140 -41	K9004902	CARRIER NO.2 ASS'Y	PORTEUR	1					

DATE	AUG. 28, 2009
3rd EDITION	

Fig. 4150 TRAVEL MOTOR
MOTEUR DE TRANSLATION

Serial No. ;

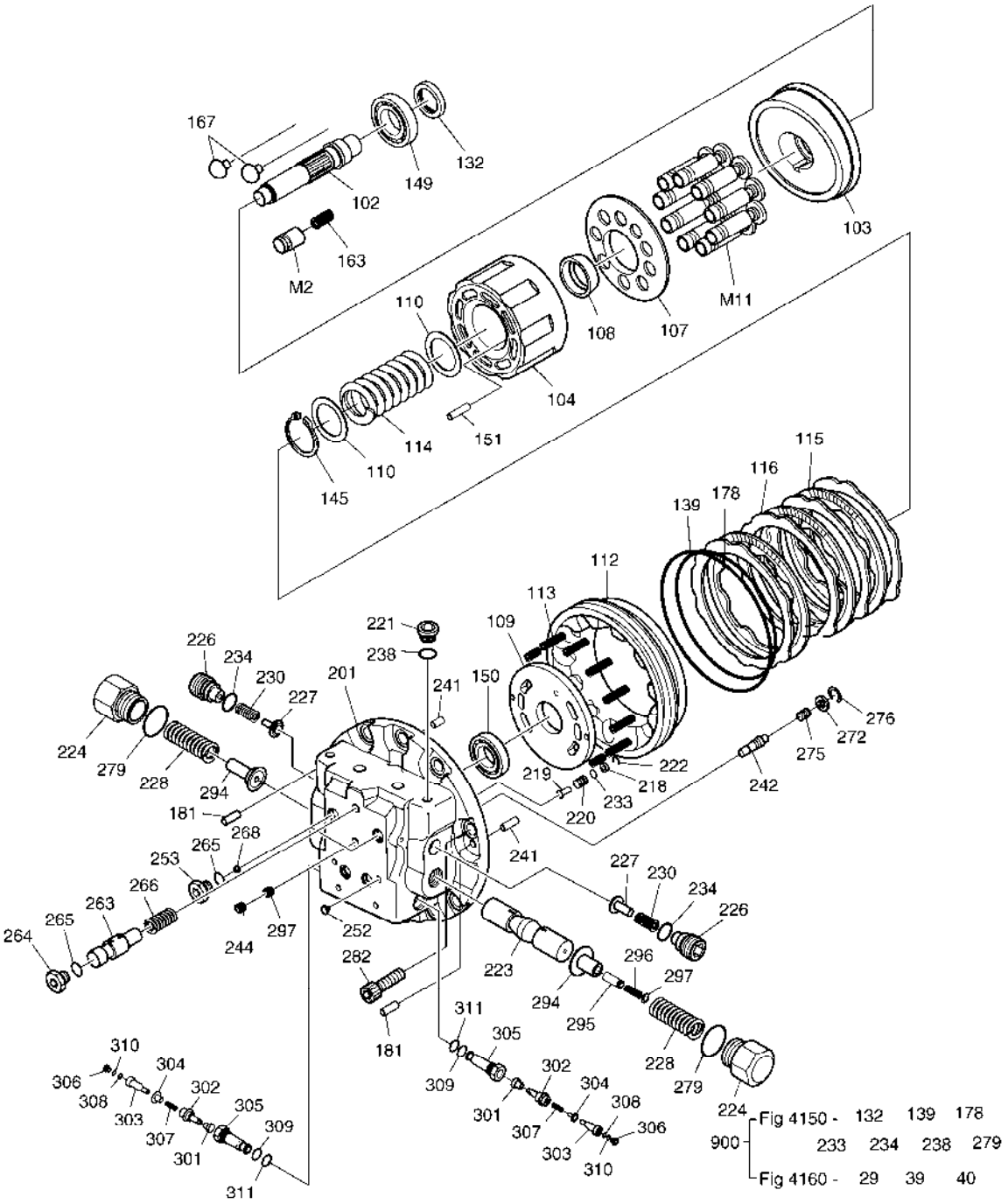

DATE	AUG. 28, 2009
3rd EDITION	

Fig. 4150 TRAVEL MOTOR
MOTEUR DE TRANSLATION

Serial No. ;

Key No.	Part No.	Description	Description	Q'ty	S.C	Serial No.	ICA	Replaceable part	
								Part No.	Q'ty
4150 --	K1011413A	TRAVEL DEVICE	MOTEUR DE TRANSLATIOI	2					
RL	K9004992	REAR FLANGE ASS'Y	KIT BRIDE DE BOBINE	1					
RL1	K9004993	KIT;REAR FLANGE	KIT BRIDE DE BOBINE	1					
201	-	FLANGE;REAR	BRIDE	1	D				
223	-	SPOOL;MAIN	BOBINE	1	D				
RL2	1.416-00026	STOPPER ASS'Y	ARRET	2					
294	-	STOPPER	ARRET	1	D				
295	-	SPOOL;MAIN	BOBINE	1	D				
296	-	SPRING	VIS	1	D				
224	1.181-00059	PLUG;FOR MAIN	BOUCHON	2					
228	1.131-00058	SPRING;FOR MAIN	RESSORT	2					
279	S8000321	O-RING	JOINT TORIQUE	2	K				
226	1.181-00067	PLUG;CHECK	BOUCHON	2					
227	1.420-00013	VALVE;CHECK	VANNE	2					
230	1.129-00006	SPRING;CHECK	RESSORT	2					
234	S8002731	O-RING	JOINT TORIQUE	2	K				
221	2181-1890D4	PLUG	BOUCHON	1					
238	S8000181	O-RING	JOINT TORIQUE	1	K				
252	2181-1116D2	PLUG	BOUCHON	2					
253	2181-1890D2	PLUG	BOUCHON	2					
244	2181-1116D1	PLUG	BOUCHON	5					
268	S6250182	BALL;STEEL	BILLE	2					
242	1.420-00014	VALVE;REDUCING	VANNE	1					
272	1.427-00031	SEAT;VALVE REDUCING	SIEGE	1					
276	1.115-00141	RING;REDUCING	BAGUE	1					
275	1.131-00062	SPRING;REDUCING V/V	RESSORT	1					
218	1.427-00029	VALVE;SEAT T-TYPE	VANNE	1					
219	1.420-00009	VALVE;T-TYPE	VANNE	1					
220	1.131-00041	SPRING;T-TYPE	RESSORT	1					
222	1.115-00139	RING;T-TYPE	BAGUE	1					
233	S8000091	O-RING	JOINT TORIQUE	1	K				
263	422-00031	VALVE;TWO SPEED	VANNE	1					
264	K9001047	PLUG	BOUCHON	1					
265	S8000111	O-RING	JOINT TORIQUE	3					
266	1.131-00099	SPRING ;TWO SPEED	RESSORT	1					
241	S5700891	PIN;PARALLEL	GOUPILLE	2					
282	S2221471	BOLT;SOCKET	BOULON A 6 PANS CREUX	9					
297	1.415-00005	ORIFICE	ORIFICE	1					

DATE	AUG. 28, 2009
3rd EDITION	

Fig. 4150 TRAVEL MOTOR
MOTEUR DE TRANSLATION

Serial No. ;

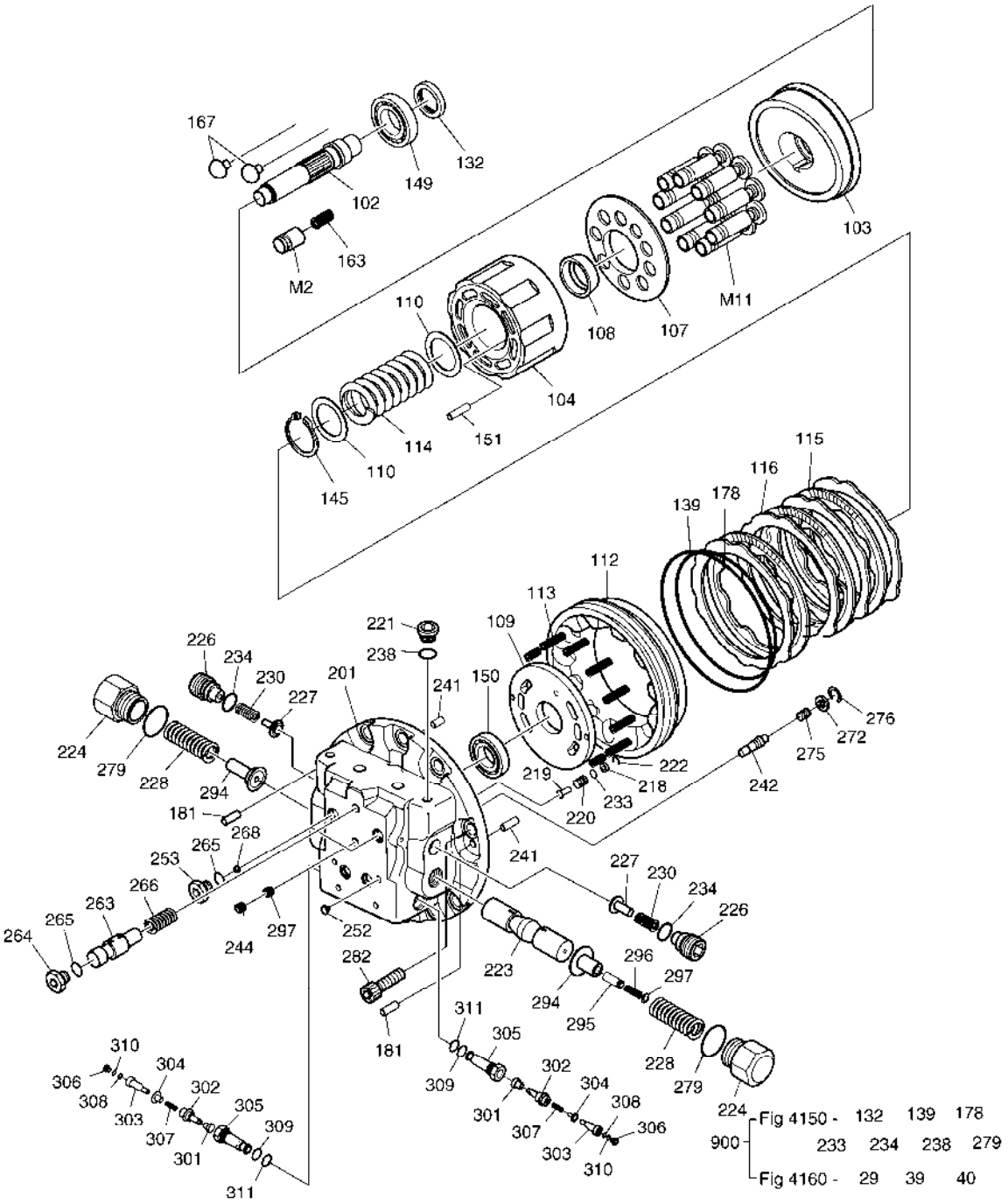

DATE	AUG. 28, 2009
3rd EDITION	

Fig. 4150 TRAVEL MOTOR
MOTEUR DE TRANSLATION

Serial No. ;

Key No.	Part No.	Description	Description	Q'ty	S.C	Serial No.	ICA	Replaceable part	
								Part No.	Q'ty
4150 -M	K9004999	MOTOR PART	MOTEUR DE TRANSLATIOI	1					
M1	1.441-00291	KIT;CYL'D BLOCK & PISTON	KIT DE CYLINDRE	1					
104	-	BLOCK;CYL'D	BLOC DE CYLINDRE	1	D				
110	1.114-00305	WASHER	RONDELLE	2					
114	1.129-00019	SPRING;FOR CYL'D	RESSORT	1					
145	S6510700	RING;SNAP	BAGUE	1					
M11	1.409-00231	PISTON ASS'Y	PISTON	1					
151	1.109-00135	ROLLER	ROULEAU	6					
107	1.412-00093	PLATE;RETAINER	PLAQUE	1					
108	1.148-00016	BALL;THRUST	BILLE	1					
M2	K9005000	PISTON ASS'Y	ENSEMBLE DE PISTON	1					
163	1.131-00042	SPRING	RESSORT	1					
102	1.405-00022	SHAFT;MAIN	ARBRE	1					
103	K9005001	PLATE;SWASH	PLAQUE	1					
109	1.412-00203	PLATE;TIMING	PLAQUE	1					
115	1.412-00061	PLATE;FRICTION	PLAQUE	3					
116	1.412-00072	PLATE;MATING	PLAQUE	4					
112	K9005002	PISTON;PARKING	PISTON	1					
113	1.131-00055	SPRING;P/PISTON	RESSORT	9					
132	1.180-00631	SEAL;OIL	JOINT D'HUILE	1	K				
149	1.109-00147	BEARING;BALL	A BILLES ROULEMENT	1					
150	1.109-00026	BEARING;BALL	A BILLES ROULEMENT	1					
139	S8002101	O-RING	JONT TORIQUE	1	K				
178	S8011951	O-RING	JONT TORIQUE	1	K				
181	S5701242	PIN	GOUPILLE	2					
167	1.540-00006	PIVOT	PIVOT	2					
R1	K9005003	RELIEF VALVE ASS'Y	COUVERCLE ETANCHE	2					
301	1.429-00037	SEAT	CUVETTE DE RESSORT	1	D				
302	-	PLUNGER	PLONGEUR	1	D				
303	-	ROD	TIGE	1	D				
304	-	PISTON	PISTON	1	D				
305	-	BODY	CARTER	1	D				
306	-	PLUG	BOUCHON	1	D				
307	-	SPRING	VIS	1	D				
308	-	SHIM	CALE	1	D				
309	S8000181	O-RING	JOINT TORIQUE	1					
310	S8000181	O-RING	JOINT TORIQUE	1					
311	S8060181	RING;BACKUP	BAGUE D'ETANCHEITE	1					

DATE	AUG. 28, 2009
3rd EDITION	

Fig. 4150 TRAVEL MOTOR
MOTEUR DE TRANSLATION

Serial No. ;

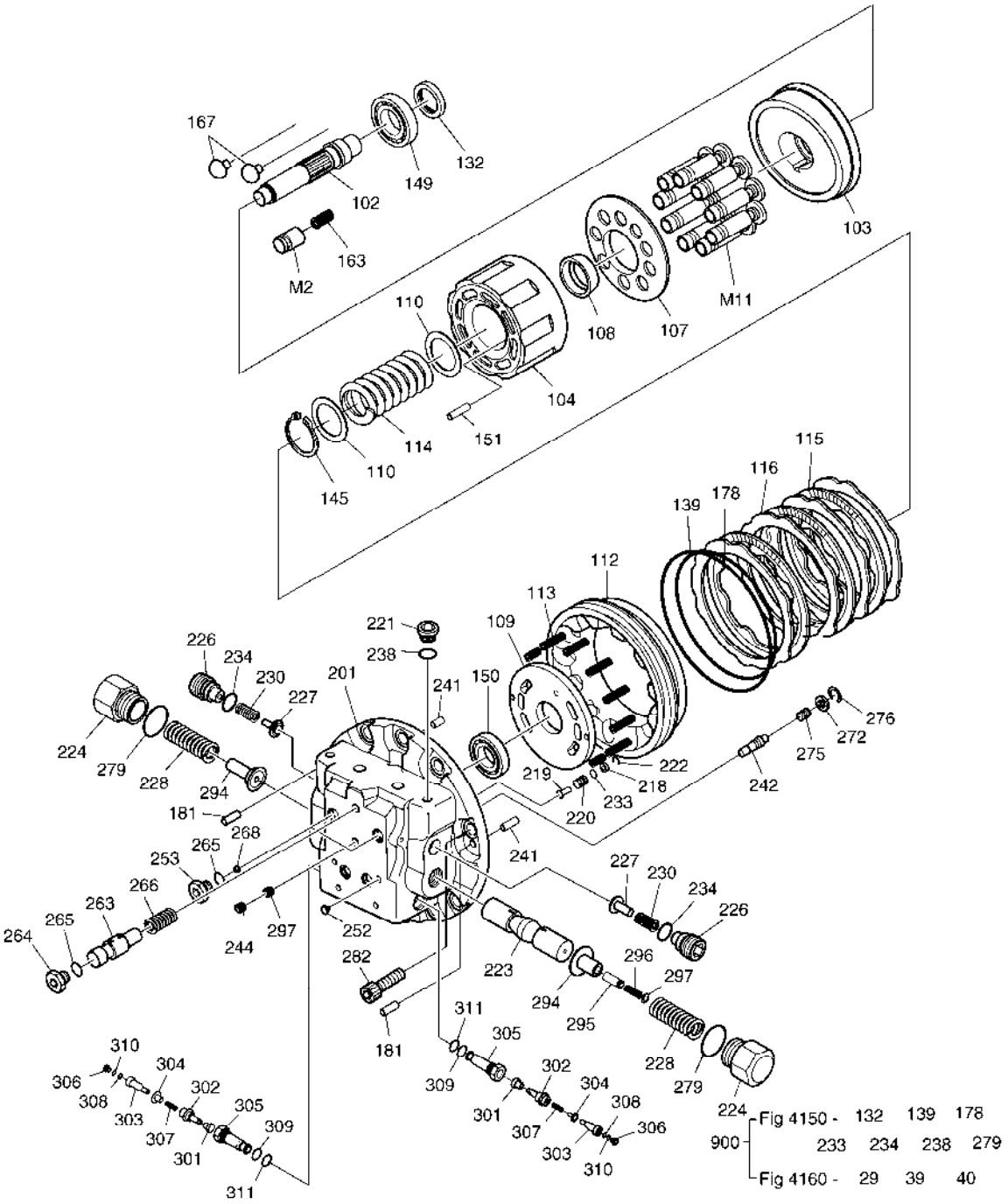

DATE	AUG. 28, 2009
3rd EDITION	

Fig. 4150 TRAVEL MOTOR
MOTEUR DE TRANSLATION

Serial No. ;

Key No.	Part No.	Description	Description	Q'ty	S.C	Serial No.	ICA	Replaceable part	
								Part No.	Q'ty
4150 -900	2401-9082K	SEAL KIT	KIT DE JOINT	1					

DATE	AUG. 28, 2009
3rd EDITION	

Fig. 4160 TRAVEL REDUCTION GEAR BOITE REDUCTEUR

Serial No. ;

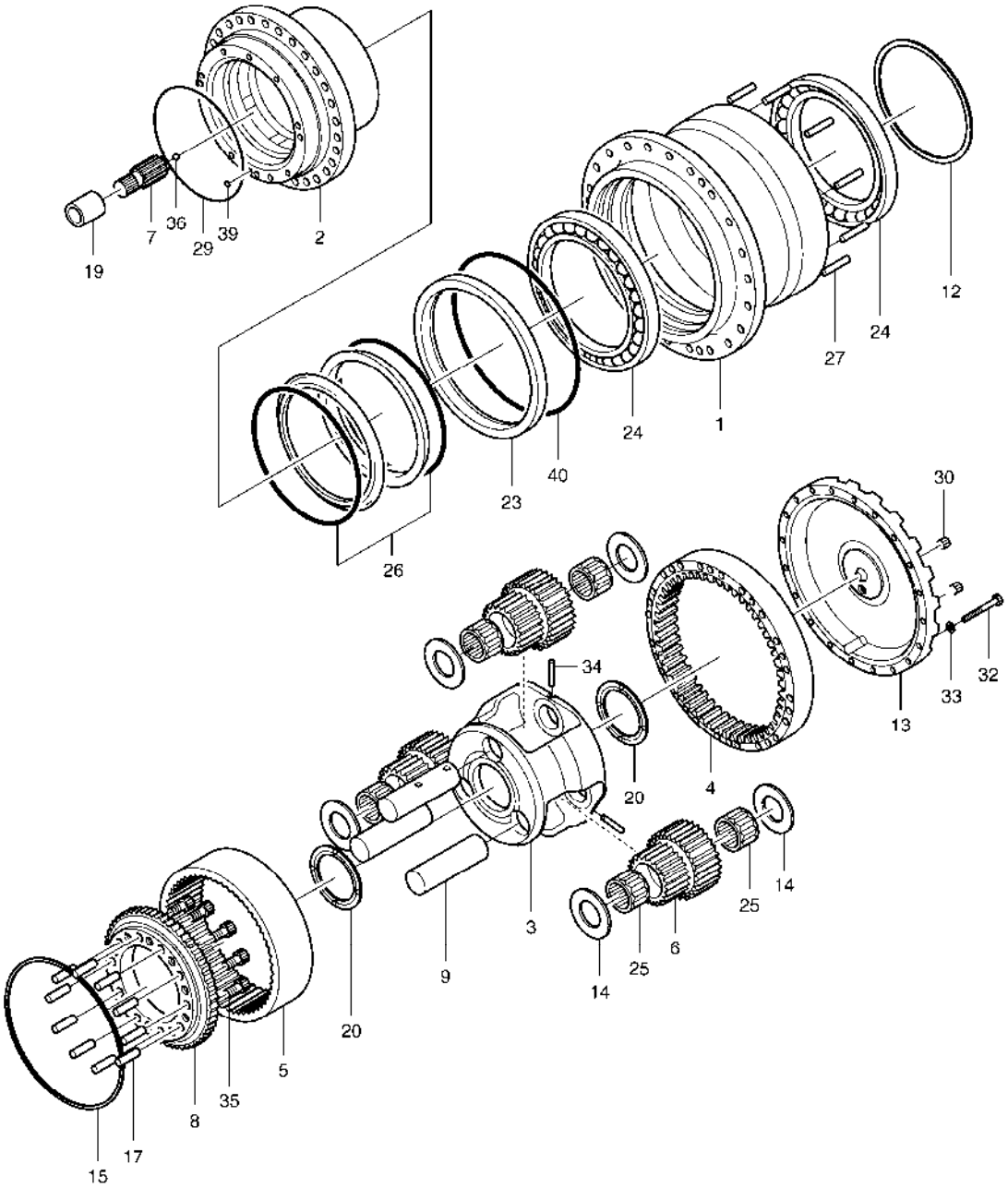

DATE	AUG. 28, 2009
3rd EDITION	

Fig. 4160 TRAVEL REDUCTION GEAR BOITE REDUCTEUR

Serial No. ;

Key No.	Part No.	Description	Description	Q'ty	S.C	Serial No.	ICA	Replaceable part	
								Part No.	Q'ty
4160 --	K1011413A	TRAVEL DEVICE	MOTEUR DE TRANSLATIOI	2					
RG	K9005007	REDUCTION GEAR ASS'Y	BOITE REDUCTEUR	1					
RG1	K9005008	HUB ASS'Y	MOYEU DE FIXATION	1					
1	-	HUB	MOYEU	1	D				
4	-	GEAR;RING A	PIGNON	1	D				
27	1.123-00107	PIN;PARALLEL D12X63	BROUCHE	10					
RG2	K9005010	SPINDLE ASS'Y	TOUPIE	1					
2	-	SPINDLE	TOUPIE	1	D				
8	1.404-00002	GEAR;COUPLING	PIGNON	1					
35	S2224471	BOLT;SOCKET M8X2.5X40	BOULON A 6 PANS CREUX	10					
17	1.123-00034	PIN	BROUCHE	10					
RG3	1.230-00053	CARRIER ASS'Y	SUPPORT	1					
3	1.230-00054	CARRIER	SUPPORT	1					
6	1.404-00007	GEAR;CLUSTER	PIGNON	3					
9	1.405-00121	SHAFT;CLUSTER	ARBRE	3					
14	1.114-00541	COLLAR;THRUST	BAGUE	6					
25	1.109-00145	BEARING;NEEDLE	PALIER	6					
5	1.104-00003	GAER;RING B	PIGNON	1					
7	1.403-00111	GEAR;SUN	PIGNON	1					
12	1.540-00004	PIECE;DISTANCE	DISQUE	1					
13	1.430-00030	COVER	COUVERCLE	1					
15	1.115-00138	RING	BAGUE	1					
19	1.414-00009	COUPLING	FIXATION DE POMPE	1					
20	1.412-00164	PLATE;THRUST	PLAQUE	2					
23	1.180-00355	RING;SEAL	BAGUE	1					
24	1.109-00146	BEARING;ANGULAR BALL	PALIER	2					
26	1.180-00512	SEAL;FLOATING	BAGUE	1					
29	S8010230	O-RING	JOINT TORIQUE	1	K				
30	2181-1116D4	PLUG(B)	BOUCHON	3					
32	S0561471	BOLT;HEX M12X1.75X85	BOULON A 6 PANS CREUX	20					
33	S5110701	WASHER;SPRING	RONDELLE ELASTIQUE	20					
34	1.123-00026	PIN;PARALLEL	BROUCHE	3					
36	S6250200	BALL;STELL	BILLE	1					
39	S8000081	O-RING	JOINT TORIQUE	2	K				
40	S8003401	O-RING	JONT TORIQUE	1	K				

DATE	AUG. 28, 2009
3rd EDITION	

Fig. 4170 CONTROL VALVE(1) DISTRIBUTEUR

Serial No. ;

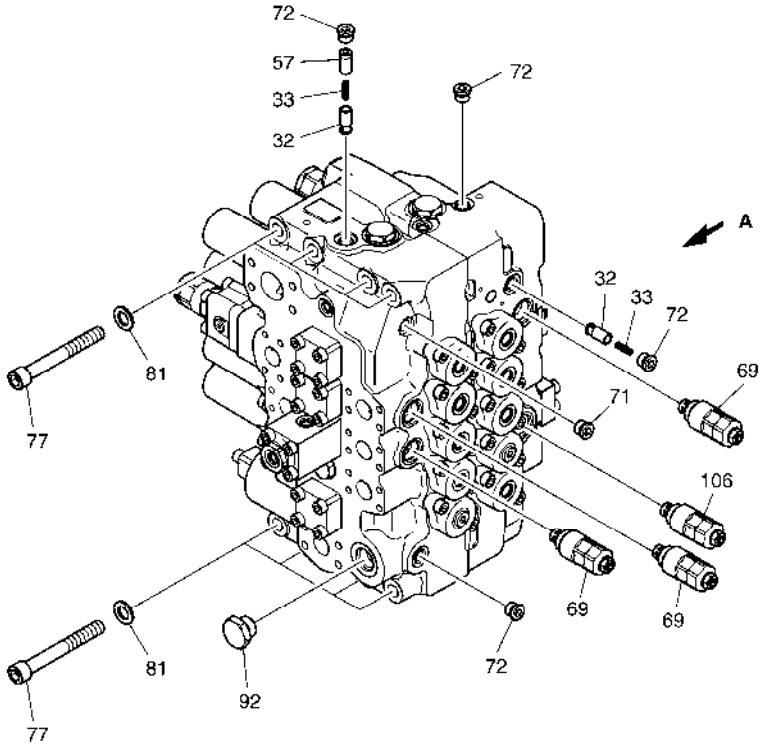

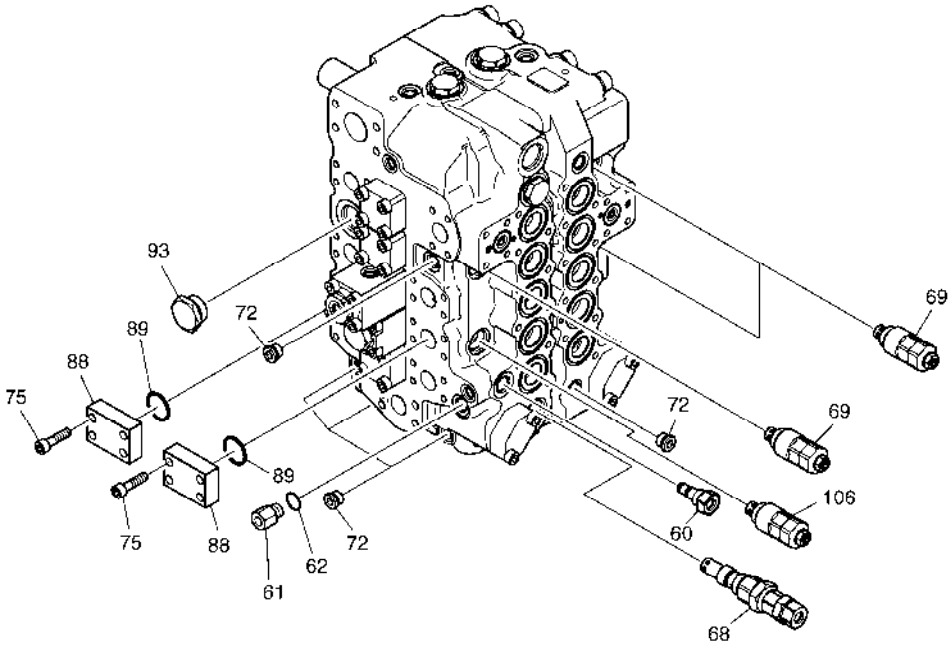

VIEW A

DATE	AUG. 28, 2009
3rd EDITION	

Fig. 4170 CONTROL VALVE(1) DISTRIBUTEUR

Serial No. ;

Key No.	Part No.	Description	Description	Q'ty	S.C	Serial No.	ICA	Replaceable part	
								Part No.	Q'ty
4170 --	K1005097A	VALVE;CONTROL	VANNE	1					
32	426-00168	POPET	POPET	2					
33	129-00126	SPRING	RESSORT	2					
57	114-00414	SPACER	BAGUE D'ECARTEMENT	1					
60	181-00633	PLUG ASS`Y	BOUCHON	1					
61	2.181-00268	PLUG	BOUCHON	1					
62	S8000141	O-RING	JOINT TORIQUE	1	K				
68	K9004572	VALVE;MAIN RELIEF	VANNE	1					
69	420-00258	VALVE;OVERLOAD RELIEF	VANNE	6					
71	181-00562	PLUG ASS`Y	BOUCHON	1					
72	181-00561	PLUG ASS`Y	BOUCHON	9					
75	S2212466	BOLT;SOCKET M10X1.5X40	BOULON A 6 PANS CREUX	8					
77	S2223266	BOLT;SOCKET M16X130L	BOULON A 6 PANS CREUX	8					
81	S5010913	WASHER	RONDELLE PLATE	8					
88	2181-2434	FLANGE	BRIDE	2					
89	2180-1216D109	O-RING	JOINT TORIQUE	2	K				
92	181-00647	PLUG ASS`Y	BOUCHON	1					
93	181-00649	PLUG ASS`Y	BOUCHON	1					
106	K9001805	VALVE;OVERLOAD RELIEF	VANNE	2					
*	420-00295KT	SEAL KIT;CONTROL VALVE	KIT DE JOINT	1					

DATE	AUG. 28, 2009
3rd EDITION	

Fig. 4180 CONTROL VALVE(2) DISTRIBUTEUR

Serial No. ;

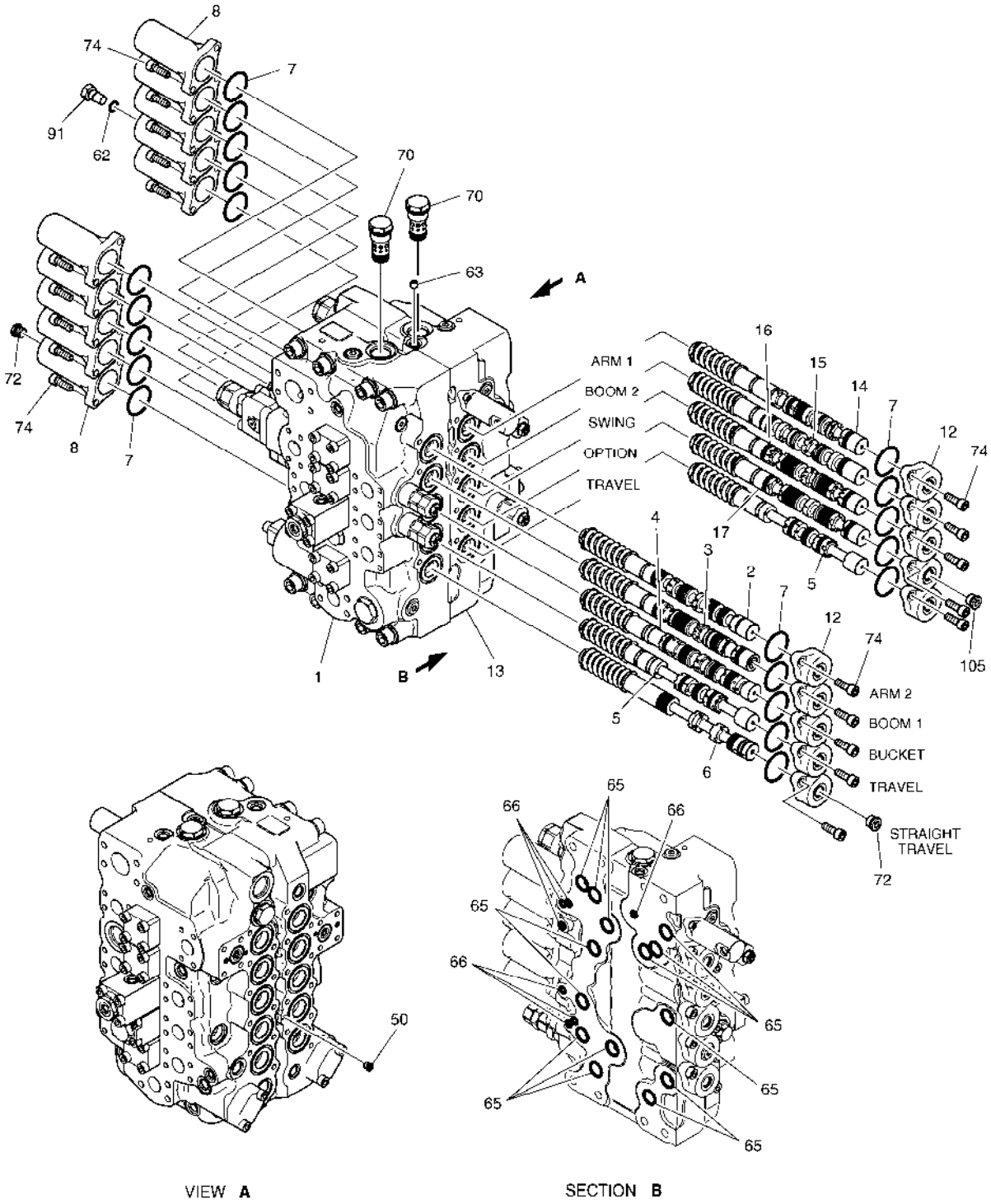

DATE	AUG. 28, 2009
3rd EDITION	

Fig. 4180 CONTROL VALVE(2) DISTRIBUTEUR

Serial No. ;

Key No.	Part No.	Description	Description	Q'ty	S.C	Serial No.	ICA	Replaceable part	
								Part No.	Q'ty
4180 --	K1005097A	VALVE;CONTROL	VANNE	1					
1	423-00096	HOUSING;VALVE	CARTER	1	D				
2	424-00185	SPOOL ASS'Y-ARM2	PLUNGEUR	1					
3	K9003671	SPOOL ASS'Y-BOOM1	PLUNGEUR	1					
4	2.424-00274	SPOOL ASS'Y-BUCKET	PLUNGEUR	1					
5	K9001807	SPOOL ASS'Y-TRAVEL	PLUNGEUR	2					
6	424-00115	SPOOL ASS'Y-T/S	PLUNGEUR	1					
7	S8010451	O-RING	JOINT TORIQUE	20	K				
8	430-00033	CAP	CHAPEAU	10					
12	430-00035	CAP	CHAPEAU	10					
13	423-00097	HOUSING;VALVE	CARTER	1	D				
14	K9003672	SPOOL ASS'Y-ARM1	PLUNGEUR	1					
15	2.424-00271	SPOOL ASS`Y-BOOM2	PLUNGEUR	1					
16	2.424-00277	SPOOL ASS'Y-SWING	PLUNGEUR	1					
17	K9001810	SPOOL ASS'Y-OPTION	PLUNGEUR	1					
50	K9001199	PLUG	BOUCHON	1	D				
62	S8000141	O-RING	JOINT TORIQUE	1	K				
63	415-00037	PLUG;ORIFICE	BOUCHON	1					
65	K9004575	O-RING	JOINT TORIQUE	14	K				
66	180-00402	O-RING	JOINT TORIQUE	7	K				
70	420-00259	FOOT RELIFE VALVE	CLAPET DE DECHARGE	2					
72	181-00561	PLUG ASS`Y	BOUCHON	2					
74	S2212266	BOLT;SOCKET	BOULON A 6 PANS CREUX	40					
91	2.181-00269	PLUG	BOUCHON	1					
105	2.181-00323	PLUG ASS`Y	BOUCHON	1					

DATE	AUG. 28, 2009
3rd EDITION	

Fig. 4190 CONTROL VALVE(3) DISTRIBUTEUR

Serial No. ;

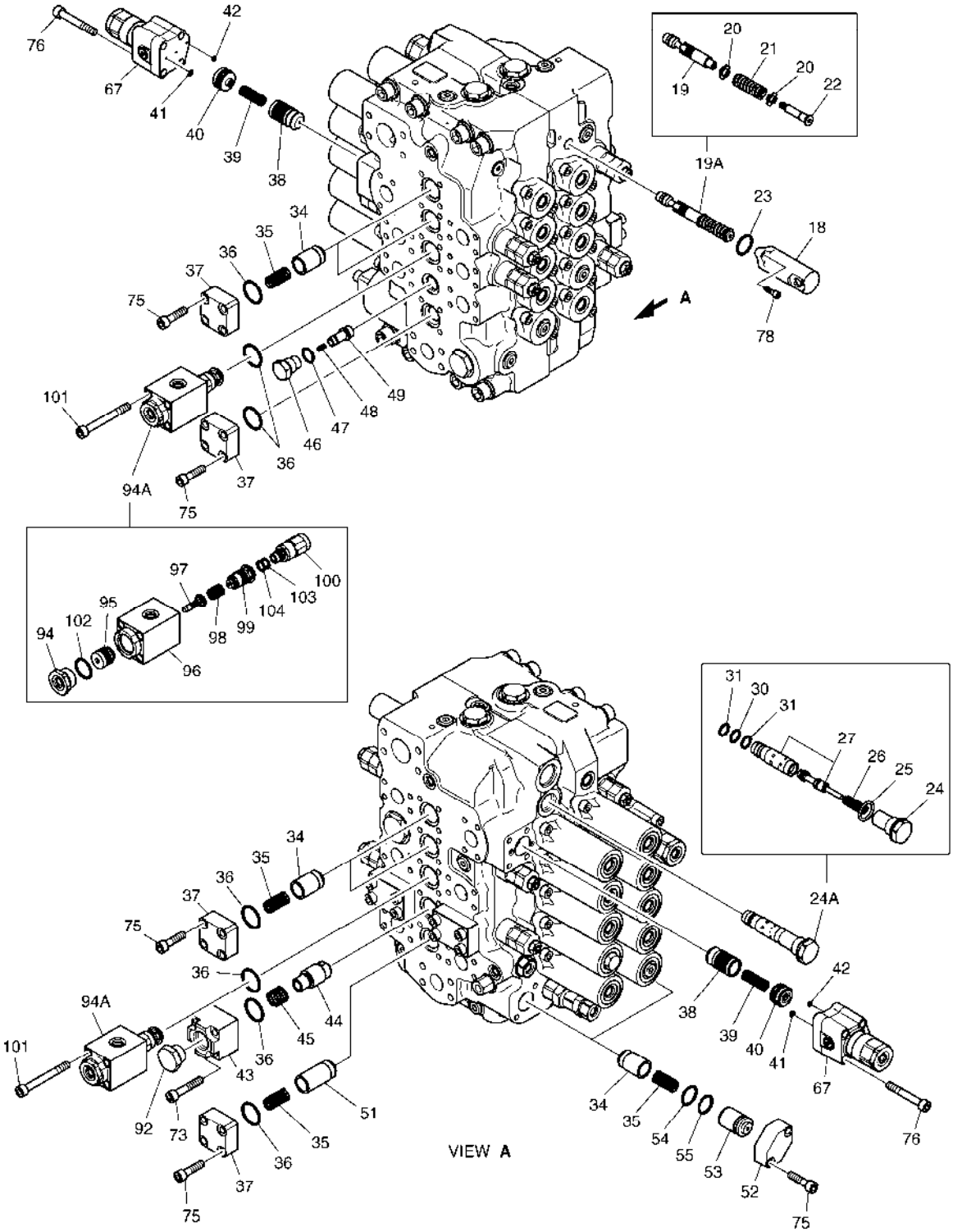

DATE	AUG. 28, 2009
3rd EDITION	

Fig. 4190 CONTROL VALVE(3) DISTRIBUTEUR

Serial No. ;

Key No.	Part No.	Description	Description	Q'ty	S.C	Serial No.	ICA	Replaceable part	
								Part No.	Q'ty
4190 --	K1005097A	VALVE;CONTROL	VANNE	1					
18	430-00038	CAP	CHAPEAU	1					
19A	420-00382	. SP VALVE ASS`Y	. SP VALVE ASS'Y	1					
19	-	SPOOL	BOBINE	1	D				
20	429-00024	SEAT;SPRING	RESSORT	2					
21	129-00124	SPRING	RESSORT	1					
22	430-00040	SPOOL END	PLUNGEUR	1					
23	S8000261	O-RING	JOINT TORIQUE	1	K				
24A	420-00314	. ARM REGEN ASS`Y	. VANNE	1					
24	430-00041	PLUG	BOUCHON	1					
25	S8000241	O-RING	JOINT TORIQUE	1	K				
26	129-00125	SPRING	RESSORT	1					
27	424-00125	SPOOL	PLUNGEUR	1	D				
30	S8000161	O-RING	JOINT TORIQUE	1	K				
31	S8060161	RING;BACK-UP	BAGUE D'ETANCHEITE	2	K				
34	426-00169	POPET	POPET	6					
35	129-00127	SPRING	RESSORT	7					
36	S8000321	O-RING	JOINT TORIQUE	9	K				
37	181-00628	FLANGE	BRIDE	6					
38	426-00170	POPET	POPET	2					
39	129-00128	SPRING	RESSORT	2					
40	114-00411	SPACER ASS`Y	BAGUE D'ECARTEMENT	2					
41	S8000061	O-RING	JOINT TORIQUE	2	K				
42	S8000041	O-RING	JOINT TORIQUE	2	K				
43	181-00630	FLANGE	BRIDE	1					
44	426-00171	POPET	POPET	1					
45	129-00130	SPRING	RESSORT	1					
46	430-00042	PLUG	BOUCHON	1					
47	180-00398	O-RING	JOINT TORIQUE	1	K				
48	129-00129	SPRING	RESSORT	1					
49	426-00172	POPET	POPET	1					
51	426-00173	POPET	POPET	1					
52	181-00631	FLANGE	BRIDE	2					
53	114-00413	SPACER	BAGUE D'ECARTEMENT	2					
54	S8010250	O-RING	JOINT TORIQUE	2	K				
55	180-00445	RING;BACK-UP	BAGUE D'ETANCHEITE	2	K				
67	420-00246	ANTI-DRIFT VALVE ASS`Y	VANNE	2					
73	S2212766	BOLT;SOCKET	BOULON A 6 PANS CREUX	4					

DATE	AUG. 28, 2009
3rd EDITION	

Fig. 4190 CONTROL VALVE(3) DISTRIBUTEUR

Serial No. ;

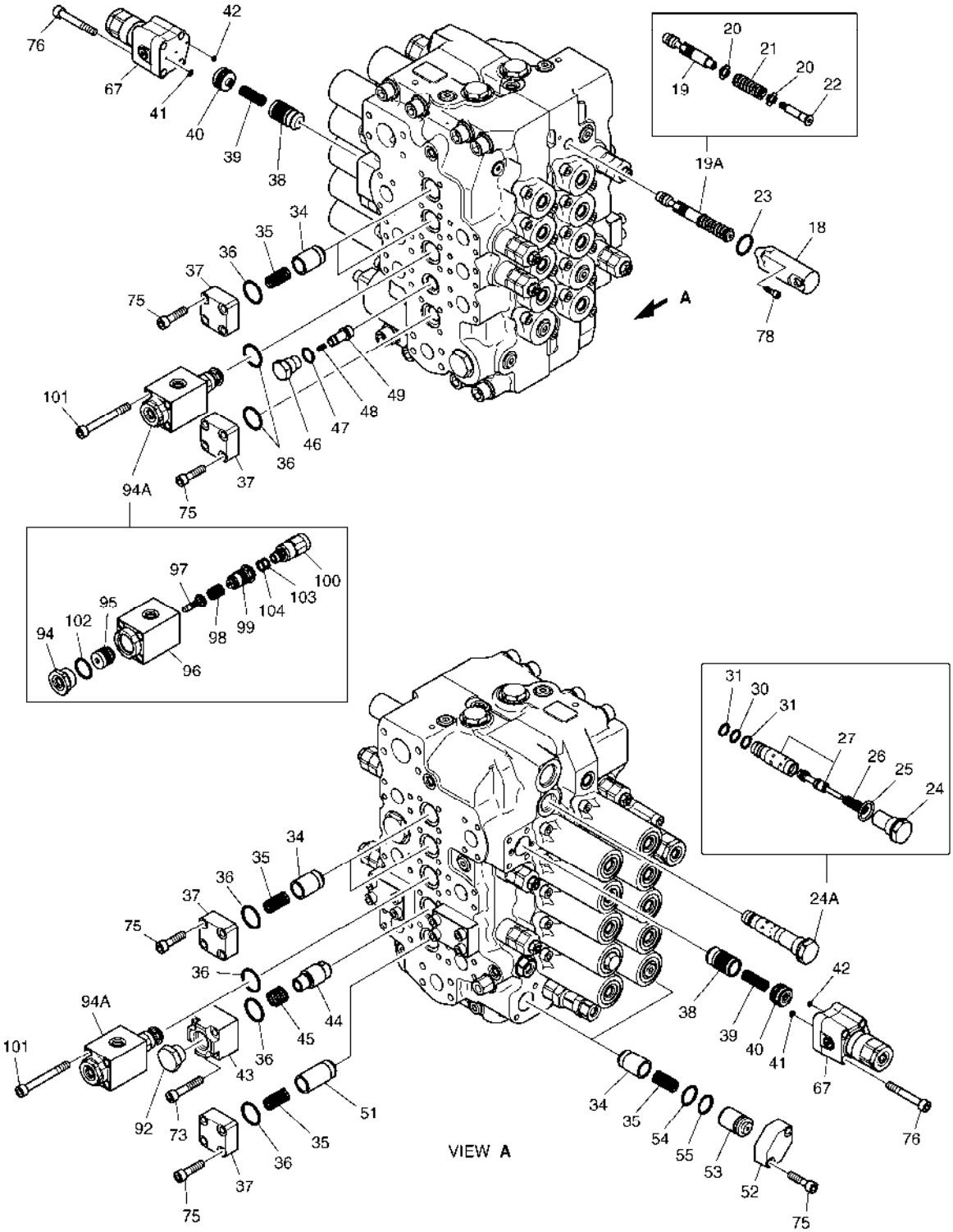

DATE	AUG. 28, 2009
3rd EDITION	

Fig. 4190 CONTROL VALVE(3) DISTRIBUTEUR

Serial No. ;

Key No.	Part No.	Description	Description	Q'ty	S.C	Serial No.	ICA	Replaceable part	
								Part No.	Q'ty
4190 -75	S2212466	BOLT;SOCKET M10X1.5X40	BOULON A 6 PANS CREUX	28					
76	S2213066	BOLT;SOCKET M10X1.5X70	BOULON A 6 PANS CREUX	8					
78	S2204866	BOLT;SOCKET	BOULON A 6 PANS CREUX	2					
92	181-00647	PLUG ASS`Y	BOUCHON	1					
94A	420-00309	. BOOM PRIORITY VALVE	. VANNE	2					
94	430-00045	PLUG	BOUCHON	1					
95	409-00049	PISTON	PISTON	1	D				
96	-	BODY	CARTER	1	D				
97	409-00050	PISTON	PISTON	1	D				
98	129-00139	SPRING	RESSORT	1					
99	-	SLEEVE	MANCHON	1	D				
100	426-00182	POPET ASS`Y	POPET	1					
102	180-00400	O-RING	JOINT TORIQUE	1	K				
103	S8060121	RING;BACK UP	BAGUE D`ETANCHEITE	1	K				
104	S8000121	O-RING	JOINT TORIQUE	1	K				
101	S2213466	BOLT;SOCKET M10X90	BOULON A 6 PANS CREUX	8					

DATE	AUG. 28, 2009
3rd EDITION	

Fig. 4200 REMOTE CONTROL VALVE
VANNE DE COMMAND A DISTANCE

Serial No. ;

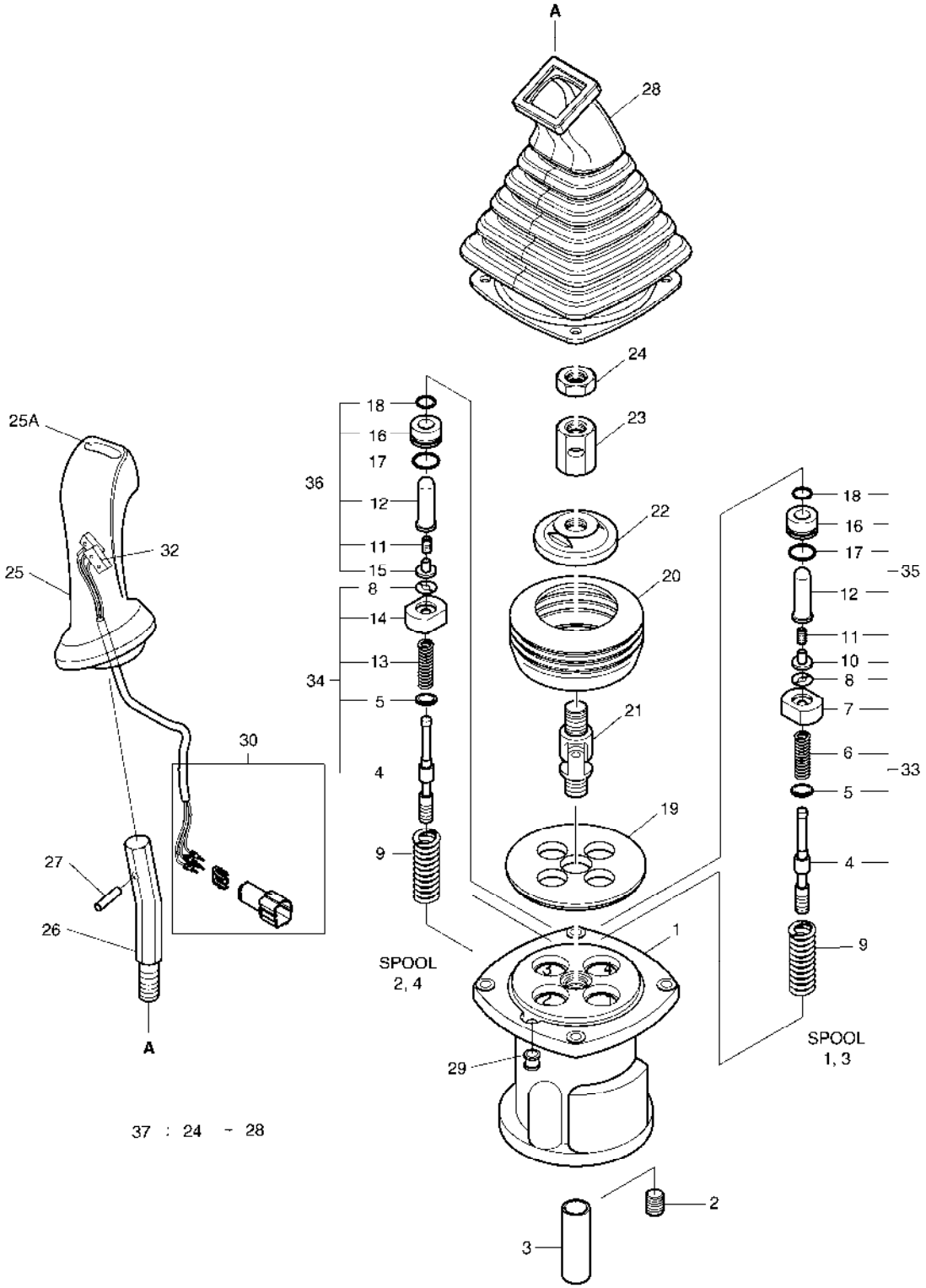

DATE	AUG. 28, 2009
3rd EDITION	

Fig. 4200 REMOTE CONTROL VALVE
VANNE DE COMMAND A DISTANCE

Serial No. ;

Key No.	Part No.	Description	Description	Q'ty	S.C	Serial No.	ICA	Replaceable part	
								Part No.	Q'ty
4200 --	K1000556G	VALVE;REMOCON(L.H)	MANETTE DE CONTROLE	1		5001-5109	I	K1000556H	1
	K1000556H	REMOTE CONTROL VALVE(L.H)	MANETTE DE CONTROLE	1		5110-			
	K1000555G	VALVE;REMOCON(R.H)	MANETTE DE CONTROLE	1		5001-5109	I	K1000555H	1
	K1000555H	REMOTE CONTROL VALVE(R.H)	MANETTE DE CONTROLE	1		5110-			
1	-	CASE	CARTER	1	D				
2	2181-1116D1	PLUG	BOUCHON	4					
3	K9001115	BUSHING	DOUILLE	1					
4	-	SPOOL	BOBINE	4	D				
5	-	SHIM	CALE	1	D				
6	-	SPRING	VIS	2	D				
7	-	SEAT;SPRING	SIEGE	2	D				
8	-	STOPPER	ARRET	4	D				
9	K9001119	SPRING	RESSORT	4					
10	-	STOPPER	ARRET	2	D				
11	-	SPRING	VIS	4	D				
12	-	ROD;PUSH	TIGE DE POUSSOIR	4	D				
13	-	SPRING	VIS	2	D				
14	-	SEAT;SPRING	SIEGE	2	D				
15	-	STOPPER	ARRET	2	D				
16	-	PLUG	BOUCHON	4	D				
17	S8000205	O-RING	JOINT TORIQUE	4					
18	K9001127	SEAL;ROD	TIGE D`ETANCHEITE	4					
19	1.412-00017	PLATE	PLAQUE	1					
20	K9001128	BOOT	BOTTE	1					
21	1.138-00004	JOINT ASS`Y	ENSEMBLE DE JOINT	1					
22	K9001129	PLATE;SWASH	PLAQUE	1					
23	1.121-00028	NUT	ECROU	1					
24	S4012833	NUT	ECROU	1					
25	K9001130	HANDLE ASS`Y(L.H)	HANDLE	1					
	K9001131	HANDLE ASS`Y(R.H)	HANDLE	1					
25A	1.161-00021	. CAP;PEANUT	. CHAPEAU	1					
26	1.178-00004	BAR;HANDLE	JAGUE DE NIVEAU	1					
27	S5740800	PIN;SPRING	GOUPILLE	1					
28	K9001132	BELLOWS	SOUFFLET	1					
29	1.110-00169	BUSHING	DOUILLE	1					
30	K9001133	CONNECTOR ASS`Y	CONNECTOR	1					
32	K9001001	SWITCH ASS`Y	INTERRUPTEUR	1					
33	K9003998	KIT;SPOOL(1,3)	KIT DE BOBINE	1					

DATE	AUG. 28, 2009
3rd EDITION	

Fig. 4200 REMOTE CONTROL VALVE
VANNE DE COMMAND A DISTANCE

Serial No. ;

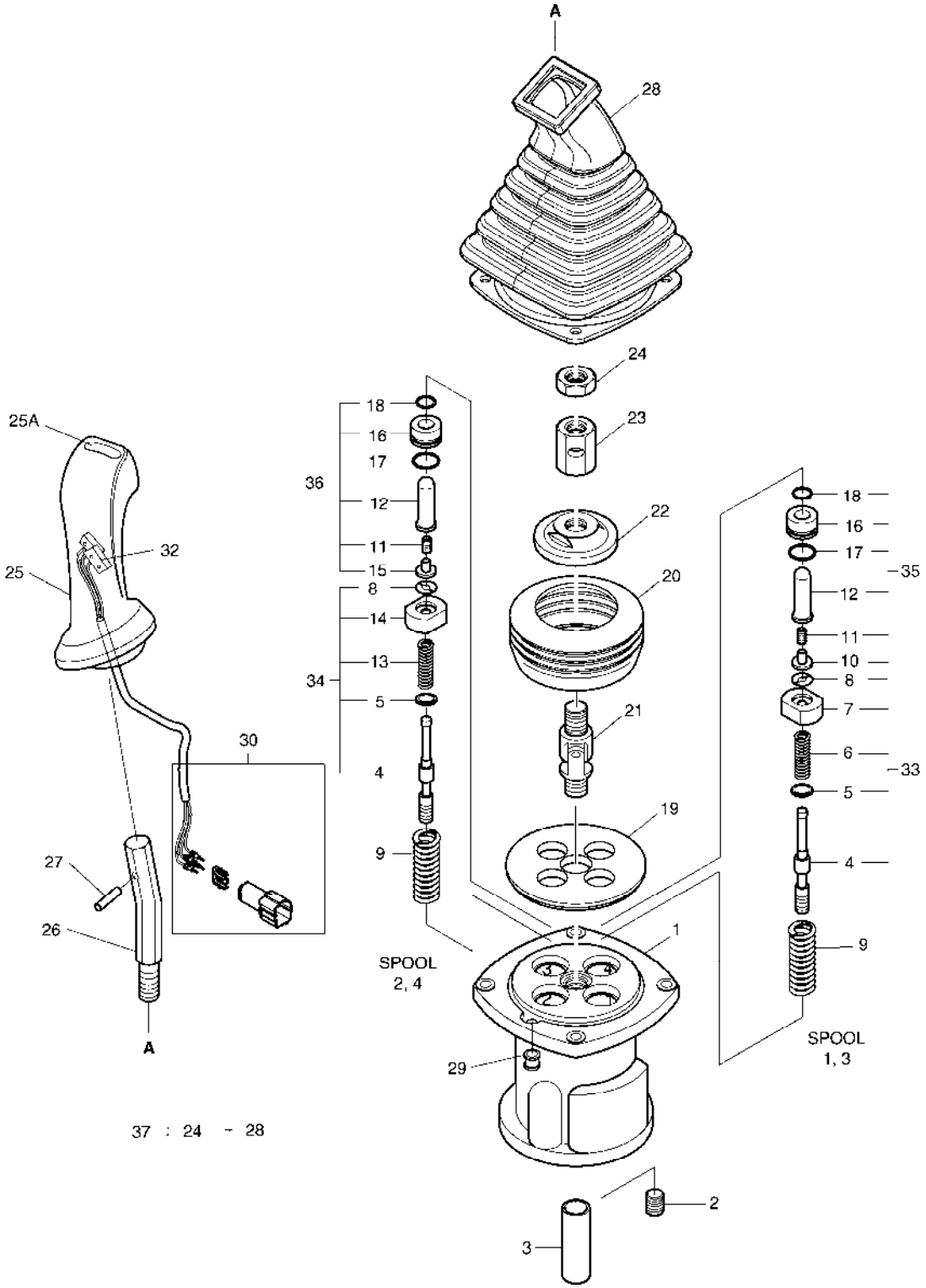

DATE	AUG. 28, 2009
3rd EDITION	

Fig. 4200 REMOTE CONTROL VALVE
VANNE DE COMMAND A DISTANCE

Serial No. ;

Key No.	Part No.	Description	Description	Q'ty	S.C	Serial No.	ICA	Replaceable part	
								Part No.	Q'ty
4200 -34	K9003999	KIT;SPOOL(2,4)	KIT DE BOBINE	1					
35	K9004000	KIT;PLUG(1,3)	KIT DE PRISE	1		5001-5109			
	K9006480	KIT;PLUG(1,3)	KIT	1		5110-			
36	K9004001	KIT;PLUG(2,4)	KIT DE PRISE	1		5001-5109			
	K9006481	KIT;PLUG(2,4)	KIT	1		5110-			
37	K9001139	KIT;HANDLE(R.H)	KIT DE POIGN?E	1					
	K9001140	KIT;HANDLE(L.H)	KIT DE POIGN?E	1					

DATE	AUG. 28, 2009
3rd EDITION	

Fig. 4210 PEDAL VALVE VANNE

Serial No. ; 5001 ~ 5109

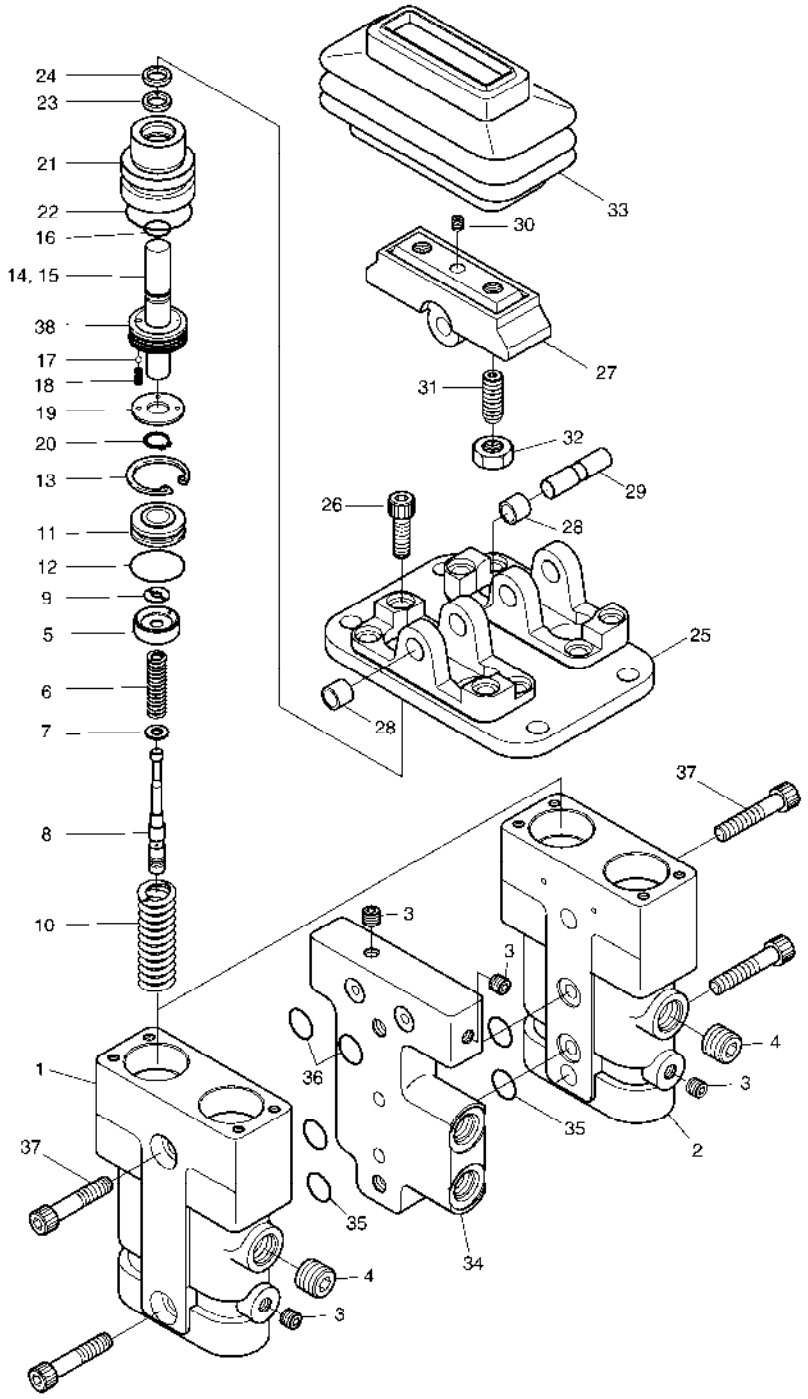

DATE	AUG. 28, 2009
3rd EDITION	

Fig. 4210 PEDAL VALVE VANNE

Serial No. ; 5001 ~ 5109

Key No.	Part No.	Description	Description	Q'ty	S.C	Serial No.	ICA	Replaceable part	
								Part No.	Q'ty
4210 --	420-00467	VALVE;PEDAL	VANNE	1		5001-5109			
1	423-00046	BODY(1)	CARTER	1	D				
2	423-00047	BODY(2)	CARTER	1	D				
3	2181-1116D1	PLUG	BOUCHON	4					
4	2181-1116D3	PLUG;HEX. SOCKET	BOUCHON	2					
5	429-00004	SEAT;SPRING	SIEGE	4					
6	K9001141	SPRING	RESSORT	4					
7	429-00005	SEAT;SPRING	SIEGE	4					
8	424-00042	SPOOL	PLUNGEUR	4					
9	161-00080	STOPPER	CHAPEAU	4					
10	129-00042	SPRING	RESSORT	4					
11	429-00006	GUIDE;ROD	GARDE	4					
12	S8000221	O-RING	JOINT TORIQUE	4	K				
13	1.229-00036	RING;SNAP	BAGUE	4					
14	1.454-00001	ROD;PUSH	TIGE DE POUSSOIR	4					
15	S5740480	PIN;SPRING	GOUJON	4					
16	180-00197	SEAL	JOINT	4	K				
17	S6250110	BALL;STEEL	BILLE	4					
18	129-00043	SPRING	RESSORT	4					
19	159-00017	PLATE	PLAQUE	4					
20	115-00042	RING;SNAP	BAGUE	4					
21	181-00319	PLUG	BOUCHON	4					
22	S8010251	O-RING	JOINT TORIQUE	4	K				
23	180-00198	SEAL;ROD	TIGE D'ETANCHEITE	4	K				
24	180-00199	SEAL;DUST	BAGUE D'ETANCHEITE	4	K				
25	K9001142	COVER	COUVERCLE	1					
26	S2205261	BOLT;WRENCH M6X1.0X30	BOULON A 6 PANS CREUX	4					
27	354-00002	CAM	CAME	2					
28	2110-1184D7	BUSH;DU 10X10	BAGUE	4					
29	354-00003	SHAFT;CAM	ARBRE A CAMES	2					
30	S3523608	SCREW;SET	VIS	2					
31	120-00127	SCREW;SET	VIS	4					
32	S4014633	NUT M10	ECROU	4					
33	160-00008	BELLOW	SOUFFLET	2					
34	114-00225	SPACER	BAGUE D'ECARTEMENT	1					
35	S8000121	O-RING	JOINT TORIQUE	4	K				
36	S8000101	O-RING	JOINT TORIQUE	2	K				
37	S2212461	BOLT;SOCKET M10X1.5X40	BOULON A 6 PANS CREUX	4					

DATE	AUG. 28, 2009
3rd EDITION	

Fig. 4210 PEDAL VALVE VANNE

Serial No. ; 5001 ~ 5109

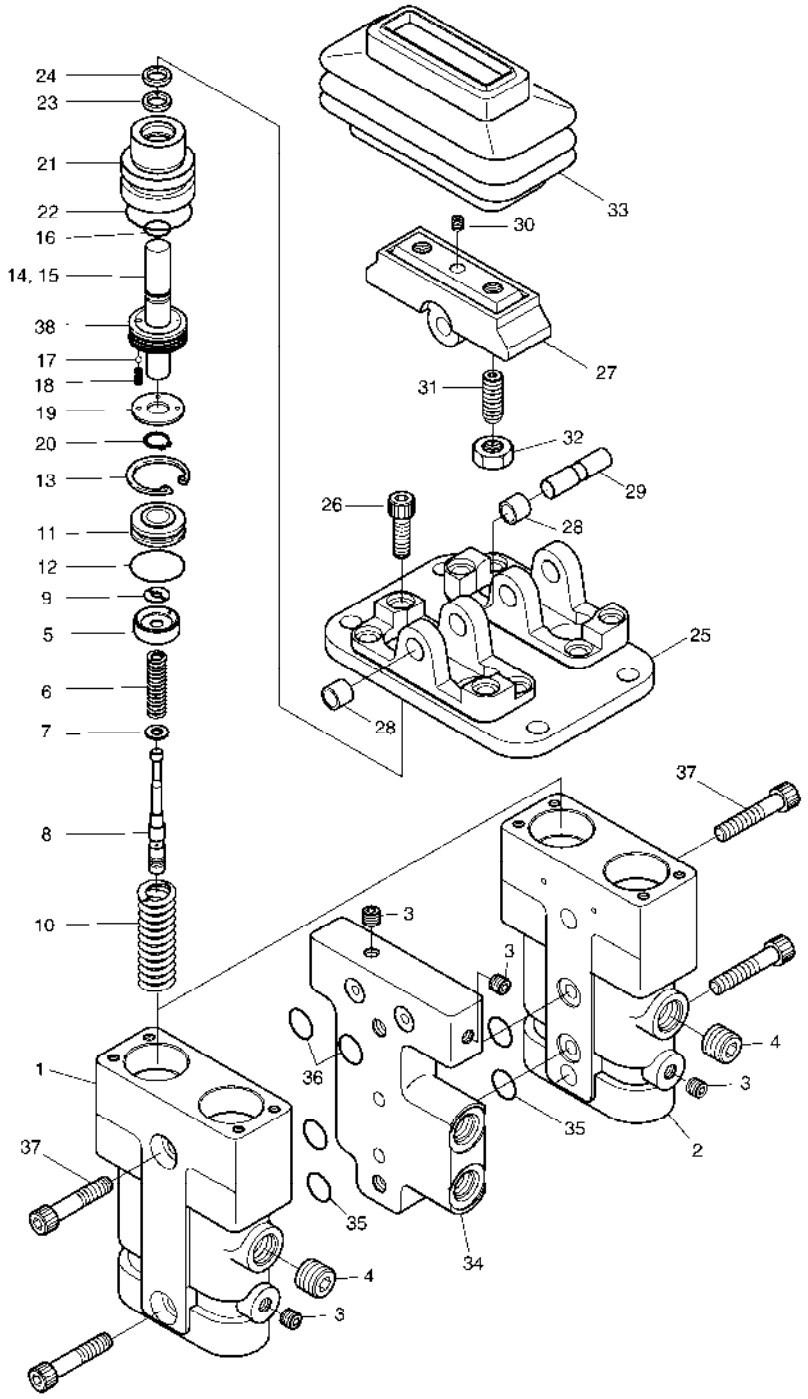

DATE	AUG. 28, 2009
3rd EDITION	

Fig. 4210 PEDAL VALVE VANNE

Serial No. ; 5001 ~ 5109

Key No.	Part No.	Description	Description	Q'ty	S.C	Serial No.	ICA	Replaceable part	
								Part No.	Q'ty
4210 -38	1.409-00225	PISTON	PISTON	4					
*	420-00453KT	SEAL KIT;PEDAL VALVE	KIT DE JOINT	1					

DATE	AUG. 28, 2009
3rd EDITION	

Fig. 4211 PEDAL VALVE VANNE

Serial No. ; 5110 ~

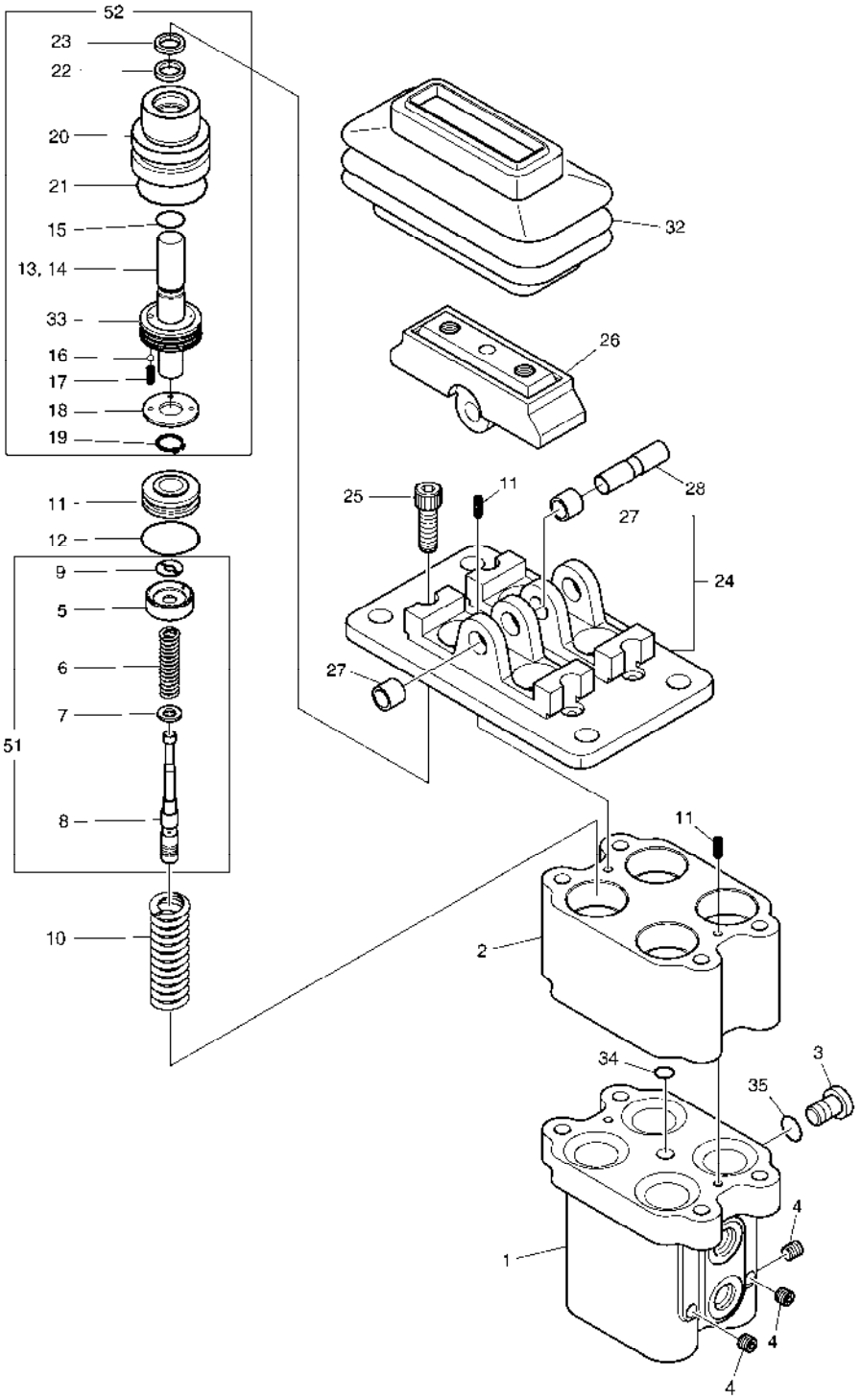

DATE	AUG. 28, 2009
3rd EDITION	

Fig. 4211 PEDAL VALVE VANNE

Serial No. ; 5110 ~

Key No.	Part No.	Description	Description	Q'ty	S.C	Serial No.	ICA	Replaceable part	
								Part No.	Q'ty
4211 --	420-00467A	VALVE;PEDAL	VANNE	1		5110-			
1	-	BODY	CARTER	1	D				
2	-	BODY	CARTER	1	D				
3	420-00112	PLUG	BOUCHON	1					
4	2181-1116D1	PLUG	BOUCHON	3					
51	K9006863	KIT;SPOOL	PLUNGEUR	4					
5	429-00004	SEAT;SPRING	SIEGE	4					
6	K9001141	SPRING	RESSORT	4					
7	429-00005	SEAT;SPRING	SIEGE	4					
8	424-00042	SPOOL	PLUNGEUR	4					
9	161-00080	STOPPER	CHAPEAU	4					
10	K9006860	SPRING	RESSORT	4					
11	S5740600	PIN;SPRING	GOUJON	4					
12	S8000261	O-RING	JOINT TORIQUE	4					
52	K9006864	KIT;PLUG	KIT	4					
13	-	ROD;PUSH	TIGE DE POUSSOIR	4	D				
14	S5740480	PIN;SPRING	GOUJON	4					
15	-	SEAL	JOINT	4	D				
16	148-00012	BALL;SPEEL	BILLE	4					
17	129-00043	SPRING	RESSORT	4					
18	159-00017	PLATE	PLAQUE	4					
19	115-00042	RING;SNAP	BAGUE	4					
20	-	PLUG	BOUCHON	4	D				
21	S8010251	O-RING	JOINT TORIQUE	4					
22	180-00198	SEAL;ROD	TIGE D'ETANCHEITE	4					
23	180-00199	SEAL;DUST	BAGUE D'ETANCHEITE	4					
33	1.409-00225	PISTON	PISTON	4					
24	K9006865	KIT;COVER	COUVERCLE	1					
27	2110-1184D7	BUSH;DU 10X10	BAGUE	4					
25	S2210071	BOLT;SOCKET	BOULON DE PLOT	4					
26	K9006866	KIT;CAM	CAME	2					
28	K9006861	SHAFT;CAM	ARBRE A CAMES	2					
32	K9006862	BELLOWS	SOUFFLET	2					
34	S8000081	O-RING	JOINT TORIQUE	1					
35	S8000111	O-RING	JOINT TORIQUE	1					

DATE	AUG. 28, 2009
3rd EDITION	

Fig. 4220 SOLENOID VALVE VANNE

Serial No. ;

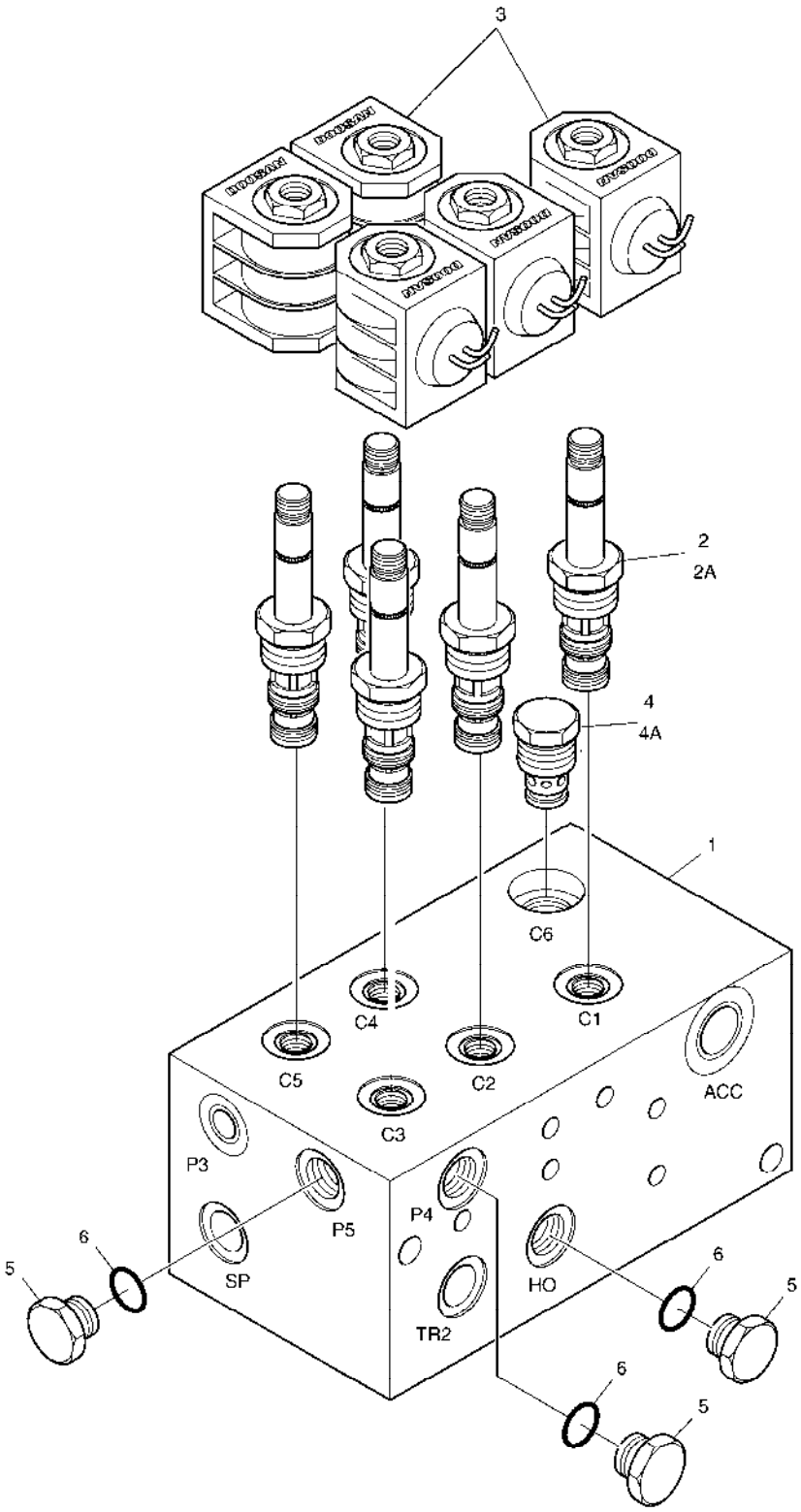

DATE	AUG. 28, 2009
3rd EDITION	

Fig. 4220 SOLENOID VALVE VANNE

Serial No. ;

Key No.	Part No.	Description	Description	Q'ty	S.C	Serial No.	ICA	Replaceable part	
								Part No.	Q'ty
4220 --	K1012576	VALVE;SOLENOID	VANNE SOLENOIDE	1					
1	-	BLOCK	BLOC	1	D				
2	K9001354	SPOOL;SOLENOID	SOUPAPE A SOLENOIDE	5					
2A	K9001943	. SEAL KIT	. KIT D`ETANCHEITE	1					
3	1.519-00001	COIL	COIL	5					
4	K9002065	VALVE;CHECK	VANNE	1					
4A	1.180-00447	. KIT;SEAL	. KIT DE JOINT	1					
5	2181-1950D1	PLUG	BOUCHON	3					
6	S8000111	O-RING	JOINT TORIQUE	3					

DATE	AUG. 28, 2009
3rd EDITION	

Fig. 4230 BOOM CYLINDER - L.H. VERIN DE FLECHE

Serial No. ;

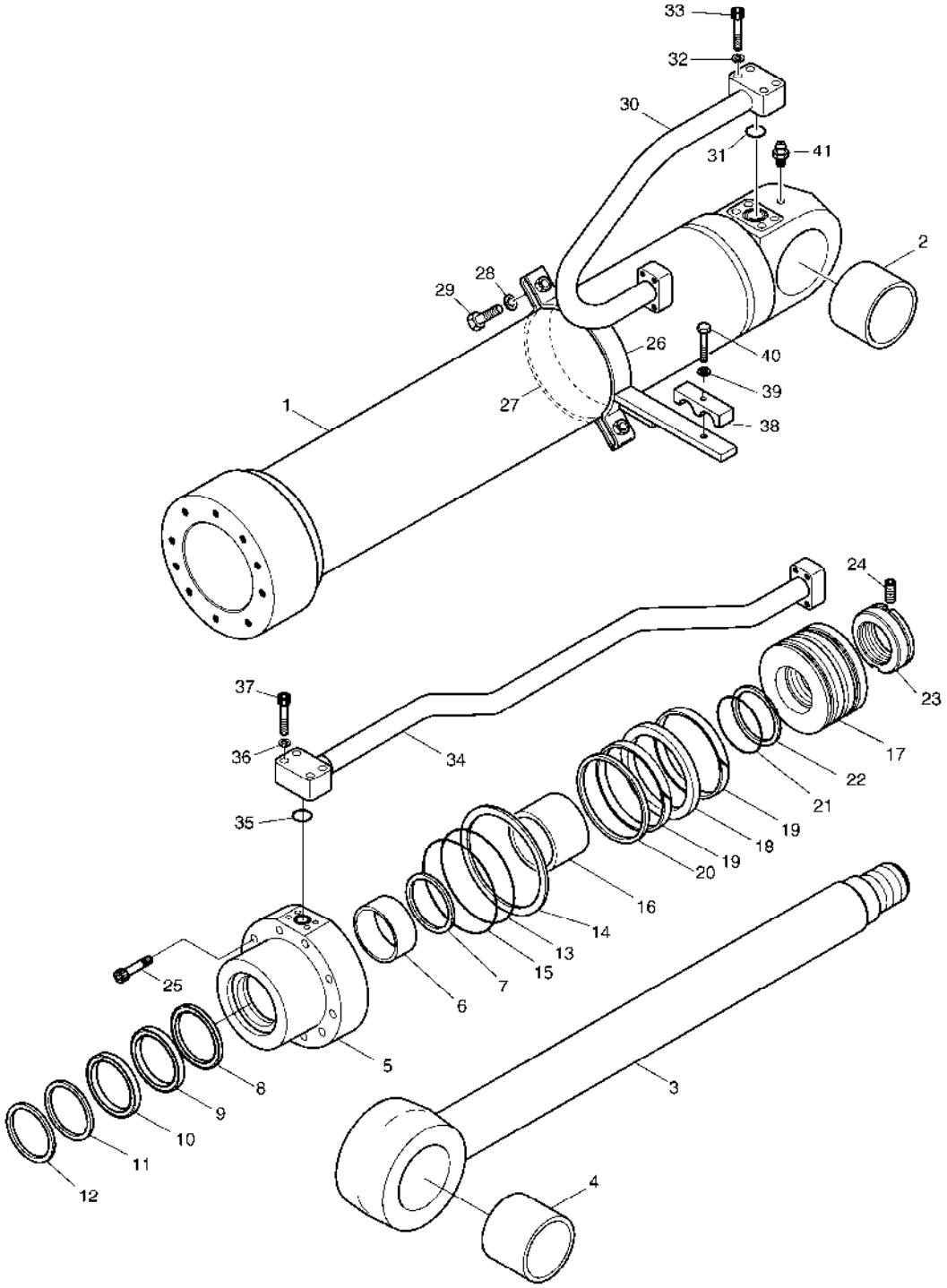

DATE	AUG. 28, 2009
3rd EDITION	

Fig. 4230 BOOM CYLINDER - L.H. VERIN DE FLECHE

Serial No. ;

Key No.	Part No.	Description	Description	Q'ty	S.C	Serial No.	ICA	Replaceable part	
								Part No.	Q'ty
4230 --	K1011026	CYLINDER;BOOM(L.H)	VERIN DE FLECHE	1					
1	K9004889	TUBE ASS'Y	TUYAU FLEXIBLE	1					
2	K1010028	BUSH	DOUILLE	1					
3	K9004890	ROD ASS'Y	ENSEMBLE TIGE	1					
4	K1010028	BUSH	DOUILLE	1					
5	K9004891	COVER;ROD	COUVERCLE	1					
6	110-00080	DD-BUSH	DOUILLE	1					
7	115-00063	RING;RETAINING	RONDELLE DE RETENUE	1					
8	1.180-00657	SEAL;BUFFER	ETANCHEITE	1	K				
9	K9001153	U-PACKING	JOINT EN U	1	K				
10	K9001154	RING;BACK UP	BAGUE	1	K				
11	115-00072	WIPER;DUST	RACCORD ADAPTATEUR	1	K				
12	115-00073	RING;RETAINING	BAGUE	1					
13	S8011251	O-RING	JOINT TORIQUE	1	K				
14	180-00266	RING;BACK-UP	BAGUE	1	K				
15	S8011301	O-RING	JOINT TORIQUE	1	K				
16	K9004886	RING;CUSHION	BAGUE	1					
17	K9004892	PISTON	PISTON	1					
18	K9004898	SEAL;SLIPPER	JOINT	1	K				
19	115-00074	RING;WEAR	BAGUE D'USURE	1	K				
20	K9004887	RING;DUST	BAGUE	2	K				
21	S8010701	O-RING	JOINT TORIQUE	1	K				
22	K9001156	RING;BACK UP	BAGUE	2	K				
23	121-00045	NUT;PISTON	ECROU	1					
24	S3523836	SCREW;SET	VIS	1					
25	S2222171	BOLT;HEX. SOCKET	BOULON A 6 PANS CREUX	10					
26	K9004893	PIPE BAND ASS'Y	ENSEMBLE DE BANDE DE	1					
27	124-00056	BAND;PIPE	ATTACHE	1					
28	S5100603	WASHER;SPRING	RONDELLE ELASTIQUE	2					
29	S0558153	BOLT	BOULON A 6 PANS	2					
30	K9004895	PIPE ASS'Y-H(L.H)	ENSEMBLE DE TUYAU	1					
31	S8000341	O-RING	JOINT TORIQUE	1					
32	S5100603	WASHER;SPRING	RONDELLE ELASTIQUE	4					
33	S2212761	BOLT;HEX. SOCKET	BOULON A 6 PANS CREUX	4					
34	K9004897	PIPE ASS'Y-R(L.H)	ENSEMBLE DE TUYAU	1					
35	S8000281	O-RING	JOINT TORIQUE	1					
36	S5100603	WASHER;SPRING	RONDELLE ELASTIQUE	4					
37	S2212761	BOLT;HEX. SOCKET	BOULON A 6 PANS CREUX	4					

DATE	AUG. 28, 2009
3rd EDITION	

Fig. 4230 BOOM CYLINDER - L.H. VERIN DE FLECHE

Serial No. ;

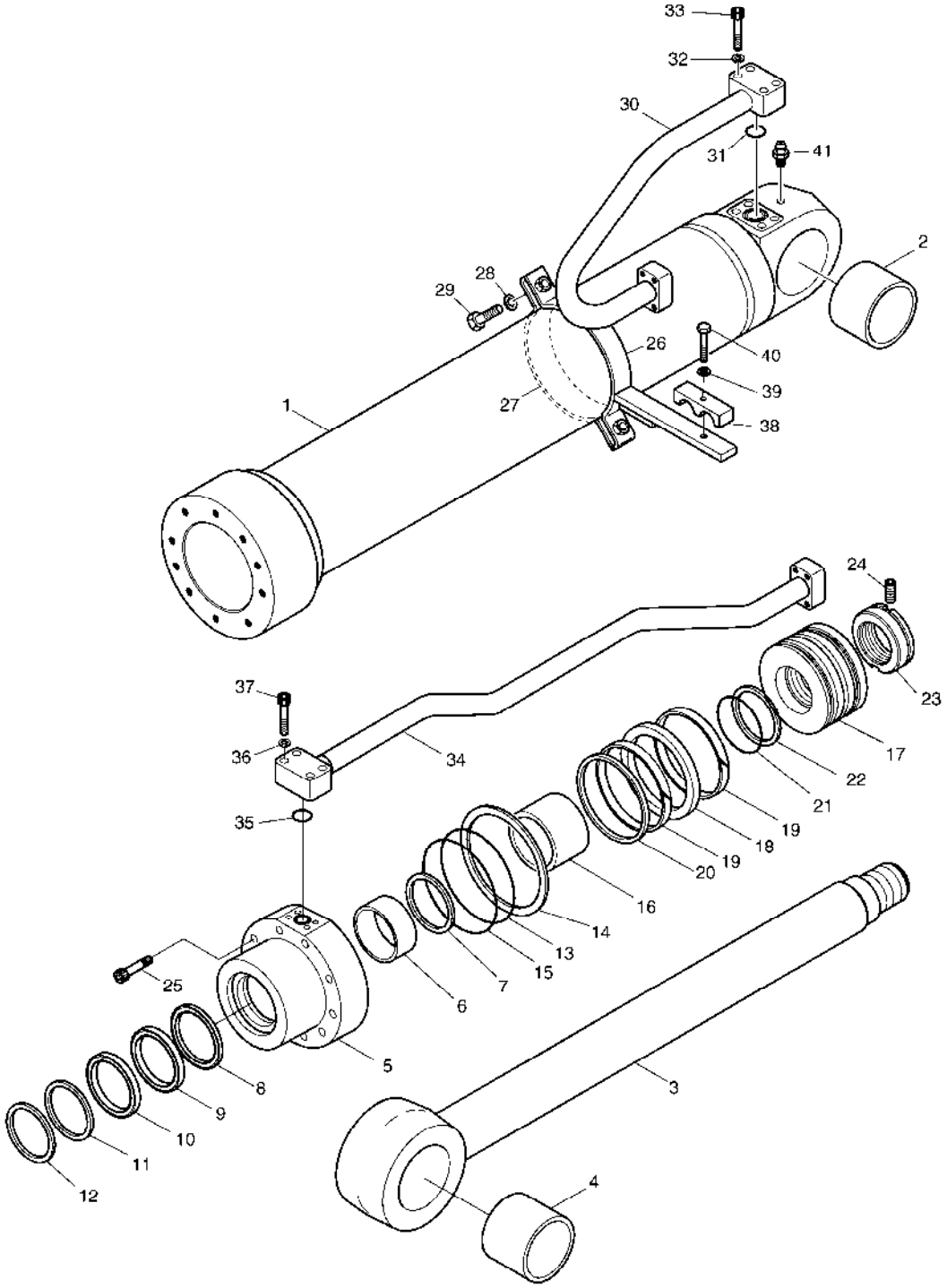

DATE	AUG. 28, 2009
3rd EDITION	

Fig. 4230 BOOM CYLINDER - L.H. VERIN DE FLECHE

Serial No. ;

Key No.	Part No.	Description	Description	Q'ty	S.C	Serial No.	ICA	Replaceable part	
								Part No.	Q'ty
4230 -38	124-00058	CLAMP;PIPE	COLLIER	1					
39	S5100703	WASHER;SPRING	RONDELLE ELASTIQUE	1					
40	S0561053	BOLT M12X1.75X65	BOULON A 6 PANS	1					
41	S6710032	NIPPLE;GREASE	GRAISSEUR	1					
*	K9004899	SEAL KIT	KIT D'ETANCHEITE	1					

DATE	AUG. 28, 2009
3rd EDITION	

Fig. 4240 BOOM CYLINDER - R.H.
VERIN DE FLECHE

Serial No. ;

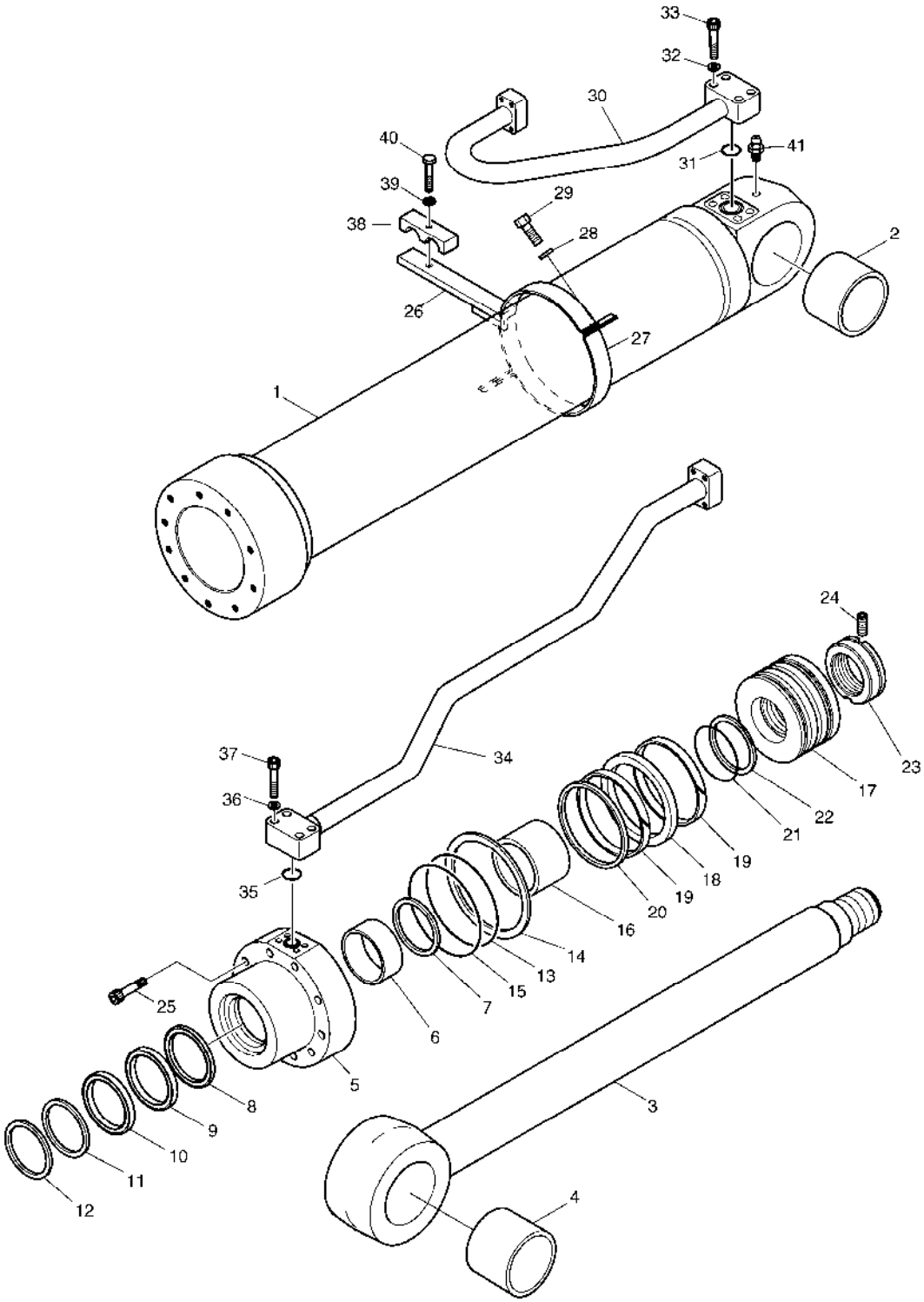

DATE	AUG. 28, 2009
3rd EDITION	

Fig. 4240 BOOM CYLINDER - R.H. VERIN DE FLECHE

Serial No. ;

Key No.	Part No.	Description	Description	Q'ty	S.C	Serial No.	ICA	Replaceable part	
								Part No.	Q'ty
4240 --	K1011027	CYLINDER;BOOM(R.H)	VERIN DE FLECHE	1					
1	K9004889	TUBE ASS'Y	TUYAU FLEXIBLE	1					
2	K1010028	BUSH	DOUILLE	1					
3	K9004890	ROD ASS'Y	ENSEMBLE TIGE	1					
4	K1010028	BUSH	DOUILLE	1					
5	K9004891	COVER;ROD	COUVERCLE	1					
6	110-00080	DD-BUSH	DOUILLE	1					
7	115-00063	RING;RETAINING	RONDELLE DE RETENUE	1					
8	1.180-00657	SEAL;BUFFER	ETANCHEITE	1	K				
9	K9001153	U-PACKING	JOINT EN U	1	K				
10	K9001154	RING;BACK UP	BAGUE	1	K				
11	115-00072	WIPER;DUST	RACCORD ADAPTATEUR	1	K				
12	115-00073	RING;RETAINING	BAGUE	1					
13	S8011251	O-RING	JOINT TORIQUE	1	K				
14	180-00266	RING;BACK-UP	BAGUE	1	K				
15	S8011301	O-RING	JOINT TORIQUE	1	K				
16	K9004886	RING;CUSHION	BAGUE	1					
17	K9004892	PISTON	PISTON	1					
18	K9004898	SEAL;SLIPPER	JOINT	1	K				
19	115-00074	RING;WEAR	BAGUE D'USURE	1	K				
20	K9004887	RING;DUST	BAGUE	2	K				
21	S8010701	O-RING	JOINT TORIQUE	1	K				
22	K9001156	RING;BACK UP	BAGUE	2	K				
23	121-00045	NUT;PISTON	ECROU	1					
24	S3523836	SCREW;SET	VIS	1					
25	S2222171	BOLT;HEX. SOCKET	BOULON A 6 PANS CREUX	10					
26	K9004893	PIPE BAND ASS'Y	ENSEMBLE DE BANDE DE	1					
27	124-00056	BAND;PIPE	ATTACHE	1					
28	S5100603	WASHER;SPRING	RONDELLE ELASTIQUE	2					
29	S0558153	BOLT	BOULON A 6 PANS	2					
30	K9004894	PIPE ASS'Y-H(R.H)	ENSEMBLE DE TUYAU	1					
31	S8000341	O-RING	JOINT TORIQUE	1					
32	S5100603	WASHER;SPRING	RONDELLE ELASTIQUE	4					
33	S2212761	BOLT;HEX. SOCKET	BOULON A 6 PANS CREUX	4					
34	K9004896	PIPE ASS'Y-R(R.H)	ENSEMBLE DE TUYAU	1					
35	S8000281	O-RING	JOINT TORIQUE	1					
36	S5100603	WASHER;SPRING	RONDELLE ELASTIQUE	4					
37	S2212761	BOLT;HEX. SOCKET	BOULON A 6 PANS CREUX	4					

DATE	AUG. 28, 2009
3rd EDITION	

Fig. 4240 BOOM CYLINDER - R.H. VERIN DE FLECHE

Serial No. ;

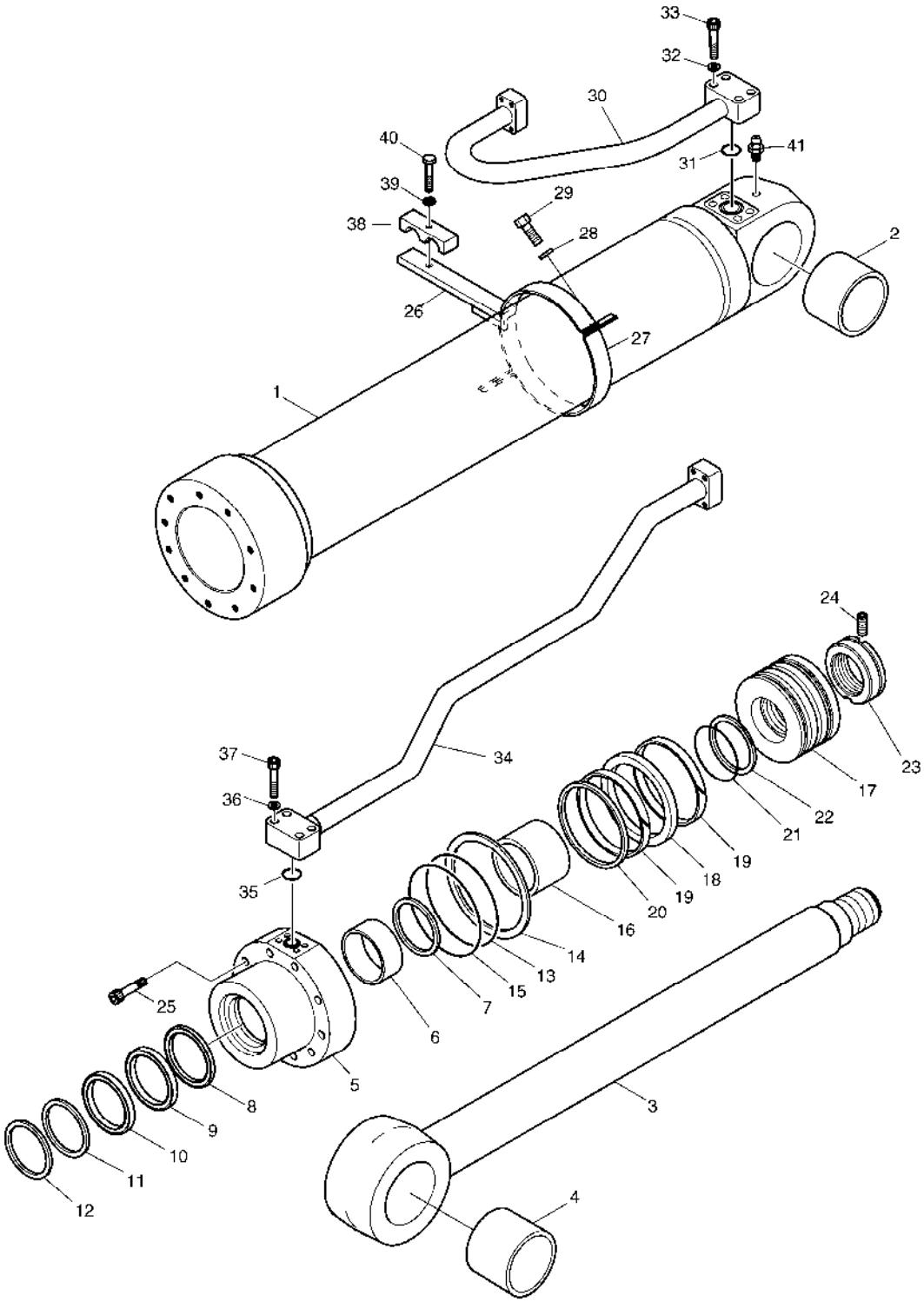

DATE	AUG. 28, 2009
3rd EDITION	

Fig. 4240 BOOM CYLINDER - R.H.
VERIN DE FLECHE

Serial No. ;

Key No.	Part No.	Description	Description	Q'ty	S.C	Serial No.	ICA	Replaceable part	
								Part No.	Q'ty
4240 -38	124-00058	CLAMP;PIPE	COLLIER	1					
39	S5100703	WASHER;SPRING	RONDELLE ELASTIQUE	1					
40	S0561053	BOLT M12X1.75X65	BOULON A 6 PANS	1					
41	S6710032	NIPPLE;GREASE	GRAISSEUR	1					
*	K9004899	SEAL KIT	KIT D'ETANCHEITE	1					

DATE	AUG. 28, 2009
3rd EDITION	

Fig. 4250 ARM CYLINDER VERIN DE BALANCIER

Serial No. ;

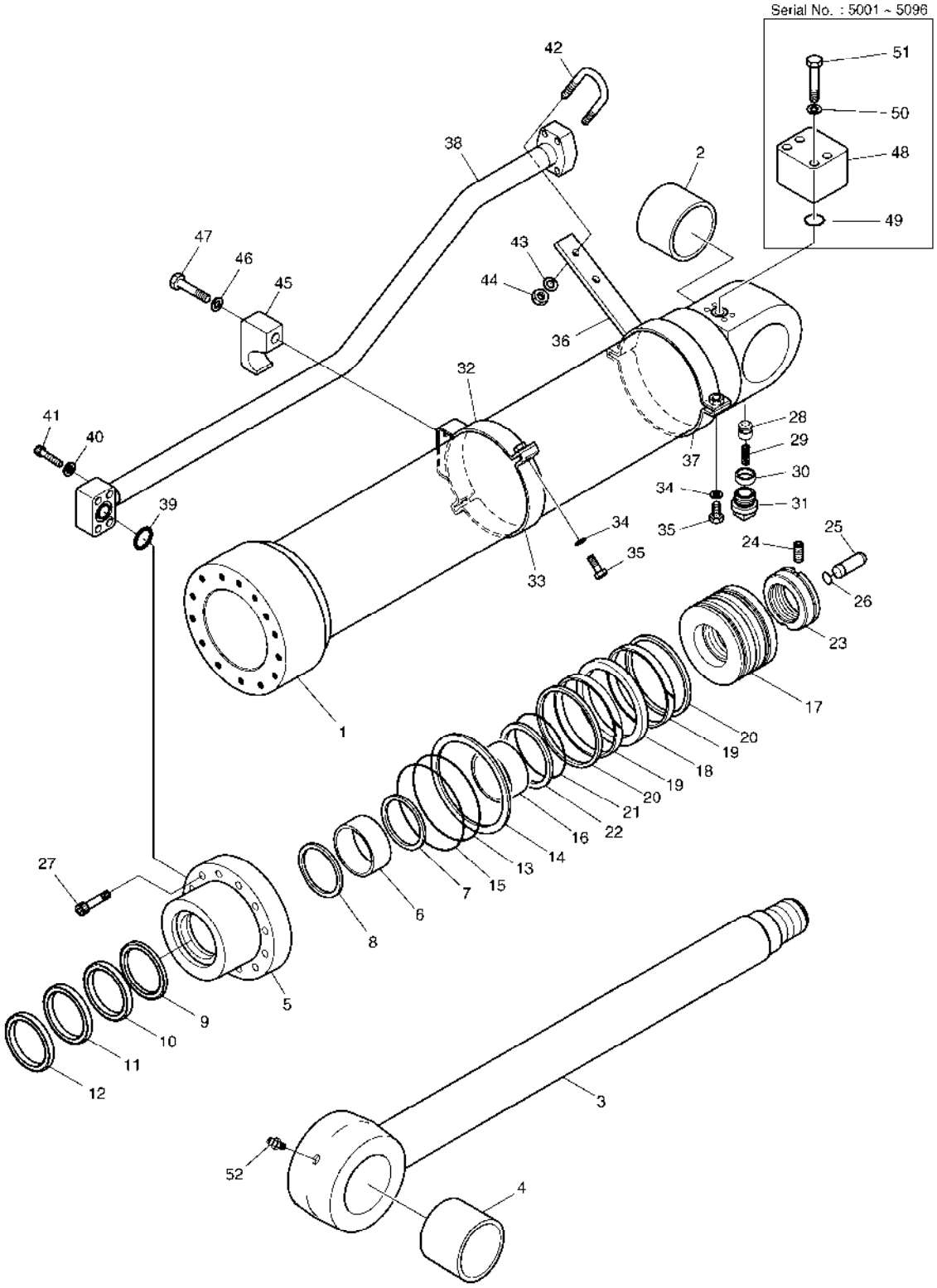

DATE	AUG. 28, 2009
3rd EDITION	

Fig. 4250 ARM CYLINDER VERIN DE BALANCIER

Serial No. ;

Key No.	Part No.	Description	Description	Q'ty	S.C	Serial No.	ICA	Replaceable part	
								Part No.	Q'ty
4250 --	K1011028	CYLINDER;ARM	VERIN DE BALANCIER	1		5001-5096			
	K1011028A	CYLINDER;ARM	VERIN DE BALANCIER	1		5097-			
1	K9004916	TUBE ASS'Y	TUYAU FLEXIBLE	1					
2	K1000737	BUSH	BUSH	1					
3	K9004917	ROD ASS'Y	ENSEMBLE TIGE	1					
4	K1000737	BUSH	BUSH	1					
5	K9001881	ROD;COVER	TIGE	1					
6	110-00081	DD-BUSH	COUSSINET	1					
7	115-00073	RING;RETAINING	BAGUE	1					
8	K9001882	SEAL;BUFFER	ETANCHEITE A GRADINS	1	K				
9	K9001883	U-PACKING	JOINT EN U	1	K				
10	K9001884	RING;BACK UP	BAGUE ANTIEXTRUSION	1	K				
11	115-00077	WIPER;DUST	PARE-POUSSIERE	1	K				
12	115-00078	RING;RETAINING	ANNEAU DE SOUTIEN	1					
13	S8011351	O-RING	JOINT TORIQUE	1	K				
14	1.180-00662	RING;BACK UP	BAGUE ANTIEXTRUSION	1	K				
15	2180-1217D96	O-RING	JOINT TORIQUE	1	K				
16	K9001893	RING;CUSHION	BAGUE D'AMORTISSEMEN	1					
17	K9001894	PISTON	PISTON	1					
18	K9001148	SEAL;SLIPPER	PATIN D'ETANCHEITE	1	K				
19	115-00079	RING;WEAR	SEGMENT D'USURE	2	K				
20	K9001149	RING;DUST	BAGUE	2	K				
21	S8010801	O-RING	JOINT TORIQUE	1	K				
22	K9001895	RING;BACK UP	BAGUE ANTIEXTRUSION	2	K				
23	121-00044	NUT;PISTON	ECROU	1					
24	S3523836	SCREW;SET	VIS	1					
25	K9001897	PLUNGER;CUSHION	BOBINE	1					
26	115-00081	RING;STOP	BAGUE D'ARRET	1					
27	S2222272	BOLT;SOCKET	BOULON A 6 PANS CREUX	14					
28	420-00131	VALVE;CHECK	VANNE	1					
29	129-00071	SPRING	RESSORT	1					
30	1.195-00022	SUPPORT;SPRING	SUPPORT	1					
31	2181-1116D3	PLUG;HEX. SOCKET	BOUCHON	1					
32	K9001899	PIPE BAND ASS'Y-A	ENSEMBLE DE FIXATION	1					
33	124-00052	BAND;PIPE	ATTACHE	1					
34	S5100703	WASHER;SPRING	RONDELLE ELASTIQUE	4					
35	S0560563	BOLT;HEX	BOULON A 6 PANS	4					
36	K9001898	PIPE BAND ASS'Y-B	ENSEMBLE DE FIXATION	1					

DATE	AUG. 28, 2009
3rd EDITION	

Fig. 4250 ARM CYLINDER VERIN DE BALANCIER

Serial No. ;

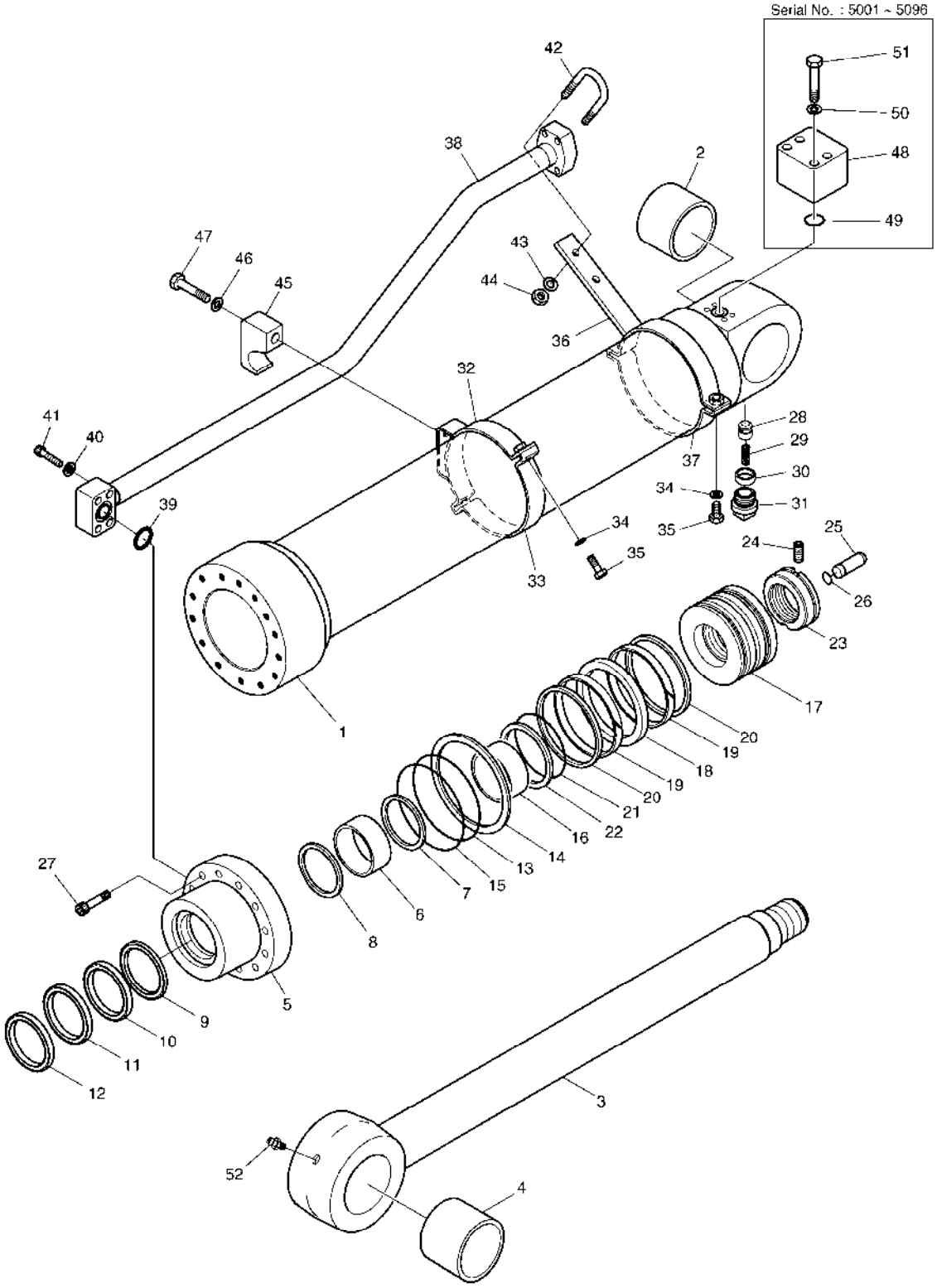

DATE	AUG. 28, 2009
3rd EDITION	

Fig. 4250 ARM CYLINDER VERIN DE BALANCIER

Serial No. ;

Key No.	Part No.	Description	Description	Q'ty	S.C	Serial No.	ICA	Replaceable part	
								Part No.	Q'ty
4250 -37	124-00052	BAND;PIPE	ATTACHE	1					
38	K9004918	PIPE ASS'Y	ENSEMBLE DE TUYAU	1					
39	S8000341	O-RING	JOINT TORIQUE	1					
40	S5100703	WASHER;SPRING	RONDELLE ELASTIQUE	4					
41	S2215961	BOLT;SOCKET	BOULON A 6 PANS CREUX	4					
42	K9001158	U-BOLT	BOULON U	1					
43	S5100603	WASHER;SPRING	RONDELLE ELASTIQUE	2					
44	S4012633	NUT	ECROU	2					
45	K9001159	CLAMP;PIPE	FIXATION DE TUYAU	1					
46	S5102903	WASHER	RONDELLE	1					
47	S0521853	BOLT	BOULON A 6 PANS	1					
48	K9001173	PORT;FLANGE	PORT;FLANGE	1		5001-5096			
49	S8000341	O-RING	JOINT TORIQUE	1		5001-5096			
50	S5100603	WASHER;SPRING	RONDELLE ELASTIQUE	4		5001-5096			
51	S2213363	BOLT	BOULON A 6 PANS	4		5001-5096			
52	S6710032	NIPPLE;GREASE	GRAISSEUR	1					
*	K9001901	SEAL KIT;ARM CYLINDER	JOINT	1					

DATE	AUG. 28, 2009
3rd EDITION	

Fig. 4260 BUCKET CYLINDER - ARM 3.0m/3.5m VERIN DE GODET

Serial No. ;

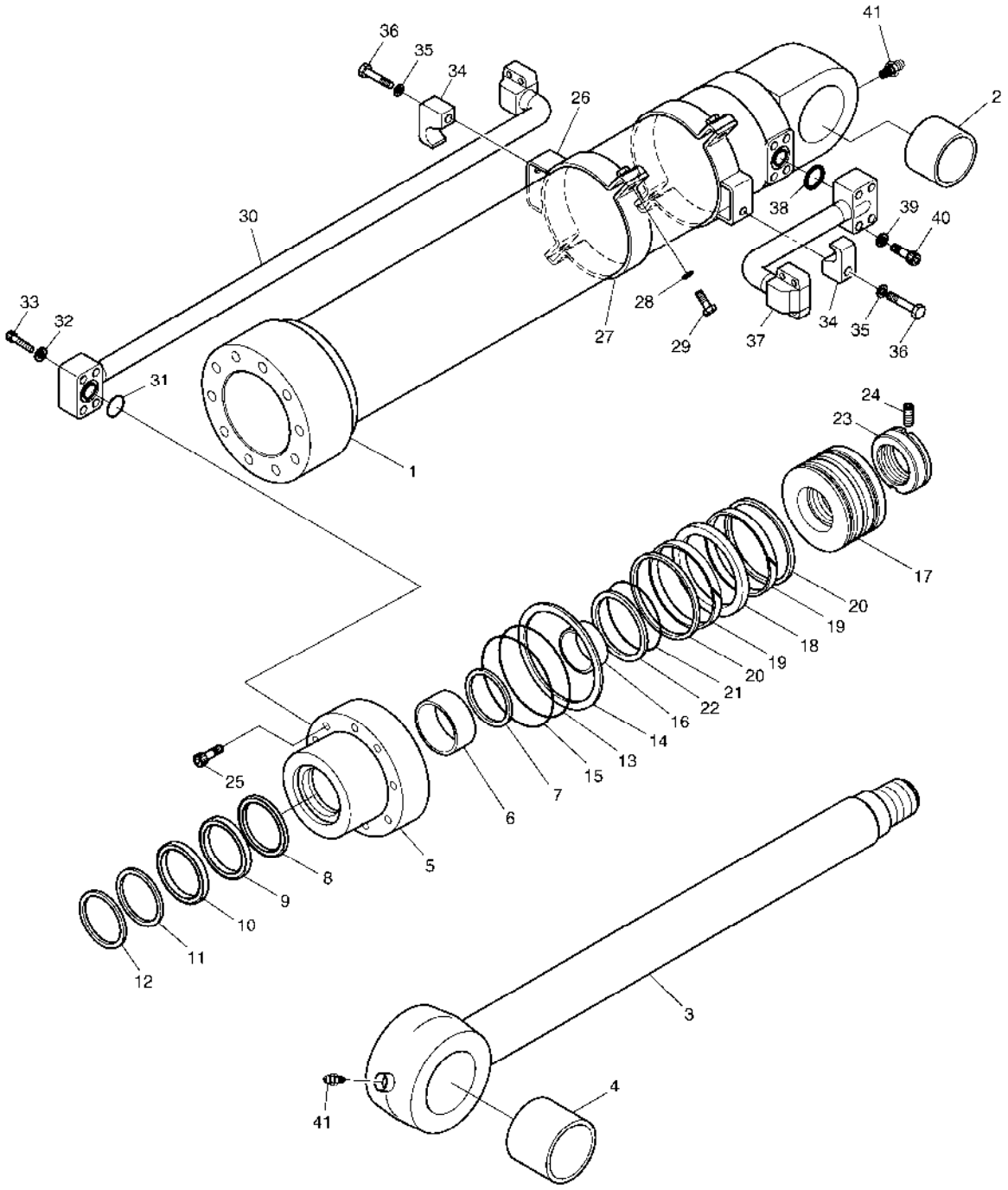

DATE	AUG. 28, 2009
3rd EDITION	

Fig. 4260 BUCKET CYLINDER - ARM 3.0m/3.5m VERIN DE GODET

Serial No. ;

Key No.	Part No.	Description	Description	Q'ty	S.C	Serial No.	ICA	Replaceable part	
								Part No.	Q'ty
4260 --	K1011044	CYLINDER;BUCKET	VERIN DE GODET	1		5001-5093	I	K1011044A	1
	K1011044A	CYLINDER;BUCKET	VERIN DE GODET	1		5094-			
1	K9004903	TUBE ASS'Y	TUYAU FLEXIBLE	1					
2	K1000736	BUSH	BUSH	1					
3	K9004904	ROD ASS'Y	ENSEMBLE TIGE	1		5001-5093	I	K9004904A	1
	K9004904A	ROD ASS'Y	ENSEMBLE TIGE	1		5094-			
4	K1000738	BUSH	BUSH	1		5001-5093	I	K1000736	1
	K1000736	BUSH	BUSH	1		5094-			
5	K9004891	COVER;ROD	COUVERCLE	1					
6	110-00080	DD-BUSH	DOUILLE	1					
7	115-00063	RING;RETAINING	RONDELLE DE RETENUE	1					
8	1.180-00657	SEAL;BUFFER	ETANCHEITE	1	K				
9	K9001153	U-PACKING	JOINT EN U	1	K				
10	K9001154	RING;BACK UP	BAGUE	1	K				
11	115-00072	WIPER;DUST	RACCORD ADAPTATEUR	1	K				
12	115-00073	RING;RETAINING	BAGUE	1					
13	S8011251	O-RING	JOINT TORIQUE	1	K				
14	180-00266	RING;BACK-UP	BAGUE	1	K				
15	S8011301	O-RING	JOINT TORIQUE	1	K				
16	K9004886	RING;CUSHION	BAGUE	1					
17	K9004892	PISTON	PISTON	1					
18	K9004898	SEAL;SLIPPER	JOINT	1	K				
19	115-00074	RING;WEAR	BAGUE D'USURE	2	K				
20	K9004887	RING;DUST	BAGUE	2	K				
21	S8010701	O-RING	JOINT TORIQUE	1	K				
22	K9001156	RING;BACK UP	BAGUE	2	K				
23	121-00045	NUT;PISTON	ECROU	1					
24	S3523836	SCREW;SET	VIS	1					
25	S2222171	BOLT;HEX. SOCKET	BOULON A 6 PANS CREUX	10					
26	K9004906	PIPE BAND ASS'Y	ENSEMBLE DE BANDE DE	2					
27	124-00053	BAND;PIPE	ATTACHE	2					
28	S5100703	WASHER;SPRING	RONDELLE ELASTIQUE	4					
29	S0560563	BOLT;HEX	BOULON A 6 PANS	4					
30	K9004908	PIPE ASS'Y-R	ENSEMBLE DE TUYAU	1					
31	S8000261	O-RING	JOINT TORIQUE	1					
32	S5100603	WASHER;SPRING	RONDELLE ELASTIQUE	4					
33	S2212861	BOLT;SOCKET	BOULON A 6 PANS CREUX	4					
34	K9001159	CLAMP;PIPE	FIXATION DE TUYAU	2					

DATE	AUG. 28, 2009
3rd EDITION	

Fig. 4260 BUCKET CYLINDER - ARM 3.0m/3.5m VERIN DE GODET

Serial No. ;

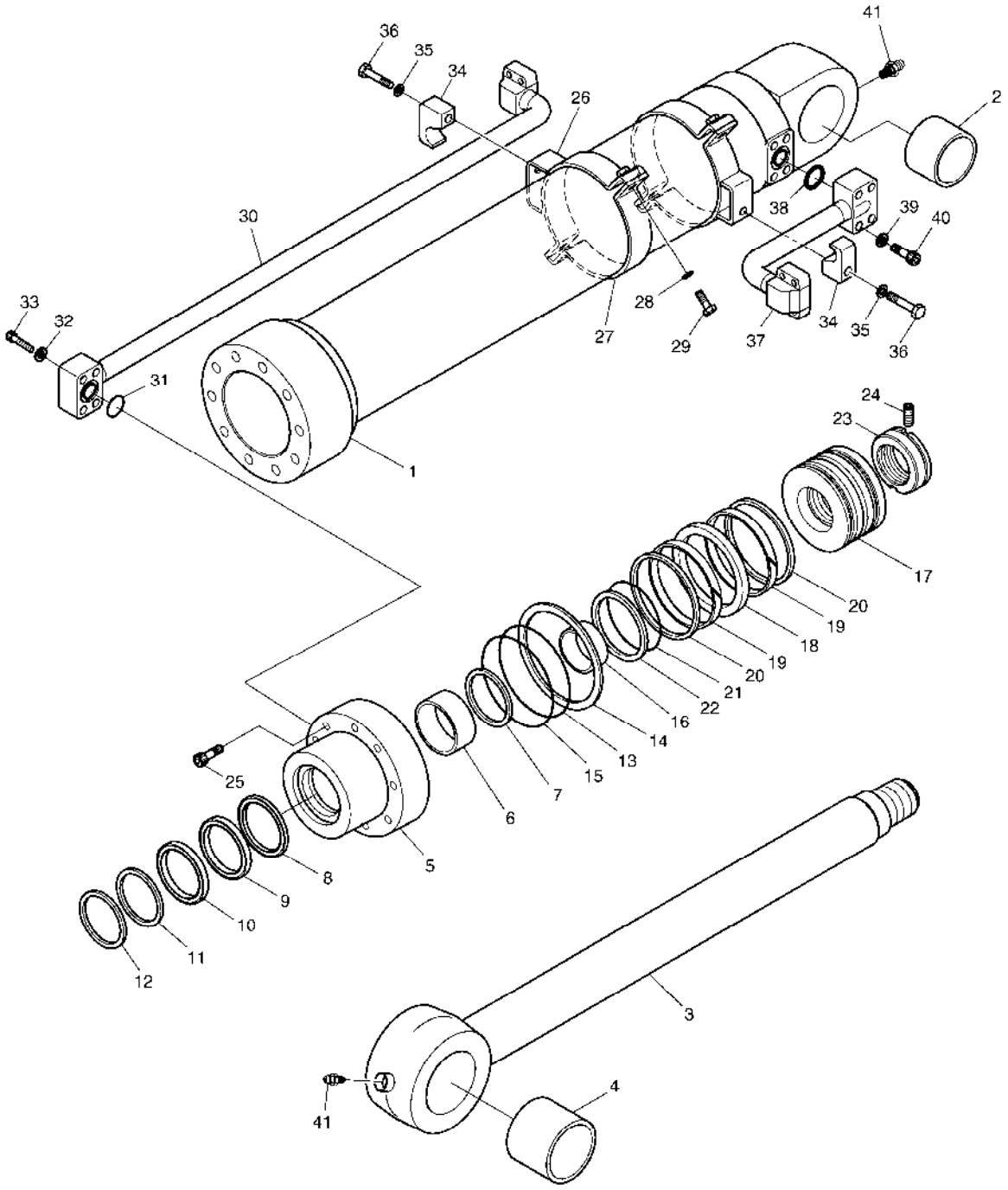

DATE	AUG. 28, 2009
3rd EDITION	

Fig. 4260 BUCKET CYLINDER - ARM 3.0m/3.5m VERIN DE GODET

Serial No. ;

Key No.	Part No.	Description	Description	Q'ty	S.C	Serial No.	ICA	Replaceable part	
								Part No.	Q'ty
4260 -35	S5102903	WASHER	RONDELLE	2					
36	S0521853	BOLT	BOULON A 6 PANS	2					
37	K9004907	PIPE ASS'Y-H	ENSEMBLE DE TUYAU	1					
38	S8000341	O-RING	JOINT TORIQUE	1					
39	S5100603	WASHER;SPRING	RONDELLE ELASTIQUE	4					
40	S2212861	BOLT;SOCKET	BOULON A 6 PANS CREUX	4					
41	S6710032	NIPPLE;GREASE	GRAISSEUR	2					
*	K9004899	SEAL KIT	KIT D'ETANCHEITE	1					

DATE	AUG. 28, 2009
3rd EDITION	

Fig. 4270 BUCKET CYLINDER - ARM 2.5m VERIN DE GODET

Serial No. ;

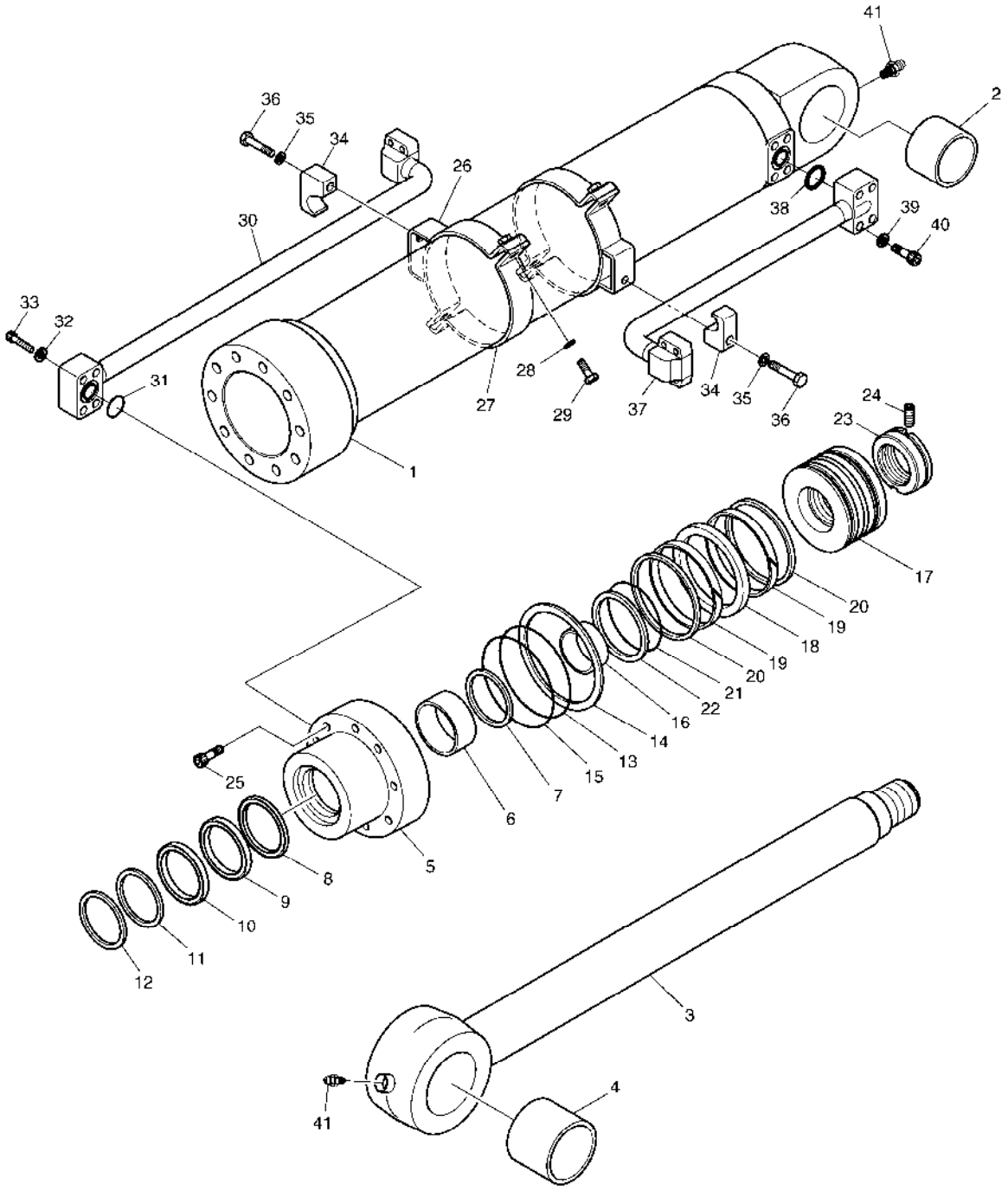

DATE	AUG. 28, 2009
3rd EDITION	

Fig. 4270 BUCKET CYLINDER - ARM 2.5m VERIN DE GODET

Serial No. ;

Key No.	Part No.	Description	Description	Q'ty	S.C	Serial No.	ICA	Replaceable part	
								Part No.	Q'ty
4270 --	K1024947	CYLINDER;BUCKET	VERIN DE GODET	1		5001-5086	I	K1024947A	1
	K1024947A	CYLINDER;BUCKET	VERIN DE GODET	1		5087-			
1	K9004909	TUBE ASS'Y	TUYAU FLEXIBLE	1					
2	K1000736	BUSH	BUSH	1					
3	K9004904	ROD ASS'Y	ENSEMBLE TIGE	1		5001-5086	I	K9004904A	1
	K9004904A	ROD ASS'Y	ENSEMBLE TIGE	1		5087-			
4	K1000738	BUSH	BUSH	1		5001-5086	I	K1000736	1
	K1000736	BUSH	BUSH	1		5087-			
5	K9004891	COVER;ROD	COUVERCLE	1					
6	110-00080	DD-BUSH	DOUILLE	1					
7	115-00063	RING;RETAINING	RONDELLE DE RETENUE	1					
8	1.180-00657	SEAL;BUFFER	ETANCHEITE	1	K				
9	K9001153	U-PACKING	JOINT EN U	1	K				
10	K9001154	RING;BACK UP	BAGUE	1	K				
11	115-00072	WIPER;DUST	RACCORD ADAPTATEUR	1	K				
12	115-00073	RING;RETAINING	BAGUE	1					
13	S8011251	O-RING	JOINT TORIQUE	1	K				
14	180-00266	RING;BACK-UP	BAGUE	1	K				
15	S8011301	O-RING	JOINT TORIQUE	1	K				
16	K9004886	RING;CUSHION	BAGUE	1					
17	K9004892	PISTON	PISTON	1					
18	K9004898	SEAL;SLIPPER	JOINT	1	K				
19	115-00074	RING;WEAR	BAGUE D'USURE	2	K				
20	K9004887	RING;DUST	BAGUE	2	K				
21	S8010701	O-RING	JOINT TORIQUE	1	K				
22	K9001156	RING;BACK UP	BAGUE	2	K				
23	121-00045	NUT;PISTON	ECROU	1					
24	S3523836	SCREW;SET	VIS	1					
25	S2222171	BOLT;HEX. SOCKET	BOULON A 6 PANS CREUX	10					
26	K9004906	PIPE BAND ASS'Y	ENSEMBLE DE BANDE DE	2					
27	124-00053	BAND;PIPE	ATTACHE	2					
28	S5100703	WASHER;SPRING	RONDELLE ELASTIQUE	4					
29	S0560563	BOLT;HEX	BOULON A 6 PANS	4					
30	K9004911	PIPE ASS'Y-R	ENSEMBLE DE TUYAU	1					
31	S8000261	O-RING	JOINT TORIQUE	1					
32	S5100603	WASHER;SPRING	RONDELLE ELASTIQUE	4					
33	S2212861	BOLT;SOCKET	BOULON A 6 PANS CREUX	4					
34	K9001159	CLAMP;PIPE	FIXATION DE TUYAU	2					

DATE	AUG. 28, 2009
3rd EDITION	

Fig. 4270 BUCKET CYLINDER - ARM 2.5m VERIN DE GODET

Serial No. ;

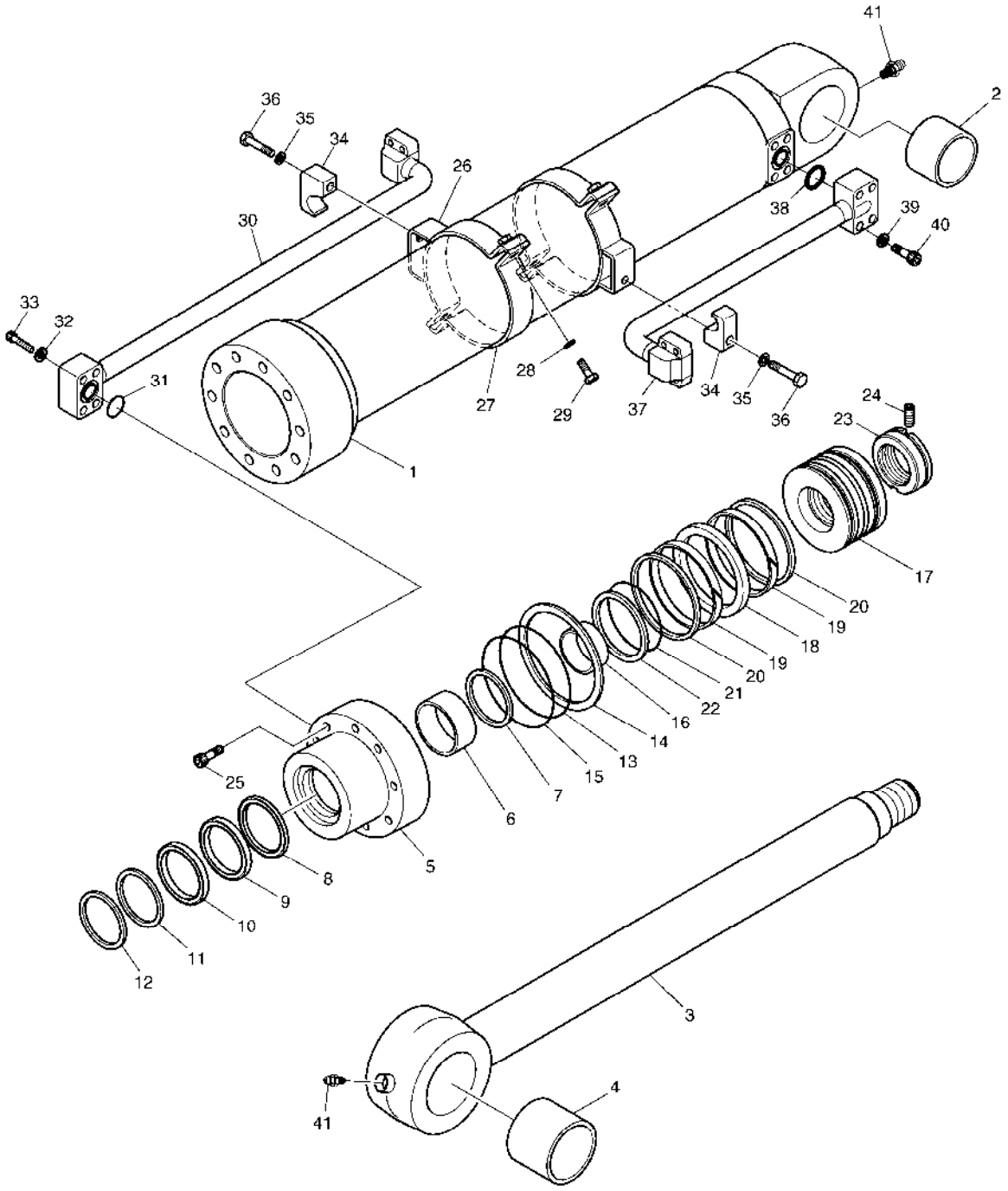

DATE	AUG. 28, 2009
3rd EDITION	

Fig. 4270 BUCKET CYLINDER - ARM 2.5m VERIN DE GODET

Serial No. ;

Key No.	Part No.	Description	Description	Q'ty	S.C	Serial No.	ICA	Replaceable part	
								Part No.	Q'ty
4270 -35	S5102903	WASHER	RONDELLE	2					
36	S0521853	BOLT	BOULON A 6 PANS	2					
37	K9004910	PIPE ASS'Y-H	ENSEMBLE DE TUYAU	1					
38	S8000341	O-RING	JOINT TORIQUE	1					
39	S5100603	WASHER;SPRING	RONDELLE ELASTIQUE	4					
40	S2212861	BOLT;SOCKET	BOULON A 6 PANS CREUX	4					
41	S6710032	NIPPLE;GREASE	GRAISSEUR	2					
*	K9004899	SEAL KIT	KIT D'ETANCHEITE	1					

DATE	AUG. 28, 2009
3rd EDITION	

Fig. 4280 BUCKET CYLINDER - ARM 2.0m VERIN DE GODET

Serial No. ;

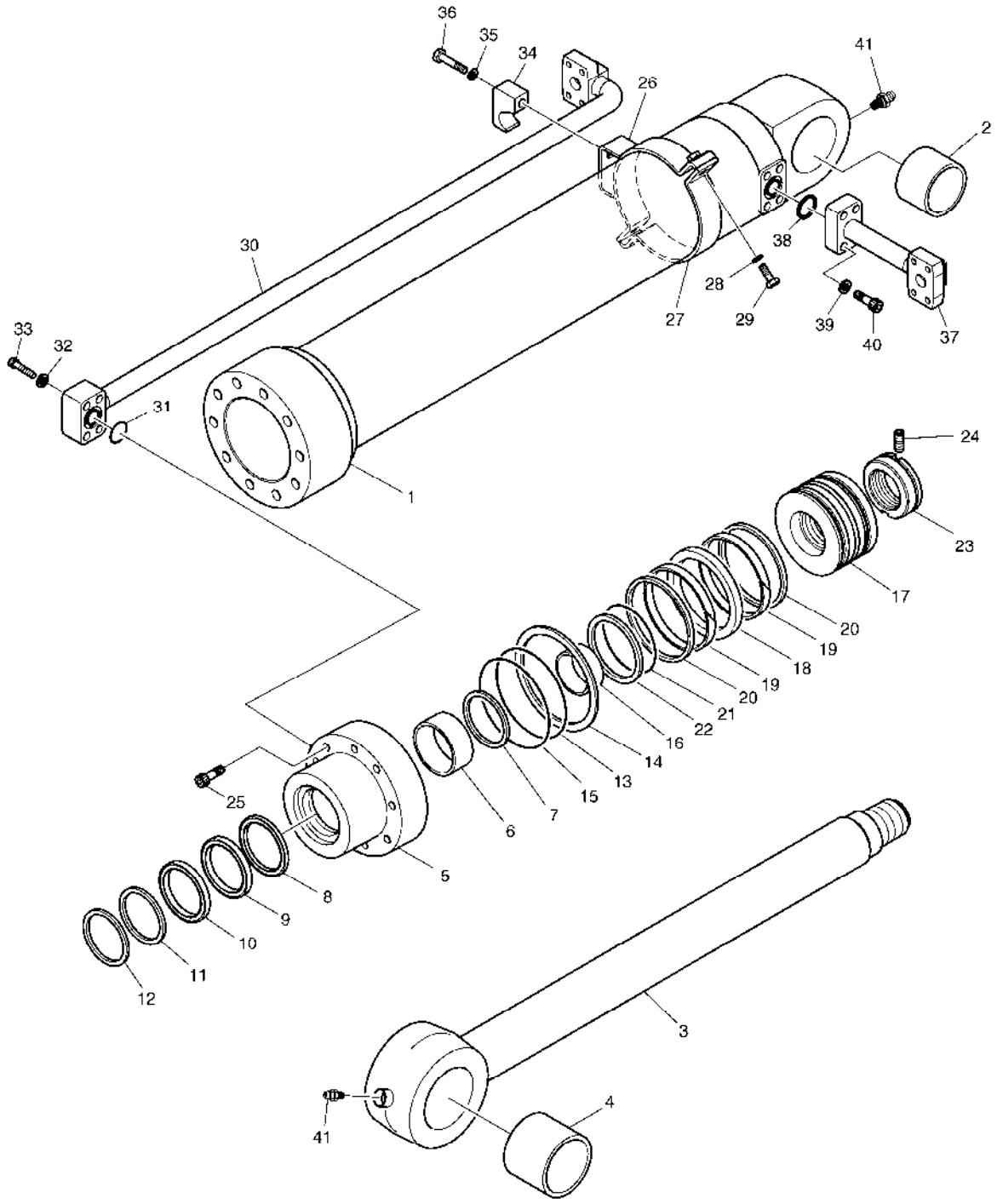

DATE	AUG. 28, 2009
3rd EDITION	

Fig. 4280 BUCKET CYLINDER - ARM 2.0m VERIN DE GODET

Serial No. ;

Key No.	Part No.	Description	Description	Q'ty	S.C	Serial No.	ICA	Replaceable part	
								Part No.	Q'ty
4280 --	K1024889	CYLINDER;BUCKET	VERIN DE GODET	1		5001-5086	I	K1024889A	1
	K1024889A	CYLINDER;BUCKET	VERIN DE GODET	1		5087-			
1	K9004912	TUBE ASS'Y	TUYAU FLEXIBLE	1					
2	K1000736	BUSH	BUSH	1					
3	K9004913	ROD ASS'Y	ENSEMBLE TIGE	1		5001-5086	I	K9004913A	1
	K9004913A	ROD ASS'Y	ENSEMBLE TIGE	1		5087-			
4	K1000738	BUSH	BUSH	1		5001-5086	I	K1000736	1
	K1000736	BUSH	BUSH	1		5087-			
5	K9003894	COVER;ROD	COUVERCLE DE TIGE	1					
6	110-00110	DD-BUSH	COUSSINET	1					
7	115-00051	RING;RETAINING	BAGUE D'ARRET	1					
8	1.180-00659	SEAL;BUFFER	ETANCHEITE A GRADINS	1	K				
9	1.180-00660	U-PACKING	JOINT EN U	1	K				
10	K9001146	RING;BACK UP	BAGUE	1	K				
11	115-00099	WIPER;DUST	PARE-POUSSIERE	1	K				
12	115-00092	RING;RETAINING	BAGUE D'ARRET	1					
13	S8011301	O-RING	JOINT TORIQUE	1	K				
14	K9003891	RING;BACK UP	BAGUE ANTIEXTRUSION	1	K				
15	S8011351	O-RING	JOINT TORIQUE	1	K				
16	1.115-00200	RING;CUSHION	BAGUE	1					
17	K9003895	PISTON	PISTON	1					
18	K9004900	SEAL;SLIPPER	PATIN D'ETANCHEITE	1	K				
19	1.180-00426	RING;WEAR	SEGMENT D'USURE	2	K				
20	K9003890	RING;DUST	BAGUE	2	K				
21	S8010751	O-RING	JOINT TORIQUE	1	K				
22	1.180-00663	RING;BACK UP	BAGUE	2	K				
23	121-00055	NUT;PISTON	ECROU	1					
24	S3523836	SCREW;SET	VIS	1					
25	S2222272	BOLT;SOCKET	BOULON A 6 PANS CREUX	14					
26	K9003896	PIPE BAND ASS'Y-A	ENSEMBLE DE FIXATION	1					
27	1.124-00040	BAND;PIPE	ATTACHE	1					
28	S5100703	WASHER;SPRING	RONDELLE ELASTIQUE	2					
29	S0560563	BOLT;HEX	BOULON A 6 PANS	2					
30	K9004914	PIPE ASS'Y-R	ENSEMBLE DE TUYAU	1					
31	S8000341	O-RING	JOINT TORIQUE	1					
32	S5100603	WASHER;SPRING	RONDELLE ELASTIQUE	4					
33	S2215961	BOLT;SOCKET	BOULON A 6 PANS CREUX	4					
34	K9001159	CLAMP;PIPE	FIXATION DE TUYAU	1					

DATE	AUG. 28, 2009
3rd EDITION	

Fig. 4280 BUCKET CYLINDER - ARM 2.0m VERIN DE GODET

Serial No. ;

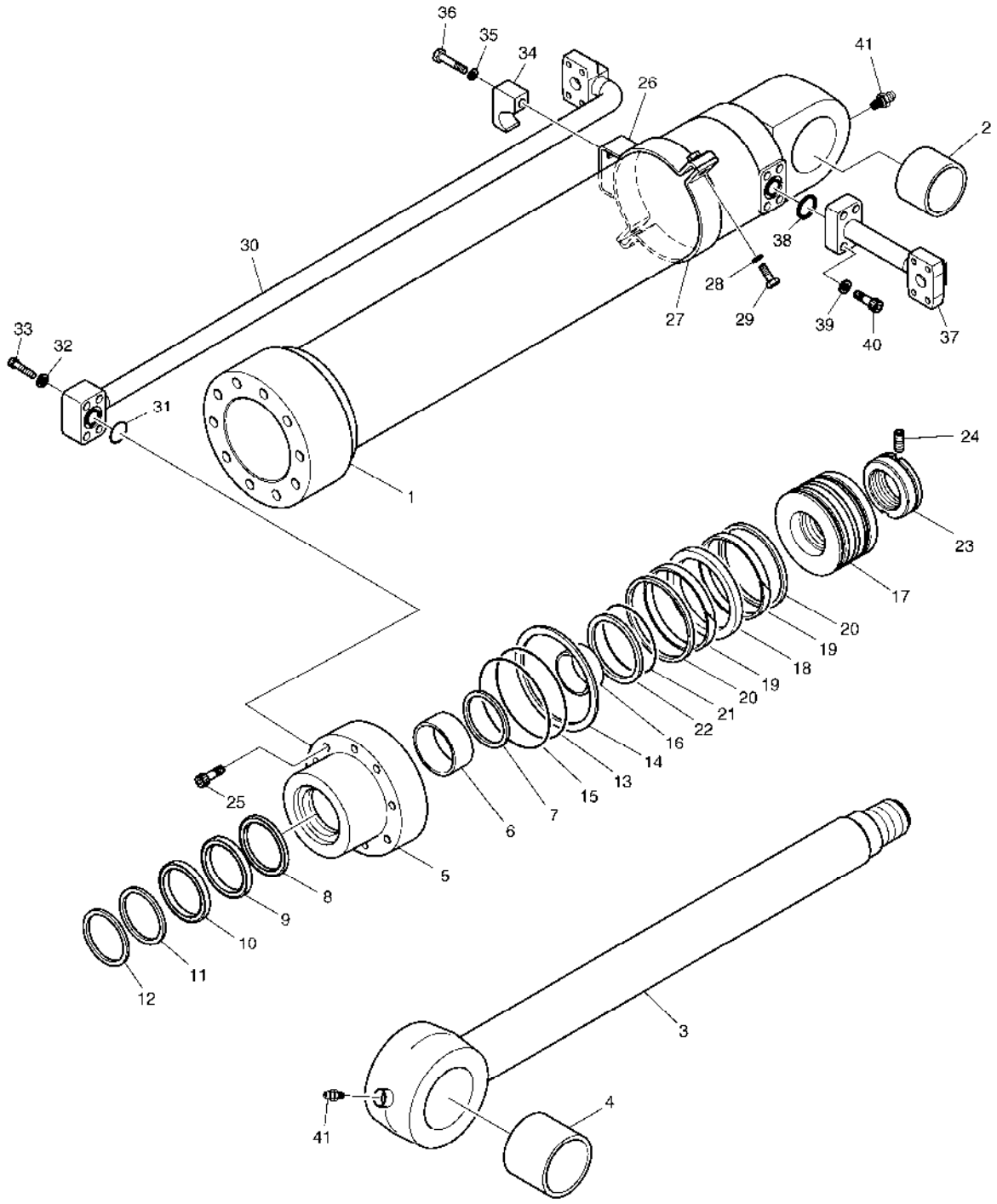

DATE	AUG. 28, 2009
3rd EDITION	

Fig. 4280 BUCKET CYLINDER - ARM 2.0m VERIN DE GODET

Serial No. ;

Key No.	Part No.	Description	Description	Q'ty	S.C	Serial No.	ICA	Replaceable part	
								Part No.	Q'ty
4280 -35	S5102903	WASHER	RONDELLE	1					
36	S0521853	BOLT	BOULON A 6 PANS	1					
37	K9004915	PIPE ASS'Y-H	ENSEMBLE DE TUYAU	1					
38	S8000341	O-RING	JOINT TORIQUE	1					
39	S5100603	WASHER;SPRING	RONDELLE ELASTIQUE	4					
40	S2215961	BOLT;SOCKET	BOULON A 6 PANS CREUX	4					
41	S6710032	NIPPLE;GREASE	GRAISSEUR	2					
*	K9003935	SEAL KIT;ARM CYLINDER	VERIN DE BALANCIER	1					

DATE	AUG. 28, 2009
3rd EDITION	

Fig. 4290 BOOM CYLINDER - L.H (LOCK VALVE) VERIN DE FLECHE

Serial No. ;

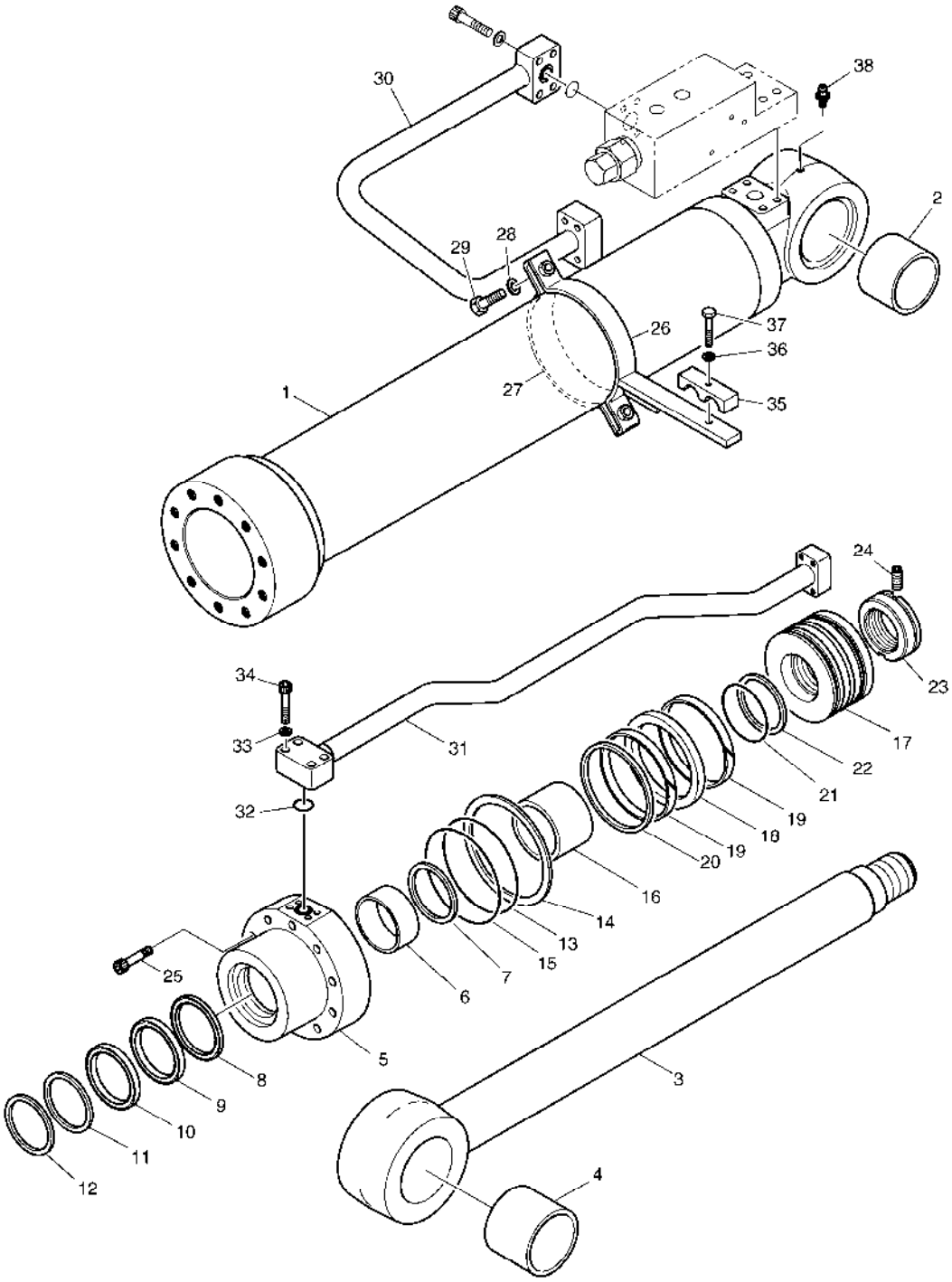

DATE	AUG. 28, 2009
3rd EDITION	

Fig. 4290 BOOM CYLINDER - L.H (LOCK VALVE) VERIN DE FLECHE

Serial No. ;

Key No.	Part No.	Description	Description	Q'ty	S.C	Serial No.	ICA	Replaceable part	
								Part No.	Q'ty
4290 --	K1011084	CYLINDER;BOOM (L.H)	CYLINDRE	1					
1	K9004889	TUBE ASS'Y	TUYAU FLEXIBLE	1					
2	K1010028	BUSH	DOUILLE	1					
3	K9004890	ROD ASS'Y	ENSEMBLE TIGE	1					
4	K1010028	BUSH	DOUILLE	1					
5	K9004891	COVER;ROD	COUVERCLE	1					
6	110-00080	DD-BUSH	DOUILLE	1					
7	115-00063	RING;RETAINING	RONDELLE DE RETENUE	1					
8	1.180-00657	SEAL;BUFFER	ETANCHEITE	1	K				
9	K9001153	U-PACKING	JOINT EN U	1	K				
10	K9001154	RING;BACK UP	BAGUE	1	K				
11	115-00072	WIPER;DUST	RACCORD ADAPTATEUR	1	K				
12	115-00073	RING;RETAINING	BAGUE	1					
13	S8011251	O-RING	JOINT TORIQUE	1	K				
14	180-00266	RING;BACK-UP	BAGUE	1	K				
15	S8011301	O-RING	JOINT TORIQUE	1	K				
16	K9004886	RING;CUSHION	BAGUE	1					
17	K9004892	PISTON	PISTON	1					
18	K9004898	SEAL;SLIPPER	JOINT	1	K				
19	115-00074	RING;WEAR	BAGUE D'USURE	1	K				
20	K9004887	RING;DUST	BAGUE	2	K				
21	S8010701	O-RING	JOINT TORIQUE	1	K				
22	K9001156	RING;BACK UP	BAGUE	2	K				
23	121-00045	NUT;PISTON	ECROU	1					
24	S3523836	SCREW;SET	VIS	1					
25	S2222171	BOLT;HEX. SOCKET	BOULON A 6 PANS CREUX	10					
26	K9004893	PIPE BAND ASS'Y	ENSEMBLE DE BANDE DE	1					
27	124-00056	BAND;PIPE	ATTACHE	1					
28	S5100603	WASHER;SPRING	RONDELLE ELASTIQUE	2					
29	S0558153	BOLT	BOULON A 6 PANS	2					
30	K9004921	PIPE ASS'Y-H(L.H)	ENSEMBLE DE TUYAU	1					
31	K9004897	PIPE ASS'Y-R(L.H)	ENSEMBLE DE TUYAU	1					
32	S8000281	O-RING	JOINT TORIQUE	1					
33	S5100603	WASHER;SPRING	RONDELLE ELASTIQUE	4					
34	S2212761	BOLT;HEX. SOCKET	BOULON A 6 PANS CREUX	4					
35	124-00058	CLAMP;PIPE	COLLIER	1					
36	S5100703	WASHER;SPRING	RONDELLE ELASTIQUE	1					
37	S0561053	BOLT M12X1.75X65	BOULON A 6 PANS	1					

Fig. 4290 BOOM CYLINDER - L.H (LOCK VALVE) VERIN DE FLECHE

Serial No. ;

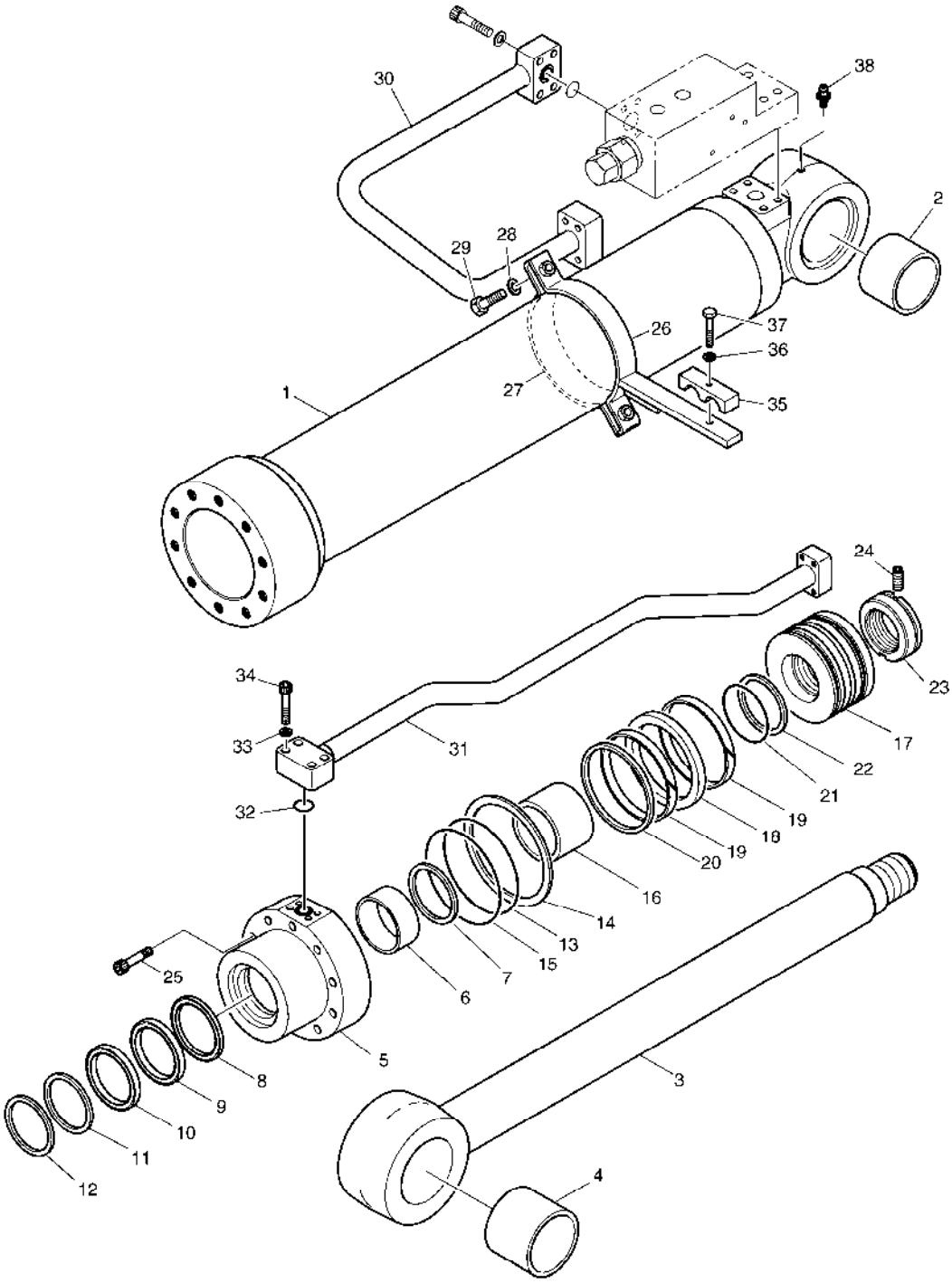

DATE	AUG. 28, 2009
3rd EDITION	

Fig. 4290 BOOM CYLINDER - L.H (LOCK VALVE) VERIN DE FLECHE

Serial No. ;

Key No.	Part No.	Description	Description	Q'ty	S.C	Serial No.	ICA	Replaceable part	
								Part No.	Q'ty
4290 -38	S6710032	NIPPLE;GREASE	GRAISSEUR	1					
*	K9004899	SEAL KIT	KIT D'ETANCHEITE	1					

DATE	AUG. 28, 2009
3rd EDITION	

Fig. 4300 BOOM CYLINDER - R.H (LOCK VALVE) VERIN DE FLECHE

Serial No. ;

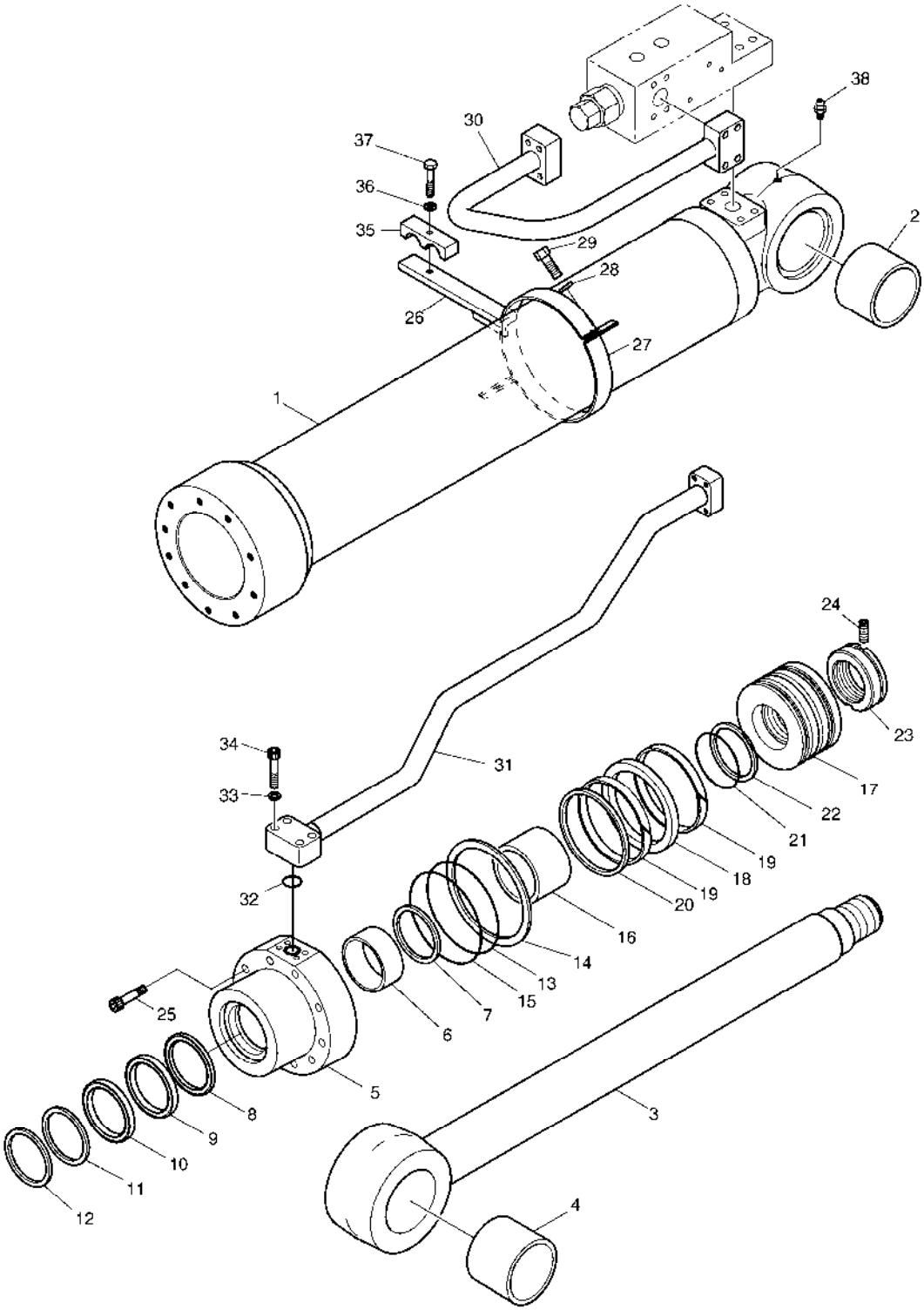

DATE	AUG. 28, 2009
3rd EDITION	

Fig. 4300 BOOM CYLINDER - R.H (LOCK VALVE) VERIN DE FLECHE

Serial No. ;

Key No.	Part No.	Description	Description	Q'ty	S.C	Serial No.	ICA	Replaceable part	
								Part No.	Q'ty
4300 --	K1011085	CYLINDER;BOOM (R.H)	CYLINDRE	1					
1	K9004889	TUBE ASS'Y	TUYAU FLEXIBLE	1					
2	K1010028	BUSH	DOUILLE	1					
3	K9004890	ROD ASS'Y	ENSEMBLE TIGE	1					
4	K1010028	BUSH	DOUILLE	1					
5	K9004891	COVER;ROD	COUVERCLE	1					
6	110-00080	DD-BUSH	DOUILLE	1					
7	115-00063	RING;RETAINING	RONDELLE DE RETENUE	1					
8	1.180-00657	SEAL;BUFFER	ETANCHEITE	1	K				
9	K9001153	U-PACKING	JOINT EN U	1	K				
10	K9001154	RING;BACK UP	BAGUE	1	K				
11	115-00072	WIPER;DUST	RACCORD ADAPTATEUR	1	K				
12	115-00073	RING;RETAINING	BAGUE	1					
13	S8011251	O-RING	JOINT TORIQUE	1	K				
14	180-00266	RING;BACK-UP	BAGUE	1	K				
15	S8011301	O-RING	JOINT TORIQUE	1	K				
16	K9004886	RING;CUSHION	BAGUE	1					
17	K9004892	PISTON	PISTON	1					
18	K9004898	SEAL;SLIPPER	JOINT	1	K				
19	115-00074	RING;WEAR	BAGUE D'USURE	1	K				
20	K9004887	RING;DUST	BAGUE	2	K				
21	S8010701	O-RING	JOINT TORIQUE	1	K				
22	K9001156	RING;BACK UP	BAGUE	2	K				
23	121-00045	NUT;PISTON	ECROU	1					
24	S3523836	SCREW;SET	VIS	1					
25	S2222171	BOLT;HEX. SOCKET	BOULON A 6 PANS CREUX	10					
26	K9004893	PIPE BAND ASS'Y	ENSEMBLE DE BANDE DE	1					
27	124-00056	BAND;PIPE	ATTACHE	1					
28	S5100603	WASHER;SPRING	RONDELLE ELASTIQUE	2					
29	S0558153	BOLT	BOULON A 6 PANS	2					
30	K9004922	PIPE ASS'Y-H(R.H)	ENSEMBLE DE TUYAU	1					
31	K9004896	PIPE ASS'Y-R(R.H)	ENSEMBLE DE TUYAU	1					
32	S8000281	O-RING	JOINT TORIQUE	1					
33	S5100603	WASHER;SPRING	RONDELLE ELASTIQUE	4					
34	S2212761	BOLT;HEX. SOCKET	BOULON A 6 PANS CREUX	4					
35	124-00058	CLAMP;PIPE	COLLIER	1					
36	S5100703	WASHER;SPRING	RONDELLE ELASTIQUE	1					
37	S0561053	BOLT M12X1.75X65	BOULON A 6 PANS	1					

DATE	AUG. 28, 2009
3rd EDITION	

Fig. 4300 BOOM CYLINDER - R.H (LOCK VALVE) VERIN DE FLECHE

Serial No. ;

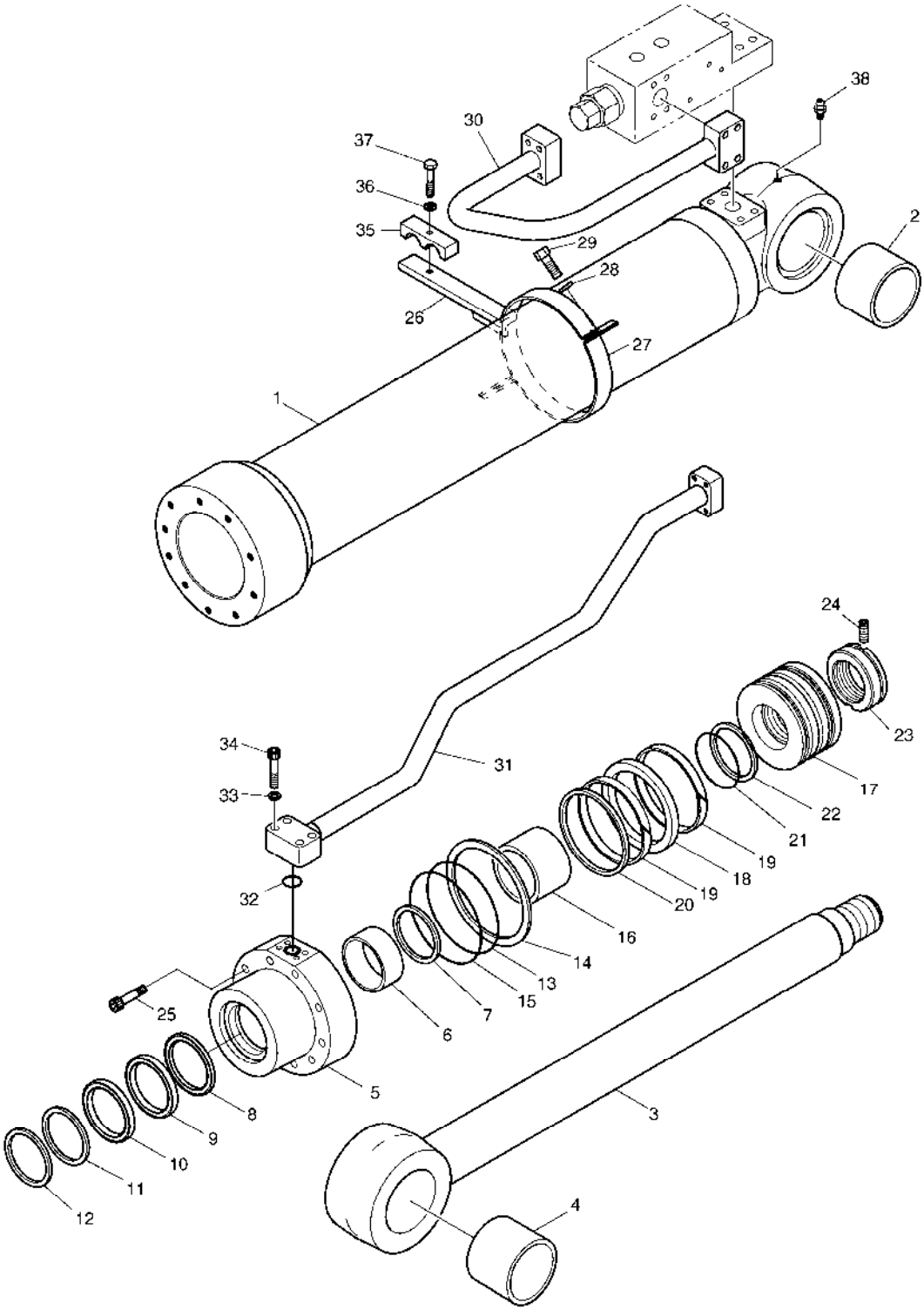

DATE	AUG. 28, 2009
3rd EDITION	

Fig. 4300 BOOM CYLINDER - R.H (LOCK VALVE) VERIN DE FLECHE

Serial No. ;

Key No.	Part No.	Description	Description	Q'ty	S.C	Serial No.	ICA	Replaceable part	
								Part No.	Q'ty
4300 -38	S6710032	NIPPLE;GREASE	GRAISSEUR	1					
*	K9004899	SEAL KIT	KIT D'ETANCHEITE	1					

DATE	AUG. 28, 2009
3rd EDITION	

Fig. 4310 ARM CYLINDER - LOCK VALVE
VERIN DE BALANCIER

Serial No. ;

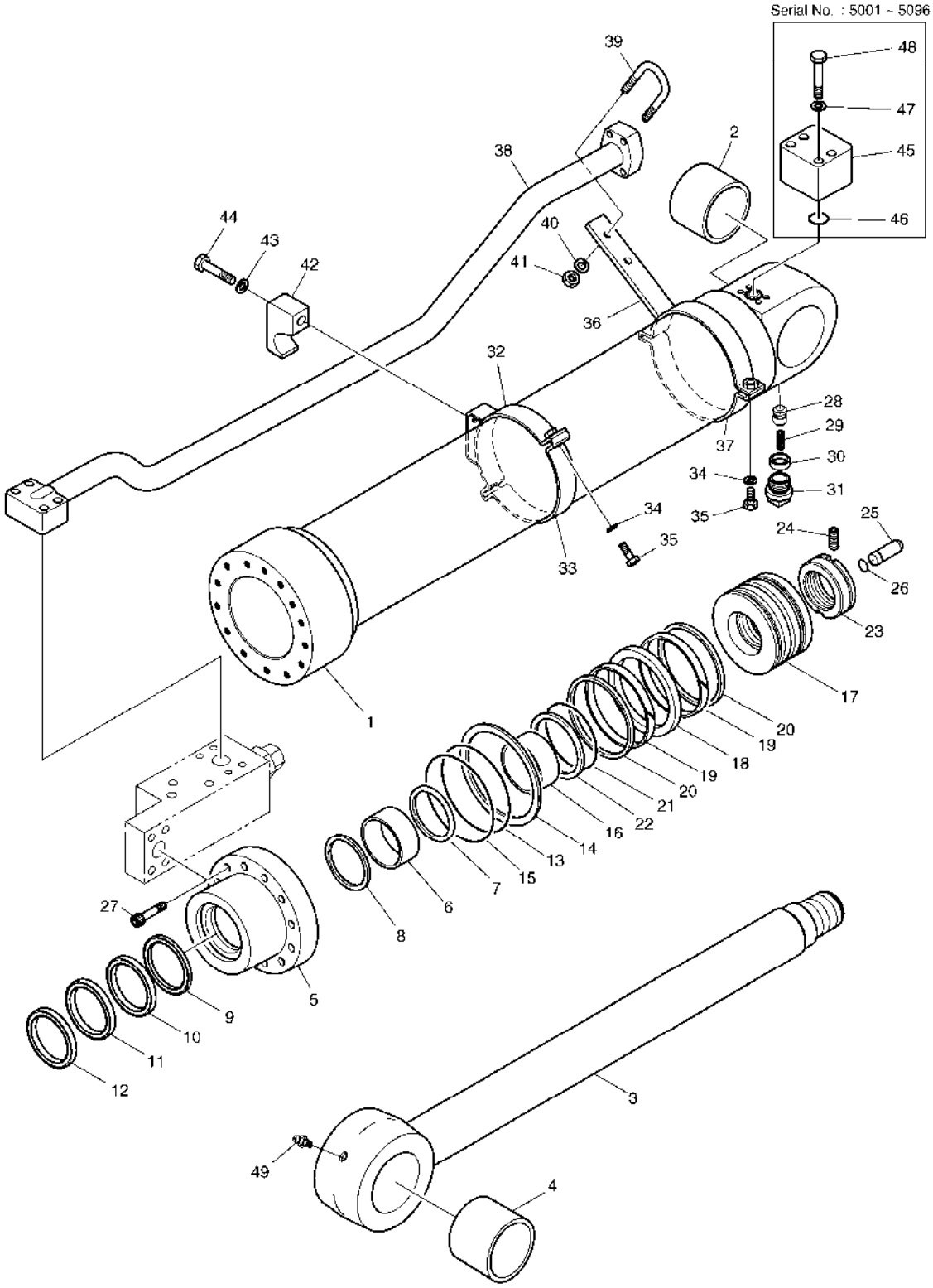

DATE	AUG. 28, 2009
3rd EDITION	

Fig. 4310 ARM CYLINDER - LOCK VALVE VERIN DE BALANCIER

Serial No. ;

Key No.	Part No.	Description	Description	Q'ty	S.C	Serial No.	ICA	Replaceable part	
								Part No.	Q'ty
4310 --	K1011088	CYLINDER;ARM(LOCK V/V)	VERIN DE BALANCIER	1		5001-5096			
	K1011088A	CYLINDER;ARM(LOCK V/V)	VERIN DE BALANCIER	1		5097-			
1	K9004920	TUBE ASS'Y	TUYAU FLEXIBLE	1					
2	K1000737	BUSH	BUSH	1					
3	K9004917	ROD ASS'Y	ENSEMBLE TIGE	1					
4	K1000737	BUSH	BUSH	1					
5	K9001881	ROD;COVER	TIGE	1					
6	110-00081	DD-BUSH	COUSSINET	1					
7	115-00073	RING;RETAINING	BAGUE	1					
8	K9001882	SEAL;BUFFER	ETANCHEITE A GRADINS	1	K				
9	K9001883	U-PACKING	JOINT EN U	1	K				
10	K9001884	RING;BACK UP	BAGUE ANTIEXTRUSION	1	K				
11	115-00077	WIPER;DUST	PARE-POUSSIERE	1	K				
12	115-00078	RING;RETAINING	ANNEAU DE SOUTIEN	1					
13	S8011351	O-RING	JOINT TORIQUE	1	K				
14	1.180-00662	RING;BACK UP	BAGUE ANTIEXTRUSION	1	K				
15	2180-1217D96	O-RING	JOINT TORIQUE	1	K				
16	K9001893	RING;CUSHION	BAGUE D'AMORTISSEMEN	1					
17	K9001894	PISTON	PISTON	1					
18	K9001148	SEAL;SLIPPER	PATIN D'ETANCHEITE	1	K				
19	115-00079	RING;WEAR	SEGMENT D'USURE	2	K				
20	K9001149	RING;DUST	BAGUE	2	K				
21	S8010801	O-RING	JOINT TORIQUE	1	K				
22	K9001895	RING;BACK UP	BAGUE ANTIEXTRUSION	2	K				
23	121-00044	NUT;PISTON	ECROU	1					
24	S3523836	SCREW;SET	VIS	1					
25	K9001897	PLUNGER;CUSHION	BOBINE	1					
26	115-00081	RING;STOP	BAGUE D'ARRET	1					
27	S2222272	BOLT;SOCKET	BOULON A 6 PANS CREUX	14					
28	420-00131	VALVE;CHECK	VANNE	1					
29	129-00071	SPRING	RESSORT	1					
30	1.195-00022	SUPPORT;SPRING	SUPPORT	1					
31	2181-1116D3	PLUG;HEX. SOCKET	BOUCHON	1					
32	K9001899	PIPE BAND ASS'Y-A	ENSEMBLE DE FIXATION	1					
33	124-00052	BAND;PIPE	ATTACHE	1					
34	S5100703	WASHER;SPRING	RONDELLE ELASTIQUE	4					
35	S0560563	BOLT;HEX	BOULON A 6 PANS	4					
36	K9001898	PIPE BAND ASS'Y-B	ENSEMBLE DE FIXATION	1					

DATE	AUG. 28, 2009
3rd EDITION	

Fig. 4310 ARM CYLINDER - LOCK VALVE VERIN DE BALANCIER

Serial No. ;

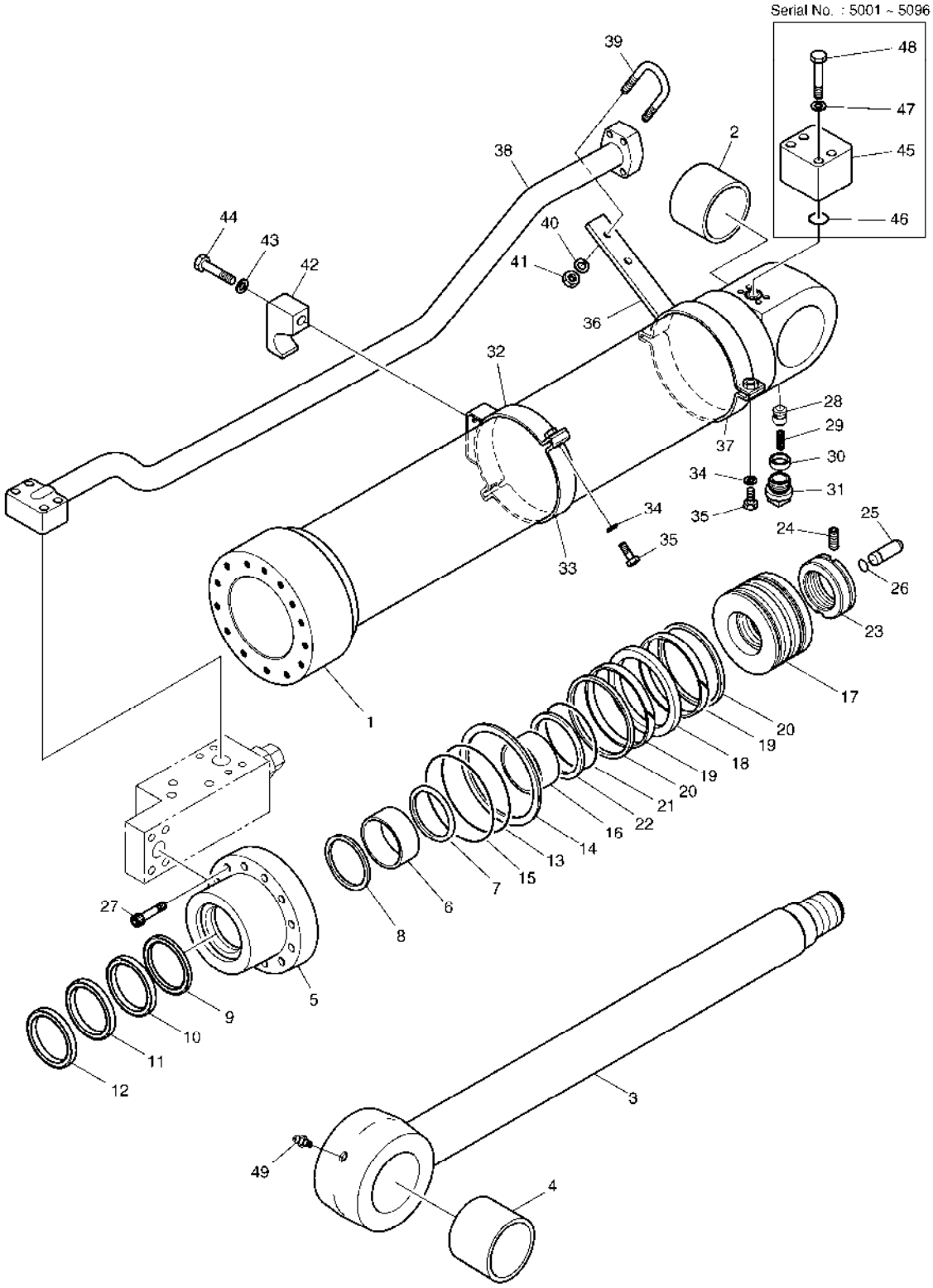

DATE	AUG. 28, 2009
3rd EDITION	

Fig. 4310 ARM CYLINDER - LOCK VALVE
VERIN DE BALANCIER

Serial No. ;

Key No.	Part No.	Description	Description	Q'ty	S.C	Serial No.	ICA	Replaceable part	
								Part No.	Q'ty
4310 -37	124-00052	BAND;PIPE	ATTACHE	1					
38	K9004923	PIPE ASS'Y	ENSEMBLE DE TUYAU	1					
39	K9001158	U-BOLT	BOULON U	1					
40	S5100603	WASHER;SPRING	RONDELLE ELASTIQUE	2					
41	S4012633	NUT	ECROU	2					
42	K9001159	CLAMP;PIPE	FIXATION DE TUYAU	1					
43	S5102903	WASHER	RONDELLE	1					
44	S0521853	BOLT	BOULON A 6 PANS	1					
45	K9001173	PORT;FLANGE	PORT;FLANGE	1		5001-5096			
46	S8000341	O-RING	JOINT TORIQUE	1		5001-5096			
47	S5100603	WASHER;SPRING	RONDELLE ELASTIQUE	4		5001-5096			
48	S2213363	BOLT	BOULON A 6 PANS	4		5001-5096			
49	S6710032	NIPPLE;GREASE	GRAISSEUR	1					
*	K9001901	SEAL KIT;ARM CYLINDER	JOINT	1					

DATE	AUG. 28, 2009
3rd EDITION	

Fig. 4320 GEAR PUMP-ROTATION POMPE

Serial No. ;

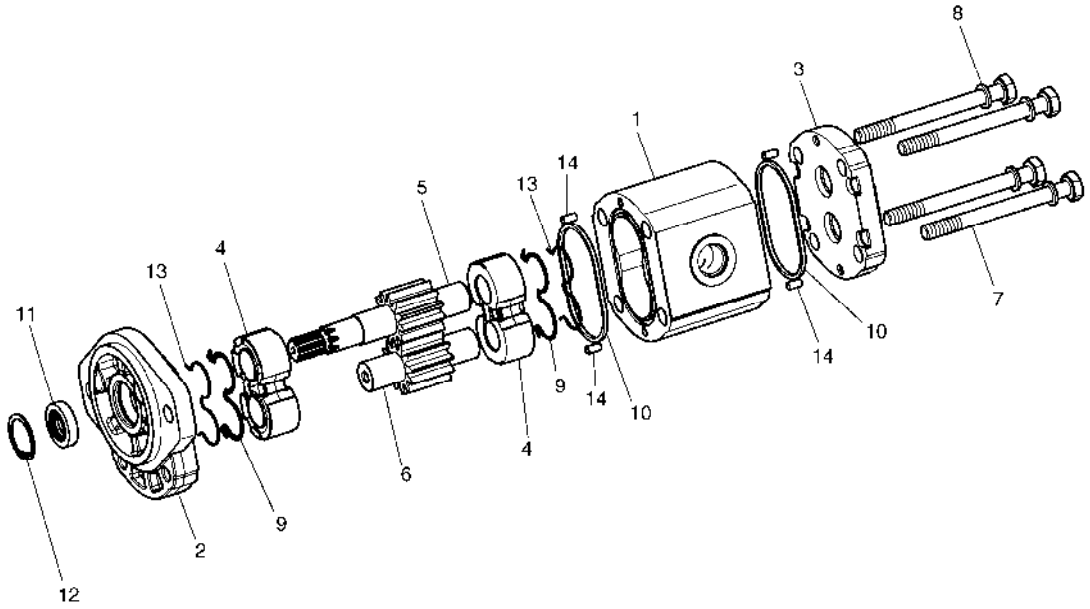

DATE	AUG. 28, 2009
3rd EDITION	

Fig. 4320 GEAR PUMP-ROTATION POMPE

Serial No. ;

Key No.	Part No.	Description	Description	Q'ty	S.C	Serial No.	ICA	Replaceable part	
								Part No.	Q'ty
4320 --	K1000410	GEAR PUMP	POMPE A ENGRENAGES	1					
1	-	BODY	CARTER	1	D				
2	-	COVER;FRONT	COUVERCLE	1	D				
3	-	COVER;REAR	COUVERCLE	1	D				
4	-	PLATE;THRUST	PLAQUE	2	D				
5	-	SHAFT;DRIVE	ARBRE	1	D				
6	-	GEAR;DRIVEN	PIGNON	1	D				
7	S0559553	BOLT	BOULON A 6 PANS	4					
8	S5102603	WASHER	RONDELLE ELASTIQUE	4					
9	-	SEAL	JOINT	2	K				
10	-	SEAL	JOINT	2	K				
11	-	SEAL;SHAFT	JOINT	1	K				
12	-	RING;SNAP	BAGUE	1	D				
13	-	RING;BACK UP	ANNEAU DE SOUTIEN	2	K				
14	-	PIN;DOWEL	GOUPILLE D'AJUSTAGE	4	D				
*	K9001457	SEAL KIT;GEAR PUMP	KIT DE JOINT	1					

DATE	AUG. 28, 2009
3rd EDITION	

Fig. 4330 PEDAL VALVE - TWO WAY VANNE DE PEDALE

Serial No. ; 5110 ~

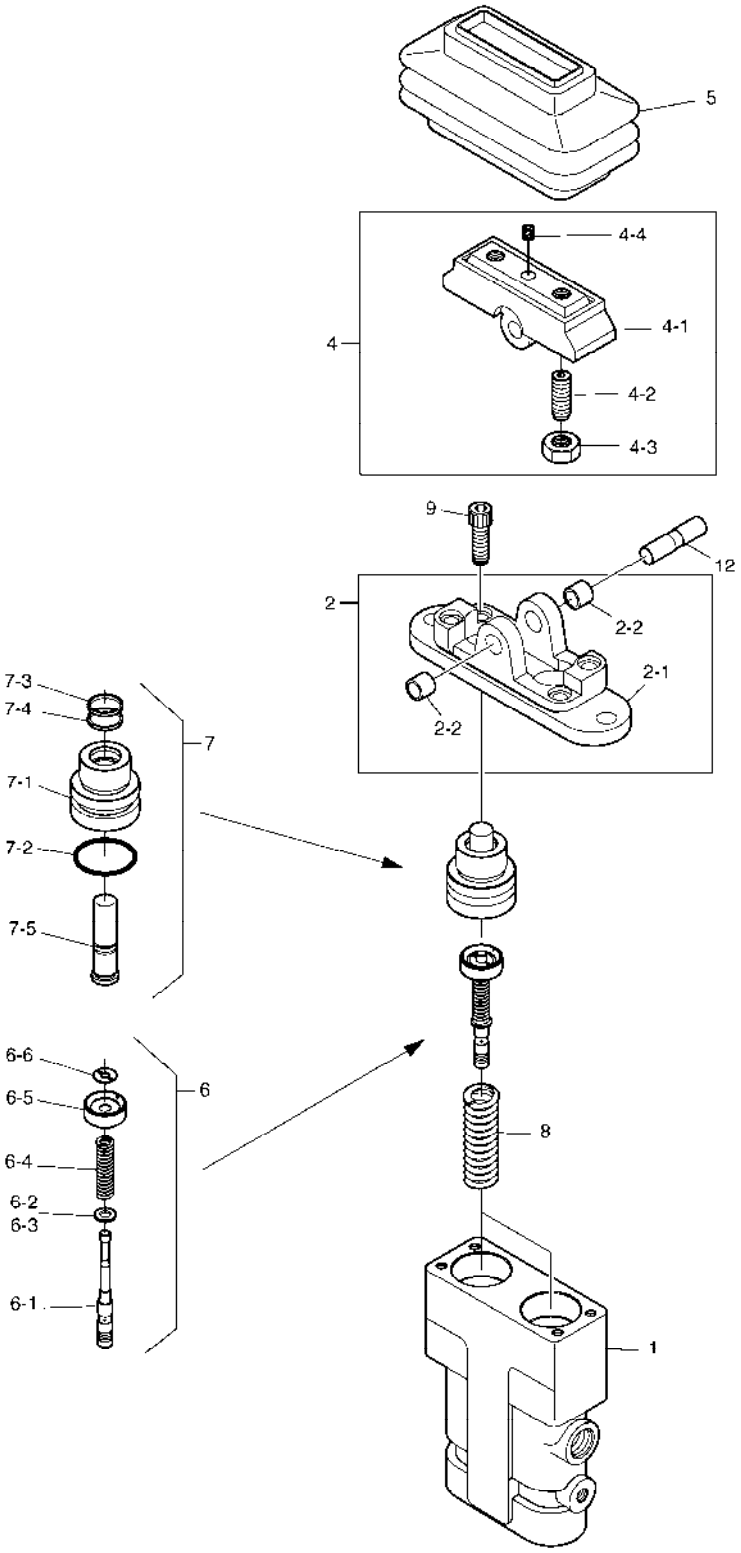

DATE	AUG. 28, 2009
3rd EDITION	

Fig. 4330 PEDAL VALVE - TWO WAY VANNE DE PEDALE

Serial No. ; 5110 ~

Key No.	Part No.	Description	Description	Q'ty	S.C	Serial No.	ICA	Replaceable part	
								Part No.	Q'ty
4330 --	K1017382A	PEDAL VALVE	VANNE	1		5110-			
1	-	CASING	CARTER	1	D				
2	K9002934	COVER KIT	COUVERCLE	1					
2-1	-	. COVER	. COUVERCLE	1	D				
2-2	2110-1184D7	. BUSH;DU 10X10	. BAGUE	2					
4	K9003465	CAM KIT	CAME	1					
4-1	-	. CAM	. CAME	1	D				
4-2	-	. SCREW;SET	. VIS	2	D				
4-3	S4014633	. NUT M10	. ECROU	2					
4-4	S3523601	. SCREW;SET M8X12	. VIS	1					
5	160-00008	BELLOW	SOUFFLET	1					
6	402-00036	SPOOL ASS`Y	PLUNGEUR	2					
6-1	-	. SPOOL	. BOBINE	1	D				
6-2	-	. SHIM	. CALE	1	RN				
6-3	-	. SEAT;SPRING	. SIEGE	1	D				
6-4	-	. SPRING	. VIS	1	D				
6-5	-	. SEAT;SPRING	. SIEGE	1	D				
6-6	-	. STOPPER	. ARRET	1	D				
7	1.428-00241A	PLUG ASS`Y	BOUCHON	2					
7-1	-	. PLUG	. BOUCHON	1	D				
7-2	-	. O-RING	. RONDELLE DE RETENUE	1	D				
7-3	-	. SEAL;DUST	. PARE-POUSSIERES	1	D				
7-4	-	. SEAL;ROD	. TIGE D'ETANCHEITE	1	D				
7-5	-	. ROD;PUSH	. TIGE DE POUSSOIR	1	D				
8	K9002935	SPRING	RESSORT	2					
9	S2209261	BOLT;WRENCH M8X30	BOULON A 6 PANS CREUX	2					
12	354-00003	SHAFT;CAM	ARBRE A CAMES	1					

DATE	AUG. 28, 2009
3rd EDITION	

Fig. 4340 ARTI. BOOM CYLINDER VERIN DE ARTICULAIRE FLECHE

Serial No. ;

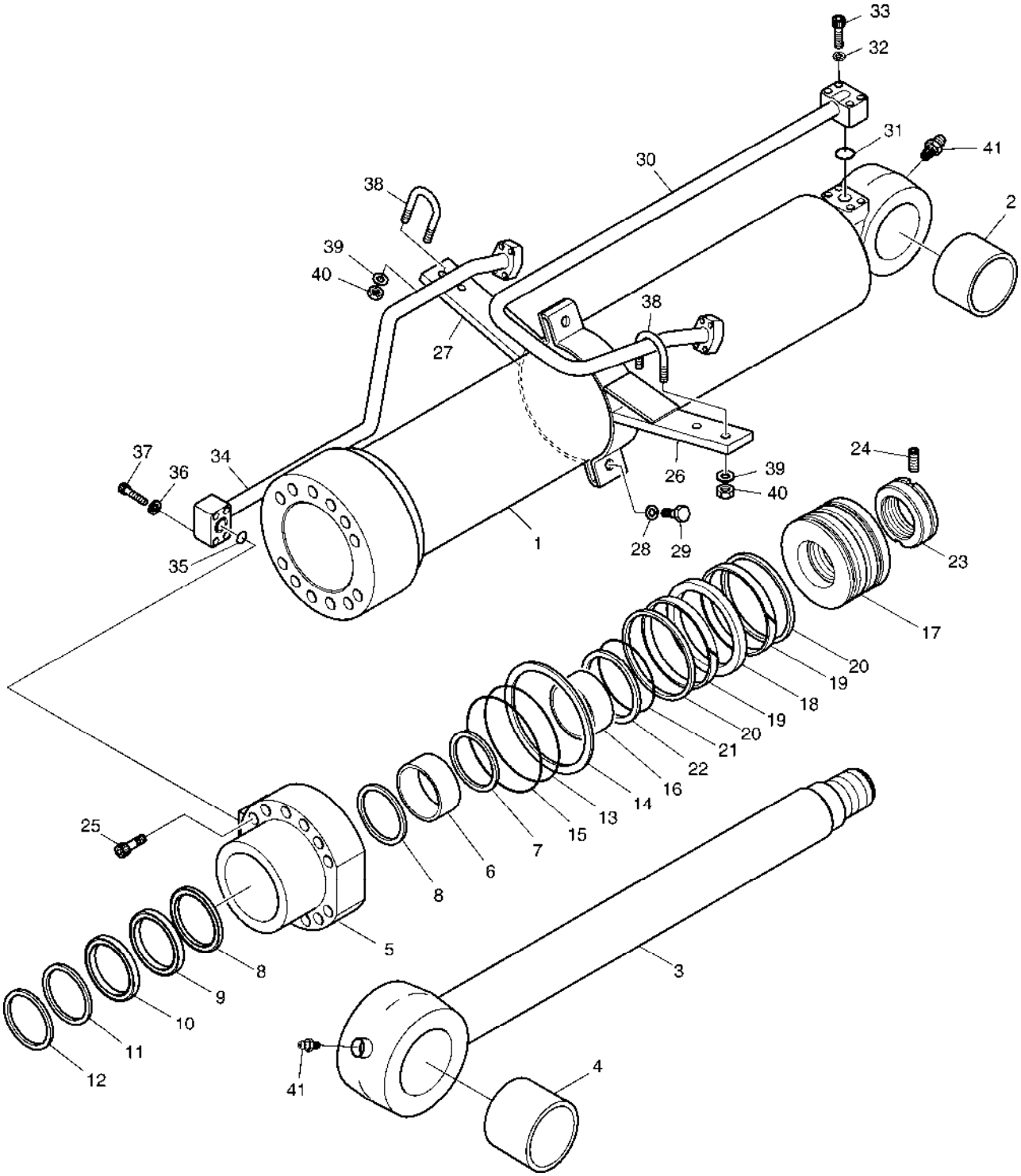

DATE	AUG. 28, 2009
3rd EDITION	

Fig. 4340 ARTI. BOOM CYLINDER VERIN DE ARTICULAIRE FLECHE

Serial No. ;

Key No.	Part No.	Description	Description	Q'ty	S.C	Serial No.	ICA	Replaceable part	
								Part No.	Q'ty
4340 --	K1023535A	CYLINDER;ARTI BOOM	CYLINDRES	1					
1	K9003678	TUBE ASS'Y	DOUILLE ACIER	1					
2	K1003914	BUSH	COUSSINET	1					
3	K9002284	ROD ASS'Y	TIGE	1					
4	K1003914	BUSH	COUSSINET	1					
5	K9002267	COVER;ROD	COUVERCLE	1					
6	110-00081	DD-BUSH	COUSSINET	1					
7	115-00073	RING;RETAINING	BAGUE	1					
8	K9001882	SEAL;BUFFER	ETANCHEITE A GRADINS	1	K				
9	K9001883	U-PACKING	JOINT EN U	1	K				
10	K9001884	RING;BACK UP	BAGUE ANTIEXTRUSION	1	K				
11	115-00077	WIPER;DUST	PARE-POUSSIERE	1	K				
12	115-00078	RING;RETAINING	ANNEAU DE SOUTIEN	1					
13	S8011451	O-RING	JOINT TORIQUE	1	K				
14	K9001164	RING;BACK UP	BAGUE D'ETANCHEITE	1	K				
15	180-00363	O-RING	JOINT TORIQUE	1	K				
16	K9002285	RING;CUSHION	BAGUE D'AMORTISSEMEN	1					
17	K9002269	PISTON	PISTON	1					
18	K9001166	SEAL;SLIPPER	PATIN D'ETANCHEITE	1	K				
19	115-00121	RING;WEAR	SEGMENT D'USURE	2	K				
20	115-00122	RING;SLYD	SEGMENT SLYD	2	K				
21	S8010801	O-RING	JOINT TORIQUE	1	K				
22	K9001895	RING;BACK UP	BAGUE ANTIEXTRUSION	2	K				
23	121-00044	NUT;PISTON	ECROU	1					
24	S3523836	SCREW;SET	VIS	1					
25	S2225271	BOLT;HEX SOCKET	BOULON A 6 PANS CREUX	12					
26	K9003679A	PIPE BAND ASS'Y-H	ENSEMBLE DE FIXATION	1					
27	K9003680A	PIPE BAND ASS'Y-R	ENSEMBLE DE FIXATION	1					
28	S5100703	WASHER;SPRING	RONDELLE ELASTIQUE	2					
29	S0560563	BOLT;HEX	BOULON A 6 PANS	2					
30	K9003681A	PIPE ASS'Y-H	CONDUITE	1					
31	S8000341	O-RING	JOINT TORIQUE	1					
32	S5100703	WASHER;SPRING	RONDELLE ELASTIQUE	4					
33	S2215961	BOLT;SOCKET	BOULON A 6 PANS CREUX	4					
34	K9003682A	PIPE ASS'Y-R	CONDUITE	1					
35	S8000341	O-RING	JOINT TORIQUE	1					
36	S5100703	WASHER;SPRING	RONDELLE ELASTIQUE	4					
37	S2215961	BOLT;SOCKET	BOULON A 6 PANS CREUX	4					

DATE	AUG. 28, 2009
3rd EDITION	

Fig. 4340 ARTI. BOOM CYLINDER VERIN DE ARTICULAIRE FLECHE

Serial No. ;

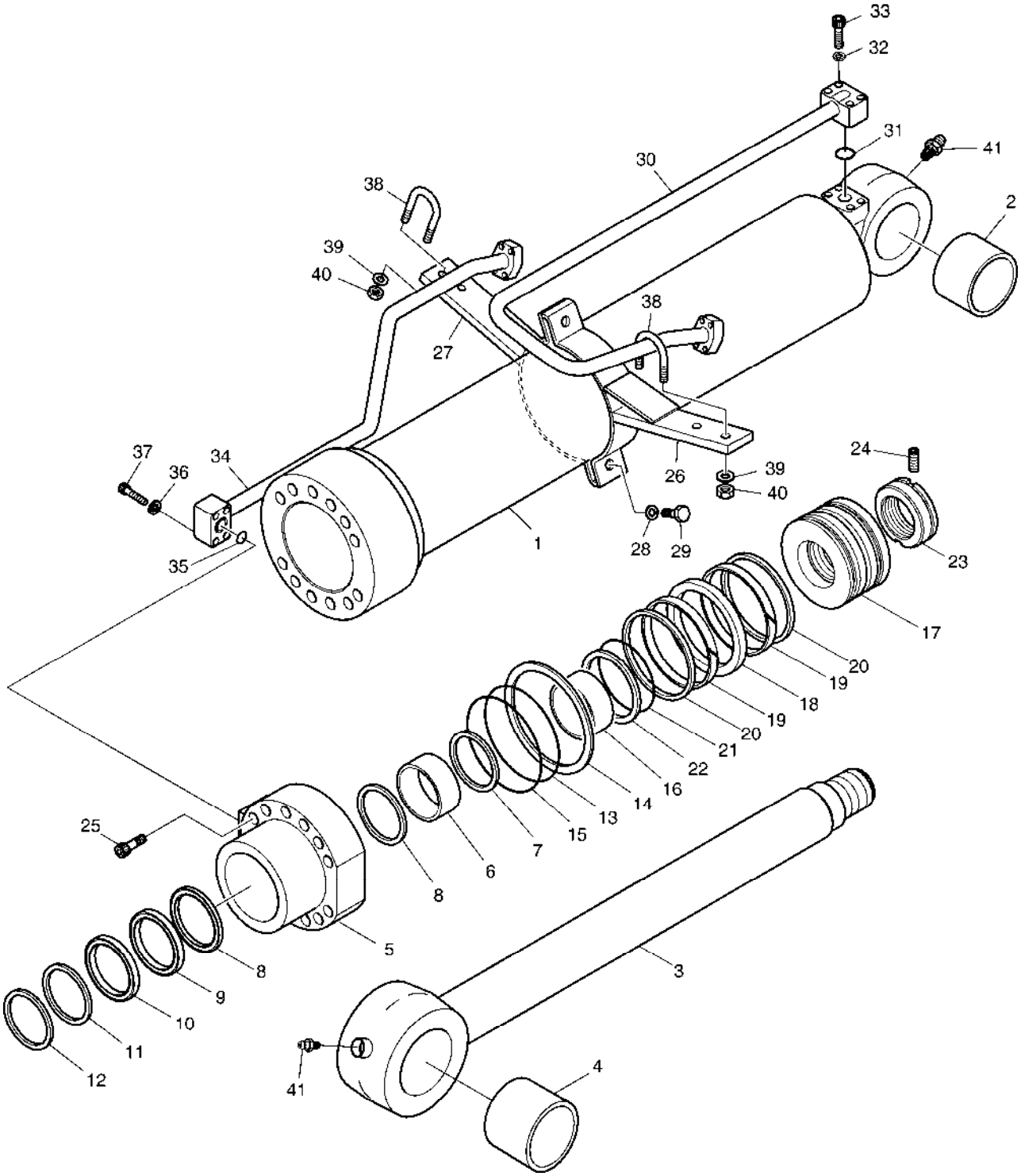

DATE	AUG. 28, 2009
3rd EDITION	

Fig. 4340 ARTI. BOOM CYLINDER VERIN DE ARTICULAIRE FLECHE

Serial No. ;

Key No.	Part No.	Description	Description	Q'ty	S.C	Serial No.	ICA	Replaceable part	
								Part No.	Q'ty
4340 -38	K9001158	U-BOLT	BOULON U	2					
39	S5100603	WASHER;SPRING	RONDELLE ELASTIQUE	4					
40	S4012633	NUT	ECROU	4					
41	S6710032	NIPPLE;GREASE	GRAISSEUR	2					
*	K9002289	SEAL KIT;BOOM CYL.	KIT D'ETANCHEITE	1					

DATE	AUG. 28, 2009
3rd EDITION	

Fig. 4350 ARM CYLINDER - ARTI. BOOM VERIN DE BALANCIER

Serial No. ;

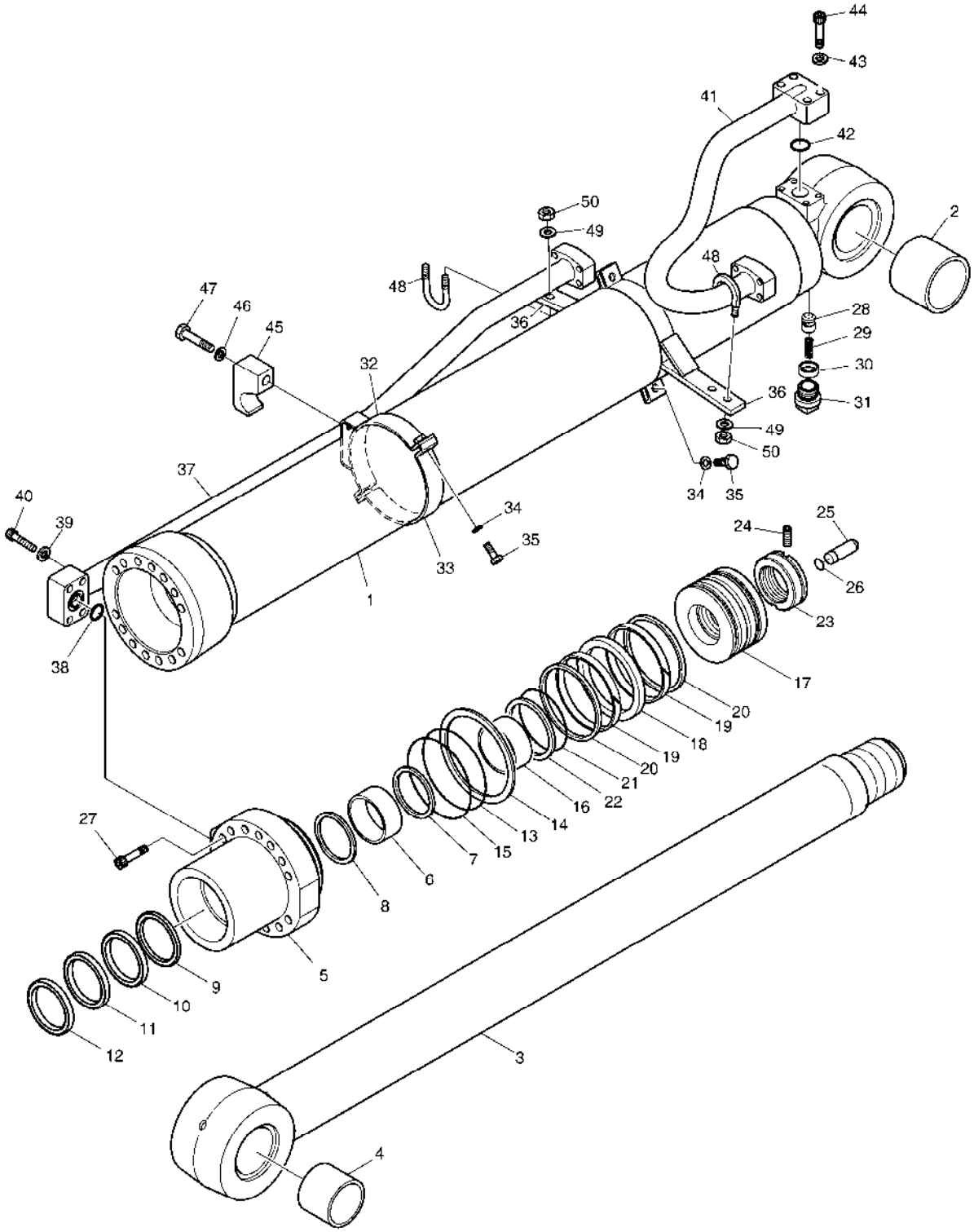

DATE	AUG. 28, 2009
3rd EDITION	

Fig. 4350 ARM CYLINDER - ARTI. BOOM VERIN DE BALANCIER

Serial No. ;

Key No.	Part No.	Description	Description	Q'ty	S.C	Serial No.	ICA	Replaceable part	
								Part No.	Q'ty
4350 --	K1030367	ARM CYLINDER	CYLINDRE	1					
1	K9008372	TUBE ASS'Y	ENSEMBLE TUBE	1					
2	K1000737	BUSH	BUSH	1					
3	K9004917	ROD ASS'Y	ENSEMBLE TIGE	1					
4	K1000737	BUSH	BUSH	1					
5	K9001881	ROD;COVER	TIGE	1					
6	110-00081	DD-BUSH	COUSSINET	1					
7	115-00073	RING;RETAINING	BAGUE	1					
8	K9001882	SEAL;BUFFER	ETANCHEITE A GRADINS	1	K				
9	K9001883	U-PACKING	JOINT EN U	1	K				
10	K9001884	RING;BACK UP	BAGUE ANTIEXTRUSION	1	K				
11	115-00077	WIPER;DUST	PARE-POUSSIERE	1	K				
12	115-00078	RING;RETAINING	ANNEAU DE SOUTIEN	1					
13	S8011351	O-RING	JOINT TORIQUE	1	K				
14	1.180-00662	RING;BACK UP	BAGUE ANTIEXTRUSION	1	K				
15	2180-1217D96	O-RING	JOINT TORIQUE	1	K				
16	K9001893	RING;CUSHION	BAGUE D'AMORTISSEMEN	1					
17	K9001894	PISTON	PISTON	1					
18	K9001148	SEAL;SLIPPER	PATIN D'ETANCHEITE	1	K				
19	115-00079	RING;WEAR	SEGMENT D'USURE	2	K				
20	K9001149	RING;DUST	BAGUE	2	K				
21	S8010801	O-RING	JOINT TORIQUE	1	K				
22	K9001895	RING;BACK UP	BAGUE ANTIEXTRUSION	2	K				
23	K9001896	NUT;RISTON	ECROU	1					
24	1.120-00219	SCREW;SET	VIS	1					
25	K9001897	PLUNGER;CUSHION	BOBINE	1					
26	115-00081	RING;STOP	BAGUE D'ARRET	1					
27	S2222272	BOLT;SOCKET	BOULON A 6 PANS CREUX	14					
28	420-00131	VALVE;CHECK	VANNE	1					
29	129-00071	SPRING	RESSORT	1					
30	1.195-00022	SUPPORT;SPRING	SUPPORT	1					
31	2181-1116D3	PLUG;HEX. SOCKET	BOUCHON	1					
32	K9001899	PIPE BAND ASS'Y-A	ENSEMBLE DE FIXATION	1					
33	124-00052	BAND;PIPE	ATTACHE	1					
34	S5100703	WASHER;SPRING	RONDELLE ELASTIQUE	4					
35	S0560563	BOLT;HEX	BOULON A 6 PANS	4					
36	K9003684	PIPE BAND ASS'Y	ENSEMBLE DE FIXATION	2					
37	K9008373	PIPE ASS'Y-R	CONDUITE	1					

DATE	AUG. 28, 2009
3rd EDITION	

Fig. 4350 ARM CYLINDER - ARTI. BOOM VERIN DE BALANCIER

Serial No. ;

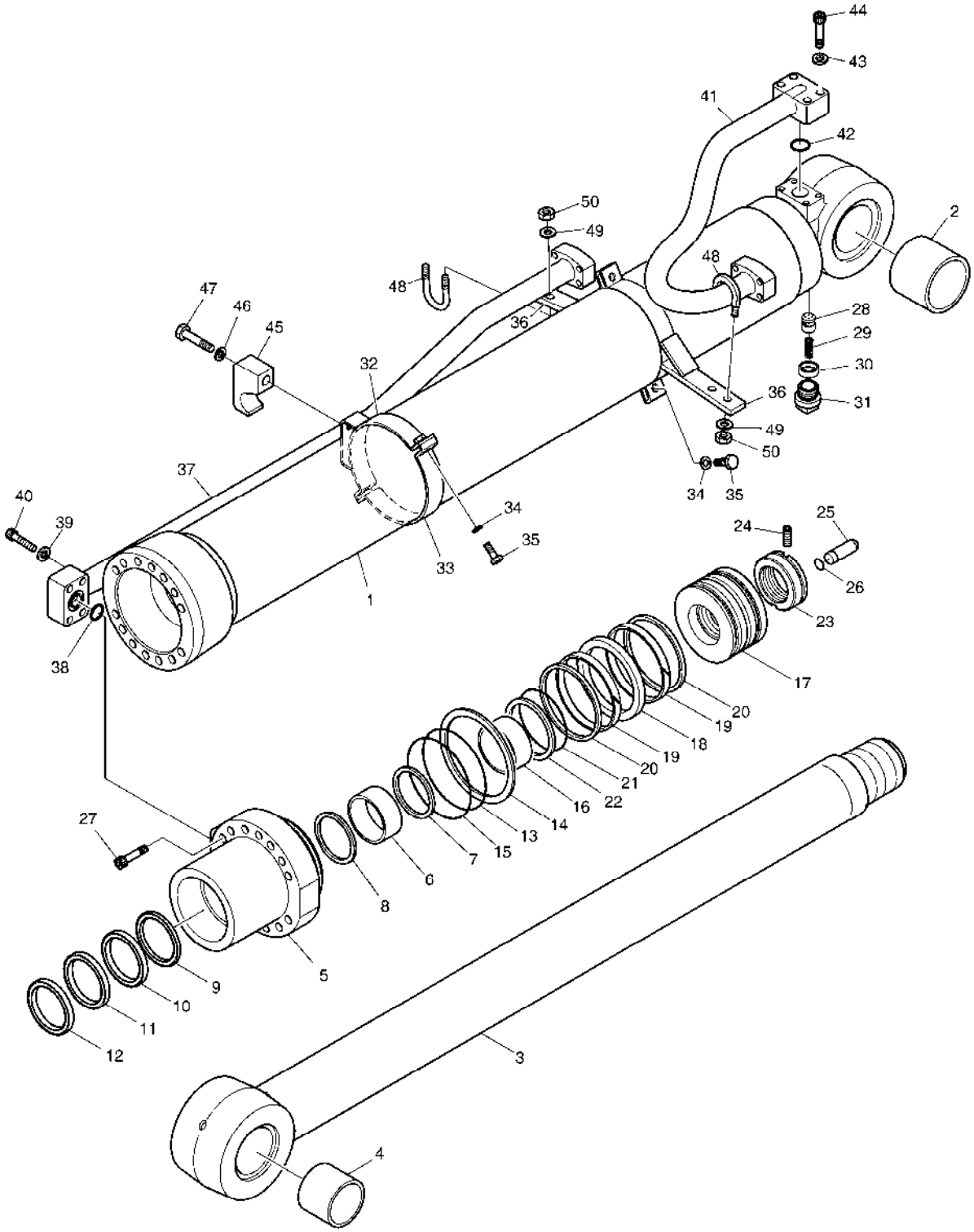

DATE	AUG. 28, 2009
3rd EDITION	

Fig. 4350 ARM CYLINDER - ARTI. BOOM VERIN DE BALANCIER

Serial No. ;

Key No.	Part No.	Description	Description	Q'ty	S.C	Serial No.	ICA	Replaceable part	
								Part No.	Q'ty
4350 -38	S8000341	O-RING	JOINT TORIQUE	1					
39	S5100703	WASHER;SPRING	RONDELLE ELASTIQUE	4					
40	S2215961	BOLT;SOCKET	BOULON A 6 PANS CREUX	4					
41	K9008374	PIPE ASS'Y-H	CONDUITE	1					
42	S8000341	O-RING	JOINT TORIQUE	1					
43	S5100603	WASHER;SPRING	RONDELLE ELASTIQUE	4					
44	S2212861	BOLT;SOCKET	BOULON A 6 PANS CREUX	4					
45	K9001159	CLAMP;PIPE	FIXATION DE TUYAU	1					
46	S5102903	WASHER	RONDELLE	1					
47	S0521853	BOLT	BOULON A 6 PANS	1					
48	K9001158	U-BOLT	BOULON U	2					
49	S5100603	WASHER;SPRING	RONDELLE ELASTIQUE	4					
50	S4012633	NUT	ECROU	4					
*	K9001901	SEAL KIT;ARM CYLINDER	JOINT	1					

DATE	AUG. 28, 2009
3rd EDITION	

Fig. 4360 ARTI BOOM CYLINDER - LOCK VALVE
VERIN DE ARTICULAIRE FLECHE

Serial No. ;

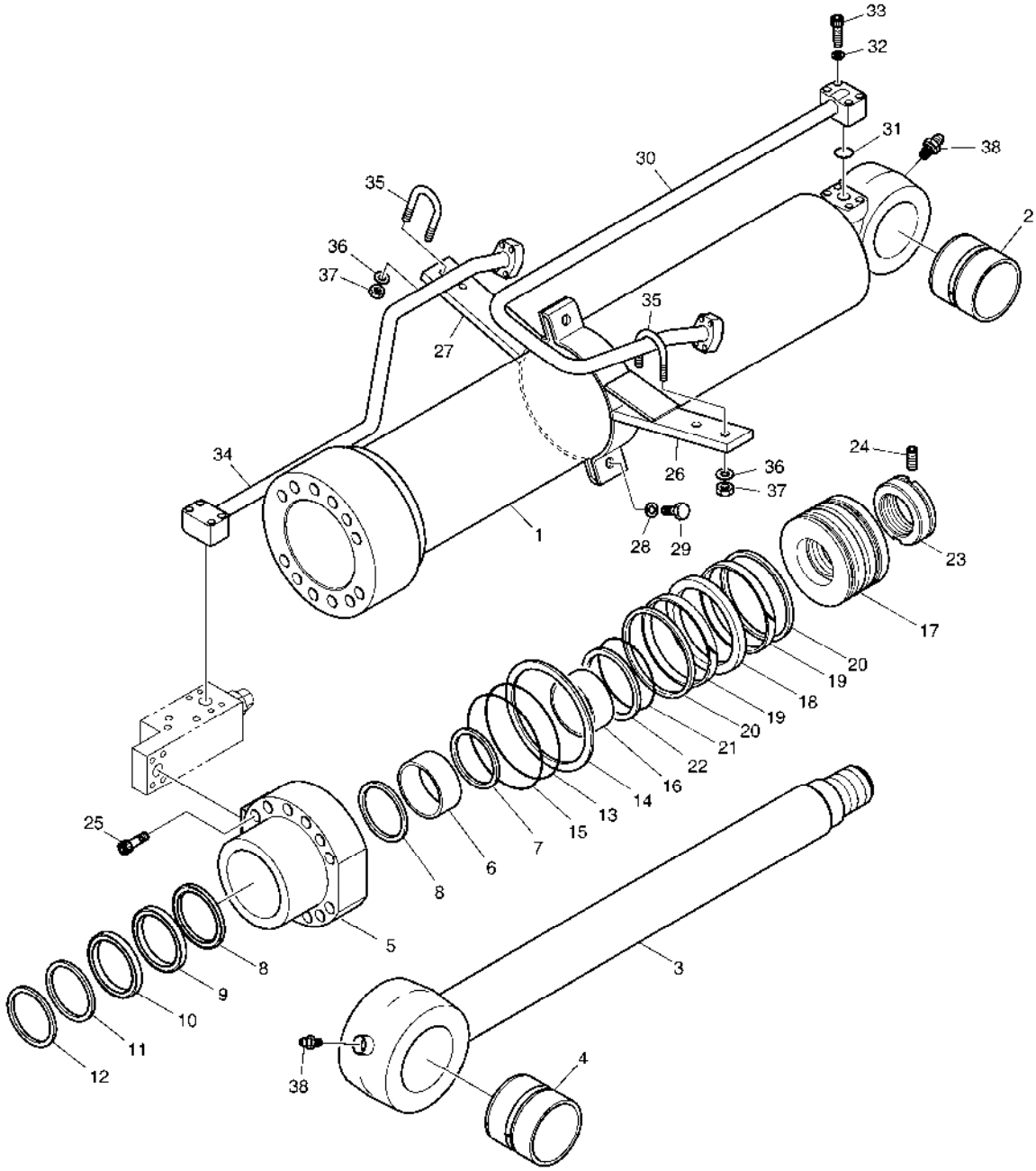

DATE	AUG. 28, 2009
3rd EDITION	

Fig. 4360 ARTI BOOM CYLINDER - LOCK VALVE
VERIN DE ARTICULAIRE FLECHE

Serial No. ;

Key No.	Part No.	Description	Description	Q'ty	S.C	Serial No.	ICA	Replaceable part	
								Part No.	Q'ty
4360 --	K1023537A	CYLINDER;ARTI BOOM	CYLINDRES	1					
1	K9003689	TUBE ASS'Y	DOUILLE ACIER	1					
2	K1003914	BUSH	COUSSINET	1					
3	K9002284	ROD ASS'Y	TIGE	1					
4	K1003914	BUSH	COUSSINET	1					
5	K9002267	COVER;ROD	COUVERCLE	1					
6	110-00081	DD-BUSH	COUSSINET	1					
7	115-00073	RING;RETAINING	BAGUE	1					
8	K9001882	SEAL;BUFFER	ETANCHEITE A GRADINS	1	K				
9	K9001883	U-PACKING	JOINT EN U	1	K				
10	K9001884	RING;BACK UP	BAGUE ANTIEXTRUSION	1	K				
11	115-00077	WIPER;DUST	PARE-POUSSIERE	1	K				
12	115-00078	RING;RETAINING	ANNEAU DE SOUTIEN	1					
13	S8011451	O-RING	JOINT TORIQUE	1	K				
14	K9001164	RING;BACK UP	BAGUE D'ETANCHEITE	1	K				
15	180-00363	O-RING	JOINT TORIQUE	1	K				
16	K9002285	RING;CUSHION	BAGUE D'AMORTISSEMEN	1					
17	K9002269	PISTON	PISTON	1					
18	K9001166	SEAL;SLIPPER	PATIN D'ETANCHEITE	1	K				
19	115-00121	RING;WEAR	SEGMENT D'USURE	2	K				
20	115-00122	RING;SLYD	SEGMENT SLYD	2	K				
21	S8010801	O-RING	JOINT TORIQUE	1	K				
22	K9001895	RING;BACK UP	BAGUE ANTIEXTRUSION	2	K				
23	121-00044	NUT;PISTON	ECROU	1					
24	S3523836	SCREW;SET	VIS	1					
25	S2225271	BOLT;HEX SOCKET	BOULON A 6 PANS CREUX	12					
26	K9003679A	PIPE BAND ASS'Y-H	ENSEMBLE DE FIXATION	1					
27	K9003680A	PIPE BAND ASS'Y-R	ENSEMBLE DE FIXATION	1					
28	S5100703	WASHER;SPRING	RONDELLE ELASTIQUE	2					
29	S0560563	BOLT;HEX	BOULON A 6 PANS	2					
30	K9003681A	PIPE ASS'Y-H	CONDUITE	1					
31	S8000341	O-RING	JOINT TORIQUE	1					
32	S5100703	WASHER;SPRING	RONDELLE ELASTIQUE	4					
33	S2215961	BOLT;SOCKET	BOULON A 6 PANS CREUX	4					
34	K9003690A	PIPE ASS'Y-R	CONDUITE	1					
35	K9001158	U-BOLT	BOULON U	2					
36	S5100603	WASHER;SPRING	RONDELLE ELASTIQUE	4					
37	S4012633	NUT	ECROU	4					

DATE	AUG. 28, 2009
3rd EDITION	

Fig. 4360 ARTI BOOM CYLINDER - LOCK VALVE
VERIN DE ARTICULAIRE FLECHE

Serial No. ;

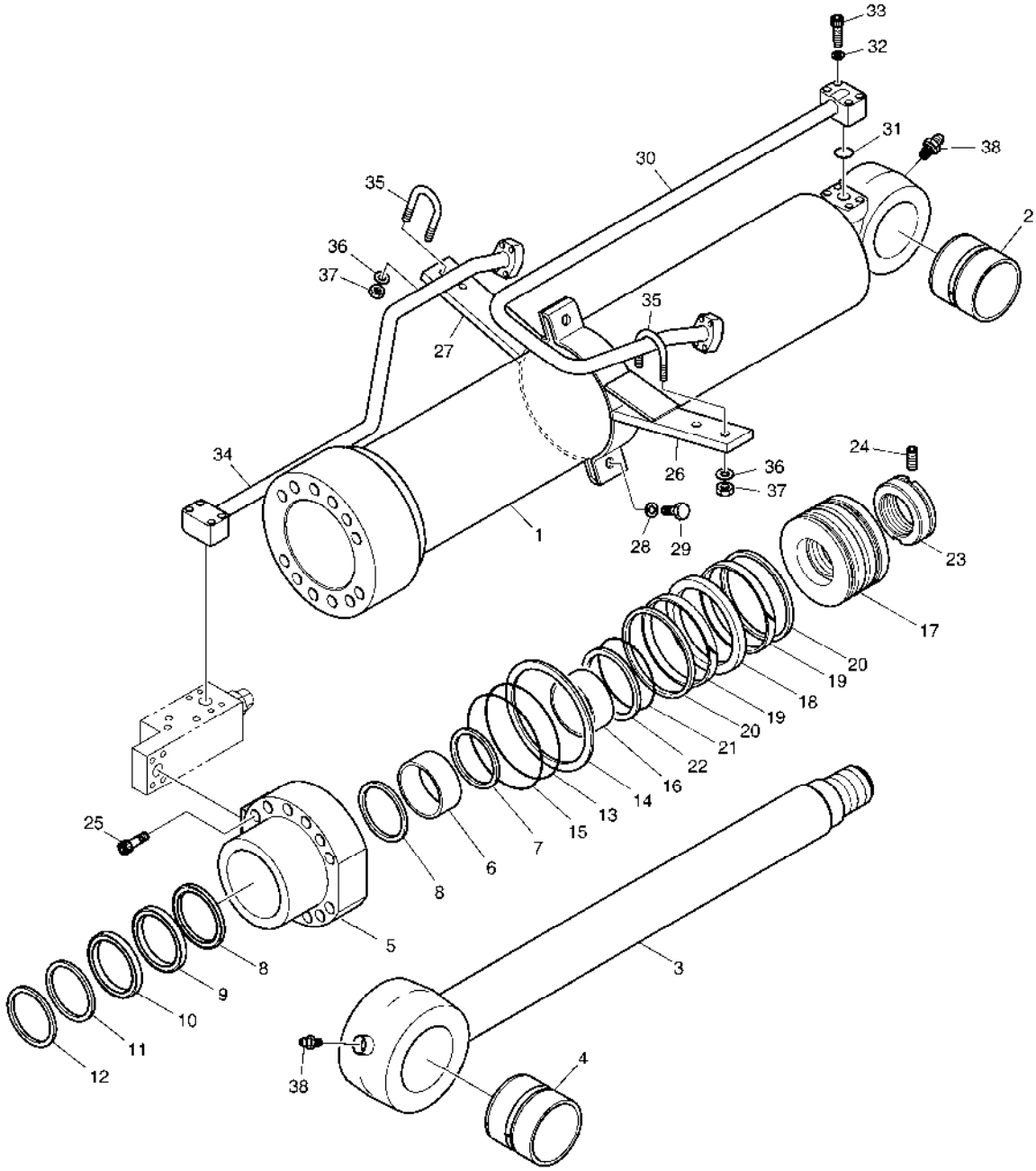

DATE	AUG. 28, 2009
3rd EDITION	

Fig. 4360 ARTI BOOM CYLINDER - LOCK VALVE
VERIN DE ARTICULAIRE FLECHE

Serial No. ;

Key No.	Part No.	Description	Description	Q'ty	S.C	Serial No.	ICA	Replaceable part	
								Part No.	Q'ty
4360 -38	S6710032	NIPPLE;GREASE	GRAISSEUR	2					
*	K9002289	SEAL KIT;BOOM CYL.	KIT D'ETANCHEITE	1					

DATE	AUG. 28, 2009
3rd EDITION	

Fig. 4370 ARM CYLINDER - ARTI BOOM(LOCK V/V) VERIN DE BALANCIER

Serial No. ;

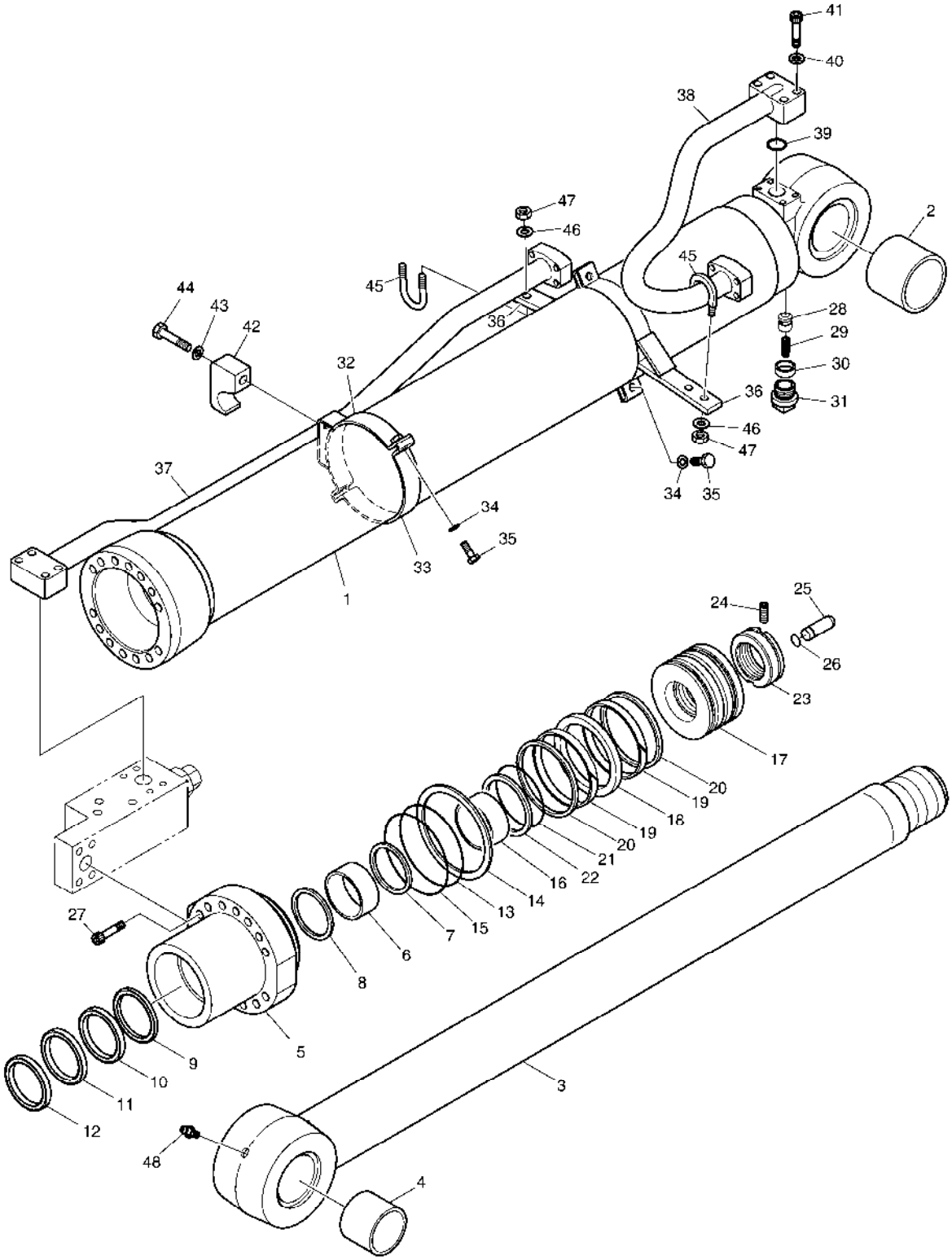

DATE	AUG. 28, 2009
3rd EDITION	

Fig. 4370 ARM CYLINDER - ARTI BOOM(LOCK V/V) VERIN DE BALANCIER

Serial No. ;

Key No.	Part No.	Description	Description	Q'ty	S.C	Serial No.	ICA	Replaceable part	
								Part No.	Q'ty
4370 --	K1036970	ARM CYLINDER	CYLINDRE DE BRAS	1					
1	K9008370	TUBE ASS'Y	ENSEMBLE TUBE	1					
2	K1000737	BUSH	BUSH	1					
3	K9004917	ROD ASS'Y	ENSEMBLE TIGE	1					
4	K1000737	BUSH	BUSH	1					
5	K9001881	ROD;COVER	TIGE	1					
6	110-00081	DD-BUSH	COUSSINET	1					
7	115-00073	RING;RETAINING	BAGUE	1					
8	K9001882	SEAL;BUFFER	ETANCHEITE A GRADINS	1	K				
9	K9001883	U-PACKING	JOINT EN U	1	K				
10	K9001884	RING;BACK UP	BAGUE ANTIEXTRUSION	1	K				
11	115-00077	WIPER;DUST	PARE-POUSSIERE	1	K				
12	115-00078	RING;RETAINING	ANNEAU DE SOUTIEN	1					
13	S8011351	O-RING	JOINT TORIQUE	1	K				
14	1.180-00662	RING;BACK UP	BAGUE ANTIEXTRUSION	1	K				
15	2180-1217D96	O-RING	JOINT TORIQUE	1	K				
16	K9001893	RING;CUSHION	BAGUE D'AMORTISSEMEN	1					
17	K9001894	PISTON	PISTON	1					
18	K9001148	SEAL;SLIPPER	PATIN D'ETANCHEITE	1	K				
19	115-00079	RING;WEAR	SEGMENT D'USURE	2	K				
20	K9001149	RING;DUST	BAGUE	2	K				
21	S8010801	O-RING	JOINT TORIQUE	1	K				
22	K9001895	RING;BACK UP	BAGUE ANTIEXTRUSION	2	K				
23	K9001896	NUT;RISTON	ECROU	1					
24	1.120-00219	SCREW;SET	VIS	1					
25	K9001897	PLUNGER;CUSHION	BOBINE	1					
26	115-00081	RING;STOP	BAGUE D'ARRET	1					
27	S2222272	BOLT;SOCKET	BOULON A 6 PANS CREUX	14					
28	420-00131	VALVE;CHECK	VANNE	1					
29	129-00071	SPRING	RESSORT	1					
30	1.195-00022	SUPPORT;SPRING	SUPPORT	1					
31	2181-1116D3	PLUG;HEX. SOCKET	BOUCHON	1					
32	K9001899	PIPE BAND ASS'Y-A	ENSEMBLE DE FIXATION	1					
33	124-00052	BAND;PIPE	ATTACHE	1					
34	S5100703	WASHER;SPRING	RONDELLE ELASTIQUE	4					
35	S0560563	BOLT;HEX	BOULON A 6 PANS	4					
36	K9003684	PIPE BAND ASS'Y	ENSEMBLE DE FIXATION	2					
37	K9008371	PIPE ASS'Y-R	CONDUITE	1					

DATE	AUG. 28, 2009
3rd EDITION	

Fig. 4370 ARM CYLINDER - ARTI BOOM(LOCK V/V) VERIN DE BALANCIER

Serial No. ;

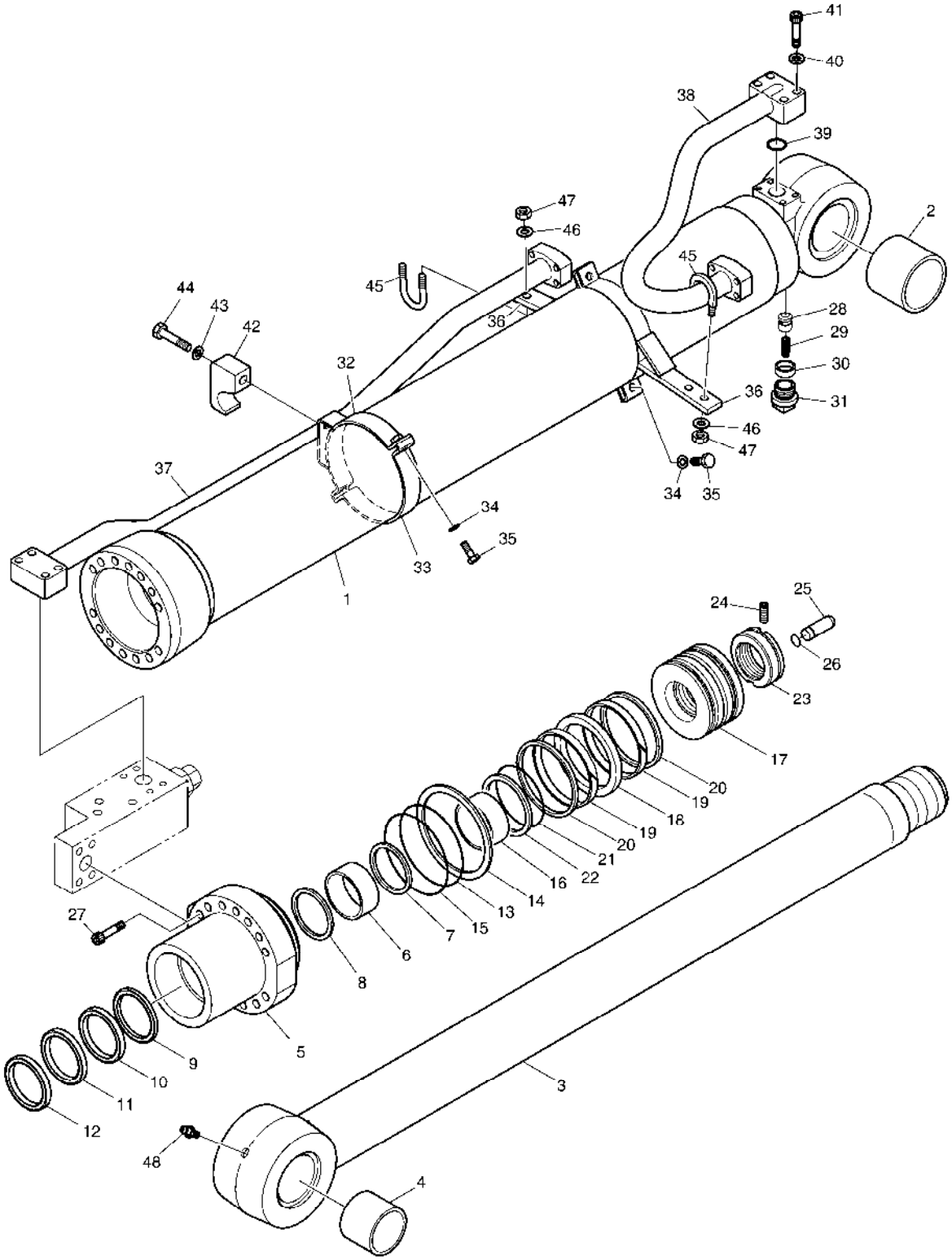

DATE	AUG. 28, 2009
3rd EDITION	

Fig. 4370 ARM CYLINDER - ARTI BOOM(LOCK V/V) VERIN DE BALANCIER

Serial No. ;

Key No.	Part No.	Description	Description	Q'ty	S.C	Serial No.	ICA	Replaceable part	
								Part No.	Q'ty
4370 -38	K9008374	PIPE ASS'Y-H	CONDUITE	1					
39	S8000341	O-RING	JOINT TORIQUE	1					
40	S5100603	WASHER;SPRING	RONDELLE ELASTIQUE	4					
41	S2212861	BOLT;SOCKET	BOULON A 6 PANS CREUX	4					
42	K9001159	CLAMP;PIPE	FIXATION DE TUYAU	1					
43	S5102903	WASHER	RONDELLE	1					
44	S0521853	BOLT	BOULON A 6 PANS	1					
45	K9001158	U-BOLT	BOULON U	2					
46	S5100603	WASHER;SPRING	RONDELLE ELASTIQUE	4					
47	S4012633	NUT	ECROU	4					
48	S6710032	NIPPLE;GREASE	GRAISSEUR	1					
*	K9001901	SEAL KIT;ARM CYLINDER	JOINT	1					

DATE	AUG. 28, 2009
3rd EDITION	

Fig. 4380 CONTROL VALVE-ARTI.BOOM TIROIRS DE COMMANDE

Serial No. ;

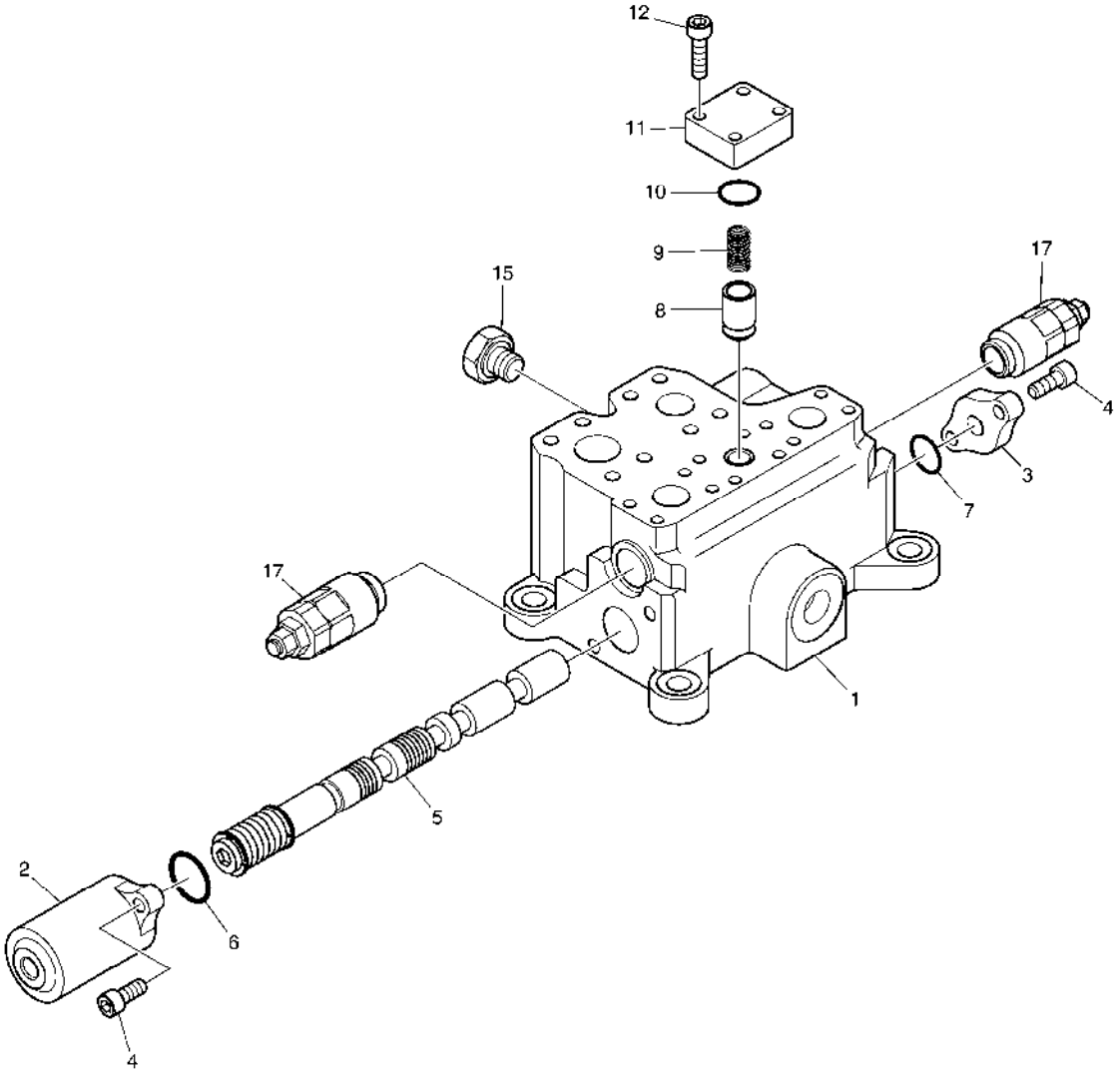

DATE	AUG. 28, 2009
3rd EDITION	

Fig. 4380 CONTROL VALVE-ARTI.BOOM TIROIRS DE COMMANDE

Serial No. ;

Key No.	Part No.	Description	Description	Q'ty	S.C	Serial No.	ICA	Replaceable part	
								Part No.	Q'ty
4380 --	K1033235A	VALVE;CONTROL	TIROIR DE COMMANDE	1					
1	-	HOUSING	VIS	1	D				
2	K9006624	CAP	CHAPEAU	1					
3	K9006623	CAP	CHAPEAU	1					
4	S2212066	BOLT;SOCKET	BOULON A 6 PANS CREUX	4					
5	K9006622	SPOOL ASS'Y	PLUNGEUR	1					
6	2180-1217D67	O-RING	JOINT TORIQUE	1					
7	2180-1217D63	O-RING	JOINT TORIQUE	1					
8	K9006625	POPPET	SOUPAPE SOULEVANTE	1					
9	K9006626	SPRING	RESSORT	1					
10	S8000321	O-RING	JOINT TORIQUE	1					
11	-	FLANGE	BRIDE	1	D				
12	S2212366	BOLT;SOCKET	BOULON A 6 PANS CREUX	4					
15	K9006620	PLUG	BOUCHON	1					
17	K9006621	VALVE;OVER LOAD	VANNE	2					

DATE	AUG. 28, 2009
3rd EDITION	

Fig. 5100 TOOLS OUTILLAGE

Serial No. ;

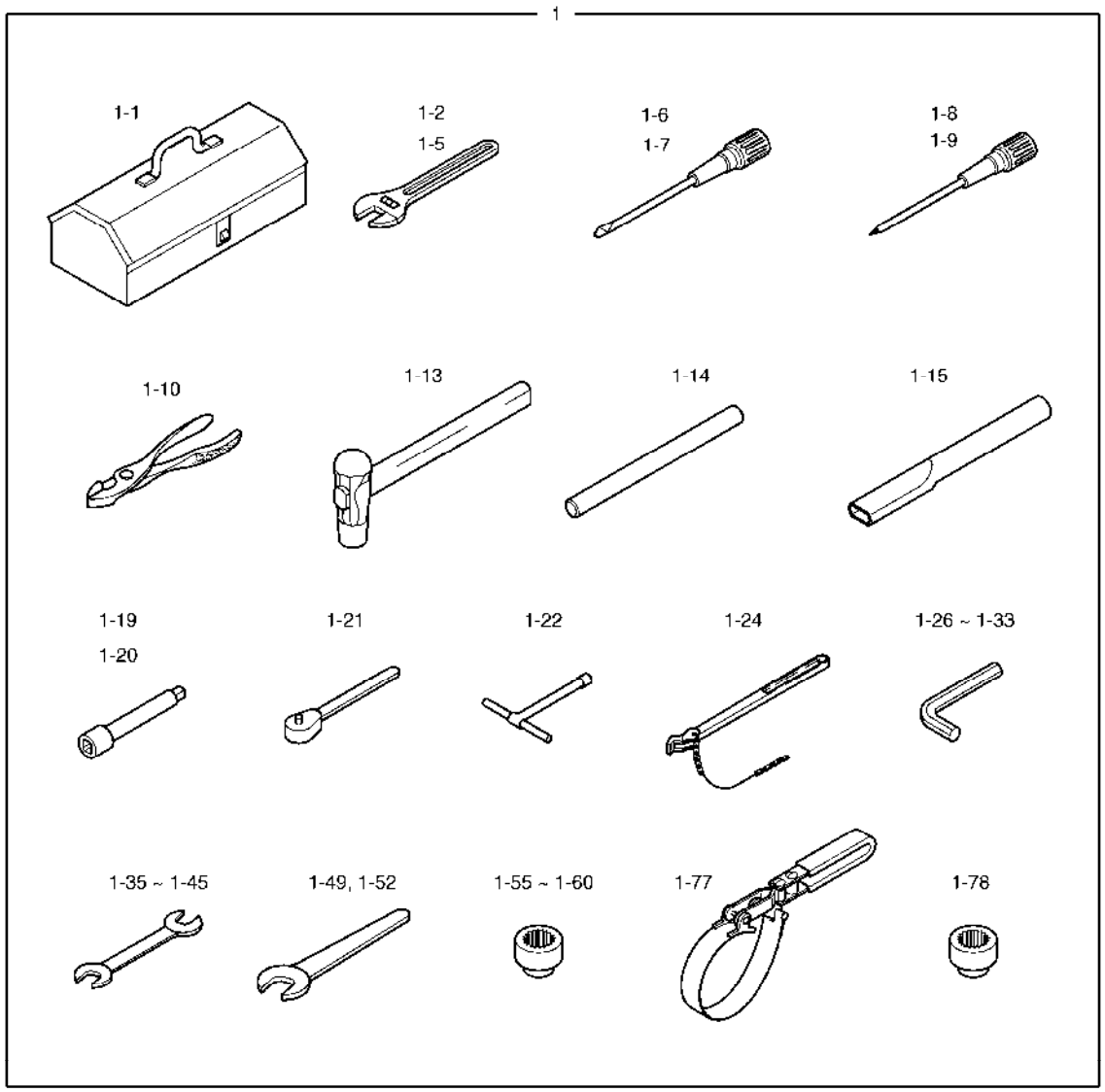

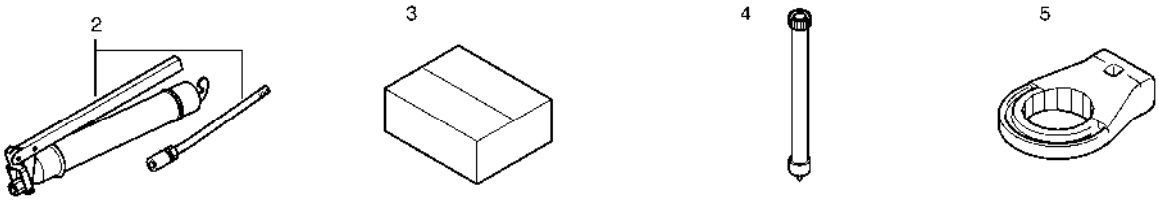

DATE	AUG. 28, 2009
3rd EDITION	

Fig. 5100 TOOLS OUTILLAGE

Serial No. ;

Key No.	Part No.	Description	Description	Q'ty	S.C	Serial No.	ICA	Replaceable part	
								Part No.	Q'ty
5100 --	K1016581	TOOLS	OUTILLAGE	-	D				
1	2199-1063F36A	TOOL ASS`Y	OUTILLAGE	1					
1-1	2199-9043	. BOX;TOOL	. BOITE	1					
1-2	T6580008	. WRENCH;ADJUSTABLE 6`	. CLE A MOLETTE	1	D				
1-5	T6580020	. WRENCH;ADJUST	. CLE A MOLETTE	1	D				
1-6	T7050003	. DRIVER(-)	. TOURNEVIS(-)	1	D				
1-7	T7050013	. DRIVER	. TOURNEVIS(-)	1	D				
1-8	T7050021	. DRIVER	. TOURNEVIS(-)	1	D				
1-9	T7050022	. DRIVER	. TOURNEVIS(+)	1	D				
1-10	T7500004	. PILER;COMBI	. PINCE	1	D				
1-13	T7260057	. HAMMER	. MARTEAU	1	D				
1-14	2199-1004	. BAR	. BARRE	1					
1-15	2199-1005	. PIPE	. CONDUITE	1					
1-19	T6690012	. BAR;EXTENSION	. RALLONGE	1	D				
1-20	T6690013	. BAR;EXTENSION	. RALLONGE	1	D				
1-21	T6750003	. HANDLE;RATCHET	. POIGNEE A CLIQUET	1	D				
1-22	2199-9009	. CLIP;DRIVER	. TOURNEVIS	1					
1-24	2199-9057	. WRENCH;FILTER	. CLE A MOLETTE	1					
1-26	T6550005	. L-WRENCH	. CLE MALE	1	D				
1-27	T6550006	. L-WRENCH	. CLE MALE	1	D				
1-28	T6550007	. L-WRENCH	. CLE MALE	1	D				
1-29	T6550009	. L-WRENCH	. CLE MALE	1	D				
1-30	T6550011	. L-WRENCH	. CLE 6 PANS MALE	1	D				
1-32	T6550015	. WRENCH;HEX	. CLE MALE	1	D				
1-33	T6550018	. L-WRENCH 17	. CLE MALE	1	D				
1-35	T6510062	. SPANNER	. CLE PLATE	1	D				
1-36	T6510066	. SPANNER	. CLE PLATE	1	D				
1-37	T6510070	. SPANNER	. CLE PLATE	1	D				
1-38	T6510072	. SPANNER	. CLE PLATE	1	D				
1-39	T6510075	. SPANNER	. CLE PLATE	1	D				
1-41	T6510081	. SPANNER	. CLE PLATE	1	D				
1-42	T6510085	. SPANNER 27X30	. CLE PLATE	1	D				
1-44	T6510089	. SPANNER 32X36	. CLE PLATE	1	D				
1-45	T6510091	. SPANNER	. CLE PLATE	1	D				
1-49	T6510018	. SPANNER 24	. CLE PLATE	1	D				
1-52	T6510027	. SPANNER	. CLE PLATE	1	D				
1-55	T6600183	. SOCKET M6	. CLE A DOUILLE	1	D				
1-56	T6600189	. SOCKET M8	. CLE A DOUILLE	1	D				

DATE	AUG. 28, 2009
3rd EDITION	

Fig. 5100 TOOLS OUTILLAGE

Serial No. ;

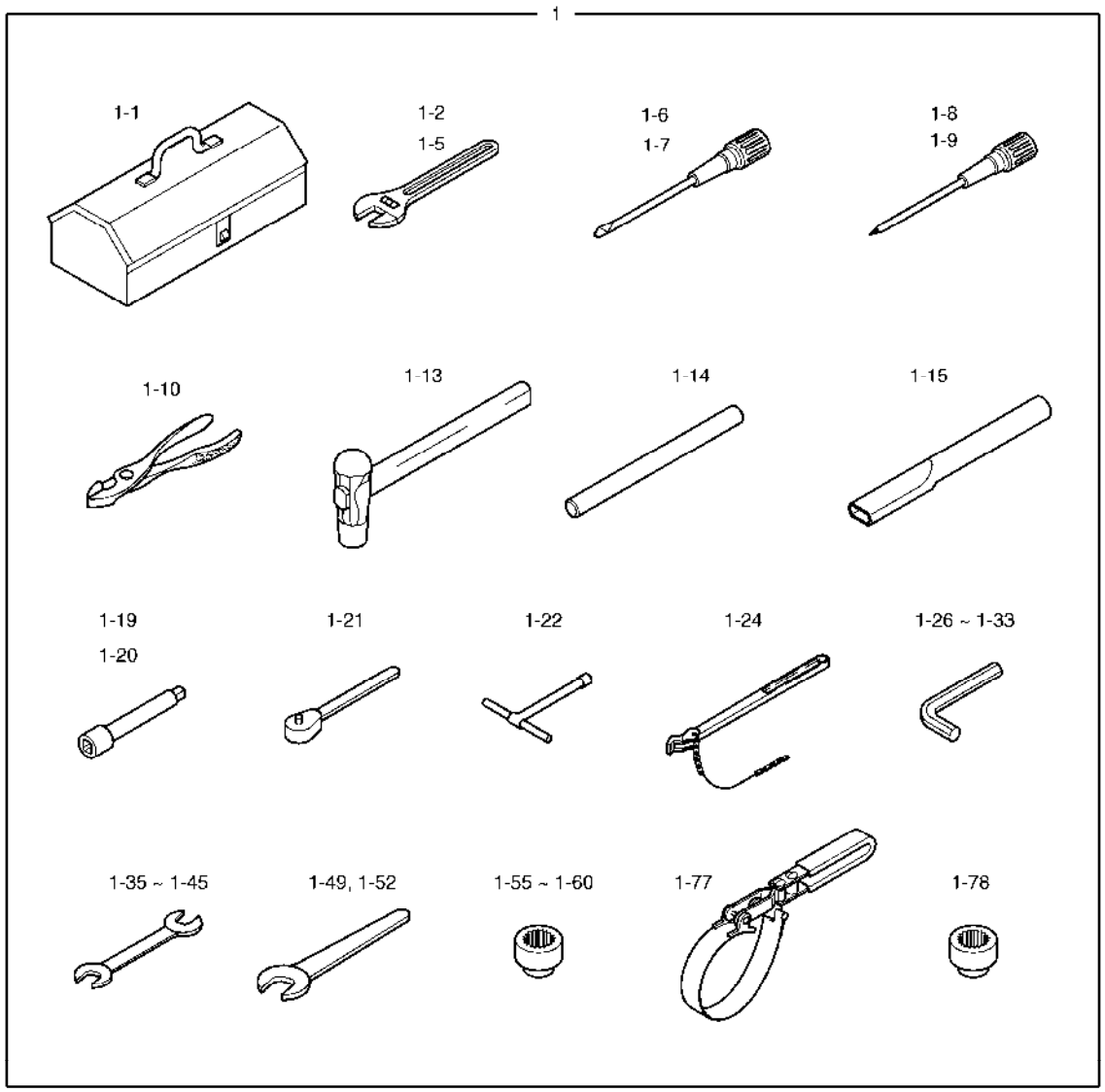

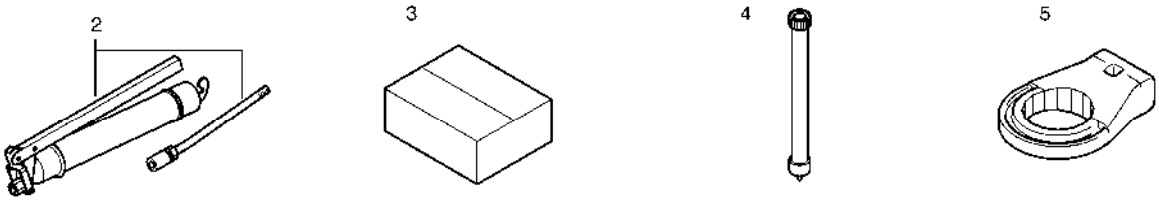

DATE	AUG. 28, 2009
3rd EDITION	

Fig. 5100 TOOLS OUTILLAGE

Serial No. ;

Key No.	Part No.	Description	Description	Q'ty	S.C	Serial No.	ICA	Replaceable part	
								Part No.	Q'ty
5100 -1-57	T6600197	. SOCKET;WRENCH	. CLE A DOUILLE	1	D				
1-58	T6600201	. SOCKET;WRENCH	. CLE A DOUILLE	1	D				
1-59	T6600211	. SOCKET;WRENCH	. CLE A DOUILLE	1	D				
1-60	T6600223	. SOCKET;WRENCH	. CLE A DOUILLE	1	D				
1-76	199-00126	. FILTER;WRENCH	. FILTRE	1					
1-77	K1008167	. WRENCH;FILTER	. CLE A FILTRE	1					
1-78	T6600217	. SOCKET;WRENCH	. CLE A DOUILLE	1	D				
2	2199-9008	GREASE GUN	PISTOLET DE GRAISSAGE	1					
3	2199-9007	BOX	BOITE	1					
4	184-00120	HOSE;OIL CHANGE	TUYAU FLEXIBLE	1					
5	K1006586	TOOL;PRE FILTER	FILTRE D'ESSENCE DE WR	1					

DATE	AUG. 28, 2009
3rd EDITION	

Fig. 5110 SPARE PARTS PIECES DE RECHANGE

Serial No. ;

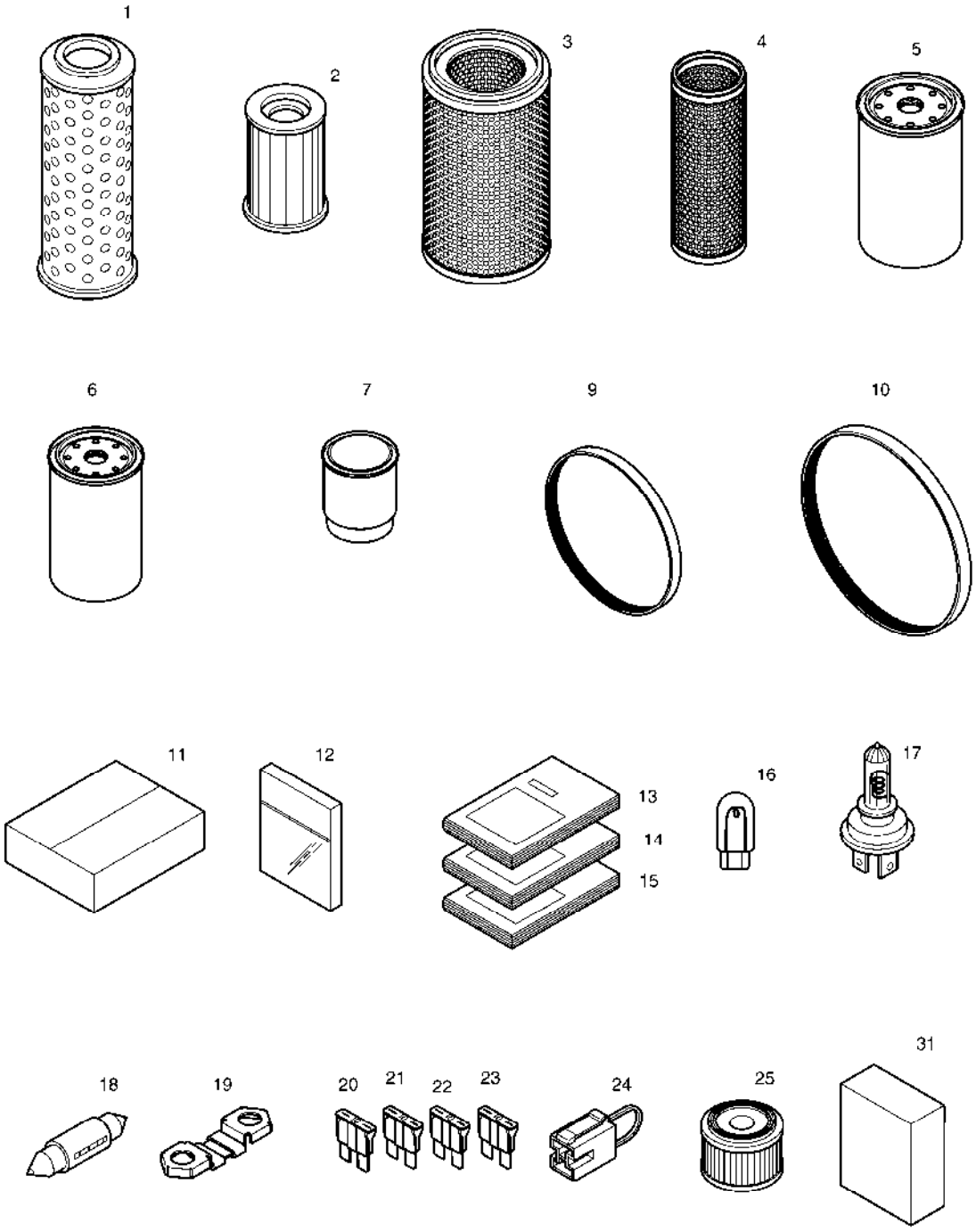

DATE	AUG. 28, 2009
3rd EDITION	

Fig. 5110 SPARE PARTS PIECES DE RECHANGE

Serial No. ;

Key No.	Part No.	Description	Description	Q'ty	S.C	Serial No.	ICA	Replaceable part	
								Part No.	Q'ty
5110 --	K1016582A	SPARE PARTS	BAGUE D'ECARTEMENT	-	D				
1	474-00055	ELEMENT;RETURN FILTER	ELEMENT	1					
2	2471-1154	ELEMENT;FILTER(PILOT)	ELEMENT FILTRANT	1					
3	474-00040	ELEMENT;OUTER	ELEMENT	1					
4	474-00039	ELEMENT;INNER	ELEMENT	1					
5	65.05510-5032	FILTER;OIL	FILTRE D'HUILE	1					
6	65.12503-5026	FILTER;E/G FUEL	FILTRE A GAZOLE	1					
7	K1006530	FILTER;PRE FUEL	FILTRE	1					
9	2106-1019D25	V-BELT;POLY(4PK-1210L)	COURROIE	1					
10	65.96801-0194	BELT;FAN	COURROIE	1					
11	2512-1095D1	BOX;SPARE PARTS	BOITE DE PIECES DE RECH	1					
12	2180-9153	O-RING KIT	KIT DE REPARATION	1					
13	K1016583EF	PARTS BOOK	MANUEL DE PIECES	1					
14	K1016584E	OPERATION MANUAL	MANUEL D'UTILISATION	1					
15	K1016585E	SHOP MANUAL	MANUEL DE MAGASIN	1					
16	515-00012A	BULB	AMPOULE	2					
17	2515-1022D1	BULB;HALOGEN	AMPOULE	1					
18	2515-1016D4	BLUB;HALOGEN	AMPOULE	1					
19	527-00005	FUSE;PREHEAT RELAY	FUSIBLE	2					
20	2527-1016	FUSE;BLADE 10A	LAME DE FUSIBLE	2					
21	2527-1017	FUSE;BLADE 15A	LAME DE FUSIBLE	2					
22	2527-1018	FUSE;BLADE 20A	FUSIBLE	1					
23	2527-1025	FUSE;BLADE 30A	FUSIBLE	1					
24	2527-1023A	LINK;FUSIBLE	FUSIBLE	1					
25	K1029257	ELEMENT;AIR BREATHER	ELEMENT	1		5071-			
31	K1006854	OIL;ENGINE	RESERVOIR D'HUILE	6					

DATE	AUG. 28, 2009
3rd EDITION	

Fig. 5120 NAME PLATE - CABIN(EXPORT) PLAQUE D'IDENTIFICATION

Serial No. ;

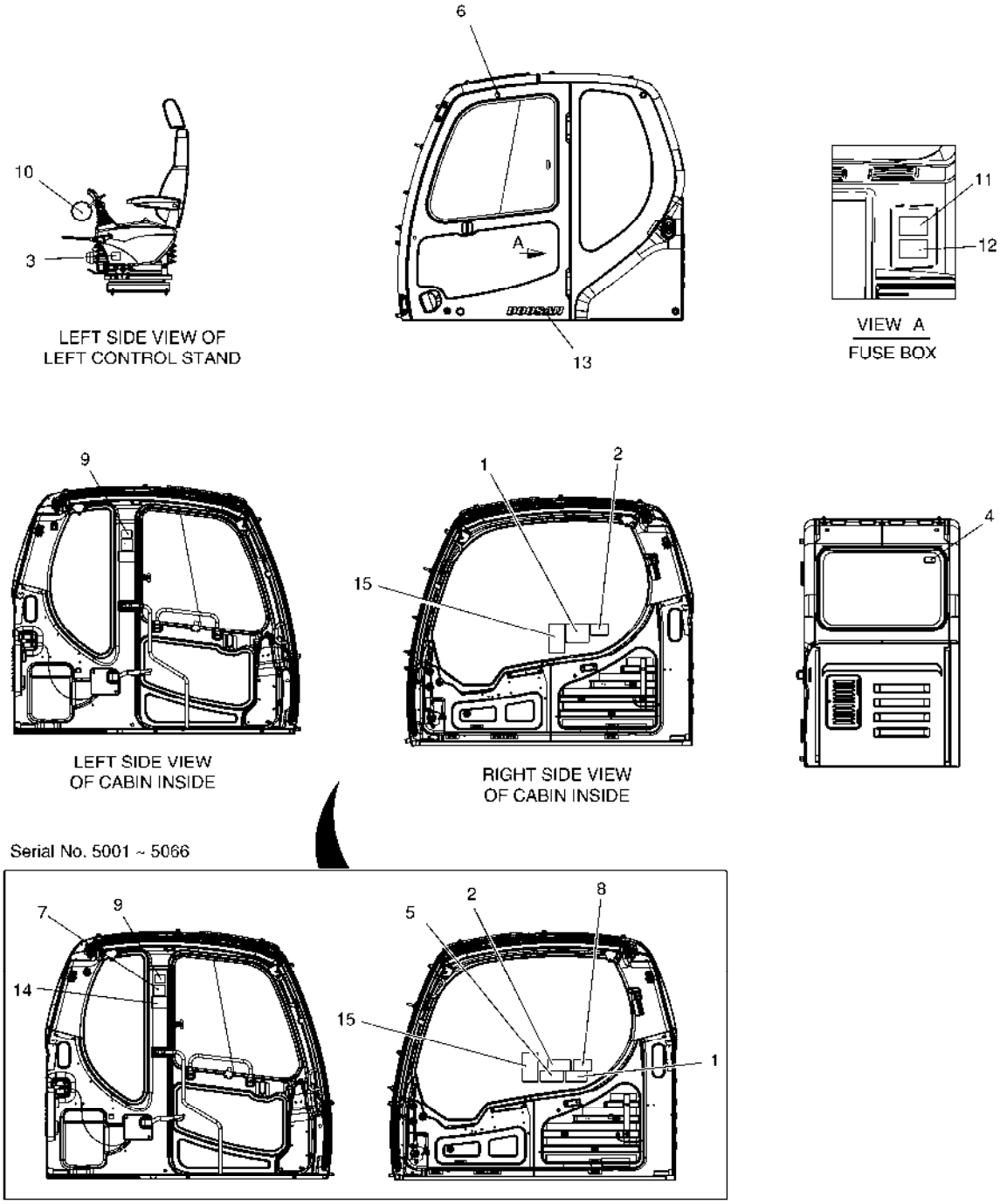

DATE	AUG. 28, 2009
3rd EDITION	

Fig. 5120 NAME PLATE - CABIN(EXPORT) PLAQUE D'IDENTIFICATION

Serial No. ;

Key No.	Part No.	Description	Description	Q'ty	S.C	Serial No.	ICA	Replaceable part	
								Part No.	Q'ty
5120 --	K1007342H	NAME PLATE ASS'Y	PLAQUE D'IDENTIFICATION	-	D				
1	190-00688	PLATE;NAME	PLAQUE D'IDENTIFICATION	1		5001-5066	I	K1034000	1
	K1034000	PLATE;NAME	PLAQUE D'IDENTIFICATION	1		5067-			
2	2190-3297	PLATE;NAME	PLAQUE D'IDENTIFICATION	1					
3	K1005909	PLATE;NAME	PLAQUE D'IDENTIFICATION	1					
4	2190-2480	PLATE;NAME	PLAQUE D'IDENTIFICATION	1					
5	2190-3386A	PLATE;NAME	PLAQUE D'IDENTIFICATION	1		5001-5066			
6	2116-9003	PLATE	PLAQUE	1		5001-5066			
7	190-00693	PLATE;NAME	PLAQUE D'IDENTIFICATION	1		5001-5066			
8	190-00689	PLATE;NAME	PLAQUE D'IDENTIFICATION	1		5001-5066			
9	2190-3388	PLATE;NAME	PLAQUE D'IDENTIFICATION	1					
10	190-00695	PLATE;NAME	PLAQUE D'IDENTIFICATION	1		5001-5066	I	190-00695A	1
	190-00695A	PLATE;NAME	PLAQUE D'IDENTIFICATION	1		5067-			
11	K1008019D3	PLATE;NAME	PLAQUE D'IDENTIFICATION	1					
12	K1008019D4	PLATE;NAME	PLAQUE D'IDENTIFICATION	1					
13	K1011743D6	PLATE;NAME	PLAQUE D'IDENTIFICATION	1					
14	K1012583	PLATE;NAME	PLAQUE D'IDENTIFICATION	1		5001-5066			
15	K1016614	PLATE;NAME	PLAQUE D'IDENTIFICATION	1					

DATE	AUG. 28, 2009
3rd EDITION	

Fig. 5130 DECAL - EXPORT DECALQUE

Serial No. ;

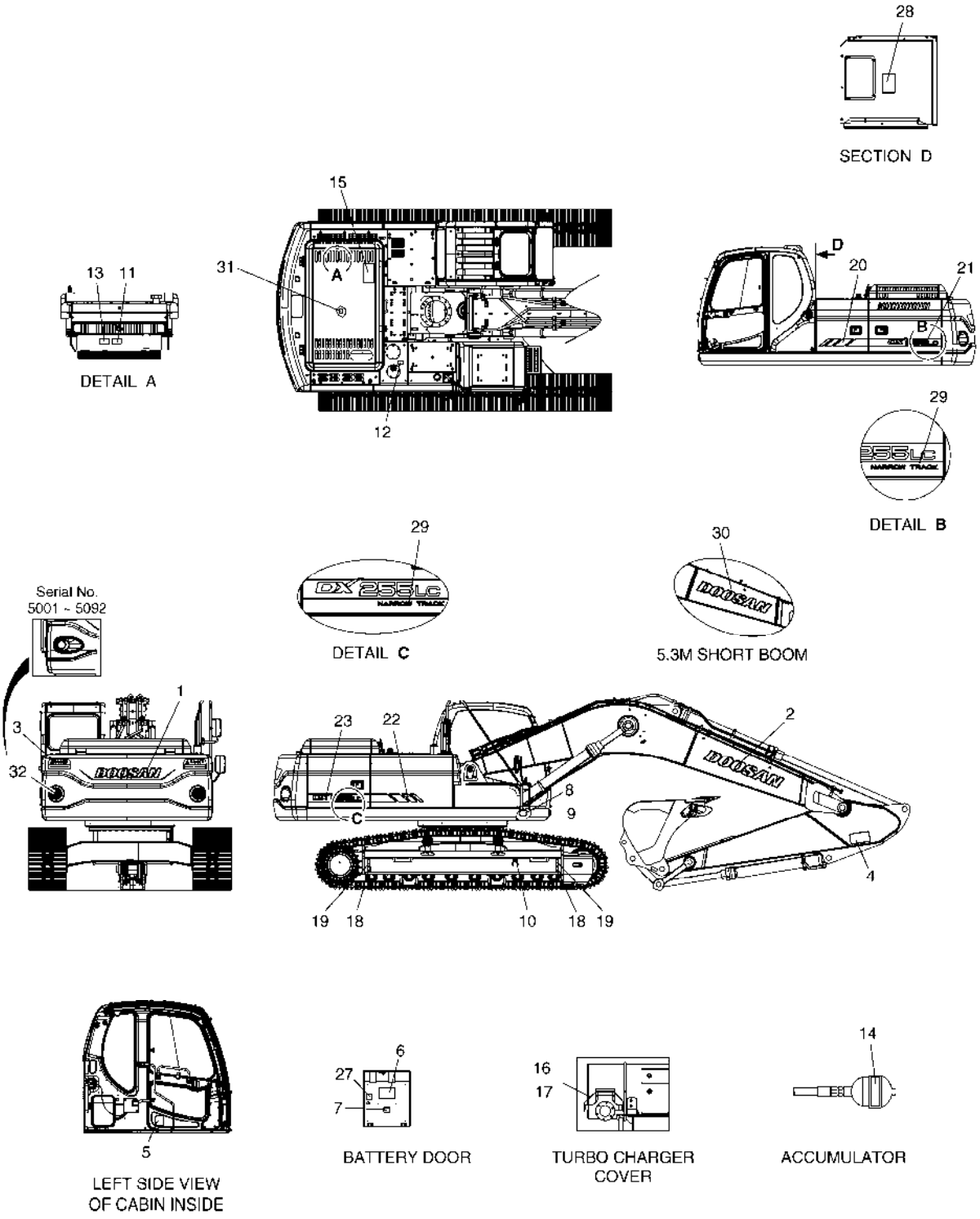

DATE	AUG. 28, 2009
3rd EDITION	

Fig. 5130 DECAL - EXPORT DECALQUE

Serial No. ;

Key No.	Part No.	Description	Description	Q'ty	S.C	Serial No.	ICA	Replaceable part Part No.	Q'ty
5130 --	K1018547J	NAME PLATE ASS'Y	PLAQUE D'IDENTIFICATION	-	D				
1	K1011645D1	PLATE;NAME	PLAQUE D'IDENTIFICATION	1					
2	K1011645D2	PLATE;NAME	PLAQUE D'IDENTIFICATION	2					
3	2190-3379A	PLATE;NAME	PLAQUE D'IDENTIFICATION	2					
4	190-00652	PLATE;NAME	PLAQUE D'IDENTIFICATION	2					
5	2190-2556D144	PLATE;NAME	PLAQUE	1					
6	K1018574	DECAL	DECALQUE	1		5001-5099	I	K1018574A	1
	K1018574A	DECAL	DECALQUE	1		5100-			
7	2190-2533A	PLATE;NAME	PLAQUE D'IDENTIFICATION	1					
8	K1011647B	PLATE;NAME	PLAQUE D'IDENTIFICATION	1		5001-5109	I	K1011647C	1
	K1011647C	DECAL	PLAQUE D'IDENTIFICATION	1		5110-			
9	2122-1002D2	RIVET	RIVET	4					
10	190-00122	PLATE;NAME	PLAQUE D'IDENTIFICATION	2					
11	190-00694	PLATE;NAME	PLAQUE D'IDENTIFICATION	1					
12	190-00691	PLATE;NAME(HOT OIL)	PLAQUE D'IDENTIFICATION	1		5001-5099			
	190-00691A	PLATE;NAME	PLAQUE D'IDENTIFICATION	1		5100-			
13	190-00692	PLATE;NAME	PLAQUE D'IDENTIFICATION	1					
14	190-00703	PLATE;NAME	PLAQUE D'IDENTIFICATION	1					
15	190-00522	PLATE;NAME	PLAQUE D'IDENTIFICATION	1		5001-5066	I	190-00522A	1
	190-00522A	PLATE;NAME	PLAQUE D'IDENTIFICATION	1		5067-			
16	190-00648A	PLATE;NAME	PLAQUE D'IDENTIFICATION	1					
17	2122-1002D4	RIVET	RIVET	4					
18	2190-2476	PLATE;NAME(TIE DOWN)	PLAQUE D'IDENTIFICATION	4		5001-5099			
19	2190-2477	PLATE;NAME(LIFTING)	PLAQUE D'IDENTIFICATION	4		5001-5099	I	K1042074	4
	K1042074	PLATE;NAME	PLAQUE D'IDENTIFICATION	4		5100-5109	I	K1042074A	4
	K1042074A	PLATE;NAME	PLAQUE D'IDENTIFICATION	4		5110-			
20	K1010723	PLATE;NAME	DECALQUE	1					
21	K1018549A	DECAL	DECALQUE	1					
22	K1010725	DECAL	DECALQUE	1					
23	K1018550A	DECAL	DECALQUE	1					
27	K1015739	PLATE;NAME	PLAQUE D'IDENTIFICATION	1					
28	K1016614	PLATE;NAME	PLAQUE D'IDENTIFICATION	1					
29	K1016066	PLATE;NAME	PLAQUE D'IDENTIFICATION	2					
30	K1011645D12	PLATE;NAME	PLAQUE D'IDENTIFICATION	2					
31	K1018746AD11	DECAL	DECALQUE	1		5001-5066			
32	K1039697	DECAL	DECALQUE	2		5093-			

DATE	AUG. 28, 2009
3rd EDITION	

Fig. 5140 NAME PLATE - CABIN(EUROPE) PLAQUE D'IDENTIFICATION

Serial No. ;

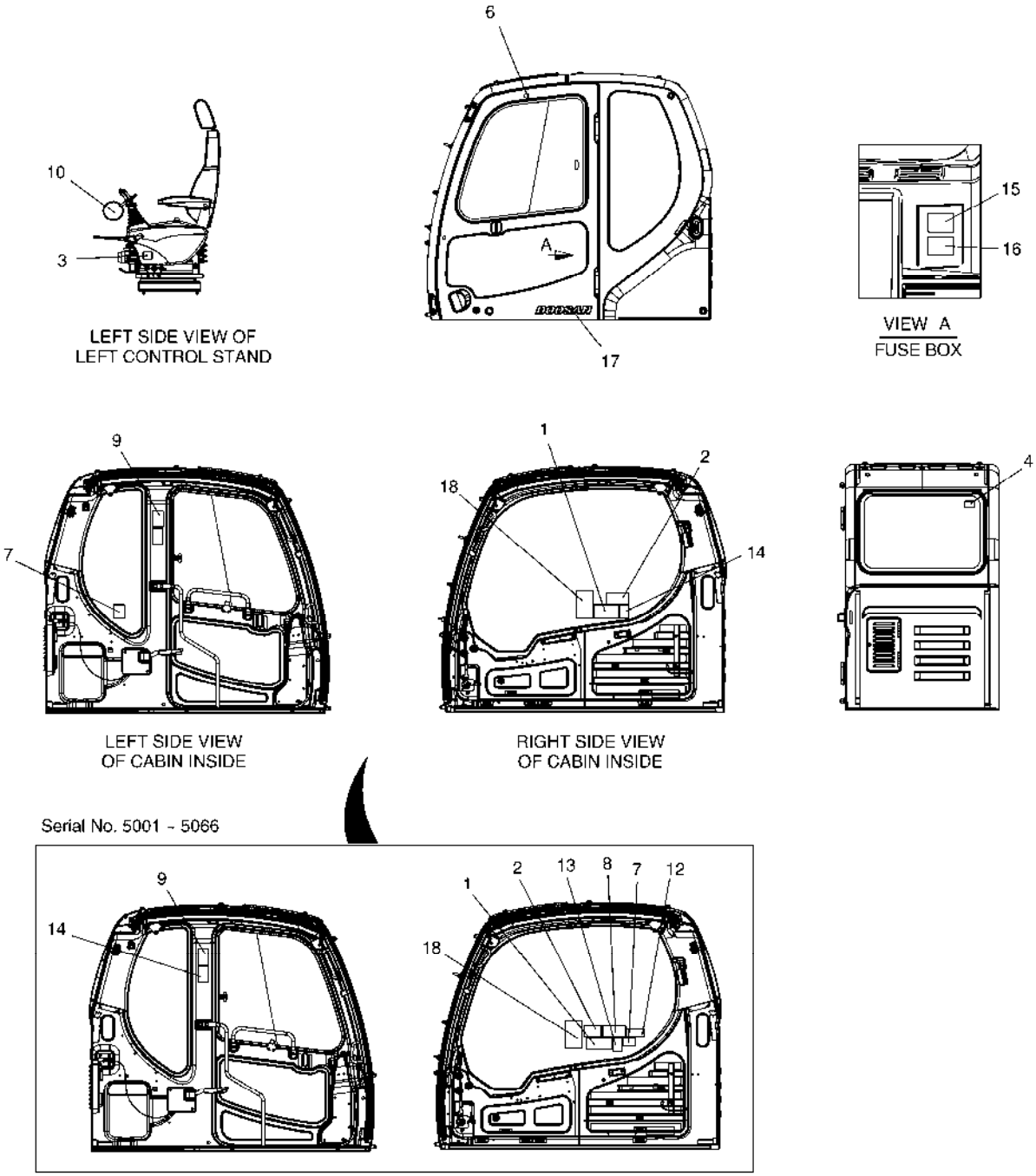

DATE	AUG. 28, 2009
3rd EDITION	

Fig. 5140 NAME PLATE - CABIN(EUROPE) PLAQUE D'IDENTIFICATION

Serial No. ;

Key No.	Part No.	Description	Description	Q'ty	S.C	Serial No.	ICA	Replaceable part	
								Part No.	Q'ty
5140 --	K1008464E	NAME PLATE ASS'Y	PLAQUE D'IDENTIFICATION	-	D				
1	190-00092	PLATE;NAME	PLAQUE D'IDENTIFICATION	1		5001-5066	I	K1034001	1
	K1034001	PLATE;NAME	PLAQUE D`IDENTIFICATIO	1		5067-			
2	2190-3297	PLATE;NAME	PLAQUE D'IDENTIFICATION	1					
3	K1005909	PLATE;NAME	PLAQUE D'IDENTIFICATION	1					
4	190-00101	PLATE;NAME(HAMMER)	PLAQUE D`IDENTIFICATIO	1					
6	2116-9003	PLATE	PLAQUE	1		5001-5066			
7	2190-2524	PLATE;NAME	PLAQUE D'IDENTIFICATION	1					
8	190-00096	PLATE;NAME(ELEC. LINE)	PLAQUE D'IDENTIFICATION	1		5001-5066			
9	190-00093	PLATE;NAME(SLIDE WINDOW)	PLAQUE D`IDENTIFICATIO	1					
10	190-00098	PLATE;NAME	PLAQUE D'IDENTIFICATION	1		5001-5066	I	190-00098A	1
	190-00098A	PLATE;NAME	PLAQUE D`IDENTIFICATIO	1		5067-			
12	190-00102	PLATE;NAME	PLAQUE D'IDENTIFICATION	1		5001-5066			
13	190-00094	PLATE;NAME(CAUTION)	PLAQUE D'IDENTIFICATION	1		5001-5066			
14	190-00521	PLATE;NAME	PLAQUE D'IDENTIFICATION	1					
15	K1008019D3	PLATE;NAME	PLAQUE D'IDENTIFICATION	1					
16	K1008019D4	PLATE;NAME	PLAQUE D'IDENTIFICATION	1					
17	K1011743D6	PLATE;NAME	PLAQUE D'IDENTIFICATION	1					
18	K1016614	PLATE;NAME	PLAQUE D'IDENTIFICATION	1					

DATE	AUG. 28, 2009
3rd EDITION	

Fig. 5150 DECAL - EUROPE DECALQUE

Serial No. ;

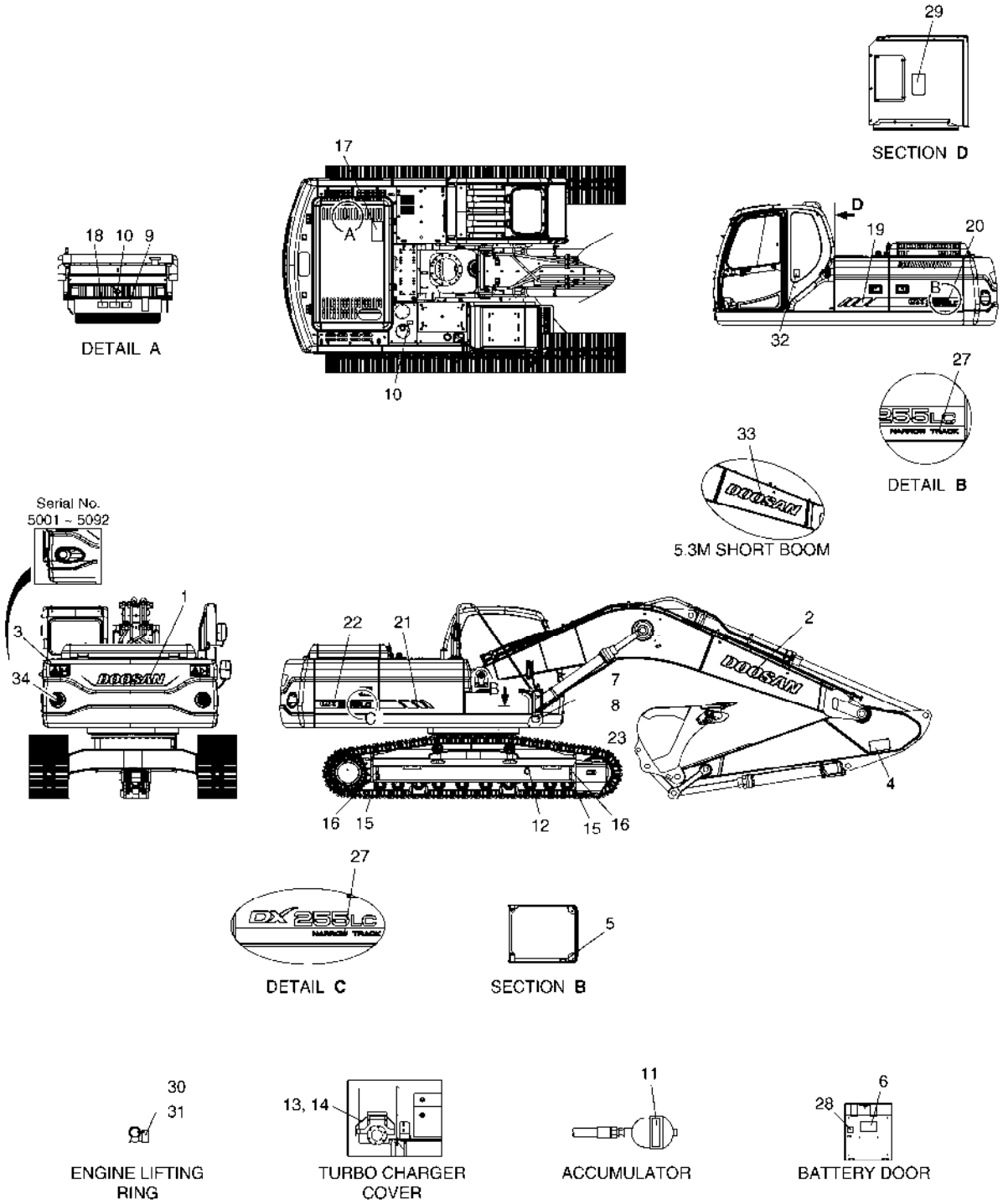

DATE	AUG. 28, 2009
3rd EDITION	

Fig. 5150 DECAL - EUROPE DECALQUE

Serial No. ;

Key No.	Part No.	Description	Description	Q'ty	S.C	Serial No.	ICA	Replaceable part Part No.	Q'ty
5150 --	K1023614J	NAME PLATE ASS'Y	PLAQUE D'IDENTIFICATION	-	D				
1	K1011645D1	PLATE;NAME	PLAQUE D'IDENTIFICATION	1					
2	K1011645D2	PLATE;NAME	PLAQUE D'IDENTIFICATION	2					
3	K1008571	DECAL	PLAQUE D'IDENTIFICATION	2					
4	190-00652	PLATE;NAME	PLAQUE D'IDENTIFICATION	2					
5	190-00100	PLATE;NAME(BATTERY)	PLAQUE D`IDENTIFICATIO	1					
6	K1023613	DECAL	DECALQUE	1		5001-5099	I	K1023613A	1
	K1023613A	DECAL	DECALQUE	1		5100-			
7	K1012204A	PLATE;NAME	PLAQUE D'IDENTIFICATION	1		5001-5109	I	K1012204B	1
	K1012204B	PLATE;NAME	PLAQUE D'IDENTIFICATION	1		5110-			
8	2122-1002D2	RIVET	RIVET	4					
9	190-00095	PLATE;NAME	PLAQUE D`IDENTIFICATIO	1					
10	190-00097	NAME PLATE	PLAQUE D`IDENTIFICATIO	2					
11	190-00099	PLATE;NAME	PLAQUE D`IDENTIFICATIO	1					
12	190-00122	PLATE;NAME	PLAQUE D'IDENTIFICATION	2					
13	190-00648A	PLATE;NAME	PLAQUE D'IDENTIFICATION	1					
14	2122-1002D4	RIVET	RIVET	4					
15	2190-2476	PLATE;NAME(TIE DOWN)	PLAQUE D'IDENTIFICATION	4		5001-5099			
16	2190-2477	PLATE;NAME(LIFTING)	PLAQUE D'IDENTIFICATION	4		5001-5099	I	K1042074	4
	K1042074	PLATE;NAME	PLAQUE D'IDENTIFICATION	4		5100-5109	I	K1042074A	4
	K1042074A	PLATE;NAME	PLAQUE D'IDENTIFICATION	4		5110-			
17	190-00522	PLATE;NAME	PLAQUE D'IDENTIFICATION	1		5001-5066	I	190-00522A	1
	190-00522A	PLATE;NAME	PLAQUE D'IDENTIFICATION	1		5067-			
18	190-00557	PLATE;NAME	PLAQUE D`IDENTIFICATIO	1					
19	K1010723	PLATE;NAME	DECALQUE	1					
20	K1018549A	DECAL	DECALQUE	1					
21	K1010725	DECAL	DECALQUE	1					
22	K1018550A	DECAL	DECALQUE	1					
23	K1012205A	PLATE;NAME	PLAQUE D'IDENTIFICATION	1		5001-5109	I	K1012205C	1
	K1012205C	PLATE;NAME	PLAQUE D'IDENTIFICATION	1		5110-			
27	K1016066	PLATE;NAME	PLAQUE D'IDENTIFICATION	2					
28	K1016102	DECAL	PLAQUE D'IDENTIFICATION	1					
29	K1016614	PLATE;NAME	PLAQUE D'IDENTIFICATION	1					
30	190-00509BD25	PLATE;NAME	PLAQUE D'IDENTIFICATION	1					
31	2124-1622D1	CLIP;BAND	ATTACHE	1					
32	190-01059D14	PLATE;NAME	PLAQUE D'IDENTIFICATION	1					
33	K1011645D12	PLATE;NAME	PLAQUE D'IDENTIFICATION	2					
34	K1039697	DECAL	DECALQUE	2		5093-			

DATE	AUG. 28, 2009
3rd EDITION	

Fig. 5160 DECAL - LIFTING CAPA DECAL

Serial No. ;

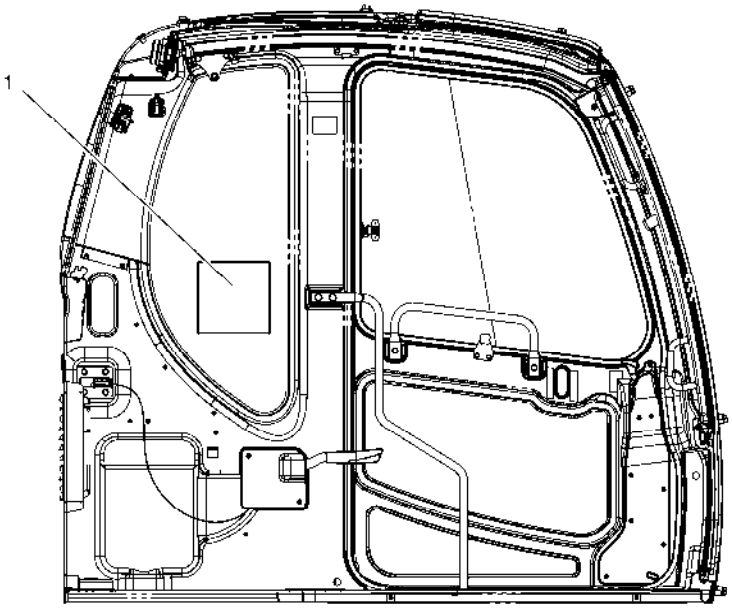

LEFT SIDE VIEW OF CABIN INSIDE

DATE	AUG. 28, 2009
3rd EDITION	

Fig. 5160 DECAL - LIFTING CAPA DECAL

Serial No. ;

Key No.	Part No.	Description	Description	Q'ty	S.C	Serial No.	ICA	Replaceable part	
								Part No.	Q'ty
5160 --	K1052030	NAME PLATE ASS'Y	PLAQUE D'IDENTIFICATION	-	D				
1	K1051913	PLATE;NAME	PLAQUE D'IDENTIFICATION	1					

DATE	AUG. 28, 2009
3rd EDITION	

Fig. 6100 FUEL FILLER PUMP POMPE

Serial No. ;

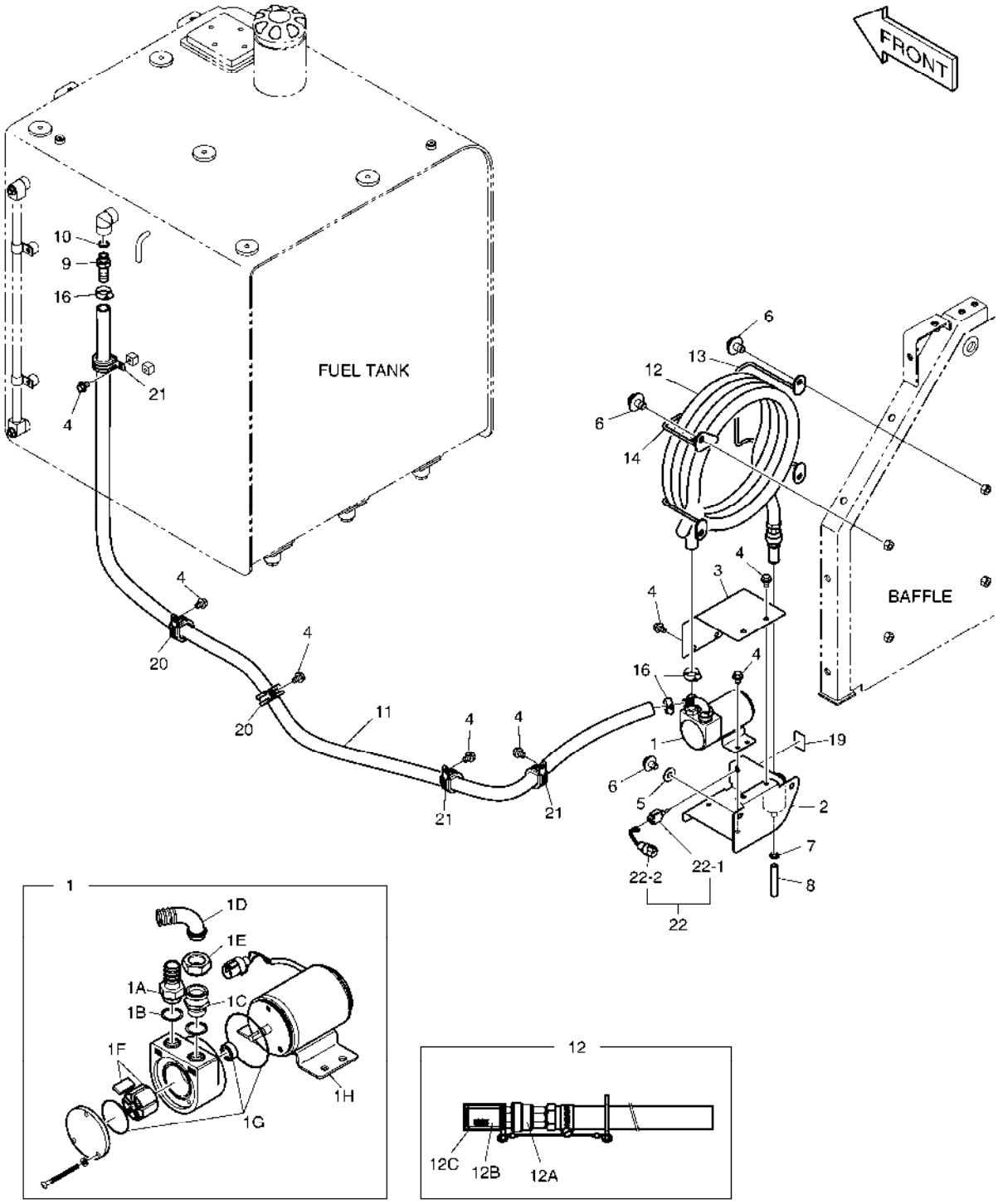

DATE	AUG. 28, 2009
3rd EDITION	

Fig. 6100 FUEL FILLER PUMP POMPE

Serial No. ;

Key No.	Part No.	Description	Description	Q'ty	S.C	Serial No.	ICA	Replaceable part	
								Part No.	Q'ty
6100 --	K1010242B	FUEL FILLER PUMP ASS'Y	POMPE	-	D				
1	401-00449	PUMP;FUEL FILLER	POMPE	1					
1A	2181-2755B	. ADAPTER	. ADAPTEUR	1					
1B	S8180321	. RING;SEAL	. BAGUE D`ETANCHEITE	2					
1C	181-00809	. ADAPTER	. ADAPTEUR	1					
1D	181-00810	. ELBOW	. COUDE	1					
1E	121-00085	. NUT	. ECROU	1					
1F	407-00001	. VANE KIT	. KIT DE VANE	1					
1G	2401-1276KT	. SEAL KIT	. KIT D`ETANCHEITE	1					
1H	523-00012	. MOTOR;FUEL TRANS. PUMP	. MOTEUR	1					
2	195-02662B	BRACKET	SUPPORT	1					
3	621-02739B	COVER	COUVERCLE	1					
4	K1001029	BOLT	BOULON A 6 PANS	11					
5	2114-1058D72	WASHER;PLAIN	RONDELLE PLATE	2					
6	DS0025019	BOLT;SET	BOULON A 6 PANS	6					
7	S8450012	CLAMP	COLLIER	1					
8	DS2079153	HOSE	TUYAU FLEXIBLE	1					
9	2181-2104D6	ADAPTER	ADAPTEUR	1					
10	S8000181	O-RING	JOINT TORIQUE	1					
11	DS2079181	HOSE	TUYAU FLEXIBLE	1					
12	185-00167D3	HOSE ASS`Y	TUYAU FLEXIBLE	1					
12A	2420-1258	. VALVE;CHECK	. CARTOUCHE DE VANNE	1					
12B	2471-1152	. STRAINER	. FILTRE	1					
12C	2160-1336	. CAP;STRAINER	. CHAPEAU	1					
13	K1011080	BRACKET	SUPPORT	1					
14	K1011081	BRACKET	SUPPORT	1					
16	S8470032	CLAMP;HOSE	COLLIER	3					
19	190-01172	PLATE;NAME(FUEL PUMP)	PLAQUE D`IDENTIFICATIO	1					
20	124-00208D7	CLIP	AGRAFE	2					
21	124-00208D5	CLIP	ATTACHE	3					
22	K1024144	SWITCH;TOGGLE	INTERRUPTEUR A LEVIER	1					
22-1	549-00093	. SWITCH;TOGGLE	. INTERRUPTEUR	1					
22-2	530-00214A	. HARNESS;JOINT(F/P SWITCH)	. FAISCEAU	1					

DATE	AUG. 28, 2009
3rd EDITION	

Fig. 6110 MAIN PIPING - ONE WAY
CONDUITES DE BATI PRINCIPAL

Serial No. ;

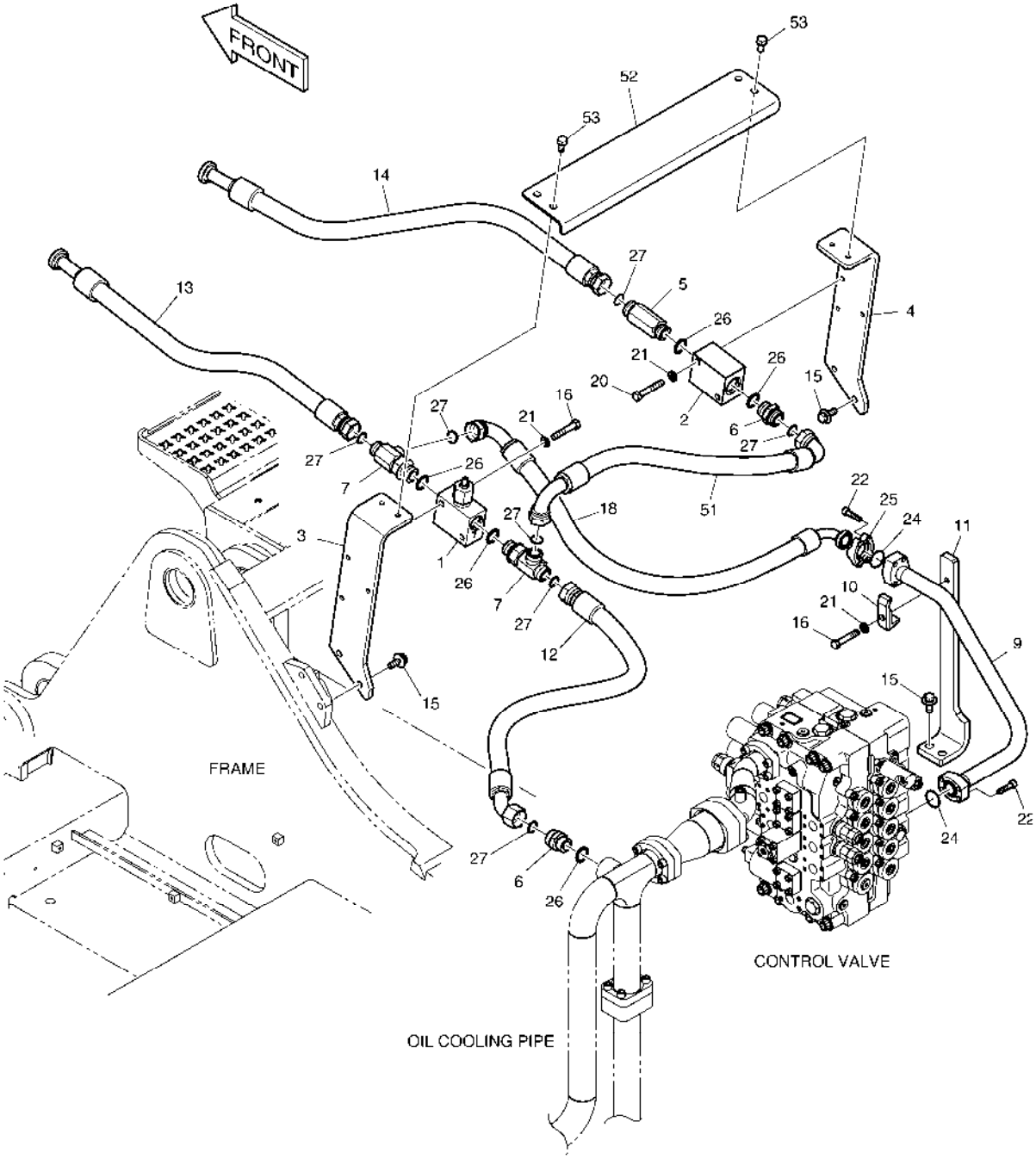

DATE	AUG. 28, 2009
3rd EDITION	

Fig. 6110 MAIN PIPING - ONE WAY
CONDUITES DE BATI PRINCIPAL

Serial No. ;

Key No.	Part No.	Description	Description	Q'ty	S.C	Serial No.	ICA	Replaceable part	
								Part No.	Q'ty
6110 --	K1009801C	MAIN PIPING - ONE WAY	CONDUITES DE BATI PRIN	-	D	5001-5121			
	420212-00338	PIPING,MAIN;ONE WAY	CONDUITES DE BATI PRIN	-	D	5122-			
1	426-00267A	VALVE;RELIEF	CLAPET DE RECHARGE	1		5001-5121	I	426-00267B	1
	426-00267B	VALVE;RELIEF	CLAPET DE RECHARGE	1		5122-			
2	423-00193B	BLOCK	BLOC	1					
3	K1010476	BRACKET	SUPPORT	1					
4	K1010477	BRACKET	SUPPORT	1					
5	DS2232107	ADAPTER	ADAPTEUR	1					
6	2181-4133D6	ADAPTER	RACCORD ADAPTATEUR	2					
7	181-00121D8	TEE	TE	2					
9	K1010475C	PIPE	TUYAU	1					
10	2124-1026D3	CLAMP;PIPE	ATTACHE DE TUBE	1					
11	K1010478	BRACKET	SUPPORT	1					
12	DS2012300	HOSE	TUYAU FLEXIBLE	1					
13	DS2016050	HOSE	TUYAU FLEXIBLE	1					
14	DS2016050	HOSE	TUYAU FLEXIBLE	1					
15	DS0025020	BOLT;SET	BOULON A 6 PANS	6					
16	S0561066	BOLT	BOULON	3					
18	DS2026158	HOSE	TUYAU FLEXIBLE	1					
20	S0561266	BOLT	BOULON	2					
21	S5102703	WASHER;SPRING	RONDELLE ELASTIQUE	5					
22	S2212466	BOLT;SOCKET M10X1.5X40	BOULON A 6 PANS CREUX	8					
24	2180-1026D19	O-RING	JOINT TORIQUE	2					
25	2181-9078	FLANGE	BRIDE	2					
26	S8000291	O-RING	JOINT TORIQUE	5					
27	S8030161	O-RING	JOINT TORIQUE	7					
51	DS2023234	HOSE	TUYAU FLEXIBLE	1					
52	K1010980	BRACKET	SUPPORT	1					
53	DS0025018	BOLT;SET	BOULON A 6 PANS	4					

DATE	AUG. 28, 2009
3rd EDITION	

Fig. 6120 ONE WAY PIPING - WITH FILTER
TUYAUTERIE A SENS UNIQUE

Serial No. ;

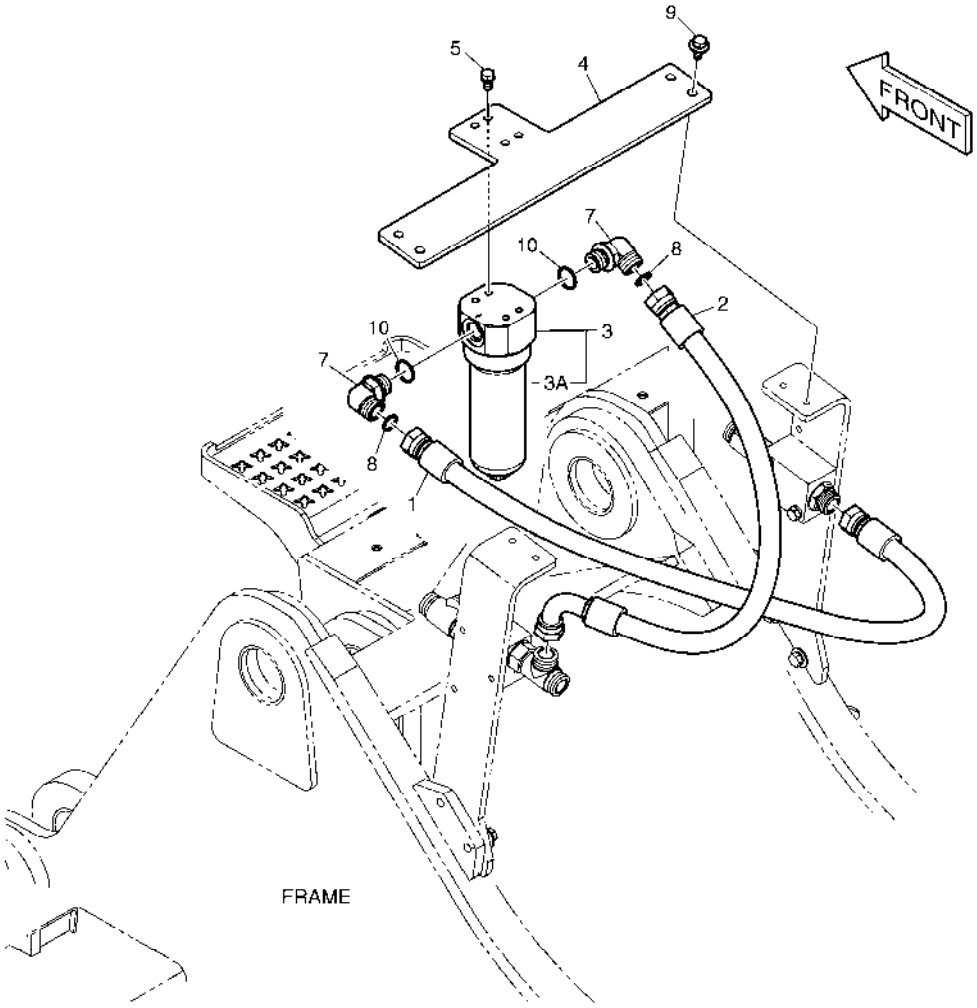

DATE	AUG. 28, 2009
3rd EDITION	

Fig. 6120 ONE WAY PIPING - WITH FILTER TUYAUTERIE A SENS UNIQUE

Serial No. ;

Key No.	Part No.	Description	Description	Q'ty	S.C	Serial No.	ICA	Replaceable part	
								Part No.	Q'ty
6120 --	K1009830A	ONE WAY PIPING-WITH FILTER	TUYAUTERIE A SENS UNIQ	-	D				
1	DS2011474	HOSE	TUYAU FLEXIBLE	1					
2	DS2013667	HOSE	TUYAU FLEXIBLE	1					
3	471-00114	FILTER;BREAKER	FILTRE	1					
3A	474-00046	. ELEMENT;BREAKER FILTER	. ELEMENT	1					
4	K1010495A	BRACKET	SUPPORT	1					
5	DS0025021	BOLT;SET	BOULON A 6 PANS	4					
7	2181-2815D1	ELBOW	COUDE	2					
8	S8030161	O-RING	JOINT TORIQUE	2					
9	DS0025018	BOLT;SET	BOULON A 6 PANS	4					
10	S8000291	O-RING	JOINT TORIQUE	2					

DATE	AUG. 28, 2009
3rd EDITION	

Fig. 6130 MAIN PIPING - TWO WAY
CONDUITES DE BATI PRINCIPAL

Serial No. ;

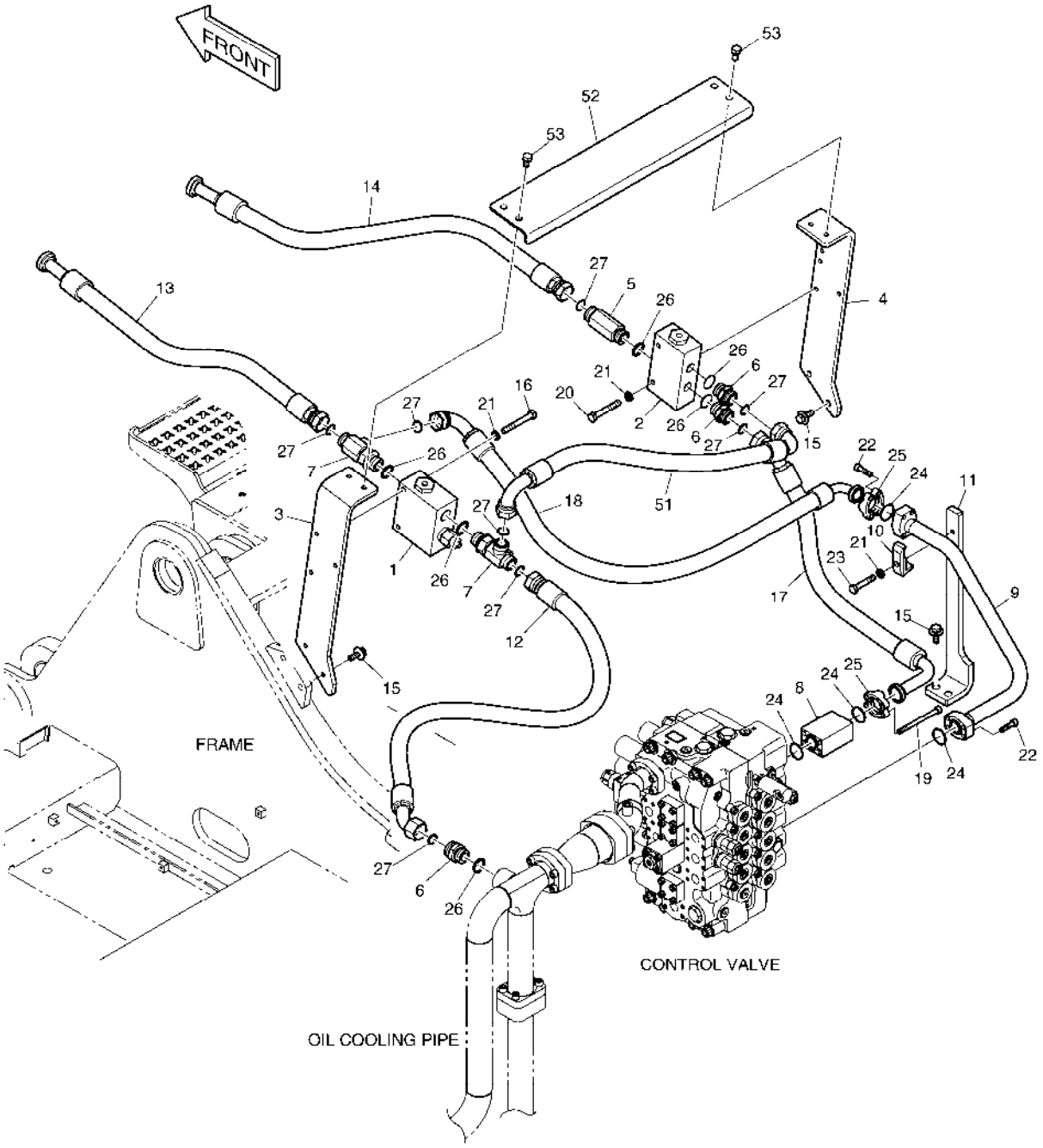

DATE	AUG. 28, 2009
3rd EDITION	

Fig. 6130 MAIN PIPING - TWO WAY
CONDUITES DE BATI PRINCIPAL

Serial No. ;

Key No.	Part No.	Description	Description	Q'ty	S.C	Serial No.	ICA	Replaceable part	
								Part No.	Q'ty
6130 --	K1009804G	MAIN PIPING - TWO WAY	CONDUITES DE BATI PRIN(	-	D				
1	426-00248A	VALVE;SELECT	VANNE	1					
2	426-00249A	VALVE;SELECT	VANNE	1					
3	K1010476	BRACKET	SUPPORT	1					
4	K1010477	BRACKET	SUPPORT	1					
5	DS2232107	ADAPTER	ADAPTEUR	1					
6	2181-4133D6	ADAPTER	RACCORD ADAPTATEUR	3					
7	181-00121D8	TEE	TE	2					
8	K1005357	BLOCK;SPACER	BLOC	1					
9	K1010475C	PIPE	TUYAU	1					
10	2124-1026D3	CLAMP;PIPE	ATTACHE DE TUBE	1					
11	K1010478A	BRACKET	SUPPORT	1					
12	DS2012298	HOSE	TUYAU FLEXIBLE	1					
13	DS2016050	HOSE	TUYAU FLEXIBLE	1					
14	DS2016050	HOSE	TUYAU FLEXIBLE	1					
15	DS0025020	BOLT;SET	BOULON A 6 PANS	6					
16	S0561466	BOLT	BOULON	2					
17	DS2065041	HOSE	TUYAU FLEXIBLE	1					
18	DS2026158	HOSE	TUYAU FLEXIBLE	1					
19	S2214266	BOLT;SOCKET M10X1.5X130	BOULON A 6 PANS CREUX	4					
20	S0561266	BOLT	BOULON	2					
21	S5102703	WASHER;SPRING	RONDELLE ELASTIQUE	5					
22	S2212466	BOLT;SOCKET M10X1.5X40	BOULON A 6 PANS CREUX	8					
23	S0561066	BOLT	BOULON	1					
24	2180-1026D19	O-RING	JOINT TORIQUE	4					
25	2181-9078	FLANGE	BRIDE	4					
26	S8000291	O-RING	JOINT TORIQUE	6					
27	S8030161	O-RING	JOINT TORIQUE	8					
51	DS2023233	HOSE	TUYAU FLEXIBLE	1					
52	K1010980	BRACKET	SUPPORT	1					
53	DS0025018	BOLT;SET	BOULON A 6 PANS	4					

DATE	AUG. 28, 2009
3rd EDITION	

Fig. 6140 TWO WAY PIPING - WITH FILTER
TUYAUTERIE DE DEUX MANIERES

Serial No. ;

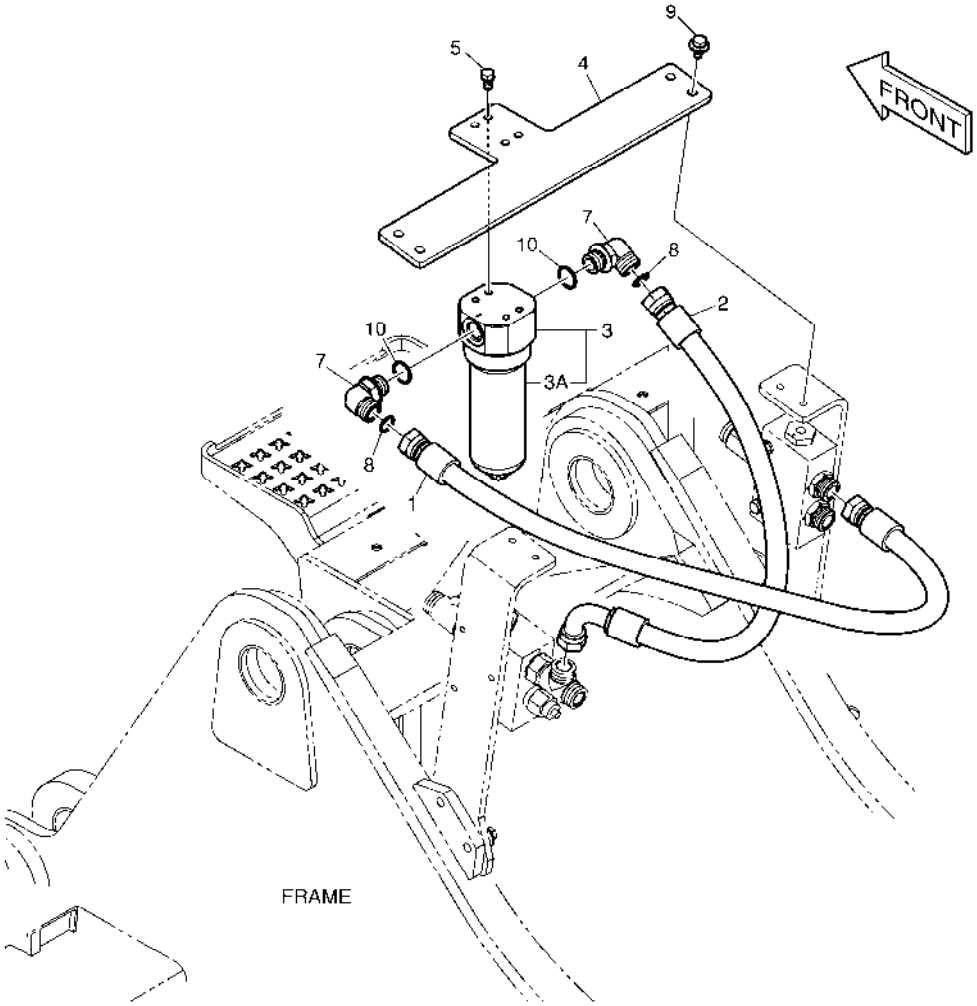

DATE	AUG. 28, 2009
3rd EDITION	

Fig. 6140 TWO WAY PIPING - WITH FILTER
TUYAUTERIE DE DEUX MANIERES

Serial No. ;

Key No.	Part No.	Description	Description	Q'ty	S.C	Serial No.	ICA	Replaceable part	
								Part No.	Q'ty
6140 --	K1009832A	TWO WAY PIPING-WITH FILTER	TUYAUTERIE DE DEUX MA	-	D				
1	DS2011474	HOSE	TUYAU FLEXIBLE	1					
2	DS2013667	HOSE	TUYAU FLEXIBLE	1					
3	471-00114	FILTER;BREAKER	FILTRE	1					
3A	474-00046	. ELEMENT;BREAKER FILTER	. ELEMENT	1					
4	K1010495A	BRACKET	SUPPORT	1					
5	DS0025021	BOLT;SET	BOULON A 6 PANS	4					
7	2181-2815D1	ELBOW	COUDE	2					
8	S8030161	O-RING	JOINT TORIQUE	2					
9	DS0025018	BOLT;SET	BOULON A 6 PANS	4					
10	S8000291	O-RING	JOINT TORIQUE	2					

DATE	AUG. 28, 2009
3rd EDITION	

Fig. 6150 PILOT PIPING - ONE & TWO WAY CONDUITES DE PILOTE

Serial No. ;

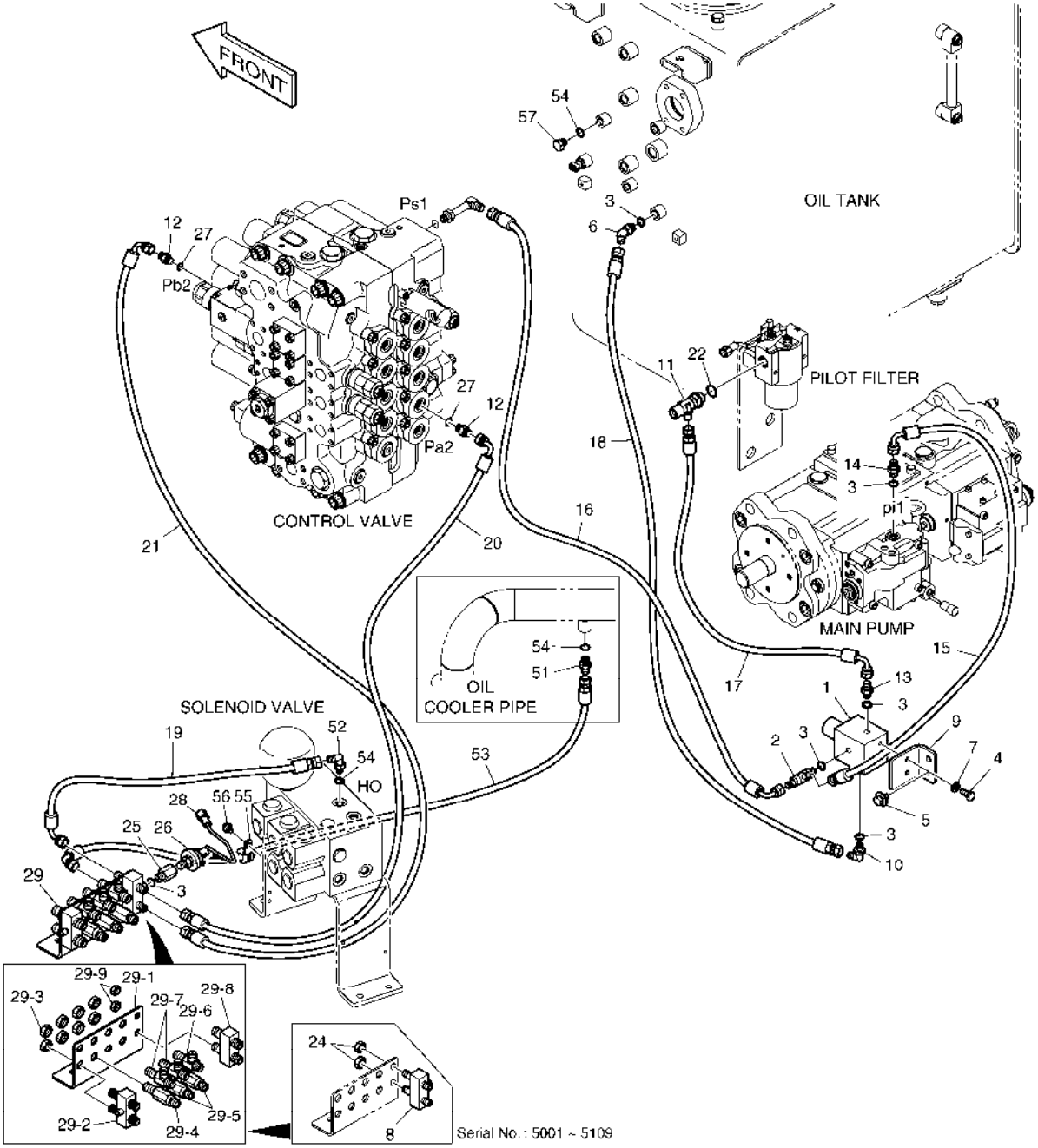

DATE	AUG. 28, 2009
3rd EDITION	

Fig. 6150 PILOT PIPING - ONE & TWO WAY CONDUITES DE PILOTE

Serial No. ;

Key No.	Part No.	Description	Description	Q'ty	S.C	Serial No.	ICA	Replaceable part	
								Part No.	Q'ty
6150 --	K1009813C	PILOT PIPING	TUYAUTERIE PILOTE	-	D				
1	426-00266	VALVE;EPPR	VANNE	1					
2	181-00779	TEE;SHUTTLE	TE	1					
3	S8000111	O-RING	JOINT TORIQUE	6					
4	S0508766	BOLT	BOULON A 6 PANS	2					
5	DS0025013	BOLT;SET	BOULON A 6 PANS	2					
6	2181-2419D1	ELBOW	COUDE	1					
7	S5102503	WASHER	RONDELLE ELASTIQUE	2					
8	420-00476	VALVE;SHUTTLE	VANNE	1		5001-5109			
9	195-02711B	BRACKET	SUPPORT	1					
10	2181-1702D4	ELBOW(1/4)	COUDE	1					
11	2181-1951D19	TEE	TE	1					
12	2181-1126D36	ADAPTER	ADAPTEUR	2					
13	2471-1133	ADAPTER;FILTER	FILTRE	1					
14	2181-1126D14	ADAPTER	ADAPTEUR	1					
15	DS2093074	HOSE	TUYAU FLEXIBLE	1					
16	DS2093349	HOSE	TUYAU FLEXIBLE	1					
17	DS2093233	HOSE	TUYAU FLEXIBLE	1					
18	DS2094076	HOSE	TUYAU FLEXIBLE	1					
19	DS2093200	HOSE	TUYAU FLEXIBLE	1					
20	DS2093348	HOSE	TUYAU FLEXIBLE	1					
21	DS2093119	HOSE	TUYAU FLEXIBLE	1					
22	S8000181	O-RING	JOINT TORIQUE	1					
24	121-00010D7	NUT	ECROU	2		5001-5109			
25	DS2242017	REDUCER	REDUCTEUR	1					
26	549-00010	SWITCH;PRESSURE	INTERRUPTEUR	1					
27	S8000141	O-RING	JOINT TORIQUE	2					
28	530-00067	HARNESS;STOP LAMP S/W	FAISCEAU	1					
29	K1038029	JOINT PLATE SUB ASS`Y	SUPPORT	1		5100-			
29-1	K1000354	. BRACKET;JOINT	. SUPPORT	1		5100-			
29-2	420-00307	. VALVE;SHUTTLE	. VANNE	1		5100-			
29-3	121-00010D1	. NUT	. ECROU	8		5100-			
29-4	420-00352D1	. VALVE;SHOCKLESS	. VANNE	1		5100-			
29-5	DS2410009	. ADAPTER	. ADAPTEUR	2		5100-			
29-6	181-00086D1	. TEE	. TE	1		5100-			
29-7	181-00086D2	. TEE	. TE	2		5100-			
29-8	420-00476	. VALVE;SHUTTLE	. VANNE	1		5100-			
29-9	121-00010D7	. NUT	. ECROU	2		5100-			

DATE	AUG. 28, 2009
3rd EDITION	

Fig. 6150 PILOT PIPING - ONE & TWO WAY CONDUITES DE PILOTE

Serial No. ;

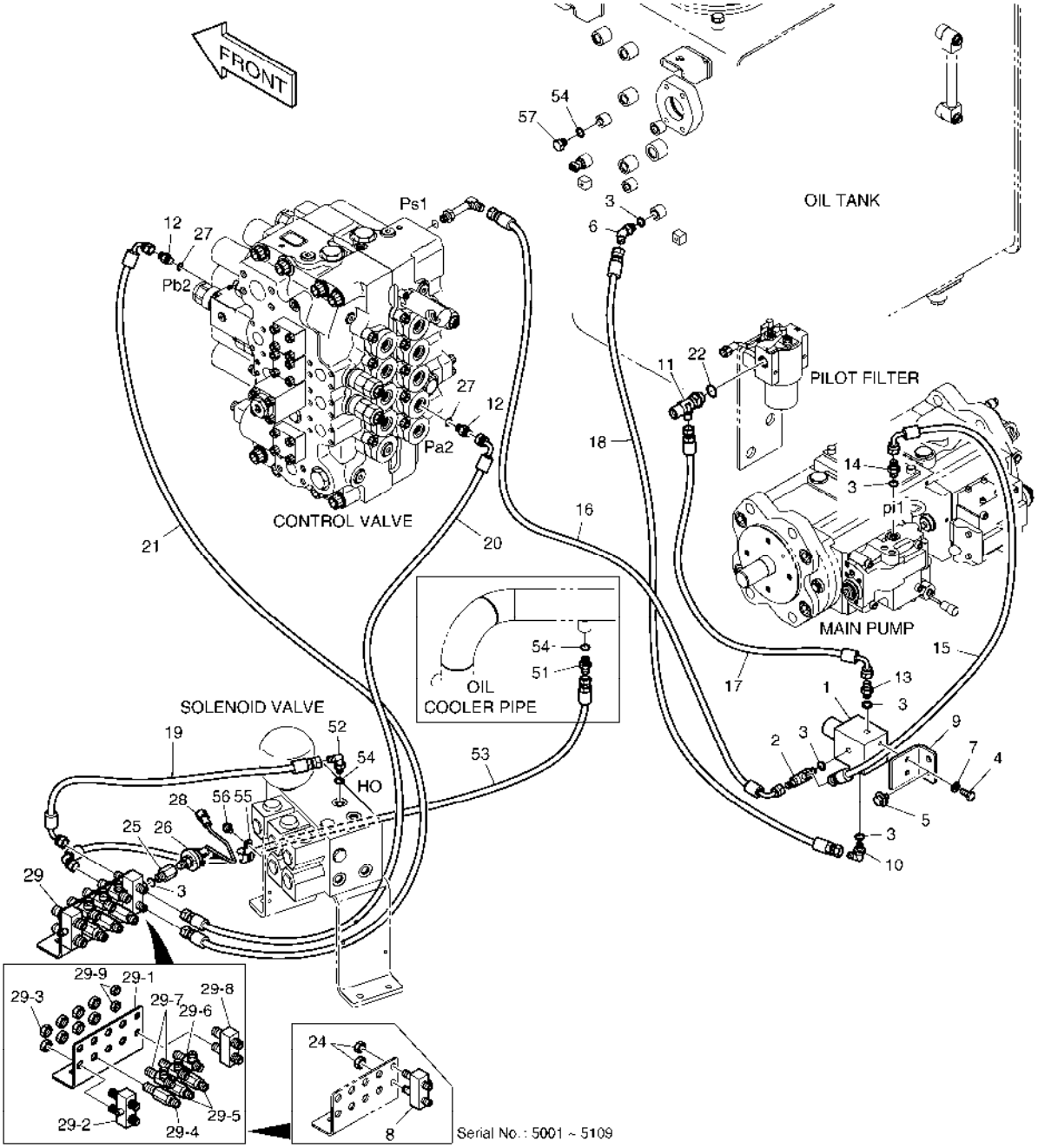

DATE	AUG. 28, 2009
3rd EDITION	

Fig. 6150 PILOT PIPING - ONE & TWO WAY CONDUITES DE PILOTE

Serial No. ;

Key No.	Part No.	Description	Description	Q'ty	S.C	Serial No.	ICA	Replaceable part	
								Part No.	Q'ty
6150 -51	2181-1126D14	ADAPTER	ADAPTEUR	1					
52	2181-1702D4	ELBOW(1/4)	COUDE	1					
53	DS2093257	HOSE	TUYAU FLEXIBLE	1					
54	S8000111	O-RING	JOINT TORIQUE	3					
55	124-00208D2	CLIP	AGRAFE	1					
56	K1001029	BOLT	BOULON A 6 PANS	1					
57	2181-1950D1	PLUG	BOUCHON	1					

DATE	AUG. 28, 2009
3rd EDITION	

Fig. 6160 PILOT PIPING(1) - TWO WAY CONDUITES DE PILOTE

Serial No. ;

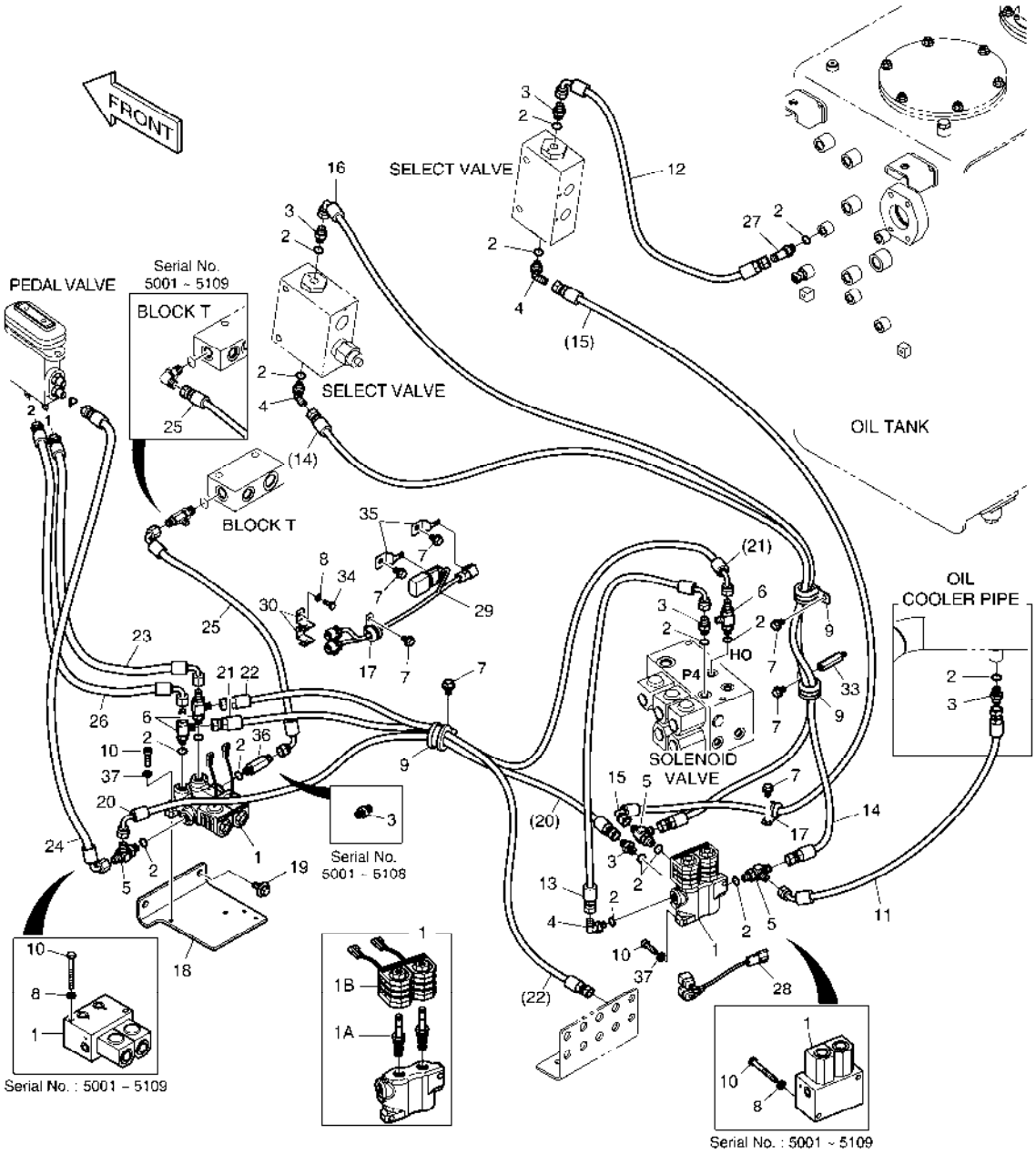

DATE	AUG. 28, 2009
3rd EDITION	

Fig. 6160 PILOT PIPING(1) - TWO WAY CONDUITES DE PILOTE

Serial No. ;

Key No.	Part No.	Description	Description	Q'ty	S.C	Serial No.	ICA	Replaceable part	
								Part No.	Q'ty
6160 --	K1009818J	PILOT PIPING - TWO WAY	TUYAUTERIE PILOTE	-	D				
1	426-00247A	VALVE;SOLENOID	SOUPAPE A SOLENOIDE	2		5001-5109			
	426-00247B	VALVE;SOLENOID	VANNE SOLENOIDE	2		5110-			
1A	K9007363	. VALVE;SOLENOID	. PLUNGEUR	2		5110-			
1B	1.519-00001	. COIL	. COIL	2		5110-			
2	S8000111	O-RING	JOINT TORIQUE	16					
3	2181-1126D14	ADAPTER	ADAPTEUR	6		5001-5108			
	2181-1126D14	ADAPTER	ADAPTEUR	5		5109-			
4	2181-1702D4	ELBOW(1/4)	COUDE	3					
5	2181-1951D1	TEE	TE	3					
6	181-00779	TEE;SHUTTLE	TE	3					
7	K1001029	BOLT	BOULON A 6 PANS	7					
8	S5102503	WASHER	RONDELLE ELASTIQUE	6		5001-5109			
	S5102503	WASHER	RONDELLE ELASTIQUE	2		5110-			
9	124-00208D4	CLIP	ATTACHE	3					
10	S0556766	BOLT	BOULON A 6 PANS	4		5001-5109			
	S2209266	BOLT	BOULON A 6 PANS CREUX	4		5110-			
11	DS2092059	HOSE	TUYAU FLEXIBLE	1					
12	DS2093096	HOSE	TUYAU FLEXIBLE	1					
13	DS2093071	HOSE	TUYAU FLEXIBLE	1					
14	DS2094090	HOSE	TUYAU FLEXIBLE	1					
15	DS2093235	HOSE	TUYAU FLEXIBLE	1					
16	DS2093238	HOSE	TUYAU FLEXIBLE	1					
17	124-00208D2	CLIP	AGRAFE	2					
18	K1003422A	BRACKET	SUPPORT	1					
19	DS0025017	BOLT;SET	BOULON A 6 PANS	2					
20	DS2093058	HOSE	TUYAU FLEXIBLE	1					
21	DS2093142	HOSE	TUYAU FLEXIBLE	1					
22	DS2094033	HOSE	TUYAU FLEXIBLE	1					
23	DS2093120	HOSE	TUYAU FLEXIBLE	1					
24	DS2093121	HOSE	TUYAU FLEXIBLE	1					
25	DS2093260	HOSE	TUYAU FLEXIBLE	1		5001-5109			
	DS2091133	HOSE	TUYAU FLEXIBLE	1		5110-			
26	DS2093119	HOSE	TUYAU FLEXIBLE	1					
27	2181-2419D1	ELBOW	COUDE	1					
28	K1000816	HARNESS	FAISCEAU	1					
29	K1003638B	HARNESS;JOINT	FAISCEAU	1					
30	2195-3500	BRACKET	SUPPORT	2					

DATE	AUG. 28, 2009
3rd EDITION	

Fig. 6160 PILOT PIPING(1) - TWO WAY CONDUITES DE PILOTE

Serial No. ;

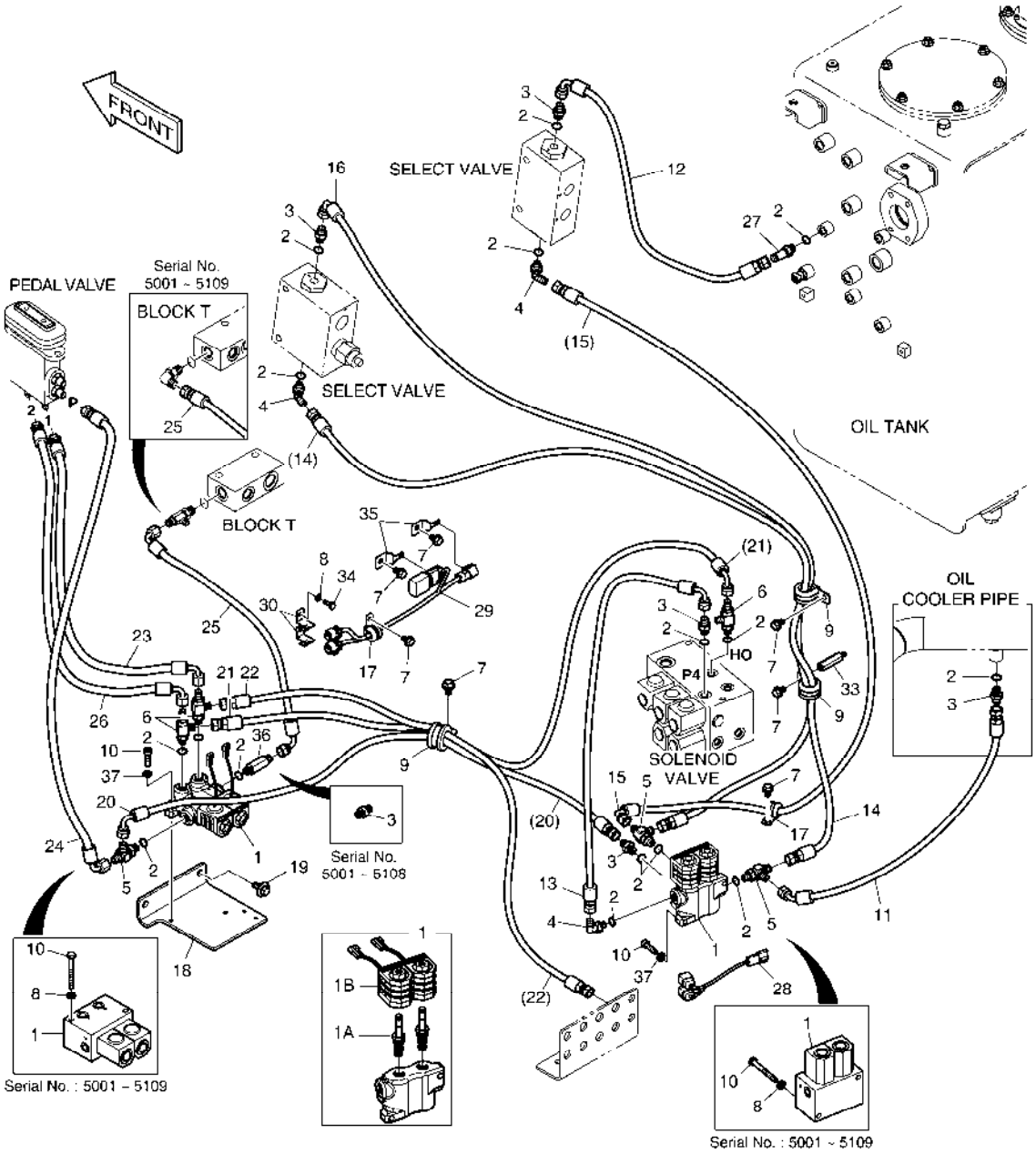

DATE	AUG. 28, 2009
3rd EDITION	

Fig. 6160 PILOT PIPING(1) - TWO WAY CONDUITES DE PILOTE

Serial No. ;

Key No.	Part No.	Description	Description	Q'ty	S.C	Serial No.	ICA	Replaceable part	
								Part No.	Q'ty
6160 -33	2120-2187	BOLT;STUD	BOULON A 6 PANS	1					
34	S0504366	BOLT	BOULON	2					
35	2197-1661	BRACKET	SUPPORT	2					
36	2181-1126D75	ADAPTER	ADAPTEUR	1		5109-			
37	S5110503	WASHER;SPRING	RONDELLE ELASTIQUE	4		5110-			

DATE	AUG. 28, 2009
3rd EDITION	

Fig. 6170 PILOT PIPING(2) - TWO WAY
CONDUITES DE PILOTE

Serial No. ;

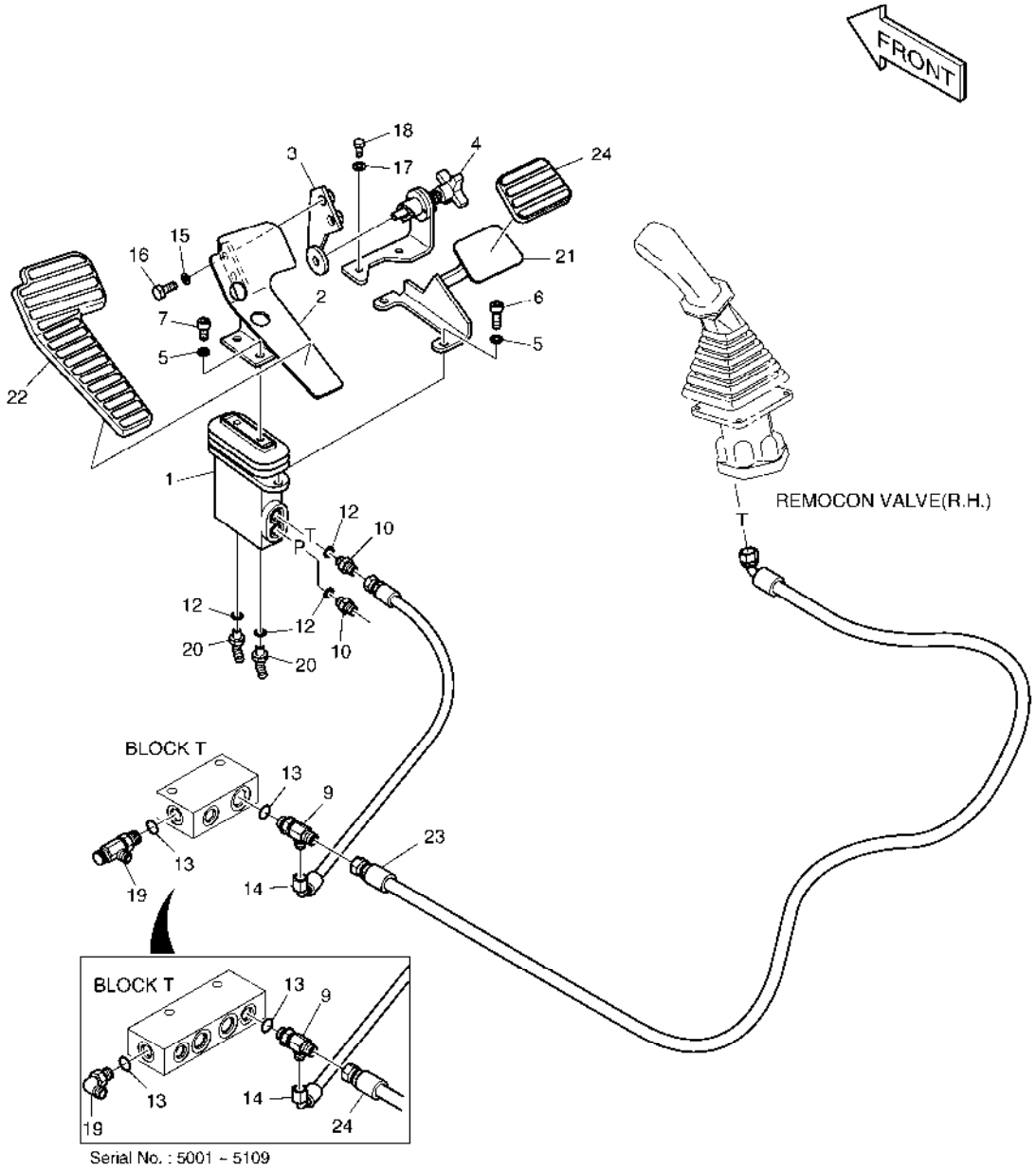

DATE	AUG. 28, 2009
3rd EDITION	

Fig. 6170 PILOT PIPING(2) - TWO WAY CONDUITES DE PILOTE

Serial No. ;

Key No.	Part No.	Description	Description	Q'ty	S.C	Serial No.	ICA	Replaceable part	
								Part No.	Q'ty
6170 --	K1009826C	PILOT PIPING-TWO WAY(2)	CIRCUIT DE PILOTE	-	D				
1	K1017382	VALVE;PEDAL	VANNE	1		5001-5109	I	K1017382A	1
	K1017382A	PEDAL VALVE	VANNE	1		5110-			
2	195-01683A	BRACKET;PEDAL(R.H)	SUPPORT	1					
3	K1000695A	PLATE	PLAQUE	1					
4	K1000696C	LOCK ASS`Y	SERRURE	1					
5	S5110603	WASHER;SPRING	RONDELLE ELASTIQUE	4					
6	S2212266	BOLT;SOCKET	BOULON A 6 PANS CREUX	2					
7	S2211866	BOLT;SOCKET	BOULON A 6 PANS CREUX	2					
9	2181-1951D6	TEE	TE	1					
10	2181-1126D14	ADAPTER	ADAPTEUR	2					
12	S8000111	O-RING	JOINT TORIQUE	4					
13	S8000141	O-RING	JOINT TORIQUE	2					
14	DS2093200	HOSE	TUYAU FLEXIBLE	1					
15	S5102603	WASHER	RONDELLE ELASTIQUE	2					
16	S0512066	BOLT	BOULON A 6 PANS	2					
17	S5102503	WASHER	RONDELLE ELASTIQUE	2					
18	S0508866	BOLT	BOULON A 6 PANS	2					
19	2181-1702D10	ELBOW	COUDE	1		5001-5109			
	2181-1951D1	TEE	TE	1		5110-			
20	2181-1702D4	ELBOW(1/4)	COUDE	2					
21	K1003947A	FOOT REST	REPOS DE PIED	1					
22	161-00381	RUBBER;PEDAL(R.H)	CAOUTCHOUC	1					
23	DS2095003	HOSE	TUYAU FLEXIBLE	1					
24	K1006656	RUBBER;PEDAL	CAOUTCHOUC	1					

DATE	AUG. 28, 2009
3rd EDITION	

Fig. 6180 BOOM PIPING - BOOM 5.9m(ONE & TWO WAY) CONDUITES DE FLECHE

Serial No. ;

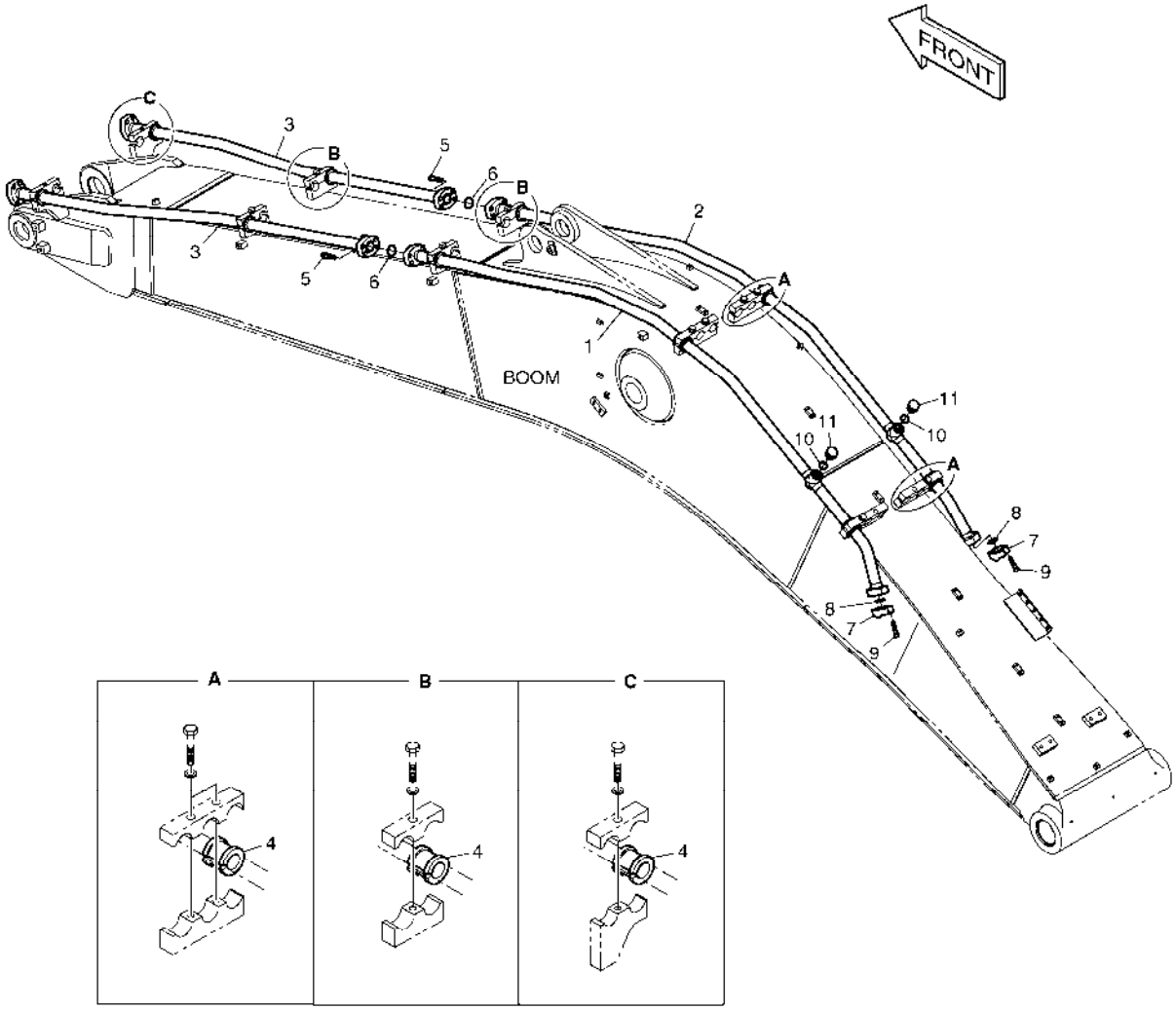

DATE	AUG. 28, 2009
3rd EDITION	

Fig. 6180 BOOM PIPING - BOOM 5.9m(ONE & TWO WAY) CONDUITES DE FLECHE

Serial No. ;

Key No.	Part No.	Description	Description	Q'ty	S.C	Serial No.	ICA	Replaceable part	
								Part No.	Q'ty
6180 --	K1011059	BOOM PIPING - ONE & TWO WAY	CONDUITES DE FLECHE	-	D				
1	K1011060	PIPE	TUYAU	1					
2	K1011061	PIPE	TUYAU	1					
3	K1011062	PIPE	TUYAU	2					
4	K1010531	RUBBER	CAOUTCHOUC	10					
5	S2218766	BOLT;SOCKET	BOULON A 6 PANS CREUX	8					
6	2180-1026D23	O-RING	JOINT TORIQUE	2					
7	2181-9081	FLANGE;SPLIT	BRIDE	4					
8	2180-1026D19	O-RING	JOINT TORIQUE	2					
9	S2215666	BOLT;SOCKET	BOULON A 6 PANS CREUX	8					
10	S8000291	O-RING	JOINT TORIQUE	2					
11	2181-1950D9	PLUG	BOUCHON	2					

DATE	AUG. 28, 2009
3rd EDITION	

Fig. 6190 ARM PIPING - ONE & TWO WAY(ARM 3.0m) CONDUITES DE BALANCIER

Serial No. ;

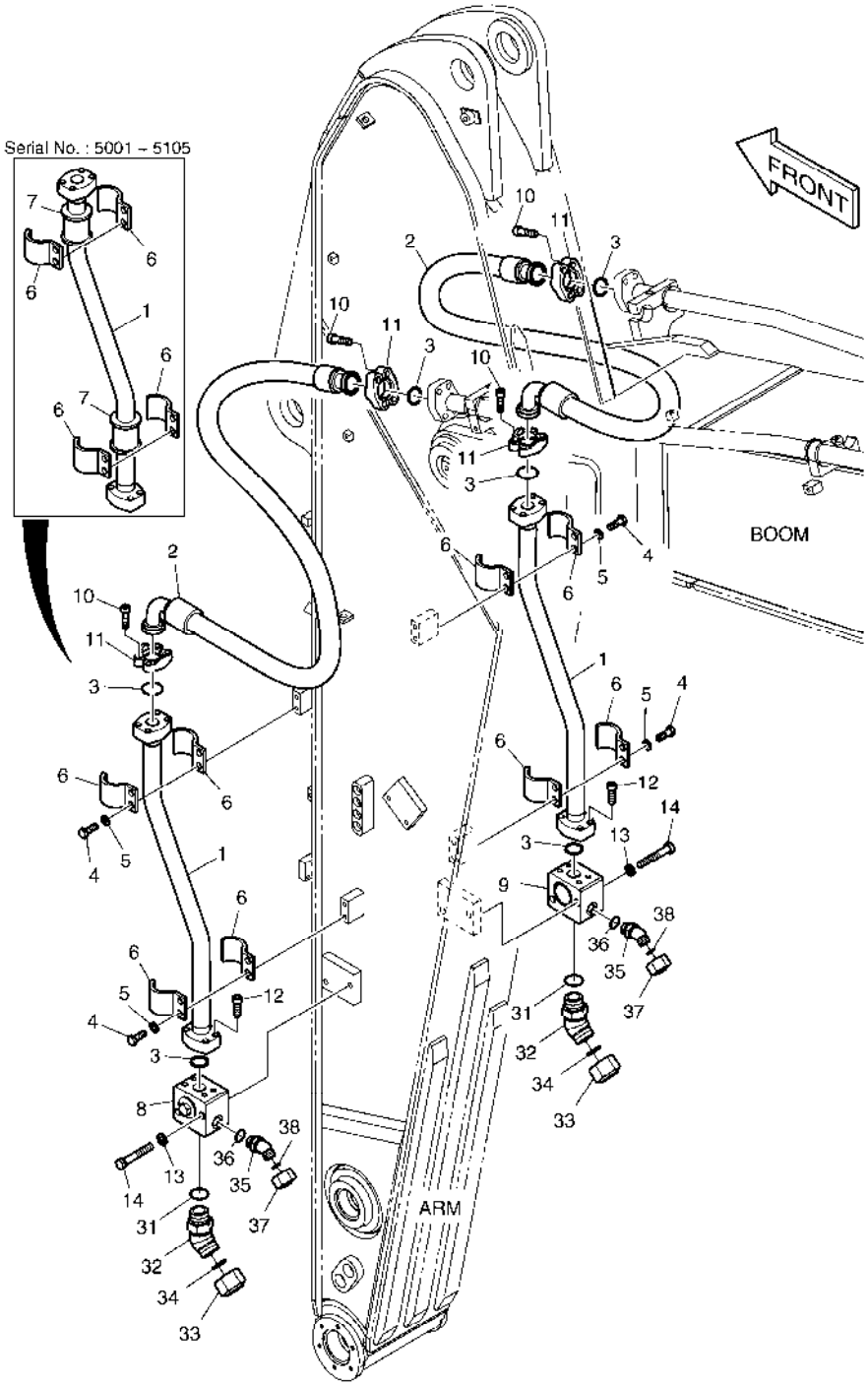

DATE	AUG. 28, 2009
3rd EDITION	

Fig. 6190 ARM PIPING - ONE & TWO WAY(ARM 3.0m) CONDUITES DE BALANCIER

Serial No. ;

Key No.	Part No.	Description	Description	Q'ty	S.C	Serial No.	ICA	Replaceable part	
								Part No.	Q'ty
6190 --	K1011063A	ARM PIPING-ONE & TWO WAY	CONDUITES DE BALANCIE	-	D				
1	K1006218	PIPE	CONDUITE	2					
2	DS2040381	HOSE	TUYAU FLEXIBLE	2					
3	2180-1026D23	O-RING	JOINT TORIQUE	6					
4	S0562766	BOLT	BOULON A 6 PANS	8					
5	S5102803	WASHER;SPRING	RONDELLE ELASTIQUE	8					
6	K1004001	CLAMP;PIPE	COLLIER	8		5001-5105			
	K1004000	CLAMP;PIPE	COLLIER	8		5106-			
7	161-00280	RUBBER	CAOUTCHOUC	4		5001-5105			
8	420-00508B	VALVE;STOP(L.H)	VANNE	1					
9	420-00515B	VALVE;STOP(R.H)	VANNE	1					
10	S2218766	BOLT;SOCKET	BOULON A 6 PANS CREUX	16					
11	2181-9086	FLANGE;SPLIT	FLASQUE EN DEUX PARTIE	8					
12	S2218566	BOLT;SOCKET	BOULON A 6 PANS CREUX	8					
13	S5102903	WASHER	RONDELLE	4					
14	S0566266	BOLT	BOULON A 6 PANS	4					
31	S8000381	O-RING	JOINT TORIQUE	2					
32	2181-2816D3	ELBOW	COUDE	2					
33	2181-2817D3	CAP	CHAPEAU	2					
34	2180-1026D37	O-RING	JOINT TORIQUE	2					
35	2181-2816D4	ELBOW	COUDE	2					
36	S8000181	O-RING	JOINT TORIQUE	2					
37	2181-2817D4	CAP	CHAPEAU	2					
38	S8030081	O-RING	JOINT TORIQUE	2					

DATE	AUG. 28, 2009
3rd EDITION	

Fig. 6200 ARM PIPING - ARM 3.0m(CLAMSHELL) CONDUITES DE BALANCIER

Serial No. ;

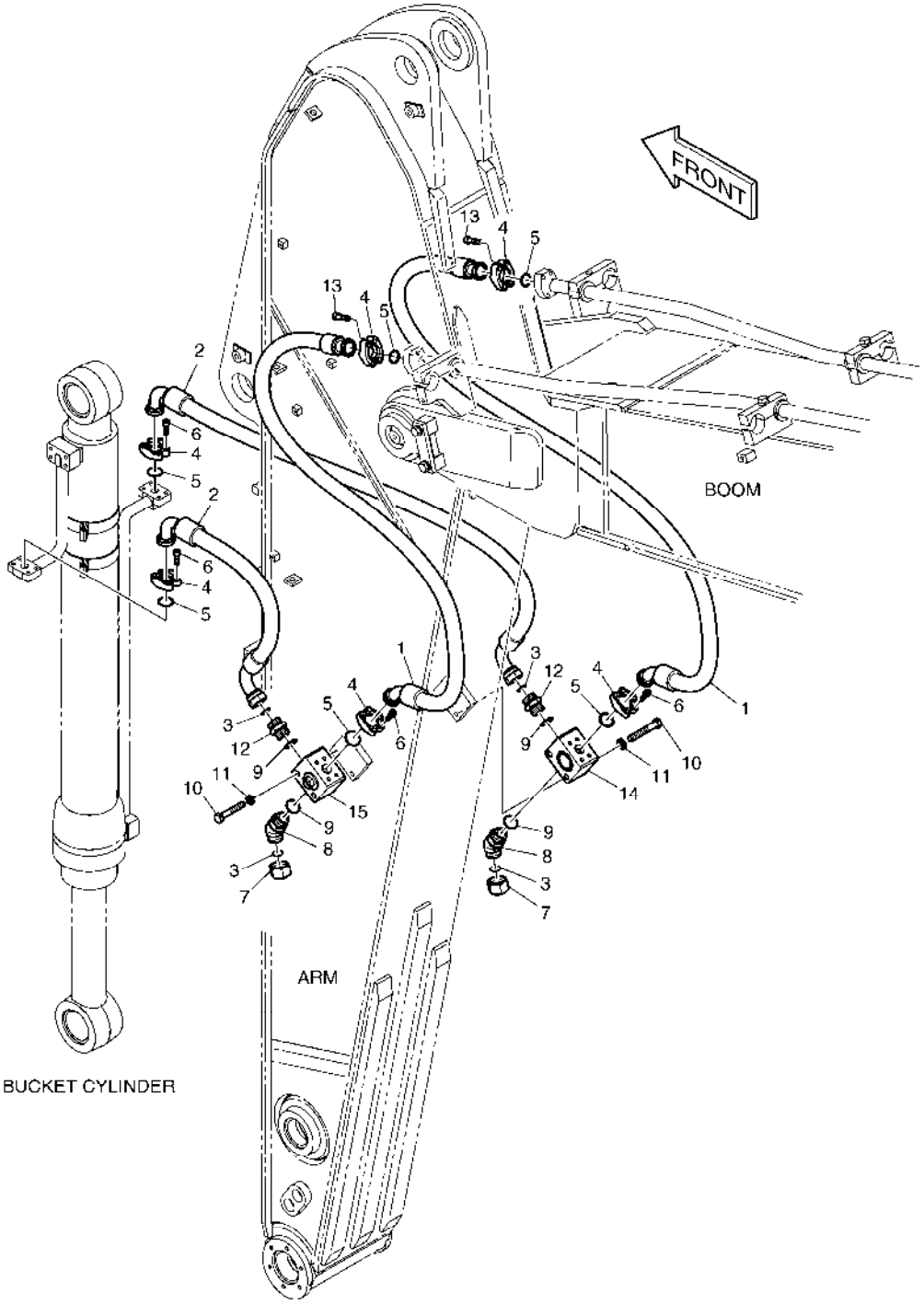

DATE	AUG. 28, 2009
3rd EDITION	

Fig. 6200 ARM PIPING - ARM 3.0m(CLAMSHELL) CONDUITES DE BALANCIER

Serial No. ;

Key No.	Part No.	Description	Description	Q'ty	S.C	Serial No.	ICA	Replaceable part	
								Part No.	Q'ty
6200 --	K1012038A	CLAMSHELL PIPING - 3.0M ARM	TUYAUTERIE DE BLOC SUI	-	D				
1	DS2039110	HOSE	TUYAU FLEXIBLE	2					
2	DS2026141	HOSE	TUYAU FLEXIBLE	2					
3	S8030161	O-RING	JOINT TORIQUE	4					
4	2181-9078	FLANGE	BRIDE	12					
5	2180-1026D19	O-RING	JOINT TORIQUE	6					
6	S2212266	BOLT;SOCKET	BOULON A 6 PANS CREUX	16					
7	2181-2817D2	CAP	CHAPEAU	2					
8	2181-2816D2	ELBOW	COUDE	2					
9	S8000291	O-RING	JOINT TORIQUE	4					
10	S0563666	BOLT	BOULON A 6 PANS	4					
11	S5102803	WASHER;SPRING	RONDELLE ELASTIQUE	4					
12	2181-4133D6	ADAPTER	RACCORD ADAPTATEUR	2					
13	S2212466	BOLT;SOCKET M10X1.5X40	BOULON A 6 PANS CREUX	8					
14	K1002965	VALVE;SWITCH	VANNE	1					
15	K1002967	VALVE;SWITCH	VANNE	1					

DATE	AUG. 28, 2009
3rd EDITION	

Fig. 6210 MAIN PIPING - QUICK CLAMP
CONDUITES DE BATI PRINCIPAL

Serial No. ;

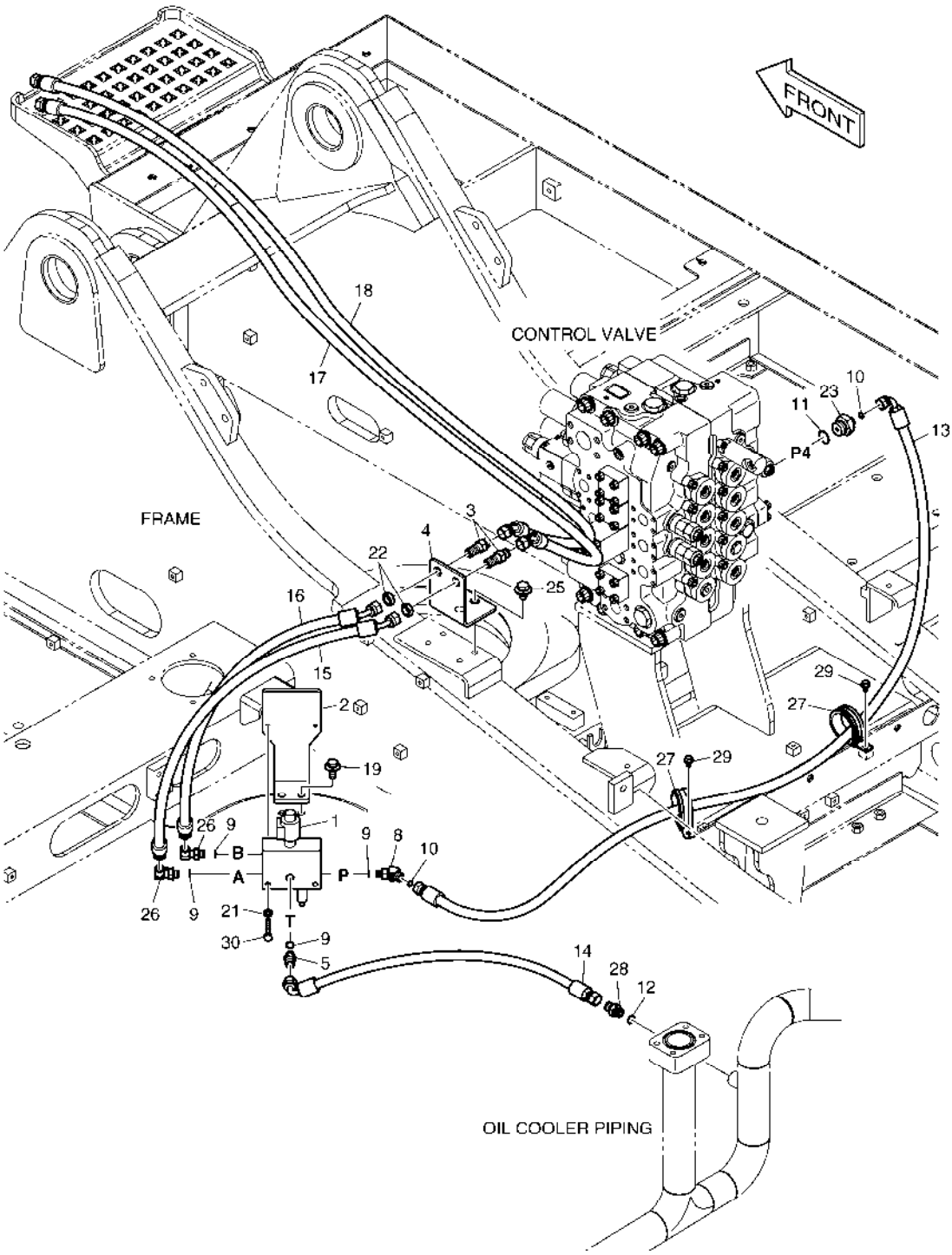

DATE	AUG. 28, 2009
3rd EDITION	

Fig. 6210 MAIN PIPING - QUICK CLAMP
CONDUITES DE BATI PRINCIPAL

Serial No. ;

Key No.	Part No.	Description	Description	Q'ty	S.C	Serial No.	ICA	Replaceable part	
								Part No.	Q'ty
6210 --	K1009803B	MAIN PIPING - QUICK CLAMP	CONDUITES DE BATI PRIN(	-	D				
1	426-00287	VALVE;QUICK-FIT	VANNE	1					
2	195-03123E	BRACKET	SUPPORT	1					
3	181-00078D1	ADAPTER	ADAPTEUR	2					
4	K1002573B	PLATE	PLAQUE	1					
5	2181-1126D85	ADAPTER	ADAPTEUR	1					
8	DS2338029	ELBOW	COUDE	1					
9	S8000111	O-RING	JOINT TORIQUE	4					
10	S8030061	O-RING	JOINT TORIQUE	2					
11	S8000231	O-RING	JOINT TORIQUE	1					
12	S8000141	O-RING	JOINT TORIQUE	1					
13	DS2013668	HOSE	TUYAU FLEXIBLE	1					
14	DS2093258	HOSE	TUYAU FLEXIBLE	1					
15	DS2054344	HOSE	TUYAU FLEXIBLE	1					
16	DS2054345	HOSE	TUYAU FLEXIBLE	1		5001-5107			
	DS2054103	HOSE	TUYAU FLEXIBLE	1		5108-			
17	DS2054365	HOSE	TUYAU FLEXIBLE	1					
18	DS2054366	HOSE	TUYAU FLEXIBLE	1					
19	DS0025016	BOLT;SET	BOULON A 6 PANS	2					
21	S5102503	WASHER	RONDELLE ELASTIQUE	2					
22	121-00010D1	NUT	ECROU	2					
23	DS2404024	ADAPTER	ADAPTEUR	1					
25	DS0025019	BOLT;SET	BOULON A 6 PANS	2					
26	2181-1702D3	ELBOW	COUDE	2					
27	124-00208D9	CLIP	AGRAFE	2					
28	2181-1126D7	ADAPTER	ADAPTEUR	1					
29	K1001029	BOLT	BOULON A 6 PANS	2					
30	S0556466	BOLT	BOULON	2					

DATE	AUG. 28, 2009
3rd EDITION	

Fig. 6220 ELECTRIC PARTS-QUICK CLAMP BRIDE RAPIDE

Serial No. ;

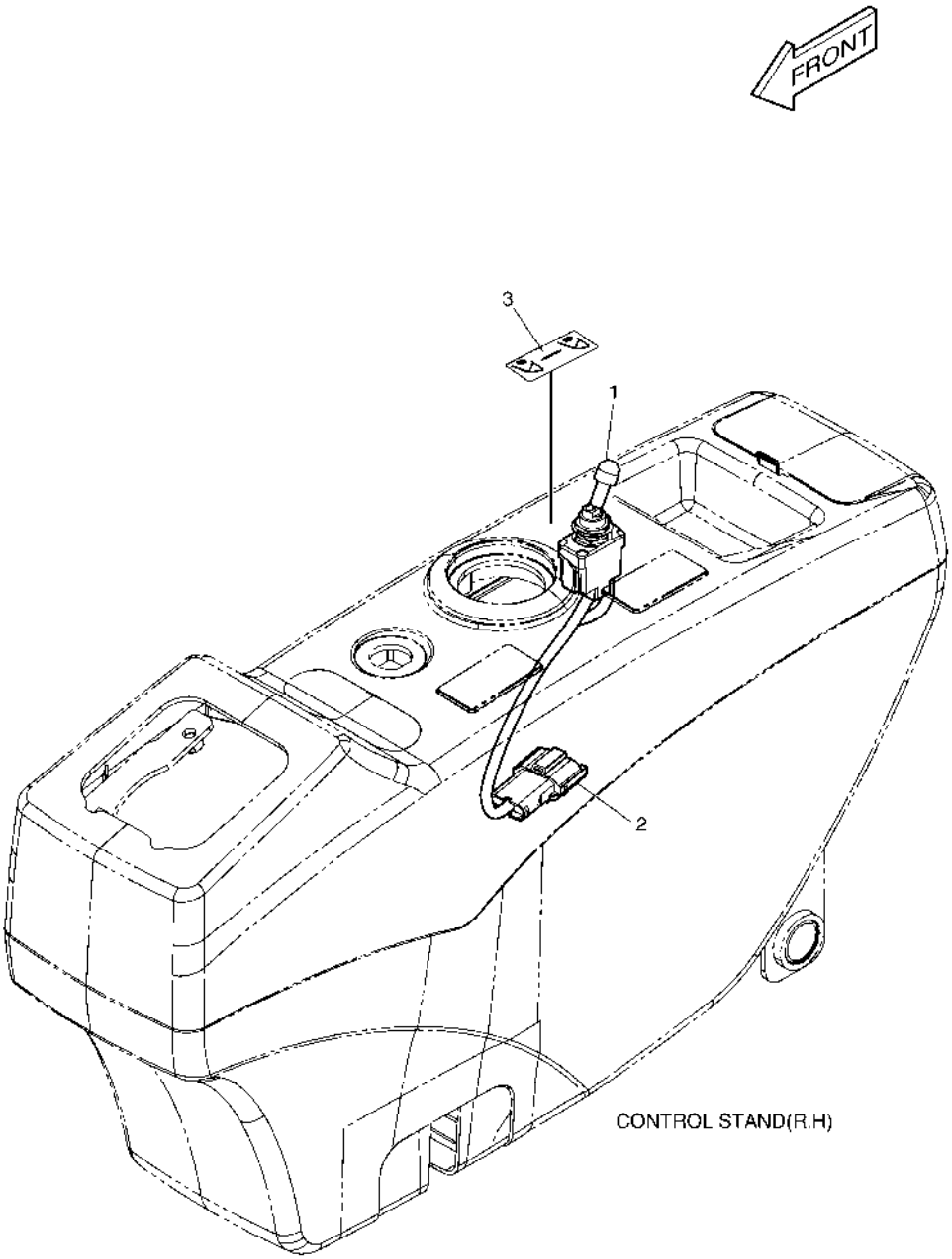

DATE	AUG. 28, 2009
3rd EDITION	

Fig. 6220 ELECTRIC PARTS-QUICK CLAMP BRIDE RAPIDE

Serial No. ;

Key No.	Part No.	Description	Description	Q'ty	S.C	Serial No.	ICA	Replaceable part	
								Part No.	Q'ty
6220 --	500-00317	QUICK CLAMP	BRIDE RAPIDE	-	D				
1	549-00092	SWITCH;LOCKOUT TOGGLE	INTERRUPTEUR	1					
2	530-00432A	HARNESS;JOINT	FAISCEAU	1					
3	K1005776	PLATE;NAME	PLAQUE D'IDENTIFICATION	1					

DATE	AUG. 28, 2009
3rd EDITION	

Fig. 6230 BOOM PIPING - BOOM 5.9m(QUICK CLAMP) CONDUITES DE FLECHE

Serial No. ;

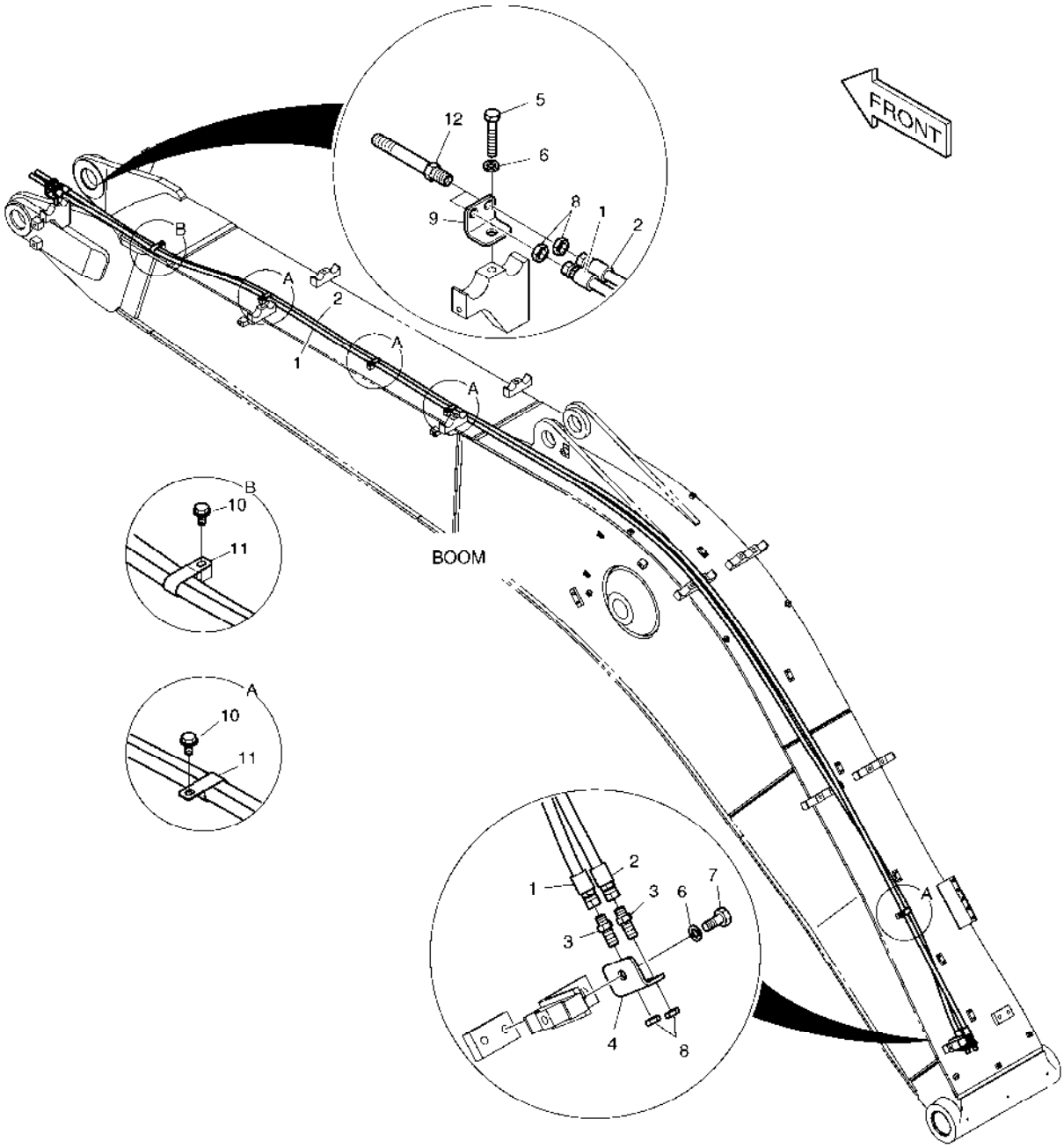

DATE	AUG. 28, 2009
3rd EDITION	

Fig. 6230 BOOM PIPING - BOOM 5.9m(QUICK CLAMP) CONDUITES DE FLECHE

Serial No. ;

Key No.	Part No.	Description	Description	Q'ty	S.C	Serial No.	ICA	Replaceable part	
								Part No.	Q'ty
6230 --	K1011073B	BOOM PIPING (QUICK CLAMP)	BOOM PIPING	-	D				
1	DS2053921	HOSE	TUYAU FLEXIBLE	1					
2	DS2053935	HOSE	TUYAU FLEXIBLE	1					
3	181-00078D1	ADAPTER	ADAPTEUR	2					
4	K1011074	BRACKET	SUPPORT	1					
5	S0565566	BOLT	BOULON A 6 PANS	1					
6	S5102903	WASHER	RONDELLE	2					
7	S0565066	BOLT	BOULON A 6 PANS	1					
8	121-00010D1	NUT	ECROU	4					
9	K1011075	BRACKET	SUPPORT	1					
10	K1001029	BOLT	BOULON A 6 PANS	5					
11	124-00199D1	CLIP	ATTACHE	5					
12	K1000112	ADAPTER	ADAPTEUR	2					

DATE	AUG. 28, 2009
3rd EDITION	

Fig. 6240 ARM PIPING - ARM 3.0m(QUICK CLAMP) CONDUITES DE BALANCIER

Serial No. ;

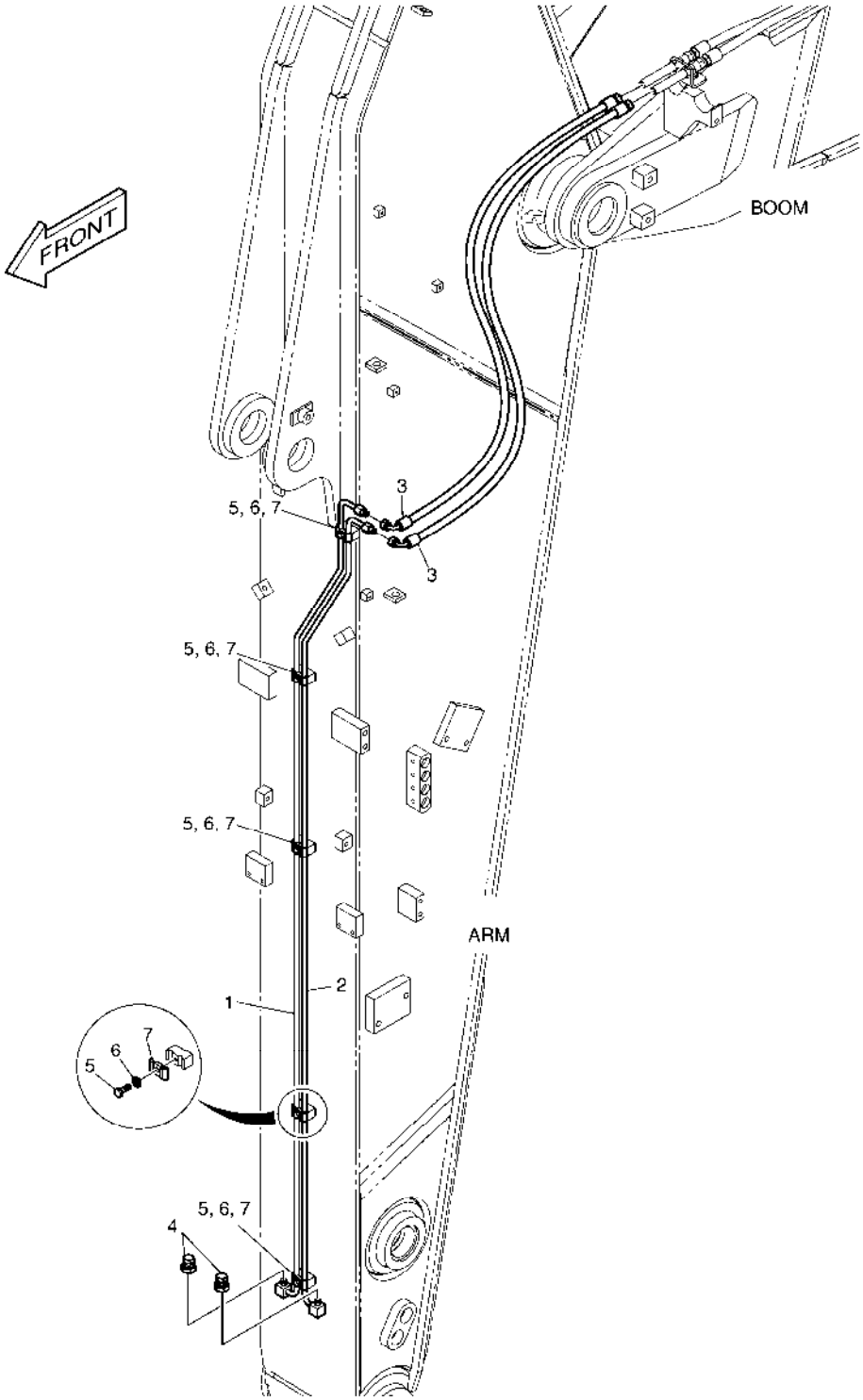

DATE	AUG. 28, 2009
3rd EDITION	

Fig. 6240 ARM PIPING - ARM 3.0m(QUICK CLAMP) CONDUITES DE BALANCIER

Serial No. ;

Key No.	Part No.	Description	Description	Q'ty	S.C	Serial No.	ICA	Replaceable part	
								Part No.	Q'ty
6240 --	K1011076	ARM PIPING-QUICK CLAMP	CONDUITES DE BALANCIE	-	D				
1	K1011078	PIPE	TUYAU	1					
2	K1011082	PIPE	TUYAU	1					
3	DS2055865	HOSE	TUYAU FLEXIBLE	2					
4	2181-2820D1	PLUG	BOUCHON	2					
5	S0508866	BOLT	BOULON A 6 PANS	5					
6	S5102503	WASHER	RONDELLE ELASTIQUE	5					
7	K1004011	CLAMP;PIPE	FIXATION DE TUYAU	5					

DATE	AUG. 28, 2009
3rd EDITION	

Fig. 6250 SUN ROOF COVER
COUVERTURE DE TOIT DU SOLEIL

Serial No. ;

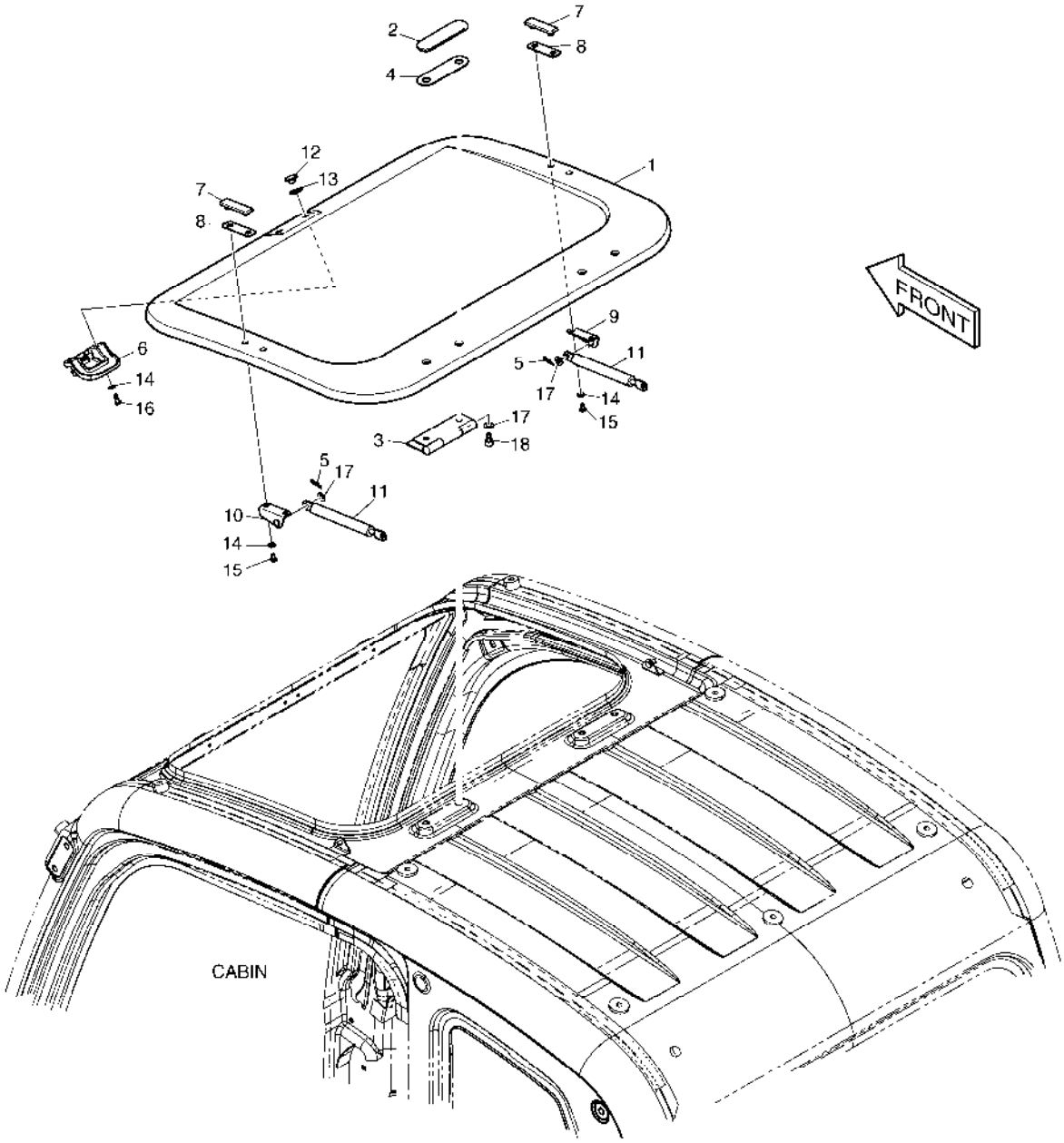

DATE	AUG. 28, 2009
3rd EDITION	

Fig. 6250 SUN ROOF COVER
COUVERTURE DE TOIT DU SOLEIL

Serial No. ;

Key No.	Part No.	Description	Description	Q'ty	S.C	Serial No.	ICA	Replaceable part	
								Part No.	Q'ty
6250 --	621-02870C	SUN ROOF COVER	LE SOLEIL	-	D				
1	621-02871B	COVER;SUN ROOF	COUVERCLE	1					
2	621-02872	COVER;ROOF HINGE	COUVERCLE	2					
3	171-00060A	HINGE;ROOF COVER	CHARNIERE	2					
4	161-00599	PAD;RUBBER	CAOUTCHOUC	2					
5	123-00523	PIN;GAS-SPRING	GOUJON	2					
6	123-00516B	LOCK ASS`Y;ROOF COVER	SERRURE	1					
7	621-02873	COVER;ROOF GAS-CYLINDER	COUVERCLE	2					
8	161-00600	PAD;RUBBER	CAOUTCHOUC	2					
9	191-03279A	PLATE;ROOF GAS-SPRING RH	PLAQUE	1					
10	191-03280A	PLATE;ROOF GAS-SPRING LH	PLAQUE	1					
11	DS1003008	GAS-SPRING	GOUJON	2					
12	621-03103	COVER;ROOF HANDLE	COUVERCLE	2					
13	161-00639	RUBBER;ROOF HANDLE	CAOUTCHOUC	2					
14	2114-1898D3	WASHER;PLAIN	RONDELLE	6					
15	S3450943	SCREW	VIS	4					
16	2120-2166D7	SCREW	VIS	2					
17	2114-1898D14	WASHER;PLAIN	RONDELLE	6					
18	S2208561	BOLT;SOCKET	BOULON A 6 PANS	4					

DATE	AUG. 28, 2009
3rd EDITION	

Fig. 6260 RAIN SHIELD BOUCLIER DE PLUIE

Serial No. ;

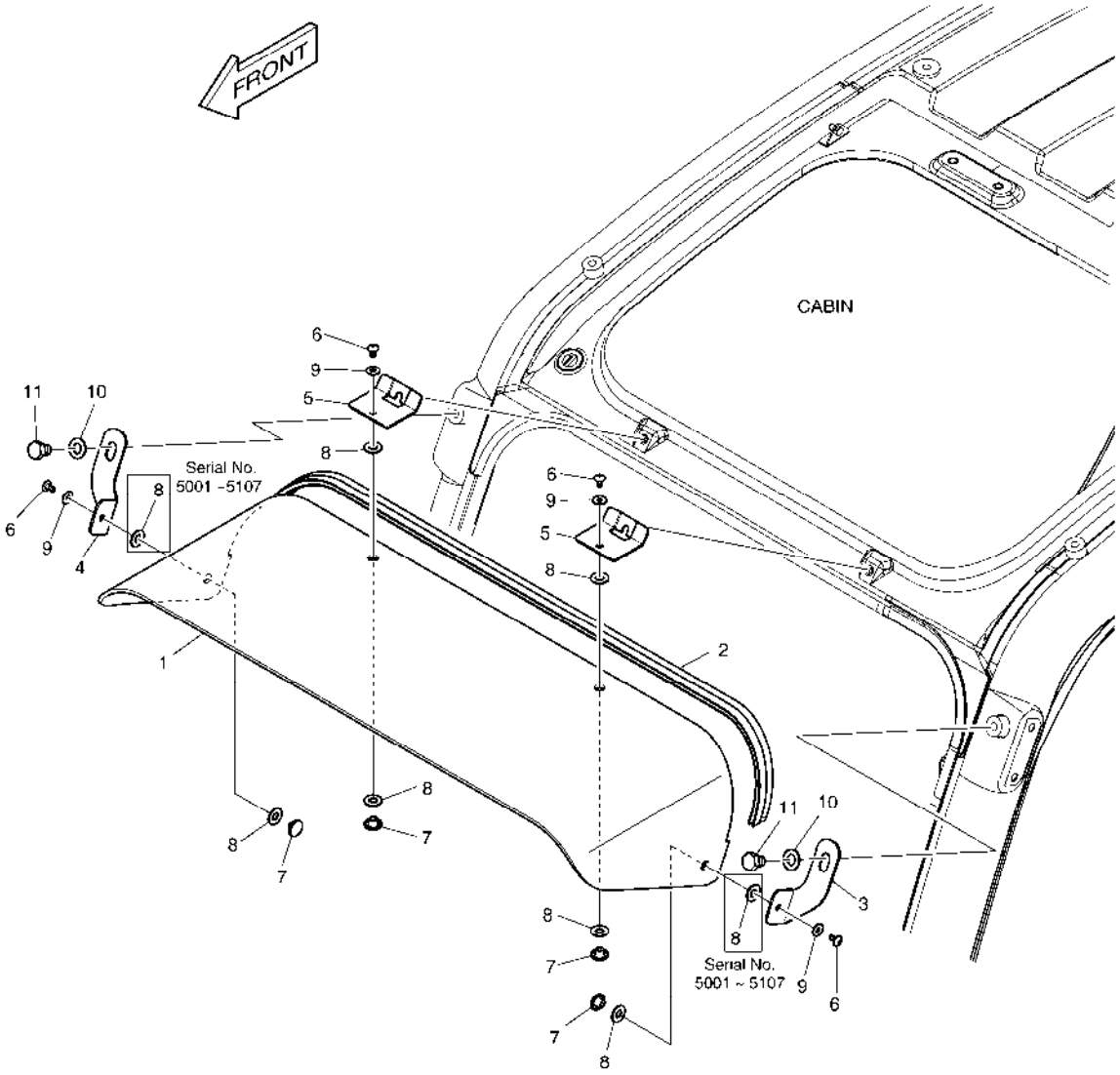

DATE	AUG. 28, 2009
3rd EDITION	

Fig. 6260 RAIN SHIELD BOUCLIER DE PLUIE

Serial No. ;

Key No.	Part No.	Description	Description	Q'ty	S.C	Serial No.	ICA	Replaceable part	
								Part No.	Q'ty
6260 --	K1002561B	RAIN SHIELD	BOUCLIER DE PLUIE	-	D				
1	159-00294B	COVER;RAIN SHIELD	COUVERCLE	1		5001-5107	I	159-00294C	1
	159-00294C	COVER;RAIN SHIELD	COUVERCLE	1		5108-			
2	162-00040A	STRIP;WEATHER	TAMPON	1					
3	K1002574A	BRACKET(L.H)	SUPPORT	1					
4	K1002575A	BRACKET(R.H)	SUPPORT	1					
5	195-03374B	BRACKET;RAIN SHIELD	SUPPORT	2		5001-5107	I	195-03374C	2
	195-03374C	BRACKET;RAIN SHIELD	SUPPORT	2		5108-			
6	2120-2166D52	BOLT	VIS	4					
7	621-03103	COVER;ROOF HANDLE	COUVERCLE	4					
8	161-00639	RUBBER;ROOF HANDLE	CAOUTCHOUC	8		5001-5107			
	161-00639	RUBBER;ROOF HANDLE	CAOUTCHOUC	6		5108-			
9	2114-1898D5	WASHER M6	RONDELLE	4					
10	2114-1898D6	WASHER;PLAIN	RONDELLE	2		5108-			
11	2120-2166D37	BOLT	BOULON A 6 PANS	2		5108-			

DATE	AUG. 28, 2009
3rd EDITION	

Fig. 6270 RAIN SHIELD & LAMP MOUNTING BOUCLIER ET DE LAMPE DE PLUIE

Serial No. ;

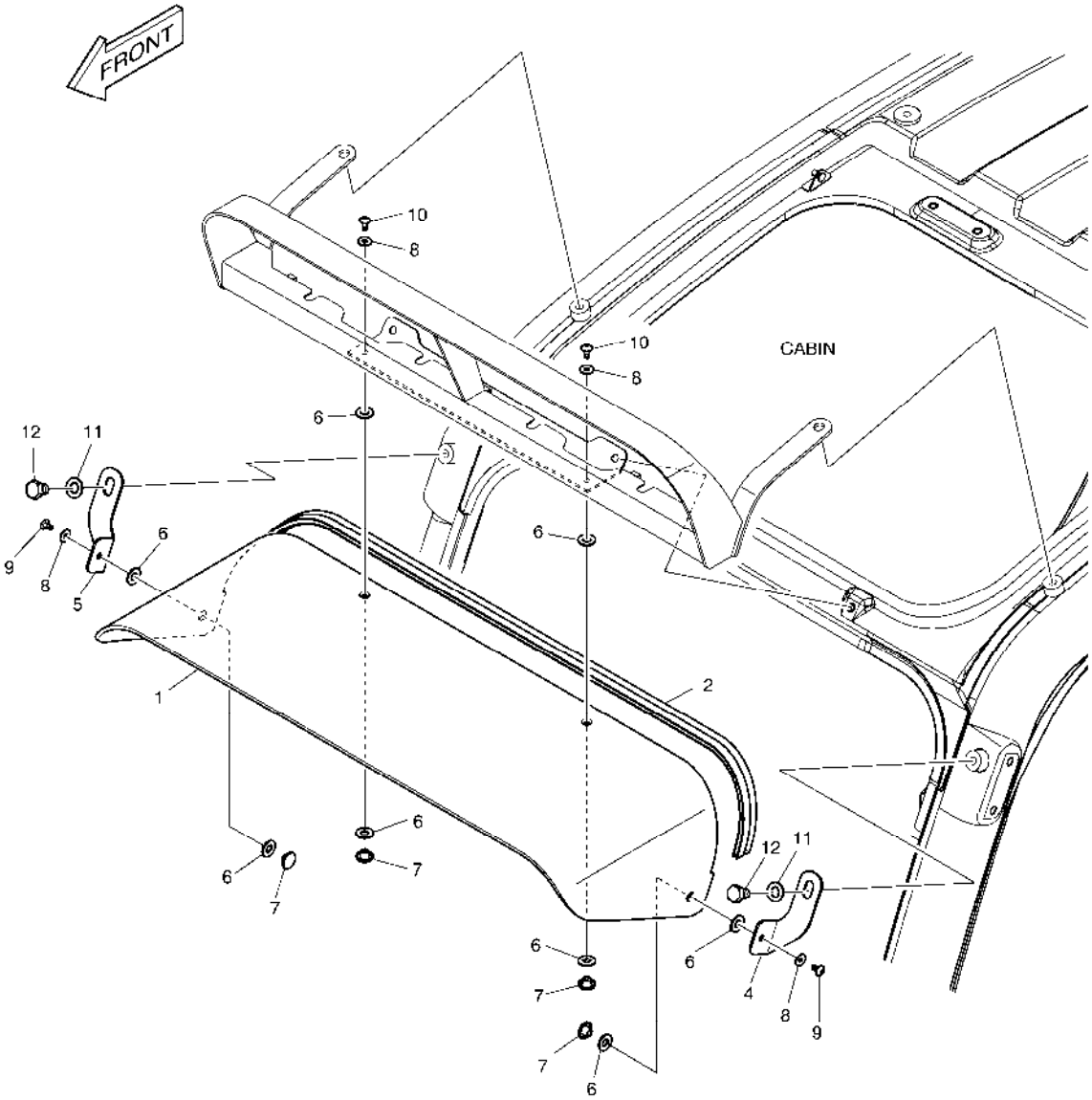

DATE	AUG. 28, 2009
3rd EDITION	

Fig. 6270 RAIN SHIELD & LAMP MOUNTING BOUCLIER ET DE LAMPE DE PLUIE

Serial No. ;

Key No.	Part No.	Description	Description	Q'ty	S.C	Serial No.	ICA	Replaceable part	
								Part No.	Q'ty
6270 --	534-00117B	RAIN SHIELD & LAMP ASSY	BOUCLIER DE PLUIE	-	D				
1	159-00294B	COVER;RAIN SHIELD	COUVERCLE	1		5001-5107	I	159-00294C	1
	159-00294C	COVER;RAIN SHIELD	COUVERCLE	1		5108-			
2	162-00040A	STRIP;WEATHER	TAMPON	1					
4	K1002574A	BRACKET(L.H)	SUPPORT	1					
5	K1002575A	BRACKET(R.H)	SUPPORT	1					
6	161-00639	RUBBER;ROOF HANDLE	CAOUTCHOUC	8					
7	621-03103	COVER;ROOF HANDLE	COUVERCLE	4					
8	2114-1898D5	WASHER M6	RONDELLE	4					
9	2120-2166D52	BOLT	VIS	2					
10	2120-2166D10	SCREW M6X1.0X14	VIS	2					
11	2114-1898D6	WASHER;PLAIN	RONDELLE	2		5108-			
12	2120-2166D37	BOLT	BOULON A 6 PANS	2		5108-			

DATE	AUG. 28, 2009
3rd EDITION	

Fig. 6280 CABIN LOWER GUARD
LA CARLINGUE ABAISSENT LA GARDE

Serial No. ;

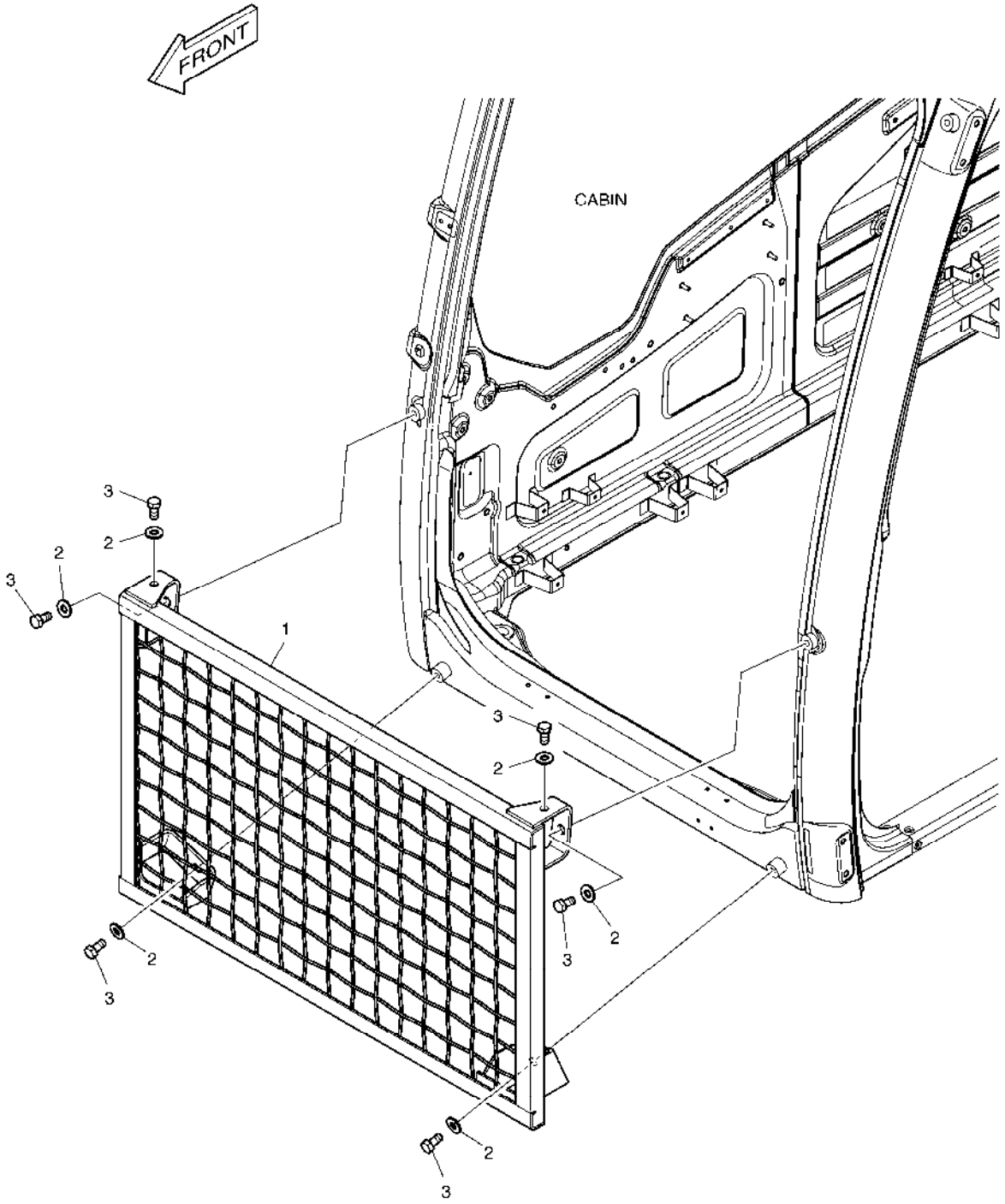

DATE	AUG. 28, 2009
3rd EDITION	

Fig. 6280 CABIN LOWER GUARD
LA CARLINGUE ABAISSENT LA GARDE

Serial No. ;

Key No.	Part No.	Description	Description	Q'ty	S.C	Serial No.	ICA	Replaceable part	
								Part No.	Q'ty
6280 --	623-00086	GUARD;FRONT LOWER	GARDE	-	D				
1	623-00085A	GUARD;FRONT LOWER	GARDE	1					
2	2114-1898D17	WASHER M12	RONDELLE	6					
3	2120-2166D27	BOLT	BOULON A 6 PANS	6					

DATE	AUG. 28, 2009
3rd EDITION	

Fig. 6290 WINDOW GUARD GARDE DE FENETRE

Serial No. ;

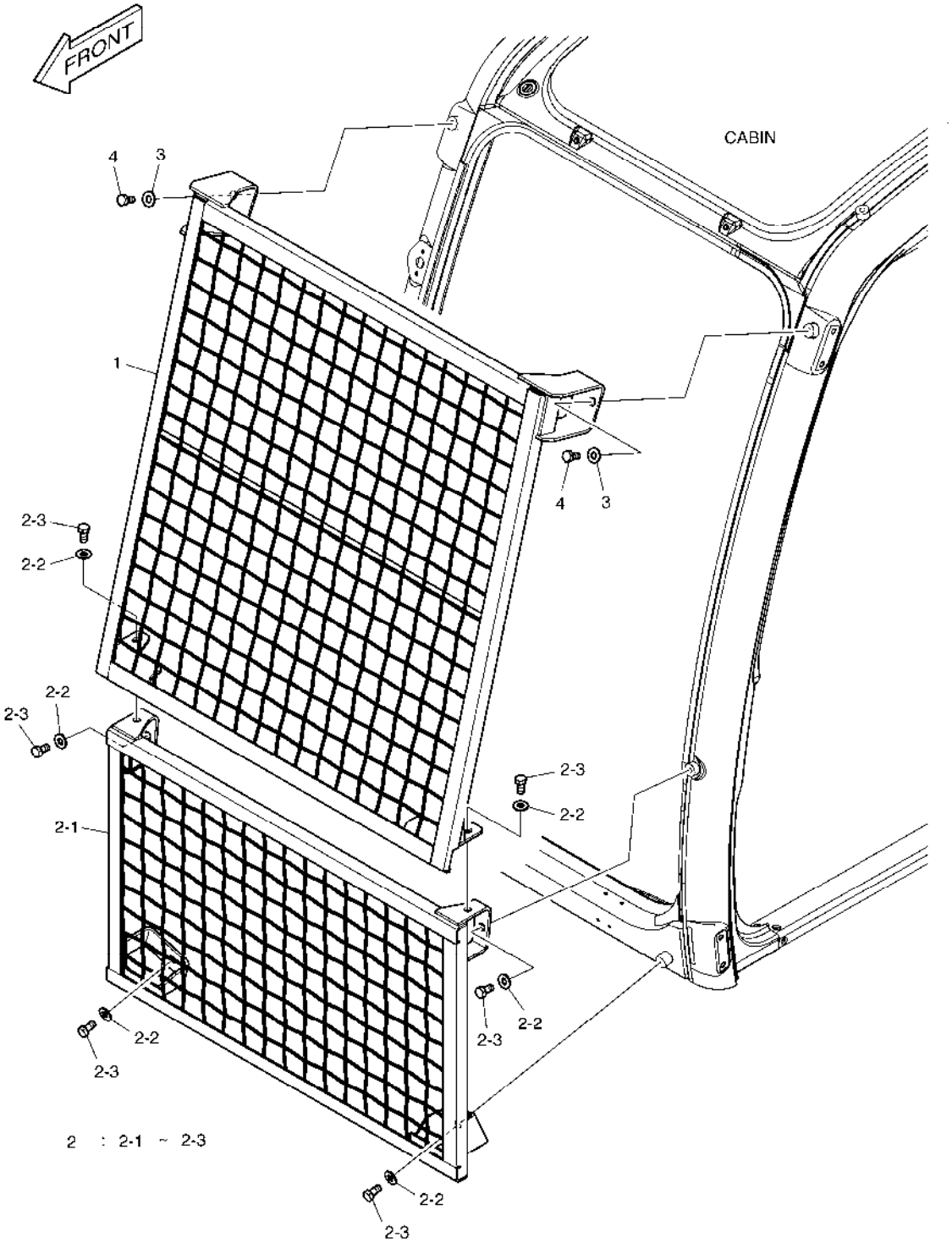

DATE	AUG. 28, 2009
3rd EDITION	

Fig. 6290 WINDOW GUARD GARDE DE FENETRE

Serial No. ;

Key No.	Part No.	Description	Description	Q'ty	S.C	Serial No.	ICA	Replaceable part	
								Part No.	Q'ty
6290 --	K1002771	WINDOW GUARD	GARDE	-	D				
1	K1002759A	GUARD;FRONT UPPER	GARDE	1					
2	623-00086	GUARD;FRONT LOWER	GARDE	1	D				
2-1	623-00085A	. GUARD;FRONT LOWER	. GARDE	1					
2-2	2114-1898D17	. WASHER M12	. RONDELLE	6					
2-3	2120-2166D27	. BOLT	. BOULON A 6 PANS	6					
3	2114-1898D17	WASHER M12	RONDELLE	2					
4	2120-2166D27	BOLT	BOULON A 6 PANS	2					

DATE	AUG. 28, 2009
3rd EDITION	

Fig. 6300 FLOOR MAT - TWO WAY PLANCHER

Serial No. ;

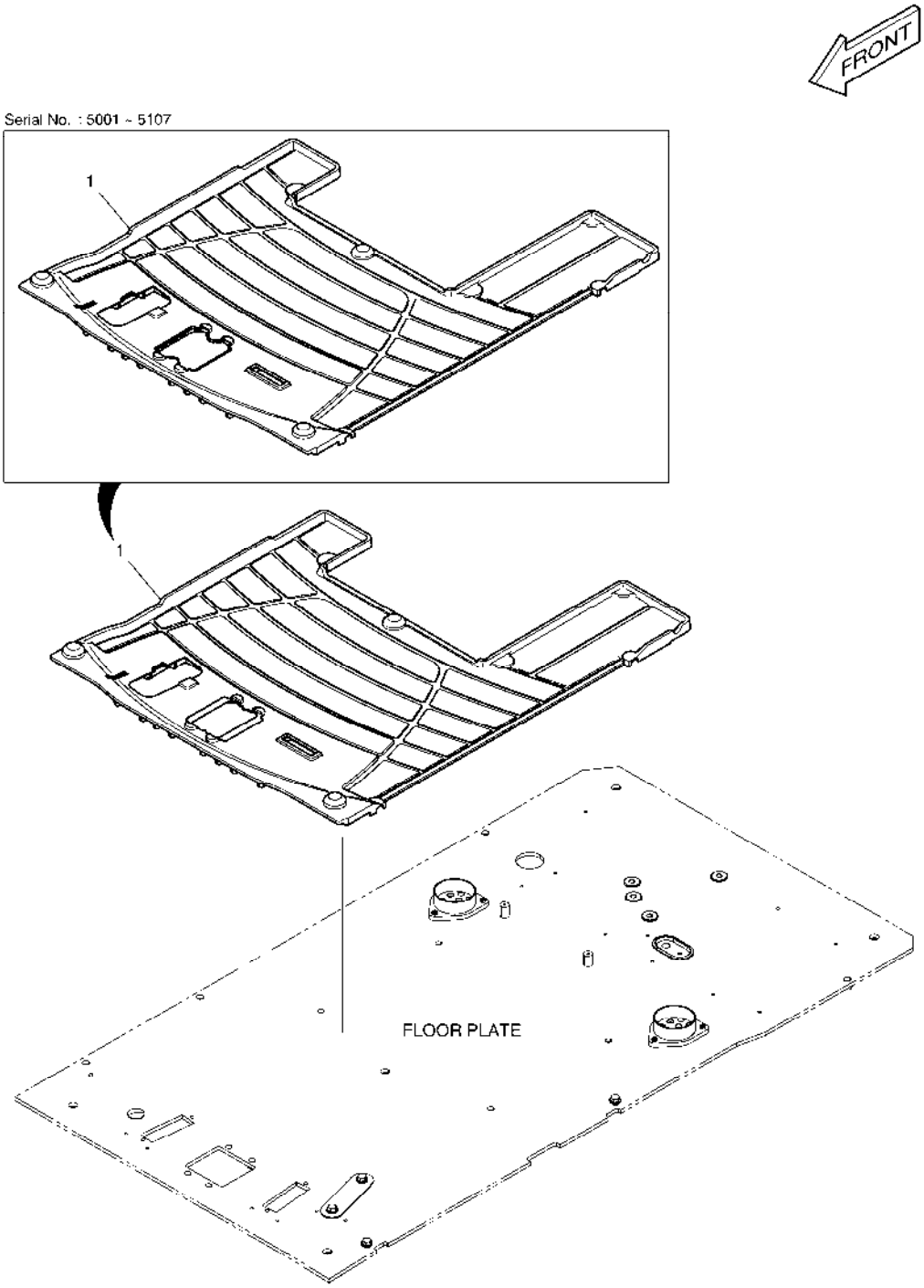

DATE	AUG. 28, 2009
3rd EDITION	

Fig. 6300 FLOOR MAT - TWO WAY PLANCHER

Serial No. ;

Key No.	Part No.	Description	Description	Q'ty	S.C	Serial No.	ICA	Replaceable part	
								Part No.	Q'ty
6300 -1	K1007092A	MAT;FLOOR	PLAQUE	1		5001-5107			
	K1007092B	MAT;FLOOR	PLAQUE	1		5108-			

DATE	AUG. 28, 2009
3rd EDITION	

Fig. 6310 FLOOR MAT - ROTATING PLANCHER

Serial No. ;

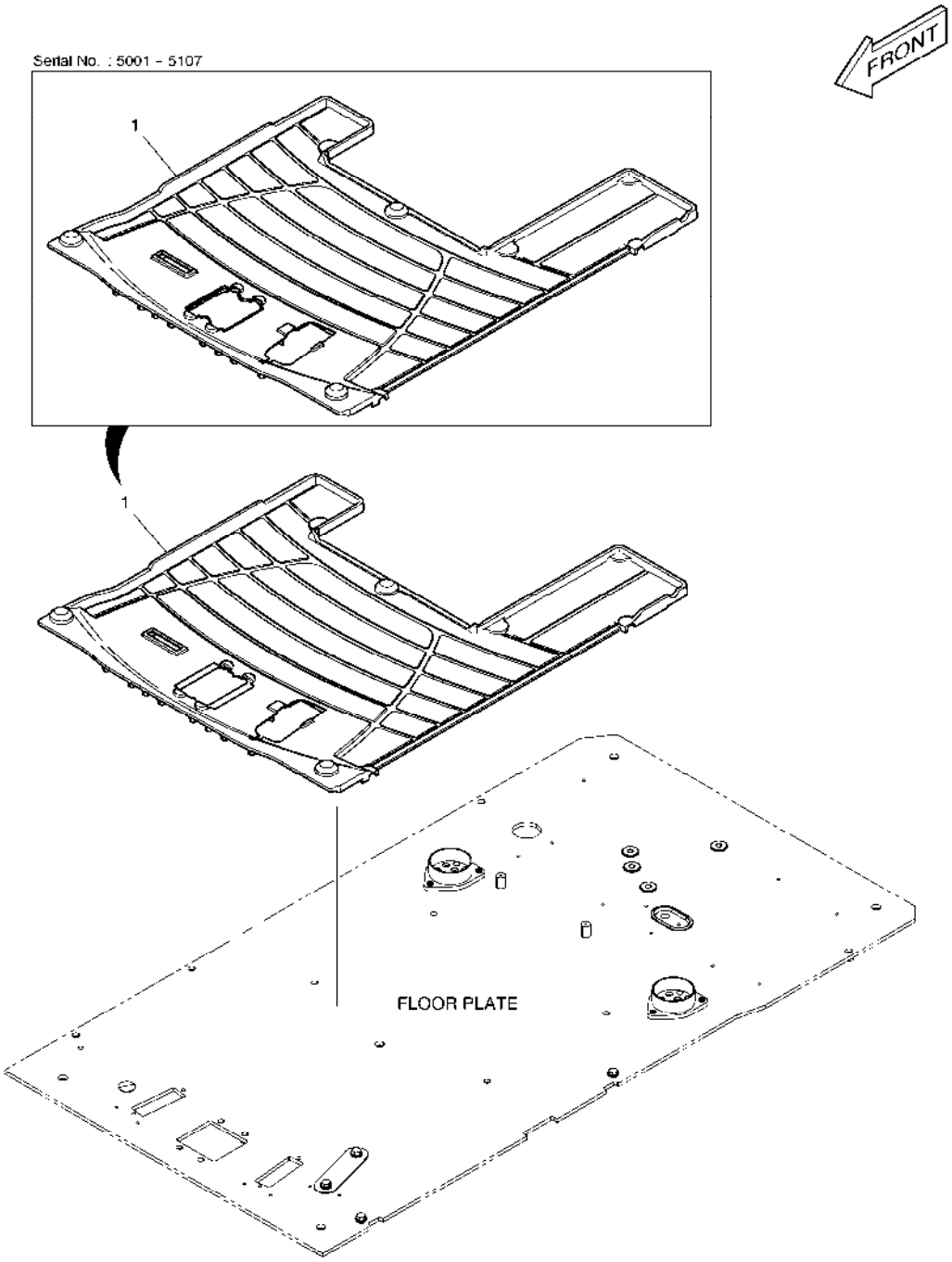

DATE	AUG. 28, 2009
3rd EDITION	

Fig. 6310 FLOOR MAT - ROTATING PLANCHER

Serial No. ;

Key No.	Part No.	Description	Description	Q'ty	S.C	Serial No.	ICA	Replaceable part	
								Part No.	Q'ty
6310 -1	K1007093A	MAT;FLOOR	PLAQUE	1		5001-5107			
	K1007093B	MAT;FLOOR	PLAQUE	1		5108-			

DATE	AUG. 28, 2009
3rd EDITION	

Fig. 6320 FLOOR MAT - TWO WAY & ROTATING PLANCHER

Serial No. ;

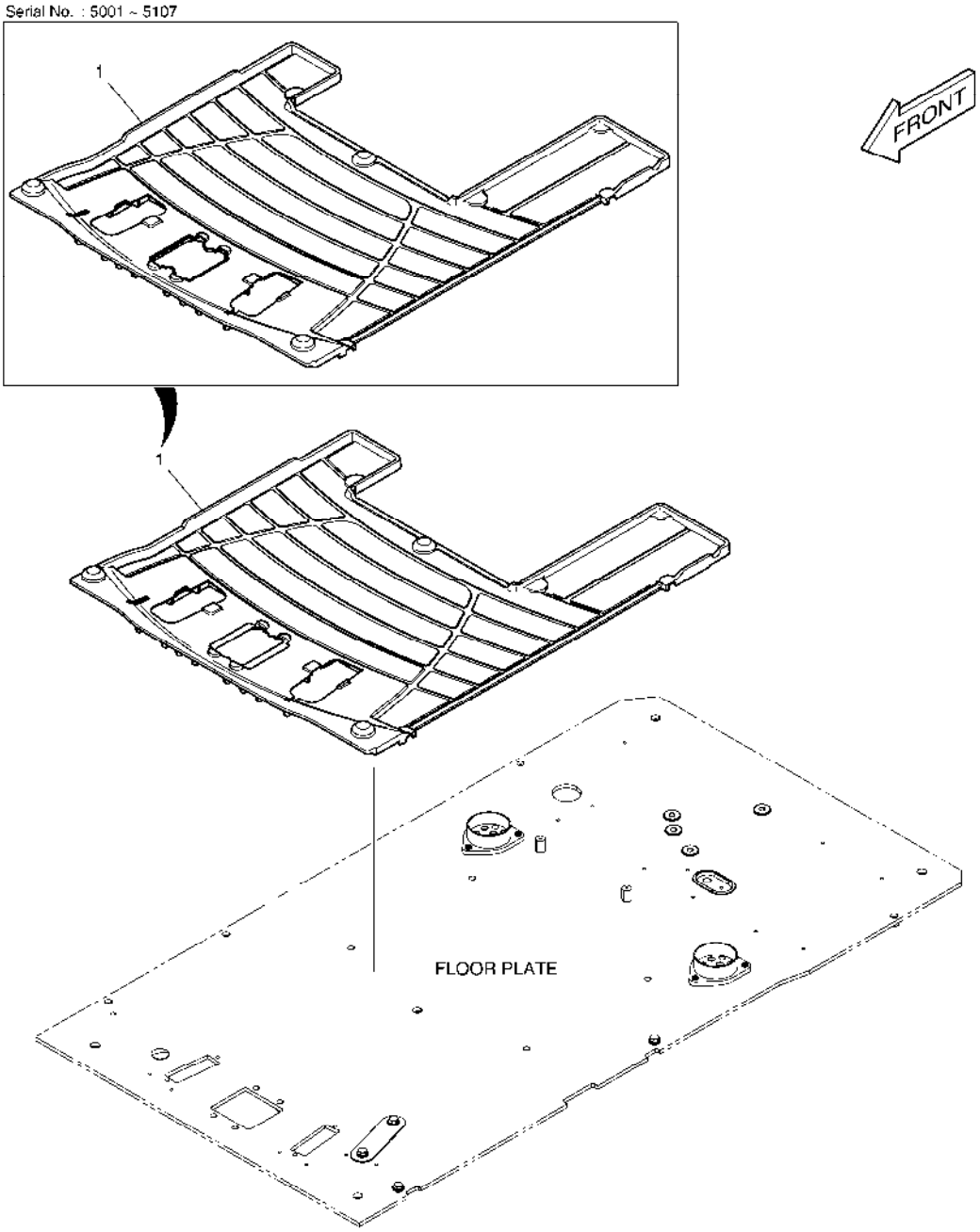

DATE	AUG. 28, 2009
3rd EDITION	

Fig. 6320 FLOOR MAT - TWO WAY & ROTATING PLANCHER

Serial No. ;

Key No.	Part No.	Description	Description	Q'ty	S.C	Serial No.	ICA	Replaceable part	
								Part No.	Q'ty
6320 -1	K1007094A	MAT;FLOOR	PLAQUE	1		5001-5107			
	K1007094B	MAT;FLOOR	PLAQUE	1		5108-			

DATE	AUG. 28, 2009
3rd EDITION	

Fig. 6330 TRACK FRAME - NARROW TRAIN DE ROULEMENT

Serial No. ;

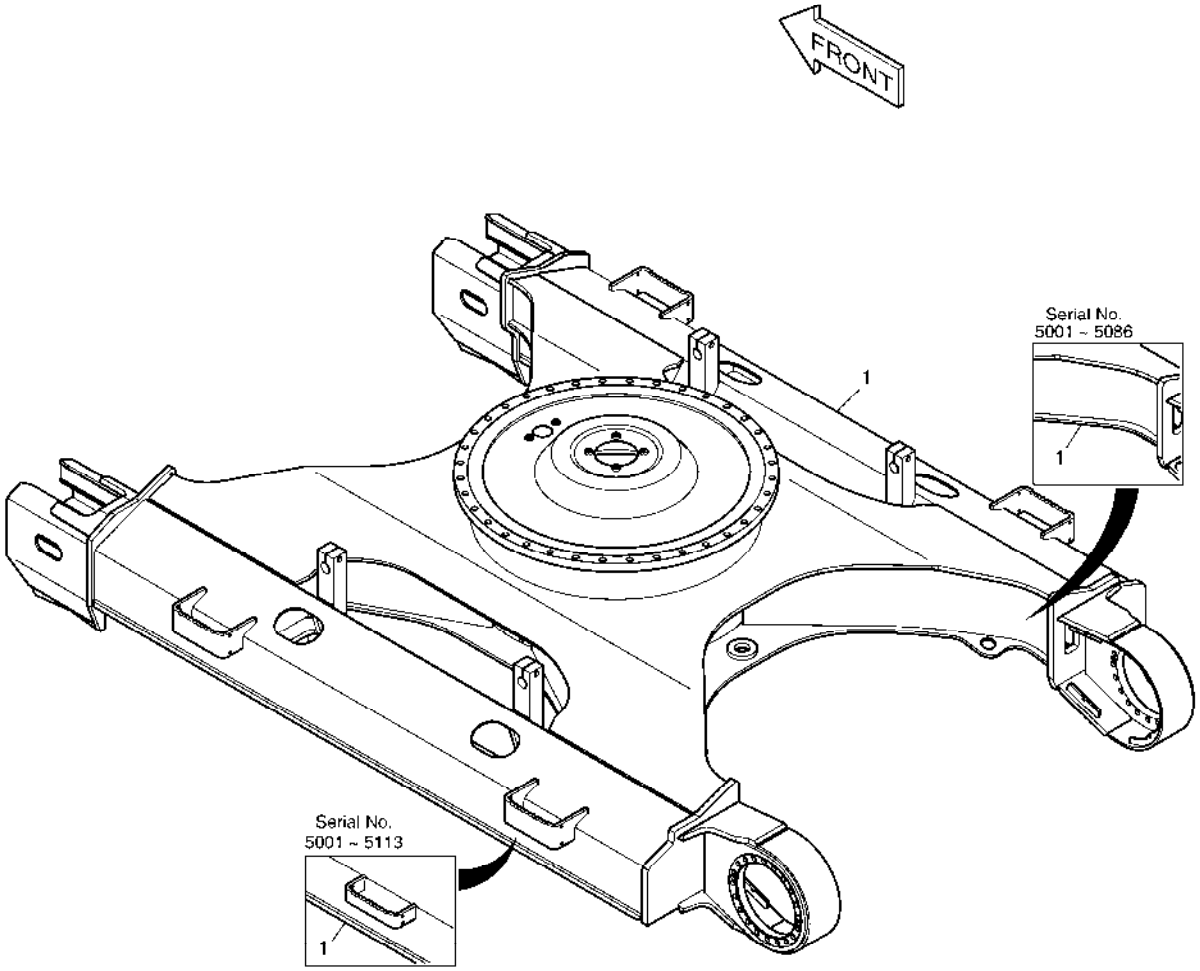

DATE	AUG. 28, 2009
3rd EDITION	

Fig. 6330 TRACK FRAME - NARROW TRAIN DE ROULEMENT

Serial No. ;

Key No.	Part No.	Description	Description	Q'ty	S.C	Serial No.	ICA	Replaceable part	
								Part No.	Q'ty
6330 --	K1010174L	TRACK FRAME	TRAIN DE ROULEMENT	-	D				
1	K1010184B	FRAME;TRACK(NARROW)	TRAIN DE ROULEMENT	1		5001-5086	I	K1010184C	1
	K1010184C	FRAME;TRACK(NARROW)	TRAIN DE ROULEMENT	1		5087-5109	I	K1010184E	1
	K1010184E	FRAME;TRACK(NARROW)	TRAIN DE ROULEMENT	1		5110-5113	I	K1010184G	1
	K1010184G	FRAME;TRACK(NARROW)	TRAIN DE ROULEMENT	1		5114-			

DATE	AUG. 28, 2009
3rd EDITION	

Fig. 6340 TRAVEL PIPING - NARROW TRACK
CONDUITES DE TRANSLATION

Serial No. ;

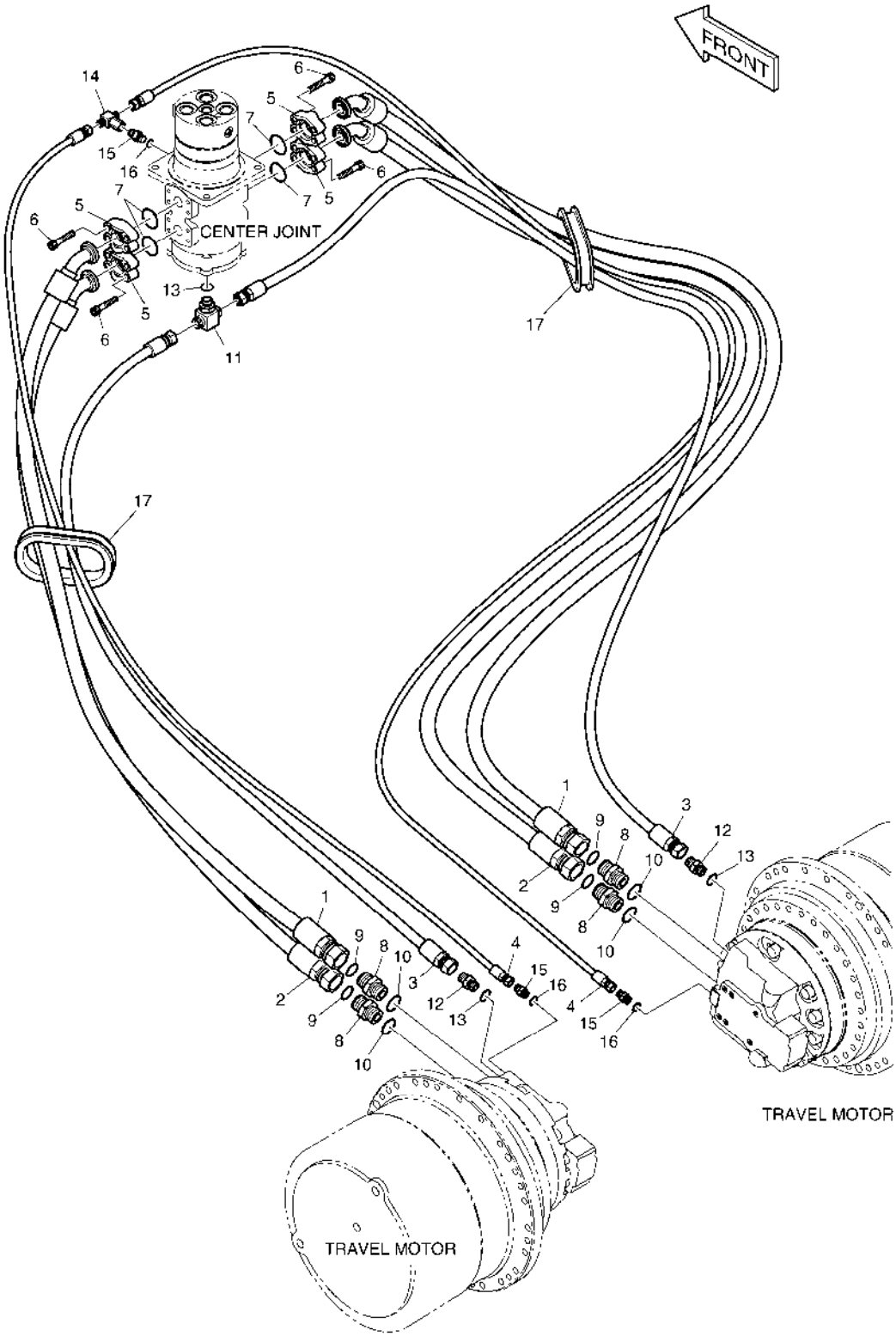

DATE	AUG. 28, 2009
3rd EDITION	

Fig. 6340 TRAVEL PIPING - NARROW TRACK CONDUITES DE TRANSLATION

Serial No. ;

Key No.	Part No.	Description	Description	Q'ty	S.C	Serial No.	ICA	Replaceable part	
								Part No.	Q'ty
6340 --	K1010176	UNDER CARRIAGE PIPING	SOUS LA TUYAUTERIE DE	-	D				
1	DS2017046	HOSE	TUYAU FLEXIBLE	2					
2	DS2017047	HOSE	TUYAU FLEXIBLE	2					
3	DS2053393	HOSE	TUYAU FLEXIBLE	2					
4	DS2094007	HOSE	TUYAU FLEXIBLE	2					
5	2181-9081	FLANGE;SPLIT	BRIDE	8					
6	S2215466	BOLT;SOCKET	BOULON A 6 PANS CREUX	16					
7	2180-1026D19	O-RING	JOINT TORIQUE	4					
8	DS2232003	ADAPTER	ADAPTEUR	4					
9	S8030121	O-RING	JOINT TORIQUE	4					
10	S8000291	O-RING	JOINT TORIQUE	4					
11	2181-2281D10	TEE	TE	1					
12	2181-1126D6	ADAPTER	ADAPTEUR	2					
13	S8000181	O-RING	JOINT TORIQUE	3					
14	2181-4125	TEE	TE	1					
15	2181-1126D14	ADAPTER	ADAPTEUR	3					
16	S8000111	O-RING	JOINT TORIQUE	3					
17	2160-1172	BUSHING;RUBBER	MANCHON CAOUTCHOUC	2					

DATE	AUG. 28, 2009
3rd EDITION	

Fig. 6350 TRACK SHOE ASS'Y - 700G MAILLON DE CHAINE

Serial No. ; 5001 ~ 5108

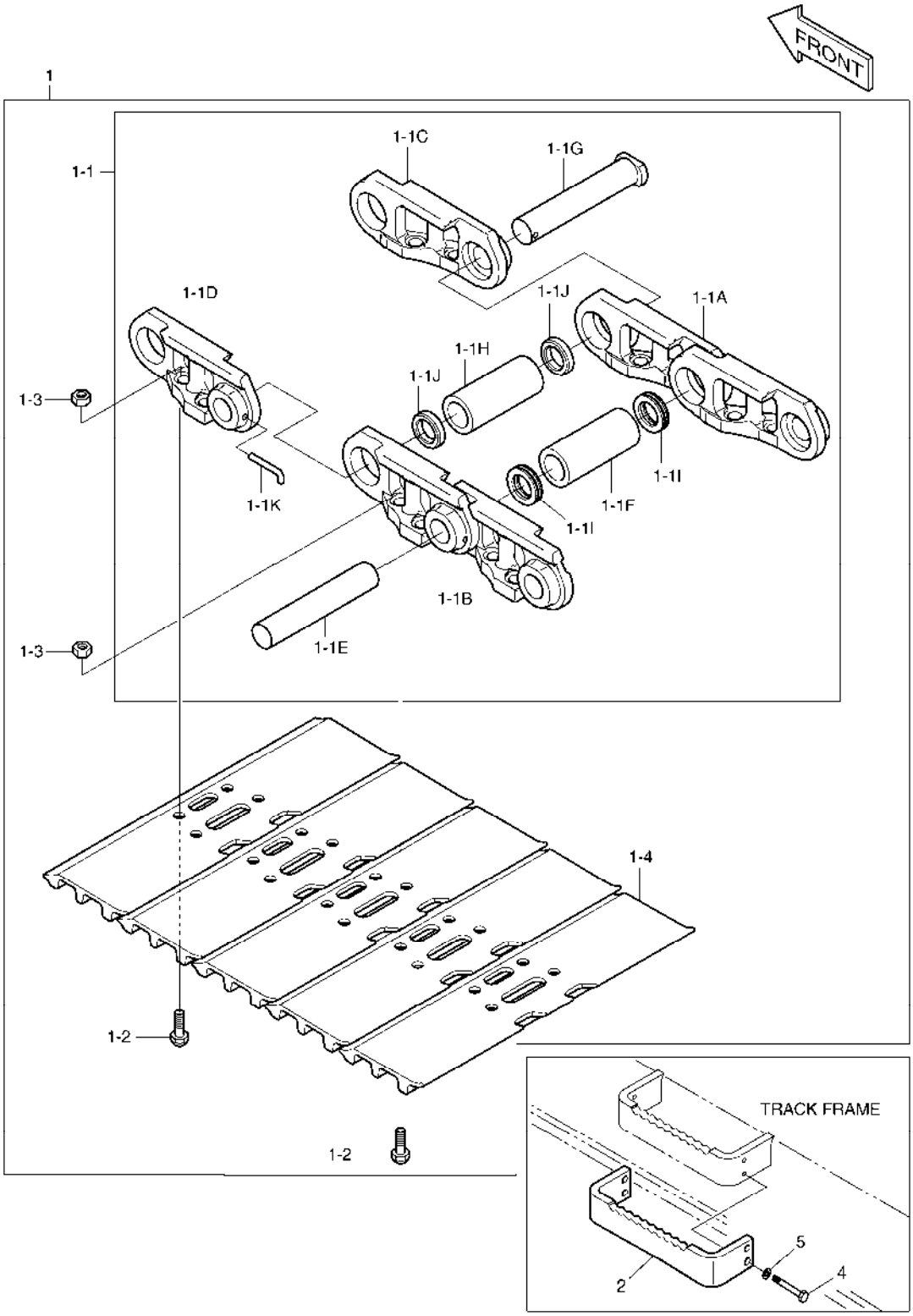

DATE	AUG. 28, 2009
3rd EDITION	

Fig. 6350 TRACK SHOE ASS'Y - 700G MAILLON DE CHAINE

Serial No. ; 5001 ~ 5108

Key No.	Part No.	Description	Description	Q'ty	S.C	Serial No.	ICA	Replaceable part	
								Part No.	Q'ty
6350 --	K1010178	TRACK SHOE ASS'Y	MAILLON DE CHAINE	-	D	5001-5108			
1	K1011515	TRACK SHOE ASS'Y-700G	MAILLON DE CHAINE	2					
1-1	K1011519	. TRACK LINK ASS'Y	. ENSEMBLE MAILLON DE C	1					
1-1A	2272-6104R	.. LINK;TRACK(RH)	.. PIECE DE JONCTION	50					
1-1B	2272-6104L	.. LINK;TRACK(LH)	.. PIECE DE JONCTION	50					
1-1C	2272-6105R	.. LINK;MASTER(RH)	.. PIECE DE JONCTION	1					
1-1D	2272-6105L	.. LINK;MASTER(LH)	.. PIECE DE JONCTION	1					
1-1E	2123-6060	.. PIN	.. GOUPILLE	50					
1-1F	110-00226	.. BUSHING	.. DOUILLE	50					
1-1G	2123-6061	.. PIN;MASTER	.. BROCHE	1					
1-1H	2110-6052	.. BUSHING;MASTER	.. MANCHON	1					
1-1I	180-00441	.. SEAL;DUST	.. JOINT	100					
1-1J	2114-6035	.. SPACER	.. ENTERTOISE	2					
1-1K	2123-6062	.. PIN;SMALL	.. GOUPILLE	1					
1-2	2120-6017	. BOLT	. BOULON A 6 PANS	204					
1-3	2121-6017	. NUT	. ECROU	204					
1-4	2273-6040D2	. SHOE 700G	. SABOT	51					
2	K1014573D1	STEP	MARCHER	4					
4	S0558266	BOLT	BOULON	16					
5	S5102603	WASHER	RONDELLE ELASTIQUE	16					

DATE	AUG. 28, 2009
3rd EDITION	

Fig. 6351 TRACK SHOE ASS'Y - 700G MAILLON DE CHAINE

Serial No. ; 5109 ~

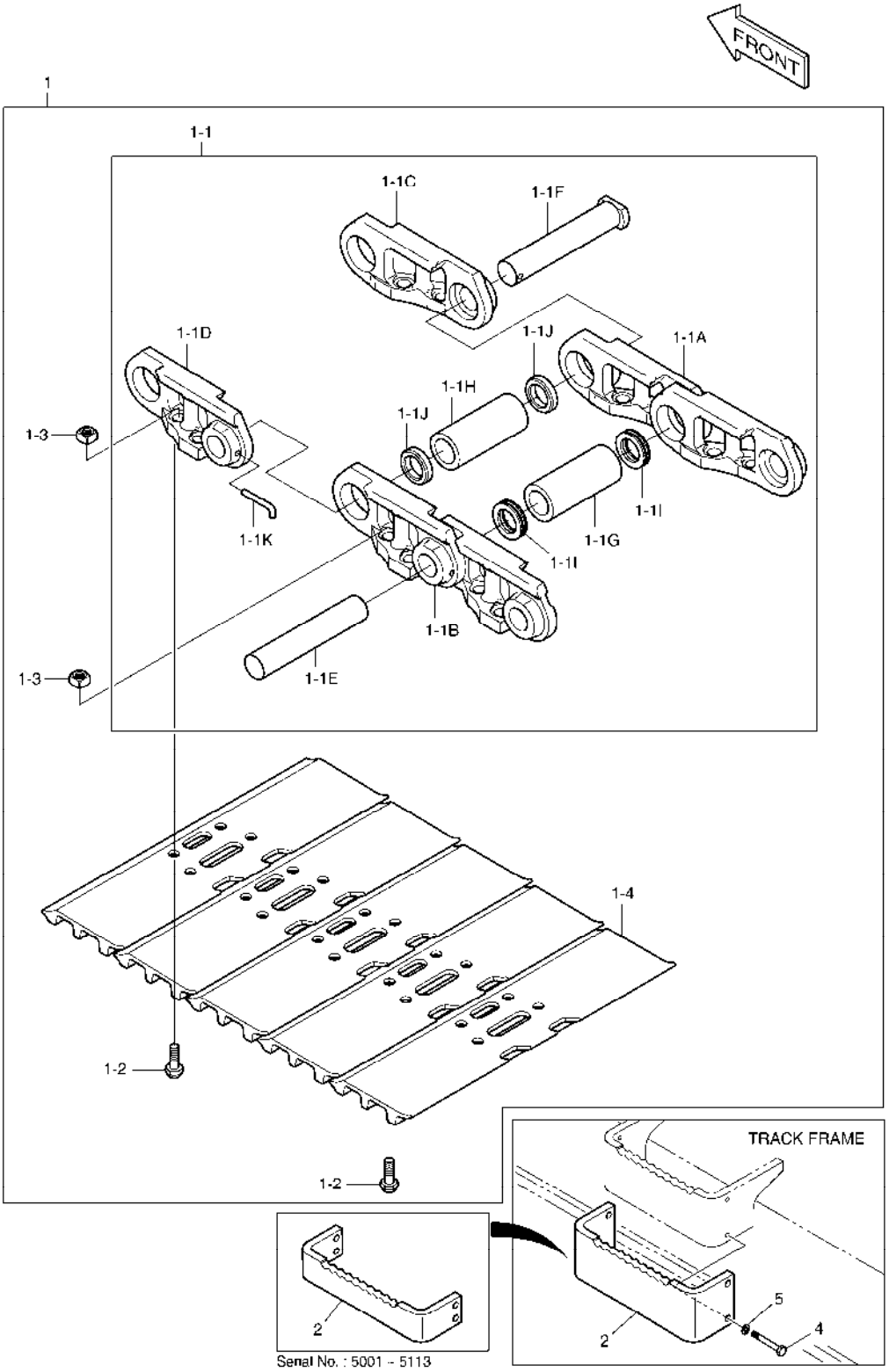

DATE	AUG. 28, 2009
3rd EDITION	

Fig. 6351 TRACK SHOE ASS'Y - 700G MAILLON DE CHAINE

Serial No. ; 5109 ~

Key No.	Part No.	Description	Description	Q'ty	S.C	Serial No.	ICA	Replaceable part	
								Part No.	Q'ty
6351 --	K1046448A	TRACK SHOE ASS'Y	MAILLON DE CHAINE	-	D	5109-			
1	K1046449	TRACK SHOE ASS'Y	MAILLON DE CHAINE	2					
1-1	K1038366	. TRACK LINK ASS`Y	. ENSEMBLE MAILLON DE C	1					
1-1A	K1038367	.. LINK;TRACK(RH)	.. PIECE DE JONCTION	50					
1-1B	K1038368	.. LINK;TRACK(LH)	.. PIECE DE JONCTION	50					
1-1C	K1038429	.. LINK;MASTER(RH)	.. PIECE DE JONCTION	1					
1-1D	K1038430	.. LINK;MASTER(LH)	.. PIECE DE JONCTION	1					
1-1E	K1038369	.. PIN	.. BROCHE	50					
1-1F	K1038370	.. PIN;MASTER	.. BROCHE PRINCIPALE	1					
1-1G	K1038371	.. BUSHING	.. DOUILLE	50					
1-1H	K1038372	.. BUSHING;MASTER	.. DOUILLE	1					
1-1I	K1038373	.. SEAL;DUST	.. JOINT	100					
1-1J	K1038374	.. SPACER	.. ENTERTOISE	2					
1-1K	K1038376	.. PIN;SMALL	.. GOUJON	1					
1-2	K1038377	. BOLT	. BOULON A 6 PANS	204					
1-3	K1038378	. NUT	. ECROU	204					
1-4	K1045478	. SHOE 700mm	. SABOT	51					
2	K1014573D1	STEP	MARCHER	4		5001-5113			
	K1050307	STEP	MARCHER	4		5114-			
4	S0558266	BOLT	BOULON	16					
5	S5102603	WASHER	RONDELLE ELASTIQUE	16					

DATE	AUG. 28, 2009
3rd EDITION	

Fig. 6360 TRACK SHOE ASS'Y - 800G MAILLON DE CHAINE

Serial No. ; 5001 ~ 5108

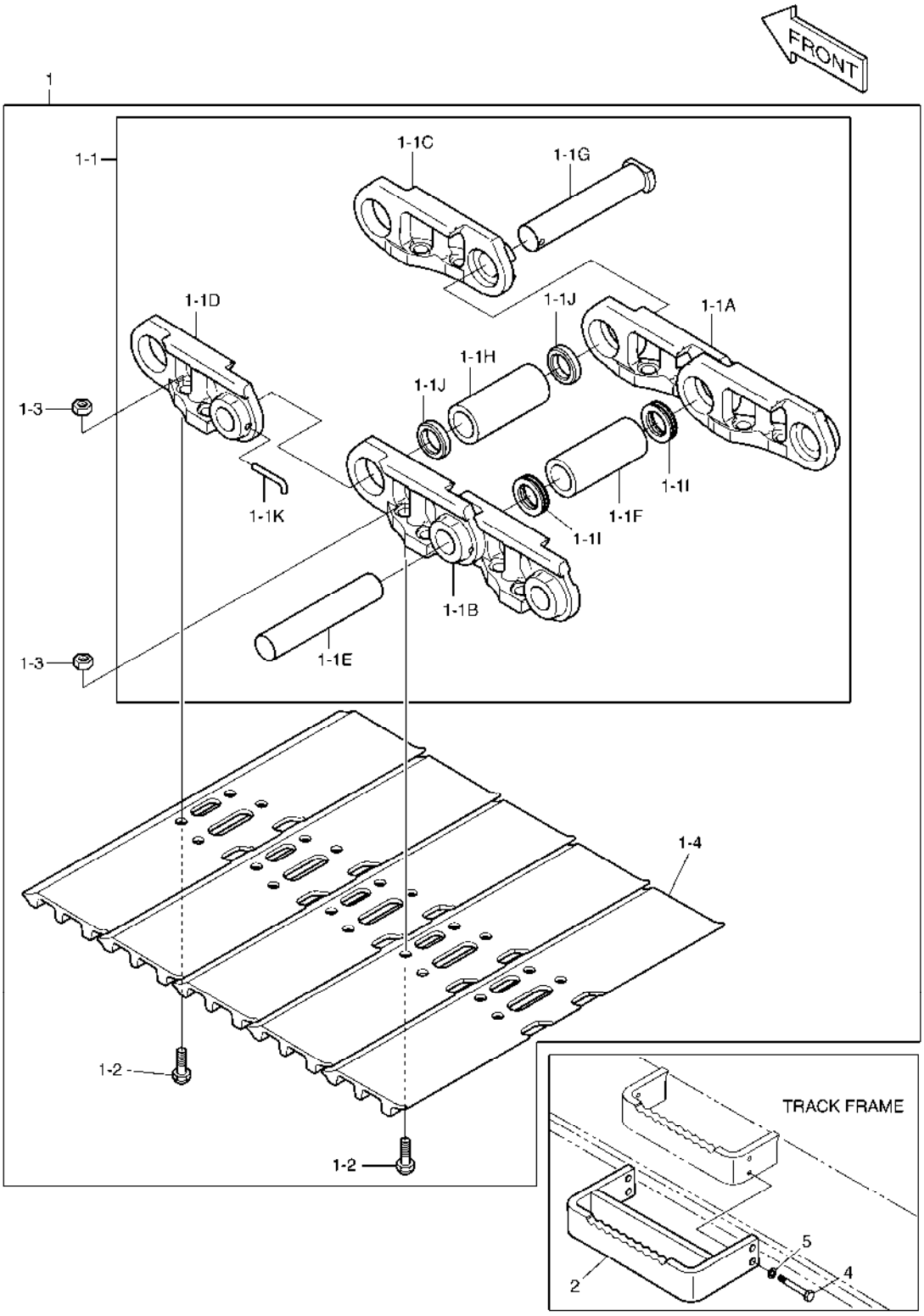

DATE	AUG. 28, 2009
3rd EDITION	

Fig. 6360 TRACK SHOE ASS'Y - 800G MAILLON DE CHAINE

Serial No. ; 5001 ~ 5108

Key No.	Part No.	Description	Description	Q'ty	S.C	Serial No.	ICA	Replaceable part	
								Part No.	Q'ty
6360 --	K1010179	TRACK SHOE ASS'Y	MAILLON DE CHAINE	-	D	5001-5108			
1	K1011516	TRACK SHOE ASS'Y-800G	MAILLON DE CHAINE	2					
1-1	K1011519	. TRACK LINK ASS'Y	. ENSEMBLE MAILLON DE C	1					
1-1A	2272-6104R	.. LINK;TRACK(RH)	.. PIECE DE JONCTION	50					
1-1B	2272-6104L	.. LINK;TRACK(LH)	.. PIECE DE JONCTION	50					
1-1C	2272-6105R	.. LINK;MASTER(RH)	.. PIECE DE JONCTION	1					
1-1D	2272-6105L	.. LINK;MASTER(LH)	.. PIECE DE JONCTION	1					
1-1E	2123-6060	.. PIN	.. GOUPILLE	50					
1-1F	110-00226	.. BUSHING	.. DOUILLE	50					
1-1G	2123-6061	.. PIN;MASTER	.. BROCHE	1					
1-1H	2110-6052	.. BUSHING;MASTER	.. MANCHON	1					
1-1I	180-00441	.. SEAL;DUST	.. JOINT	100					
1-1J	2114-6035	.. SPACER	.. ENTERTOISE	2					
1-1K	2123-6062	.. PIN;SMALL	.. GOUPILLE	1					
1-2	2120-6017	. BOLT	. BOULON A 6 PANS	204					
1-3	2121-6017	. NUT	. ECROU	204					
1-4	2273-6040D3	. SHOE 800G	. SABOT	51					
2	K1014573D2	STEP	MARCHER	4					
4	S0558266	BOLT	BOULON	16					
5	S5102603	WASHER	RONDELLE ELASTIQUE	16					

DATE	AUG. 28, 2009
3rd EDITION	

Fig. 6361 TRACK SHOE ASS'Y - 800G MAILLON DE CHAINE

Serial No. ; 5109 ~

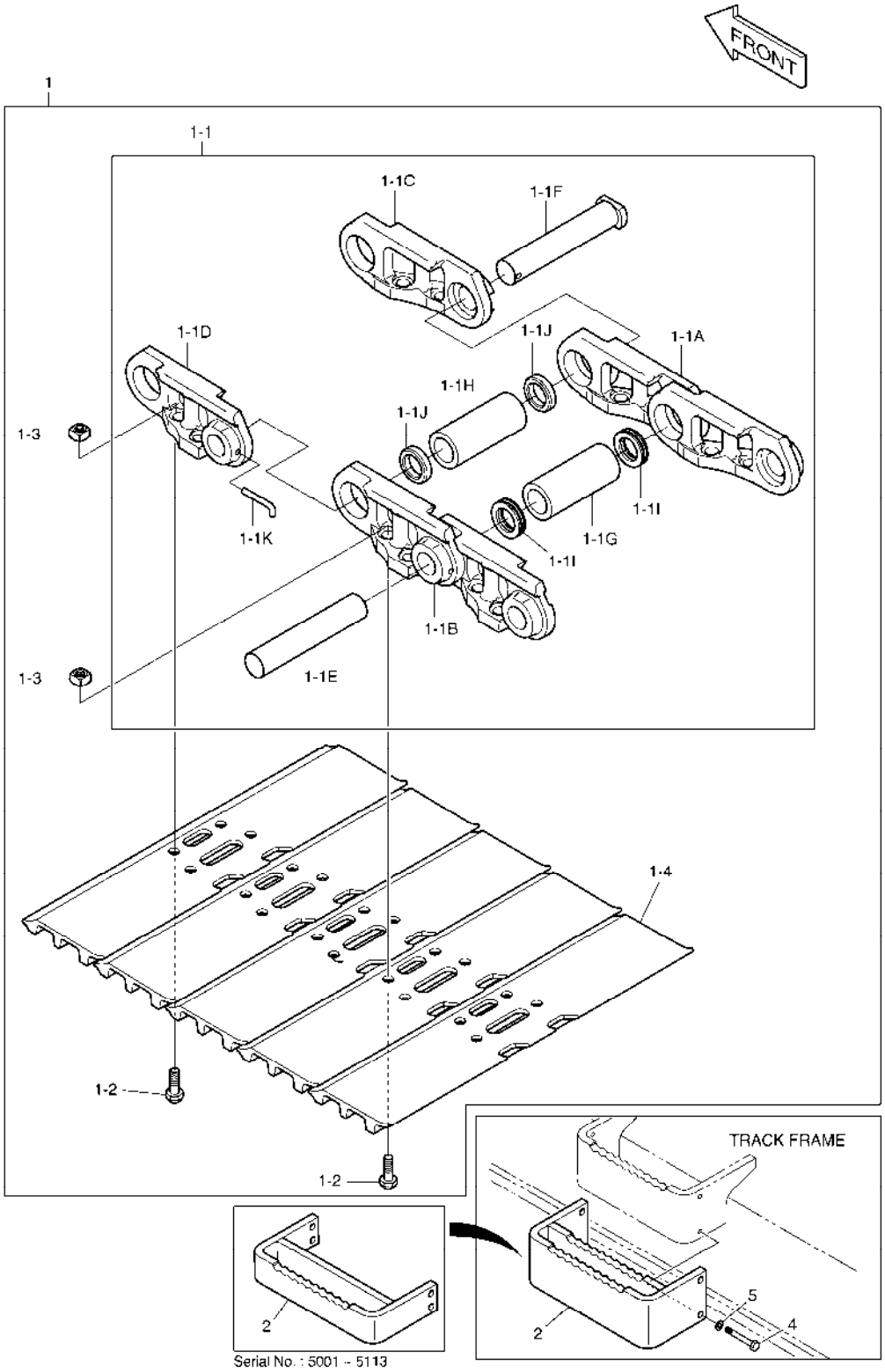

DATE	AUG. 28, 2009
3rd EDITION	

Fig. 6361 TRACK SHOE ASS'Y - 800G MAILLON DE CHAINE

Serial No. ; 5109 ~

Key No.	Part No.	Description	Description	Q'ty	S.C	Serial No.	ICA	Replaceable part	
								Part No.	Q'ty
6361 --	K1046450A	TRACK SHOE ASS`Y	MAILLON DE CHAINE	-	D	5109-			
1	K1046451	TRACK SHOE ASS`Y	MAILLON DE CHAINE	2					
1-1	K1038366	. TRACK LINK ASS`Y	. ENSEMBLE MAILLON DE C	1					
1-1A	K1038367	.. LINK;TRACK(RH)	.. PIECE DE JONCTION	50					
1-1B	K1038368	.. LINK;TRACK(LH)	.. PIECE DE JONCTION	50					
1-1C	K1038429	.. LINK;MASTER(RH)	.. PIECE DE JONCTION	1					
1-1D	K1038430	.. LINK;MASTER(LH)	.. PIECE DE JONCTION	1					
1-1E	K1038369	.. PIN	.. BROCHE	50					
1-1F	K1038370	.. PIN;MASTER	.. BROCHE PRINCIPALE	1					
1-1G	K1038371	.. BUSHING	.. DOUILLE	50					
1-1H	K1038372	.. BUSHING;MASTER	.. DOUILLE	1					
1-1I	K1038373	.. SEAL;DUST	.. JOINT	100					
1-1J	K1038374	.. SPACER	.. ENTERTOISE	2					
1-1K	K1038376	.. PIN;SMALL	.. GOUJON	1					
1-2	K1038377	. BOLT	. BOULON A 6 PANS	204					
1-3	K1038378	. NUT	. ECROU	204					
1-4	K1045479	. SHOE 800mm	. SABOT	51					
2	K1014573D2	STEP	MARCHER	4		5001-5113			
	K1050308	STEP	MARCHER	4		5114-			
4	S0558266	BOLT	BOULON	16					
5	S5102603	WASHER	RONDELLE ELASTIQUE	16					

DATE	AUG. 28, 2009
3rd EDITION	

Fig. 6370 TRACK SHOE ASS'Y - 900G MAILLON DE CHAINE

Serial No. ; 5001 ~ 5108

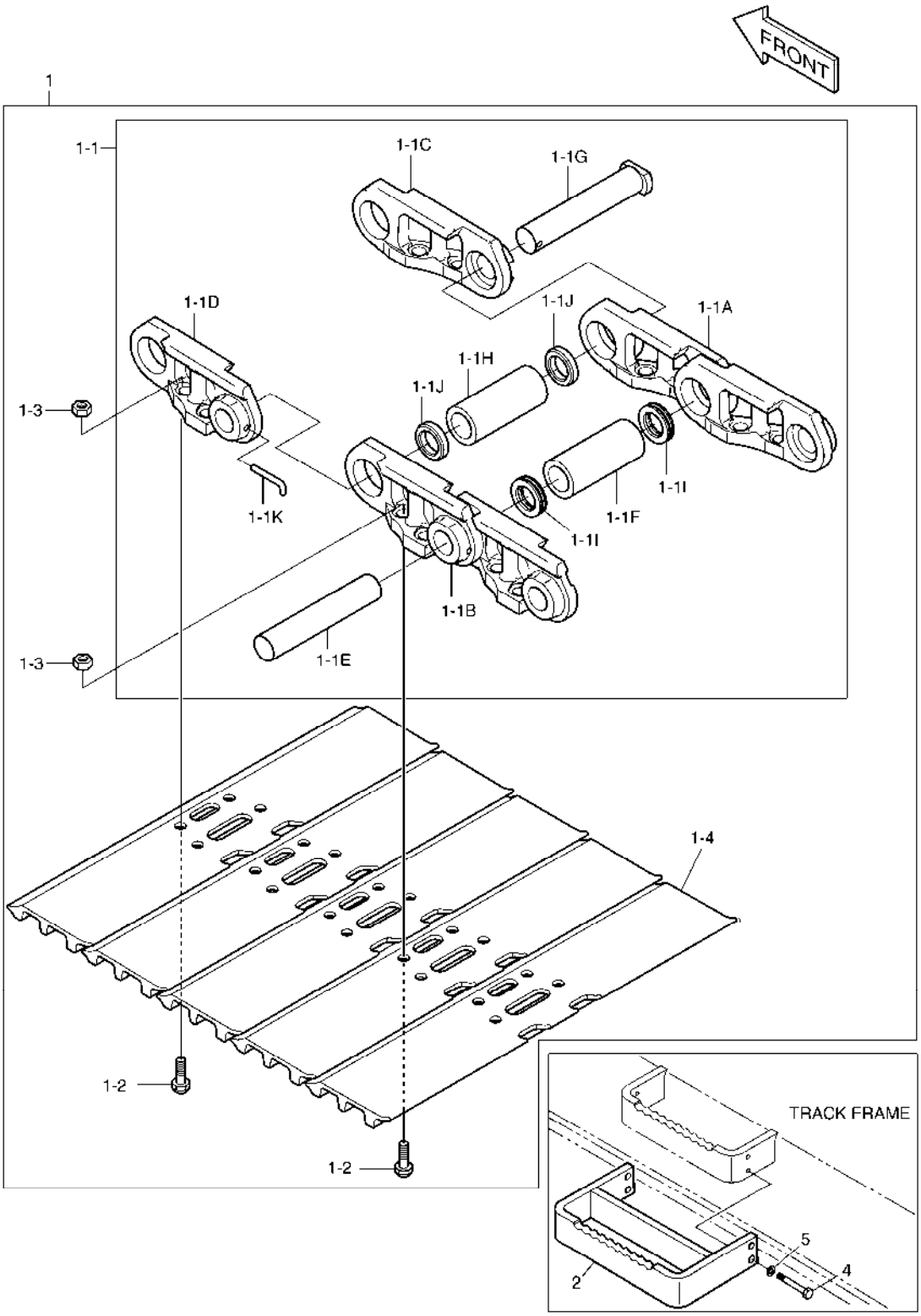

DATE	AUG. 28, 2009
3rd EDITION	

Fig. 6370 TRACK SHOE ASS'Y - 900G MAILLON DE CHAINE

Serial No. ; 5001 ~ 5108

Key No.	Part No.	Description	Description	Q'ty	S.C	Serial No.	ICA	Replaceable part	
								Part No.	Q'ty
6370 --	K1010180	TRACK SHOE ASS'Y	MAILLON DE CHAINE	-	D	5001-5108			
1	K1011518	TRACK SHOE ASS'Y-900G	MAILLON DE CHAINE	2					
1-1	K1011519	. TRACK LINK ASS'Y	. ENSEMBLE MAILLON DE C	1					
1-1A	2272-6104R	.. LINK;TRACK(RH)	.. PIECE DE JONCTION	50					
1-1B	2272-6104L	.. LINK;TRACK(LH)	.. PIECE DE JONCTION	50					
1-1C	2272-6105R	.. LINK;MASTER(RH)	.. PIECE DE JONCTION	1					
1-1D	2272-6105L	.. LINK;MASTER(LH)	.. PIECE DE JONCTION	1					
1-1E	2123-6060	.. PIN	.. GOUPILLE	50					
1-1F	110-00226	.. BUSHING	.. DOUILLE	50					
1-1G	2123-6061	.. PIN;MASTER	.. BROCHE	1					
1-1H	2110-6052	.. BUSHING;MASTER	.. MANCHON	1					
1-1I	180-00441	.. SEAL;DUST	.. JOINT	100					
1-1J	2114-6035	.. SPACER	.. ENTERTOISE	2					
1-1K	2123-6062	.. PIN;SMALL	.. GOUPILLE	1					
1-2	2120-6017	. BOLT	. BOULON A 6 PANS	204					
1-3	2121-6017	. NUT	. ECROU	204					
1-4	2273-6040D4	. SHOE 900G	. SABOT	51					
2	K1014573D3	STEP	MARCHER	4					
4	S0558266	BOLT	BOULON	16					
5	S5102603	WASHER	RONDELLE ELASTIQUE	16					

DATE	AUG. 28, 2009
3rd EDITION	

Fig. 6371 TRACK SHOE ASS'Y - 900G MAILLON DE CHAINE

Serial No. ; 5109 ~

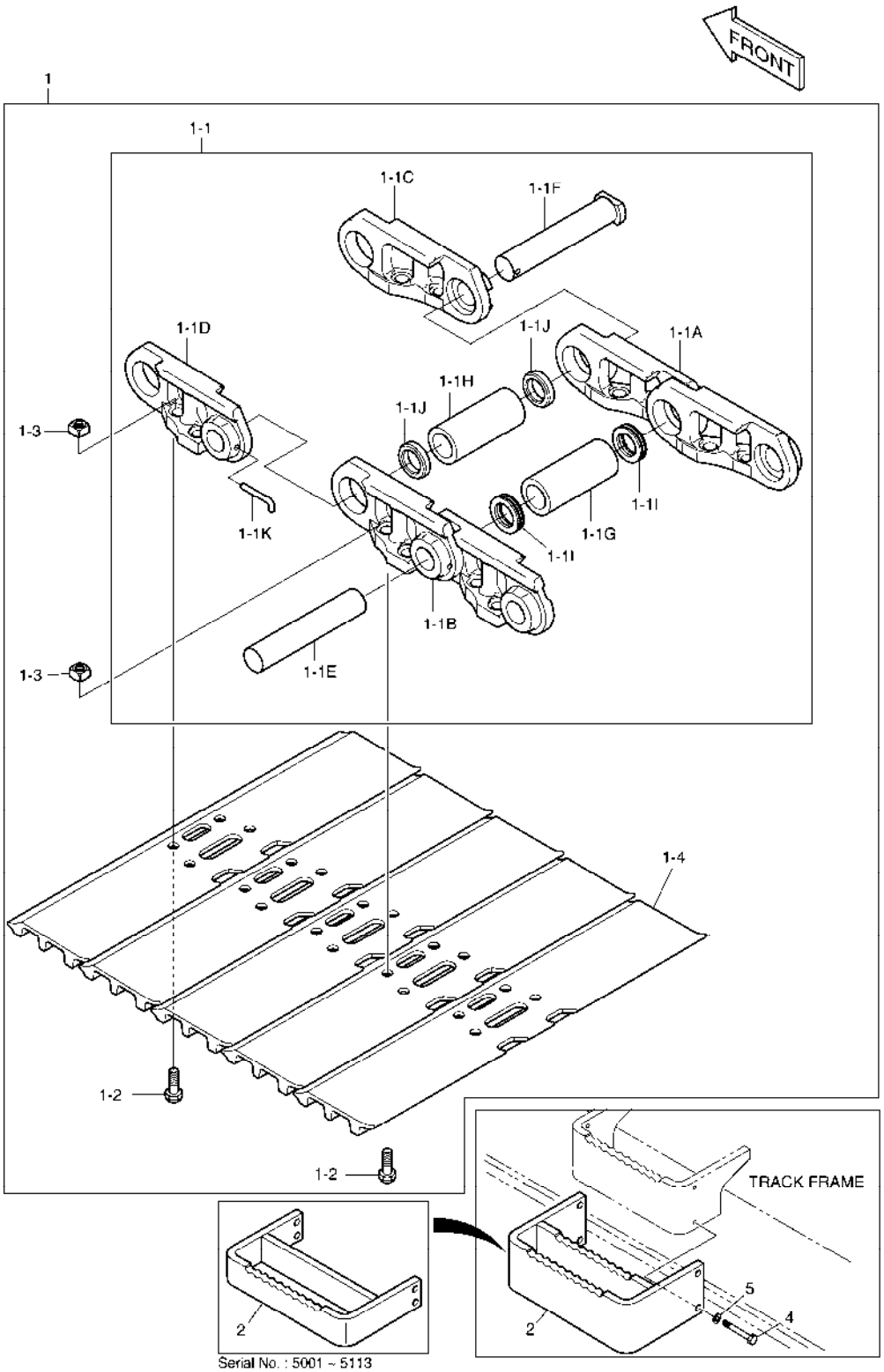

DATE	AUG. 28, 2009
3rd EDITION	

Fig. 6371 TRACK SHOE ASS'Y - 900G MAILLON DE CHAINE

Serial No. ; 5109 ~

Key No.	Part No.	Description	Description	Q'ty	S.C	Serial No.	ICA	Replaceable part	
								Part No.	Q'ty
6371 --	K1046452A	TRACK SHOE ASS'Y	MAILLON DE CHAINE	-	D	5109-			
1	K1046453	TRACK SHOE ASS'Y	MAILLON DE CHAINE	2					
1-1	K1038366	. TRACK LINK ASS`Y	. ENSEMBLE MAILLON DE C	1					
1-1A	K1038367	.. LINK;TRACK(RH)	.. PIECE DE JONCTION	50					
1-1B	K1038368	.. LINK;TRACK(LH)	.. PIECE DE JONCTION	50					
1-1C	K1038429	.. LINK;MASTER(RH)	.. PIECE DE JONCTION	1					
1-1D	K1038430	.. LINK;MASTER(LH)	.. PIECE DE JONCTION	1					
1-1E	K1038369	.. PIN	.. BROCHE	50					
1-1F	K1038370	.. PIN;MASTER	.. BROCHE PRINCIPALE	1					
1-1G	K1038371	.. BUSHING	.. DOUILLE	50					
1-1H	K1038372	.. BUSHING;MASTER	.. DOUILLE	1					
1-1I	K1038373	.. SEAL;DUST	.. JOINT	100					
1-1J	K1038374	.. SPACER	.. ENTERTOISE	2					
1-1K	K1038376	.. PIN;SMALL	.. GOUJON	1					
1-2	K1038377	. BOLT	. BOULON A 6 PANS	204					
1-3	K1038378	. NUT	. ECROU	204					
1-4	K1045480	. SHOE 900mm	. SABOT	51					
2	K1014573D3	STEP	MARCHER	4		5001-5113			
	K1050309	STEP	MARCHER	4		5114-			
4	S0558266	BOLT	BOULON	16					
5	S5102603	WASHER	RONDELLE ELASTIQUE	16					

DATE	AUG. 28, 2009
3rd EDITION	

Fig. 6380 SWING ALARM AVERTISSEUR

Serial No. ;

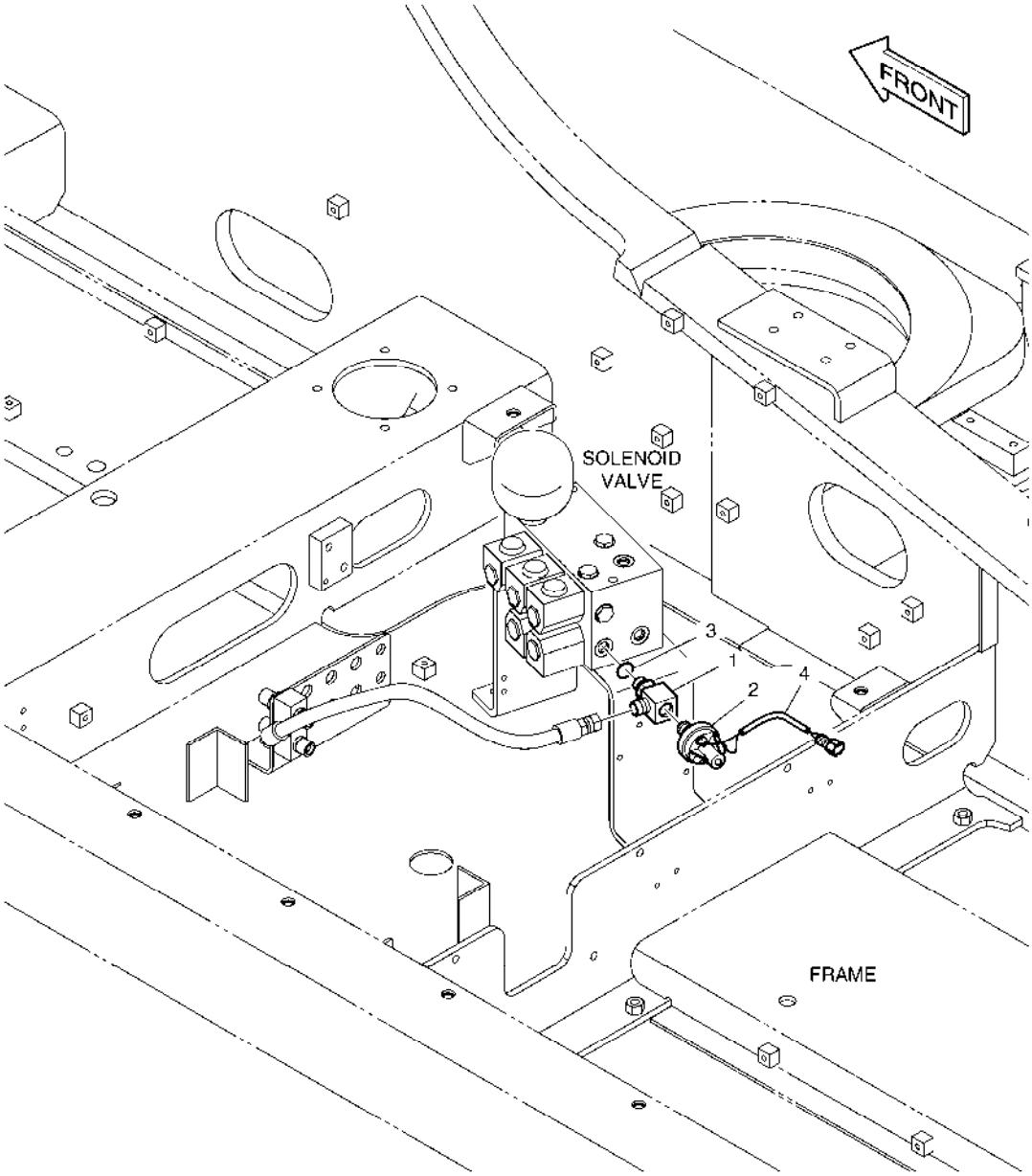

DATE	AUG. 28, 2009
3rd EDITION	

Fig. 6380 SWING ALARM AVERTISSEUR

Serial No. ;

Key No.	Part No.	Description	Description	Q'ty	S.C	Serial No.	ICA	Replaceable part	
								Part No.	Q'ty
6380 --	K1009823	ASSEMBLY;SWING ALARM	ALARME D'OSCILLATION D	-	D				
1	K1002158	TEE	TE	1					
2	549-00010	SWITCH;PRESSURE	INTERRUPTEUR	1					
3	S8000111	O-RING	JOINT TORIQUE	1					
4	530-00067	HARNESS;STOP LAMP S/W	FAISCEAU	1					

DATE	AUG. 28, 2009
3rd EDITION	

Fig. 6390 PATTERN CHANGE PIPING(1)
TUYAUTERIE DE CHANGEMENT DE MODELE

Serial No. ;

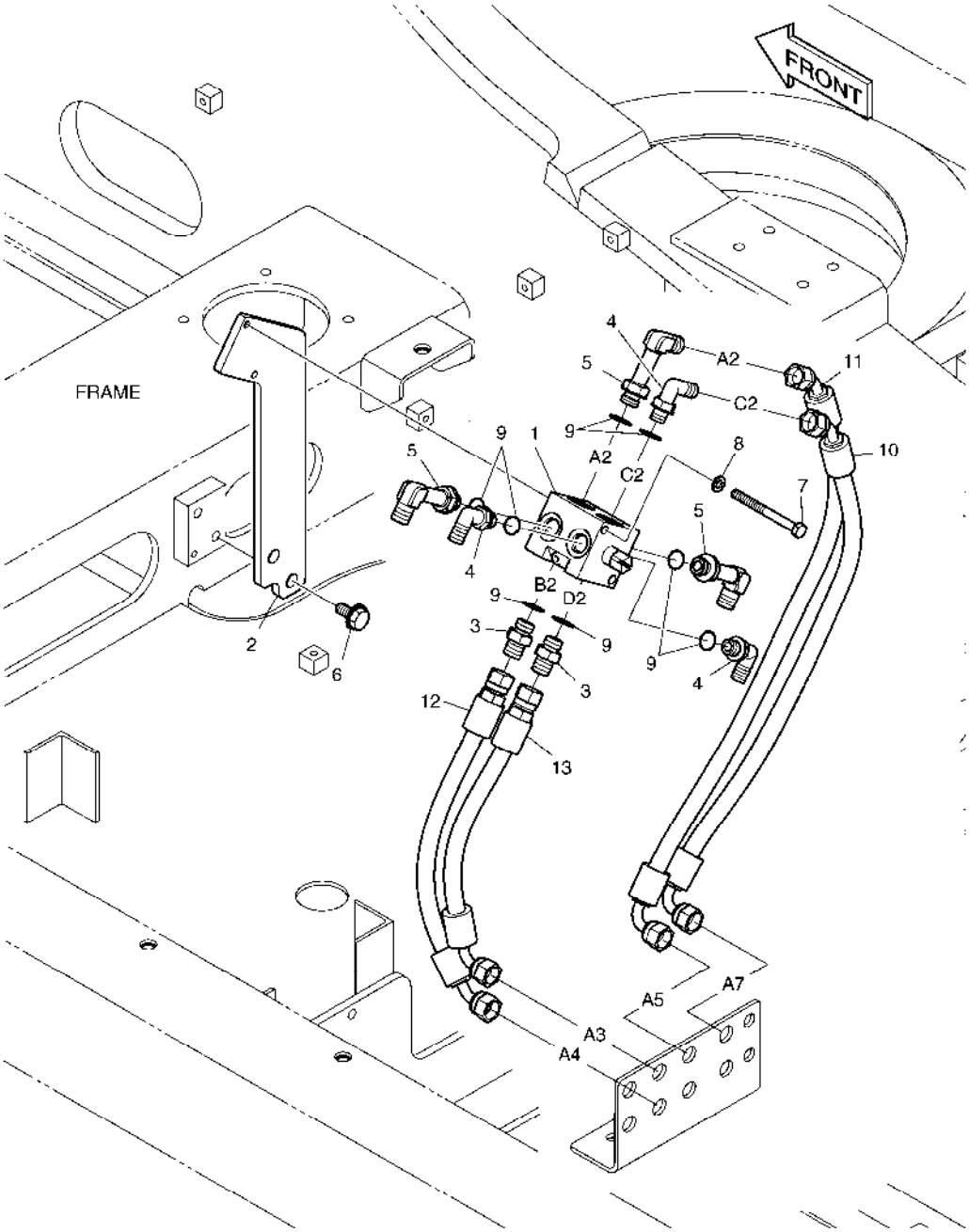

DATE	AUG. 28, 2009
3rd EDITION	

Fig. 6390 PATTERN CHANGE PIPING(1) TUYAUTERIE DE CHANGEMENT DE MODELE

Serial No. ;

Key No.	Part No.	Description	Description	Q'ty	S.C	Serial No.	ICA	Replaceable part	
								Part No.	Q'ty
6390 --	K1016886	PATTERN CHANGE PIPING	TUYAUTERIE DE CHANGEI	-	D				
1	K1014874	VALVE;SELECTOR	CLAPET SELECTEUR	1					
2	K1015780	BRACKET	SUPPORT	1					
3	2181-1126D7	ADAPTER	ADAPTEUR	2					
4	2181-1702D5	ELBOW	COUDE	3					
5	2181-1702D51	ELBOW	COUDE	3					
6	DS0025018	BOLT;SET	BOULON A 6 PANS	2		5001-5110			
	DS0025020	BOLT;SET	BOULON A 6 PANS	2		5111-			
7	S0557066	BOLT	BOULON A 6 PANS	2					
8	S5102503	WASHER	RONDELLE ELASTIQUE	2					
9	S8000141	O-RING	JOINT TORIQUE	8					
10	DS2090020	HOSE	TUYAU FLEXIBLE	1					
11	DS2090021	HOSE	TUYAU FLEXIBLE	1					
12	DS2092080	HOSE	TUYAU FLEXIBLE	1					
13	DS2095031	HOSE	TUYAU FLEXIBLE	1					

DATE	AUG. 28, 2009
3rd EDITION	

Fig. 6400 PATTERN CHANGE PIPING(2)
TUYAUTERIE DE CHANGEMENT DE MODELE

Serial No. ;

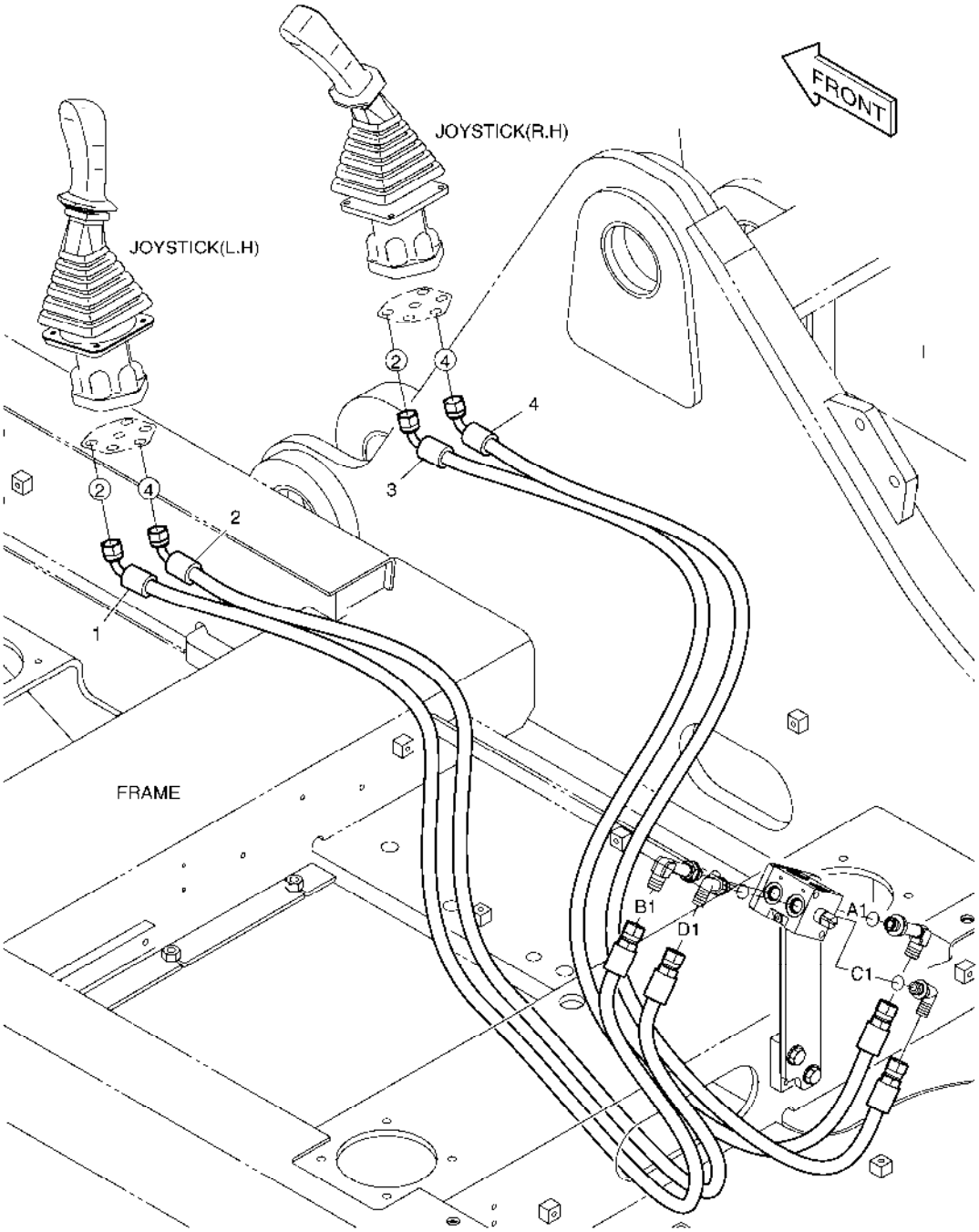

DATE	AUG. 28, 2009
3rd EDITION	

Fig. 6400 PATTERN CHANGE PIPING(2)
TUYAUTERIE DE CHANGEMENT DE MODELE

Serial No. ;

Key No.	Part No.	Description	Description	Q'ty	S.C	Serial No.	ICA	Replaceable part	
								Part No.	Q'ty
6400 --	K1016885	PATTERN CHANGE PIPING	TUYAUTERIE DE CHANGEI	-	D				
1	DS2095030	HOSE	TUYAU FLEXIBLE	1					
2	DS2095030	HOSE	TUYAU FLEXIBLE	1					
3	DS2095029	HOSE	TUYAU FLEXIBLE	1					
4	DS2095029	HOSE	TUYAU FLEXIBLE	1					

DATE	AUG. 28, 2009
3rd EDITION	

Fig. 6410 LOCK VALVE PIPING - BOOM
CONDUITES DE VERROU VANNE

Serial No. ;

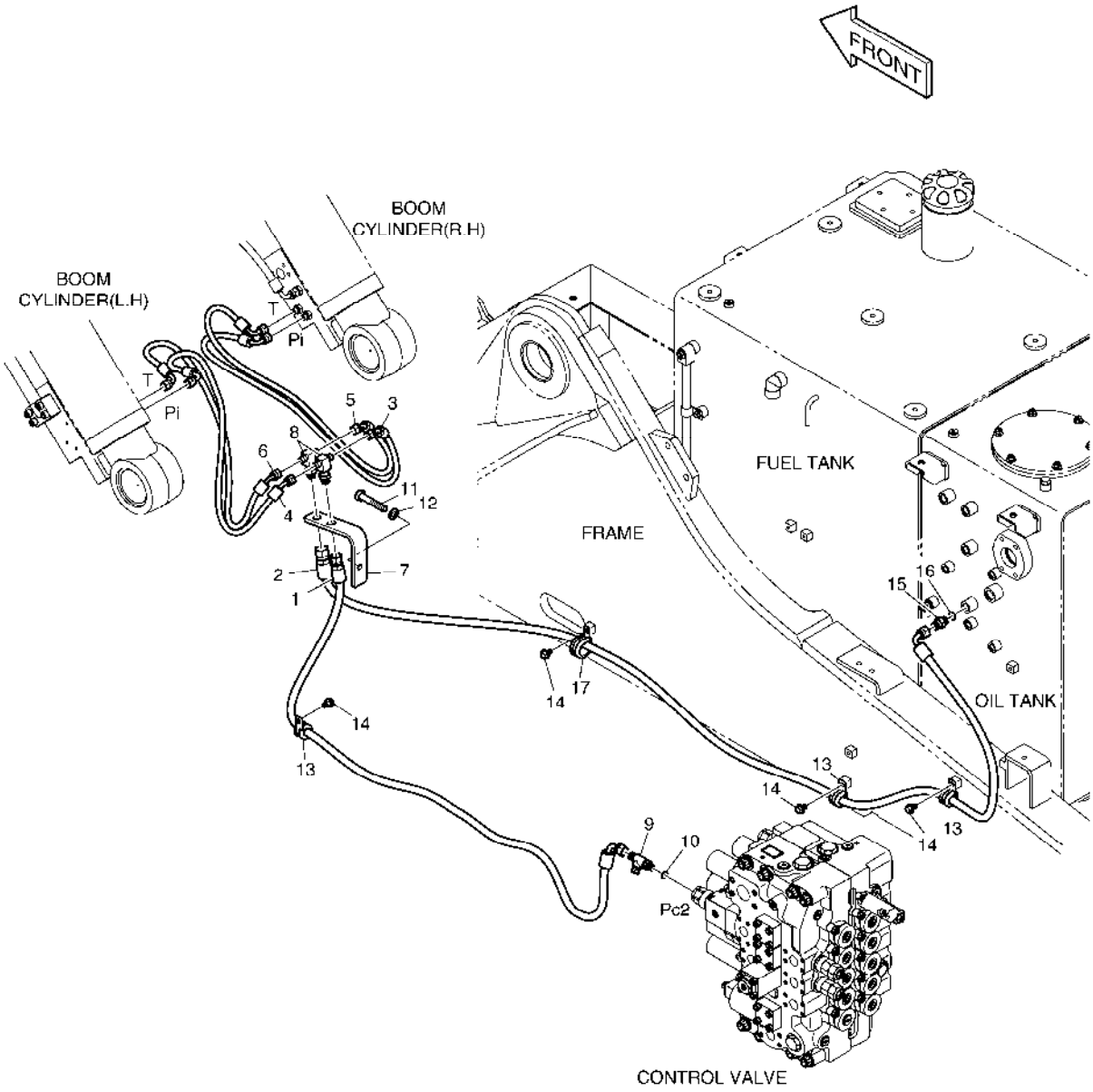

DATE	AUG. 28, 2009
3rd EDITION	

Fig. 6410 LOCK VALVE PIPING - BOOM
CONDUITES DE VERROU VANNE

Serial No. ;

Key No.	Part No.	Description	Description	Q'ty	S.C	Serial No.	ICA	Replaceable part	
								Part No.	Q'ty
6410 --	K1009815E	LOCK VALVE PIPING;BOOM	FERMEZ LA TUYAUTERIE A	-	D				
1	DS2093351	HOSE	TUYAU FLEXIBLE	1					
2	DS2093264	HOSE	TUYAU FLEXIBLE	1					
3	DS2090009	HOSE	TUYAU FLEXIBLE	1					
4	DS2090009	HOSE	TUYAU FLEXIBLE	1					
5	DS2090009	HOSE	TUYAU FLEXIBLE	1					
6	DS2090009	HOSE	TUYAU FLEXIBLE	1					
7	K1000140A	PLATE	PLAQUE	1					
8	181-00008	TEE	TE	2					
9	2181-2375D7	TEE	TE	1					
10	S8000111	O-RING	JOINT TORIQUE	1					
11	S0561066	BOLT	BOULON	1					
12	S5102703	WASHER;SPRING	RONDELLE ELASTIQUE	1					
13	124-00208D3	CLIP	ATTACHE	3					
14	K1001029	BOLT	BOULON A 6 PANS	4					
15	2181-1126D7	ADAPTER	ADAPTEUR	1					
16	S8000141	O-RING	JOINT TORIQUE	1					
17	124-00208D5	CLIP	ATTACHE	1					

DATE	AUG. 28, 2009
3rd EDITION	

Fig. 6420 BOOM PIPING - LOCK VALVE DONDUITER DE FLECHE

Serial No. ;

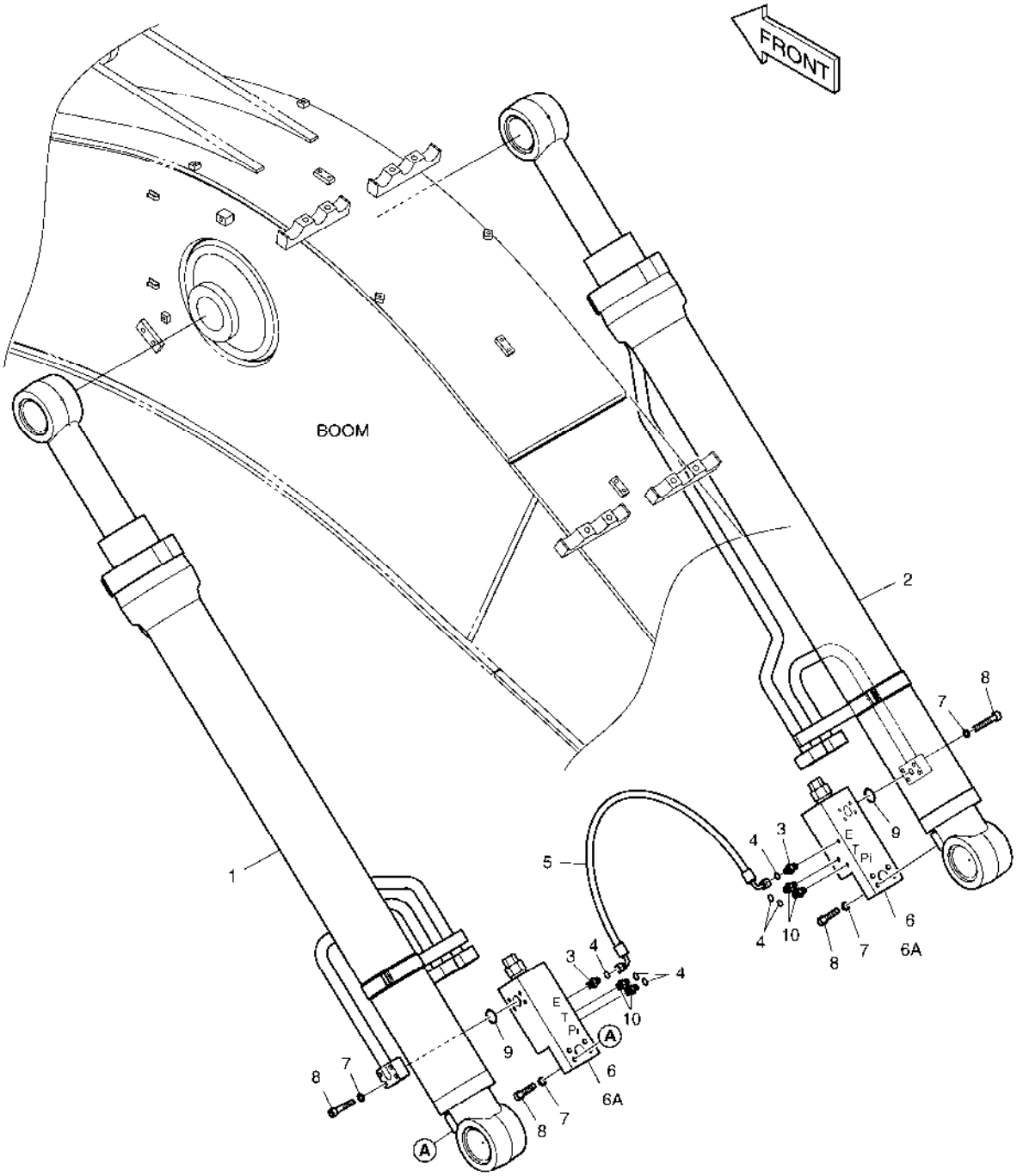

DATE	AUG. 28, 2009
3rd EDITION	

Fig. 6420 BOOM PIPING - LOCK VALVE DONDUITER DE FLECHE

Serial No. ;

Key No.	Part No.	Description	Description	Q'ty	S.C	Serial No.	ICA	Replaceable part	
								Part No.	Q'ty
6420 --	K1011083A	BOOM LOCK V/V PIPING	CONDUITES DE PILOTE	-	D				
1	K1011084	CYLINDER;BOOM (L.H)	CYLINDRE	1					
2	K1011085	CYLINDER;BOOM (R.H)	CYLINDRE	1					
3	2181-1126D14	ADAPTER	ADAPTEUR	2					
4	S8000111	O-RING	JOINT TORIQUE	6					
5	DS2059423	HOSE	TUYAU FLEXIBLE	1					
6	420-00226	VALVE;LOCK	VANNE	2					
6A	K9000998	. SEAL KIT	. KIT D'ETANCHEITE	1					
7	S5110603	WASHER;SPRING	RONDELLE ELASTIQUE	16					
8	S2212766	BOLT;SOCKET	BOULON A 6 PANS CREUX	16					
9	S8000281	O-RING	JOINT TORIQUE	2					
10	2181-1126D14	ADAPTER	ADAPTEUR	4					

DATE	AUG. 28, 2009
3rd EDITION	

Fig. 6430 PILOT PIPING - ARM LOCK V/V CONDUITES DE PILOTE

Serial No. ;

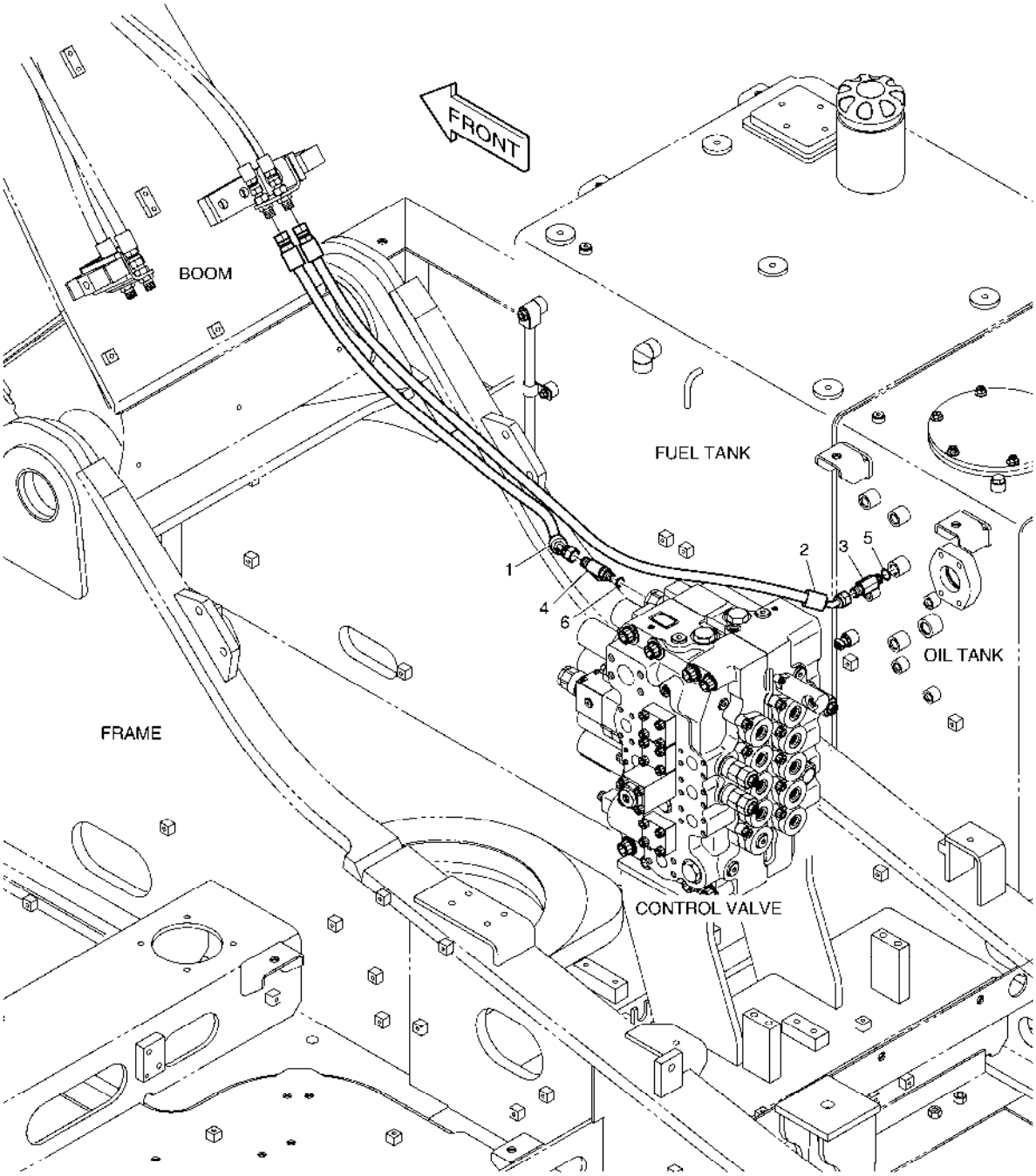

DATE	AUG. 28, 2009
3rd EDITION	

Fig. 6430 PILOT PIPING - ARM LOCK V/V CONDUITES DE PILOTE

Serial No. ;

Key No.	Part No.	Description	Description	Q'ty	S.C	Serial No.	ICA	Replaceable part	
								Part No.	Q'ty
6430 --	K1009816B	LOCK VALVE PIPING;ARM	FERMEZ LA TUYAUTERIE A	-	D				
1	DS2092099	HOSE	TUYAU FLEXIBLE	1					
2	DS2092085	HOSE	TUYAU FLEXIBLE	1					
3	2181-1126D27	ADAPTER	ADAPTEUR	1					
4	2181-2375D7	TEE	TE	1					
5	S8000141	O-RING	JOINT TORIQUE	1					
6	S8000111	O-RING	JOINT TORIQUE	1					

DATE	AUG. 28, 2009
3rd EDITION	

Fig. 6440 ARM PIPING - LOCK VALVE
CONDUITES DE BALANCIER

Serial No. ;

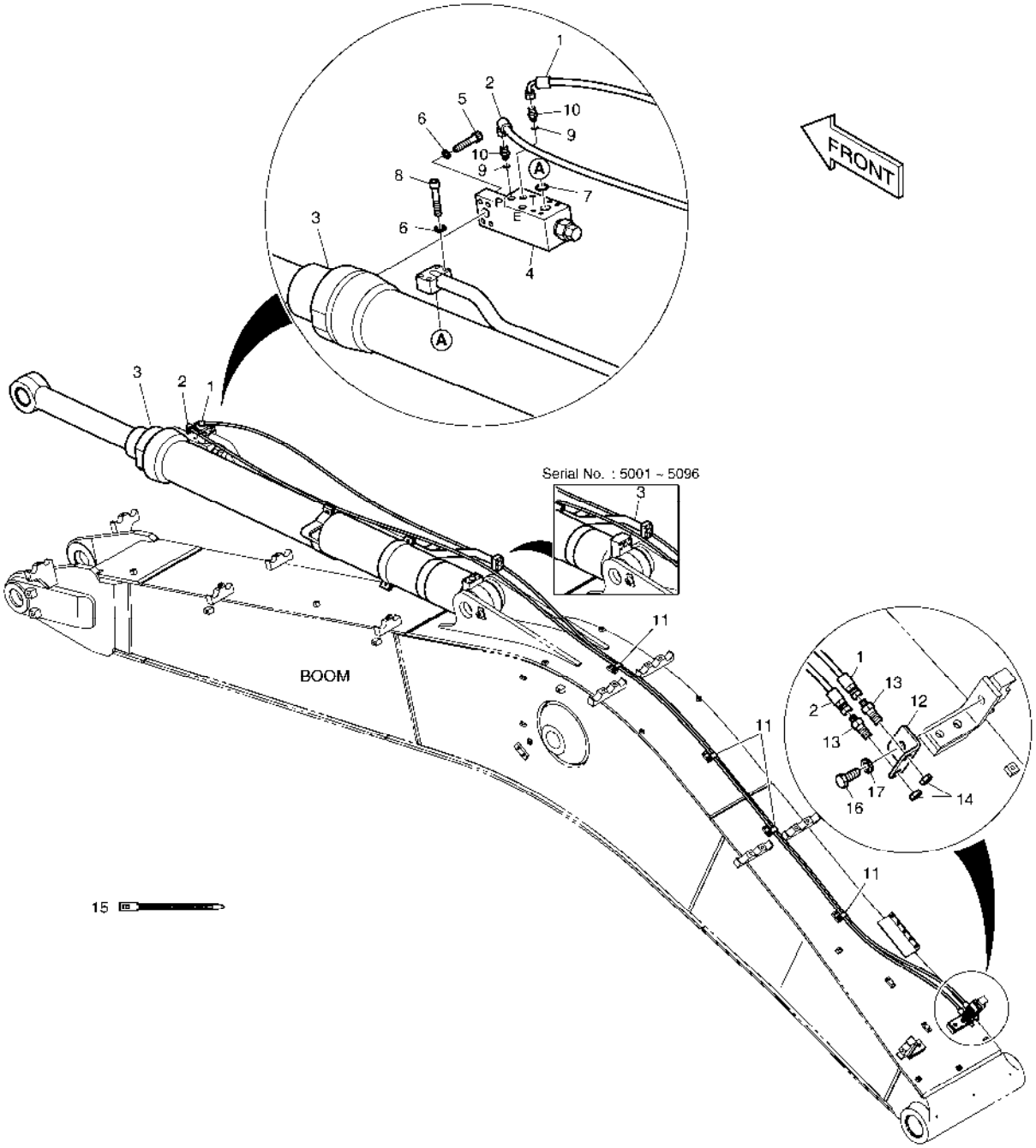

DATE	AUG. 28, 2009
3rd EDITION	

Fig. 6440 ARM PIPING - LOCK VALVE CONDUITES DE BALANCIER

Serial No. ;

Key No.	Part No.	Description	Description	Q'ty	S.C	Serial No.	ICA	Replaceable part	
								Part No.	Q'ty
6440 --	K1011087A	ARM;LOCK V/V PIPING	CONDUITES DE BALANCIE	-	D				
1	2184-1046D302	HOSE PF1/4-5250L	TUYAU FLEXIBLE	1					
2	2184-1046D302	HOSE PF1/4-5250L	TUYAU FLEXIBLE	1					
3	K1011088	CYLINDER;ARM(LOCK V/V)	VERIN DE BALANCIER	1		5001-5096			
	K1011088A	CYLINDER;ARM(LOCK V/V)	VERIN DE BALANCIER	1		5097-			
4	420-00004A	VALVE;LOCK	VANNE	1					
5	S2215766	BOLT;SOCKET M12X1.75X55	BOULON A 6 PANS CREUX	4					
6	S5110703	WASHER;SPRING	RONDELLE ELASTIQUE	8					
7	S8000341	O-RING	JOINT TORIQUE	1					
8	S2215966	BOLT;SOCKET	BOULON A 6 PANS CREUX	4					
9	S8000111	O-RING	JOINT TORIQUE	2					
10	2181-1126D14	ADAPTER	ADAPTEUR	2					
11	124-00199D5	CLIP	AGRAFE	4					
12	K1011074	BRACKET	SUPPORT	1					
13	181-00078D5	ADAPTER	ADAPTEUR	2					
14	121-00010D1	NUT	ECROU	2					
15	2124-1084D2	CLIP;BAND	ATTACHE	30					
16	S0565066	BOLT	BOULON A 6 PANS	1					
17	S5102903	WASHER	RONDELLE	1					

DATE	AUG. 28, 2009
3rd EDITION	

Fig. 6450 MAIN PIPING-ROTATING CONDUITES DE BATI PRINCIPAL

Serial No. ;

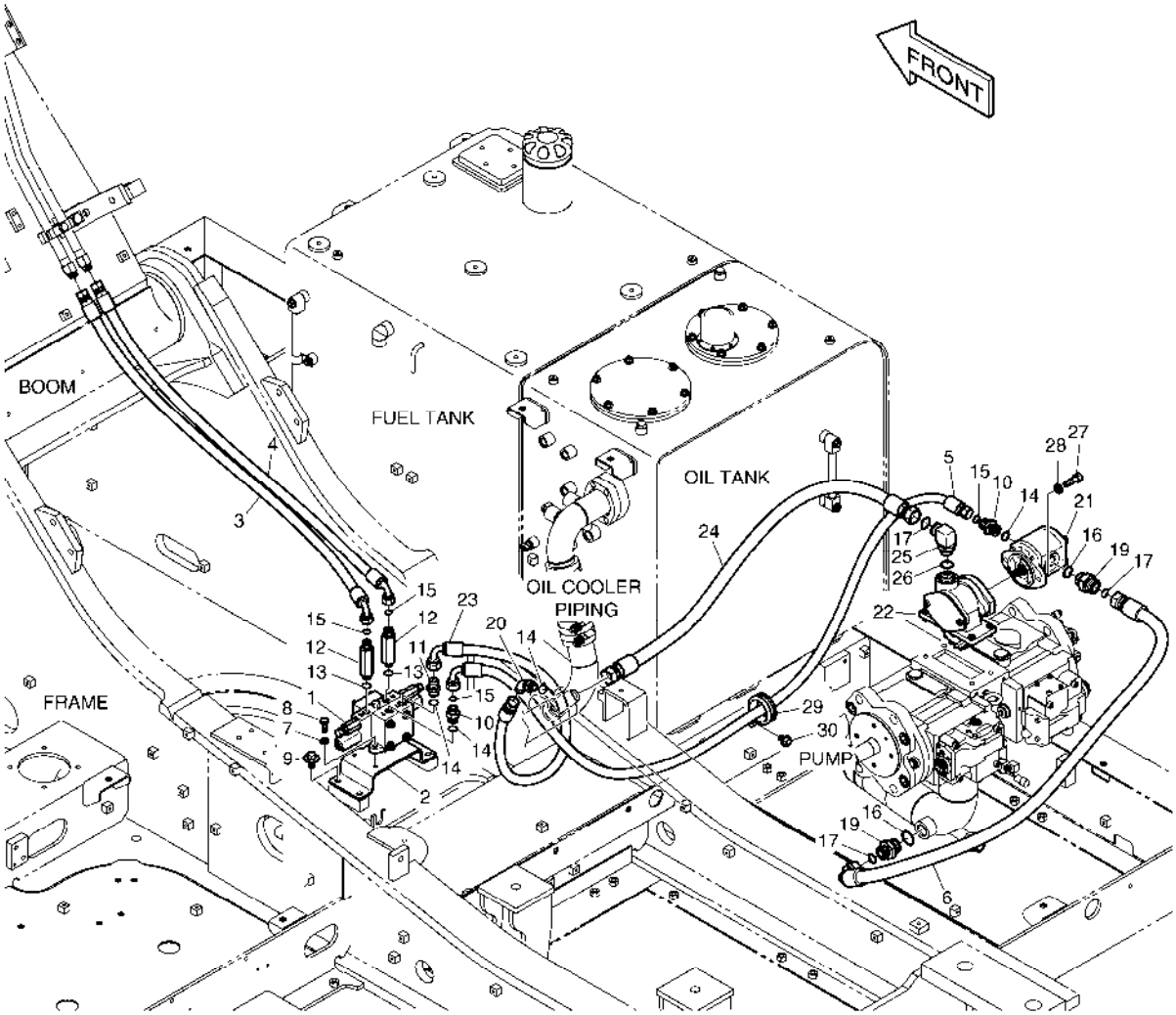

DATE	AUG. 28, 2009
3rd EDITION	

Fig. 6450 MAIN PIPING-ROTATING CONDUITES DE BATI PRINCIPAL

Serial No. ;

Key No.	Part No.	Description	Description	Q'ty	S.C	Serial No.	ICA	Replaceable part	
								Part No.	Q'ty
6450 --	K1009802E	MAIN PIPING;ROTATING	CIRCUIT HYDRAULIQUE PF	-	D				
1	426-00284B	VALVE;ONE SPOOL	VANNE	1					
2	K1000352A	BRACKET	SUPPORT	1					
3	DS2013759	HOSE	TUYAU FLEXIBLE	1					
4	DS2013760	HOSE	TUYAU FLEXIBLE	1					
5	DS2013670	HOSE	TUYAU FLEXIBLE	1					
6	DS2013671	HOSE	TUYAU FLEXIBLE	1					
7	S5102503	WASHER	RONDELLE ELASTIQUE	3					
8	S0508966	BOLT	BOULON A 6 PANS	3					
9	DS0025017	BOLT;SET	BOULON A 6 PANS	4					
10	2181-4133D3	ADAPTER	ADAPTEUR	2					
11	2181-1126D6	ADAPTER	ADAPTEUR	1					
12	DS2232108	ADAPTER	ADAPTEUR	2					
13	S8000141	O-RING	JOINT TORIQUE	2					
14	S8000181	O-RING	JOINT TORIQUE	4					
15	S8030081	O-RING	JOINT TORIQUE	4					
16	S8000231	O-RING	JOINT TORIQUE	2					
17	S8030121	O-RING	JOINT TORIQUE	3					
19	2181-2627D1	ADAPTER	ADAPTEUR	2					
20	2181-2419D3	ELBOW	COUDE	1					
21	K1000410	GEAR PUMP	POMPE A ENGRENAGES	1					
22	K1001252B	PTO ASS'Y	PTO ASS'Y	1					
23	DS2055985	HOSE	TUYAU FLEXIBLE	1					
24	2184-1196D69	HOSE	TUYAU FLEXIBLE	1					
25	2181-2294D2	ELBOW	COUDE	1					
26	S8000241	O-RING	JOINT TORIQUE	1					
27	S2212266	BOLT;SOCKET	BOULON A 6 PANS CREUX	2					
28	S5102603	WASHER	RONDELLE ELASTIQUE	2					
29	124-00208D9	CLIP	AGRAFE	1					
30	K1001029	BOLT	BOULON A 6 PANS	1					

DATE	AUG. 28, 2009
3rd EDITION	

Fig. 6460 PILOT PIPING(1) - ROTATING CONDUITES DE PILOTE

Serial No. ;

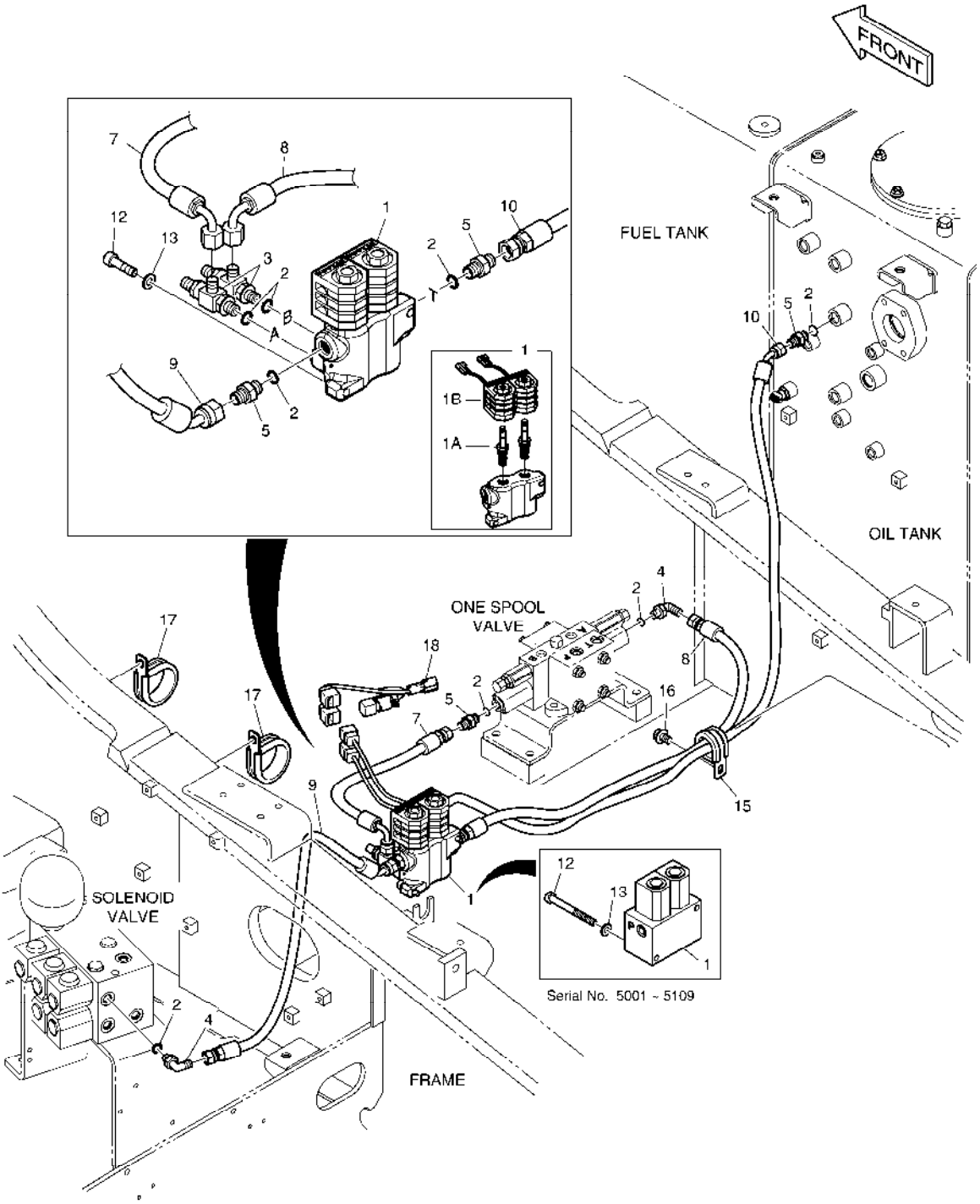

DATE	AUG. 28, 2009
3rd EDITION	

Fig. 6460 PILOT PIPING(1) - ROTATING CONDUITES DE PILOTE

Serial No. ;

Key No.	Part No.	Description	Description	Q'ty	S.C	Serial No.	ICA	Replaceable part	
								Part No.	Q'ty
6460 --	K1009819B	PILOT PIPING;ROTATING	TUYAUTERIE PILOTE	-	D				
1	426-00247A	VALVE;SOLENOID	SOUPAPE A SOLENOIDE	1		5000-5109			
	426-00247B	VALVE;SOLENOID	VANNE SOLENOIDE	1		5110-			
1A	K9007363	. VALVE;SOLENOID	. PLUNGEUR	2		5110-			
1B	1.519-00001	. COIL	. COIL	2		5110-			
2	S8000111	O-RING	JOINT TORIQUE	8					
3	181-00779	TEE;SHUTTLE	TE	2					
4	2181-1702D4	ELBOW(1/4)	COUDE	2					
5	2181-1126D14	ADAPTER	ADAPTEUR	4					
7	DS2093197	HOSE	TUYAU FLEXIBLE	1					
8	DS2093262	HOSE	TUYAU FLEXIBLE	1					
9	DS2092023	HOSE	TUYAU FLEXIBLE	1					
10	DS2092068	HOSE	TUYAU FLEXIBLE	1					
12	S0556866	BOLT	BOULON	2		5001-5109			
	S2209266	BOLT	BOULON A 6 PANS CREUX	2		5110-			
13	S5100503	WASHER	RONDELLE ELASTIQUE	2		5001-5109			
	S5110503	WASHER;SPRING	RONDELLE ELASTIQUE	2		5110-			
15	124-00208D4	CLIP	ATTACHE	1					
16	K1001029	BOLT	BOULON A 6 PANS	1					
17	124-00208D9	CLIP	AGRAFE	2					
18	K1000817	HARNESS	HARNAIS	1					

DATE	AUG. 28, 2009
3rd EDITION	

Fig. 6470 PILOT PIPING(2) - ROTATING CONDUITES DE PILOTE

Serial No. ;

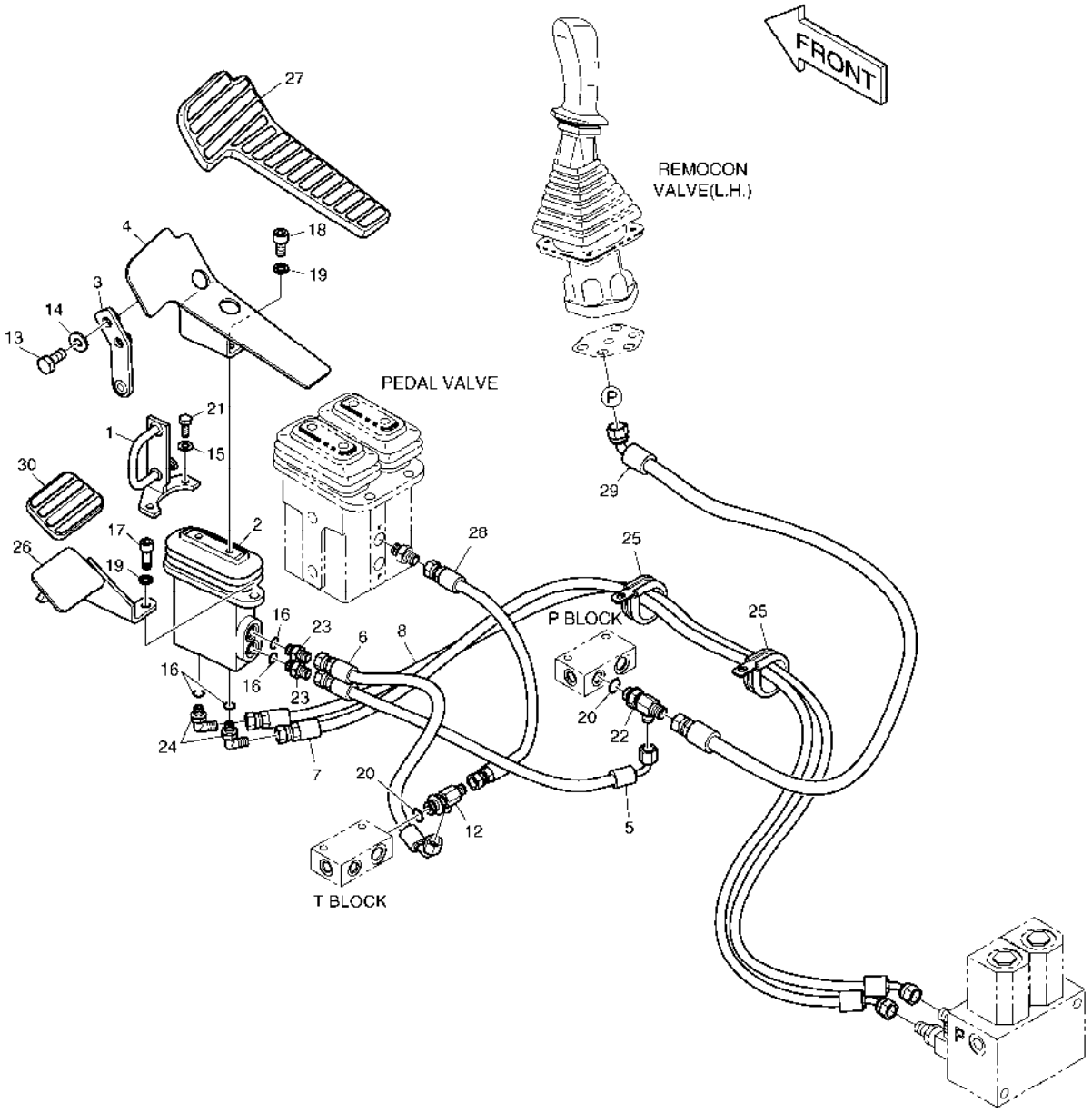

DATE	AUG. 28, 2009
3rd EDITION	

Fig. 6470 PILOT PIPING(2) - ROTATING CONDUITES DE PILOTE

Serial No. ;

Key No.	Part No.	Description	Description	Q'ty	S.C	Serial No.	ICA	Replaceable part	
								Part No.	Q'ty
6470 --	K1009828A	PILOT PIPING;ROTATING	TUYAUTERIE PILOTE	-	D				
1	K1001873A	PLATE	PLAQUE	1					
2	K1017382	VALVE;PEDAL	VANNE	1		5001-5109	I	K1017382A	1
	K1017382A	PEDAL VALVE	VANNE	1		5110-			
3	K1001871B	PLATE	PLAQUE	1					
4	195-01684A	BRACKET;PEDAL(L.H)	SUPPORT	1					
5	DS2093123	HOSE	TUYAU FLEXIBLE	1					
6	DS2093130	HOSE	TUYAU FLEXIBLE	1					
7	DS2092069	HOSE	TUYAU FLEXIBLE	1					
8	DS2092087	HOSE	TUYAU FLEXIBLE	1					
12	2181-1951D7	TEE	TE	1					
13	S0512066	BOLT	BOULON A 6 PANS	2					
14	S5102603	WASHER	RONDELLE ELASTIQUE	2					
15	S5102503	WASHER	RONDELLE ELASTIQUE	2					
16	S8000111	O-RING	JOINT TORIQUE	4					
17	S2212266	BOLT;SOCKET	BOULON A 6 PANS CREUX	2					
18	S2211866	BOLT;SOCKET	BOULON A 6 PANS CREUX	2					
19	S5110603	WASHER;SPRING	RONDELLE ELASTIQUE	4					
20	S8000141	O-RING	JOINT TORIQUE	2					
21	S0508866	BOLT	BOULON A 6 PANS	2					
22	2181-1951D6	TEE	TE	1					
23	2181-1126D14	ADAPTER	ADAPTEUR	2					
24	2181-1702D4	ELBOW(1/4)	COUDE	2					
25	124-00208D7	CLIP	AGRAFE	2					
26	K1003948A	FOOT REST	REPOS DE PIED	1					
27	161-00382	RUBBER;PEDAL(L.H)	CAOUTCHOUC	1					
28	DS2094006	HOSE	TUYAU FLEXIBLE	1					
29	DS2095003	HOSE	TUYAU FLEXIBLE	1					
30	K1006656	RUBBER;PEDAL	CAOUTCHOUC	1					

DATE	AUG. 28, 2009
3rd EDITION	

Fig. 6480 BOOM PIPING - BOOM 5.9m(ROTATING) CONDUITES DE FLECHE

Serial No. ;

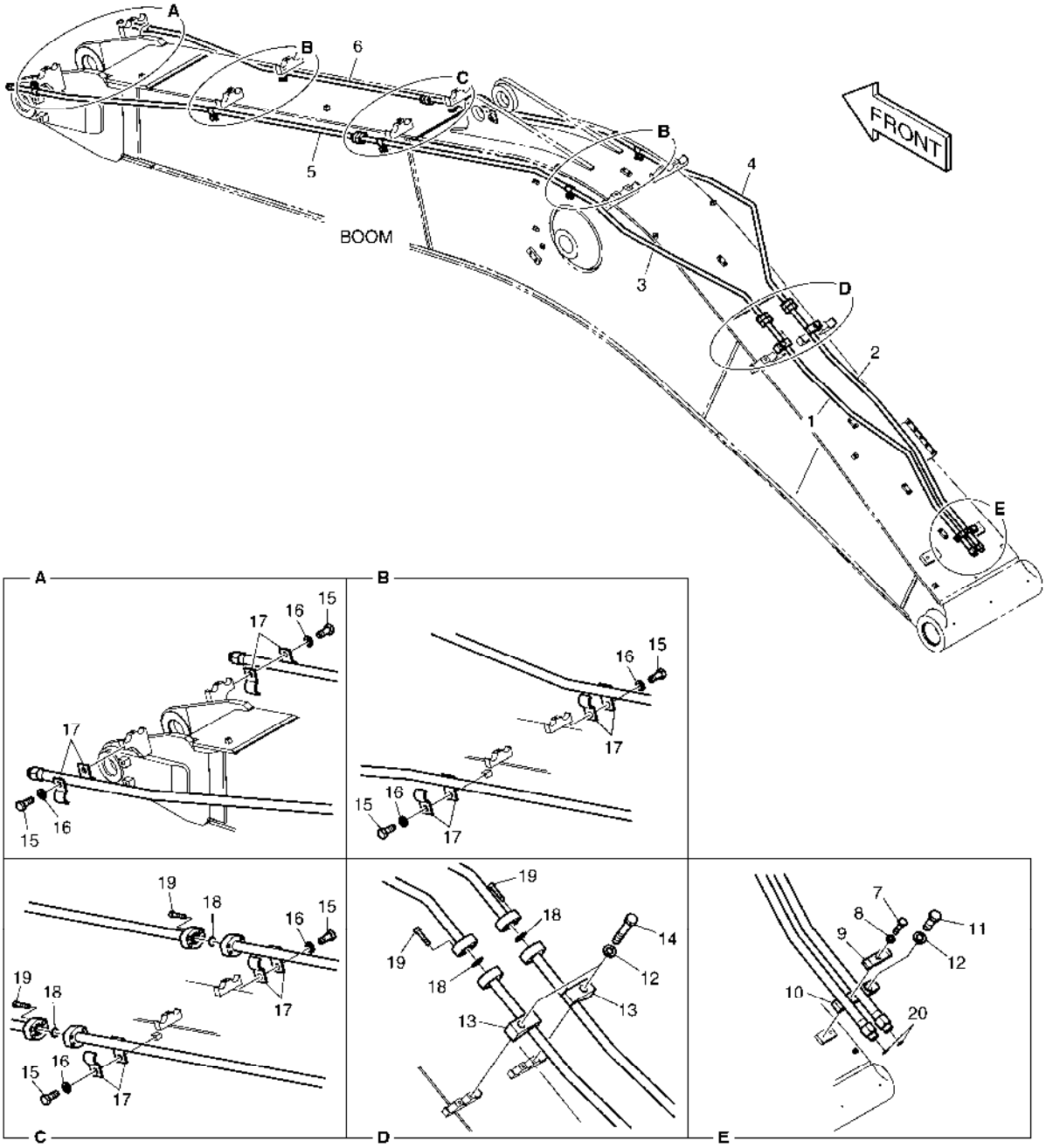

DATE	AUG. 28, 2009
3rd EDITION	

Fig. 6480 BOOM PIPING - BOOM 5.9m(ROTATING) CONDUITES DE FLECHE

Serial No. ;

Key No.	Part No.	Description	Description	Q'ty	S.C	Serial No.	ICA	Replaceable part	
								Part No.	Q'ty
6480 --	K1011064A	ROTATION PIPING - 5.9M BOOM	CONDUITES DE FLECHE	-	D				
1	K1011065A	PIPE	TUYAU	1					
2	K1011066A	PIPE	TUYAU	1					
3	K1011067	PIPE	TUYAU	1					
4	K1011068	PIPE	TUYAU	1					
5	K1011069	PIPE	TUYAU	1					
6	K1011070	PIPE	TUYAU	1					
7	S0558466	BOLT	BOULON A 6 PANS	1					
8	S5102603	WASHER	RONDELLE ELASTIQUE	1					
9	K1004028	CLAMP;PIPE	COLLIER	1					
10	K1010716	PLATE	PLAQUE	1					
11	S0565266	BOLT	BOULON	1					
12	S5102903	WASHER	RONDELLE	3					
13	K1010717	CLAMP	COLLIER	2					
14	S0566166	BOLT	BOULON	2					
15	S0515266	BOLT	BOULON A 6 PANS	8					
16	S5102703	WASHER;SPRING	RONDELLE ELASTIQUE	8					
17	124-00299A	CLAMP;PIPE	COLLIER	16					
18	2180-1026D30	O-RING	JOINT TORIQUE	4					
19	S2209466	BOLT;SOCKET	BOULON A 6 PANS CREUX	16					
20	S8030081	O-RING	JOINT TORIQUE	2					

DATE	AUG. 28, 2009
3rd EDITION	

Fig. 6490 ARM PIPING - ROTATING(ARM 3.0m)
CONDUITES DE BALANCIER

Serial No. ;

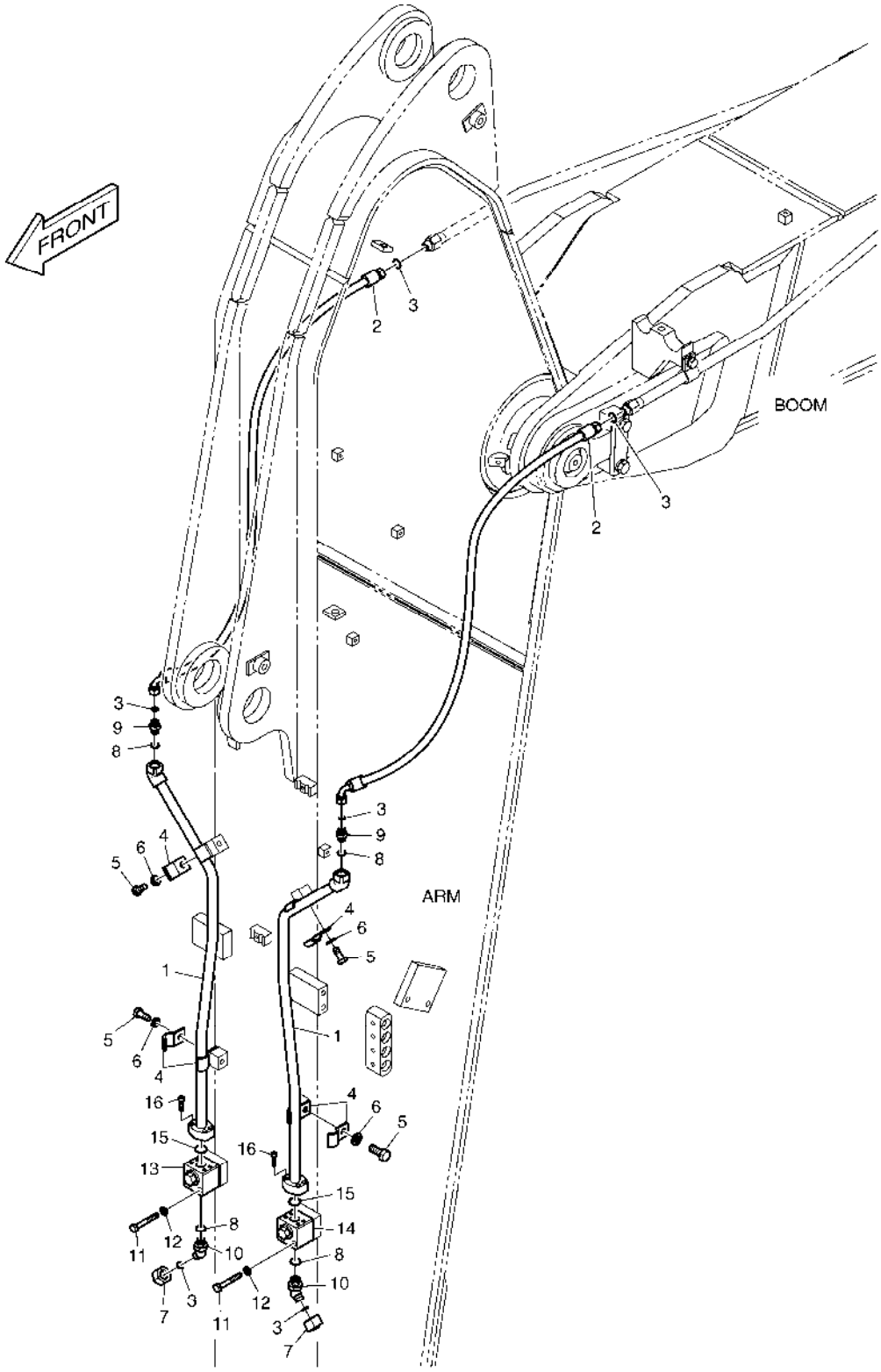

DATE	AUG. 28, 2009
3rd EDITION	

Fig. 6490 ARM PIPING - ROTATING(ARM 3.0m) CONDUITES DE BALANCIER

Serial No. ;

Key No.	Part No.	Description	Description	Q'ty	S.C	Serial No.	ICA	Replaceable part	
								Part No.	Q'ty
6490 --	K1011071	ARM PIPING-ROTATION	CONDUITES DE BALANCIE	-	D				
1	K1011072	PIPE	TUYAU	2					
2	DS2013656	HOSE	TUYAU FLEXIBLE	2					
3	S8030081	O-RING	JOINT TORIQUE	6					
4	124-00299A	CLAMP;PIPE	COLLIER	8					
5	S0515266	BOLT	BOULON A 6 PANS	4					
6	S5102703	WASHER;SPRING	RONDELLE ELASTIQUE	4					
7	2181-2817D4	CAP	CHAPEAU	2					
8	S8000181	O-RING	JOINT TORIQUE	4					
9	2181-4133D3	ADAPTER	ADAPTEUR	2					
10	2181-2816D4	ELBOW	COUDE	2					
11	S0558966	BOLT	BOULON	4					
12	S5102603	WASHER	RONDELLE ELASTIQUE	4					
13	K1006227	VALVE;SWITCH(R.H)	VANNE	1					
14	K1006228	VALVE;SWITCH(L.H)	VANNE	1					
15	2180-1026D30	O-RING	JOINT TORIQUE	2					
16	S2209266	BOLT	BOULON A 6 PANS CREUX	8					

DATE	AUG. 28, 2009
3rd EDITION	

Fig. 6500 BUCKET ASS'Y - 0.47m³ ENSEMBLE DE GODET

Serial No. ;

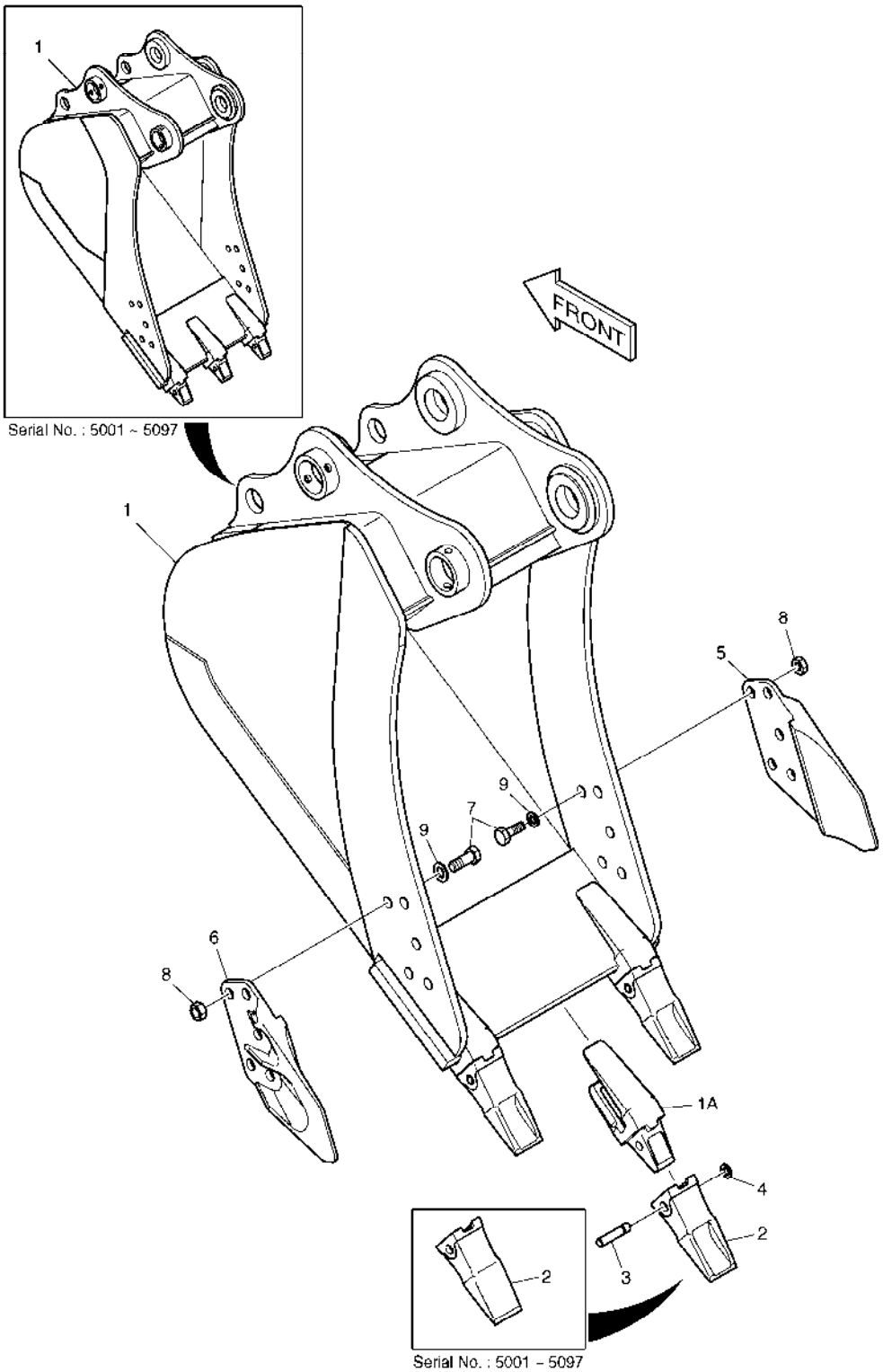

DATE	AUG. 28, 2009
3rd EDITION	

Fig. 6500 BUCKET ASS'Y - 0.47m³ ENSEMBLE DE GODET

Serial No. ;

Key No.	Part No.	Description	Description	Q'ty	S.C	Serial No.	ICA	Replaceable part	
								Part No.	Q'ty
6500 --	K1011476	BUCKET ASS'Y-0.47㎥	GODET	1		5001-5041	I	K1011476A	1
	K1011476A	BUCKET ASS'Y-0.47㎥	GODET	1		5042-5097	I	K1011476B	1
	K1011476B	BUCKET ASS'Y-0.47㎥	GODET	1		5098-5109	I	K1011476E	1
	K1011476E	BUCKET ASS'Y-0.47㎥	GODET	1		5110-			
1	K1011477	BUCKET-0.47㎥	GODET	1		5001-5041	I	K1011477A	1
	K1011477A	BUCKET-0.47㎥	GODET	1		5042-5097	I	K1011477B	1
	K1011477B	BUCKET-0.47㎥	GODET	1		5098-5109	I	K1011477E	1
	K1011477E	BUCKET-0.47㎥	GODET	1		5110-			
1A	2713-1218	. ADAPTER;TOOTH	. DENT DE ADAPTEUR	3		5001-5109	I	2713-1218A	3
	2713-1218A	. ADAPTER;TOOTH	. DENT DE ADAPTEUR	3		5110-			
2	K1000344	POINT;TOOTH	DENT	3		5001-5109	I	K1038006A	3
	K1038006A	TOOTH	DENT	3		5110-			
3	2705-1020	PIN;LOCKING	GOUPILLE DE BLOCAGE	3					
4	2114-1848A	WASHER;LOCKING	RONDELLE	3					
5	2713-1059A	CUTTER;SIDE(R.H)	COIN DE GODET DROIT	1					
6	2713-1060A	CUTTER;SIDE(L.H)	COIN DE GODET GAUCHE	1					
7	S0574661	BOLT M24X3.0X65	BOULON A 6 PANS	10					
8	S4013333	NUT	ECROU	10					
9	2114-1831A	WASHER;HARDEN	RONDELLE	10					

DATE	AUG. 28, 2009
3rd EDITION	

Fig. 6510 BUCKET ASS'Y - 0.72m³ ENSEMBLE DE GODET

Serial No. ;

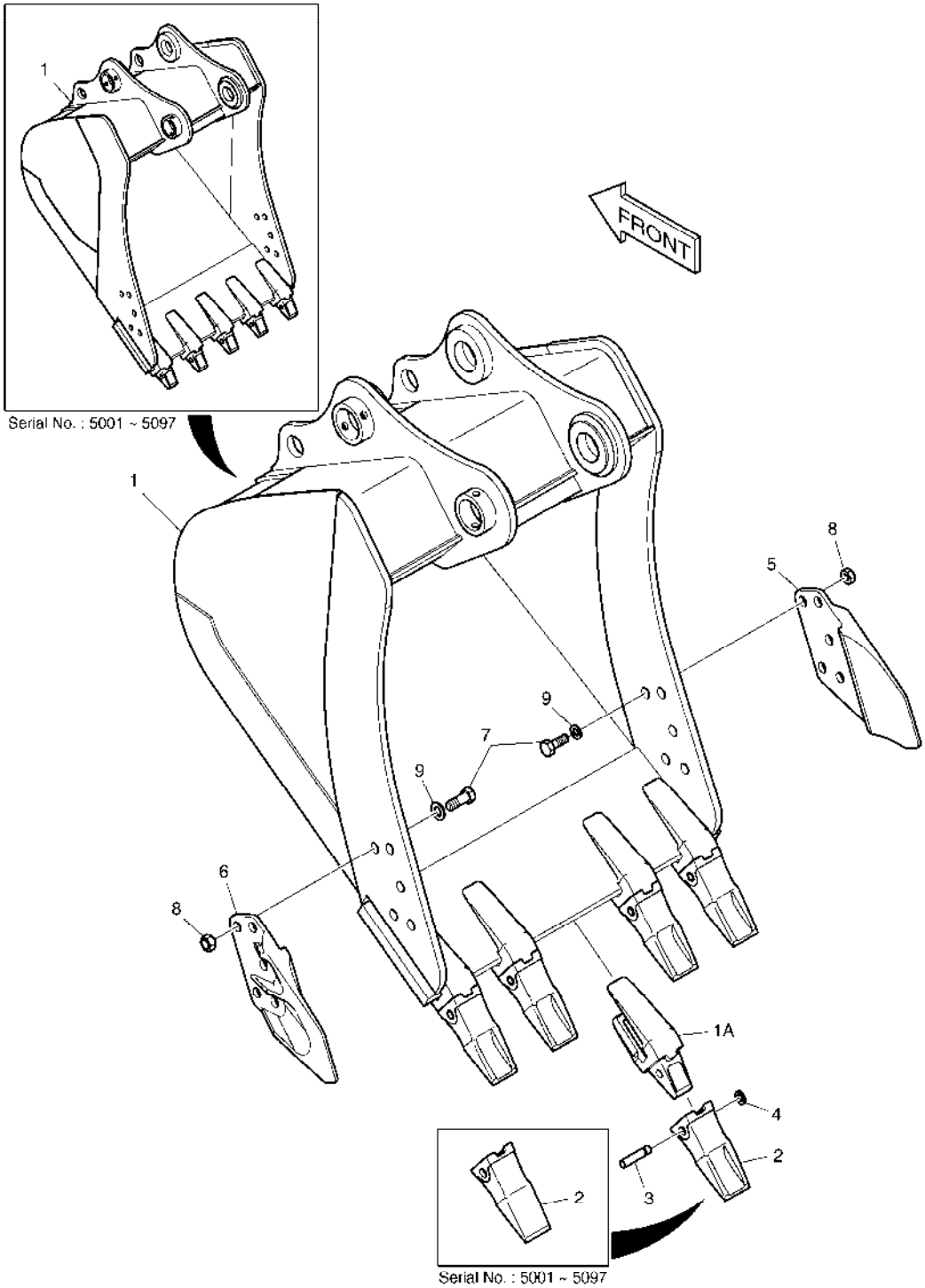

DATE	AUG. 28, 2009
3rd EDITION	

Fig. 6510 BUCKET ASS'Y - 0.72m³ ENSEMBLE DE GODET

Serial No. ;

Key No.	Part No.	Description	Description	Q'ty	S.C	Serial No.	ICA	Replaceable part	
								Part No.	Q'ty
6510 --	K1011478	BUCKET ASS'Y-0.72㎥	GODET	1		5001-5041	I	K1011478A	1
	K1011478A	BUCKET ASS'Y-0.72㎥	GODET	1		5042-5097	I	K1011478B	1
	K1011478B	BUCKET ASS'Y-0.72㎥	GODET	1		5098-5109	I	K1011478E	1
	K1011478E	BUCKET ASS'Y-0.72㎥	GODET	1		5110-			
1	K1011479	BUCKET-0.72㎥	GODET	1		5001-5041	I	K1011479A	1
	K1011479A	BUCKET-0.72㎥	GODET	1		5042-5097	I	K1011479B	1
	K1011479B	BUCKET-0.72㎥	GODET	1		5098-5109	I	K1011479E	1
	K1011479E	BUCKET-0.72㎥	GODET	1		5110-			
1A	2713-1218	. ADAPTER;TOOTH	. DENT DE ADAPTEUR	5		5001-5109	I	2713-1218A	5
	2713-1218A	. ADAPTER;TOOTH	. DENT DE ADAPTEUR	5		5110-			
2	K1000344	POINT;TOOTH	DENT	5		5001-5109	I	K1038006A	5
	K1038006A	TOOTH	DENT	5		5110-			
3	2705-1020	PIN;LOCKING	GOUPILLE DE BLOCAGE	5					
4	2114-1848A	WASHER;LOCKING	RONDELLE	5					
5	2713-1059A	CUTTER;SIDE(R.H)	COIN DE GODET DROIT	1					
6	2713-1060A	CUTTER;SIDE(L.H)	COIN DE GODET GAUCHE	1					
7	S0574661	BOLT M24X3.0X65	BOULON A 6 PANS	10					
8	S4013333	NUT	ECROU	10					
9	2114-1831A	WASHER;HARDEN	RONDELLE	10					

DATE	AUG. 28, 2009
3rd EDITION	

Fig. 6520 BUCKET ASS'Y - 0.8m³ ENSEMBLE DE GODET

Serial No. ;

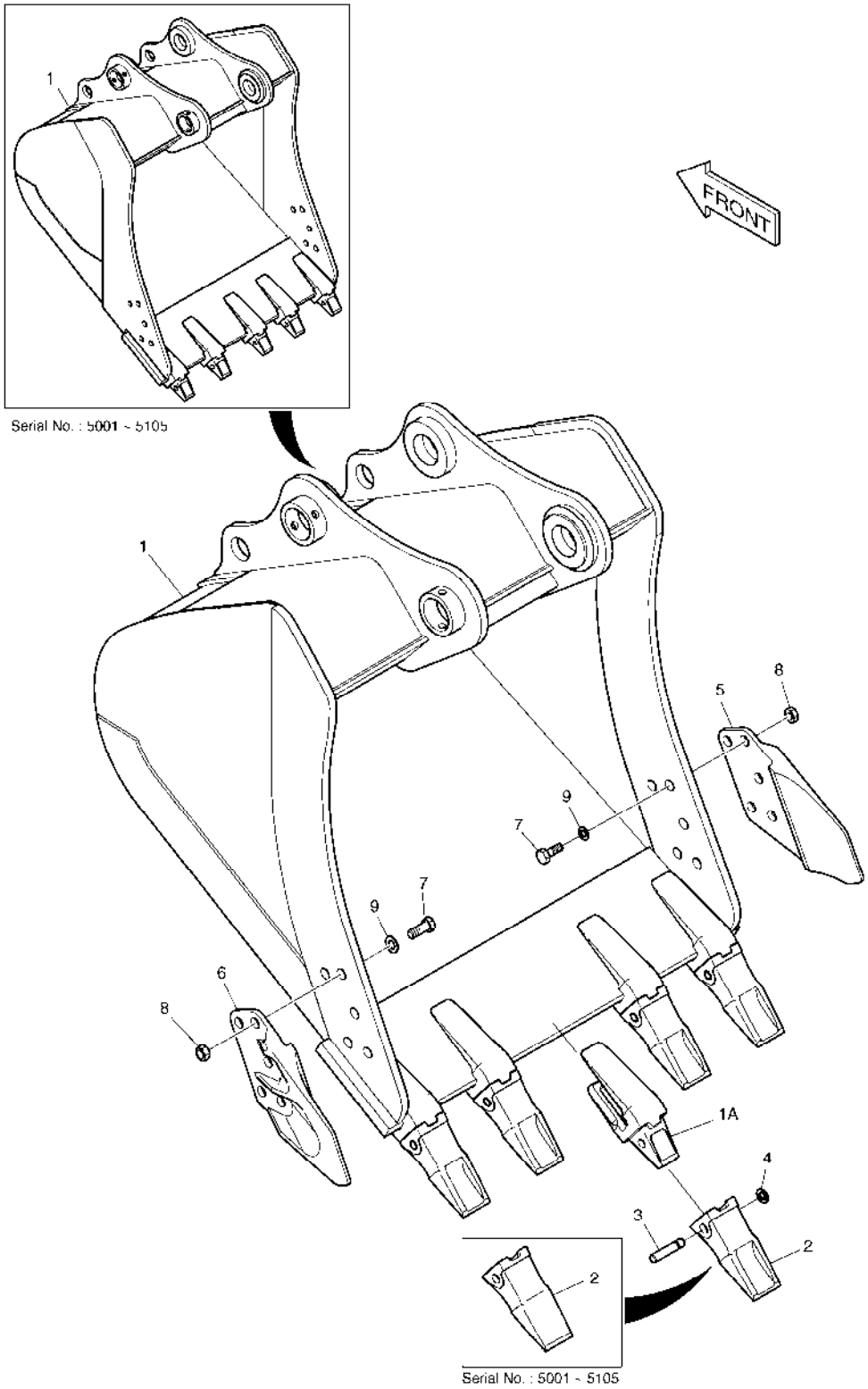

DATE	AUG. 28, 2009
3rd EDITION	

Fig. 6520 BUCKET ASS'Y - 0.8m³ ENSEMBLE DE GODET

Serial No. ;

Key No.	Part No.	Description	Description	Q'ty	S.C	Serial No.	ICA	Replaceable part	
								Part No.	Q'ty
6520 --	K1000321A	BUCKET ASS'Y-0.8㎥	ENSEMBLE GODET	1		5001-5041	I	K1000321B	1
	K1000321B	BUCKET ASS'Y-0.8㎥	ENSEMBLE GODET	1		5042-5105	I	K1000321C	1
	K1000321C	BUCKET ASS'Y-0.8㎥	ENSEMBLE GODET	1		5106-5109	I	K1000321G	1
	K1000321G	BUCKET ASS'Y-0.8㎥	ENSEMBLE GODET	1		5110-			
1	K1000322A	BUCKET-0.8㎥	GODET	1		5001-5041	I	K1000322B	1
	K1000322B	BUCKET-0.8㎥	GODET	1		5042-5105	I	K1000322C	1
	K1000322C	BUCKET-0.8㎥	GODET	1		5106-5109	I	K1000322G	1
	K1000322G	BUCKET-0.8㎥	GODET	1		5110-			
1A	2713-1218	. ADAPTER;TOOTH	. DENT DE ADAPTEUR	5		5001-5109	I	2713-1218A	5
	2713-1218A	. ADAPTER;TOOTH	. DENT DE ADAPTEUR	5		5110-			
2	K1000344	POINT;TOOTH	DENT	5		5001-5109	I	K1038006A	5
	K1038006A	TOOTH	DENT	5		5110-			
3	2705-1020	PIN;LOCKING	GOUPILLE DE BLOCAGE	5					
4	2114-1848A	WASHER;LOCKING	RONDELLE	5					
5	2713-1059A	CUTTER;SIDE(R.H)	COIN DE GODET DROIT	1					
6	2713-1060A	CUTTER;SIDE(L.H)	COIN DE GODET GAUCHE	1					
7	S0574861	BOLT M24X3.0X75	BOULON A 6 PANS	10					
8	S4013333	NUT	ECROU	10					
9	2114-1831A	WASHER;HARDEN	RONDELLE	10					

DATE	AUG. 28, 2009
3rd EDITION	

Fig. 6530 BUCKET ASS'Y - 0.92m³ ENSEMBLE DE GODET

Serial No. ;

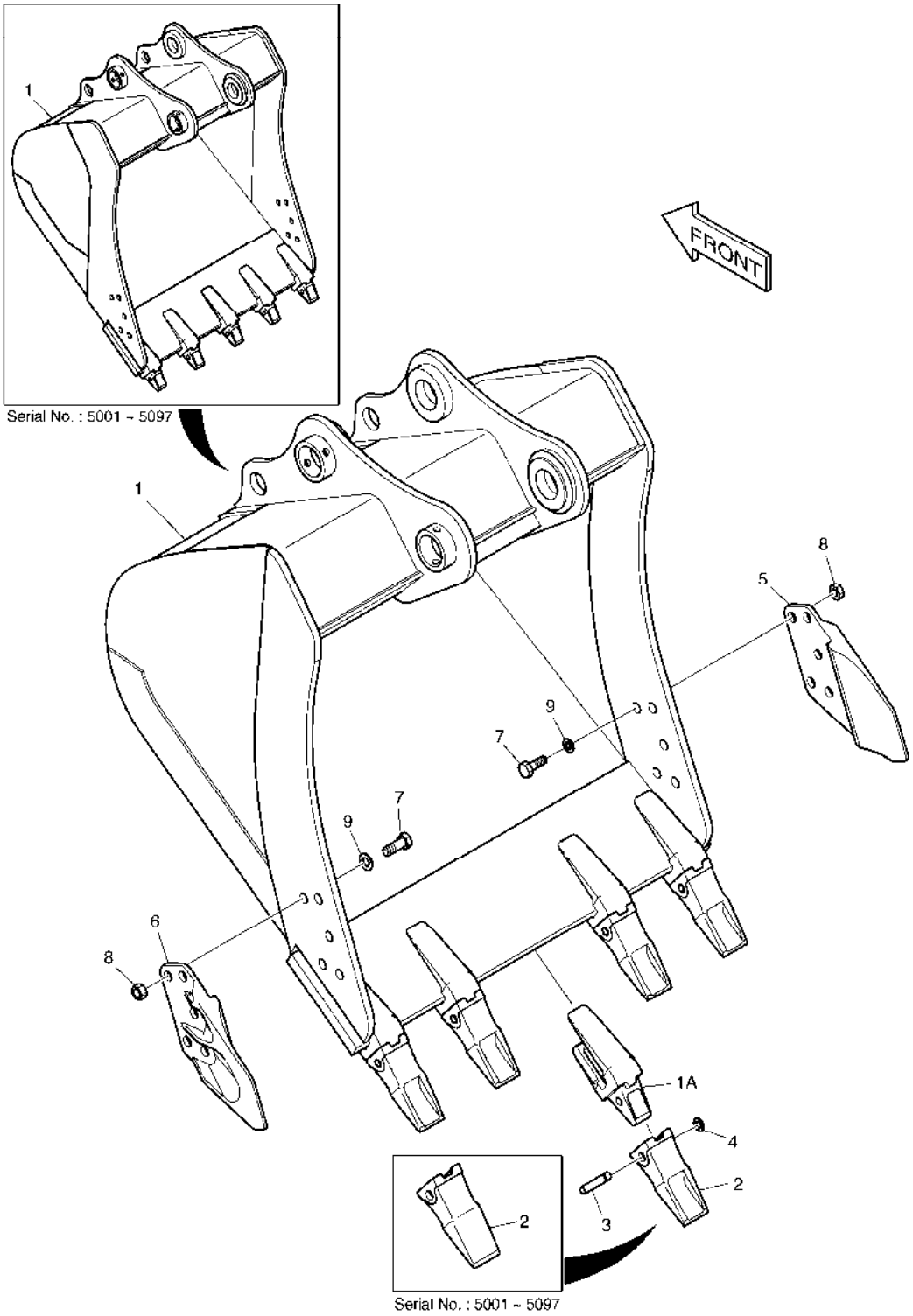

DATE	AUG. 28, 2009
3rd EDITION	

Fig. 6530 BUCKET ASS'Y - 0.92m³ ENSEMBLE DE GODET

Serial No. ;

Key No.	Part No.	Description	Description	Q'ty	S.C	Serial No.	ICA	Replaceable part	
								Part No.	Q'ty
6530 --	K1011480	BUCKET ASS'Y-0.92㎥	GODET	1		5001-5041	I	K1011480A	1
	K1011480A	BUCKET ASS'Y-0.92㎥	GODET	1		5042-5097	I	K1011480B	1
	K1011480B	BUCKET ASS'Y-0.92㎥	GODET	1		5098-5109	I	K1011480E	1
	K1011480E	BUCKET ASS'Y-0.92㎥	GODET	1		5110-			
1	K1011481	BUCKET-0.92㎥	GODET	1		5001-5041	I	K1011481A	1
	K1011481A	BUCKET-0.92㎥	GODET	1		5042-5097	I	K1011481B	1
	K1011481B	BUCKET-0.92㎥	GODET	1		5098-5109	I	K1011481E	1
	K1011481E	BUCKET-0.92㎥	GODET	1		5110-			
1A	2713-1218	. ADAPTER;TOOTH	. DENT DE ADAPTEUR	5		5001-5109	I	2713-1218A	5
	2713-1218A	. ADAPTER;TOOTH	. DENT DE ADAPTEUR	5		5110-			
2	K1000344	POINT;TOOTH	DENT	5		5001-5109	I	K1038006A	5
	K1038006A	TOOTH	DENT	5		5110-			
3	2705-1020	PIN;LOCKING	GOUPILLE DE BLOCAGE	5					
4	2114-1848A	WASHER;LOCKING	RONDELLE	5					
5	2713-1059A	CUTTER;SIDE(R.H)	COIN DE GODET DROIT	1					
6	2713-1060A	CUTTER;SIDE(L.H)	COIN DE GODET GAUCHE	1					
7	S0574661	BOLT M24X3.0X65	BOULON A 6 PANS	10					
8	S4013333	NUT	ECROU	10					
9	2114-1831A	WASHER;HARDEN	RONDELLE	10					

DATE	AUG. 28, 2009
3rd EDITION	

Fig. 6540 BUCKET ASS'Y - 1.0m³ ENSEMBLE DE GODET

Serial No. ;

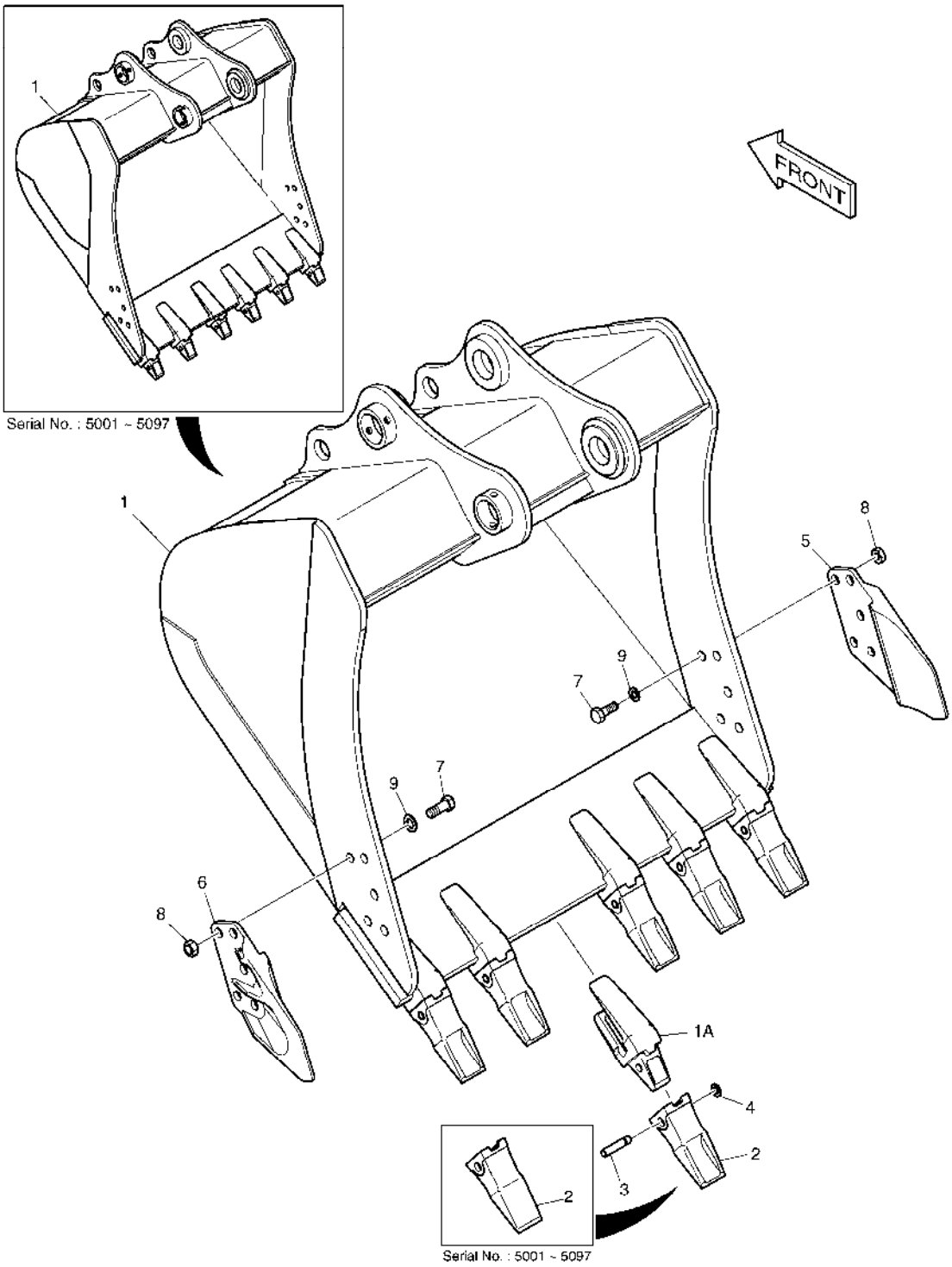

DATE	AUG. 28, 2009
3rd EDITION	

Fig. 6540 BUCKET ASS'Y - 1.0m³ ENSEMBLE DE GODET

Serial No. ;

Key No.	Part No.	Description	Description	Q'ty	S.C	Serial No.	ICA	Replaceable part	
								Part No.	Q'ty
6540 --	K1011482	BUCKET ASS'Y-1.0㎥	GODET	1		5001-5041	I	K1011482A	1
	K1011482A	BUCKET ASS'Y-1.0㎥	GODET	1		5042-5097	I	K1011482B	1
	K1011482B	BUCKET ASS'Y-1.0㎥	GODET	1		5098-5109	I	K1011482E	1
	K1011482E	BUCKET ASS'Y-1.0㎥	GODET	1		5110-			
1	K1011483	BUCKET-1.0㎥	GODET	1		5001-5041	I	K1011483A	1
	K1011483A	BUCKET-1.0㎥	GODET	1		5042-5097	I	K1011483B	1
	K1011483B	BUCKET-1.0㎥	GODET	1		5098-5109	I	K1011483E	1
	K1011483E	BUCKET-1.0㎥	GODET	1		5110-			
1A	2713-1218	. ADAPTER;TOOTH	. DENT DE ADAPTEUR	6		5001-5109	I	2713-1218A	6
	2713-1218A	. ADAPTER;TOOTH	. DENT DE ADAPTEUR	6		5110-			
2	K1000344	POINT;TOOTH	DENT	6		5001-5109	I	K1038006A	6
	K1038006A	TOOTH	DENT	6		5110-			
3	2705-1020	PIN;LOCKING	GOUPILLE DE BLOCAGE	6					
4	2114-1848A	WASHER;LOCKING	RONDELLE	6					
5	2713-1059A	CUTTER;SIDE(R.H)	COIN DE GODET DROIT	1					
6	2713-1060A	CUTTER;SIDE(L.H)	COIN DE GODET GAUCHE	1					
7	S0574661	BOLT M24X3.0X65	BOULON A 6 PANS	10					
8	S4013333	NUT	ECROU	10					
9	2114-1831A	WASHER;HARDEN	RONDELLE	10					

DATE	AUG. 28, 2009
3rd EDITION	

Fig. 6550 BUCKET ASS'Y - 1.1m³ ENSEMBLE DE GODET

Serial No. ;

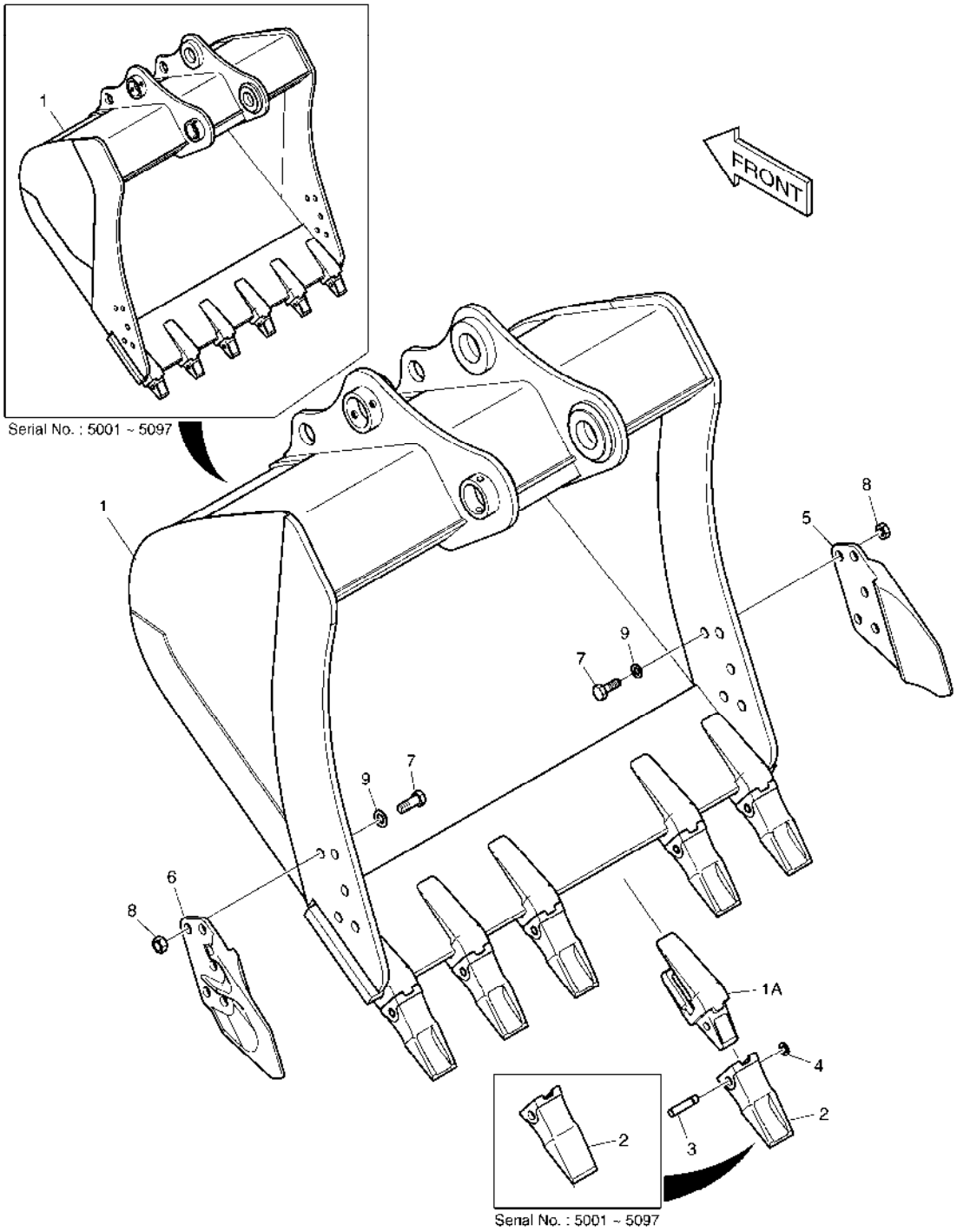

DATE	AUG. 28, 2009
3rd EDITION	

Fig. 6550 BUCKET ASS'Y - 1.1m³ ENSEMBLE DE GODET

Serial No. ;

Key No.	Part No.	Description	Description	Q'ty	S.C	Serial No.	ICA	Replaceable part	
								Part No.	Q'ty
6550 --	K1011484	BUCKET ASS'Y-1.1㎥	GODET	1		5001-5041	I	K1011484A	1
	K1011484A	BUCKET ASS'Y-1.1㎥	GODET	1		5042-5097	I	K1011484B	1
	K1011484B	BUCKET ASS'Y-1.1㎥	GODET	1		5098-5109	I	K1011484E	1
	K1011484E	BUCKET ASS'Y-1.1㎥	GODET	1		5110-			
1	K1011485	BUCKET-1.1㎥	GODET	1		5001-5041	I	K1011485A	1
	K1011485A	BUCKET-1.1㎥	GODET	1		5042-5097	I	K1011485B	1
	K1011485B	BUCKET-1.1㎥	GODET	1		5098-5109	I	K1011485E	1
	K1011485E	BUCKET-1.1㎥	GODET	1		5110-			
1A	2713-1218	. ADAPTER;TOOTH	. DENT DE ADAPTEUR	6		5001-5109	I	2713-1218A	6
	2713-1218A	. ADAPTER;TOOTH	. DENT DE ADAPTEUR	6		5110-			
2	K1000344	POINT;TOOTH	DENT	6		5001-5109	I	K1038006A	6
	K1038006A	TOOTH	DENT	6		5110-			
3	2705-1020	PIN;LOCKING	GOUPILLE DE BLOCAGE	6					
4	2114-1848A	WASHER;LOCKING	RONDELLE	6					
5	2713-1059A	CUTTER;SIDE(R.H)	COIN DE GODET DROIT	1					
6	2713-1060A	CUTTER;SIDE(L.H)	COIN DE GODET GAUCHE	1					
7	S0574661	BOLT M24X3.0X65	BOULON A 6 PANS	10					
8	S4013333	NUT	ECROU	10					
9	2114-1831A	WASHER;HARDEN	RONDELLE	10					

DATE	AUG. 28, 2009
3rd EDITION	

Fig. 6560 BUCKET ASS'Y - 1.22m³ ENSEMBLE DE GODET

Serial No. ;

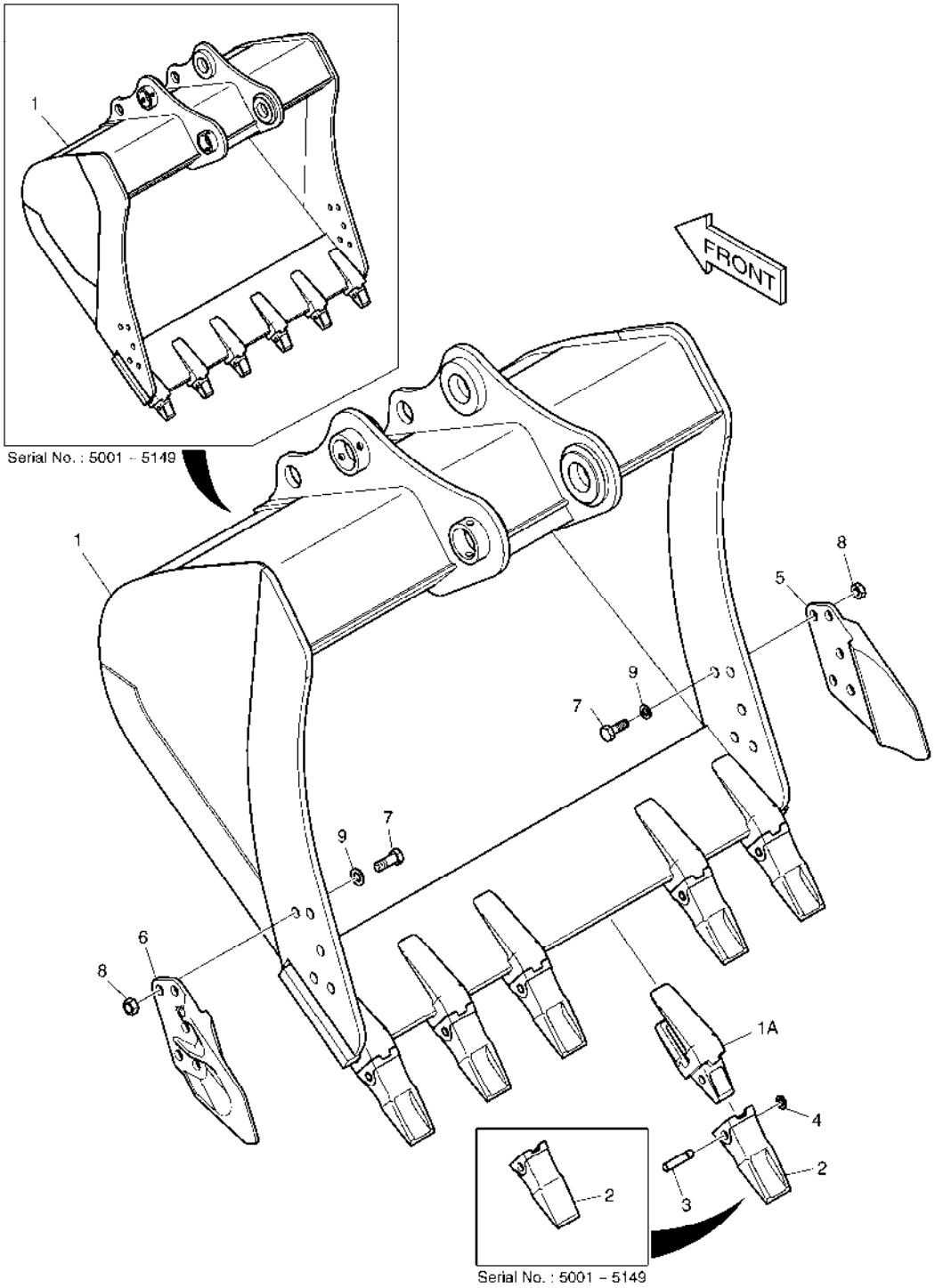

DATE	AUG. 28, 2009
3rd EDITION	

Fig. 6560 BUCKET ASS'Y - 1.22m³ ENSEMBLE DE GODET

Serial No. ;

Key No.	Part No.	Description	Description	Q'ty	S.C	Serial No.	ICA	Replaceable part	
								Part No.	Q'ty
6560 --	K1023188	BUCKET ASS'Y-1.22㎥	GODET	1		5001-5041	I	K1023188A	1
	K1023188A	BUCKET ASS'Y-1.22㎥	GODET	1		5042-5109	I	K1023188E	1
	K1023188E	BUCKET ASS'Y-1.22㎥	GODET	1		5110-			
1	K1023189	BUCKET-1.22㎥	GODET	1		5001-5041	I	K1023189A	1
	K1023189A	BUCKET-1.22㎥	GODET	1		5042-5109	I	K1023189E	1
	K1023189E	BUCKET-1.22㎥	GODET	1		5110-			
1A	2713-1218	. ADAPTER;TOOTH	. DENT DE ADAPTEUR	6		5001-5109	I	2713-1218A	6
	2713-1218A	. ADAPTER;TOOTH	. DENT DE ADAPTEUR	6		5110-			
2	K1000344	POINT;TOOTH	DENT	6		5001-5109	I	K1038006A	6
	K1038006A	TOOTH	DENT	6		5110-			
3	2705-1020	PIN;LOCKING	GOUPILLE DE BLOCAGE	6					
4	2114-1848A	WASHER;LOCKING	RONDELLE	6					
5	2713-1059A	CUTTER;SIDE(R.H)	COIN DE GODET DROIT	1					
6	2713-1060A	CUTTER;SIDE(L.H)	COIN DE GODET GAUCHE	1					
7	S0574661	BOLT M24X3.0X65	BOULON A 6 PANS	10					
8	S4013333	NUT	ECROU	10					
9	2114-1831A	WASHER;HARDEN	RONDELLE	10					

DATE	AUG. 28, 2009
3rd EDITION	

Fig. 6570 BOOM - 5.3m ENSEMBLE FLECHE

Serial No. ;

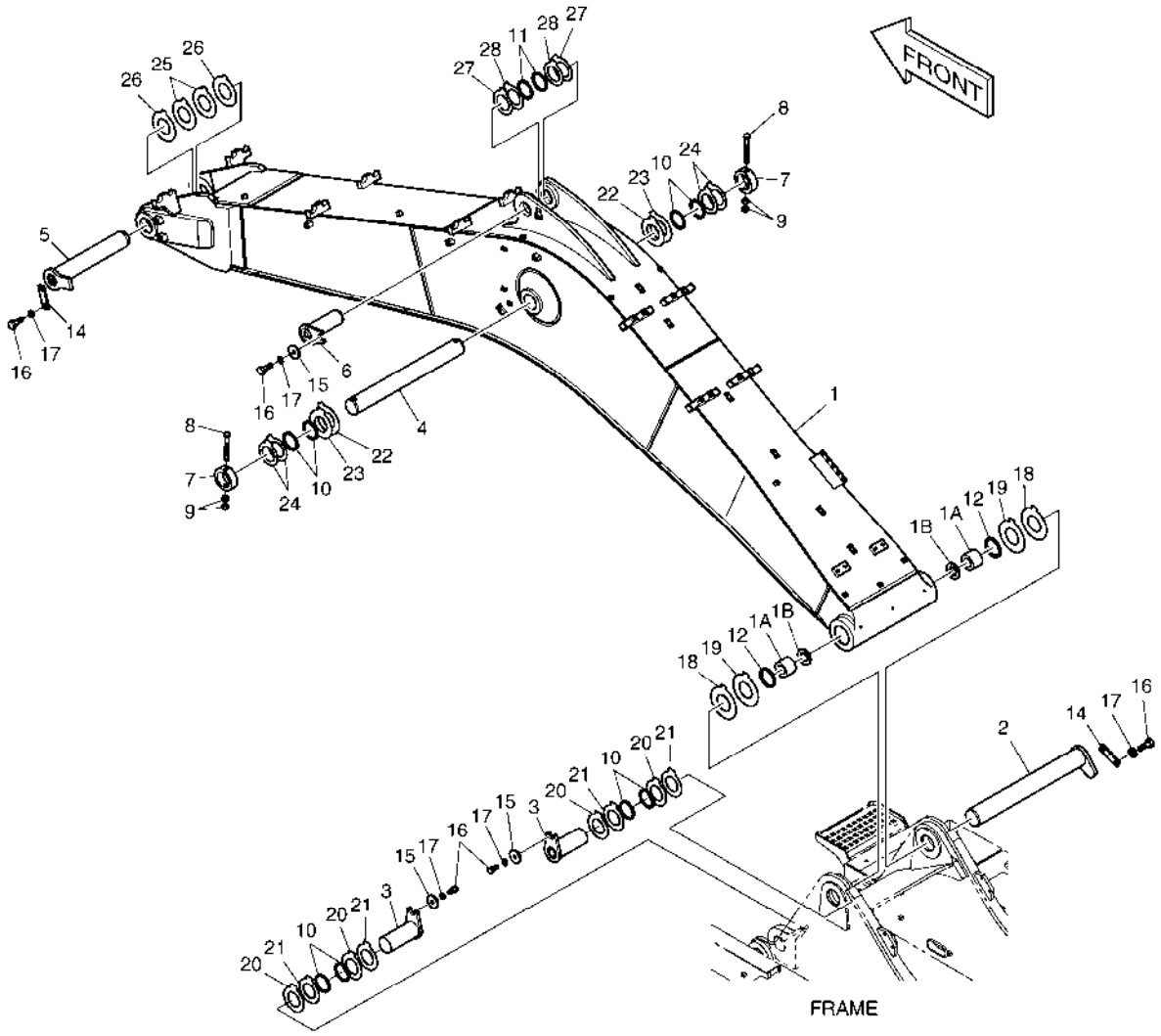

DATE	AUG. 28, 2009
3rd EDITION	

Fig. 6570 BOOM - 5.3m ENSEMBLE FLECHE

Serial No. ;

Key No.	Part No.	Description	Description	Q'ty	S.C	Serial No.	ICA	Replaceable part	
								Part No.	Q'ty
6570 --	K1018635A	BOOM ASS'Y	ENSEMBLE FLECHE	-	D				
1	K1018637	BOOM;MACH 5.3m	BOOM;MACH	1		5001-5033	I	K1018637A	1
	K1018637A	BOOM;MACH 5.3m	BOOM;MACH	1		5034-5109	I	K1018637B	1
	K1018637B	BOOM;MACH 5.3m	BOOM;MACH	1		5110-			
1A	K1010027	. BUSHING	. DOUILLE	2					
1B	2180-1106BD14	. SEAL;DUST	. PARE-POUSSIERES	2					
2	K1010021	PIN;BOOM FOOT	GOUPILLE	1		5001-5105	I	K1010021A	1
	K1010021A	PIN;BOOM FOOT	GOUPILLE	1		5106-			
3	K1011056	PIN;BOOM CYL HEAD	GOUPILLE	2		5001-5105	I	K1011056A	2
	K1011056A	PIN;BOOM CYL HEAD	GOUPILLE	2		5106-			
4	K1010023	PIN;BOOM CENTER	GOUPILLE	1		5001-5105	I	K1010023B	1
	K1010023B	PIN;BOOM CENTER	GOUPILLE	1		5106-			
5	2123-2185E	PIN	GOUJON	1		5001-5105	I	2123-2185G	1
	2123-2185G	PIN	GOUPILLE	1		5106-			
6	2123-2187C	PIN	GOUJON	1		5001-5105	I	2123-2187E	1
	2123-2187E	PIN	GOUPILLE	1		5106-			
7	2116-1527A	STOPPER	TAQUET D'ARRET	2					
8	S0571866	BOLT M20X2.5X170	BOULON A 6 PANS	2					
9	S4013133	NUT	ECROU	4					
10	2180-1106BD6	SEAL;DUST	PARE-POUSSIERES	8					
11	2180-1106BD24	SEAL;DUST	PARE-POUSSIERES	2					
12	2180-1106BD14	SEAL;DUST	PARE-POUSSIERES	2					
14	621-03710A	PLATE;STOPPER	PLAQUE	2					
15	2116-1060D6	STOPPER	TAQUET D'ARRET	3					
16	S0521366	BOLT	BOULON A 6 PANS	7					
17	S5102903	WASHER	RONDELLE	7					
18	DS7752046	SHIM	CALE	2					
19	DS7752066	SHIM 2.0t	CALE	2					
20	DS7752061	SHIM 1.0t	CALE	4					
21	DS7752062	SHIM 1.6t	CALE	4					
22	DS7752015	SHIM	CALE	2					
23	DS7752016	SHIM	CALE	2					
24	DS7752014	SHIM	CALE	4					
25	DS7752017	SHIM	CALE	2					
26	DS7752018	SHIM	CALE	2					
27	DS7752012	SHIM	CALE	2					
28	DS7752013	SHIM	CALE	2					

DATE	AUG. 28, 2009
3rd EDITION	

Fig. 6580 BOOM PIPING - BOOM 5.3m
CONDUITES DE FLECHE

Serial No. ;

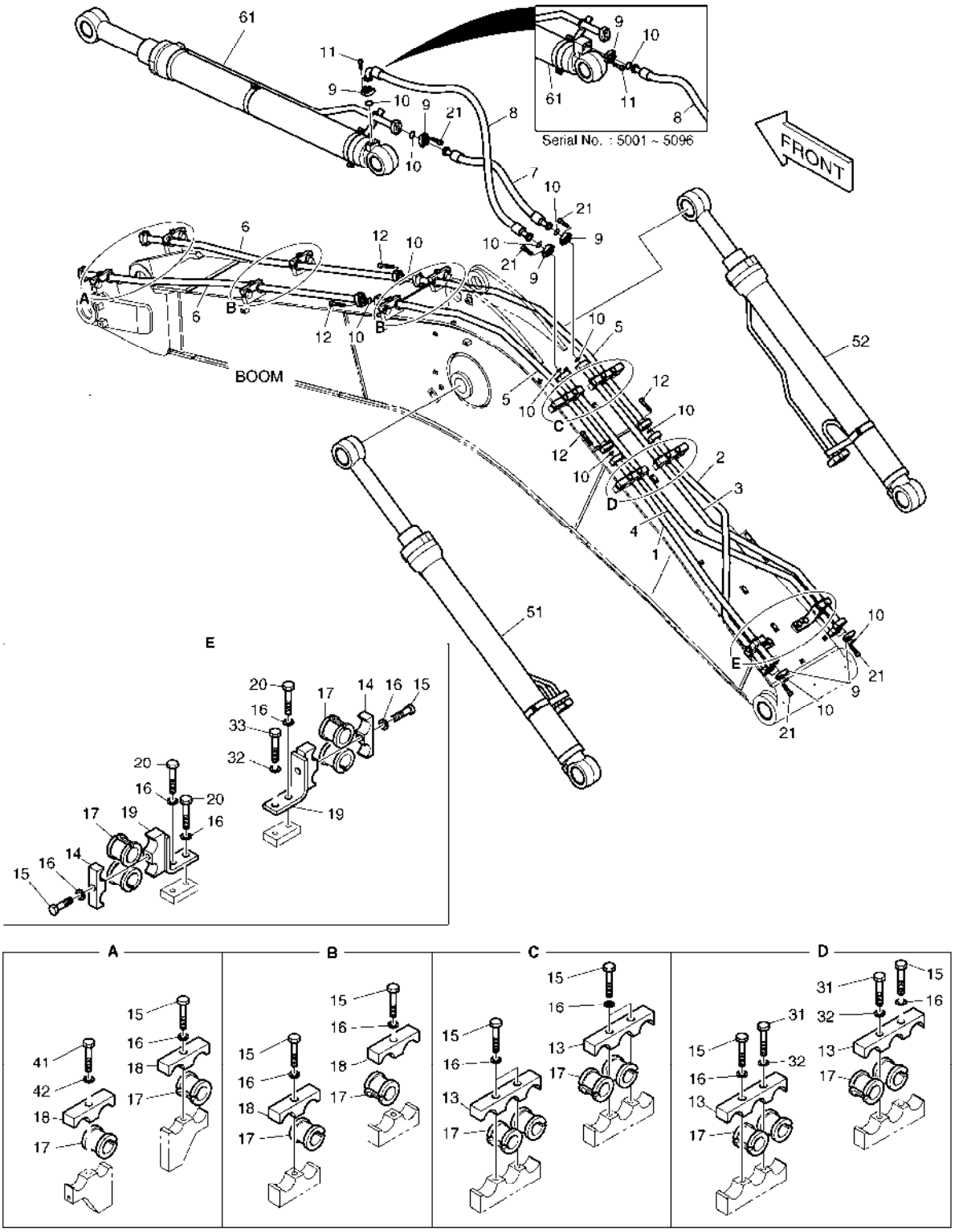

DATE	AUG. 28, 2009
3rd EDITION	

Fig. 6580 BOOM PIPING - BOOM 5.3m CONDUITES DE FLECHE

Serial No. ;

Key No.	Part No.	Description	Description	Q'ty	S.C	Serial No.	ICA	Replaceable part	
								Part No.	Q'ty
6580 --	K1023248	BOOM PIPING	CONDUITES DE FLECHE	-	D				
1	K1011029A	PIPE	TUYAU	1					
2	K1011030A	PIPE	TUYAU	1					
3	K1023308	PIPE	TUYAU	1					
4	K1023309	PIPE	TUYAU	1					
5	K1023310	PIPE	TUYAU	2					
6	K1011034A	PIPE	TUYAU	2					
7	DS2038210	HOSE	TUYAU FLEXIBLE	1					
8	DS2038210	HOSE	TUYAU FLEXIBLE	1		5001-5096			
	DS2040650	HOSE	TUYAU FLEXIBLE	1		5097-			
9	2181-9078	FLANGE	BRIDE	16					
10	2180-1026D19	O-RING	JOINT TORIQUE	12					
11	S2212266	BOLT;SOCKET	BOULON A 6 PANS CREUX	4					
12	S2212666	BOLT	BOULON A 6 PANS CREUX	16					
13	K1010537	CLAMP;PIPE	COLLIER	4					
14	K1010535	CLAMP;PIPE	COLLIER	2					
15	S0565466	BOLT	BOULON A 6 PANS	13					
16	S5102903	WASHER	RONDELLE	16					
17	K1010532	RUBBER;PIPE	CAOUTCHOUC	18					
18	K1010538	CLAMP;PIPE	COLLIER	6					
19	K1010541	BRACKET	SUPPORT	2					
20	S0521366	BOLT	BOULON A 6 PANS	3					
21	S2212466	BOLT;SOCKET M10X1.5X40	BOULON A 6 PANS CREUX	28					
31	S0565466	BOLT	BOULON A 6 PANS	2					
32	S5102903	WASHER	RONDELLE	3					
33	S0521366	BOLT	BOULON A 6 PANS	1					
41	S0565466	BOLT	BOULON A 6 PANS	1					
42	S5102903	WASHER	RONDELLE	1					
51	K1011026	CYLINDER;BOOM(L.H)	VERIN DE FLECHE	1					
52	K1011027	CYLINDER;BOOM(R.H)	VERIN DE FLECHE	1					
61	K1011028	CYLINDER;ARM	VERIN DE BALANCIER	1		5001-5096			
	K1011028A	CYLINDER;ARM	VERIN DE BALANCIER	1		5097-			

DATE	AUG. 28, 2009
3rd EDITION	

Fig. 6590 LUBRICATION PIPING - BOOM 5.3m LUBRIFICATION

Serial No. ;

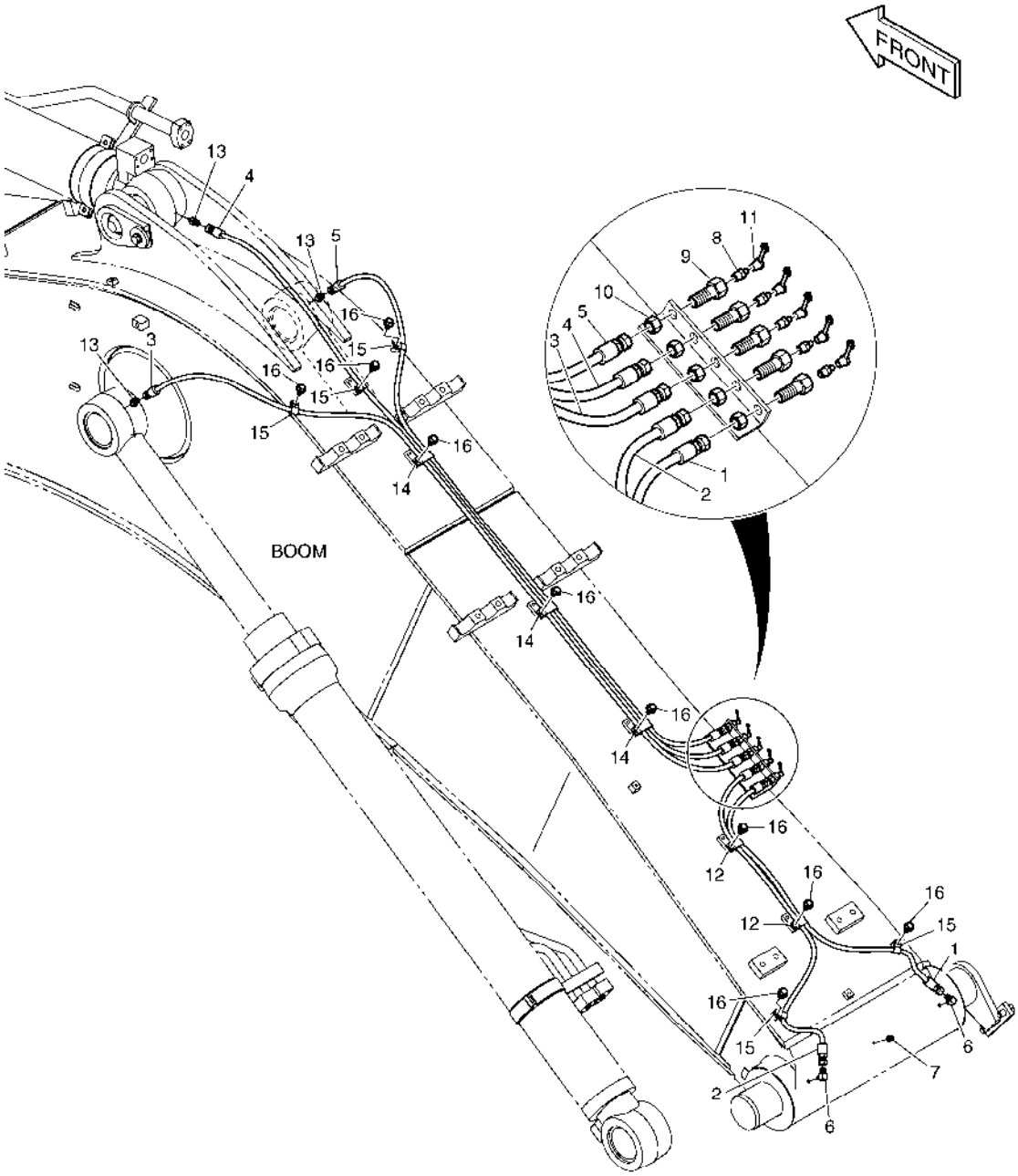

DATE	AUG. 28, 2009
3rd EDITION	

Fig. 6590 LUBRICATION PIPING - BOOM 5.3m LUBRIFICATION

Serial No. ;

Key No.	Part No.	Description	Description	Q'ty	S.C	Serial No.	ICA	Replaceable part	
								Part No.	Q'ty
6590 --	K1023249	LUBRICATION PIPING	LUBRIFICATION	-	D				
1	DS2053886	HOSE	TUYAU FLEXIBLE	1					
2	2184-1045D128	HOSE PF1/4-1080L	TUYAU FLEXIBLE	1					
3	DS2053864	HOSE	TUYAU FLEXIBLE	1					
4	2184-1045D135	HOSE	TUYAU FLEXIBLE	1					
5	DS2053867	HOSE	TUYAU FLEXIBLE	1					
6	2181-1186D12	ELBOW	COUDE	2					
7	S3524403	PLUG	BOUCHON	1					
8	S6710041	NIPPLE;GREASE	GRAISSEUR	5					
9	181-00103	REDUCER	REDUCTEUR	5					
10	121-00006	NUT	ECROU	5					
11	160-00020	CAP;GREASE NIPPLE	CHAPEAU	5					
12	124-00199D5	CLIP	AGRAFE	2					
13	2181-4112	ADAPTER	ADAPTEUR	3					
14	124-00199D4	CLIP	CLIP	3					
15	2124-1353D2	CLIP	CLIP	5					
16	K1001029	BOLT	BOULON A 6 PANS	10					

DATE	AUG. 28, 2009
3rd EDITION	

Fig. 6600 BOOM PIPING - BOOM 5.3m(ONE & TWO WAY) CONDUITES DE FLECHE

Serial No. ;

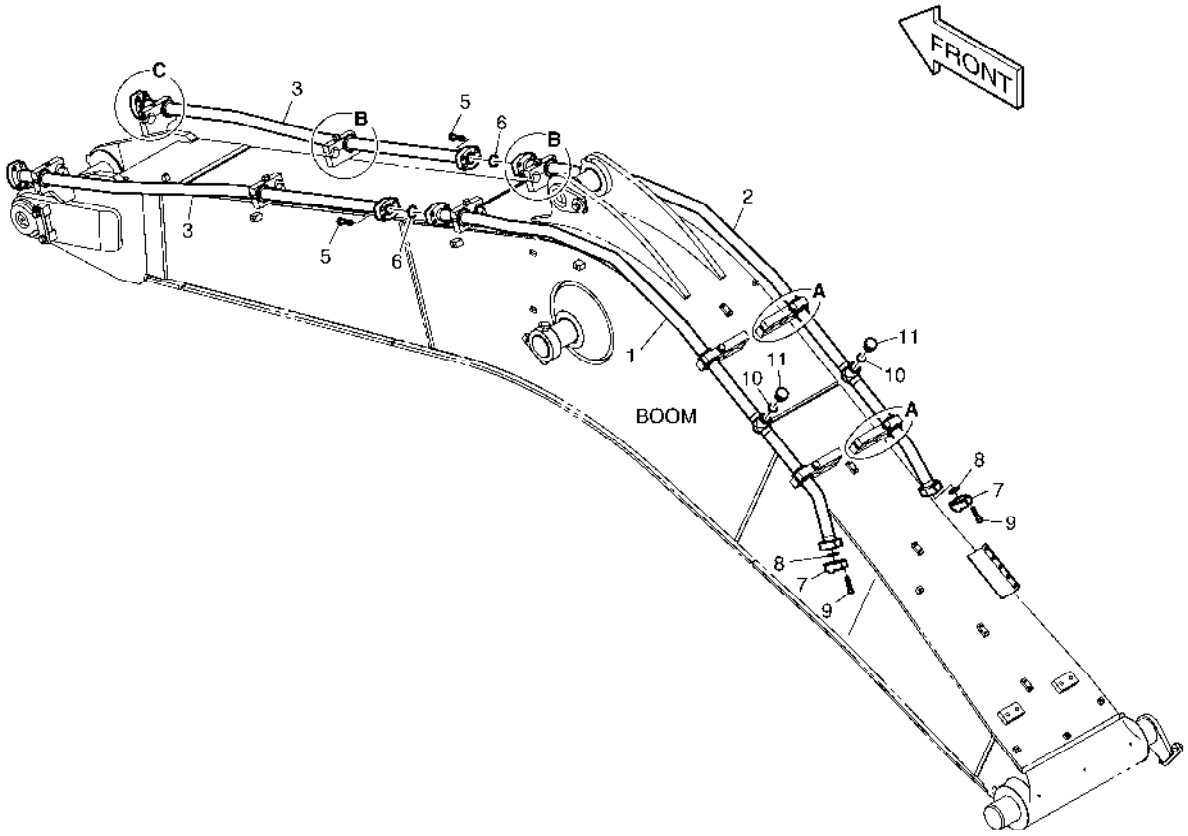

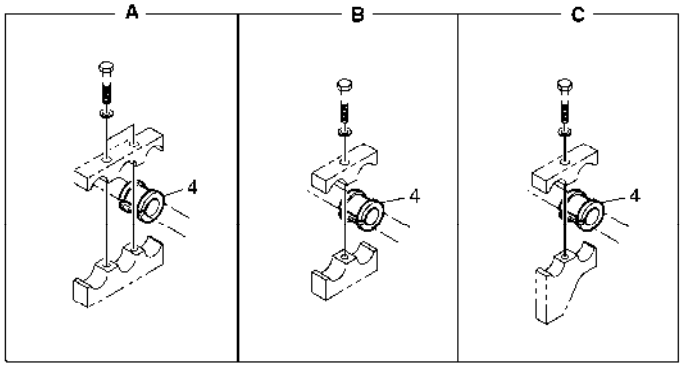

DATE	AUG. 28, 2009
3rd EDITION	

Fig. 6600 BOOM PIPING - BOOM 5.3m(ONE & TWO WAY) CONDUITES DE FLECHE

Serial No. ;

Key No.	Part No.	Description	Description	Q'ty	S.C	Serial No.	ICA	Replaceable part	
								Part No.	Q'ty
6600 --	K1023250	ONE & TWO WAY PIPING	PERCHE ASS'Y D'ARTI	-	D				
1	K1023311	PIPE	TUYAU	1					
2	K1023312	PIPE	TUYAU	1					
3	K1011062	PIPE	TUYAU	2					
4	K1010531	RUBBER	CAOUTCHOUC	10					
5	S2218766	BOLT;SOCKET	BOULON A 6 PANS CREUX	8					
6	2180-1026D23	O-RING	JOINT TORIQUE	2					
7	2181-9081	FLANGE;SPLIT	BRIDE	4					
8	2180-1026D19	O-RING	JOINT TORIQUE	2					
9	S2215666	BOLT;SOCKET	BOULON A 6 PANS CREUX	8					
10	S8000291	O-RING	JOINT TORIQUE	2					
11	2181-1950D9	PLUG	BOUCHON	2					

DATE	AUG. 28, 2009
3rd EDITION	

Fig. 6610 ARM PIPING - LOCK VALVE (BOOM 5.3m) CONDUITES DE BALANCIER

Serial No. ;

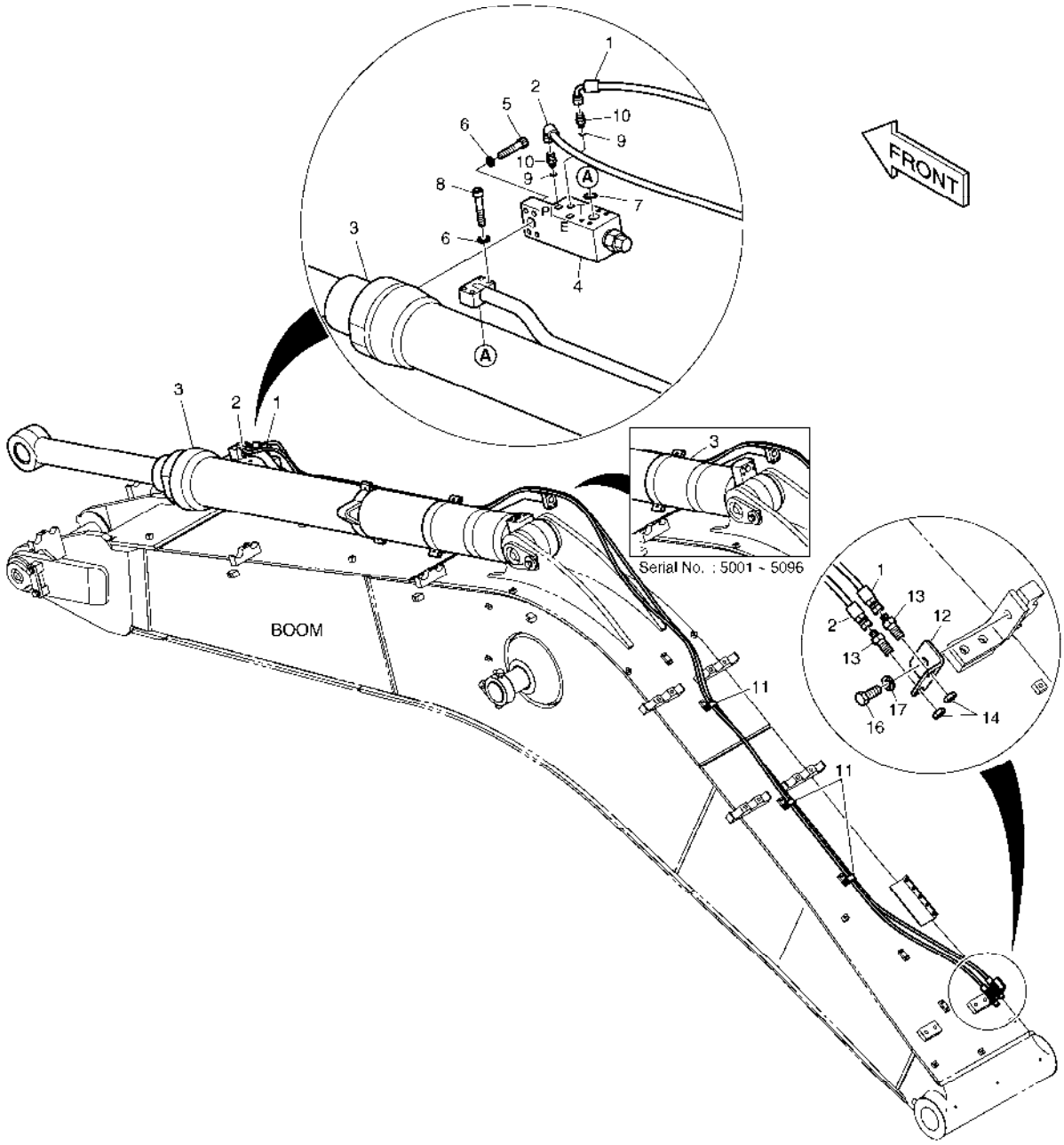

DATE	AUG. 28, 2009
3rd EDITION	

Fig. 6610 ARM PIPING - LOCK VALVE (BOOM 5.3m) CONDUITES DE BALANCIER

Serial No. ;

Key No.	Part No.	Description	Description	Q'ty	S.C	Serial No.	ICA	Replaceable part	
								Part No.	Q'ty
6610 --	K1023255	LOCK VALVE PIPING;ARM	FERMEZ LA TUYAUTERIE A	-	D				
1	2184-1046D225	HOSE	TUYAU FLEXIBLE	1					
2	2184-1046D225	HOSE	TUYAU FLEXIBLE	1					
3	K1011088	CYLINDER;ARM(LOCK V/V)	VERIN DE BALANCIER	1		5001-5096			
	K1011088A	CYLINDER;ARM(LOCK V/V)	VERIN DE BALANCIER	1		5097-			
4	420-00004A	VALVE;LOCK	VANNE	1					
5	S2215766	BOLT;SOCKET M12X1.75X55	BOULON A 6 PANS CREUX	4					
6	S5110703	WASHER;SPRING	RONDELLE ELASTIQUE	8					
7	S8000341	O-RING	JOINT TORIQUE	1					
8	S2215966	BOLT;SOCKET	BOULON A 6 PANS CREUX	4					
9	S8000111	O-RING	JOINT TORIQUE	2					
10	2181-1126D14	ADAPTER	ADAPTEUR	2					
11	124-00199D5	CLIP	AGRAFE	3					
12	K1011074	BRACKET	SUPPORT	1					
13	181-00078D5	ADAPTER	ADAPTEUR	2					
14	121-00010D1	NUT	ECROU	2					
16	S0565066	BOLT	BOULON A 6 PANS	1					
17	S5102903	WASHER	RONDELLE	1					

DATE	AUG. 28, 2009
3rd EDITION	

Fig. 6620 BOOM PIPING - BOOM 5.3m(ROTATING) CONDUITES DE FLECHE

Serial No. ;

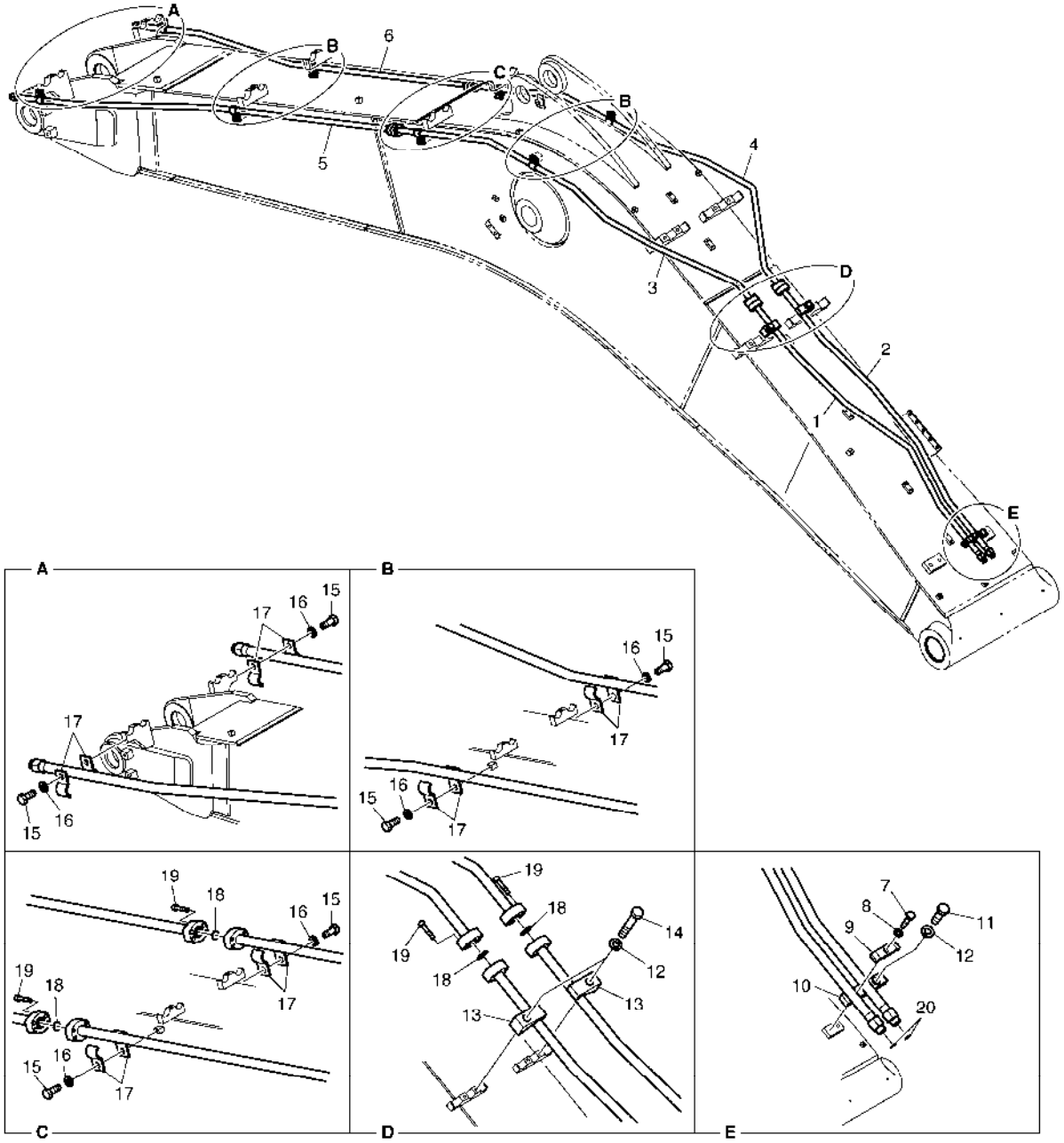

DATE	AUG. 28, 2009
3rd EDITION	

Fig. 6620 BOOM PIPING - BOOM 5.3m(ROTATING) CONDUITES DE FLECHE

Serial No. ;

Key No.	Part No.	Description	Description	Q'ty	S.C	Serial No.	ICA	Replaceable part	
								Part No.	Q'ty
6620 --	K1023251	ROTATION PIPING - 5.3M BOOM	TUYAUTERIE DE ROTATIO	-	D				
1	K1023318	PIPE	TUYAU	1					
2	K1023319	PIPE	TUYAU	1					
3	K1023320	PIPE	TUYAU	1					
4	K1023321	PIPE	TUYAU	1					
5	K1011069	PIPE	TUYAU	1					
6	K1011070	PIPE	TUYAU	1					
7	S0558466	BOLT	BOULON A 6 PANS	1					
8	S5102603	WASHER	RONDELLE ELASTIQUE	1					
9	K1004028	CLAMP;PIPE	COLLIER	1					
10	K1010716	PLATE	PLAQUE	1					
11	S0565266	BOLT	BOULON	1					
12	S5102903	WASHER	RONDELLE	3					
13	K1010717	CLAMP	COLLIER	2					
14	S0566166	BOLT	BOULON	2					
15	S0515266	BOLT	BOULON A 6 PANS	8					
16	S5102703	WASHER;SPRING	RONDELLE ELASTIQUE	8					
17	124-00299A	CLAMP;PIPE	COLLIER	16					
18	2180-1026D30	O-RING	JOINT TORIQUE	4					
19	S2209466	BOLT;SOCKET	BOULON A 6 PANS CREUX	16					
20	S8030081	O-RING	JOINT TORIQUE	2					

DATE	AUG. 28, 2009
3rd EDITION	

Fig. 6630 ARM - 2.0m BALANCIER

Serial No. ;

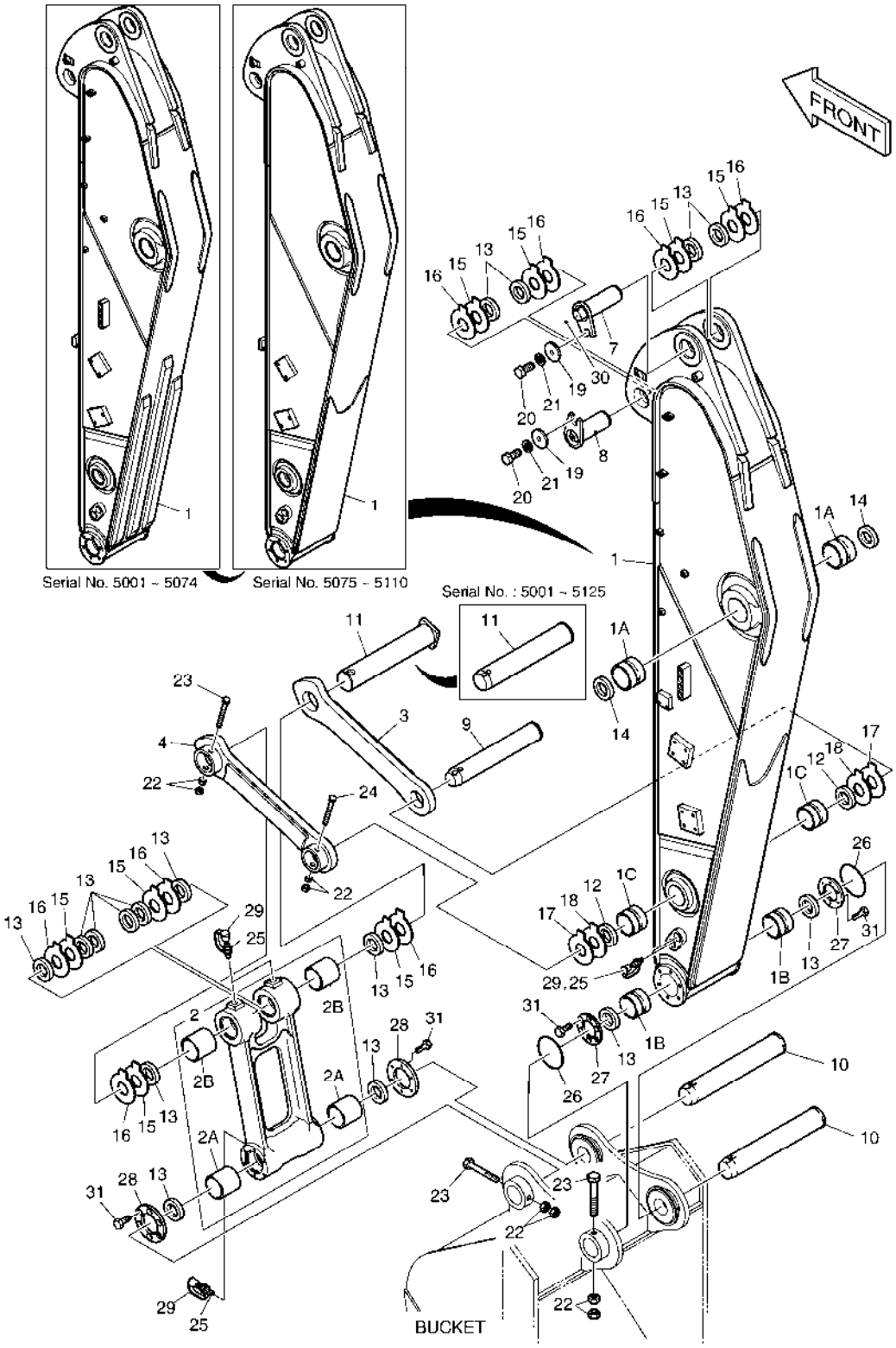

DATE	AUG. 28, 2009
3rd EDITION	

Fig. 6630 ARM - 2.0m BALANCIER

Serial No. ;

Key No.	Part No.	Description	Description	Q'ty	S.C	Serial No.	ICA	Replaceable part Part No.	Q'ty
6630 --	K1018646L	ARM ASS'Y	BALANCIER	-	D	5001-5125			
	230201-00101	ARM ASSY;2.0M_OPT	BALANCIER	-	D	5126-			
1	K1018647A	ARM SUB ASS'Y-2.0m	ENSEMBLE BALANCIER	1		5001-5074			
	K1018647C	ARM SUB ASS'Y-2.0m	ENSEMBLE BALANCIER	1		5075-5105	I	K1018647G	1
	K1018647G	ARM SUB ASS'Y-2.0m	ENSEMBLE BALANCIER	1		5106-5110			
	K1018647H	ARM SUB ASS'Y-2.0m	ENSEMBLE BALANCIER	1		5111-			
1A	110-00252	. BUSHING	. DOUILLE	2					
1B	K1000733	. BUSHING	. DOUILLE	2					
1C	K1000734	. BUSHING	. DOUILLE	2					
2	K1002294	PUSH LINK ASS`Y	ENSEMBLE DE ARTICULAT	1					
2A	110-00249	. BUSHING	. DOUILLE	2					
2B	K1000735	. BUSHING	. DOUILLE	2					
3	K1010024	LINK;GUIDE(R.H)	ARTICULATION	1		5001-5108	I	K1010024A	1
	K1010024A	LINK;GUIDE(R.H)	ARTICULATION	1		5109-5125	Y	101540-00006	1
	101540-00006	LINK,GUIDE(R.H)	ARTICULATION	1		5126-			
4	K1010025	LINK;GUIDE(L.H)	ARTICULATION	1		5001-5108	I	K1010025A	1
	K1010025A	LINK;GUIDE(L.H)	ARTICULATION	1		5109-			
7	K1002128	PIN	GOUPILLE	1		5001-5105			
	2123-2187E	PIN	GOUPILLE	1		5106-5110	I	K1046927	1
	K1046927	PIN	GOUPILLE	1		5111-			
8	K1002130	PIN	GOUPILLE	1		5001-5105			
	2123-2182E	PIN	GOUPILLE	1		5106-5110	I	K1002130A	1
	K1002130A	PIN	GOUPILLE	1		5111-			
9	K1007255	PIN	GOUPILLE	1		5001-5105	I	K1007255A	1
	K1007255A	PIN	GOUPILLE	1		5106-			
10	2123-2192C	PIN	GOUJON	2		5001-5105	I	2123-2192E	2
	2123-2192E	PIN	GOUPILLE	2		5106-			
11	K1007256	PIN	GOUPILLE	1		5001-5105	I	K1007256A	1
	K1007256A	PIN	GOUPILLE	1		5106-5125	Y	120501-00130	1
	120501-00130	PIN;BUCKET CYL ROD	GOUPILLE	1		5126-			
12	2180-1106BD4	SEAL;DUST	PARE-POUSSIERES	2					
13	2180-1106BD24	SEAL;DUST	PARE-POUSSIERES	14					
14	2180-1106BD6	SEAL;DUST	PARE-POUSSIERES	2					
15	DS7752012	SHIM	CALE	8					
16	DS7752013	SHIM	CALE	8					
17	DS7752006	SHIM	CALE	2					
18	DS7752007	SHIM	CALE	2					
19	2116-1060D6	STOPPER	TAQUET D'ARRET	2					

DATE	AUG. 28, 2009
3rd EDITION	

Fig. 6630 ARM - 2.0m BALANCIER

Serial No. ;

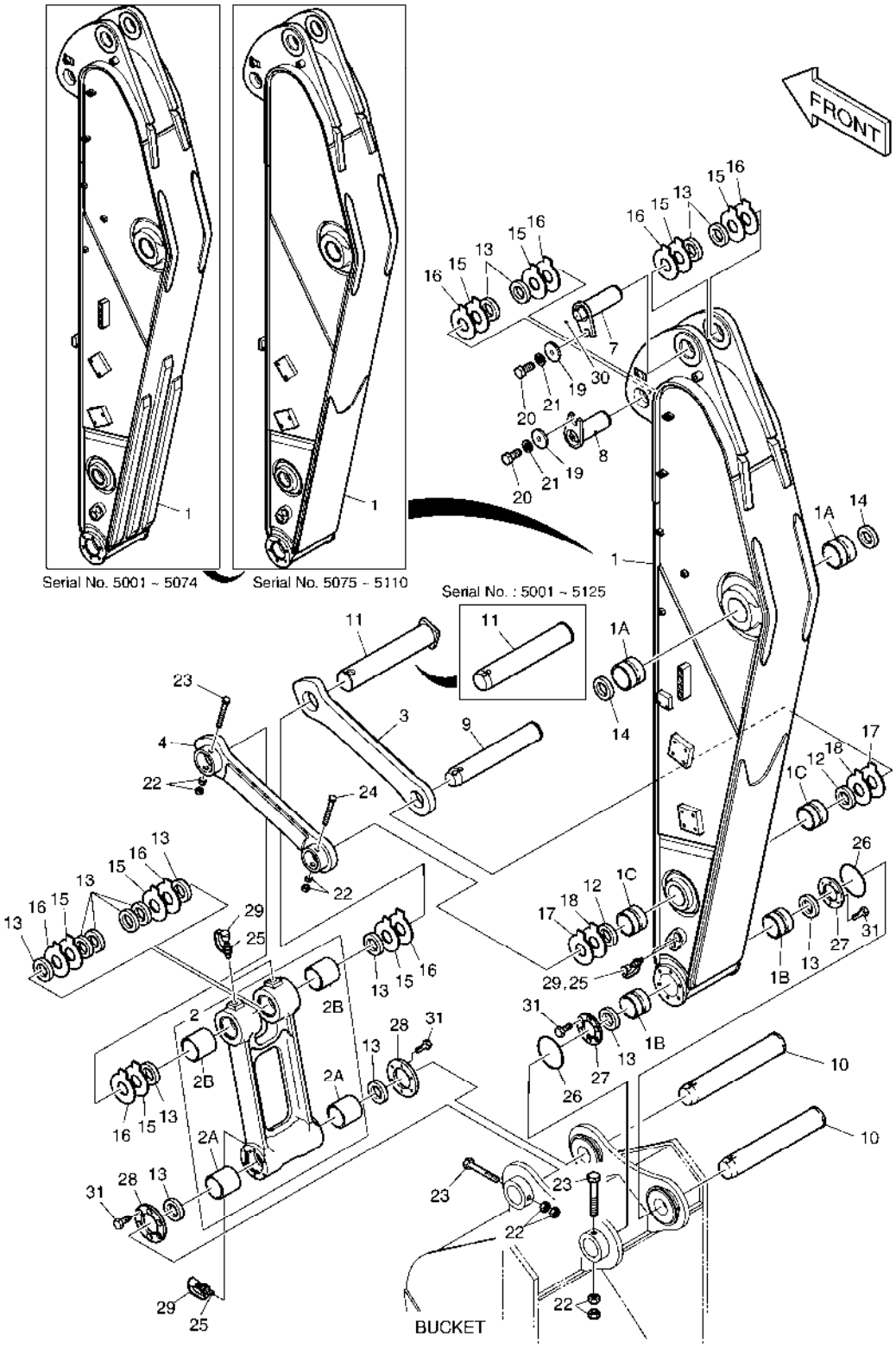

DATE	AUG. 28, 2009
3rd EDITION	

Fig. 6630 ARM - 2.0m BALANCIER

Serial No. ;

Key No.	Part No.	Description	Description	Q'ty	S.C	Serial No.	ICA	Replaceable part	
								Part No.	Q'ty
6630 -20	S0521366	BOLT	BOULON A 6 PANS	2					
21	S5102903	WASHER	RONDELLE	2					
22	S4012933	NUT	ECROU	8					
23	DS0001084	BOLT	BOULON A 6 PANS	3					
24	DS0001083	BOLT	BOULON A 6 PANS	1					
25	S6710041	NIPPLE;GREASE	GRAISSEUR	5					
26	180-00077D5	O-RING	JOINT TORIQUE	2					
27	K1000911	SPACER	BAGUE D'ECARTEMENT	2					
28	K1000912A	SPACER	BAGUE D'ECARTEMENT	2		5001-5108	I	K1000912B	2
	K1000912B	SPACER	BAGUE D'ECARTEMENT	2		5109-			
29	160-00020	CAP;GREASE NIPPLE	CHAPEAU	5					
30	2181-1116D1	PLUG	BOUCHON	1		5001-5074			
31	S0712066	BOLT	BOULON A 6 PANS	24					

DATE	AUG. 28, 2009
3rd EDITION	

Fig. 6640 ARM PIPING - ARM 2.0m CONDUITES DE BALANCIER

Serial No. ;

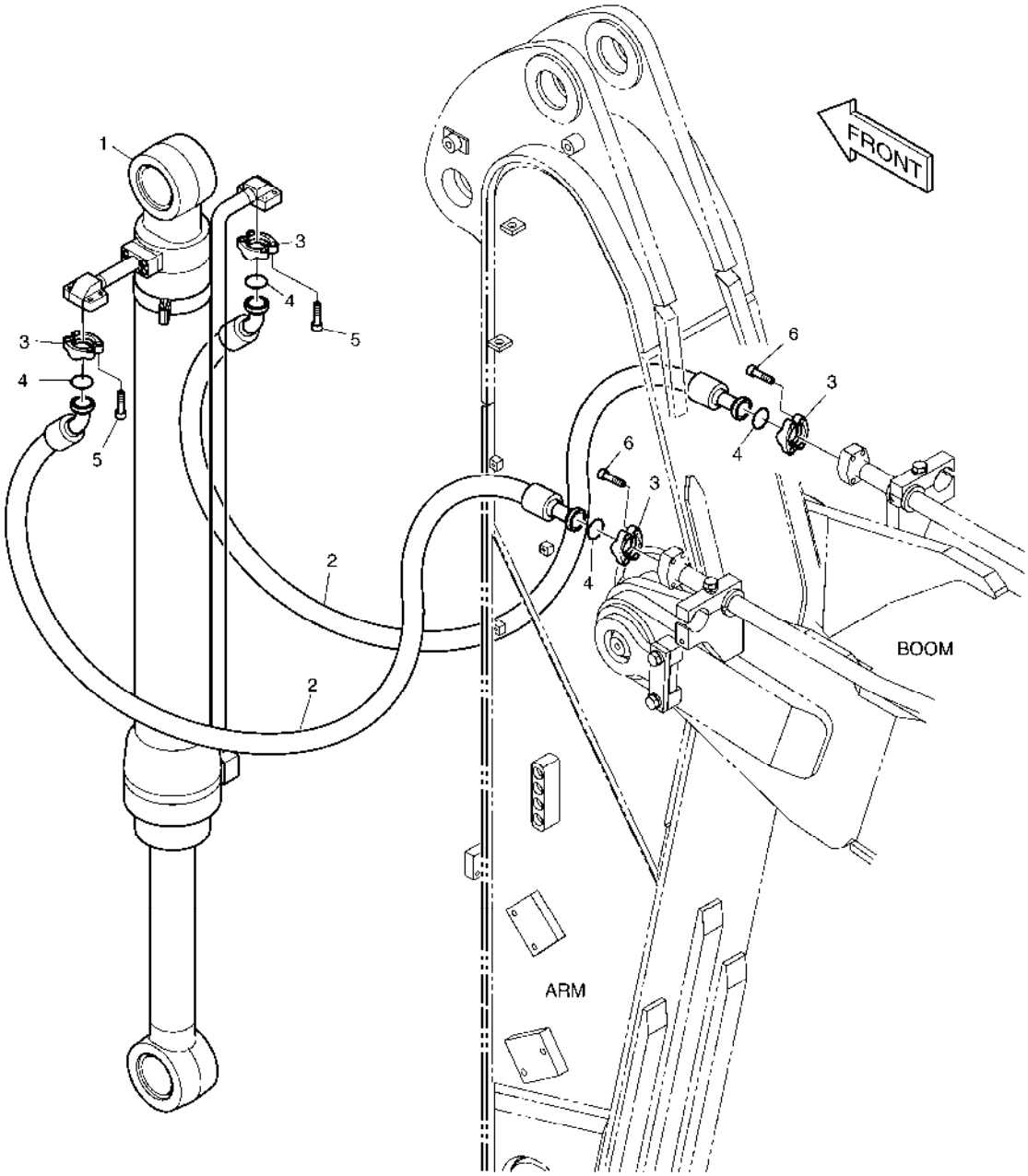

DATE	AUG. 28, 2009
3rd EDITION	

Fig. 6640 ARM PIPING - ARM 2.0m CONDUITES DE BALANCIER

Serial No. ;

Key No.	Part No.	Description	Description	Q'ty	S.C	Serial No.	ICA	Replaceable part	
								Part No.	Q'ty
6640 --	K1023263A	ARM PIPING	CONDUITES DE BALANCIE	-	D				
1	K1024889	CYLINDER;BUCKET	VERIN DE GODET	1		5001-5086	I	K1024889A	1
	K1024889A	CYLINDER;BUCKET	VERIN DE GODET	1		5087-			
2	DS2039119	HOSE	TUYAU FLEXIBLE	2					
3	2181-9078	FLANGE	BRIDE	8					
4	2180-1026D19	O-RING	JOINT TORIQUE	4					
5	S2212266	BOLT;SOCKET	BOULON A 6 PANS CREUX	8					
6	S2212466	BOLT;SOCKET M10X1.5X40	BOULON A 6 PANS CREUX	8					

DATE	AUG. 28, 2009
3rd EDITION	

Fig. 6650 LUBRICATION PIPING - ARM 2.0m LUBRIFICATION

Serial No. ; 5001 ~ 5074

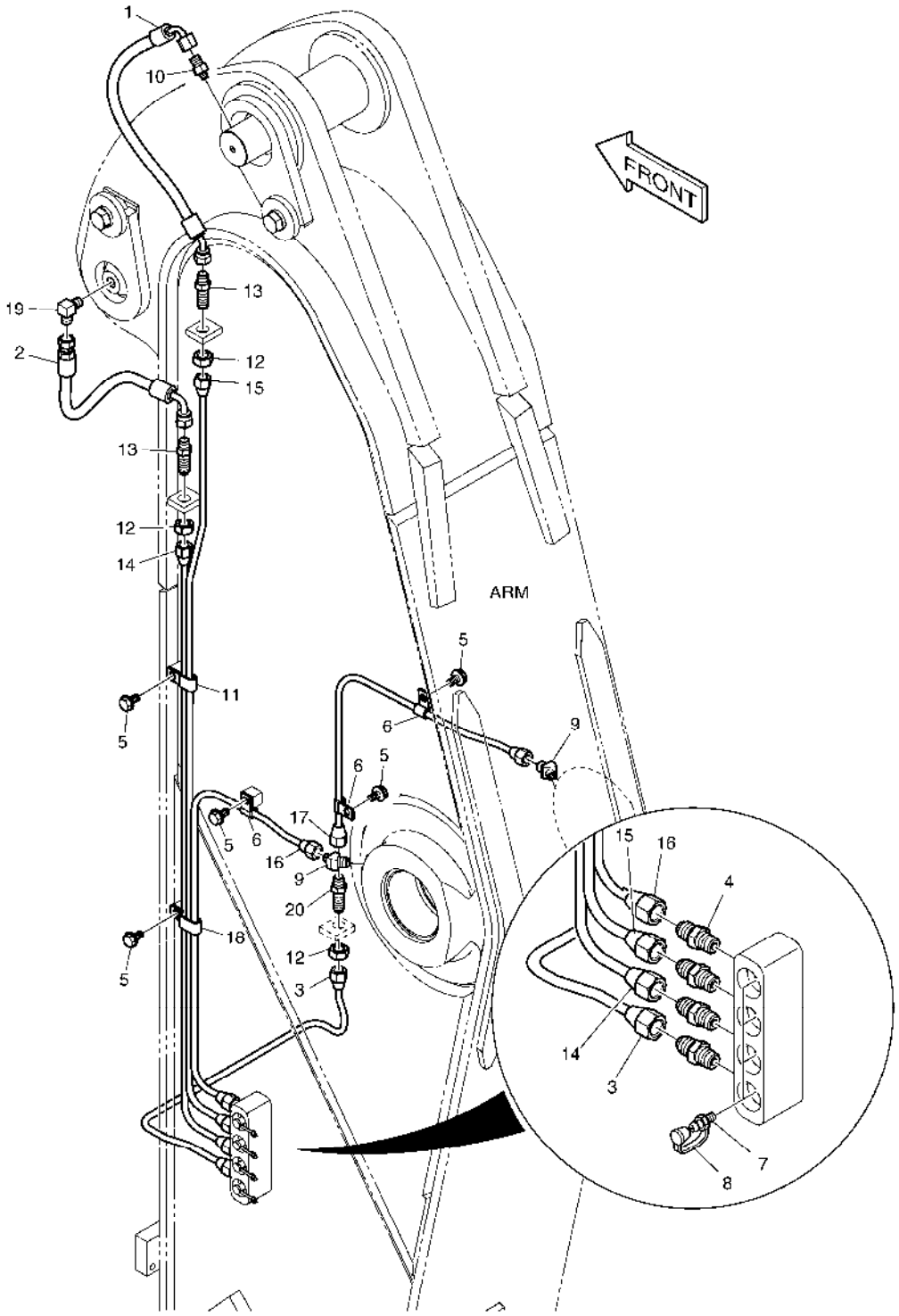

DATE	AUG. 28, 2009
3rd EDITION	

Fig. 6650 LUBRICATION PIPING - ARM 2.0m LUBRIFICATION

Serial No. ; 5001 ~ 5074

Key No.	Part No.	Description	Description	Q'ty	S.C	Serial No.	ICA	Replaceable part	
								Part No.	Q'ty
6650 --	K1023264	LUBRICATION PIPING-ARM	LUBRIFICATION	-	D	5001-5074			
1	DS2058284	HOSE	TUYAU FLEXIBLE	1					
2	2184-1036D11	HOSE	TUYAU FLEXIBLE	1					
3	K1023322	PIPE	TUYAU	1					
4	2181-1184	ADAPTER	ADAPTEUR	4					
5	K1001029	BOLT	BOULON A 6 PANS	5					
6	DS2802023	CLIP	CLIP	3					
7	S6710041	NIPPLE;GREASE	GRAISSEUR	4					
8	160-00020	CAP;GREASE NIPPLE	CHAPEAU	4					
9	K1010730	ELBOW	COUDE	2					
10	2181-4112	ADAPTER	ADAPTEUR	1					
11	DS2805007	CLIP	CLIP	1					
12	S4032833	NUT	ECROU	3					
13	2181-1923D12	ADAPTER	ADAPTEUR	2					
14	K1024916	PIPE	TUYAU	1					
15	K1024917	PIPE	TUYAU	1					
16	K1023323	PIPE	TUYAU	1					
17	K1023324	PIPE	TUYAU	1					
18	DS2805008	CLIP	CLIP	1					
19	2181-1111D11	ELBOW	COUDE	1					
20	DS2225009	ADAPTER	ADAPTEUR	1					

DATE	AUG. 28, 2009
3rd EDITION	

Fig. 6651 LUBRICATION PIPING - ARM 2.0m LUBRIFICATION

Serial No. ; 5111 ~

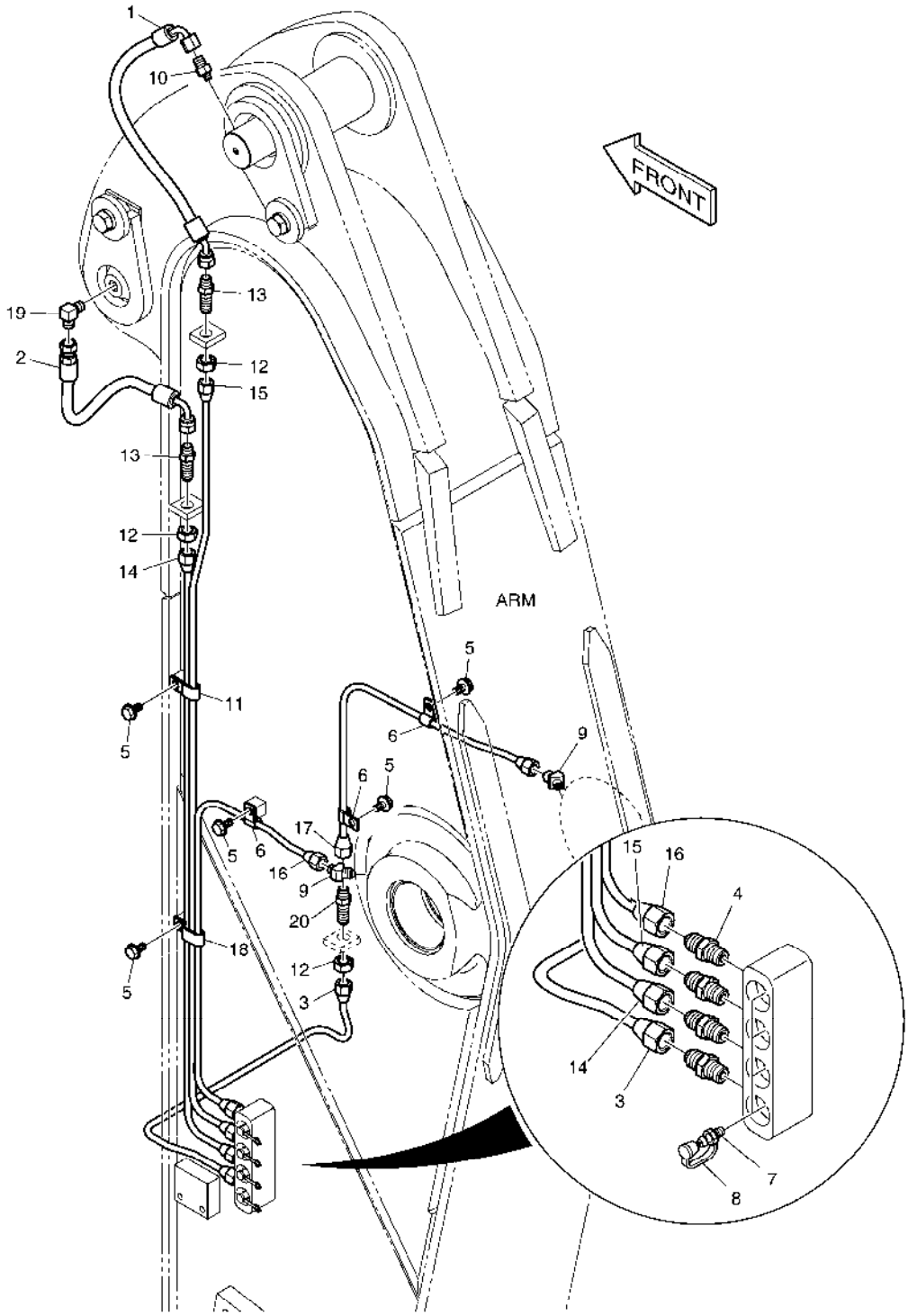

DATE	AUG. 28, 2009
3rd EDITION	

Fig. 6651 LUBRICATION PIPING - ARM 2.0m LUBRIFICATION

Serial No. ; 5111 ~

Key No.	Part No.	Description	Description	Q'ty	S.C	Serial No.	ICA	Replaceable part	
								Part No.	Q'ty
6651 --	K1023264A	LUBRICATION PIPING-ARM	LUBRIFICATION	-	D	5111-			
1	DS2058284	HOSE	TUYAU FLEXIBLE	1					
2	2184-1036D11	HOSE	TUYAU FLEXIBLE	1					
3	K1023322A	PIPE	TUYAU	1					
4	2181-1184	ADAPTER	ADAPTEUR	4					
5	K1001029	BOLT	BOULON A 6 PANS	5					
6	DS2802023	CLIP	CLIP	3					
7	S6710041	NIPPLE;GREASE	GRAISSEUR	4					
8	160-00020	CAP;GREASE NIPPLE	CHAPEAU	4					
9	K1010730	ELBOW	COUDE	2					
10	2181-4112	ADAPTER	ADAPTEUR	1					
11	DS2805007	CLIP	CLIP	1					
12	S4032833	NUT	ECROU	3					
13	2181-1923D12	ADAPTER	ADAPTEUR	2					
14	K1024916A	PIPE	TUYAU	1					
15	K1024917A	PIPE	TUYAU	1					
16	K1023323A	PIPE	TUYAU	1					
17	K1023324A	PIPE	TUYAU	1					
18	DS2805008	CLIP	CLIP	1					
19	2181-1111D11	ELBOW	COUDE	1					
20	DS2225009	ADAPTER	ADAPTEUR	1					

DATE	AUG. 28, 2009
3rd EDITION	

Fig. 6660 ARM PIPING - ARM 2.0m(ONE & TWO WAY) CONDUITES DE BALANCIER

Serial No. ;

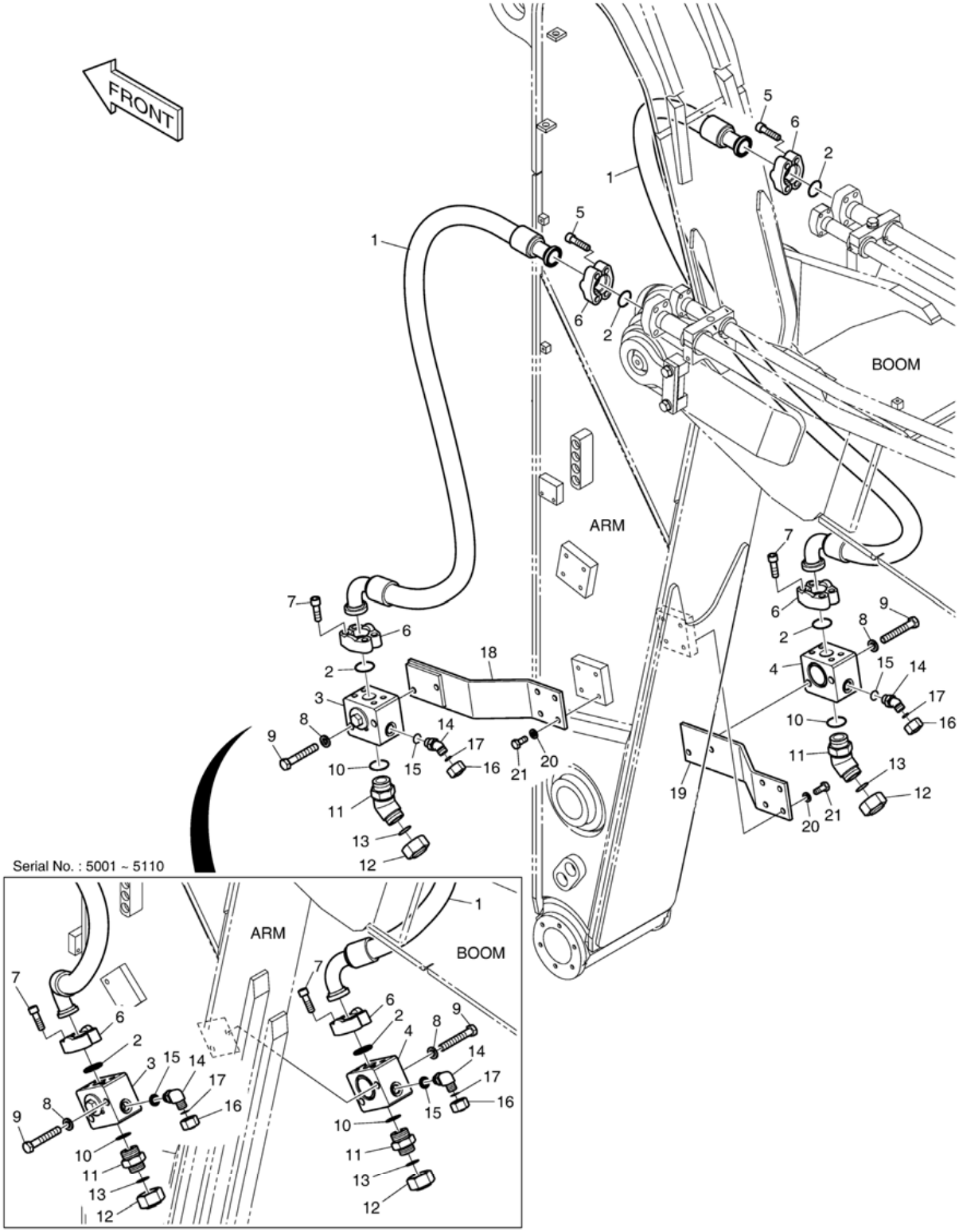

DATE	AUG. 28, 2009
3rd EDITION	

Fig. 6660 ARM PIPING - ARM 2.0m(ONE & TWO WAY) CONDUITES DE BALANCIER

Serial No. ;

Key No.	Part No.	Description	Description	Q'ty	S.C	Serial No.	ICA	Replaceable part	
								Part No.	Q'ty
6660 --	K1023268A	ONE & TWO WAY PIPING(2.0M AI	PERCHE ASS'Y D'ARTI	-	D				
1	2184-1100D91	HOSE 2-1 1/4 6000PSI-2000L	TUYAU FLEXIBLE	2		5001-5110			
	DS2040495	HOSE	TUYAU FLEXIBLE	2		5111-			
2	2180-1026D23	O-RING	JOINT TORIQUE	4					
3	420-00508B	VALVE;STOP(L.H)	VANNE	1					
4	420-00515B	VALVE;STOP(R.H)	VANNE	1					
5	S2218766	BOLT;SOCKET	BOULON A 6 PANS CREUX	8					
6	2181-9086	FLANGE;SPLIT	FLASQUE EN DEUX PARTIE	8					
7	S2218566	BOLT;SOCKET	BOULON A 6 PANS CREUX	8					
8	S5102903	WASHER	RONDELLE	4					
9	S0566266	BOLT	BOULON A 6 PANS	4					
10	S8000381	O-RING	JOINT TORIQUE	2					
11	2181-4133D35	ADAPTER	ADAPTEUR	2		5001-5110			
	2181-2816D3	ELBOW	COUDE	2		5111-			
12	2181-2817D3	CAP	CHAPEAU	2					
13	2180-1026D37	O-RING	JOINT TORIQUE	2					
14	2181-2815D3	ELBOW	COUDE	2		5001-5110			
	2181-2816D4	ELBOW	COUDE	2		5111-			
15	S8000181	O-RING	JOINT TORIQUE	2					
16	2181-2817D4	CAP	CHAPEAU	2					
17	S8030081	O-RING	JOINT TORIQUE	2					
18	K1045048	BRACKET;L.H	SUPPORT	1		5111-			
19	K1045127	BRACKET;R.H	SUPPORT	1		5111-			
20	S5102703	WASHER;SPRING	RONDELLE ELASTIQUE	8		5111-			
21	S0515266	BOLT	BOULON A 6 PANS	8		5111-			

DATE	AUG. 28, 2009
3rd EDITION	

Fig. 6670 ARM PIPING - ARM 2.0m(QUICK CLAMP) CONDUITES DE BALANCIER

Serial No. ;

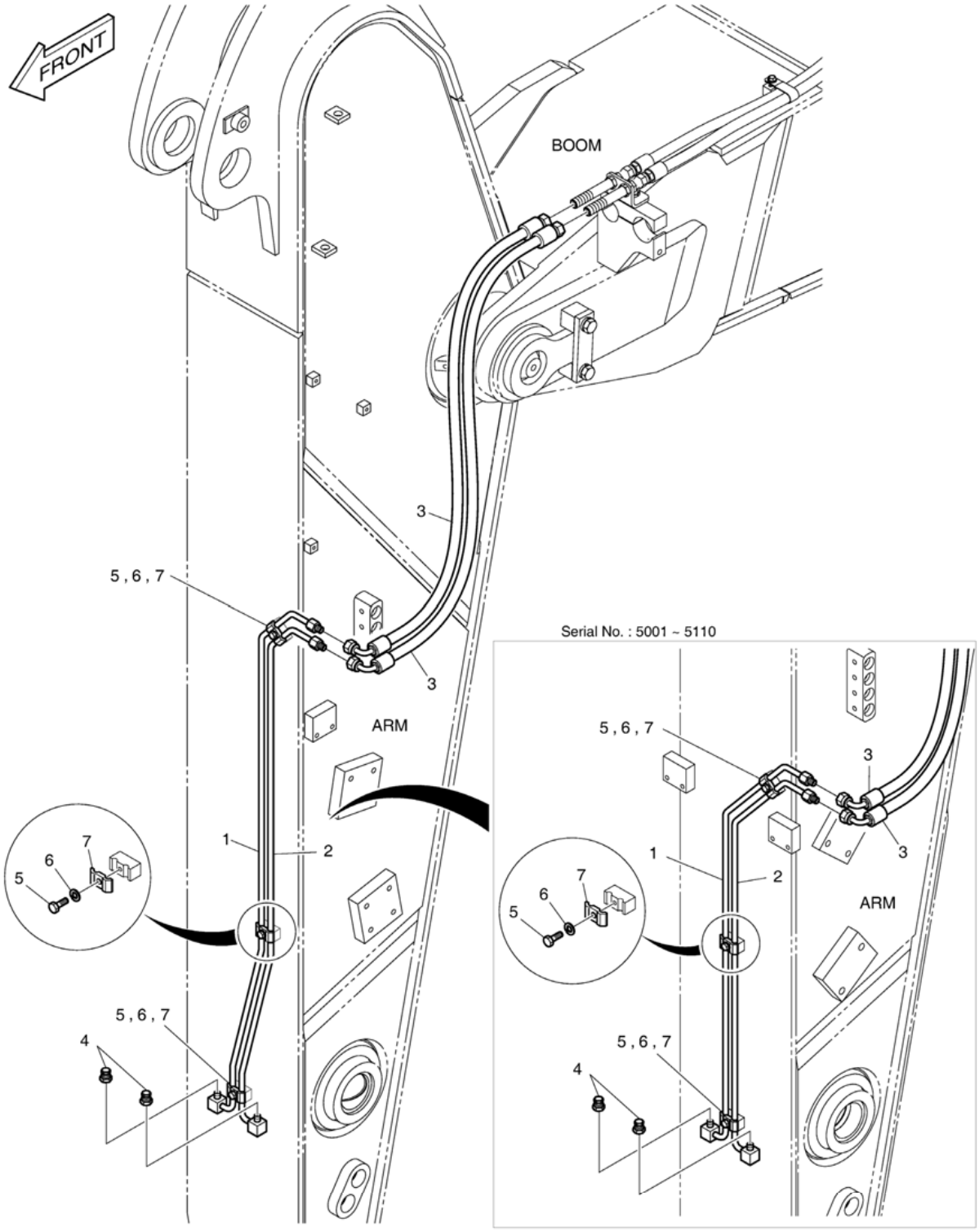

DATE	AUG. 28, 2009
3rd EDITION	

Fig. 6670 ARM PIPING - ARM 2.0m(QUICK CLAMP) CONDUITES DE BALANCIER

Serial No. ;

Key No.	Part No.	Description	Description	Q'ty	S.C	Serial No.	ICA	Replaceable part	
								Part No.	Q'ty
6670 --	K1023266A	ARM PIPING-QUICK CLAMP	CONDUITES DE BALANCIE	-	D				
1	K1026136	PIPE	TUYAU	1		5001-5110			
	K1026136A	PIPE	TUYAU	1		5111-			
2	K1026137	PIPE	TUYAU	1		5001-5110			
	K1026137A	PIPE	TUYAU	1		5111-			
3	DS2055847	HOSE	TUYAU FLEXIBLE	2		5001-5110			
	DS2055861	HOSE	TUYAU FLEXIBLE	2		5111-			
4	2181-2820D1	PLUG	BOUCHON	2					
5	S0508866	BOLT	BOULON A 6 PANS	3					
6	S5102503	WASHER	RONDELLE ELASTIQUE	3					
7	K1004011	CLAMP;PIPE	FIXATION DE TUYAU	3					

DATE	AUG. 28, 2009
3rd EDITION	

Fig. 6680 ARM PIPING - ARM 2.0m(CLAMSHELL) CONDUITES DE BALANCIER

Serial No. ;

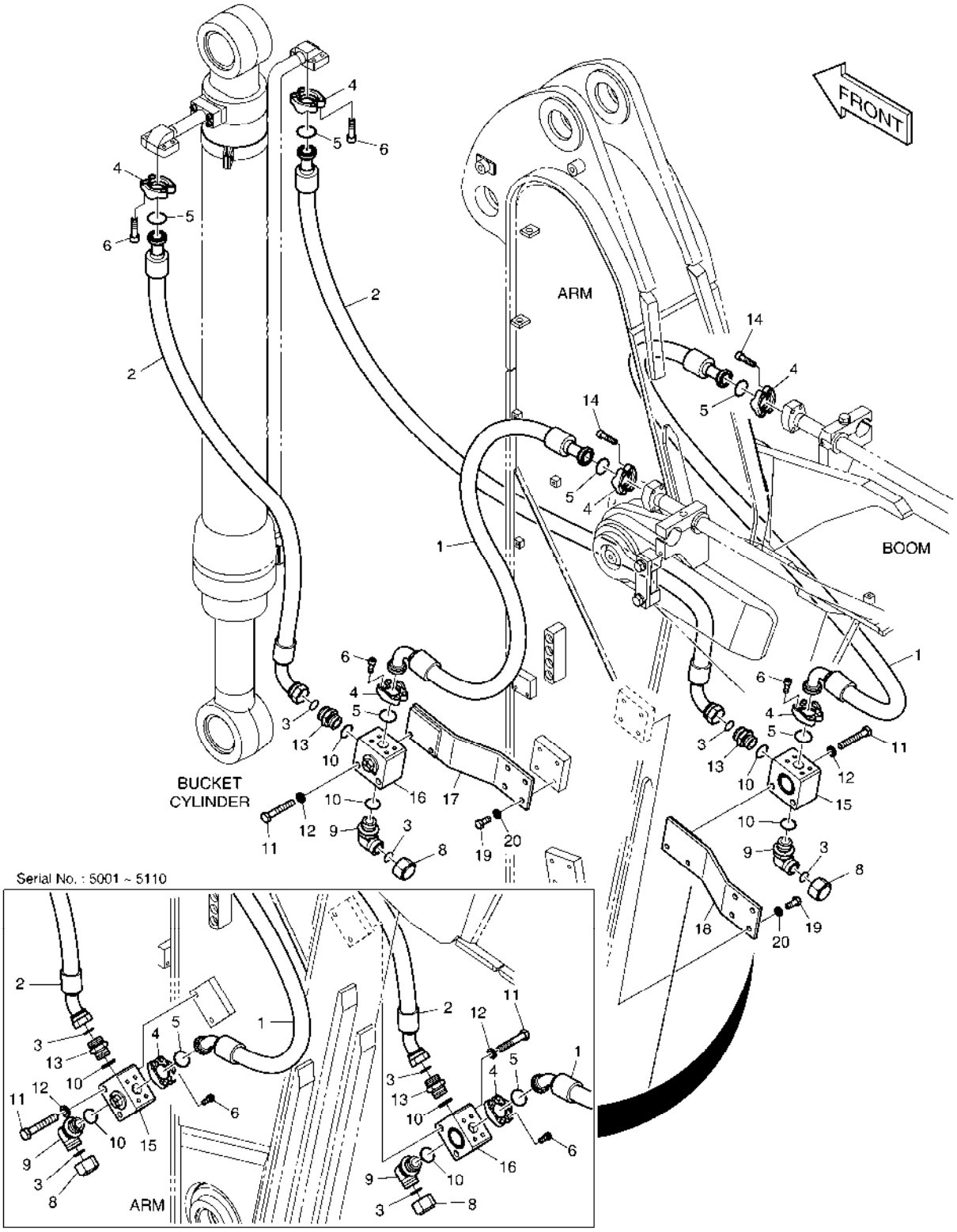

DATE	AUG. 28, 2009
3rd EDITION	

Fig. 6680 ARM PIPING - ARM 2.0m(CLAMSHELL) CONDUITES DE BALANCIER

Serial No. ;

Key No.	Part No.	Description	Description	Q'ty	S.C	Serial No.	ICA	Replaceable part	
								Part No.	Q'ty
6680 --	K1023267A	CLAMSHELL PIPING-2.0M ARM	TUYAUTERIE DE BLOC SUI	-	D				
1	DS2039099	HOSE	TUYAU FLEXIBLE	2		5001-5110			
	DS2040239	HOSE	TUYAU FLEXIBLE	2		5111-			
2	DS2082018	HOSE	TUYAU FLEXIBLE	2		5001-5110			
	DS2025116	HOSE	TUYAU FLEXIBLE	2		5111-			
3	S8030161	O-RING	JOINT TORIQUE	4					
4	2181-9078	FLANGE	BRIDE	12					
5	2180-1026D19	O-RING	JOINT TORIQUE	6					
6	S2212266	BOLT;SOCKET	BOULON A 6 PANS CREUX	16					
8	2181-2817D2	CAP	CHAPEAU	2					
9	2181-2815D1	ELBOW	COUDE	2					
10	S8000291	O-RING	JOINT TORIQUE	4					
11	S0563666	BOLT	BOULON A 6 PANS	4					
12	S5102803	WASHER;SPRING	RONDELLE ELASTIQUE	4					
13	2181-4133D6	ADAPTER	RACCORD ADAPTATEUR	2					
14	S2212466	BOLT;SOCKET M10X1.5X40	BOULON A 6 PANS CREUX	8					
15	K1002967	VALVE;SWITCH	VANNE	1					
16	K1002965	VALVE;SWITCH	VANNE	1					
17	K1045049	BRACKET;L.H	SUPPORT	1		5111-			
18	K1045116	BRACKET;R.H	SUPPORT	1		5111-			
19	S0515266	BOLT	BOULON A 6 PANS	8		5111-			
20	S5102703	WASHER;SPRING	RONDELLE ELASTIQUE	8		5111-			

DATE	AUG. 28, 2009
3rd EDITION	

Fig. 6690 ARM PIPING - ARM 2.0m(ROTATING)
CONDUITES DE BALANCIER

Serial No. ;

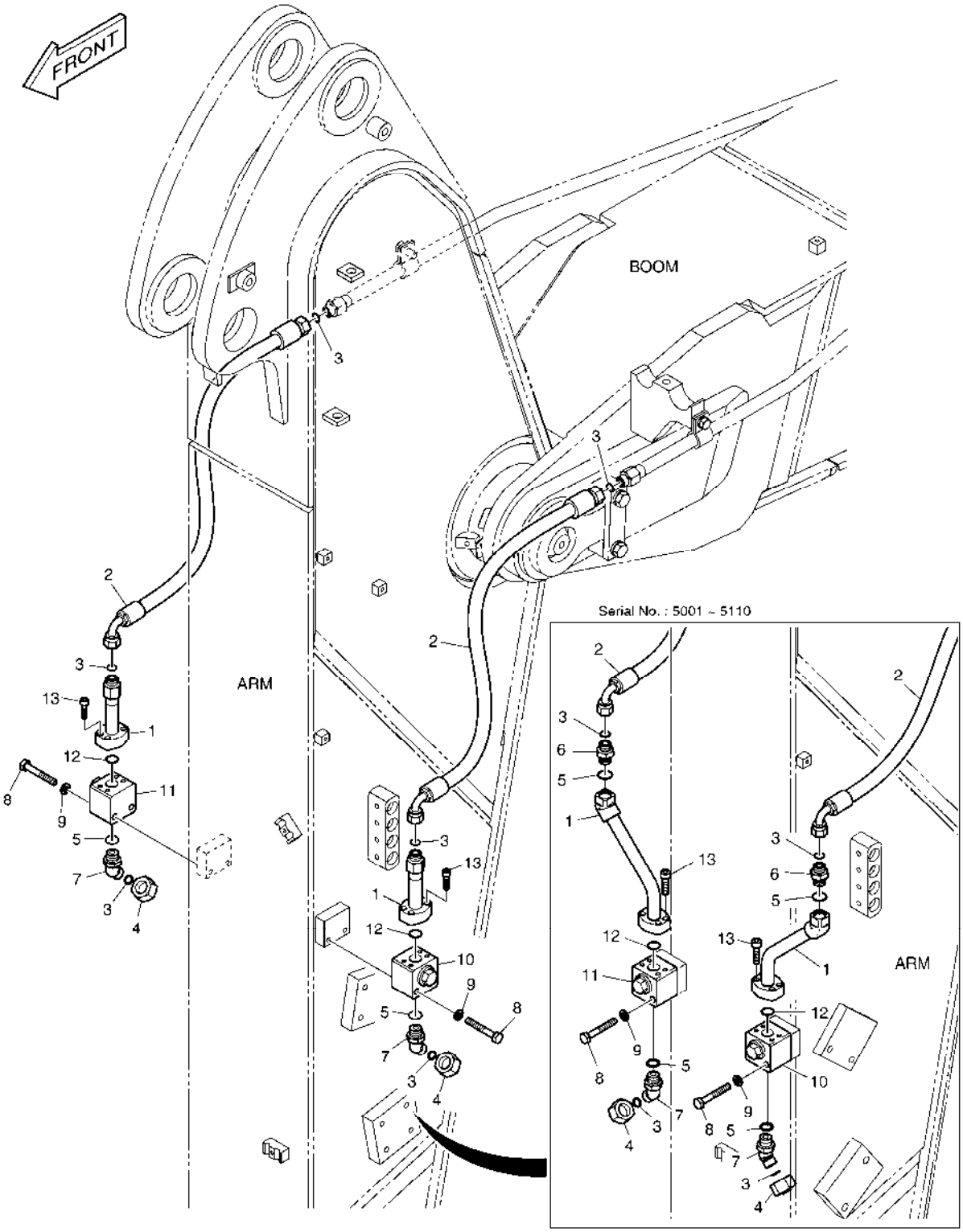

DATE	AUG. 28, 2009
3rd EDITION	

Fig. 6690 ARM PIPING - ARM 2.0m(ROTATING) CONDUITES DE BALANCIER

Serial No. ;

Key No.	Part No.	Description	Description	Q'ty	S.C	Serial No.	ICA	Replaceable part	
								Part No.	Q'ty
6690 --	K1023265A	ROTATION PIPING - 2.0M ARM	CONDUITES DE BALANCIE	-	D				
1	K1010233	PIPE	TUYAU	2		5001-5110			
	K1045102	PIPE	TUYAU	2		5111-			
2	DS2013787	HOSE	TUYAU FLEXIBLE	2		5001-5110			
	DS2013510	HOSE	TUYAU FLEXIBLE	2		5111-			
3	S8030081	O-RING	JOINT TORIQUE	6					
4	2181-2817D4	CAP	CHAPEAU	2					
5	S8000181	O-RING	JOINT TORIQUE	4		5001-5110			
	S8000181	O-RING	JOINT TORIQUE	2		5111-			
6	2181-4133D3	ADAPTER	ADAPTEUR	2		5001-5110			
7	2181-2816D4	ELBOW	COUDE	2					
8	S0558966	BOLT	BOULON	4					
9	S5102603	WASHER	RONDELLE ELASTIQUE	4					
10	K1006227	VALVE;SWITCH(R.H)	VANNE	1					
11	K1006228	VALVE;SWITCH(L.H)	VANNE	1					
12	2180-1026D30	O-RING	JOINT TORIQUE	2					
13	S2209266	BOLT	BOULON A 6 PANS CREUX	8					

DATE	AUG. 28, 2009
3rd EDITION	

Fig. 6700 ARM - 2.5m BALANCIER

Serial No. ;

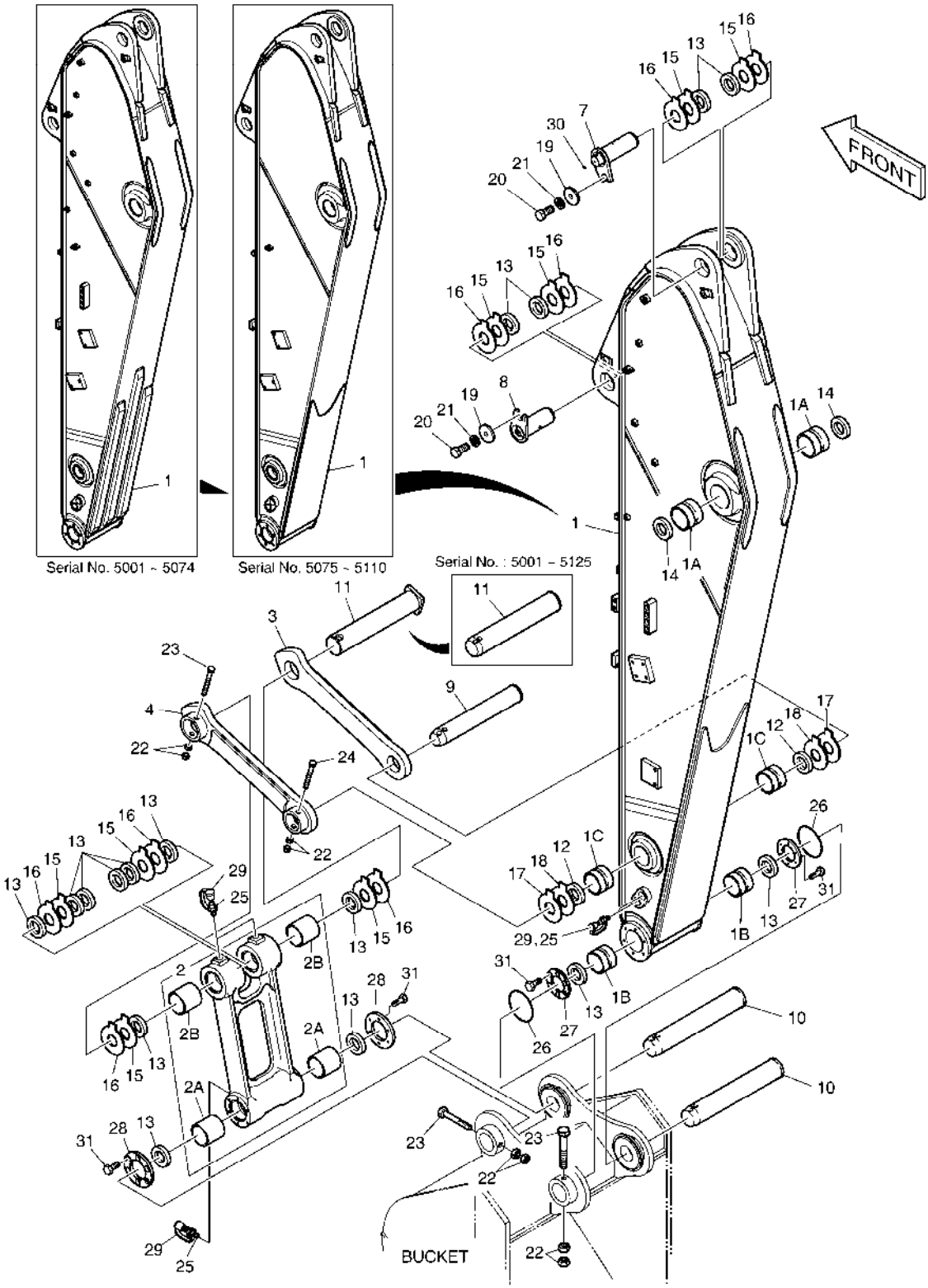

DATE	AUG. 28, 2009
3rd EDITION	

Fig. 6700 ARM - 2.5m BALANCIER

Serial No. ;

Key No.	Part No.	Description	Description	Q'ty	S.C	Serial No.	ICA	Replaceable part Part No.	Q'ty
6700 --	K1018642L	ARM ASS'Y	BALANCIER	-	D	5001-5125			
	230201-00102	ARM ASSY;2.5M_OPT	BALANCIER	-	D	5126-			
1	K1018643A	ARM SUB ASS'Y-2.5m	ENSEMBLE BALANCIER	1		5001-5074			
	K1018643C	ARM SUB ASS'Y-2.5m	ENSEMBLE BALANCIER	1		5075-5105	I	K1018643G	1
	K1018643G	ARM SUB ASS'Y-2.5m	ENSEMBLE BALANCIER	1		5106-5110			
	K1018643H	ARM SUB ASS'Y-2.5m	ENSEMBLE BALANCIER	1		5111-			
1A	110-00252	. BUSHING	. DOUILLE	2					
1B	K1000733	. BUSHING	. DOUILLE	2					
1C	K1000734	. BUSHING	. DOUILLE	2					
2	K1002294	PUSH LINK ASS`Y	ENSEMBLE DE ARTICULAT	1					
2A	110-00249	. BUSHING	. DOUILLE	2					
2B	K1000735	. BUSHING	. DOUILLE	2					
3	K1010024	LINK;GUIDE(R.H)	ARTICULATION	1		5001-5108	I	K1010024A	1
	K1010024A	LINK;GUIDE(R.H)	ARTICULATION	1		5109-5125	Y	101540-00006	1
	101540-00006	LINK,GUIDE(R.H)	ARTICULATION	1		5126-			
4	K1010025	LINK;GUIDE(L.H)	ARTICULATION	1		5001-5108	I	K1010025A	1
	K1010025A	LINK;GUIDE(L.H)	ARTICULATION	1		5109-			
7	K1002128	PIN	GOUPILLE	1		5001-5105			
	2123-2187E	PIN	GOUPILLE	1		5106-5110	I	K1046927	1
	K1046927	PIN	GOUPILLE	1		5111-			
8	K1002130	PIN	GOUPILLE	1		5001-5105			
	2123-2182E	PIN	GOUPILLE	1		5106-5110	I	K1002130A	1
	K1002130A	PIN	GOUPILLE	1		5111-			
9	K1007255	PIN	GOUPILLE	1		5001-5105	I	K1007255A	1
	K1007255A	PIN	GOUPILLE	1		5106-			
10	2123-2192C	PIN	GOUJON	2		5001-5105	I	2123-2192E	2
	2123-2192E	PIN	GOUPILLE	2		5106-			
11	K1007256	PIN	GOUPILLE	1		5001-5105	I	K1007256A	1
	K1007256A	PIN	GOUPILLE	1		5106-5125	Y	120501-00130	1
	120501-00130	PIN;BUCKET CYL ROD	GOUPILLE	1		5126-			
12	2180-1106BD4	SEAL;DUST	PARE-POUSSIERES	2					
13	2180-1106BD24	SEAL;DUST	PARE-POUSSIERES	14					
14	2180-1106BD6	SEAL;DUST	PARE-POUSSIERES	2					
15	DS7752012	SHIM	CALE	8					
16	DS7752013	SHIM	CALE	8					
17	DS7752006	SHIM	CALE	2					
18	DS7752007	SHIM	CALE	2					
19	2116-1060D6	STOPPER	TAQUET D'ARRET	2					

DATE	AUG. 28, 2009
3rd EDITION	

Fig. 6700 ARM - 2.5m BALANCIER

Serial No. ;

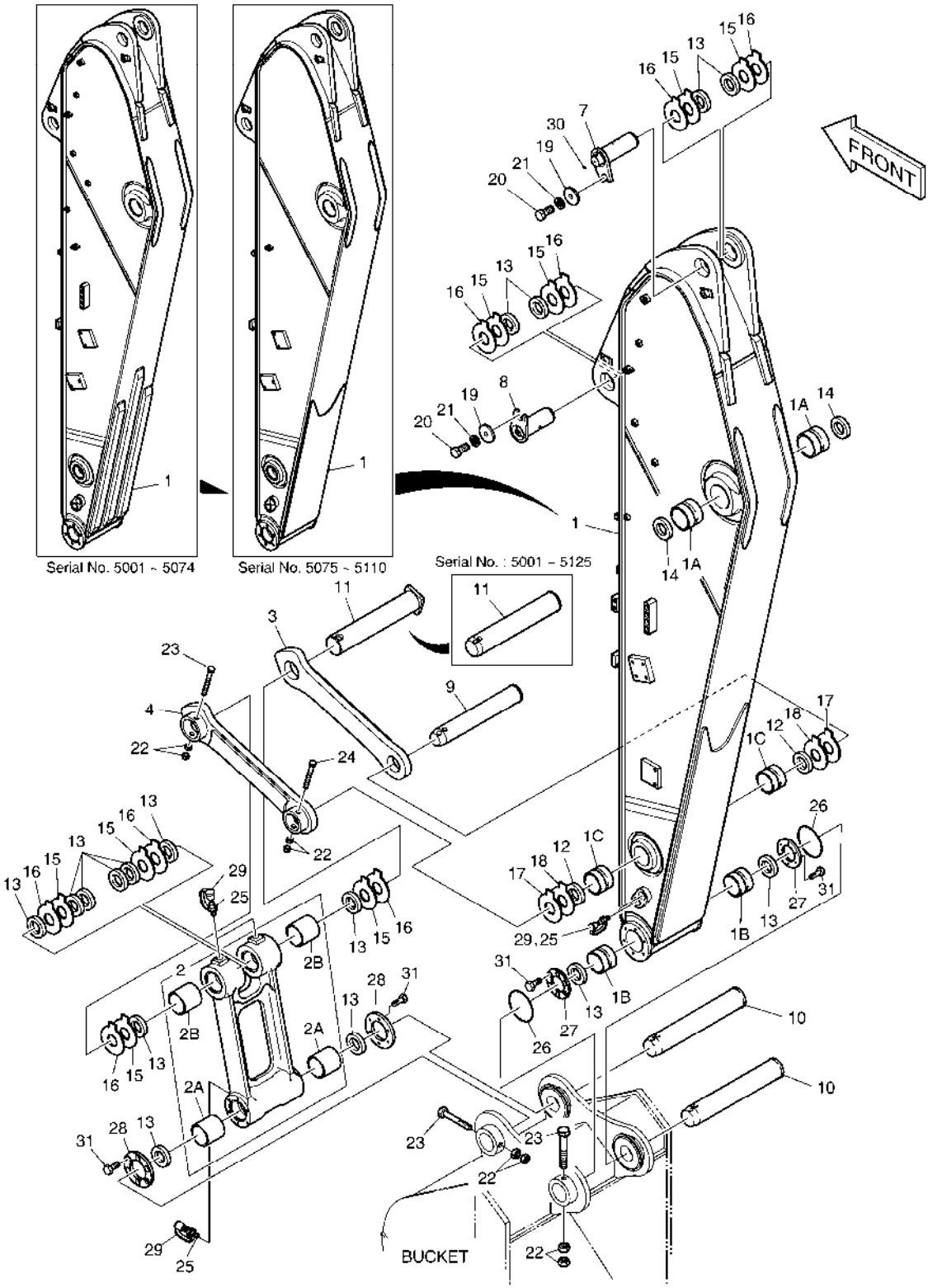

DATE	AUG. 28, 2009
3rd EDITION	

Fig. 6700 ARM - 2.5m BALANCIER

Serial No. ;

Key No.	Part No.	Description	Description	Q'ty	S.C	Serial No.	ICA	Replaceable part	
								Part No.	Q'ty
6700 -20	S0521366	BOLT	BOULON A 6 PANS	2					
21	S5102903	WASHER	RONDELLE	2					
22	S4012933	NUT	ECROU	8					
23	DS0001084	BOLT	BOULON A 6 PANS	3					
24	DS0001083	BOLT	BOULON A 6 PANS	1					
25	S6710041	NIPPLE;GREASE	GRAISSEUR	5					
26	180-00077D5	O-RING	JOINT TORIQUE	2					
27	K1000911	SPACER	BAGUE D'ECARTEMENT	2					
28	K1000912A	SPACER	BAGUE D'ECARTEMENT	2		5001-5108	I	K1000912B	2
	K1000912B	SPACER	BAGUE D'ECARTEMENT	2		5109-			
29	160-00020	CAP;GREASE NIPPLE	CHAPEAU	5					
30	2181-1116D1	PLUG	BOUCHON	1		5001-5074			
31	S0712066	BOLT	BOULON A 6 PANS	24					

DATE	AUG. 28, 2009
3rd EDITION	

Fig. 6710 ARM PIPING - ARM 2.5m CONDUITES DE BALANCIER

Serial No. ;

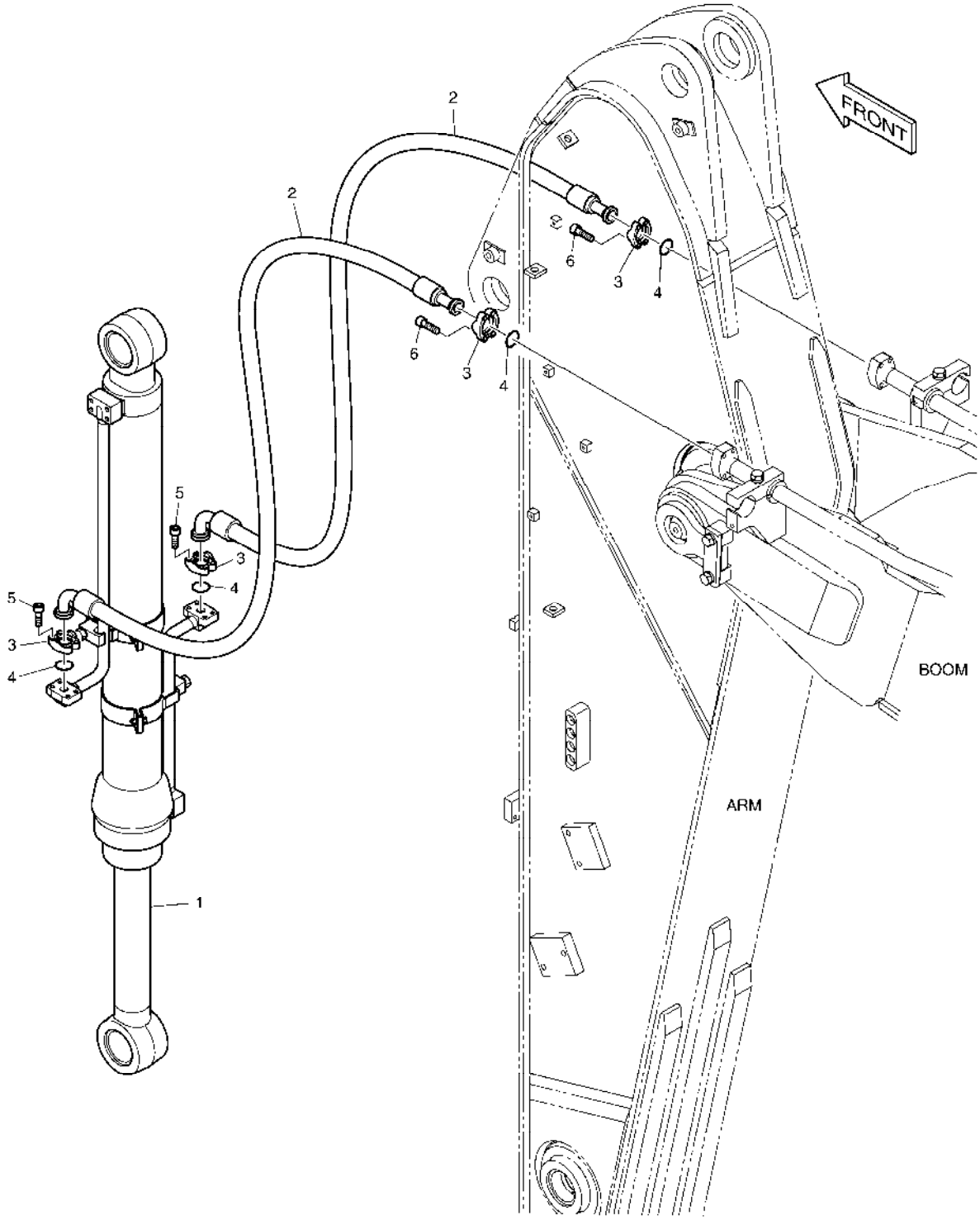

DATE	AUG. 28, 2009
3rd EDITION	

Fig. 6710 ARM PIPING - ARM 2.5m CONDUITES DE BALANCIER

Serial No. ;

Key No.	Part No.	Description	Description	Q'ty	S.C	Serial No.	ICA	Replaceable part	
								Part No.	Q'ty
6710 --	K1023270A	ARM PIPING-2.5m	CONDUITES DE BALANCIE	-	D				
1	K1024947	CYLINDER;BUCKET	VERIN DE GODET	1		5001-5086	I	K1024947A	1
	K1024947A	CYLINDER;BUCKET	VERIN DE GODET	1		5087-			
2	2184-1100D78	HOSE	TUYAU FLEXIBLE	2					
3	2181-9078	FLANGE	BRIDE	8					
4	2180-1026D19	O-RING	JOINT TORIQUE	4					
5	S2212266	BOLT;SOCKET	BOULON A 6 PANS CREUX	8					
6	S2212466	BOLT;SOCKET M10X1.5X40	BOULON A 6 PANS CREUX	8					

DATE	AUG. 28, 2009
3rd EDITION	

Fig. 6720 LUBRICATION PIPING - ARM 2.5m LUBRIFICATION

Serial No. ; 5001 ~ 5074

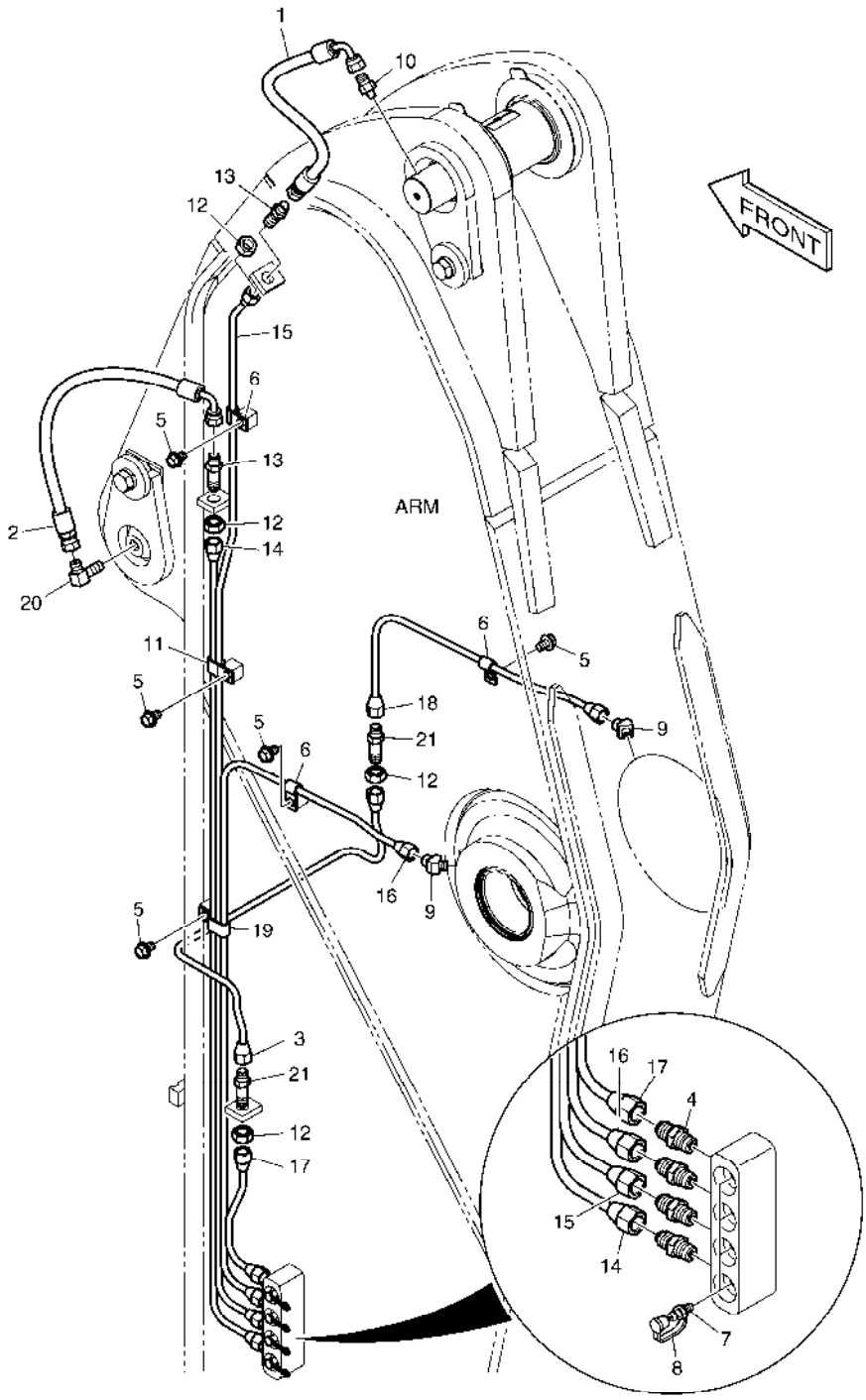

DATE	AUG. 28, 2009
3rd EDITION	

Fig. 6720 LUBRICATION PIPING - ARM 2.5m LUBRIFICATION

Serial No. ; 5001 ~ 5074

Key No.	Part No.	Description	Description	Q'ty	S.C	Serial No.	ICA	Replaceable part	
								Part No.	Q'ty
6720 --	K1023271	LUBRICATION PIPING-ARM	LUBRIFICATION	-	D	5001-5074			
1	DS2055849	HOSE	TUYAU FLEXIBLE	1					
2	DS2055699	HOSE	TUYAU FLEXIBLE	1					
3	K1013687	PIPE	TUYAU	1					
4	2181-1184	ADAPTER	ADAPTEUR	4					
5	K1001029	BOLT	BOULON A 6 PANS	5					
6	DS2802023	CLIP	CLIP	3					
7	S6710041	NIPPLE;GREASE	GRAISSEUR	4					
8	160-00020	CAP;GREASE NIPPLE	CHAPEAU	4					
9	K1010730	ELBOW	COUDE	2					
10	2181-4112	ADAPTER	ADAPTEUR	1					
11	DS2805007	CLIP	CLIP	1					
12	S4032833	NUT	ECROU	4					
13	2181-1923D12	ADAPTER	ADAPTEUR	2					
14	K1011048	PIPE	TUYAU	1					
15	K1023286	PIPE	TUYAU	1					
16	K1023287	PIPE	TUYAU	1					
17	K1010271	PIPE	TUYAU	1					
18	K1023288	PIPE	TUYAU	1					
19	DS2805008	CLIP	CLIP	1					
20	2181-1111D11	ELBOW	COUDE	1					
21	DS2225009	ADAPTER	ADAPTEUR	2					

DATE	AUG. 28, 2009
3rd EDITION	

Fig. 6721 LUBRICATION PIPING - ARM 2.5m LUBRIFICATION

Serial No. ; 5111 ~

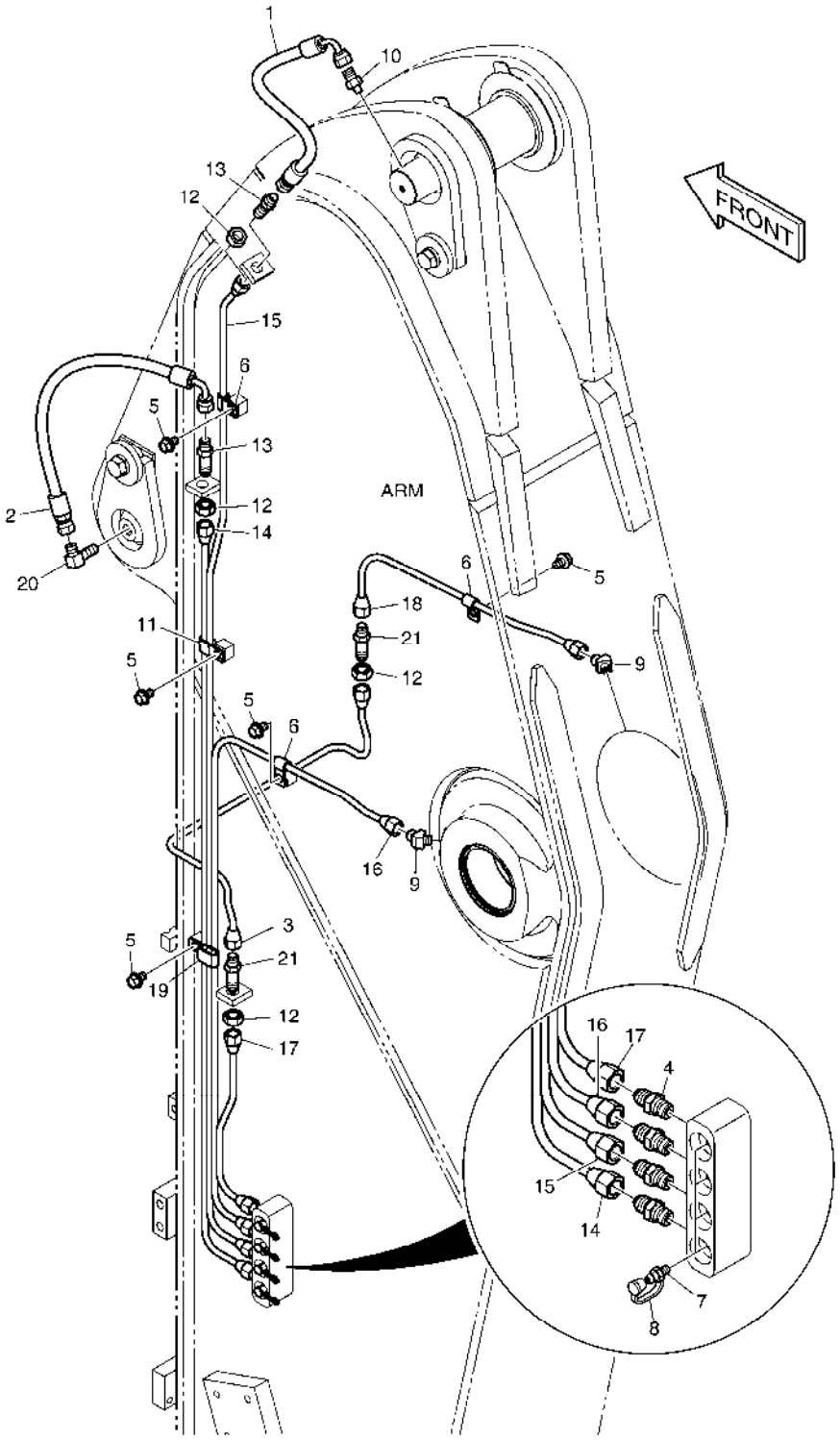

DATE	AUG. 28, 2009
3rd EDITION	

Fig. 6721 LUBRICATION PIPING - ARM 2.5m LUBRIFICATION

Serial No. ; 5111 ~

Key No.	Part No.	Description	Description	Q'ty	S.C	Serial No.	ICA	Replaceable part	
								Part No.	Q'ty
6721 --	K1023271A	LUBRICATION PIPING-ARM	LUBRIFICATION	-	D	5111-			
1	DS2055849	HOSE	TUYAU FLEXIBLE	1					
2	DS2055699	HOSE	TUYAU FLEXIBLE	1					
3	K1013687	PIPE	TUYAU	1					
4	2181-1184	ADAPTER	ADAPTEUR	4					
5	K1001029	BOLT	BOULON A 6 PANS	5					
6	DS2802023	CLIP	CLIP	3					
7	S6710041	NIPPLE;GREASE	GRAISSEUR	4					
8	160-00020	CAP;GREASE NIPPLE	CHAPEAU	4					
9	K1010730	ELBOW	COUDE	2					
10	2181-4112	ADAPTER	ADAPTEUR	1					
11	DS2805007	CLIP	CLIP	1					
12	S4032833	NUT	ECROU	4					
13	2181-1923D12	ADAPTER	ADAPTEUR	2					
14	K1011048	PIPE	TUYAU	1					
15	K1023286	PIPE	TUYAU	1					
16	K1023287	PIPE	TUYAU	1					
17	K1047323	PIPE	TUYAU	1					
18	K1023288A	PIPE	TUYAU	1					
19	DS2805008	CLIP	CLIP	1					
20	2181-1111D11	ELBOW	COUDE	1					
21	DS2225009	ADAPTER	ADAPTEUR	2					

DATE	AUG. 28, 2009
3rd EDITION	

Fig. 6730 ARM PIPING - ARM 2.5m(ONE & TWO WAY) CONDUITES DE BALANCIER

Serial No. ;

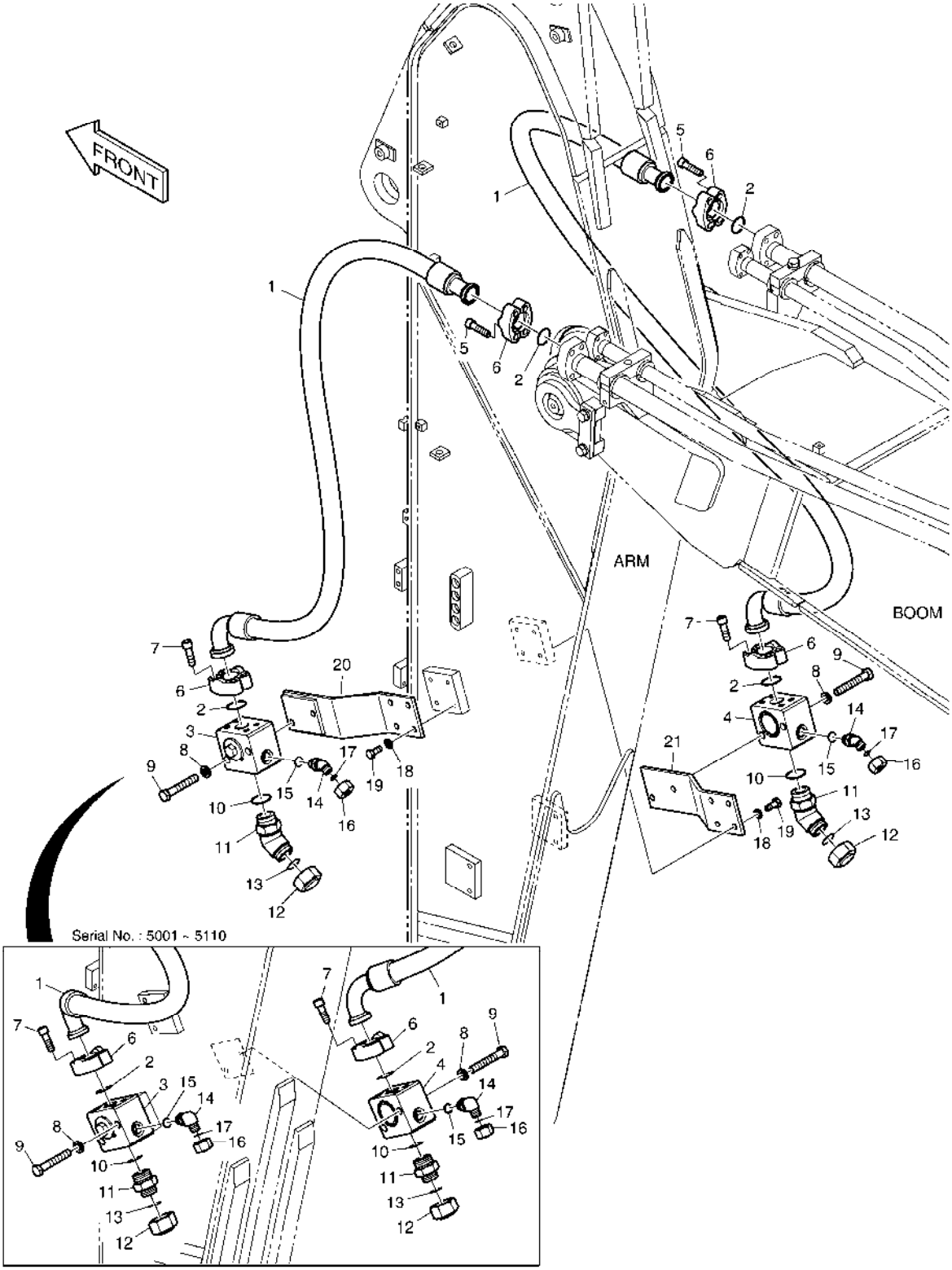

DATE	AUG. 28, 2009
3rd EDITION	

Fig. 6730 ARM PIPING - ARM 2.5m(ONE & TWO WAY) CONDUITES DE BALANCIER

Serial No. ;

Key No.	Part No.	Description	Description	Q'ty	S.C	Serial No.	ICA	Replaceable part	
								Part No.	Q'ty
6730 --	K1023275A	ONE & TWO WAY PIPING (2.5M A	PERCHE ASS'Y D'ARTI	-	D				
1	DS2040574	HOSE	TUYAU FLEXIBLE	2		5001-5110			
	DS2040693	HOSE	TUYAU FLEXIBLE	2		5111-			
2	2180-1026D23	O-RING	JOINT TORIQUE	4					
3	420-00508B	VALVE;STOP(L.H)	VANNE	1					
4	420-00515B	VALVE;STOP(R.H)	VANNE	1					
5	S2218766	BOLT;SOCKET	BOULON A 6 PANS CREUX	8					
6	2181-9086	FLANGE;SPLIT	FLASQUE EN DEUX PARTIE	8					
7	S2218566	BOLT;SOCKET	BOULON A 6 PANS CREUX	8					
8	S5102903	WASHER	RONDELLE	4					
9	S0566266	BOLT	BOULON A 6 PANS	4					
10	S8000381	O-RING	JOINT TORIQUE	2					
11	2181-4133D35	ADAPTER	ADAPTEUR	2		5001-5110			
	2181-2816D3	ELBOW	COUDE	2		5111-			
12	2181-2817D3	CAP	CHAPEAU	2					
13	2180-1026D37	O-RING	JOINT TORIQUE	2					
14	2181-2815D3	ELBOW	COUDE	2		5001-5110			
	2181-2816D4	ELBOW	COUDE	2		5111-			
15	S8000181	O-RING	JOINT TORIQUE	2					
16	2181-2817D4	CAP	CHAPEAU	2					
17	S8030081	O-RING	JOINT TORIQUE	2					
18	S5102703	WASHER;SPRING	RONDELLE ELASTIQUE	8		5111-			
19	S0515266	BOLT	BOULON A 6 PANS	8		5111-			
20	K1045047	BRACKET;L.H	SUPPORT	1		5111-			
21	K1045053	BRACKET;R.H	SUPPORT	1		5111-			

DATE	AUG. 28, 2009
3rd EDITION	

Fig. 6740 ARM PIPING - ARM 2.5m(QUICK CLAMP)
CONDUITES DE BALANCIER

Serial No. ;

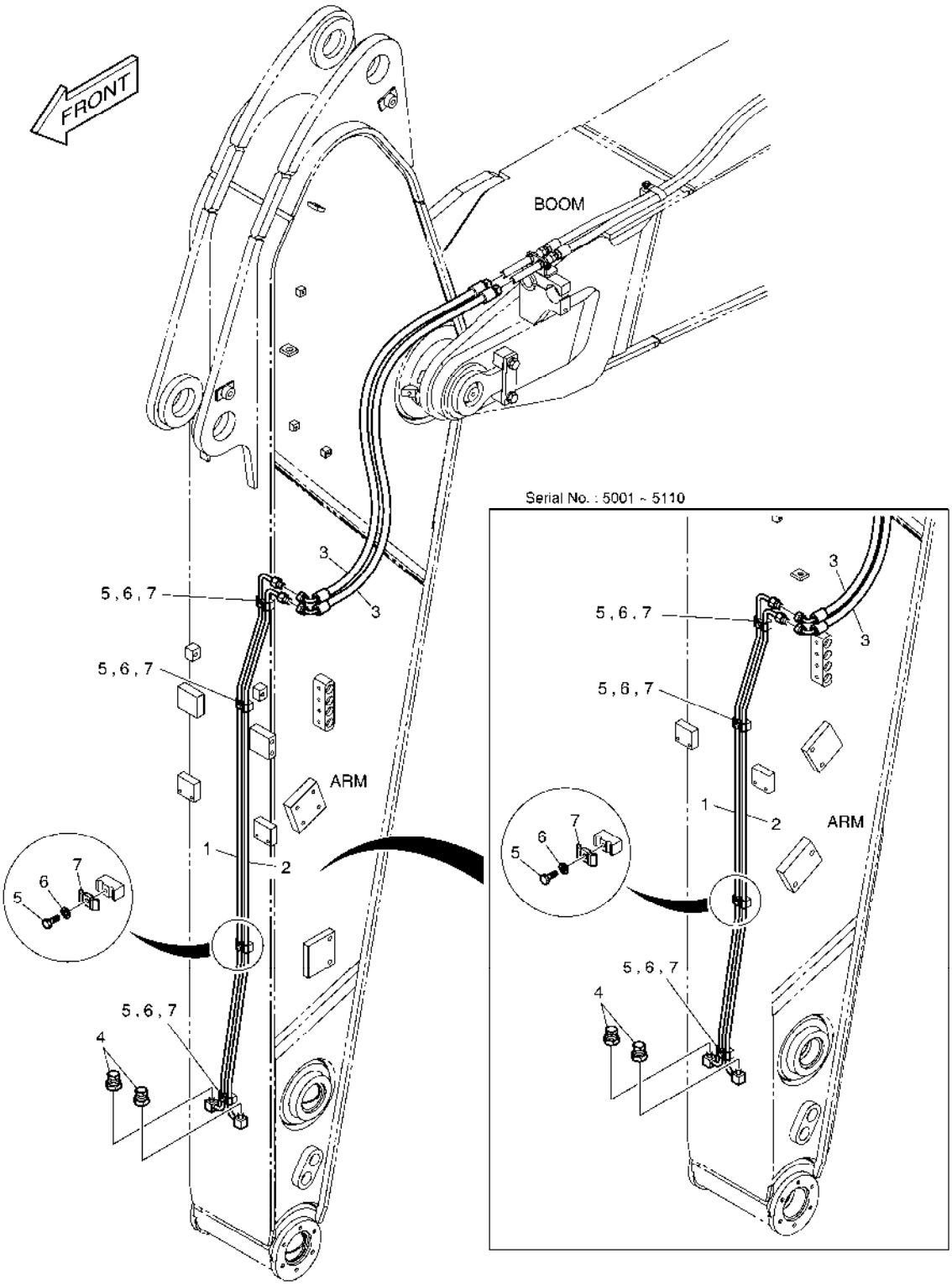

DATE	AUG. 28, 2009
3rd EDITION	

Fig. 6740 ARM PIPING - ARM 2.5m(QUICK CLAMP) CONDUITES DE BALANCIER

Serial No. ;

Key No.	Part No.	Description	Description	Q'ty	S.C	Serial No.	ICA	Replaceable part	
								Part No.	Q'ty
6740 --	K1023273A	ARM PIPING-QUICK CLAMP	CONDUITES DE BALANCIE	-	D				
1	K1023292	PIPE	TUYAU	1		5001-5110			
	K1023292A	PIPE	TUYAU	1		5111-			
2	K1023289	PIPE	TUYAU	1		5001-5110			
	K1023289A	PIPE	TUYAU	1		5111-			
3	DS2055847	HOSE	TUYAU FLEXIBLE	2		5001-5110			
	DS2055926	HOSE	TUYAU FLEXIBLE	2		5111-			
4	2181-2820D1	PLUG	BOUCHON	2					
5	S0508866	BOLT	BOULON A 6 PANS	4					
6	S5102503	WASHER	RONDELLE ELASTIQUE	4					
7	K1004011	CLAMP;PIPE	FIXATION DE TUYAU	4					

DATE	AUG. 28, 2009
3rd EDITION	

Fig. 6750 ARM PIPING - ARM 2.5m(CLAMPSHELL) CONDUITES DE BALANCIER

Serial No. ; 5001 ~ 5110

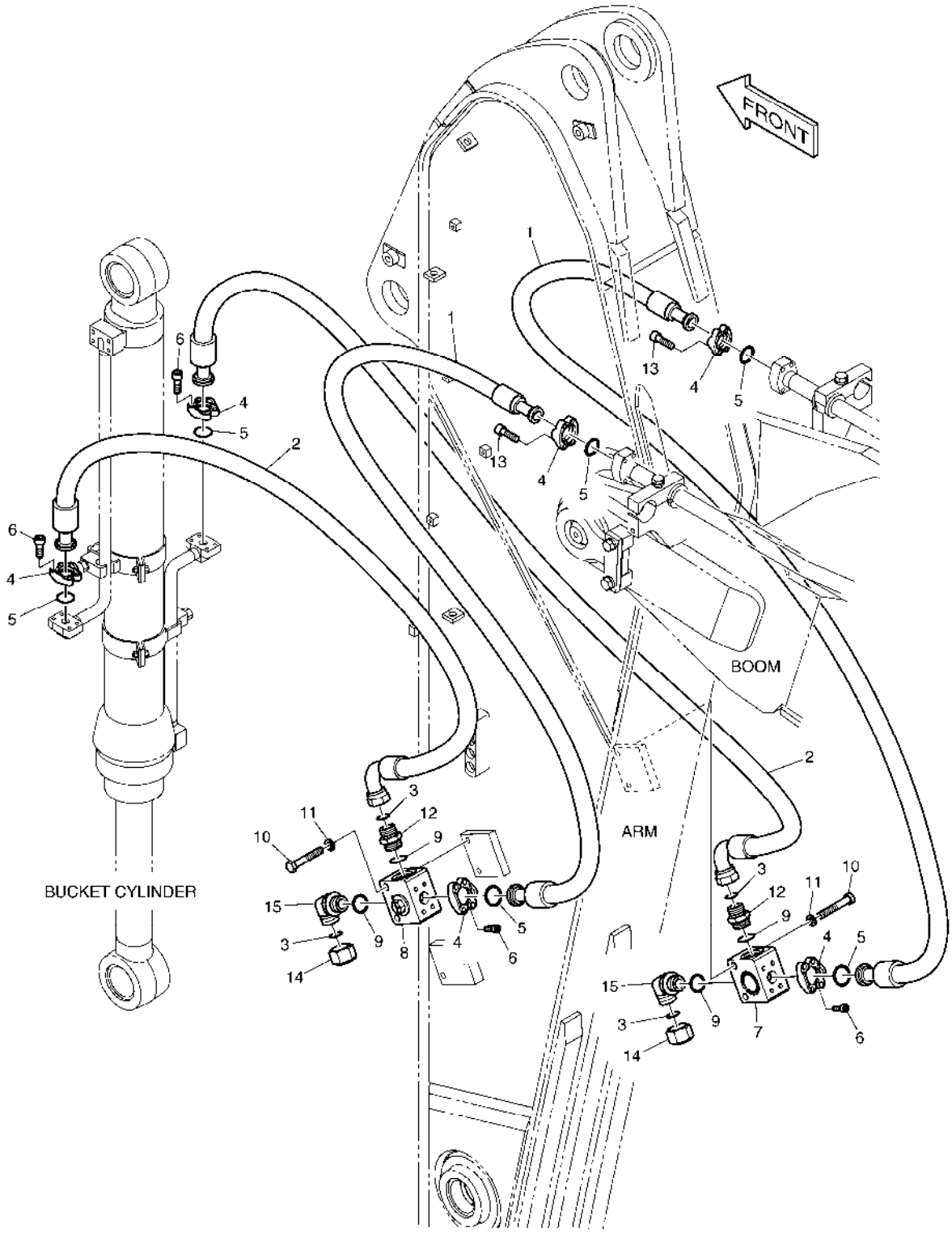

DATE	AUG. 28, 2009
3rd EDITION	

Fig. 6750 ARM PIPING - ARM 2.5m(CLAMPSHELL) CONDUITES DE BALANCIER

Serial No. ; 5001 ~ 5110

Key No.	Part No.	Description	Description	Q'ty	S.C	Serial No.	ICA	Replaceable part	
								Part No.	Q'ty
6750 --	K1023274	CLAMSHELL PIPING (2.5M_ARM)	TUYAUTERIE DE BLOC SUI	-	D	5001-5110			
1	2184-1081D80	HOSE	TUYAU FLEXIBLE	2					
2	DS2025086	HOSE	TUYAU FLEXIBLE	2					
3	S8030161	O-RING	JOINT TORIQUE	4					
4	2181-9078	FLANGE	BRIDE	12					
5	2180-1026D19	O-RING	JOINT TORIQUE	6					
6	S2212266	BOLT;SOCKET	BOULON A 6 PANS CREUX	16					
7	K1002965	VALVE;SWITCH	VANNE	1					
8	K1002967	VALVE;SWITCH	VANNE	1					
9	S8000291	O-RING	JOINT TORIQUE	4					
10	S0563666	BOLT	BOULON A 6 PANS	4					
11	S5102803	WASHER;SPRING	RONDELLE ELASTIQUE	4					
12	2181-4133D6	ADAPTER	RACCORD ADAPTATEUR	2					
13	S2212466	BOLT;SOCKET M10X1.5X40	BOULON A 6 PANS CREUX	8					
14	2181-2817D2	CAP	CHAPEAU	2					
15	2181-2815D1	ELBOW	COUDE	2					

DATE	AUG. 28, 2009
3rd EDITION	

Fig. 6751 ARM PIPING - ARM 2.5m(CLAMPSHELL) CONDUITES DE BALANCIER

Serial No. ; 5111 ~

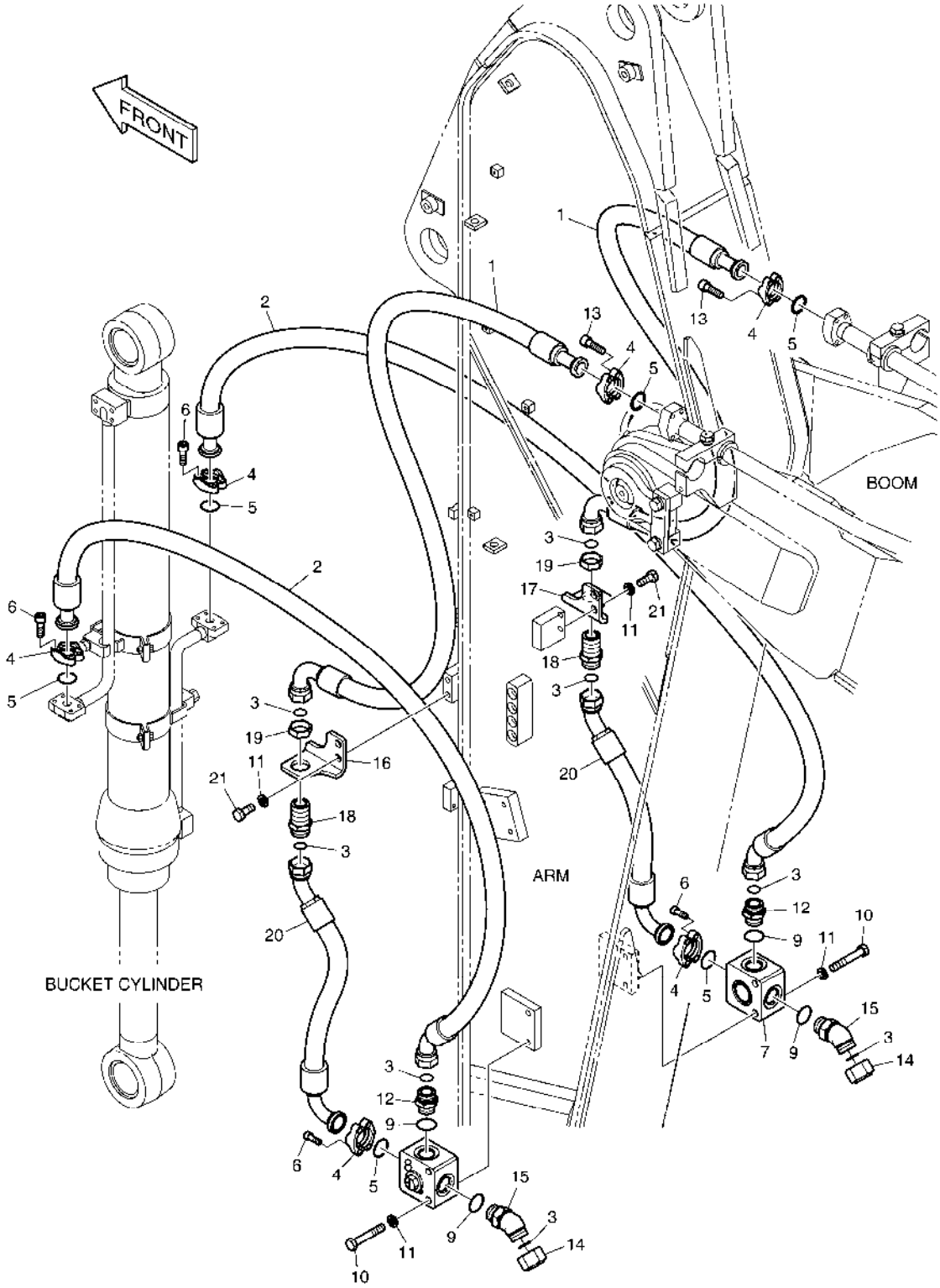

DATE	AUG. 28, 2009
3rd EDITION	

Fig. 6751 ARM PIPING - ARM 2.5m(CLAMPSHELL) CONDUITES DE BALANCIER

Serial No. ; 5111 ~

Key No.	Part No.	Description	Description	Q'ty	S.C	Serial No.	ICA	Replaceable part	
								Part No.	Q'ty
6751 --	K1023274A	CLAMSHELL PIPING (2.5M_ARM)	TUYAUTERIE DE BLOC SUI	-	D	5111-			
1	DS2025117	HOSE	TUYAU FLEXIBLE	2					
2	DS2065052	HOSE	TUYAU FLEXIBLE	2					
3	S8030161	O-RING	JOINT TORIQUE	8					
4	2181-9078	FLANGE	BRIDE	12					
5	2180-1026D19	O-RING	JOINT TORIQUE	6					
6	S2212266	BOLT;SOCKET	BOULON A 6 PANS CREUX	16					
7	K1002965	VALVE;SWITCH	VANNE	1					
8	K1002967	VALVE;SWITCH	VANNE	1					
9	S8000291	O-RING	JOINT TORIQUE	4					
10	S0563666	BOLT	BOULON A 6 PANS	4					
11	S5102803	WASHER;SPRING	RONDELLE ELASTIQUE	8					
12	2181-4133D6	ADAPTER	RACCORD ADAPTATEUR	2					
13	S2212466	BOLT;SOCKET M10X1.5X40	BOULON A 6 PANS CREUX	8					
14	2181-2817D2	CAP	CHAPEAU	2					
15	2181-2816D2	ELBOW	COUDE	2					
16	K1045056	BRACKET;L.H	SUPPORT	1					
17	K1045091	BRACKET;R.H	SUPPORT	1					
18	DS2415005	ADAPTER;CONNECTOR	ADAPTEUR	2					
19	121-00010D9	NUT	ECROU	2					
20	DS2065053	HOSE	TUYAU FLEXIBLE	2					
21	S0518366	BOLT	BOULON	4					

DATE	AUG. 28, 2009
3rd EDITION	

Fig. 6760 ARM PIPING - ARM 2.5m(ROTATING) CONDUITES DE BALANCIER

Serial No. ;

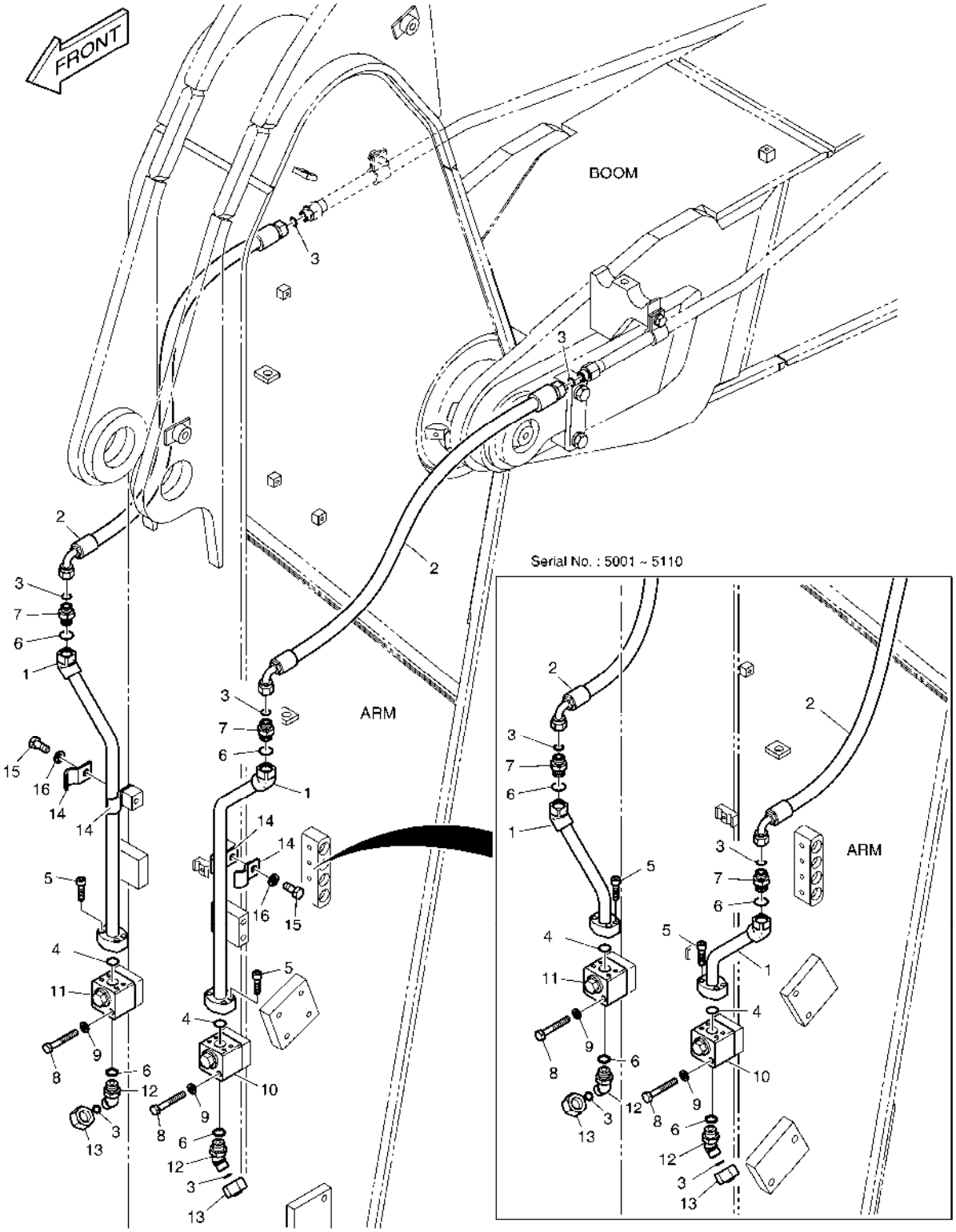

DATE	AUG. 28, 2009
3rd EDITION	

Fig. 6760 ARM PIPING - ARM 2.5m(ROTATING) CONDUITES DE BALANCIER

Serial No. ;

Key No.	Part No.	Description	Description	Q'ty	S.C	Serial No.	ICA	Replaceable part	
								Part No.	Q'ty
6760 --	K1023272A	ROTATION PIPING (2.5M_ARM)	CONDUITES DE FLECHE	-	D				
1	K1010233	PIPE	TUYAU	2		5001-5110			
	K1045059	PIPE	TUYAU	2		5111-			
2	DS2013596	HOSE	TUYAU FLEXIBLE	2		5001-5110			
	DS2013356	HOSE ORS1/2-1250L	TUYAU FLEXIBLE	2		5111-			
3	S8030081	O-RING	JOINT TORIQUE	6					
4	2180-1026D30	O-RING	JOINT TORIQUE	2					
5	S2209266	BOLT	BOULON A 6 PANS CREUX	8					
6	S8000181	O-RING	JOINT TORIQUE	4					
7	2181-4133D3	ADAPTER	ADAPTEUR	2					
8	S0558966	BOLT	BOULON	4					
9	S5102603	WASHER	RONDELLE ELASTIQUE	4					
10	K1006227	VALVE;SWITCH(R.H)	VANNE	1					
11	K1006228	VALVE;SWITCH(L.H)	VANNE	1					
12	2181-2816D4	ELBOW	COUDE	2					
13	2181-2817D4	CAP	CHAPEAU	2					
14	124-00299A	CLAMP;PIPE	COLLIER	4		5111-			
15	S0515266	BOLT	BOULON A 6 PANS	2		5111-			
16	S5102703	WASHER;SPRING	RONDELLE ELASTIQUE	2		5111-			

DATE	AUG. 28, 2009
3rd EDITION	

Fig. 6770 ARM - 3.5m BALANCIER

Serial No. ;

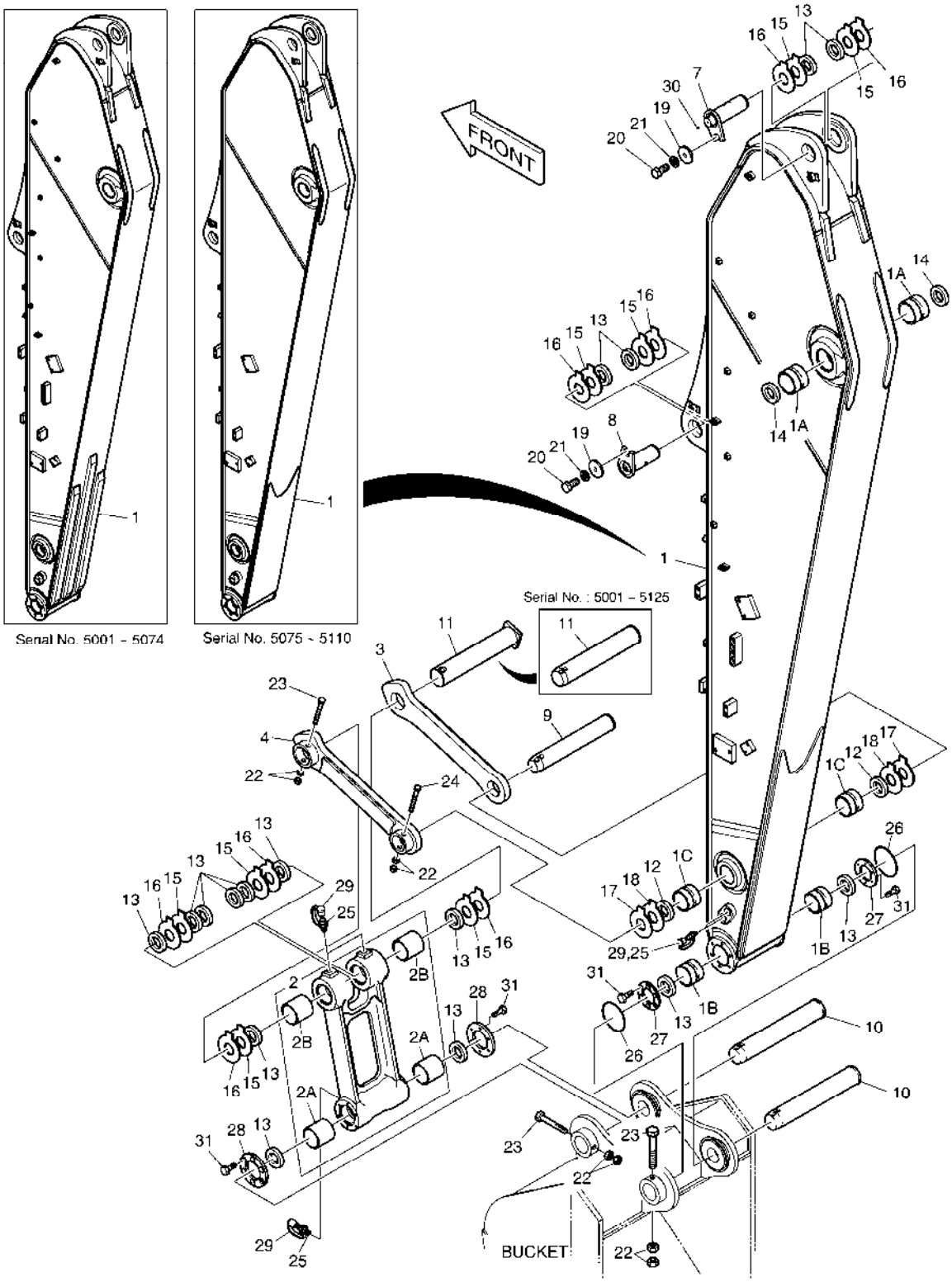

DATE	AUG. 28, 2009
3rd EDITION	

Fig. 6770 ARM - 3.5m BALANCIER

Serial No. ;

Key No.	Part No.	Description	Description	Q'ty	S.C	Serial No.	ICA	Replaceable part Part No.	Q'ty
6770 --	K1018650M	ARM ASS'Y	BALANCIER	-	D	5001-5125			
	230201-00103	ARM ASSY;3.5M_OPT	BALANCIER	-	D	5126-			
1	K1018651A	ARM SUB ASS'Y-3.5m	ENSEMBLE BALANCIER	1		5001-5074			
	K1018651C	ARM SUB ASS'Y-3.5m	ENSEMBLE BALANCIER	1		5075-5105	I	K1018651G	1
	K1018651G	ARM SUB ASS'Y-3.5m	ENSEMBLE BALANCIER	1		5106-5110			
	K1018651H	ARM SUB ASS'Y-3.5m	ENSEMBLE BALANCIER	1		5111-			
1A	110-00252	. BUSHING	. DOUILLE	2					
1B	K1000733	. BUSHING	. DOUILLE	2					
1C	K1000734	. BUSHING	. DOUILLE	2					
2	K1002294	PUSH LINK ASS`Y	ENSEMBLE DE ARTICULAT	1					
2A	110-00249	. BUSHING	. DOUILLE	2					
2B	K1000735	. BUSHING	. DOUILLE	2					
3	K1010024	LINK;GUIDE(R.H)	ARTICULATION	1		5001-5108	I	K1010024A	1
	K1010024A	LINK;GUIDE(R.H)	ARTICULATION	1		5109-5125	Y	101540-00006	1
	101540-00006	LINK,GUIDE(R.H)	ARTICULATION	1		5126-			
4	K1010025	LINK;GUIDE(L.H)	ARTICULATION	1		5001-5108	I	K1010025A	1
	K1010025A	LINK;GUIDE(L.H)	ARTICULATION	1		5109-			
7	K1002128	PIN	GOUPILLE	1		5001-5105			
	2123-2187E	PIN	GOUPILLE	1		5106-5110	I	K1046927	1
	K1046927	PIN	GOUPILLE	1		5111-			
8	K1002130	PIN	GOUPILLE	1		5001-5105			
	2123-2182E	PIN	GOUPILLE	1		5106-5110	I	K1002130A	1
	K1002130A	PIN	GOUPILLE	1		5111-			
9	K1007255	PIN	GOUPILLE	1		5001-5105	I	K1007255A	1
	K1007255A	PIN	GOUPILLE	1		5106-			
10	2123-2192C	PIN	GOUJON	2		5001-5105	I	2123-2192E	2
	2123-2192E	PIN	GOUPILLE	2		5106-			
11	K1007256	PIN	GOUPILLE	1		5001-5105	I	K1007256A	1
	K1007256A	PIN	GOUPILLE	1		5106-5125	Y	120501-00130	1
	120501-00130	PIN;BUCKET CYL ROD	GOUPILLE	1		5126-			
12	2180-1106BD4	SEAL;DUST	PARE-POUSSIERES	2					
13	2180-1106BD24	SEAL;DUST	PARE-POUSSIERES	14					
14	2180-1106BD6	SEAL;DUST	PARE-POUSSIERES	2					
15	DS7752012	SHIM	CALE	8					
16	DS7752013	SHIM	CALE	8					
17	DS7752006	SHIM	CALE	2					
18	DS7752007	SHIM	CALE	2					
19	2116-1060D6	STOPPER	TAQUET D'ARRET	2					

DATE	AUG. 28, 2009
3rd EDITION	

Fig. 6770 ARM - 3.5m BALANCIER

Serial No. ;

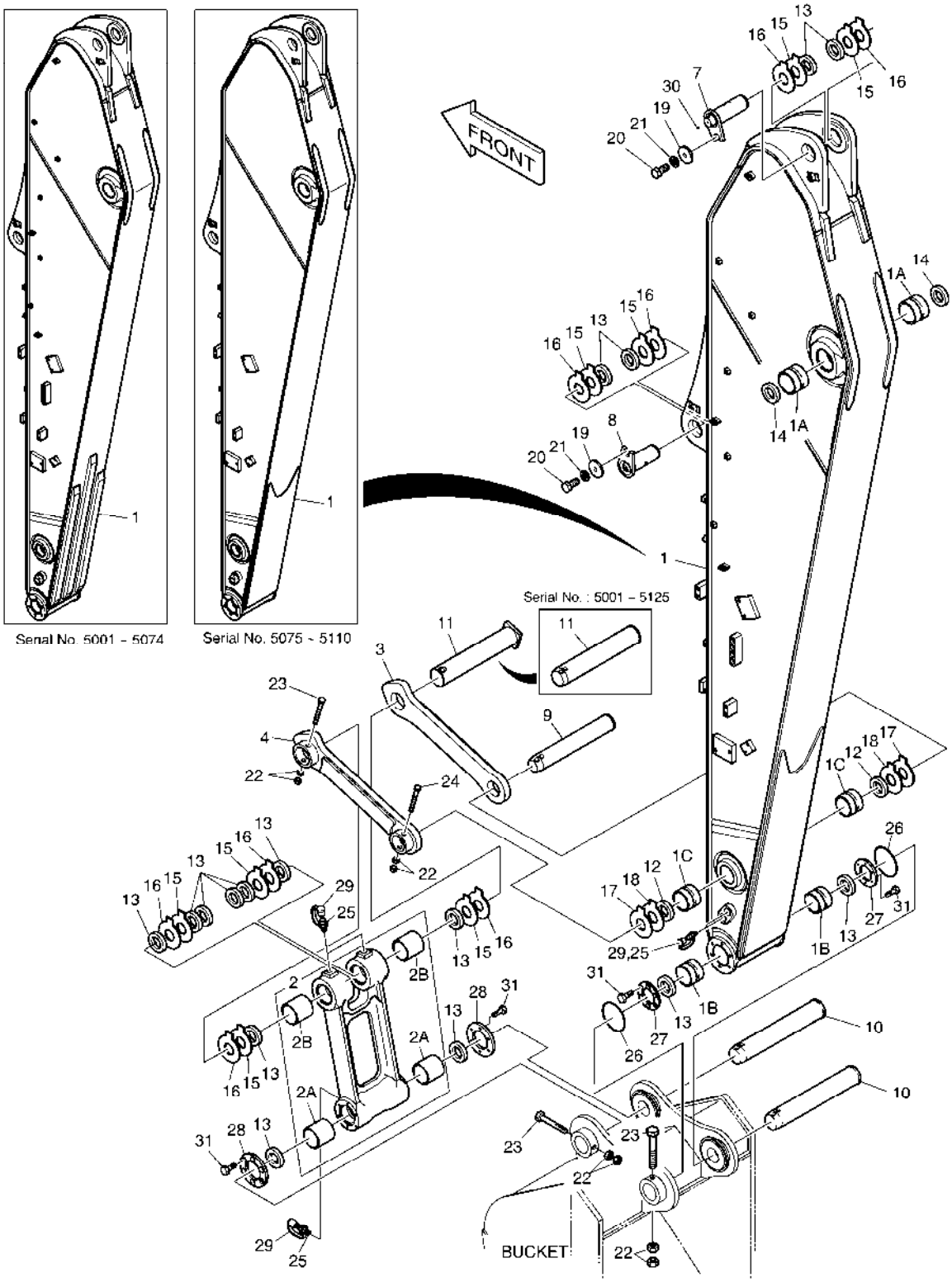

DATE	AUG. 28, 2009
3rd EDITION	

Fig. 6770 ARM - 3.5m BALANCIER

Serial No. ;

Key No.	Part No.	Description	Description	Q'ty	S.C	Serial No.	ICA	Replaceable part	
								Part No.	Q'ty
6770 -20	S0521366	BOLT	BOULON A 6 PANS	2					
21	S5102903	WASHER	RONDELLE	2					
22	S4012933	NUT	ECROU	8					
23	DS0001084	BOLT	BOULON A 6 PANS	3					
24	DS0001083	BOLT	BOULON A 6 PANS	1					
25	S6710041	NIPPLE;GREASE	GRAISSEUR	5					
26	180-00077D5	O-RING	JOINT TORIQUE	2					
27	K1000911	SPACER	BAGUE D'ECARTEMENT	2					
28	K1000912A	SPACER	BAGUE D'ECARTEMENT	2		5001-5108	I	K1000912B	2
	K1000912B	SPACER	BAGUE D'ECARTEMENT	2		5109-			
29	160-00020	CAP;GREASE NIPPLE	CHAPEAU	5					
30	2181-1116D1	PLUG	BOUCHON	1		5001-5074			
31	S0712066	BOLT	BOULON A 6 PANS	24					

Fig. 6780 ARM PIPING - ARM 3.5m
CONDUITES DE BALANCIER

Serial No. ;

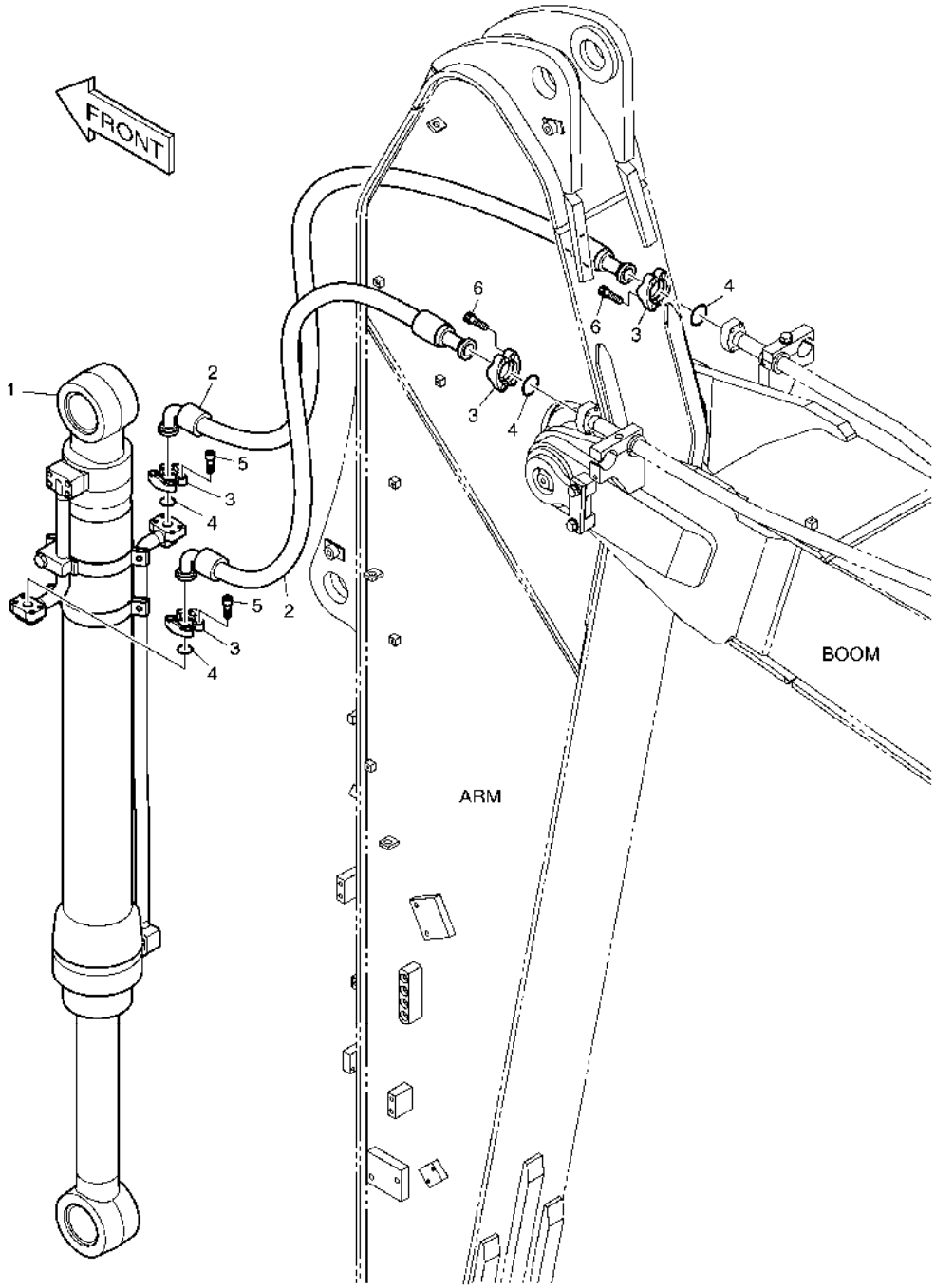

DATE	AUG. 28, 2009
3rd EDITION	

Fig. 6780 ARM PIPING - ARM 3.5m CONDUITES DE BALANCIER

Serial No. ;

Key No.	Part No.	Description	Description	Q'ty	S.C	Serial No.	ICA	Replaceable part	
								Part No.	Q'ty
6780 --	K1023277A	ARM PIPING	CONDUITES DE BALANCIE	-	D				
1	K1011044	CYLINDER;BUCKET	VERIN DE GODET	1		5001-5093	I	K1011044A	1
	K1011044A	CYLINDER;BUCKET	VERIN DE GODET	1		5094-			
2	DS2040587	HOSE	TUYAU FLEXIBLE	2					
3	2181-9078	FLANGE	BRIDE	8					
4	2180-1026D19	O-RING	JOINT TORIQUE	4					
5	S2212266	BOLT;SOCKET	BOULON A 6 PANS CREUX	8					
6	S2212466	BOLT;SOCKET M10X1.5X40	BOULON A 6 PANS CREUX	8					

DATE	AUG. 28, 2009
3rd EDITION	

Fig. 6790 LUBRICATION PIPING - ARM 3.5m LUBRIFICATION

Serial No. ; 5001 ~ 5074

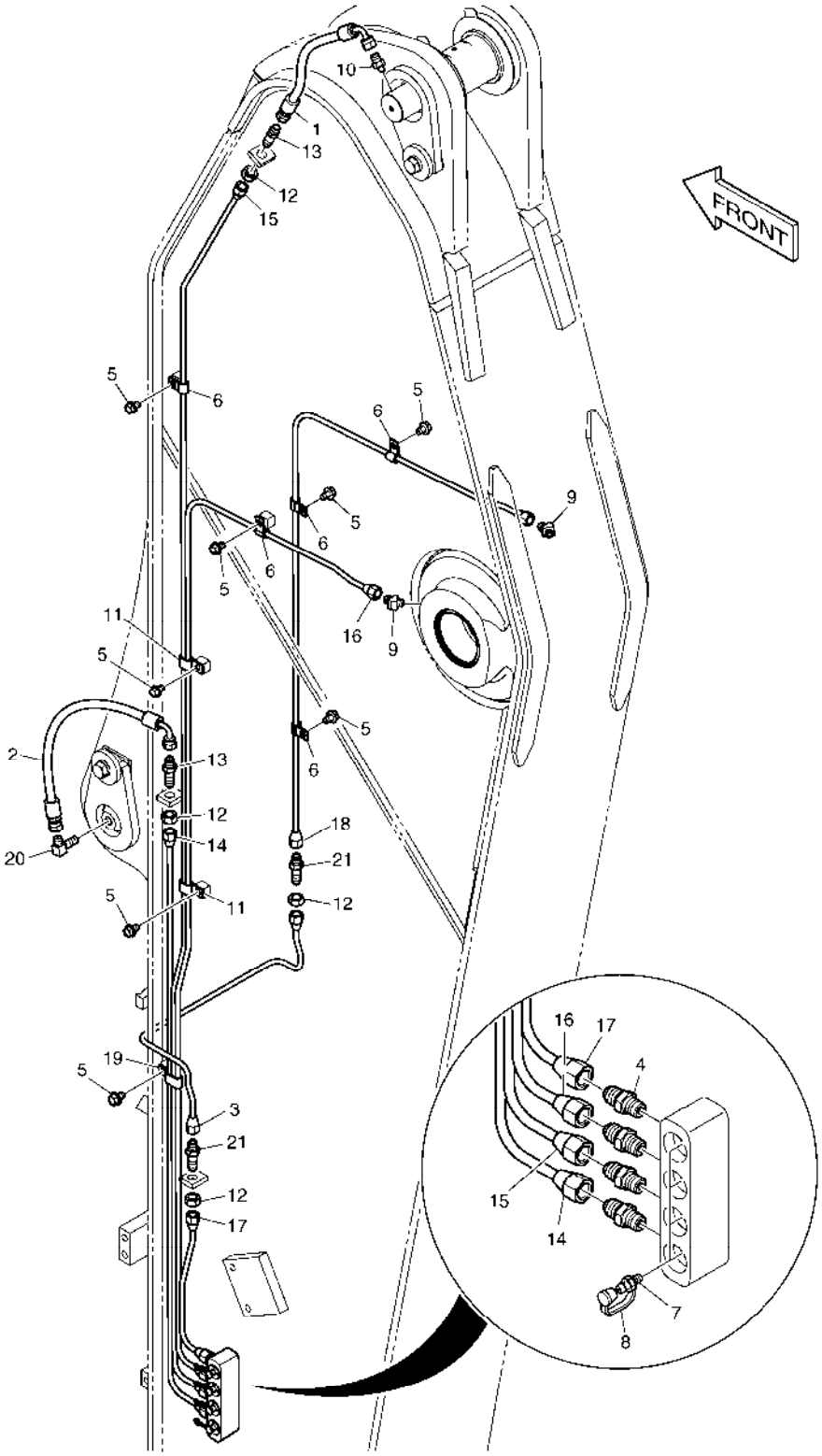

DATE	AUG. 28, 2009
3rd EDITION	

Fig. 6790 LUBRICATION PIPING - ARM 3.5m LUBRIFICATION

Serial No. ; 5001 ~ 5074

Key No.	Part No.	Description	Description	Q'ty	S.C	Serial No.	ICA	Replaceable part	
								Part No.	Q'ty
6790 --	K1023278	LUBRICATION PIPING	LUBRIFICATION	-	D	5001-5074			
1	DS2055849	HOSE	TUYAU FLEXIBLE	1					
2	DS2055699	HOSE	TUYAU FLEXIBLE	1					
3	K1013687	PIPE	TUYAU	1					
4	2181-1184	ADAPTER	ADAPTEUR	4					
5	K1001029	BOLT	BOULON A 6 PANS	8					
6	DS2802023	CLIP	CLIP	5					
7	S6710041	NIPPLE;GREASE	GRAISSEUR	4					
8	160-00020	CAP;GREASE NIPPLE	CHAPEAU	4					
9	K1010730	ELBOW	COUDE	2					
10	2181-4112	ADAPTER	ADAPTEUR	1					
11	DS2805007	CLIP	CLIP	2					
12	S4032833	NUT	ECROU	4					
13	2181-1923D12	ADAPTER	ADAPTEUR	2					
14	K1010218	PIPE	TUYAU	1					
15	K1023328	PIPE	TUYAU	1					
16	K1023329	PIPE	TUYAU	1					
17	K1010221	PIPE	TUYAU	1					
18	K1023330	PIPE	TUYAU	1					
19	DS2805008	CLIP	CLIP	1					
20	2181-1111D11	ELBOW	COUDE	1					
21	DS2225009	ADAPTER	ADAPTEUR	2					

DATE	AUG. 28, 2009
3rd EDITION	

Fig. 6791 LUBRICATION PIPING - ARM 3.5m LUBRIFICATION

Serial No. ; 5111 ~

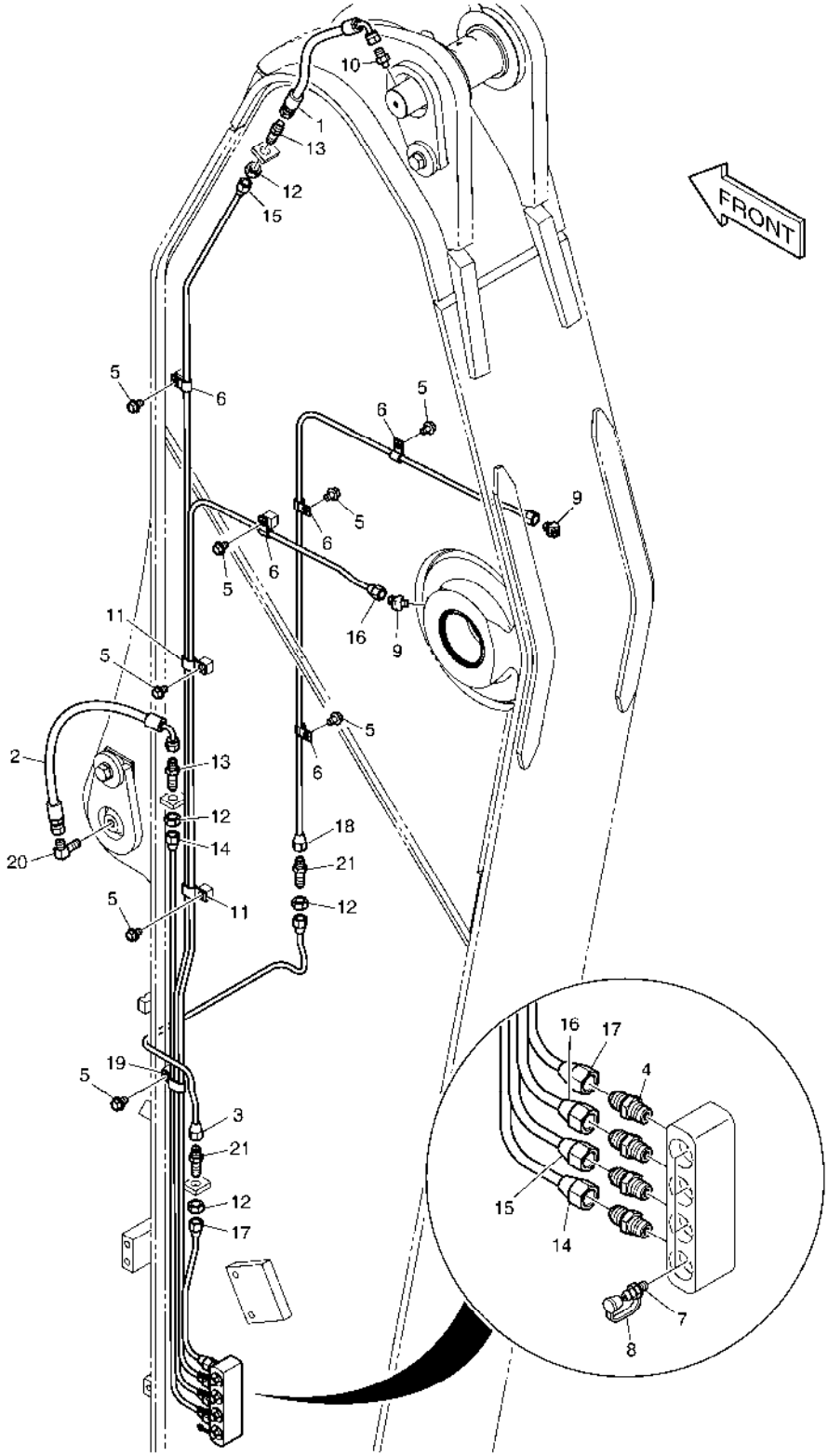

DATE	AUG. 28, 2009
3rd EDITION	

Fig. 6791 LUBRICATION PIPING - ARM 3.5m LUBRIFICATION

Serial No. ; 5111 ~

Key No.	Part No.	Description	Description	Q'ty	S.C	Serial No.	ICA	Replaceable part	
								Part No.	Q'ty
6791 --	K1023278A	LUBRICATION PIPING	LUBRIFICATION	-	D	5111-			
1	DS2055849	HOSE	TUYAU FLEXIBLE	1					
2	DS2055699	HOSE	TUYAU FLEXIBLE	1					
3	K1047641	PIPE	TUYAU	1					
4	2181-1184	ADAPTER	ADAPTEUR	4					
5	K1001029	BOLT	BOULON A 6 PANS	8					
6	DS2802023	CLIP	CLIP	5					
7	S6710041	NIPPLE;GREASE	GRAISSEUR	4					
8	160-00020	CAP;GREASE NIPPLE	CHAPEAU	4					
9	K1010730	ELBOW	COUDE	2					
10	2181-4112	ADAPTER	ADAPTEUR	1					
11	DS2805007	CLIP	CLIP	2					
12	S4032833	NUT	ECROU	4					
13	2181-1923D12	ADAPTER	ADAPTEUR	2					
14	K1010218	PIPE	TUYAU	1					
15	K1023328	PIPE	TUYAU	1					
16	K1023329	PIPE	TUYAU	1					
17	K1010221	PIPE	TUYAU	1					
18	K1023330	PIPE	TUYAU	1					
19	DS2805008	CLIP	CLIP	1					
20	2181-1111D11	ELBOW	COUDE	1					
21	DS2225009	ADAPTER	ADAPTEUR	2					

DATE	AUG. 28, 2009
3rd EDITION	

Fig. 6800 ARM PIPING - ARM 3.5m(ONE & TWO WAY)
CONDUITES DE BALANCIER

Serial No. ;

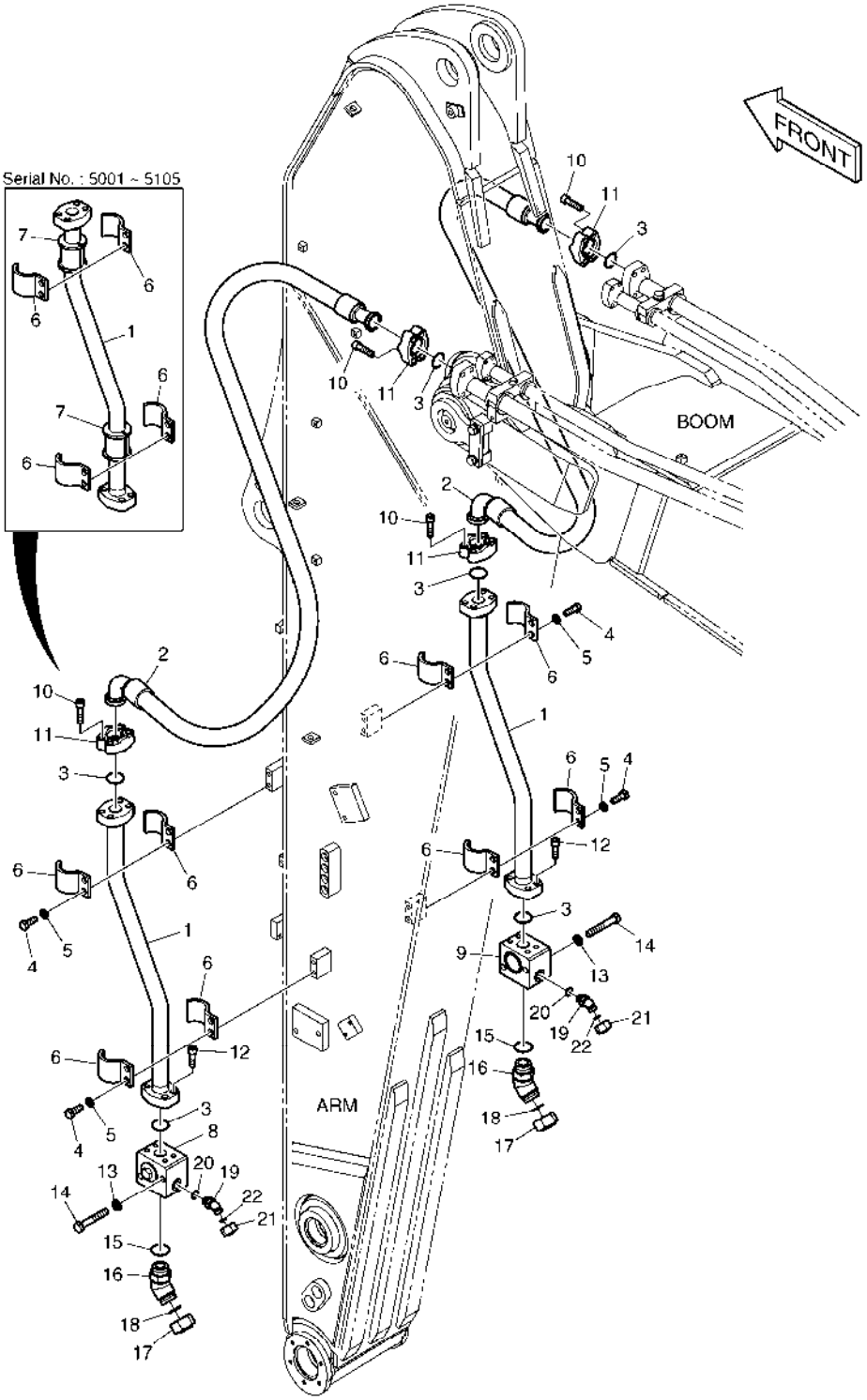

DATE	AUG. 28, 2009
3rd EDITION	

Fig. 6800 ARM PIPING - ARM 3.5m(ONE & TWO WAY) CONDUITES DE BALANCIER

Serial No. ;

Key No.	Part No.	Description	Description	Q'ty	S.C	Serial No.	ICA	Replaceable part	
								Part No.	Q'ty
6800 --	K1023283A	ONE & TWO WAY PIPING(3.5M AI	CONDUITES DE BALANCIE	-	D				
1	K1006218	PIPE	CONDUITE	2					
2	DS2040588	HOSE	TUYAU FLEXIBLE	2					
3	2180-1026D23	O-RING	JOINT TORIQUE	6					
4	S0562766	BOLT	BOULON A 6 PANS	8					
5	S5102803	WASHER;SPRING	RONDELLE ELASTIQUE	8					
6	K1004001	CLAMP;PIPE	COLLIER	8		5001-5105			
	K1004000	CLAMP;PIPE	COLLIER	8		5106-			
7	161-00280	RUBBER	CAOUTCHOUC	4		5001-5105			
8	420-00508B	VALVE;STOP(L.H)	VANNE	1					
9	420-00515B	VALVE;STOP(R.H)	VANNE	1					
10	S2218766	BOLT;SOCKET	BOULON A 6 PANS CREUX	16					
11	2181-9086	FLANGE;SPLIT	FLASQUE EN DEUX PARTIE	8					
12	S2218566	BOLT;SOCKET	BOULON A 6 PANS CREUX	8					
13	S5102903	WASHER	RONDELLE	4					
14	S0566266	BOLT	BOULON A 6 PANS	4					
15	S8000381	O-RING	JOINT TORIQUE	2					
16	2181-2816D3	ELBOW	COUDE	2					
17	2181-2817D3	CAP	CHAPEAU	2					
18	2180-1026D37	O-RING	JOINT TORIQUE	2					
19	2181-2816D4	ELBOW	COUDE	2					
20	S8000181	O-RING	JOINT TORIQUE	2					
21	2181-2817D4	CAP	CHAPEAU	2					
22	S8030081	O-RING	JOINT TORIQUE	2					

DATE	AUG. 28, 2009
3rd EDITION	

Fig. 6810 ARM PIPING - ARM 3.5m(QUICK CLAMP) CONDUITES DE BALANCIER

Serial No. ;

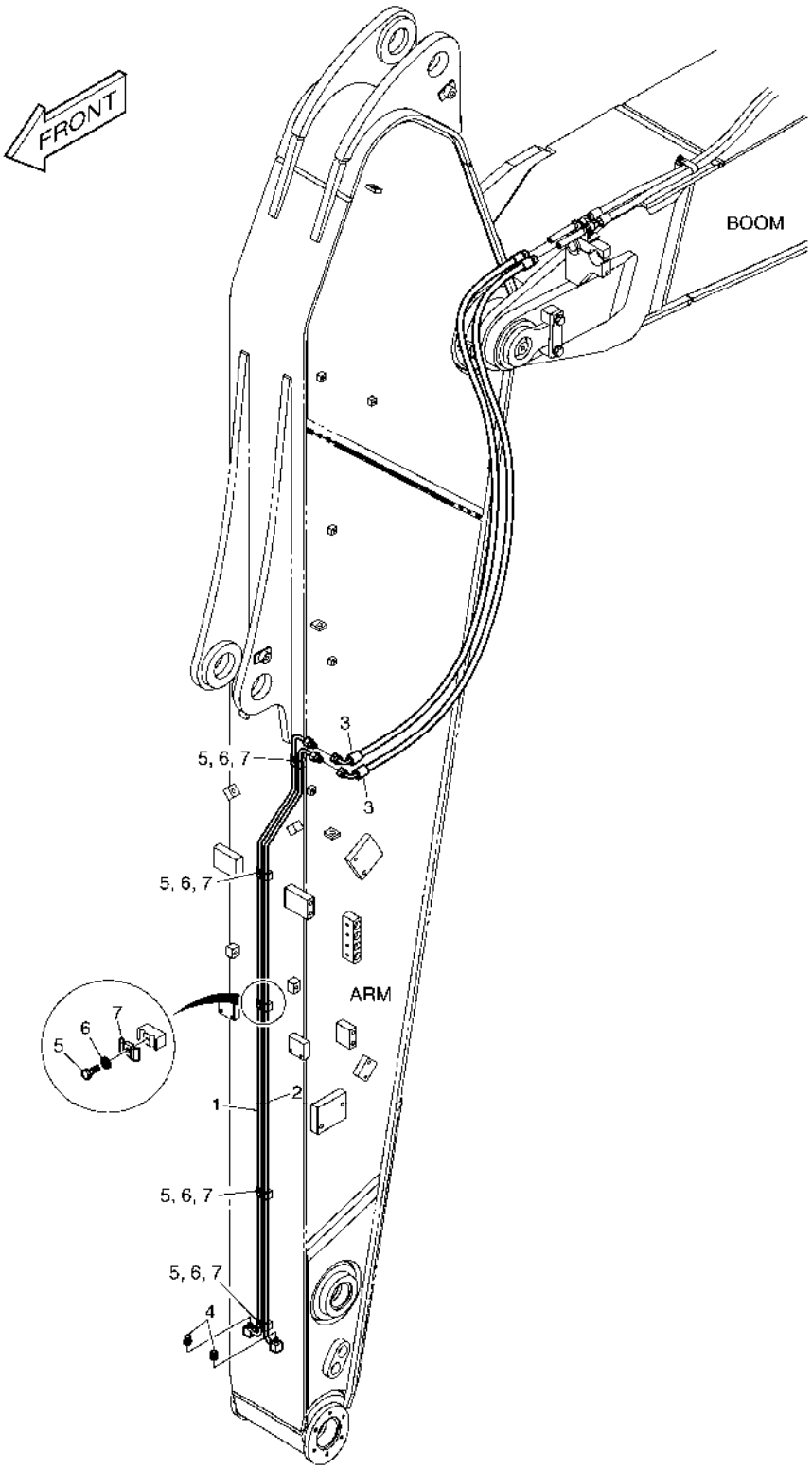

DATE	AUG. 28, 2009
3rd EDITION	

Fig. 6810 ARM PIPING - ARM 3.5m(QUICK CLAMP) CONDUITES DE BALANCIER

Serial No. ;

Key No.	Part No.	Description	Description	Q'ty	S.C	Serial No.	ICA	Replaceable part	
								Part No.	Q'ty
6810 --	K1023281	ARM PIPING-QUICK CLAMP	CONDUITES DE BALANCIE	-	D				
1	K1024823	PIPE	TUYAU	1					
2	K1024824	PIPE	TUYAU	1					
3	DS2055927	HOSE	TUYAU FLEXIBLE	2					
4	2181-2820D1	PLUG	BOUCHON	2					
5	S0508866	BOLT	BOULON A 6 PANS	5					
6	S5102503	WASHER	RONDELLE ELASTIQUE	5					
7	K1004011	CLAMP;PIPE	FIXATION DE TUYAU	5					

DATE	AUG. 28, 2009
3rd EDITION	

Fig. 6820 ARM PIPING - ARM 3.5m(CLAMSHELL) CONDUITES DE BALANCIER

Serial No. ;

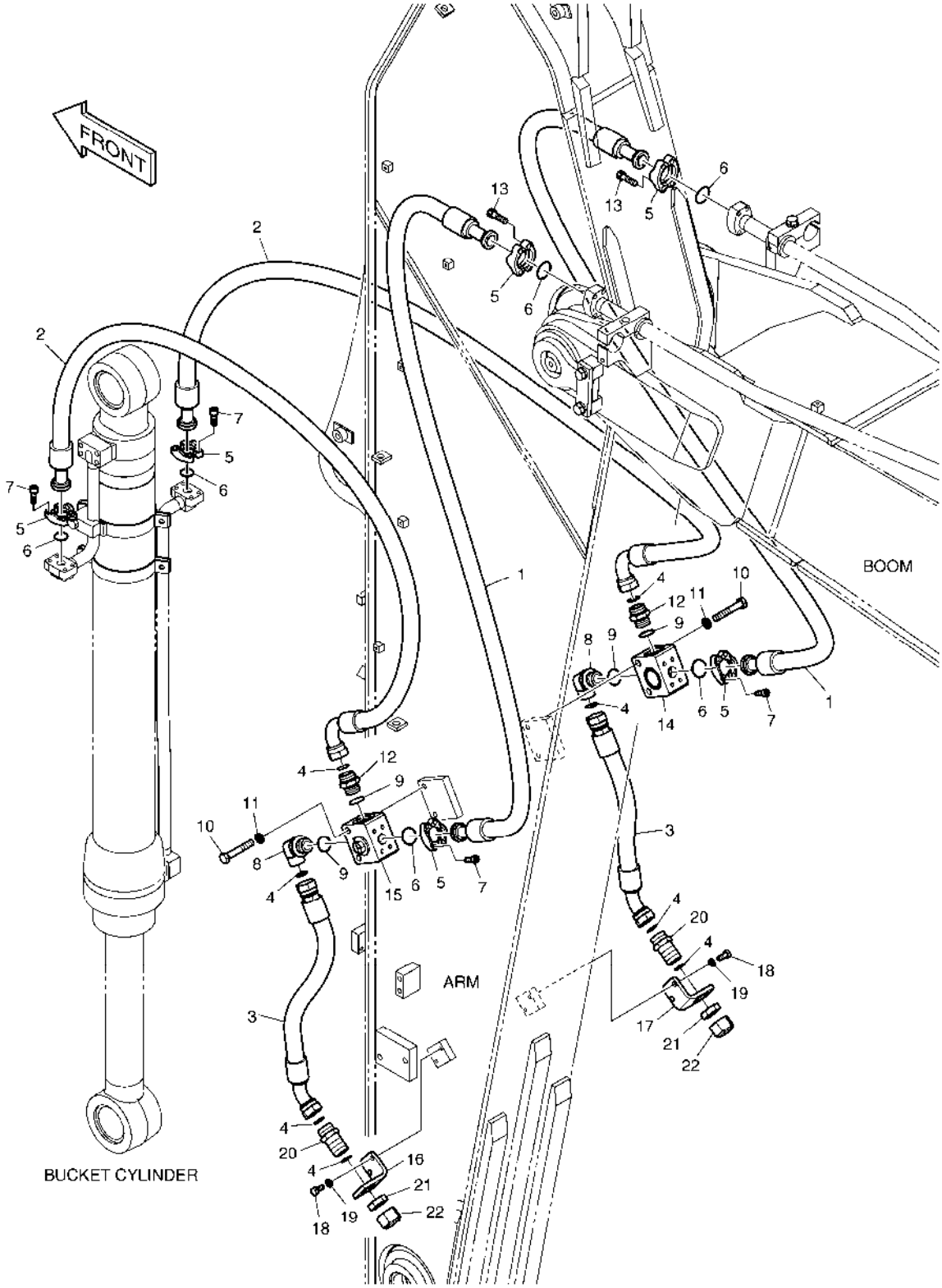

DATE	AUG. 28, 2009
3rd EDITION	

Fig. 6820 ARM PIPING - ARM 3.5m(CLAMSHELL) CONDUITES DE BALANCIER

Serial No. ;

Key No.	Part No.	Description	Description	Q'ty	S.C	Serial No.	ICA	Replaceable part	
								Part No.	Q'ty
6820 --	K1023282	CLAMSHELL PIPING(3.5M ARM)	CONDUITES DE BALANCIE	-	D				
1	DS2038240	HOSE	TUYAU FLEXIBLE	2					
2	DS2025087	HOSE	TUYAU FLEXIBLE	2					
3	DS2012419	HOSE	TUYAU FLEXIBLE	2					
4	S8030161	O-RING	JOINT TORIQUE	8					
5	2181-9078	FLANGE	BRIDE	12					
6	2180-1026D19	O-RING	JOINT TORIQUE	6					
7	S2212266	BOLT;SOCKET	BOULON A 6 PANS CREUX	16					
8	2181-2815D1	ELBOW	COUDE	2					
9	S8000291	O-RING	JOINT TORIQUE	4					
10	S0563666	BOLT	BOULON A 6 PANS	4					
11	S5102803	WASHER;SPRING	RONDELLE ELASTIQUE	4					
12	2181-4133D6	ADAPTER	RACCORD ADAPTATEUR	2					
13	S2212466	BOLT;SOCKET M10X1.5X40	BOULON A 6 PANS CREUX	8					
14	K1002965	VALVE;SWITCH	VANNE	1					
15	K1002967	VALVE;SWITCH	VANNE	1					
16	K1023326	BRACKET	SUPPORT	1					
17	K1023327	BRACKET	SUPPORT	1					
18	S0512066	BOLT	BOULON A 6 PANS	4					
19	S5102603	WASHER	RONDELLE ELASTIQUE	4					
20	DS2415005	ADAPTER;CONNECTOR	ADAPTEUR	2					
21	121-00010D9	NUT	ECROU	2					
22	2181-2817D2	CAP	CHAPEAU	2					

DATE	AUG. 28, 2009
3rd EDITION	

Fig. 6830 ARM PIPING - ARM 3.5m(ROTATING) CONDUITES DE BALANCIER

Serial No. ;

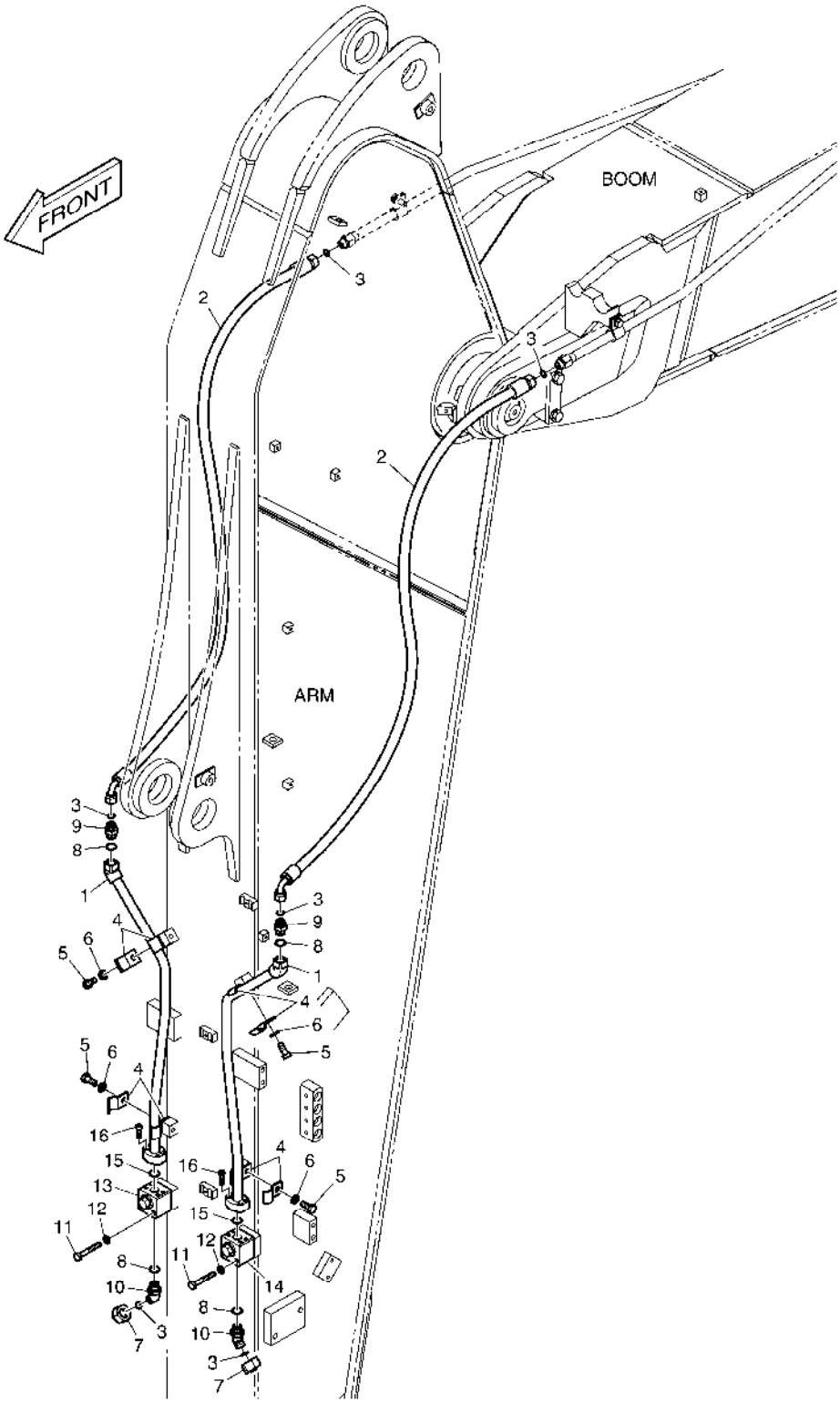

DATE	AUG. 28, 2009
3rd EDITION	

Fig. 6830 ARM PIPING - ARM 3.5m(ROTATING) CONDUITES DE BALANCIER

Serial No. ;

Key No.	Part No.	Description	Description	Q'ty	S.C	Serial No.	ICA	Replaceable part	
								Part No.	Q'ty
6830 --	K1023280	ROTATION PIPING(3.5M ARM)	CONDUITES DE BALANCIE	-	D				
1	K1011072	PIPE	TUYAU	2					
2	DS2013625	HOSE	TUYAU FLEXIBLE	2					
3	S8030081	O-RING	JOINT TORIQUE	6					
4	124-00299A	CLAMP;PIPE	COLLIER	8					
5	S0515266	BOLT	BOULON A 6 PANS	4					
6	S5102703	WASHER;SPRING	RONDELLE ELASTIQUE	4					
7	2181-2817D4	CAP	CHAPEAU	2					
8	S8000181	O-RING	JOINT TORIQUE	4					
9	2181-4133D3	ADAPTER	ADAPTEUR	2					
10	2181-2816D4	ELBOW	COUDE	2					
11	S0558966	BOLT	BOULON	4					
12	S5102603	WASHER	RONDELLE ELASTIQUE	4					
13	K1006227	VALVE;SWITCH(R.H)	VANNE	1					
14	K1006228	VALVE;SWITCH(L.H)	VANNE	1					
15	2180-1026D30	O-RING	JOINT TORIQUE	2					
16	S2209266	BOLT	BOULON A 6 PANS CREUX	8					

DATE	AUG. 28, 2009
3rd EDITION	

Fig. 6840 BUCKET ASS'Y - 0.67m³(36") - SIDE PIN
ENSEMBLE DE GODET

Serial No. ;

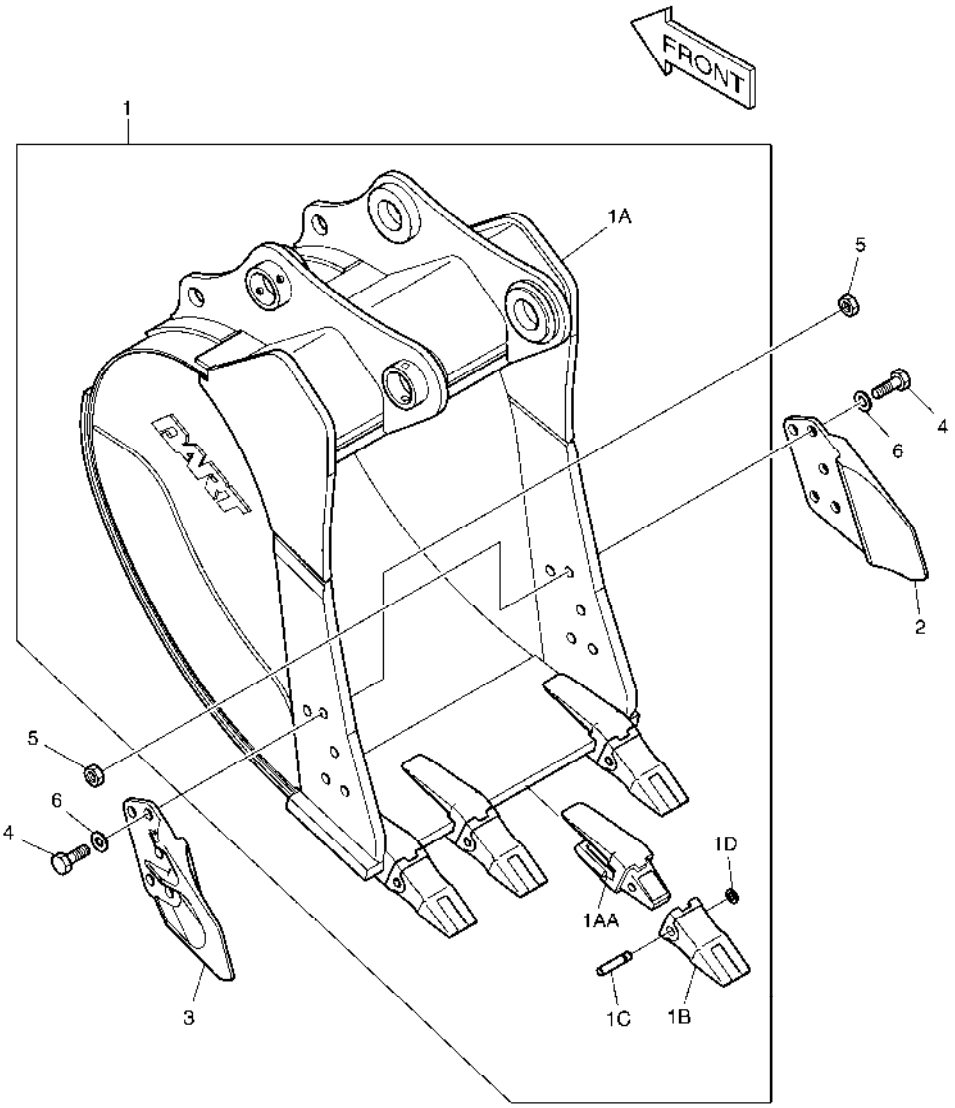

DATE	AUG. 28, 2009
3rd EDITION	

Fig. 6840 BUCKET ASS'Y - 0.67m³(36") - SIDE PIN
ENSEMBLE DE GODET

Serial No. ;

Key No.	Part No.	Description	Description	Q'ty	S.C	Serial No.	ICA	Replaceable part	
								Part No.	Q'ty
6840 --	K1013100	BUCKET ASS'Y-0.67㎥	GODET	1		5001-5109	I	K1013100A	1
	K1013100A	BUCKET ASS'Y-0.67㎥	GODET	1		5110-			
1	K1013101	BUCKET;WITH TOOTH-0.67㎥	GODET	1	D				1
1A	K1013102	. BUCKET;WELD-0.67㎥	. GODET	1		5001-5109	I	K1013102A	1
	K1013102A	. BUCKET;WELD-0.67m³	. GODET	1		5110-			
1AA	2713-1218	.. ADAPTER;TOOTH	.. DENT DE ADAPTEUR	4		5001-5109	I	2713-1218A	4
	2713-1218A	.. ADAPTER;TOOTH	.. DENT DE ADAPTEUR	4		5110-			
1B	713-00024	. POINT;TOOTH	. DENT	4		5001-5109	I	713-00024A	4
	713-00024A	. TOOTH;POINT	. DENT	4		5110-			
1C	2705-1020	. PIN;LOCKING	. GOUPILLE DE BLOCAGE	4					
1D	2114-1848A	. WASHER;LOCKING	. RONDELLE	4					
2	2713-1059A	CUTTER;SIDE(R.H)	COIN DE GODET DROIT	1					
3	2713-1060A	CUTTER;SIDE(L.H)	COIN DE GODET GAUCHE	1					
4	S0574861	BOLT M24X3.0X75	BOULON A 6 PANS	10					
5	S4013333	NUT	ECROU	10					
6	2114-1831A	WASHER;HARDEN	RONDELLE	10					

DATE	AUG. 28, 2009
3rd EDITION	

Fig. 6850 BUCKET ASS'Y - 0.8m³(42") - SIDE PIN
ENSEMBLE DE GODET

Serial No. ;

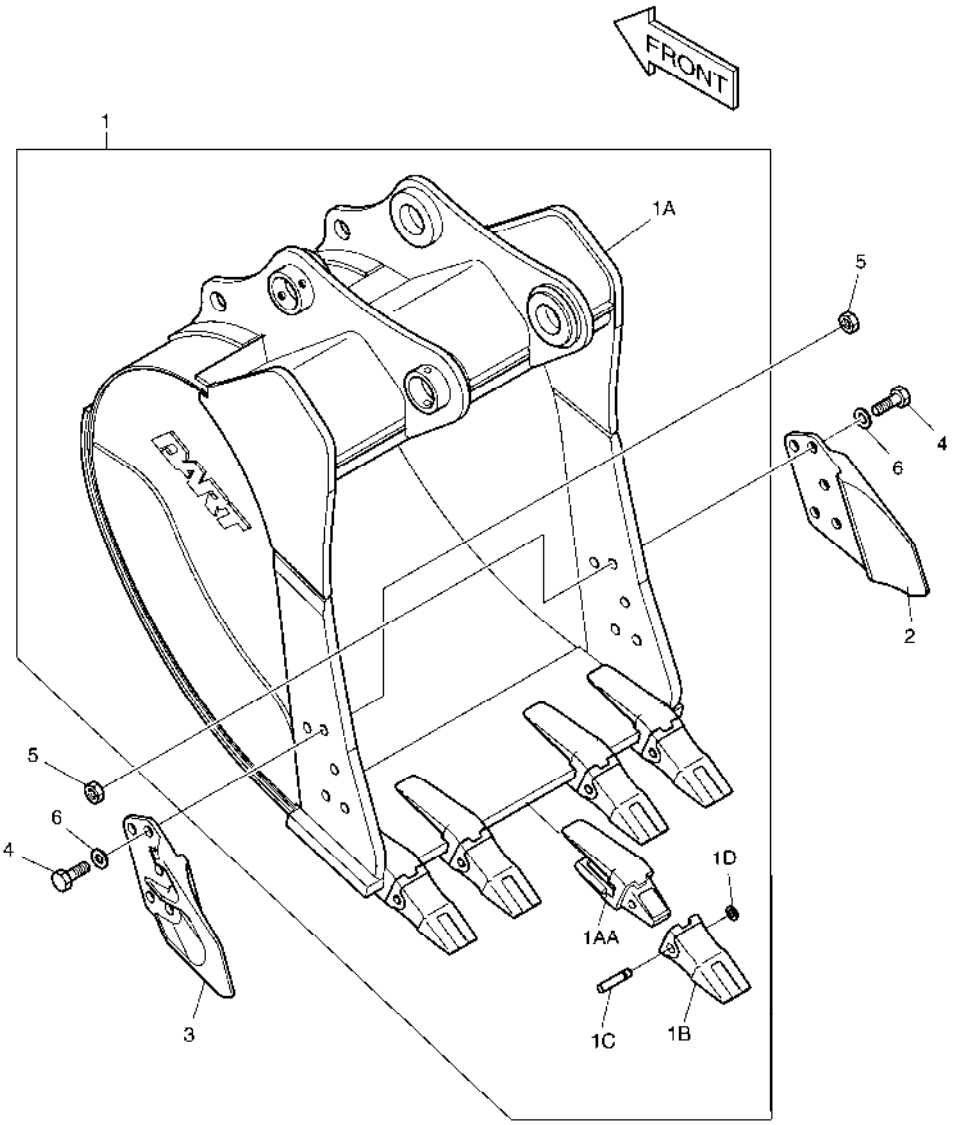

DATE	AUG. 28, 2009
3rd EDITION	

Fig. 6850 BUCKET ASS'Y - 0.8m³(42") - SIDE PIN
ENSEMBLE DE GODET

Serial No. ;

Key No.	Part No.	Description	Description	Q'ty	S.C	Serial No.	ICA	Replaceable part	
								Part No.	Q'ty
6850 --	K1013103	BUCKET ASS'Y-0.8㎥	ENSEMBLE GODET	1		5001-5109	I	K1013103A	1
	K1013103A	BUCKET ASS'Y-0.8㎥	ENSEMBLE GODET	1		5110-			
1	K1013104	BUCKET;WITH TOOTH-0.8㎥	GODET	1	D				
1A	K1013105	. BUCKET;WELD-0.8㎥	. GODET	1		5001-5109	I	K1013105A	1
	K1013105A	. BUCKET;WELD-0.8m³	. GODET	1		5110-			
1AA	2713-1218	.. ADAPTER;TOOTH	.. DENT DE ADAPTEUR	5		5001-5109	I	2713-1218A	5
	2713-1218A	.. ADAPTER;TOOTH	.. DENT DE ADAPTEUR	5		5110-			
1B	713-00024	. POINT;TOOTH	. DENT	5		5001-5109	I	713-00024A	5
	713-00024A	. TOOTH;POINT	. DENT	5		5110-			
1C	2705-1020	. PIN;LOCKING	. GOUPILLE DE BLOCAGE	5					
1D	2114-1848A	. WASHER;LOCKING	. RONDELLE	5					
2	2713-1059A	CUTTER;SIDE(R.H)	COIN DE GODET DROIT	1					
3	2713-1060A	CUTTER;SIDE(L.H)	COIN DE GODET GAUCHE	1					
4	S0574861	BOLT M24X3.0X75	BOULON A 6 PANS	10					
5	S4013333	NUT	ECROU	10					
6	2114-1831A	WASHER;HARDEN	RONDELLE	10					

DATE	AUG. 28, 2009
3rd EDITION	

Fig. 6860 BUCKET ASS'Y - 0.95m³(48") - SIDE PIN
ENSEMBLE DE GODET

Serial No. ;

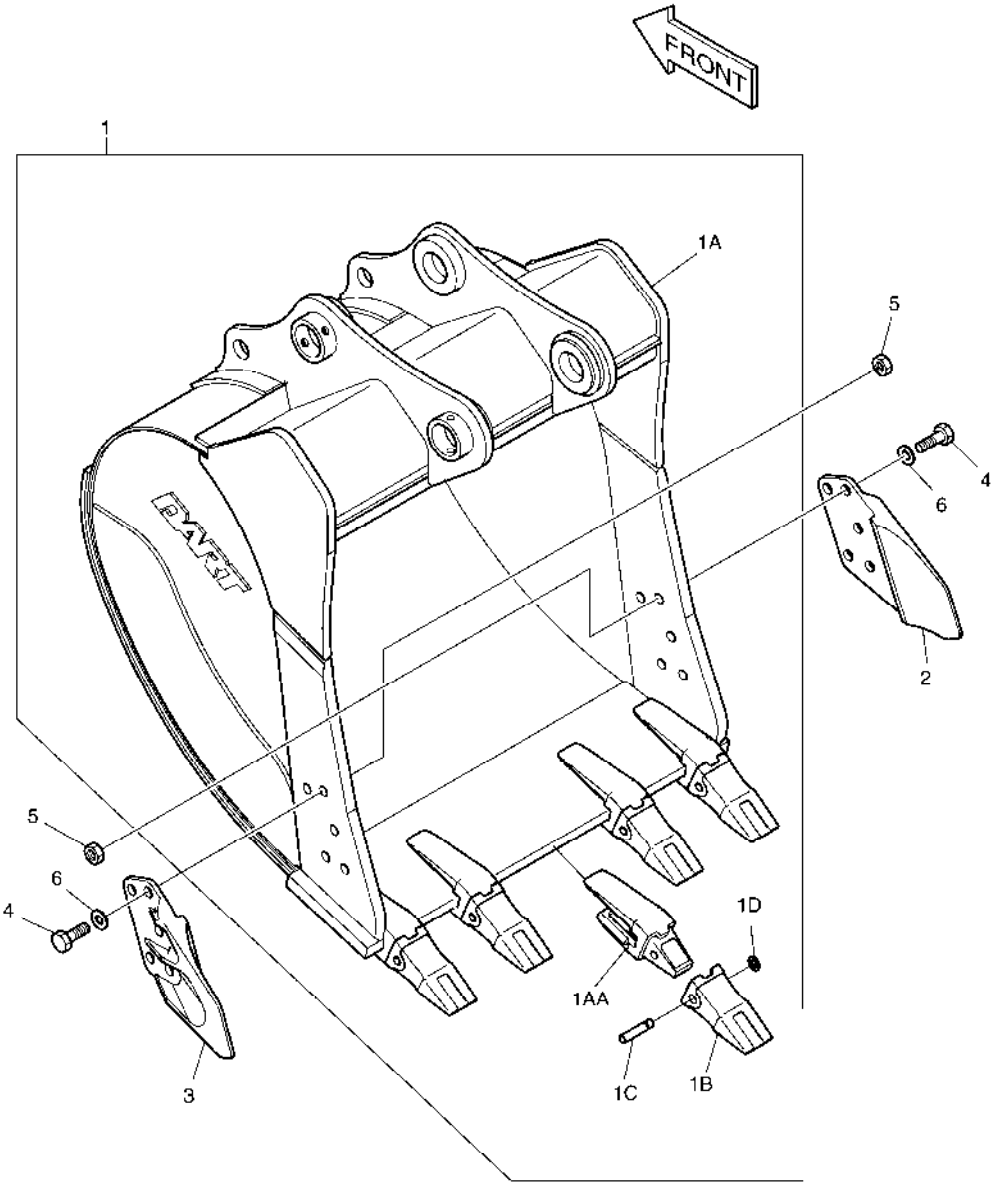

DATE	AUG. 28, 2009
3rd EDITION	

Fig. 6860 BUCKET ASS'Y - 0.95m³(48") - SIDE PIN
ENSEMBLE DE GODET

Serial No. ;

Key No.	Part No.	Description	Description	Q'ty	S.C	Serial No.	ICA	Replaceable part	
								Part No.	Q'ty
6860 --	K1013106	BUCKET ASS'Y-0.95㎥	GODET	1		5001-5109	I	K1013106A	1
	K1013106A	BUCKET ASS`Y-0.95m³	GODET	1		5110-			
1	K1013107	BUCKET;WITH TOOTH-0.95m³	GODET	1	D				
1A	K1013108	. BUCKET;WELD-0.95㎥	. GODET	1		5001-5109	I	K1013108A	1
	K1013108A	. BUCKET;WELD-0.95m³	. GODET	1		5110-			
1AA	2713-1218	.. ADAPTER;TOOTH	.. DENT DE ADAPTEUR	5		5001-5109	I	2713-1218A	5
	2713-1218A	.. ADAPTER;TOOTH	.. DENT DE ADAPTEUR	5		5110-			
1B	713-00024	. POINT;TOOTH	. DENT	5		5001-5109	I	713-00024A	5
	713-00024A	. TOOTH;POINT	. DENT	5		5110-			
1C	2705-1020	. PIN;LOCKING	. GOUPILLE DE BLOCAGE	5					
1D	2114-1848A	. WASHER;LOCKING	. RONDELLE	5					
2	2713-1059A	CUTTER;SIDE(R.H)	COIN DE GODET DROIT	1					
3	2713-1060A	CUTTER;SIDE(L.H)	COIN DE GODET GAUCHE	1					
4	S0574861	BOLT M24X3.0X75	BOULON A 6 PANS	10					
5	S4013333	NUT	ECROU	10					
6	2114-1831A	WASHER;HARDEN	RONDELLE	10					

DATE	AUG. 28, 2009
3rd EDITION	

Fig. 6870 BUCKET ASS'Y - 1.1m³(54") - SIDE PIN
ENSEMBLE DE GODET

Serial No. ;

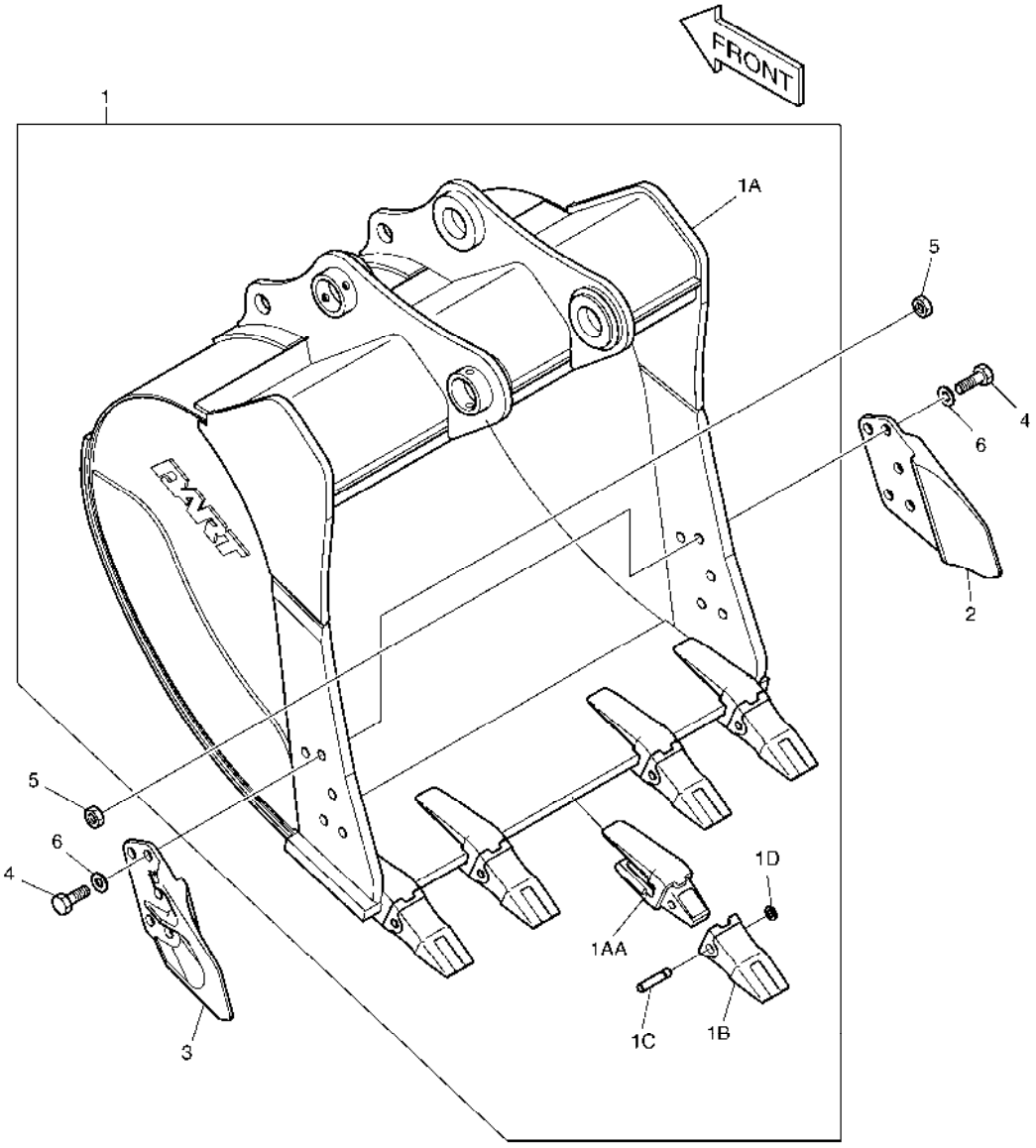

DATE	AUG. 28, 2009
3rd EDITION	

Fig. 6870 BUCKET ASS'Y - 1.1m³(54") - SIDE PIN
ENSEMBLE DE GODET

Serial No. ;

Key No.	Part No.	Description	Description	Q'ty	S.C	Serial No.	ICA	Replaceable part	
								Part No.	Q'ty
6870 --	K1013110	BUCKET ASS'Y-1.1㎥	GODET	1		5001-5109	I	K1013110A	1
	K1013110A	BUCKET ASS'Y-1.1㎥	GODET	1		5110-			
1	K1013111	BUCKET;WITH TOOTH-1.1㎥	GODET	1	D				
1A	K1013112	. BUCKET;WELD-1.1㎥	. GODET	1		5001-5109	I	K1013112A	1
	K1013112A	. BUCKET;WELD-1.1m³	. GODET	1		5110-			
1AA	2713-1218	.. ADAPTER;TOOTH	.. DENT DE ADAPTEUR	5		5001-5109	I	2713-1218A	5
	2713-1218A	.. ADAPTER;TOOTH	.. DENT DE ADAPTEUR	5		5110-			
1B	713-00024	. POINT;TOOTH	. DENT	5		5001-5109	I	713-00024A	5
	713-00024A	. TOOTH;POINT	. DENT	5		5110-			
1C	2705-1020	. PIN;LOCKING	. GOUPILLE DE BLOCAGE	5					
1D	2114-1848A	. WASHER;LOCKING	. RONDELLE	5					
2	2713-1059A	CUTTER;SIDE(R.H)	COIN DE GODET DROIT	1					
3	2713-1060A	CUTTER;SIDE(L.H)	COIN DE GODET GAUCHE	1					
4	S0574861	BOLT M24X3.0X75	BOULON A 6 PANS	10					
5	S4013333	NUT	ECROU	10					
6	2114-1831A	WASHER;HARDEN	RONDELLE	10					

DATE	AUG. 28, 2009
3rd EDITION	

Fig. 6880 BUCKET ASS'Y - 1.17m³(57") - SIDE PIN
ENSEMBLE DE GODET

Serial No. ;

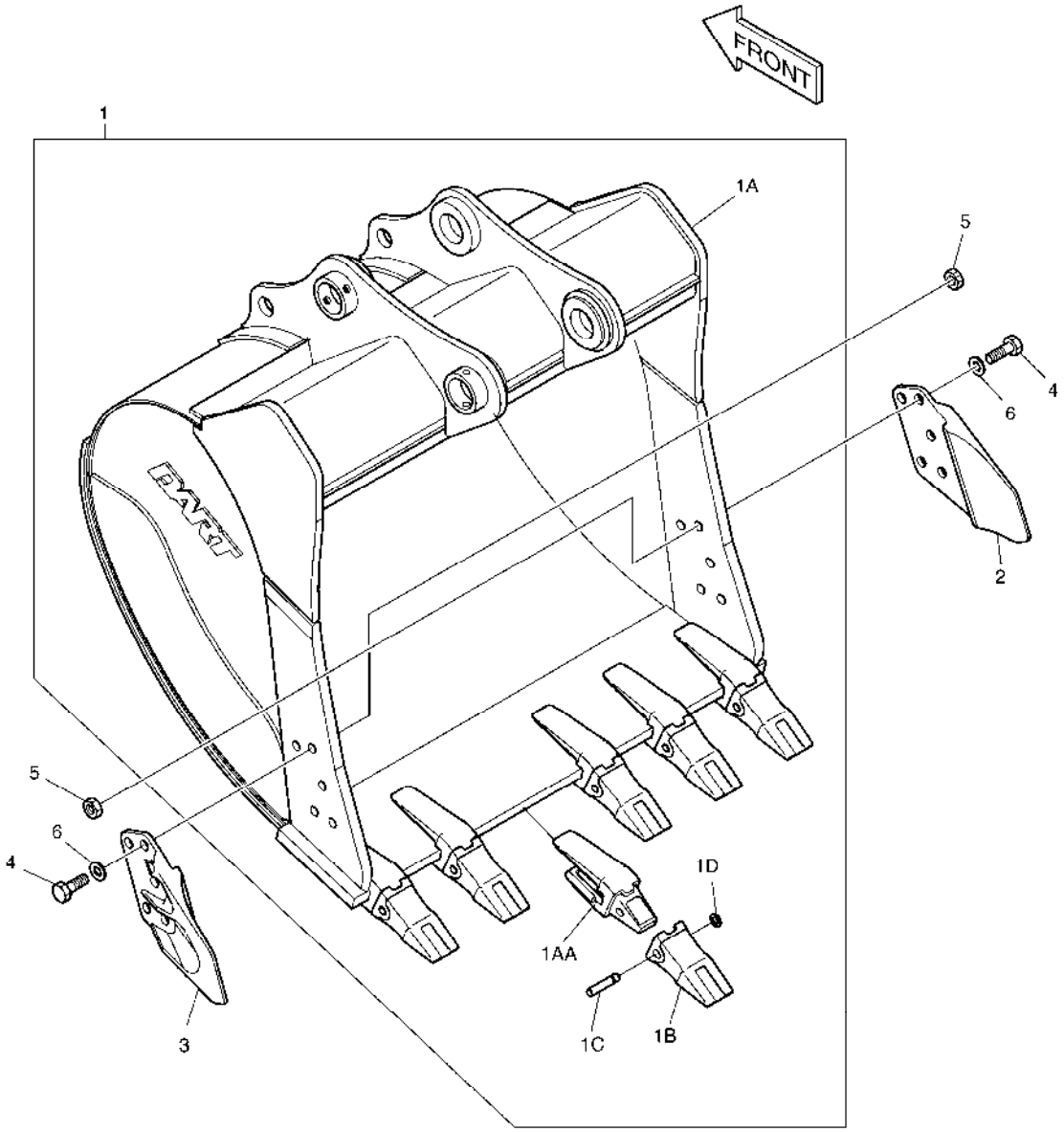

DATE	AUG. 28, 2009
3rd EDITION	

Fig. 6880 BUCKET ASS'Y - 1.17m³(57") - SIDE PIN
ENSEMBLE DE GODET

Serial No. ;

Key No.	Part No.	Description	Description	Q'ty	S.C	Serial No.	ICA	Replaceable part	
								Part No.	Q'ty
6880 --	K1013113	BUCKET ASS'Y-1.17㎥	GODET	1		5001-5109	I	K1013113A	1
	K1013113A	BUCKET ASS'Y-1.17㎥	GODET	1		5110-			
1	K1013114	BUCKET;WITH TOOTH-1.17㎥	GODET	1	D				
1A	K1013115	. BUCKET;WELD-1.17㎥	. GODET	1		5001-5109	I	K1013115A	1
	K1013115A	. BUCKET;WELD-1.17m³	. GODET	1		5110-			
1AA	2713-1218	.. ADAPTER;TOOTH	.. DENT DE ADAPTEUR	6		5001-5109	I	2713-1218A	6
	2713-1218A	.. ADAPTER;TOOTH	.. DENT DE ADAPTEUR	6		5110-			
1B	713-00024	. POINT;TOOTH	. DENT	6		5001-5109	I	713-00024A	6
	713-00024A	. TOOTH;POINT	. DENT	6		5110-			
1C	2705-1020	. PIN;LOCKING	. GOUPILLE DE BLOCAGE	6					
1D	2114-1848A	. WASHER;LOCKING	. RONDELLE	6					
2	2713-1059A	CUTTER;SIDE(R.H)	COIN DE GODET DROIT	1					
3	2713-1060A	CUTTER;SIDE(L.H)	COIN DE GODET GAUCHE	1					
4	S0574861	BOLT M24X3.0X75	BOULON A 6 PANS	10					
5	S4013333	NUT	ECROU	10					
6	2114-1831A	WASHER;HARDEN	RONDELLE	10					

DATE	AUG. 28, 2009
3rd EDITION	

Fig. 6890 BUCKET ASS'Y - 1.31m³(63") - SIDE PIN
ENSEMBLE DE GODET

Serial No. ;

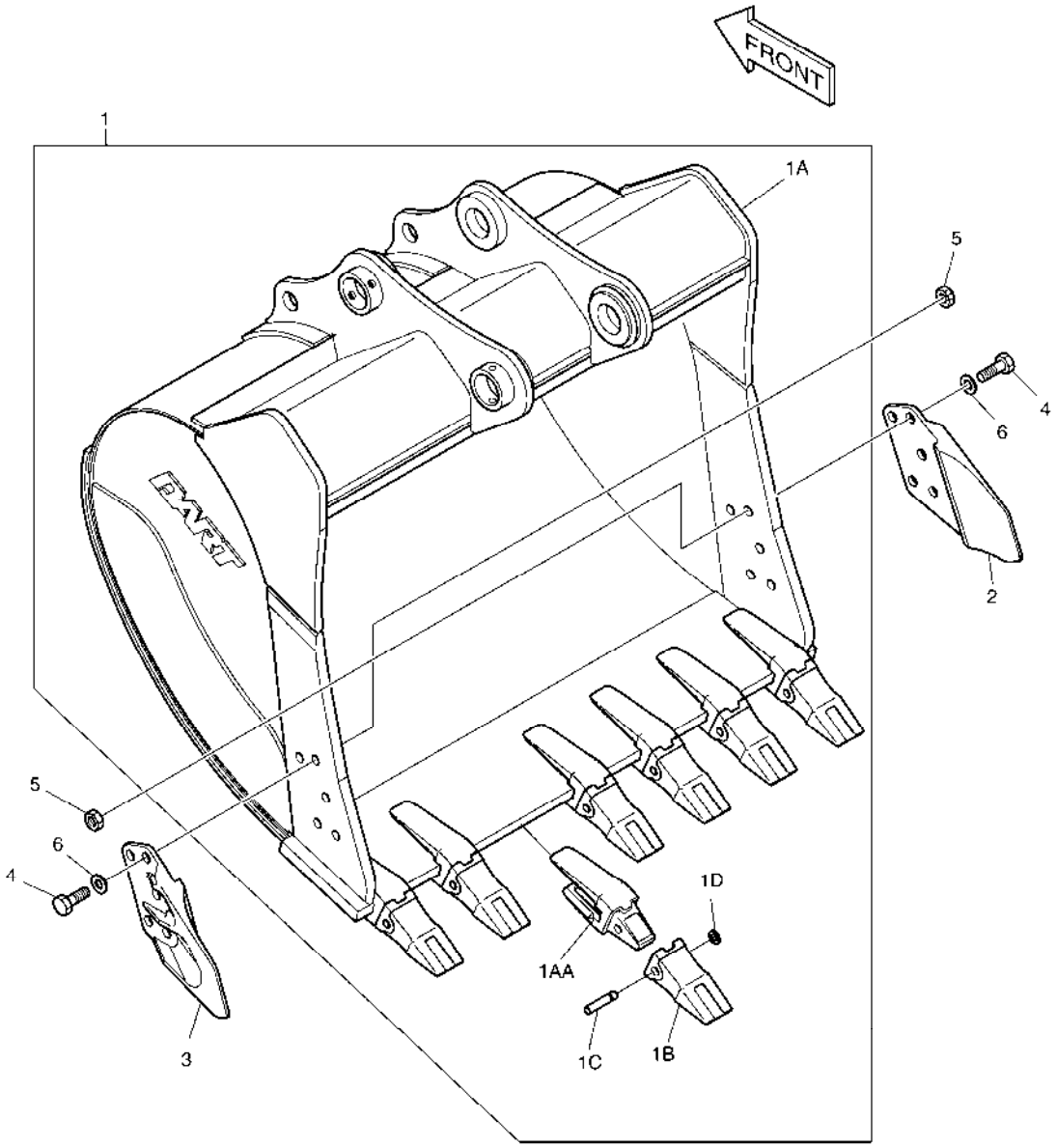

DATE	AUG. 28, 2009
3rd EDITION	

Fig. 6890 BUCKET ASS'Y - 1.31m³(63") - SIDE PIN
ENSEMBLE DE GODET

Serial No. ;

Key No.	Part No.	Description	Description	Q'ty	S.C	Serial No.	ICA	Replaceable part	
								Part No.	Q'ty
6890 --	K1013117	BUCKET ASS'Y-1.31㎥	GODET	1		5001-5109	I	K1013117A	1
	K1013117A	BUCKET ASS'Y-1.31㎥	GODET	1		5110-			
1	K1013118	BUCKET;WITH TOOTH-1.31㎥	GODET	1	D				
1A	K1013119	. BUCKET;WELD-1.31㎥	. GODET	1		5001-5109	I	K1013119A	1
	K1013119A	. BUCKET;WELD-1.31m³	. GODET	1		5110-			
1AA	2713-1218	.. ADAPTER;TOOTH	.. DENT DE ADAPTEUR	7		5001-5109	I	2713-1218A	7
	2713-1218A	.. ADAPTER;TOOTH	.. DENT DE ADAPTEUR	7		5110-			
1B	713-00024	. POINT;TOOTH	. DENT	7		5001-5109	I	713-00024A	7
	713-00024A	. TOOTH;POINT	. DENT	7		5110-			
1C	2705-1020	. PIN;LOCKING	. GOUPILLE DE BLOCAGE	7					
1D	2114-1848A	. WASHER;LOCKING	. RONDELLE	7					
2	2713-1059A	CUTTER;SIDE(R.H)	COIN DE GODET DROIT	1					
3	2713-1060A	CUTTER;SIDE(L.H)	COIN DE GODET GAUCHE	1					
4	S0574861	BOLT M24X3.0X75	BOULON A 6 PANS	10					
5	S4013333	NUT	ECROU	10					
6	2114-1831A	WASHER;HARDEN	RONDELLE	10					

DATE	AUG. 28, 2009
3rd EDITION	

Fig. 6900 ALTERNATOR - 80A ALTERNATEUR

Serial No. ;

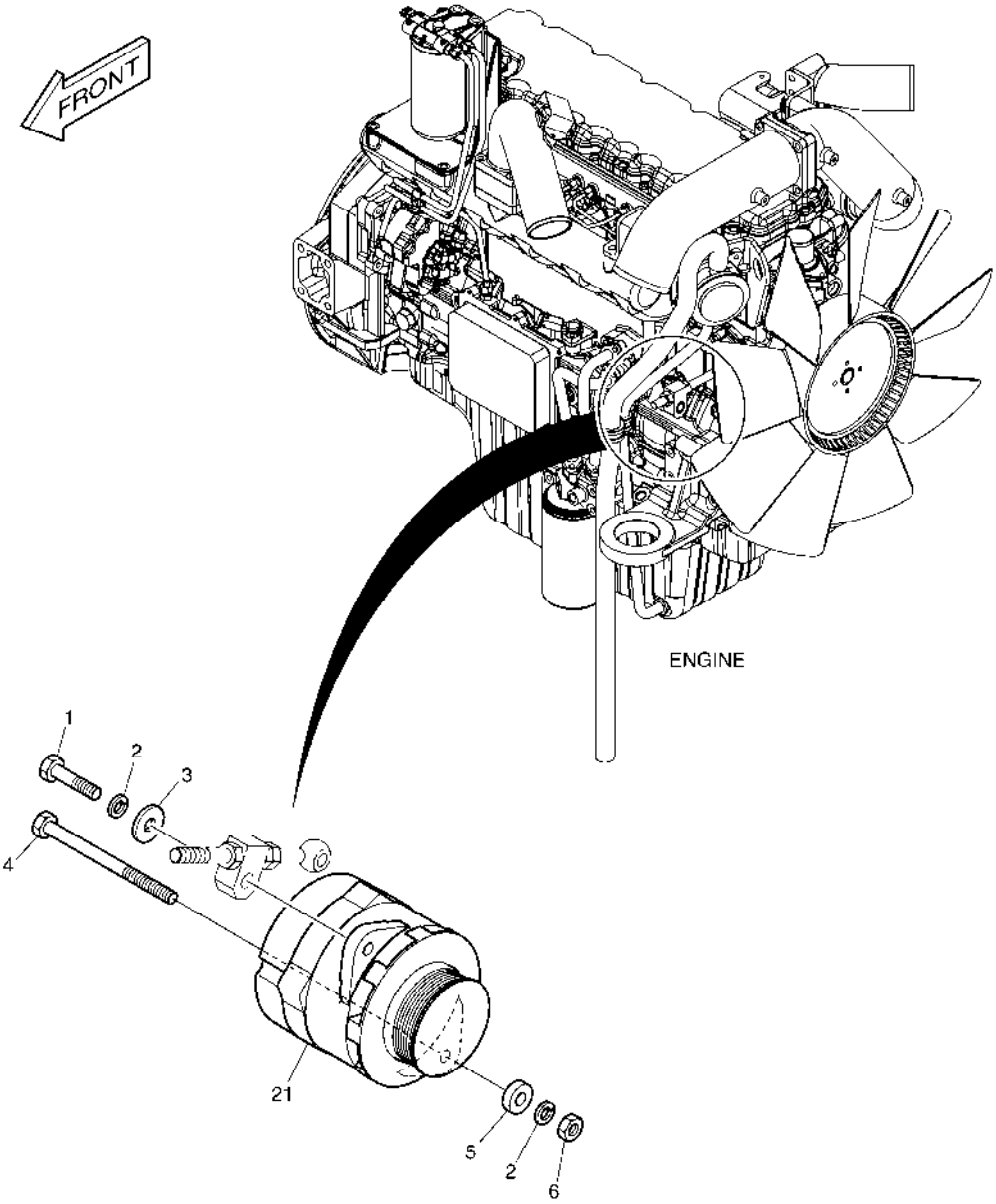

DATE	AUG. 28, 2009
3rd EDITION	

Fig. 6900 ALTERNATOR - 80A ALTERNATEUR

Serial No. ;

Key No.	Part No.	Description	Description	Q'ty	S.C	Serial No.	ICA	Replaceable part	
								Part No.	Q'ty
6900 --	K1008715	ALTERNATOR MOUNTING	SUPPORT D'ALTERNATEU	-	D				
1	S0760853	BOLT	BOULON A 6 PANS	1					
2	S5102703	WASHER;SPRING	RONDELLE ELASTIQUE	2					
3	2114-1058D54	WASHER	RONDELLE	1					
4	S0562653	BOLT M12X1.75X160	BOULON A 6 PANS	1					
5	S5010713	WASHER;PLAIN	RONDELLE	1					
6	S4012733	NUT	ECROU	1					
21	K1010703	ALTERNATOR 80A	ALTERNATEUR	1					

DATE	AUG. 28, 2009
3rd EDITION	

Fig. 6910 CD PLAYER PLAQUEUR DE CD

Serial No. ;

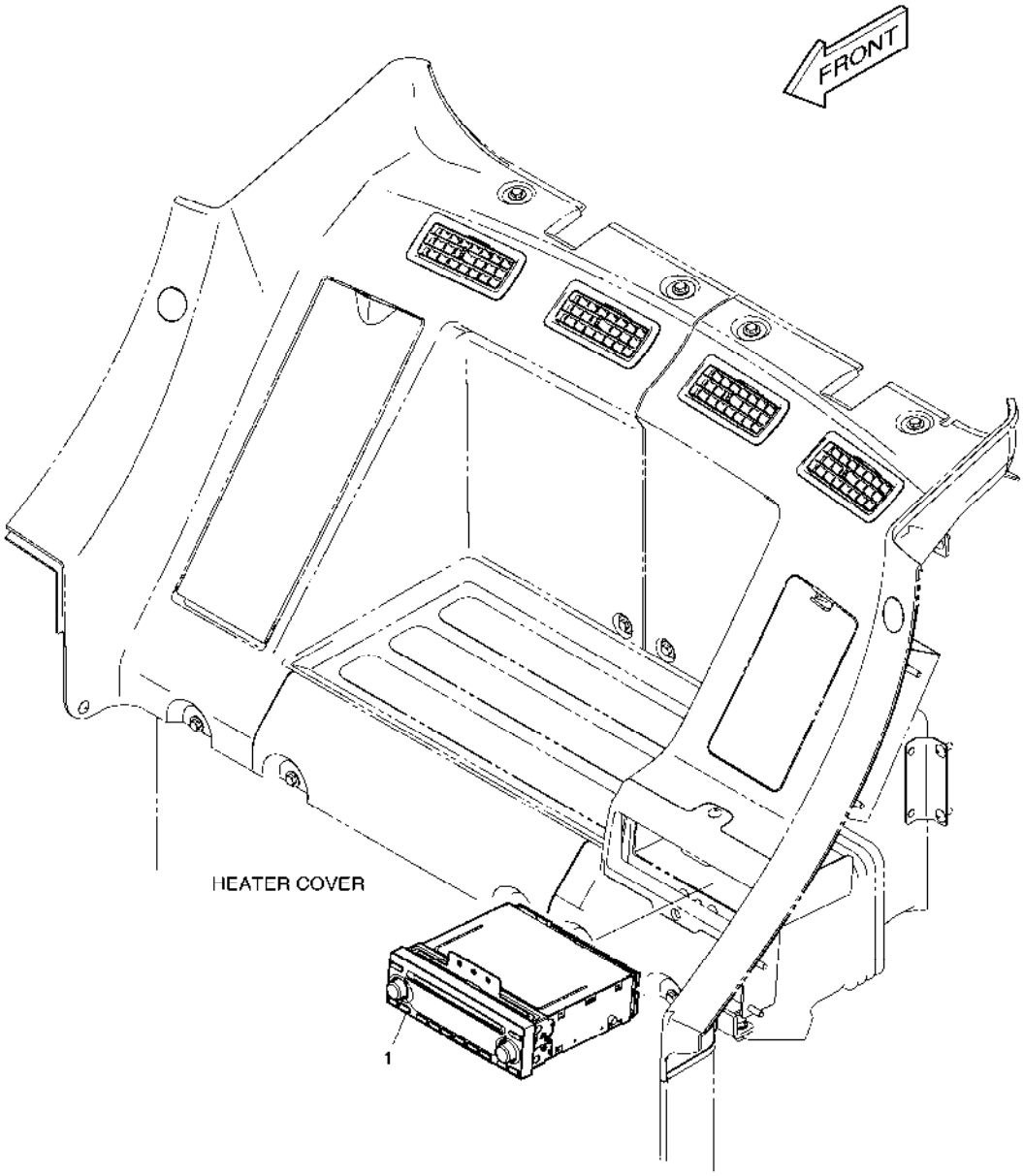

DATE	AUG. 28, 2009
3rd EDITION	

Fig. 6910 CD PLAYER PLAQUEUR DE CD

Serial No. ;

Key No.	Part No.	Description	Description	Q'ty	S.C	Serial No.	ICA	Replaceable part	
								Part No.	Q'ty
6910 --	K1003350	CD PLAYER	PLAQUEUR DE CD	-	D				
1	K1000982	CD PLAYER	PLAQUEUR DE CD	1					

DATE	AUG. 28, 2009
3rd EDITION	

Fig. 6920 FUEL HEATER
RECHAUFFEUR DE CARBURANT

Serial No. ;

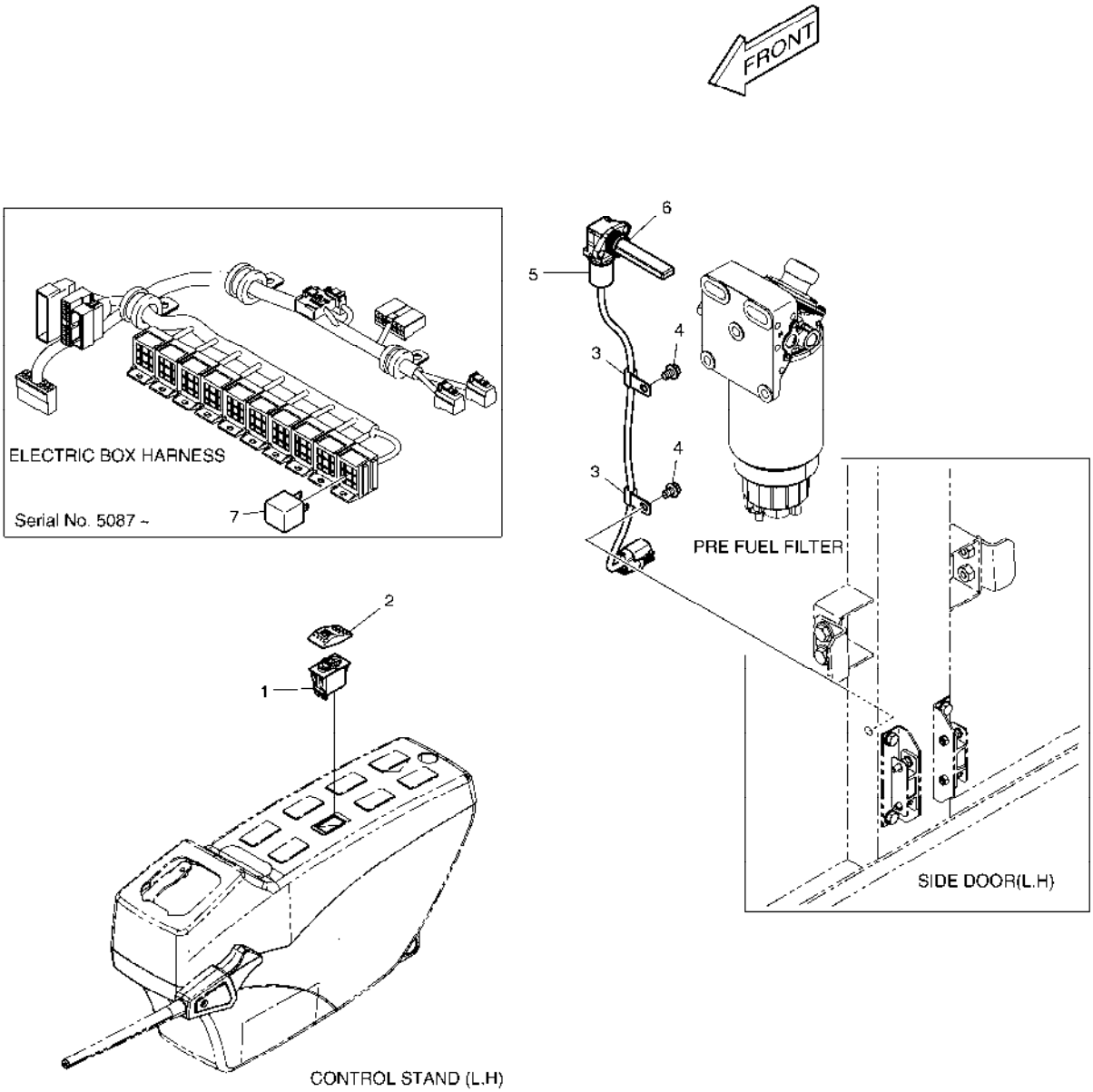

DATE	AUG. 28, 2009
3rd EDITION	

Fig. 6920 FUEL HEATER RECHAUFFEUR DE CARBURANT

Serial No. ;

Key No.	Part No.	Description	Description	Q'ty	S.C	Serial No.	ICA	Replaceable part	
								Part No.	Q'ty
6920 --	K1012167A	FUEL HEATER	RECHAUFFEUR DE CARBU	-	D				
1	549-00101	SWITCH;ROCKER(1STEP)	INTERRUPTEUR	1					
2	K1002406D2	ACTUATOR;SWITCH	ACTUATOR;SWITCH	1					
3	2124-1509D1	CLIP	ATTACHE	2					
4	K1001029	BOLT	BOULON A 6 PANS	2					
5	K1006668	HARNESS;JOINT	FAISCEAU	1					
6	K1004716	HEATER;FUEL	RECHAUFFEUR	1					
7	2544-9033	RELAY	RELAIS AVERTISSEUR	1		5087-			

DATE	AUG. 28, 2009
3rd EDITION	

Fig. 6930 TRAVEL ALARM
ALARME DE VOYAGE

Serial No. ;

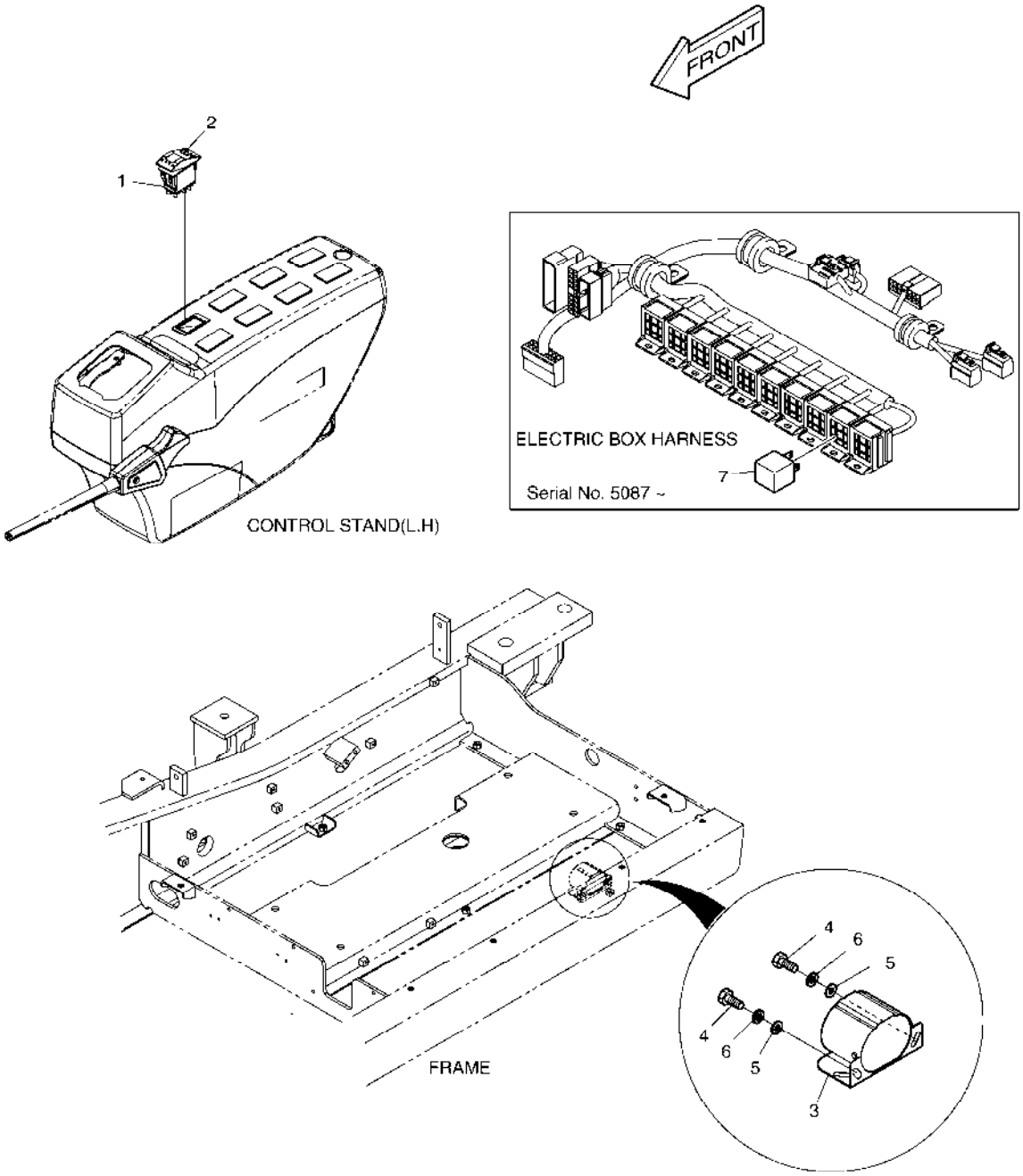

DATE	AUG. 28, 2009
3rd EDITION	

Fig. 6930 TRAVEL ALARM ALARME DE VOYAGE

Serial No. ;

Key No.	Part No.	Description	Description	Q'ty	S.C	Serial No.	ICA	Replaceable part	
								Part No.	Q'ty
6930 --	K1012169A	TRAVEL ALARM	ALARME DE VOYAGE	-	D				
1	549-00103	SWITCH;ROCKER(2STEP)	INTERRUPTEUR	1					
2	K1002406D14	ACTUATOR;SWITCH	ACTUATOR;SWITCH	1					
3	516-00011	BUZZER;ALARM	VIBREUR ARRIERE	1					
4	S0508666	BOLT	BOULON A 6 PANS	2					
5	S5010513	WASHER	RONDELLE	2					
6	S5102503	WASHER	RONDELLE ELASTIQUE	2					
7	2544-9033	RELAY	RELAIS AVERTISSEUR	1		5087-			

DATE	AUG. 28, 2009
3rd EDITION	

Fig. 6940 WORKING LAMP - 2 LAMP AVERTISSEUR RELAIS

Serial No. ;

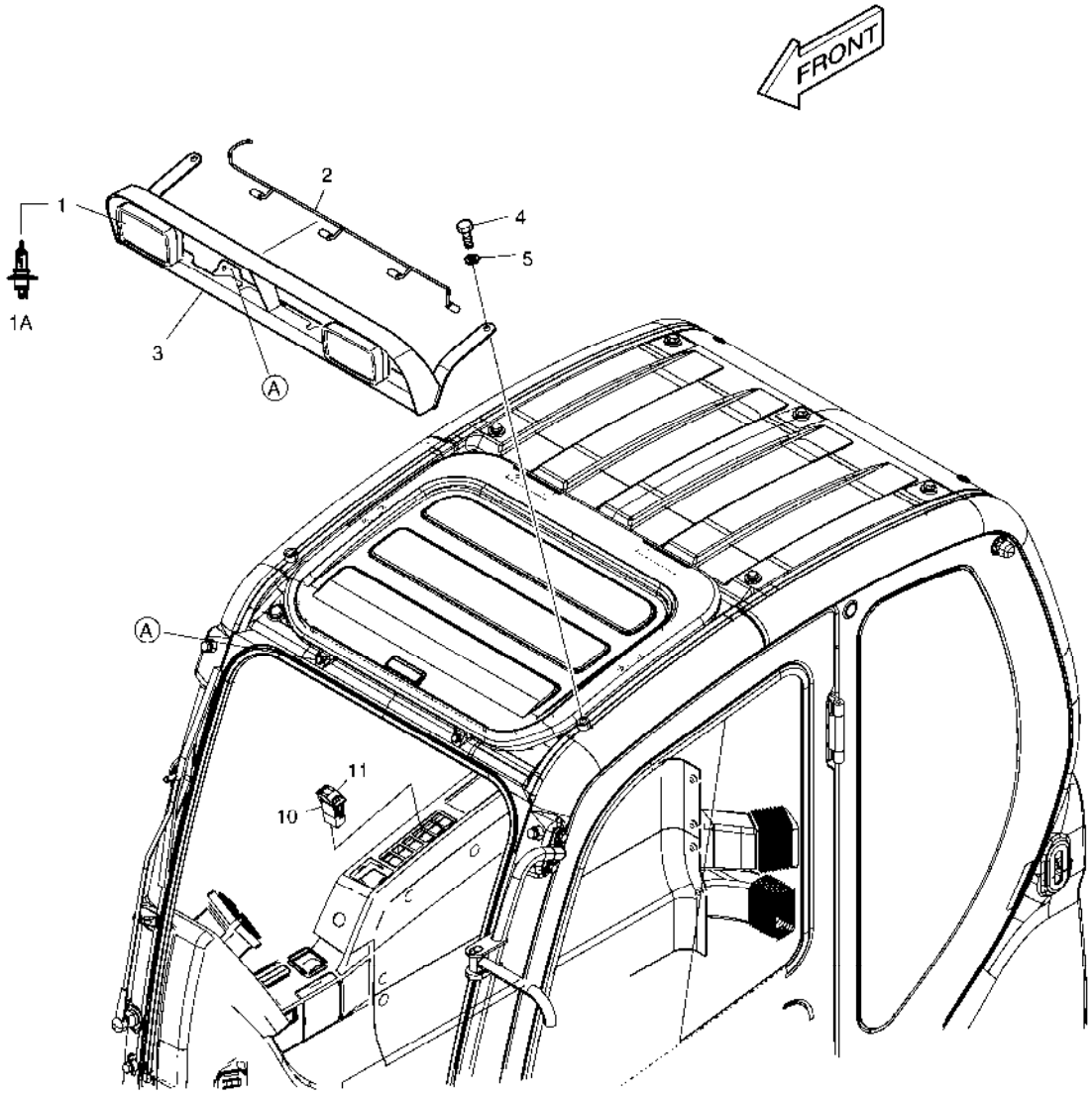

DATE	AUG. 28, 2009
3rd EDITION	

Fig. 6940 WORKING LAMP - 2 LAMP AVERTISSEUR RELAIS

Serial No. ;

Key No.	Part No.	Description	Description	Q'ty	S.C	Serial No.	ICA	Replaceable part	
								Part No.	Q'ty
6940 --	500-00302B	WORKING LAMP-2LAMP	LAMPE FONCTIONNANTE	-	D				
1	534-00085	LAMP;HEAD	LAMPE	2					
1A	2515-1016D4	. BLUB;HALOGEN	. AMPOULE	1					
2	530-00430A	HARNESS;FRONT CABIN LAMP	FAISCEAU	1					
3	195-02908C	BRACKET;FRONT LAMP	SUPPORT	1		5001-5107	I	195-02908E	1
	195-02908E	BRACKET;FRONT LAMP	SUPPORT	1		5108-			
4	2120-2166D54	BOLT;GREEN	BOULON A 6 PANS	2					
5	2114-1898D6	WASHER;PLAIN	RONDELLE	2					
10	549-00103	SWITCH;ROCKER(2STEP)	INTERRUPTEUR	1					
11	K1002406D13	ACTUATOR;SWITCH	DECLENCHEURE	1					

DATE	AUG. 28, 2009
3rd EDITION	

Fig. 6950 WORKING LAMP - 4 LAMP
AVERTISSEUR RELAIS

Serial No. ;

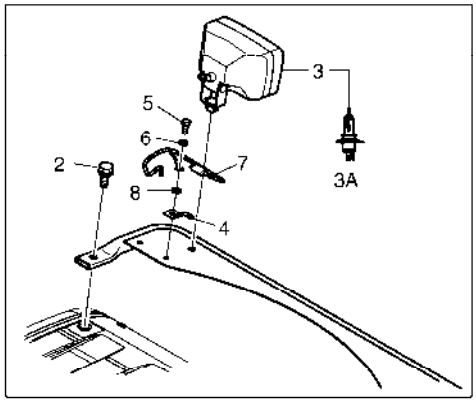

Serial No. : 5001 ~ 5108

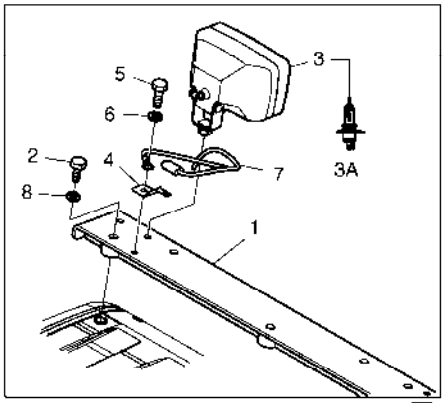

Serial No. : 5109 ~

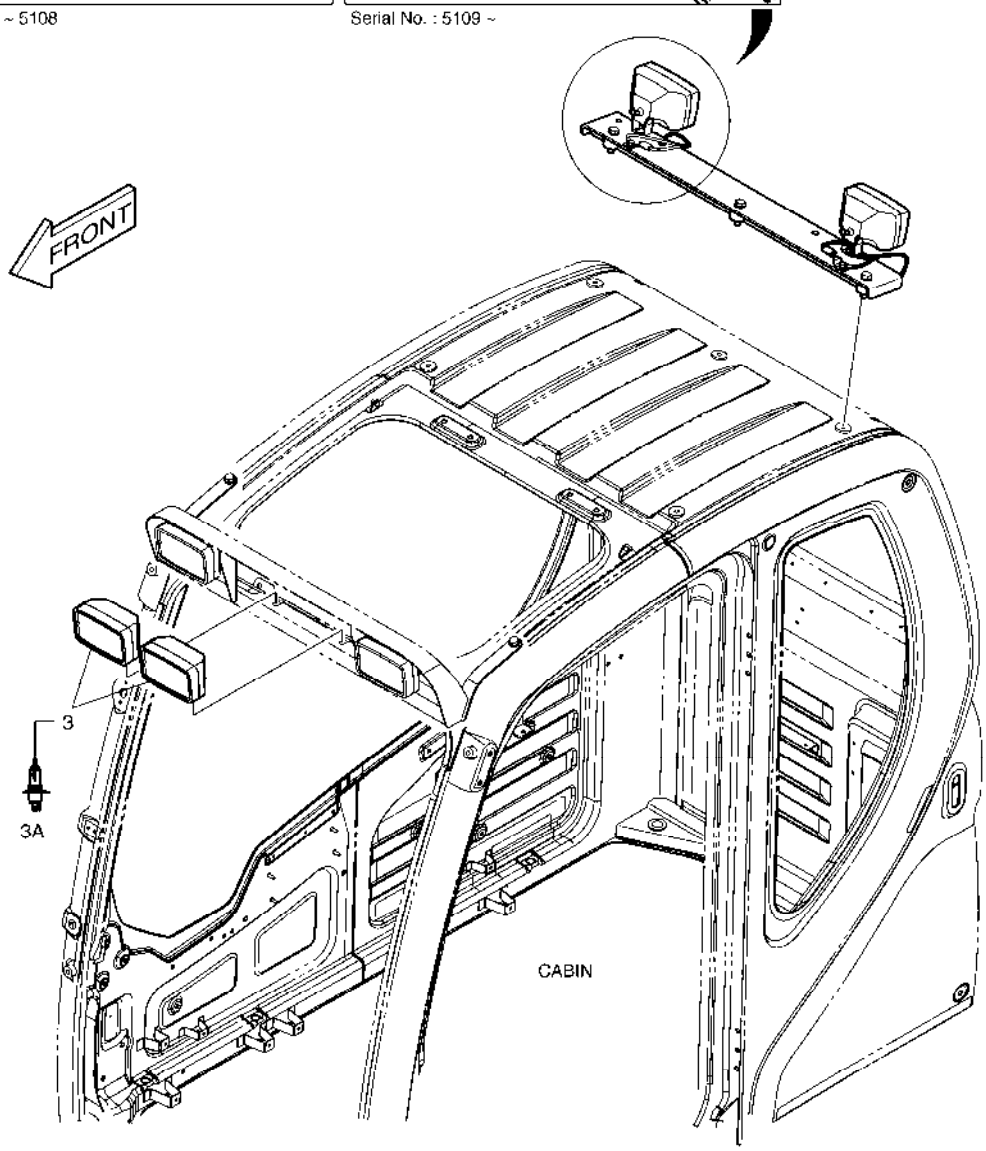

DATE	AUG. 28, 2009
3rd EDITION	

Fig. 6950 WORKING LAMP - 4 LAMP AVERTISSEUR RELAIS

Serial No. ;

Key No.	Part No.	Description	Description	Q'ty	S.C	Serial No.	ICA	Replaceable part	
								Part No.	Q'ty
6950 --	500-00303	WORKING LAMP	LAMPE FONCTIONNANTE	-	D				
1	195-02910A	BRACKET	SUPPORT	1		5001-5108			
	195-02910C	BRACKET;REAR LAMP	SUPPORT	1		5109-			
2	2120-2166D54	BOLT;GREEN	BOULON A 6 PANS	2		5001-5108			
	S0515653	BOLT M12X1.75X50	BOULON A 6 PANS	3		5109-			
3	534-00085	LAMP;HEAD	LAMPE	4					
3A	2515-1016D4	. BLUB;HALOGEN	. AMPOULE	1					
4	2197-1661	BRACKET	SUPPORT	2					
5	S0508853	BOLT	BOULON A 6 PANS	2					
6	S5102503	WASHER	RONDELLE ELASTIQUE	2					
7	530-00463A	HARNESS;REAR CABIN LAMP	FAISCEAU	2					
8	2114-1898D6	WASHER;PLAIN	RONDELLE	2		5001-5108			
	S5010713	WASHER;PLAIN	RONDELLE	3		5109-			

DATE	AUG. 28, 2009
3rd EDITION	

Fig. 6960 WORKING LAMP - REAR AVERTISSEUR RELAIS

Serial No. ;

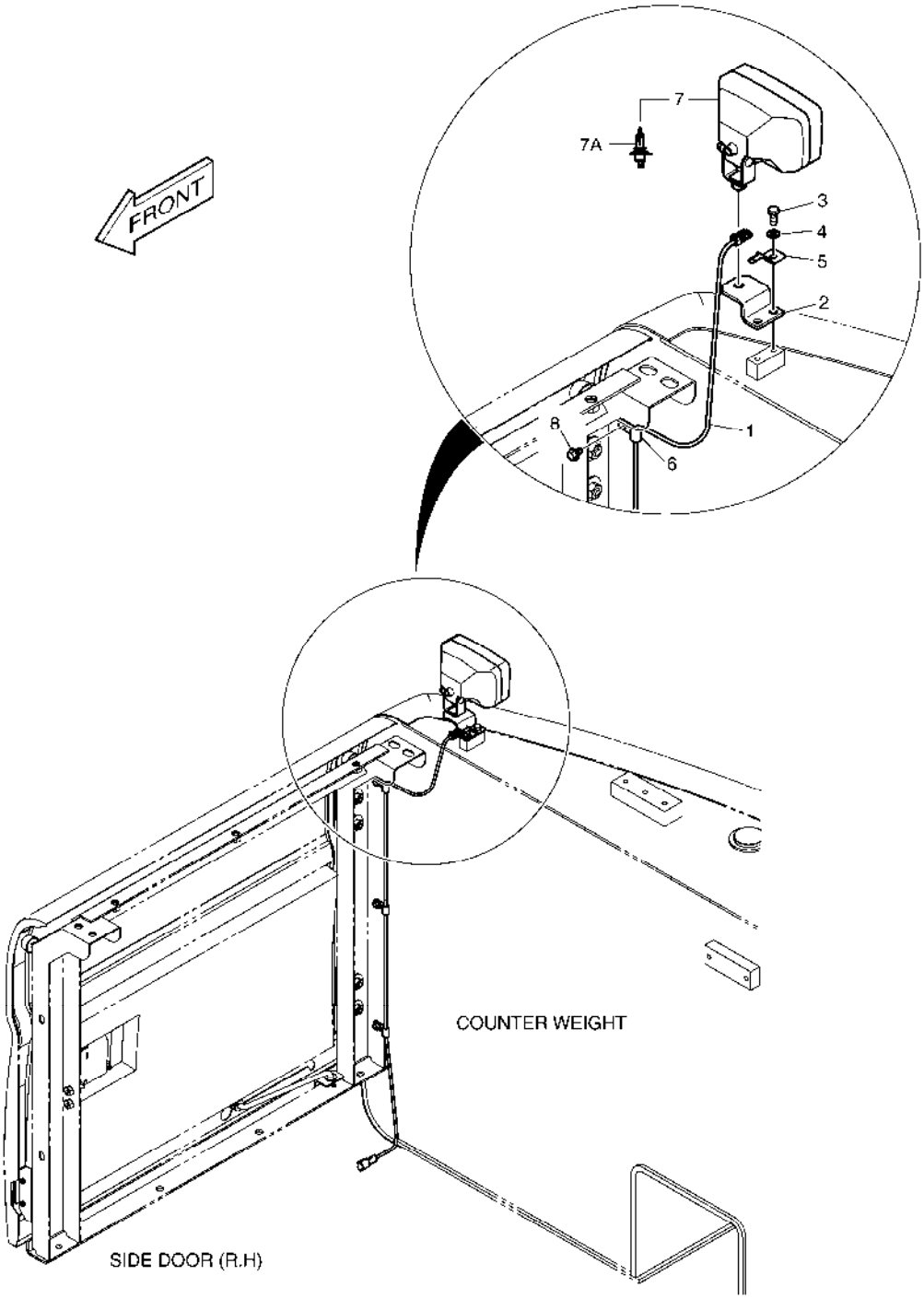

DATE	AUG. 28, 2009
3rd EDITION	

Fig. 6960 WORKING LAMP - REAR AVERTISSEUR RELAIS

Serial No. ;

Key No.	Part No.	Description	Description	Q'ty	S.C	Serial No.	ICA	Replaceable part	
								Part No.	Q'ty
6960 --	K1012175	WORKING LAMP-REAR LAMP	AVERTISSEUR RELAIS	-	D				
1	530-00431	HARNESS;REAR LAMP	FAISCEAU	1					
2	195-02775A	PLATE	PLAQUE	1					
3	S0508866	BOLT	BOULON A 6 PANS	2					
4	S5102503	WASHER	RONDELLE ELASTIQUE	2					
5	2197-1661	BRACKET	SUPPORT	1					
6	2124-1509D1	CLIP	ATTACHE	3					
7	534-00085	LAMP;HEAD	LAMPE	1					
7A	2515-1016D4	. BLUB;HALOGEN	. AMPOULE	1					
8	K1001029	BOLT	BOULON A 6 PANS	3					

DATE	AUG. 28, 2009
3rd EDITION	

Fig. 6970 ROTATING BEACON FEU DE CIRCULATION

Serial No. ;

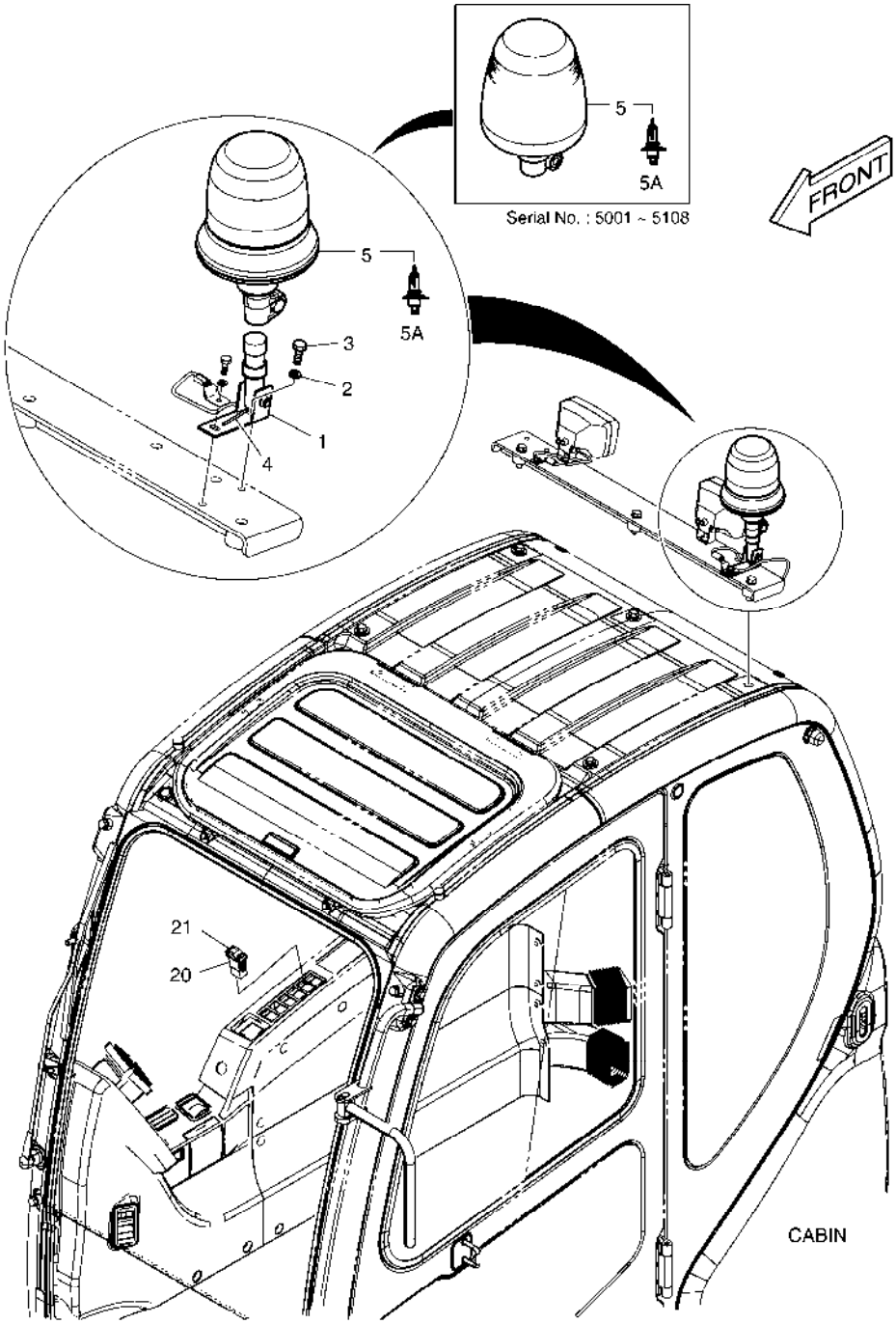

DATE	AUG. 28, 2009
3rd EDITION	

Fig. 6970 ROTATING BEACON FEU DE CIRCULATION

Serial No. ;

Key No.	Part No.	Description	Description	Q'ty	S.C	Serial No.	ICA	Replaceable part	
								Part No.	Q'ty
6970 --	500-00307A	BEACON;ROTATING	FEU DE CIRCULATION	-	D				
1	160-00061	BUSH;MOUNTING	MANCHON	1					
2	S5102503	WASHER	RONDELLE ELASTIQUE	1					
3	S0508853	BOLT	BOULON A 6 PANS	1					
4	530-00464	HARNESS;ROTATING BEACON	FAISCEAU	1					
5	534-00062	LAMP;ROTATING BEACON	LAMPE	1		5001-5108	Y	K1038193	1
	K1038193	BEACON;ROTATING	FEU DE CIRCULATION	1		5109-			
5A	515-00013	. BULB;HALOGEN 24V 70W	. AMPOULE	1		5001-5108			
	K9007240	. BULB;HALOGEN 24V 70W	. AMPOULE	1		5109-			
20	549-00101	SWITCH;ROCKER(1STEP)	INTERRUPTEUR	1					
21	K1002406D3	ACTUATOR	DECLENCHEURE	1					

DATE	AUG. 28, 2009
3rd EDITION	

Fig. 6980 ROTATING BEACON MOUNTING SUPPORT TOURNANT DE BALISE

Serial No. ;

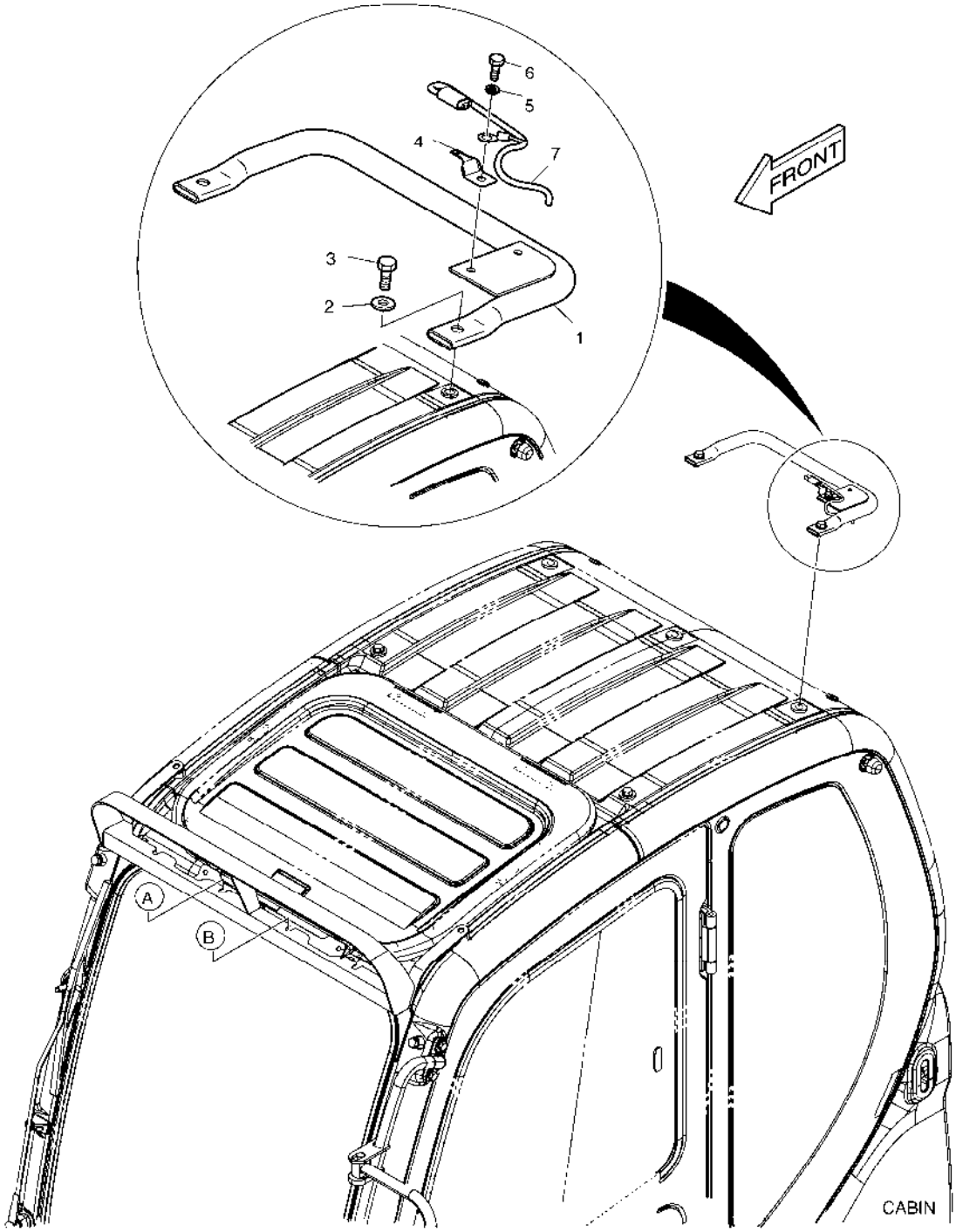

DATE	AUG. 28, 2009
3rd EDITION	

Fig. 6980 ROTATING BEACON MOUNTING SUPPORT TOURNANT DE BALISE

Serial No. ;

Key No.	Part No.	Description	Description	Q'ty	S.C	Serial No.	ICA	Replaceable part	
								Part No.	Q'ty
6980 --	500-00308	ROTATING BEACON MOUNTING	SUPPORT TOURNANT DE	-	D				
1	195-02909A	BRACKET;BEACON	SUPPORT	1					
2	2114-1898D1	WASHER	RONDELLE	2					
3	S0512053	BOLT	BOULON A 6 PANS	2					
4	2197-1661	BRACKET	SUPPORT	1					
5	S5102503	WASHER	RONDELLE ELASTIQUE	1					
6	S0508853	BOLT	BOULON A 6 PANS	1					
7	530-00463A	HARNESS;REAR CABIN LAMP	FAISCEAU	1					

DATE	AUG. 28, 2009
3rd EDITION	

Fig. 6990 ROTATING BEACON(TELESCOPIC) WITH LAMP FEU DE CIRCULATION

Serial No. ;

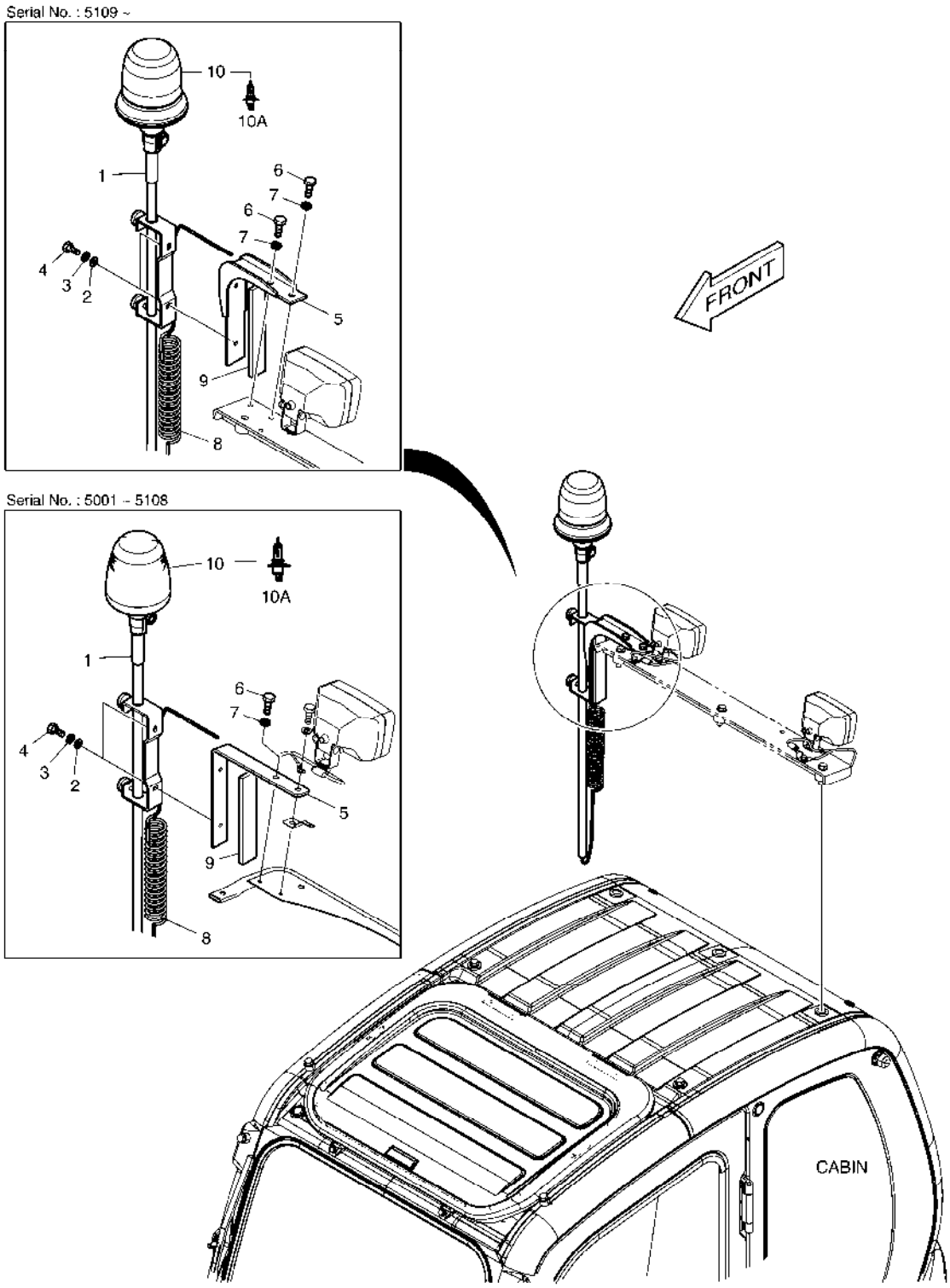

DATE	AUG. 28, 2009
3rd EDITION	

Fig. 6990 ROTATING BEACON(TELESCOPIC) WITH LAMP FEU DE CIRCULATION

Serial No. ;

Key No.	Part No.	Description	Description	Q'ty	S.C	Serial No.	ICA	Replaceable part	
								Part No.	Q'ty
6990 --	500-00309C	BEACON;ROTATING	FEU DE CIRCULATION	-	D				
1	195-01805	SUPPORT;BEACON	SUPPORT	1					
2	S5010513	WASHER	RONDELLE	2					
3	S5102503	WASHER	RONDELLE ELASTIQUE	2					
4	S0508653	BOLT	BOULON A 6 PANS	2					
5	195-02925	BRACKET	SUPPORT	1		5001-5108			
	195-02925A	BRACKET	SUPPORT	1		5109-			
6	S0508853	BOLT	BOULON A 6 PANS	1		5001-5108			
	S0512053	BOLT	BOULON A 6 PANS	2		5109-			
7	S5102503	WASHER	RONDELLE ELASTIQUE	1		5001-5108			
	S5100603	WASHER;SPRING	RONDELLE ELASTIQUE	2		5109-			
8	K1010065	HARNESS;JOINT	FAISCEAU	1					
9	161-00404	RUBBER	CAOUTCHOUC	1					
10	534-00062	LAMP;ROTATING BEACON	LAMPE	1		5001-5108	Y	K1038193	1
	K1038193	BEACON;ROTATING	FEU DE CIRCULATION	1		5109-			
10A	515-00013	. BULB;HALOGEN 24V 70W	. AMPOULE	1		5001-5108			
	K9007240	. BULB;HALOGEN 24V 70W	. AMPOULE	1		5109-			

DATE	AUG. 28, 2009
3rd EDITION	

Fig. 7000 ROTATING BEACON(TELESCOPIC) W/O LAMP FEU DE CIRCULATION

Serial No. ;

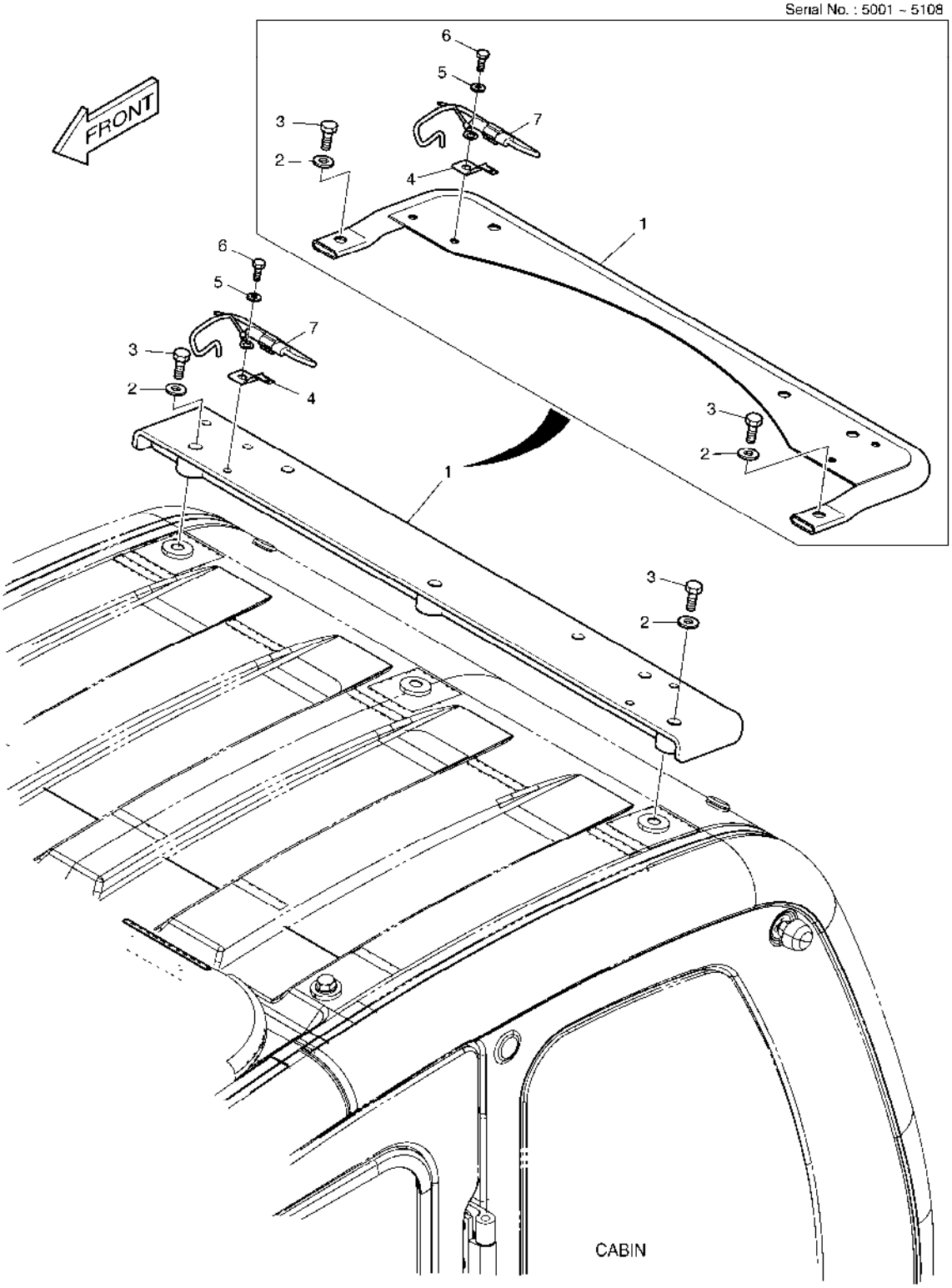

DATE	AUG. 28, 2009
3rd EDITION	

Fig. 7000 ROTATING BEACON(TELESCOPIC) W/O LAMP FEU DE CIRCULATION

Serial No. ;

Key No.	Part No.	Description	Description	Q'ty	S.C	Serial No.	ICA	Replaceable part	
								Part No.	Q'ty
7000 --	500-00310	ROTATING BEACON-TELESCOP	FEU DE CIRCULATION	-	D				
1	195-02910A	BRACKET	SUPPORT	1		5001-5108			
	195-02910C	BRACKET;REAR LAMP	SUPPORT	1		5109-			
2	2114-1898D6	WASHER;PLAIN	RONDELLE	2		5001-5108			
	S5010713	WASHER;PLAIN	RONDELLE	3		5109-			
3	2120-2166D54	BOLT;GREEN	BOULON A 6 PANS	2		5001-5108			
	S0515653	BOLT M12X1.75X50	BOULON A 6 PANS	3		5109-			
4	2197-1661	BRACKET	SUPPORT	1					
5	S5102503	WASHER	RONDELLE ELASTIQUE	1					
6	S0508853	BOLT	BOULON A 6 PANS	1					
7	530-00463A	HARNESS;REAR CABIN LAMP	FAISCEAU	1					

DATE	AUG. 28, 2009
3rd EDITION	

Fig. 7010 OVERLOAD WARNING AVERTISSEMENT DE SURCHARGE

Serial No. ;

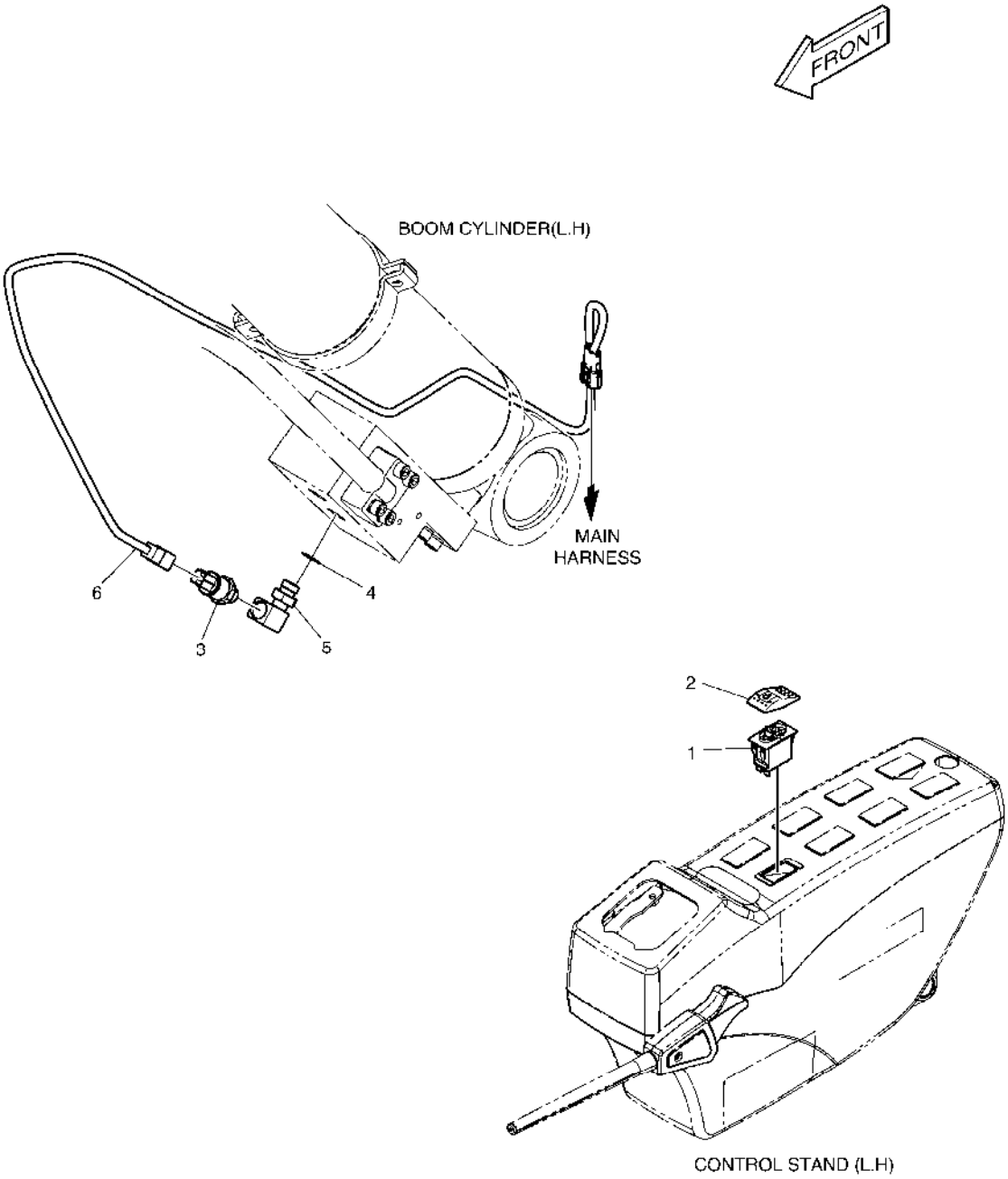

DATE	AUG. 28, 2009
3rd EDITION	

Fig. 7010 OVERLOAD WARNING AVERTISSEMENT DE SURCHARGE

Serial No. ;

Key No.	Part No.	Description	Description	Q'ty	S.C	Serial No.	ICA	Replaceable part	
								Part No.	Q'ty
7010 --	K1012198	OVER LOAD WARNING	AVERTISSEMENT DE SUR(	-	D				
1	549-00102	SWITCH	INTERRUPTEUR	1					
2	K1002406D4	ACTUATOR	DECLENCHEURE	1					
3	2547-9045	SENSOR;PRESSURE	CAPTEUR	1					
4	S8000161	O-RING	JOINT TORIQUE	1					
5	DS2308021	ELBOW	COUDE	1					
6	K1002153	HARNESS;JOINT	FAISCEAU	1					

DATE	AUG. 28, 2009
3rd EDITION	

Fig. 7020 LOWER WIPER
ABAISSEZ L'ESSUIE-GLACE

Serial No. ;

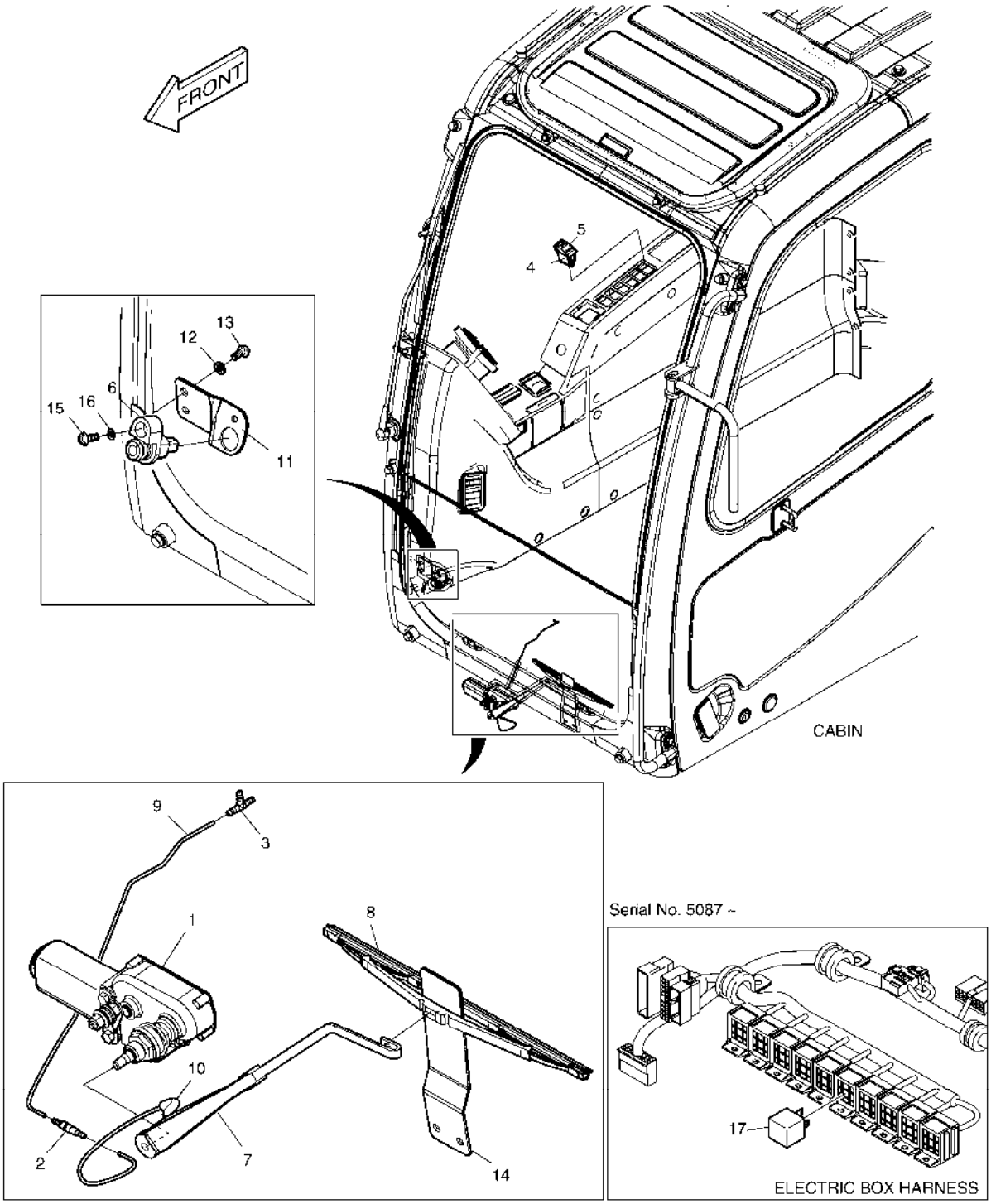

DATE	AUG. 28, 2009
3rd EDITION	

Fig. 7020 LOWER WIPER ABAISSEZ L'ESSUIE-GLACE

Serial No. ;

Key No.	Part No.	Description	Description	Q'ty	S.C	Serial No.	ICA	Replaceable part	
								Part No.	Q'ty
7020 --	K1012199A	LOWER WIPER ASS'Y	ABAISSEZ L'ESSUIE-GLA	-	D				
1	538-00012	MOTOR;WIPER	MOTEUR	1					
2	426-00282	VALVE;LOWER WIPER CHECK	VANNE	1					
3	181-00804	TEE	TE	1					
4	549-00101	SWITCH;ROCKER(1STEP)	INTERRUPTEUR	1					
5	K1002406D5	ACTUATOR	DECLENCHEURE	1					
6	549-00077	SWITCH	AVERTISSEUR	1					
7	541-00016	ARM;WIPER	BALANCIER	1					
8	507-00007	BLADE;WIPER	LAME	1					
9	K1002866	HOSE	TUYAU FLEXIBLE	1					
10	K1002867D1	TUBE	DOUILLE ACIER	1					
11	195-03444	BRACKET;SWITCH	SUPPORT	1					
12	2114-1898D3	WASHER;PLAIN	RONDELLE	2					
13	2120-2166D9	SCREW	VIS	2					
14	191-03736E	PLATE;STOPPER	TAQUET D'ARRET	1					
15	S3450833	SCREW	VIS	1					
16	S5100203	WASHER;SPRING	RONDELLE ELASTIQUE	1					
17	2544-9033	RELAY	RELAIS AVERTISSEUR	1		5087-			

DATE	AUG. 28, 2009
3rd EDITION	

Fig. 7030 WORKING LAMP(2-LAMP) LAMPE FONCTIONNANTE

Serial No. ;

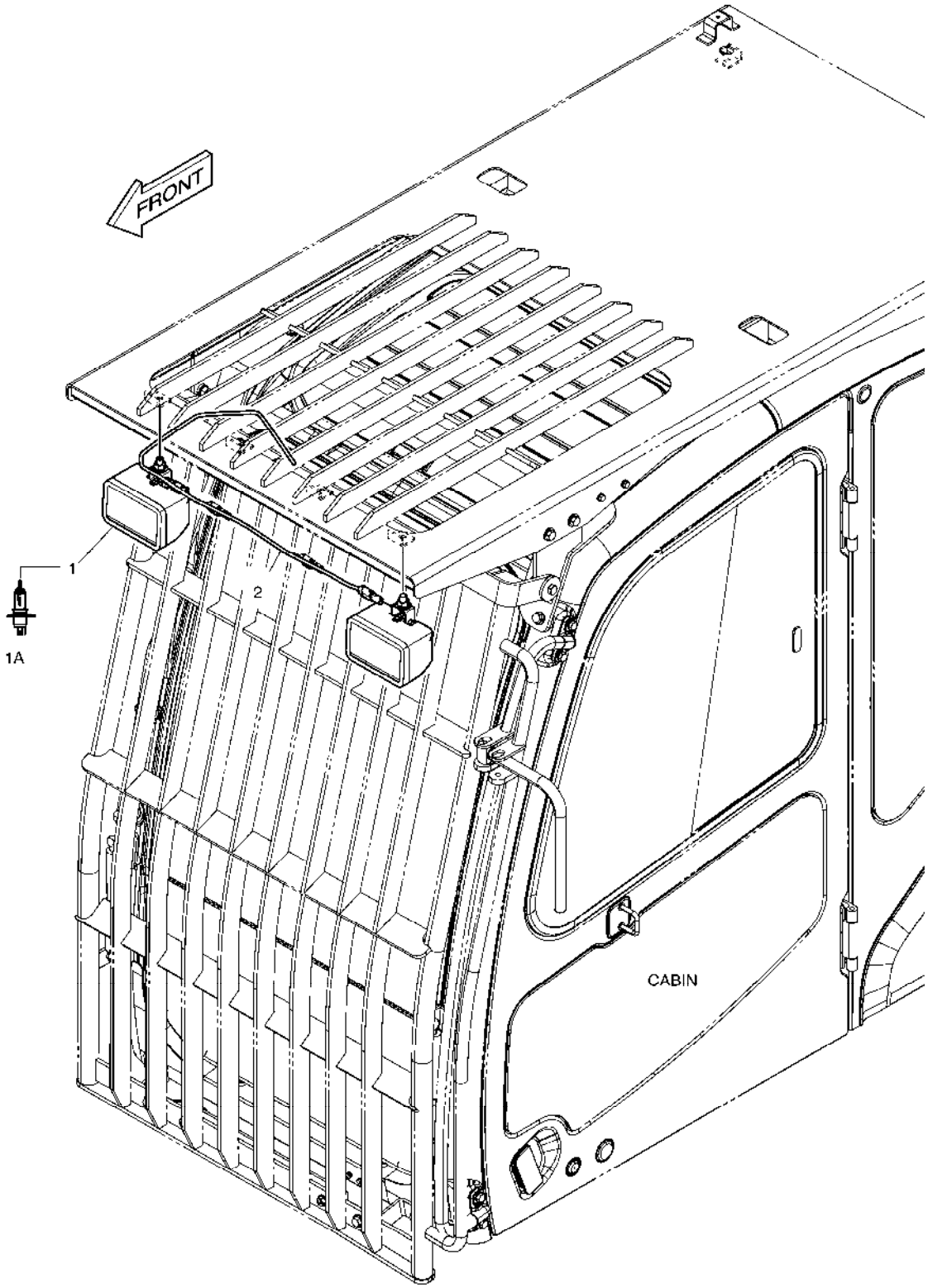

DATE	AUG. 28, 2009
3rd EDITION	

Fig. 7030 WORKING LAMP(2-LAMP) LAMPE FONCTIONNANTE

Serial No. ;

Key No.	Part No.	Description	Description	Q'ty	S.C	Serial No.	ICA	Replaceable part	
								Part No.	Q'ty
7030 --	K1006801	WORKING LAMP ASS'Y	LAMPE FONCTIONNANTE	-	D				
1	534-00085	LAMP;HEAD	LAMPE	2					
1A	2515-1016D4	. BLUB;HALOGEN	. AMPOULE	1					
2	K1006663	HARNESS;JOINT	FAISCEAU	1					

DATE	AUG. 28, 2009
3rd EDITION	

Fig. 7040 WORKING LAMP(4-LAMP) LAMPE FONCTIONNANTE

Serial No. ;

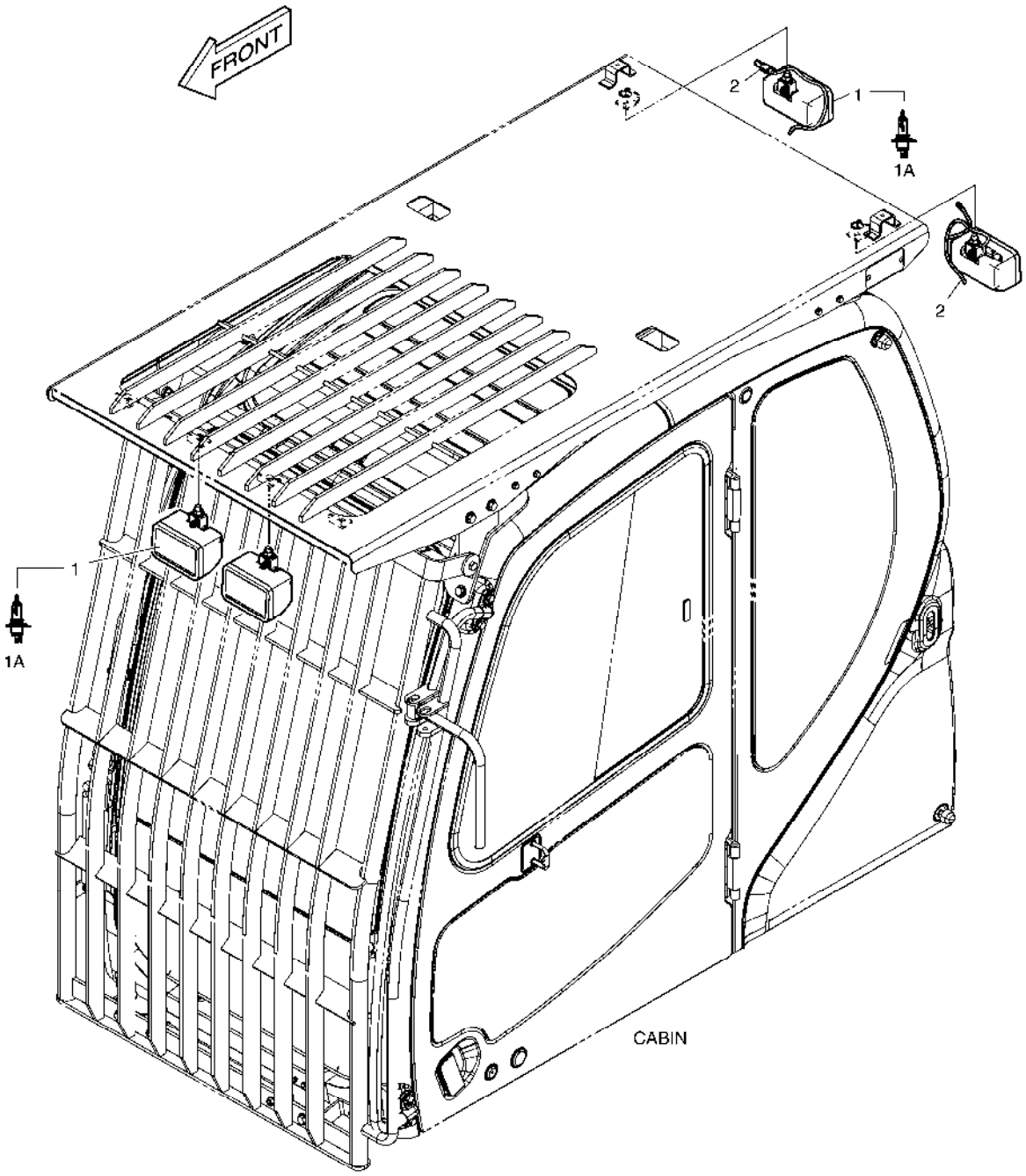

DATE	AUG. 28, 2009
3rd EDITION	

Fig. 7040 WORKING LAMP(4-LAMP) LAMPE FONCTIONNANTE

Serial No. ;

Key No.	Part No.	Description	Description	Q'ty	S.C	Serial No.	ICA	Replaceable part	
								Part No.	Q'ty
7040 --	K1006802	WORKING LAMP ASS'Y	LAMPE FONCTIONNANTE	-	D				
1	534-00085	LAMP;HEAD	LAMPE	4					
1A	2515-1016D4	. BLUB;HALOGEN	. AMPOULE	1					
2	530-00463A	HARNESS;REAR CABIN LAMP	FAISCEAU	2					

DATE	AUG. 28, 2009
3rd EDITION	

Fig. 7050 ROTATING BEACON-WITH FOGS FEU DE CIRCULATION

Serial No. ;

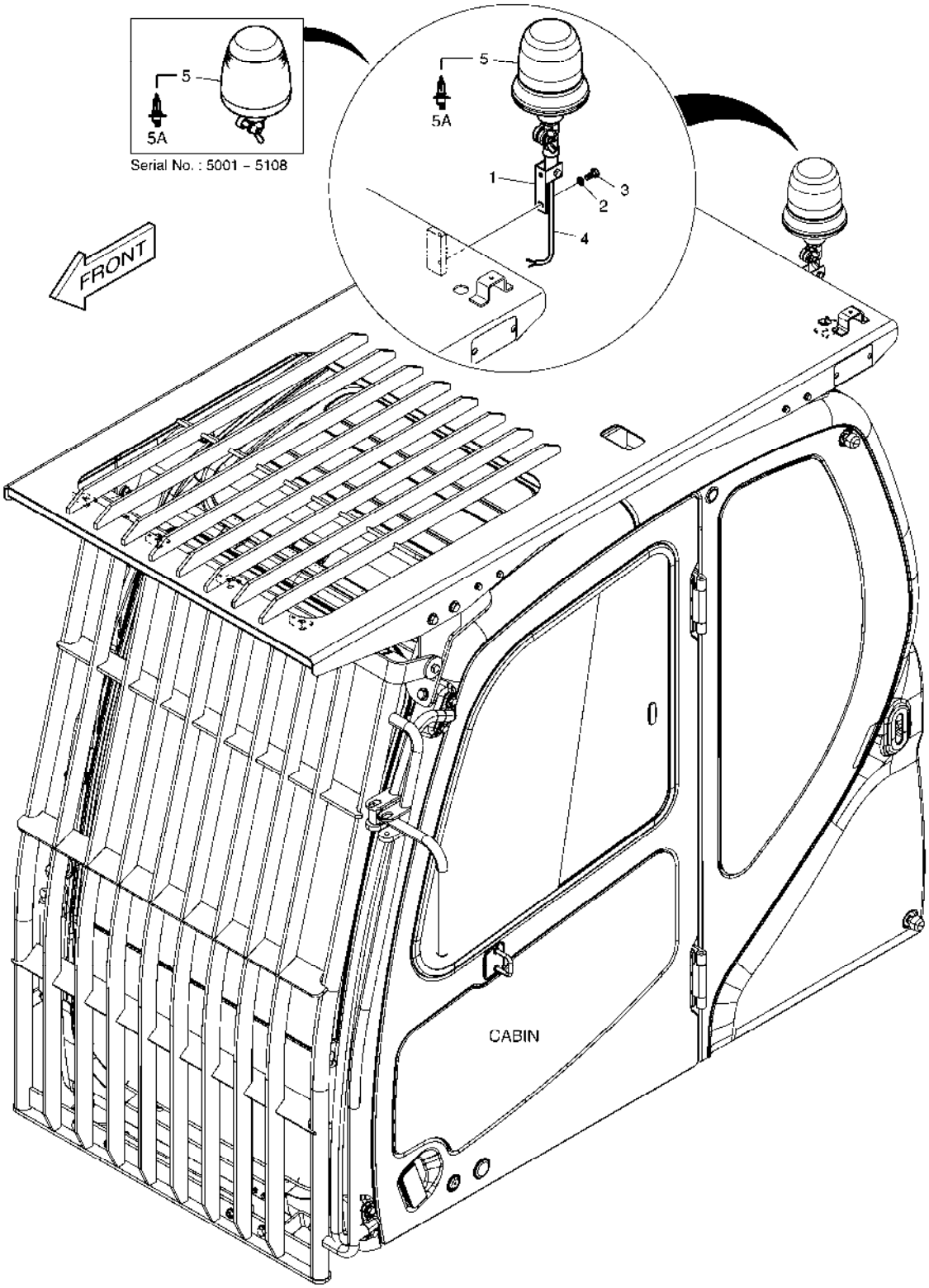

DATE	AUG. 28, 2009
3rd EDITION	

Fig. 7050 ROTATING BEACON-WITH FOGS FEU DE CIRCULATION

Serial No. ;

Key No.	Part No.	Description	Description	Q'ty	S.C	Serial No.	ICA	Replaceable part	
								Part No.	Q'ty
7050 --	K1006803A	ROTATING BEACON	FEU DE CIRCULATION	-	D				
1	160-00061	BUSH;MOUNTING	MANCHON	1					
2	S5102503	WASHER	RONDELLE ELASTIQUE	2					
3	S0508853	BOLT	BOULON A 6 PANS	2					
4	530-00464	HARNESS;ROTATING BEACON	FAISCEAU	1					
5	534-00062	LAMP;ROTATING BEACON	LAMPE	1		5001-5108	Y	K1038193	1
	K1038193	BEACON;ROTATING	FEU DE CIRCULATION	1		5109-			
5A	515-00013	. BULB;HALOGEN 24V 70W	. AMPOULE	1		5001-5108			
	K9007240	. BULB;HALOGEN 24V 70W	. AMPOULE	1		5109-			

DATE	AUG. 28, 2009
3rd EDITION	

Fig. 7060 TROPICAL PARTS PIECES TROPICALES

Serial No. ;

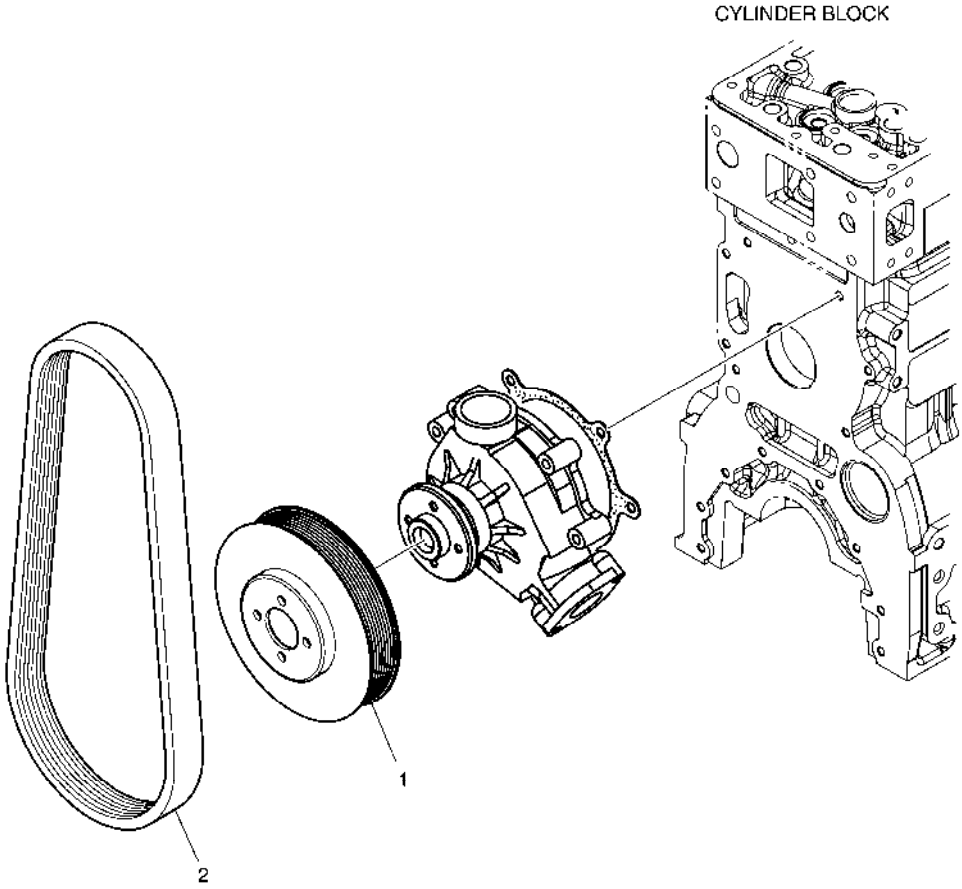

DATE	AUG. 28, 2009
3rd EDITION	

Fig. 7060 TROPICAL PARTS PIECES TROPICALES

Serial No. ;

Key No.	Part No.	Description	Description	Q'ty	S.C	Serial No.	ICA	Replaceable part	
								Part No.	Q'ty
7060 --	K1038104	TROPICAL PARTS	PIECES TROPICALES	-	D				
1	K1037889	PULLEY;BELT	POULIE	1					
2	DS3201029	BELT;RIBBED(8PK 1200L)	CEINTURE	1					

DATE	AUG. 28, 2009
3rd EDITION	

Fig. 7070 RADIO RADIO

Serial No. ;

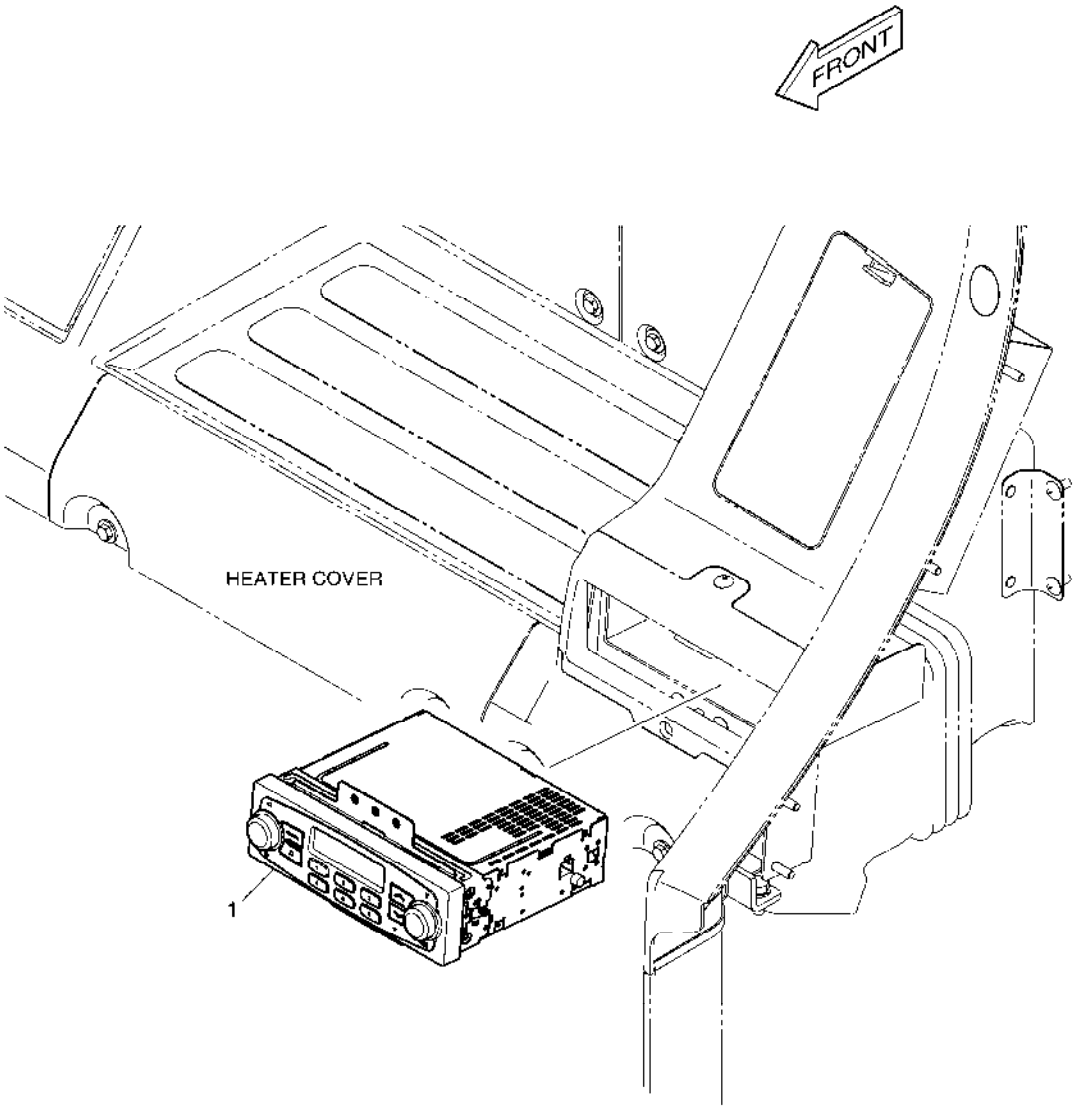

DATE	AUG. 28, 2009
3rd EDITION	

Fig. 7070 RADIO RADIO

Serial No. ;

Key No.	Part No.	Description	Description	Q'ty	S.C	Serial No.	ICA	Replaceable part	
								Part No.	Q'ty
7070 --	K1033652	RADIO;STEREO	RADIO STEREO	-	D				
1	K1033644	RADIO;STEREO(12V)	RADIO STEREO	1					

DATE	AUG. 28, 2009
3rd EDITION	

Fig. 7080 ACOUSTIC FOAM - NOISE KIT
MOUSSE ACOUSTIQUE - KIT DE BRUIT

Serial No. ;

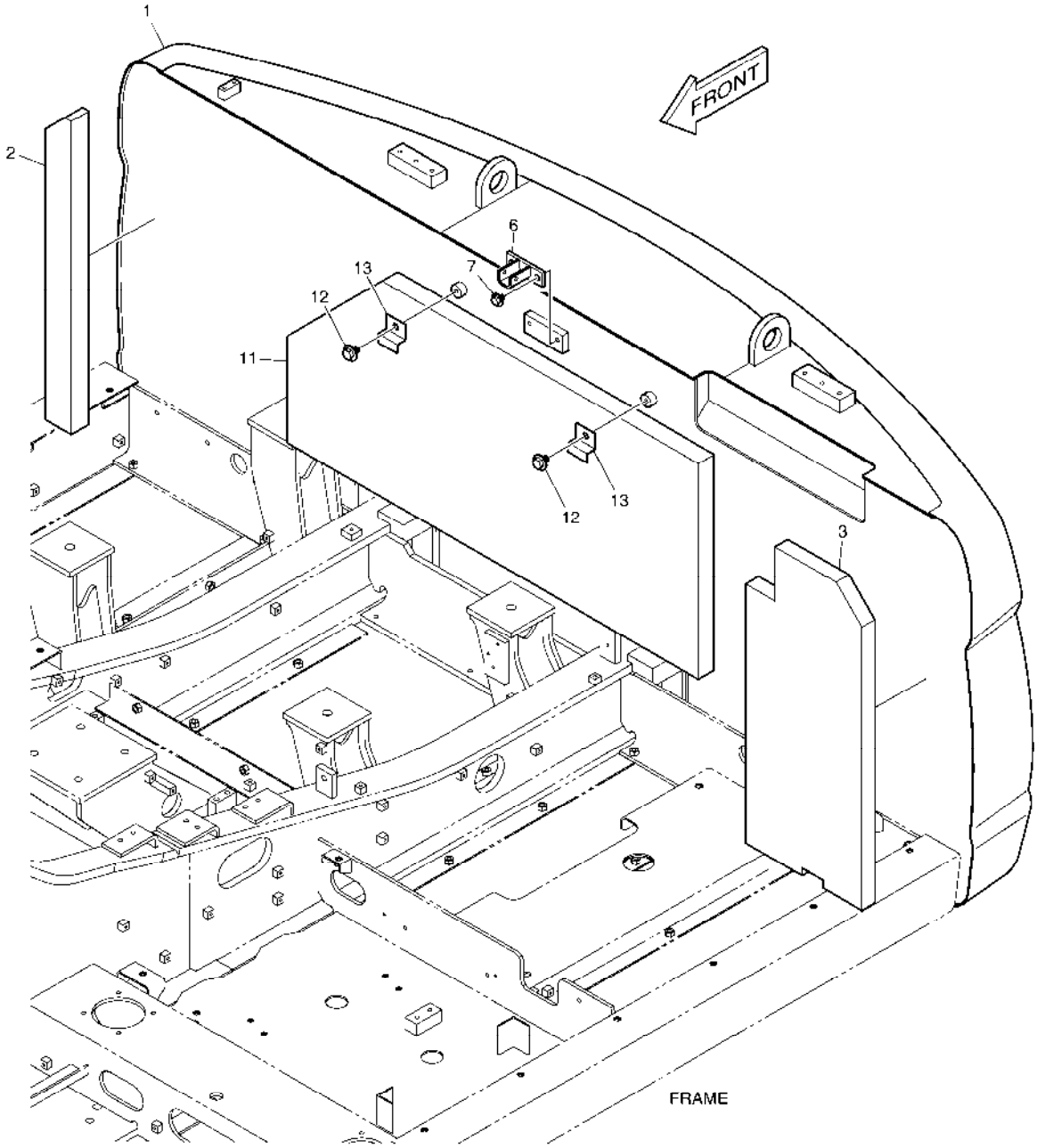

DATE	AUG. 28, 2009
3rd EDITION	

Fig. 7080 ACOUSTIC FOAM - NOISE KIT
MOUSSE ACOUSTIQUE - KIT DE BRUIT

Serial No. ;

Key No.	Part No.	Description	Description	Q'ty	S.C	Serial No.	ICA	Replaceable part	
								Part No.	Q'ty
7080 --	K1011764A	ACOUSTIC FOAM - NOISE KIT	ENSEMBLE DE EPONGE	-	D	5001-5106			
	K1045570	ACOUSTIC FOAM - NOISE KIT	ENSEMBLE DE EPONGE	1		5107-			
1	K1010303C	WEIGHT;COUNTER	MASSE D'EQUILIBRAGE	1					
2	K1002730A	FOAM	EPONGE	1					
3	K1011180	FOAM	EPONGE	1					
6	K1029630	BRACKET	SUPPORT	1					
7	DS0025015	BOLT;SET	BOULON A 6 PANS	2					
11	K1011304	FOAM	EPONGE	1					
12	DS0025022	BOLT;SET	BOULON A 6 PANS	2					
13	621-01572	PLATE	PLAQUE	2					

DATE	AUG. 28, 2009
3rd EDITION	

Fig. 7090 MAIN PIPING - ARTI. BOOM
CONDUITES DE BATI PRINCIPAL

Serial No. ;

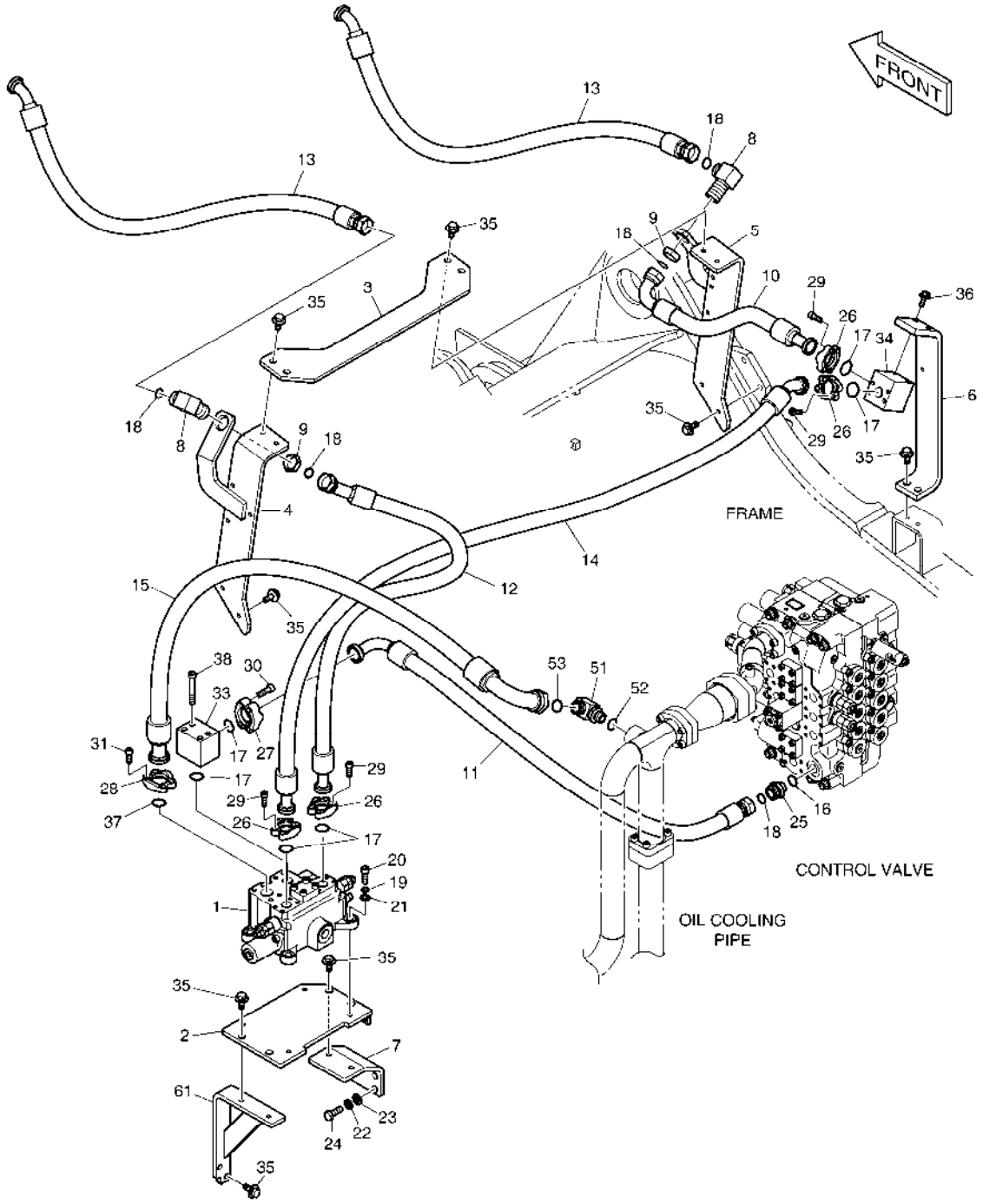

DATE	AUG. 28, 2009
3rd EDITION	

Fig. 7090 MAIN PIPING - ARTI. BOOM
CONDUITES DE BATI PRINCIPAL

Serial No. ;

Key No.	Part No.	Description	Description	Q'ty	S.C	Serial No.	ICA	Replaceable part	
								Part No.	Q'ty
7090 --	K1038585B	MAIN PIPING;ARTI BOOM	CIRCUIT HYDRAULIQUE PF	-	D				
1	K1033235A	VALVE;CONTROL	TIROIR DE COMMANDE	1					
2	K1024011C	BRACKET	SUPPORT	1					
3	K1038601	BRACKET	SUPPORT	1					
4	K1038602	BRACKET	SUPPORT	1					
5	K1038603	BRACKET	SUPPORT	1					
6	K1038604	BRACKET	SUPPORT	1					
7	K1029831B	BRACKET	SUPPORT	1					
8	DS2290010	ELBOW	COUDE	2					
9	121-00010D9	NUT	ECROU	2					
10	DS2025057	HOSE	TUYAU FLEXIBLE	1					
11	DS2018196	HOSE	TUYAU FLEXIBLE	1					
12	DS2082024	HOSE	TUYAU FLEXIBLE	1					
13	DS2017063	HOSE	TUYAU FLEXIBLE	2		5001-5110			
	DS2017071	HOSE	TUYAU FLEXIBLE	2		5111-			
14	DS2039159	HOSE	TUYAU FLEXIBLE	1					
15	DS2025094	HOSE	TUYAU FLEXIBLE	1					
16	S8000241	O-RING	JOINT TORIQUE	1					
17	2180-1026D19	O-RING	JOINT TORIQUE	6					
18	S8030161	O-RING	JOINT TORIQUE	5					
19	S5110703	WASHER;SPRING	RONDELLE ELASTIQUE	4					
20	S2215366	BOLT	BOULON A 6 PANS CREUX	4					
21	S5010713	WASHER;PLAIN	RONDELLE	4					
22	S5010813	WASHER;PLAIN	RONDELLE	4					
23	S5102803	WASHER;SPRING	RONDELLE ELASTIQUE	4					
24	S0518466	BOLT	BOULON A 6 PANS	4					
25	2181-4133D7	ADAPTER	ADAPTEUR	1					
26	2181-9078	FLANGE	BRIDE	8					
27	2181-9081	FLANGE;SPLIT	BRIDE	2					
28	4215-1003D7	FLANGE;HALF	BRIDE	2					
29	S2212266	BOLT;SOCKET	BOULON A 6 PANS CREUX	16					
30	S2215466	BOLT;SOCKET	BOULON A 6 PANS CREUX	4					
31	S2215266	BOLT;SOCKET	BOULON A 6 PANS CREUX	4					
33	K1037707A	BLOCK	BLOC	1					
34	423-00180	BLOCK	BLOC	1					
35	DS0025020	BOLT;SET	BOULON A 6 PANS	16					
36	DS0025016	BOLT;SET	BOULON A 6 PANS	2					
37	2180-1026D23	O-RING	JOINT TORIQUE	1					

DATE	AUG. 28, 2009
3rd EDITION	

Fig. 7090 MAIN PIPING - ARTI. BOOM
CONDUITES DE BATI PRINCIPAL

Serial No. ;

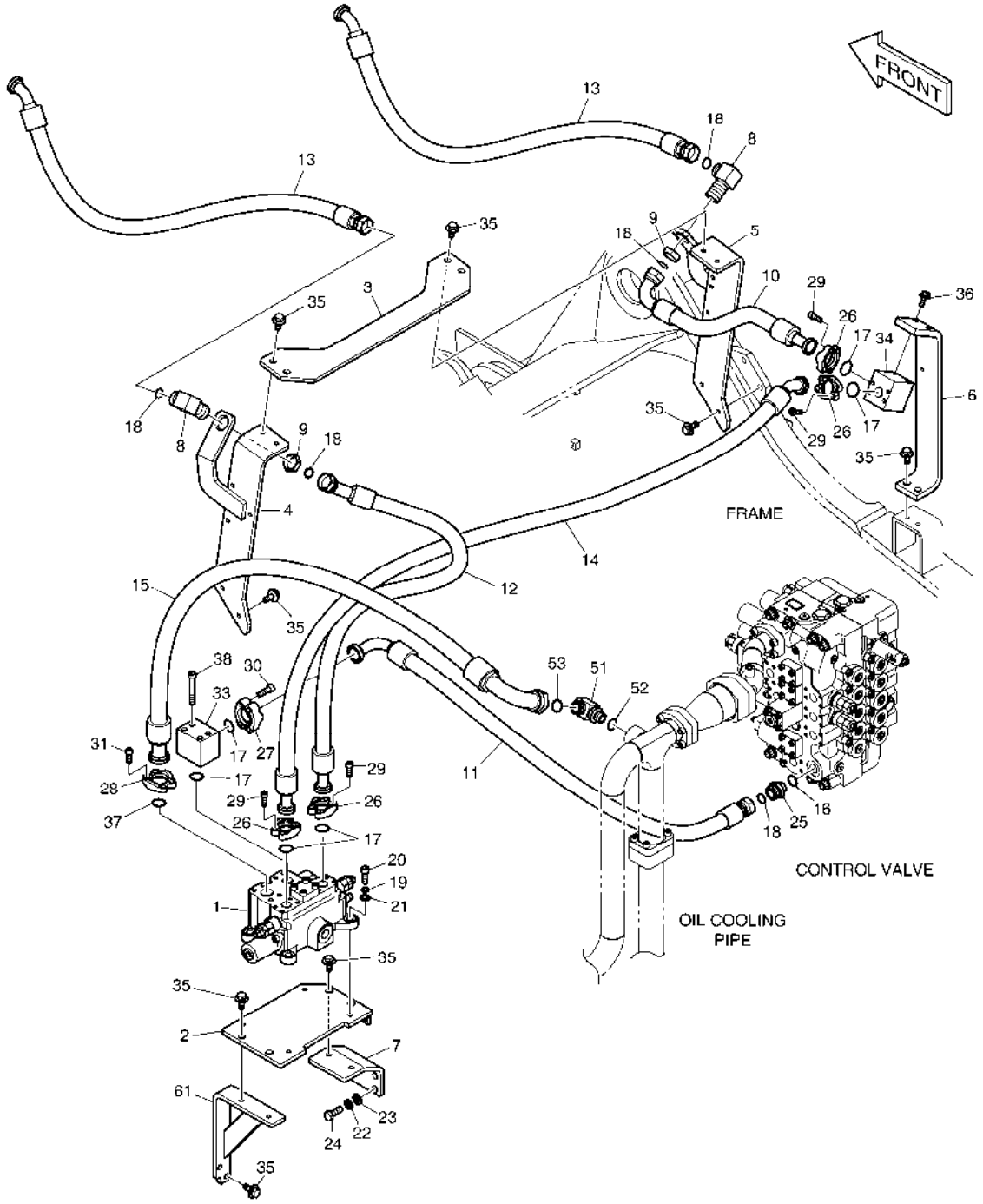

DATE	AUG. 28, 2009
3rd EDITION	

Fig. 7090 MAIN PIPING - ARTI. BOOM
CONDUITES DE BATI PRINCIPAL

Serial No. ;

Key No.	Part No.	Description	Description	Q'ty	S.C	Serial No.	ICA	Replaceable part	
								Part No.	Q'ty
7090 -38	S2216366	BOLT;SOCKET	BOULON A 6 PANS CREUX	4					
51	DS2304096	ELBOW	COUDE	1					
52	S8000291	O-RING	JOINT TORIQUE	1					
53	2180-1026D37	O-RING	JOINT TORIQUE	1					
61	K1029828A	BRACKET	SUPPORT	1					

DATE	AUG. 28, 2009
3rd EDITION	

Fig. 7100 PILOT PIPING(1) - ARTI. BOOM
CONDUITES DE PILOTE

Serial No. ;

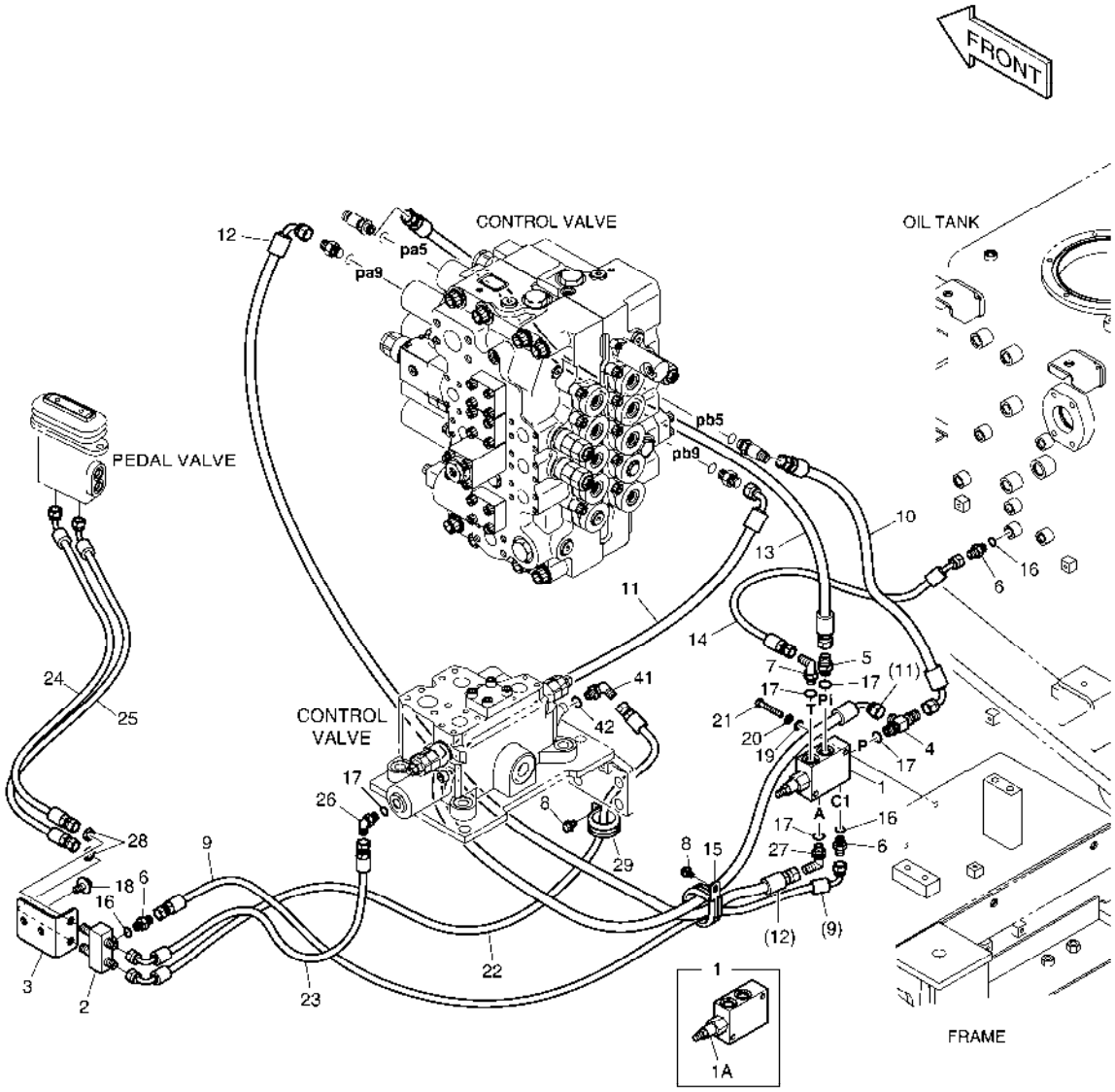

DATE	AUG. 28, 2009
3rd EDITION	

Fig. 7100 PILOT PIPING(1) - ARTI. BOOM
CONDUITES DE PILOTE

Serial No. ;

Key No.	Part No.	Description	Description	Q'ty	S.C	Serial No.	ICA	Replaceable part	
								Part No.	Q'ty
7100 --	K1038807	PILOT PIPING;ARTI BOOM	CONDUITES DE PILOTE	-	D				
1	K1014266	VALVE;PILOT	DECALAGE PILOTE	1					
1A	2.421-00208	. VALVE;PILOT SHIFT	. DECALAGE PILOTE	1					
2	420-00476	VALVE;SHUTTLE	VANNE	1					
3	K1023823	BRACKET	SUPPORT	1					
4	181-00811	TEE;SHUTTLE	TE	1					
5	2181-1126D7	ADAPTER	ADAPTEUR	1					
6	2181-1126D14	ADAPTER	ADAPTEUR	3					
7	2181-1702D10	ELBOW	COUDE	1					
8	K1001029	BOLT	BOULON A 6 PANS	2					
9	DS2093145	HOSE	TUYAU FLEXIBLE	1					
10	DS2093097	HOSE	TUYAU FLEXIBLE	1					
11	DS2091169	HOSE	TUYAU FLEXIBLE	1					
12	DS2093316	HOSE	TUYAU FLEXIBLE	1					
13	DS2094366	HOSE	TUYAU FLEXIBLE	1					
14	DS2092119	HOSE	TUYAU FLEXIBLE	1					
15	124-00208D9	CLIP	AGRAFE	1					
16	S8000111	O-RING	JOINT TORIQUE	3					
17	S8000141	O-RING	JOINT TORIQUE	5					
18	DS0025017	BOLT;SET	BOULON A 6 PANS	2					
19	S5010513	WASHER	RONDELLE	2					
20	S5102503	WASHER	RONDELLE ELASTIQUE	2					
21	S0556366	BOLT	BOULON	2					
22	DS2093186	HOSE	TUYAU FLEXIBLE	1					
23	DS2093336	HOSE	TUYAU FLEXIBLE	1					
24	DS2093021	HOSE	TUYAU FLEXIBLE	1					
25	DS2093350	HOSE	TUYAU FLEXIBLE	1					
26	2181-1702D10	ELBOW	COUDE	1					
27	2181-1702D5	ELBOW	COUDE	1					
28	121-00010D7	NUT	ECROU	2					
29	124-00208D2	CLIP	AGRAFE	1					
41	2181-1702D10	ELBOW	COUDE	1					
42	S8000141	O-RING	JOINT TORIQUE	1					

DATE	AUG. 28, 2009
3rd EDITION	

Fig. 7110 PILOT PIPING(2) - ARTI. BOOM
CONDUITES DE PILOTE

Serial No. ;

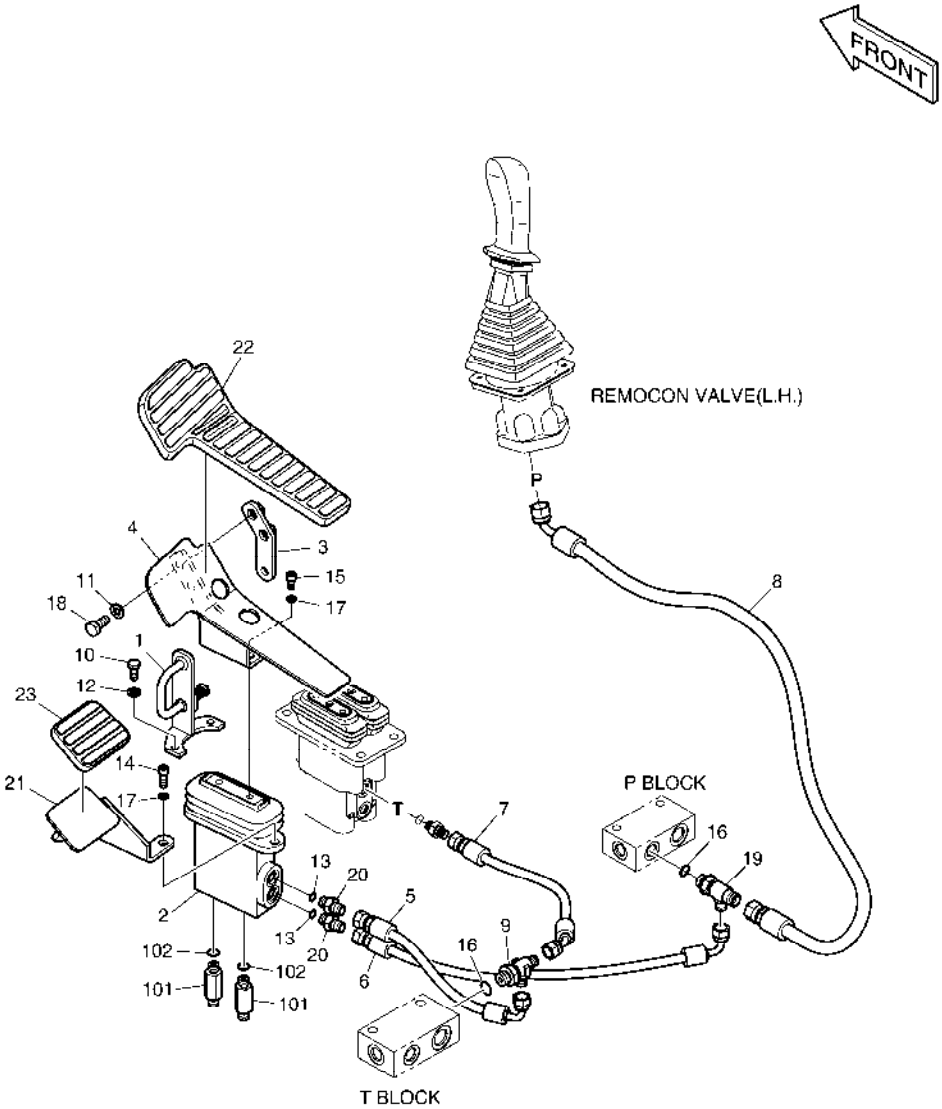

DATE	AUG. 28, 2009
3rd EDITION	

Fig. 7110 PILOT PIPING(2) - ARTI. BOOM
CONDUITES DE PILOTE

Serial No. ;

Key No.	Part No.	Description	Description	Q'ty	S.C	Serial No.	ICA	Replaceable part	
								Part No.	Q'ty
7110 --	K1038219	PILOT PIPING;SINGLE PEDAL	CONDUITES DE PILOTE	-	D				
1	K1001873A	PLATE	PLAQUE	1					
2	K1017382A	PEDAL VALVE	VANNE	1					
3	K1001871B	PLATE	PLAQUE	1					
4	195-01684A	BRACKET;PEDAL(L.H)	SUPPORT	1					
5	DS2093130	HOSE	TUYAU FLEXIBLE	1					
6	DS2093202	HOSE	TUYAU FLEXIBLE	1					
7	DS2092046	HOSE	TUYAU FLEXIBLE	1					
8	DS2095003	HOSE	TUYAU FLEXIBLE	1					
9	2181-1951D7	TEE	TE	1					
10	S0508866	BOLT	BOULON A 6 PANS	2					
11	S5102603	WASHER	RONDELLE ELASTIQUE	2					
12	S5102503	WASHER	RONDELLE ELASTIQUE	2					
13	S8000111	O-RING	JOINT TORIQUE	2					
14	S2212266	BOLT;SOCKET	BOULON A 6 PANS CREUX	2					
15	S2211866	BOLT;SOCKET	BOULON A 6 PANS CREUX	2					
16	S8000141	O-RING	JOINT TORIQUE	2					
17	S5110603	WASHER;SPRING	RONDELLE ELASTIQUE	4					
18	S0512066	BOLT	BOULON A 6 PANS	2					
19	2181-1951D6	TEE	TE	1					
20	2181-1126D14	ADAPTER	ADAPTEUR	2					
21	K1003948A	FOOT REST	REPOS DE PIED	1					
22	161-00382	RUBBER;PEDAL(L.H)	CAOUTCHOUC	1					
23	K1006656	RUBBER;PEDAL	CAOUTCHOUC	1					
101	2181-1126D34	ADAPTER	ADAPTEUR	2					
102	S8000111	O-RING	JOINT TORIQUE	2					

DATE	AUG. 28, 2009
3rd EDITION	

Fig. 7115 FLOOR MAT - THREE PEDAL PLANCHER

Serial No. ; 5108 ~

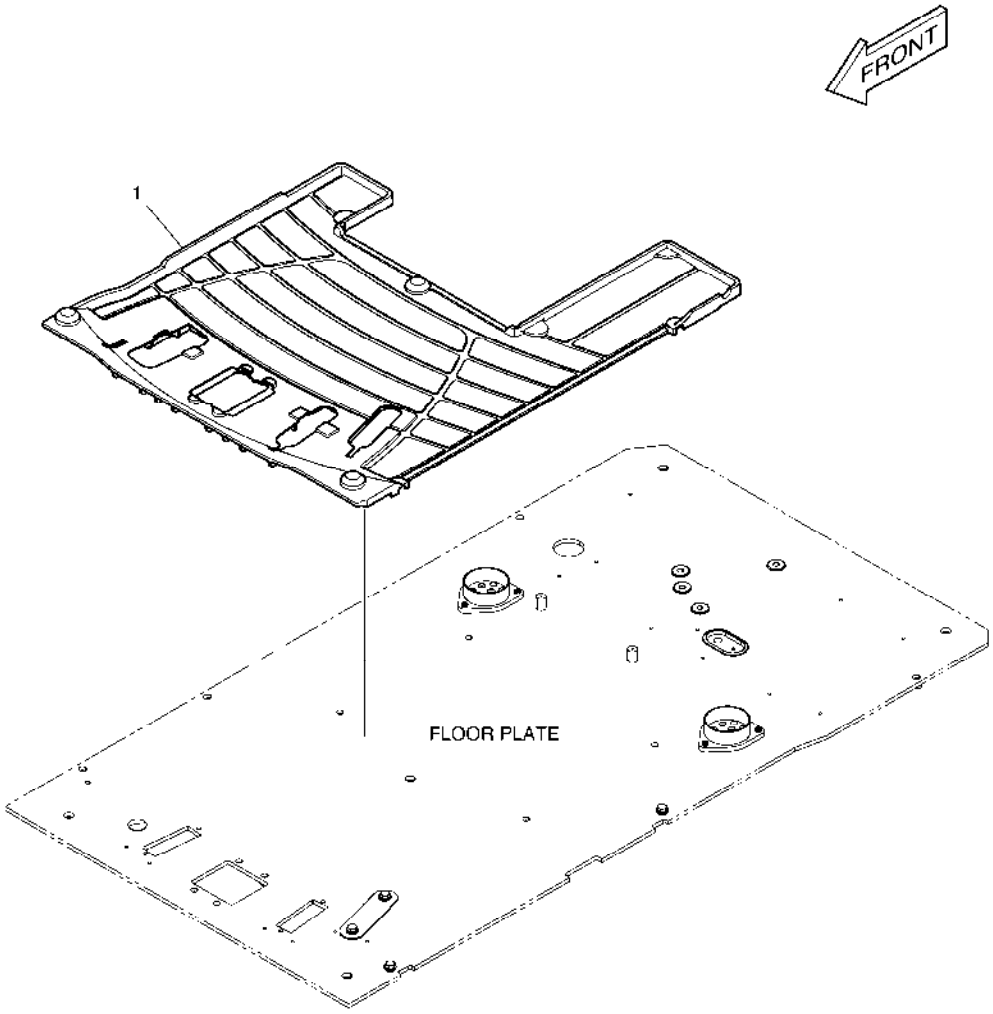

DATE	AUG. 28, 2009
3rd EDITION	

Fig. 7115 FLOOR MAT - THREE PEDAL PLANCHER

Serial No. ; 5108 ~

Key No.	Part No.	Description	Description	Q'ty	S.C	Serial No.	ICA	Replaceable part	
								Part No.	Q'ty
7115 -1	K1007095B	MAT;FLOOR	PLAQUE	1		5108-			

DATE	AUG. 28, 2009
3rd EDITION	

Fig. 7120 ARTI. BOOM
PERCHE ASS'Y D'ARTI

Serial No. ;

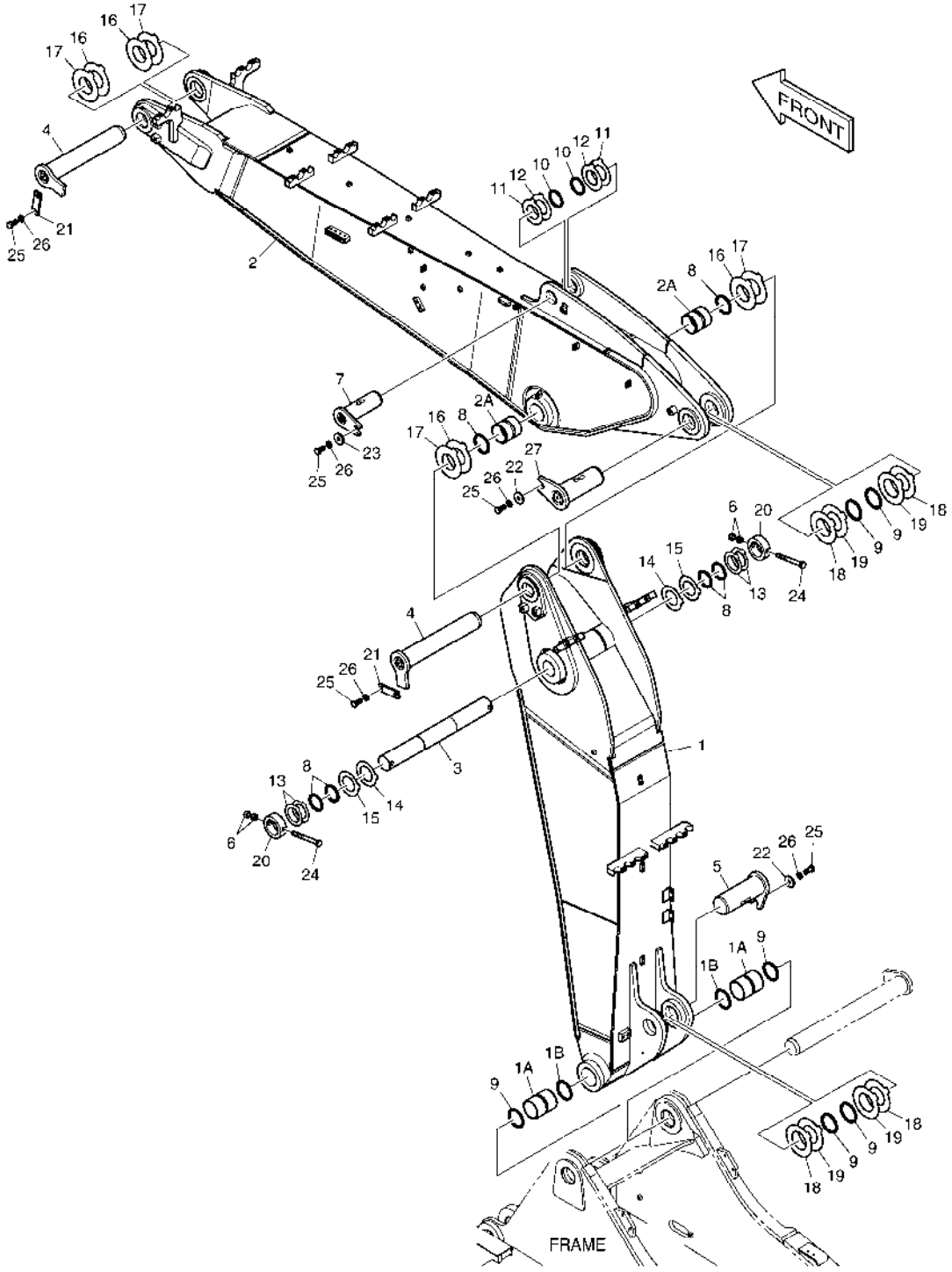

DATE	AUG. 28, 2009
3rd EDITION	

Fig. 7120 ARTI. BOOM PERCHE ASS'Y D'ARTI

Serial No. ;

Key No.	Part No.	Description	Description	Q'ty	S.C	Serial No.	ICA	Replaceable part	
								Part No.	Q'ty
7120 --	K1037450	ARTI. BOOM ASS'Y	ARTI. PERCHE ASS'Y	-	D				
1	K1037451	BOOM;LOWER	PERCHE	1					
1A	K1010027	. BUSHING	. DOUILLE	2					
1B	2180-1106BD14	. SEAL;DUST	. PARE-POUSSIERES	2					
2	K1037454	BOOM;UPPER	PERCHE	1					
2A	110-00252	. BUSHING	. DOUILLE	2					
3	K1010023B	PIN;BOOM CENTER	GOUPILLE	1					
4	2123-2185G	PIN	GOUPILLE	2					
5	2123-2356A	PIN	GOUPILLE	1					
6	S4013133	NUT	ECROU	4					
7	K1023963	PIN	GOUPILLE	1					
8	2180-1106BD6	SEAL;DUST	PARE-POUSSIERES	6					
9	2180-1106BD14	SEAL;DUST	PARE-POUSSIERES	6					
10	2180-1106BD24	SEAL;DUST	PARE-POUSSIERES	2					
11	DS7752012	SHIM	CALE	2					
12	DS7752013	SHIM	CALE	2					
13	DS7752014	SHIM	CALE	4					
14	DS7752015	SHIM	CALE	2					
15	DS7752016	SHIM	CALE	2					
16	DS7752017	SHIM	CALE	4					
17	DS7752018	SHIM	CALE	4					
18	DS7752045	SHIM	CALE	4					
19	DS7752046	SHIM	CALE	4					
20	2116-1527A	STOPPER	TAQUET D'ARRET	2					
21	621-03710A	PLATE;STOPPER	PLAQUE	2					
22	2116-1060D5	STOPPER	TAQUET D'ARRET	2					
23	2116-1060D6	STOPPER	TAQUET D'ARRET	1					
24	S0571866	BOLT M20X2.5X170	BOULON A 6 PANS	2					
25	S0521366	BOLT	BOULON A 6 PANS	7					
26	S5102903	WASHER	RONDELLE	7					
27	K1000543A	PIN	GOUJON	1					

DATE	AUG. 28, 2009
3rd EDITION	

Fig. 7130 ARTI. BOOM PIPING
PERCHE ASS'Y D'ARTI

Serial No. ;

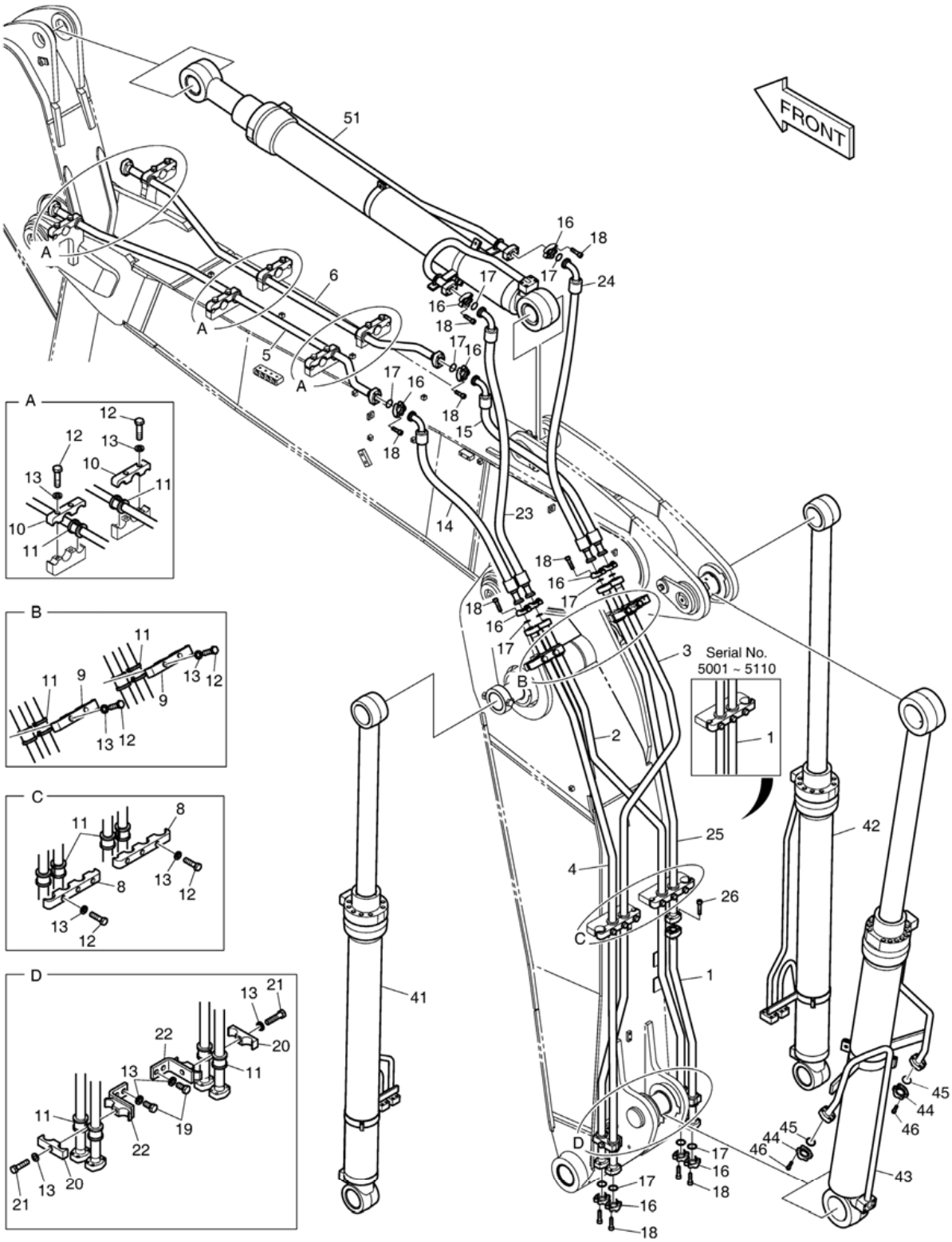

DATE	AUG. 28, 2009
3rd EDITION	

Fig. 7130 ARTI. BOOM PIPING PERCHE ASS'Y D'ARTI

Serial No. ;

Key No.	Part No.	Description	Description	Q'ty	S.C	Serial No.	ICA	Replaceable part	
								Part No.	Q'ty
7130 --	K1037464A	ARTI BOOM PIPING	ARTI. TUYAUTERIE DE PER	-	D				
1	K1030322	PIPE	CONDUITES	1		5001-5110			
	K1053537	PIPE	CONDUITES	1		5111-			
2	K1030323	PIPE	CONDUITES	1					
3	K1030324	PIPE	CONDUITES	1					
4	K1030325	PIPE	CONDUITES	1					
5	K1030326	PIPE	CONDUITES	1					
6	K1030327	PIPE	CONDUITES	1					
8	K1030332	CLAMP;PIPE	COLLIER	2					
9	K1030333	CLAMP;PIPE	COLLIER	2					
10	K1030334	CLAMP;PIPE	COLLIER	6					
11	K1010532	RUBBER;PIPE	CAOUTCHOUC	18					
12	S0565466	BOLT	BOULON A 6 PANS	22					
13	S5102903	WASHER	RONDELLE	28					
14	DS2040624	HOSE 1430L	TUYAU FLEXIBLE	1					
15	DS2040624	HOSE 1430L	TUYAU FLEXIBLE	1					
16	2181-9078	FLANGE	BRIDE	24					
17	2180-1026D19	O-RING	JOINT TORIQUE	12		5001-5110			
	2180-1026D19	O-RING	JOINT TORIQUE	13		5111-			
18	S2212466	BOLT;SOCKET M10X1.5X40	BOULON A 6 PANS CREUX	48					
19	S0521366	BOLT	BOULON A 6 PANS	4					
20	K1010535	CLAMP;PIPE	COLLIER	2					
21	S0565566	BOLT	BOULON A 6 PANS	2					
22	K1036471	BRACKET	SUPPORT	2					
23	DS2040623	HOSE 1180L	TUYAU FLEXIBLE	1					
24	DS2040623	HOSE 1180L	TUYAU FLEXIBLE	1					
25	K1053538	PIPE	CONDUITES	1		5111-			
26	S2212666	BOLT	BOULON A 6 PANS CREUX	4		5111-			
41	K1011026	CYLINDER;BOOM(L.H)	VERIN DE FLECHE	1					
42	K1011027	CYLINDER;BOOM(R.H)	VERIN DE FLECHE	1					
43	K1023535A	CYLINDER;ARTI BOOM	CYLINDRES	1					
44	2181-9078	FLANGE	BRIDE	4					
45	2180-1026D19	O-RING	JOINT TORIQUE	2					
46	S2212466	BOLT;SOCKET M10X1.5X40	BOULON A 6 PANS CREUX	8					
51	K1030367	ARM CYLINDER	CYLINDRE	1					

DATE	AUG. 28, 2009
3rd EDITION	

Fig. 7140 LUBRICATION PIPING - LOWER BOOM LUBRIFICATION

Serial No. ;

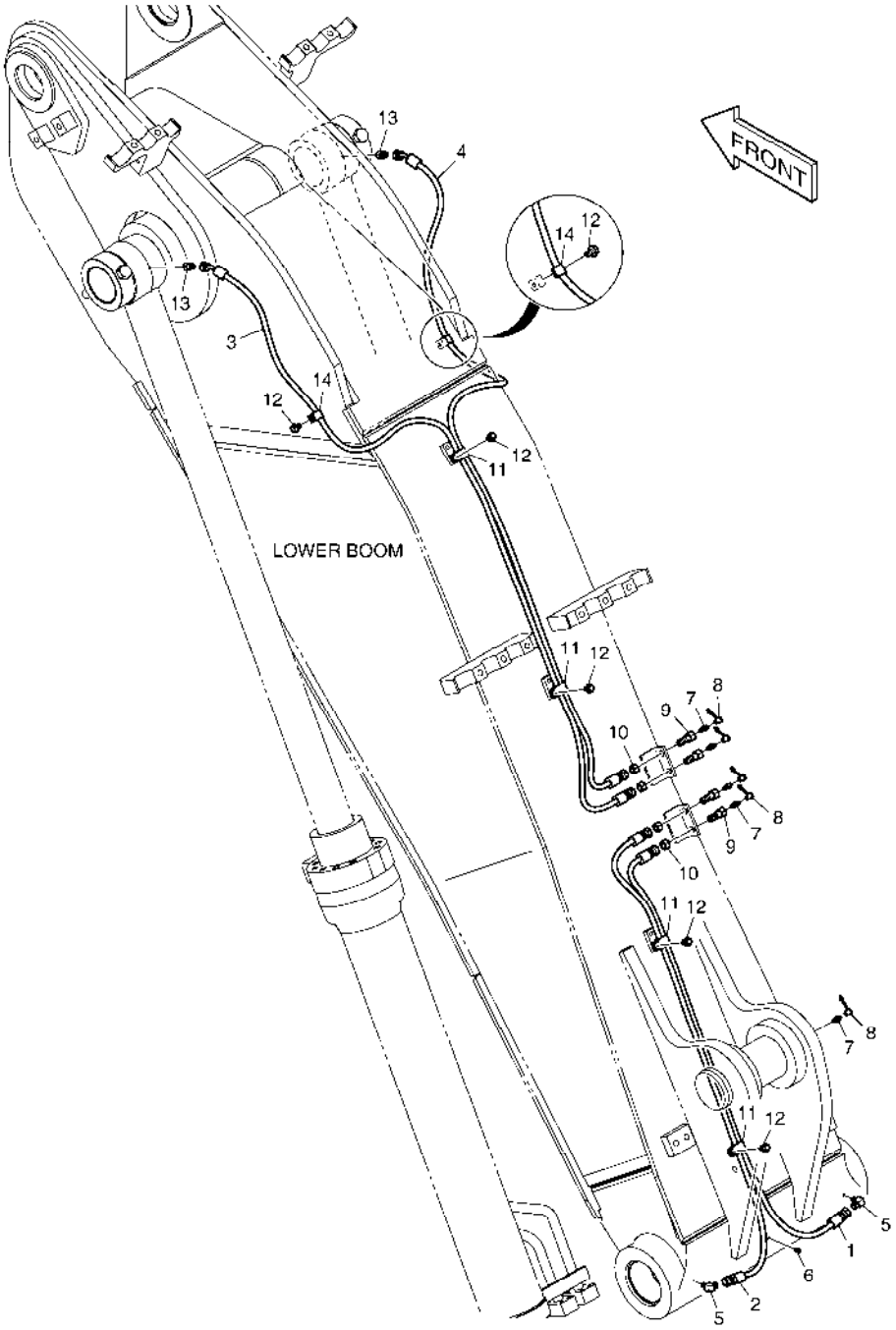

DATE	AUG. 28, 2009
3rd EDITION	

Fig. 7140 LUBRICATION PIPING - LOWER BOOM LUBRIFICATION

Serial No. ;

Key No.	Part No.	Description	Description	Q'ty	S.C	Serial No.	ICA	Replaceable part	
								Part No.	Q'ty
7140 --	K1037467	LUBRICATION PIPING	LUBRIFICATION	-	D				
1	DS2053773	HOSE	TUYAU FLEXIBLE	1					
2	DS2053983	HOSE	TUYAU FLEXIBLE	1					
3	DS2092148	HOSE	TUYAU FLEXIBLE	1					
4	DS2092149	HOSE	TUYAU FLEXIBLE	1					
5	2181-1186D12	ELBOW	COUDE	2					
6	S3524403	PLUG	BOUCHON	1					
7	S6710041	NIPPLE;GREASE	GRAISSEUR	5					
8	160-00020	CAP;GREASE NIPPLE	CHAPEAU	5					
9	181-00103	REDUCER	REDUCTEUR	4					
10	121-00006	NUT	ECROU	4					
11	124-00199D5	CLIP	AGRAFE	4					
12	K1001029	BOLT	BOULON A 6 PANS	6					
13	2181-4112	ADAPTER	ADAPTEUR	2					
14	2124-1353D2	CLIP	CLIP	2					

DATE	AUG. 28, 2009
3rd EDITION	

Fig. 7150 LUBRICATION PIPING - UPPER BOOM LUBRIFICATION

Serial No. ;

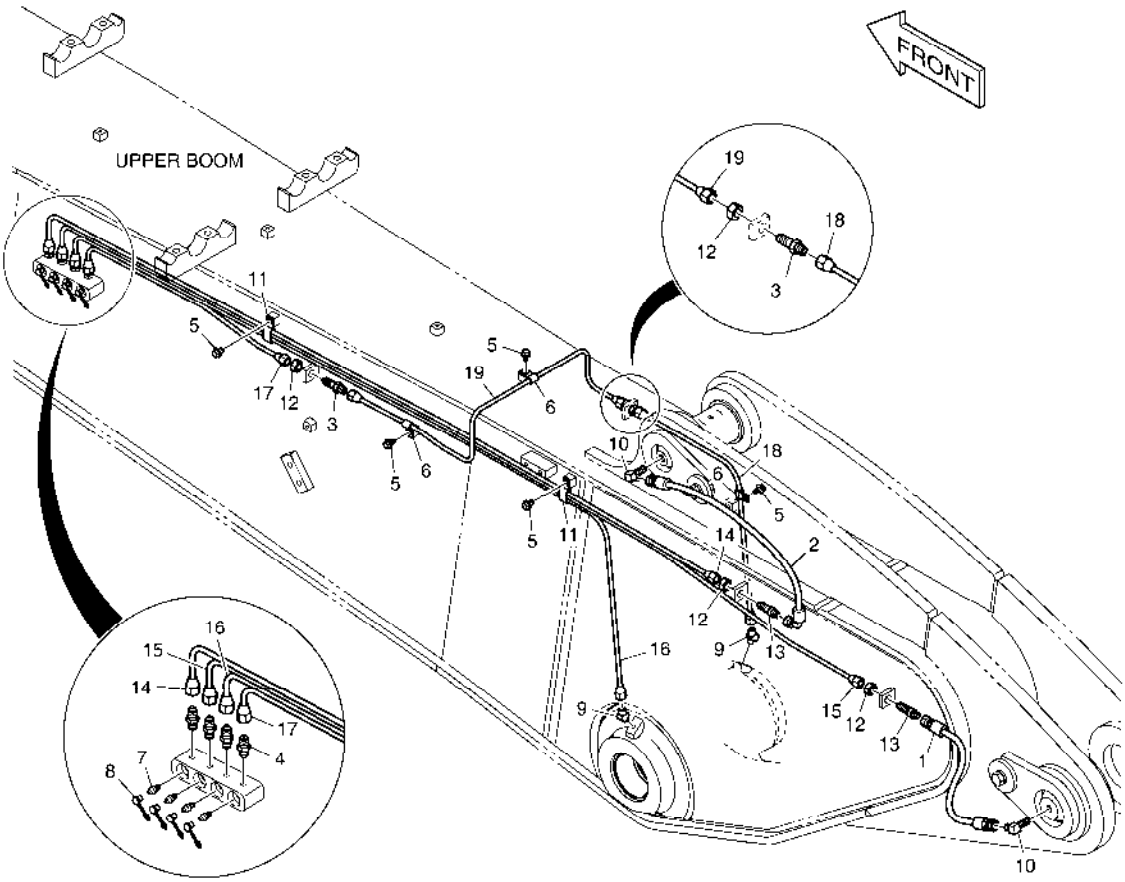

DATE	AUG. 28, 2009
3rd EDITION	

Fig. 7150 LUBRICATION PIPING - UPPER BOOM LUBRIFICATION

Serial No. ;

Key No.	Part No.	Description	Description	Q'ty	S.C	Serial No.	ICA	Replaceable part	
								Part No.	Q'ty
7150 --	K1037469	LUBRICATION PIPING	LUBRIFICATION	-	D				
1	DS2094295	HOSE	TUYAU FLEXIBLE	1					
2	DS2093102	HOSE	TUYAU FLEXIBLE	1					
3	DS2225009	ADAPTER	ADAPTEUR	2					
4	2181-1184	ADAPTER	ADAPTEUR	4					
5	K1001029	BOLT	BOULON A 6 PANS	5					
6	DS2802023	CLIP	CLIP	3					
7	S6710041	NIPPLE;GREASE	GRAISSEUR	4					
8	160-00020	CAP;GREASE NIPPLE	CHAPEAU	4					
9	K1010730	ELBOW	COUDE	2					
10	2181-1111D11	ELBOW	COUDE	2					
11	DS2805008	CLIP	CLIP	2					
12	S4032833	NUT	ECROU	4					
13	2181-1923D12	ADAPTER	ADAPTEUR	2					
14	K1030359	PIPE	TUYAU	1					
15	K1030360	PIPE	TUYAU	1					
16	K1030361	PIPE	TUYAU	1					
17	K1018420	PIPE	TUYAU	1					
18	K1030363	PIPE	TUYAU	1					
19	K1030364	PIPE	TUYAU	1					

DATE	AUG. 28, 2009
3rd EDITION	

Fig. 7160 MAIN PIPING - ONE WAY(ARTI. BOOM) CONDUITES DE BATI PRINCIPAL

Serial No. ;

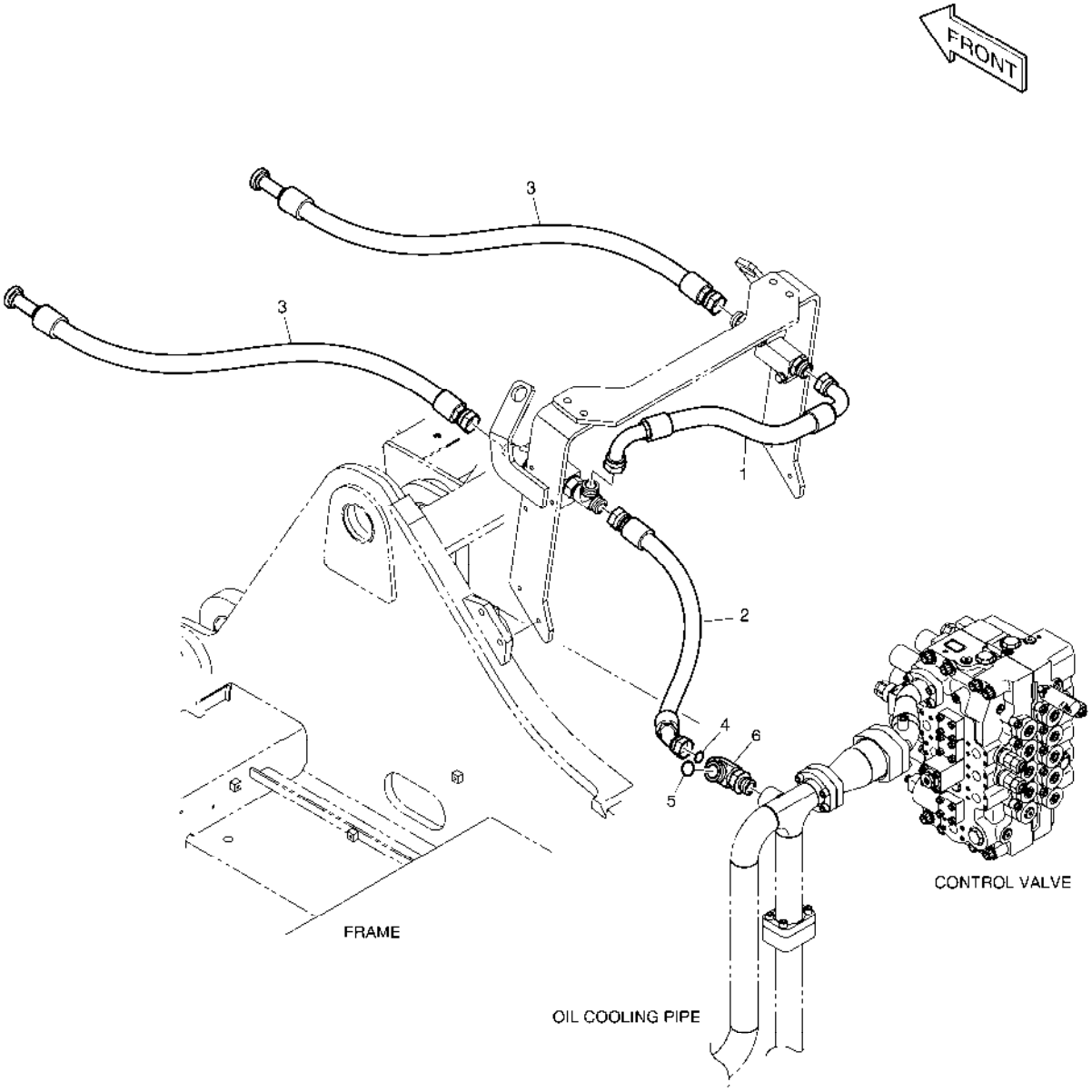

DATE	AUG. 28, 2009
3rd EDITION	

Fig. 7160 MAIN PIPING - ONE WAY(ARTI. BOOM) CONDUITES DE BATI PRINCIPAL

Serial No. ;

Key No.	Part No.	Description	Description	Q'ty	S.C	Serial No.	ICA	Replaceable part	
								Part No.	Q'ty
7160 --	K1038586B	MAIN PIPING - ONE WAY	CONDUITES DE BATI PRIN(	-	D				
1	DS2023234	HOSE	TUYAU FLEXIBLE	1					
2	DS2012298	HOSE	TUYAU FLEXIBLE	1					
3	DS2016125	HOSE	TUYAU FLEXIBLE	2		5001-5110			
	DS2016050	HOSE	TUYAU FLEXIBLE	2		5111-			
4	S8030161	O-RING	JOINT TORIQUE	1					
5	2180-1026D37	O-RING	JOINT TORIQUE	1					
6	DS2412024	TEE	TE	1					

DATE	AUG. 28, 2009
3rd EDITION	

Fig. 7170 MAIN PIPING - TWO WAY(ARTI. BOOM) CONDUITES DE BATI PRINCIPAL

Serial No. ;

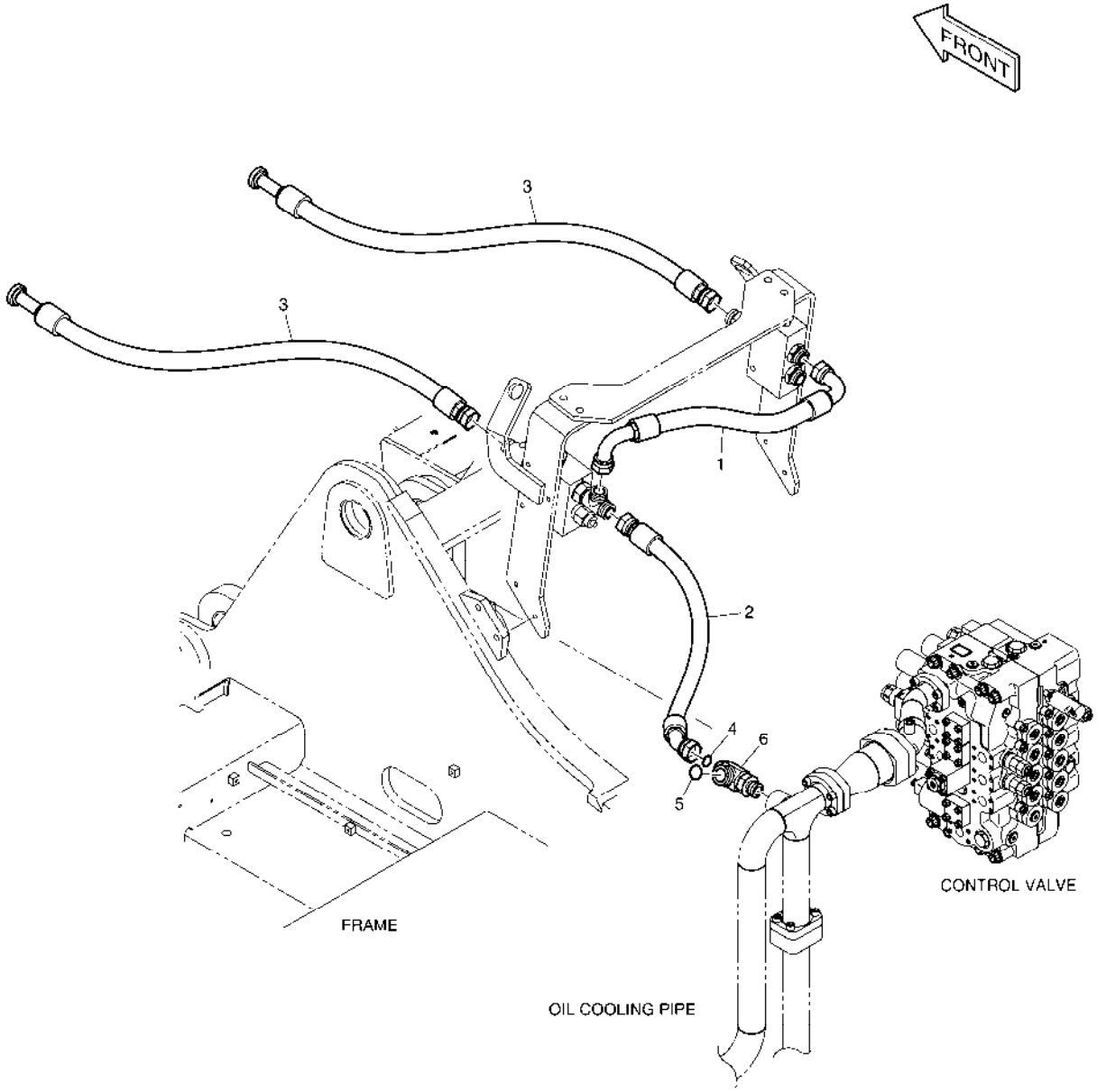

DATE	AUG. 28, 2009
3rd EDITION	

Fig. 7170 MAIN PIPING - TWO WAY(ARTI. BOOM) CONDUITES DE BATI PRINCIPAL

Serial No. ;

Key No.	Part No.	Description	Description	Q'ty	S.C	Serial No.	ICA	Replaceable part	
								Part No.	Q'ty
7170 --	K1038588B	MAIN PIPING - TWO WAY	CONDUITES DE BATI PRIN(	-	D				
1	DS2023233	HOSE	TUYAU FLEXIBLE	1					
2	DS2012442	HOSE	TUYAU FLEXIBLE	1					
3	DS2016125	HOSE	TUYAU FLEXIBLE	2		5001-5110			
	DS2016050	HOSE	TUYAU FLEXIBLE	2		5111-			
4	S8030161	O-RING	JOINT TORIQUE	1					
5	2180-1026D37	O-RING	JOINT TORIQUE	1					
6	DS2412024	TEE	TE	1					

DATE	AUG. 28, 2009
3rd EDITION	

Fig. 7180 ARTI. BOOM PIPING - ONE & TWO WAY
PERCHE ASS'Y D'ARTI

Serial No. ;

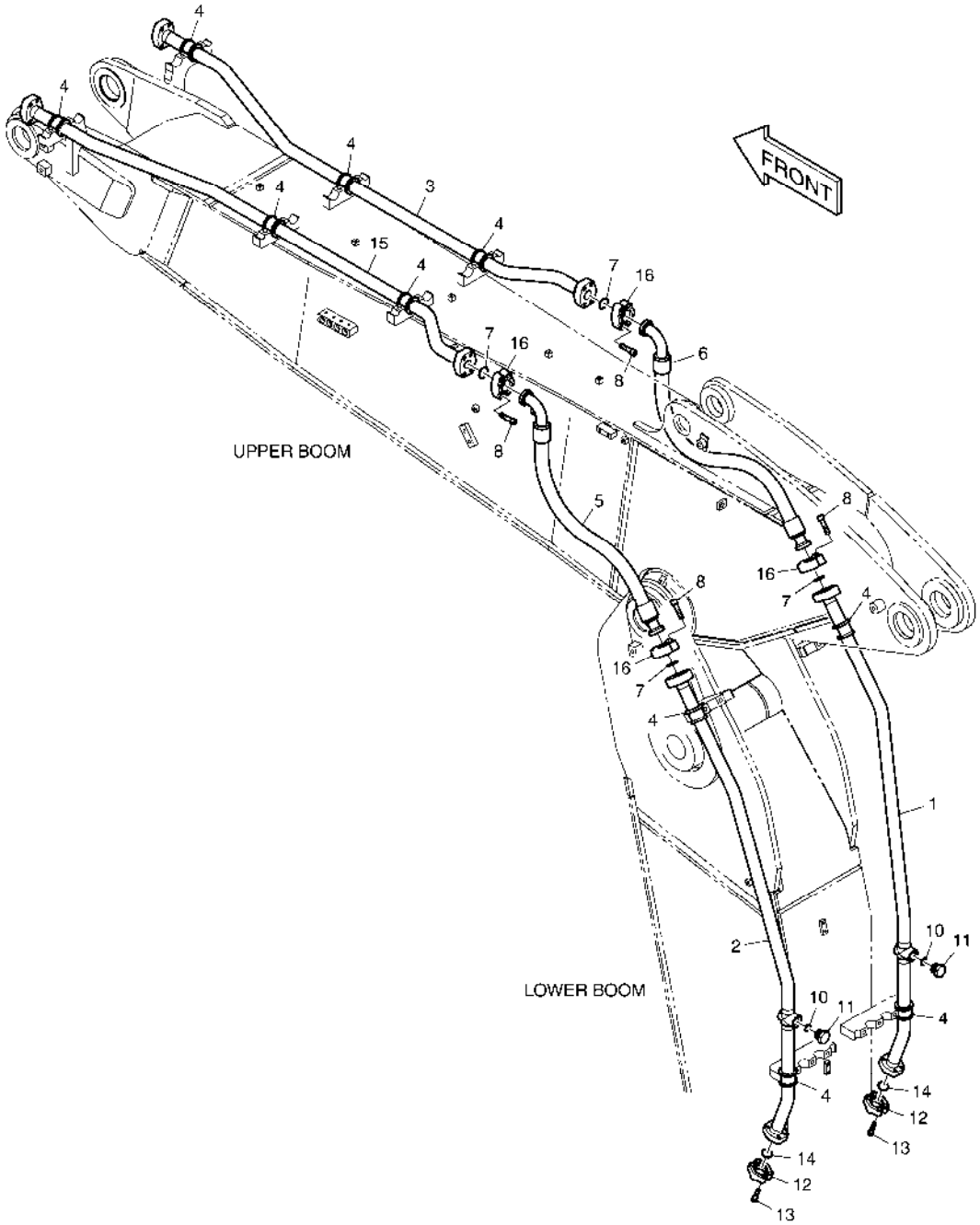

DATE	AUG. 28, 2009
3rd EDITION	

Fig. 7180 ARTI. BOOM PIPING - ONE & TWO WAY
PERCHE ASS'Y D'ARTI

Serial No. ;

Key No.	Part No.	Description	Description	Q'ty	S.C	Serial No.	ICA	Replaceable part	
								Part No.	Q'ty
7180 --	K1037470	ONE & TWO WAY PIPING	TUYAUTERIE	-	D				
1	K1030337	PIPE	CONDUITES	1					
2	K1030338	PIPE	CONDUITES	1					
3	K1030340	PIPE	CONDUITES	1					
4	K1010531	RUBBER	CAOUTCHOUC	10					
5	DS2040627	HOSE 1470L	TUYAU FLEXIBLE	1					
6	DS2040627	HOSE 1470L	TUYAU FLEXIBLE	1					
7	2180-1026D23	O-RING	JOINT TORIQUE	4					
8	S2218766	BOLT;SOCKET	BOULON A 6 PANS CREUX	16					
10	S8000291	O-RING	JOINT TORIQUE	2					
11	2181-1950D9	PLUG	BOUCHON	2					
12	2181-9081	FLANGE;SPLIT	BRIDE	4					
13	S2215666	BOLT;SOCKET	BOULON A 6 PANS CREUX	8					
14	2180-1026D19	O-RING	JOINT TORIQUE	2					
15	K1030339	PIPE	CONDUITES	1					
16	2181-9086	FLANGE;SPLIT	FLASQUE EN DEUX PARTIE	8					

DATE	AUG. 28, 2009
3rd EDITION	

Fig. 7190 MAIN PIPING - ROTATING(ARTI. BOOM) CONDUITES DE BATI PRINCIPAL

Serial No. ;

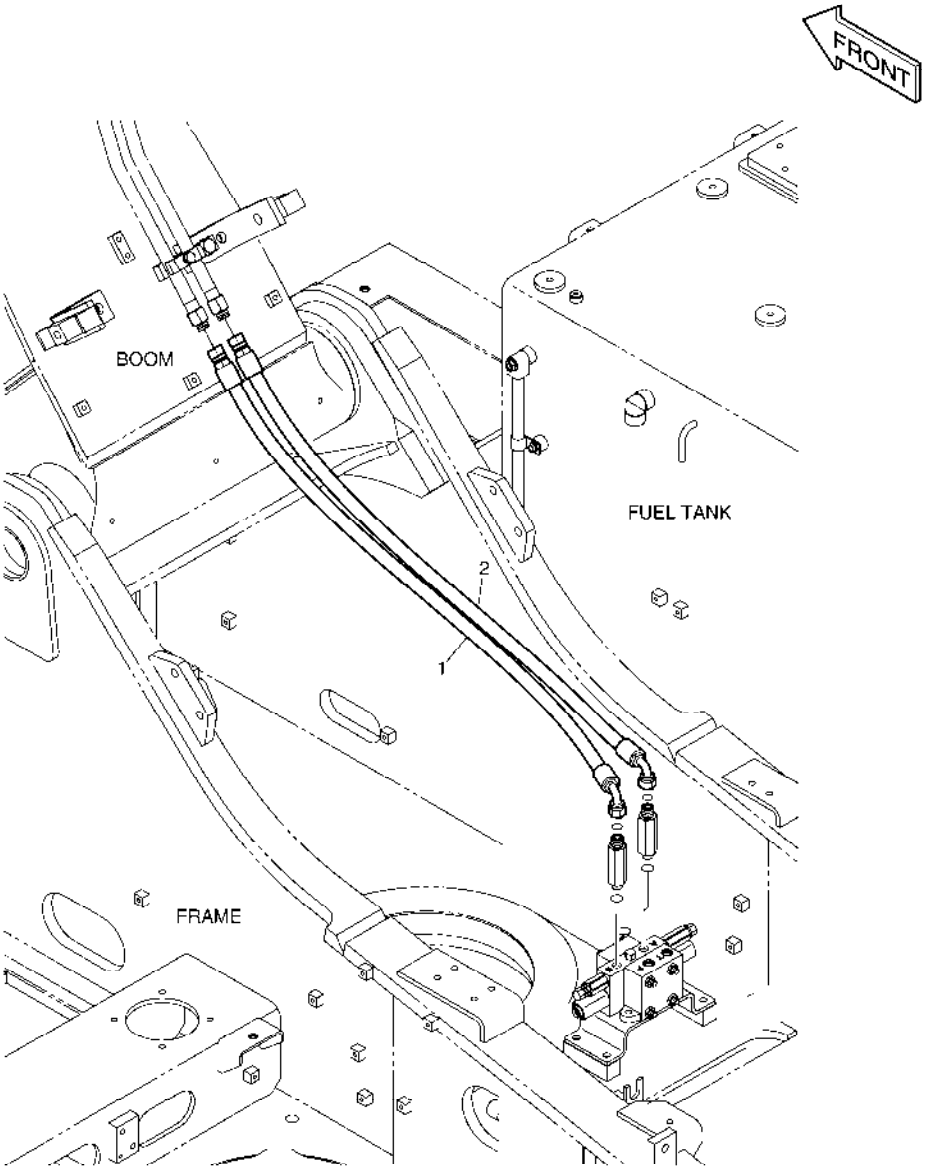

DATE	AUG. 28, 2009
3rd EDITION	

Fig. 7190 MAIN PIPING - ROTATING(ARTI. BOOM) CONDUITES DE BATI PRINCIPAL

Serial No. ;

Key No.	Part No.	Description	Description	Q'ty	S.C	Serial No.	ICA	Replaceable part	
								Part No.	Q'ty
7190 --	K1038587	MAIN PIPING;ROTATING	CIRCUIT HYDRAULIQUE PF	-	D				
1	DS2013848	HOSE	TUYAU FLEXIBLE	1					
2	DS2013848	HOSE	TUYAU FLEXIBLE	1					

DATE	AUG. 28, 2009
3rd EDITION	

Fig. 7200 PILOT PIPING - ARTI. & ROTATING CONDUITES DE PILOTE

Serial No. ;

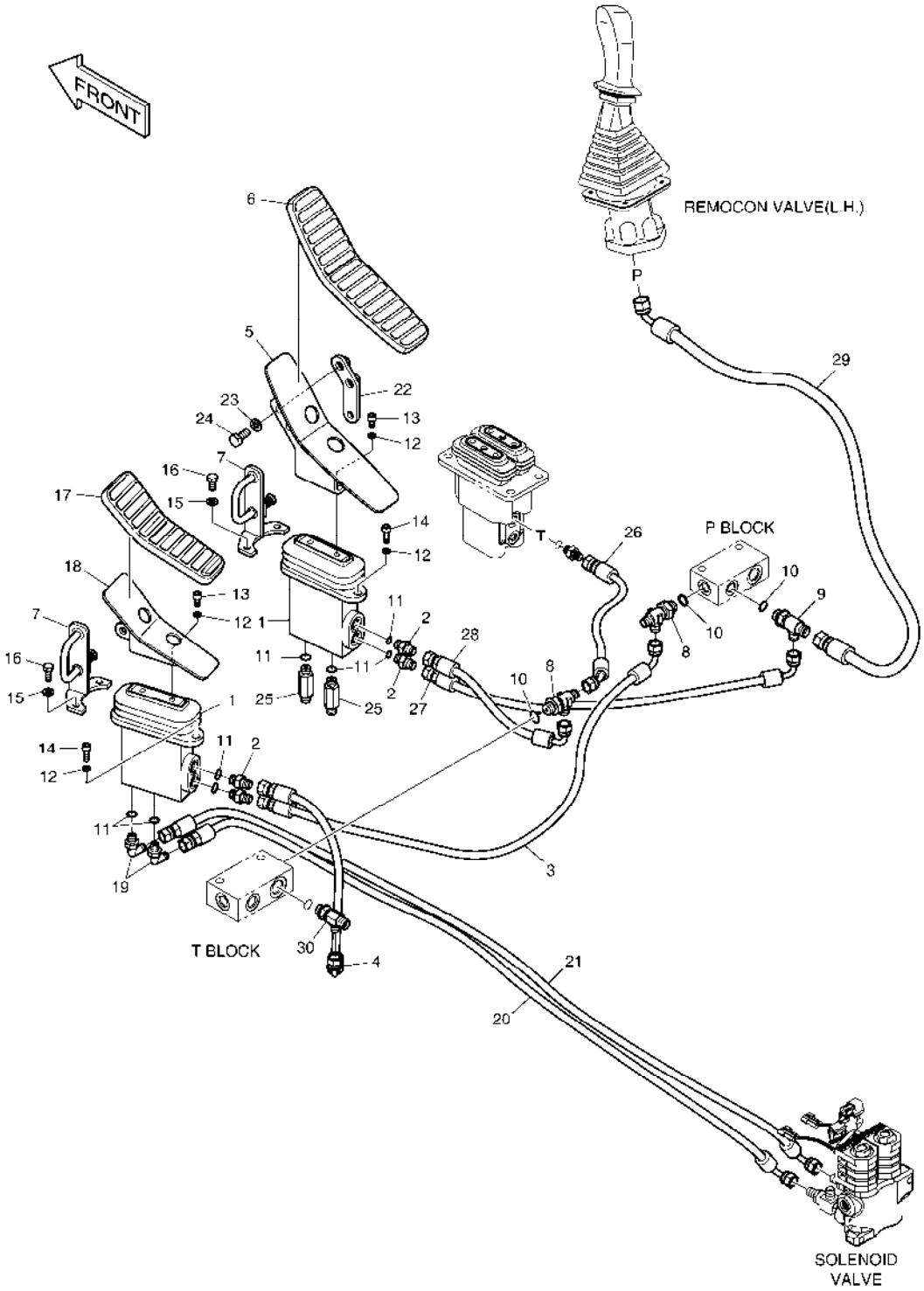

DATE	AUG. 28, 2009
3rd EDITION	

Fig. 7200 PILOT PIPING - ARTI. & ROTATING CONDUITES DE PILOTE

Serial No. ;

Key No.	Part No.	Description	Description	Q'ty	S.C	Serial No.	ICA	Replaceable part	
								Part No.	Q'ty
7200 --	K1038218A	PILOT PIPING;ARTI(PERO)	CONDUITES DE PILOTE	-	D				
1	K1017382A	PEDAL VALVE	VANNE	2					
2	2181-1126D14	ADAPTER	ADAPTEUR	4					
3	DS2093013	HOSE	TUYAU FLEXIBLE	1					
4	DS2093130	HOSE	TUYAU FLEXIBLE	1					
5	K1015404	BRACKET	SUPPORT	1					
6	161-00386	RUBBER;PEDAL	CAOUTCHOUC	1					
7	K1001873A	PLATE	PLAQUE	2					
8	2181-1951D7	TEE	TE	2					
9	2181-1951D6	TEE	TE	1					
10	S8000141	O-RING	JOINT TORIQUE	3					
11	S8000111	O-RING	JOINT TORIQUE	8					
12	S5110603	WASHER;SPRING	RONDELLE ELASTIQUE	8					
13	S2211866	BOLT;SOCKET	BOULON A 6 PANS CREUX	4					
14	S2212266	BOLT;SOCKET	BOULON A 6 PANS CREUX	4					
15	S5102503	WASHER	RONDELLE ELASTIQUE	4					
16	S0508866	BOLT	BOULON A 6 PANS	4					
17	K1017235	RUBBER;PEDAL	CAOUTCHOUC	1					
18	K1015486	BRACKET	SUPPORT	1					
19	2181-1702D4	ELBOW(1/4)	COUDE	2					
20	DS2093073	HOSE	TUYAU FLEXIBLE	1					
21	DS2093073	HOSE	TUYAU FLEXIBLE	1					
22	K1001871B	PLATE	PLAQUE	1					
23	S5102603	WASHER	RONDELLE ELASTIQUE	2					
24	S0512066	BOLT	BOULON A 6 PANS	2					
25	2181-1126D34	ADAPTER	ADAPTEUR	2					
26	DS2092046	HOSE	TUYAU FLEXIBLE	1					
27	DS2093202	HOSE	TUYAU FLEXIBLE	1					
28	DS2093130	HOSE	TUYAU FLEXIBLE	1					
29	DS2095003	HOSE	TUYAU FLEXIBLE	1					
30	2181-1951D19	TEE	TE	1					

DATE	AUG. 28, 2009
3rd EDITION	

Fig. 7210 ARTI. BOOM PIPING - ROTATING
PERCHE ASS'Y D'ARTI

Serial No. ;

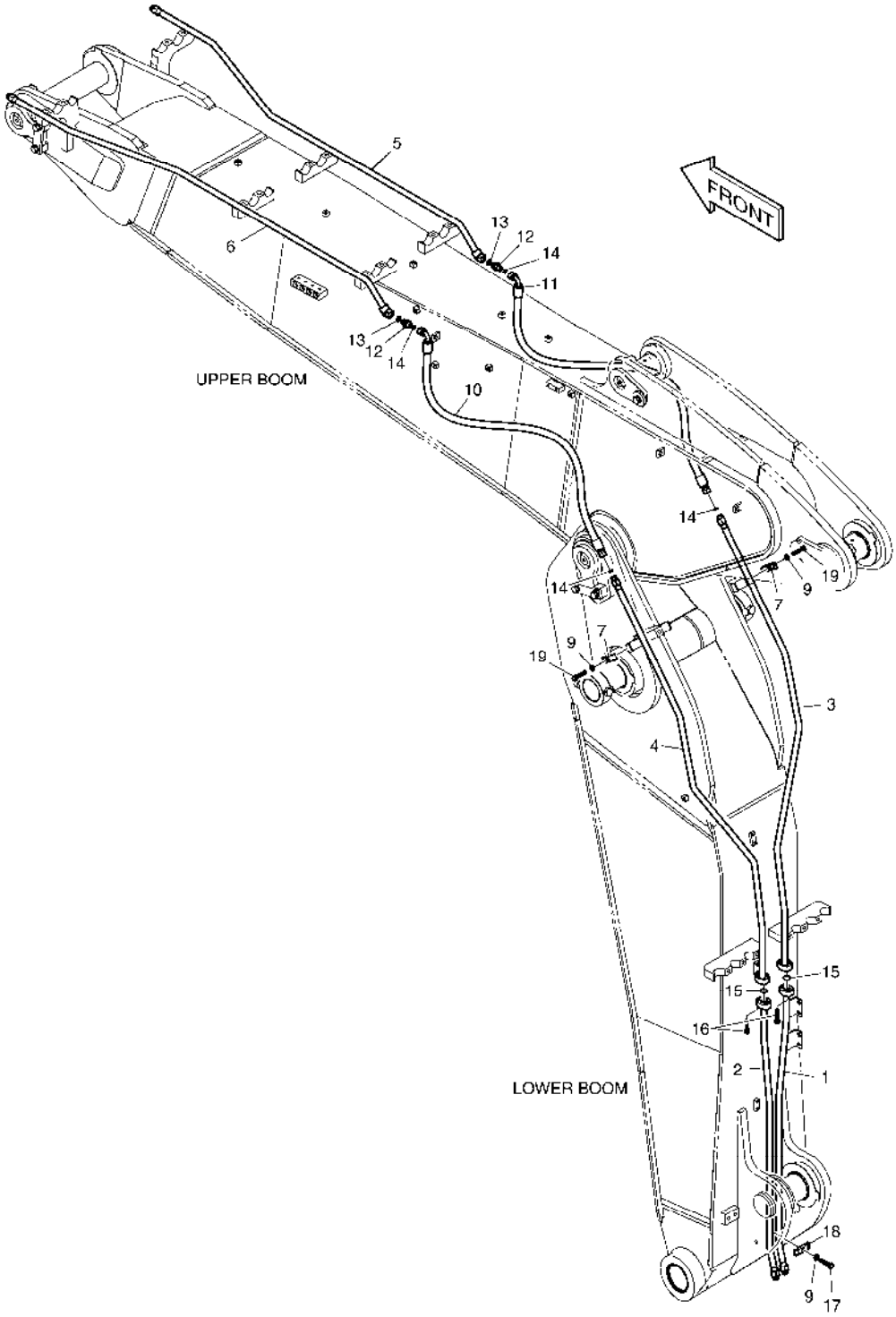

DATE	AUG. 28, 2009
3rd EDITION	

Fig. 7210 ARTI. BOOM PIPING - ROTATING
PERCHE ASS'Y D'ARTI

Serial No. ;

Key No.	Part No.	Description	Description	Q'ty	S.C	Serial No.	ICA	Replaceable part	
								Part No.	Q'ty
7210 --	K1037471A	ROTATION PIPING;ARTI_BOOM	FEU DE CIRCULATION	-	D				
1	K1030349	PIPE	CONDUITES	1					
2	K1030350	PIPE	CONDUITES	1					
3	K1030351	PIPE	CONDUITES	1					
4	K1030352	PIPE	CONDUITES	1					
5	K1030353	PIPE	CONDUITES	1		5001-5110			
	K1030353A	PIPE	CONDUITES	1		5111-			
6	K1030355	PIPE	CONDUITES	1		5001-5110			
	K1030355A	PIPE	CONDUITES	1		5111-			
7	2124-1026D1	CLAMP;PIPE	COLLIER	2					
9	S5102603	WASHER	RONDELLE ELASTIQUE	3					
10	DS2013358	HOSE ORS1/2-1400L	TUYAU FLEXIBLE	1					
11	DS2013358	HOSE ORS1/2-1400L	TUYAU FLEXIBLE	1					
12	2181-4133D3	ADAPTER	ADAPTEUR	2					
13	S8000181	O-RING	JOINT TORIQUE	2					
14	S8030081	O-RING	JOINT TORIQUE	4					
15	2180-1026D30	O-RING	JOINT TORIQUE	2					
16	S2209466	BOLT;SOCKET	BOULON A 6 PANS CREUX	8					
17	S0558466	BOLT	BOULON A 6 PANS	1					
18	K1004028	CLAMP;PIPE	COLLIER	1					
19	S0558566	BOLT	BOULON A 6 PANS	2					

DATE	AUG. 28, 2009
3rd EDITION	

Fig. 7220 MAIN PIPING - QUICK CLAMP(ARTI. BOOM) CONDUITES DE BATI PRINCIPAL

Serial No. ;

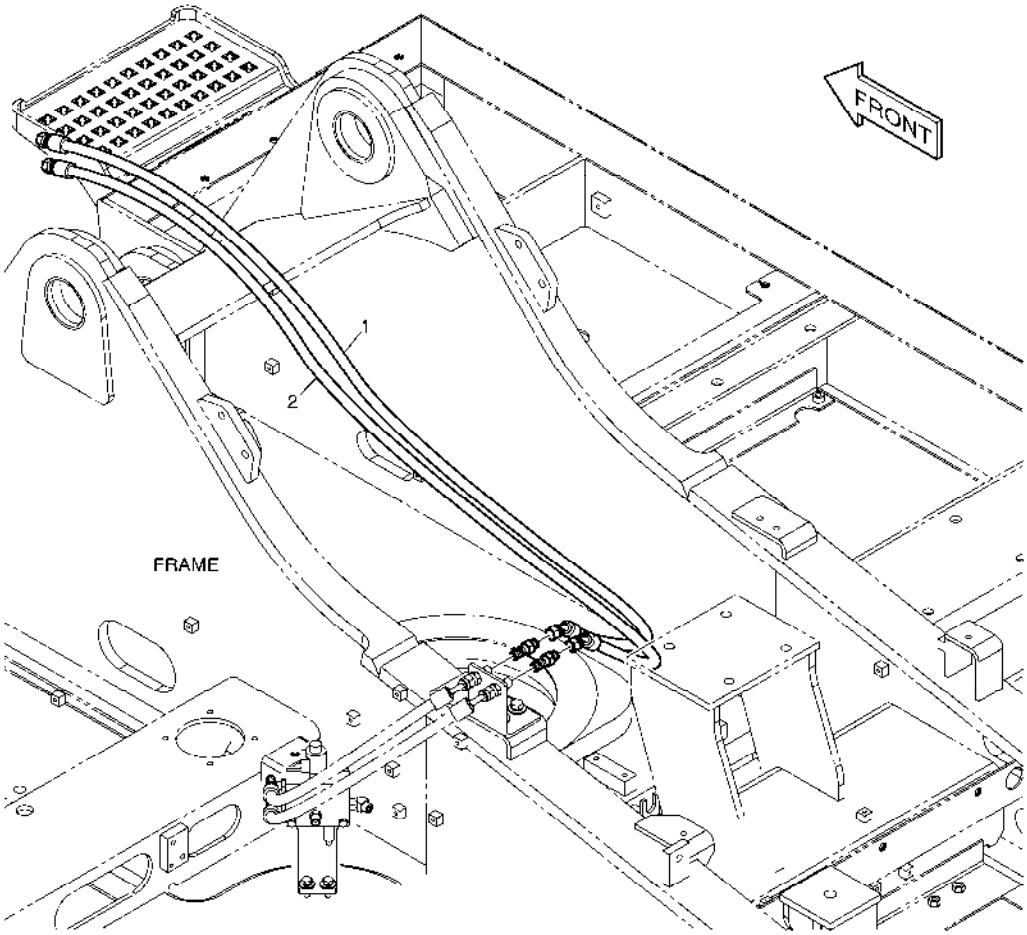

DATE	AUG. 28, 2009
3rd EDITION	

Fig. 7220 MAIN PIPING - QUICK CLAMP(ARTI. BOOM)
CONDUITES DE BATI PRINCIPAL

Serial No. ;

Key No.	Part No.	Description	Description	Q'ty	S.C	Serial No.	ICA	Replaceable part	
								Part No.	Q'ty
7220 --	K1038589	MAIN PIPING - QUICK CLAMP	CONDUITES DE BATI PRIN(	-	D				
1	DS2054351	HOSE	TUYAU FLEXIBLE	1					
2	DS2054413	HOSE	TUYAU FLEXIBLE	1					

DATE	AUG. 28, 2009
3rd EDITION	

Fig. 7230 ARTI. BOOM PIPING - QUICK FIT
PERCHE ASS'Y D'ARTI

Serial No. ;

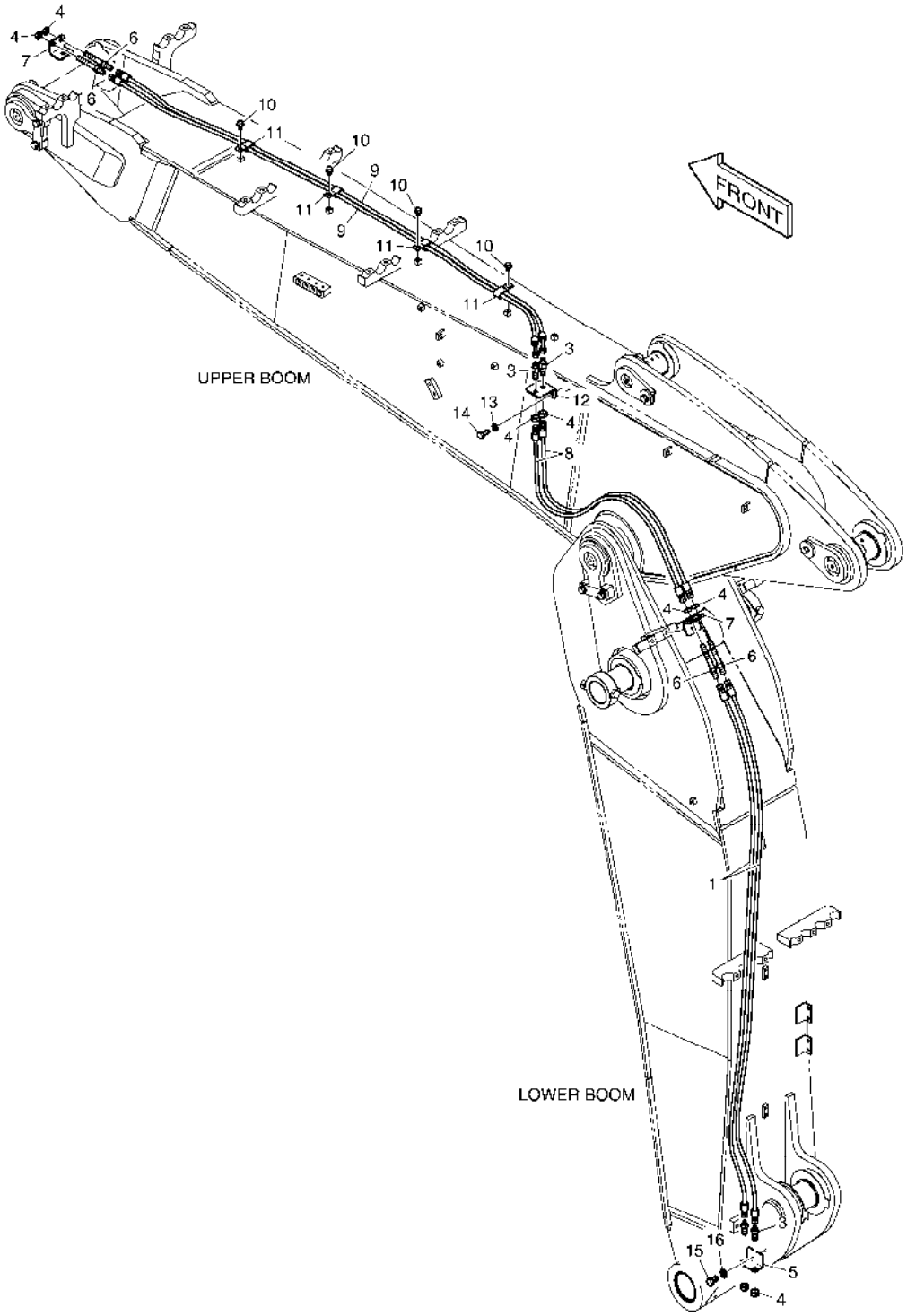

DATE	AUG. 28, 2009
3rd EDITION	

Fig. 7230 ARTI. BOOM PIPING - QUICK FIT
PERCHE ASS'Y D'ARTI

Serial No. ;

Key No.	Part No.	Description	Description	Q'ty	S.C	Serial No.	ICA	Replaceable part	
								Part No.	Q'ty
7230 --	K1037472	QUICK CLAMP PIPING;ARTI	TUYAUTERIE	-	D				
1	DS2053978	HOSE	TUYAU FLEXIBLE	2					
3	181-00078D1	ADAPTER	ADAPTEUR	4					
4	121-00010D1	NUT	ECROU	8					
5	K1011074	BRACKET	SUPPORT	1					
6	K1000112	ADAPTER	ADAPTEUR	4					
7	K1011075	BRACKET	SUPPORT	2					
8	DS2053980	HOSE 930L	TUYAU FLEXIBLE	2					
9	DS20551042	HOSE 2650L	TUYAU FLEXIBLE	2					
10	K1001029	BOLT	BOULON A 6 PANS	4					
11	124-00199D1	CLIP	ATTACHE	4					
12	K1030382	BRACKET	SUPPORT	1					
13	S5102603	WASHER	RONDELLE ELASTIQUE	2					
14	S0512066	BOLT	BOULON A 6 PANS	2					
15	S0521266	BOLT	BOULON A 6 PANS	1					
16	S5102903	WASHER	RONDELLE	1					

DATE	AUG. 28, 2009
3rd EDITION	

Fig. 7240 LOCK VALVE PIPING - ARTI. BOOM
CONDUITES DE VERROU VANNE

Serial No. ;

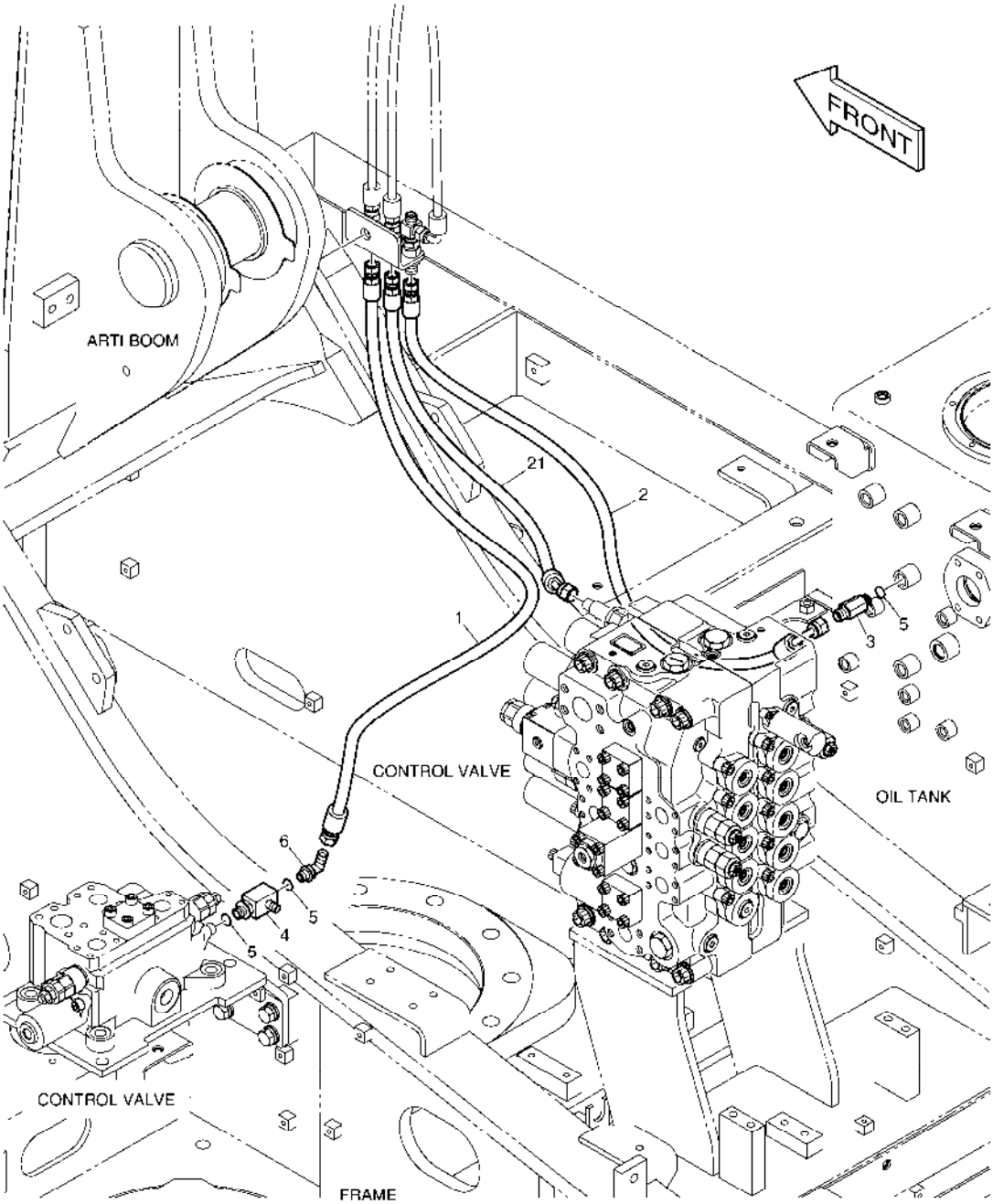

DATE	AUG. 28, 2009
3rd EDITION	

Fig. 7240 LOCK VALVE PIPING - ARTI. BOOM
CONDUITES DE VERROU VANNE

Serial No. ;

Key No.	Part No.	Description	Description	Q'ty	S.C	Serial No.	ICA	Replaceable part	
								Part No.	Q'ty
7240 --	K1038809	LOCK VALVE PIPING	FERMEZ LA TUYAUTERIE A	-	D	5001-5123			
	420212-00037	PIPING,LOCK VALVE	FERMEZ LA TUYAUTERIE A	-	D	5124-			
1	DS2094355	HOSE	TUYAU FLEXIBLE	1					
2	DS2093175	HOSE	TUYAU FLEXIBLE	1					
3	2181-1126D7	ADAPTER	ADAPTEUR	1					
4	DS2365003	TEE	TE	1					
5	S8000141	O-RING	JOINT TORIQUE	3					
6	2181-1702D5	ELBOW	COUDE	1					
21	DS2092162	HOSE	TUYAU FLEXIBLE	1		5001-5110			
	DS2092176	HOSE	TUYAU FLEXIBLE	1		5111-5123			
	DS2092225	HOSE	TUYAU FLEXIBLE	1		5124-			

DATE	AUG. 28, 2009
3rd EDITION	

Fig. 7250 ARTI. BOOM PIPING - LOCK VALVE
PERCHE ASS'Y D'ARTI

Serial No. ;

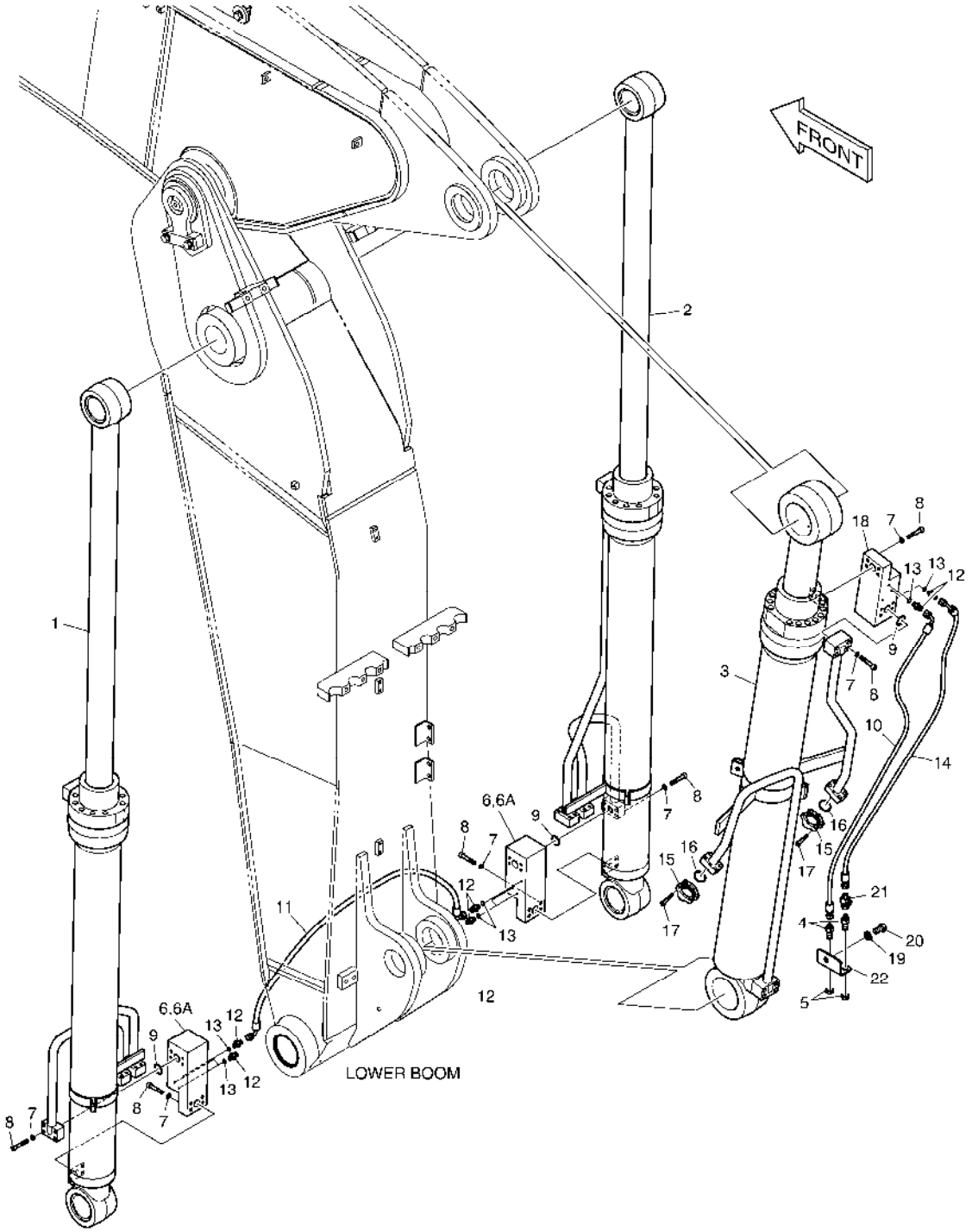

DATE	AUG. 28, 2009
3rd EDITION	

Fig. 7250 ARTI. BOOM PIPING - LOCK VALVE
PERCHE ASS'Y D'ARTI

Serial No. ;

Key No.	Part No.	Description	Description	Q'ty	S.C	Serial No.	ICA	Replaceable part	
								Part No.	Q'ty
7250 --	K1037475	LOCK VALVE PIPING;ARTI_BOOM	TUYAUTERIE	-	D				
1	K1011084	CYLINDER;BOOM (L.H)	CYLINDRE	1					
2	K1011085	CYLINDER;BOOM (R.H)	CYLINDRE	1					
3	K1023537A	CYLINDER;ARTI BOOM	CYLINDRES	1					
4	181-00078D5	ADAPTER	ADAPTEUR	2					
5	121-00010D1	NUT	ECROU	2					
6	420-00226	VALVE;LOCK	VANNE	2					
6A	K9000998	. SEAL KIT	. KIT D'ETANCHEITE	1					
7	S5102603	WASHER	RONDELLE ELASTIQUE	24					
8	S2212766	BOLT;SOCKET	BOULON A 6 PANS CREUX	24					
9	S8000281	O-RING	JOINT TORIQUE	3					
10	2184-1046D221	HOSE PF1/4-2050L	TUYAU FLEXIBLE	1					
11	DS2059423	HOSE	TUYAU FLEXIBLE	1					
12	2181-1126D14	ADAPTER	ADAPTEUR	8					
13	S8000111	O-RING	JOINT TORIQUE	8					
14	2184-1046D120	HOSE PF1/4-1950L	TUYAU FLEXIBLE	1					
15	2181-9078	FLANGE	BRIDE	4					
16	2180-1026D19	O-RING	JOINT TORIQUE	2					
17	S2212466	BOLT;SOCKET M10X1.5X40	BOULON A 6 PANS CREUX	8					
18	420-00004A	VALVE;LOCK	VANNE	1					
19	S5102903	WASHER	RONDELLE	1					
20	S0521266	BOLT	BOULON A 6 PANS	1					
21	181-00673D1	TEE;UNION	TE	1					
22	K1030374	PLATE	PLAQUE	1					

DATE	AUG. 28, 2009
3rd EDITION	

Fig. 7260 ARTI. ARM PIPING - LOCK VALVE
CONDUITES DE VERROU VANNE

Serial No. ;

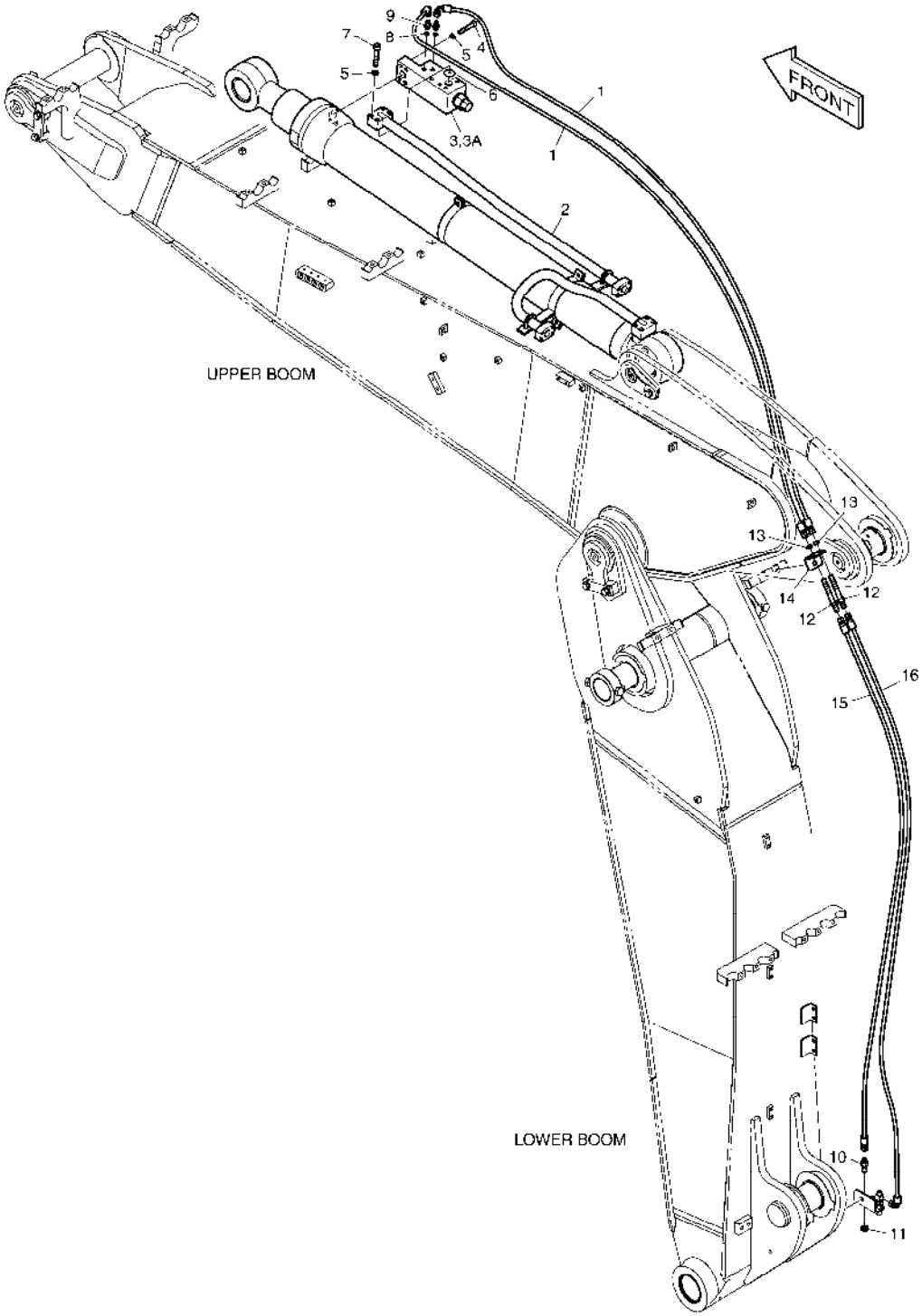

DATE	AUG. 28, 2009
3rd EDITION	

Fig. 7260 ARTI. ARM PIPING - LOCK VALVE
CONDUITES DE VERROU VANNE

Serial No. ;

Key No.	Part No.	Description	Description	Q'ty	S.C	Serial No.	ICA	Replaceable part	
								Part No.	Q'ty
7260 --	K1037476A	ARTI BOOM PIPING;ARM LOCK V	PERCHE ASS'Y D'ARTI	-	D				
1	2184-1046D135	HOSE PF1/4-2500L	TUYAU FLEXIBLE	2		5001-5110			
	2184-1046D194	HOSE PF1/4-2800L	TUYAU FLEXIBLE	2		5111-			
2	K1036970	ARM CYLINDER	CYLINDRE DE BRAS	1					
3	420-00004A	VALVE;LOCK	VANNE	1					
3A	K9000999	. SEAL KIT	. KIT DE JOINT	1					
4	S2215766	BOLT;SOCKET M12X1.75X55	BOULON A 6 PANS CREUX	4					
5	S5110703	WASHER;SPRING	RONDELLE ELASTIQUE	8					
6	S8000341	O-RING	JOINT TORIQUE	1					
7	S2215966	BOLT;SOCKET	BOULON A 6 PANS CREUX	4					
8	S8000111	O-RING	JOINT TORIQUE	2					
9	2181-1126D14	ADAPTER	ADAPTEUR	2					
10	181-00078D5	ADAPTER	ADAPTEUR	1					
11	121-00010D1	NUT	ECROU	1					
12	K1000356	ADAPTER	ADAPTEUR	2					
13	121-00010D7	NUT	ECROU	2					
14	K1030371	BRACKET	SUPPORT	1					
15	2184-1045D96	HOSE	TUYAU FLEXIBLE	1					
16	2184-1046D267	HOSE	TUYAU FLEXIBLE	1					

DATE	AUG. 28, 2009
3rd EDITION	

Fig. 7270 WORKING LAMP - ARTI. BOOM AVERTISSEUR RELAIS

Serial No. ;

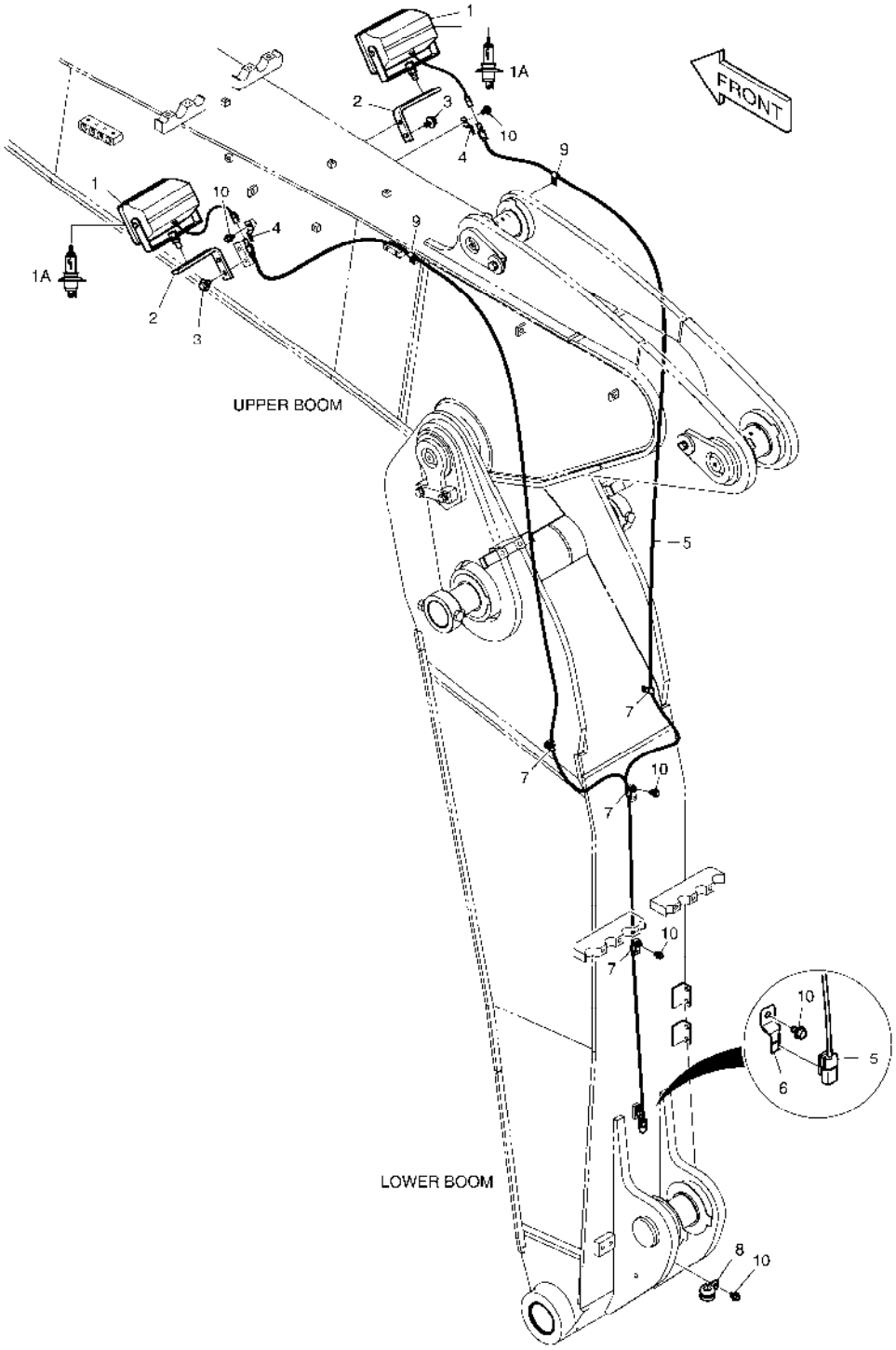

DATE	AUG. 28, 2009
3rd EDITION	

Fig. 7270 WORKING LAMP - ARTI. BOOM AVERTISSEUR RELAIS

Serial No. ;

Key No.	Part No.	Description	Description	Q'ty	S.C	Serial No.	ICA	Replaceable part	
								Part No.	Q'ty
7270 --	K1045060	WORKING LAMP	LAMPE FONCTIONNANTE	-	D				
1	534-00064	LAMP ASSY;WORKING	LAMPE	2					
1A	2515-1022D1	. BULB;HALOGEN	. AMPOULE	1					
2	2195-2394B	BRACKET	SUPPORT	2					
3	DS0025019	BOLT;SET	BOULON A 6 PANS	4					
4	2197-1661	BRACKET	SUPPORT	2					
5	530-00418D10	HARNESS;WORK LAMP	FAISCEAU	1					
6	2197-1660	BRACKET;HOUSING	SUPPORT	1					
7	2124-1509D1	CLIP	ATTACHE	4					
8	124-00208D2	CLIP	AGRAFE	1					
9	2124-1353D1	CLIP	CLIP	2					
10	K1001029	BOLT	BOULON A 6 PANS	6					

Part No.	Fig No.	Key No.
06.01013-9127	021	38
06.01013-9130	025	3
06.01283-7115	022	12
06.01913-2911	019	35
	037	3
06.01913-3114	020	8
	021	14
	027	17
06.01913-3115	022	16
06.01913-3117	024	15
06.01913-3118	029	31
06.01913-3119	022	17
	029	32
06.01913-3120	024	11
06.01913-3121	024	12
06.01913-3128	021	34
06.01913-3129	021	39
06.01913-3213	026	13
06.01913-3216	032	55
06.01913-3217	032	55
06.01923-2910	026	22
06.01923-2911	031	9
06.01923-2913	036	11
	036	13
	036	4
06.01923-2917	031	3
06.01923-2919	036	5
06.01923-3111	013	9
	015	22
	032	38
	037	24
06.01923-3114	015	3
	023	7
06.01923-3116	014	4
06.01923-3117	021	32
06.01923-3118	030	9
06.01923-3119	021	24
	021	33
06.01923-3120	022	5
06.01923-3125	026	17
06.01923-3215	027	34
	027	41
	027	43
06.01923-3217	032	53
06.01923-3218	023	3
	026	15
	027	39
06.01923-3222	021	8
06.01923-3225	021	9
06.01923-3228	021	10

Part No.	Fig No.	Key No.
06.01924-3217	015	4
	034	2
	038	2
	038	4
06.01943-3318	012	11
06.01943-3319	033	8
06.01943-3323	033	2
06.01953-3318	035	20
06.02097-8306	021	29
06.02106-0723	016	42
06.06125-8709	030	6
06.06125-8716	026	23
06.08092-2405	023	8
06.11063-8212	031	10
06.11063-8214	015	15
	026	26
	029	10
	030	7
	037	22
	037	8
06.11063-9217	033	7
06.15010-2311	021	36
	022	13
	026	19
	026	24
	037	18
	037	20
	037	6
06.16110-0106	019	21
06.16731-2105	021	30
06.16731-2106	031	11
06.16731-2107	015	14
	021	37
	025	4
	026	20
	026	25
	027	19
	029	11
	030	8
	037	17
	037	21
	037	7
06.22022-0907	020	6
06.22022-0909	020	9
06.22022-1016	019	33
06.22022-1018	016	2
06.22022-1063	014	5
06.29010-0120	019	19
06.29020-0125	016	37
06.29020-0132	024	5

Part No.	Fig No.	Key No.
06.31641-0618	011	17
06.56020-0115	030	5
	040	28
06.56021-0102	011	24
	040	1
06.56180-0712	032	33
	040	30
	041	15
06.56190-0704	027	10
	027	8
	032	12
	032	4
06.56190-0705	011	29
	039	2
06.56190-0706	032	13
	032	16
	032	19
	032	57
	032	6
06.56190-0709	023	9
	027	6
06.56190-0719	015	17
06.56190-0726	021	6
06.56190-0732	022	3
06.67020-0104	027	14
06.67020-0105	015	10
	015	6
06.67020-0116	027	45
06.78144-2204	032	10
06.78144-2403	027	7
	027	9
06.78190-0206	032	15
1.104-00003	4160	5
1.109-00026	4150	150
1.109-00111	4100	123
1.109-00135	4150	151
1.109-00145	4160	25
1.109-00146	4160	24
1.109-00147	4150	149
1.110-00101	4100	156
1.110-00169	4200	29
1.114-00305	4150	110
1.114-00541	4160	14
1.115-00111	4110	836
1.115-00138	4160	15
1.115-00139	4150	222
1.115-00141	4150	276
1.115-00142	4120	309
1.115-00200	4280	16
1.120-00071	4100	954

Part No.	Fig No.	Key No.
1.120-00078	4120	311
1.120-00219	4350	24
	4370	24
1.121-00028	4200	23
1.121-00045	4110	630
1.123-00026	4160	34
1.123-00030	4110	874
1.123-00031	4110	875
1.123-00032	4110	887
1.123-00034	4160	17
1.123-00039	4110	876
1.123-00040	4110	897
1.123-00107	4160	27
1.124-00040	4280	27
1.129-00006	4150	230
1.129-00019	4150	114
1.131-00041	4150	220
1.131-00042	4150	163
1.131-00055	4150	113
1.131-00058	4150	228
1.131-00062	4150	275
1.131-00099	4150	266
1.131-00127	4100	157
1.131-00161	4110	654
1.131-00167	4110	653
1.131-00173	4110	655
1.138-00004	4200	21
1.148-00016	4150	108
1.161-00018	1750	25C
1.161-00019	1750	23C
1.161-00021	4200	25A
1.162-00001	1610	1A
1.178-00004	4200	26
1.180-00355	4160	23
1.180-00426	4280	19
1.180-00447	4220	4A
1.180-00512	4160	26
1.180-00631	4150	132
1.180-00657	4230	8
	4240	8
	4260	8
	4270	8
	4290	8
	4300	8
1.180-00659	4280	8
1.180-00660	4280	9
1.180-00662	4250	14
	4310	14
	4350	14
	4370	14

Part No.	Fig No.	Key No.
1.180-00663	4280	22
1.181-00059	4150	224
1.181-00067	4150	226
1.181-00091	4110	615
1.181-00095	4110	614
1.195-00022	4250	30
	4310	30
	4350	30
	4370	30
1.229-00035	4120	435
1.229-00036	4210	13
1.230-00053	4160	RG3
1.230-00054	4160	3
1.357-00006	4110	612
1.357-00009	4110	613
1.357-00015	4110	611
1.402-00019	4120	361
1.402-00026	4120	351
1.402-00037	4110	622
1.402-00062	4110	601
1.402-00097	4100	325
1.403-00111	4160	7
1.404-00002	4160	8
1.404-00007	4160	6
1.405-00022	4150	102
1.405-00064	4100	113
1.405-00121	4160	9
1.409-00190	4110	621
1.409-00205	4110	643
1.409-00209	4100	532
1.409-00225	4210	38
	4211	33
1.409-00231	4150	M11
1.412-00017	4200	19
1.412-00061	4150	115
1.412-00072	4150	116
1.412-00093	4150	107
1.412-00098	4100	153
1.412-00110	4100	211
1.412-00139	4100	212
1.412-00164	4160	20
1.412-00203	4150	109
1.414-00009	4160	19
1.415-00005	4150	297
1.416-00021	4100	535
1.416-00026	4150	RL2
1.420-00009	4150	219
1.420-00013	4150	227
1.420-00014	4150	242
1.420-00016	4130	106

Part No.	Fig No.	Key No.
1.424-00021	4110	652
1.425-00005	4110	651
1.426-00007	4120	307
1.427-00005	4120	308
1.427-00016	4110	624
1.427-00017	4110	644
1.427-00029	4150	218
1.427-00031	4150	272
1.428-00209	4110	623
1.428-00241A	4330	7
1.429-00037	4150	301
1.430-00029	4110	656
1.430-00030	4160	13
1.430-00049	4110	629
1.430-00066	4110	641
1.441-00291	4150	M1
1.451-00045	4100	141
1.454-00001	4210	14
1.519-00001	4220	3
	6160	1B
	6460	1B
1.540-00004	4160	12
1.540-00006	4150	167
101540-00006	3110	3
	6630	3
	6700	3
	6770	3
110-00080	4230	6
	4240	6
	4260	6
	4270	6
	4290	6
	4300	6
110-00081	4250	6
	4310	6
	4340	6
	4350	6
	4360	6
	4370	6
110-00110	4280	6
110-00226	2170	1-1F
	6350	1-1F
	6360	1-1F
	6370	1-1F
110-00249	3110	2A
	6630	2A
	6700	2A
	6770	2A
110-00252	3110	1A
	6630	1A

Part No.	Fig No.	Key No.
110-00252	6700	1A
	6770	1A
	7120	2A
112-00091	2140	7-3
112-00091A	2140	7-3
114-00225	4210	34
114-00411	4190	40
114-00413	4190	53
114-00414	4170	57
114-00425	1200	13
	1220	24
	1260	36
114-00522	1200	9
	1220	3
114-00523	1200	10
	1220	4
114-00529	1600	34
114-00583	2160	2D
114-00584	2160	2E
114-00590	1380	13
115-00042	4210	20
	4211	19
115-00051	4280	7
115-00063	4230	7
	4240	7
	4260	7
	4270	7
	4290	7
	4300	7
115-00072	4230	11
	4240	11
	4260	11
	4270	11
	4290	11
	4300	11
115-00073	4230	12
	4240	12
	4250	7
	4260	12
	4270	12
	4290	12
	4300	12
	4310	7
	4340	7
	4350	7
	4360	7
	4370	7
115-00074	4230	19
	4240	19
	4260	19
115-00074	4270	19
	4290	19
	4300	19
115-00077	4250	11
	4310	11
	4340	11
	4350	11
	4360	11
	4370	11
115-00078	4250	12
	4310	12
	4340	12
	4350	12
	4360	12
	4370	12
115-00079	4250	19
	4310	19
	4350	19
	4370	19
115-00081	4250	26
	4310	26
	4350	26
	4370	26
115-00092	4280	12
115-00099	4280	11
115-00121	4340	19
	4360	19
115-00122	4340	20
	4360	20
115-00136	2140	7-2
116-00089B	1460	53
116-00090B	1460	54
116-00092A	1480	32-28D
119-00014AD1	1200	14
119-00020	4140	31
119-00025B	1220	20
120-00114D7	1250	45
120-00127	4210	31
120-00246	1690	5
	1730	24
120-00258A	1240	20
120501-00130	3110	11
	6630	11
	6700	11
	6770	11
121-00006	1190	8
	3140	10
	6590	10
	7140	10
121-00010D1	1300	11
121-00010D1	1300	137-3
	1310	11
	6150	29-3
	6210	22
	6230	8
	6440	14
	6610	14
	7230	4
	7250	5
	7260	11
121-00010D3	1190	1-10
121-00010D7	6150	24
	6150	29-9
	7100	28
	7260	13
121-00010D9	6751	19
	6820	21
	7090	9
121-00044	4250	23
	4310	23
	4340	23
	4360	23
121-00045	4230	23
	4240	23
	4260	23
	4270	23
	4290	23
	4300	23
121-00055	4280	23
121-00085	6100	1E
123-00516B	1520	2
	6250	6
123-00522B	1460	49-9
123-00523	1450	66
	1520	7
	6250	5
123-00524B	1380	2
124-00010	1480	32-35
124-00052	4250	33
	4250	37
	4310	33
	4310	37
	4350	33
	4370	33
124-00053	4260	27
	4270	27
124-00056	4230	27
	4240	27
	4290	27
	4300	27

Part No.	Fig No.	Key No.
124-00058	4230	38
	4240	38
	4290	35
	4300	35
124-00070	1620	21
124-00194	1160	3
124-00199D1	6230	11
	7230	11
124-00199D4	3140	14
	6590	14
124-00199D5	3140	12
	6440	11
	6590	12
	6610	11
	7140	11
124-00208D2	1130	31
	1650	31
	1710	7
	1720	26
	6150	55
	6160	17
	7100	29
	7270	8
124-00208D3	1210	9
	1650	30
	1670	36
	1690	12
	1720	27
	1750	34
	6410	13
124-00208D4	1250	56
	1670	37
	1720	28
	6160	9
	6460	15
124-00208D5	1670	52
	1720	29
	6100	21
	6410	17
124-00208D6	1720	31
124-00208D7	1240	103
	1290	42
	1730	16
	6100	20
	6470	25
124-00208D9	1730	17
	6210	27
	6450	29
	6460	17
	7100	15

Part No.	Fig No.	Key No.
124-00209D1	1210	10
	1720	25
	1730	18
	1730	23
	1750	35
124-00209D2	1340	35
124-00209D3	1350	73
124-00209D8	1330	53
124-00218	1260	34
124-00298A	1170	2
124-00298B	1170	2
124-00299A	6480	17
	6490	4
	6620	17
	6760	14
	6830	4
124-00310A	1150	33
124-00344	1480	32-36
125-00034A	1570	3-2A
125-00035A	1570	3-3A
	1580	2-2A
125-00071B	1590	4-2A
125-00072	1480	32-11
125-00073B	1460	49-4A
125-00074B	1460	49-5A
125-00075A	1610	13
125-00077	1470	70
125-00078	1470	71
125-00096A	1460	49-4
125-00097A	1460	49-5
129-00042	4210	10
129-00043	4210	18
	4211	17
129-00062	4130	309
129-00071	4250	29
	4310	29
	4350	29
	4370	29
129-00124	4190	21
129-00125	4190	26
129-00126	4170	33
129-00127	4190	35
129-00128	4190	39
129-00129	4190	48
129-00130	4190	45
129-00139	4190	98
129-00155	1460	69
133-00220E	1480	37
133-00221	1480	32-9
133-00229A	1500	10

Part No.	Fig No.	Key No.
133-00230A	1500	11
133-00248	1460	49-4C
	1460	49-5C
136-00002	1220	14
136-00055A	1480	32-12
137-00092	1480	32-10
140-00805	1190	1-8
140-01343A	4140	30
142-00127C	1460	52
142-00128B	1460	51
145-00070B	1610	12
145-00124A	1480	32-18
148-00012	4211	16
159-00017	4210	19
	4211	18
159-00287A	1360	8
	1370	8
159-00287B	1360	8
	1370	8
159-00290A	1360	7
	1370	7
159-00290B	1360	7
	1370	7
159-00294B	6260	1
	6270	1
159-00294C	6260	1
	6270	1
160-00008	4210	33
	4330	5
160-00020	1190	10
	1640	6
	3110	29
	3140	11
	3160	8
	3161	8
	6590	11
	6630	29
	6650	8
	6651	8
	6700	29
	6720	8
	6721	8
	6770	29
	6790	8
	6791	8
	7140	8
	7150	8
160-00061	6970	1
	7050	1
160-00068	1100	4

Part No.	Fig No.	Key No.
160-00068A	1100	4
160-00071	1500	5
160-00072	1500	6
160-00073A	1500	26
160-00074A	1450	121
160-00075A	1450	122
160-00080A	1500	7
160-00080B	1500	7
160-00081	1100	25
161-00080	4210	9
	4211	9
161-00195	1460	34
	1480	34
161-00280	6190	7
	6800	7
161-00281	1260	35
161-00381	1500	14
	6170	22
161-00382	1500	15
	6470	27
	7110	22
161-00386	7200	6
161-00404	6990	9
161-00548	1120	18
161-00550	1120	19
161-00580	1590	29
161-00598A	1450	59
161-00599	6250	4
161-00600	6250	8
161-00609C	1470	84
161-00609E	1470	84
161-00610C	1470	85
161-00610E	1470	85
161-00613B	1470	90
161-00614	1620	15
161-00618B	1460	63
161-00619B	1460	64
161-00620	1480	32-28C
161-00621B	1480	32-28
161-00622	1430	23
161-00623	1480	32-6
161-00624	1430	34
161-00639	6250	13
	6260	8
	6270	6
161-00640A	1450	30
162-00033A	1480	32-3C
162-00034B	1460	7
162-00035A	1450	6
162-00038	1450	9
162-00039A	1450	8
162-00040A	6260	2
	6270	2
170-00004	1170	11
171-00060A	6250	3
172-00052E	1480	15
172-00053B	1510	1
172-00055A	1470	91
172-00372A	1510	-
180-00077D5	3110	26
	6630	26
	6700	26
	6770	26
180-00197	4210	16
180-00198	4210	23
	4211	22
180-00199	4210	24
	4211	23
180-00200	1220	21A
180-00266	4230	14
	4240	14
	4260	14
	4270	14
	4290	14
	4300	14
180-00297D3	2100	3A
180-00363	4340	15
	4360	15
180-00398	4190	47
180-00400	4190	102
180-00402	4180	66
180-00441	2170	1-1I
	6350	1-1I
	6360	1-1I
	6370	1-1I
180-00445	4190	55
180-00463	1100	8
	2100	11
181-00008	6410	8
181-00078D1	6210	3
	6230	3
	7230	3
181-00078D5	6440	13
	6610	13
	7250	4
	7260	10
181-00086D1	1300	137-6
	1310	12
	6150	29-6
181-00086D2	1300	13
181-00086D2	1300	137-7
	1310	13
	6150	29-7
181-00103	1190	7
	3140	9
	6590	9
	7140	9
181-00121D8	6110	7
	6130	7
181-00144D5	1300	33
181-00319	4210	21
181-00561	4170	72
	4180	72
181-00562	4170	71
181-00628	4190	37
181-00630	4190	43
181-00631	4190	52
181-00633	4170	60
181-00647	4170	92
	4190	92
181-00649	4170	93
181-00673D1	7250	21
181-00717	1190	1-11
181-00779	6150	2
	6160	6
	6460	3
181-00804	7020	3
181-00809	6100	1C
181-00810	6100	1D
181-00811	7100	4
184-00120	5100	4
185-00167D3	6100	12
185-00386B	1750	24
185-00387A	1750	29
186-00017A	1200	7
190-00092	5140	1
190-00093	5140	9
190-00094	5140	13
190-00095	5150	9
190-00096	5140	8
190-00097	5150	10
190-00098	5140	10
190-00098A	5140	10
190-00099	5150	11
190-00100	5150	5
190-00101	5140	4
190-00102	5140	12
190-00122	5130	10
	5150	12
190-00509BD25	5150	30

Part No.	Fig No.	Key No.
190-00521	5140	14
190-00522	5130	15
	5150	17
190-00522A	5130	15
	5150	17
190-00557	5150	18
190-00648A	5130	16
	5150	13
190-00652	5130	4
	5150	4
190-00688	5120	1
190-00689	5120	8
190-00691	5130	12
190-00691A	5130	12
190-00692	5130	13
190-00693	5120	7
190-00694	5130	11
190-00695	5120	10
190-00695A	5120	10
190-00703	5130	14
190-01059D14	5150	32
190-01107B	1110	2
190-01172	6100	19
190-01192D2	1650	28
190-01192D9	1650	27
191-02987B	1100	32
191-02990B	1100	28
191-02990C	1100	28
191-03166C	1470	17
191-03179A	1470	16
191-03279A	6250	9
191-03280A	6250	10
191-03283	1480	32-28A
191-03734A	1460	83
191-03736E	7020	14
195-01601	1280	1
195-01620	1160	5
195-01683A	1500	19
	6170	2
195-01684A	1500	20
	6470	4
	7110	4
195-01805	6990	1
195-02622C	1680	30
195-02623B	1100	33
195-02624C	1590	41
195-02643C	1120	26
195-02662B	6100	2
195-02706C	1590	27
195-02711B	6150	9

Part No.	Fig No.	Key No.
195-02719B	1480	38
195-02719C	1480	38
195-02729	1450	58
195-02735B	1240	7
195-02739B	1460	49-2
195-02739C	1460	49-2
195-02740C	1460	49-3
195-02740E	1460	49-3
195-02742H	1550	1
195-02753C	1360	1
195-02755C	1370	1
195-02768C	1420	14
195-02768E	1420	14
195-02769C	1420	15
195-02769E	1420	15
195-02770C	1420	18
195-02770E	1420	18
195-02771B	1430	14
195-02771C	1430	14
195-02772E	1430	15
195-02772G	1430	15
195-02774	1430	22
195-02774A	1430	22
195-02775A	6960	2
195-02785C	1430	24
195-02785E	1430	24
195-02790B	1430	25
195-02858C	1420	22
195-02858E	1420	22
195-02868C	1360	5
195-02904C	1380	1-2
195-02908C	6940	3
195-02908E	6940	3
195-02909A	6980	1
195-02910A	6950	1
	7000	1
195-02910C	6950	1
	7000	1
195-02925	6990	5
195-02925A	6990	5
195-02948A	1540	1
195-02949A	1530	1
195-03123E	6210	2
195-03374B	6260	5
195-03374C	6260	5
195-03434B	1170	7
195-03434E	1170	7
195-03444	7020	11
198-00016	1280	2
	1350	6

Part No.	Fig No.	Key No.
198-00028	1190	5
198-00053A	1480	32-8
198-00054A	1450	5
199-00126	5100	1-76
2.109-00228	4100	127
2.115-00119	4120	700
2.115-00441	4110	645
2.121-00009	4130	102
2.121-00170	4120	312
2.123-00067	4100	885
2.123-00095	4100	530
2.123-00154	4100	548
2.123-00254	4100	531
2.131-00388	4110	626
2.131-00401	4110	646
2.172-00003	1410	9
2.181-00089	4120	433
2.181-00090	4120	434
2.181-00214	4100	490
	4110	496
2.181-00268	4170	61
2.181-00269	4180	91
2.181-00323	4180	105
2.197-00012	4100	251
2.403-00020	4100	116
2.403-00123	4120	353
2.403-00130	4120	354
2.405-00121	4100	111
2.408-00088	4100	214
2.412-00276	4100	30
2.421-00208	7100	1A
2.424-00271	4180	15
2.424-00274	4180	4
2.424-00277	4180	16
2.430-00365	4100	261
2.471-00004	4120	355
204-00067	1170	1
204-00070	1170	1D
204-00075	1170	1C
2106-1019D25	1750	33
	5110	9
2107-6006	1750	16
2110-1004	2140	7-6
2110-1005	2140	7-5
2110-1184D7	4210	28
	4211	27
	4330	2-2
2110-6052	2170	1-1H
	6350	1-1H
	6360	1-1H

Part No.	Fig No.	Key No.
2110-6052	6370	1-1H
2114-1019A	2140	7-7
2114-1058D10	1150	12-5
	1280	3
	1350	38
2114-1058D2	1440	4
2114-1058D29	1590	4-12
	1620	14
	1730	4
	1750	22
2114-1058D30	1240	23
	1570	3-14
	1580	2-12
2114-1058D45	1570	3-12
	1580	2-10
2114-1058D52	1750	28
2114-1058D54	1590	46
	1700	3
	6900	3
2114-1058D68	1590	19
2114-1058D70	1700	5
2114-1058D72	2100	26
	6100	5
2114-1154	1590	37
	1610	37
2114-1816A	1130	28
2114-1817	1100	102
2114-1831A	1190	3
	2100	27
	3120	9
	6500	9
	6510	9
	6520	9
	6530	9
	6540	9
	6550	9
	6560	9
	6840	6
	6850	6
	6860	6
	6870	6
	6880	6
	6890	6
2114-1848A	3120	4
	6500	4
	6510	4
	6520	4
	6530	4
	6540	4
	6550	4

Part No.	Fig No.	Key No.
2114-1848A	6560	4
	6840	1D
	6850	1D
	6860	1D
	6870	1D
	6880	1D
	6890	1D
2114-1856	1480	42
2114-1898D1	1440	7
	1500	4
	1530	3
	1540	3
	6980	2
2114-1898D13	1450	76
	1470	76
2114-1898D14	1100	27
	1380	1-5
	1380	5
	1420	31
	1430	28
	1450	18
	1460	18
	1470	18
	1480	18
	1500	9
	1520	6
	6250	17
2114-1898D15	1390	4
	1480	23
	1480	32-22
	1485	3
	1510	3
2114-1898D17	1380	8
	1500	2
	6280	2
	6290	2-2
	6290	3
2114-1898D18	1380	11
2114-1898D2	1460	49-13
	1480	32-25
	1480	46
2114-1898D3	1450	19
	1460	19
	1460	49-10
	1470	19
	1480	19
	1480	32-29
	1520	3
	6250	14
	7020	12

Part No.	Fig No.	Key No.
2114-1898D4	1360	19
2114-1898D5	1420	36
	1430	31
	1470	113
	6260	9
	6270	8
2114-1898D6	1450	26
	1460	26
	6260	10
	6270	11
	6940	5
	6950	8
	7000	2
2114-1929	1120	17
2114-2031D1	1470	97
2114-2031D4	1380	6
	1420	33
2114-6035	2170	1-1J
	6350	1-1J
	6360	1-1J
	6370	1-1J
2114-9012A	1120	25
	2100	28
	2110	28
2116-1060D5	7120	22
2116-1060D6	3100	15
	3110	19
	6570	15
	6630	19
	6700	19
	6770	19
	7120	23
2116-1522	1570	3-4
	1580	2-3
2116-1527A	3100	7
	6570	7
	7120	20
2116-9003	5120	6
	5140	6
2119-1063B	1190	1-9
2120-1354	1680	13
2120-1363	4140	34
2120-1413D12	1240	59
2120-2137A	1100	101
2120-2150D1	1480	43
2120-2150D3	1480	28
	1480	32-33
2120-2166D1	1480	32-23
	1480	41
	1500	3

Part No.	Fig No.	Key No.
2120-2166D1	1530	2
	1540	2
2120-2166D10	1360	10
	1370	10
	1390	3
	1430	26
	1470	14
	6270	10
2120-2166D12	1430	29
	1450	25
	1460	25
	1460	49-12
	1470	25
	1480	25
	1500	26
2120-2166D18	1470	99
2120-2166D2	1440	6
	1510	2
2120-2166D23	1420	26
2120-2166D26	1450	77
	1470	77
2120-2166D27	6280	3
	6290	2-3
	6290	4
2120-2166D28	1450	20
	1460	20
	1460	49-11
	1470	20
	1480	20
	1480	32-30
2120-2166D36	1420	35
	1430	30
2120-2166D37	1450	27
	6260	11
	6270	12
2120-2166D4	1480	22
	1485	2
	1500	16
2120-2166D41	1220	25
2120-2166D5	1100	26
	1380	1-3
	1380	10
	1420	32
	1430	35
	1450	47
	1480	32-24
	1480	47
2120-2166D52	1360	16
	1370	11
	1420	23

Part No.	Fig No.	Key No.
2120-2166D52	1460	49-15
	1460	80
	1470	80
	1480	32-31
	6260	6
	6270	9
2120-2166D53	1360	9
	1370	9
	1390	5
	1420	24
	1430	27
	1450	111
	1470	111
	1480	32-37
2120-2166D54	6940	4
	6950	2
	7000	3
2120-2166D55	1500	1
2120-2166D57	1420	38
2120-2166D58	1430	36
2120-2166D7	1450	31
	1470	31
	6250	16
2120-2166D9	1520	4
	7020	13
2120-2187	1730	14
	6160	33
2120-6017	2170	1-3
	6350	1-2
	6360	1-2
	6370	1-2
2121-1305	1250	57
	1670	53
	1690	15
	1730	22
2121-1311D1	1380	9
2121-1311D2	1380	7
	1460	49-14
2121-1311D4	1460	39
	1480	39
2121-6017	2170	1-4
	6350	1-3
	6360	1-3
	6370	1-3
2121-9007	1440	5
2122-1002D2	5130	9
	5150	8
2122-1002D4	5130	17
	5150	14
2123-1057D47	1610	35

Part No.	Fig No.	Key No.
2123-1107D7	1100	3
2123-1717B	1190	4
2123-1719	2150	8H
2123-2182E	3110	8
	6630	8
	6700	8
	6770	8
2123-2185E	3100	5
	6570	5
2123-2185G	3100	5
	6570	5
	7120	4
2123-2187C	3100	6
	6570	6
2123-2187E	3100	6
	3110	7
	6570	6
	6630	7
	6700	7
	6770	7
2123-2192C	3110	10
	6630	10
	6700	10
	6770	10
2123-2192E	3110	10
	6630	10
	6700	10
	6770	10
2123-2247	1480	32-19
2123-2356A	7120	5
2123-6060	2170	1-1E
	6350	1-1E
	6360	1-1E
	6370	1-1E
2123-6061	2170	1-1G
	6350	1-1G
	6360	1-1G
	6370	1-1G
2123-6062	2170	1-1K
	6350	1-1K
	6360	1-1K
	6370	1-1K
2123-6119	1480	32-3B
2124-1025D5	1270	33
2124-1025D6	1270	32
2124-1026D1	7210	7
2124-1026D3	6110	10
	6130	10
2124-1084D2	6440	15
2124-1353D1	7270	9

Part No.	Fig No.	Key No.
2124-1353D2	3140	15
	6590	15
	7140	14
2124-1509D1	1710	8
	6920	3
	6960	6
	7270	7
2124-1592A	1150	33
2124-1622D1	5150	31
2124-1689A	1480	32-20
2125-1095A	1430	16
2125-9055	1480	35
2126-9001	4140	36
2127-1002A	1480	48
2129-1008	1220	15
2129-1393	1220	7
2129-1446	1480	117
213-00029C	1420	13
213-00030B	1420	8
213-00031E	1420	9
213-00032B	1420	10
213-00033B	1420	11
213-00034E	1420	12
213-00035B	1420	7
213-00036B	1430	2
213-00037B	1430	3
213-00038B	1430	4
213-00039B	1430	5
213-00040A	1430	21
2132-1133B	1500	22
2132-1134B	1500	21
2140-1338	1460	55
	1470	55
2142-9005	1480	33
2150-1132A	1480	32-14
2150-1133	1470	93
2160-1004D34	1100	18
2160-1004D35	1100	19
2160-1004D44	1100	23
2160-1004D48	1100	11
2160-1004D58	1100	24
2160-1004D62	1100	12
2160-1172	2180	17
	6340	17
2160-1201D11	1100	10
2160-1201D12	1100	22
2160-1201D13	1100	14
2160-1201D24	1100	17
2160-1212	1720	4
2160-1213	1720	5

Part No.	Fig No.	Key No.
2160-1310	1450	21
2160-1336	6100	12C
2160-1345	1530	4
2160-1346	1540	4
2161-2212	1470	72
2161-2487	1500	25
2161-9052	1570	3-5
	1580	2-4
2161-9053	1570	3-6
	1580	2-5
2161-9057	1440	1
2161-9058	1440	2
2172-9021	1480	32-17
2180-1026D19	1260	59
	1270	59
	2180	7
	3130	13
	3150	4
	6110	24
	6130	24
	6180	8
	6200	5
	6340	7
	6580	10
	6600	8
	6640	4
	6680	5
	6710	4
	6750	5
	6751	5
	6780	4
	6820	6
	7090	17
	7130	17
	7130	45
	7180	14
	7250	16
2180-1026D2	1270	58
2180-1026D23	6180	6
	6190	3
	6600	6
	6660	2
	6730	2
	6800	3
	7090	37
	7180	7
2180-1026D24	1240	17
2180-1026D27	1240	18
2180-1026D28	1240	58
2180-1026D3	2140	7-9

Part No.	Fig No.	Key No.
2180-1026D30	6480	18
	6490	15
	6620	18
	6690	12
	6760	4
	6830	15
	7210	15
2180-1026D31	1230	19
	1240	19
2180-1026D37	6190	34
	6660	13
	6730	13
	6800	18
	7090	53
	7160	5
	7170	5
2180-1106BD14	3100	12
	3100	1B
	6570	12
	6570	1B
	7120	1B
	7120	9
2180-1106BD24	3100	11
	3110	13
	6570	11
	6630	13
	6700	13
	6770	13
	7120	10
2180-1106BD4	3110	12
	6630	12
	6700	12
	6770	12
2180-1106BD6	3100	10
	3110	14
	6570	10
	6630	14
	6700	14
	6770	14
	7120	8
2180-1216D109	4170	89
2180-1217D13	4100	79-1
2180-1217D14	4100	79-2
2180-1217D15	4100	79-3
2180-1217D156	4130	306
2180-1217D158	4130	112
2180-1217D159	4130	307
2180-1217D63	4380	7
2180-1217D67	4380	6
2180-1217D96	4250	15

Part No.	Fig No.	Key No.
2180-1217D96	4310	15
	4350	15
	4370	15
2180-6086	1750	23A
2180-6088	1750	25A
2180-9005B	2140	7-8
2180-9021	2140	7-8
2180-9149A	2150	8E
2180-9153	5110	12
2181-1110D3	1190	1-7
2181-1111D11	3160	20
	3161	20
	6650	19
	6651	19
	6720	20
	6721	20
	6790	20
	6791	20
	7150	10
2181-1116D1	3110	30
	4150	244
	4200	2
	4210	3
	4211	4
	6630	30
	6700	30
	6770	30
2181-1116D2	2120	4-2H
	2150	8F
	2160	2K
	2161	8-15
	4130	311
	4150	252
2181-1116D3	4210	4
	4250	31
	4310	31
	4350	31
	4370	31
2181-1116D4	4140	26
	4160	30
2181-1116D5	4130	310
2181-1126D113	1250	53
2181-1126D14	1280	34
	1290	34
	1320	34
	1350	29
	2180	15
	6150	14
	6150	51
	6160	3

Part No.	Fig No.	Key No.
2181-1126D14	6170	10
	6340	15
	6420	10
	6420	3
	6440	10
	6460	5
	6470	23
	6610	10
	7100	6
	7110	20
	7200	2
	7250	12
	7260	9
2181-1126D25	1250	43
2181-1126D27	1320	45
	1330	26
	1340	26
	6430	3
2181-1126D28	1330	27
	1340	27
2181-1126D34	1280	21
	1290	41
	7110	101
	7200	25
2181-1126D36	1350	31
	1350	72
	6150	12
2181-1126D6	1230	25
	1250	25
	1280	17
	1290	17
	1350	30
	2180	12
	6340	12
	6450	11
2181-1126D7	1300	35
	1310	35
	1320	35
	1330	52
	1330	71
	1340	81
	6210	28
	6390	3
	6410	15
	7100	5
	7240	3
2181-1126D75	1320	36
	6160	36
2181-1126D85	6210	5
2181-1133	2140	7-10

Part No.	Fig No.	Key No.
2181-1159	1730	10
2181-1160A	1730	11
2181-1161A	1730	12
2181-1184	3160	4
	3161	4
	6650	4
	6651	4
	6720	4
	6721	4
	6790	4
	6791	4
	7150	4
2181-1186D12	3140	6
	6590	6
	7140	5
2181-1702D10	1310	38
	6170	19
	7100	26
	7100	41
	7100	7
2181-1702D2	1280	39
	1290	39
2181-1702D3	1300	111
	1310	101
	6210	26
2181-1702D34	1250	28
2181-1702D36	1230	26
2181-1702D4	1280	37
	1290	37
	1300	131
	1300	37
	1310	37
	6150	10
	6150	52
	6160	4
	6170	20
	6460	4
	6470	24
	7200	19
2181-1702D5	1340	24
	1340	82
	6390	4
	7100	27
	7240	6
2181-1702D51	6390	5
2181-1702D56	1280	40
2181-1890D2	1200	20
	1220	30
	4150	253
2181-1890D4	4150	221

Part No.	Fig No.	Key No.
2181-1923D12	3160	13
	3161	13
	6650	13
	6651	13
	6720	13
	6721	13
	6790	13
	6791	13
	7150	13
2181-1925	1640	2
2181-1950D1	1230	83
	1240	41
	1300	122
	1300	143
	4100	466
	4120	466
	4130	110
	4220	5
	6150	57
2181-1950D15	1230	94
2181-1950D2	1240	101
	1300	112
	1310	102
	1320	32
	1340	82
	4100	467
2181-1950D3	1230	93
2181-1950D5	4100	468
2181-1950D7	1190	1-5
	1200	51
	1220	23
2181-1950D9	1230	85
	6180	11
	6600	11
	7180	11
2181-1951D1	1290	48
	6160	5
	6170	19
2181-1951D11	1310	53
2181-1951D16	1300	51
	1310	51
	1320	51
2181-1951D19	6150	11
	7200	30
2181-1951D5	1250	28
	1290	16
2181-1951D6	6170	9
	6470	22
	7110	19
	7200	9

Part No.	Fig No.	Key No.
2181-1951D7	6470	12
	7110	9
	7200	8
2181-2104D6	6100	9
2181-2157D6	1240	42
2181-2169	1260	24
2181-2187	1720	23
2181-2281D10	2180	11
	6340	11
2181-2294D2	1230	92
	1240	51
	6450	25
2181-2375D7	6410	9
	6430	4
2181-2419D1	6150	6
	6160	27
2181-2419D3	6450	20
2181-2434	4170	88
2181-2527	1640	3
2181-2614	1260	37
	1270	37
2181-2627D1	1260	38
	6450	19
2181-2627D3	1260	39
2181-2635	1300	54
2181-2755B	6100	1A
2181-2774	1730	8
2181-2815D1	6120	7
	6140	7
	6680	9
	6750	15
	6820	8
2181-2815D3	6660	14
	6730	14
2181-2816D2	6200	8
	6751	15
2181-2816D3	6190	32
	6660	11
	6730	11
	6800	16
2181-2816D4	6190	35
	6490	10
	6660	14
	6690	7
	6730	14
	6760	12
	6800	19
	6830	10
2181-2817D2	6200	7
	6680	8

Part No.	Fig No.	Key No.
2181-2817D2	6750	14
	6751	14
	6820	22
2181-2817D3	6190	33
	6660	12
	6730	12
	6800	17
2181-2817D4	6190	37
	6490	7
	6660	16
	6690	4
	6730	16
	6760	13
	6800	21
	6830	7
2181-2820D1	6240	4
	6670	4
	6740	4
	6810	4
2181-4112	1190	11
	3140	13
	3160	10
	3161	10
	6590	13
	6650	10
	6651	10
	6720	10
	6721	10
	6790	10
	6791	10
	7140	13
2181-4125	2180	14
	6340	14
2181-4133D3	6450	10
	6490	9
	6690	6
	6760	7
	6830	9
	7210	12
2181-4133D35	6660	11
	6730	11
2181-4133D5	1230	31
2181-4133D6	6110	6
	6130	6
	6200	12
	6680	13
	6750	12
	6751	12
	6820	12
2181-4133D7	7090	25

Part No.	Fig No.	Key No.
2181-9078	1260	29
	1270	29
	3130	12
	3150	3
	6110	25
	6130	25
	6200	4
	6580	9
	6640	3
	6680	4
	6710	3
	6750	4
	6751	4
	6780	3
	6820	5
	7090	26
	7130	16
	7130	44
	7250	15
2181-9079	1270	30
2181-9081	1260	27
	2180	5
	6180	7
	6340	5
	6600	7
	7090	27
	7180	12
2181-9083	1270	31
2181-9084A	1260	28
2181-9086	6190	11
	6660	6
	6730	6
	6800	11
	7180	16
2184-1036D11	6650	2
	6651	2
2184-1045D128	3140	2
	6590	2
2184-1045D135	3140	4
	6590	4
2184-1045D96	7260	15
2184-1046D120	7250	14
2184-1046D135	7260	1
2184-1046D194	7260	1
2184-1046D221	7250	10
2184-1046D225	6610	1
	6610	2
2184-1046D267	7260	16
2184-1046D302	6440	1
	6440	2

Part No.	Fig No.	Key No.
2184-1060D53	1190	6
2184-1081D80	6750	1
2184-1100D78	3150	2
	6710	2
2184-1100D91	6660	1
2184-1196D69	6450	24
2185-1308D7	1730	7
2185-1660	1450	106
2185-1737D9	1230	6
2185-1776D1	1240	14
2186-9003	1730	8
2190-2476	5130	18
	5150	15
2190-2477	5130	19
	5150	16
2190-2480	5120	4
2190-2524	5140	7
2190-2533A	5130	7
2190-2556D144	5130	5
2190-3297	5120	2
	5140	2
2190-3379A	5130	3
2190-3386A	5120	5
2190-3388	5120	9
2195-1534	1680	22
2195-2394B	1710	2
	7270	2
2195-3500	1720	17
	6160	30
2197-1660	1710	10
	1720	21
	7270	6
2197-1661	1280	5I
	1670	35
	1680	36
	1690	16
	1710	5
	1720	22
	6160	35
	6950	4
	6960	5
	6980	4
	7000	4
	7270	4
2199-1004	5100	1-14
2199-1005	5100	1-15
2199-1063F36A	5100	1
2199-9007	5100	3
2199-9008	5100	2
2199-9009	5100	1-22

Part No.	Fig No.	Key No.
2199-9043	5100	1-1
2199-9057	5100	1-24
2199-9058	1470	92
220-00050	2150	8C
2204-6039A	1750	2
2208-6013B	1750	12
2229-1003A	2140	7-4
2229-1003B	2140	7-4
2272-6104L	2170	1-1B
	6350	1-1B
	6360	1-1B
	6370	1-1B
2272-6104R	2170	1-1A
	6350	1-1A
	6360	1-1A
	6370	1-1A
2272-6105L	2170	1-1D
	6350	1-1D
	6360	1-1D
	6370	1-1D
2272-6105R	2170	1-1C
	6350	1-1C
	6360	1-1C
	6370	1-1C
2273-6040D1	2170	1-2
2273-6040D2	6350	1-4
2273-6040D3	6360	1-4
2273-6040D4	6370	1-4
230201-00100	3110	-
230201-00101	6630	-
230201-00102	6700	-
230201-00103	6770	-
2401-1276KT	6100	1G
2401-9082K	4150	900
2403-1039A	4140	35
2414-9041	1180	3
2415-1018	1680	35
2420-1258	6100	12A
2423-1407	1260	26
	1270	26
2423-1470	1350	4
2426-1175	1220	8
2426-1237	1280	5D
2440-9142	1610	14
2460-9057A	1290	27
2471-1133	6150	13
2471-1135	1350	23
2471-1152	6100	12B
2471-1154	1280	5C
	5110	2

Part No.	Fig No.	Key No.
2471-1155A	1280	5E
2472-7003	1280	5B
2474-7009	1180	3B
2474-7009K	1180	3H
2474-9016A	1220	17
2512-1095D1	5110	11
2515-1016D4	1680	25A
	5110	18
	6940	1A
	6950	3A
	6960	7A
	7030	1A
	7040	1A
2515-1021D1	1470	75A
2515-1022D1	1710	1A
	5110	17
	7270	1A
2516-1116	1670	32
2527-1016	1670	5A
	1670	6A
	5110	20
2527-1017	1670	5B
	1670	6B
	5110	21
2527-1018	1670	5C
	1670	6C
	5110	22
2527-1023A	1680	14
	5110	24
2527-1025	1670	5D
	1670	6D
	5110	23
2527-9004	1680	12
2528-9040	1670	18
2531-1003	1650	8
	1650	9
2541-9020	1470	81
2543-9015	1650	6
2544-1022	1680	15
2544-9024	1680	8
2544-9033	1650	15
	1650	16
	1650	17
	1650	18
	1650	19
	1650	20
	1650	21
	1650	22
	1650	23
	1650	24

Part No.	Fig No.	Key No.
2544-9033	6920	7
	6930	7
	7020	17
2547-9045	1260	40
	7010	3
2548-1027	1720	1A
2549-9112	1300	55
2550-1014D1	1720	2
2550-1014D2	1720	3
2553-1275D39	1720	10
2553-1275D5	1720	10
2553-1275D6	1720	14
2553-1275D69	1720	15
2553-1275D78	1720	6
2553-1275D81	1720	16
270-00054B	1460	49-6
270-00062A	1460	74
270-00064	2140	7
270-00064A	2140	7
2705-1020	3120	3
	6500	3
	6510	3
	6520	3
	6530	3
	6540	3
	6550	3
	6560	3
	6840	1C
	6850	1C
	6860	1C
	6870	1C
	6880	1C
	6890	1C
2705-9002	1570	3-22
	1580	2-9
	1610	36
2713-1059A	3120	5
	6500	5
	6510	5
	6520	5
	6530	5
	6540	5
	6550	5
	6560	5
	6840	2
	6850	2
	6860	2
	6870	2
	6880	2
	6890	2

Part No.	Fig No.	Key No.
2713-1060A	3120	6
	6500	6
	6510	6
	6520	6
	6530	6
	6540	6
	6550	6
	6560	6
	6840	3
	6850	3
	6860	3
	6870	3
	6880	3
	6890	3
2713-1218	3120	1A
	6500	1A
	6510	1A
	6520	1A
	6530	1A
	6540	1A
	6550	1A
	6560	1A
	6840	1AA
	6850	1AA
	6860	1AA
	6870	1AA
	6880	1AA
	6890	1AA
2713-1218A	3120	1A
	6500	1A
	6510	1A
	6520	1A
	6530	1A
	6540	1A
	6550	1A
	6560	1A
	6840	1AA
	6850	1AA
	6860	1AA
	6870	1AA
	6880	1AA
	6890	1AA
274-00009KT	2130	*
2891-1311	1480	32-26
300619-00124	1690	-
310207-00130	1690	17
354-00002	4210	27
354-00003	4210	29
	4330	12
359-00021A	1470	87

Part No.	Fig No.	Key No.
359-00022A	1470	86
401-00449	6100	1
402-00036	4330	6
407-00001	6100	1F
409-00049	4190	95
409-00050	4190	97
412-00036	4130	304
412-00037	4130	305
4132-1138	1480	32-28B
415-00037	4180	63
415-00043B	1430	6
415-00044B	1420	19
415-00045B	1420	17
415-00046B	1420	16
416-00018A	1460	10
416-00019B	1460	29
416-00020	1460	40
4185-1777	1680	34
420-00004A	6440	4
	6610	4
	7250	18
	7260	3
420-00112	4211	3
420-00131	4250	28
	4310	28
	4350	28
	4370	28
420-00195	4130	107
420-00226	6420	6
	7250	6
420-00246	4190	67
420-00258	4170	69
420-00259	4180	70
420-00295KT	4170	*
420-00307	1300	10
	1300	137-2
	6150	29-2
420-00309	4190	94A
420-00314	4190	24A
420-00352D1	1300	137-4
	1300	26
	6150	29-4
420-00382	4190	19A
420-00453KT	4210	*
420-00467	1350	3
	4210	-
420-00467A	1350	3
	4211	-
420-00476	6150	29-8
	6150	8

Part No.	Fig No.	Key No.
420-00476	7100	2
420-00508B	6190	8
	6660	3
	6730	3
	6800	8
420-00515B	6190	9
	6660	4
	6730	4
	6800	9
420207-00021	1240	2
420212-00036	1240	-
420212-00037	7240	-
420212-00338	6110	-
4215-1003D6	1240	30
4215-1003D7	7090	28
422-00027A	1220	21
422-00031	4150	263
422-00055	2120	4-5
423-00046	4210	1
423-00047	4210	2
423-00096	4180	1
423-00097	4180	13
423-00180	7090	34
423-00193B	6110	2
423-00199	1260	20
424-00042	4210	8
	4211	8
424-00115	4180	6
424-00125	4190	27
424-00185	4180	2
426-00168	4170	32
426-00169	4190	34
426-00170	4190	38
426-00171	4190	44
426-00172	4190	49
426-00173	4190	51
426-00182	4190	100
426-00247A	6160	1
	6460	1
426-00247B	6160	1
	6460	1
426-00248A	6130	1
426-00249A	6130	2
426-00266	6150	1
426-00267A	6110	1
426-00267B	6110	1
426-00278	1190	1-5
	1220	23
426-00282	7020	2
426-00284B	6450	1

Part No.	Fig No.	Key No.
426-00287	6210	1
429-00004	4210	5
	4211	5
429-00005	4210	7
	4211	7
429-00006	4210	11
429-00024	4190	20
430-00033	4180	8
430-00035	4180	12
430-00038	4190	18
430-00040	4190	22
430-00041	4190	24
430-00042	4190	46
430-00045	4190	94
444-00009B	2130	3
471-00075A	1280	5
471-00105A	1200	11
471-00114	6120	3
	6140	3
471-00118	1290	47
471-00119	1450	13
471-00127	1220	26
473-00033	1200	4
473-00052	1220	12
474-00039	1170	1A
	5110	4
474-00040	1170	1B
	5110	3
474-00044A	1460	49-16
474-00046	6120	3A
	6140	3A
474-00055	1220	9
	5110	1
480-00018C	2160	2
480-00018KT	2160	*
481-00002	2160	2A
482-00003	2160	2C
483-00002	2160	2B
500-00302B	6940	-
500-00303	6950	-
500-00307A	6970	-
500-00308	6980	-
500-00309C	6990	-
500-00310	7000	-
500-00317	6220	-
505-00016B	1460	49-7
506-00006	1680	1
507-00006	1450	102
507-00007	7020	8
515-00012A	1670	1A

Part No.	Fig No.	Key No.
515-00012A	5110	16
515-00013	6970	5A
	6990	10A
	7050	5A
516-00011	6930	3
516-00014	1680	26
516-00015	1680	27
520-00004	1750	19
523-00012	6100	1H
527-00005	1690	1A
	5110	19
527-00006	1670	17
530-00067	6150	28
	6380	4
530-00150	1660	2
530-00214A	6100	22-2
530-00236	1280	5H
530-00411G	1670	25
530-00412G	1650	29
530-00413C	1670	26
530-00414C	1660	10
530-00415C	1660	9
530-00416B	1670	31
530-00417B	1470	62
530-00418D10	7270	5
530-00418D6	1710	6
530-00430A	6940	2
530-00431	6960	1
530-00432A	6220	2
530-00434B	1670	27
530-00435A	1670	28
530-00435B	1670	28
530-00463A	6950	7
	6980	7
	7000	7
	7040	2
530-00464	6970	4
	7050	4
534-00062	6970	5
	6990	10
	7050	5
534-00064	1710	1
	7270	1
534-00079	1470	75
534-00085	1680	25
	6940	1
	6950	3
	6960	7
	7030	1
	7040	1

Part No.	Fig No.	Key No.
534-00117B	6270	-
538-00011	1450	73
538-00012	7020	1
539-00076C	1670	1
539-00076E	1670	1
539-00076G	1670	1
541-00015	1450	101
541-00016	7020	7
543-00095	1670	14
543-00096	1670	15
543-00106	1650	7
543-00107	1750	1
544-00007	1690	1
545-00001	1670	16
545-00011	1650	12
547-00023	1670	49
547-00024A	1730	20
547-00026	1200	2
548-00003A	1720	1B
549-00010	6150	26
	6380	2
549-00077	7020	6
549-00086	1460	57
549-00089	1360	5A
549-00090	1660	6
549-00090A	1660	6
549-00092	6220	1
549-00093	6100	22-1
549-00095	1240	55
549-00101	6920	1
	6970	20
	7020	4
549-00102	7010	1
549-00103	1670	19
	1670	21
	6930	1
	6940	10
553-00001D4	1690	19
554-00005	1450	60
621-01507	1500	13
621-01507A	1500	13
621-01572	7080	13
621-02151	1350	5
621-02643B	1680	32
621-02683G	1580	5
621-02724G	1570	3-2
621-02726A	1570	3-7
	1580	2-6
621-02739B	6100	3
621-02800	1100	13

Part No.	Fig No.	Key No.
621-02801	1360	17
	1370	14
	1420	27
621-02837A	1450	61
621-02849A	1480	36
621-02864	1450	12
621-02867A	1480	32-21
621-02869B	1480	32-7
621-02869C	1480	32-7
621-02870C	6250	-
621-02871B	6250	1
621-02872	6250	2
621-02873	6250	7
621-02892G	1500	12
621-02892J	1500	12
621-02894E	1430	1
621-02894G	1430	1
621-02895C	1380	1-1
621-02896K	1430	-
621-02900B	1370	3
621-02901B	1360	2
621-02902J	1420	-
621-02903C	1420	1
621-02904C	1420	3
621-02905C	1420	2
621-02907B	1430	10
621-02908B	1420	6
621-02909E	1420	4
621-02909G	1420	4
621-02910C	1470	94
621-02911C	1470	95
621-02912B	1470	96
621-02913C	1430	7
621-02914C	1430	8
621-02915B	1430	9
621-02917C	1430	11
621-02919B	1430	13
621-02920C	1430	19
621-02925A	1380	1-4
621-02926C	1370	2
621-02926E	1370	2
621-02938B	1100	7
	2100	10
621-02955B	1650	1
621-02955C	1650	1
621-02957A	1360	6
	1370	6
621-02957B	1360	6
	1370	6
621-03005A	1380	4

Part No.	Fig No.	Key No.
621-03011E	1380	1
621-03012E	1360	3
621-03012G	1360	3
621-03014B	1360	4
	1370	5
621-03103	6250	12
	6260	7
	6270	7
621-03113B	1470	67
621-03114B	1470	68
621-03223	1440	-
621-03655A	1550	9
621-03656C	1590	4
621-03657B	1590	11
621-03659C	1590	4-2
621-03660	1590	4-3
621-03710A	3100	14
	6570	14
	7120	21
621-03724	1460	49-4B
621-03725	1460	49-5B
621-03727B	1520	1
621-03732C	1520	-
621-03733B	1360	12
	1370	13
621-03733C	1360	12
	1370	13
621-03734A	1420	28
622-00351H	1450	-
	1460	-
	1470	-
	1480	-
622-00351J	1450	-
	1460	-
	1470	-
	1480	-
622-00351K	1450	-
	1460	-
	1470	-
	1480	-
622-00351M	1450	-
	1460	-
	1470	-
	1480	-
622-00353G	1480	32
622-00353H	1480	32
622-00353J	1480	32
622-00355A	1480	32-3
622-00356	1480	32-3A
622-00359H	1460	49

Part No.	Fig No.	Key No.
622-00359J	1460	49
622-00359K	1460	49
622-00360G	1460	49-1
622-00360H	1460	49-1
622-00426G	1500	-
623-00074B	1570	3-9
623-00075B	1570	3-10
	1580	2-8
623-00085A	6280	1
	6290	2-1
623-00086	6280	-
	6290	2
625-00159B	1480	11
65.01101-0054	011	2
65.01101-0054A	011	2
65.01101-6085B	011	1
65.01101-6092A	011	1
65.01105-1051B	011	4
65.01105-1052B	011	7
65.01105-6005B	011	3
65.01105-6006B	011	6
65.01110-6140	016	4
65.01110-6140A	016	4
65.01150-6008	016	5
65.01201-0075A	011	30
65.01201-0076	011	31
65.01201-0077	011	32
65.01201-0078	011	33
65.01201-0079	011	34
65.01304-0029	012	1
65.01304-0029A	012	1
65.01401-0253A	013	1
65.01401-0253B	013	1
65.01414-0004A	013	8
65.01501-5003A	014	1
65.01510-0040	013	2
	040	4
65.01510-0157	014	2
	040	6
65.01601-5020	011	20
65.01801-5043A	015	20
65.01801-5100	015	1
65.01810-5011	018	8
65.01840-0017	015	2
65.01903-0034	012	3
	040	2
65.01904-0032	013	3
	040	5
65.01905-0009	014	3
	040	7

Part No.	Fig No.	Key No.
65.02101-0069A	016	1
65.02115-0016	016	3
65.02130-0004	016	18
65.02201-0002	016	10
65.02301-0291A	016	16
65.02301-5148A	016	15
65.02310-0006	016	17
65.02401-6032B	016	20
65.02410-0040	016	22
65.02410-0041	016	22
65.02410-0042	016	22
65.02410-0050	016	23
65.02410-0051	016	23
65.02410-0052	016	23
65.02411-0009	016	21
65.02501-0476	016	30
65.02501-0477	016	31
65.02501-0478	016	32
65.02502-0017A	016	36
65.02503-0132A	016	33
65.02503-0133A	016	34
65.02503-0134	016	35
65.02601-0225B	016	40
65.03101-1068C	017	2
65.03101-6090E	017	1
65.03101-6090F	017	1
65.03201-1016A	017	5
65.03201-1016B	017	5
65.03203-1062	017	3
65.03203-1063	017	4
65.03205-0006A	017	8
65.03401-5010	018	1
65.03401-5010B	018	1
65.03402-0008A	018	5
65.03402-0008B	018	5
65.03402-0009	018	5
65.03901-0071	017	13
	040	8
	041	1
65.03905-0037A	018	3
	040	10
	041	3
65.03905-0041	018	6
	040	11
	041	4
65.03905-5002	018	4
	040	9
	041	2
65.04101-0065B	019	1
65.04101-0066B	019	2

Part No.	Fig No.	Key No.
65.04102-0024	019	3
65.04103-0018	019	4
65.04104-0009	019	6
65.04130-0009A	019	8
65.04130-0011	019	9
65.04200-6038A	019	10
65.04200-6038C	019	10
65.04200-6038D	019	10
65.04201-5042A	019	11
65.04201-5042C	019	11
65.04201-5043A	019	12
65.04201-5043C	019	12
65.04202-0033	019	14
65.04202-0034	019	15
65.04202-0035	019	16
65.04203-5020A	019	13
65.04205-0014	019	22
65.04209-0005	019	24
65.04209-0006	019	25
65.04209-5002	019	24
65.04301-5003B	019	30
65.04301-5003C	019	30
65.04302-5015	019	31
65.04401-0045A	019	32
65.04410-0021A	011	10
65.04410-0022	011	11
65.04501-0017	019	40
65.04505-5018	019	42
65.04506-0015	019	47
65.04506-0016	019	43
65.04902-0016	019	7
65.05100-6063	020	1
65.05100-6063A	020	1
65.05102-0030	020	2
65.05103-0034	020	7
65.05104-0022	020	3
65.05104-0023	020	4
65.05201-0016	020	5
65.05401-5002F	011	23
65.05401-5002G	011	23
65.05401-5031	011	21
65.05401-5032	012	7
65.05401-5032A	012	7
65.05501-7089	021	1
65.05501-7089A	021	1
65.05503-5056	021	3
65.05510-5032	021	2
	5110	5
65.05510-5032A	021	2
65.05518-0006	021	4

Part No.	Fig No.	Key No.
65.05601-7079B	021	20
65.05604-0030A	021	21
65.05606-5032A	021	22
65.05607-5003	021	26
65.05610-0007A	021	28
65.05701-5567	027	5
65.05701-5568	027	11
65.05701-5569	027	12
65.05701-5573A	021	11
65.05701-5573B	021	11
65.05701-5574	021	12
65.05701-6121	022	8
65.05740-0041	022	10
65.05801-5244	022	1
65.05805-5233B	022	7
65.05805-5233C	022	7
65.05806-5118	022	6
65.05806-5118A	022	6
65.05901-0027	040	15
65.05901-0031	021	27
65.05901-0032	022	15
65.05902-0022	021	23
65.05902-0023	021	31
	040	13
65.05903A0001	021	13
	040	12
65.05904-0035	022	4
	040	14
65.06301-0257	023	11
65.06301-0258A	024	13
65.06402-5015	023	4
65.06404-0039A	023	1
65.06405-0012A	023	6
65.06405-0039	023	6
65.06500-6178B	024	1
65.06500-6271A	024	1
65.06501-0099A	024	2
65.06501-0300	024	2
65.06503-0113	024	8
65.06504-0033	024	6
65.06506-0029A	024	7
65.06506-0032	024	7
65.06520-6007	024	3
65.06520-6008	024	3
65.06601-5075	025	1
65.06611-0116	025	2
65.06611-0132	025	2
65.06901-0042	024	10
	040	19
65.06903-0029	024	14

Part No.	Fig No.	Key No.
65.06903-0029	040	20
65.06904-0003	023	5
	040	17
	041	6
65.06904-0020	023	2
	040	16
	041	5
65.06904-0021	023	2
	040	16
	041	5
65.08100-6088A	026	1
65.08100-6088B	026	1
65.08101-0263	026	2
65.08101-0264	026	3
65.08101-0264A	026	3
65.08201-5075	026	11
65.08202-0185	026	16
65.08204-0004	026	21
65.08204-0004A	026	21
65.08901-0045	026	5
	040	21
	041	8
65.08902-0030A	026	14
	040	22
	041	9
65.09100-7110	027	1
65.09140-0005	027	20
65.09411-5102	027	37
65.09411-5104	027	36
65.09411-5113	027	30
65.09411-7012	027	35
65.09440-0056	027	42
65.09440-0057	027	40
65.09440-0058	027	33
65.09901-0018A	027	2
	040	23
	041	10
65.09904-0008	026	31
	040	31
	041	16
65.09904-0009	027	38
65.10205-0006	028	4
65.10205-0006A	028	4
65.10301-6191	029	1
65.10301-6192	029	2
65.10301-6193	029	3
65.10301-6194	029	4
65.10301-6195	029	5
65.10401-7004A	028	1
65.10410-6003A	029	15

Part No.	Fig No.	Key No.
65.10415-0001	029	17
65.10501-7005A	030	1
65.10601-6004A	029	20
65.10610-0003	029	30
65.11210-0003A	031	2
65.11210-0003B	031	2
65.11301-0038	030	15
65.11301-5002	019	46
65.11304-0001	030	3
65.11308-0005	036	3
65.11308-0006	036	3
65.11308-0007	036	3
65.11308-0008	036	3
65.12301-5268	032	17
65.12301-5288A	032	31
65.12301-5288B	032	31
65.12301-5289	032	14
65.12301-5291	032	7
65.12303-0009	026	12
65.12501-7042A	032	50
65.12501-7042B	032	50
65.12501-7042C	032	50
65.12503-5026	032	52
	5110	6
65.12503-5026A	032	52
65.12504-5027	032	51
65.12504-5028	032	51
65.12540-0057B	032	54
65.12540-0057C	032	54
65.12540-0061	032	54
65.19102-0096	033	1
65.19102-0103	033	1
65.19103-5049	033	9
65.19103-6010A	033	3
65.19107-0001A	033	5
65.19202-0057A	034	1
65.26201-7075A	035	1
65.26201-7093	035	1
65.26212-0006	035	9
65.26214-0004	035	10
65.26803-7028B	026	30
65.27103-7014	036	1
	036	2
65.27114-5002	029	21
65.27423-7003	036	10
65.27427-7001	036	12
65.27444-7001	036	14
65.29101-6184B	037	1
65.29101-6184C	037	1
65.29101-6201A	037	4
65.29101-6201C	037	4
65.29101-6209	037	15
65.29101-6209B	037	15
65.29150-5006	031	7
65.38901-0018A	012	10
	040	3
65.41530-0185	038	1
	038	3
65.52122-6002	029	22
65.54109-0005A	021	25
65.90020-0062B	016	11
65.90020-0063B	012	4
65.90020-0066A	011	9
65.90020-0080	012	5
65.90020-0085	020	10
65.90020-0095	031	5
65.90020-0100	013	4
65.90020-0101	013	5
65.90020-0105	013	6
65.90020-0109	018	2
65.90020-0117	019	41
65.90020-0118	019	45
	019	49
65.90020-0119	019	50
65.90020-0120	019	26
65.90020-0121	030	4
65.90020-0123	016	19
65.90020-0136	028	5
65.90020-0138	018	7
65.90020-0140A	016	19
65.90021-0009	017	11
65.90030-0018	019	20
65.90201-0073	026	8
65.90201-0075	027	18
65.90201-0076	026	9
65.90201-0122	015	11
65.90201-0128	037	16
65.90201-0134	017	12
65.90201-0135	021	35
65.90201-0136	026	18
65.90302-0009	011	12
65.90302-0029	017	7
65.90302-0034	011	14
65.90302-0041	011	15
65.90302-0042	011	13
65.90302-0048	017	6
65.90310-0065	021	7
65.90310-0134	011	26
65.90310-0135	011	28
	039	1
65.90320-0019	023	10
65.90320-0022	011	22
65.90441-0009A	033	4
65.90441-0066	031	12
65.90501-0003	019	23
65.90510-0012	022	14
65.90535-0001	027	3
65.90535-0003	026	6
65.90701-0098	019	5
65.90701-0099	016	41
65.90701-0136B	019	18
65.90720-0032	019	34
65.90720-0033A	019	48
65.90720-0034B	019	44
65.91030-0005	017	10
65.91601-0011	012	9
65.91605-0002	011	25
65.91606-0041	011	16
65.91701-0086	026	7
65.91710-0001	011	5
	011	8
65.91710-0009	013	7
65.91710-0016	012	2
65.93020-0055	033	6
65.93410-0027	024	4
65.96210-6001A	031	4
	040	29
65.96301-0035	027	44
65.96301-0327A	027	13
65.96301-0441	015	9
65.96301-0441A	015	9
65.96301-0455A	015	7
65.96301-0462	032	35
65.96301-0462A	032	35
65.96301-0478	015	5
65.96301-6003	027	31
65.96330-0018	032	8
65.96330-0018B	032	8
65.96340-5079	032	1
65.96340-5080	032	2
65.96501-0033B	015	21
65.96501-0074	012	8
65.96501-0088	017	9
65.96501-0099A	023	12
	040	18
	041	7
65.96501-0102	031	6
65.96501-0431	029	23
65.96501-0437	028	2
65.96501-0438	029	16

Part No.	Fig No.	Key No.
65.96501-0439	030	1A
65.96507-0043	032	13
	032	16
	032	19
	032	57
	032	6
65.96507-0053	028	3
	040	27
	041	14
65.96507-0055	032	30
65.96507-0059	026	4
65.96601-0052	027	16
	040	25
	041	12
65.96601-0067	027	15
	040	24
	041	11
65.96801-0194	025	5
	5110	10
65.97401-0137	022	11
65.97401-0188	031	8
	037	5
65.97401-0196	037	19
65.97401-5019	015	13
	032	37
65.97401-5024	015	12
	037	25
65.97401-6039	029	8
65.97402-0003	032	36
65.97402-0025	015	8
65.97440-0005	015	8
65.97440-0045	032	36
	032	9
65.97450-5003	027	32
65.97460-0005	037	23
65.97460-0008	037	2
65.97480-0220	029	9
65.97601-0075	021	5
65.97601-0124	019	17
65.98125-5022A	022	2
65.98130-0154	032	32
65.98130-0159A	032	11
65.98130-0200A	027	4
65.98130-0211	032	3
65.98130-0229	032	15
	032	18
	032	5
	032	56
65.98130-0241	012	6
65.98131-0119	015	16

Part No.	Fig No.	Key No.
65.98150-0042A	032	34
65.99497-8642	031	1
65.99601-8071	040	-
65.99605-8042	041	-
713-00024	6840	1B
	6850	1B
	6860	1B
	6870	1B
	6880	1B
	6890	1B
713-00024A	6840	1B
	6850	1B
	6860	1B
	6870	1B
	6880	1B
	6890	1B
800215-00004	030	1B
901-00045	1400	1
	1410	-
903-00068	1440	8
	1590	81
903-00069A	1480	32-2
903-00070B	1480	32-4
903-00071B	1480	32-5
903-00072A	1450	2
903-00073A	1450	3
903-00074A	1460	50
903-00075	1450	4
903-00076B	1460	49-8
906-00002A	1420	5
920-00127A	1730	1
	1740	-
DS0001079	1680	4
DS0001083	3110	24
	6630	24
	6700	24
	6770	24
DS0001084	3110	23
	6630	23
	6700	23
	6770	23
DS0025013	1680	33
	6150	5
DS0025014	1100	35
	1130	35
	1150	12-7
	1590	25
DS0025015	1100	34
	1110	7
	1170	3

Part No.	Fig No.	Key No.
DS0025015	1550	18
	1560	18
	1570	26
	1580	26
	1590	26
	1600	26
	1610	26
	7080	7
DS0025016	1150	21
	1290	31
	2100	23
	6210	19
	7090	36
DS0025017	1130	35
	1160	6
	1300	93
	6160	19
	6450	9
	7100	18
DS0025018	1210	14
	1240	24
	6110	53
	6120	9
	6130	53
	6140	9
	6390	6
DS0025019	1130	24
	1680	31
	6100	6
	6210	25
	7270	3
DS0025020	1270	42
	6110	15
	6130	15
	6390	6
	7090	35
DS0025021	6120	5
	6140	5
DS0025022	1550	19
	1560	19
	7080	12
DS0025023	1100	9
DS0025027	1590	42
DS0401188	1630	11
DS1001061	1590	4-14
DS1003008	6250	11
DS1003009	1520	5
DS2011112	1230	91
DS2011474	6120	1
	6140	1

Part No.	Fig No.	Key No.
DS2012066	1230	32
DS2012298	6130	12
	7160	2
DS2012300	6110	12
DS2012419	6820	3
DS2012442	7170	2
DS2013356	6760	2
DS2013358	7210	10
	7210	11
DS2013510	6690	2
DS2013596	6760	2
DS2013625	6830	2
DS2013656	6490	2
DS2013667	6120	2
	6140	2
DS2013668	6210	13
DS2013670	6450	5
DS2013671	6450	6
DS2013759	6450	3
DS2013760	6450	4
DS2013787	6690	2
DS2013848	7190	1
	7190	2
DS2016050	6110	13
	6110	14
	6130	13
	6130	14
	7160	3
	7170	3
DS2016125	7160	3
	7170	3
DS2017045	2180	1
DS2017046	2180	2
	6340	1
DS2017047	6340	2
DS2017063	7090	13
DS2017071	7090	13
DS2018196	7090	11
DS2023233	6130	51
	7170	1
DS2023234	6110	51
	7160	1
DS2025057	7090	10
DS2025086	6750	2
DS2025087	6820	2
DS2025094	7090	15
DS2025116	6680	2
DS2025117	6751	1
DS2026141	6200	2
DS2026158	6110	18

Part No.	Fig No.	Key No.
DS2026158	6130	18
DS2026173	1260	6
DS2026174	1260	7
DS2026175	1260	8
DS2026176	1260	9
DS2038145	1270	15
DS2038183	1240	36
DS2038202	1270	14
DS2038210	3130	10
	3130	11
	6580	7
	6580	8
DS2038240	6820	1
DS2039099	6680	1
DS2039110	6200	1
DS2039119	6640	2
DS2039159	7090	14
DS2040239	6680	1
DS2040381	6190	2
DS2040473	1270	11
DS2040495	6660	1
DS2040513	1240	37
DS2040533	1270	10
DS2040534	1270	12
DS2040535	1270	13
DS2040574	6730	1
DS2040587	6780	2
DS2040588	6800	2
DS2040623	7130	23
	7130	24
DS2040624	7130	14
	7130	15
DS2040627	7180	5
	7180	6
DS2040650	3130	11
	6580	8
DS2040693	6730	1
DS2040725	1270	10
DS2045428	1260	17
DS2045429	1260	16
DS2053389	2180	3
DS2053393	6340	3
DS2053773	7140	1
DS2053864	3140	3
	6590	3
DS2053867	3140	5
	6590	5
DS2053870	1350	51
DS2053886	3140	1
	6590	1

Part No.	Fig No.	Key No.
DS2053921	6230	1
DS2053935	6230	2
DS2053978	7230	1
DS2053980	7230	8
DS2053983	7140	2
DS2054103	6210	16
DS2054336	1350	9
DS2054338	1190	1-4
DS2054340	1250	35
DS2054341	1280	56
DS2054344	6210	15
DS2054345	6210	16
DS2054351	7220	1
DS2054355	1290	61
DS2054356	1350	10
DS2054365	6210	17
DS2054366	6210	18
DS2054384	1250	34
DS2054413	7220	2
DS20551042	7230	9
DS2055699	3160	1
	3160	2
	3161	1
	3161	2
	6720	2
	6721	2
	6790	2
	6791	2
DS2055825	1290	60
DS2055847	6670	3
	6740	3
DS2055849	6720	1
	6721	1
	6790	1
	6791	1
DS2055861	6670	3
DS2055865	6240	3
DS2055926	6740	3
DS2055927	6810	3
DS2055948	1250	33
DS2055976	1250	35
DS2055985	6450	23
DS2055986	1230	29
DS2058284	6650	1
	6651	1
DS2059423	6420	5
	7250	11
DS2065041	6130	17
DS2065052	6751	2
DS2065053	6751	20

Part No.	Fig No.	Key No.
DS2079153	6100	8
DS2079181	6100	11
DS2082018	6680	2
DS2082024	7090	12
DS2090009	6410	3
	6410	4
	6410	5
	6410	6
DS2090020	6390	10
DS2090021	6390	11
DS2091133	6160	25
DS2091169	7100	11
DS2092023	6460	9
DS2092046	7110	7
	7200	26
DS2092059	6160	11
DS2092068	6460	10
DS2092069	6470	7
DS2092080	6390	12
DS2092085	6430	2
DS2092087	6470	8
DS2092099	6430	1
DS2092119	7100	14
DS2092148	7140	3
DS2092149	7140	4
DS2092162	7240	21
DS2092176	7240	21
DS2092225	7240	21
DS2093003	1310	77
DS2093013	7200	3
DS2093021	7100	24
DS2093029	1300	141
	1300	142
	1320	86
DS2093035	1290	79
DS2093058	1310	73
	6160	20
DS2093063	1300	64
DS2093071	6160	13
DS2093073	1230	81
	1280	62
	7200	20
	7200	21
DS2093074	6150	15
DS2093096	6160	12
DS2093097	7100	10
DS2093101	1290	82
DS2093102	1300	83
	7150	2
DS2093119	6150	21

Part No.	Fig No.	Key No.
DS2093119	6160	26
DS2093120	6160	23
DS2093121	6160	24
DS2093123	6470	5
DS2093130	6470	6
	7110	5
	7200	28
	7200	4
DS2093142	6160	21
DS2093145	7100	9
DS2093152	1300	68
DS2093153	1300	63
DS2093169	1350	44
DS2093175	7240	2
DS2093180	1280	67
DS2093186	7100	22
DS2093197	6460	7
DS2093200	1300	65
	6150	19
	6170	14
DS2093202	7110	6
	7200	27
DS2093225	1300	70
DS2093233	6150	17
DS2093235	6160	15
DS2093238	6160	16
DS2093242	1300	66
DS2093243	1310	71
	1310	74
DS2093246	1310	75
DS2093247	1310	76
DS2093249	1290	81
DS2093250	1320	87
DS2093251	1320	92
DS2093254	1290	79
DS2093257	6150	53
DS2093258	6210	14
DS2093260	6160	25
DS2093262	6460	8
DS2093264	6410	2
DS2093282	1350	43
	1350	45
	1350	46
DS2093316	7100	12
DS2093327	1310	72
DS2093336	7100	23
DS2093346	1290	80
DS2093348	6150	20
DS2093349	6150	16
DS2093350	7100	25

Part No.	Fig No.	Key No.
DS2093351	6410	1
DS2094006	1350	7
	1350	74
	6470	28
DS2094007	6340	4
DS2094010	1310	91
DS2094032	1290	78
DS2094033	6160	22
DS2094041	1290	78
DS2094048	1320	84
DS2094064	2180	4
DS2094076	6150	18
DS2094088	1320	85
DS2094090	6160	14
DS2094295	7150	1
DS2094355	7240	1
DS2094366	7100	13
DS2095001	1330	11
	1330	12
	1330	91
	1330	92
	1340	15
	1340	17
	1340	93
	1340	94
DS2095002	1340	20
DS2095003	1330	75
	1340	84
	6170	23
	6470	29
	7110	8
	7200	29
DS2095004	1330	19
DS2095029	6400	3
	6400	4
DS2095030	6400	1
	6400	2
DS2095031	6390	13
DS2097007	1260	18
DS2097008	1260	19
DS2097018	1260	18
DS2097019	1260	19
DS2105018	1210	7
DS2105020	1210	8
DS2105047	1210	6
DS2105053	1200	21
DS2105060	1210	5
DS2213165	1330	25
	1340	25
DS2213168	1250	27

Part No.	Fig No.	Key No.
DS2225009	3160	21
	3161	21
	6650	20
	6651	20
	6720	21
	6721	21
	6790	21
	6791	21
	7150	3
DS2232003	2180	8
	6340	8
DS2232107	6110	5
	6130	5
DS2232108	6450	12
DS2242015	1260	41
DS2242017	6150	25
DS2290010	7090	8
DS2304096	7090	51
DS2308021	7010	5
DS2338029	6210	8
DS2347033	1320	18
DS2365003	7240	4
DS2404024	6210	23
DS2410009	1300	137-5
	1310	15
	6150	29-5
DS2412024	7160	6
	7170	6
DS2415005	6751	18
	6820	20
DS2479004	1210	3
DS2802021	1200	18
DS2802023	3160	6
	3161	6
	6650	6
	6651	6
	6720	6
	6721	6
	6790	6
	6791	6
	7150	6
DS2805007	3160	11
	3161	11
	6650	11
	6651	11
	6720	11
	6721	11
	6790	11
	6791	11
DS2805008	3160	19

Part No.	Fig No.	Key No.
DS2805008	3161	19
	6650	18
	6651	18
	6720	19
	6721	19
	6790	19
	6791	19
	7150	11
DS3201029	7060	2
DS7601020	1100	20
DS7601021	1100	21
DS7601024	1100	15
DS7752006	3110	17
	6630	17
	6700	17
	6770	17
DS7752007	3110	18
	6630	18
	6700	18
	6770	18
DS7752012	3100	27
	3110	15
	6570	27
	6630	15
	6700	15
	6770	15
	7120	11
DS7752013	3100	28
	3110	16
	6570	28
	6630	16
	6700	16
	6770	16
	7120	12
DS7752014	3100	24
	6570	24
	7120	13
DS7752015	3100	22
	6570	22
	7120	14
DS7752016	3100	23
	6570	23
	7120	15
DS7752017	3100	25
	6570	25
	7120	16
DS7752018	3100	26
	6570	26
	7120	17
DS7752045	7120	18

Part No.	Fig No.	Key No.
DS7752046	3100	18
	6570	18
	7120	19
DS7752061	3100	20
	6570	20
DS7752062	3100	21
	6570	21
DS7752066	3100	19
	6570	19
K1000043	1440	3
K1000112	6230	12
	7230	6
K1000140A	6410	7
K1000269A	1220	16
K1000321A	6520	-
K1000321B	6520	-
K1000321C	6520	-
K1000321G	6520	-
K1000322A	6520	1
K1000322B	6520	1
K1000322C	6520	1
K1000322G	6520	1
K1000344	3120	2
	6500	2
	6510	2
	6520	2
	6530	2
	6540	2
	6550	2
	6560	2
K1000352A	6450	2
K1000354	1300	137-1
	1300	8
	6150	29-1
K1000356	7260	12
K1000410	4320	-
	6450	21
K1000500	1620	19
K1000543A	7120	27
K1000555G	1340	2
	4200	-
K1000555H	1340	2
	4200	-
K1000556G	1330	1
	4200	-
K1000556H	1330	1
	4200	-
K1000602	1570	3-11
	1580	2-20
K1000644B	1240	15

Part No.	Fig No.	Key No.
K1000695A	6170	3
K1000696C	6170	4
K1000722A	1130	20
K1000733	3110	1B
	6630	1B
	6700	1B
	6770	1B
K1000734	3110	1C
	6630	1C
	6700	1C
	6770	1C
K1000735	3110	2B
	6630	2B
	6700	2B
	6770	2B
K1000736	4260	2
	4260	4
	4270	2
	4270	4
	4280	2
	4280	4
K1000737	4250	2
	4250	4
	4310	2
	4310	4
	4350	2
	4350	4
	4370	2
	4370	4
K1000738	4260	4
	4270	4
	4280	4
K1000789	1680	21
K1000794	1470	56
K1000814	1720	1C
K1000815	1720	1D
K1000816	6160	28
K1000817	6460	18
K1000840	1360	13
K1000840A	1360	13
K1000842A	1360	14
K1000911	3110	27
	6630	27
	6700	27
	6770	27
K1000912A	3110	28
	6630	28
	6700	28
	6770	28
K1000912B	3110	28

Part No.	Fig No.	Key No.
K1000912B	6630	28
	6700	28
	6770	28
K1000968B	1100	31
K1000976B	2150	8
K1000982	6910	1
K1001023	1360	11
	1370	12
K1001029	1100	30
	1130	34
	1150	34
	1200	17
	1210	15
	1240	104
	1290	44
	1330	40
	1340	40
	1620	17
	1640	4
	1650	32
	1670	38
	1680	37
	1690	14
	1710	9
	1720	30
	1730	19
	1750	36
	3140	16
	3160	5
	3161	5
	6100	4
	6150	56
	6160	7
	6210	29
	6230	10
	6410	14
	6450	30
	6460	16
	6590	16
	6650	5
	6651	5
	6720	5
	6721	5
	6790	5
	6791	5
	6920	4
	6960	8
	7100	8
	7140	12
	7150	5

Part No.	Fig No.	Key No.
K1001029	7230	10
	7270	10
K1001068	1420	20
K1001069A	1420	21
K1001252B	6450	22
K1001260A	1570	3-8
	1580	2-7
K1001263A	1670	5
	1670	6
K1001295A	1430	12
K1001295B	1430	12
K1001310	1430	20
K1001702	1660	7
K1001702A	1660	7
K1001858A	1660	1
K1001871B	6470	3
	7110	3
	7200	22
K1001873A	6470	1
	7110	1
	7200	7
K1002081A	1490	1
K1002081B	1490	1
K1002082	1530	-
K1002083	1540	-
K1002084A	1400	-
K1002128	3110	7
	6630	7
	6700	7
	6770	7
K1002130	3110	8
	6630	8
	6700	8
	6770	8
K1002130A	3110	8
	6630	8
	6700	8
	6770	8
K1002153	7010	6
K1002158	6380	1
K1002202H	1360	-
K1002204C	1380	-
K1002206	1740	1
K1002207	1740	2
K1002208	1740	3
K1002209	1740	4
K1002210	1740	5
K1002211	1740	6
K1002212	1740	7
K1002213	1740	8

Part No.	Fig No.	Key No.
K1002214	1740	9
K1002215	1740	10
K1002216	1740	11
K1002217	1740	12
K1002218	1740	13
K1002219	1740	14
K1002229A	1390	-
K1002230A	1390	1
K1002231A	1390	2
K1002294	3110	2
	6630	2
	6700	2
	6770	2
K1002341	1240	9
K1002385	1430	33
K1002406D11	1670	20
K1002406D12	1670	22
K1002406D13	6940	11
K1002406D14	6930	2
K1002406D2	6920	2
K1002406D21	1670	24
K1002406D3	6970	21
K1002406D4	7010	2
K1002406D5	7020	5
K1002539A	4140	2
K1002540A	4140	3
K1002541A	4140	4
K1002542	4140	5
K1002543	4140	6
K1002544	4140	7
K1002545	4140	8
K1002546	4140	9
K1002548	4140	11
K1002549	4140	12
K1002550	4140	13
K1002552	4140	15
K1002554A	4140	18
K1002556	4140	20
K1002558	4140	21
K1002559	4140	22
K1002561B	6260	-
K1002567	4140	32
K1002573B	6210	4
K1002574A	6260	3
	6270	4
K1002575A	6260	4
	6270	5
K1002635	1450	104
K1002636	1450	105
K1002637	1480	32-13
K1002638A	1460	49-17
K1002639B	1240	13
K1002641	1470	100
K1002730A	1110	4
	7080	2
K1002759A	6290	1
K1002771	6290	-
K1002864	1210	4
K1002866	7020	9
K1002867D1	7020	10
K1002943	1600	38
K1002965	6200	14
	6680	16
	6750	7
	6751	7
	6820	14
K1002967	6200	15
	6680	15
	6750	8
	6751	8
	6820	15
K1003180A	1130	13
K1003284	1460	88
K1003296	1220	27
K1003350	6910	-
K1003381	1380	3
K1003384A	4140	17
K1003386	4140	37
K1003422A	6160	18
K1003427	1450	89
K1003522	1450	109
K1003618	1170	18
K1003638B	6160	29
K1003676B	1470	107
K1003682A	4140	23
K1003900	1480	32-16
K1003914	4340	2
	4340	4
	4360	2
	4360	4
K1003945	1330	49
	1340	49
K1003947A	6170	21
K1003948A	6470	26
	7110	21
K1004000	6190	6
	6800	6
K1004001	6190	6
	6800	6
K1004011	6240	7
K1004011	6670	7
	6740	7
	6810	7
K1004028	6480	9
	6620	9
	7210	18
K1004037A	1190	1-2
	4140	-
K1004038B	4140	1
K1004040B	4140	10
K1004041A	4140	19
K1004042A	4140	28
K1004061	1450	108
K1004266	1200	12
K1004271	2100	9
K1004272	1510	4
K1004425	1660	11
K1004426	1660	12
K1004427	1660	8
K1004515	1130	22
K1004630	1570	44
	1580	44
	1590	44
	1610	44
K1004716	6920	6
K1005007A	1420	30
K1005097A	1260	1
	4170	-
	4180	-
	4190	-
K1005181	1590	4-8
K1005228	1120	3
K1005305A	1590	4-13
K1005343B	1370	4
K1005343C	1370	4
K1005344A	1430	17
K1005345A	1430	18
K1005357	6130	8
K1005468E	1370	-
K1005719	4140	24
K1005776	6220	3
K1005909	5120	3
	5140	3
K1006209	3160	17
	3161	17
K1006218	6190	1
	6800	1
K1006227	6490	13
	6690	10
	6760	10

Part No.	Fig No.	Key No.
K1006227	6830	13
K1006228	6490	14
	6690	11
	6760	11
	6830	14
K1006368	1460	49-18
	1480	120
K1006370	1480	32-38
K1006520	1210	1
K1006530	1210	1A
	5110	7
K1006572	1670	23
K1006586	5100	5
K1006656	6170	24
	6470	30
	7110	23
K1006663	7030	2
K1006668	6920	5
K1006801	7030	-
K1006802	7040	-
K1006803A	7050	-
K1006854	5110	31
K1006933	1470	114
K1006936	1470	98
K1006973	1210	1B
K1006981	4140	14
K1006995	1370	15
K1007042	1350	50
K1007044	1620	18
K1007092A	6300	1
K1007092B	6300	1
K1007093A	6310	1
K1007093B	6310	1
K1007094A	6320	1
K1007094B	6320	1
K1007095B	7115	1
K1007197	1240	10
K1007255	3110	9
	6630	9
	6700	9
	6770	9
K1007255A	3110	9
	6630	9
	6700	9
	6770	9
K1007256	3110	11
	6630	11
	6700	11
	6770	11
K1007256A	3110	11

Part No.	Fig No.	Key No.
K1007256A	6630	11
	6700	11
	6770	11
K1007342H	5120	-
K1007668	1680	18
K1007950A	1190	1-1
	4130	-
K1007957	1220	28
K1008019D3	1670	9
	5120	11
	5140	15
K1008019D4	1670	10
	5120	12
	5140	16
K1008167	5100	1-77
K1008335	1570	3-23
	1580	2-21
K1008448B	1690	17
K1008464E	5140	-
K1008482B	1750	5
K1008550G	3100	-
K1008551A	3100	1
K1008551B	3100	1
K1008551C	3100	1
K1008558M	3110	-
K1008559A	3110	1
K1008559C	3110	1
K1008559G	3110	1
K1008559H	3110	1
K1008566	3120	-
K1008566A	3120	-
K1008566E	3120	-
K1008567	3120	1
K1008567A	3120	1
K1008567E	3120	1
K1008571	5150	3
K1008713	1700	-
K1008715	6900	-
K1009605B	1660	1A
K1009627	1420	34
K1009662N	1100	-
K1009668E	1100	1
K1009668H	1100	1
K1009668J	1100	1
K1009668M	1100	1
K1009668N	1100	1
K1009800H	1260	-
K1009800J	1270	-
K1009801C	6110	-
K1009802E	6450	-

Part No.	Fig No.	Key No.
K1009803B	6210	-
K1009804G	6130	-
K1009806E	1230	-
K1009806H	1240	-
	1250	-
K1009807E	1280	-
	1320	-
K1009807G	1300	-
	1310	-
K1009807J	1290	-
K1009813C	6150	-
K1009815E	6410	-
K1009816B	6430	-
K1009818J	6160	-
K1009819B	6460	-
K1009823	6380	-
K1009824C	1340	-
	1350	-
K1009824E	1330	-
K1009826C	6170	-
K1009828A	6470	-
K1009830A	6120	-
K1009832A	6140	-
K1009984K	1120	-
	1130	-
	1150	-
K1009985	1120	1
K1010021	3100	2
	6570	2
K1010021A	3100	2
	6570	2
K1010023	3100	4
	6570	4
K1010023B	3100	4
	6570	4
	7120	3
K1010024	3110	3
	6630	3
	6700	3
	6770	3
K1010024A	3110	3
	6630	3
	6700	3
	6770	3
K1010025	3110	4
	6630	4
	6700	4
	6770	4
K1010025A	3110	4
	6630	4

Part No.	Fig No.	Key No.
K1010025A	6700	4
	6770	4
K1010027	3100	1A
	6570	1A
	7120	1A
K1010028	4230	2
	4230	4
	4240	2
	4240	4
	4290	2
	4290	4
	4300	2
	4300	4
K1010065	6990	8
K1010120C	1190	–
K1010121B	1190	1
K1010121C	1190	1
K1010122A	1230	1
K1010123B	1240	2
K1010124A	1240	3
K1010125A	1240	4
K1010126A	1240	5
K1010126B	1240	5
K1010126C	1240	5
K1010173E	2110	–
	2120	–
	2160	–
K1010173G	2140	–
	2150	–
K1010173L	2100	–
K1010174L	6330	–
K1010175	2180	–
K1010176	6340	–
K1010178	6350	–
K1010179	6360	–
K1010180	6370	–
K1010183B	2100	1
K1010183C	2100	1
K1010183E	2100	1
K1010183G	2100	1
K1010184B	6330	1
K1010184C	6330	1
K1010184E	6330	1
K1010184G	6330	1
K1010189A	1260	2
K1010190A	1260	3
K1010191A	1270	4
K1010192A	1270	5
K1010196H	1200	–
K1010197B	1200	1

Part No.	Fig No.	Key No.
K1010197E	1200	1
K1010197G	1200	1
K1010202H	1220	–
K1010203C	1220	1
K1010203G	1220	1
K1010218	6790	14
	6791	14
K1010221	6790	17
	6791	17
K1010223C	1160	–
K1010224B	1170	–
K1010225B	1180	–
K1010227A	1180	2
K1010233	6690	1
	6760	1
K1010236E	1550	–
K1010236G	1560	–
K1010242B	6100	–
K1010244B	1210	–
K1010271	6720	17
K1010302E	1110	–
K1010303B	1110	1
K1010303C	1110	1
	7080	1
K1010304	1420	37
K1010388A	1170	5
K1010396A	1170	10
K1010397C	1550	2
K1010398C	1550	3
K1010399B	1550	7
K1010400A	1550	6
K1010401A	1560	5
K1010401C	1560	5
K1010415A	1170	4
K1010421B	1550	8
K1010432	1240	8
K1010447B	1150	12
K1010448A	1150	12-1
K1010449	1150	12-2
K1010452C	1150	16
K1010466	1360	20
	1370	16
K1010475C	6110	9
	6130	9
K1010476	6110	3
	6130	3
K1010477	6110	4
	6130	4
K1010478	6110	11
K1010478A	6130	11

Part No.	Fig No.	Key No.
K1010483	1270	22
K1010484	1270	23
K1010495A	6120	4
	6140	4
K1010505	2100	3
K1010511B	2120	4
K1010512A	2130	–
K1010512B	2130	–
K1010531	6180	4
	6600	4
	7180	4
K1010532	3130	20
	6580	17
	7130	11
K1010535	3130	17
	6580	14
	7130	20
K1010537	3130	16
	6580	13
K1010538	3130	21
	6580	18
K1010541	3130	22
	6580	19
K1010542	2110	6
K1010544	2110	18
K1010567	1560	10
K1010568B	1560	11
K1010569	1560	12
K1010570A	1560	13
K1010571	1560	14
K1010572B	1560	15
K1010573A	1560	16
K1010574A	1560	17
K1010683	2100	29
K1010691A	1640	–
K1010692	1640	1
K1010692A	1640	1
K1010702	1700	21
K1010703	6900	21
K1010716	6480	10
	6620	10
K1010717	6480	13
	6620	13
K1010723	5130	20
	5150	19
K1010725	5130	22
	5150	21
K1010730	3160	9
	3161	9
	6650	9

Part No.	Fig No.	Key No.
K1010730	6651	9
	6720	9
	6721	9
	6790	9
	6791	9
	7150	9
K1010733J	1610	-
K1010733P	1570	-
	1580	-
K1010733Q	1600	-
K1010733U	1590	-
K1010737C	1570	3
K1010737E	1570	3
K1010738A	1570	3-1
K1010738C	1570	3-1
K1010739A	1570	3-3
K1010741A	1610	6
K1010742A	1600	7
K1010743	1600	8
K1010743B	1600	8
K1010744	1600	9
K1010744A	1600	9
K1010745B	1600	10
K1010769	1140	11
K1010776A	1680	2
K1010777	1680	7
K1010802C	1630	-
K1010804	1630	1
K1010805A	1630	2
K1010806A	1630	3
K1010807B	1630	4
K1010807C	1630	4
K1010808A	1630	5
K1010808B	1630	5
K1010809A	1630	6
K1010809B	1630	6
K1010810A	1630	7
K1010810B	1630	7
K1010811A	1630	8
K1010811B	1630	8
K1010812A	1630	9
K1010812B	1630	9
K1010813	1630	10
K1010839	1470	116
K1010872	1550	21
K1010873A	1550	22
K1010980	6110	52
	6130	52
K1011025B	3130	-
K1011026	3130	51

Part No.	Fig No.	Key No.
K1011026	4230	-
	6580	51
	7130	41
K1011027	3130	52
	4240	-
	6580	52
	7130	42
K1011028	3130	61
	4250	-
	6580	61
K1011028A	3130	61
	4250	-
	6580	61
K1011029A	3130	4
	6580	1
K1011030A	3130	5
	6580	2
K1011031A	3130	6
K1011032A	3130	7
K1011033A	3130	8
K1011034A	3130	9
	6580	6
K1011043A	3150	-
K1011044	3150	1
	4260	-
	6780	1
K1011044A	3150	1
	4260	-
	6780	1
K1011045A	3140	-
K1011046	3160	-
K1011046A	3161	-
K1011047	3160	3
K1011047A	3161	3
K1011048	3160	14
	3161	14
	6720	14
	6721	14
K1011049	3160	15
	3161	15
K1011050	3160	16
	3161	16
K1011056	3100	3
	6570	3
K1011056A	3100	3
	6570	3
K1011058	3160	18
	3161	18
K1011059	6180	-
K1011060	6180	1

Part No.	Fig No.	Key No.
K1011061	6180	2
K1011062	6180	3
	6600	3
K1011063A	6190	-
K1011064A	6480	-
K1011065A	6480	1
K1011066A	6480	2
K1011067	6480	3
K1011068	6480	4
K1011069	6480	5
	6620	5
K1011070	6480	6
	6620	6
K1011071	6490	-
K1011072	6490	1
	6830	1
K1011073B	6230	-
K1011074	6230	4
	6440	12
	6610	12
	7230	5
K1011075	6230	9
	7230	7
K1011076	6240	-
K1011078	6240	1
K1011080	6100	13
K1011081	6100	14
K1011082	6240	2
K1011083A	6420	-
K1011084	4290	-
	6420	1
	7250	1
K1011085	4300	-
	6420	2
	7250	2
K1011087A	6440	-
K1011088	4310	-
	6440	3
	6610	3
K1011088A	4310	-
	6440	3
	6610	3
K1011137	1550	20
K1011174	1620	7
K1011175	1620	8
K1011176	1620	9
K1011180	1110	5
	7080	3
K1011181	1620	16
K1011182A	1550	4

Part No.	Fig No.	Key No.
K1011294A	2150	8B
K1011304	7080	11
K1011345	1210	2
K1011384	1750	25B
K1011385	1750	23B
K1011388	1750	24A
	1750	29A
K1011413A	2110	5
	4150	-
	4160	-
K1011420	2100	30
K1011476	6500	-
K1011476A	6500	-
K1011476B	6500	-
K1011476E	6500	-
K1011477	6500	1
K1011477A	6500	1
K1011477B	6500	1
K1011477E	6500	1
K1011478	6510	-
K1011478A	6510	-
K1011478B	6510	-
K1011478E	6510	-
K1011479	6510	1
K1011479A	6510	1
K1011479B	6510	1
K1011479E	6510	1
K1011480	6530	-
K1011480A	6530	-
K1011480B	6530	-
K1011480E	6530	-
K1011481	6530	1
K1011481A	6530	1
K1011481B	6530	1
K1011481E	6530	1
K1011482	6540	-
K1011482A	6540	-
K1011482B	6540	-
K1011482E	6540	-
K1011483	6540	1
K1011483A	6540	1
K1011483B	6540	1
K1011483E	6540	1
K1011484	6550	-
K1011484A	6550	-
K1011484B	6550	-
K1011484E	6550	-
K1011485	6550	1
K1011485A	6550	1
K1011485B	6550	1

Part No.	Fig No.	Key No.
K1011485E	6550	1
K1011514	2170	1
K1011515	6350	1
K1011516	6360	1
K1011518	6370	1
K1011519	2170	1-1
	6350	1-1
	6360	1-1
	6370	1-1
K1011605	1150	9
K1011606A	1150	12-6
K1011607	1130	6
K1011645D1	5130	1
	5150	1
K1011645D12	5130	30
	5150	33
K1011645D2	5130	2
	5150	2
K1011647B	5130	8
K1011647C	5130	8
K1011675	1220	5
K1011675A	1220	5
K1011713	2150	8
K1011738	2150	8D
K1011743D6	5120	13
	5140	17
K1011763B	1620	-
K1011764A	7080	-
K1011790	2120	4-2
K1011848A	2130	1
K1011849A	2130	2
K1011849B	2130	2
K1011853	2130	4
K1011855A	2130	8
K1011855B	2130	8
K1011858A	2130	9
K1011858B	2130	9
K1011860A	2130	10
K1011865A	2130	1-1
K1011866A	2130	1-2
K1011891	2120	4-2B
K1011892	2120	4-2C
K1011893	2120	4-2D
K1011894	2120	4-2E
K1011895	2120	4-2G
K1012038A	6200	-
K1012148	1650	-
K1012148A	1650	-
K1012148B	1650	-
K1012148C	1650	-

Part No.	Fig No.	Key No.
K1012149G	1670	-
K1012150B	1660	-
K1012152A	1680	-
K1012153B	1690	-
K1012154	1710	-
K1012155B	1720	-
K1012162B	1730	-
K1012163B	1750	-
K1012167A	6920	-
K1012169A	6930	-
K1012175	6960	-
K1012198	7010	-
K1012199A	7020	-
K1012204A	5150	7
K1012204B	5150	7
K1012205A	5150	23
K1012205C	5150	23
K1012214	1160	2
K1012476A	1750	23
K1012479A	1720	1
K1012479B	1720	1
K1012576	1290	20
	4220	-
K1012583	5120	14
K1012685A	1220	21
K1013100	6840	-
K1013100A	6840	-
K1013101	6840	1
K1013102	6840	1A
K1013102A	6840	1A
K1013103	6850	-
K1013103A	6850	-
K1013104	6850	1
K1013105	6850	1A
K1013105A	6850	1A
K1013106	6860	-
K1013106A	6860	-
K1013107	6860	1
K1013108	6860	1A
K1013108A	6860	1A
K1013110	6870	-
K1013110A	6870	-
K1013111	6870	1
K1013112	6870	1A
K1013112A	6870	1A
K1013113	6880	-
K1013113A	6880	-
K1013114	6880	1
K1013115	6880	1A
K1013115A	6880	1A

Part No.	Fig No.	Key No.
K1013117	6890	–
K1013117A	6890	–
K1013118	6890	1
K1013119	6890	1A
K1013119A	6890	1A
K1013266	1590	15
K1013266A	1590	15
K1013266B	1590	15
K1013269	1590	17
K1013290	1590	18
K1013608	1290	19
K1013687	6720	3
	6721	3
	6790	3
K1013846	1660	3
K1014266	7100	1
K1014573D1	6350	2
	6351	2
K1014573D2	6360	2
	6361	2
K1014573D3	6370	2
	6371	2
K1014874	6390	1
K1015048	1130	14
K1015049	1610	1
K1015051	1160	1
K1015052	1160	4
K1015055	1620	2
K1015056	1620	3
K1015057	1620	4
K1015058	1620	6
K1015071	1620	20
K1015201	1690	4
K1015292A	1150	15
K1015293	1150	32
K1015294	1150	47
K1015319A	1580	2
K1015319C	1580	2
K1015320	1580	2-1
K1015320B	1580	2-1
K1015321A	1580	2-2
K1015391	1130	5
K1015404	7200	5
K1015486	7200	18
K1015739	5130	27
K1015780	6390	2
K1016015	1650	2
K1016015A	1650	2
K1016015B	1650	2
K1016066	5130	29
K1016066	5150	27
K1016089	1690	18
K1016102	5150	28
K1016112	1750	25
K1016321	1560	23
K1016581	5100	–
K1016582A	5110	–
K1016583EF	5110	13
K1016584E	5110	14
K1016585E	5110	15
K1016614	5120	15
	5130	28
	5140	18
	5150	29
K1016885	6400	–
K1016886	6390	–
K1017235	7200	17
K1017271	1430	37
K1017382	6170	1
	6470	2
K1017382A	4330	–
	6170	1
	6470	2
	7110	2
	7200	1
K1018420	7150	17
K1018547J	5130	–
K1018549A	5130	21
	5150	20
K1018550A	5130	23
	5150	22
K1018574	5130	6
K1018574A	5130	6
K1018635A	6570	–
K1018637	6570	1
K1018637A	6570	1
K1018637B	6570	1
K1018642L	6700	–
K1018643A	6700	1
K1018643C	6700	1
K1018643G	6700	1
K1018643H	6700	1
K1018646L	6630	–
K1018647A	6630	1
K1018647C	6630	1
K1018647G	6630	1
K1018647H	6630	1
K1018650M	6770	–
K1018651A	6770	1
K1018651C	6770	1
K1018651G	6770	1
K1018651H	6770	1
K1018746AD11	5130	31
K1018750A	1130	2
	1140	–
K1018750B	1130	2
	1140	–
K1023188	6560	–
K1023188A	6560	–
K1023188E	6560	–
K1023189	6560	1
K1023189A	6560	1
K1023189E	6560	1
K1023248	6580	–
K1023249	6590	–
K1023250	6600	–
K1023251	6620	–
K1023255	6610	–
K1023258	1130	7
K1023259	1130	8
K1023259A	1130	8
K1023263A	6640	–
K1023264	6650	–
K1023264A	6651	–
K1023265A	6690	–
K1023266A	6670	–
K1023267A	6680	–
K1023268A	6660	–
K1023270A	6710	–
K1023271	6720	–
K1023271A	6721	–
K1023272A	6760	–
K1023273A	6740	–
K1023274	6750	–
K1023274A	6751	–
K1023275A	6730	–
K1023277A	6780	–
K1023278	6790	–
K1023278A	6791	–
K1023280	6830	–
K1023281	6810	–
K1023282	6820	–
K1023283A	6800	–
K1023286	6720	15
	6721	15
K1023287	6720	16
	6721	16
K1023288	6720	18
K1023288A	6721	18
K1023289	6740	2

Part No.	Fig No.	Key No.
K1023289A	6740	2
K1023292	6740	1
K1023292A	6740	1
K1023308	6580	3
K1023309	6580	4
K1023310	6580	5
K1023311	6600	1
K1023312	6600	2
K1023318	6620	1
K1023319	6620	2
K1023320	6620	3
K1023321	6620	4
K1023322	6650	3
K1023322A	6651	3
K1023323	6650	16
K1023323A	6651	16
K1023324	6650	17
K1023324A	6651	17
K1023326	6820	16
K1023327	6820	17
K1023328	6790	15
	6791	15
K1023329	6790	16
	6791	16
K1023330	6790	18
	6791	18
K1023513	1240	11
K1023514	1240	12
K1023516	1620	1
K1023535A	4340	–
	7130	43
K1023537A	4360	–
	7250	3
K1023547	1150	12-3
K1023613	5150	6
K1023613A	5150	6
K1023614J	5150	–
K1023823	7100	3
K1023963	7120	7
K1024011C	7090	2
K1024144	6100	22
K1024182	1150	50
K1024823	6810	1
K1024824	6810	2
K1024889	4280	–
	6640	1
K1024889A	4280	–
	6640	1
K1024916	6650	14
K1024916A	6651	14

Part No.	Fig No.	Key No.
K1024917	6650	15
K1024917A	6651	15
K1024947	4270	–
	6710	1
K1024947A	4270	–
	6710	1
K1025496	1180	1
	4100	–
K1025511	1620	22
K1025523	2100	13
K1026136	6670	1
K1026136A	6670	1
K1026137	6670	2
K1026137A	6670	2
K1026654	1670	91
K1027765	1480	32-15
K1027768	1460	118
K1027769	1460	119
K1029257	1220	21B
	5110	25
K1029630	1110	6
	7080	6
K1029828A	7090	61
K1029831B	7090	7
K1030275	1660	9
K1030322	7130	1
K1030323	7130	2
K1030324	7130	3
K1030325	7130	4
K1030326	7130	5
K1030327	7130	6
K1030332	7130	8
K1030333	7130	9
K1030334	7130	10
K1030336A	1670	25
K1030337	7180	1
K1030338	7180	2
K1030339	7180	15
K1030340	7180	3
K1030349	7210	1
K1030350	7210	2
K1030351	7210	3
K1030352	7210	4
K1030353	7210	5
K1030353A	7210	5
K1030355	7210	6
K1030355A	7210	6
K1030359	7150	14
K1030360	7150	15
K1030361	7150	16

Part No.	Fig No.	Key No.
K1030363	7150	18
K1030364	7150	19
K1030367	4350	–
	7130	51
K1030371	7260	14
K1030374	7250	22
K1030382	7230	12
K1030574	1660	10
K1033235A	4380	–
	7090	1
K1033644	7070	1
K1033652	7070	–
K1033880	1460	49-8
K1033991	1460	49-1
K1034000	5120	1
K1034001	5140	1
K1036331	1460	49-7
K1036458	2150	8E
K1036461	2140	7-5
K1036462	2140	7-6
K1036471	7130	22
K1036967	1460	49-17
K1036970	4370	–
	7260	2
K1037354A	1120	3
K1037356A	1750	5
K1037450	7120	–
K1037451	7120	1
K1037454	7120	2
K1037464A	7130	–
K1037467	7140	–
K1037469	7150	–
K1037470	7180	–
K1037471A	7210	–
K1037472	7230	–
K1037475	7250	–
K1037476A	7260	–
K1037707A	7090	33
K1037889	7060	1
K1037930	1150	15
K1038006A	3120	2
	6500	2
	6510	2
	6520	2
	6530	2
	6540	2
	6550	2
	6560	2
K1038028	1300	137
K1038029	6150	29

Part No.	Fig No.	Key No.
K1038032	1290	48
K1038104	7060	-
K1038107A	1590	18
K1038110A	1590	17
K1038193	6970	5
	6990	10
	7050	5
K1038218A	7200	-
K1038219	7110	-
K1038240	1485	-
K1038247	1485	1
K1038366	2171	1
	6351	1-1
	6361	1-1
	6371	1-1
K1038367	2171	1A
	6351	1-1A
	6361	1-1A
	6371	1-1A
K1038368	2171	1B
	6351	1-1B
	6361	1-1B
	6371	1-1B
K1038369	2171	1E
	6351	1-1E
	6361	1-1E
	6371	1-1E
K1038370	2171	1F
	6351	1-1F
	6361	1-1F
	6371	1-1F
K1038371	2171	1G
	6351	1-1G
	6361	1-1G
	6371	1-1G
K1038372	2171	1H
	6351	1-1H
	6361	1-1H
	6371	1-1H
K1038373	2171	1I
	6351	1-1I
	6361	1-1I
	6371	1-1I
K1038374	2171	1J
	6351	1-1J
	6361	1-1J
	6371	1-1J
K1038376	2171	1K
	6351	1-1K
	6361	1-1K

Part No.	Fig No.	Key No.
K1038376	6371	1-1K
K1038377	2171	2
	6351	1-2
	6361	1-2
	6371	1-2
K1038378	2171	3
	6351	1-3
	6361	1-3
	6371	1-3
K1038379	2171	4
K1038409	1130	13
K1038429	2171	1C
	6351	1-1C
	6361	1-1C
	6371	1-1C
K1038430	2171	1D
	6351	1-1D
	6361	1-1D
	6371	1-1D
K1038559	1160	2
K1038585B	7090	-
K1038586B	7160	-
K1038587	7190	-
K1038588B	7170	-
K1038589	7220	-
K1038601	7090	3
K1038602	7090	4
K1038603	7090	5
K1038604	7090	6
K1038697A	1590	4-2
K1038697B	1590	4-2
K1038790	2161	8
K1038790KT	2161	*
K1038791	2161	8-1
K1038792	2161	8-2
K1038793	2161	8-3
K1038794	2161	8-4
K1038807	7100	-
K1038809	7240	-
K1039067A	1590	4
K1039067C	1590	4
K1039068	1680	7
K1039514	1500	20
K1039515	1500	19
K1039521A	1680	2
K1039697	5130	32
	5150	34
K1040096	1380	3
K1040606	1440	8
	1590	81

Part No.	Fig No.	Key No.
K1042074	5130	19
	5150	16
K1042074A	5130	19
	5150	16
K1043726	1430	38
K1044605	1210	1
K1045047	6730	20
K1045048	6660	18
K1045049	6680	17
K1045053	6730	21
K1045056	6751	16
K1045059	6760	1
K1045060	7270	-
K1045091	6751	17
K1045102	6690	1
K1045116	6680	18
K1045127	6660	19
K1045478	6351	1-4
K1045479	6361	1-4
K1045480	6371	1-4
K1045570	7080	-
K1046005	1160	7
K1046350	1210	1C
K1046352	1210	1B
K1046447	2171	-
K1046448A	6351	-
K1046449	6351	1
K1046450A	6361	-
K1046451	6361	1
K1046452A	6371	-
K1046453	6371	1
K1046927	3110	7
	6630	7
	6700	7
	6770	7
K1047323	6721	17
K1047641	6791	3
K1049858	1100	30
K1050307	6351	2
K1050308	6361	2
K1050309	6371	2
K1051913	5160	1
K1052030	5160	-
K1053537	7130	1
K1053538	7130	25
K9000422	1180	3E
K9000998	6420	6A
	7250	6A
K9000999	7260	3A
K9001001	4200	32

Part No.	Fig No.	Key No.
K9001047	4150	264
K9001115	4200	3
K9001119	4200	9
K9001127	4200	18
K9001128	4200	20
K9001129	4200	22
K9001130	4200	25
K9001131	4200	25
K9001132	4200	28
K9001133	4200	30
K9001139	4200	37
K9001140	4200	37
K9001141	4210	6
	4211	6
K9001142	4210	25
K9001146	4280	10
K9001148	4250	18
	4310	18
	4350	18
	4370	18
K9001149	4250	20
	4310	20
	4350	20
	4370	20
K9001153	4230	9
	4240	9
	4260	9
	4270	9
	4290	9
	4300	9
K9001154	4230	10
	4240	10
	4260	10
	4270	10
	4290	10
	4300	10
K9001156	4230	22
	4240	22
	4260	22
	4270	22
	4290	22
	4300	22
K9001158	4250	42
	4310	39
	4340	38
	4350	48
	4360	35
	4370	45
K9001159	4250	45
	4260	34

Part No.	Fig No.	Key No.
K9001159	4270	34
	4280	34
	4310	42
	4350	45
	4370	42
K9001164	4340	14
	4360	14
K9001166	4340	18
	4360	18
K9001173	4250	48
	4310	45
K9001178	4100	80
K9001179	4100	79
K9001181	4100	312
K9001182	4100	326
K9001183	4100	41
K9001184	4100	541
K9001185	4100	543
K9001186	4100	42
K9001187	4100	544
K9001192	4120	–
K9001193	4120	310
K9001194	4120	350
K9001199	4180	50
K9001201	1410	2
K9001202	1410	3
K9001203	1410	4
K9001204	1410	5
K9001206	1410	7
K9001207	1410	8
K9001208	1410	10
K9001209	1410	11
K9001210	1410	12
K9001211	1410	13
K9001212	1410	14
K9001213	1410	15
K9001214	1410	16
K9001215	1410	17
K9001216	1410	18
K9001217	1410	19
K9001218	1410	20
K9001219	1410	21
K9001220	1410	22
K9001221	1410	23
K9001354	4220	2
K9001457	4320	*
K9001695	1410	1
K9001805	4170	106
K9001807	4180	5
K9001810	4180	17

Part No.	Fig No.	Key No.
K9001840	4130	103
K9001841	4130	104
K9001881	4250	5
	4310	5
	4350	5
	4370	5
K9001882	4250	8
	4310	8
	4340	8
	4350	8
	4360	8
	4370	8
K9001883	4250	9
	4310	9
	4340	9
	4350	9
	4360	9
	4370	9
K9001884	4250	10
	4310	10
	4340	10
	4350	10
	4360	10
	4370	10
K9001893	4250	16
	4310	16
	4350	16
	4370	16
K9001894	4250	17
	4310	17
	4350	17
	4370	17
K9001895	4250	22
	4310	22
	4340	22
	4350	22
	4360	22
	4370	22
K9001896	4350	23
	4370	23
K9001897	4250	25
	4310	25
	4350	25
	4370	25
K9001898	4250	36
	4310	36
K9001899	4250	32
	4310	32
	4350	32
	4370	32

Part No.	Fig No.	Key No.
K9001901	4250	*
	4310	*
	4350	*
	4370	*
K9001943	4220	2A
K9002065	4220	4
K9002267	4340	5
	4360	5
K9002269	4340	17
	4360	17
K9002284	4340	3
	4360	3
K9002285	4340	16
	4360	16
K9002289	4340	*
	4360	*
K9002934	4330	2
K9002935	4330	8
K9003465	4330	4
K9003671	4180	3
K9003672	4180	14
K9003678	4340	1
K9003679A	4340	26
	4360	26
K9003680A	4340	27
	4360	27
K9003681A	4340	30
	4360	30
K9003682A	4340	34
K9003684	4350	36
	4370	36
K9003689	4360	1
K9003690A	4360	34
K9003878	1140	14
K9003890	4280	20
K9003891	4280	14
K9003894	4280	5
K9003895	4280	17
K9003896	4280	26
K9003935	4280	*
K9003998	4200	33
K9003999	4200	34
K9004000	4200	35
K9004001	4200	36
K9004385	4100	313
K9004544	1140	1
K9004545	1140	2
K9004546	1140	3
K9004546A	1140	3
K9004547	1140	4

Part No.	Fig No.	Key No.
K9004548	1140	6
K9004549	1140	7
K9004550	1140	8
K9004551	1140	9
K9004552	1140	10
K9004553	1140	18
K9004554	1140	19
K9004555	4130	207
K9004556	4130	202
K9004557	4130	210
K9004558	4130	208
K9004559	4130	214
K9004560	4130	209
K9004561	4130	201
K9004562	4130	308
K9004563	4130	213
K9004564	4130	211
K9004565	4130	302
K9004566	4130	303
K9004567	4130	108
K9004568	4130	203
K9004569	4130	400
K9004570	4130	205
K9004571	4130	206
K9004572	4170	68
K9004575	4180	65
K9004794	4110	628
K9004800	4110	802
K9004839	4100	13
K9004867	4100	14
K9004869	4100	11
K9004872	4100	314
K9004873	4100	534
K9004874	4110	627
K9004875	4110	625
K9004876	4110	631
K9004877	4110	–
K9004878	4110	753
K9004879	4100	774
K9004880	4100	124
K9004881	4110	898
K9004882	4100	*
K9004885	4130	*
K9004886	4230	16
	4240	16
	4260	16
	4270	16
	4290	16
	4300	16
K9004887	4230	20

Part No.	Fig No.	Key No.
K9004887	4240	20
	4260	20
	4270	20
	4290	20
	4300	20
K9004889	4230	1
	4240	1
	4290	1
	4300	1
K9004890	4230	3
	4240	3
	4290	3
	4300	3
K9004891	4230	5
	4240	5
	4260	5
	4270	5
	4290	5
	4300	5
K9004892	4230	17
	4240	17
	4260	17
	4270	17
	4290	17
	4300	17
K9004893	4230	26
	4240	26
	4290	26
	4300	26
K9004894	4240	30
K9004895	4230	30
K9004896	4240	34
	4300	31
K9004897	4230	34
	4290	31
K9004898	4230	18
	4240	18
	4260	18
	4270	18
	4290	18
	4300	18
K9004899	4230	*
	4240	*
	4260	*
	4270	*
	4290	*
	4300	*
K9004900	4280	18
K9004901	4140	40
K9004902	4140	41

Part No.	Fig No.	Key No.
K9004903	4260	1
K9004904	4260	3
	4270	3
K9004904A	4260	3
	4270	3
K9004906	4260	26
	4270	26
K9004907	4260	37
K9004908	4260	30
K9004909	4270	1
K9004910	4270	37
K9004911	4270	30
K9004912	4280	1
K9004913	4280	3
K9004913A	4280	3
K9004914	4280	30
K9004915	4280	37
K9004916	4250	1
K9004917	4250	3
	4310	3
	4350	3
	4370	3
K9004918	4250	38
K9004920	4310	1
K9004921	4290	30
K9004922	4300	30
K9004923	4310	38
K9004992	4150	RL
K9004993	4150	RL1
K9004999	4150	M
K9005000	4150	M2
K9005001	4150	103
K9005002	4150	112
K9005003	4150	R1
K9005007	4160	RG
K9005008	4160	RG1
K9005010	4160	RG2
K9005662	1220	21A
K9005964	4100	271
K9006401	1140	7
K9006480	4200	35
K9006481	4200	36
K9006620	4380	15
K9006621	4380	17
K9006622	4380	5
K9006623	4380	3
K9006624	4380	2
K9006625	4380	8
K9006626	4380	9
K9006860	4211	10

Part No.	Fig No.	Key No.
K9006861	4211	28
K9006862	4211	32
K9006863	4211	51
K9006864	4211	52
K9006865	4211	24
K9006866	4211	26
K9006883	2161	8-12
K9006884	2161	8-11
K9007240	6970	5A
	6990	10A
	7050	5A
K9007363	6160	1A
	6460	1A
K9008370	4370	1
K9008371	4370	37
K9008372	4350	1
K9008373	4350	37
K9008374	4350	41
	4370	38
S0504366	6160	34
S0504453	1570	3-18
	1580	2-16
	1680	16
	1680	23
	1690	2
	1720	18
S0504553	1570	3-17
	1580	2-15
S0504666	1750	26
S0508653	1280	5J
	1670	42
	1670	50
	1730	2
	6990	4
S0508666	1620	12
	1680	19
	1680	28
	1750	3
	6930	4
S0508753	1570	3-20
	1580	2-18
S0508766	6150	4
S0508853	6950	5
	6970	3
	6980	6
	6990	6
	7000	6
	7050	3
S0508861	2140	7-14
S0508866	1590	4-11

Part No.	Fig No.	Key No.
S0508866	1610	24
	6170	18
	6240	5
	6470	21
	6670	5
	6740	5
	6810	5
	6960	3
	7110	10
	7200	16
S0508966	6450	8
S0509066	1680	9
S0509366	1750	20
S0511653	1690	20
	1720	11
	1720	7
S0511666	1690	6
S0511853	1580	2-11
S0511866	1570	3-13
S0512053	2160	2O
	6980	3
	6990	6
S0512066	1170	16
	1200	5
	1220	10
	1590	4-4
	1750	17
	6170	16
	6470	13
	6820	18
	7110	18
	7200	24
	7230	14
S0512266	1280	4
	1350	39
S0514666	1220	31
S0514853	1710	3
S0515066	2100	22
S0515166	1590	45
S0515253	2160	2M
	2161	8-13
S0515263	2130	11
S0515266	1240	44
	1600	39
	6480	15
	6490	5
	6620	15
	6660	21
	6680	19
	6730	19

Part No.	Fig No.	Key No.
S0515266	6760	15
	6830	5
S0515366	2160	15
S0515653	6950	2
	7000	3
S0515866	1150	36
S0518366	6751	21
S0518466	7090	24
S0521266	7230	15
	7250	20
S0521366	1130	29
	3100	16
	3110	20
	3130	23
	3130	33
	6570	16
	6580	20
	6580	33
	6630	20
	6700	20
	6770	20
	7120	25
	7130	19
S0521566	1120	41
S0521853	4250	47
	4260	36
	4270	36
	4280	36
	4310	44
	4350	47
	4370	44
S0553766	1280	6
S0556366	7100	21
S0556466	6210	30
S0556766	6160	10
S0556866	6460	12
S0557066	6390	7
S0557166	1750	13
S0558153	4230	29
	4240	29
	4290	29
	4300	29
S0558166	1150	10
S0558266	1180	6
	6350	4
	6351	4
	6360	4
	6361	4
	6370	4
	6371	4

Part No.	Fig No.	Key No.
S0558466	1150	48
	1180	8
	6480	7
	6620	7
	7210	17
S0558566	7210	19
S0558666	1350	37
S0558766	1350	41
S0558966	1750	6
	6490	11
	6690	8
	6760	8
	6830	11
S0559553	4320	7
S0560066	1290	14
S0560466	1630	13
S0560563	4250	35
	4260	29
	4270	29
	4280	29
	4310	35
	4340	29
	4350	35
	4360	29
	4370	35
S0560566	1590	33
S0560666	1590	31
S0560866	1270	101
S0561053	4230	40
	4240	40
	4290	37
	4300	37
S0561066	1270	44
	1590	30
	6110	16
	6130	23
	6410	11
S0561266	1210	11
	6110	20
	6130	20
S0561466	1590	30
	6130	16
S0561471	4160	32
S0562653	1700	4
	6900	4
S0562766	1260	45
	6190	4
	6800	4
S0563666	6200	10
	6680	11

Part No.	Fig No.	Key No.
S0563666	6750	10
	6751	10
	6820	10
S0565066	6230	7
	6440	16
	6610	16
S0565266	6480	11
	6620	11
S0565466	1200	8
	1220	2
	1260	46
	2120	4-3
	3130	18
	3130	31
	3130	41
	6580	15
	6580	31
	6580	41
	7130	12
S0565566	6230	5
	7130	21
S0566166	6480	14
	6620	14
S0566266	6190	14
	6660	9
	6730	9
	6800	14
S0570366	2110	17
S0571166	2100	19
S0571866	3100	8
	6570	8
	7120	24
S0572166	1100	5
S0574661	6500	7
	6510	7
	6530	7
	6540	7
	6550	7
	6560	7
S0574761	3120	7
S0574861	6520	7
	6840	4
	6850	4
	6860	4
	6870	4
	6880	4
	6890	4
S0574966	2100	16
S0712066	3110	31
	6630	31

Part No.	Fig No.	Key No.
S0712066	6700	31
	6770	31
S0715351	2140	7-12
S0715463	1750	9
S0721466	2100	21
S0760853	1700	1
	6900	1
S0766066	2100	20
S0771466	1120	27
S0774766	1190	2
S0775666	1100	2
S2201766	1500	23
S2202966	1360	18
S2204861	4110	438
S2204866	1330	48
	1340	48
	4190	78
S2205261	4110	436
	4210	26
S2205861	4100	407
S2206261	4130	401
S2208466	1450	110
S2208561	1450	24
	6250	18
S2208866	1380	12
	1400	2
	1500	8
S2208871	4100	406
S2209261	4330	9
S2209266	6160	10
	6460	12
	6490	16
	6690	13
	6760	5
	6830	16
S2209466	6480	19
	6620	19
	7210	16
S2209661	4110	412
S2210071	4110	413
	4211	25
S2211861	4100	414
S2211866	1500	17
	6170	7
	6470	18
	7110	15
	7200	13
S2212066	4380	4
S2212266	1260	50
	1270	50

Part No.	Fig No.	Key No.
S2212266	1350	42
	3130	14
	3150	5
	4180	74
	6170	6
	6200	6
	6450	27
	6470	17
	6580	11
	6640	5
	6680	6
	6710	5
	6750	6
	6751	6
	6780	5
	6820	7
	7090	29
	7110	14
	7200	14
S2212366	4380	12
S2212461	4210	37
S2212466	1260	49
	1270	49
	3130	24
	3150	6
	4170	75
	4190	75
	6110	22
	6130	22
	6200	13
	6580	21
	6640	6
	6680	14
	6710	6
	6750	13
	6751	13
	6780	6
	6820	13
	7130	18
	7130	46
	7250	17
S2212666	1260	25
	3130	15
	6580	12
	7130	26
S2212761	4230	33
	4230	37
	4240	33
	4240	37
	4290	34

Part No.	Fig No.	Key No.
S2212761	4300	34
S2212766	4190	73
	6420	8
	7250	8
S2212861	4260	33
	4260	40
	4270	33
	4270	40
	4350	44
	4370	41
S2212866	1260	52
	1270	52
S2213066	1260	55
	1270	55
	4190	76
S2213363	4250	51
	4310	48
S2213466	4190	101
S2214266	6130	19
S2215266	7090	31
S2215366	1230	16
	1240	16
	7090	20
S2215466	1260	47
	2180	6
	6340	6
	7090	30
S2215666	6180	9
	6600	9
	7180	13
S2215766	1260	51
	6440	5
	6610	5
	7260	4
S2215961	4250	41
	4280	33
	4280	40
	4340	33
	4340	37
	4350	40
	4360	33
S2215966	6440	8
	6610	8
	7260	7
S2216366	7090	38
S2218566	6190	12
	6660	7
	6730	7
	6800	12
S2218766	6180	5

Part No.	Fig No.	Key No.
S2218766	6190	10
	6600	5
	6660	5
	6730	5
	6800	10
	7180	8
S2221471	4150	282
S2222171	4230	25
	4240	25
	4260	25
	4270	25
	4290	25
	4300	25
S2222272	4250	27
	4280	25
	4310	27
	4350	27
	4370	27
S2223266	4170	77
S2224471	4160	35
S2225271	4340	25
	4360	25
S2226671	4140	29
S2227866	1180	4
S2229071	4100	401
S2230561	4130	109
S3050863	1680	6
S3140025	4100	901
S3450343	1110	3
	1670	30
	1670	46
S3450583	1660	4
S3450823	1360	15
S3450833	1200	16
	1470	82
	1650	25
	1670	12
	1670	45
	1730	5
	7020	15
S3450863	1650	13
	1670	2
S3450943	1670	34
	6250	15
S3450953	1650	10
	1670	40
S3450983	1670	7
S3450993	1460	78
	1470	78
S3452853	1470	79

Part No.	Fig No.	Key No.
S3458843	1470	65
S3523601	4330	4-4
S3523608	4210	30
S3523836	4230	24
	4240	24
	4250	24
	4260	24
	4270	24
	4280	24
	4290	24
	4300	24
	4310	24
	4340	24
	4360	24
S3524008	4110	924
S3524403	3140	7
	6590	7
	7140	6
S3527808	4100	953
S3644163	1430	32
S3654523	1420	25
S4012003	1670	48
S4012203	1670	44
S4012303	1750	32
S4012333	1480	32-32
	1590	4-15
S4012531	4110	801
S4012533	1480	32-27
	1590	4-10
	1610	28
S4012633	1150	12-4
	1570	3-21
	1580	2-19
	1650	5
	4250	44
	4310	41
	4340	40
	4350	50
	4360	37
	4370	47
S4012733	1150	38
	1220	18
	1240	21
	1570	3-15
	1580	2-13
	1590	40
	1700	6
	6900	6
S4012833	4200	24
S4012931	4100	806

Part No.	Fig No.	Key No.
S4012933	3110	22
	6630	22
	6700	22
	6770	22
S4013133	1100	6
	2100	14
	3100	9
	6570	9
	7120	6
S4013333	3120	8
	6500	8
	6510	8
	6520	8
	6530	8
	6540	8
	6550	8
	6560	8
	6840	5
	6850	5
	6860	5
	6870	5
	6880	5
	6890	5
S4014633	4210	32
	4330	4-3
S4015130	4100	808
S4032833	3160	12
	3161	12
	6650	12
	6651	12
	6720	12
	6721	12
	6790	12
	6791	12
	7150	12
S4034833	1460	103
S5000113	1500	24
S5000213	1670	4
	1730	6
S5000313	1750	30
S5010303	1750	27
S5010313	1470	115
	1570	3-16
	1580	2-14
	1720	20
S5010503	1680	11
S5010513	1570	3-19
	1580	2-17
	1610	23
	1750	15

Part No.	Fig No.	Key No.
S5010513	6930	5
	6990	2
	7100	19
S5010613	1150	49
	1170	15
	1590	4-5
	1650	3
	1690	22
	1720	13
	1720	9
	1750	8
S5010713	1150	37
	1210	13
	1590	43
	1750	11
	6900	5
	6950	8
	7000	2
	7090	21
S5010813	7090	22
S5010913	1130	43
	4170	81
S5011113	1190	1-3
S5100003	1670	29
	1670	47
S5100103	1660	5
S5100203	1200	15
	1650	14
	1650	26
	1670	13
	1670	3
	1670	43
	7020	16
S5100503	6460	13
S5100603	4230	28
	4230	32
	4230	36
	4240	28
	4240	32
	4240	36
	4250	43
	4250	50
	4260	32
	4260	39
	4270	32
	4270	39
	4280	32
	4280	39
	4290	28
	4290	33

Part No.	Fig No.	Key No.
S5100603	4300	28
	4300	33
	4310	40
	4310	47
	4340	39
	4350	43
	4350	49
	4360	36
	4370	40
	4370	46
	6990	7
S5100703	4230	39
	4240	39
	4250	34
	4250	40
	4260	28
	4270	28
	4280	28
	4290	36
	4300	36
	4310	34
	4340	28
	4340	32
	4340	36
	4350	34
	4350	39
	4360	28
	4360	32
	4370	34
S5102303	1280	7
	1590	4-16
	1650	11
	1670	33
	1670	39
	1670	8
	1680	17
	1680	24
	1690	3
	1720	19
	1750	31
S5102503	1280	5K
	1590	4-9
	1610	22
	1620	13
	1670	41
	1670	51
	1680	10
	1680	20
	1680	29
	1680	5

Part No.	Fig No.	Key No.
S5102503	1720	24
	1730	15
	1730	3
	1750	14
	1750	21
	1750	4
	2140	7-13
	6150	7
	6160	8
	6170	17
	6210	21
	6240	6
	6390	8
	6450	7
	6470	15
	6670	6
	6740	6
	6810	6
	6930	6
	6950	6
	6960	4
	6970	2
	6980	5
	6990	3
	6990	7
	7000	5
	7050	2
	7100	20
	7110	12
	7200	15
S5102603	1150	11
	1180	7
	1200	6
	1220	11
	1290	22
	1350	36
	1650	4
	1680	3
	1690	21
	1690	7
	1720	12
	1720	8
	1730	21
	1750	18
	1750	7
	2160	2P
	4320	8
	6170	15
	6350	5
	6351	5

Part No.	Fig No.	Key No.
S5102603	6360	5
	6361	5
	6370	5
	6371	5
	6450	28
	6470	14
	6480	8
	6490	12
	6620	8
	6690	9
	6760	9
	6820	19
	6830	12
	7110	11
	7200	23
	7210	9
	7230	13
	7250	7
S5102702	2140	7-11
S5102703	1210	12
	1240	22
	1270	102
	1270	54
	1590	32
	1630	12
	1700	2
	1710	4
	1750	10
	2100	24
	2130	12
	2160	24
	2160	2N
	2161	8-14
	6110	21
	6130	21
	6410	12
	6480	16
	6490	6
	6620	16
	6660	20
	6680	20
	6730	18
	6760	16
	6830	6
	6900	2
S5102803	1260	56
	6190	5
	6200	11
	6680	12
	6750	11

Part No.	Fig No.	Key No.
S5102803	6751	11
	6800	5
	6820	11
	7090	23
S5102903	1120	42
	1130	30
	2100	25
	2120	4-4
	3100	17
	3110	21
	3130	19
	3130	32
	3130	42
	4250	46
	4260	35
	4270	35
	4280	35
	4310	43
	4350	46
	4370	43
	6190	13
	6230	6
	6440	17
	6480	12
	6570	17
	6580	16
	6580	32
	6580	42
	6610	17
	6620	12
	6630	21
	6660	8
	6700	21
	6730	8
	6770	21
	6800	13
	7120	26
	7130	13
	7230	16
	7250	19
S5110503	6160	37
	6460	13
S5110603	1350	28
	1500	18
	6170	5
	6420	7
	6470	19
	7110	17
	7200	12
S5110701	4160	33

Part No.	Fig No.	Key No.
S5110703	6440	6
	6610	6
	7090	19
	7260	5
S5111103	1180	5
S5210303	1480	32-34
S5700891	4150	241
S5701242	4150	181
S5740480	4210	15
	4211	14
S5740600	4211	11
S5740800	4200	27
S5740870	4100	886
S5741162	4130	113
S5741270	2130	1-3
S5741361	4140	25
S5810010	4140	27
S6250110	4210	17
S6250131	4100	545
S6250182	4150	268
S6250200	4160	36
S6500100	4110	814
S6500400	4100	824
S6500600	2161	8-5
	4140	33
S6510150	4110	858
S6510180	4120	850
S6510620	4130	212
S6510700	4150	145
S6540600	1460	112
S6710032	4230	41
	4240	41
	4250	52
	4260	41
	4270	41
	4280	41
	4290	38
	4300	38
	4310	49
	4340	41
	4360	38
	4370	48
S6710041	1190	9
	3110	25
	3140	8
	3160	7
	3161	7
	6590	8
	6630	25
	6650	7

Part No.	Fig No.	Key No.
S6710041	6651	7
	6700	25
	6720	7
	6721	7
	6770	25
	6790	7
	6791	7
	7140	7
	7150	7
S6710042	1640	5
S8000041	4190	42
S8000061	4190	41
S8000065	4110	722
S8000081	4160	39
	4211	34
S8000085	4100	724
	4110	724
S8000091	4150	233
S8000101	4210	36
S8000105	4110	725
S8000111	1200	19
	1220	29
	1230	84
	1240	49
	1280	28
	1290	28
	1300	114
	1300	121
	1300	132
	1300	144
	1300	28
	1310	104
	1310	28
	1320	28
	1350	34
	2180	16
	4120	725
	4130	111
	4150	265
	4211	35
	4220	6
	6150	3
	6150	54
	6160	2
	6170	12
	6210	9
	6340	16
	6380	3
	6410	10
	6420	4

Part No.	Fig No.	Key No.
S8000111	6430	6
	6440	9
	6460	2
	6470	16
	6610	9
	7100	16
	7110	102
	7110	13
	7200	11
	7250	13
	7260	8
S8000115	4100	725
	4110	755
S8000121	4190	104
	4210	35
S8000141	1230	54
	1240	102
	1260	43
	1300	113
	1300	29
	1310	103
	1310	29
	1320	29
	1330	32
	1330	76
	1340	32
	1340	83
	1350	32
	1350	76
	4170	62
	4180	62
	6150	27
	6170	13
	6210	12
	6390	9
	6410	16
	6430	5
	6450	13
	6470	20
	7100	17
	7100	42
	7110	16
	7200	10
	7240	5
S8000145	4100	726
S8000161	4120	732
	4190	30
	7010	4
S8000165	4100	732
	4110	732

Part No.	Fig No.	Key No.
S8000181	1190	1-6
	1200	52
	1220	19
	1230	46
	1230	97
	1250	46
	1280	30
	1290	30
	1350	33
	2180	13
	4150	238
	4150	309
	4150	310
	6100	10
	6150	22
	6190	36
	6340	13
	6450	14
	6490	8
	6660	15
	6690	5
	6730	15
	6760	6
	6800	20
	6830	8
	7210	13
S8000185	4100	732
	4110	728
S8000205	4110	733
	4200	17
S8000221	4210	12
S8000225	4110	730
S8000231	1230	98
	1260	61
	6210	11
	6450	16
S8000241	1230	52
	1230	96
	1240	52
	4190	25
	6450	26
	7090	16
S8000245	4100	728
S8000261	4190	23
	4211	12
	4260	31
	4270	31
S8000265	4110	756
S8000281	4230	35
	4240	35

Part No.	Fig No.	Key No.
S8000281	4290	32
	4300	32
	6420	9
	7250	9
S8000291	1230	86
	1250	50
	2180	10
	6110	26
	6120	10
	6130	26
	6140	10
	6180	10
	6200	9
	6340	10
	6600	10
	6680	10
	6750	9
	6751	9
	6820	9
	7090	52
	7180	10
S8000321	4150	279
	4190	36
	4380	10
S8000341	4130	105
	4230	31
	4240	31
	4250	39
	4250	49
	4260	38
	4270	38
	4280	31
	4280	38
	4310	46
	4340	31
	4340	35
	4350	38
	4350	42
	4360	31
	4370	39
	6440	7
	6610	7
	7260	6
S8000381	6190	31
	6660	10
	6730	10
	6800	15
S8000460	2140	7-15
S8000901	2161	8-7
S8001001	2160	2I

Part No.	Fig No.	Key No.
S8001050	2161	8-10
S8001200	2160	2H
S8002101	4150	139
S8002725	4110	735
S8002731	4150	234
S8003401	4160	40
S8010230	4160	29
S8010250	4190	54
S8010251	4210	22
	4211	21
S8010255	4110	734
S8010355	4100	702
	4110	763
S8010451	4180	7
S8010650	2150	8G
S8010700	2120	4-2F
S8010701	4230	21
	4240	21
	4260	21
	4270	21
	4290	21
	4300	21
S8010751	4280	21
S8010755	4110	708
S8010801	4250	21
	4310	21
	4340	21
	4350	21
	4360	21
	4370	21
S8010955	4100	710
	4120	710
S8011000	2161	8-9
S8011200	1220	22
S8011201	2160	2J
S8011251	4230	13
	4240	13
	4260	13
	4270	13
	4290	13
	4300	13
S8011301	4230	15
	4240	15
	4260	15
	4270	15
	4280	13
	4290	15
	4300	15
S8011351	4250	13
	4280	15

Part No.	Fig No.	Key No.
S8011351	4310	13
	4350	13
	4370	13
S8011450	1200	3
S8011451	4340	13
	4360	13
S8011455	4100	717
S8011650	1220	13
S8011850	1220	6
S8011951	4150	178
S8030061	6210	10
S8030081	6190	38
	6450	15
	6480	20
	6490	3
	6620	20
	6660	17
	6690	3
	6730	17
	6760	3
	6800	22
	6830	3
	7210	14
S8030121	1230	47
	1230	95
	1240	47
	1260	60
	2180	9
	6340	9
	6450	17
S8030161	6110	27
	6120	8
	6130	27
	6140	8
	6200	3
	6680	3
	6750	3
	6751	3
	6820	4
	7090	18
	7160	4
	7170	4
S8060121	4190	103
S8060161	4190	31
S8060181	4100	789
	4150	311
S8090350	4100	792
S8180321	6100	1B
S8180411	1730	13
S8450012	1130	46

Part No.	Fig No.	Key No.	Part No.	Fig No.	Key No.	Part No.	Fig No.	Key No.
S8450012	1200	22	null data	026	3			
	1210	16		032	54			
	6100	7						
S8450016	1730	9						
S8470032	6100	16						
S8470075	1130	45						
S8470085	1130	44						
S8470165	1100	29						
S8500092	1240	40						
S8500118	1230	39						
S8510118	1170	6						
S8510143	1170	17						
T6510018	5100	1-49						
T6510027	5100	1-52						
T6510062	5100	1-35						
T6510066	5100	1-36						
T6510070	5100	1-37						
T6510072	5100	1-38						
T6510075	5100	1-39						
T6510081	5100	1-41						
T6510085	5100	1-42						
T6510089	5100	1-44						
T6510091	5100	1-45						
T6550005	5100	1-26						
T6550006	5100	1-27						
T6550007	5100	1-28						
T6550009	5100	1-29						
T6550011	5100	1-30						
T6550015	5100	1-32						
T6550018	5100	1-33						
T6580008	5100	1-2						
T6580020	5100	1-5						
T6600183	5100	1-55						
T6600189	5100	1-56						
T6600197	5100	1-57						
T6600201	5100	1-58						
T6600211	5100	1-59						
T6600217	5100	1-78						
T6600223	5100	1-60						
T6690012	5100	1-19						
T6690013	5100	1-20						
T6750003	5100	1-21						
T7050003	5100	1-6						
T7050013	5100	1-7						
T7050021	5100	1-8						
T7050022	5100	1-9						
T7260057	5100	1-13						
T7500004	5100	1-10						
Y-3738-04	1280	5F						
Y-3738-05	1280	5G						