A1

MF 187LB

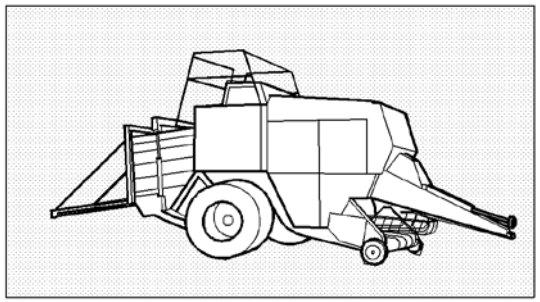

1637373 M5 (1) 10/04

MASSEY FERGUSON

CONTENTS / SOMMAIRE / INHALT / CONTENUTO / SUMARIO

A2

CONTENTS

SECTION ONE

- GENERAL INFORMATION
- SYMBOLS
- GROUP INDEX ALPHA.
- RECOMMENDED STOCKING PARTS
- MARKETING KEY PARTS INDEX
- CHANGES AFTER PREVIOUS PUBLICATION INDEX
- NUMERICAL PART NUMBER INDEX

SECTION TWO

- ILLUSTRATIONS WITH REFERENCES
- PART NUMBER REFERENCE LISTS

SOMMAIRE

SECTION UNE

- INFORMATIONS GENERALES
- SYMBOLES
- GROUPES DE MONTAGE
- PIECES DONT LE STOCKAGE EST RECOMMANDE
- PIECES DE VENTES COURANTES
- CHANGEMENT DEPUIS LA DERNIERE EDITION
- INDEX NUMERIQUE PIECES

SECTION DEUX

- ILLUSTRATIONS AVEC REFERENCES
- LISTES DES NUMEROS DE REFERENCE DES PIECES

INHALT

ABSCHNITTEINS

- ALLGEMEINE HINWEISE
- SYMBOLE
- GRUPPENVERZEICHNIS
- LAGERVOSCHLAGSTEILE
- SCHWERPUNKTEILE MARKETING
- AENDERUNG GEGENEUBER VORIGER AUSGABE
- NUMMERN - INDEX

ABSCHNITT ZWEI

- ABBILDUNGEN MIT POSITIONS NUMMERN
- TEXTSEITEN MIT TEILNUMMERN

CONTENUTO

SEZIONE PRIMA

- INFORMAZIONI GENERALI
- SIMBOLI
- GRUPPO INDICE
- PEZZI CHE RECCOMANDIANO DI TENERE A MAGAZZINO
- PEZZI ESSENZIALI PER IL MARKETING
- VARIAZIONE RISPETTO ALL ULTIMA EMISSIONE
- INDICE NUMERICO

SEZIONE SECONDA

- ILLUSTRAZIONI CON REFERIMENTI
- ELENCO DEI PARTICOLARI RICAMBIO

SUMARIO

SECCION PRIMERA

- INFORMATION GENERAL
- SIMBOLOS
- GROUPOS DE MONTAJE
- RECAMBIO QUE SE RECOMIENDA MANTENER EN STOCK
- RECAMBIO SELECCIONADO POR MARKETING COMO PIEZAS CLAVE
- MOD. DESDE LA ULTIMA EDICION
- INDICE NUMERICO

SECCION SEGUNDA

- DJBUJOS CON REFERENCIAS
- LISTAS CON LOS NUMEROS DE REFERENCIA

I PART NUMBER REFERENCE LIST

(1) EXAMPLE

A	B	C	D	E	F	G	H	J
							K	L
1		*1611168M4*	1		1	DIFFERENTIAL	DIFFERENTIEL DIFFERENZIALE	DIFFERENTIAL DIFFERENCIAL
2		*3619014M1*	2		1	KIT	JEU IL GRUPPO	REPARATURSATZ JUEGO
3			2	REF.2	1	CROWNWHEEL	COURONNE CORONA	TELLERRAD CORONA
4			2	REF.2	1	PINION	PIGNON PIGNONE	ZAHNRAD PINON
5	*	**3617401M5**	2	1234567	1	BOLT	BOULON BULLONE	SCHRAUBE PERNO
6	*	3617352M3	2	1234567	1	BOLT	BOULON BULLONE	SCHRAUBE PERNO

(2) EXPLANATION

COL. A	ILLUSTRATION REFERENCE NUMBER
COL. B	AN ASTERISK INDICATES A CHANGE SINCE LAST PRINT
COL. C	PART NUMBER (SEE PARAGRAPH 2)
COL. D	ITEM ALSO A COMPONENT OF AN ASSEMBLY. SEE ASSEMBLY ILLUSTRATION NUMBER INDICATED
COL. E	COMMENT (SEE SYMBOLS AND NOTES)
COL. F	QUANTITY REQUIRED (SEE NOTES BELOW)
COL. G.H.J.K.L	DESCRIPTION LANGUAGE FORMAT : ENGLISH, FRENCH, GERMAN, ITALIAN, SPANISH

II PART NUMBER IDENTIFICATION

1611168M4	= RECOMMENDED STOCKING PARTS AND MARKETING KEY PARTS
3619014M1	= RECOMMENDED STOCKING PARTS
3617401M5	= MARKETING KEY PARTS INDEX
3617352M3	= PART WITHOUT SPECIFIC MARKS

(3) SPECIAL NOTES

THE QUANTITY SHOWN IN COLUMN 'F' IS THE QUANTITY REQUIRED FOR THE PARTICULAR APPLICATION THAT IS ILLUSTRATED. WHERE THESE PARTS ARE COMPONENTS OF AN ASSEMBLY THIS REFERS TO THE QUANTITY IN ONE ASSEMBLY OR SUB-ASSEMBLY.

FOR PARTS SUCH AS SHIMS, WASHERS, ETC. AN 'X' IN THE QUANTITY COLUMN MEANS "QUANTITY AS REQUIRED"

THE PARTS BOOK NUMBER, ISSUE NUMBER AND DATE ARE SHOWN IN THE LOWER RIGHT HAND CORNER OF THE ILLUSTRATED PAGE. THE ISSUE NUMBER IS PRINTED IN BRACKETS

RECOMMENDED STOCKING PARTS

THE INDEX OF THESE PARTS INCLUDES A COLUMN QTY REPORTING THE QUANTITY USED FOR EACH PART IN THE RELEVANT FITTING.

SAFETY NOTE

WHEN ORDERING REPLACEMENT PARTS TO WHICH SAFETY DECALS WERE ORIGINALLY ATTACHED THE APPROPRIATE SAFETY DECALS MUST BE ORDERED AND FITTED.

I LISTES DES NUMEROS DE REFERENCE DES PIECES

(1) EXEMPLE

A	B	C	D	E	F	G	H	J
							K	L
1		*1611168M4*	1		1	DIFFERENTIAL	DIFFERENTIEL DIFFERENZIALE	DIFFERENTIAL DIFFERENCIAL
2		*3619014M1*	2		1	KIT	JEU IL GRUPPO	REPARATURSATZ JUEGO
3			2	REF.2	1	CROWNWHEEL	COURONNE CORONA	TELLERRAD CORONA
4			2	REF.2	1	PINION	PIGNON PIGNONE	ZAHNRAD PINON
5	*	**3617401M5**	2	1234567	1	BOLT	BOULON BULLONE	SCHRAUBE PERNO
6	*	3617352M3	2	1234567	1	BOLT	BOULON BULLONE	SCHRAUBE PERNO

(2) EXPLICATIONS

COL. A	NUMERO DE REFERENCE DE L'ILLUSTRATION
COL. B	UN ASTERISQUE INDIQUE UN CHANGEMENT DEPUIS LA DERNIERE EDITION
COL. C	NUMERO DE PIECE (VOIR PARAGRAPHE 2)
COL. D	PIECE COMPRISE DANS L'ENSEMBLE DONT LE NUMERO DE REFERENCE DE L'ILLUSTRATION EST INDIQUE
COL. E	REMARQUE (VOIR SYMBOLES ET NOTES)
COL. F	QUANTITE (VOIR NOTE CI-DESSOUS)
COL. G.H.J.K.L	DESIGNATION ORDRE DES LANGUES ANGLAIS, FRANCAIS, ALLEMAND, ITALIEN, ESPAGNOL

II IDENTIFICATION DES NUMEROS DE PIECES

1611168M4	= PIECES DONT LE STOCKAGE EST RECOMMANDE ET PIECES DE VENTES COURANTES
3619014M1	= PIECES DONT LE STOCKAGE EST RECOMMANDE
3617401M5	= PIECES DE VENTES COURANTES
3617352M3	= PIECES SANS SIGNIFICATION PARTICULIERE

(3) NOTES SPECIALES

LA QUANTITE INDIQUEE DANS LA COLONNE 'F' EST CELLE APPLICABLE A L'ENSEMBLE ILLUSTRE SUR LA PAGE ADJACENTE, LE NOMBRE INDIQUE DONC LA QUANTITE DANS L'ENSEMBLE OU SOUS-ENSEMBLE ET NON POUR LA MACHINE COMPLETE.

POUR DES PIECES TELLES QUE CALES D'EPAISSEUR, RONDELLES, ETC. UN "X" DANS LA COLONNE QUANTITE SIGNIFIE "SUIVANT BESOIN".

LE NUMERO DU CATALOGUE, LE NUMERO D'EMISSION ET LA DATE SONT INDIQUES DANS LE COIN INFERIEUR DROIT DE LA PAGE ILLUSTREE. LE NUMERO D'EMISSION EST IMPRIME ENTRE PARENTHESES.

PIECES DONT LE STOCKAGE EST RECOMMANDE

L'INDEX DE CES PIECES INCLUS UNE COLONNE QTY QUI LISTE LA QUANTITE UTILISEE DE CHAQUE PIECE POUR LE MONTAGE.

NOTE DE SECURITE

LORS DU REMPLACEMENT DE PIECES MUNIES A L'ORIGINE D'UNE DECALCOMANIE DE SECURITE. LA DECALCOMANIE CORRESPONDANTE DOIT AUSSI ETRE COMMANDEE ET MONTEE.

ALLGEMEINE HINWEISE

A5

I TEXTSEITEN MIT TEILNUMMERN

(1) BEISPEIL

A	B	C	D	E	F	G	H	J
							K	L
1		*1611168M4*	1		1	DIFFERENTIAL	DIFFERENTIEL DIFFERENZIALE	DIFFERENTIAL DIFFERENCIAL
2		*3619014M1*	2		1	KIT	JEU IL GRUPPO	REPARATURSATZ JUEGO
3			2	REF.2	1	CROWNWHEEL	COURONNE CORONA	TELLERRAD CORONA
4			2	REF.2	1	PINION	PIGNON PIGNONE	ZAHNRAD PINON
5	*	**3617401M5**	2	1234567	1	BOLT	BOULON BULLONE	SCHRAUBE PERNO
6	*	3617352M3	2	1234567	1	BOLT	BOULON BULLONE	SCHRAUBE PERNO

(2) ERLAEUTERUNG

COL. A	POSITIONSNUMMER DER ABBILDUNG
COL. B	EIN STERN BEDEUTET AENDERUNG GEGENEUBER VORIGER AUSGABE
COL. C	TEILNUMMER (SEHE ABSATZ 2)
COL. D	EINZELTEIL VON KOMPLETTEIL, DESSEN POSITIONSNUMMER HIER ANGEGEBEN IST
COL. E	BEMERKUNGEN (SIEHE SYMBOLE UND HINWEISE)
COL. F	ANZAHL (SIEHE UNTENSTEHENDE ANMERKUNG)
COL. G.H.J.K.L	SPRACHEN - DESCHREIBUNG ENGLICH, FRANZOESISCH, DEUTSCH, ITALIENSCH UND SPANISCH

II FESTSTELLEN DER TEILNUMMER

1611168M4 = LAGERVORSCHLAGSTEILE UND SCHWERPUNKTEILE MARKETING

3619014M1 = LAGERVORSCHLASTEILE

3617401M5 = SCHWERPUNKTEILE MARKETING

3617352M3 = TEIL OHNE SPEZIFIKATIONS KENNZEICHNUNG

(3) ANMERKUNGEN

DIE IN SPALTE 'F' AUFGEFUEHRTE ANZAHL IST DIE AND DIESTER STELLE BENOETIGTE ANZAHL. FALLS ES SICH UMEIN EINZELTEIL EINES KOMPLETTEILS HANDEL, IST DIE ANZAHL PRO KOMPLETTEIL ORDER ZUSAM-MENBAUGEMEINT.

FUER TEILE WIE EINSTELLBLECHE, SCHEIBEN USW BEDEUTET EIN 'X' IN DER ANZAHLSPALT "ANZAHL NACH BEDARF".

DIE TEILNUMMER DER ERSATZTEILLISTE, AUSGABENUMMER UND DATUM SIND IN DER RECHTEN UNTEREN ECKE DER BILDSEITE AUFGEFUEHRT. DIE AUSGABENUMER STEHT IN KLAMMERN.

ZUR LAGERHALTUNG EMPFOHLENE ERSATZTEILE

DER ERSATZTEIL INDEX ENTHAELT EINE SPALTE "MENGE", WELCHE DIE ANZAHL DER ZUM ZUSAMMENBAU ERFORDERLICHEN ANGIBT.

WECHTIGER HINWEIS

WENN ERSETZTE TEILE BESTELLT WERDEN, BEI DENEN SICHERHEITSABZIEHBILDER WAREN, MUESSEN DIE ENTSPRECHENDEN SICHERHEITZABZIEHBILDER BESTELLT UND ANGEBRACHT WERDEN.

I ELENCO DEL PARTICOLARI RICAMBIO

(1) ESEMPION

A	B	C	D	E	F	G	H	J
							K	L
1		*1611168M4*	1		1	DIFFERENTIAL	DIFFERENTIEL DIFFERENZIALE	DIFFERENTIAL DIFFERENCIAL
2		*3619014M1*	2		1	KIT	JEU IL GRUPPO	REPARATURSATZ JUEGO
3			2	REF.2	1	CROWNWHEEL	COURONNE CORONA	TELLERRAD CORONA
4			2	REF.2	1	PINION	PIGNON PIGNONE	ZAHNRAD PINON
5	*	**3617401M5**	2	→ 1234567	1	BOLT	BOULON BULLONE	SCHRAUBE PERNO
6	*	3617352M3	2	→ 1234567	1	BOLT	BOULON BULLONE	SCHRAUBE PERNO

(2) SPIEGAZIONE

COL. A	NUMERO DI RIFERIMENTO DELL ILLUSTRAZIONE
COL. B	UN ASTERISCO INDICA UNA VARIAZIONE RISPETO ALL ULTIMA EMISSIONE
COL. C	NUMERO DEL RECAMBIO (VEDER PARAGRAFO 2)
COL. D	IL PARTICOLARE E ANCHE COMPONENTE DI UN GRUPPO IL CUI NUMERO DI ILLUSTRAZIONE E INDICATO
COL. E	COMENTO (VEDER SIMBOLI E NOTE)
COL. F	QUANTITA RECHIESTA (VEDERE NOTA A SEQUITO)
COL. G.H.J.K.L	DESCRIZIONE - SEQUENZA LIGNUA : INGLESE, FRANCESE, TEDESCO, ITALIANO E SPAGNOLO

II CODICE IDENTIFICAZIONE DEL PARTICOLARE

1611168M4 = PEZZI CHE RECOMANDIANO DI TENERE A MAGAZZINO E PEZZI ESSENZIALI PER IL MARKETING

3619014M1 = PEZZI CHE RECOMANDIANO DI TENERE A MAGAZZINO

3617401M5 = PEZZI ESSENZIALI PER IL MARKETING

3617352M3 = SENZA CODICE IDENTIFICAZIONE DEL PARTICOLARE

(3) NOTE AGGIUNTIVE

LA QUANTITA INDICATA NELLA COLONNA 'F' CORRISPONDE ALLA QUANTITA RICHIESTA PER LA PARTICOLARE APPLICAZIONE ILLUSTRATA. QUALORA LA PARTE SIA COMPONENTE DI UN GRUPPO, LA QUANTITA INDICATA SI REFERISCE ALLA QUANTITA CONTENUTA NEL GRUPPO.
PER PARTICOLARI COME SPESSORI, RONDELLE ETC. UNA 'X' NELLA COLONNA DELLA QUANTITA STA A INDICARE "QUANTITA A RICHIESTA"

IL NUMERO DI RIFERIMENTO DEL CATALOGO, IL NUMERO DI EDIZIONE E LA DATA SONO RIPORTATI IN BASSO A DESTRA NELLA PAGINA ILLUSTRATIVA.

PEZZI CHE RECCOMANDIANO DI TENERE A

L'INDICE DELA LISTA RICAMBI INCLUDE UNA COLONNA QTY CHE INDICA LA QUANTITA PER OGNI CODICE RICAMBI NECESSARIA PER IL MONTAGIO.

NOTA PER LA SICUREZZA

QUANDO VIENE ORDINATO UN PEZZO AL QUALE ERANO ORIGINARIAMENTE APPLICATE LE DECALCOMANIE PER LA SICUREZZA ANCHE QUESTE ULTIME DEVONO ESSERE ORDINATE E APPLICATE AL PEZZO PRIMA DELLA CONSEGNA AL CLIENTE.

I LISTAS CON LOS NUMEROS DE REFERENCIA DE LAS PIEZAS

(1) EJEMPLO

A	B	C	D	E	F	G	H	J
							K	L
1		***1611168M4***	1		1	DIFFERENTIAL	DIFFERENTIEL DIFFERENZIALE	DIFFERENTIAL DIFFERENCIAL
2		*3619014M1*	2		1	KIT	JEU IL GRUPPO	REPARATURSATZ JUEGO
3			2	REF.2	1	CROWNWHEEL	COURONNE CORONA	TELLERRAD CORONA
4			2	REF.2	1	PINION	PIGNON PIGNONE	ZAHNRAD PINON
5	*	**3617401M5**	2	1234567	1	BOLT	BOULON BULLONE	SCHRAUBE PERNO
6	*	3617352M3	2	1234567	1	BOLT	BOULON BULLONE	SCHRAUBE PERNO

(2) EXPLICACION

COL. A NUMERO DE REFERENCIA DEL DIBUJO

COL. B UN ASTERISCO INDICA UNA MODIFICATION DESDE LA ULTIMA EDICION

COL. C NUMERO DE PIEZA (VER PARAGRAFO 2)

COL. D PIEZA INCLUIDA EN EL CONJUNTO CUYO NUMERO DE REFERENCIA DE DIBUJO SE INDICA COMENTARIO (VEANSE LOS SIMBOLOS Y LAS NOTAS)

COL. E CANDIDAD NECESARIA (VER NOTA A CONTINUACION)

COL. F CANDIDAD NECESARIA (VER NOTA A CONTINUACION)

COL. G.H.J.K.L DESCRIPCION - FORMATO DE IDIOMA - INGLES, FRANCES, ALEMAN, ITALIANO Y ESPANOL

II IDENTIFICATION DE NUMERO DE REFERENCIA

1611168M4 = RECAMBIO QUE SE RECOMENDA MANTENER EN STOCK Y RECAMBIO SELECCIONADO POR MARKETING COMO PIEZAS CLAVE

3619014M1 = RECAMBIO QUE SE RECOMIENDA MANTENER EN STOCK

3617401M5 = RECAMBIO SELECCIONADO POR MARKETING COMO PIEZAS CLAVE

3617352M3 = RECAMBIO SIN MARCAS ESPECIFICAS

(3) NOTAS ESPECIALES

LA CANTIDAD INDICADA EN LA COLUMNA 'F' ES LA CANTIDAD NECESARIA PARA EL CONJUNTO DISENADO EN LA PAGINA CONTIGUA, EL NUMERO POR LO TANTO INDICA LA CANTIDAD CORRESPONDIENTE AL CONJUNTO O SUBCONJUNTO Y NO A LA MAQUINA COMPLETA.

PARA DETERMINADAS PIEZAS COMO ESPACIADORES, ARANDELAS, ETC. UNA 'X' EN LA COLUMNA DE CANDIDADES INDICA "SEGUN NECESIDADES".

LA REFERENCIA DEL CATALOGO NUMERO Y FECHA DE EDICION ESTAN IMPRESAS EN EL ANGULO DERECHO INFERIOR DE LA PAGINA ILLUSTRADA EL NUMERO DE EDICION ESTA INDICADO ENTRE PARENTESIS.

RECAMBIO QUE SE RECOMIENDIA MANTENER EN STOCK

L'INDEX NUMERICO DE ESTAS PIEZAS INCLUSO UNA COLUMNA QTY QUE LISTA LA CANTIDAD UTILISADA DE CADA PIEZA POR MEL MONTAJE.

AVISO DE SEGURIDAD

CUANDO SE PIDEN PIEZAS DE REPUESTO QUE ORIGINALIMENTE LLEVABAN CALCOMANIAS DE SEGURIDAD HAY QUE PEDIR Y COLOCAR TAMBIEN LAS CALCOMANIAS APROPIADAS.

SYMBOLS / SYMBOLES / SYMBOLE / SIMBOLI / SIMBOLOS

A8

	FOUR WHEEL DRIVE	4 ROUES MOTRICES 4 RUEDAS MOTRIZ	4 RAD ANTRIEB 4 RUEDAS MOTRIZ
	TWO WHEEL DRIVE	2 ROUES MOTRICES 2 RUEDAS MOTRIZ	2 RAD ANTRIEB 2 RUEDAS MOTRIZ
D	FOR GERMANY ONLY OR ANY TEXT IN GERMAN ONLY	POUR ALLEMAGNE SEULEMENT OU EN ALLEMAND PARA ALEMANIA SOLAMENTE O EN ALEMAN SOLAMENTE	NUR FUER DEUTSCHLAND ODER TEXT NUR IN DEUTSCH PARA ALEMANIA SOLAMENTE O EN ALEMAN SOLAMENTE
F	FOR FRANCE ONLY OR ANY TEXT IN FRENCH ONLY	POUR FRANCE SEULEMENT OU EN FRANÇAIS PARA FRANCIA SOLAMENTE O EN FRANCES SOLAMENTE	NUR FUER FRANKREICH ODER TEXT NUR IN FRANZOESICH PARA FRANCIA SOLAMENTE O EN FRANCES SOLAMENTE
I	FOR ITALY ONLY OR ANY TEXT IN ITALIAN ONLY	POUR ITALIE SEULEMENT OU EN ITALIEN PARA ITALIA SOLAMENTE O EN ITALIANO SOLAMENTE	NUR FUER ITALIEN ODER TEXT NUR IN ITALIENSCH PARA ITALIA SOLAMENTE O EN ITALIANO SOLAMENTE
GB	FOR UK ONLY OR ANY TEXT IN ENGLISH ONLY	POUR ROYAUME UNI SEULEMENT OU EN ANGLAIS PARA INGLATERRA SOLAMENTE O EN INGLES SOLAMENTE	NUR FUER ENGLAND ODER TEXT NUR IN ENGLISCH PARA INGLATERRA SOLAMENTE O EN INGLES SOLAMENTE
2A	FOR AMERICAS REGION	POUR AMERIQUES PARA REGION DE LAS AMERICAS SOLAMENTE	FUER AMERICA PARA REGION DE LAS AMERICAS SOLAMENTE
3A	FOR ASIA/AFRICA/AUSTRALASIA REGION	POUR ASIE/AFRIQUE/AUSTRALASIE PARA ASIA/AGRICA/AUSTRALASIA SOLAMENTE	FUER ASIEN/AFRIKA/AUSTRALIEN PARA ASIA/AFRICA/AUSTRALASIA SOLAMENTE
EE	FOR EXPORT EUROPE	POUR EXPORT EUROPE PARA EXPORTACION EUROPA	FUER EUROPA PARA EXPORTACION EUROPA
US	FOR UNITED STATES OF AMERICA	POUR ETATS UNIS D'AMERIQUE PARA EE UU DE AMERICA	FUER USA PARA EE UU DE AMERICA
AA	FOR AUSTRALIA	POUR AUSTRALIE PARA AUSTRALIA	FUER AUSTRALIEN PARA AUSTRALIA
S	FOR SWEDEN	POUR SUEDE PARA SUECA	FUER SCHWEDEN PARA SUECA
N	FOR NORWAY	POUR NORVEGE PARA NORVEGA	FUER NORWEGEN PARA NORVEGA
ZA	FOR SOUTH AFRICA	POUR AFRIQUE DU SUD PARA AFRICA DEL SUR	FUER SUED-AFRIKA PARA AFRICA DEL SUR
	REPLACE AND REPAIR OLD IS NOT INTERCHANGEABLE WITH NEW	REMPLACE ET RECHANGE NON INTERCHANGEABLE SOSTITUIRE E RIPARARE/NUOVO-VECCHIO NON INTERC.	FUER ERSATZ ALTE VERSION NICHT AUSTAUS. MIT NEUER VERSION REEMPLAZAR Y REPARAR/LA ANTERIOR NO ES INTERCAM. CON LA NUEVA
	REPLACE AND REPAIR - OLD AND NEW INTERCHANGEABLE	REMPLACE ET RECHANGE - INTERCHANGEABLE SOSTITUIRE E RIPARARE/NUOVO-VECCHIO SONO INTERC.	FUER ERSATZ - ALTE VERSION AUSTAUS. MIT NEUER VERSION REEMPLAZAR Y REPARAR/ANTERIOR Y NUEVAS SON INTERCAMB.

SYMBOLS / SYMBOLES / SYMBOLE / SIMBOLI / SIMBOLOS

A9

▶	RIGHT HAND	DROITE DESTRA	RECHTS DERECHA
◀	LEFT HAND	GAUCHE SINISTRA	LINKS IZQUIERDA
▶◀	WIDTH	LARGEUR LARGHEZZA	BREITE ANCHURA
◀▶	LENGTH	LONGUEUR LUNGHEZZA	LANGE LONGITUD
▼▲	THICKNESS	EPAISSEUR SPESSEZZA	STAERKE ESPESOR
∅	DIAMETER	DIAMETRE DIAMETRO	DURCHMESSER DIAMETRO
	NUMBER OF TEETH/SPLINES	NOMBRE DE DENTS/CANNELURES NUMERO DE DENTES/CALETTATURAS	ANZAHL DER ZAEHNE/YERZAHNUNG NUMERO DE DIENTES/RANURAS
▲	TOP	HAUT PARTE SUPERIORE	OBEN PARTE SUPERIOR
▼	BOTTOM	BAS PARTE INFERIORE	UNTEN PARTE INFERIOR
	FROM SERIAL OR ENGINE NUMBER	A PARTIR DU NUMERO DE SERIE DU NUMERO DE MOTEUR DESDE EL NUMERO	AB SERIEN-ODER MOTOR NUMMER DESDE EL NUMERO
	UP TO SERIAL OR ENGINE NUMBER	JUSQU'AU NUMERO DE SERIE OU NUMERO DE MOTEUR HASTA EL NUMERO	DROITE HASTA EL NUMERO
	REPAIRS AND REPLACES	REMPLACE ET RECHANGE SURROGARE Y RICAMBIO	ERSETZT REEMPLAZA Y SUSTIUYE
	SEE PAGE - REFERENCE NUMBER	VOIR PAGE - NUMERO DE REFERENCE VER PAGINA - NUMERO DE REFERENCIA	SIEHE SEITE - POSITIONSNUMMER VER PAGINA NUMERO DE REFERENCIA
	ALTERNATIVE	ALTERNATIVE ALTERNATIVO	WAHLWEISE ALTERNATIVO
	NOT SERVICED, ORDER	PAS FOURNIES, COMMANDER NO SUMINISTRADAS, PEDIR	NICHT LIEFERTEILE, BESTELLE NO SUMINISTRADAS, PEDIR
GB	WITHOUT OR NOT FOR. EXAMPLE: NOT FOR ENGLAND	SANS OU PAS POUR EXAMPLE : PAS POUR ANGLETERRE SON O NO PARA. EJEMPLO : NO PARA INGHILTERRA	OHNE ODER NICHT FUER. BEISPEL : FUER DEUTSCHLAND SON O NO PARA. EJEMPLO : NO PARA INGLETERRA

RESERVED

GROUP INDEX ALPHA
GROUPES DE MONTAGE
GRUPPENVERZEICHNIS
GRUPPO INDICE
GRUPOS DE MONTAJE

B 1

		PAGE
BA01	TRANSMISSION TRANSMISSION GETRIEBE TRANSMISSIONE TRANSMISSION	10
BA02	PICK–UP PICK–UP AUFSAMMELTROMMEL RACCOGLITORE RECOGEDOR	20
BA10	ELECTRICAL ELECTRICITE ELEKTRIZITAT ELETTRICITA ELECTRICIDAD	30
BA04	CHARGE AND PLUNGER ALIMENTATION ZUBRINGER ALIMENTATORE ALIMENTACIONE	40
BA06	KNOTTER NOUEUR BINDER LEGATORE ANUDADORA	50
BA07	MAINFRAME WHEELS AND SHIELD ASSEMBLIES BATI ROUES ET GARANTS RAHMEN RAEDER UND SCHUTZBLECHE TELAIO RUOTE DIFESA BASTIDOR RUEDAS PROTECCIONE	60
BA11	HYDRAULICS HYDRAULIQUE HYDRAULISCHE IDRAULICI HIDRAULICOS	70
BA12	ACCESSORIES AND DECALS ACCESSOIRES ET DECALCOMANIES ZUBEHOER UND AUFKLEBER ACCESSORIES E DECALCOMANIES ACCESORIOS Y CALLOMANIES	80

RESERVED

ALPHABETICAL INDEX

C1

PAGE

Accessories And Decals
Accessories And Decals 80–40
Bale Chute 80–45
Connector Assembly Kit 80–35
Decals 80–5
Fieldstar 80–90
Hydraulic 80–95
Knotter 80–75
Literature 80–100

Charge And Plunger
Bale Chute 40–75
Charge And Plunger 40–25
Finger 40–10
Hay Check 40–15
Plunger 40–50
Transmission 40–5

Electrical
Electrical 30–5
Electrical Plug 30–85
Lighting Equipment 30–50
Front 30–50
Sensors Harness 30–15

Hydraulics
Hydraulic 70–5
Hydraulic Cylinder 70–25
Hydraulic Flow Control
Valve 70–15

Knotter
Frame 50–35
Hay Check 50–55
Knotter 50–10
Knotter Control
Cam Assembly 50–40
Frame 50–65
Lubrication 50–95
Needle 50–5
Star Wheel 50–75

PAGE

Mainframe Wheels And Shield Assemblies
Axle 60–190
Bale Tensioner 60–5
Brake System 60–205
Drum Brake 60–285
Handbrake
Control Linkage 60–245
Rear Axle 60–185
Shields 60–65
With Cutter 60–65
Steering Axle 60–315
Twine Box 60–130
Wheel 60–195

Pick–Up
Chain Drive 20–90
With Cutter 20–90
Clutch 20–115
Pick–Up 20–20
With Cutter 20–20
Shields 20–145
With Cutter 20–145
Wheel 20–175

Transmission
Chain Drive 10–105
Clutch 10–130
With Cutter 10–130
Cutter Drive Assembly
Left 10–125
Cutter Gearbox Assembly 10–100
Gearbox 10–90
Hitch Safety Chain – Jack 10–5
Linkage – Hitch Safety Chain 10–10
Transmission 10–15

INDEX ALPHABETIQUE

C2

PAGE

Accessoires Et Decalcomanies
Accessoires Et Decalcomanies 80–40
Decalcomanies 80–5
Fieldstar 80–90
Hydraulique 80–95
Jeu D'Accouplement 80–35
Litterature 80–100
Noueur 80–75
Rampe De Dechargement 80–45

Alimentation
Alimentation 40–25
Ameneurs 40–10
Piston 40–50
Rampe De Dechargement 40–75
Reteneur Escamotable 40–15
Transmission 40–5

Bati Roues Et Garants
Boite A Ficelle 60–130
Chambre De Compression 60–5
Essieu 60–190
Essieu Arriere 60–185
Essieu De Direction 60–315
Frein A Main
Commande De Freinage 60–245
Frein Tambour 60–285
Garants 60–65
Avec Couteau 60–65
Roues 60–195
Systeme De Freinage 60–205

Electricite
Eclairage 30–50
Avant 30–50
Electricite 30–5
Faisceau Capteurs 30–15
Prise Electrique 30–85

Hydraulique
Commande Hydraulique
Valve 70–15
Hydraulique 70–5
Verin Hydraulique 70–25

Noueur
Aiguille 50–5
Chassis 50–35
Commande Des Noueurs
Bati 50–65
Ensemble Came 50–40
Declencheur 50–75
Lubrification 50–95
Noueur 50–10
Reteneur Escamotable 50–55

Pick–Up
Embrayage 20–115
Garants 20–145
Avec Couteau 20–145
Pick–Up 20–20
Avec Couteau 20–20
Roues 20–175
Transmission Par Chaine 20–90
Avec Couteau 20–90

Transmission
Attelage – Chaine De Securite 10–10
Boite De Vitesses 10–90
Boite De Vitesses Couteau 10–100
Chaine De Securite – Cric 10–5
Embrayage 10–130
Avec Couteau 10–130
Ensemble Commande Couteau
Gauche 10–125
Transmission 10–15
Transmission Par Chaine 10–105

ALPHABETISCHER INDEX

C3

PAGE

Aufsammeltrommel
Aufsammeltrommel 20–20
Mit Messer 20–20
Kettenantrieb 20–90
Mit Messer 20–90
Kupplung 20–115
Rader 20–175
Schutzbleche 20–145
Mit Messer 20–145

Binder
Binder 50–10
Binderantrieb
Nocken Kpl 50–40
Rahmen 50–65
Nadeln 50–5
Pressgut–Rueckhalter 50–55
Rahmen 50–35
Schmieren 50–95
Strohrad 50–75

Elektrizitat
Beleuchtung 30–55
Beleuchtungsanlage
Vorderseite 30–50
Elektrischer Stecker 30–85
Elektrizitat 30–5
Sensoren–Kabelb 30–15

Getriebe
Getriebe 10–15
Kettenantrieb 10–105
Kupplung 10–130
Mit Messer 10–130
Lenker – Sicherheitskette 10–10
Messer Getriebe 10–100
Schneidwerksantrieb
Links 10–125
Sicherheitskette – Abstellstuetze 10–5

PAGE

Hydraulische
Hydraulik 70–5
Hydraulikzylinder 70–25
Hydraulischer Antrieb
Ventil 70–15

Rahmen Raeder Und Schutzbleche
Achse 60–190
Brems System 60–205
Garnbehalter 60–130
Handbremse
Bremsgestaenge 60–245
Hinterachse 60–185
Kanalverstellung 60–5
Lenkachse 60–315
Rader 60–195
Schutzbleche 60–65
Mit Messer 60–65
Trommelbremse 60–285

Zubehoer Und Aufkleber
Aufkleber 80–5
Ballenrutsche 80–45
Binder 80–75
Fieldstar 80–90
Hydraulik 80–95
Literatur 80–100
Satz Kupplungsstueck 80–35
Zubehoer Und Aufkleber 80–40

Zubringer
Ballenrutsche 40–75
Getriebe 40–5
Kolben 40–50
Pressgut–Rueckhalter 40–15
Zubringer 40–10

INDICE ALFABETICO

C4

PAGE

Accessories E Decalcomanies
Accessories E Decalcomanies 80 – 40
Decalcomanie 80 – 5
Fieldstar 80 – 90
Idraulica 80 – 95
Kit Raccordi 80 – 35
Legatore 80 – 75
Letteratura 80 – 100
Scivolo Per Balle 80 – 45

Alimentatore
Alimentatore 40 – 25
Controllo Fieno 40 – 15
Infaldatore 40 – 10
Pistone 40 – 50
Scivolo Per Balle 40 – 75
Transmissione 40 – 5

Elettricita
Cavi Sensori 30 – 15
Elettricita 30 – 5
Equipaggiamento Illuminazione 30 – 50
Frontale 30 – 50
Presaelettricita 30 – 85

Idraulici
Cilindros Idraulico 70 – 25
Idraulica 70 – 5
Mando Hidraulico
Valvola 70 – 15

Legatore
Ago 50 – 5
Braccio Di Scatto 50 – 75
Commando Legatore
Cammacomplet 50 – 40
Telaio 50 – 65
Controllo Fieno 50 – 55
Legatore 50 – 10
Lubrificazione 50 – 95
Telaio 50 – 35

PAGE

Raccoglitore
Difese 20 – 145
Con Cuchillo 20 – 145
Frizione 20 – 115
Raccoglitore 20 – 20
Con Cuchillo 20 – 20
Ruota 20 – 175
Trasmissione A Catena 20 – 90
Con Cuchillo 20 – 90

Telaio Ruote Difesa
Assale 60 – 190
Assale Posteriore 60 – 185
Assale Sterzo 60 – 315
Difese 60 – 65
Con Cuchillo 60 – 65
Freno A Mano
Freni E Leverismi 60 – 245
Freno A Tamburo 60 – 285
Ruota 60 – 195
Scatola Portafilo 60 – 130
Sistea Di Frenata 60 – 205
Tenditore Balle 60 – 5

Transmissione
Cambio Di Velocita 10 – 90
Cambio Di Velocita Cuchillo 10 – 100
Catena Sicurezza – Martinetto 10 – 5
Completo Comando Coltello
Sinistro 10 – 125
Frizione 10 – 130
Con Cuchillo 10 – 130
Teranteria – Catena Sicurezza 10 – 10
Transmissione 10 – 15
Trasmissione A Catena 10 – 105

INDICE ALFABETICO

C5

PAGE

Accesorios Y Callomanies
Accesorios Y Callomanies 80–40
Anudadora 80–75
Callomanias 80–5
Fieldstar 80–90
Hidraulico 80–95
Juego De Conjunto De Conectador 80–35
Literatura 80–100
Tobogan De Descarga 80–45

Alimentacione
Alimentacione 40–25
Control 40–15
Embocador 40–10
Stantuffo 40–50
Tobogan De Descarga 40–75
Transmission 40–5

Anudadora
Aguja 50–5
Anudadora 50–10
Bastidor 50–35
Control 50–55
Engrase 50–95
Mando Del Anudadora
Bastidor 50–65
Levacjt 50–40
Rueda Medicion 50–75

Bastidor Ruedas Proteccione
Caja De La Bobina 60–130
Eje 60–190
Eje Direccion 60–315
Eje Trasero 60–185
Freno De Mano
Comando Freno Varillaje 60–245
Proteccionee 60–65
Con Coltello 60–65
Rueda 60–195
Sistema De Frenado 60–205
Tambor De Freno 60–285

PAGE

Tensor Paca 60–5

Electricidad
Electricidad 30–5
Equipo Alumbrado 30–50
Frontal 30–50
Sensores De Arnes 30–15
Tomacorriente 30–85

Hidraulicos
Cilindro Hidraulico 70–25
Comando Idraulico
Valvula 70–15
Hidraulico 70–5

Recogedor
Accionamiento Cadena 20–90
Con Coltello 20–90
Embraque 20–115
Proteccionee 20–145
Con Coltello 20–145
Recogedor 20–20
Con Coltello 20–20
Rueda 20–175

Transmission
Accionamiento Cadena 10–105
Cadena Seguridad – Gato Armado 10–5
Caja De Cambios 10–90
Caja De Cambios Coltello 10–100
Conjunto Mando Cuchilla
Izquierda 10–125
Embraque 10–130
Con Coltello 10–130
Enganches – Cadena Seguridad 10–10
Transmission 10–15

RESERVED

RECOMMENDED STOCKING PARTS

D1

		Qty	PAGE
ACTUATOR	700709996	1	30 – 5
		1	30 – 10
		1	30 – 20
		1	60 – 250
		1	60 – 270
ACTUATOR	700710211	2	30 – 10
		1	30 – 15
		2	30 – 20
		1	30 – 45
		1	30 – 120
		1	70 – 45
		1	80 – 65
BALL BEARING	1109055	6	40 – 5
BALL BEARING	700722661	2	50 – 5
		1	50 – 25
		6	50 – 35
		1	50 – 35
		1	50 – 90
BAND	844498	2	80 – 85
BAR	700113189	7	40 – 60
BEAR. 6309 2RS	391069X1	2	10 – 25
BEARING	1124697	1	10 – 20
		1	10 – 75
BEARING	50021	1	20 – 85
		1	20 – 90
		2	20 – 95
		1	20 – 100
		1	20 – 105
		3	20 – 110
		1	20 – 155
		1	20 – 170
BEARING	50393	2	40 – 40
BEARING	51292	1	20 – 85
		1	20 – 90
		1	20 – 95
		2	20 – 100
		2	20 – 105
		1	20 – 110
		1	20 – 140
		1	20 – 145
		1	20 – 150
		1	20 – 160
		1	20 – 165
BEARING	51318	1	10 – 60
		1	10 – 65
		1	10 – 70
		1	20 – 5
		1	20 – 20
BEARING	6105159	3	40 – 45

		Qty	PAGE
BEARING	700109753P	1	40 – 5
BEARING	700124004P	1	10 – 60
		1	10 – 65
		1	10 – 70
BEARING	700140331	1	10 – 125
		1	20 – 35
BEARING	700704263	1	10 – 110
		1	10 – 125
		1	40 – 5
BEARING	700706124	1	40 – 55
BEARING	700706131	6	40 – 5
BEARING	700706956	1	10 – 20
		1	10 – 75
BEARING	700715741	1	20 – 35
		1	40 – 55
BEARING	700715941	1	50 – 25
BEARING	700716611	1	10 – 110
		1	40 – 5
BEARING	700720050	1	20 – 135
		1	40 – 45
BEARING	700720348	19	20 – 40
BEARING	700720349	19	20 – 45
BEARING	70590704	4	20 – 130
BEARING	711770	10	40 – 80
		1	50 – 5
BEARING	712158	1	40 – 5
BEARING	712604	1	10 – 110
		1	20 – 110
BEARING	7713829	2	40 – 60
BEARING	7713837	2	40 – 10
BEARING	8050478	1	50 – 40
BEARING	8050866	2	50 – 35
BEARING	Y710392	10	80 – 45
		10	80 – 65
BEARING ASSY	70590709	1	20 – 135
		2	80 – 45
		2	80 – 65
BEARING CONE	700706039	2	10 – 80
BEARING CONE	70927347	2	10 – 115
BEARING CUP	700706038	2	10 – 80
BEARING CUP	70927348	2	10 – 115
BEARING CUP	832190M1	4	20 – 175
BEARING SPHERICL	700720354	1	20 – 35
BELT	700717886	1	80 – 80
BEVEL GEAR	7894389	1	50 – 45
BOLT	700707998	8	10 – 75
BOLT	700710413	24	50 – 5

		Qty	PAGE
BOLT	700728135	10	60 – 285
		16	60 – 305
		16	60 – 310
		8	60 – 320
		8	60 – 325
		8	60 – 330
		8	60 – 335

		Qty	PAGE
BOLT	70922786	2	10 – 125
		4	20 – 5
		4	20 – 10
		18	20 – 25
		2	20 – 30
		18	20 – 60
		2	20 – 65
		3	20 – 85
		3	20 – 90
		11	20 – 95
		3	20 – 100
		3	20 – 105
		6	20 – 110
		8	20 – 135
		7	20 – 155
		18	40 – 25
		10	40 – 40
		6	40 – 45
		8	40 – 60
		6	40 – 65
		18	40 – 70
		4	50 – 10
		5	50 – 15
		6	50 – 65
		6	50 – 70
		8	50 – 80
		2	50 – 80
		8	60 – 30
		4	60 – 35
		2	60 – 40
		2	60 – 45
		2	60 – 50
		2	60 – 55
		2	60 – 60
		5	60 – 85
		5	60 – 105
		4	60 – 110
		2	60 – 130
		2	60 – 135
		4	60 – 140
		8	80 – 45
		8	80 – 55
		8	80 – 65
		4	80 – 80
BOLT	70934842	4	20 – 15
		4	20 – 65
		4	20 – 70
		12	60 – 5

RECOMMENDED STOCKING PARTS

D2

		Qty	PAGE
BOLT	8701476	2	50 – 5
		6	50 – 35
		1	50 – 90
BOLT	Y703132	72	20 – 50
		62	20 – 55
		62	20 – 60
		15	20 – 140
		9	20 – 145
		15	20 – 150
		8	20 – 155
		6	20 – 160
		4	20 – 165
		8	20 – 170
		9	40 – 25
		5	40 – 35
BOLT ASSY	6521868	1	10 – 80
		1	80 – 40
BOLT UNC	354269X1	1	60 – 245
		1	60 – 265
BOLT UNC	354289X1	1	10 – 115
		10	80 – 40
BOLT UNC	354636X1	12	10 – 130
		1	70 – 40
		1	70 – 45
BOLT UNC	354667X1	1	10 – 85
		2	60 – 245
		2	60 – 250
		2	60 – 265
		2	60 – 270
BOX	700114076	1	30 – 115
BOX	700114079	1	50 – 180
BRAKE SHOE	700720545	4	60 – 305
		4	60 – 310
		2	60 – 320
		2	60 – 325
		2	60 – 330
		2	60 – 335
BRUSH	700713894	12	40 – 60
BULB	285871M1	1	30 – 60
		1	30 – 65
		1	30 – 70
BULB 12V 21W SBC	621235M1	1	30 – 55
		2	30 – 60
		1	30 – 65
BULB S/L 21/5W	908543M1	1	30 – 55
		2	30 – 60
		1	30 – 65

		Qty	PAGE
BUSH	52761	1	10 – 105
		5	10 – 110
		6	20 – 35
		6	60 – 10
BUSH	6523500	6	10 – 110
		2	10 – 125
		3	10 – 125
		7	50 – 40
		3	50 – 55
BUSH	6523799	1	30 – 15
		10	50 – 35
BUSH	700122681P	6	50 – 65
		6	50 – 70
BUSH	700123261	1	50 – 5
BUSH	700124038	12	40 – 5
BUSH	700129529	2	40 – 10
BUSH	700138307	14	20 – 40
BUSH	700139037	6	20 – 40
BUSH	700161321	2	20 – 35
BUSH	70936273	1	60 – 10
BUSH	712810	1	40 – 10
		3	50 – 5
BUSH	740217	1	20 – 35
BUSH	7852114	2	10 – 75
BUSH	Y52316	2	40 – 10
		5	40 – 40
		3	50 – 5
		1	60 – 290
		2	60 – 305
		2	60 – 310
		1	60 – 320
		1	60 – 325
		1	60 – 330
		1	60 – 335
CAM	700113323P	1	50 – 45
CAP	26260	2	20 – 175
CARTRIDGE	700706153	2	70 – 15
CHAIN	700720264	1	10 – 125
CHAIN	7087935	1	10 – 110

		Qty	PAGE
CLAMP	70925094	6	30 – 5
		6	30 – 10
		1	30 – 15
		5	30 – 20
		4	30 – 25
		X	30 – 25
		1	30 – 30
		5	30 – 55
		4	30 – 70
		2	30 – 80
		18	50 – 95
		36	50 – 105
		1	50 – 120
		2	50 – 135
		6	50 – 145
		6	50 – 150
		2	50 – 155
		2	50 – 160
		1	70 – 40
CLEVIS PIN	700706685	5	50 – 65
		5	50 – 70
		4	60 – 5
		2	70 – 60
		2	70 – 65
CLIP	70925993	1	10 – 110
		1	20 – 110
CLIP	7894975	2	60 – 30
CLUTCH DISC	700140071P	1	10 – 120
		3	10 – 130
CLUTCH DISC	700140072P	1	10 – 120
		1	10 – 130
CLUTCH DISC	700710945	2	20 – 120
		2	20 – 125
CLUTCH DISC	700710946	2	40 – 20
		2	50 – 60
COIL	700725827	1	70 – 20
		3	70 – 20
		2	70 – 50
COMP.SPRING	58511	2	20 – 5
		1	20 – 45
CONE	70341230	4	20 – 175
CONNECTOR	700706683	3	50 – 120
		3	50 – 125
		2	50 – 130
		6	50 – 175
		2	50 – 180
CONNECTOR	70919171	3	50 – 135
CRANKED LINK	329266M91	1	20 – 90

		Qty	PAGE
CRANKED LINK	329420M91	2	20 – 100
		2	20 – 105
DISC	1712868	1	50 – 45
DISC	700108820	4	10 – 75
		2	10 – 120
		4	10 – 130
DISC	700711025	2	20 – 115
DOG	700129571P	4	40 – 80
DOG	700137654P	4	60 – 5
DOG	700137655P	5	50 – 65
		5	50 – 70
DOWEL	863738	1	50 – 50
ELBOW	700706682	5	50 – 120
		5	50 – 125
		6	50 – 130
		11	50 – 175
		2	50 – 180
ELEMENT	7033616	1	80 – 85
FASTENER	866566	2	50 – 5
		6	50 – 35
		1	50 – 90
FILTER	7825516	1	80 – 85
FILTER	8799280	1	10 – 95
		2	70 – 30
FINGER	700113345P	6	50 – 65
		6	50 – 70
FLANGE	051417P	4	20 – 85
		4	20 – 90
		6	20 – 95
		6	20 – 100
		6	20 – 105
		8	20 – 110
		2	20 – 140
		2	20 – 145
		2	20 – 150
		2	20 – 155
		2	20 – 160
		2	20 – 165
		2	20 – 170
FLANGE	50591	4	40 – 45
FLANGE	700108622P	10	80 – 45
		10	80 – 65
FLANGE	700140328P	1	20 – 20
FLANGE	71130258	2	20 – 5
		2	20 – 20
FLANGE	714360	2	50 – 40

RECOMMENDED STOCKING PARTS

D3

		Qty	PAGE
FLANGE	Y710293	8	20 – 130
		2	20 – 135
		4	80 – 45
		4	80 – 65
FLAT WASHERS	705541	12	10 – 85
		1	10 – 110
		18	20 – 35
		4	20 – 175
		2	40 – 30
		2	40 – 40
		3	40 – 45
		8	40 – 50
		4	40 – 60
		24	50 – 5
		2	50 – 30
		4	50 – 35
		4	50 – 40
		4	50 – 80
		6	60 – 5
		7	60 – 85
		12	60 – 90
		12	60 – 95
		12	60 – 110
		8	60 – 190
		4	60 – 205
		4	60 – 210
		4	60 – 215
		4	60 – 220
FUSE	1695966M1	1	30 – 105
		2	30 – 120
FUSE	3387318M1	1	30 – 105
		2	30 – 120
GASKET	359119X1	2	10 – 95
GEAR	7894454	1	50 – 45
GEAR	8802795	2	50 – 10
		2	50 – 20

		Qty	PAGE
GREASER	70923219	1	10 – 5
		1	10 – 20
		1	10 – 40
		1	10 – 45
		1	10 – 50
		1	10 – 55
		1	10 – 60
		1	10 – 65
		3	10 – 80
		1	10 – 110
		1	10 – 125
		1	20 – 5
		1	20 – 20
		1	20 – 30
		1	20 – 35
		1	20 – 75
		1	20 – 80
		1	40 – 10
		2	40 – 50
		1	50 – 45
		1	50 – 75
		2	60 – 10
		2	60 – 130
		4	60 – 135
		4	60 – 140
		2	60 – 215
		2	60 – 220
		1	80 – 35
		2	80 – 55
GREASER	71339847	2	60 – 35
		2	60 – 40
		2	60 – 45
		2	60 – 50
		2	60 – 55
		2	60 – 60
		4	60 – 145
		4	60 – 150
		4	60 – 155
		4	60 – 160
		4	60 – 165
		4	60 – 170
		4	60 – 175
		4	60 – 180
GUARD	700139255	1	50 – 20
		6	60 – 30
		2	60 – 150
		10	60 – 160
		2	60 – 170
		10	60 – 180

		Qty	PAGE
HANDLE	7894967	2	60 – 30
HOLDER	8045148	1	50 – 45
HOOK	1712835	1	50 – 50
HOSE	700706798	3	50 – 135
KEY	Y61952	1	20 – 110
KIT	700138038	1	80 – 40
KIT	700710807	1	50 – 115
KIT	700711425	1	10 – 35
		1	10 – 45
		1	10 – 55
KIT	700712574	2	10 – 40
		2	10 – 45
		2	10 – 50
		2	10 – 55
KIT	700720098	1	50 – 175
KIT	7815053	1	10 – 20
		2	10 – 30
		2	10 – 35
		1	10 – 40
		1	10 – 45
		1	10 – 50
		1	10 – 55
		1	10 – 75
KIT, BEARING	700720153	2	10 – 30
		2	10 – 35
KIT, BEARING	71308951	2	40 – 45
KIT, REPAIR	700150670	1	50 – 90
KIT, REPAIR	700154471	1	30 – 120
KIT, REPAIR	700719338	1	70 – 75
KIT, REPAIR	700720122	1	10 – 30
		1	10 – 40
		1	10 – 50
KIT, REPAIR	700723268	1	10 – 40
		1	10 – 45
		2	10 – 50
		1	10 – 55
KIT, REPAIR	700723560	1	80 – 85
KIT, REPAIR	7738800	1	80 – 85
KIT, REPAIR	8732661	1	80 – 80
KIT, SEAL	700711114	1	70 – 25
KIT, SEAL	700712678	3	70 – 50
		1	70 – 70
KIT, SEAL	700714382	1	70 – 55
KIT, SEAL	700715662	1	70 – 15
		6	70 – 15
KIT, SEAL	700715929	3	70 – 20
		5	70 – 20
KIT, SEAL	700719151	1	70 – 70
KIT, SEAL	700720178	1	70 – 35

		Qty	PAGE
KIT, SEAL	700720460	1	60 – 315
KIT, SEAL	700722237	1	80 – 80
KNIFE	700113188P	7	40 – 60
KNIFE	700718710	1	50 – 50
		1	50 – 90
KNIFE	700721367	19	20 – 45
KNOTTER	700700968	1	50 – 45
		1	50 – 50
		1	50 – 90
LAMP	700721617	3	30 – 70
LATCH	700714528	2	20 – 140
		2	20 – 145
		2	20 – 150
		1	20 – 155
		1	20 – 160
		2	20 – 165
		2	20 – 170
		6	60 – 30
		2	60 – 35
		1	60 – 40
		1	60 – 45
		2	60 – 50
		1	60 – 55
		1	60 – 60
LIGHT	700716461	2	30 – 55
		2	30 – 60
		2	30 – 65
LIGHT	700726172	1	30 – 60
		1	30 – 65
LINK	329264M91	1	20 – 85
		1	20 – 90
		1	20 – 95
LINK	329277M91	2	20 – 100
		2	20 – 105
		2	20 – 110
LINK	700124036P	3	40 – 5
LINK	700720263	1	10 – 125
LINK	7088008	1	10 – 110
LINK	86405	1	10 – 105
LOCKING PLATE	6613624P	1	50 – 50
		1	50 – 90

RECOMMENDED STOCKING PARTS

D4

		Qty	PAGE
LOCKNUT	704247	38	20–45
		8	20–75
		2	40–10
		6	50–10
		2	50–20
		18	50–65
		12	50–70
		2	50–185
		4	60–100
		2	60–105
		4	60–105
		5	60–105
		4	60–110
		12	60–130
		15	60–135
		18	60–140
		4	60–145
		4	60–150
		4	60–155
		4	60–160
		4	60–165
		4	60–170
		4	60–175
		4	60–180
		4	60–205
		2	60–255
		2	80–50
		2	80–70
MAGNET	700706340	2	30–5
		1	30–115
		1	80–45
		1	80–60
NEEDLE	700123233P	6	50–5
NIPPLE	70915276	1	10–75
		1	50–155
		1	50–160
NUT	370873X1	1	10–80
		10	80–40
NUT	700703458	24	50–5
NUT	700710414	2	40–10
		1	40–10
		24	50–5
		2	50–55

		Qty	PAGE
NUT	700711238	1	10–10
		2	10–65
		5	10–105
		4	10–110
		2	10–110
		4	10–125
		4	20–5
		4	20–10
		5	20–30
		4	20–35
		6	20–55
		18	20–60
		4	20–70
		2	20–80
		14	20–95
		12	20–110
		6	20–140
		3	20–145
		6	20–150
		3	20–155
		3	20–160
		3	20–165
		3	20–170
		34	30–5
		34	30–10
		11	30–15
		1	30–20
		8	30–20
		1	30–25
		18	30–25
		X	30–25
		6	30–30
		3	30–35
		3	30–40
		1	30–45
		3	30–50
		11	30–55
		2	30–60
		4	30–60
		4	30–65
		1	30–70
		5	30–75
		74	40–25
		18	40–30
		31	40–35
		10	40–40
		4	40–45
		2	40–45
		17	50–10

		Qty	PAGE
		4	50–10
		21	50–15
		2	50–30
		8	50–80
		14	50–120
		14	50–125
		8	50–130
		5	50–135
		40	60–5
		2	60–15
		33	60–30
		12	60–35
		9	60–40
		9	60–45
		11	60–50
		8	60–55
		8	60–60
		2	60–85
		3	60–85
		4	60–85
		5	60–85
		7	60–85
		12	60–90
		12	60–95
		12	60–100
		14	60–105
		4	60–105
		5	60–105
		12	60–110
		20	60–110
		3	60–110
		4	60–110
		6	60–125
		5	60–130
		5	60–135
		12	60–140
		2	60–205
		2	60–215
		3	60–215
		8	60–215
		8	60–220
		1	60–225
		3	60–225
		3	60–230
		3	60–235
		1	60–240
		2	70–5
		2	70–10
		3	70–40

		Qty	PAGE
		2	70–45
		4	80–45
		4	80–60
		8	80–65
		5	80–75
		10	80–80
NUT	700715751	1	10–100
		1	10–110
		1	10–125
		1	40–5
NUT	704486	1	10–60
		1	50–45
NUT	70917421	2	40–50
		1	50–45
		6	50–65
NUT	7704208	2	20–175
NUT	874404	6	50–85
NUT	Y704072	4	20–145
		4	30–50
		8	30–65
		6	50–85
		12	60–30
		4	60–35
		4	60–40
		4	60–50
		4	60–55
		4	60–60
		2	60–65
		2	60–70
		2	60–75
		2	60–80
		4	60–145
		4	60–150
		4	60–155
		4	60–160
		4	60–165
		4	60–170
		4	60–175
		4	60–180
O RING	700706050	1	10–80
O RING	7040330	1	10–80
O RING	70921205	1	70–5
		X	70–10
		1	80–80
O RING	70921206	1	80–75
		1	80–80
		1	80–85
O RING	70921214	2	80–85

RECOMMENDED STOCKING PARTS

D5

		Qty	PAGE
O RING	70921349	2	70–30
		1	70–40
		1	70–40
		X	70–45
O RING	70921882	1	30–25
O RING	70923561	1	50–50
O RING	831452M1	1	10–100
		1	70–5
		1	70–5
		X	70–10
		X	70–45
		X	70–60
		X	70–65
OIL SEAL	700715740	2	20–35
		2	40–55
PAWL	700113036	2	10–15
		2	10–75
PIN	700113037	2	10–15
		2	10–75
PIN	70922135	1	50–45
PIN	70922598	3	50–45
		1	50–90
PINION	702700040	1	50–45
PLATE	6522866P	1	10–75
		1	10–120
PLATE	6523807	1	50–45
PLATE	700112903P	3	10–75
		1	10–120
PROTECTOR	700129647P	6	60–5
RECEIVER	700714529	2	20–140
		2	20–145
		2	20–150
		1	20–155
		2	20–160
		2	20–165
		2	20–170
		6	60–30
		2	60–35
		2	60–40
		2	60–45
		2	60–50
		2	60–55
		2	60–60
		1	60–65
		1	60–70
		1	60–75
		1	60–80
REFLECTOR	700723134	6	50–85
REFLECTOR	8722894	6	50–85

		Qty	PAGE
RING	355994X1	2	10–25
RING	700720004	2	20–35
		2	40–55
RING	70927103	1	10–60
		10	40–80
RING	70927699	1	10–20
		1	10–75
RING	70927700	2	40–10
RING	70927728	1	50–50
RING	70927744	2	20–40
		1	50–20
		6	60–30
		2	60–130
		4	60–135
		2	60–150
		2	60–155
		10	60–160
		2	60–170
		2	60–175
		10	60–180
RING	70928720	8	60–10
RING	738633	2	50–35
RING	7852767	3	40–10
RING	Y740720	1	10–125
ROD	6523740P	6	50–65
		6	50–70
ROD	700137699P	7	20–10
ROD	700706503	6	50–85
ROD	702400048	6	50–10
		6	50–65
ROLL OF CHAIN	1836103M91	1	20–85
		1	20–90
		1	20–95
ROLL OF CHAIN	1836104M91	1	20–100
		1	20–100
		1	20–105
		1	20–105
		2	20–110
ROLL OF CHAIN	W980268US	1	10–105
ROLLER	6524623P	1	50–55
ROLLER	6524870P	1	40–40
ROLLER	700122799	1	50–50
ROLLER	700138225	1	40–40
		1	50–75
ROLLER	700140080	19	20–45
RUBBER	700137058	1	40–10

		Qty	PAGE
SCREW	7883374	1	10–70
		2	20–35
		6	20–50
		3	20–95
		3	20–110
		24	20–130
		3	30–55
		4	30–60
		4	30–65
		1	30–70
		2	30–75
		8	40–60
		1	60–50
		2	60–85
		4	60–100
		4	60–105
		5	60–105
		3	60–110
		4	60–110
		12	60–130
		15	60–135
		20	60–140
		2	70–30
		2	80–60
		1	80–75
SCREW	8701781	2	50–10
		2	50–20
SCREW	Y706549	6	50–85
SEAL	700706045	1	10–80
		2	10–95
SEAL	700706096	6	40–5
SEAL	700710542	1	10–125
SEAL	700715965	1	10–110
		1	10–125
SEAL	700716267	2	10–115
SEAL	700718774	1	80–80
SEAL	700723562	1	80–85
SEAL	70248372	2	20–175
SEAL	8044695	12	50–65
		12	50–70
SENSOR	700706398	8	30–5
		8	30–10
		5	30–25
		1	30–45
		1	30–115
		1	30–120
SENSOR	71391869	1	30–45
SENSOR	71393718	1	10–80

		Qty	PAGE
SETSCREW	70923306	3	40–10
		1	50–55
SHAFT	6553267	1	50–45
SHAFT	6591580	1	50–50
SHIM	6522932	2	10–15
		2	10–75
SHIM	6553275	2	50–45
		9	50–60
SLEEVE	7852718	1	10–80
SNAPRING	355919X1	1	10–110
		1	10–125
		1	50–40
		1	50–55
SNAPRING	70927732	2	40–40
		1	50–45
		2	50–75
SNAPRING	70928179	2	50–5
SOLENOID	700720041	4	70–15
		1	70–15
SOLENOID VALVE	1079721M1	2	70–20
SOLENOID VALVE	1079723M1	1	70–50
SPACER	158758	19	20–45
		1	60–245
		2	60–250
		1	60–265
		2	60–270
SPACER	2401516P	1	50–80
SPACER	6518302	2	40–65
SPACER	6530828P	2	50–10
SPACER	700137750P	1	20–135
		1	40–45
SPRING	58107B	8	10–120
		12	10–130
		6	20–115
		8	20–120
		8	20–125
SPRING	58644	10	50–60
		1	50–80
SPRING	6522700P	1	20–75
		1	20–80
SPRING	6553259P	2	50–45
SPRING	700706376	5	50–65
		5	50–70
		4	60–5
SPRING	700709636	1	50–80
SPRING	700714166	2	40–75
		4	40–80
		1	50–75
SPRING	700714985	1	50–35

RECOMMENDED STOCKING PARTS

D6

		Qty	PAGE
SPRING	700714986	6	50 – 10
		6	50 – 15
SPRING	700714987	1	40 – 45
SPRING	700720059	19	20 – 45
SPRING	700720548	2	20 – 5
		2	20 – 20
SPRING	758011	10	40 – 20
SPRING	758482	6	50 – 35
SPRING	7758212	2	60 – 30
SPRING	7758915	2	40 – 75
		1	60 – 15
		1	60 – 20
SPRING	858019	8	10 – 75
SPRING	858027	2	50 – 10
		2	50 – 20
SPRING	858308	1	40 – 40
		2	50 – 35
SPROCKET	87726	3	20 – 100
		3	20 – 105
		2	20 – 110
SPROCKET	87973	2	20 – 85
		1	20 – 90
		1	20 – 95
SPROCKET	Y747931	1	10 – 110
STRIPPER	700138858	1	50 – 45
STRIPPER	700161305P	5	20 – 35
STUD	6523229	1	50 – 45
SUPPORT	700102136	1	50 – 50
SWITCH	700113863	2	30 – 5
		1	30 – 115
		1	80 – 50
		1	80 – 70
SWITCH	700119161	2	30 – 10
		1	30 – 15
		2	30 – 20
		1	30 – 45
		1	30 – 120
		1	70 – 45
		1	80 – 65
SWITCH	700710208	1	30 – 5
		1	30 – 10
		1	30 – 20
		1	60 – 250
		1	60 – 270
SWITCH	700711188	1	30 – 20
TENSION SPRING	700712484	1	50 – 35
TENSION SPRING	700758888	1	20 – 30
TENSION SPRING	758268	1	40 – 15
		1	50 – 55

		Qty	PAGE
TENSION SPRING	758441	1	50 – 80
		2	60 – 245
		2	60 – 250
TENSIONER	6845077	1	50 – 10
TENSIONER	7895733	1	50 – 45
THERMOSTAT	700716952	1	10 – 80
TINE	700716132	8	20 – 135
TOP LOCKNUT	700703922	1	10 – 115
		6	40 – 5
		1	40 – 45
		1	50 – 5
		3	50 – 80
		2	80 – 35
		10	80 – 40
		3	80 – 50
		2	80 – 55
		3	80 – 70

		Qty	PAGE
TOP LOCKNUT	Y704734	14	10 – 60
		6	10 – 65
		7	10 – 70
		2	10 – 85
		4	10 – 110
		8	10 – 120
		4	10 – 125
		12	10 – 130
		4	20 – 15
		18	20 – 25
		20	20 – 45
		12	20 – 65
		8	20 – 120
		8	20 – 125
		8	20 – 135
		7	20 – 155
		1	20 – 170
		2	30 – 50
		2	40 – 40
		2	40 – 45
		6	40 – 50
		8	40 – 60
		8	40 – 65
		18	40 – 70
		5	40 – 80
		4	50 – 5
		4	50 – 80
		2	60 – 15
		2	60 – 20
		4	60 – 205
		1	60 – 210
		2	60 – 230
		13	60 – 245
		2	60 – 250
		6	60 – 250
		7	60 – 250
		4	60 – 260
		11	60 – 265
		11	60 – 270
		1	70 – 5
		6	70 – 5
		5	70 – 10
		2	70 – 30
		1	70 – 45
		3	70 – 60
		3	70 – 65
		28	80 – 45
		28	80 – 65
		4	80 – 85

		Qty	PAGE
TOP LOCKNUT	Y704742	2	10 – 5
		28	10 – 15
		20	10 – 60
		20	10 – 65
		20	10 – 70
		1	10 – 85
		4	10 – 110
		4	10 – 125
		2	20 – 10
		8	20 – 15
		6	20 – 25
		2	20 – 35
		2	20 – 45
		8	20 – 65
		6	20 – 70
		12	40 – 5
		6	40 – 10
		3	40 – 45
		2	40 – 50
		10	40 – 60
		6	40 – 70
		2	40 – 75
		8	50 – 5
		1	50 – 80
		1	60 – 245
		2	60 – 250
		8	60 – 260
		2	60 – 265
		2	60 – 270
		1	70 – 40
		1	70 – 45
		10	80 – 45
		2	80 – 50
		2	80 – 55
		10	80 – 65
		2	80 – 70
TRANSDUCER	700720228	1	30 – 5
		1	30 – 10
		1	30 – 95
		X	30 – 100
TRANSDUCER	700722199	1	30 – 25
WASHER	6591572	1	50 – 50
WASHER	700123293P	3	40 – 10
WASHER	700137107P	1	10 – 80
		1	10 – 105
WASHER	7852163	2	50 – 45
WASHER	7852593	2	50 – 50
WASHER	7852742	1	50 – 45

RECOMMENDED STOCKING PARTS

D7

		Qty	PAGE
WASHER	Y705525	2	**10 – 60**
		2	**10 – 65**
		1	**10 – 70**
		2	**10 – 125**
		15	**20 – 15**
		15	**20 – 65**
		2	**30 – 5**
		2	**30 – 10**
		1	**30 – 15**
		1	**30 – 25**
		4	**30 – 30**
		22	**40 – 25**
		2	**40 – 75**
		2	**50 – 140**
		6	**60 – 15**
		5	**60 – 20**
		12	**60 – 30**
		2	**60 – 35**
		2	**60 – 40**
		1	**60 – 45**
		2	**60 – 50**
		2	**60 – 55**
		1	**60 – 60**
		2	**60 – 65**
		2	**60 – 70**
		1	**60 – 75**
		2	**60 – 80**
		6	**60 – 125**
		2	**70 – 45**
		5	**80 – 75**

		Qty	PAGE
WASHER	Y705533	2	**10 – 85**
		1	**20 – 45**
		3	**20 – 85**
		3	**20 – 90**
		3	**20 – 100**
		3	**20 – 105**
		8	**20 – 135**
		9	**30 – 5**
		9	**30 – 10**
		1	**30 – 15**
		1	**30 – 20**
		1	**30 – 25**
		4	**30 – 30**
		3	**30 – 35**
		3	**30 – 40**
		3	**30 – 50**
		6	**30 – 70**
		2	**40 – 10**
		20	**40 – 20**
		8	**40 – 25**
		10	**40 – 40**
		15	**40 – 60**
		16	**40 – 60**
		2	**50 – 30**
		4	**50 – 40**
		6	**50 – 80**
		2	**60 – 15**
		2	**60 – 15**
		2	**60 – 20**
		14	**60 – 30**
		1	**60 – 35**
		1	**60 – 50**
		1	**60 – 55**
		1	**60 – 60**
		3	**60 – 85**
		4	**60 – 85**
		5	**60 – 85**
		14	**60 – 105**
		2	**60 – 105**
		4	**60 – 105**
		5	**60 – 105**
		20	**60 – 110**
		3	**60 – 110**
		4	**60 – 110**
		6	**60 – 125**
		6	**60 – 145**
		6	**60 – 150**
		4	**60 – 155**
		4	**60 – 160**

		Qty	PAGE
		6	**60 – 165**
		6	**60 – 170**
		4	**60 – 175**
		4	**60 – 180**
		3	**60 – 205**
		3	**60 – 215**
		3	**60 – 220**
		1	**60 – 225**
		1	**60 – 235**
		4	**70 – 45**
		1	**70 – 60**
		1	**70 – 65**
		4	**80 – 65**
		8	**80 – 80**
WORM GEAR	7894413	1	**50 – 45**
WRAPPER	700129658P	31	**20 – 50**
		31	**20 – 55**
		31	**20 – 60**

	Qty	PAGE

PIECES DONT LE STOCKAGE EST RECOMMANDE

D8

		Qty	PAGE
AGRAFE	866566	2	50 – 5
		6	50 – 35
		1	50 – 90
AIGUILLE	700123233P	6	50 – 5
AIMANT	700706340	2	30 – 5
		1	30 – 115
		1	80 – 45
		1	80 – 60
AMPOULE	285871M1	1	30 – 60
		1	30 – 65
		1	30 – 70
AMPOULE 12V 21W	621235M1	1	30 – 55
		2	30 – 60
		1	30 – 65
AMPOULE 21/5W	908543M1	1	30 – 55
		2	30 – 60
		1	30 – 65
ANNEAU	355994X1	2	10 – 25
ANNEAU	700720004	2	20 – 35
		2	40 – 55
ANNEAU	70927103	1	10 – 60
		10	40 – 80
ANNEAU	70927699	1	10 – 20
		1	10 – 75
ANNEAU	70927700	2	40 – 10
ANNEAU	70927728	1	50 – 50
ANNEAU	70927744	2	20 – 40
		1	50 – 20
		6	60 – 30
		2	60 – 130
		4	60 – 135
		2	60 – 150
		2	60 – 155
		10	60 – 160
		2	60 – 170
		2	60 – 175
		10	60 – 180
ANNEAU	70928720	8	60 – 10
ANNEAU	738633	2	50 – 35
ANNEAU	7852767	3	40 – 10
ANNEAU	Y740720	1	10 – 125
ARBRE	6553267	1	50 – 45
ARBRE	6591580	1	50 – 50
AXE	700706685	5	50 – 65
		5	50 – 70
		4	60 – 5
		2	70 – 60
		2	70 – 65

		Qty	PAGE
BAGUE	52761	1	10 – 105
		5	10 – 110
		6	20 – 35
		6	60 – 10
BAGUE	6523500	6	10 – 110
		2	10 – 125
		3	10 – 125
		7	50 – 40
		3	50 – 55
BAGUE	6523799	1	30 – 15
		10	50 – 35
BAGUE	700122681P	6	50 – 65
		6	50 – 70
BAGUE	700123261	1	50 – 5
BAGUE	700124038	12	40 – 5
BAGUE	700129529	2	40 – 10
BAGUE	700138307	14	20 – 40
BAGUE	700139037	6	20 – 40
BAGUE	700161321	2	20 – 35
BAGUE	70936273	1	60 – 10
BAGUE	712810	1	40 – 10
		3	50 – 5
BAGUE	740217	1	20 – 35
BAGUE	7852114	2	10 – 75
BAGUE	Y52316	2	40 – 10
		5	40 – 40
		3	50 – 5
		1	60 – 290
		2	60 – 305
		2	60 – 310
		1	60 – 320
		1	60 – 325
		1	60 – 330
		1	60 – 335
BAGUE ETANCHEITE	700715740	2	20 – 35
		2	40 – 55
BALAI	700713894	12	40 – 60
BANDE	844498	2	80 – 85
BARBOTIN	87726	3	20 – 100
		3	20 – 105
		2	20 – 110
BARBOTIN	87973	2	20 – 85
		1	20 – 90
		1	20 – 95
BARBOTIN	Y747931	1	10 – 110
BARRE	700113189	7	40 – 60
BOBINE	700725827	1	70 – 20
		3	70 – 20
		2	70 – 50

		Qty	PAGE
BOITE	700114076	1	30 – 115
BOITE	700114079	1	50 – 180
BORNE	700706683	3	50 – 120
		3	50 – 125
		2	50 – 130
		6	50 – 175
		2	50 – 180
BORNE	70919171	3	50 – 135
BOULON	700707998	8	10 – 75
BOULON	700710413	24	50 – 5
BOULON	700728135	10	60 – 285
		16	60 – 305
		16	60 – 310
		8	60 – 320
		8	60 – 325
		8	60 – 330
		8	60 – 335

		Qty	PAGE
BOULON	70922786	2	10 – 125
		4	20 – 5
		4	20 – 10
		18	20 – 25
		2	20 – 30
		18	20 – 60
		2	20 – 65
		3	20 – 85
		3	20 – 90
		11	20 – 95
		3	20 – 100
		3	20 – 105
		6	20 – 110
		8	20 – 135
		7	20 – 155
		18	40 – 25
		10	40 – 40
		6	40 – 45
		8	40 – 60
		6	40 – 65
		18	40 – 70
		4	50 – 10
		5	50 – 15
		6	50 – 65
		6	50 – 70
		8	50 – 80
		2	50 – 80
		8	60 – 30
		4	60 – 35
		2	60 – 40
		2	60 – 45
		2	60 – 50
		2	60 – 55
		2	60 – 60
		5	60 – 85
		5	60 – 105
		4	60 – 110
		2	60 – 130
		2	60 – 135
		4	60 – 140
		8	80 – 45
		8	80 – 55
		8	80 – 65
		4	80 – 80
BOULON	70934842	4	20 – 15
		4	20 – 65
		4	20 – 70
		12	60 – 5

PIECES DONT LE STOCKAGE EST RECOMMANDE

D9

		Qty	PAGE
BOULON	8701476	2	50 – 5
		6	50 – 35
		1	50 – 90
BOULON	Y703132	72	20 – 50
		62	20 – 55
		62	20 – 60
		15	20 – 140
		9	20 – 145
		15	20 – 150
		8	20 – 155
		6	20 – 160
		4	20 – 165
		8	20 – 170
		9	40 – 25
		5	40 – 35
BOULON UNC	354269X1	1	60 – 245
		1	60 – 265
BOULON UNC	354289X1	1	10 – 115
		10	80 – 40
BOULON UNC	354636X1	12	10 – 130
		1	70 – 40
		1	70 – 45
BOULON UNC	354667X1	1	10 – 85
		2	60 – 245
		2	60 – 250
		2	60 – 265
		2	60 – 270
CALE REGLAGE	6522932	2	10 – 15
		2	10 – 75
CALE REGLAGE	6553275	2	50 – 45
		9	50 – 60
CAME	700113323P	1	50 – 45
CAOUTCHOUC	700137058	1	40 – 10
CAPTEUR	700720228	1	30 – 5
		1	30 – 10
		1	30 – 95
		X	30 – 100
CAPTEUR	700722199	1	30 – 25
CARTOUCHE	700706153	2	70 – 15
CATADIOPTRE	700723134	6	50 – 85
CATADIOPTRE	8722894	6	50 – 85
CHAINE	700720264	1	10 – 125
CHAINE	7087935	1	10 – 110
CHAPEAU	26260	2	20 – 175
CHIEN	700129571P	4	40 – 80
CHIEN	700137654P	4	60 – 5
CHIEN	700137655P	5	50 – 65
		5	50 – 70
CLAVETTE	Y61952	1	20 – 110

		Qty	PAGE
CLIP	70925993	1	10 – 110
		1	20 – 110
CLIP	7894975	2	60 – 30
COLLIER	70925094	6	30 – 5
		6	30 – 10
		1	30 – 15
		5	30 – 20
		4	30 – 25
		X	30 – 25
		1	30 – 30
		5	30 – 55
		4	30 – 70
		2	30 – 80
		18	50 – 95
		36	50 – 105
		1	50 – 120
		2	50 – 135
		6	50 – 145
		6	50 – 150
		2	50 – 155
		2	50 – 160
		1	70 – 40
CONE	70341230	4	20 – 175
CONE ROULEMENT	700706039	2	10 – 80
CONE ROULEMENT	70927347	2	10 – 115
COUDE	700706682	5	50 – 120
		5	50 – 125
		6	50 – 130
		11	50 – 175
		2	50 – 180
COURONNE CONIQUE	7894389	1	50 – 45
COURROIE	700717886	1	80 – 80
COUSSINET	1124697	1	10 – 20
		1	10 – 75
COUSSINET	50021	1	20 – 85
		1	20 – 90
		2	20 – 95
		1	20 – 100
		1	20 – 105
		3	20 – 110
		1	20 – 155
		1	20 – 170
COUSSINET	50393	2	40 – 40

		Qty	PAGE
COUSSINET	51292	1	20 – 85
		1	20 – 90
		1	20 – 95
		2	20 – 100
		2	20 – 105
		1	20 – 110
		1	20 – 140
		1	20 – 145
		1	20 – 150
		1	20 – 160
		1	20 – 165
COUSSINET	51318	1	10 – 60
		1	10 – 65
		1	10 – 70
		1	20 – 5
		1	20 – 20
COUSSINET	6105159	3	40 – 45
COUSSINET	700109753P	1	40 – 5
COUSSINET	700124004P	1	10 – 60
		1	10 – 65
		1	10 – 70
COUSSINET	700140331	1	10 – 125
		1	20 – 35
COUSSINET	700704263	1	10 – 110
		1	10 – 125
		1	40 – 5
COUSSINET	700706124	1	40 – 55
COUSSINET	700706131	6	40 – 5
COUSSINET	700706956	1	10 – 20
		1	10 – 75
COUSSINET	700715741	1	20 – 35
		1	40 – 55
COUSSINET	700715941	1	50 – 25
COUSSINET	700716611	1	10 – 110
		1	40 – 5
COUSSINET	700720050	1	20 – 135
		1	40 – 45
COUSSINET	700720348	19	20 – 40
COUSSINET	700720349	19	20 – 45
COUSSINET	70590704	4	20 – 130
COUSSINET	711770	10	40 – 80
		1	50 – 5
COUSSINET	712158	1	40 – 5
COUSSINET	712604	1	10 – 110
		1	20 – 110
COUSSINET	7713829	2	40 – 60
COUSSINET	7713837	2	40 – 10
COUSSINET	8050478	1	50 – 40
COUSSINET	8050866	2	50 – 35

		Qty	PAGE
COUSSINET	Y710392	10	80 – 45
		10	80 – 65
COUTEAU	700113188P	7	40 – 60
COUTEAU	700718710	1	50 – 50
		1	50 – 90
COUTEAU	700721367	19	20 – 45
COUVERTURE	700129658P	31	20 – 50
		31	20 – 55
		31	20 – 60
CROCHET	1712835	1	50 – 50
CUVETTE ROULEMNT	700706038	2	10 – 80
CUVETTE ROULEMNT	70927348	2	10 – 115
CUVETTE ROULEMNT	832190M1	4	20 – 175
DEBOURREUR	700138858	1	50 – 45
DEBOURREUR	700161305P	5	20 – 35
DECLENCHEUR	700709996	1	30 – 5
		1	30 – 10
		1	30 – 20
		1	60 – 250
		1	60 – 270
DECLENCHEUR	700710211	2	30 – 10
		1	30 – 15
		2	30 – 20
		1	30 – 45
		1	30 – 120
		1	70 – 45
		1	80 – 65
DENT A RESSORT	700716132	8	20 – 135
DETECTEUR	700706398	8	30 – 5
		8	30 – 10
		5	30 – 25
		1	30 – 45
		1	30 – 115
		1	30 – 120
DETECTEUR	71391869	1	30 – 45
DETECTEUR	71393718	1	10 – 80
DISQUE	1712868	1	50 – 45
DISQUE	700108820	4	10 – 75
		2	10 – 120
		4	10 – 130
DISQUE	700711025	2	20 – 115
DISQUE EMBRAYAGE	700140071P	1	10 – 120
		3	10 – 130
DISQUE EMBRAYAGE	700140072P	1	10 – 120
		1	10 – 130
DISQUE EMBRAYAGE	700710945	2	20 – 120
		2	20 – 125
DISQUE EMBRAYAGE	700710946	2	40 – 20
		2	50 – 60

PIECES DONT LE STOCKAGE EST RECOMMANDE

D10

		Qty	PAGE
DOIGT	700113345P	6	50 – 65
		6	50 – 70
DURITE	700706798	3	50 – 135
ECROU	370873X1	1	10 – 80
		10	80 – 40
ECROU	700703458	24	50 – 5
ECROU	700710414	2	40 – 10
		1	40 – 10
		24	50 – 5
		2	50 – 55

		Qty	PAGE
ECROU	700711238	1	10 – 10
		2	10 – 65
		5	10 – 105
		4	10 – 110
		2	10 – 110
		4	10 – 125
		4	20 – 5
		4	20 – 10
		5	20 – 30
		4	20 – 35
		6	20 – 55
		18	20 – 60
		4	20 – 70
		2	20 – 80
		14	20 – 95
		12	20 – 110
		6	20 – 140
		3	20 – 145
		6	20 – 150
		3	20 – 155
		3	20 – 160
		3	20 – 165
		3	20 – 170
		34	30 – 5
		34	30 – 10
		11	30 – 15
		1	30 – 20
		8	30 – 20
		1	30 – 25
		18	30 – 25
		X	30 – 25
		6	30 – 30
		3	30 – 35
		3	30 – 40
		1	30 – 45
		3	30 – 50
		11	30 – 55
		2	30 – 60
		4	30 – 60
		4	30 – 65
		1	30 – 70
		5	30 – 75
		74	40 – 25
		18	40 – 30
		31	40 – 35
		10	40 – 40
		4	40 – 45
		2	40 – 45
		17	50 – 10

		Qty	PAGE
		4	50 – 10
		21	50 – 15
		2	50 – 30
		8	50 – 80
		14	50 – 120
		14	50 – 125
		8	50 – 130
		5	50 – 135
		40	60 – 5
		2	60 – 15
		33	60 – 30
		12	60 – 35
		9	60 – 40
		9	60 – 45
		11	60 – 50
		8	60 – 55
		8	60 – 60
		2	60 – 85
		3	60 – 85
		4	60 – 85
		5	60 – 85
		7	60 – 85
		12	60 – 90
		12	60 – 95
		12	60 – 100
		14	60 – 105
		4	60 – 105
		5	60 – 105
		12	60 – 110
		20	60 – 110
		3	60 – 110
		4	60 – 110
		6	60 – 125
		5	60 – 130
		5	60 – 135
		12	60 – 140
		2	60 – 205
		2	60 – 215
		3	60 – 215
		8	60 – 215
		8	60 – 220
		1	60 – 225
		3	60 – 225
		3	60 – 230
		3	60 – 235
		1	60 – 240
		2	70 – 5
		2	70 – 10
		3	70 – 40

		Qty	PAGE
		2	70 – 45
		4	80 – 45
		4	80 – 60
		8	80 – 65
		5	80 – 75
		10	80 – 80
ECROU	700715751	1	10 – 100
		1	10 – 110
		1	10 – 125
		1	40 – 5
ECROU	704486	1	10 – 60
		1	50 – 45
ECROU	70917421	2	40 – 50
		1	50 – 45
		6	50 – 65
ECROU	7704208	2	20 – 175
ECROU	874404	6	50 – 85
ECROU	Y704072	4	20 – 145
		4	30 – 50
		8	30 – 65
		6	50 – 85
		12	60 – 30
		4	60 – 35
		4	60 – 40
		4	60 – 50
		4	60 – 55
		4	60 – 60
		2	60 – 65
		2	60 – 70
		2	60 – 75
		2	60 – 80
		4	60 – 145
		4	60 – 150
		4	60 – 155
		4	60 – 160
		4	60 – 165
		4	60 – 170
		4	60 – 175
		4	60 – 180

PIECES DONT LE STOCKAGE EST RECOMMANDE

D11

		Qty	PAGE
ECROU BLOCAGE	704247	38	20 – 45
		8	20 – 75
		2	40 – 10
		6	50 – 10
		2	50 – 20
		18	50 – 65
		12	50 – 70
		2	50 – 185
		4	60 – 100
		2	60 – 105
		4	60 – 105
		5	60 – 105
		4	60 – 110
		12	60 – 130
		15	60 – 135
		18	60 – 140
		4	60 – 145
		4	60 – 150
		4	60 – 155
		4	60 – 160
		4	60 – 165
		4	60 – 170
		4	60 – 175
		4	60 – 180
		4	60 – 205
		2	60 – 255
		2	80 – 50
		2	80 – 70
ECROU FREIN	700703922	1	10 – 115
		6	40 – 5
		1	40 – 45
		1	50 – 5
		3	50 – 80
		2	80 – 35
		10	80 – 40
		3	80 – 50
		2	80 – 55
		3	80 – 70

		Qty	PAGE
ECROU FREIN	Y704734	14	10 – 60
		6	10 – 65
		7	10 – 70
		2	10 – 85
		4	10 – 110
		8	10 – 120
		4	10 – 125
		12	10 – 130
		4	20 – 15
		18	20 – 25
		20	20 – 45
		12	20 – 65
		8	20 – 120
		8	20 – 125
		8	20 – 135
		7	20 – 155
		1	20 – 170
		2	30 – 50
		2	40 – 40
		2	40 – 45
		6	40 – 50
		8	40 – 60
		8	40 – 65
		18	40 – 70
		5	40 – 80
		4	50 – 5
		4	50 – 80
		2	60 – 15
		2	60 – 20
		4	60 – 205
		1	60 – 210
		2	60 – 230
		13	60 – 245
		2	60 – 250
		6	60 – 250
		7	60 – 250
		4	60 – 260
		11	60 – 265
		11	60 – 270
		1	70 – 5
		6	70 – 5
		5	70 – 10
		2	70 – 30
		1	70 – 45
		3	70 – 60
		3	70 – 65
		28	80 – 45
		28	80 – 65
		4	80 – 85

		Qty	PAGE
ECROU FREIN	Y704742	2	10 – 5
		28	10 – 15
		20	10 – 60
		20	10 – 65
		20	10 – 70
		1	10 – 85
		4	10 – 110
		4	10 – 125
		2	20 – 10
		8	20 – 15
		6	20 – 25
		2	20 – 35
		2	20 – 45
		8	20 – 65
		6	20 – 70
		12	40 – 5
		6	40 – 10
		3	40 – 45
		2	40 – 50
		10	40 – 60
		6	40 – 70
		2	40 – 75
		8	50 – 5
		1	50 – 80
		1	60 – 245
		2	60 – 250
		8	60 – 260
		2	60 – 265
		2	60 – 270
		1	70 – 40
		1	70 – 45
		10	80 – 45
		2	80 – 50
		2	80 – 55
		10	80 – 65
		2	80 – 70
ELEMENT	7033616	1	80 – 85
ENGRENAGE	7894454	1	50 – 45
ENGRENAGE	8802795	2	50 – 10
		2	50 – 20
ENSEMBLE BOULON	6521868	1	10 – 80
		1	80 – 40
ENTRETOISE	158758	19	20 – 45
		1	60 – 245
		2	60 – 250
		1	60 – 265
		2	60 – 270
ENTRETOISE	2401516P	1	50 – 80
ENTRETOISE	6518302	2	40 – 65

		Qty	PAGE
ENTRETOISE	6530828P	2	50 – 10
ENTRETOISE	700137750P	1	20 – 135
		1	40 – 45
FEU	700716461	2	30 – 55
		2	30 – 60
		2	30 – 65
FEU	700726172	1	30 – 60
		1	30 – 65
FILTRE	7825516	1	80 – 85
FILTRE	8799280	1	10 – 95
		2	70 – 30
FLASQUE	051417P	4	20 – 85
		4	20 – 90
		6	20 – 95
		6	20 – 100
		6	20 – 105
		8	20 – 110
		2	20 – 140
		2	20 – 145
		2	20 – 150
		2	20 – 155
		2	20 – 160
		2	20 – 165
		2	20 – 170
FLASQUE	50591	4	40 – 45
FLASQUE	700108622P	10	80 – 45
		10	80 – 65
FLASQUE	700140328P	1	20 – 20
FLASQUE	71130258	2	20 – 5
		2	20 – 20
FLASQUE	714360	2	50 – 40
FLASQUE	Y710293	8	20 – 130
		2	20 – 135
		4	80 – 45
		4	80 – 65
FUSIBLE	1695966M1	1	30 – 105
		2	30 – 120
FUSIBLE	3387318M1	1	30 – 105
		2	30 – 120
GALET	6524623P	1	50 – 55
GALET	6524870P	1	40 – 40
GALET	700122799	1	50 – 50
GALET	700138225	1	40 – 40
		1	50 – 75
GALET	700140080	19	20 – 45

PIECES DONT LE STOCKAGE EST RECOMMANDE

D 12

		Qty	PAGE
GARDE	700139255	1	50 – 20
		6	60 – 30
		2	60 – 150
		10	60 – 160
		2	60 – 170
		10	60 – 180
GOUJON	6523229	1	50 – 45
GOUPILLE	700113037	2	10 – 15
		2	10 – 75
GOUPILLE	70922135	1	50 – 45
GOUPILLE	70922598	3	50 – 45
		1	50 – 90
GRAISSEUR	70923219	1	10 – 5
		1	10 – 20
		1	10 – 40
		1	10 – 45
		1	10 – 50
		1	10 – 55
		1	10 – 60
		1	10 – 65
		3	10 – 80
		1	10 – 110
		1	10 – 125
		1	20 – 5
		1	20 – 20
		1	20 – 30
		1	20 – 35
		1	20 – 75
		1	20 – 80
		1	40 – 10
		2	40 – 50
		1	50 – 45
		1	50 – 75
		2	60 – 10
		2	60 – 130
		4	60 – 135
		4	60 – 140
		2	60 – 215
		2	60 – 220
		1	80 – 35
		2	80 – 55

		Qty	PAGE
GRAISSEUR	71339847	2	60 – 35
		2	60 – 40
		2	60 – 45
		2	60 – 50
		2	60 – 55
		2	60 – 60
		4	60 – 145
		4	60 – 150
		4	60 – 155
		4	60 – 160
		4	60 – 165
		4	60 – 170
		4	60 – 175
		4	60 – 180
GRAISSEUR COUDE	70915276	1	10 – 75
		1	50 – 155
		1	50 – 160
INTERRUPTEUR	700113863	2	30 – 5
		1	30 – 115
		1	80 – 50
		1	80 – 70
INTERRUPTEUR	700119161	2	30 – 10
		1	30 – 15
		2	30 – 20
		1	30 – 45
		1	30 – 120
		1	70 – 45
		1	80 – 65
INTERRUPTEUR	700710208	1	30 – 5
		1	30 – 10
		1	30 – 20
		1	60 – 250
		1	60 – 270
INTERRUPTEUR	700711188	1	30 – 20
JEU	700138038	1	80 – 40
JEU	700710807	1	50 – 115
JEU	700711425	1	10 – 35
		1	10 – 45
		1	10 – 55
JEU	700712574	2	10 – 40
		2	10 – 45
		2	10 – 50
		2	10 – 55
JEU	700720098	1	50 – 175

		Qty	PAGE
JEU	7815053	1	10 – 20
		2	10 – 30
		2	10 – 35
		1	10 – 40
		1	10 – 45
		1	10 – 50
		1	10 – 55
		1	10 – 75
JEU COUSSINETS	700720153	2	10 – 30
		2	10 – 35
JEU COUSSINETS	71308951	2	40 – 45
JEU ETANCHEITE	700711114	1	70 – 25
JEU ETANCHEITE	700712678	3	70 – 50
		1	70 – 70
JEU ETANCHEITE	700714382	1	70 – 55
JEU ETANCHEITE	700715662	1	70 – 15
		6	70 – 15
JEU ETANCHEITE	700715929	3	70 – 20
		5	70 – 20
JEU ETANCHEITE	700719151	1	70 – 70
JEU ETANCHEITE	700720178	1	70 – 35
JEU ETANCHEITE	700720460	1	60 – 315
JEU ETANCHEITE	700722237	1	80 – 80
JEU REPARATION	700150670	1	50 – 90
JEU REPARATION	700154471	1	30 – 120
JEU REPARATION	700719338	1	70 – 75
JEU REPARATION	700720122	1	10 – 30
		1	10 – 40
		1	10 – 50
JEU REPARATION	700723268	1	10 – 40
		1	10 – 45
		2	10 – 50
		1	10 – 55
JEU REPARATION	700723560	1	80 – 85
JEU REPARATION	7738800	1	80 – 85
JEU REPARATION	8732661	1	80 – 80
JOINT	359119X1	2	10 – 95
JOINT ETANCHEITE	700706045	1	10 – 80
		2	10 – 95
JOINT ETANCHEITE	700706096	6	40 – 5
JOINT ETANCHEITE	700710542	1	10 – 125
JOINT ETANCHEITE	700715965	1	10 – 110
		1	10 – 125
JOINT ETANCHEITE	700716267	2	10 – 115
JOINT ETANCHEITE	700718774	1	80 – 80
JOINT ETANCHEITE	700723562	1	80 – 85
JOINT ETANCHEITE	70248372	2	20 – 175
JOINT ETANCHEITE	8044695	12	50 – 65
		12	50 – 70

		Qty	PAGE
JOINT TORIQUE	700706050	1	10 – 80
JOINT TORIQUE	7040330	1	10 – 80
JOINT TORIQUE	70921205	1	70 – 5
		X	70 – 10
		1	80 – 80
JOINT TORIQUE	70921206	1	80 – 75
		1	80 – 80
		1	80 – 85
JOINT TORIQUE	70921214	2	80 – 85
JOINT TORIQUE	70921349	2	70 – 30
		1	70 – 40
		1	70 – 40
		X	70 – 45
JOINT TORIQUE	70921882	1	30 – 25
JOINT TORIQUE	70923561	1	50 – 50
JOINT TORIQUE	831452M1	1	10 – 100
		1	70 – 5
		1	70 – 5
		X	70 – 10
		X	70 – 45
		X	70 – 60
		X	70 – 65
LINGUET	700113036	2	10 – 15
		2	10 – 75
MAILLON	329264M91	1	20 – 85
		1	20 – 90
		1	20 – 95
MAILLON	329277M91	2	20 – 100
		2	20 – 105
		2	20 – 110
MAILLON	700124036P	3	40 – 5
MAILLON	700720263	1	10 – 125
MAILLON	7088008	1	10 – 110
MAILLON	86405	1	10 – 105
MAILLON COUDE	329266M91	1	20 – 90
MAILLON COUDE	329420M91	2	20 – 100
		2	20 – 105
MANCHON	7852718	1	10 – 80
NOUEUR	700700968	1	50 – 45
		1	50 – 50
		1	50 – 90
PHARE	700721617	3	30 – 70
PIECE SUPPORT	8045148	1	50 – 45
PIGNON	702700040	1	50 – 45
PIGNON HELICOIDA	7894413	1	50 – 45
PLAQUE	6522866P	1	10 – 75
		1	10 – 120
PLAQUE	6523807	1	50 – 45

PIECES DONT LE STOCKAGE EST RECOMMANDE

D13

		Qty	PAGE
PLAQUE	700112903P	3	10 – 75
		1	10 – 120
PLAQUE BLOCAGE	6613624P	1	50 – 50
		1	50 – 90
PLOT	863738	1	50 – 50
POIGNEE	7894967	2	60 – 30
PROTECTEUR	700129647P	6	60 – 5
RECEVEUR	700714529	2	20 – 140
		2	20 – 145
		2	20 – 150
		1	20 – 155
		2	20 – 160
		2	20 – 165
		2	20 – 170
		6	60 – 30
		2	60 – 35
		2	60 – 40
		2	60 – 45
		2	60 – 50
		2	60 – 55
		2	60 – 60
		1	60 – 65
		1	60 – 70
		1	60 – 75
		1	60 – 80
RESSORT	58107B	8	10 – 120
		12	10 – 130
		6	20 – 115
		8	20 – 120
		8	20 – 125
RESSORT	58644	10	50 – 60
		1	50 – 80
RESSORT	6522700P	1	20 – 75
		1	20 – 80
RESSORT	6553259P	2	50 – 45
RESSORT	700706376	5	50 – 65
		5	50 – 70
		4	60 – 5
RESSORT	700709636	1	50 – 80
RESSORT	700714166	2	40 – 75
		4	40 – 80
		1	50 – 75
RESSORT	700714985	1	50 – 35
RESSORT	700714986	6	50 – 10
		6	50 – 15
RESSORT	700714987	1	40 – 45
RESSORT	700720059	19	20 – 45
RESSORT	700720548	2	20 – 5
		2	20 – 20

		Qty	PAGE
RESSORT	758011	10	40 – 20
RESSORT	758482	6	50 – 35
RESSORT	7758212	2	60 – 30
RESSORT	7758915	2	40 – 75
		1	60 – 15
		1	60 – 20
RESSORT	858019	8	10 – 75
RESSORT	858027	2	50 – 10
		2	50 – 20
RESSORT	858308	1	40 – 40
		2	50 – 35
RESSORT DE COMPR	58511	2	20 – 5
		1	20 – 45
RESSORT TRACTION	700712484	1	50 – 35
RESSORT TRACTION	700758888	1	20 – 30
RESSORT TRACTION	758268	1	40 – 15
		1	50 – 55
RESSORT TRACTION	758441	1	50 – 80
		2	60 – 245
		2	60 – 250
RLT 6309 2RS	391069X1	2	10 – 25
RONDELLE	6591572	1	50 – 50
RONDELLE	700123293P	3	40 – 10
RONDELLE	700137107P	1	10 – 80
		1	10 – 105
RONDELLE	7852163	2	50 – 45
RONDELLE	7852593	2	50 – 50
RONDELLE	7852742	1	50 – 45

		Qty	PAGE
RONDELLE	Y705525	2	10 – 60
		2	10 – 65
		1	10 – 70
		2	10 – 125
		15	20 – 15
		15	20 – 65
		2	30 – 5
		2	30 – 10
		1	30 – 15
		1	30 – 25
		4	30 – 30
		22	40 – 25
		2	40 – 75
		2	50 – 140
		6	60 – 15
		5	60 – 20
		12	60 – 30
		2	60 – 35
		2	60 – 40
		1	60 – 45
		2	60 – 50
		2	60 – 55
		1	60 – 60
		2	60 – 65
		2	60 – 70
		1	60 – 75
		2	60 – 80
		6	60 – 125
		2	70 – 45
		5	80 – 75

		Qty	PAGE
RONDELLE	Y705533	2	10 – 85
		1	20 – 45
		3	20 – 85
		3	20 – 90
		3	20 – 100
		3	20 – 105
		8	20 – 135
		9	30 – 5
		9	30 – 10
		1	30 – 15
		1	30 – 20
		1	30 – 25
		4	30 – 30
		3	30 – 35
		3	30 – 40
		3	30 – 50
		6	30 – 70
		2	40 – 10
		20	40 – 20
		8	40 – 25
		10	40 – 40
		15	40 – 60
		16	40 – 60
		2	50 – 30
		4	50 – 40
		6	50 – 80
		2	60 – 15
		2	60 – 15
		2	60 – 20
		14	60 – 30
		1	60 – 35
		1	60 – 50
		1	60 – 55
		1	60 – 60
		3	60 – 85
		4	60 – 85
		5	60 – 85
		14	60 – 105
		2	60 – 105
		4	60 – 105
		5	60 – 105
		20	60 – 110
		3	60 – 110
		4	60 – 110
		6	60 – 125
		6	60 – 145
		6	60 – 150
		4	60 – 155
		4	60 – 160

PIECES DONT LE STOCKAGE EST RECOMMANDE

D14

		Qty	PAGE
		6	60 – 165
		6	60 – 170
		4	60 – 175
		4	60 – 180
		3	60 – 205
		3	60 – 215
		3	60 – 220
		1	60 – 225
		1	60 – 235
		4	70 – 45
		1	70 – 60
		1	70 – 65
		4	80 – 65
		8	80 – 80
RONDELLES PLATES	705541	12	10 – 85
		1	10 – 110
		18	20 – 35
		4	20 – 175
		2	40 – 30
		2	40 – 40
		3	40 – 45
		8	40 – 50
		4	40 – 60
		24	50 – 5
		2	50 – 30
		4	50 – 35
		4	50 – 40
		4	50 – 80
		6	60 – 5
		7	60 – 85
		12	60 – 90
		12	60 – 95
		12	60 – 110
		8	60 – 190
		4	60 – 205
		4	60 – 210
		4	60 – 215
		4	60 – 220
ROULEAU CHAINE	1836103M91	1	20 – 85
		1	20 – 90
		1	20 – 95
ROULEAU CHAINE	1836104M91	1	20 – 100
		1	20 – 100
		1	20 – 105
		1	20 – 105
		2	20 – 110
ROULEAU CHAINE	W980268US	1	10 – 105

		Qty	PAGE
ROULEMENT	70590709	1	20 – 135
		2	80 – 45
		2	80 – 65
ROULEMENT BILLES	1109055	6	40 – 5
ROULEMENT BILLES	700722661	2	50 – 5
		1	50 – 25
		6	50 – 35
		1	50 – 35
		1	50 – 90
ROULEMNT SPHERIC	700720354	1	20 – 35
SABOT DE FREIN	700720545	4	60 – 305
		4	60 – 310
		2	60 – 320
		2	60 – 325
		2	60 – 330
		2	60 – 335
SEGMENT ARRET	355919X1	1	10 – 110
		1	10 – 125
		1	50 – 40
		1	50 – 55
SEGMENT ARRET	70927732	2	40 – 40
		1	50 – 45
		2	50 – 75
SEGMENT ARRET	70928179	2	50 – 5
SOLENOIDE	700720041	4	70 – 15
		1	70 – 15
SUPPORT	700102136	1	50 – 50
TENDEUR	6845077	1	50 – 10
TENDEUR	7895733	1	50 – 45
THERMOSTAT	700716952	1	10 – 80
TRINGLE	6523740P	6	50 – 65
		6	50 – 70
TRINGLE	700137699P	7	20 – 10
TRINGLE	700706503	6	50 – 85
TRINGLE	702400048	6	50 – 10
		6	50 – 65
VALVE SOLENOIDE	1079721M1	2	70 – 20
VALVE SOLENOIDE	1079723M1	1	70 – 50

		Qty	PAGE
VERROU	700714528	2	20 – 140
		2	20 – 145
		2	20 – 150
		1	20 – 155
		1	20 – 160
		2	20 – 165
		2	20 – 170
		6	60 – 30
		2	60 – 35
		1	60 – 40
		1	60 – 45
		2	60 – 50
		1	60 – 55
		1	60 – 60
VIS	7883374	1	10 – 70
		2	20 – 35
		6	20 – 50
		3	20 – 95
		3	20 – 110
		24	20 – 130
		3	30 – 55
		4	30 – 60
		4	30 – 65
		1	30 – 70
		2	30 – 75
		8	40 – 60
		1	60 – 50
		2	60 – 85
		4	60 – 100
		4	60 – 105
		5	60 – 105
		3	60 – 110
		4	60 – 110
		12	60 – 130
		15	60 – 135
		20	60 – 140
		2	70 – 30
		2	80 – 60
		1	80 – 75
VIS	8701781	2	50 – 10
		2	50 – 20
VIS	Y706549	6	50 – 85
VIS DE BLOCAGE	70923306	3	40 – 10
		1	50 – 55

		Qty	PAGE

LAGERVORSCHLAGSTEILE

D15

		Qty	PAGE
ABSTANDSTUECK	158758	19	20 – 45
		1	60 – 245
		2	60 – 250
		1	60 – 265
		2	60 – 270
ABSTANDSTUECK	2401516P	1	50 – 80
ABSTANDSTUECK	6518302	2	40 – 65
ABSTANDSTUECK	6530828P	2	50 – 10
ABSTANDSTUECK	700137750P	1	20 – 135
		1	40 – 45
ABSTREIFER	700138858	1	50 – 45
ABSTREIFER	700161305P	5	20 – 35
BAND	844498	2	80 – 85
BETAETIGUNG	700709996	1	30 – 5
		1	30 – 10
		1	30 – 20
		1	60 – 250
		1	60 – 270
BETAETIGUNG	700710211	2	30 – 10
		1	30 – 15
		2	30 – 20
		1	30 – 45
		1	30 – 120
		1	70 – 45
		1	80 – 65
BINDER	700700968	1	50 – 45
		1	50 – 50
		1	50 – 90
BOLZEN	700113037	2	10 – 15
		2	10 – 75
BOLZEN	70922135	1	50 – 45
BOLZEN	70922598	3	50 – 45
		1	50 – 90
BREMSBACKE	700720545	4	60 – 305
		4	60 – 310
		2	60 – 320
		2	60 – 325
		2	60 – 330
		2	60 – 335
BUCHSE	52761	1	10 – 105
		5	10 – 110
		6	20 – 35
		6	60 – 10
BUCHSE	6523500	6	10 – 110
		2	10 – 125
		3	10 – 125
		7	50 – 40
		3	50 – 55

		Qty	PAGE
BUCHSE	6523799	1	30 – 15
		10	50 – 35
BUCHSE	700122681P	6	50 – 65
		6	50 – 70
BUCHSE	700123261	1	50 – 5
BUCHSE	700124038	12	40 – 5
BUCHSE	700129529	2	40 – 10
BUCHSE	700138307	14	20 – 40
BUCHSE	700139037	6	20 – 40
BUCHSE	700161321	2	20 – 35
BUCHSE	70936273	1	60 – 10
BUCHSE	712810	1	40 – 10
		3	50 – 5
BUCHSE	740217	1	20 – 35
BUCHSE	7852114	2	10 – 75
BUCHSE	Y52316	2	40 – 10
		5	40 – 40
		3	50 – 5
		1	60 – 290
		2	60 – 305
		2	60 – 310
		1	60 – 320
		1	60 – 325
		1	60 – 330
		1	60 – 335
BUERSTE	700713894	12	40 – 60
DICHTRING	700706045	1	10 – 80
		2	10 – 95
DICHTRING	700706096	6	40 – 5
DICHTRING	700710542	1	10 – 125
DICHTRING	700715965	1	10 – 110
		1	10 – 125
DICHTRING	700716267	2	10 – 115
DICHTRING	700718774	1	80 – 80
DICHTRING	700723562	1	80 – 85
DICHTRING	70248372	2	20 – 175
DICHTRING	8044695	12	50 – 65
		12	50 – 70
DICHTRINGSATZ	700711114	1	70 – 25
DICHTRINGSATZ	700712678	3	70 – 50
		1	70 – 70
DICHTRINGSATZ	700714382	1	70 – 55
DICHTRINGSATZ	700715662	1	70 – 15
		6	70 – 15
DICHTRINGSATZ	700715929	3	70 – 20
		5	70 – 20
DICHTRINGSATZ	700719151	1	70 – 70
DICHTRINGSATZ	700720178	1	70 – 35
DICHTRINGSATZ	700720460	1	60 – 315

		Qty	PAGE
DICHTRINGSATZ	700722237	1	80 – 80
DICHTSCHEIBE	359119X1	2	10 – 95
DOPPELNIPPEL	700706683	3	50 – 120
		3	50 – 125
		2	50 – 130
		6	50 – 175
		2	50 – 180
DOPPELNIPPEL	70919171	3	50 – 135
DRUCKFEDER	58511	2	20 – 5
		1	20 – 45
EINSTELLBLECH	6522932	2	10 – 15
		2	10 – 75
EINSTELLBLECH	6553275	2	50 – 45
		9	50 – 60
ELEMENT	7033616	1	80 – 85
EMPFAENGER	700714529	2	20 – 140
		2	20 – 145
		2	20 – 150
		1	20 – 155
		2	20 – 160
		2	20 – 165
		2	20 – 170
		6	60 – 30
		2	60 – 35
		2	60 – 40
		2	60 – 45
		2	60 – 50
		2	60 – 55
		2	60 – 60
		1	60 – 65
		1	60 – 70
		1	60 – 75
		1	60 – 80
FEDER	58107B	8	10 – 120
		12	10 – 130
		6	20 – 115
		8	20 – 120
		8	20 – 125
FEDER	58644	10	50 – 60
		1	50 – 80
FEDER	6522700P	1	20 – 75
		1	20 – 80
FEDER	6553259P	2	50 – 45
FEDER	700706376	5	50 – 65
		5	50 – 70
		4	60 – 5
FEDER	700709636	1	50 – 80

		Qty	PAGE
FEDER	700714166	2	40 – 75
		4	40 – 80
		1	50 – 75
FEDER	700714985	1	50 – 35
FEDER	700714986	6	50 – 10
		6	50 – 15
FEDER	700714987	1	40 – 45
FEDER	700720059	19	20 – 45
FEDER	700720548	2	20 – 5
		2	20 – 20
FEDER	758011	10	40 – 20
FEDER	758482	6	50 – 35
FEDER	7758212	2	60 – 30
FEDER	7758915	2	40 – 75
		1	60 – 15
		1	60 – 20
FEDER	858019	8	10 – 75
FEDER	858027	2	50 – 10
		2	50 – 20
FEDER	858308	1	40 – 40
		2	50 – 35

LAGERVORSCHLAGSTEILE

D16

		Qty	PAGE
FETTNIPPEL	70923219	1	10–5
		1	10–20
		1	10–40
		1	10–45
		1	10–50
		1	10–55
		1	10–60
		1	10–65
		3	10–80
		1	10–110
		1	10–125
		1	20–5
		1	20–20
		1	20–30
		1	20–35
		1	20–75
		1	20–80
		1	40–10
		2	40–50
		1	50–45
		1	50–75
		2	60–10
		2	60–130
		4	60–135
		4	60–140
		2	60–215
		2	60–220
		1	80–35
		2	80–55
FETTNIPPEL	71339847	2	60–35
		2	60–40
		2	60–45
		2	60–50
		2	60–55
		2	60–60
		4	60–145
		4	60–150
		4	60–155
		4	60–160
		4	60–165
		4	60–170
		4	60–175
		4	60–180
FILTER	7825516	1	80–85
FILTER	8799280	1	10–95
		2	70–30
FINGER	700113345P	6	50–65
		6	50–70

		Qty	PAGE
FLACHMUTTER	704247	38	20–45
		8	20–75
		2	40–10
		6	50–10
		2	50–20
		18	50–65
		12	50–70
		2	50–185
		4	60–100
		2	60–105
		4	60–105
		5	60–105
		4	60–110
		12	60–130
		15	60–135
		18	60–140
		4	60–145
		4	60–150
		4	60–155
		4	60–160
		4	60–165
		4	60–205
		2	60–255
		2	80–50
		2	80–70
FLANSCH	051417P	4	20–85
		4	20–90
		6	20–95
		6	20–100
		6	20–105
		8	20–110
		2	20–140
		2	20–145
		2	20–150
		2	20–155
		2	20–160
		2	20–165
		2	20–170
FLANSCH	50591	4	40–45
FLANSCH	700108622P	10	80–45
		10	80–65
FLANSCH	700140328P	1	20–20
FLANSCH	71130258	2	20–5
		2	20–20
FLANSCH	714360	2	50–40

		Qty	PAGE
FLANSCH	Y710293	8	20–130
		2	20–135
		4	80–45
		4	80–65
GEKROEPFTESGLIED	329266M91	1	20–90
GEKROEPFTESGLIED	329420M91	2	20–100
		2	20–105
GLIED	329264M91	1	20–85
		1	20–90
		1	20–95
GLIED	329277M91	2	20–100
		2	20–105
		2	20–110
GLIED	700124036P	3	40–5
GLIED	700720263	1	10–125
GLIED	7088008	1	10–110
GLIED	86405	1	10–105
GLUEHL 12V21WSBC	621235M1	1	30–55
		2	30–60
		1	30–65
GLUEHLAMPE	285871M1	1	30–60
		1	30–65
		1	30–70
GLUEHLAMPE 21/5W	908543M1	1	30–55
		2	30–60
		1	30–65
GUMMI	700137058	1	40–10
HAKEN	1712835	1	50–50
HALTEKLAMMER	866566	2	50–5
		6	50–35
		1	50–90
HALTER	8045148	1	50–45

		Qty	PAGE
HALTESCHELLE	70925094	6	30–5
		6	30–10
		1	30–15
		5	30–20
		4	30–25
		X	30–25
		1	30–30
		5	30–55
		4	30–70
		2	30–80
		18	50–95
		36	50–105
		1	50–120
		2	50–135
		6	50–145
		6	50–150
		2	50–155
		2	50–160
		1	70–40
HANDGRIFF	7894967	2	60–30
HUELSE	7852718	1	10–80
KAPPE	26260	2	20–175
KEGELRAD	7894389	1	50–45
KETTE	700720264	1	10–125
KETTE	7087935	1	10–110
KETTE METERWARE	1836103M91	1	20–85
		1	20–90
		1	20–95
KETTE METERWARE	1836104M91	1	20–100
		1	20–100
		1	20–105
		1	20–105
		2	20–110
KETTE METERWARE	W980268US	1	10–105
KETTENRAD	87726	3	20–100
		3	20–105
		2	20–110
KETTENRAD	87973	2	20–85
		1	20–90
		1	20–95
KETTENRAD	Y747931	1	10–110
KLAUE	700129571P	4	40–80
KLAUE	700137654P	4	60–5
KLAUE	700137655P	5	50–65
		5	50–70
KNICKSCHUTZFEDER	700725827	1	70–20
		3	70–20
		2	70–50
KONUS	70341230	4	20–175

LAGERVORSCHLAGSTEILE

D17

		Qty	PAGE
KUGELLAGER	1109055	6	40–5
KUGELLAGER	700722661	2	50–5
		1	50–25
		6	50–35
		1	50–35
		1	50–90
KUPPLUNGSSCHEIBE	700140071P	1	10–120
		3	10–130
KUPPLUNGSSCHEIBE	700140072P	1	10–120
		1	10–130
KUPPLUNGSSCHEIBE	700710945	2	20–120
		2	20–125
KUPPLUNGSSCHEIBE	700710946	2	40–20
		2	50–60
LAGER	1124697	1	10–20
		1	10–75
LAGER	50021	1	20–85
		1	20–90
		2	20–95
		1	20–100
		1	20–105
		3	20–110
		1	20–155
		1	20–170
LAGER	50393	2	40–40
LAGER	51292	1	20–85
		1	20–90
		1	20–95
		2	20–100
		2	20–105
		1	20–110
		1	20–140
		1	20–145
		1	20–150
		1	20–160
		1	20–165
LAGER	51318	1	10–60
		1	10–65
		1	10–70
		1	20–5
		1	20–20
LAGER	6105159	3	40–45
LAGER	700109753P	1	40–5
LAGER	700124004P	1	10–60
		1	10–65
		1	10–70
LAGER	700140331	1	10–125
		1	20–35

		Qty	PAGE
LAGER	700704263	1	10–110
		1	10–125
		1	40–5
LAGER	700706124	1	40–55
LAGER	700706131	6	40–5
LAGER	700706956	1	10–20
		1	10–75
LAGER	700715741	1	20–35
		1	40–55
LAGER	700715941	1	50–25
LAGER	700716611	1	10–110
		1	40–5
LAGER	700720050	1	20–135
		1	40–45
LAGER	700720348	19	20–40
LAGER	700720349	19	20–45
LAGER	70590704	4	20–130
LAGER	711770	10	40–80
		1	50–5
LAGER	712158	1	40–5
LAGER	712604	1	10–110
		1	20–110
LAGER	7713829	2	40–60
LAGER	7713837	2	40–10
LAGER	8050478	1	50–40
LAGER	8050866	2	50–35
LAGER	Y710392	10	80–45
		10	80–65
LAGER 6309 2RS	391069X1	2	10–25
LAGER–BALLIG	700720354	1	20–35
LAGERAUSSENRING	700706038	2	10–80
LAGERAUSSENRING	70927348	2	10–115
LAGERAUSSENRING	832190M1	4	20–175
LAGERINNENRING	700706039	2	10–80
LAGERINNENRING	70927347	2	10–115
LAGERSATZ	700720153	2	10–30
		2	10–35
LAGERSATZ	71308951	2	40–45
LAGERUNG	700102136	1	50–50
LEUCHTE	700716461	2	30–55
		2	30–60
		2	30–65
LEUCHTE	700726172	1	30–60
		1	30–65
MAGNET	700706340	2	30–5
		1	30–115
		1	80–45
		1	80–60

		Qty	PAGE
MAGNETSPULE	700720041	4	70–15
		1	70–15
MAGNETVENTIL	1079721M1	2	70–20
MAGNETVENTIL	1079723M1	1	70–50
MASCH.SCHRAUBE	700707998	8	10–75
MASCH.SCHRAUBE	700710413	24	50–5
MASCH.SCHRAUBE	700728135	10	60–285
		16	60–305
		16	60–310
		8	60–320
		8	60–325
		8	60–330
		8	60–335

		Qty	PAGE
MASCH.SCHRAUBE	70922786	2	10–125
		4	20–5
		4	20–10
		18	20–25
		2	20–30
		18	20–60
		2	20–65
		3	20–85
		3	20–90
		11	20–95
		3	20–100
		3	20–105
		6	20–110
		8	20–135
		7	20–155
		18	40–25
		10	40–40
		6	40–45
		8	40–60
		6	40–65
		18	40–70
		4	50–10
		5	50–15
		6	50–65
		6	50–70
		8	50–80
		2	50–80
		8	60–30
		4	60–35
		2	60–40
		2	60–45
		2	60–50
		2	60–55
		2	60–60
		5	60–85
		5	60–105
		4	60–110
		2	60–130
		2	60–135
		4	60–140
		8	80–45
		8	80–55
		8	80–65
		4	80–80
MASCH.SCHRAUBE	70934842	4	20–15
		4	20–65
		4	20–70
		12	60–5

LAGERVORSCHLAGSTEILE

D18

		Qty	PAGE
MASCH.SCHRAUBE	8701476	2	50 – 5
		6	50 – 35
		1	50 – 90
MASCH.SCHRAUBE	Y703132	72	20 – 50
		62	20 – 55
		62	20 – 60
		15	20 – 140
		9	20 – 145
		15	20 – 150
		8	20 – 155
		6	20 – 160
		4	20 – 165
		8	20 – 170
		9	40 – 25
		5	40 – 35
MASCH.SCHRB.KPL	6521868	1	10 – 80
		1	80 – 40
MASCH.SCHRB.UNC	354269X1	1	60 – 245
		1	60 – 265
MASCH.SCHRB.UNC	354289X1	1	10 – 115
		10	80 – 40
MASCH.SCHRB.UNC	354636X1	12	10 – 130
		1	70 – 40
		1	70 – 45
MASCH.SCHRB.UNC	354667X1	1	10 – 85
		2	60 – 245
		2	60 – 250
		2	60 – 265
		2	60 – 270
MESSER	700113188P	7	40 – 60
MESSER	700718710	1	50 – 50
		1	50 – 90
MESSER	700721367	19	20 – 45
MUTTER	370873X1	1	10 – 80
		10	80 – 40
MUTTER	700703458	24	50 – 5
MUTTER	700710414	2	40 – 10
		1	40 – 10
		24	50 – 5
		2	50 – 55

		Qty	PAGE
MUTTER	700711238	1	10 – 10
		2	10 – 65
		5	10 – 105
		4	10 – 110
		2	10 – 110
		4	10 – 125
		4	20 – 5
		4	20 – 10
		5	20 – 30
		4	20 – 35
		6	20 – 55
		18	20 – 60
		4	20 – 70
		2	20 – 80
		14	20 – 95
		12	20 – 110
		6	20 – 140
		3	20 – 145
		6	20 – 150
		3	20 – 155
		3	20 – 160
		3	20 – 165
		3	20 – 170
		34	30 – 5
		34	30 – 10
		11	30 – 15
		1	30 – 20
		8	30 – 20
		1	30 – 25
		18	30 – 25
		X	30 – 25
		6	30 – 30
		3	30 – 35
		3	30 – 40
		1	30 – 45
		3	30 – 50
		11	30 – 55
		2	30 – 60
		4	30 – 60
		4	30 – 65
		1	30 – 70
		5	30 – 75
		74	40 – 25
		18	40 – 30
		31	40 – 35
		10	40 – 40
		4	40 – 45
		2	40 – 45
		17	50 – 10

		Qty	PAGE
		4	50 – 10
		21	50 – 15
		2	50 – 30
		8	50 – 80
		14	50 – 120
		14	50 – 125
		8	50 – 130
		5	50 – 135
		40	60 – 5
		2	60 – 15
		33	60 – 30
		12	60 – 35
		9	60 – 40
		9	60 – 45
		11	60 – 50
		8	60 – 55
		8	60 – 60
		2	60 – 85
		3	60 – 85
		4	60 – 85
		5	60 – 85
		7	60 – 85
		12	60 – 90
		12	60 – 95
		12	60 – 100
		14	60 – 105
		4	60 – 105
		5	60 – 105
		12	60 – 110
		20	60 – 110
		3	60 – 110
		4	60 – 110
		6	60 – 125
		5	60 – 130
		5	60 – 135
		12	60 – 140
		2	60 – 205
		2	60 – 215
		3	60 – 215
		8	60 – 215
		8	60 – 220
		1	60 – 225
		3	60 – 225
		3	60 – 230
		3	60 – 235
		1	60 – 240
		2	70 – 5
		2	70 – 10
		3	70 – 40

		Qty	PAGE
		2	70 – 45
		4	80 – 45
		4	80 – 60
		8	80 – 65
		5	80 – 75
		10	80 – 80
MUTTER	700715751	1	10 – 100
		1	10 – 110
		1	10 – 125
		1	40 – 5
MUTTER	704486	1	10 – 60
		1	50 – 45
MUTTER	70917421	2	40 – 50
		1	50 – 45
		6	50 – 65
MUTTER	7704208	2	20 – 175
MUTTER	874404	6	50 – 85
MUTTER	Y704072	4	20 – 145
		4	30 – 50
		8	30 – 65
		6	50 – 85
		12	60 – 30
		4	60 – 35
		4	60 – 40
		4	60 – 50
		4	60 – 55
		4	60 – 60
		2	60 – 65
		2	60 – 70
		2	60 – 75
		2	60 – 80
		4	60 – 145
		4	60 – 150
		4	60 – 155
		4	60 – 160
		4	60 – 165
		4	60 – 170
		4	60 – 175
		4	60 – 180
NABENTRIEB.	700720228	1	30 – 5
		1	30 – 10
		1	30 – 95
		X	30 – 100
NABENTRIEB.	700722199	1	30 – 25
NADEL	700123233P	6	50 – 5
NIPPEL	70915276	1	10 – 75
		1	50 – 155
		1	50 – 160
NOCKEN	700113323P	1	50 – 45

LAGERVORSCHLAGSTEILE

		Qty	PAGE
O-RING	700706050	1	10-80
O-RING	7040330	1	10-80
O-RING	70921205	1	70-5
		X	70-10
		1	80-80
O-RING	70921206	1	80-75
		1	80-80
		1	80-85
O-RING	70921214	2	80-85
O-RING	70921349	2	70-30
		1	70-40
		1	70-40
		X	70-45
O-RING	70921882	1	30-25
O-RING	70923561	1	50-50
O-RING	831452M1	1	10-100
		1	70-5
		1	70-5
		X	70-10
		X	70-45
		X	70-60
		X	70-65
OELDICHTRING	700715740	2	20-35
		2	40-55
PASSKEIL	Y61952	1	20-110
PATRONE	700706153	2	70-15
PLATTE	6522866P	1	10-75
		1	10-120
PLATTE	6523807	1	50-45
PLATTE	700112903P	3	10-75
		1	10-120
RADIALLAGER	70590709	1	20-135
		2	80-45
		2	80-65
REFLEKTOR	700723134	6	50-85
REFLEKTOR	8722894	6	50-85
REPARATURSATZ	700150670	1	50-90
REPARATURSATZ	700154471	1	30-120
REPARATURSATZ	700719338	1	70-75
REPARATURSATZ	700720122	1	10-30
		1	10-40
		1	10-50
REPARATURSATZ	700723268	1	10-40
		1	10-45
		2	10-50
		1	10-55
REPARATURSATZ	700723560	1	80-85
REPARATURSATZ	7738800	1	80-85
REPARATURSATZ	8732661	1	80-80

		Qty	PAGE
RIEGEL	700714528	2	20-140
		2	20-145
		2	20-150
		1	20-155
		1	20-160
		2	20-165
		2	20-170
		6	60-30
		2	60-35
		1	60-40
		1	60-45
		2	60-50
		1	60-55
		1	60-60
RIEMEN	700717886	1	80-80
RING	355994X1	2	10-25
RING	700720004	2	20-35
		2	40-55
RING	70927103	1	10-60
		10	40-80
RING	70927699	1	10-20
		1	10-75
RING	70927700	2	40-10
RING	70927728	1	50-50
RING	70927744	2	20-40
		1	50-20
		6	60-30
		2	60-130
		4	60-135
		2	60-150
		2	60-155
		10	60-160
		2	60-170
		2	60-175
		10	60-180
RING	70928720	8	60-10
RING	738633	2	50-35
RING	7852767	3	40-10
RING	Y740720	1	10-125
RITZEL	702700040	1	50-45
ROLLE	6524623P	1	50-55
ROLLE	6524870P	1	40-40
ROLLE	700122799	1	50-50
ROLLE	700138225	1	40-40
		1	50-75
ROLLE	700140080	19	20-45
SATZ	700138038	1	80-40
SATZ	700710807	1	50-115

		Qty	PAGE
SATZ	700711425	1	10-35
		1	10-45
		1	10-55
SATZ	700712574	2	10-40
		2	10-45
		2	10-50
		2	10-55
SATZ	700720098	1	50-175
SATZ	7815053	1	10-20
		2	10-30
		2	10-35
		1	10-40
		1	10-45
		1	10-50
		1	10-55
		1	10-75
SCHACHTEL	700114076	1	30-115
SCHACHTEL	700114079	1	50-180
SCHALTER	700113863	2	30-5
		1	30-115
		1	80-50
		1	80-70
SCHALTER	700119161	2	30-10
		1	30-15
		2	30-20
		1	30-45
		1	30-120
		1	70-45
		1	80-65
SCHALTER	700710208	1	30-5
		1	30-10
		1	30-20
		1	60-250
		1	60-270
SCHALTER	700711188	1	30-20
SCHEIBE	1712868	1	50-45
SCHEIBE	700108820	4	10-75
		2	10-120
		4	10-130
SCHEIBE	700711025	2	20-115
SCHEINWERFER	700721617	3	30-70
SCHELLE	70925993	1	10-110
		1	20-110
SCHELLE	7894975	2	60-30
SCHLAUCH	700706798	3	50-135
SCHNECKENRAD	7894413	1	50-45

		Qty	PAGE
SCHRAUBE	7883374	1	10-70
		2	20-35
		6	20-50
		3	20-95
		3	20-110
		24	20-130
		3	30-55
		4	30-60
		4	30-65
		1	30-70
		2	30-75
		8	40-60
		1	60-50
		2	60-85
		4	60-100
		4	60-105
		5	60-105
		3	60-110
		4	60-110
		12	60-130
		15	60-135
		20	60-140
		2	70-30
		2	80-60
		1	80-75
SCHRAUBE	8701781	2	50-10
		2	50-20
SCHRAUBE	Y706549	6	50-85
SCHUTZ	700129647P	6	60-5
SCHUTZVORR	700139255	1	50-20
		6	60-30
		2	60-150
		10	60-160
		2	60-170
		10	60-180
SELBSTS.MUTTER	700703922	1	10-115
		6	40-5
		1	40-45
		1	50-5
		3	50-80
		2	80-35
		10	80-40
		3	80-50
		2	80-55
		3	80-70

LAGERVORSCHLAGSTEILE

D20

		Qty	PAGE
SELBSTS.MUTTER	Y704734	14	10–60
		6	10–65
		7	10–70
		2	10–85
		4	10–110
		8	10–120
		4	10–125
		12	10–130
		4	20–15
		18	20–25
		20	20–45
		12	20–65
		8	20–120
		8	20–125
		8	20–135
		7	20–155
		1	20–170
		2	30–50
		2	40–40
		2	40–45
		6	40–50
		8	40–60
		8	40–65
		18	40–70
		5	40–80
		4	50–5
		4	50–80
		2	60–15
		2	60–20
		4	60–205
		1	60–210
		2	60–230
		13	60–245
		2	60–250
		6	60–250
		7	60–250
		4	60–260
		11	60–265
		11	60–270
		1	70–5
		6	70–5
		5	70–10
		2	70–30
		1	70–45
		3	70–60
		3	70–65
		28	80–45
		28	80–65
		4	80–85

		Qty	PAGE
SELBSTS.MUTTER	Y704742	2	10–5
		28	10–15
		20	10–60
		20	10–65
		20	10–70
		1	10–85
		4	10–110
		4	10–125
		2	20–10
		8	20–15
		6	20–25
		2	20–35
		2	20–45
		8	20–65
		6	20–70
		12	40–5
		6	40–10
		3	40–45
		2	40–50
		10	40–60
		6	40–70
		2	40–75
		8	50–5
		1	50–80
		1	60–245
		2	60–250
		8	60–260
		2	60–265
		2	60–270
		1	70–40
		1	70–45
		10	80–45
		2	80–50
		2	80–55
		10	80–65
		2	80–70
SENSOR.	700706398	8	30–5
		8	30–10
		5	30–25
		1	30–45
		1	30–115
		1	30–120
SENSOR.	71391869	1	30–45
SENSOR.	71393718	1	10–80
SICH.BLECH	6613624P	1	50–50
		1	50–90
SICHERUNG	1695966M1	1	30–105
		2	30–120

		Qty	PAGE
SICHERUNG	3387318M1	1	30–105
		2	30–120
SPANNER	6845077	1	50–10
SPANNER	7895733	1	50–45
SPERRKLINKE	700113036	2	10–15
		2	10–75
SPLINTBOLZEN	700706685	5	50–65
		5	50–70
		4	60–5
		2	70–60
		2	70–65
SPRENGRING	355919X1	1	10–110
		1	10–125
		1	50–40
		1	50–55
SPRENGRING	70927732	2	40–40
		1	50–45
		2	50–75
SPRENGRING	70928179	2	50–5
STAB	700113189	7	40–60
STANGE	6523740P	6	50–65
		6	50–70
STANGE	700137699P	7	20–10
STANGE	700706503	6	50–85
STANGE	702400048	6	50–10
		6	50–65
STEHBOLZEN	6523229	1	50–45
STELLSCHRAUBE	70923306	3	40–10
		1	50–55
THERMOSTAT	700716952	1	10–80
UMSCHLAG	700129658P	31	20–50
		31	20–55
		31	20–60
UNTERLEGSCHEIBE	6591572	1	50–50
UNTERLEGSCHEIBE	700123293P	3	40–10
UNTERLEGSCHEIBE	700137107P	1	10–80
		1	10–105
UNTERLEGSCHEIBE	7852163	2	50–45
UNTERLEGSCHEIBE	7852593	2	50–50
UNTERLEGSCHEIBE	7852742	1	50–45

		Qty	PAGE
UNTERLEGSCHEIBE	Y705525	2	10–60
		2	10–65
		1	10–70
		2	10–125
		15	20–15
		15	20–65
		2	30–5
		2	30–10
		1	30–15
		1	30–25
		4	30–30
		22	40–25
		2	40–75
		2	50–140
		6	60–15
		5	60–20
		12	60–30
		2	60–35
		2	60–40
		1	60–45
		2	60–50
		2	60–55
		1	60–60
		2	60–65
		2	60–70
		1	60–75
		2	60–80
		6	60–125
		2	70–45
		5	80–75

LAGERVORSCHLAGSTEILE

D21

		Qty	PAGE
UNTERLEGSCHEIBE	Y705533	2	**10 – 85**
		1	**20 – 45**
		3	**20 – 85**
		3	**20 – 90**
		3	**20 – 100**
		3	**20 – 105**
		8	**20 – 135**
		9	**30 – 5**
		9	**30 – 10**
		1	**30 – 15**
		1	**30 – 20**
		1	**30 – 25**
		4	**30 – 30**
		3	**30 – 35**
		3	**30 – 40**
		3	**30 – 50**
		6	**30 – 70**
		2	**40 – 10**
		20	**40 – 20**
		8	**40 – 25**
		10	**40 – 40**
		15	**40 – 60**
		16	**40 – 60**
		2	**50 – 30**
		4	**50 – 40**
		6	**50 – 80**
		2	**60 – 15**
		2	**60 – 15**
		2	**60 – 20**
		14	**60 – 30**
		1	**60 – 35**
		1	**60 – 50**
		1	**60 – 55**
		1	**60 – 60**
		3	**60 – 85**
		4	**60 – 85**
		5	**60 – 85**
		14	**60 – 105**
		2	**60 – 105**
		4	**60 – 105**
		5	**60 – 105**
		20	**60 – 110**
		3	**60 – 110**
		4	**60 – 110**
		6	**60 – 125**
		6	**60 – 145**
		6	**60 – 150**
		4	**60 – 155**
		4	**60 – 160**

1637373

		Qty	PAGE
		6	**60 – 165**
		6	**60 – 170**
		4	**60 – 175**
		4	**60 – 180**
		3	**60 – 205**
		3	**60 – 215**
		3	**60 – 220**
		1	**60 – 225**
		1	**60 – 235**
		4	**70 – 45**
		1	**70 – 60**
		1	**70 – 65**
		4	**80 – 65**
		8	**80 – 80**
UNTERLEGSCHEIBEN	705541	12	**10 – 85**
		1	**10 – 110**
		18	**20 – 35**
		4	**20 – 175**
		2	**40 – 30**
		2	**40 – 40**
		3	**40 – 45**
		8	**40 – 50**
		4	**40 – 60**
		24	**50 – 5**
		2	**50 – 30**
		4	**50 – 35**
		4	**50 – 40**
		4	**50 – 80**
		6	**60 – 5**
		7	**60 – 85**
		12	**60 – 90**
		12	**60 – 95**
		12	**60 – 110**
		8	**60 – 190**
		4	**60 – 205**
		4	**60 – 210**
		4	**60 – 215**
		4	**60 – 220**
WELLE	6553267	1	**50 – 45**
WELLE	6591580	1	**50 – 50**
WINKELSTUECK	700706682	5	**50 – 120**
		5	**50 – 125**
		6	**50 – 130**
		11	**50 – 175**
		2	**50 – 180**
ZAHNRAD	7894454	1	**50 – 45**
ZAHNRAD	8802795	2	**50 – 10**
		2	**50 – 20**
ZINKE	700716132	8	**20 – 135**

		Qty	PAGE
ZUGFEDER	700712484	1	**50 – 35**
ZUGFEDER	700758888	1	**20 – 30**
ZUGFEDER	758268	1	**40 – 15**
		1	**50 – 55**
ZUGFEDER	758441	1	**50 – 80**
		2	**60 – 245**
		2	**60 – 250**
ZYLINDERSTIFT	863738	1	**50 – 50**

Qty	PAGE

PEZZI CHE RECCOMANDIANO DI TENERE A MAGAZZINO

		Qty	PAGE
AGO	700123233P	6	50 – 5
ALBERO	6553267	1	50 – 45
ALBERO	6591580	1	50 – 50
ANELLO	355994X1	2	10 – 25
ANELLO	700720004	2	20 – 35
		2	40 – 55
ANELLO	70927103	1	10 – 60
		10	40 – 80
ANELLO	70927699	1	10 – 20
		1	10 – 75
ANELLO	70927700	2	40 – 10
ANELLO	70927728	1	50 – 50
ANELLO	70927744	2	20 – 40
		1	50 – 20
		6	60 – 30
		2	60 – 130
		4	60 – 135
		2	60 – 150
		2	60 – 155
		10	60 – 160
		2	60 – 170
		2	60 – 175
		10	60 – 180
ANELLO	70928720	8	60 – 10
ANELLO	738633	2	50 – 35
ANELLO	7852767	3	40 – 10
ANELLO	Y740720	1	10 – 125
ANELLO OR	700706050	1	10 – 80
ANELLO OR	7040330	1	10 – 80
ANELLO OR	70921205	1	70 – 5
		X	70 – 10
		1	80 – 80
ANELLO OR	70921206	1	80 – 75
		1	80 – 80
		1	80 – 85
ANELLO OR	70921214	2	80 – 85
ANELLO OR	70921349	2	70 – 30
		1	70 – 40
		1	70 – 40
		X	70 – 45
ANELLO OR	70921882	1	30 – 25
ANELLO OR	70923561	1	50 – 50
ANELLO OR	831452M1	1	10 – 100
		1	70 – 5
		1	70 – 5
		X	70 – 10
		X	70 – 45
		X	70 – 60
		X	70 – 65

		Qty	PAGE
ANELLO SIEGER	355919X1	1	10 – 110
		1	10 – 125
		1	50 – 40
		1	50 – 55
ANELLO SIEGER	70927732	2	40 – 40
		1	50 – 45
		2	50 – 75
ANELLO SIEGER	70928179	2	50 – 5
ARRESTO	700113036	2	10 – 15
		2	10 – 75
ASTA	6523740P	6	50 – 65
		6	50 – 70
ASTA	700137699P	7	20 – 10
ASTA	700706503	6	50 – 85
ASTA	702400048	6	50 – 10
		6	50 – 65
AUTOBLOCCANTE	704247	38	20 – 45
		8	20 – 75
		2	40 – 10
		6	50 – 10
		2	50 – 20
		18	50 – 65
		12	50 – 70
		2	50 – 185
		4	60 – 100
		2	60 – 105
		4	60 – 105
		5	60 – 105
		4	60 – 110
		12	60 – 130
		15	60 – 135
		18	60 – 140
		4	60 – 145
		4	60 – 150
		4	60 – 155
		4	60 – 160
		4	60 – 165
		4	60 – 170
		4	60 – 175
		4	60 – 180
		4	60 – 205
		2	60 – 255
		2	80 – 50
		2	80 – 70
AZIONATORE	700709996	1	30 – 5
		1	30 – 10
		1	30 – 20
		1	60 – 250
		1	60 – 270

		Qty	PAGE
AZIONATORE	700710211	2	30 – 10
		1	30 – 15
		2	30 – 20
		1	30 – 45
		1	30 – 120
		1	70 – 45
		1	80 – 65
BARRA	700113189	7	40 – 60
BOBINA	700725827	1	70 – 20
		3	70 – 20
		2	70 – 50
BOCCOLA	52761	1	10 – 105
		5	10 – 110
		6	20 – 35
		6	60 – 10
BOCCOLA	6523500	6	10 – 110
		2	10 – 125
		3	10 – 125
		7	50 – 40
		3	50 – 55
BOCCOLA	6523799	1	30 – 15
		10	50 – 35
BOCCOLA	700122681P	6	50 – 65
		6	50 – 70
BOCCOLA	700123261	1	50 – 5
BOCCOLA	700124038	12	40 – 5
BOCCOLA	700129529	2	40 – 10
BOCCOLA	700138307	14	20 – 40
BOCCOLA	700139037	6	20 – 40
BOCCOLA	700161321	2	20 – 35
BOCCOLA	70936273	1	60 – 10
BOCCOLA	712810	1	40 – 10
		3	50 – 5
BOCCOLA	740217	1	20 – 35
BOCCOLA	7852114	2	10 – 75
BOCCOLA	Y52316	2	40 – 10
		5	40 – 40
		3	50 – 5
		1	60 – 290
		2	60 – 305
		2	60 – 310
		1	60 – 320
		1	60 – 325
		1	60 – 330
		1	60 – 335
BOCCOLA PARAOLIO	700715740	2	20 – 35
		2	40 – 55

		Qty	PAGE
BULBO	285871M1	1	30 – 60
		1	30 – 65
		1	30 – 70
BULBO 12V 21W	621235M1	1	30 – 55
		2	30 – 60
		1	30 – 65
BULBO 21/5W	908543M1	1	30 – 55
		2	30 – 60
		1	30 – 65
BULLONE	700707998	8	10 – 75
BULLONE	700710413	24	50 – 5
BULLONE	700728135	10	60 – 285
		16	60 – 305
		16	60 – 310
		8	60 – 320
		8	60 – 325
		8	60 – 330
		8	60 – 335

PEZZI CHE RECCOMANDIANO DI TENERE A MAGAZZINO

D23

		Qty	PAGE
BULLONE	70922786	2	10 – 125
		4	20 – 5
		4	20 – 10
		18	20 – 25
		2	20 – 30
		18	20 – 60
		2	20 – 65
		3	20 – 85
		3	20 – 90
		11	20 – 95
		3	20 – 100
		3	20 – 105
		6	20 – 110
		8	20 – 135
		7	20 – 155
		18	40 – 25
		10	40 – 40
		6	40 – 45
		8	40 – 60
		6	40 – 65
		18	40 – 70
		4	50 – 10
		5	50 – 15
		6	50 – 65
		6	50 – 70
		8	50 – 80
		2	50 – 80
		8	60 – 30
		4	60 – 35
		2	60 – 40
		2	60 – 45
		2	60 – 50
		2	60 – 55
		2	60 – 60
		5	60 – 85
		5	60 – 105
		4	60 – 110
		2	60 – 130
		2	60 – 135
		4	60 – 140
		8	80 – 45
		8	80 – 55
		8	80 – 65
		4	80 – 80
BULLONE	70934842	4	20 – 15
		4	20 – 65
		4	20 – 70
		12	60 – 5

		Qty	PAGE
BULLONE	8701476	2	50 – 5
		6	50 – 35
		1	50 – 90
BULLONE	Y703132	72	20 – 50
		62	20 – 55
		62	20 – 60
		15	20 – 140
		9	20 – 145
		15	20 – 150
		8	20 – 155
		6	20 – 160
		4	20 – 165
		8	20 – 170
		9	40 – 25
		5	40 – 35
BULLONE COMPLET	6521868	1	10 – 80
		1	80 – 40
BULLONE UNC	354269X1	1	60 – 245
		1	60 – 265
BULLONE UNC	354289X1	1	10 – 115
		10	80 – 40
BULLONE UNC	354636X1	12	10 – 130
		1	70 – 40
		1	70 – 45
BULLONE UNC	354667X1	1	10 – 85
		2	60 – 245
		2	60 – 250
		2	60 – 265
		2	60 – 270
CAMMA	700113323P	1	50 – 45
CANE	700129571P	4	40 – 80
CANE	700137654P	4	60 – 5
CANE	700137655P	5	50 – 65
		5	50 – 70
CAPPELLO	26260	2	20 – 175
CARTUCCIA	700706153	2	70 – 15
CATARIFRANGENTE	700723134	6	50 – 85
CATARIFRANGENTE	8722894	6	50 – 85
CATENA	700720264	1	10 – 125
CATENA	7087935	1	10 – 110
CEPPO FRENO	700720545	4	60 – 305
		4	60 – 310
		2	60 – 320
		2	60 – 325
		2	60 – 330
		2	60 – 335
CHIAVETTA	Y61952	1	20 – 110
CINGHIA	700717886	1	80 – 80
COLTELLO	700113188P	7	40 – 60

		Qty	PAGE
COLTELLO	700718710	1	50 – 50
		1	50 – 90
COLTELLO	700721367	19	20 – 45
CONO	70341230	4	20 – 175
CONO CUSCINETTO	700706039	2	10 – 80
CONO CUSCINETTO	70927347	2	10 – 115
COPPA CUSCINETTO	700706038	2	10 – 80
COPPA CUSCINETTO	70927348	2	10 – 115
COPPA CUSCINETTO	832190M1	4	20 – 175
COTE	700137058	1	40 – 10
CUSC. 6309 2RS	391069X1	2	10 – 25
CUSCINETTO	1124697	1	10 – 20
		1	10 – 75
CUSCINETTO	50021	1	20 – 85
		1	20 – 90
		2	20 – 95
		1	20 – 100
		1	20 – 105
		3	20 – 110
		1	20 – 155
		1	20 – 170
CUSCINETTO	50393	2	40 – 40
CUSCINETTO	51292	1	20 – 85
		1	20 – 90
		1	20 – 95
		2	20 – 100
		2	20 – 105
		1	20 – 110
		1	20 – 140
		1	20 – 145
		1	20 – 150
		1	20 – 160
		1	20 – 165
CUSCINETTO	51318	1	10 – 60
		1	10 – 65
		1	10 – 70
		1	20 – 5
		1	20 – 20
CUSCINETTO	6105159	3	40 – 45
CUSCINETTO	700109753P	1	40 – 5
CUSCINETTO	700124004P	1	10 – 60
		1	10 – 65
		1	10 – 70
CUSCINETTO	700140331	1	10 – 125
		1	20 – 35
CUSCINETTO	700704263	1	10 – 110
		1	10 – 125
		1	40 – 5
CUSCINETTO	700706124	1	40 – 55

		Qty	PAGE
CUSCINETTO	700706131	6	40 – 5
CUSCINETTO	700706956	1	10 – 20
		1	10 – 75
CUSCINETTO	700715741	1	20 – 35
		1	40 – 55
CUSCINETTO	700715941	1	50 – 25
CUSCINETTO	700716611	1	10 – 110
		1	40 – 5
CUSCINETTO	700720050	1	20 – 135
		1	40 – 45
CUSCINETTO	700720348	19	20 – 40
CUSCINETTO	700720349	19	20 – 45
CUSCINETTO	70590704	4	20 – 130
CUSCINETTO	711770	10	40 – 80
		1	50 – 5
CUSCINETTO	712158	1	40 – 5
CUSCINETTO	712604	1	10 – 110
		1	20 – 110
CUSCINETTO	7713829	2	40 – 60
CUSCINETTO	7713837	2	40 – 10
CUSCINETTO	8050478	1	50 – 40
CUSCINETTO	8050866	2	50 – 35
CUSCINETTO	Y710392	10	80 – 45
		10	80 – 65
CUSCINETTO COMPL	70590709	1	20 – 135
		2	80 – 45
		2	80 – 65
CUSCINETTO SFER.	700720354	1	20 – 35
CUSCINETTO SFERE	1109055	6	40 – 5
CUSCINETTO SFERE	700722661	2	50 – 5
		1	50 – 25
		6	50 – 35
		1	50 – 35
		1	50 – 90
DADO	370873X1	1	10 – 80
		10	80 – 40
DADO	700703458	24	50 – 5
DADO	700710414	2	40 – 10
		1	40 – 10
		24	50 – 5
		2	50 – 55

PEZZI CHE RECCOMANDIANO DI TENERE A MAGAZZINO

D24

		Qty	PAGE
DADO	700711238	1	10 – 10
		2	10 – 65
		5	10 – 105
		4	10 – 110
		2	10 – 110
		4	10 – 125
		4	20 – 5
		4	20 – 10
		5	20 – 30
		4	20 – 35
		6	20 – 55
		18	20 – 60
		4	20 – 70
		2	20 – 80
		14	20 – 95
		12	20 – 110
		6	20 – 140
		3	20 – 145
		6	20 – 150
		3	20 – 155
		3	20 – 160
		3	20 – 165
		3	20 – 170
		34	30 – 5
		34	30 – 10
		11	30 – 15
		1	30 – 20
		8	30 – 20
		1	30 – 25
		18	30 – 25
		X	30 – 25
		6	30 – 30
		3	30 – 35
		3	30 – 40
		1	30 – 45
		3	30 – 50
		11	30 – 55
		2	30 – 60
		4	30 – 60
		4	30 – 65
		1	30 – 70
		5	30 – 75
		74	40 – 25
		18	40 – 30
		31	40 – 35
		10	40 – 40
		4	40 – 45
		2	40 – 45
		17	50 – 10

		Qty	PAGE
		4	50 – 10
		21	50 – 15
		2	50 – 30
		8	50 – 80
		14	50 – 120
		14	50 – 125
		8	50 – 130
		5	50 – 135
		40	60 – 5
		2	60 – 15
		33	60 – 30
		12	60 – 35
		9	60 – 40
		9	60 – 45
		11	60 – 50
		8	60 – 55
		8	60 – 60
		2	60 – 85
		3	60 – 85
		4	60 – 85
		5	60 – 85
		7	60 – 85
		12	60 – 90
		12	60 – 95
		12	60 – 100
		14	60 – 105
		4	60 – 105
		5	60 – 105
		12	60 – 110
		20	60 – 110
		3	60 – 110
		4	60 – 110
		6	60 – 125
		5	60 – 130
		5	60 – 135
		12	60 – 140
		2	60 – 205
		2	60 – 215
		3	60 – 215
		8	60 – 215
		8	60 – 220
		1	60 – 225
		3	60 – 225
		3	60 – 230
		3	60 – 235
		1	60 – 240
		2	70 – 5
		2	70 – 10
		3	70 – 40

		Qty	PAGE
		2	70 – 45
		4	80 – 45
		4	80 – 60
		8	80 – 65
		5	80 – 75
		10	80 – 80
DADO	700715751	1	10 – 100
		1	10 – 110
		1	10 – 125
		1	40 – 5
DADO	704486	1	10 – 60
		1	50 – 45
DADO	70917421	2	40 – 50
		1	50 – 45
		6	50 – 65
DADO	7704208	2	20 – 175
DADO	874404	6	50 – 85
DADO	Y704072	4	20 – 145
		4	30 – 50
		8	30 – 65
		6	50 – 85
		12	60 – 30
		4	60 – 35
		4	60 – 40
		4	60 – 50
		4	60 – 55
		4	60 – 60
		2	60 – 65
		2	60 – 70
		2	60 – 75
		2	60 – 80
		4	60 – 145
		4	60 – 150
		4	60 – 155
		4	60 – 160
		4	60 – 165
		4	60 – 170
		4	60 – 175
		4	60 – 180
DADO DI TESTA	700703922	1	10 – 115
		6	40 – 5
		1	40 – 45
		1	50 – 5
		3	50 – 80
		2	80 – 35
		10	80 – 40
		3	80 – 50
		2	80 – 55
		3	80 – 70

		Qty	PAGE
DADO DI TESTA	Y704734	14	10 – 60
		6	10 – 65
		7	10 – 70
		2	10 – 85
		4	10 – 110
		8	10 – 120
		4	10 – 125
		12	10 – 130
		4	20 – 15
		18	20 – 25
		20	20 – 45
		12	20 – 65
		8	20 – 120
		8	20 – 125
		8	20 – 135
		7	20 – 155
		1	20 – 170
		2	30 – 50
		2	40 – 40
		2	40 – 45
		6	40 – 50
		8	40 – 60
		8	40 – 65
		18	40 – 70
		5	40 – 80
		4	50 – 5
		4	50 – 80
		2	60 – 15
		2	60 – 20
		4	60 – 205
		1	60 – 210
		2	60 – 230
		13	60 – 245
		2	60 – 250
		6	60 – 250
		7	60 – 250
		4	60 – 260
		11	60 – 265
		11	60 – 270
		1	70 – 5
		6	70 – 5
		5	70 – 10
		2	70 – 30
		1	70 – 45
		3	70 – 60
		3	70 – 65
		28	80 – 45
		28	80 – 65
		4	80 – 85

PEZZI CHE RECCOMANDIANO DI TENERE A MAGAZZINO

D25

		Qty	PAGE
DADO DI TESTA	Y704742	2	10 – 5
		28	10 – 15
		20	10 – 60
		20	10 – 65
		20	10 – 70
		1	10 – 85
		4	10 – 110
		4	10 – 125
		2	20 – 10
		8	20 – 15
		6	20 – 25
		2	20 – 35
		2	20 – 45
		8	20 – 65
		6	20 – 70
		12	40 – 5
		6	40 – 10
		3	40 – 45
		2	40 – 50
		10	40 – 60
		6	40 – 70
		2	40 – 75
		8	50 – 5
		1	50 – 80
		1	60 – 245
		2	60 – 250
		8	60 – 260
		2	60 – 265
		2	60 – 270
		1	70 – 40
		1	70 – 45
		10	80 – 45
		2	80 – 50
		2	80 – 55
		10	80 – 65
		2	80 – 70
DENTE ELASTICO	700716132	8	20 – 135
DISCO	1712868	1	50 – 45
DISCO	700108820	4	10 – 75
		2	10 – 120
		4	10 – 130
DISCO	700711025	2	20 – 115
DISCO FRIZIONE	700140071P	1	10 – 120
		3	10 – 130
DISCO FRIZIONE	700140072P	1	10 – 120
		1	10 – 130
DISCO FRIZIONE	700710945	2	20 – 120
		2	20 – 125

		Qty	PAGE
DISCO FRIZIONE	700710946	2	40 – 20
		2	50 – 60
DISTANZIALE	158758	19	20 – 45
		1	60 – 245
		2	60 – 250
		1	60 – 265
		2	60 – 270
DISTANZIALE	2401516P	1	50 – 80
DISTANZIALE	6518302	2	40 – 65
DISTANZIALE	6530828P	2	50 – 10
DISTANZIALE	700137750P	1	20 – 135
		1	40 – 45
DITO	700113345P	6	50 – 65
		6	50 – 70
ELEMENTO	7033616	1	80 – 85
FARO	700716461	2	30 – 55
		2	30 – 60
		2	30 – 65
FARO	700726172	1	30 – 60
		1	30 – 65
FASCETTA	70925094	6	30 – 5
		6	30 – 10
		1	30 – 15
		5	30 – 20
		4	30 – 25
		X	30 – 25
		1	30 – 30
		5	30 – 55
		4	30 – 70
		2	30 – 80
		18	50 – 95
		36	50 – 105
		1	50 – 120
		2	50 – 135
		6	50 – 145
		6	50 – 150
		2	50 – 155
		2	50 – 160
		1	70 – 40
FERMAGLIO	70925993	1	10 – 110
		1	20 – 110
FERMAGLIO	7894975	2	60 – 30
FILTRO	7825516	1	80 – 85
FILTRO	8799280	1	10 – 95
		2	70 – 30

		Qty	PAGE
FLANGIA	051417P	4	20 – 85
		4	20 – 90
		6	20 – 95
		6	20 – 100
		6	20 – 105
		8	20 – 110
		2	20 – 140
		2	20 – 145
		2	20 – 150
		2	20 – 155
		2	20 – 160
		2	20 – 165
		2	20 – 170
FLANGIA	50591	4	40 – 45
FLANGIA	700108622P	10	80 – 45
		10	80 – 65
FLANGIA	700140328P	1	20 – 20
FLANGIA	71130258	2	20 – 5
		2	20 – 20
FLANGIA	714360	2	50 – 40
FLANGIA	Y710293	8	20 – 130
		2	20 – 135
		4	80 – 45
		4	80 – 65
FUSIBILE	1695966M1	1	30 – 105
		2	30 – 120
FUSIBILE	3387318M1	1	30 – 105
		2	30 – 120
GANCIO	1712835	1	50 – 50
GOMITO	700706682	5	50 – 120
		5	50 – 125
		6	50 – 130
		11	50 – 175
		2	50 – 180
GUARNIZIONE	359119X1	2	10 – 95
IMBALLATORE	700129658P	31	20 – 50
		31	20 – 55
		31	20 – 60
INGRANAGGIO	7894454	1	50 – 45
INGRANAGGIO	8802795	2	50 – 10
		2	50 – 20
INGRANAGGIO CON.	7894389	1	50 – 45
INGRANAGGIO ELIC	7894413	1	50 – 45

		Qty	PAGE
INGRASSATORE	70923219	1	10 – 5
		1	10 – 20
		1	10 – 40
		1	10 – 45
		1	10 – 50
		1	10 – 55
		1	10 – 60
		1	10 – 65
		3	10 – 80
		1	10 – 110
		1	10 – 125
		1	20 – 5
		1	20 – 20
		1	20 – 30
		1	20 – 35
		1	20 – 75
		1	20 – 80
		1	40 – 10
		2	40 – 50
		1	50 – 45
		1	50 – 75
		2	60 – 10
		2	60 – 130
		4	60 – 135
		4	60 – 140
		2	60 – 215
		2	60 – 220
		1	80 – 35
		2	80 – 55
INGRASSATORE	71339847	2	60 – 35
		2	60 – 40
		2	60 – 45
		2	60 – 50
		2	60 – 55
		2	60 – 60
		4	60 – 145
		4	60 – 150
		4	60 – 155
		4	60 – 160
		4	60 – 165
		4	60 – 170
		4	60 – 175
		4	60 – 180
INSIEME VITI	70923306	3	40 – 10
		1	50 – 55
INTERRUTTORE	700113863	2	30 – 5
		1	30 – 115
		1	80 – 50
		1	80 – 70

PEZZI CHE RECCOMANDIANO DI TENERE A MAGAZZINO

D26

		Qty	PAGE
INTERRUTTORE	700119161	2	30 – 10
		1	30 – 15
		2	30 – 20
		1	30 – 45
		1	30 – 120
		1	70 – 45
		1	80 – 65
INTERRUTTORE	700710208	1	30 – 5
		1	30 – 10
		1	30 – 20
		1	60 – 250
		1	60 – 270
INTERRUTTORE	700711188	1	30 – 20
KIT	700138038	1	80 – 40
KIT	700710807	1	50 – 115
KIT	700711425	1	10 – 35
		1	10 – 45
		1	10 – 55
KIT	700712574	2	10 – 40
		2	10 – 45
		2	10 – 50
		2	10 – 55
KIT	700720098	1	50 – 175
KIT	7815053	1	10 – 20
		2	10 – 30
		2	10 – 35
		1	10 – 40
		1	10 – 45
		1	10 – 50
		1	10 – 55
		1	10 – 75
KIT CUSCINETTO	700720153	2	10 – 30
		2	10 – 35
KIT CUSCINETTO	71308951	2	40 – 45
KIT RIPARAZIONE	700150670	1	50 – 90
KIT RIPARAZIONE	700154471	1	30 – 120
KIT RIPARAZIONE	700719338	1	70 – 75
KIT RIPARAZIONE	700720122	1	10 – 30
		1	10 – 40
		1	10 – 50
KIT RIPARAZIONE	700723268	1	10 – 40
		1	10 – 45
		2	10 – 50
		1	10 – 55
KIT RIPARAZIONE	700723560	1	80 – 85
KIT RIPARAZIONE	7738800	1	80 – 85
KIT RIPARAZIONE	8732661	1	80 – 80
KIT TENUTA	700711114	1	70 – 25

		Qty	PAGE
KIT TENUTA	700712678	3	70 – 50
		1	70 – 70
KIT TENUTA	700714382	1	70 – 55
KIT TENUTA	700715662	1	70 – 15
		6	70 – 15
KIT TENUTA	700715929	3	70 – 20
		5	70 – 20
KIT TENUTA	700719151	1	70 – 70
KIT TENUTA	700720178	1	70 – 35
KIT TENUTA	700720460	1	60 – 315
KIT TENUTA	700722237	1	80 – 80
LACCIO	866566	2	50 – 5
		6	50 – 35
		1	50 – 90
LAMPADINA	700721617	3	30 – 70
LEGATORE	700700968	1	50 – 45
		1	50 – 50
		1	50 – 90
MAGLIA	329264M91	1	20 – 85
		1	20 – 90
		1	20 – 95
MAGLIA	329277M91	2	20 – 100
		2	20 – 105
		2	20 – 110
MAGLIA	700124036P	3	40 – 5
MAGLIA	700720263	1	10 – 125
MAGLIA	7088008	1	10 – 110
MAGLIA	86405	1	10 – 105
MAGLIA INCLINATA	329266M91	1	20 – 90
MAGLIA INCLINATA	329420M91	2	20 – 100
		2	20 – 105
MAGNETE	700706340	2	30 – 5
		1	30 – 115
		1	80 – 45
		1	80 – 60
MANICOTTO	7852718	1	10 – 80
MANIGLIA	7894967	2	60 – 30
MOLLA	58107B	8	10 – 120
		12	10 – 130
		6	20 – 115
		8	20 – 120
		8	20 – 125
MOLLA	58644	10	50 – 60
		1	50 – 80
MOLLA	6522700P	1	20 – 75
		1	20 – 80
MOLLA	6553259P	2	50 – 45

		Qty	PAGE
MOLLA	700706376	5	50 – 65
		5	50 – 70
		4	60 – 5
MOLLA	700709636	1	50 – 80
MOLLA	700714166	2	40 – 75
		4	40 – 80
		1	50 – 75
MOLLA	700714985	1	50 – 35
MOLLA	700714986	6	50 – 10
		6	50 – 15
MOLLA	700714987	1	40 – 45
MOLLA	700720059	19	20 – 45
MOLLA	700720548	2	20 – 5
		2	20 – 20
MOLLA	758011	10	40 – 20
MOLLA	758482	6	50 – 35
MOLLA	7758212	2	60 – 30
MOLLA	7758915	2	40 – 75
		1	60 – 15
		1	60 – 20
MOLLA	858019	8	10 – 75
MOLLA	858027	2	50 – 10
		2	50 – 20
MOLLA	858308	1	40 – 40
		2	50 – 35
MOLLA COMPOSTA	58511	2	20 – 5
		1	20 – 45
MOLLA TENDITRICE	700712484	1	50 – 35
MOLLA TENDITRICE	700758888	1	20 – 30
MOLLA TENDITRICE	758268	1	40 – 15
		1	50 – 55
MOLLA TENDITRICE	758441	1	50 – 80
		2	60 – 245
		2	60 – 250
MORSETTO	700706683	3	50 – 120
		3	50 – 125
		2	50 – 130
		6	50 – 175
		2	50 – 180
MORSETTO	70919171	3	50 – 135
NASTRO	844498	2	80 – 85
NIPPLO	70915276	1	10 – 75
		1	50 – 155
		1	50 – 160
PARAOLIO	700706045	1	10 – 80
		2	10 – 95
PARAOLIO	700706096	6	40 – 5
PARAOLIO	700710542	1	10 – 125

		Qty	PAGE
PARAOLIO	700715965	1	10 – 110
		1	10 – 125
PARAOLIO	700716267	2	10 – 115
PARAOLIO	700718774	1	80 – 80
PARAOLIO	700723562	1	80 – 85
PARAOLIO	70248372	2	20 – 175
PARAOLIO	8044695	12	50 – 65
		12	50 – 70
PERNO	700113037	2	10 – 15
		2	10 – 75
PERNO	70922135	1	50 – 45
PERNO	70922598	3	50 – 45
		1	50 – 90
PERNO D'ATTACCO	700706685	5	50 – 65
		5	50 – 70
		4	60 – 5
		2	70 – 60
		2	70 – 65
PIASTRA	6522866P	1	10 – 75
		1	10 – 120
PIASTRA	6523807	1	50 – 45
PIASTRA	700112903P	3	10 – 75
		1	10 – 120
PIASTRA DI FERMO	6613624P	1	50 – 50
		1	50 – 90
PIGNONE	702700040	1	50 – 45
PRIGIONIERO	6523229	1	50 – 45
PROTETTORE	700129647P	6	60 – 5
PROTEZIONE	700139255	1	50 – 20
		6	60 – 30
		2	60 – 150
		10	60 – 160
		2	60 – 170
		10	60 – 180

PEZZI CHE RECCOMANDIANO DI TENERE A MAGAZZINO

D27

		Qty	PAGE
RICEVITORE	700714529	2	20 – 140
		2	20 – 145
		2	20 – 150
		1	20 – 155
		2	20 – 160
		2	20 – 165
		2	20 – 170
		6	60 – 30
		2	60 – 35
		2	60 – 40
		2	60 – 45
		2	60 – 50
		2	60 – 55
		2	60 – 60
		1	60 – 65
		1	60 – 70
		1	60 – 75
		1	60 – 80
RONDELLA	6591572	1	50 – 50
RONDELLA	700123293P	3	40 – 10
RONDELLA	700137107P	1	10 – 80
		1	10 – 105
RONDELLA	7852163	2	50 – 45
RONDELLA	7852593	2	50 – 50
RONDELLA	7852742	1	50 – 45

		Qty	PAGE
RONDELLA	Y705525	2	10 – 60
		2	10 – 65
		1	10 – 70
		2	10 – 125
		15	20 – 15
		15	20 – 65
		2	30 – 5
		2	30 – 10
		1	30 – 15
		1	30 – 25
		4	30 – 30
		22	40 – 25
		2	40 – 75
		2	50 – 140
		6	60 – 15
		5	60 – 20
		12	60 – 30
		2	60 – 35
		2	60 – 40
		1	60 – 45
		2	60 – 50
		2	60 – 55
		1	60 – 60
		2	60 – 65
		2	60 – 70
		1	60 – 75
		2	60 – 80
		6	60 – 125
		2	70 – 45
		5	80 – 75

		Qty	PAGE
RONDELLA	Y705533	2	10 – 85
		1	20 – 45
		3	20 – 85
		3	20 – 90
		3	20 – 100
		3	20 – 105
		8	20 – 135
		9	30 – 5
		9	30 – 10
		1	30 – 15
		1	30 – 20
		1	30 – 25
		4	30 – 30
		3	30 – 35
		3	30 – 40
		3	30 – 50
		6	30 – 70
		2	40 – 10
		20	40 – 20
		8	40 – 25
		10	40 – 40
		15	40 – 60
		16	40 – 60
		2	50 – 30
		4	50 – 40
		6	50 – 80
		2	60 – 15
		2	60 – 15
		2	60 – 20
		14	60 – 30
		1	60 – 35
		1	60 – 50
		1	60 – 55
		1	60 – 60
		3	60 – 85
		4	60 – 85
		5	60 – 85
		14	60 – 105
		2	60 – 105
		4	60 – 105
		5	60 – 105
		20	60 – 110
		3	60 – 110
		4	60 – 110
		6	60 – 125
		6	60 – 145
		6	60 – 150
		4	60 – 155
		4	60 – 160

		Qty	PAGE
		6	60 – 165
		6	60 – 170
		4	60 – 175
		4	60 – 180
		3	60 – 205
		3	60 – 215
		3	60 – 220
		1	60 – 225
		1	60 – 235
		4	70 – 45
		1	70 – 60
		1	70 – 65
		4	80 – 65
		8	80 – 80
RONDELLE PIANE	705541	12	10 – 85
		1	10 – 110
		18	20 – 35
		4	20 – 175
		2	40 – 30
		2	40 – 40
		3	40 – 45
		8	40 – 50
		4	40 – 60
		24	50 – 5
		2	50 – 30
		4	50 – 35
		4	50 – 40
		4	50 – 80
		6	60 – 5
		7	60 – 85
		12	60 – 90
		12	60 – 95
		12	60 – 110
		8	60 – 190
		4	60 – 205
		4	60 – 210
		4	60 – 215
		4	60 – 220
RULLO	6524623P	1	50 – 55
RULLO	6524870P	1	40 – 40
RULLO	700122799	1	50 – 50
RULLO	700138225	1	40 – 40
		1	50 – 75
RULLO	700140080	19	20 – 45
RULLO PER CATENA	1836103M91	1	20 – 85
		1	20 – 90
		1	20 – 95

PEZZI CHE RECCOMANDIANO DI TENERE A MAGAZZINO

D28

		Qty	PAGE
RULLO PER CATENA	1836104M91	1	**20 – 100**
		1	**20 – 100**
		1	**20 – 105**
		1	**20 – 105**
		2	**20 – 110**
RULLO PER CATENA	W980268US	1	**10 – 105**
RUOTA MOTRICE	87726	3	**20 – 100**
		3	**20 – 105**
		2	**20 – 110**
RUOTA MOTRICE	87973	2	**20 – 85**
		1	**20 – 90**
		1	**20 – 95**
RUOTA MOTRICE	Y747931	1	**10 – 110**
SALISCENDI	700714528	2	**20 – 140**
		2	**20 – 145**
		2	**20 – 150**
		1	**20 – 155**
		1	**20 – 160**
		2	**20 – 165**
		2	**20 – 170**
		6	**60 – 30**
		2	**60 – 35**
		1	**60 – 40**
		1	**60 – 45**
		2	**60 – 50**
		1	**60 – 55**
		1	**60 – 60**
SCATOLA	700114076	1	**30 – 115**
SCATOLA	700114079	1	**50 – 180**
SENSORE	700706398	8	**30 – 5**
		8	**30 – 10**
		5	**30 – 25**
		1	**30 – 45**
		1	**30 – 115**
		1	**30 – 120**
SENSORE	71391869	1	**30 – 45**
SENSORE	71393718	1	**10 – 80**
SOLENOIDE	700720041	4	**70 – 15**
		1	**70 – 15**
SPAZZOLA	700713894	12	**40 – 60**
SPESSORE	6522932	2	**10 – 15**
		2	**10 – 75**
SPESSORE	6553275	2	**50 – 45**
		9	**50 – 60**
SPINA	863738	1	**50 – 50**
SPOGLIATORE	700138858	1	**50 – 45**
SPOGLIATORE	700161305P	5	**20 – 35**
SUPPORTO	700102136	1	**50 – 50**
SUPPORTO DI BASE	8045148	1	**50 – 45**

		Qty	PAGE
TENDITORE	6845077	1	**50 – 10**
TENDITORE	7895733	1	**50 – 45**
TERMOSTATO	700716952	1	**10 – 80**
TRANSDUCER	700720228	1	**30 – 5**
		1	**30 – 10**
		1	**30 – 95**
		X	**30 – 100**
TRANSDUCER	700722199	1	**30 – 25**
TUBO FLESSIBILE	700706798	3	**50 – 135**
VALVOLASOLENOIDE	1079721M1	2	**70 – 20**
VALVOLASOLENOIDE	1079723M1	1	**70 – 50**
VITE	7883374	1	**10 – 70**
		2	**20 – 35**
		6	**20 – 50**
		3	**20 – 95**
		3	**20 – 110**
		24	**20 – 130**
		3	**30 – 55**
		4	**30 – 60**
		4	**30 – 65**
		1	**30 – 70**
		2	**30 – 75**
		8	**40 – 60**
		1	**60 – 50**
		2	**60 – 85**
		4	**60 – 100**
		4	**60 – 105**
		5	**60 – 105**
		3	**60 – 110**
		4	**60 – 110**
		12	**60 – 130**
		15	**60 – 135**
		20	**60 – 140**
		2	**70 – 30**
		2	**80 – 60**
		1	**80 – 75**
VITE	8701781	2	**50 – 10**
		2	**50 – 20**
VITE	Y706549	6	**50 – 85**

Qty	PAGE

Qty	PAGE

RECAMBIO QUE SE RECOMIENDA MANTENER EN STOCK

D29

		Qty	PAGE
ABRAZADERA	70925094	6	30 – 5
		6	30 – 10
		1	30 – 15
		5	30 – 20
		4	30 – 25
		X	30 – 25
		1	30 – 30
		5	30 – 55
		4	30 – 70
		2	30 – 80
		18	50 – 95
		36	50 – 105
		1	50 – 120
		2	50 – 135
		6	50 – 145
		6	50 – 150
		2	50 – 155
		2	50 – 160
		1	70 – 40
ACTUADOR	700709996	1	30 – 5
		1	30 – 10
		1	30 – 20
		1	60 – 250
		1	60 – 270
ACTUADOR	700710211	2	30 – 10
		1	30 – 15
		2	30 – 20
		1	30 – 45
		1	30 – 120
		1	70 – 45
		1	80 – 65
AGUJA	700123233P	6	50 – 5
ALUMBRADO	700716461	2	30 – 55
		2	30 – 60
		2	30 – 65
ALUMBRADO	700726172	1	30 – 60
		1	30 – 65
ANILLA RETENCION	355919X1	1	10 – 110
		1	10 – 125
		1	50 – 40
		1	50 – 55
ANILLA RETENCION	70927732	2	40 – 40
		1	50 – 45
		2	50 – 75
ANILLA RETENCION	70928179	2	50 – 5
ANILLO COJINETE	700706038	2	10 – 80
ANILLO COJINETE	70927348	2	10 – 115
ANILLO COJINETE	832190M1	4	20 – 175

		Qty	PAGE
ANUDADOR	700700968	1	50 – 45
		1	50 – 50
		1	50 – 90
ARANDELA	6591572	1	50 – 50
ARANDELA	700123293P	3	40 – 10
ARANDELA	700137107P	1	10 – 80
		1	10 – 105
ARANDELA	7852163	2	50 – 45
ARANDELA	7852593	2	50 – 50
ARANDELA	7852742	1	50 – 45
ARANDELA	Y705525	2	10 – 60
		2	10 – 65
		1	10 – 70
		2	10 – 125
		15	20 – 15
		15	20 – 65
		2	30 – 5
		2	30 – 10
		1	30 – 15
		1	30 – 25
		4	30 – 30
		22	40 – 25
		2	40 – 75
		2	50 – 140
		6	60 – 15
		5	60 – 20
		12	60 – 30
		2	60 – 35
		2	60 – 40
		1	60 – 45
		2	60 – 50
		2	60 – 55
		1	60 – 60
		2	60 – 65
		2	60 – 70
		1	60 – 75
		2	60 – 80
		6	60 – 125
		2	70 – 45
		5	80 – 75

		Qty	PAGE
ARANDELA	Y705533	2	10 – 85
		1	20 – 45
		3	20 – 85
		3	20 – 90
		3	20 – 100
		3	20 – 105
		8	20 – 135
		9	30 – 5
		9	30 – 10
		1	30 – 15
		1	30 – 20
		1	30 – 25
		4	30 – 30
		3	30 – 35
		3	30 – 40
		3	30 – 50
		6	30 – 70
		2	40 – 10
		20	40 – 20
		8	40 – 25
		10	40 – 40
		15	40 – 60
		16	40 – 60
		2	50 – 30
		4	50 – 40
		6	50 – 80
		2	60 – 15
		2	60 – 15
		2	60 – 20
		14	60 – 30
		1	60 – 35
		1	60 – 50
		1	60 – 55
		1	60 – 60
		3	60 – 85
		4	60 – 85
		5	60 – 85
		14	60 – 105
		2	60 – 105
		4	60 – 105
		5	60 – 105
		20	60 – 110
		3	60 – 110
		4	60 – 110
		6	60 – 125
		6	60 – 145
		6	60 – 150
		4	60 – 155
		4	60 – 160

		Qty	PAGE
		6	60 – 165
		6	60 – 170
		4	60 – 175
		4	60 – 180
		3	60 – 205
		3	60 – 215
		3	60 – 220
		1	60 – 225
		1	60 – 235
		4	70 – 45
		1	70 – 60
		1	70 – 65
		4	80 – 65
		8	80 – 80
ARANDELAS PLANAS	705541	12	10 – 85
		1	10 – 110
		18	20 – 35
		4	20 – 175
		2	40 – 30
		2	40 – 40
		3	40 – 45
		8	40 – 50
		4	40 – 60
		24	50 – 5
		2	50 – 30
		4	50 – 35
		4	50 – 40
		4	50 – 80
		6	60 – 5
		7	60 – 85
		12	60 – 90
		12	60 – 95
		12	60 – 110
		8	60 – 190
		4	60 – 205
		4	60 – 210
		4	60 – 215
		4	60 – 220
ARBOL	6553267	1	50 – 45
ARBOL	6591580	1	50 – 50
ARO	355994X1	2	10 – 25
ARO	700720004	2	20 – 35
		2	40 – 55
ARO	70927103	1	10 – 60
		10	40 – 80
ARO	70927699	1	10 – 20
		1	10 – 75
ARO	70927700	2	40 – 10
ARO	70927728	1	50 – 50

RECAMBIO QUE SE RECOMIENDA MANTENER EN STOCK

		Qty	PAGE
ARO	70927744	2	20 – 40
		1	50 – 20
		6	60 – 30
		2	60 – 130
		4	60 – 135
		2	60 – 150
		2	60 – 155
		10	60 – 160
		2	60 – 170
		2	60 – 175
		10	60 – 180
ARO	70928720	8	60 – 10
ARO	738633	2	50 – 35
ARO	7852767	3	40 – 10
ARO	Y740720	1	10 – 125
BANDA	844498	2	80 – 85
BARRA	700113189	7	40 – 60
BOBINA	700725827	1	70 – 20
		3	70 – 20
		2	70 – 50
BOMB 12V 21W SBC	621235M1	1	30 – 55
		2	30 – 60
		1	30 – 65
BOMB C/I 21/5W	908543M1	1	30 – 55
		2	30 – 60
		1	30 – 65
BUJE RETENACEITE	700715740	2	20 – 35
		2	40 – 55
BULON CILINDRICO	700706685	5	50 – 65
		5	50 – 70
		4	60 – 5
		2	70 – 60
		2	70 – 65
CADENA	700720264	1	10 – 125
CADENA	7087935	1	10 – 110
CADENA 5M	1836103M91	1	20 – 85
		1	20 – 90
		1	20 – 95
CADENA 5M	1836104M91	1	20 – 100
		1	20 – 100
		1	20 – 105
		1	20 – 105
		2	20 – 110
CADENA 5M	W980268US	1	10 – 105
CAJA	700114076	1	30 – 115
CAJA	700114079	1	50 – 180
CALCE	6522932	2	10 – 15
		2	10 – 75

		Qty	PAGE
CALCE	6553275	2	50 – 45
		9	50 – 60
CASQUILLO	52761	1	10 – 105
		5	10 – 110
		6	20 – 35
		6	60 – 10
CASQUILLO	6523500	6	10 – 110
		2	10 – 125
		3	10 – 125
		7	50 – 40
		3	50 – 55
CASQUILLO	6523799	1	30 – 15
		10	50 – 35
CASQUILLO	700122681P	6	50 – 65
		6	50 – 70
CASQUILLO	700123261	1	50 – 5
CASQUILLO	700124038	12	40 – 5
CASQUILLO	700129529	2	40 – 10
CASQUILLO	700138307	14	20 – 40
CASQUILLO	700139037	6	20 – 40
CASQUILLO	700161321	2	20 – 35
CASQUILLO	70936273	1	60 – 10
CASQUILLO	712810	1	40 – 10
		3	50 – 5
CASQUILLO	740217	1	20 – 35
CASQUILLO	7852114	2	10 – 75
CASQUILLO	Y52316	2	40 – 10
		5	40 – 40
		3	50 – 5
		1	60 – 290
		2	60 – 305
		2	60 – 310
		1	60 – 320
		1	60 – 325
		1	60 – 330
		1	60 – 335
CATADIOPTRICO	700723134	6	50 – 85
CATADIOPTRICO	8722894	6	50 – 85
CAUCHO	700137058	1	40 – 10
CENTRAJE	863738	1	50 – 50

		Qty	PAGE
CERROJO	700714528	2	20 – 140
		2	20 – 145
		2	20 – 150
		1	20 – 155
		1	20 – 160
		2	20 – 165
		2	20 – 170
		6	60 – 30
		2	60 – 35
		1	60 – 40
		1	60 – 45
		2	60 – 50
		1	60 – 55
		1	60 – 60
CIERRE	866566	2	50 – 5
		6	50 – 35
		1	50 – 90
CJT PERNO	6521868	1	10 – 80
		1	80 – 40
CLAVE	Y61952	1	20 – 110
CODO	700706682	5	50 – 120
		5	50 – 125
		6	50 – 130
		11	50 – 175
		2	50 – 180
COJINETE	1124697	1	10 – 20
		1	10 – 75
COJINETE	50021	1	20 – 85
		1	20 – 90
		2	20 – 95
		1	20 – 100
		1	20 – 105
		3	20 – 110
		1	20 – 155
		1	20 – 170
COJINETE	50393	2	40 – 40
COJINETE	51292	1	20 – 85
		1	20 – 90
		1	20 – 95
		2	20 – 100
		2	20 – 105
		1	20 – 110
		1	20 – 140
		1	20 – 145
		1	20 – 150
		1	20 – 160
		1	20 – 165

		Qty	PAGE
COJINETE	51318	1	10 – 60
		1	10 – 65
		1	10 – 70
		1	20 – 5
		1	20 – 20
COJINETE	6105159	3	40 – 45
COJINETE	700109753P	1	40 – 5
COJINETE	700124004P	1	10 – 60
		1	10 – 65
		1	10 – 70
COJINETE	700140331	1	10 – 125
		1	20 – 35
COJINETE	700704263	1	10 – 110
		1	10 – 125
		1	40 – 5
COJINETE	700706124	1	40 – 55
COJINETE	700706131	6	40 – 5
COJINETE	700706956	1	10 – 20
		1	10 – 75
COJINETE	700715741	1	20 – 35
		1	40 – 55
COJINETE	700715941	1	50 – 25
COJINETE	700716611	1	10 – 110
		1	40 – 5
COJINETE	700720050	1	20 – 135
		1	40 – 45
COJINETE	700720348	19	20 – 40
COJINETE	700720349	19	20 – 45
COJINETE	70590704	4	20 – 130
COJINETE	711770	10	40 – 80
		1	50 – 5
COJINETE	712158	1	40 – 5
COJINETE	712604	1	10 – 110
		1	20 – 110
COJINETE	7713829	2	40 – 60
COJINETE	7713837	2	40 – 10
COJINETE	8050478	1	50 – 40
COJINETE	8050866	2	50 – 35
COJINETE	Y710392	10	80 – 45
		10	80 – 65
COJINETE DE BOLA	1109055	6	40 – 5
COJINETE DE BOLA	700722661	2	50 – 5
		1	50 – 25
		6	50 – 35
		1	50 – 35
		1	50 – 90
COJINETE OSCIL.	700720354	1	20 – 35

RECAMBIO QUE SE RECOMIENDA MANTENER EN STOCK

D31

		Qty	PAGE
CONECTOR	700706683	3	50 – 120
		3	50 – 125
		2	50 – 130
		6	50 – 175
		2	50 – 180
CONECTOR	70919171	3	50 – 135
CONO	70341230	4	20 – 175
CONO COJINETE	700706039	2	10 – 80
CONO COJINETE	70927347	2	10 – 115
CONTRATUERCA	704247	38	20 – 45
		8	20 – 75
		2	40 – 10
		6	50 – 10
		2	50 – 20
		18	50 – 65
		12	50 – 70
		2	50 – 185
		4	60 – 100
		2	60 – 105
		4	60 – 105
		5	60 – 105
		4	60 – 110
		12	60 – 130
		15	60 – 135
		18	60 – 140
		4	60 – 145
		4	60 – 150
		4	60 – 155
		4	60 – 160
		4	60 – 165
		4	60 – 170
		4	60 – 175
		4	60 – 180
		4	60 – 205
		2	60 – 255
		2	80 – 50
		2	80 – 70
CONTRATUERCA SUP	700703922	1	10 – 115
		6	40 – 5
		1	40 – 45
		1	50 – 5
		3	50 – 80
		2	80 – 35
		10	80 – 40
		3	80 – 50
		2	80 – 55
		3	80 – 70

		Qty	PAGE
CONTRATUERCA SUP	Y704734	14	10 – 60
		6	10 – 65
		7	10 – 70
		2	10 – 85
		4	10 – 110
		8	10 – 120
		4	10 – 125
		12	10 – 130
		4	20 – 15
		18	20 – 25
		20	20 – 45
		12	20 – 65
		8	20 – 120
		8	20 – 125
		8	20 – 135
		7	20 – 155
		1	20 – 170
		2	30 – 50
		2	40 – 40
		2	40 – 45
		6	40 – 50
		8	40 – 60
		8	40 – 65
		18	40 – 70
		5	40 – 80
		4	50 – 5
		4	50 – 80
		2	60 – 15
		2	60 – 20
		4	60 – 205
		1	60 – 210
		2	60 – 230
		13	60 – 245
		2	60 – 250
		6	60 – 250
		7	60 – 250
		4	60 – 260
		11	60 – 265
		11	60 – 270
		1	70 – 5
		6	70 – 5
		5	70 – 10
		2	70 – 30
		1	70 – 45
		3	70 – 60
		3	70 – 65
		28	80 – 45
		28	80 – 65
		4	80 – 85

		Qty	PAGE
CONTRATUERCA SUP	Y704742	2	10 – 5
		28	10 – 15
		20	10 – 60
		20	10 – 65
		20	10 – 70
		1	10 – 85
		4	10 – 110
		4	10 – 125
		2	20 – 10
		8	20 – 15
		6	20 – 25
		2	20 – 35
		2	20 – 45
		8	20 – 65
		6	20 – 70
		12	40 – 5
		6	40 – 10
		3	40 – 45
		2	40 – 50
		10	40 – 60
		6	40 – 70
		2	40 – 75
		8	50 – 5
		1	50 – 80
		1	60 – 245
		2	60 – 250
		8	60 – 260
		2	60 – 265
		2	60 – 270
		1	70 – 40
		1	70 – 45
		10	80 – 45
		2	80 – 50
		2	80 – 55
		10	80 – 65
		2	80 – 70
CORREA	700717886	1	80 – 80
CRAPA RETEN	70925993	1	10 – 110
		1	20 – 110
CRAPA RETEN	7894975	2	60 – 30
CUCHILLA	700113188P	7	40 – 60
CUCHILLA	700718710	1	50 – 50
		1	50 – 90
CUCHILLA	700721367	19	20 – 45
DEDO	700113345P	6	50 – 65
		6	50 – 70

		Qty	PAGE
DEFENSA	700139255	1	50 – 20
		6	60 – 30
		2	60 – 150
		10	60 – 160
		2	60 – 170
		10	60 – 180
DESBARBADOR	700138858	1	50 – 45
DESBARBADOR	700161305P	5	20 – 35
DETECTOR	700706398	8	30 – 5
		8	30 – 10
		5	30 – 25
		1	30 – 45
		1	30 – 115
		1	30 – 120
DETECTOR	71391869	1	30 – 45
DETECTOR	71393718	1	10 – 80
DIENTE	700716132	8	20 – 135
DISCO	1712868	1	50 – 45
DISCO	700108820	4	10 – 75
		2	10 – 120
		4	10 – 130
DISCO	700711025	2	20 – 115
DISCO DE EMBRAGU	700140071P	1	10 – 120
		3	10 – 130
DISCO DE EMBRAGU	700140072P	1	10 – 120
		1	10 – 130
DISCO DE EMBRAGU	700710945	2	20 – 120
		2	20 – 125
DISCO DE EMBRAGU	700710946	2	40 – 20
		2	50 – 60
DISPOS.DE SOSTEN	700102136	1	50 – 50
ELEMENTO	7033616	1	80 – 85
ELEMENTO FILTRO	700706153	2	70 – 15
EMPAQUETADURA.	359119X1	2	10 – 95
ENGRANAJE	7894454	1	50 – 45
ENGRANAJE	8802795	2	50 – 10
		2	50 – 20
ENGRANAJE CONICO	7894389	1	50 – 45
ENGRANAJE SINFIN	7894413	1	50 – 45

RECAMBIO QUE SE RECOMIENDA MANTENER EN STOCK

D 32

		Qty	PAGE
ENGRASADOR	70923219	1	10 – 5
		1	10 – 20
		1	10 – 40
		1	10 – 45
		1	10 – 50
		1	10 – 55
		1	10 – 60
		1	10 – 65
		3	10 – 80
		1	10 – 110
		1	10 – 125
		1	20 – 5
		1	20 – 20
		1	20 – 30
		1	20 – 35
		1	20 – 75
		1	20 – 80
		1	40 – 10
		2	40 – 50
		1	50 – 45
		1	50 – 75
		2	60 – 10
		2	60 – 130
		4	60 – 135
		4	60 – 140
		2	60 – 215
		2	60 – 220
		1	80 – 35
		2	80 – 55
ENGRASADOR	71339847	2	60 – 35
		2	60 – 40
		2	60 – 45
		2	60 – 50
		2	60 – 55
		2	60 – 60
		4	60 – 145
		4	60 – 150
		4	60 – 155
		4	60 – 160
		4	60 – 165
		4	60 – 170
		4	60 – 175
		4	60 – 180
ENVASE	700129658P	31	20 – 50
		31	20 – 55
		31	20 – 60
ESCOBILLA	700713894	12	40 – 60
ESPARRAGO	6523229	1	50 – 45
FARO	700721617	3	30 – 70

		Qty	PAGE
FIADOR TRINQUETE	700113036	2	10 – 15
		2	10 – 75
FILTRO	7825516	1	80 – 85
FILTRO	8799280	1	10 – 95
		2	70 – 30
FLEXIBLE	700706798	3	50 – 135
FUSIBLE	1695966M1	1	30 – 105
		2	30 – 120
FUSIBLE	3387318M1	1	30 – 105
		2	30 – 120
GANCHO	1712835	1	50 – 50
IMAN	700706340	2	30 – 5
		1	30 – 115
		1	80 – 45
		1	80 – 60
INTERRUPTOR	700113863	2	30 – 5
		1	30 – 115
		1	80 – 50
		1	80 – 70
INTERRUPTOR	700119161	2	30 – 10
		1	30 – 15
		2	30 – 20
		1	30 – 45
		1	30 – 120
		1	70 – 45
		1	80 – 65
INTERRUPTOR	700710208	1	30 – 5
		1	30 – 10
		1	30 – 20
		1	60 – 250
		1	60 – 270
INTERRUPTOR	700711188	1	30 – 20
JUEGO	700138038	1	80 – 40
JUEGO	700710807	1	50 – 115
JUEGO	700711425	1	10 – 35
		1	10 – 45
		1	10 – 55
JUEGO	700712574	2	10 – 40
		2	10 – 45
		2	10 – 50
		2	10 – 55
JUEGO	700720098	1	50 – 175

		Qty	PAGE
JUEGO	7815053	1	10 – 20
		2	10 – 30
		2	10 – 35
		1	10 – 40
		1	10 – 45
		1	10 – 50
		1	10 – 55
		1	10 – 75
JUEGO COJINETES	700720153	2	10 – 30
		2	10 – 35
JUEGO COJINETES	71308951	2	40 – 45
JUEGO REPARACION	700150670	1	50 – 90
JUEGO REPARACION	700154471	1	30 – 120
JUEGO REPARACION	700719338	1	70 – 75
JUEGO REPARACION	700720122	1	10 – 30
		1	10 – 40
		1	10 – 50
JUEGO REPARACION	700723268	1	10 – 40
		1	10 – 45
		2	10 – 50
		1	10 – 55
JUEGO REPARACION	700723560	1	80 – 85
JUEGO REPARACION	7738800	1	80 – 85
JUEGO REPARACION	8732661	1	80 – 80
JUNTA TORICA	700706050	1	10 – 80
JUNTA TORICA	7040330	1	10 – 80
JUNTA TORICA	70921205	1	70 – 5
		X	70 – 10
		1	80 – 80
JUNTA TORICA	70921206	1	80 – 75
		1	80 – 80
		1	80 – 85
JUNTA TORICA	70921214	2	80 – 85
JUNTA TORICA	70921349	2	70 – 30
		1	70 – 40
		1	70 – 40
		X	70 – 45
JUNTA TORICA	70921882	1	30 – 25
JUNTA TORICA	70923561	1	50 – 50
JUNTA TORICA	831452M1	1	10 – 100
		1	70 – 5
		1	70 – 5
		X	70 – 10
		X	70 – 45
		X	70 – 60
		X	70 – 65
LAMPARA	285871M1	1	30 – 60
		1	30 – 65
		1	30 – 70

		Qty	PAGE
LEVA	700113323P	1	50 – 45
MANCHA	7852718	1	10 – 80
MANETA	7894967	2	60 – 30
MUELLE	58107B	8	10 – 120
		12	10 – 130
		6	20 – 115
		8	20 – 120
		8	20 – 125
MUELLE	58644	10	50 – 60
		1	50 – 80
MUELLE	6522700P	1	20 – 75
		1	20 – 80
MUELLE	6553259P	2	50 – 45
MUELLE	700706376	5	50 – 65
		5	50 – 70
		4	60 – 5
MUELLE	700709636	1	50 – 80
MUELLE	700714166	2	40 – 75
		4	40 – 80
		1	50 – 75
MUELLE	700714985	1	50 – 35
MUELLE	700714986	6	50 – 10
		6	50 – 15
MUELLE	700714987	1	40 – 45
MUELLE	700720059	19	20 – 45
MUELLE	700720548	2	20 – 5
		2	20 – 20
MUELLE	758011	10	40 – 20
MUELLE	758482	6	50 – 35
MUELLE	7758212	2	60 – 30
MUELLE	7758915	2	40 – 75
		1	60 – 15
		1	60 – 20
MUELLE	858019	8	10 – 75
MUELLE	858027	2	50 – 10
		2	50 – 20
MUELLE	858308	1	40 – 40
		2	50 – 35
MUELLE COMPRESOR	58511	2	20 – 5
		1	20 – 45
NIPLE	70915276	1	10 – 75
		1	50 – 155
		1	50 – 160
PASADOR	700113037	2	10 – 15
		2	10 – 75
PASADOR	70922135	1	50 – 45
PASADOR	70922598	3	50 – 45
		1	50 – 90
PERNO	700707998	8	10 – 75

RECAMBIO QUE SE RECOMIENDA MANTENER EN STOCK

D 33

		Qty	PAGE
PERNO	700710413	24	50 – 5
PERNO	700728135	10	60 – 285
		16	60 – 305
		16	60 – 310
		8	60 – 320
		8	60 – 325
		8	60 – 330
		8	60 – 335

		Qty	PAGE
PERNO	70922786	2	10 – 125
		4	20 – 5
		4	20 – 10
		18	20 – 25
		2	20 – 30
		18	20 – 60
		2	20 – 65
		3	20 – 85
		3	20 – 90
		11	20 – 95
		3	20 – 100
		3	20 – 105
		6	20 – 110
		8	20 – 135
		7	20 – 155
		18	40 – 25
		10	40 – 40
		6	40 – 45
		8	40 – 60
		6	40 – 65
		18	40 – 70
		4	50 – 10
		5	50 – 15
		6	50 – 65
		6	50 – 70
		8	50 – 80
		2	50 – 80
		8	60 – 30
		4	60 – 35
		2	60 – 40
		2	60 – 45
		2	60 – 50
		2	60 – 55
		2	60 – 60
		5	60 – 85
		5	60 – 105
		4	60 – 110
		2	60 – 130
		2	60 – 135
		4	60 – 140
		8	80 – 45
		8	80 – 55
		8	80 – 65
		4	80 – 80
PERNO	70934842	4	20 – 15
		4	20 – 65
		4	20 – 70
		12	60 – 5

		Qty	PAGE
PERNO	8701476	2	50 – 5
		6	50 – 35
		1	50 – 90
PERNO	Y703132	72	20 – 50
		62	20 – 55
		62	20 – 60
		15	20 – 140
		9	20 – 145
		15	20 – 150
		8	20 – 155
		6	20 – 160
		4	20 – 165
		8	20 – 170
		9	40 – 25
		5	40 – 35
PERNO UNC	354269X1	1	60 – 245
		1	60 – 265
PERNO UNC	354289X1	1	10 – 115
		10	80 – 40
PERNO UNC	354636X1	12	10 – 130
		1	70 – 40
		1	70 – 45
PERNO UNC	354667X1	1	10 – 85
		2	60 – 245
		2	60 – 250
		2	60 – 265
		2	60 – 270
PIEZA DISTANCIA	158758	19	20 – 45
		1	60 – 245
		2	60 – 250
		1	60 – 265
		2	60 – 270
PIEZA DISTANCIA	2401516P	1	50 – 80
PIEZA DISTANCIA	6518302	2	40 – 65
PIEZA DISTANCIA	6530828P	2	50 – 10
PIEZA DISTANCIA	700137750P	1	20 – 135
		1	40 – 45
PINON	702700040	1	50 – 45
PLACA DE BLOCAJE	6613624P	1	50 – 50
		1	50 – 90
PLATO	6522866P	1	10 – 75
		1	10 – 120
PLATO	6523807	1	50 – 45
PLATO	700112903P	3	10 – 75
		1	10 – 120

		Qty	PAGE
PLETINA	051417P	4	20 – 85
		4	20 – 90
		6	20 – 95
		6	20 – 100
		6	20 – 105
		8	20 – 110
		2	20 – 140
		2	20 – 145
		2	20 – 150
		2	20 – 155
		2	20 – 160
		2	20 – 165
		2	20 – 170
PLETINA	50591	4	40 – 45
PLETINA	700108622P	10	80 – 45
		10	80 – 65
PLETINA	700140328P	1	20 – 20
PLETINA	71130258	2	20 – 5
		2	20 – 20
PLETINA	714360	2	50 – 40
PLETINA	Y710293	8	20 – 130
		2	20 – 135
		4	80 – 45
		4	80 – 65
PRISIONERO	700129571P	4	40 – 80
PRISIONERO	700137654P	4	60 – 5
PRISIONERO	700137655P	5	50 – 65
		5	50 – 70
PROTECTOR	700129647P	6	60 – 5
RECEPTOR	700714529	2	20 – 140
		2	20 – 145
		2	20 – 150
		1	20 – 155
		2	20 – 160
		2	20 – 165
		2	20 – 170
		6	60 – 30
		2	60 – 35
		2	60 – 40
		2	60 – 45
		2	60 – 50
		2	60 – 55
		2	60 – 60
		1	60 – 65
		1	60 – 70
		1	60 – 75
		1	60 – 80
RESORTE TENSOR	700712484	1	50 – 35
RESORTE TENSOR	700758888	1	20 – 30

RECAMBIO QUE SE RECOMIENDA MANTENER EN STOCK

D34

		Qty	PAGE
RESORTE TENSOR	758268	1	40 – 15
		1	50 – 55
RESORTE TENSOR	758441	1	50 – 80
		2	60 – 245
		2	60 – 250
RETEN	700706045	1	10 – 80
		2	10 – 95
RETEN	700706096	6	40 – 5
RETEN	700710542	1	10 – 125
RETEN	700715965	1	10 – 110
		1	10 – 125
RETEN	700716267	2	10 – 115
RETEN	700718774	1	80 – 80
RETEN	700723562	1	80 – 85
RETEN	70248372	2	20 – 175
RETEN	8044695	12	50 – 65
		12	50 – 70
RETENES JUEGO	700711114	1	70 – 25
RETENES JUEGO	700712678	3	70 – 50
		1	70 – 70
RETENES JUEGO	700714382	1	70 – 55
RETENES JUEGO	700715662	1	70 – 15
		6	70 – 15
RETENES JUEGO	700715929	3	70 – 20
		5	70 – 20
RETENES JUEGO	700719151	1	70 – 70
RETENES JUEGO	700720178	1	70 – 35
RETENES JUEGO	700720460	1	60 – 315
RETENES JUEGO	700722237	1	80 – 80
RODA. 6309 2RS	391069X1	2	10 – 25
RODAMIENTO RAD	70590709	1	20 – 135
		2	80 – 45
		2	80 – 65
RODILLO	6524623P	1	50 – 55
RODILLO	6524870P	1	40 – 40
RODILLO	700122799	1	50 – 50
RODILLO	700138225	1	40 – 40
		1	50 – 75
RODILLO	700140080	19	20 – 45
RUEDA DE CADENA	87726	3	20 – 100
		3	20 – 105
		2	20 – 110
RUEDA DE CADENA	87973	2	20 – 85
		1	20 – 90
		1	20 – 95
RUEDA DE CADENA	Y747931	1	10 – 110
SOLENOIDE	700720041	4	70 – 15
		1	70 – 15
SUJETADOR	8045148	1	50 – 45

		Qty	PAGE
TAPA	26260	2	20 – 175
TENSOR	6845077	1	50 – 10
TENSOR	7895733	1	50 – 45
TERMOSTATO	700716952	1	10 – 80
TORNILLO	7883374	1	10 – 70
		2	20 – 35
		6	20 – 50
		3	20 – 95
		3	20 – 110
		24	20 – 130
		3	30 – 55
		4	30 – 60
		4	30 – 65
		1	30 – 70
		2	30 – 75
		8	40 – 60
		1	60 – 50
		2	60 – 85
		4	60 – 100
		4	60 – 105
		5	60 – 105
		3	60 – 110
		4	60 – 110
		12	60 – 130
		15	60 – 135
		20	60 – 140
		2	70 – 30
		2	80 – 60
		1	80 – 75
TORNILLO	8701781	2	50 – 10
		2	50 – 20
TORNILLO	Y706549	6	50 – 85
TORNILLO AJUSTE	70923306	3	40 – 10
		1	50 – 55
TRANSDUCER	700720228	1	30 – 5
		1	30 – 10
		1	30 – 95
		X	30 – 100
TRANSDUCER	700722199	1	30 – 25
TUERCA	370873X1	1	10 – 80
		10	80 – 40
TUERCA	700703458	24	50 – 5
TUERCA	700710414	2	40 – 10
		1	40 – 10
		24	50 – 5
		2	50 – 55

		Qty	PAGE
TUERCA	700711238	1	10 – 10
		2	10 – 65
		5	10 – 105
		4	10 – 110
		2	10 – 110
		4	10 – 125
		4	20 – 5
		4	20 – 10
		5	20 – 30
		4	20 – 35
		6	20 – 55
		18	20 – 60
		4	20 – 70
		2	20 – 80
		14	20 – 95
		12	20 – 110
		6	20 – 140
		3	20 – 145
		6	20 – 150
		3	20 – 155
		3	20 – 160
		3	20 – 165
		3	20 – 170
		34	30 – 5
		34	30 – 10
		11	30 – 15
		1	30 – 20
		8	30 – 20
		1	30 – 25
		18	30 – 25
		X	30 – 25
		6	30 – 30
		3	30 – 35
		3	30 – 40
		1	30 – 45
		3	30 – 50
		11	30 – 55
		2	30 – 60
		4	30 – 60
		4	30 – 65
		1	30 – 70
		5	30 – 75
		74	40 – 25
		18	40 – 30
		31	40 – 35
		10	40 – 40
		4	40 – 45
		2	40 – 45
		17	50 – 10

Qty	PAGE
4	50 – 10
21	50 – 15
2	50 – 30
8	50 – 80
14	50 – 120
14	50 – 125
8	50 – 130
5	50 – 135
40	60 – 5
2	60 – 15
33	60 – 30
12	60 – 35
9	60 – 40
9	60 – 45
11	60 – 50
8	60 – 55
8	60 – 60
2	60 – 85
3	60 – 85
4	60 – 85
5	60 – 85
7	60 – 85
12	60 – 90
12	60 – 95
12	60 – 100
14	60 – 105
4	60 – 105
5	60 – 105
12	60 – 110
20	60 – 110
3	60 – 110
4	60 – 110
6	60 – 125
5	60 – 130
5	60 – 135
12	60 – 140
2	60 – 205
2	60 – 215
3	60 – 215
8	60 – 215
8	60 – 220
1	60 – 225
3	60 – 225
3	60 – 230
3	60 – 235
1	60 – 240
2	70 – 5
2	70 – 10
3	70 – 40

RECAMBIO QUE SE RECOMIENDA MANTENER EN STOCK

D35

		Qty	PAGE
		2	70– 45
		4	80– 45
		4	80– 60
		8	80– 65
		5	80– 75
		10	80– 80
TUERCA	700715751	1	10– 100
		1	10– 110
		1	10– 125
		1	40– 5
TUERCA	704486	1	10– 60
		1	50– 45
TUERCA	70917421	2	40– 50
		1	50– 45
		6	50– 65
TUERCA	7704208	2	20– 175
TUERCA	874404	6	50– 85
TUERCA	Y704072	4	20– 145
		4	30– 50
		8	30– 65
		6	50– 85
		12	60– 30
		4	60– 35
		4	60– 40
		4	60– 50
		4	60– 55
		4	60– 60
		2	60– 65
		2	60– 70
		2	60– 75
		2	60– 80
		4	60– 145
		4	60– 150
		4	60– 155
		4	60– 160
		4	60– 165
		4	60– 170
		4	60– 175
		4	60– 180
UNION	329264M91	1	20– 85
		1	20– 90
		1	20– 95
UNION	329277M91	2	20– 100
		2	20– 105
		2	20– 110
UNION	700124036P	3	40– 5
UNION	700720263	1	10– 125
UNION	7088008	1	10– 110
UNION	86405	1	10– 105

		Qty	PAGE
UNION ACODADA	329266M91	1	20– 90
UNION ACODADA	329420M91	2	20– 100
		2	20– 105
VALVULA SOLENOID	1079721M1	2	70– 20
VALVULA SOLENOID	1079723M1	1	70– 50
VARILLA	6523740P	6	50– 65
		6	50– 70
VARILLA	700137699P	7	20– 10
VARILLA	700706503	6	50– 85
VARILLA	702400048	6	50– 10
		6	50– 65
ZAPATA DE FRENO	700720545	4	60– 305
		4	60– 310
		2	60– 320
		2	60– 325
		2	60– 330
		2	60– 335

Qty	PAGE

Qty	PAGE

RESERVED

NUMERICAL INDEX
INDEX NUMERIQUE
NUMMERN–INDEX
INDICE NUMERICO
INDICE NUMERICO

G 1

051417P **20–85** **20–90** **20–95** **20–100** **20–105** **20–110** **20–140** **20–145** **20–150** **20–155** **20–160** **20–165** **20–170**
1003115M1 **20–75** **20–80**
10163 **50–70**
1043728M91 **70–35**
1079645M1 **80–85**
1079721M1 **70–20**
1079723M1 **70–50**
1109055 **40–5**
1117878P **20–10**
1124697 **10–20** **10–75**
113354M1 **30–20** **30–75**
13223X **10–20** **10–30** **10–35** **10–40** **10–45** **10–50** **10–55** **10–75**
1427996M1 **30–110**
158758 **20–45** **60–245** **60–250** **60–265** **60–270**
1663157P **10–5** **80–35**
1663158P **10–5** **80–35**
1663159P **10–5** **80–35**
1663161 **10–5** **80–35**
1663162 **10–5** **80–35**
1663163 **10–5** **80–35**
1695966M1 **30–105** **30–120**
1703354 **30–45** **30–65** **50–25** **50–35** **50–90** **50–95** **50–100** **50–105**
1705912 **30–20**
1712835 **50–50**
1712868 **50–45**
1713486 **80–85**
1713973 **30–90** **30–100**
1713981 **30–85** **30–100**
1713999 **30–90** **30–100**
1714005 **30–90** **30–100**
1714708 **70–40**
1836103M91 **20–85** **20–90** **20–95**
1836104M91 **20–100** **20–105** **20–110**
195441M1 **30–5** **30–55** **30–60** **30–65** **30–75**
210371 **10–20** **10–30** **10–35** **10–40** **10–45** **10–50** **10–55** **80–15**
211468 **70–45**
235663 **50–40**
2401516P **50–80**
2514740W1 **20–15** **20–65** **20–70** **20–175**
26260 **40–55**
26922 **10–85**
27342 **40–75**
285871M1 **30–60** **30–65** **30–70**
300974M1 **10–100** **60–195**
300975M1 **10–100** **60–195**
318618X **60–35** **60–40** **60–45** **60–50** **60–55** **60–60** **60–145** **60–150** **60–165** **60–170**
325621P **20–85** **20–90** **20–95**
329264M91 **20–90** **20–100** **20–105** **20–110**
329266M91 **20–100**
329277M91 **20–105**
329420M91 **30–105** **30–120**
3387318M1 **50–35** **50–190**
339374X1 **30–70** **50–45** **50–90** **60–205**
3405930M1
353431X1
353433X1 **20–85** **20–90** **20–100** **20–105** **40–75** **50–60** **80–45** **80–65**
353434X1 **20–85** **20–90** **20–100** **20–105** **30–70** **40–50** **40–60** **50–10** **50–40** **50–45** **50–65** **50–70** **80–55** **80–90**
353436X1 **30–5** **30–10** **30–25** **30–45** **30–115** **30–120**
353437X1 **50–35** **50–50**
353439X1 **10–15** **10–60** **10–90** **40–10** **40–50** **40–60** **50–30** **50–35** **50–40** **50–45** **50–50** **80–50** **80–70** **80–80**
353440X1 **40–60** **50–30**
353441X1 **20–30** **30–5** **30–80** **30–115** **80–50** **80–70**
353444X1 **30–5**
353445X1 **20–145** **30–50** **30–55** **30–60** **30–65** **50–85** **60–30** **60–35** **60–40** **60–50** **60–55** **60–60** **60–65** **60–70** **60–75** **60–80** **60–145** **60–150** **60–155** **60–160** **60–165** **60–170** **60–175** **60–180** **60–195**
353446X1 **30–45**
353667X1 **60–35**
353673X1 **60–40** **60–45** **60–50** **60–55** **60–60**
353675X1 **10–125** **20–140** **20–145** **20–150** **20–155** **20–160** **20–165** **20–170**
353677X1 **10–60** **10–65** **10–85** **40–45** **60–195**
353679X1 **40–60** **40–75** **50–25**
353681X1 **30–15** **50–35**
353685X1 **10–60** **10–65** **10–70** **60–15** **60–20** **60–115**
353687X1 **60–100** **60–115**
353689X1 **80–65**
353691X1 **10–10** **10–60** **10–65** **10–70** **10–85** **20–85** **20–90** **20–100** **20–105** **40–60** **50–45** **60–35** **60–40** **60–45** **60–50** **60–55** **60–60** **60–205** **60–245** **60–250** **60–265** **60–270** **80–65** **80–90**

NUMERICAL INDEX
INDEX NUMERIQUE
NUMMERN–INDEX
INDICE NUMERICO
INDICE NUMERICO

G2

353693X1 **20–10** **20–45** **20–85** **20–90** **20–95** **20–100** **20–105** **20–110** **40–50** **50–185** **60–205** **60–245** **60–250**
353724X1 **20–10** **40–10** **60–260** **80–80**
353725X1 **40–45** **50–30** **80–50** **80–70**
353726X1 **10–115**
353728X1 **50–60**
353752X1 **30–5** **30–10** **30–20**
353760X1 **40–45**
353769X1 **30–30** **30–60** **30–65** **30–115** **60–145** **60–150** **60–165** **60–170** **60–175** **60–250** **60–270**
353898X1 **20–115** **20–120** **20–125** **60–255** **60–270**
353906X1 **20–20**
354048X1 **20–170**
354057X1 **50–65** **50–70** **60–245** **60–250** **60–265** **60–270** **80–50** **80–70** **50–80** **60–205** **60–210**
354059X1 **10–10** **10–65** **20–5** **20–20** **20–35** **20–75**
354061X1 **10–70** **10–85** **50–80** **60–205** **60–210** **60–215** **60–220** **20–145** **70–5** **70–10** **70–60** **70–65** **50–35** **10–85** **60–10** **40–40** **30–55** **40–50** **60–245** **60–265** **50–80** **60–205** **70–45**
354066X1
354070X1
354072X1
354080X1
354089X1
354262X1
354264X1
354269X1
354271X1
354276X1 **10–90** **40–10** **40–50** **50–5** **50–35** **50–40** **60–25** **60–255** **80–50** **80–70**
354280X1 **10–105** **50–45**
354285X1 **40–5** **40–75** **50–5**
354289X1 **10–115** **80–40**
354290X1 **20–30** **80–50** **80–70**
354294X1 **10–10** **50–40** **80–35** **80–45** **80–65** **40–75** **40–45** **10–10** **70–60** **70–65** **60–115** **60–250** **10–120** **10–130** **70–40** **70–45** **20–35** **10–85** **60–245** **60–250** **60–265** **60–270** **60–195** **50–30** **10–110** **20–160** **20–165** **20–170**
354441X1
354601X1
354603X1
354613X1
354615X1
354628X1
354632X1
354636X1
354659X1
354667X1
354687X1
354708X1
354712X1
354718X1
354722X1 **10–105** **20–110**
354726X1 **10–90** **10–110**
355564X1 **30–5** **30–80** **30–115** **40–75** **50–10** **80–50** **80–70**
355566X1 **20–85** **20–90** **20–100** **20–105** **40–40** **40–60** **50–10** **50–40** **50–65** **50–70** **80–55** **80–65** **80–90**
355573X1 **10–5** **80–35**
355617X1 **30–5** **30–45** **40–75** **50–10** **80–45** **80–50** **80–60** **80–70**
355618X1 **50–35** **50–140** **60–15** **60–20** **60–30** **80–50** **80–70**
355619X1 **10–75** **10–120** **10–130** **20–115** **20–120** **20–125** **50–10** **50–20** **50–60** **50–65** **50–70** **60–35** **60–40** **60–45** **60–50** **60–55** **60–60** **80–90**
355621X1 **20–15** **20–65** **50–30**
355623X1 **50–40**
355919X1 **10–110** **10–125** **50–40** **50–55**
355994X1 **10–25**
357197X91 **70–5** **70–10** **70–45** **70–60** **70–65** **80–95**
359119X1 **10–95**
360025X1 **40–10**
360030X1 **30–10**
360568X1 **30–5**
3619622M1 **30–15** **50–130** **80–95**
363503X1 **50–30**
363906X1 **40–65**
364224X1 **20–5** **20–20** **20–25** **20–30** **40–5** **40–30** **40–50** **40–60** **40–70** **50–30** **50–40** **60–40** **60–55** **60–130** **60–140**
364246X1 **10–110** **10–125** **20–30** **20–175** **50–35**
3643380M1 **40–45**

364352X1 20–140
20–145
20–150
20–155
20–160
20–165
20–170
30–60
30–65
40–25
40–40
40–45
50–80
60–15
60–20
60–35
60–40
60–50
60–55
60–65
60–70
60–75
60–80
60–130
60–135
60–145
60–150
60–155
60–160
60–165
60–170
60–175
60–180
364533X1 60–145
60–155
60–165
60–175
364534X1 50–25
364965X1 10–60
10–65
50–65
50–70
364970X1 40–20
50–60
70–5
70–10

364975X1 10–65
10–70
40–40
364976X1 20–30
80–55
364982X1 40–5
364988X1 20–100
20–105
20–110
366439X1 10–105
366573X1 10–75
10–120
20–115
40–20
50–60
80–85
367514X1 10–30
10–35
10–50
367550X1 70–35
368270X1 60–35
369250X1 50–80
369275X1 40–45
370873X1 10–80
80–40
373839X1 60–35
60–40
60–45
60–50
60–55
60–60
375095X1 60–195
375099X1 10–90
10–105
20–75
20–80
20–85
20–90
20–100
20–105
80–50
80–70
375101X1 10–80
375113X1 10–125
50–5
376331X1 50–10
50–25
378083X91 80–80

378604P 80–50
80–70
3901284M91 60–205
3901293M1 60–215
60–220
60–230
60–240
3901314M1 60–205
3901358M1 60–295
3901359M1 60–285
60–295
3901361M1 60–295
3901362M1 60–295
3901363M1 60–295
3901364M1 60–295
3901368M1 60–295
3901370M1 60–285
3904567M1 60–285
60–295
3904568M1 60–295
3904569M1 60–295
3904571M1 60–295
3904572M1 60–295
3904573M1 60–285
60–295
3904574M1 60–295
3904575M1 60–295
3904576M1 60–295
3904577M1 60–285
60–295
3904578M1 60–295
3904692M91 60–285
60–295
3904704M91 60–285
60–290
60–295
3904705M91 60–290
390912X1 60–205
60–210
390972X1 70–60
70–65
391069X1 10–25
392464P 20–115
41145 30–70
41681 30–70
457432 10–5
46235 60–225
60–235

50021 20–85
20–90
20–95
20–100
20–105
20–110
20–155
20–170
50393 40–40
50591 40–45
51292 20–85
20–90
20–95
20–100
20–105
20–110
20–140
20–145
20–150
20–160
20–165
51318 10–60
10–65
10–70
20–5
20–20
52183 10–105
10–110
52233 10–65
50–5
60–140
52761 10–105
10–110
20–35
60–10
528324 80–10
528516 70–35
528752 20–30
58107B 10–120
10–130
20–115
20–120
20–125
58511 20–5
20–45
58644 50–60
50–80
6105159 40–45

6124267 60–15
60–20
61390 20–110
6143895B 60–245
60–250
61622 20–115
6176655 50–80
61770 20–5
20–20
6179832P 40–40
60–210
6186506 20–5
61895 20–100
20–105
20–110
61978 20–100
20–105
40–40
6201404 40–10
621235M1 30–55
30–60
30–65
62190 10–125
50–10
50–15
62307 40–40
80–45
80–65
6232946 40–65
6234710 50–80
6268494P 20–100
20–105
20–110
6270888 60–15
60–20
62786 40–10
50–5
63495 70–5
70–10
6350805P 10–75
63586 50–40
50–65
50–70
50–90
60–245
60–250
60–265
60–270

63693 20–75
70–60
70–65
63701 20–15
20–65
20–70
63776 60–5
63800 20–5
63875 60–205
60–210
63883 10–85
60–215
60–220
6474316 20–140
20–150
6475842 80–50
80–70
6489231 10–85
6514772 50–25
6518302 40–65
6521868 10–80
80–40
6522700P 20–75
20–80
6522866P 10–75
10–120
6522932 10–15
10–75
6523229 50–45
6523500 10–110
10–125
50–40
50–55
6523518 50–55
6523534 50–40
50–55
6523542 10–110
10–125
50–40
6523740P 50–65
50–70
6523799 30–15
50–35
6523807 50–45
6524003P 10–85
6524623P 50–55
6524649P 50–55
6524870P 40–40

6524946P 40–40
6529408 60–10
6529432 60–10
6529671B 80–55
6530489P 50–80
6530604 50–5
6530828P 50–10
6553259P 50–45
6553267 50–45
6553275 50–45
50–60
6561351P 50–60
6564595 60–30
6565014 50–40
6579106P 10–10
10–105
6591366 50–40
6591457 50–40
6591465P 50–40
6591549P 50–40
6591564 50–40
6591572 50–50
6591580 50–50
6591614P 50–30
6612030 60–15
6613624P 50–50
50–90
6621825P 50–80
66332 50–5
6818561P 40–20
50–60
6823512P 10–110
6844344 20–160
20–165
6844773P 50–40
6844971 50–35
6845077 50–10
6845101P 50–10
6845135P 50–10
6845507P 40–45
6845713P 50–35
6845721P 50–35
6845879P 20–75
20–80
6848832P 50–10
50–15
6849178 80–20
68759 20–30

69526 40–15
700050220 60–190
700102136 50–50
700105144 80–75
700108565 60–15
700108566P 60–15
60–140
700108569P 60–15
60–140
700108570 60–15
60–140
700108622P 80–45
80–65
700108636P 20–85
20–90
20–95
20–100
20–105
20–110
700108661P 20–115
700108665P 20–115
700108820 10–75
10–120
10–130
700109003P 50–80
700109753P 40–5
700112787P 40–5
700112815P 40–40
700112817P 40–5
700112825P 40–25
700112826P 40–25
700112856P 40–15
700112857 40–15
700112903P 10–75
10–120
700112930P 10–105
700112933 10–115
700112988 10–95
700112993P 10–95
700113036 10–15
10–75
700113037 10–15
10–75
700113042P 10–90
700113044P 10–80
700113045P 10–80
700113047P 10–90
700113054P 10–85

700113057P 10–85
700113058B 10–85
700113098P 50–5
700113170 40–55
700113171 40–55
700113187P 40–60
700113188P 40–60
700113189 40–60
700113281P 20–160
20–165
20–170
700113296P 20–75
700113311 50–35
700113321B 50–40
50–45
50–50
700113323P 50–45
700113325P 50–40
700113328P 50–40
700113330P 50–35
700113336P 50–35
700113342P 50–35
700113345P 50–65
50–70
700113346B 50–35
700113353P 50–95
50–105
700113359 50–95
50–100
50–105
700113360 50–95
50–105
700113361P 50–95
50–105
50–115
700113614 60–10
700113615 60–10
700113646B 10–5
10–10
80–35
700113671P 50–135
700113862 50–150
50–155
50–160
50–175

700113863 30–5
30–115
80–50
80–70
700114076 30–115
700114077 30–80
700114079 50–180
700116125P 20–100
20–105
20–110
700119161 30–10
30–15
30–20
30–45
30–120
70–45
80–65
700119832 40–45
700121187 60–205
700121805 80–50
80–70
700122210 10–5
700122574 30–5
30–10
30–20
700122588P 40–65
700122650 10–90
700122653 10–90
700122654 10–90
700122681P 50–65
50–70
700122682P 50–65
50–70
700122683 50–95
700122799 50–50
700122883 50–55
700123184P 40–60
700123192P 40–60
700123193P 40–60
700123233P 50–5
700123261 50–5
700123293P 40–10
700123321P 20–75
700123330P 10–110
700123337P 10–105
700123362 50–95
50–105
700123388P 40–25

700123409P 40–25
700123417P 40–25
700123432P 40–40
700123444P 20–75
700123446P 20–75
700123460 50–105
700123461 50–95
700123700P 60–10
700123706P 60–10
700123709P 60–10
700123773P 20–85
20–90
20–95
700123774P 20–100
20–105
20–110
700123775P 20–100
700123780P 20–10
700123781P 20–10
700123782P 20–10
700123797P 20–5
700123850P 50–80
700123852P 50–80
700123855 50–80
700123856P 50–80
700123857 50–80
700123860P 50–80
700123922P 60–130
60–135
60–140
700123929 60–145
60–150
60–165
60–170
60–175
60–180
700124004P 10–60
10–65
10–70
700124022P 40–50
700124023P 40–50
700124026 40–55
700124027P 40–50
700124036P 40–5
700124038 40–5
700124041 10–5
80–35
700124052P 50–55

700124056P 50–75
700127895 40–75
700129085 70–5
70–60
700129433B 50–185
700129435P 50–185
700129529 40–10
700129533P 40–10
700129534P 40–10
700129562P 40–80
700129567P 40–80
700129571P 40–80
700129586P 60–5
700129588P 40–20
700129640P 60–5
700129645P 60–5
700129646P 60–5
700129647P 60–5
700129658P 20–50
20–55
20–60
700129665P 40–75
700129682B 80–50
80–70
700129686P 50–80
700129689P 50–80
700129690P 40–60
700129695P 40–80
700129696 70–40
70–45
700129699 70–40
70–45
700129701P 40–80
700129704P 40–75
700129705P 40–80
700129744P 80–45
80–65
700129745P 80–45
80–65
700129761B 80–50
80–70
700129769 40–75
700131436P 60–185
60–215
700133120P 20–140
20–150

700133129P 20–85
20–90
20–95
700133153P 60–30
700133154P 60–30
700133155P 60–30
700133160 60–30
700133164 60–30
700133171 30–55
30–60
30–65
700133172 30–75
700133188P 50–80
700133747P 30–55
700133748P 30–55
700134434P 70–5
70–10
700134443 10–70
700134449P 50–80
700134527 50–80
700134804 10–60
10–65
10–70
60–35
60–40
60–45
60–50
60–55
60–60
700134931P 50–80
700134935 50–80
700134937P 50–80
700134938 50–80
700136931P 50–80
700136934P 50–80
700137039P 10–110
700137040P 60–260
700137047P 30–50
700137058 40–10
700137099 10–95
700137100 10–95
700137103P 10–80
700137106P 10–80
700137107P 10–80
10–105
700137110 40–55
700137114 10–95
700137115 10–95
700137135P 10–80
700137136P 10–90
700137144 40–65
700137150 40–60
700137181P 40–50
700137184P 40–50
700137187P 40–50
700137198P 40–50
700137200P 40–50
700137204 40–60
700137207 40–60
700137210P 40–50
700137213 40–65
700137215P 40–60
700137217P 40–60
700137221P 40–50
700137222 40–50
700137225P 40–45
700137228P 40–45
700137229P 40–45
700137233P 40–45
700137243P 40–10
700137246 40–15
700137248P 40–15
700137254B 40–50
700137305P 40–5
700137310P 40–25
700137312P 40–25
700137316P 40–25
700137318P 40–25
700137319P 40–45
700137321P 40–40
700137326P 40–25
700137327P 40–25
700137330P 40–25
700137336P 40–5
700137337P 40–5
700137341P 40–40
700137343P 40–40
700137346P 40–40
700137354P 40–40
700137361P 60–210
700137366P 60–205
700137367P 60–205
700137368P 60–210
700137369P 60–210
700137370P 60–205
60–210
700137374P 60–210
700137375 10–120
10–130
700137377P 10–120
700137378 10–110
700137382 10–110
10–125
700137386P 10–110
700137387P 10–110
700137390P 10–115
700137393P 10–115
700137396 10–115
700137397P 10–115
700137399P 10–115
700137407P 10–115
700137408P 10–115
700137423P 60–10
700137425P 60–10
700137440 40–75
700137451P 50–5
700137460P 50–10
700137466P 50–25
700137467P 50–25
700137469P 50–10
50–15
700137472P 50–5
700137474P 50–55
700137476P 50–5
700137477P 50–10
50–15
700137481 50–40
700137484P 50–60
700137486P 50–55
700137490P 50–75
700137492 50–75
700137581P 60–5
700137582P 60–5
700137594P 60–5
700137607P 10–85
700137621 10–60
10–65
700137643P 50–125
700137644 10–60
700137654P 60–5
700137655P 50–65
50–70
700137674P 10–65
10–70
700137697P 30–50
700137699P 20–10
700137708 20–50
700137718P 20–85
700137719P 20–100
700137726P 20–130
700137732P 20–135
700137733P 20–135
700137740 60–195
700137742 60–195
700137747P 20–135
700137750P 20–135
40–45
700137751P 20–85
20–90
20–95
700137753P 20–75
700137755P 10–5
700137764P 20–160
700137765P 20–160
20–165
700137766P 20–140
20–145
20–150
700137774P 20–10
700137775P 20–10
700137776P 20–10
700137780 20–115
700137781P 20–5
700137784P 20–75
700137791 10–60
10–65
700137792 10–60
10–65
700137797P 10–60
10–65
10–70
700137800P 10–60
10–65
10–70
700137803P 10–60
10–65
10–70
700137806 10–60
700137811P 60–175
60–180
700137812 60–145
60–150
60–165
60–170
700137816 60–130
60–135
60–155
60–175
700137820P 60–130
60–135
60–140
700137822 60–145
60–155
60–165
60–175
700137824 60–145
60–150
60–155
60–160
60–165
60–170
60–175
700137825 60–145
60–155
60–165
60–175
700137848P 60–130
60–140
700137849P 60–135
60–140
700137855 60–130
60–140
700137866P 60–155
60–160
700137867P 60–175
60–180
700137876P 60–145
60–150
60–165
60–170
700137880 60–145
60–150
60–155
60–160
60–165
60–170
60–175
60–180
700137881 60–145
60–150
60–155
60–160
60–165
60–170
60–175
60–180
700137886 60–145
60–150
60–155
60–160
60–165
60–170
60–175
60–180
700137887 60–145
60–150
60–155
60–160
60–165
60–170
60–175
60–180
700137888 60–100
60–105
60–110
700137889 60–145
60–150
60–155
60–160
60–165
60–170
60–175
60–180
700137890P 60–25
700137894 60–100
700137897P 60–15
60–20
700137898P 20–160

700137899P 60–35
60–40
60–45
700137905P 10–60
10–65
700137906P 60–15
700137911 60–25
700137918P 60–35
60–40
60–45
700137921P 60–50
60–55
60–60
700137929P 60–35
60–40
60–45
60–50
60–55
60–60
700137933 60–35
60–40
60–45
60–50
60–55
60–60
700137934P 60–35
60–40
60–45
60–50
60–55
60–60
700137937P 60–35
60–40
60–45
60–50
60–55
60–60
700137938P 60–35
60–40
60–45
700137939 60–35
700137940P 60–50
700137945P 60–130
60–140
700137949P 60–130
60–140
700137951P 60–135
60–140
700137954P 60–35
700137955P 60–50
700137956 60–30
700137957P 60–30
700137960 60–35
60–40
60–45
60–50
60–55
60–60
700137961 60–35
60–40
60–45
60–50
60–55
60–60
700137964P 60–15
700137965 60–130
700137971 60–130
700137972 60–135
700137975P 60–50
60–55
60–60
700137977P 60–25
700137979 60–30
700137981 60–35
60–40
60–45
60–50
60–55
60–60
700137982P 60–15
700137985P 60–15
700137990 60–15
60–20
700137995P 10–60
10–65
10–70
700137996 60–35
700137997P 60–50
700138000P 60–30
700138001B 60–115
700138004 60–115
700138009B 60–115
700138010B 60–115
700138015B 60–115
700138022B 60–100
60–105
60–110
700138023B 60–115
700138026 60–115
700138028B 60–115
700138029B 60–115
700138031 60–100
60–140
700138035 60–115
700138036 60–35
60–50
700138037P 60–30
700138038 80–40
700138042B 80–45
80–65
700138044B 80–45
80–65
700138046B 80–45
80–65
700138047 80–45
700138049B 80–45
80–65
700138050B 80–45
80–65
700138051B 80–45
80–65
700138052B 80–45
80–65
700138053P 60–135
60–140
700138060P 10–60
10–65
10–70
700138061P 60–25
700138066 30–55
700138067 30–5
30–10
30–20
700138074 30–5
700138076P 10–120
700138096P 10–60
10–65
10–70
700138098 10–60
10–65
700138100P 10–60
700138104P 60–15
700138106P 20–5
700138109P 60–35
60–40
60–45
700138111P 60–145
700138113P 60–145
700138116M 60–165
700138118M 60–165
700138120P 60–155
700138122M 60–155
700138126P 60–155
60–160
700138127P 60–175
700138129 60–175
700138132 60–100
700138133P 60–175
60–180
700138135 60–135
700138138P 20–145
700138140M 60–125
700138145M 60–125
700138146P 60–125
700138152P 60–205
700138159 60–205
700138161P 60–125
700138165P 60–35
60–40
700138167P 60–50
60–55
700138169P 60–50
60–55
700138175P 20–50
20–150
60–125
700138176P 20–50
20–165
60–125
700138179P 40–15
700138197 40–10
700138199P 40–15
700138219 50–75
700138224 50–75
700138225 40–40
50–75
700138228B 40–70
700138229B 40–70
700138243P 20–120
700138246P 20–120
20–125
700138247P 60–40
60–55
700138287P 20–160
20–165
20–170
700138307 20–40
700138328 20–45
700138348 10–125
700138435 20–35
700138460 20–30
700138462P 40–25
700138489P 60–65
60–70
700138490P 60–75
60–80
700138491P 60–65
60–70
700138492P 60–75
60–80
700138493 60–75
700138856P 50–40
700138857P 50–45
700138858 50–45
700138989P 20–65
700139017P 20–35
700139023 20–35
700139033P 20–45
700139034P 20–45
700139037 20–40
700139039 20–40
700139040 20–45
700139041P 20–40
700139042P 20–45
700139044P 20–45
700139045 20–45
700139046P 20–30
700139049P 20–140
20–150
20–155
700139050P 20–30
700139058P 40–35
700139059P 60–65
60–70
60–75
700139060P 20–30
700139077 70–60
70–65
700139079P 20–20
700139082 20–55
700139086P 20–90
700139090P 20–105
700139092P 20–150
700139094P 20–165
700139098 10–125
700139100 10–125
700139101P 10–125
700139102P 10–125
700139103P 10–125
700139107P 20–30
700139109P 20–30
700139117P 40–35
700139123P 40–35
700139124P 40–35
700139138P 20–65
700139141P 20–15
20–65
700139146P 20–15
20–65
700139148P 20–120
700139165P 40–10
700139173P 40–45
700139176P 30–60
30–65
700139177P 30–60
30–65
700139179 40–30
700139180 10–125
700139181P 20–100
20–105
700139182P 20–55
700139183P 20–55
700139184 20–30
700139186 20–30
700139192 20–145
700139193P 20–145
700139195P 20–145
700139207P 20–15
20–65
700139209P 20–30
700139211 30–45
700139213 30–45
700139215 30–45
700139216 30–45

700139217 30–45
700139221P 20–30
700139224P 60–150
60–170
700139232B 80–55
700139237P 50–120
50–125
700139255 50–20
60–30
60–150
60–160
60–170
60–180
700139258B 80–45
80–65
700139259B 80–45
80–65
700139320P 20–35
700139321B 20–35
700139322 20–35
700139324 20–125
700139326P 20–35
700139327P 20–45
700139332 10–125
700139333 20–25
40–70
60–30
700139336P 50–15
50–20
50–70
700139338P 50–15
50–20
50–70
700139339P 50–20
700139341 40–70
60–30
700139343P 60–150
700139346P 60–150
700139347P 60–160
700139349P 60–160
700139353P 60–170
700139355P 60–170
700139357P 60–180
700139359P 60–180
700139366P 60–30
700139374P 40–10
700139379P 20–20
700139384B 20–50
700139385B 20–50
700139388 20–15
700139411P 10–15
700139417B 10–10
700139422P 10–10
700139426P 10–10
700139427P 10–10
700139433 10–10
700139434 10–10
700139437P 10–25
700139441 10–25
700139445P 60–20
700139447 10–10
700139455 10–10
700139456 10–10
700139457 10–10
700139465P 60–255
700139466P 60–255
700139467P 60–255
700139472P 60–255
700139473 60–260
700139474 60–255
60–260
700139475 60–255
700139476 60–255
700139478 60–255
700139479P 60–260
700139598P 50–55
700139673P 30–65
700139682P 20–140
20–150
20–160
20–165
700139752P 20–15
700139753P 20–15
700139810P 20–35
700139811P 20–35
700139812P 20–160
700139814M 20–5
700140014P 20–65
20–70
700140018 20–15
20–65
700140026 20–65
20–70
700140041P 10–100
700140043P 10–100
700140047P 10–100
700140048P 10–100
700140059P 20–105
700140066 10–125
10–130
700140067P 10–130
700140071P 10–120
10–130
700140072P 10–120
10–130
700140075 20–35
700140078 20–45
700140080 20–45
700140082 20–40
700140083 20–40
700140084 20–40
700140085 20–40
700140166P 60–245
60–250
60–265
60–270
700140175 20–80
700140179P 20–5
700140185P 60–245
60–250
700140189P 50–10
50–15
700140227 60–230
700140233P 40–45
700140260 60–245
60–250
60–265
60–270
700140266P 60–190
700140272 40–45
700140279P 40–25
700140280P 40–25
700140281P 40–40
700140282P 50–10
50–15
700140286P 60–185
700140292P 60–110
700140294P 60–85
700140295P 10–70
700140313P 60–15
700140315P 60–15
60–20
700140320 60–140
700140324P 20–35
700140328P 20–20
700140331 10–125
20–35
700140332 10–125
700140333 10–125
700140336 10–125
700140346P 20–150
700140347P 20–165
700140359P 30–45
700140367P 10–125
700140373 30–45
700140380P 60–110
700140382P 60–110
700140383P 60–85
700140386P 60–105
60–110
700140387P 60–85
700140391P 60–85
700140393P 60–85
700140395P 60–105
60–110
700140425P 40–45
700140431P 60–105
700140432P 60–110
700140433P 60–90
700140436P 60–90
700140438P 60–90
700140439P 60–95
700140440P 60–95
700140441P 60–95
700140445P 60–85
60–110
700140446P 60–245
60–250
700140452P 60–215
60–220
700140457P 60–215
60–220
700140458P 60–215
60–220
700140463P 60–245
60–250
700140465P 60–190
700140466P 60–190
700140468 60–185
60–215
60–290
700140469 60–185
60–215
60–290
700140478P 40–45
700140481M 60–105
60–110
700140482P 60–105
700140486M 60–110
700140487M 60–85
700140488M 60–105
60–110
700140489P 60–105
700140495P 20–5
700140497P 60–290
700140498P 60–290
700140499P 60–105
700140500P 60–105
700140714X 20–35
700140716P 20–35
700149042 60–205
700149704 80–85
700149710 80–85
700149712 80–85
700149714 80–85
700149718 80–85
700149719B 80–85
700149720P 80–75
700149723P 80–75
700149725P 80–75
700149726P 80–80
700149729P 80–80
700149734P 80–75
700149735P 80–80
700149736P 80–80
700150609P 50–35
700150610P 50–35
700150655 10–70
700150670 50–90
700151967 80–50
80–70
700151968 80–50
80–70
700151970 80–50
80–60
80–70
700152209P 60–35
60–40
60–45
700152210P 60–135
60–140
700152211P 60–50
60–55
60–60
700152212P 60–135
60–140
700152213P 10–80
700153070P 20–25
40–60
40–70
700153081 10–65
700153111 10–80
700153131B 80–65
700153137P 60–80
700153141P 40–45
700153333P 20–140
20–145
700153335P 20–160
700153373B 80–65
700153393 30–20
700153397 30–20
700153509 50–35
700153514P 50–35
700153515P 50–5
700153519P 10–110
700153538P 50–80
700153546P 30–60
30–65
700153547 10–125
700153563P 10–110
700153566P 30–60
30–65
700153598B 80–55
700153603B 80–55
700154430P 60–205
60–210
700154471 30–120
700154475P 40–10
700154485 10–110
700154486 10–105
700154487 10–105
700154495 50–35
700155797B 40–10
700155822 60–245
60–250
60–265
60–270

700155835 30–30
700155837P 10–70
700155840P 60–15
700155841P 60–15
700155843 30–15
700155844 70–45
700155851 10–70
700155859P 60–205
700155860P 60–205
700155862 10–70
700155865 10–110
700157769P 40–30
700157778P 20–140
700161036P 20–110
700161045P 20–110
700161046P 20–95
700161052 20–35
700161070P 20–110
700161076P 20–35
700161077P 20–35
700161187P 20–155
700161188P 20–170
700161189P 20–155
700161191P 20–170
700161192P 20–155
700161193P 20–170
700161194 20–155
700161195 20–170
700161206P 20–125
700161209P 20–170
700161210P 20–5
20–20
700161212P 20–70
700161288 20–145
700161289P 20–100
20–105
20–110
700161305P 20–35
700161318P 20–120
20–125
700161321 20–35
700161330 10–125
700161334P 20–175
700161336 60–250
60–270
700161337 60–250
60–270

700161338 60–250
60–270
700161352P 10–70
700161867P 60–245
60–250
60–265
60–270
700161900P 20–20
700161903 20–80
700161905P 20–80
700161907 20–80
700161909 40–10
700161920P 20–165
700161950P 20–160
700162029P 20–160
700163293P 10–75
700163297P 10–75
700163299 20–140
20–150
20–155
20–160
20–165
20–170
700163300P 40–60
700163301P 40–60
700163330P 20–155
700163332P 20–170
700163333X 20–170
700163334P 20–95
700163340P 20–110
700163342P 20–95
20–110
700163346P 20–60
700163347P 20–60
700163348P 20–60
700163349P 20–60
700163357M 20–20
700163359P 60–120
700163361P 60–120
700163366P 60–80
700163371P 20–70
700163376P 30–65
700163377P 30–65
700163380P 50–20
700164420P 80–35
700164425B 80–35

700700628 20–140
20–145
20–150
20–155
20–160
20–165
20–170
60–30
60–35
60–40
60–50
60–55
60–60
60–65
60–70
60–75
60–80
700700968 50–45
50–50
50–90
700701069 10–65
10–70
80–75
700701753 80–75
700701764 80–75
700701848 60–195
60–290
700702916 10–60
10–65
10–70
10–105
40–65
50–80
50–120
50–125
700703458 50–5
700703806 10–125
700703830 30–5
30–10
30–20
60–250
60–270

700703922 10–115
40–5
40–45
50–5
50–80
80–35
80–40
80–50
80–55
80–70
700703923 10–5
10–10
10–90
10–105
10–110
20–110
50–30
50–75
700704132 30–20
30–75
70–20
70–50
700704263 10–110
10–125
40–5
700704513 10–105
10–125
700704639 10–100
700704745 50–10
700704837 60–145
60–150
60–155
60–160
60–165
60–170
60–175
60–180
700705088 30–50
30–65
700705158 80–10
700705185 30–50
700705456 60–190
700705617 50–140
700706027 10–95
700706029 10–95
700706030 10–95
700706032 10–95
700706034 10–95

700706038 10–80
700706039 10–80
700706041 10–95
700706045 10–80
10–95
700706049 10–95
700706050 10–80
700706056 10–80
700706057 10–80
700706058 10–80
700706059 10–80
700706060 10–80
700706061 10–80
700706062 10–90
700706063 10–90
700706064 10–90
700706065 10–95
700706087 10–75
700706096 40–5
700706110 10–105
700706124 40–55
700706125 40–55
700706131 40–5
700706133 40–5
700706134 40–5
700706144 10–95
700706151 70–15
700706153 70–15
700706155 70–15
700706156 70–15
700706194 60–195
700706269 50–35
700706276 50–95
50–105
50–115
700706277 50–95
50–105
50–115
50–180
700706279 50–95
50–115
700706280 50–105
50–180
700706281 50–110
700706282 50–110
700706284 50–185
700706288 50–185
700706300 80–95

700706340 30–5
30–115
80–45
80–60
700706376 50–65
50–70
60–5
700706392 70–30
70–60
70–65
700706398 30–5
30–10
30–25
30–45
30–115
30–120
700706399 30–85
30–95
30–110
700706400 30–85
30–95
30–100
30–105
30–110
700706401 30–85
30–100
30–105
30–110
700706413 30–90
30–105
700706414 30–90
30–95
700706415 30–90
30–95
700706419 10–5
40–50
60–185
60–215
700706459 30–5
30–10
700706463 40–60
700706503 50–85
700706539 50–95
50–105
50–115
700706540 50–95
50–105
50–115

700706541 50-95
50-105
50-115
700706542 50-95
50-105
50-115
700706543 50-95
50-105
50-115
700706548 40-45
700706602 70-15
80-95
700706609 70-15
700706610 70-15
700706611 70-15
700706633 80-10
700706646 30-90
30-100
700706678 50-165
50-170
700706679 50-175
50-180
700706682 50-120
50-125
50-130
50-175
50-180
700706683 50-120
50-125
50-130
50-175
50-180
700706685 50-65
50-70
60-5
70-60
70-65
700706798 50-135
700706837 50-145
50-150
50-165
700706839 50-150
50-155
50-160
50-165
50-170
700706840 50-135
50-180

700706841 50-150
50-155
50-160
50-165
50-170
700706843 50-180
700706850 40-5
700706852 40-60
700706898 50-105
50-180
700706955 10-20
10-75
700706956 10-20
10-75
700706957 10-75
700706966 10-30
700706990 80-15
80-25
700706999 30-85
30-95
700707001 30-85
30-95
700707002 30-85
30-95
700707003 30-85
30-95
700707004 30-85
30-95
700707011 50-120
50-125
700707012 30-90
700707013 30-90
700707014 30-90
700707203 60-35
60-40
60-45
60-50
60-55
60-60
700707294 30-80
700707295 30-80
700707296 30-80
700707346 60-205
60-220
60-225
700707377 30-80
700707378 30-80
700707382 30-80

700707383 30-80
700707386 70-45
700707418 70-25
700707419 70-25
700707457 30-80
700707474 30-115
30-120
50-90
50-180
700707584 80-50
80-70
700707598 30-80
700707619 30-55
700707677B 60-145
60-150
60-165
60-170
60-175
60-180
700707683 30-80
700707817 30-90
30-95
700707818 30-90
30-95
700707819 30-90
30-95
700707820 30-90
30-95
700707832 70-15
700707858 60-15
60-140
700707867 20-135
40-45
700707960 10-20
10-30
10-35
10-40
10-45
10-50
10-55
80-15
700707991 10-80
700707993 10-80
700707998 10-75
700708000 10-95
700708037 10-95
700708038 10-80
700708039 10-80

700708041 10-80
700708048 20-175
700708076 80-85
700708270 10-55
700708272 20-10
700708333 30-90
700708348 10-10
80-35
700708351 10-95
700708355 10-80
700708407 60-100
60-105
60-110
700708648 60-35
60-40
60-45
60-50
60-55
60-60
700708652 60-215
60-220
700708753 30-85
30-110
700708756 30-90
30-100
700708757 30-90
700708758 30-90
30-95
700708760 30-85
30-95
700708761 30-85
30-95
30-110
700708963 30-85
30-95
30-110
700708964 30-85
30-100
700709175 30-85
30-95
700709216 80-95
700709232 30-90
30-95
30-100
700709233 30-90
30-100

700709354 30-55
30-85
30-100
700709465 70-25
700709593 60-225
60-235
700709608 10-75
700709636 50-80
700709704 30-100
700709705 30-100
700709706 30-95
30-100
700709708 30-90
30-100
700709843 80-50
80-70
700709866 10-60
10-65
10-70
60-15
80-10
700709867 80-10
700709911 30-85
30-95
30-100
700709957 80-95
700709996 30-5
30-10
30-20
60-250
60-270
700710049 10-10
60-85
60-105
60-110
60-130
60-135
60-140
700710072 10-80
700710188 30-5
30-10
30-20
30-60
30-65
60-250
60-270

700710189 30-10
30-20
60-250
60-270
700710208 30-5
30-10
30-20
60-250
60-270
700710211 30-10
30-15
30-20
30-45
30-120
70-45
80-65
700710263 10-90
700710264 10-90
700710312 60-10
700710413 50-5
700710414 40-10
50-5
50-55
700710421 70-55
700710540 50-5
700710542 10-125
700710620 30-95
30-100
700710659 30-90
30-100
700710807 50-115
700710945 20-120
20-125
700710946 40-20
50-60
700710972 80-85
700710982 60-185
60-190
700710984 10-15
10-60
10-65
10-70
20-15
20-65
20-70
40-60
60-5
700711025 20-115

700711084 **50–135**
60–205
60–230
60–255
700711092 **80–15**
700711094 **20–140**
80–10
700711095 **80–10**
80–15
700711112 **70–25**
700711114 **70–25**
700711132 **20–45**
60–205
60–210
700711134 **20–80**
700711165 **80–55**
700711188 **30–20**
700711198 **10–5**
10–10
10–15
10–30
10–35
10–40
10–45
10–50
10–55

700711238 **10–10**
10–65
10–105
10–110
10–125
20–5
20–10
20–30
20–35
20–55
20–60
20–70
20–80
20–95
20–110
20–140
20–145
20–150
20–155
20–160
20–165
20–170
30–5
30–10
30–15
30–20
30–25
30–30
30–35
30–40
30–45
30–50
30–55
30–60
30–65
30–70
30–75
40–25
40–30
40–35
40–40
40–45
50–10
50–15
50–30
50–80
50–120
50–125

700711262 **50–130**
700711320 **50–135**
60–5
60–15
60–30
60–35
60–40
60–45
60–50
60–55
60–60
60–85
60–90
700711336 **60–95**
700711425 **60–100**
60–105
60–110
60–125
60–130
60–135
60–140
60–205
60–215
60–220
60–225
60–230
60–235
60–240
70–5
70–10
70–40
70–45
80–45
80–60
80–65
80–75
80–80
20–35
60–210
60–245
60–250
80–10
10–35
10–45
10–55

700711557 **20–10**
50–80
60–40
60–55
80–50
80–70
700711659 **30–5**
30–10
30–20
30–45
700711660 **30–80**
30–90
30–100
700711751 **50–95**
50–105
700711829 **30–100**
700712102 **30–80**
700712122 **70–5**
70–10
70–25
700712132 **30–90**
30–95
700712134 **30–80**
700712135 **30–80**
700712445 **10–30**
700712467 **30–95**
30–110
700712484 **50–35**
700712517 **10–30**
10–35
700712574 **10–40**
10–45
10–50
10–55
700712616 **80–50**
80–70
700712678 **70–50**
70–70
700712767 **10–30**
10–35
700712821 **70–20**
70–50
700712823 **70–20**
700712824 **70–20**

700712882 **20–15**
20–65
20–70
40–10
40–15
60–245
60–250
700712896 **30–90**
30–100
700712917 **70–20**
700712920 **70–50**
700712924 **70–20**
700712983 **30–90**
30–100
700713300 **30–90**
30–100
700713576 **30–95**
700713587 **70–70**
700713894 **40–60**
700713998 **70–40**
70–45
70–55
700714008 **50–145**
50–150
50–155
50–160
700714047 **80–50**
80–55
80–70
700714053 **80–50**
80–55
80–70
700714064 **60–205**
60–210
700714065 **80–50**
80–70
700714066 **80–50**
80–55
80–70
700714067 **80–10**
700714074 **80–10**
700714096 **30–75**
700714106 **80–30**
700714107 **80–30**
700714108 **80–30**
700714109 **80–30**
700714110 **80–30**
700714111 **80–30**

700714112 **80–30**
700714114 **30–75**
700714150 **80–50**
80–70
700714164 **80–15**
700714166 **40–75**
40–80
50–75
700714178 **60–300**
700714201 **60–300**
700714202 **60–300**
700714203 **60–300**
700714205 **60–300**
700714206 **60–300**
700714382 **70–55**
700714383 **70–55**
700714384 **70–55**
700714418 **80–10**
700714506 **80–5**
700714528 **20–140**
20–145
20–150
20–155
20–160
20–165
20–170
60–30
60–35
60–40
60–45
60–50
60–55
60–60

700714529 20–140
20–145
20–150
20–155
20–160
20–165
20–170
60–30
60–35
60–40
60–45
60–50
60–55
60–60
60–65
60–70
60–75
60–80
700714545 80–5
700714570 80–10
700714572 80–15
700714585 80–10
700714586 10–65
10–70
10–85
10–105
20–5
20–15
20–20
20–30
20–65
20–70
20–175
40–5
40–30
50–30
60–5
60–40
60–55
60–130
60–135
60–140
60–185
60–190
700714661 80–10
80–15
700714662 80–15
80–20

700714829 30–90
30–100
30–110
700714985 50–35
700714986 50–10
50–15
700714987 40–45
700715020 10–30
700715024 10–30
700715035 10–40
10–45
10–50
10–55
700715051 80–10
700715143 30–55
30–60
30–65
700715152 30–20
30–75
30–30
700715153 80–20
700715154 80–10
700715156 80–15
700715157 80–15
80–20
80–25
700715158 80–15
700715159 80–10
700715192 80–10
700715415 50–185
700715459 50–185
700715541 10–95
700715542 10–95
700715543 10–95
700715659 70–15
700715662 70–15
700715684 60–285
60–295
700715693 10–95
700715740 20–35
40–55
700715741 20–35
40–55
700715742 10–95
700715743 10–95
700715744 10–95
700715745 10–95
700715746 10–95

700715747 10–95
700715751 10–100
10–110
10–125
40–5
700715820 10–30
10–35
700715824 10–35
700715825 10–35
700715826 10–35
700715827 10–35
700715897 40–40
40–45
700715900 60–5
700715929 70–20
700715941 50–25
700715956 40–25
700715957P 60–5
700715965 10–110
10–125
700715969 70–30
70–35
700715983 10–95
700715985 10–95
700716127 10–110
700716132 20–135
700716158 20–135
700716244 10–115
700716245 10–115
700716246 10–115
700716247 10–115
700716264 10–105
700716265 10–105
700716267 10–115
700716314 60–145
60–150
60–155
60–160
60–165
60–170
60–175
60–180
700716345 30–110
700716454 30–110
700716461 30–55
30–60
30–65

700716611 10–110
40–5
700716624 10–5
80–35
700716685 10–95
700716698 10–80
700716699 10–80
700716724 30–5
30–10
30–25
700716772 30–55
30–60
30–65
700716833 80–65
700716838 80–90
700716842 30–30
700716853 70–30
700716854 70–5
70–10
700716856 70–5
70–10
700716857 70–5
70–10
700716858 70–5
70–10
700716887 30–5
30–10
700716903 70–20
70–50
700716952 10–80
700717102 80–20
700717103 80–20
700717104 80–20
700717105 80–20
700717106 80–20
700717386 30–55
30–60
30–65
700717417 30–55
30–60
30–65

700717627 30–15
30–25
30–60
30–65
70–45
70–60
70–65
80–60
700717695 80–85
700717696 80–85
700717705 80–85
700717713 80–85
700717759 80–85
700717760 80–75
700717761 80–75
700717836 30–35
30–40
700717837 30–55
30–60
700717865 80–75
700717866 80–80
700717886 80–80
700718428 60–275
700718483 80–80
700718484 80–80
700718530 30–95
700718576 30–95
30–110
700718588 30–95
700718590 30–110
700718599 30–105
700718604 30–85
30–95
700718605 30–85
30–90
30–95
30–100
700718607 30–85
30–95
700718608 30–85
30–95
30–100
700718618 30–90
700718702 80–85
700718703 80–85
700718704 80–85
700718710 50–50
50–90

700718774 80–80
700718805 20–35
20–45
700718962 50–165
50–170
700718963 50–165
50–170
700719151 70–70
700719193C 80–100
700719201 70–20
700719204 30–45
80–50
80–70
700719282 30–90
30–95
700719293 30–100
700719297 30–90
30–100
700719338 70–75
700719339 70–75
700719341 70–75
700719342 70–75
700719423C 80–100
700719863 30–105
700719868 30–105
700719869 30–110
700719870 30–105
700719871 30–105
700720001 10–95
700720004 20–35
40–55
700720005 10–95
700720006 10–95
700720007 10–95
700720008 10–95
700720014 10–5
700720018 60–145
60–150
60–155
60–160
60–165
60–170
60–175
60–180
700720021 60–195
700720023 10–95
700720025 10–95
700720026 10–95

700720027 10–95
700720028 10–95
700720030 10–95
700720031 60–145
60–150
60–165
60–170
700720032 60–35
60–40
60–45
60–50
60–55
60–60
60–155
60–160
60–175
60–180
700720033 20–30
60–35
60–40
60–45
60–50
60–55
60–60
700720034 60–145
60–150
60–155
60–160
60–165
60–170
60–175
60–180
700720040 70–15
700720041 70–15
700720042 60–130
60–135
60–140
700720043 60–130
60–135
60–140
700720046 60–145
60–150
60–165
60–170
700720047 60–155
60–160
700720048 60–175
60–180

700720050 20–135
40–45
700720054 60–280
700720058 70–15
700720059 20–45
700720063 60–280
700720064J 80–100
700720067 40–40
40–45
700720068 70–35
700720071 70–35
700720072 70–35
700720075 70–35
700720077 50–165
50–170
700720079 50–165
50–170
700720080 50–165
50–170
700720081 50–145
50–150
50–165
50–170
700720082 50–165
50–170
700720083 50–165
50–170
700720087 50–120
50–140
700720088 50–145
700720089 50–145
700720091 50–145
50–150
50–155
50–160
50–165
50–170
700720092 50–145
50–150
50–155
50–160
700720093 50–155
50–160
700720095 50–165
50–170
700720097 50–155
50–160
50–170

700720098 50–175
700720099 50–140
700720100 50–140
700720101 50–140
700720103 50–140
700720104 50–140
700720105 50–140
700720106 50–140
700720108 50–140
700720109 50–125
700720111 10–35
700720112 10–30
700720113 10–35
700720117 30–70
700720118 30–70
700720119 30–70
700720121 10–30
700720122 10–30
10–40
10–50
700720127 80–5
700720129 80–5
700720131 80–10
700720132 10–5
10–10
700720133 60–280
700720134 60–205
700720135 60–205
700720140 60–205
700720148 60–285
700720152 10–20
10–30
10–35
10–40
10–45
10–50
10–55
700720153 10–30
10–35
700720157 60–280
700720158 60–280
700720162D 80–100
700720166C 80–100
700720171C 80–100
700720178 70–35
700720179 70–35
700720180 10–5
10–15

700720181 10–5
10–15
700720195 80–50
80–60
80–70
700720203 10–45
10–55
700720213A 80–100
700720222 70–60
70–65
700720223 70–60
70–65
700720224 70–60
70–65
700720228 30–5
30–10
30–95
30–100
700720230 10–30
700720231 10–5
10–15
700720236 20–35
700720237 20–35
700720245 10–125
700720248 80–15
700720257D 80–100
700720263 10–125
700720264 10–125
700720280 70–5
70–15
700720285 80–15
700720302 30–80
700720304 80–5
700720306 70–60
70–65
700720311 70–50
700720329 10–100
700720332 10–100
700720333 10–100
700720336 10–100
700720337 10–100
700720338 10–100
700720339 10–100
700720340 10–100
700720341 10–100
700720343 10–100
700720345 70–75

700720347 70–60
70–65
70–70
700720348 20–40
700720349 20–45
700720351 70–60
70–65
70–75
700720353 20–20
700720354 20–35
700720358 70–60
70–65
700720362 70–70
700720363 70–70
700720368 60–190
700720369 60–190
700720370 60–190
700720371 60–190
700720372 60–190
700720373 60–190
700720374 60–190
700720376 60–190
700720377 60–190
700720379 60–190
700720380 60–315
700720381 60–315
700720382 60–315
700720384 60–315
700720385 60–190
700720386 60–190
700720387 60–190
700720388 60–190
700720389 60–315
700720390 60–190
700720411 60–200
700720412 60–245
60–250
700720413 60–245
60–250
60–265
60–270
700720414 60–215
60–220
60–225
60–230
60–240

700720415 60–230
700720416 60–215
60–220
60–225
60–230
60–240
700720421 60–245
700720423 60–215
60–220
60–225
700720424 60–305
60–310
60–320
60–325
60–330
60–335
700720426 60–225
700720427 60–225
60–235
700720429 60–230
700720430 60–230
700720431 60–230
700720435 60–290
60–305
60–310
60–320
60–325
60–330
60–335
700720436 60–290
60–305
60–310
60–320
60–325
60–330
60–335
700720438 60–290
60–305
60–310
60–320
60–325
60–330
60–335

700720439 60–305
60–310
60–320
60–325
60–330
60–335
700720440 60–290
60–320
60–330
60–335
700720442 60–320
60–330
60–335
700720444 60–305
700720445 60–315
700720446 60–315
700720447 60–305
60–320
60–330
700720448 60–320
60–330
700720451 60–290
60–305
60–310
60–320
60–325
60–330
60–335
700720457 60–285
60–290
60–295
700720459 60–305
700720460 60–315
700720461 60–315
700720462 60–315
700720463 60–320
60–330
700720470 60–305
60–310
60–320
60–325
60–330
60–335
700720471 60–320
60–330

700720472 60–305
60–310
60–320
60–325
60–330
60–335
700720473 60–305
60–310
60–320
60–325
60–330
60–335
700720475 60–290
60–305
60–310
700720476 60–305
60–310
60–320
60–325
60–330
60–335
700720477 60–320
60–325
700720478 60–330
60–335
700720483 60–190
700720484 60–190
60–305
700720489 60–275
700720491 60–275
700720492 60–275
700720493 60–275
700720494 60–275
700720495 60–275
700720496 60–245
700720498 60–230
700720499 60–215
60–220
700720500 60–215
60–220
700720503 60–195
700720504 60–190
700720518 10–100
700720520 10–100
700720521 60–85
60–110

700720525 60–290
60–305
60–310
60–320
60–325
60–330
60–335
700720526 60–305
60–310
60–320
60–325
60–330
60–335
700720527 60–305
60–310
60–320
60–325
60–330
60–335
700720531 60–285
60–290
700720533 60–290
700720535 60–295
60–305
60–310
700720537 60–305
60–310
60–320
60–325
60–330
60–335
700720538 60–290
60–305
60–310
60–320
60–325
60–330
60–335
700720539 60–305
60–310
60–320
60–325
60–330
60–335
700720541 60–305
60–310
700720542 60–305
60–310

700720543 60–330
60–335
700720544 60–320
60–325
700720545 60–305
60–310
60–320
60–325
60–330
60–335
700720546 20–15
20–65
20–70
700720548 20–5
20–20
700720550 30–30
700720554 60–285
60–295
700720555 60–285
60–295
700720568 60–315
700720569 60–315
700720570 60–290
700720571 60–290
700720579B 80–100
700720586 30–105
700720644 80–95
700720654 30–105
700720655 30–105
700720679 80–95
700720744 60–85
60–105
60–140
700720762 30–105
700720764 30–105
700720765 30–105
700720766 30–105
700720800 30–105
700720801 30–105
700720802 30–105
700720804 30–110
700720807 30–105
700720826 60–285
60–290
700720827 60–290
60–315
700720916 80–95
700720921 60–290

700720923 60–290
700720925 60–285
60–290
700720926 60–290
700720927 60–290
700720928 60–285
60–290
700720929 60–290
700720930 60–290
700720952 30–15
700721234 30–110
700721367 20–45
700721425 60–285
700721426 60–285
700721427 60–285
700721428 60–285
700721590 10–10
700721591 10–10
700721595 80–15
700721617 30–70
700721634 20–95
700721657P 10–80
10–95
700721659 10–95
700721715 10–10
700721771 60–190
60–310
700721774 60–190
700721775 80–90
700721778 10–40
10–45
10–50
10–55
700721780 10–45
10–55
700721786 10–15
10–20
700721788 10–15
10–20
700721789 10–20
700721790 10–20
10–40
10–45
700721791 10–20
700721792 10–20
700721793 10–20

700721794 10–20
10–40
10–45
10–50
10–55
700721797 10–40
10–50
700721799 10–40
10–45
10–50
10–55
700721800 10–40
10–45
10–50
700721801 10–40
10–45
10–50
10–55
700721855 60–245
60–250
60–265
60–270
60–275
700721913B 80–100
700721914B 80–100
700721952 80–20
700721953 80–20
700721954 80–20
700721955 80–20
700721967 80–25
700721968 80–10
700721970 80–10
700722091 60–240
700722126 60–315
700722127 60–315
700722128 60–315
700722129 60–315
700722130 60–315
700722131 60–315
700722133 60–315
700722134 60–315
700722135 60–315
700722137 60–315
700722138 60–315
700722199 30–25
700722236 80–80
700722237 80–80
700722295 60–255

700722296 60-260
700722297 60-255
60-260
700722299 60-255
700722300 60-255
700722301 60-260
700722302 60-255
60-260
700722303 60-255
60-260
700722304 60-255
60-260
700722305 60-255
60-260
700722307 60-255
60-260
700722308 60-260
700722309 60-255
60-260
700722310 60-255
60-260
700722311 60-255
700722312 60-255
700722313 60-255
60-260
700722315 60-255
700722316 60-255
700722317 60-255
60-260
700722318 60-260
700722319 60-260
700722320 60-255
700722321 60-260
700722323 60-260
700722324 60-255
700722325 60-255
700722326 60-255
700722327 60-255
700722328 60-260
700722402A 80-100
700722505A 80-100
700722506A 80-100
700722507A 80-100
700722508A 80-100
700722532B 80-100
700722533B 80-100
700722534B 80-100
700722535B 80-100

700722661 50-5
50-25
50-35
50-90
700722670 20-175
700722691A 80-100
700722704 80-85
700722759 30-65
700722786 30-50
700722787 30-60
30-65
700722788 30-35
30-50
700722906 60-250
700722908 60-250
700722909 60-265
60-270
700722910 60-265
60-270
700722928 60-260
700722957 30-30
700723134 50-85
700723220 30-110
700723222 30-110
700723223 30-110
700723226 10-40
10-45
10-50
10-55
700723264 10-40
10-45
10-50
10-55
700723265 10-40
10-50
700723267 10-40
10-45
10-50
10-55
700723268 10-40
10-45
10-50
10-55
700723269 10-40
10-45
10-50
10-55

700723271 10-40
10-45
10-50
10-55
700723357 10-10
700723470 80-90
700723555 80-85
700723558 80-85
700723560 80-85
700723562 80-85
700723642 30-50
700723738 80-90
700723802 30-110
700723828 30-50
700724190 70-5
70-10
700724342 80-95
700724387 60-315
700724388 60-315
700724389 60-315
700724601 50-140
700724602 50-140
700724603 50-140
700724605 50-140
700724606 50-140
700724607 50-140
700724608 50-140
700724610 50-140
700724611 50-140
700724612 50-140
700724618 50-140
700724619 50-140
700724620 50-140
700724621 50-140
700725527 30-110
700725528 30-110
700725529 30-110
700725581 80-25
700725801 80-25
700725814 30-15
700725815 30-25
700725816 30-30
700725817 80-60
700725818 30-30
80-90
700725824 30-45
700725825 50-125
50-140

700725827 70-20
70-50
700725829 70-10
70-20
700725830 70-45
70-50
700725832 30-15
30-25
700725849 80-5
700725850 80-5
700725925 30-30
700725938 70-50
700725941 60-205
700725942 60-205
700725949 30-20
700725954 70-20
700725961 80-90
700725972 60-295
700725973 60-295
700725980 60-205
60-210
60-295
700726147 30-110
700726155 30-110
700726172 30-60
30-65
700726183 50-190
700726247 50-190
700726248 50-190
700726249 50-190
700726250 50-190
700726369 60-305
60-310
60-320
60-325
60-330
60-335
700726370 60-305
60-310
60-320
60-325
60-330
60-335
700728081 60-215
60-220
700728132 60-285

700728133 60-305
60-310
60-320
60-325
60-330
60-335
700728134 60-305
60-310
60-320
60-325
60-330
60-335
700728135 60-285
60-305
60-310
60-320
60-325
60-330
60-335
700728138 60-305
60-310
60-320
60-325
60-330
60-335
700728140 60-285
60-290
60-305
60-310
60-320
60-325
60-330
60-335
700728141 60-285
60-290
60-305
60-310
60-320
60-325
60-330
60-335
700728142 60-305
60-310
60-320
60-325
60-330
60-335
700728144 60-285

700728149 60-285
700758888 20-30
701144 60-205
60-210
701953 30-55
7020019 50-110
50-185
702400022 50-45
702400048 50-10
50-65
70248372 20-175
702700040 50-45
7027352 50-120
7027469 60-195
60-200
7033616 80-85
70336568 10-10
70341230 20-175
704031 10-110
40-10
40-60
50-35
50-40
50-80
80-80
7040330 10-80
704056 60-205
60-210
80-80

704247 20–45
20–75
40–10
50–10
50–20
50–65
50–70
50–185
60–100
60–105
60–110
60–130
60–135
60–140
60–145
60–150
60–155
60–160
60–165
60–170
60–175
60–180
60–205
60–255
80–50
80–70
704254 40–10
40–15
50–35
704486 10–60
50–45
704494 30–5
30–50
704551 30–5
704585 10–5
80–35
704601 60–195
704692 40–10
50–5
704858 40–40
60–25

705541 10–85
10–110
20–35
20–175
40–30
40–40
40–45
40–50
40–60
50–5
50–30
50–35
50–40
50–80
60–5
60–85
60–90
60–95
60–110
60–190
60–205
60–210
60–215
60–220
705574 50–10
50–15
705665 10–80
70590704 20–130
70590709 20–135
80–45
80–65
70594977 60–225
60–235
70–10
70–60
70–65
707018 60–5
707448 60–5
7087935 10–110
7088008 10–110
70901763 50–135
70903835 80–80
70906853 20–5
70910851 50–40
70912267 10–100
70912269 10–5
80–35

70914465 10–75
10–110
10–125
20–45
50–55
50–140
50–145
50–150
70915276 10–75
50–155
50–160
70915751 10–15
10–75
70915935 40–80
70917380 20–140
20–145
20–150
20–155
20–160
20–165
20–170
30–30
50–85
60–30
60–35
60–40
60–50
60–55
60–60
60–65
60–70
60–75
60–80
60–205
60–220
60–225
60–250
60–270
70917421 40–50
50–45
50–65
70917467 10–100
70917733 80–65
70917758 20–45
70918111 20–45
70918249 10–85
70918403 50–65
50–70

70918454 20–175
60–285
70919087 60–205
70–60
70–65
70919171 50–135
70919173 50–180
70920469 20–120
20–125
40–10
70920655 50–135
70921205 70–5
70–10
80–80
70921206 80–75
80–80
80–85
70921214 80–85
70921228 80–85
70921279 70–40
70921292 50–80
80–50
80–70
70921297 70–30
70921326 70–5
70–10
70921349 70–30
70–40
70–45
70921576 10–15
10–40
10–45
70921744 50–45
70921882 30–25
70921911 50–120
50–125
50–130
70921958 40–75
70921978 60–140
70922135 50–45
70922522 70–45
70–60
70–65
70922598 50–45
50–90
70922695 50–55
50–60
70922710 30–50

70922784 10–65
20–65
20–75
20–100
20–105
20–110
20–140
20–145
20–155
20–170
40–10
40–25
40–30
40–35
50–10
50–15
50–80
50–120
50–125
60–30
60–35
60–40
60–45
60–50
60–55
60–60
60–100
60–130
60–135
60–140
60–145
60–150
60–155
60–160
60–165
60–170
60–175
60–180
80–45
80–50
80–65
80–70

70922786 10–125
20–5
20–10
20–25
20–30
20–60
20–65
20–85
20–90
20–95
20–100
20–105
20–110
20–135
20–155
40–25
40–40
40–45
40–60
40–65
40–70
50–10
50–15
50–65
50–70
50–80
60–30
60–35
60–40
60–45
60–50
60–55
60–60
60–85
60–105
60–110
60–130
60–135
60–140
80–45
80–55
80–65
80–80
70922921 70–5
70–10
70–45
70922974 80–75
70922978 10–80

70923056 **50–60**
70923154 **10–15**
10–60
70923174 **80–85**
70923219 **10–5**
10–20
10–40
10–45
10–50
10–55
10–60
10–65
10–80
10–110
10–125
20–5
20–20
20–30
20–35
20–75
20–80
40–10
40–50
50–45
50–75
60–10
60–130
60–135
60–140
60–215
60–220
80–35
80–55
70923220 **20–35**
20–75
20–140
20–150
20–160
20–165
40–25
40–50
50–30
50–40
60–5
70–60
80–85
70923306 **40–10**
50–55

70923501 **10–5**
70923561 **50–50**
70923596 **10–95**
70923717 **80–80**
70923740 **50–5**
70923894 **80–95**
70923901 **20–35**
70923905 **70–30**
70–45
70924121 **50–65**
50–70
70924846 **20–85**
20–90
20–95
20–100
20–105
20–110
70925094 **30–5**
30–10
30–15
30–20
30–25
30–30
30–55
30–70
30–80
50–95
50–105
50–120
50–135
50–145
50–150
50–155
50–160
70–40

70925617 **30–5**
30–10
30–15
30–20
30–25
30–35
30–40
30–45
30–50
30–55
30–60
30–65
50–120
50–125
50–130
60–205
70–5
70–10
70–30
70–60
70925619 **30–5**
30–10
30–15
30–25
30–30
50–135
60–215
60–220
60–225
60–230
60–235
60–245
60–250
60–265
60–270
70925689 **60–260**
70925731 **10–125**
40–15
50–55
70925765 **10–5**
70925993 **10–110**
20–110

70926049 **30–5**
30–10
30–20
30–25
50–130
50–135
80–75
70926162 **40–10**
70926228 **20–30**
70926673 **20–140**
20–150
20–155
20–160
20–165
20–170
30–30
60–250
60–270
70926917 **30–5**
30–10
30–15
30–20
30–25
30–45
30–55
30–60
30–65
30–75
50–120
50–125
60–205
70926919 **30–5**
30–115
50–95
80–45
80–50
80–60
80–70
70927103 **10–60**
40–80
70927236 **40–45**
70927347 **10–115**
70927348 **10–115**
70927401 **20–30**
30–5
30–80
30–115

70927699 **10–20**
10–75
70927700 **40–10**
70927728 **50–50**
70927732 **40–40**
50–45
50–75
70927738 **40–40**
70927744 **20–40**
50–20
60–30
60–130
60–135
60–150
60–155
60–160
60–170
60–175
60–180
70928148 **70–45**
70928178 **10–5**
70928179 **50–5**
70928367 **10–85**
20–5
20–20
40–60
50–35
60–130
60–135
60–140
80–45
80–65
70928654 **30–70**
50–120
50–125
50–130
50–135
80–60
70928720 **60–10**
70928931 **70–30**
70–60
70–65
70929160 **30–5**
30–10
60–260
70–5
70–10
80–75

70929593 **50–80**
70929912 **70–60**
70–65
70930228 **40–80**
70930253 **40–60**
70930680 **40–10**
50–35
70930764 **10–75**
70931209 **30–60**
30–65
80–10
80–85
70931272 **30–30**

70931277 10–85
20–50
20–85
20–90
20–95
20–100
20–105
20–110
20–140
20–145
20–150
20–155
20–160
20–165
20–170
30–5
30–10
30–15
30–20
30–25
30–30
30–60
30–65
40–25
40–35
40–40
40–45
50–80
50–140
60–15
60–20
60–25
60–30
60–35
60–40
60–45
60–50
60–55
60–60
60–65
60–70
60–75
60–80
60–120
60–125
60–130
60–135
60–140
60–145
60–150
60–155
60–160
60–165
60–170
60–175
60–180
70–45
80–75
70931317 30–5
30–60
30–65
80–45
80–50
80–60
80–70
70931390 60–10
70931528 10–105
10–110
70931805 70–5
70931813 50–80
70931852 10–100
70932747 30–80
70933955 80–50
80–55
80–70
70934842 20–15
20–65
20–70
60–5
70934980 10–5
10–15
70935468 80–75
70935781 70–40
70936273 60–10
70936348 20–45
20–75
20–80
70937133 10–10
30–40
30–50
30–60
30–65
60–265
60–270
70–5
70–10
70–45
70937154 20–5
20–20
70937465 50–80
70950401 60–205
60–210
71130258 20–5
20–20
711770 40–80
50–5
712158 40–5
712604 10–110
20–110
712810 40–10
50–5
71307132 60–130
60–135
60–140
71308951 40–45
71339847 60–35
60–40
60–45
60–50
60–55
60–60
60–145
60–150
60–155
60–160
60–165
60–170
60–175
60–180
71391869 30–45
71393718 10–80
71396309 80–90
71399227 80–90
71399389 30–110
714360 50–40
71500377 20–5
20–20
72514681 30–85
30–95
72514685 30–90
30–100
72514689 30–90
30–100
72514691 30–85
30–95
72514693 30–105
72514694 30–105
72835 50–20
738633 50–35
740167 40–45
740217 20–35
740522 20–75
20–80
50–5
746875 10–100
751628 50–100
755751 30–75
70–40
758011 40–20
758268 40–15
50–55
758342 10–60
10–65
10–70
60–15
758441 50–80
60–245
60–250
758482 50–35
761213 20–85
20–90
20–95
20–100
20–105
763177 10–125
20–5
20–20
20–75
20–80
50–5
763201 70–35
763730 60–205
60–210
763987 40–15
50–55
766485 40–40
766667 10–85
76695 60–35
60–40
60–45
60–50
60–55
60–60
768036 10–70
7700461 20–15
20–65
30–5
30–10
30–25
60–30
7701444 50–130
50–135
7701782 60–250
60–270
7703259 10–95
7703424 20–80
40–45
50–185
7703432 50–10
50–15
50–65
50–70
60–145
60–150
60–165
60–170
60–215
60–220
7703879 10–10
80–35
7704000 40–40
40–45
7704141 20–10
50–10
50–20
50–185
60–245
60–250
60–265
60–270
7704208 20–175
7704752 10–85
7704919 10–125
20–95
20–110
50–30
60–185
60–190
7705064 60–195
7705197 10–5
80–35
77057 50–45
7705841 60–190
771022 20–130
20–135
7713134 60–195
7713829 40–60
7713837 40–10
772426 30–30
772434 40–40
77388 10–115
7738800 80–85
7744519 60–195
774521 50–80
77552 60–190
60–285
60–290
7758212 60–30
7758915 40–75
60–15
60–20
7770175 80–50
80–70
7770225 60–145
60–150
60–165
60–170
7770456 20–45
20–55
40–30
40–35
60–85
60–90
60–95
60–100
60–105
60–110
7770589 50–20

7770878 10–110
7771371 60–210
7771504 10–90
7772049 40–25
40–35
7773930 60–35
60–40
60–45
7774078 30–55
30–60
30–65
7774151 40–40
40–45
7774391 50–5
7774458 20–30
7774482 40–10
50–40
60–195
7774516 70–55
7774839 40–45
7775414 30–10
30–20
30–45
7815053 10–20
10–30
10–35
10–40
10–45
10–50
10–55
10–75
7825516 80–85
7827561 50–130
7846389 70–5
70–10
7846462 60–225
60–235
7850399 20–110
7852114 10–75
7852163 50–45
7852593 50–50
7852718 10–80
7852742 50–45
7852767 40–10
7873755 70–45

7883275 30–65
50–35
50–95
50–100
50–105
60–250
60–270
80–85
7883283 50–35
50–90
7883317 10–60
10–65
10–70
50–80
60–15
60–155
60–160
60–175
60–180
80–85

7883325 20–85
20–90
20–95
20–100
20–105
20–110
20–140
20–145
20–150
20–155
20–160
20–165
20–170
30–5
30–10
30–20
30–25
30–30
50–35
60–25
60–30
60–35
60–40
60–45
60–50
60–55
60–60
60–65
60–70
60–75
60–80
60–115
60–120
60–125
60–150
60–170
60–175
60–180
70–30
70–45
80–45
80–65
80–75
80–85

7883333 30–35
30–45
30–50
60–25
60–30
60–140
60–260
70–60
70–65
80–80
7883341 80–50
80–70
80–75
7883358 40–45
7883366 60–215
60–220
7883374 10–70
20–35
20–50
20–95
20–110
20–130
30–55
30–60
30–65
30–70
30–75
40–60
60–50
60–85
60–100
60–105
60–110
60–130
60–135
60–140
70–30
80–60
80–75

7883382 10–110
10–125
20–170
30–5
30–10
30–15
30–20
30–25
30–30
30–35
30–40
30–45
30–50
30–65
30–75
40–50
40–80
50–5
50–120
50–125
50–130
50–135
60–15
60–85
60–110
60–125
60–205
60–215
60–220
60–225
60–230
60–235
60–245
60–250
60–260
60–265
60–270
70–5
70–10
70–40
70–60
70–65
80–85

7883408 40–40
60–15
60–20
60–205
60–210
60–255
80–75
80–80
7883424 20–15
20–25
20–35
20–65
40–60
40–70
60–210
80–45
80–65
7883432 10–5
10–15
60–245
60–250
60–265
70–40
70–45
7883978 80–90
7884950 80–40
7894389 50–45
7894413 50–45
7894454 50–45
7894967 60–30
7894975 60–30
7895733 50–45
792051 10–95
792259 50–95
50–105
50–115
50–180
8021693 60–30
8027005 40–45
8044695 50–65
50–70
8045148 50–45
8046724 70–30
8050478 50–40
8050536 50–75
8050866 50–35
826271 60–195
826545 60–195

826578 60–195
827360 50–80
60–35
60–40
60–45
60–50
60–55
60–60
831452M1 10–100
70–5
70–10
70–45
70–60
70–65
832190M1 20–175
835087M91 10–100
844498 80–85
846337 70–40
846477 70–60
70–65
80–95
846915 50–185
858019 10–75
858027 50–10
50–20
858308 40–40
50–35
863381 10–70
20–75
863423 60–205
60–210
863738 50–50
86405 10–105
86439 20–85
20–90
866566 50–5
50–35
50–90
8701237 10–15
10–60
10–65
10–70
20–35
20–70
60–185
60–190
8701377 60–5

8701476 50–5
50–35
50–90
8701484 50–40
8701534 60–270
8701625 50–50
50–90
8701781 50–10
50–20
8722894 50–85
8732661 80–80
873513 80–80
873786 10–125
874404 50–85
87726 20–100
20–105
20–110
87973 20–85
20–90
20–95
8799280 10–95
70–30
8802613 10–35
8802795 50–10
50–20
8877334 80–10
908543M1 30–55
30–60
30–65
98–2107 50–40
50–65
50–70
50–90
60–5
70–35
D28989058 80–90
KB5012B 60–195
MK40934 80–45
MK40954 80–75
MK41072 10–30
MK41073 10–35
MK41076 40–70
MK41084 80–55
MK41086 80–60
80–65
MK41103 10–50
MK41104 10–55
MK41106 80–90

MK41143 10–10
MK41144 10–10
MK41145 10–10
MK41152 80–95
N857459 30–105
N857481 80–90
N857482 30–105
N858482 30–105
N858677 30–105
N858734 30–105
80–90
N858736 30–105
N858742 30–105
N858743 30–105
N858747 30–105
N858852 80–90
N858871 80–90
N858872 80–90
W907183–4 10–10
W980268US 10–105
Y46409 50–110
Y52209 40–40
50–35
Y52258 40–10
50–5
Y52266 10–115
50–5
Y52274 10–75
20–40
Y52290 20–5
Y52316 40–10
40–40
50–5
60–290
60–305
60–310
60–320
60–325
60–330
60–335
Y52324 50–5
Y58024 50–80
Y61424 20–85
20–90
Y61556 20–120
20–125
Y61879 50–55
50–60

Y61952 20–110
Y6613665 10–110
10–125
50–40
Y700139803 20–50
Y700163328 20–60
Y702282 20–75
20–80
Y702951 10–60
30–20
30–45
40–75
60–100
60–105
60–110
60–140
Y703132 20–50
20–55
20–60
20–140
20–145
20–150
20–155
20–160
20–165
20–170
40–25
40–35
Y704015 20–15
20–65
50–35
60–15
60–20

Y704072 20–145
30–50
30–65
50–85
60–30
60–35
60–40
60–50
60–55
60–60
60–65
60–70
60–75
60–80
60–145
60–150
60–155
60–160
60–165
60–170
60–175
60–180
60–115
Y704163 60–115
Y704288 50–40
Y704395 30–30
60–145
60–150
60–165
60–170
60–175
60–250
60–270
80–45
80–60
Y704445 50–130
50–135
60–205
60–220
60–225
Y704452 20–130
20–135
Y704718 20–160
20–165
20–170

Y704726 10–10
10–60
10–65
10–70
10–85
30–35
30–45
30–50
40–45
40–60
40–75
50–20
50–25
50–35
60–15
60–20
60–30
60–35
60–40
60–45
60–100
60–115
60–130
60–135
60–140
60–145
60–150
60–155
60–160
60–165
60–170
60–175
60–180
60–210
60–260
70–30
70–60
70–65
80–45
80–50
80–65
80–70
80–75

Y704734
10–60
10–65
10–70
10–85
10–110
10–120
10–125
10–130
20–15
20–25
20–45
20–65
20–120
20–125
20–135
20–155
20–170
30–50
40–40
40–45
40–50
40–60
40–65
40–70
40–80
50–5
50–80
60–15
60–20
60–205
60–210
60–230
60–245
60–250
60–260
60–265
60–270
70–5
70–10
70–30
70–45
70–60
70–65
80–45
80–65
80–85

Y704742
10–5
10–15
10–60
10–65
10–70
10–85
10–110
10–125
20–10
20–15
20–25
20–35
20–45
20–65
20–70
40–5
40–10
40–45
40–50
40–60
40–70
40–75
50–5
50–80
60–245
60–250
60–260
60–265
60–270
70–40
70–45
80–45
80–50
80–55
80–65
80–70
60–275
20–35
80–90

Y704783
Y704866
Y705269

Y705525
10–60
10–65
10–70
10–125
20–15
20–65
30–5
30–10
30–15
30–25
30–30
40–25
40–75
50–140
60–15
60–20
60–30
60–35
60–40
60–45
60–50
60–55
60–60
60–65
60–70
60–75
60–80
60–125
70–45
80–75

Y705533
10–85
20–45
20–85
20–90
20–100
20–105
20–135
30–5
30–10
30–15
30–20
30–25
30–30
30–35
30–40
30–50
30–70
40–10
40–20
40–25
40–40
40–60
50–30
50–40
50–80
60–15
60–20
60–30
60–35
60–50
60–55
60–60
60–85
60–105
60–110
60–125
60–145
60–150
60–155
60–160
60–165
60–170
60–175
60–180
60–205
60–215
60–220
60–225
60–235
70–45
70–60
70–65
80–65
80–80
Y705566
10–80
10–125
20–35
20–80
20–175
30–5
30–10
30–25
30–45
40–50
50–30
60–10
80–65
Y705582
10–60
10–125
20–75
20–80
40–45
40–75
50–30
50–60
50–65
50–70
50–80
60–5
Y706549
50–85
Y708230
50–55
Y710293
20–130
20–135
80–45
80–65
Y710392
80–45
80–65
Y714592
80–65
Y740068
40–10
50–35
Y740720
10–125
Y740787
40–65

Y745216
30–35
30–40
30–50
30–90
30–100
Y746461
50–180
Y747931
10–110
Y761312
40–10
Y762245
20–20
Y762260
10–5
80–35
Y763227
70–5
70–10
Y766113
80–55
Y852749
20–115
20–120
20–125
Y852947
40–5

10

Hitch Safety Chain – Jack
Chaine De Securite – Cric
Sicherheitskette – Abstellstuetze
Catena Sicurezza – Martinetto
Cadena Seguridad – Gato Armado

10-5

Hitch Standard
Attelage Standard
Anhaengekupplung Standard
Attacco Standard
Enganche Standard

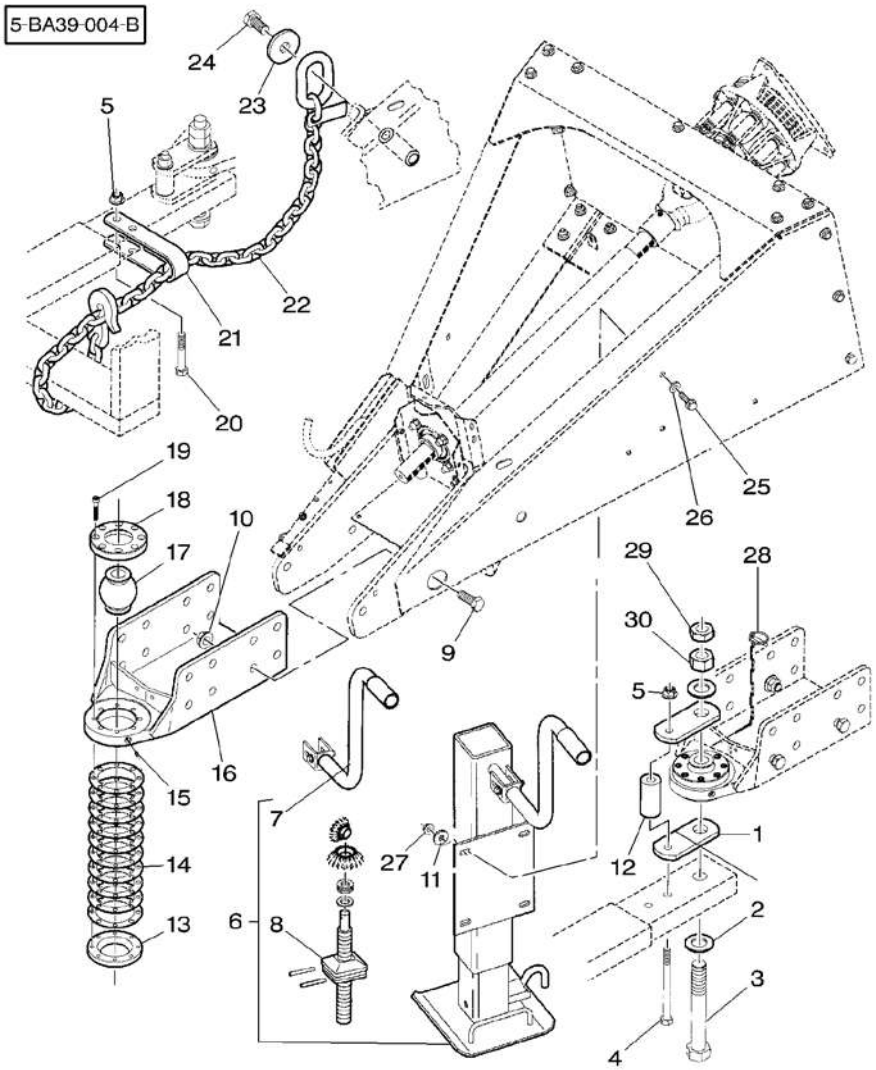

1	1663161		2	PLATE	PLAQUE PIASTRA	PLATTE PLATO
2	7705197	1"–1/4	2	WASHER	RONDELLE RONDELLA	UNTERLEGSCHEIBE ARANDELA
3	700124041		1	BOLT	BOULON BULLONE	MASCH.SCHRAUBE PERNO
4	700716624	5/8"–11 X 7–1/2	1	BOLT	BOULON BULLONE	MASCH.SCHRAUBE PERNO
5*	700711198	5/8"–11	2	NUT	ECROU DADO	MUTTER TUERCA
6	700720014	➡ HL 74226	1	JACK	CRIC CRICCO	WAGENHEBER GATO
6	700720231	➡ HL 74227	1	JACK	CRIC CRICCO	WAGENHEBER GATO
7	700720181	6	1	HANDLE	POIGNEE MANIGLIA	HANDGRIFF MANETA
8	700720180	6	1	KIT, HARDWARE	JEUQUINCAILLERIE KIT BULLONERIA	NORMTEILESATZ BULONERIA JUEGO
9*	700706419	3/4"–10 X 2	4	BOLT	BOULON BULLONE	MASCH.SCHRAUBE PERNO
10*	700703923	3/4"–10	4	TOP LOCKNUT	ECROU FREIN DADO DI TESTA	SELBSTS.MUTTER CONTRATUERCA SUP
11	457432	➡ HL 74226	2	WASHER	RONDELLE RONDELLA	UNTERLEGSCHEIBE ARANDELA
12	1663162		1	SPACER	ENTRETOISE DISTANZIALE	ABSTANDSTUECK PIEZA DISTANCIA
13*	1663158P		1	RING	ANNEAU ANELLO	RING ARO
14	1663163		10	SHIM	CALE REGLAGE SPESSORE	EINSTELLBLECH CALCE
15	***70923219***	1/4"–28	1	GREASER	GRAISSEUR INGRASSATORE	FETTNIPPEL ENGRASADOR
16*	700137755P		1	HITCH	ATTELAGE ATTACCO	ANHAENGEKUPPLUNG ENGANCHE
17*	1663159P		1	BALL	BILLE SFERA	KUGEL BOLA
18*	1663157P		1	RING	ANNEAU ANELLO	RING ARO
19*	70912269	3/8"–16 X 2	8	BOLT	BOULON BULLONE	MASCH.SCHRAUBE PERNO
20*	70923501	5/8"–11 X 3–3/4	1	CAPSCREW	VIS BOUCHON TAPPO A VITE	HUTSCHRAUBE TORNILLO TAPON
21*	700113646B		1	CLEVIS	CHAPE GANCIO D'ATTACCO	GABELSTUECK GANCHO SEGURI.
22	700720132		1	CHAIN	CHAINE CATENA	KETTE CADENA
23*	700122210		1	WASHER	RONDELLE RONDELLA	UNTERLEGSCHEIBE ARANDELA
24*	70925765	1"–8 X 2	1	SCREW	VIS VITE	SCHRAUBE TORNILLO
25*	7883432	➡ HL 74226 1/2"–13 X 1–3/4	2	SCREW	VIS VITE	SCHRAUBE TORNILLO

Hitch Safety Chain – Jack
Chaine De Securite – Cric
Sicherheitskette – Abstellstuetze
Catena Sicurezza – Martinetto
Cadena Seguridad – Gato Armado

10-5

Hitch Standard
Attelage Standard
Anhaengekupplung Standard
Attacco Standard
Enganche Standard

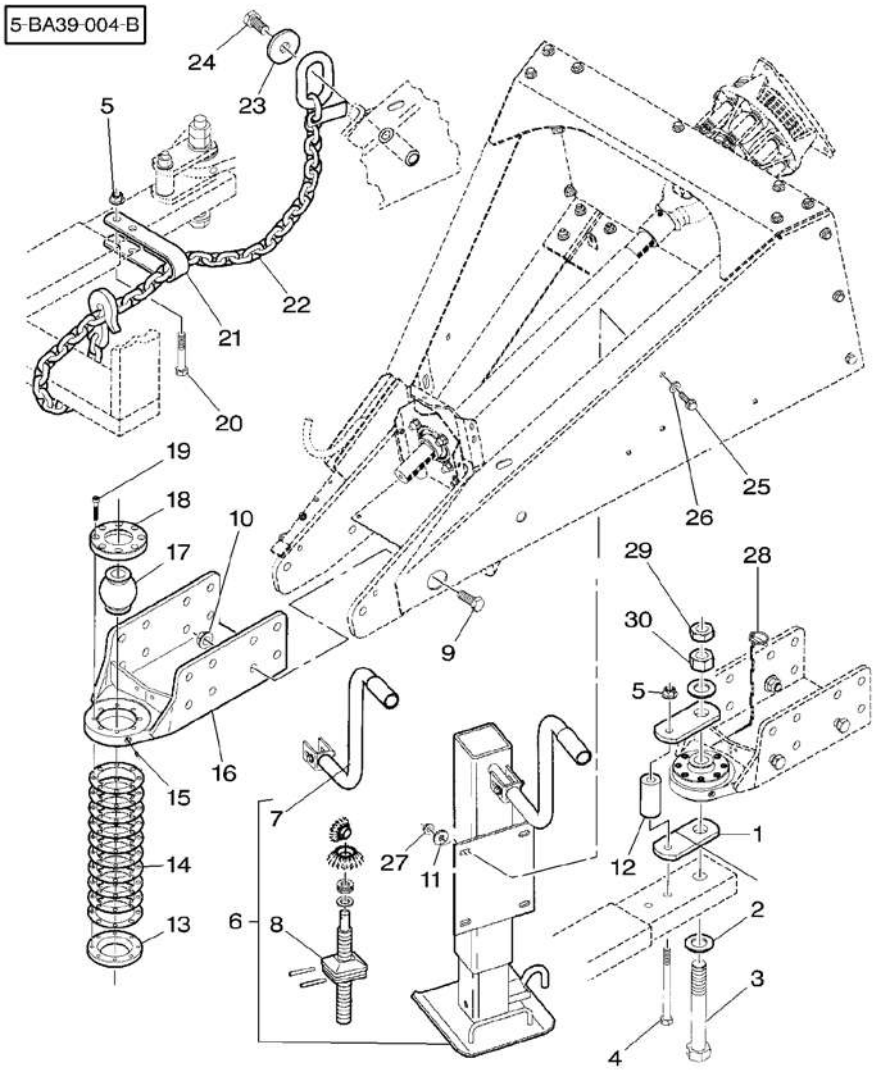

25 *	70934980	➡ HL 74227 1/2"–13 X 1–1/4	4 SCREW	VIS VITE	SCHRAUBE TORNILLO
26 *	70928178	➡ HL 74226 1/2"	2 WASHER	RONDELLE RONDELLA	UNTERLEGSCHEIBE ARANDELA
27 *	*Y704742*	1/2"–13	2 TOP LOCKNUT	ECROU FREIN DADO DI TESTA	SELBSTS.MUTTER CONTRATUERCA SUP
28	Y762260	1/4" X 1–3/4	1 PIN	GOUPILLE PERNO	BOLZEN PASADOR
29 *	704585	1–1/4–7	1 NUT	ECROU DADO	MUTTER TUERCA
30 *	355573X1	1–1/4–7	1 NUT UNC	ECROU UNC DADO UNC	MUTTER UNC TUERCA UNC

Linkage – Hitch Safety Chain
Attelage – Chaine De Securite
Lenker – Sicherheitskette
Teranteria – Catena Sicurezza
Enganches – Cadena Seguridad

10-10

High/Low Hitch
Attelage Haut/Bas
Hoch/Niedrig Anhaengekupplung
Attacco Alto/Basso
Enganche Alto/Bajo

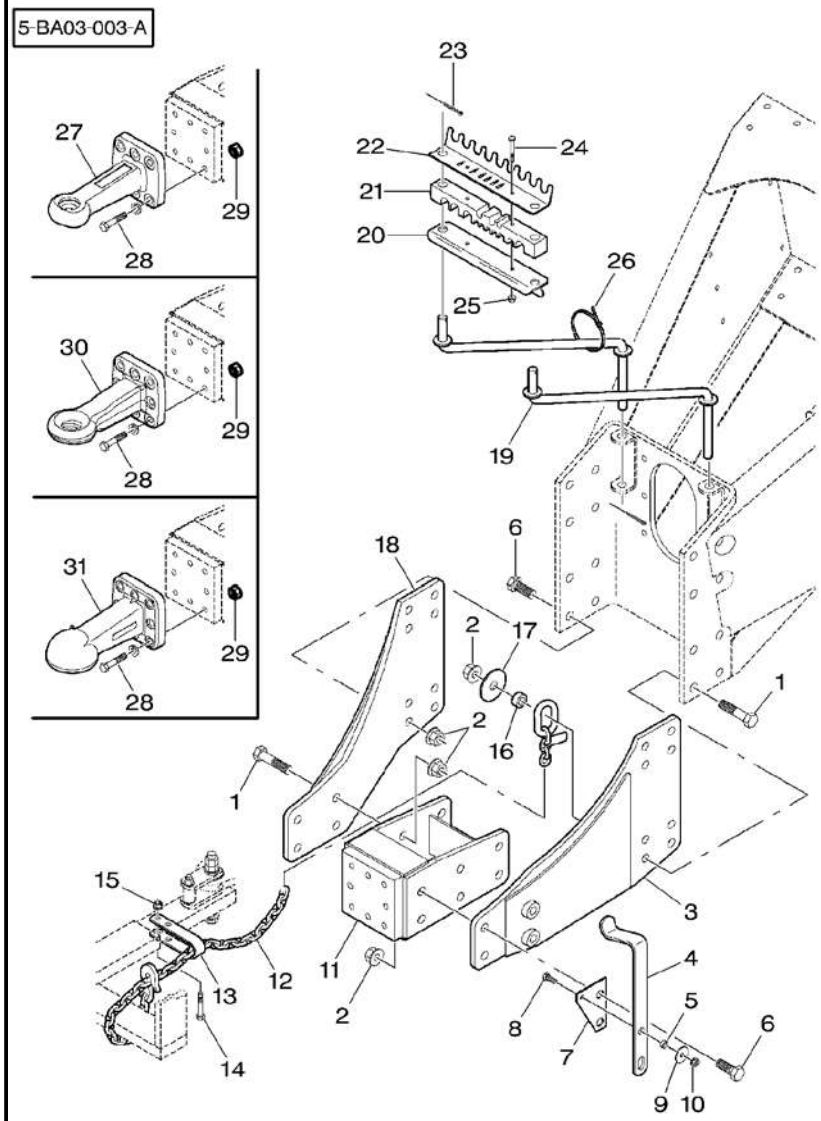

1★	W907183-4	3/4"-10 X 3-1/4	5	BOLT	BOULON BULLONE MASCH.SCHRAUBE PERNO
2★	700703923	3/4"-10	16	TOP LOCKNUT	ECROU FREIN DADO DI TESTA SELBSTS.MUTTER CONTRATUERCA SUP
3★	700139426P	◀	1	TONGUE	LANGUETTE LINGUETTA ZUNGE LENGUETA
4★	700139456		1	STRAP	PATTE CORREGGIA LASCHE FAJA
5★	70336568		1	SPACER	ENTRETOISE DISTANZIALE ABSTANDSTUECK PIEZA DISTANCIA
6★	700721715	3/4"-10 X 2	11	SCREW	VIS VITE SCHRAUBE TORNILLO
7★	700139457		1	PLATE	PLAQUE PIASTRA PLATTE PLATO
8★	353691X1	3/8"-16 X 1	1	BOLT UNC	BOULON UNC BULLONE UNC MASCH.SCHRB.UNC PERNO UNC
9★	700710049	3/8"	1	WASHER	RONDELLE RONDELLA UNTERLEGSCHEIBE ARANDELA
10★	***700711238***	3/8"-16	1	NUT	ECROU DADO MUTTER TUERCA
11★	700139422P		1	HITCH	ATTELAGE ATTACCO ANHAENGEKUPPLUNG ENGANCHE
12★	700720132		1	CHAIN	CHAINE CATENA KETTE CADENA
13★	700113646B		1	CLEVIS	CHAPE GANCIO D'ATTACCO GABELSTUECK GANCHO SEGURI.
14★	**354294X1**	5/8"-11 X 3-3/4	1	BOLT UNC	BOULON UNC BULLONE UNC MASCH.SCHRB.UNC PERNO UNC
15★	700711198	5/8"-11	1	NUT	ECROU DADO MUTTER TUERCA
16★	700139417B		1	BUSH	BAGUE BOCCOLA BUCHSE CASQUILLO
17★	6579106P		1	CAP	CHAPEAU CAPPELLO KAPPE TAPA
18★	700139427P	▶	1	TONGUE	LANGUETTE LINGUETTA ZUNGE LENGUETA
19★	700139447		2	ROD	TRINGLE ASTA STANGE VARILLA
20★	700139434		1	PLATE	PLAQUE PIASTRA PLATTE PLATO
21★	700139455		1	BLOCK	BLOC BLOCCO BLOCK BLOQUE
22★	700139433		1	PLATE	PLAQUE PIASTRA PLATTE PLATO
23★	354061X1	1/8" X 1-1/4	4	PIN	GOUPILLE PERNO BOLZEN PASADOR
24★	354613X1	5/16"-18 X 2-1/4	2	BOLT UNC	BOULON UNC BULLONE UNC MASCH.SCHRB.UNC PERNO UNC
25★	Y704726	5/16"-18	2	TOP LOCKNUT	ECROU FREIN DADO DI TESTA SELBSTS.MUTTER CONTRATUERCA SUP
26★	70937133		2	TIE	ATTACHE TRAVERSA ATTACCO KUPPL.STANGE BARRA DE ENLACE

Linkage – Hitch Safety Chain
Attelage – Chaine De Securite
Lenker – Sicherheitskette
Teranteria – Catena Sicurezza
Enganches – Cadena Seguridad

10-10

High/Low Hitch
Attelage Haut/Bas
Hoch/Niedrig Anhaengekupplung
Attacco Alto/Basso
Enganche Alto/Bajo

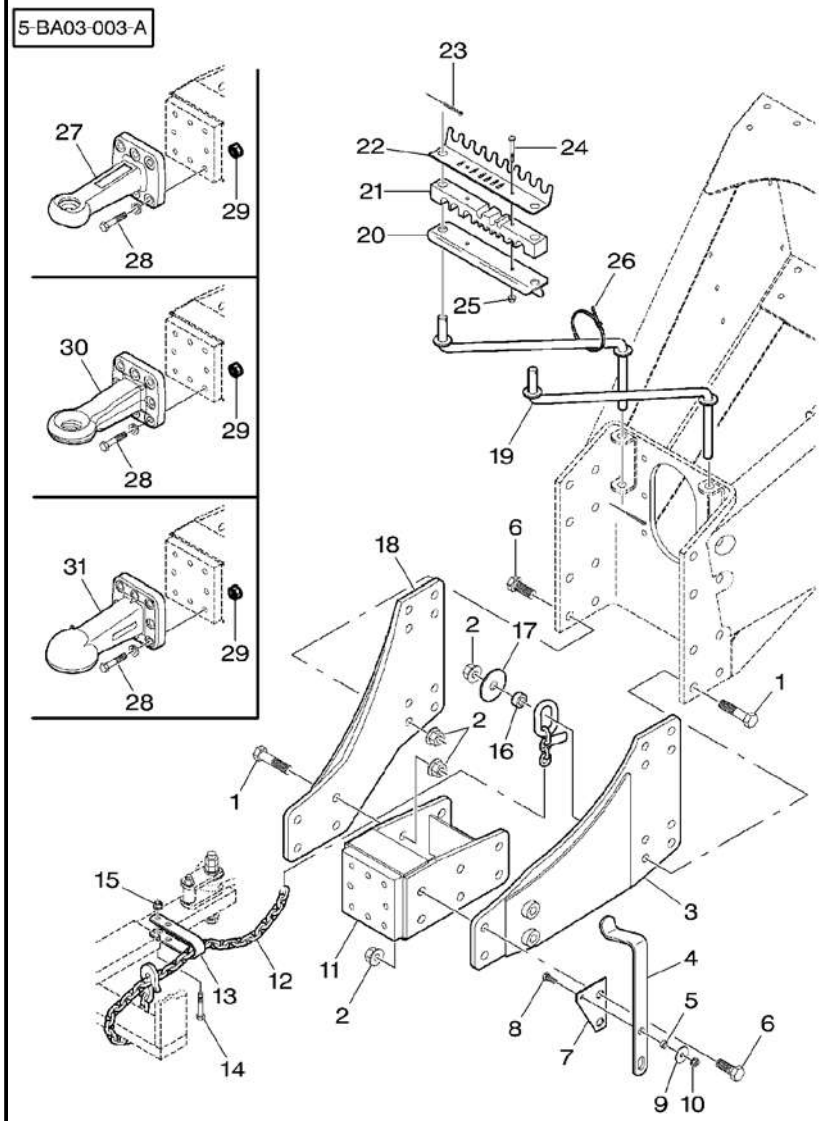

27*	700721591		1	COUPLING	CRABOT ACCOPPIAMENTO KUPPLUNG ACOPLAMIENTO
27*	MK41143	40 mm	1	KIT	JEU KIT SATZ JUEGO
28*	7703879	M16 X 60	22	SCREW	VIS VITE SCHRAUBE TORNILLO
29*	700708348	M16	22	NUT	ECROU DADO MUTTER TUERCA
30*	700723357		1	KIT	JEU KIT SATZ JUEGO
30*	MK41144	50 mm	1	KIT	JEU KIT SATZ JUEGO
31*	700721590		1	COUPLING	CRABOT ACCOPPIAMENTO KUPPLUNG ACOPLAMIENTO
31*	MK41145		1	KIT	JEU KIT SATZ JUEGO

5-BA01-049-A

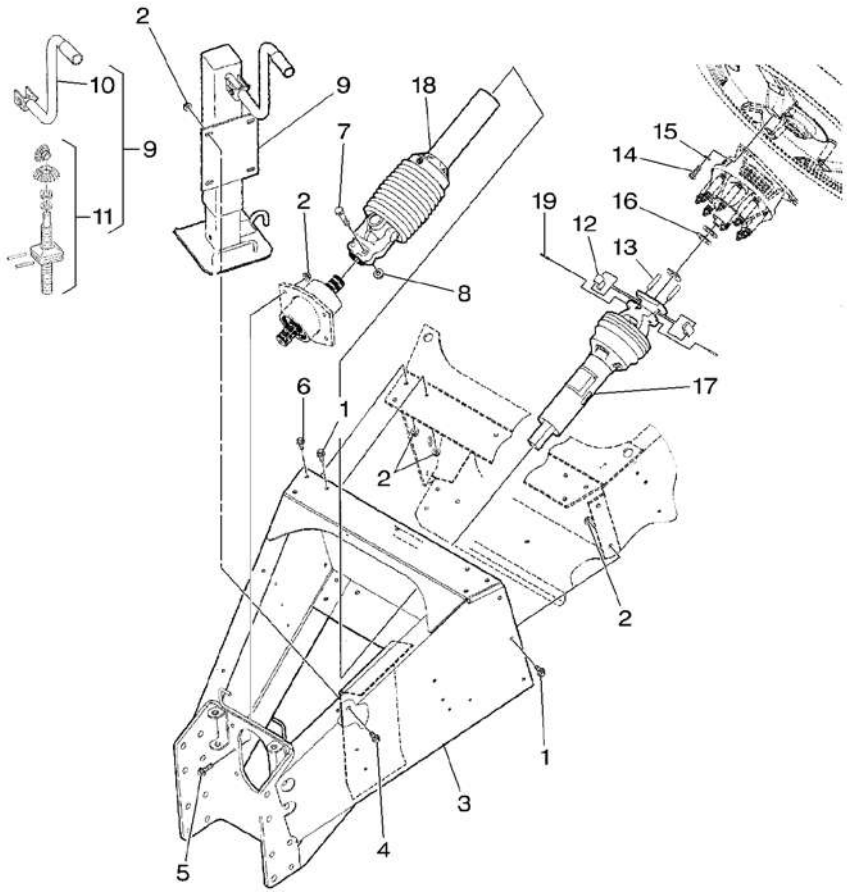

1 ✱	700710984	1/2"-13 X 1-1/4	12	SCREW	VIS VITE	SCHRAUBE TORNILLO
2 ✱	*Y704742*	1/2"-13	28	TOP LOCKNUT	ECROU FREIN DADO DI TESTA	SELBSTS.MUTTER CONTRATUERCA SUP
3 ✱	700139411P		1	TONGUE	LANGUETTE LINGUETTA	ZUNGE LENGUETA
4 ✱	70934980	1/2"-13 X 1-1/4	4	SCREW	VIS VITE	SCHRAUBE TORNILLO
5 ✱	7883432	1/2"-13 X 1-3/4	4	SCREW	VIS VITE	SCHRAUBE TORNILLO
6 ✱	8701237	1/2"-13 X 1-1/2	8	SCREW	VIS VITE	SCHRAUBE TORNILLO
7 ✱	70921576	5/8"-11 X 3	2	CAPSCREW	VIS BOUCHON TAPPO A VITE	HUTSCHRAUBE TORNILLO TAPON
8 ✱	700711198	5/8"-11	2	NUT	ECROU DADO	MUTTER TUERCA
9 ✱	700720231		1	JACK	CRIC CRICCO	WAGENHEBER GATO
10 ✱	700720181	9	1	HANDLE	POIGNEE MANIGLIA	HANDGRIFF MANETA
11 ✱	700720180	9	1	KIT, HARDWARE	JEUQUINCAILLERIE KIT BULLONERIA	NORMTEILESATZ BULONERIA JUEGO
12 ✱	*700113036*		2	PAWL	LINGUET ARRESTO	SPERRKLINKE FIADOR TRINQUETE
13 ✱	*700113037*		2	PIN	GOUPILLE PERNO	BOLZEN PASADOR
14 ✱	70923154	1/2"-13 X 1-1/2	3	CAPSCREW	VIS BOUCHON TAPPO A VITE	HUTSCHRAUBE TORNILLO TAPON
15 ✱	353439X1	1/2"	3	LOCK WASHER	RONDELLE FREIN ROSETTA ELASTICA	FEDERRING ARANDELA GROWER
16 ✱	*6522932*		2	SHIM	CALE REGLAGE SPESSORE	EINSTELLBLECH CALCE
17 ✱	700721786		1	SHAFT	ARBRE ALBERO	WELLE ARBOL
18 ✱	700721788		1	TUBE	TUBE TUBO	ROHR TUBO
19 ✱	70915751	3/16" X 1-1/2	2	PIN	GOUPILLE PERNO	BOLZEN PASADOR

5-BA01-050-B

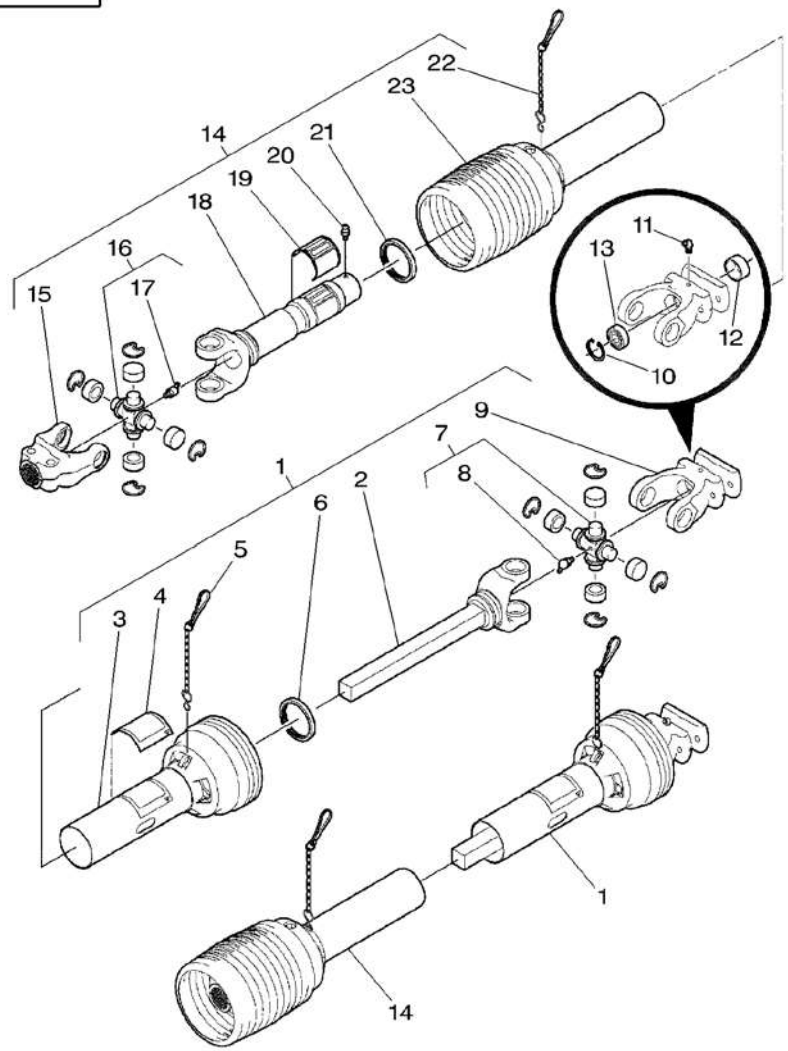

1	700721786			1	SHAFT	ARBRE ALBERO	WELLE ARBOL
2	700721789	1		1	YOKE	CHAPE ARTICULAT FORCELLA	GELENKGABEL YUGO
3	700721791	1		1	GUARD	GARDE PROTEZIONE	SCHUTZVORR DEFENSA
4	700707960	1		1	DECAL	DECALCOMANIE DECALCOMANIA	AUFKLEBER CALCOMANIA
5	700720152	1		1	KIT, CHAIN	JEU CHAINES KIT CATENA	KETTENSATZ CADENA JUEGO
6	700721790	1		1	KIT, REPAIR	JEU REPARATION KIT RIPARAZIONE	REPARATURSATZ JUEGO REPARACION
7	***7815053***	1		1	KIT	JEU KIT	SATZ JUEGO
8	13223X	7		1	NIPPLE	GRAISSEUR COUDE NIPPLO	NIPPEL NIPLE
9	700706955	1		1	YOKE	CHAPE ARTICULAT FORCELLA	GELENKGABEL YUGO
10	***70927699***	9		1	RING	ANNEAU ANELLO	RING ARO
11	13223X	9		1	NIPPLE	GRAISSEUR COUDE NIPPLO	NIPPEL NIPLE
12	***700706956***	9		1	BEARING	COUSSINET CUSCINETTO	LAGER COJINETE
13	***1124697***	9		1	BEARING	COUSSINET CUSCINETTO	LAGER COJINETE
14	700721788			1	TUBE	TUBE TUBO	ROHR TUBO
15	700721794	14		1	YOKE	CHAPE ARTICULAT FORCELLA	GELENKGABEL YUGO
16	***7815053***	14		1	KIT	JEU KIT	SATZ JUEGO
17	13223X	16		1	NIPPLE	GRAISSEUR COUDE NIPPLO	NIPPEL NIPLE
18	700721793	14		1	YOKE	CHAPE ARTICULAT FORCELLA	GELENKGABEL YUGO
19	210371	14		1	DECAL	DECALCOMANIE DECALCOMANIA	AUFKLEBER CALCOMANIA
20	***70923219***	14	1/4"-28	1	GREASER	GRAISSEUR INGRASSATORE	FETTNIPPEL ENGRASADOR
21	700721790	14		1	KIT, REPAIR	JEU REPARATION KIT RIPARAZIONE	REPARATURSATZ JUEGO REPARACION
22	700720152	14		1	KIT, CHAIN	JEU CHAINES KIT CATENA	KETTENSATZ CADENA JUEGO
23	700721792	14		1	GUARD	GARDE PROTEZIONE	SCHUTZVORR DEFENSA

5-BA01-051-A

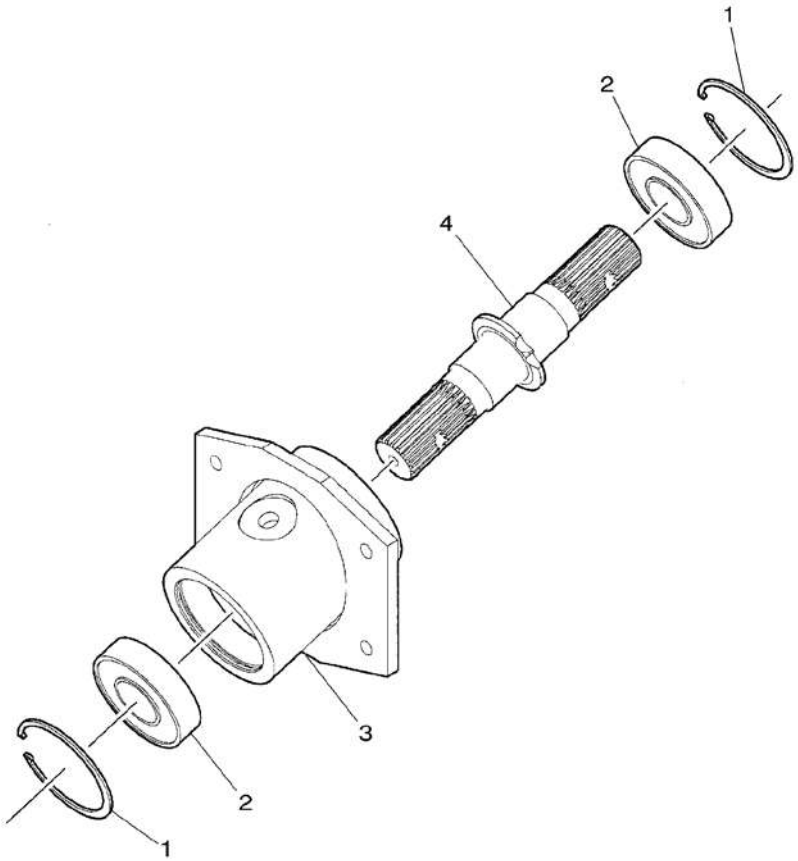

1	***355994X1***	**2**	RING	ANNEAU ANELLO	RING ARO
2	***391069X1***	**2**	BEAR. 6309 2RS	RLT 6309 2RS CUSC. 6309 2RS	LAGER 6309 2RS RODA. 6309 2RS
3	700139437P	**1**	SUPPORT	SUPPORT SUPPORTO	LAGERUNG DISPOS.DE SOSTEN
4	700139441	**1**	SHAFT	ARBRE ALBERO	WELLE ARBOL

Transmission Transmission Getriebe Transmissione Transmission	10-30	Standard – Type 2 1–3/8 X 21 Splines Standard – Type 2 1–3/8 X 21 Cannelures Standard – Type 2 1–3/8 X 21 Rillen Standard – Type 2 1–3/8 X 21 Scanalature Standard – Type 2 1–3/8 X 21 Estrias

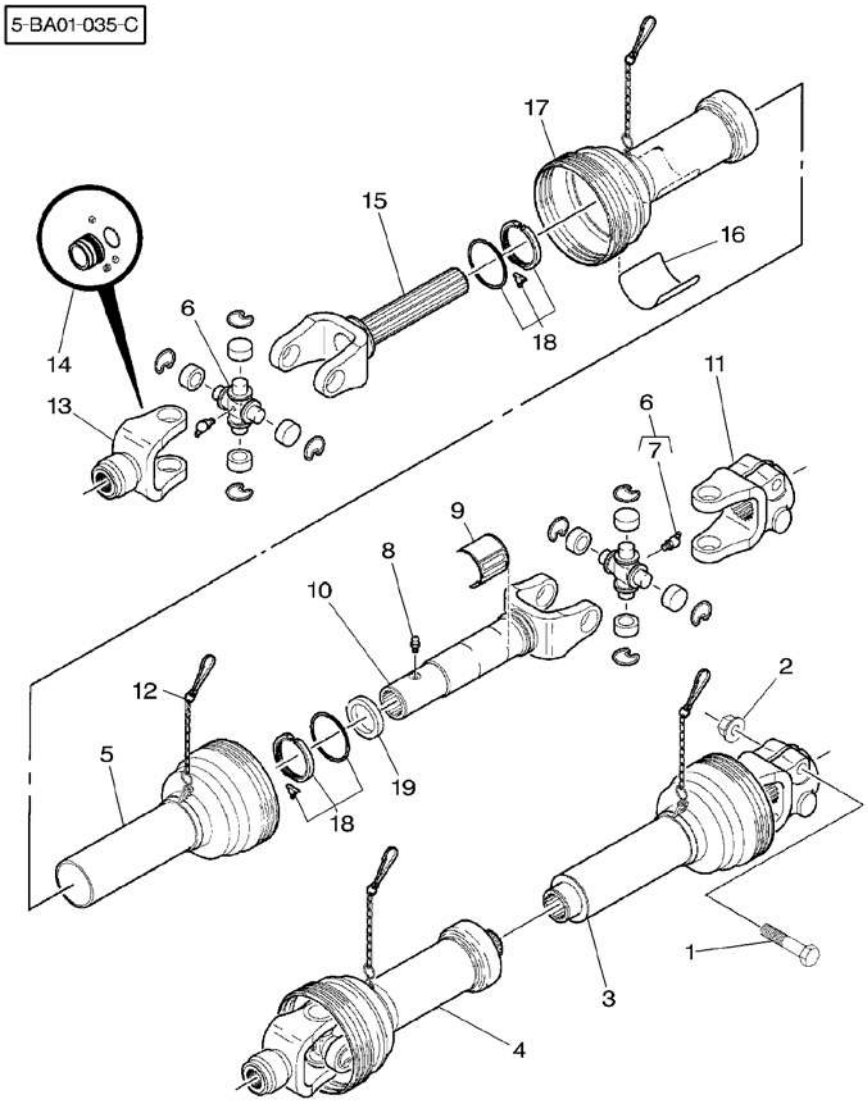

0*	MK41072		1	KIT	JEU KIT	SATZ JUEGO
1*	367514X1	5/8"–11 X 3	1	BOLT	BOULON BULLONE	MASCH.SCHRAUBE PERNO
2*	700711198	5/8"–11	1	NUT	ECROU DADO	MUTTER TUERCA
3*	700715020	[B]	1	SHAFT	ARBRE ALBERO	WELLE ARBOL
4*	700720121	[A]	1	UNIVERSAL JOINT	CARDAN GIUNTO UNIVERSAL	KARDANGELENK CRUCETA CARDAN
5*	700715024		1	GUARD	GARDE PROTEZIONE	SCHUTZVORR DEFENSA
6	***7815053***		2	KIT	JEU KIT	SATZ JUEGO
7*	13223X	6	1	NIPPLE	GRAISSEUR COUDE NIPPLO	NIPPEL NIPLE
8	700712767	3/16"	1	GREASER	GRAISSEUR INGRASSATORE	FETTNIPPEL ENGRASADOR
9	210371	⇨ 700708583	1	DECAL	DECALCOMANIE DECALCOMANIA	AUFKLEBER CALCOMANIA
10*	700712445		1	YOKE	CHAPE ARTICULAT FORCELLA	GELENKGABEL YUGO
11	700712517		1	YOKE	CHAPE ARTICULAT FORCELLA	GELENKGABEL YUGO
12*	700720152		1	KIT, CHAIN	JEU CHAINES KIT CATENA	KETTENSATZ CADENA JUEGO
13	700720112		1	YOKE	CHAPE ARTICULAT FORCELLA	GELENKGABEL YUGO
14*	***700720122***		1	KIT, REPAIR	JEU REPARATION KIT RIPARAZIONE	REPARATURSATZ JUEGO REPARACION
15	700706966		1	YOKE	CHAPE ARTICULAT FORCELLA	GELENKGABEL YUGO
16	700707960		1	DECAL	DECALCOMANIE DECALCOMANIA	AUFKLEBER CALCOMANIA
17*	700720230		1	GUARD	GARDE PROTEZIONE	SCHUTZVORR DEFENSA
18*	***700720153***		2	KIT, BEARING	JEU COUSSINETS KIT CUSCINETTO	LAGERSATZ JUEGO COJINETES
19*	700715820		1	RING	ANNEAU ANELLO	RING ARO

[A] TRACTOR SIDE
COTE TRACTEUR
SCHLEPPER SEITE
LATO TRATTORE
LADO TRACTOR

[B] IMPLEMENT SIDE
COTE OUTILS
WERKZEUG SEITE
LATO ATTREZZO
LADO IMPLEMENTO

Transmission Transmission Getriebe Transmissione Transmission	10-35	Standard – Type 3 1–3/4 X 20 Splines Standard – Type 3 1–3/4 X 20 Cannelures Standard – Type 3 1–3/4 X 20 Rillen Standard – Type 3 1–3/4 X 20 Scanalature Standard – Type 3 1–3/4 X 20 Estrias

5-BA01-048-B

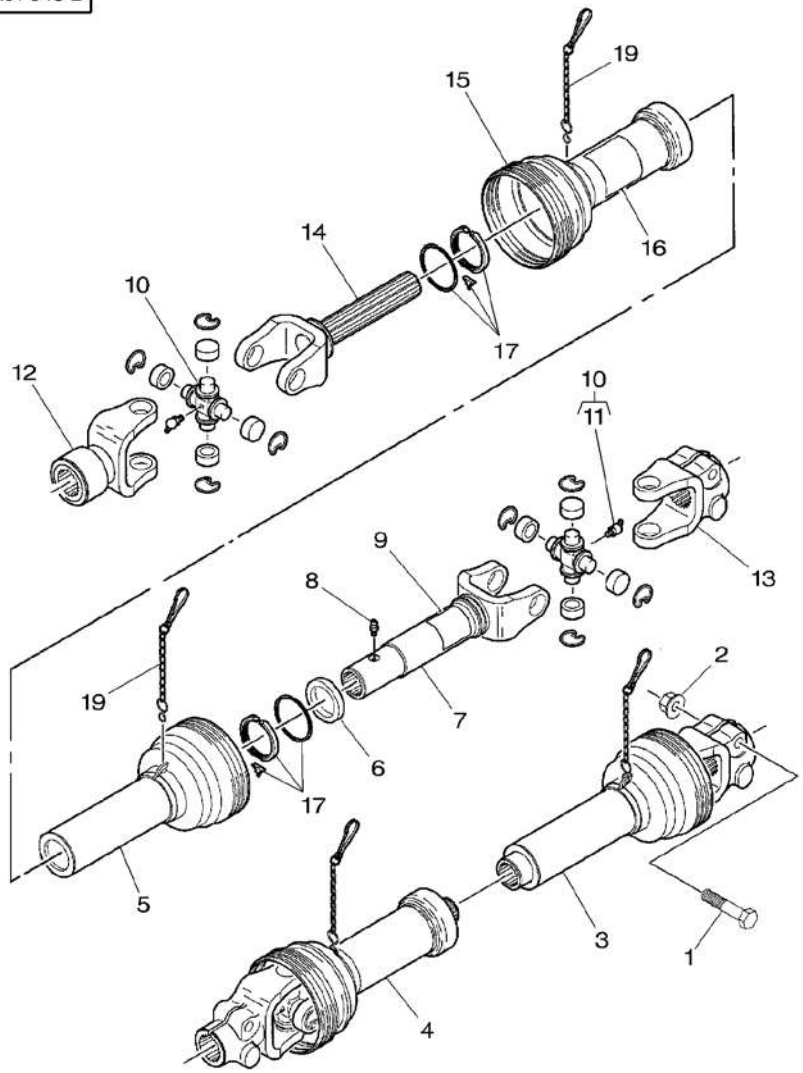

0*	MK41073		1	KIT	JEU KIT	SATZ JUEGO
1*	367514X1	5/8"–11 X 3	1	BOLT	BOULON BULLONE	MASCH.SCHRAUBE PERNO
2	700711198	5/8"–11	1	NUT	ECROU DADO	MUTTER TUERCA
3*	700715824	[B]	1	PTO SHAFT 540	PTO ARBRE 540 PTO ALBERO 540	PTO GELWELLE 540 EJE TDF 540
4*	700720111	[A]	1	UNIVERSAL JOINT	CARDAN GIUNTO UNIVERSAL	KARDANGELENK CRUCETA CARDAN
5*	700715826		1	SHIELD	TOLE RIPARO	SCHILD BLINDAJE
6	700715820		1	RING	ANNEAU ANELLO	RING ARO
7	700715827		1	YOKE	CHAPE ARTICULAT FORCELLA	GELENKGABEL YUGO
8	700712767	3/16"	1	GREASER	GRAISSEUR INGRASSATORE	FETTNIPPEL ENGRASADOR
9*	700707960		1	DECAL	DECALCOMANIE DECALCOMANIA	AUFKLEBER CALCOMANIA
10*	***7815053***		2	KIT	JEU KIT	SATZ JUEGO
11*	13223X	10	1	NIPPLE	GRAISSEUR COUDE NIPPLO	NIPPEL NIPLE
12	700720113		1	YOKE	CHAPE ARTICULAT FORCELLA	GELENKGABEL YUGO
13*	700712517		1	YOKE	CHAPE ARTICULAT FORCELLA	GELENKGABEL YUGO
14	8802613		1	SHAFT	ARBRE ALBERO	WELLE ARBOL
15*	700715825		1	SHIELD	TOLE RIPARO	SCHILD BLINDAJE
16*	210371		1	DECAL	DECALCOMANIE DECALCOMANIA	AUFKLEBER CALCOMANIA
17	***700720153***		2	KIT, BEARING	JEU COUSSINETS KIT CUSCINETTO	LAGERSATZ JUEGO COJINETES
18*	***700711425***	[C]	1	KIT	JEU KIT	SATZ JUEGO
19*	700720152		2	KIT, CHAIN	JEU CHAINES KIT CATENA	KETTENSATZ CADENA JUEGO

[A] TRACTOR SIDE
COTE TRACTEUR
SCHLEPPER SEITE
LATO TRATTORE
LADO TRACTOR

[B] IMPLEMENT SIDE
COTE OUTILS
WERKZEUG SEITE
LATO ATTREZZO
LADO IMPLEMENTO

Standard – Type 3 1–3/4 X 20 Splines
Standard – Type 3 1–3/4 X 20 Cannelures
Standard – Type 3 1–3/4 X 20 Rillen
Standard – Type 3 1–3/4 X 20 Scanalature
Standard – Type 3 1–3/4 X 20 Estrias

5-BA01-048-B

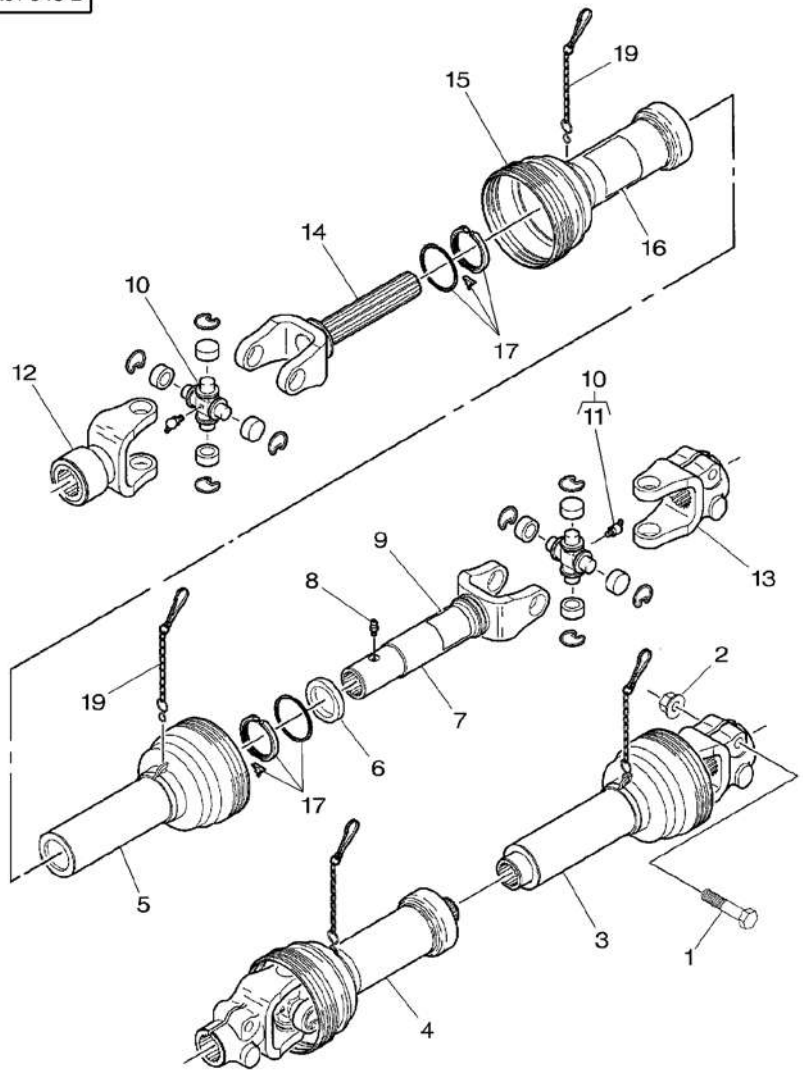

[C] NOT ILLUSTRATED
NON ILLUSTRE
NICHT ABGEBILDET
NO ILLUSTRADO
NO ILLUSTRADED

Transmission Transmission Getriebe Transmissione Transmission	10-40	Type 2 1-3/8 X 21 Splines - Auto Lock Type 2 1-3/8 X 21 Cannelures - Auto Lock Type 2 1-3/8 X 21 Rillen - Auto Lock Type 2 1-3/8 X 21 Scanalature - Auto Lock Type 2 1-3/8 X 21 Estrias - Auto Lock

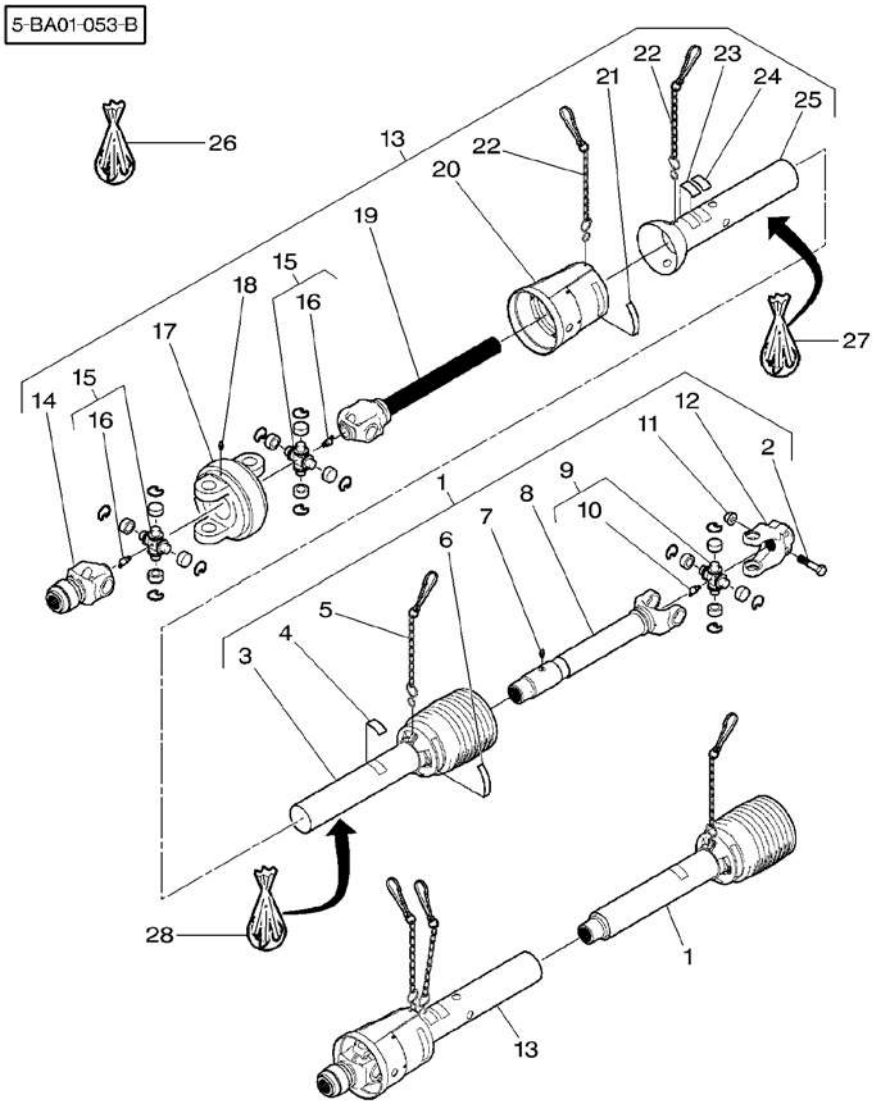

1*	700723264			1	SHAFT	ARBRE ALBERO	WELLE ARBOL
2*	70921576	1	5/8"-11 X 3	1	CAPSCREW	VIS BOUCHON TAPPO A VITE	HUTSCHRAUBE TORNILLO TAPON
3*	700723226	1		1	GUARD	GARDE PROTEZIONE	SCHUTZVORR DEFENSA
4*	210371	1		1	DECAL	DECALCOMANIE DECALCOMANIA	AUFKLEBER CALCOMANIA
5*	700720152	1		1	KIT, CHAIN	JEU CHAINES KIT CATENA	KETTENSATZ CADENA JUEGO
6*	700715035	1		1	DECAL	DECALCOMANIE DECALCOMANIA	AUFKLEBER CALCOMANIA
7*	***70923219***	1	1/4"-28	1	GREASER	GRAISSEUR INGRASSATORE	FETTNIPPEL ENGRASADOR
8*	700721778	1		1	YOKE	CHAPE ARTICULAT FORCELLA	GELENKGABEL YUGO
9*	***7815053***	1		1	KIT	JEU KIT	SATZ JUEGO
10*	13223X	9	1/8"-27 X 65	1	NIPPLE	GRAISSEUR COUDE NIPPLO	NIPPEL NIPLE
11*	700711198	1	5/8"-11	1	NUT	ECROU DADO	MUTTER TUERCA
12*	700721794	1		1	YOKE	CHAPE ARTICULAT FORCELLA	GELENKGABEL YUGO
13*	700723265			1	SHAFT	ARBRE ALBERO	WELLE ARBOL
14*	700721797	13		1	YOKE	CHAPE ARTICULAT FORCELLA	GELENKGABEL YUGO
15*	***700712574***	13		2	KIT	JEU KIT	SATZ JUEGO
16*	13223X	15		1	NIPPLE	GRAISSEUR COUDE NIPPLO	NIPPEL NIPLE
17*	700723271	13		1	HOUSING	CARTER CARCASSA	GEHAEUSE ALOJAMIENTO
18*	***70923219***	13	1/4"-28	1	GREASER	GRAISSEUR INGRASSATORE	FETTNIPPEL ENGRASADOR
19*	700721799	13		1	SHAFT	ARBRE ALBERO	WELLE ARBOL
20*	700723269	13		1	KIT, GUARD	JEU GARANTS KIT SCORTA	SCHUTZVORR.SATZ PROTECTOR JUEGO
21*	700715035	13		1	DECAL	DECALCOMANIE DECALCOMANIA	AUFKLEBER CALCOMANIA
22*	700720152	13		2	KIT, CHAIN	JEU CHAINES KIT CATENA	KETTENSATZ CADENA JUEGO
23*	700707960	13		1	DECAL	DECALCOMANIE DECALCOMANIA	AUFKLEBER CALCOMANIA
24*	700721801	13		1	GUARD	GARDE PROTEZIONE	SCHUTZVORR DEFENSA
25*	700723267	13		1	GUARD	GARDE PROTEZIONE	SCHUTZVORR DEFENSA
26*	***700720122***		AUTO-LOCK	1	KIT, REPAIR	JEU REPARATION KIT RIPARAZIONE	REPARATURSATZ JUEGO REPARACION

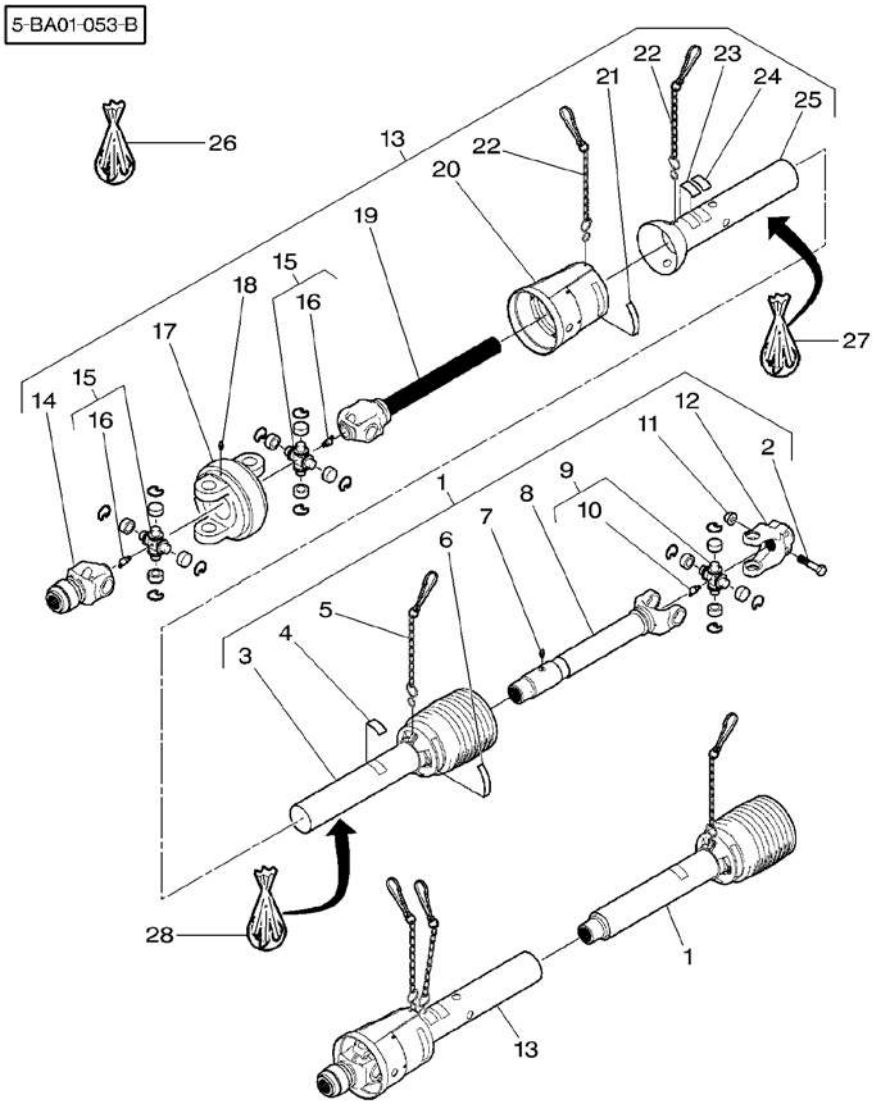

26*	*700723268*	NYLON	1	KIT, REPAIR	JEU REPARATION KIT RIPARAZIONE	REPARATURSATZ JUEGO REPARACION
27*	700721800		1	KIT, REPAIR	JEU REPARATION KIT RIPARAZIONE	REPARATURSATZ JUEGO REPARACION
28*	700721790		1	KIT, REPAIR	JEU REPARATION KIT RIPARAZIONE	REPARATURSATZ JUEGO REPARACION

Transmission
Transmission
Getriebe
Transmissione
Transmission

10-45

Type 3 1-3/4 X 20 Splines - Auto Lock
Type 3 1-3/4 X 20 Cannelures - Auto Lock
Type 3 1-3/4 X 20 Rillen - Auto Lock
Type 3 1-3/4 X 20 Scanalature - Auto Lock
Type 3 1-3/4 X 20 Estrias - Auto Lock

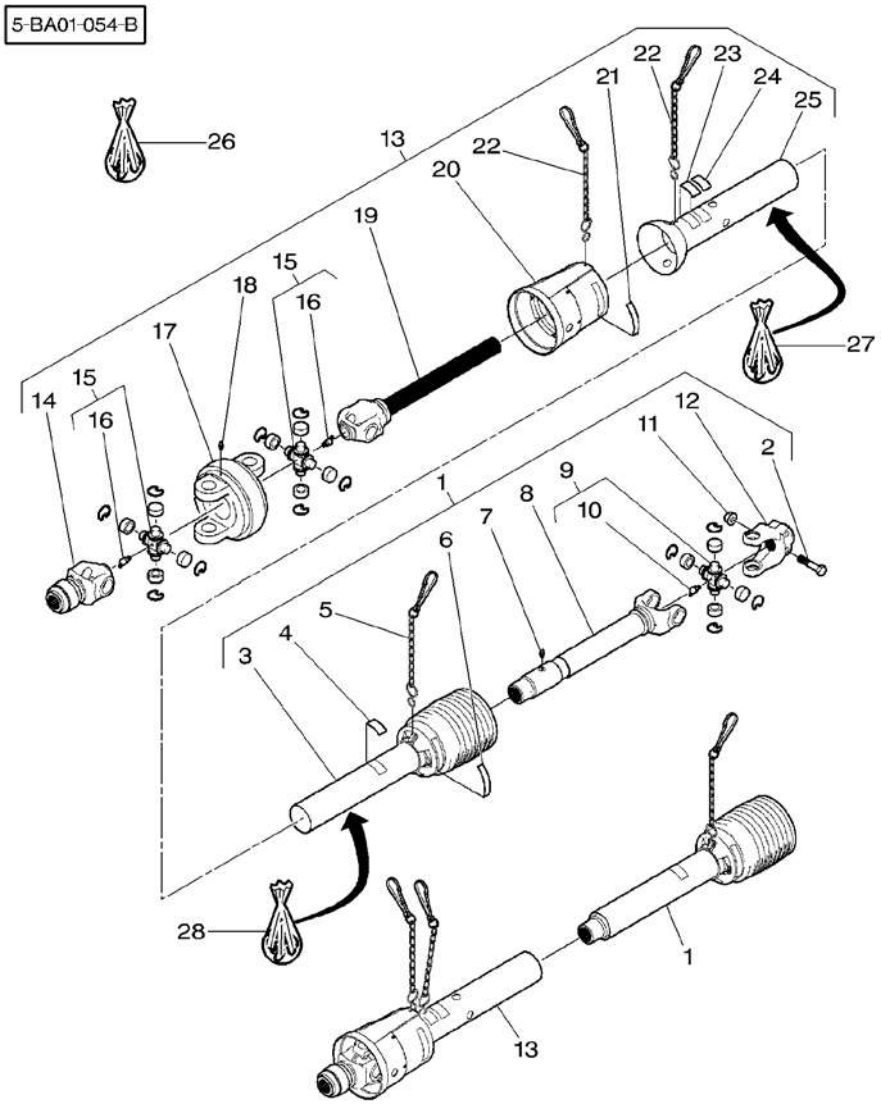

1*	700723264			1	SHAFT	ARBRE ALBERO	WELLE ARBOL
2*	70921576	1	5/8"-11 X 3	1	CAPSCREW	VIS BOUCHON TAPPO A VITE	HUTSCHRAUBE TORNILLO TAPON
3*	700723226	1		1	GUARD	GARDE PROTEZIONE	SCHUTZVORR DEFENSA
4*	210371	1		1	DECAL	DECALCOMANIE DECALCOMANIA	AUFKLEBER CALCOMANIA
5*	700720152	1		1	KIT, CHAIN	JEU CHAINES KIT CATENA	KETTENSATZ CADENA JUEGO
6*	700715035	1		1	DECAL	DECALCOMANIE DECALCOMANIA	AUFKLEBER CALCOMANIA
7*	***70923219***	1	1/4"-28	1	GREASER	GRAISSEUR INGRASSATORE	FETTNIPPEL ENGRASADOR
8*	700721778	1		1	YOKE	CHAPE ARTICULAT FORCELLA	GELENKGABEL YUGO
9*	***7815053***	1		1	KIT	JEU KIT	SATZ JUEGO
10*	13223X	9	1/8"-27 X 65	1	NIPPLE	GRAISSEUR COUDE NIPPLO	NIPPEL NIPLE
11*	700711198	1	5/8"-11	1	NUT	ECROU DADO	MUTTER TUERCA
12*	700721794	1		1	YOKE	CHAPE ARTICULAT FORCELLA	GELENKGABEL YUGO
13*	700721780			1	SHAFT	ARBRE ALBERO	WELLE ARBOL
14*	700720203	13		1	YOKE	CHAPE ARTICULAT FORCELLA	GELENKGABEL YUGO
15*	***700712574***	13		2	KIT	JEU KIT	SATZ JUEGO
16*	13223X	15	1/8"-27 X 65	1	NIPPLE	GRAISSEUR COUDE NIPPLO	NIPPEL NIPLE
17*	700723271	13		1	HOUSING	CARTER CARCASSA	GEHAEUSE ALOJAMIENTO
18*	***70923219***	13	1/4"-28	1	GREASER	GRAISSEUR INGRASSATORE	FETTNIPPEL ENGRASADOR
19*	700721799	13		1	SHAFT	ARBRE ALBERO	WELLE ARBOL
20*	700723269	13		1	KIT, GUARD	JEU GARANTS KIT SCORTA	SCHUTZVORR.SATZ PROTECTOR JUEGO
21*	700715035	13		1	DECAL	DECALCOMANIE DECALCOMANIA	AUFKLEBER CALCOMANIA
22*	700720152	13		2	KIT, CHAIN	JEU CHAINES KIT CATENA	KETTENSATZ CADENA JUEGO
23*	700707960	13		1	DECAL	DECALCOMANIE DECALCOMANIA	AUFKLEBER CALCOMANIA
24*	700721801	13		1	GUARD	GARDE PROTEZIONE	SCHUTZVORR DEFENSA
25*	700723267	13		1	GUARD	GARDE PROTEZIONE	SCHUTZVORR DEFENSA
26*	***700711425***		AUTO-LOCK	1	KIT	JEU KIT	SATZ JUEGO

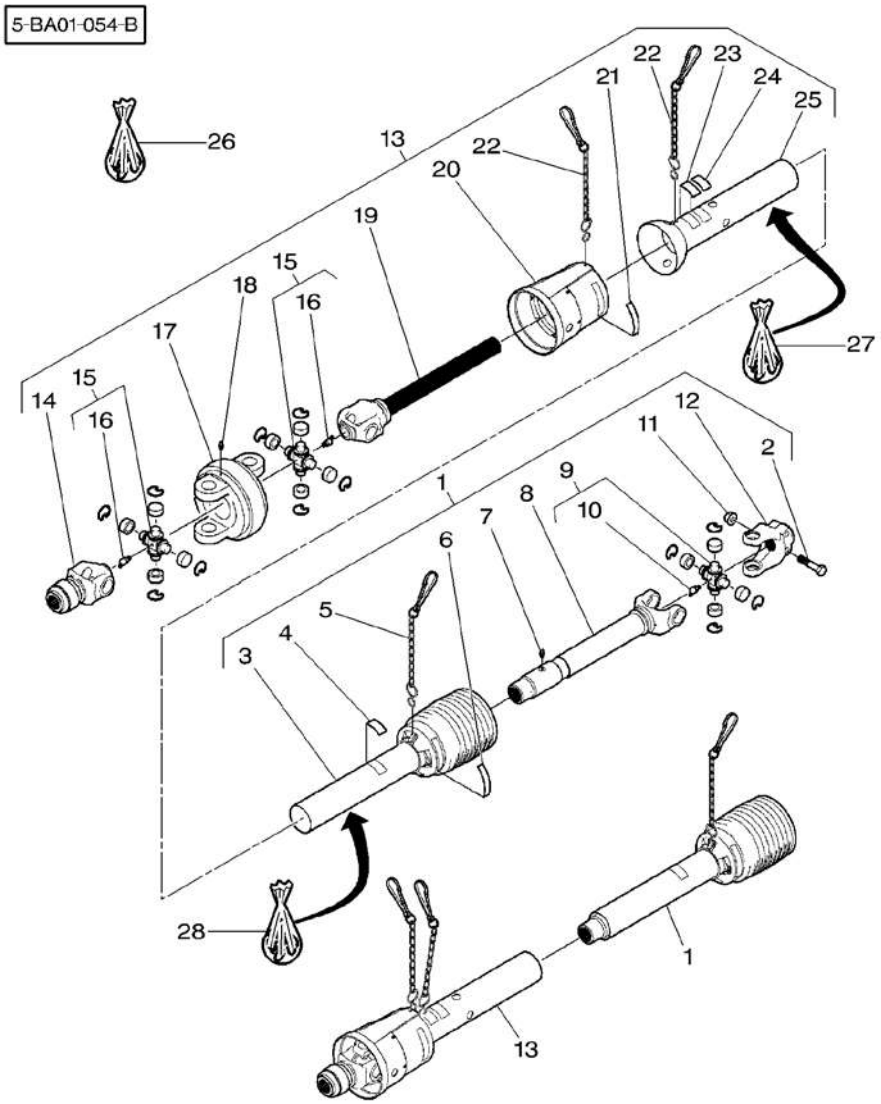

26*	*700723268*	NYLON	1	KIT, REPAIR	JEU REPARATION KIT RIPARAZIONE	REPARATURSATZ JUEGO REPARACION
27*	700721800		1	KIT, REPAIR	JEU REPARATION KIT RIPARAZIONE	REPARATURSATZ JUEGO REPARACION
28*	700721790		1	KIT, REPAIR	JEU REPARATION KIT RIPARAZIONE	REPARATURSATZ JUEGO REPARACION

High/Low Hitch – Type 2 1–3/8 X 21 Splines – Auto Lock
Attelage Haut/Bas – Type 2 1–3/8 X 21 Cannelures – Auto Lock
Hoch/Niedrig – Type 2 1–3/8 X 21 Rillen – Auto Lock
Attaccatura Alto/Basso – Type 2 1–3/8 X 21 Scanalature – Auto Lock
Fijacion Alto/Bajo – Type 2 1–3/8 X 21 Estrias – Auto Lock

5-BA01-059-A

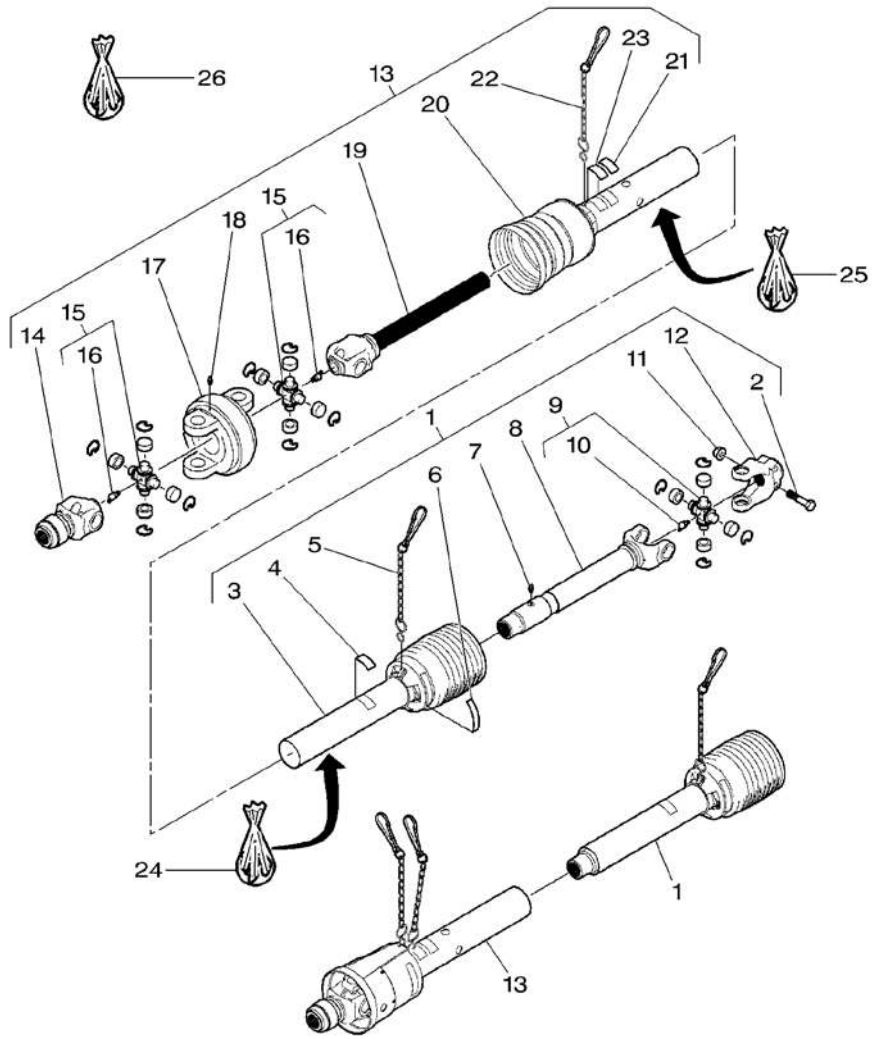

0*	MK41103			1	KIT, ATTACHMENT	JEU ACCESSOIRES KIT ACCESSORI	SATZ ANBAUTEILE JUEGO ACCESORIO
1*	700723264			1	SHAFT	ARBRE ALBERO	WELLE ARBOL
2*	367514X1	1	5/8"–11 X 3	1	BOLT	BOULON BULLONE	MASCH.SCHRAUBE PERNO
3*	700723226	1		1	GUARD	GARDE PROTEZIONE	SCHUTZVORR DEFENSA
4*	210371	1		1	DECAL	DECALCOMANIE DECALCOMANIA	AUFKLEBER CALCOMANIA
5*	700720152	1		1	KIT, CHAIN	JEU CHAINES KIT CATENA	KETTENSATZ CADENA JUEGO
6*	700715035	1		1	DECAL	DECALCOMANIE DECALCOMANIA	AUFKLEBER CALCOMANIA
7*	***70923219***	1	1/4"–28	1	GREASER	GRAISSEUR INGRASSATORE	FETTNIPPEL ENGRASADOR
8*	700721778	1		1	YOKE	CHAPE ARTICULAT FORCELLA	GELENKGABEL YUGO
9*	***7815053***	1		1	KIT	JEU KIT	SATZ JUEGO
10*	13223X	9	1/8"–27 X 65	1	NIPPLE	GRAISSEUR COUDE NIPPLO	NIPPEL NIPLE
11*	700711198	1	5/8"–11	1	NUT	ECROU DADO	MUTTER TUERCA
12*	700721794	1		1	YOKE	CHAPE ARTICULAT FORCELLA	GELENKGABEL YUGO
13*	700723265			1	SHAFT	ARBRE ALBERO	WELLE ARBOL
14*	700721797	13		1	YOKE	CHAPE ARTICULAT FORCELLA	GELENKGABEL YUGO
15*	***700712574***	13		2	KIT	JEU KIT	SATZ JUEGO
16*	13223X	15	1/8"–27 X 65	1	NIPPLE	GRAISSEUR COUDE NIPPLO	NIPPEL NIPLE
17*	700723271	13		1	HOUSING	CARTER CARCASSA	GEHAEUSE ALOJAMIENTO
18*	***70923219***	13	1/4"–28	1	GREASER	GRAISSEUR INGRASSATORE	FETTNIPPEL ENGRASADOR
19*	700721799	13		1	SHAFT	ARBRE ALBERO	WELLE ARBOL
20*	700723267	13		1	GUARD	GARDE PROTEZIONE	SCHUTZVORR DEFENSA
21*	700721801	13		1	GUARD	GARDE PROTEZIONE	SCHUTZVORR DEFENSA
22*	700720152	13		2	KIT, CHAIN	JEU CHAINES KIT CATENA	KETTENSATZ CADENA JUEGO
23*	700707960	13		1	DECAL	DECALCOMANIE DECALCOMANIA	AUFKLEBER CALCOMANIA
24*	700723269			1	KIT, GUARD	JEU GARANTS KIT SCORTA	SCHUTZVORR.SATZ PROTECTOR JUEGO
25*	***700723268***			2	KIT, REPAIR	JEU REPARATION KIT RIPARAZIONE	REPARATURSATZ JUEGO REPARACION

5-BA01-059-A

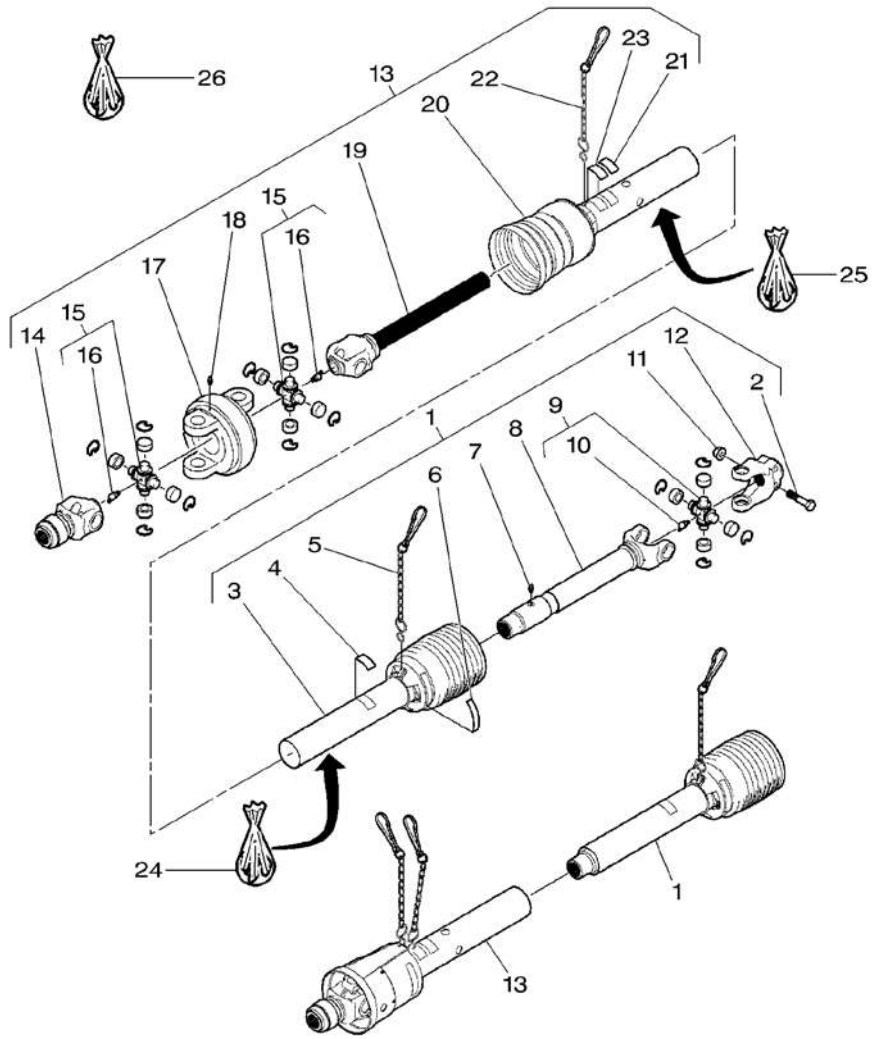

26*	*700720122*	AUTO–LOCK	1	KIT, REPAIR	JEU REPARATION KIT RIPARAZIONE
27*	700721800	[A]	1	KIT, REPAIR	JEU REPARATION KIT RIPARAZIONE

REPARATURSATZ
JUEGO REPARACION
REPARATURSATZ
JUEGO REPARACION

[A] NOT ILLUSTRATED
NON ILLUSTRE
NICHT ABGEBILDET
NO ILLUSTRADO
NO ILLUSTRADED

High/Low Hitch – Type 3 1–3/4 X 20 Splines – Auto Lock
Attelage Haut/Bas – Type 3 1–3/4 X 20 Cannelures – Auto Lock
Hoch/Niedrig – Type 3 1–3/4 X 20 Rillen – Auto Lock
Attaccatura Alto/Basso – Type 3 1–3/4 X 20 Scanalature –Auto Lock
Fijacion Alto/Bajo – Type 3 1–3/4 X 20 Estrias – Auto Lock

5-BA01-060-A

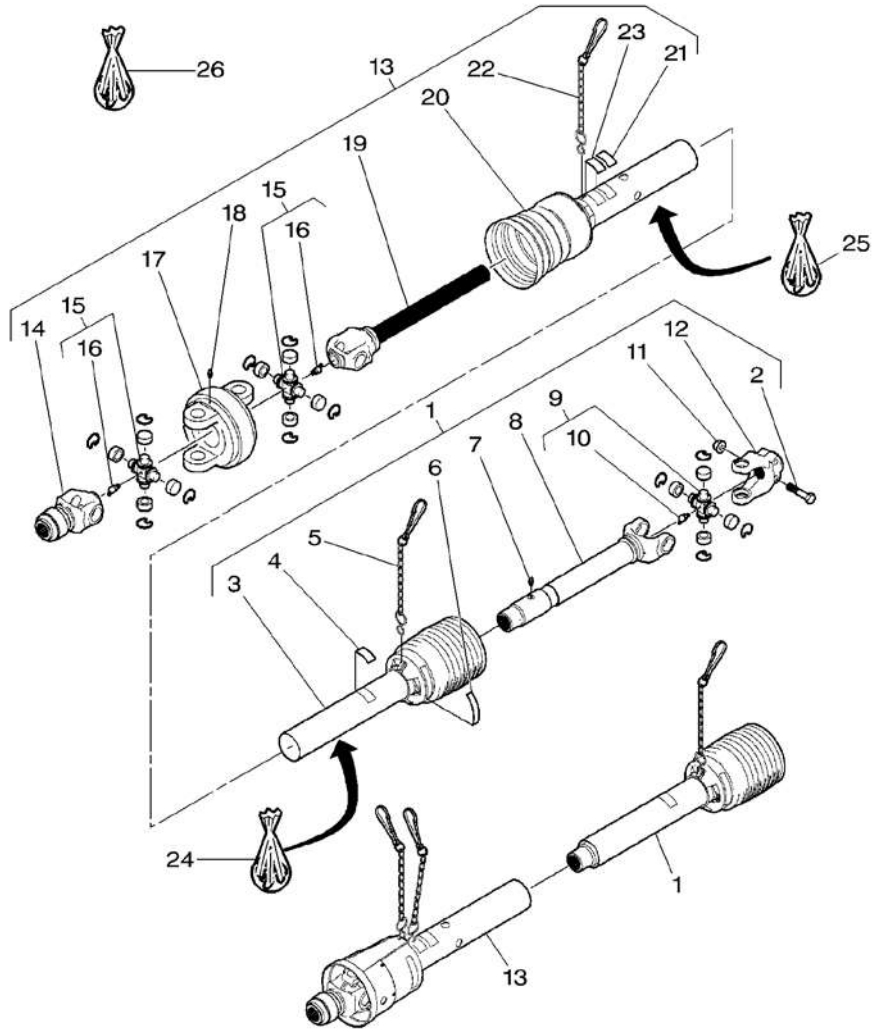

0*	MK41104			1	KIT, ATTACHMENT	JEU ACCESSOIRES KIT ACCESSORI	SATZ ANBAUTEILE JUEGO ACCESORIO
1*	700723264			1	SHAFT	ARBRE ALBERO	WELLE ARBOL
2*	700708270	1	5/8"–11 X 3	1	CAPSCREW	VIS BOUCHON TAPPO A VITE	HUTSCHRAUBE TORNILLO TAPON
3*	700723226	1		1	GUARD	GARDE PROTEZIONE	SCHUTZVORR DEFENSA
4*	210371	1		1	DECAL	DECALCOMANIE DECALCOMANIA	AUFKLEBER CALCOMANIA
5*	700720152	1		1	KIT, CHAIN	JEU CHAINES KIT CATENA	KETTENSATZ CADENA JUEGO
6*	700715035	1		1	DECAL	DECALCOMANIE DECALCOMANIA	AUFKLEBER CALCOMANIA
7*	***70923219***	1	1/4"–28	1	GREASER	GRAISSEUR INGRASSATORE	FETTNIPPEL ENGRASADOR
8*	700721778	1		1	YOKE	CHAPE ARTICULAT FORCELLA	GELENKGABEL YUGO
9*	***7815053***	1		1	KIT	JEU KIT	SATZ JUEGO
10*	13223X	9	1/8"–27 X 65	1	NIPPLE	GRAISSEUR COUDE NIPPLO	NIPPEL NIPLE
11*	700711198	1	5/8"–11	1	NUT	ECROU DADO	MUTTER TUERCA
12*	700721794	1		1	YOKE	CHAPE ARTICULAT FORCELLA	GELENKGABEL YUGO
13*	700721780			1	SHAFT	ARBRE ALBERO	WELLE ARBOL
14*	700720203	13		1	YOKE	CHAPE ARTICULAT FORCELLA	GELENKGABEL YUGO
15*	***700712574***	13		2	KIT	JEU KIT	SATZ JUEGO
16*	13223X	15	1/8"–27 X 65	1	NIPPLE	GRAISSEUR COUDE NIPPLO	NIPPEL NIPLE
17*	700723271	13		1	HOUSING	CARTER CARCASSA	GEHAEUSE ALOJAMIENTO
18*	***70923219***	13	1/4"–28	1	GREASER	GRAISSEUR INGRASSATORE	FETTNIPPEL ENGRASADOR
19*	700721799	13		1	SHAFT	ARBRE ALBERO	WELLE ARBOL
20*	700723267	13		1	GUARD	GARDE PROTEZIONE	SCHUTZVORR DEFENSA
21*	700721801	13		1	GUARD	GARDE PROTEZIONE	SCHUTZVORR DEFENSA
22*	700720152	13		2	KIT, CHAIN	JEU CHAINES KIT CATENA	KETTENSATZ CADENA JUEGO
23*	700707960	13		1	DECAL	DECALCOMANIE DECALCOMANIA	AUFKLEBER CALCOMANIA
24*	700723269			1	KIT, GUARD	JEU GARANTS KIT SCORTA	SCHUTZVORR.SATZ PROTECTOR JUEGO
25*	***700723268***			1	KIT, REPAIR	JEU REPARATION KIT RIPARAZIONE	REPARATURSATZ JUEGO REPARACION

High/Low Hitch – Type 3 1–3/4 X 20 Splines – Auto Lock
Attelage Haut/Bas – Type 3 1–3/4 X 20 Cannelures – Auto Lock
Hoch/Niedrig – Type 3 1–3/4 X 20 Rillen – Auto Lock
Attaccatura Alto/Basso – Type 3 1–3/4 X 20 Scanalature –Auto Lock
Fijacion Alto/Bajo – Type 3 1–3/4 X 20 Estrias – Auto Lock

5-BA01-060-A

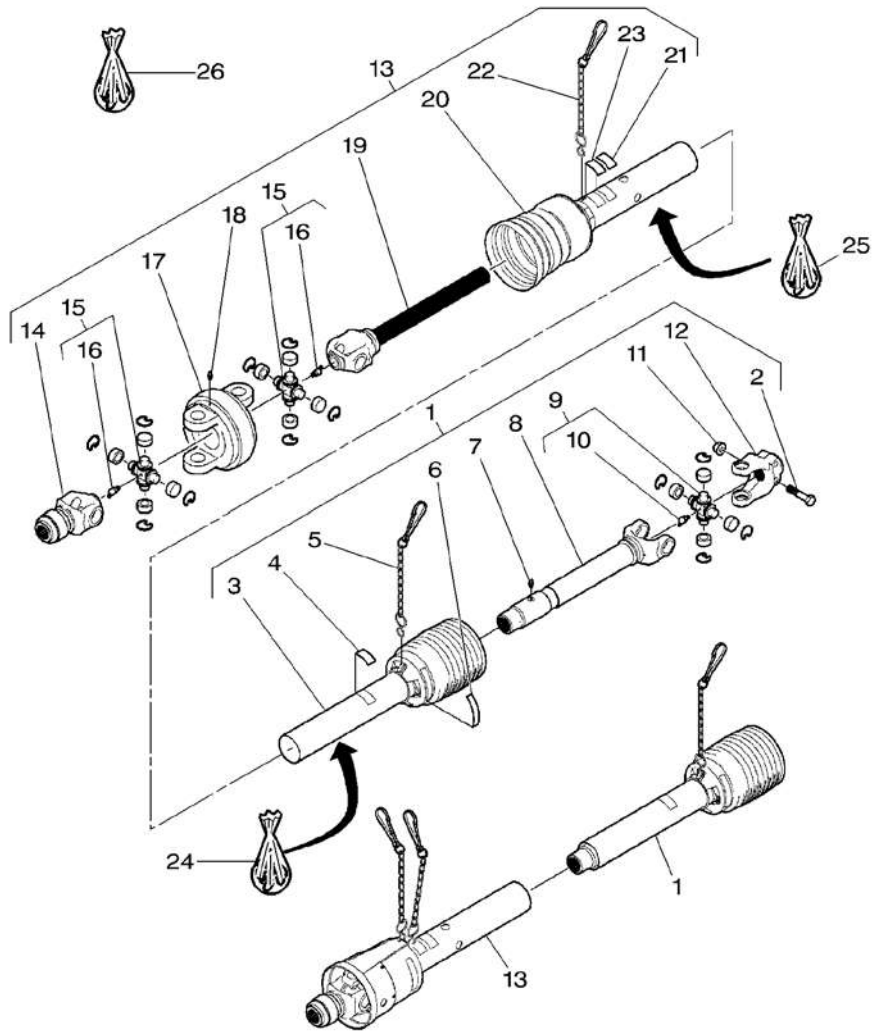

26*	*700711425*	AUTO–LOCK	1 KIT	JEU KIT	SATZ JUEGO

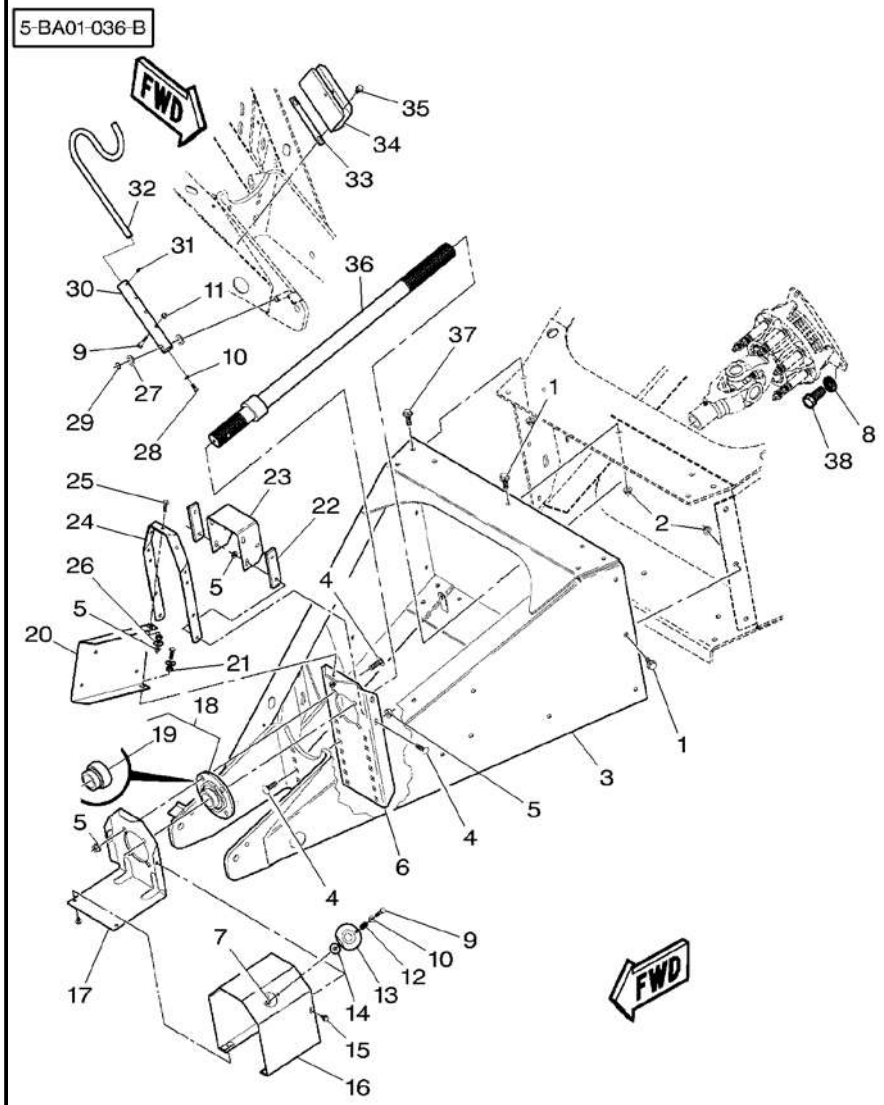

1	700710984	1/2"–13 X 1–1/4	12	SCREW	VIS VITE	SCHRAUBE TORNILLO
2*	*Y704742*	1/2"–13	20	TOP LOCKNUT	ECROU FREIN DADO DI TESTA	SELBSTS.MUTTER CONTRATUERCA SUP
3*	700138100P		1	TONGUE	LANGUETTE LINGUETTA	ZUNGE LENGUETA
4*	364965X1	3/8"–16 X 1–1/2	12	BOLT UNC	BOULON UNC BULLONE UNC	MASCH.SCHRB.UNC PERNO UNC
5*	*Y704734*	3/8"–16	14	TOP LOCKNUT	ECROU FREIN DADO DI TESTA	SELBSTS.MUTTER CONTRATUERCA SUP
6	700137644		1	SUPPORT	SUPPORT SUPPORTO	LAGERUNG DISPOS.DE SOSTEN
7	*704486*	5/16"–18	1	NUT	ECROU DADO	MUTTER TUERCA
8*	353439X1	1/2"	3	LOCK WASHER	RONDELLE FREIN ROSETTA ELASTICA	FEDERRING ARANDELA GROWER
9	353685X1	5/16"–18 X 1–3/4	2	BOLT UNC	BOULON UNC BULLONE UNC	MASCH.SCHRB.UNC PERNO UNC
10	*Y705525*	5/16"	2	WASHER	RONDELLE RONDELLA	UNTERLEGSCHEIBE ARANDELA
11*	Y704726	5/16"–18	2	TOP LOCKNUT	ECROU FREIN DADO DI TESTA	SELBSTS.MUTTER CONTRATUERCA SUP
12	758342		1	COMP.SPRING	RESSORT DE COMPR MOLLA COMPOSTA	DRUCKFEDER MUELLE COMPRESOR
13*	700137803P		1	SHIELD	TOLE RIPARO	SCHILD BLINDAJE
14	700709866		1	WASHER	RONDELLE RONDELLA	UNTERLEGSCHEIBE ARANDELA
15*	7883317	5/16"–18 X 1/2	4	SCREW	VIS VITE	SCHRAUBE TORNILLO
16*	700137800P	▲	1	SHIELD	TOLE RIPARO	SCHILD BLINDAJE
17*	700137797P	▼	1	SHIELD	TOLE RIPARO	SCHILD BLINDAJE
18*	*700124004P*		1	BEARING	COUSSINET CUSCINETTO	LAGER COJINETE
19	*51318*	18	1	BEARING	COUSSINET CUSCINETTO	LAGER COJINETE
20*	700138098		1	SUPPORT	SUPPORT SUPPORTO	LAGERUNG DISPOS.DE SOSTEN
21	700134804		2	SPACER	ENTRETOISE DISTANZIALE	ABSTANDSTUECK PIEZA DISTANCIA
22*	700137995P		2	SPACER	ENTRETOISE DISTANZIALE	ABSTANDSTUECK PIEZA DISTANCIA
23*	700137905P		1	CHANNEL	CANAL PROFILATO	KANAL CANAL
24*	700138096P		1	SUPPORT	SUPPORT SUPPORTO	LAGERUNG DISPOS.DE SOSTEN
25	353691X1	3/8–16 X 1	2	BOLT UNC	BOULON UNC BULLONE UNC	MASCH.SCHRB.UNC PERNO UNC
26	700702916	3/8"	2	WASHER	RONDELLE RONDELLA	UNTERLEGSCHEIBE ARANDELA

Transmission
Transmission
Getriebe
Transmissione
Transmission

10-60

HL 74226

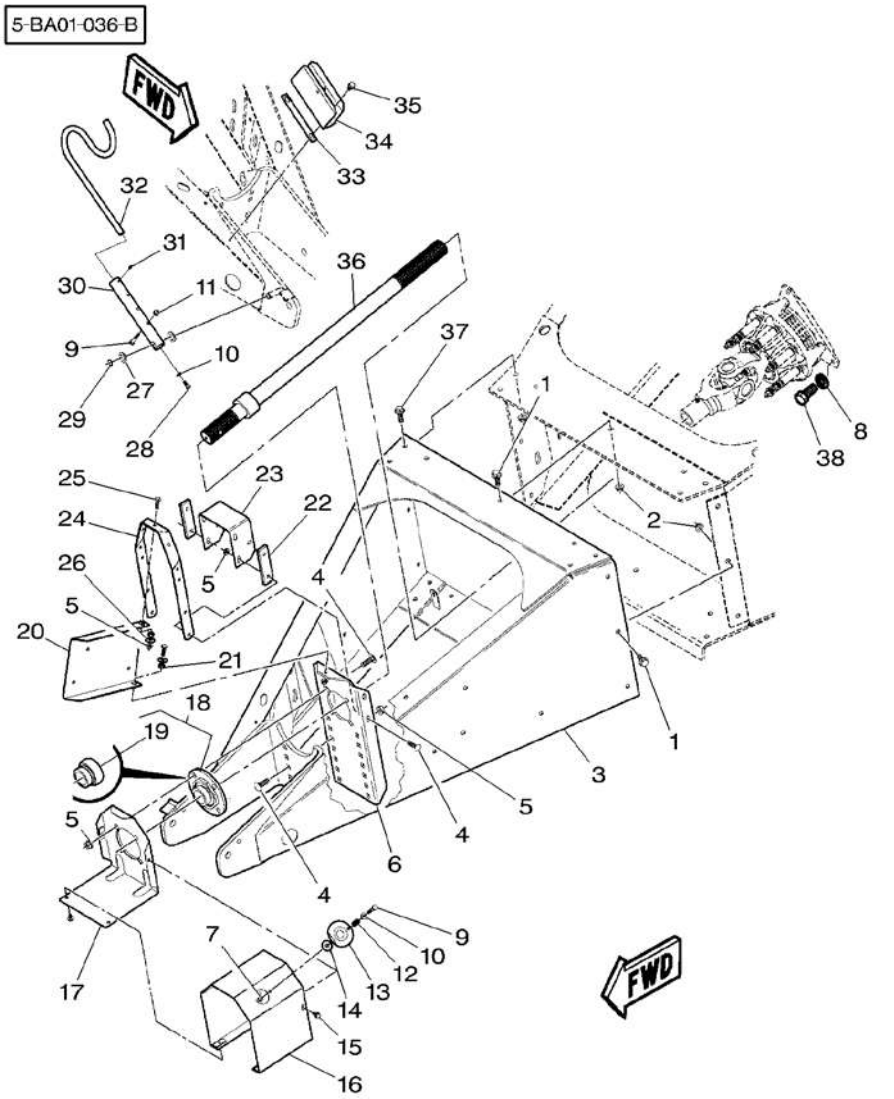

27	Y705582	5/8"	**2**	WASHER	RONDELLE RONDELLA UNTERLEGSCHEIBE ARANDELA
28*	353677X1	5/16–18 X 3/4	**1**	BOLT UNC	BOULON UNC BULLONE UNC MASCH.SCHRB.UNC PERNO UNC
29	***70927103***		**1**	RING	ANNEAU ANELLO RING ARO
30	700137791		**1**	TUBE	TUBE TUBO ROHR TUBO
31*	***70923219***	1/4"–28	**1**	GREASER	GRAISSEUR INGRASSATORE FETTNIPPEL ENGRASADOR
32	700137792		**1**	BAR	BARRE BARRA STAB BARRA
33	700137806		**1**	SPACER	ENTRETOISE DISTANZIALE ABSTANDSTUECK PIEZA DISTANCIA
34	700137621		**1**	CHANNEL	CANAL PROFILATO KANAL CANAL
35*	Y702951	3/8"–16 X 3/4	**2**	SCREW	VIS VITE SCHRAUBE TORNILLO
36*	700138060P		**1**	SHAFT	ARBRE ALBERO WELLE ARBOL
37*	8701237	1/2"–13 X 1–1/2	**8**	SCREW	VIS VITE SCHRAUBE TORNILLO
38*	70923154	1/2"–13 X 1–1/2	**3**	CAPSCREW	VIS BOUCHON TAPPO A VITE HUTSCHRAUBE TORNILLO TAPON

Transmission
Transmission
Getriebe
Transmissione
Transmission

10-65

From H.L 74227 – Up To H.M 74235
A Partir Du H.L 74227 – Jusqu'Au H.M 74235
Ab H.L 74227 – Bis H.M 74235
Dalla H.L 74227 – Fino Alla H.M 74235
Despues El H.L 74227 – Hasta H.M 74235

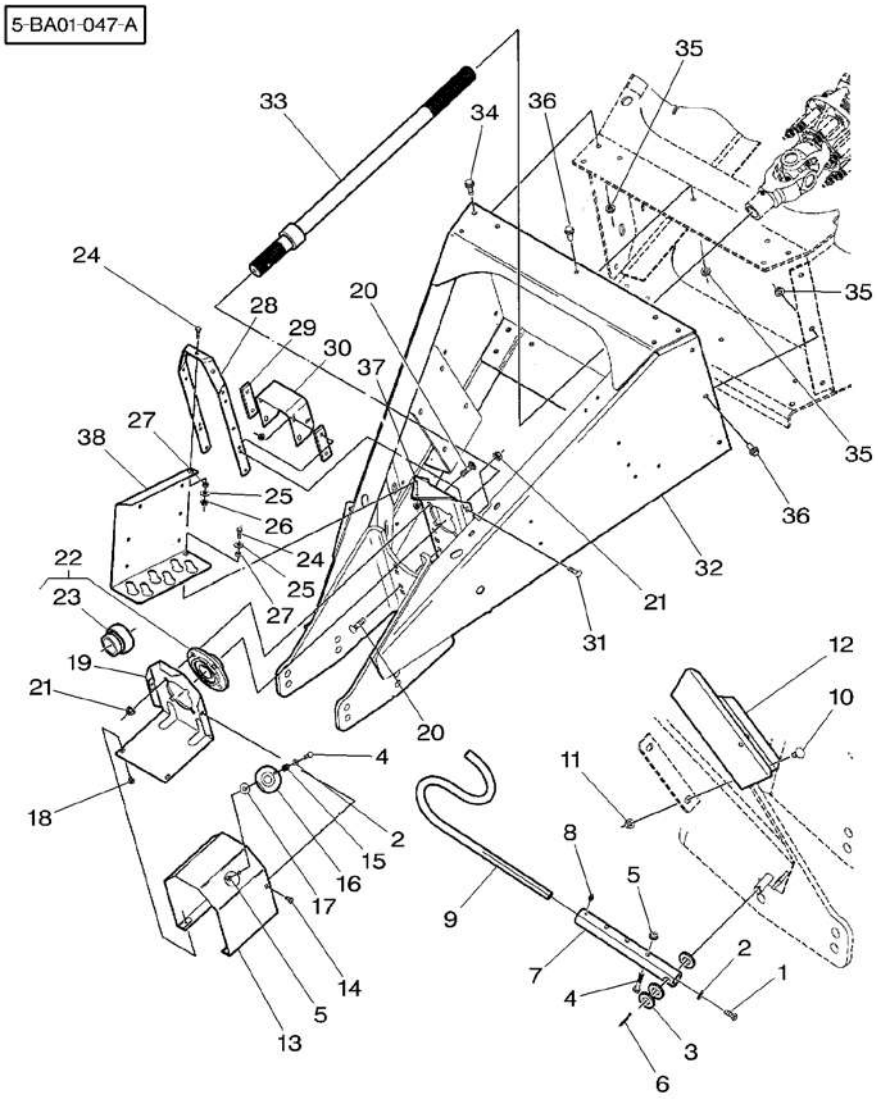

1*	353677X1	5/16"–18 X 3/4	1	BOLT UNC BOULON UNC BULLONE UNC	MASCH.SCHRB.UNC PERNO UNC
2*	*Y705525*	5/16"	2	WASHER RONDELLE RONDELLA	UNTERLEGSCHEIBE ARANDELA
3*	52233	5/8"	3	WASHER RONDELLE RONDELLA	UNTERLEGSCHEIBE ARANDELA
4	353685X1	5/16"–18 X 1–3/4	2	BOLT UNC BOULON UNC BULLONE UNC	MASCH.SCHRB.UNC PERNO UNC
5*	Y704726	5/16"–18	2	TOP LOCKNUT ECROU FREIN DADO DI TESTA	SELBSTS.MUTTER CONTRATUERCA SUP
6*	354061X1	1/8" X 1–1/4	1	PIN GOUPILLE PERNO	BOLZEN PASADOR
7	700137791		1	TUBE TUBE TUBO	ROHR TUBO
8	*70923219*	1/4"–28	1	GREASER GRAISSEUR INGRASSATORE	FETTNIPPEL ENGRASADOR
9	700137792		1	BAR BARRE BARRA	STAB BARRA
10*	70922784	3/8"–16 X 3/4	2	BOLT BOULON BULLONE	MASCH.SCHRAUBE PERNO
11*	*700711238*	3/8"–16	2	NUT ECROU DADO	MUTTER TUERCA
12	700137621		1	CHANNEL CANAL PROFILATO	KANAL CANAL
13*	700137800P		1	SHIELD TOLE RIPARO	SCHILD BLINDAJE
14*	700701069	5/16"–18 X 3/4	2	SCREW VIS VITE	SCHRAUBE TORNILLO
15	758342		1	COMP.SPRING RESSORT DE COMPR MOLLA COMPOSTA	DRUCKFEDER MUELLE COMPRESOR
16*	700137803P		1	SHIELD TOLE RIPARO	SCHILD BLINDAJE
17	700709866		1	WASHER RONDELLE RONDELLA	UNTERLEGSCHEIBE ARANDELA
18*	7883317	5/16"–18 X 1/2	2	SCREW VIS VITE	SCHRAUBE TORNILLO
19*	700137797P		1	SHIELD TOLE RIPARO	SCHILD BLINDAJE
20*	364975X1	1/2"–13 X 1–3/4	12	BOLT UNC BOULON UNC BULLONE UNC	MASCH.SCHRB.UNC PERNO UNC
21*	700714586	1/2"–13	12	NUT ECROU DADO	MUTTER TUERCA
22*	*700124004P*		1	BEARING COUSSINET CUSCINETTO	LAGER COJINETE
23	*51318*	22	1	BEARING COUSSINET CUSCINETTO	LAGER COJINETE
24*	353691X1	3/8"–16 X 1	2	BOLT UNC BOULON UNC BULLONE UNC	MASCH.SCHRB.UNC PERNO UNC
25*	700702916	3/8"	2	WASHER RONDELLE RONDELLA	UNTERLEGSCHEIBE ARANDELA
26*	*Y704734*	3/8"–16	6	TOP LOCKNUT ECROU FREIN DADO DI TESTA	SELBSTS.MUTTER CONTRATUERCA SUP

Transmission
Transmission
Getriebe
Transmissione
Transmission

10-65

From H.L 74227 – Up To H.M 74235
A Partir Du H.L 74227 – Jusqu'Au H.M 74235
Ab H.L 74227 – Bis H.M 74235
Dalla H.L 74227 – Fino Alla H.M 74235
Despues El H.L 74227 – Hasta H.M 74235

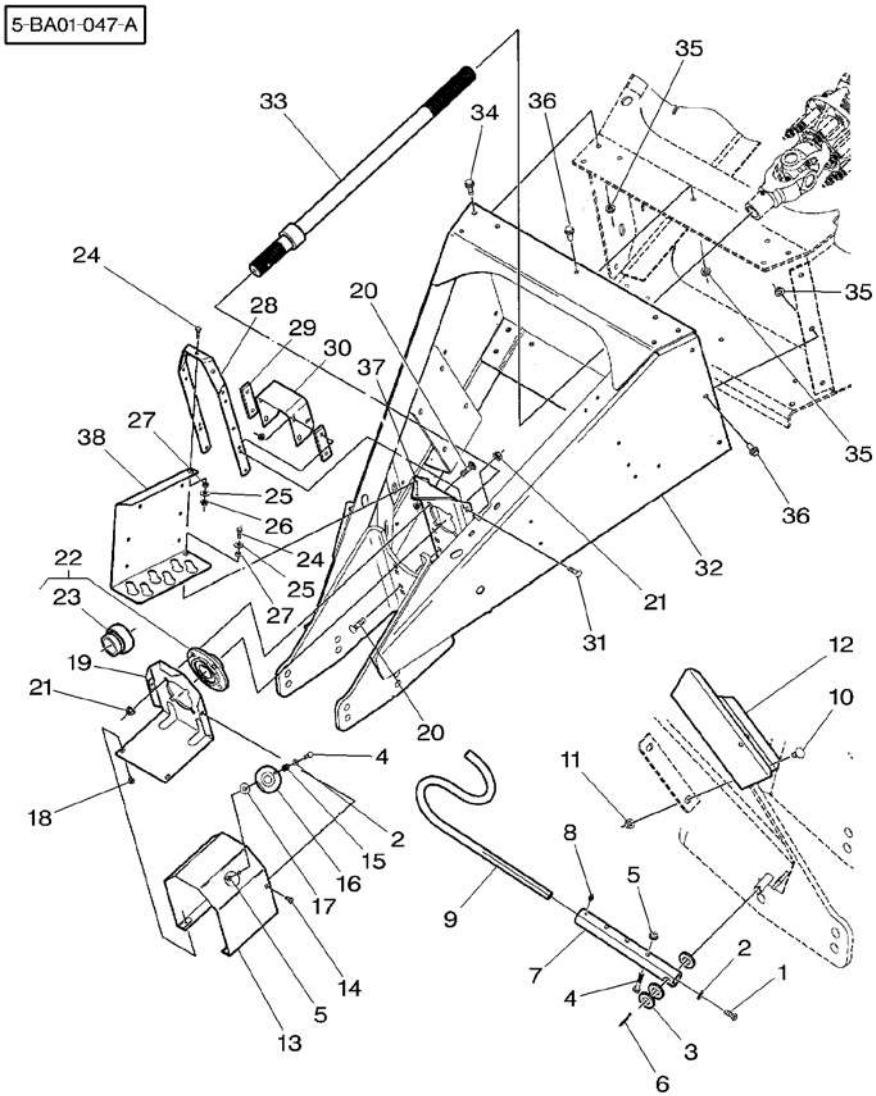

27	700134804		**2** SPACER	ENTRETOISE DISTANZIALE	ABSTANDSTUECK PIEZA DISTANCIA
28*	700138096P		**1** SUPPORT	SUPPORT SUPPORTO	LAGERUNG DISPOS.DE SOSTEN
29*	700137995P		**2** SPACER	ENTRETOISE DISTANZIALE	ABSTANDSTUECK PIEZA DISTANCIA
30*	700137905P		**1** CHANNEL	CANAL PROFILATO	KANAL CANAL
31*	364965X1	3/8"–16 X 1–1/2	**4** BOLT UNC	BOULON UNC BULLONE UNC	MASCH.SCHRB.UNC PERNO UNC
32*	700153081		**1** TONGUE	LANGUETTE LINGUETTA	ZUNGE LENGUETA
33*	700138060P		**1** SHAFT	ARBRE ALBERO	WELLE ARBOL
34*	8701237	1/2"–13 X 1–1/2	**8** SCREW	VIS VITE	SCHRAUBE TORNILLO
35*	*Y704742*	1/2"–13	**20** TOP LOCKNUT	ECROU FREIN DADO DI TESTA	SELBSTS.MUTTER CONTRATUERCA SUP
36*	700710984	1/2"–13 X 1–1/4	**12** SCREW	VIS VITE	SCHRAUBE TORNILLO
37*	700137674P		**1** SUPPORT	SUPPORT SUPPORTO	LAGERUNG DISPOS.DE SOSTEN
38	700138098		**1** SUPPORT	SUPPORT SUPPORTO	LAGERUNG DISPOS.DE SOSTEN

5-BA01-058-A

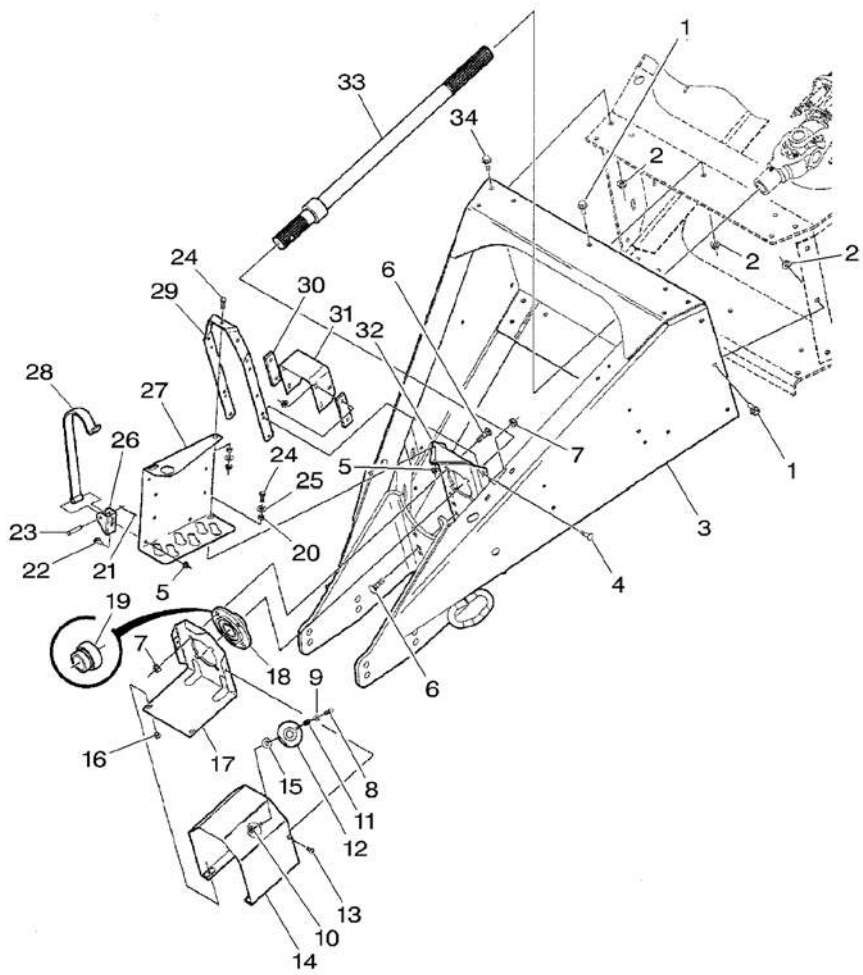

1 * 700710984	1/2"-13 X 1-1/4	12	SCREW	VIS VITE	SCHRAUBE TORNILLO
2 * *Y704742*	1/2"-13	20	TOP LOCKNUT	ECROU FREIN DADO DI TESTA	SELBSTS.MUTTER CONTRATUERCA SUP
3 * 700161352P		1	TONGUE	LANGUETTE LINGUETTA	ZUNGE LENGUETA
4 * 768036	3/8"-16 X 1-1/2	4	BOLT	BOULON BULLONE	MASCH.SCHRAUBE PERNO
5 * *Y704734*	3/8"-16	7	TOP LOCKNUT	ECROU FREIN DADO DI TESTA	SELBSTS.MUTTER CONTRATUERCA SUP
6 * 364975X1	1/2"-13 X 1-3/4	8	BOLT UNC	BOULON UNC BULLONE UNC	MASCH.SCHRB.UNC PERNO UNC
7 * 700714586	1/2"-13	8	NUT	ECROU DADO	MUTTER TUERCA
8 * 353685X1	5/16"-18 X 1-3/4	1	BOLT UNC	BOULON UNC BULLONE UNC	MASCH.SCHRB.UNC PERNO UNC
9 * *Y705525*	5/16"	1	WASHER	RONDELLE RONDELLA	UNTERLEGSCHEIBE ARANDELA
10 * Y704726	5/16"-18	1	TOP LOCKNUT	ECROU FREIN DADO DI TESTA	SELBSTS.MUTTER CONTRATUERCA SUP
11 * 758342		1	COMP.SPRING	RESSORT DE COMPR MOLLA COMPOSTA	DRUCKFEDER MUELLE COMPRESOR
12 * 700137803P		1	SHIELD	TOLE RIPARO	SCHILD BLINDAJE
13 * 700701069	5/16"-18 X 3/4	2	SCREW	VIS VITE	SCHRAUBE TORNILLO
14 * 700137800P		1	SHIELD	TOLE RIPARO	SCHILD BLINDAJE
15 * 700709866		1	WASHER	RONDELLE RONDELLA	UNTERLEGSCHEIBE ARANDELA
16 * 7883317	5/16"-18 X 1/2	2	SCREW	VIS VITE	SCHRAUBE TORNILLO
17 * 700137797P		1	SHIELD	TOLE RIPARO	SCHILD BLINDAJE
18 * *700124004P*		1	BEARING	COUSSINET CUSCINETTO	LAGER COJINETE
19 * *51318*	18	1	BEARING	COUSSINET CUSCINETTO	LAGER COJINETE
20 * 700134804		2	SPACER	ENTRETOISE DISTANZIALE	ABSTANDSTUECK PIEZA DISTANCIA
21 * 354066X1	5/32" X 3/4	1	PIN	GOUPILLE PERNO	BOLZEN PASADOR
22 * *7883374*	3/8"-16 X 3/4	1	SCREW	VIS VITE	SCHRAUBE TORNILLO
23 * 863381	3/8" X 2	1	CLEVIS PIN	AXE PERNO D'ATTACCO	SPLINTBOLZEN BULON CILINDRICO
24 * 353691X1	3/8"-16 X 1	2	BOLT UNC	BOULON UNC BULLONE UNC	MASCH.SCHRB.UNC PERNO UNC
25 * 700702916	3/8"	2	WASHER	RONDELLE RONDELLA	UNTERLEGSCHEIBE ARANDELA
26 * 700150655		1	CHANNEL	CANAL PROFILATO	KANAL CANAL

5-BA01-058-A

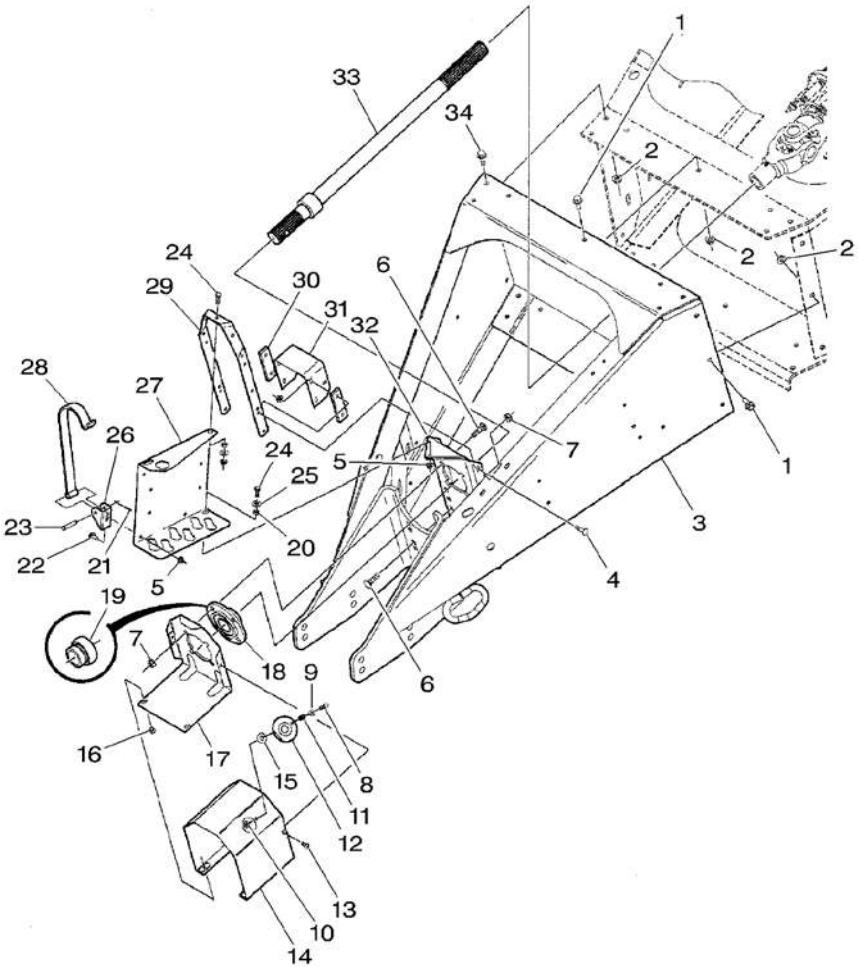

27*	700155862		1	SUPPORT SUPPORTO	SUPPORT DISPOS.DE SOSTEN	LAGERUNG
28*	700134443		1	SUPPORT SUPPORTO	SUPPORT DISPOS.DE SOSTEN	LAGERUNG
29*	700138096P		1	SUPPORT SUPPORTO	SUPPORT DISPOS.DE SOSTEN	LAGERUNG
30*	700137995P		2	SPACER DISTANZIALE	ENTRETOISE PIEZA DISTANCIA	ABSTANDSTUECK
31*	700140295P		1	CHANNEL PROFILATO	CANAL CANAL	KANAL
31*	700155837P	[A]	1	CHANNEL PROFILATO	CANAL CANAL	KANAL
32*	700137674P		1	SUPPORT SUPPORTO	SUPPORT DISPOS.DE SOSTEN	LAGERUNG
33*	700138060P		1	SHAFT ALBERO	ARBRE ARBOL	WELLE
33*	700155851	[A]	1	SHAFT ALBERO	ARBRE ARBOL	WELLE
34*	8701237	1/2"-13 X 1-1/2	8	SCREW VITE	VIS TORNILLO	SCHRAUBE

[A] WITH ELECTRONIC CONTROL
AVEC CONTROLE ELECTRONIQUE
MIT ELEKTRONISCHE STEUERUNG
CON CONTROLLO ELETTRONICO
CON CONTROL ELECTRONICO

Clutch
Embrayage
Kupplung
Frizione
Embraque

10-75

5-BA18-007-B

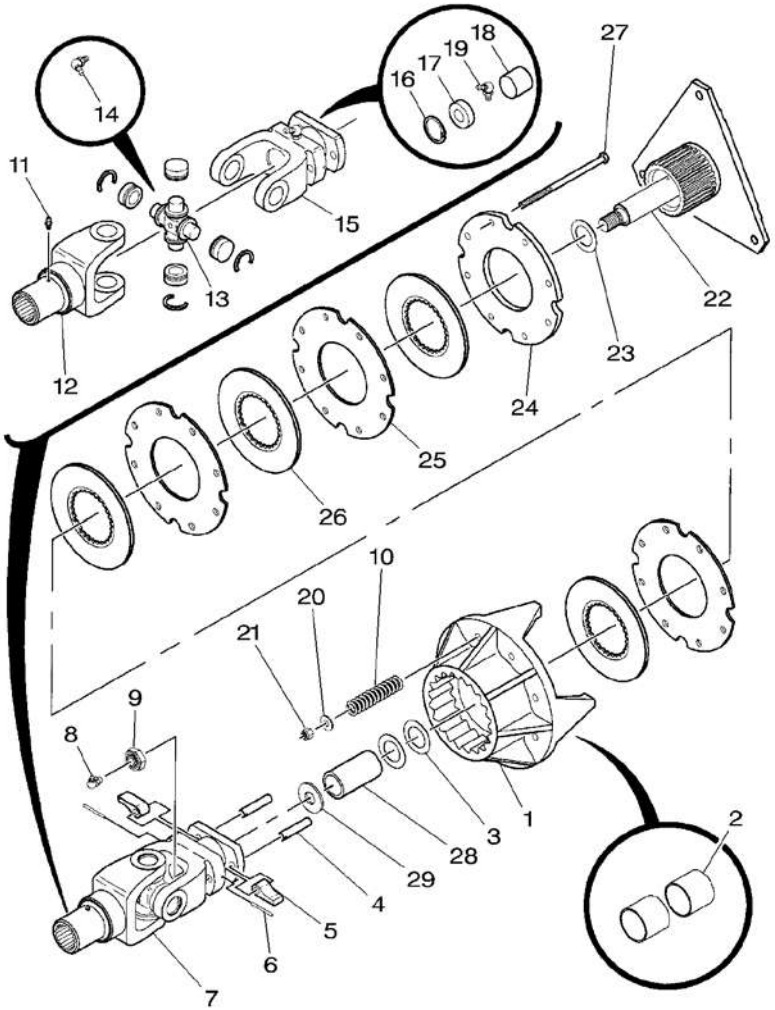

1*	700163297P		1	HOUSING	CARTER CARCASSA	GEHAEUSE ALOJAMIENTO
2	***7852114***	1	2	BUSH	BAGUE BOCCOLA	BUCHSE CASQUILLO
3	***6522932***		2	SHIM	CALE REGLAGE SPESSORE	EINSTELLBLECH CALCE
4	***700113037***		2	PIN	GOUPILLE PERNO	BOLZEN PASADOR
5	***700113036***		2	PAWL	LINGUET ARRESTO	SPERRKLINKE FIADOR TRINQUETE
6	70915751	3/16" X 1-1/2	2	PIN	GOUPILLE PERNO	BOLZEN PASADOR
7	700706087		1	UNIVERSAL JOINT	CARDAN GIUNTO UNIVERSAL	KARDANGELENK CRUCETA CARDAN
8	***70915276***	1/8"-27 X 90	1	NIPPLE	GRAISSEUR COUDE NIPPLO	NIPPEL NIPLE
9*	70930764	7/8"-14	1	NUT	ECROU DADO	MUTTER TUERCA
10	***858019***		8	SPRING	RESSORT MOLLA	FEDER MUELLE
11*	700706957		1	YOKE	CHAPE ARTICULAT FORCELLA	GELENKGABEL YUGO
12*	70914465	11 1/8"-27	1	GREASE NIPPLE	GRAISSEUR DROIT INGRASSAT.	FETT-NIPPEL ENGRASADOR
13	***7815053***		1	KIT	JEU KIT	SATZ JUEGO
14*	13223X	13 1/8"-27 X 65	1	NIPPLE	GRAISSEUR COUDE NIPPLO	NIPPEL NIPLE
15	700706955		1	YOKE	CHAPE ARTICULAT FORCELLA	GELENKGABEL YUGO
16	***70927699***	15	1	RING	ANNEAU ANELLO	RING ARO
17	***1124697***	15	1	BEARING	COUSSINET CUSCINETTO	LAGER COJINETE
18	***700706956***	15	1	BEARING	COUSSINET CUSCINETTO	LAGER COJINETE
19*	13223X	15 1/8"-27 X 65	1	NIPPLE	GRAISSEUR COUDE NIPPLO	NIPPEL NIPLE
20*	355619X1	3/8"	8	WASHER	RONDELLE RONDELLA	UNTERLEGSCHEIBE ARANDELA
21*	366573X1	3/8"-16	8	LOCKNUT	ECROU BLOCAGE AUTOBLOCCANTE	FLACHMUTTER CONTRATUERCA
22*	700163293P		1	SHAFT	ARBRE ALBERO	WELLE ARBOL
23*	Y52274	1"-3/8 X 14	1	WASHER	RONDELLE RONDELLA	UNTERLEGSCHEIBE ARANDELA
24*	***6522866P***		1	PLATE	PLAQUE PIASTRA	PLATTE PLATO
25*	***700112903P***		3	PLATE	PLAQUE PIASTRA	PLATTE PLATO
26	***700108820***		4	DISC	DISQUE DISCO	SCHEIBE DISCO

Clutch
Embrayage
Kupplung
Frizione
Embraque

10-75

5-BA18-007-B

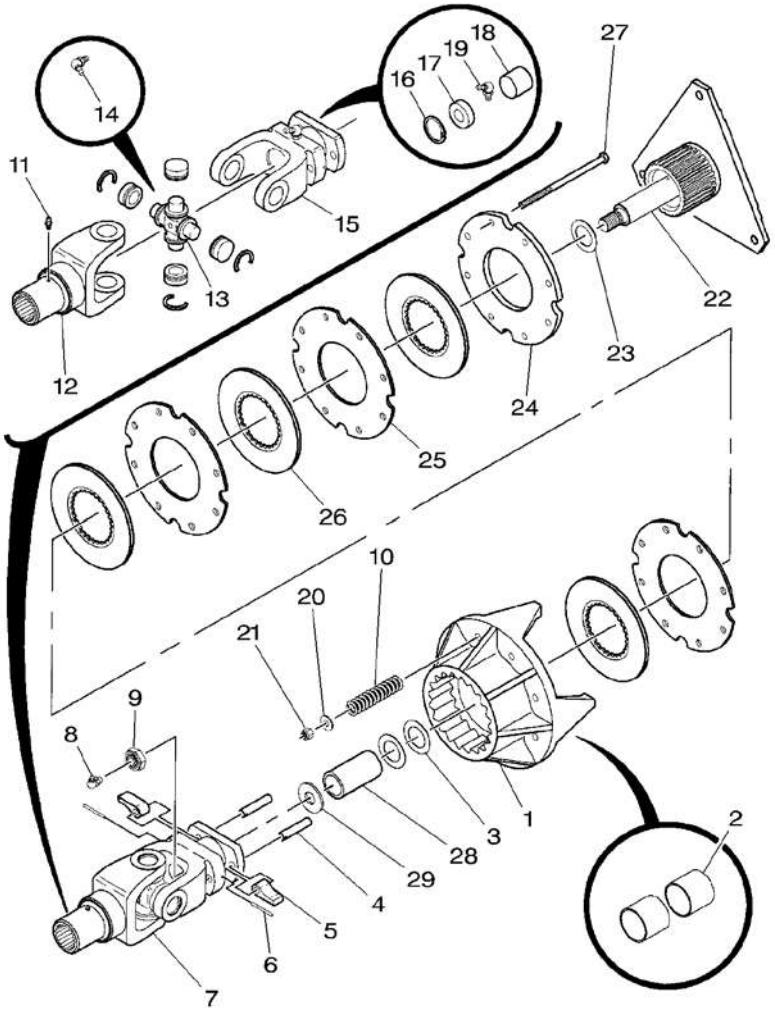

27	***700707998***	3/8"16 X 7	**8** BOLT	BOULON BULLONE	MASCH.SCHRAUBE PERNO
27*	355619X1	3/8"	**8** WASHER	RONDELLE RONDELLA	UNTERLEGSCHEIBE ARANDELA
27*	366573X1	3/8"-16	**8** LOCKNUT	ECROU BLOCAGE AUTOBLOCCANTE	FLACHMUTTER CONTRATUERCA
28*	6350805P	▶	**1** TUBE	TUBE TUBO	ROHR TUBO
29*	700709608		**1** WASHER	RONDELLE RONDELLA	UNTERLEGSCHEIBE ARANDELA

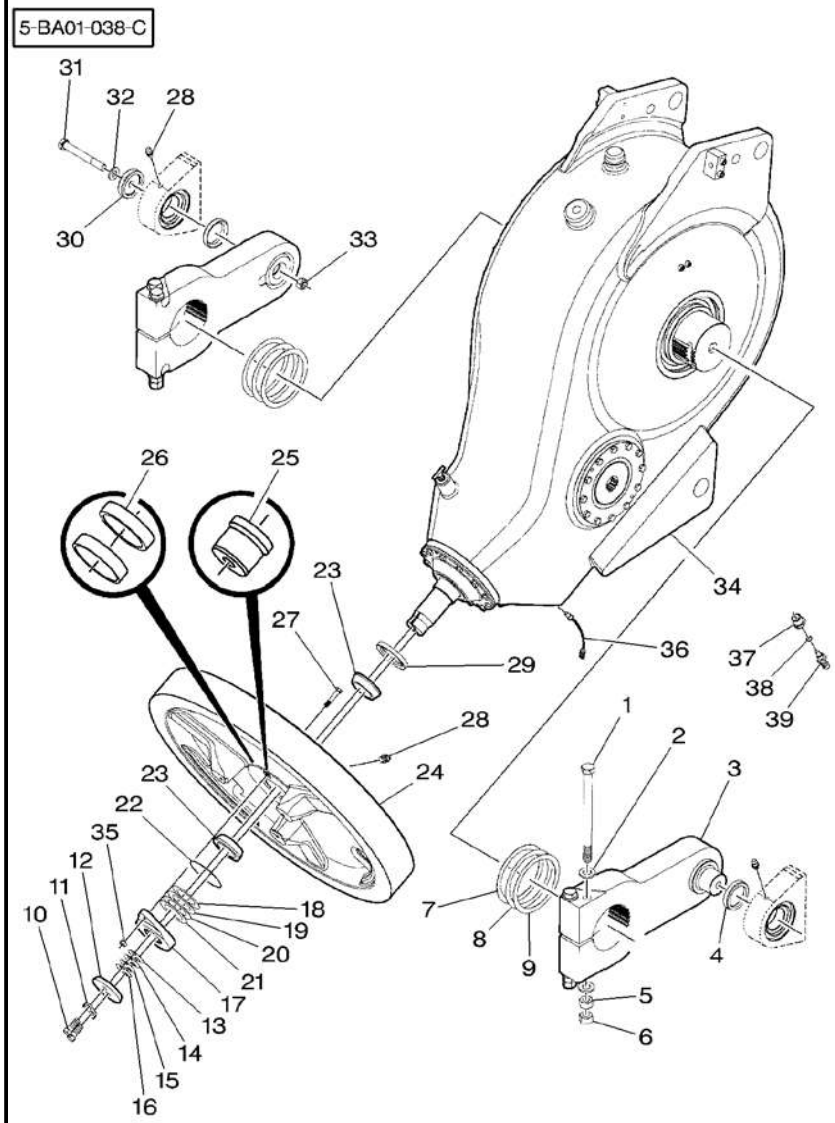

1	700716699	7/8"-9 X 12	4	CAPSCREW	VIS BOUCHON TAPPO A VITE	HUTSCHRAUBE TORNILLO TAPON
2	705665	7/8"	8	WASHER	RONDELLE RONDELLA	UNTERLEGSCHEIBE ARANDELA
3*	700137103P		2	ARM	BRAS BRACCIO	ARM BRAZO
4*	700137106P		2	SPACER	ENTRETOISE DISTANZIALE	ABSTANDSTUECK PIEZA DISTANCIA
5	700716698	7/8"-9	4	NUT	ECROU DADO	MUTTER TUERCA
6*	375101X1	7/8"-9	4	NUT UNC	ECROU UNC DADO UNC	MUTTER UNC TUERCA UNC
7	700708038	⧗ 0.25/.010	2	SHIM	CALE REGLAGE SPESSORE	EINSTELLBLECH CALCE
8	700708039	⧗ 0.64/.025	2	SHIM	CALE REGLAGE SPESSORE	EINSTELLBLECH CALCE
9	700708041	⧗ 1.20/.048	2	SHIM	CALE REGLAGE SPESSORE	EINSTELLBLECH CALCE
10	700708355	M16 X 40	2	BOLT	BOULON BULLONE	MASCH.SCHRAUBE PERNO
11*	700113045P		1	LOCKING PLATE	PLAQUE BLOCAGE PIASTRA DI FERMO	SICH.BLECH PLACA DE BLOCAJE
12*	700113044P		1	CAP	CHAPEAU CAPPELLO	KAPPE TAPA
13	700706059	⧗ 0.08/.003	1	SHIM	CALE REGLAGE SPESSORE	EINSTELLBLECH CALCE
14	700707993	⧗ 0.51/.020	1	SHIM	CALE REGLAGE SPESSORE	EINSTELLBLECH CALCE
15	700706061	⧗ 0.25/.010	1	SHIM	CALE REGLAGE SPESSORE	EINSTELLBLECH CALCE
16	700706060	⧗ 0.13/.005	1	SHIM	CALE REGLAGE SPESSORE	EINSTELLBLECH CALCE
17*	700137135P		1	HUB	MOYEU MOZZO	NABE CUBO
18	700706056	⧗ 0.08/.003	1	SHIM	CALE REGLAGE SPESSORE	EINSTELLBLECH CALCE
19	700706058	⧗ 0.25/.010	1	SHIM	CALE REGLAGE SPESSORE	EINSTELLBLECH CALCE
20	700706057	⧗ 0.13/.005	1	SHIM	CALE REGLAGE SPESSORE	EINSTELLBLECH CALCE
21	700707991	⧗ 0.51/.020	1	SHIM	CALE REGLAGE SPESSORE	EINSTELLBLECH CALCE
22	***700706050***		1	O RING	JOINT TORIQUE ANELLO OR	O-RING JUNTA TORICA
23	***700706039***		2	BEARING CONE	CONE ROULEMENT CONO CUSCINETTO	LAGERINNENRING CONO COJINETE
24*	700152213P		1	FLYWHEEL	VOLANT MOTEUR VOLANO	SCHWUNGRAD VOLANTE MOTOR
25*	***7852718***	24	1	SLEEVE	MANCHON MANICOTTO	HUELSE MANCHA
26*	***700706038***	24	2	BEARING CUP	CUVETTE ROULEMNT COPPA CUSCINETTO	LAGERAUSSENRING ANILLO COJINETE

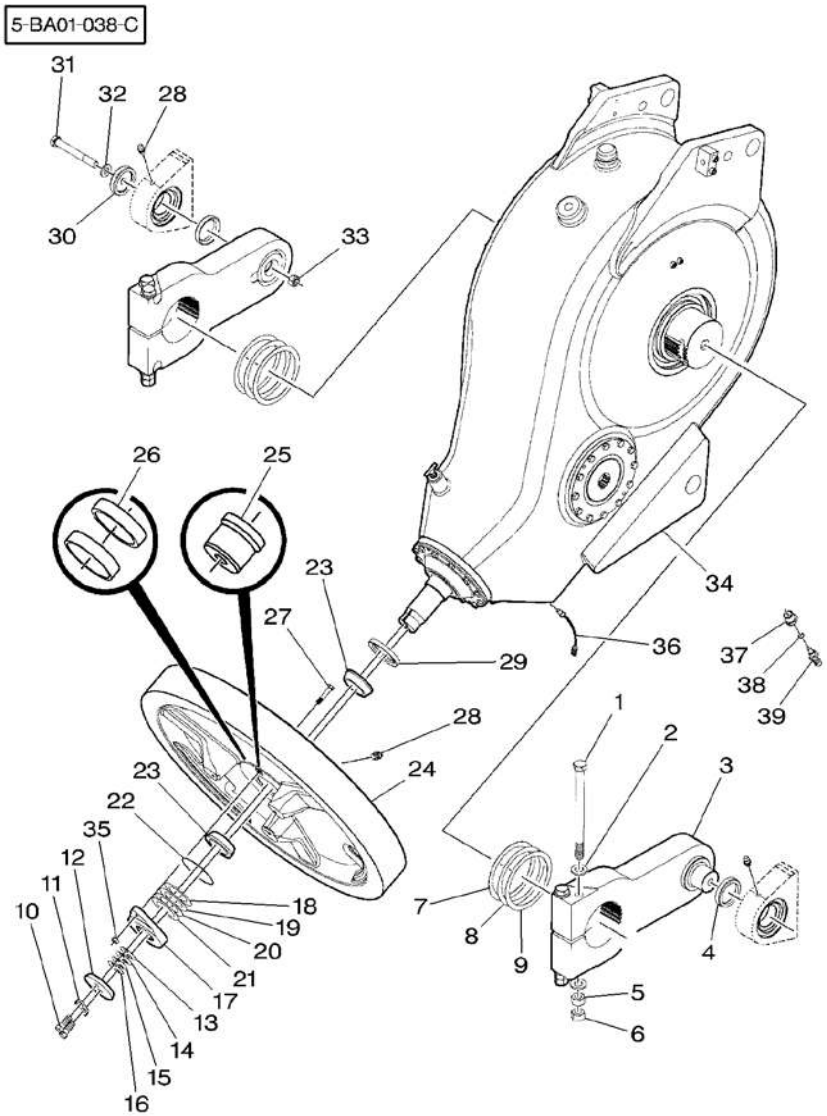

27	*6521868*		1	BOLT ASSY	ENSEMBLE BOULON BULLONE COMPLET MASCH.SCHRB.KPL CJT PERNO
28*	***70923219***	1/4"–28	3	GREASER	GRAISSEUR INGRASSATORE FETTNIPPEL ENGRASADOR
29*	***700706045***		1	SEAL	JOINT ETANCHEITE PARAOLIO DICHTRING RETEN
30*	***700137107P***		1	WASHER	RONDELLE RONDELLA UNTERLEGSCHEIBE ARANDELA
31*	70922978	3/4"–10 X 6	1	CAPSCREW	VIS BOUCHON TAPPO A VITE HUTSCHRAUBE TORNILLO TAPON
32	Y705566	3/4"	1	WASHER	RONDELLE RONDELLA UNTERLEGSCHEIBE ARANDELA
33	700710072	3/4"–10	1	LOCKNUT	ECROU BLOCAGE AUTOBLOCCANTE FLACHMUTTER CONTRATUERCA
34*	700721657P		1	GEARBOX	BOITE VITESSES CAMBIO VELOCITA ZAHNRADGETRIEBE CAJA CAMBIO
35	***370873X1***	7/16"–14	1	NUT	ECROU DADO MUTTER TUERCA
36*	***700716952***	[A]	1	THERMOSTAT	THERMOSTAT TERMOSTATO THERMOSTAT TERMOSTATO
37*	***71393718***	[B]	1	SENSOR	DETECTEUR SENSORE SENSOR. DETECTOR
38*	***7040330***	[B]	1	O RING	JOINT TORIQUE ANELLO OR O–RING JUNTA TORICA
39*	700153111	[B]	1	ADAPTOR	ADAPTATEUR ADATTATORE REDUZIERNIPPEL ADAPTADOR

[A] STANDARD
STANDARD
STANDARD
NORMALE
NORMALE

[B] WITH ELECTRONIC CONTROL
AVEC CONTROLE ELECTRONIQUE
MIT ELEKTRONISCHE STEUERUNG
CON CONTROLLO ELETTRONICO
CON CONTROL ELECTRONICO

Flywheel
Volant Moteur
Schwungrad
Volano
Volante Motor

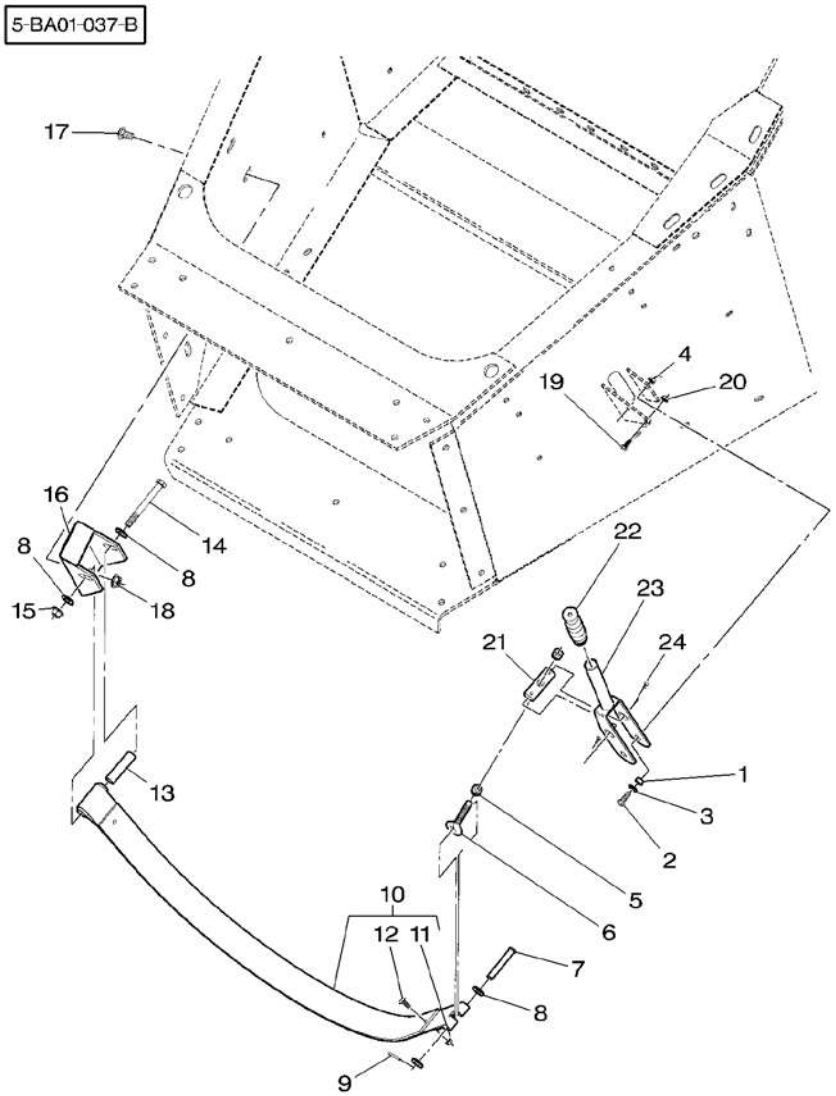

1	6489231		2	SPACER	ENTRETOISE DISTANZIALE	ABSTANDSTUECK PIEZA DISTANCIA
2	353691X1	3/8"–16 X 1	2	BOLT UNC	BOULON UNC BULLONE UNC	MASCH.SCHRB.UNC PERNO UNC
3	*Y705533*	3/8"	2	WASHER	RONDELLE RONDELLA	UNTERLEGSCHEIBE ARANDELA
4	***Y704734***	3/8"–16	2	TOP LOCKNUT	ECROU FREIN DADO DI TESTA	SELBSTS.MUTTER CONTRATUERCA SUP
5	7704752	1/2"–13	2	NUT	ECROU DADO	MUTTER TUERCA
6*	766667	1/2"–13 X 10	1	EYE BOLT	BOULON A OEIL GOLFARE	AUGENSCHRAUBE CANCAMO
7	63883	1/2" X 3	1	CLEVIS PIN	AXE PERNO D'ATTACCO	SPLINTBOLZEN BULON CILINDRICO
8*	***705541***	1/2"	12	FLAT WASHERS	RONDELLES PLATES RONDELLE PIANE	UNTERLEGSCHEIBEN ARANDELAS PLANAS
9	354066X1	5/32" X 1	1	PIN	GOUPILLE PERNO	BOLZEN PASADOR
10*	700113058B		1	BAND	BANDE NASTRO	BAND BANDA
11*	70931277	10 5/16"–18	2	LOCKNUT	ECROU BLOCAGE AUTOBLOCCANTE	FLACHMUTTER CONTRATUERCA
12*	70918249	10 5/16"–18 X 3/4	2	SCREW	VIS VITE	SCHRAUBE TORNILLO
13*	6524003P		1	SPACER	ENTRETOISE DISTANZIALE	ABSTANDSTUECK PIEZA DISTANCIA
14	***354667X1***	1/2"–13 X 4–1/2	1	BOLT UNC	BOULON UNC BULLONE UNC	MASCH.SCHRB.UNC PERNO UNC
15	***Y704742***	1/2"–13	1	TOP LOCKNUT	ECROU FREIN DADO DI TESTA	SELBSTS.MUTTER CONTRATUERCA SUP
16*	700137607P		1	CHANNEL	CANAL PROFILATO	KANAL CANAL
17	70928367	1/2"–13 X 1	2	BOLT	BOULON BULLONE	MASCH.SCHRAUBE PERNO
18	700714586	1/2"–13	2	NUT	ECROU DADO	MUTTER TUERCA
19*	353677X1	5/16"–18 X 3/4	1	BOLT UNC	BOULON UNC BULLONE UNC	MASCH.SCHRB.UNC PERNO UNC
20	Y704726	5/16"–18	1	TOP LOCKNUT	ECROU FREIN DADO DI TESTA	SELBSTS.MUTTER CONTRATUERCA SUP
21*	700113057P		1	PIN	GOUPILLE PERNO	BOLZEN PASADOR
22	27342		1	GRIP	MANCHE IMPUGNATURA	GRIFF EMPUNADURA
23*	700113054P		1	HANDLE	POIGNEE MANIGLIA	HANDGRIFF MANETA
24*	354080X1	3/16" X 1–1/2	2	SPLIT PIN	GOUPILLE FENDUE PERNO DIVISORIO	SPALTBOLZEN PASADOR HENDIDO

Gearbox
Boite De Vitesses
Getriebe
Cambio Di Velocita
Caja De Cambios

10-90

5-BA19-015-A

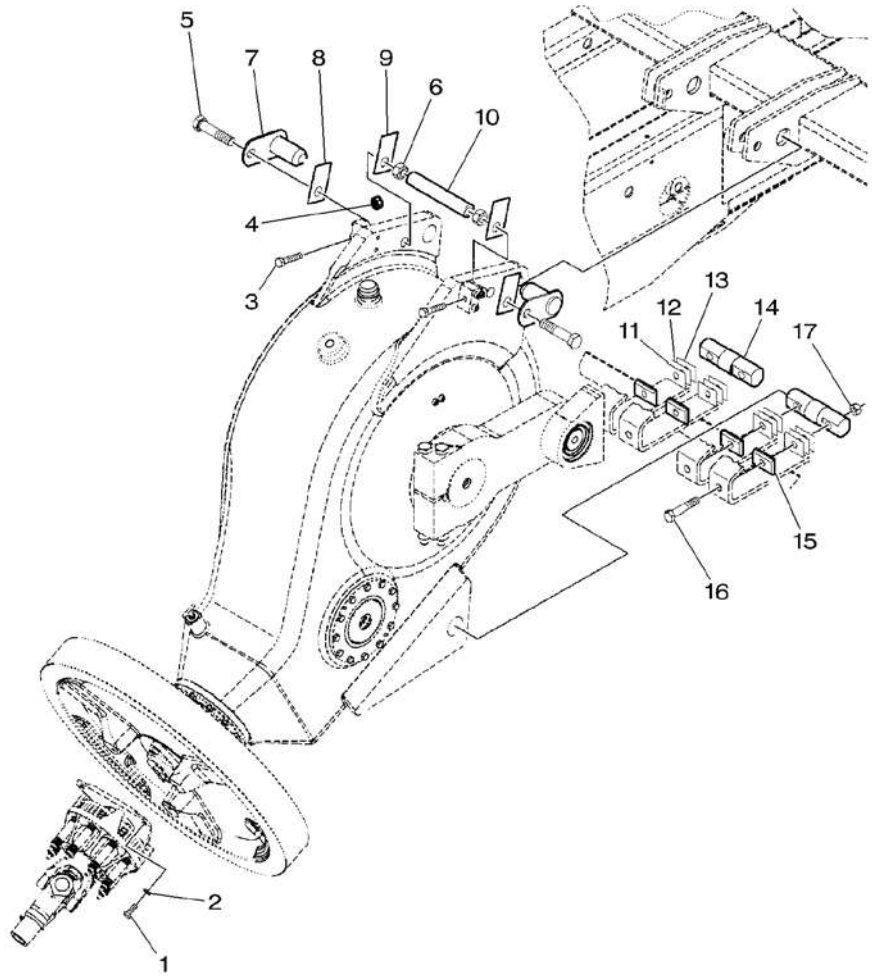

1 *	354276X1	1/2"-13 X 1-1/4	3	BOLT UNC	BOULON UNC BULLONE UNC PERNO UNC
2 *	353439X1	1/2"	3	LOCK WASHER	RONDELLE FREIN ROSETTA ELASTICA FEDERRING ARANDELA GROWER
3 *	7771504	5/8"-11 X 3	2	CAPSCREW	VIS BOUCHON TAPPO A VITE HUTSCHRAUBE TORNILLO TAPON
4 *	375099X1	5/8"-11	2	NUT UNC	ECROU UNC DADO UNC MUTTER UNC TUERCA UNC
5	700710263	1"-8 X 4-1/2	2	CAPSCREW	VIS BOUCHON TAPPO A VITE HUTSCHRAUBE TORNILLO TAPON
6	700710264	1"-8	2	TOP LOCKNUT	ECROU FREIN DADO DI TESTA SELBSTS.MUTTER CONTRATUERCA SUP
7 *	700113047P		2	PIN	GOUPILLE PERNO BOLZEN PASADOR
8	700122653		2	SHIM	CALE REGLAGE SPESSORE EINSTELLBLECH CALCE
9	700122654		2	SHIM	CALE REGLAGE SPESSORE EINSTELLBLECH CALCE
10 *	700137136P		1	TUBE	TUBE TUBO ROHR TUBO
11	700706062	⧗ .076/.003"	4	SHIM	CALE REGLAGE SPESSORE EINSTELLBLECH CALCE
12	700706063	⧗ .130/.005"	4	SHIM	CALE REGLAGE SPESSORE EINSTELLBLECH CALCE
13	700706064	⧗ .250/.010"	4	SHIM	CALE REGLAGE SPESSORE EINSTELLBLECH CALCE
14	700122650		2	PIN	GOUPILLE PERNO BOLZEN PASADOR
15 *	700113042P		4	SPACER	ENTRETOISE DISTANZIALE ABSTANDSTUECK PIEZA DISTANCIA
16 *	354726X1	3/4"-10 X 4	4	BOLT UNC	BOULON UNC BULLONE UNC MASCH.SCHRB.UNC PERNO UNC
17 *	700703923	3/4"-10	4	TOP LOCKNUT	ECROU FREIN DADO DI TESTA SELBSTS.MUTTER CONTRATUERCA SUP

Gearbox
Boite De Vitesses
Getriebe
Cambio Di Velocita
Caja De Cambios

10-95

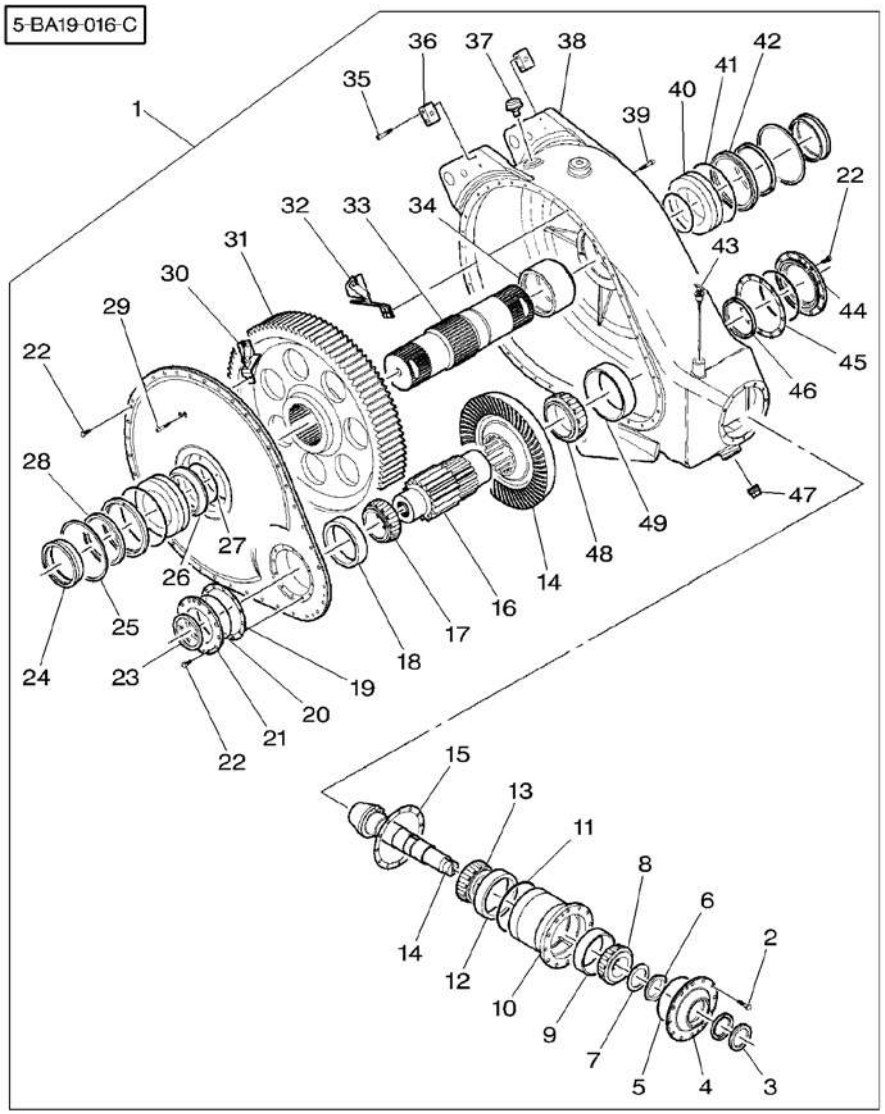

1*	700721657P		1	GEARBOX	BOITE VITESSES CAMBIO VELOCITA	ZAHNRADGETRIEBE CAJA CAMBIO
2	7703259	1 M12 X 50	12	SCREW	VIS VITE	SCHRAUBE TORNILLO
3	***700706045***	1	2	SEAL	JOINT ETANCHEITE PARAOLIO	DICHTRING RETEN
4	700715985	1	1	HOUSING	CARTER CARCASSA	GEHAEUSE ALOJAMIENTO
5	70923596	1	1	O RING	JOINT TORIQUE ANELLO OR	O-RING JUNTA TORICA
6	700706065	1	1	NUT	ECROU DADO	MUTTER TUERCA
7	700706032	1	1	WASHER	RONDELLE RONDELLA	UNTERLEGSCHEIBE ARANDELA
8	700706030	1	1	BEARING CONE	CONE ROULEMENT CONO CUSCINETTO	LAGERINNENRING CONO COJINETE
9	700706034	1	1	BEARING CUP	CUVETTE ROULEMNT COPPA CUSCINETTO	LAGERAUSSENRING ANILLO COJINETE
10	700715983	1	1	HOUSING	CARTER CARCASSA	GEHAEUSE ALOJAMIENTO
11	700720023	1	2	O RING	JOINT TORIQUE ANELLO OR	O-RING JUNTA TORICA
12	700706029	1	1	BEARING CUP	CUVETTE ROULEMNT COPPA CUSCINETTO	LAGERAUSSENRING ANILLO COJINETE
13	700706027	1	1	BEARING CONE	CONE ROULEMENT CONO CUSCINETTO	LAGERINNENRING CONO COJINETE
14	700715693	1	2	KIT, BEVEL GEAR	COUPLE CONIQUE KIT COPPIA CONIC	KEGELRADSATZ CORONA Y PINON
15	700720026	1	1	KIT, SHIMS	JEU CALES KIT SPESSORI	SATZ BEILAGEN JUEGO SUPLEMENTO
16*	700715541	1 ➡ HM 74235	1	GEAR	ENGRENAGE INGRANAGGIO	ZAHNRAD ENGRANAJE
16*	700721659	1 ➡ HM 74236	1	PINION	PIGNON PIGNONE	RITZEL PINON
17	700715743	1	1	BEARING CONE	CONE ROULEMENT CONO CUSCINETTO	LAGERINNENRING CONO COJINETE
18	700715745	1	1	BEARING CUP	CUVETTE ROULEMNT COPPA CUSCINETTO	LAGERAUSSENRING ANILLO COJINETE
19	700720008	1 ▶	1	KIT, SHIMS	JEU CALES KIT SPESSORI	SATZ BEILAGEN JUEGO SUPLEMENTO
20	700720025	1	1	O RING	JOINT TORIQUE ANELLO OR	O-RING JUNTA TORICA
21	700720005	1	1	CAP	CHAPEAU CAPPELLO	KAPPE TAPA
22	700708351	1 M12 X 30	62	BOLT	BOULON BULLONE	MASCH.SCHRAUBE PERNO
23	700715746	1	1	OIL SEAL	BAGUE ETANCHEITE BOCCOLA PARAOLIO	OELDICHTRING BUJE RETENACEITE
24	700112988	1	2	SPACER	ENTRETOISE DISTANZIALE	ABSTANDSTUECK PIEZA DISTANCIA
25	700708037	1	2	CIRCLIP	CIRCLIP ANNELLO ELASTICO	SEEGERING GRAPA CIRCULAR

Gearbox
Boite De Vitesses
Getriebe
Cambio Di Velocita
Caja De Cambios

10-95

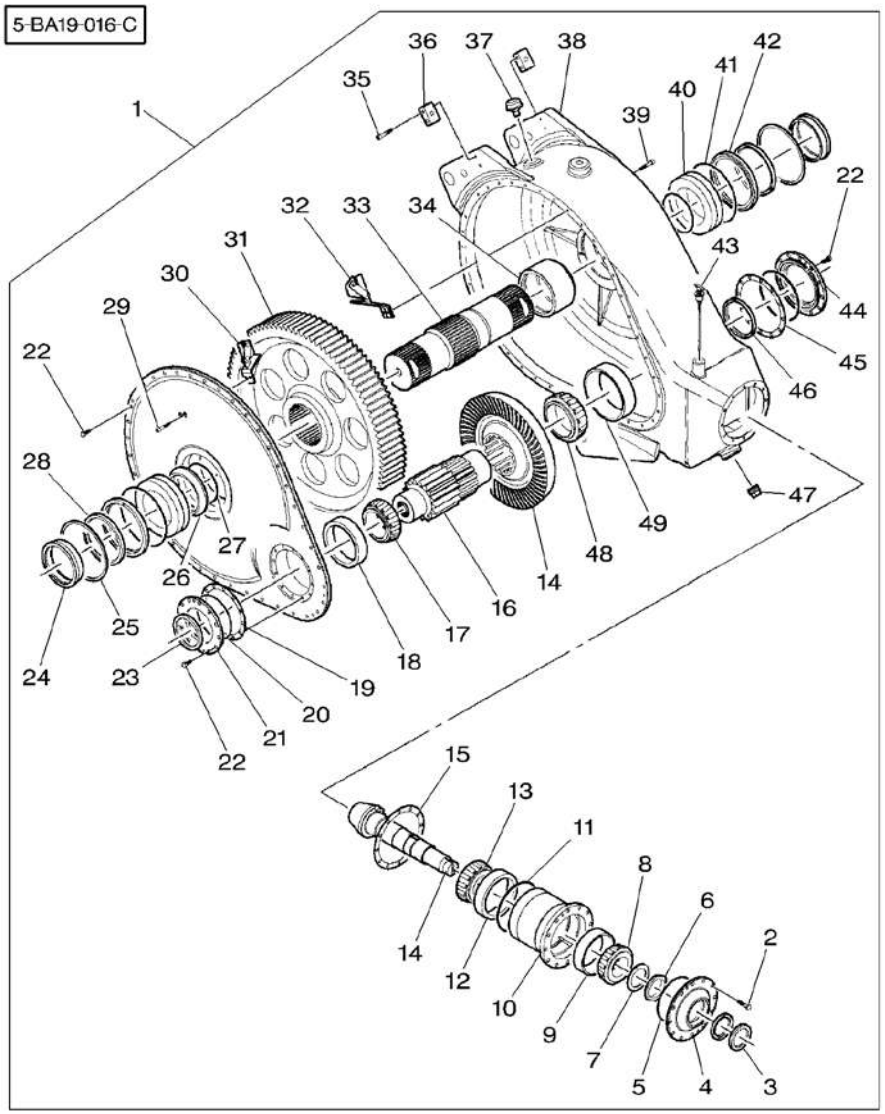

26	700137100	1 ▶	1	SPACER	ENTRETOISE DISTANZIALE	ABSTANDSTUECK PIEZA DISTANCIA
27*	*359119X1*	1	2	GASKET	JOINT GUARNIZIONE	DICHTSCHEIBE EMPAQUETADURA.
28	700708000	1	2	SEAL	JOINT ETANCHEITE PARAOLIO	DICHTRING RETEN
29	700720028	1 M10 X 55	2	SCREW	VIS VITE	SCHRAUBE TORNILLO
30	700137115	1 ▶	1	SCRAPER	RACLEUR RUSPA	ABSTREICHER RASPADOR
31	700715542	1	1	GEAR	ENGRENAGE INGRANAGGIO	ZAHNRAD ENGRANAJE
32	700137114	1 ◀	1	SCRAPER	RACLEUR RUSPA	ABSTREICHER RASPADOR
33	700715543	1	1	SHAFT	ARBRE ALBERO	WELLE ARBOL
34	700137099	1	1	SPACER	ENTRETOISE DISTANZIALE	ABSTANDSTUECK PIEZA DISTANCIA
35	700720027	1 M12 X 60	4	SCREW	VIS VITE	SCHRAUBE TORNILLO
36	700716685	1	2	BAR	BARRE BARRA	STAB BARRA
37	*8799280*	1	1	FILTER	FILTRE FILTRO	FILTER FILTRO
38	700720001	1	1	HOUSING	CARTER CARCASSA	GEHAEUSE ALOJAMIENTO
39	700720030	1 M10 X 60	2	SCREW	VIS VITE	SCHRAUBE TORNILLO
40	700706041	1	2	BEARING	COUSSINET CUSCINETTO	LAGER COJINETE
41	700706049	1	2	O RING	JOINT TORIQUE ANELLO OR	O-RING JUNTA TORICA
42*	700112993P	1	2	CAP	CHAPEAU CAPPELLO	KAPPE TAPA
43	700706144	1	1	DIPSTICK	JAUGE ASTA LIVELLO	MESSTAB VARILLA ACEITE
44	700720006	1	1	CAP	CHAPEAU CAPPELLO	KAPPE TAPA
45	700720007	1 ◀	1	KIT, SHIMS	JEU CALES KIT SPESSORI	SATZ BEILAGEN JUEGO SUPLEMENTO
46	700715747	1	1	OIL SEAL	BAGUE ETANCHEITE BOCCOLA PARAOLIO	OELDICHTRING BUJE RETENACEITE
47	792051	1	1	PLUG	BOUCHON TAPPO	VERSCHL.STOPFEN TAPON
48	700715742	1	1	BEARING CONE	CONE ROULEMENT CONO CUSCINETTO	LAGERINNENRING CONO COJINETE
49	700715744	1	1	BEARING CUP	CUVETTE ROULEMNT COPPA CUSCINETTO	LAGERAUSSENRING ANILLO COJINETE

Cutter Gearbox Assembly
Boite De Vitesses Couteau
Messer Getriebe
Cambio Di Velocita Cuchillo
Caja De Cambios Coltello

10-100

5-BA27-001-C

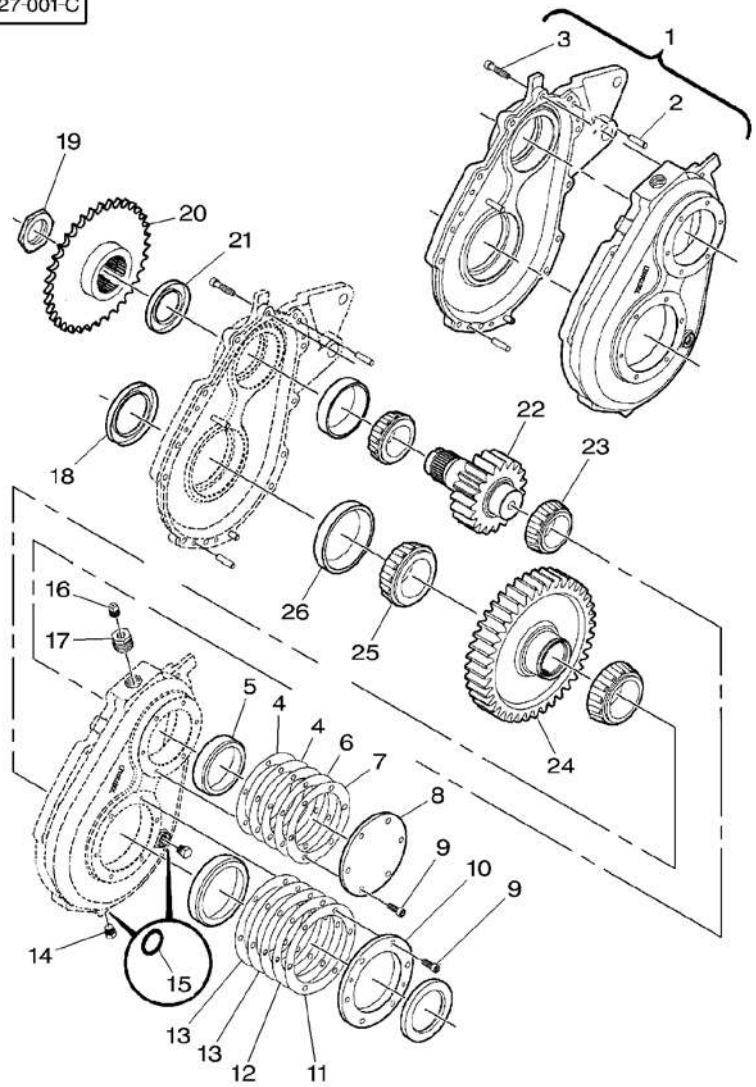

1★	700140041P		1	GEARBOX	BOITE VITESSES CAMBIO VELOCITA	ZAHNRADGETRIEBE CAJA CAMBIO
2★	70931852	1	3	PIN	GOUPILLE PERNO	BOLZEN PASADOR
3★	70917467	1 3/8"–16 X 1–3/4	13	SCREW	VIS VITE	SCHRAUBE TORNILLO
4	700720333	⧗ .25/.010	2	SHIM	CALE REGLAGE SPESSORE	EINSTELLBLECH CALCE
5	300975M1		2	CUP	COUPELLE SCODELLINO	LAUFRING CUBETA
6	700720339	⧗ 0.13/.005	2	SHIM	CALE REGLAGE SPESSORE	EINSTELLBLECH CALCE
7	700720340	⧗ 0.08/.003	1	SHIM	CALE REGLAGE SPESSORE	EINSTELLBLECH CALCE
8★	700140048P	▲	1	COVER	COUVERCLE COPERCHIO	DECKEL CUBIERTA
9	70912267	3/8"–16 X 1	12	CAPSCREW	VIS BOUCHON TAPPO A VITE	HUTSCHRAUBE TORNILLO TAPON
10★	700140047P	▼	1	COVER	COUVERCLE COPERCHIO	DECKEL CUBIERTA
11	700720343	⧗ 0.08/.003	1	SHIM	CALE REGLAGE SPESSORE	EINSTELLBLECH CALCE
12	700720341	⧗ 0.13/.005	2	SHIM	CALE REGLAGE SPESSORE	EINSTELLBLECH CALCE
13	700720332	⧗ 0.25/.010	2	SHIM	CALE REGLAGE SPESSORE	EINSTELLBLECH CALCE
14★	835087M91	9/16"–18	2	PLUG	BOUCHON TAPPO	VERSCHL.STOPFEN TAPON
15★	***831452M1***	14	1	O RING	JOINT TORIQUE ANELLO OR	O–RING JUNTA TORICA
16	700704639		1	PLUG	BOUCHON TAPPO	VERSCHL.STOPFEN TAPON
17	746875		1	BUSH	BAGUE BOCCOLA	BUCHSE CASQUILLO
18	700720338		2	SEAL	JOINT ETANCHEITE PARAOLIO	DICHTRING RETEN
19	***700715751***		1	NUT	ECROU DADO	MUTTER TUERCA
20★	700140043P		1	SPROCKET	BARBOTIN RUOTA MOTRICE	KETTENRAD RUEDA DE CADENA
21	700720337		1	SEAL	JOINT ETANCHEITE PARAOLIO	DICHTRING RETEN
22	700720329		1	PINION	PIGNON PIGNONE	RITZEL PINON
23	300974M1		2	CONE	CONE CONO	KONUS CONO
24	700720520		1	GEAR	ENGRENAGE INGRANAGGIO	ZAHNRAD ENGRANAJE
25★	700720518		2	BEARING CONE	CONE ROULEMENT CONO CUSCINETTO	LAGERINNENRING CONO COJINETE
26★	700720336		2	BEARING CUP	CUVETTE ROULEMNT COPPA CUSCINETTO	LAGERAUSSENRING ANILLO COJINETE

Chain Drive
Transmission Par Chaine
Kettenantrieb
Trasmissione A Catena
Accionamiento Cadena

10-105

Left Side
Cote Gauche
Linke Seite
Lato Sinistro
Lado Izquierdo

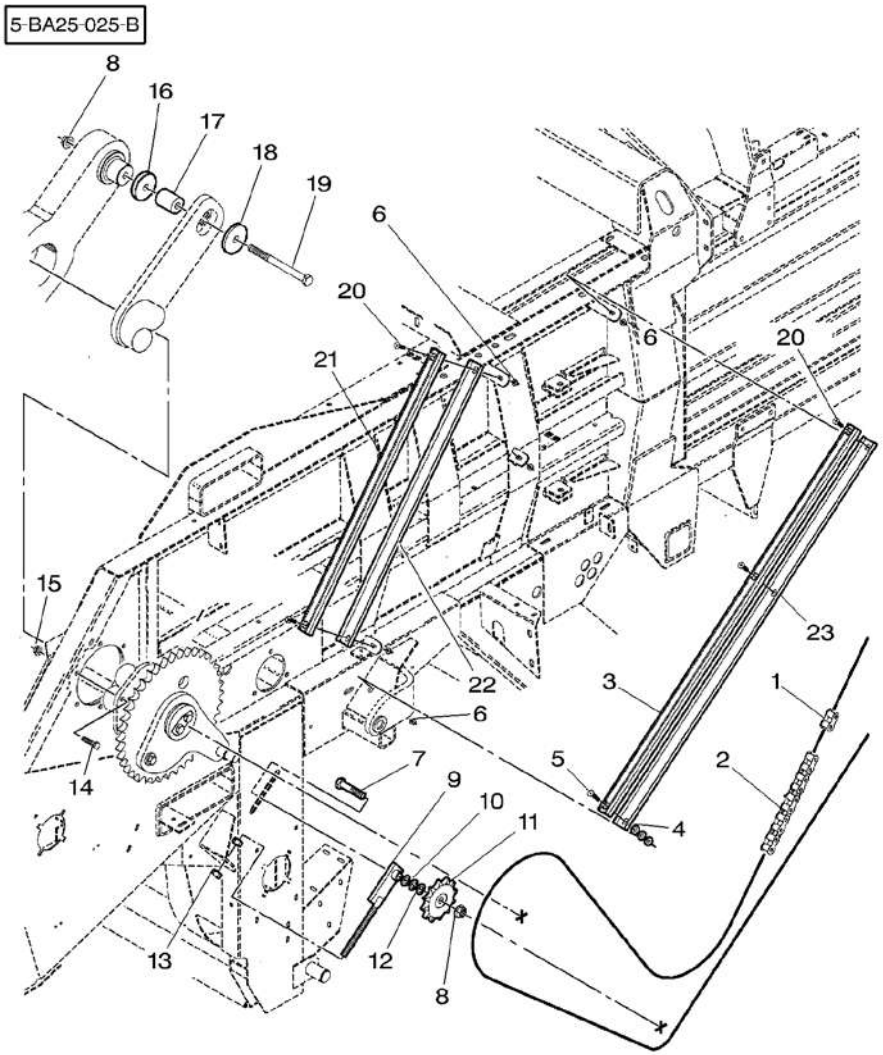

1*	*86405*	ASA 100	1	LINK	MAILLON MAGLIA GLIED UNION
2*	*W980268US*	ASA 100 10 FOOT BULK	1	ROLL OF CHAIN	ROULEAU CHAINE RULLO PER CATENA KETTE METERWARE CADENA 5M
3	700716265		1	GUIDE	GUIDE GUIDA FUEHRUNG GUIA
4	700702916	3/8"	3	WASHER	RONDELLE RONDELLA UNTERLEGSCHEIBE ARANDELA
5	700704513	3/8"-16 X 2	1	CAPSCREW	VIS BOUCHON TAPPO A VITE HUTSCHRAUBE TORNILLO TAPON
6	*700711238*	3/8"-16	5	NUT	ECROU DADO MUTTER TUERCA
7	354722X1	3/4"-10 X 3-1/2	1	BOLT UNC	BOULON UNC BULLONE UNC MASCH.SCHRB.UNC PERNO UNC
8	700703923	3/4"-10	2	TOP LOCKNUT	ECROU FREIN DADO DI TESTA SELBSTS.MUTTER CONTRATUERCA SUP
9*	700123337P		1	ROD	TRINGLE ASTA STANGE VARILLA
10	52183	3/4" X 18	2	BUSH	BAGUE BOCCOLA BUCHSE CASQUILLO
11	700706110	12 ASA 100	1	SPROCKET	BARBOTIN RUOTA MOTRICE KETTENRAD RUEDA DE CADENA
12	*52761*	3/4" X 14	1	BUSH	BAGUE BOCCOLA BUCHSE CASQUILLO
13*	375099X1	5/8"-11	2	NUT UNC	ECROU UNC DADO UNC MUTTER UNC TUERCA UNC
14*	354280X1	1/2"-13 X 2	6	BOLT UNC	BOULON UNC BULLONE UNC MASCH.SCHRB.UNC PERNO UNC
15	700714586	1/2"-13	6	NUT	ECROU DADO MUTTER TUERCA
16*	*700137107P*		1	WASHER	RONDELLE RONDELLA UNTERLEGSCHEIBE ARANDELA
17*	700112930P		1	BUSH	BAGUE BOCCOLA BUCHSE CASQUILLO
18*	6579106P		1	CAP	CHAPEAU CAPPELLO KAPPE TAPA
19	366439X1	3/4"-10 X 9	1	BOLT UNC	BOULON UNC BULLONE UNC MASCH.SCHRB.UNC PERNO UNC
20	70931528	3/8"-16 X 1-1/2	4	SCREW	VIS VITE SCHRAUBE TORNILLO
21	700716264		1	GUIDE	GUIDE GUIDA FUEHRUNG GUIA
22	700154486		1	SUPPORT	SUPPORT SUPPORTO LAGERUNG DISPOS.DE SOSTEN
23	700154487		1	SUPPORT	SUPPORT SUPPORTO LAGERUNG DISPOS.DE SOSTEN

Chain Drive
Transmission Par Chaine
Kettenantrieb
Trasmissione A Catena
Accionamiento Cadena

10-110

Right Side
Cote Droit
Rechte Seite
Lato Destro
Lado Derecho

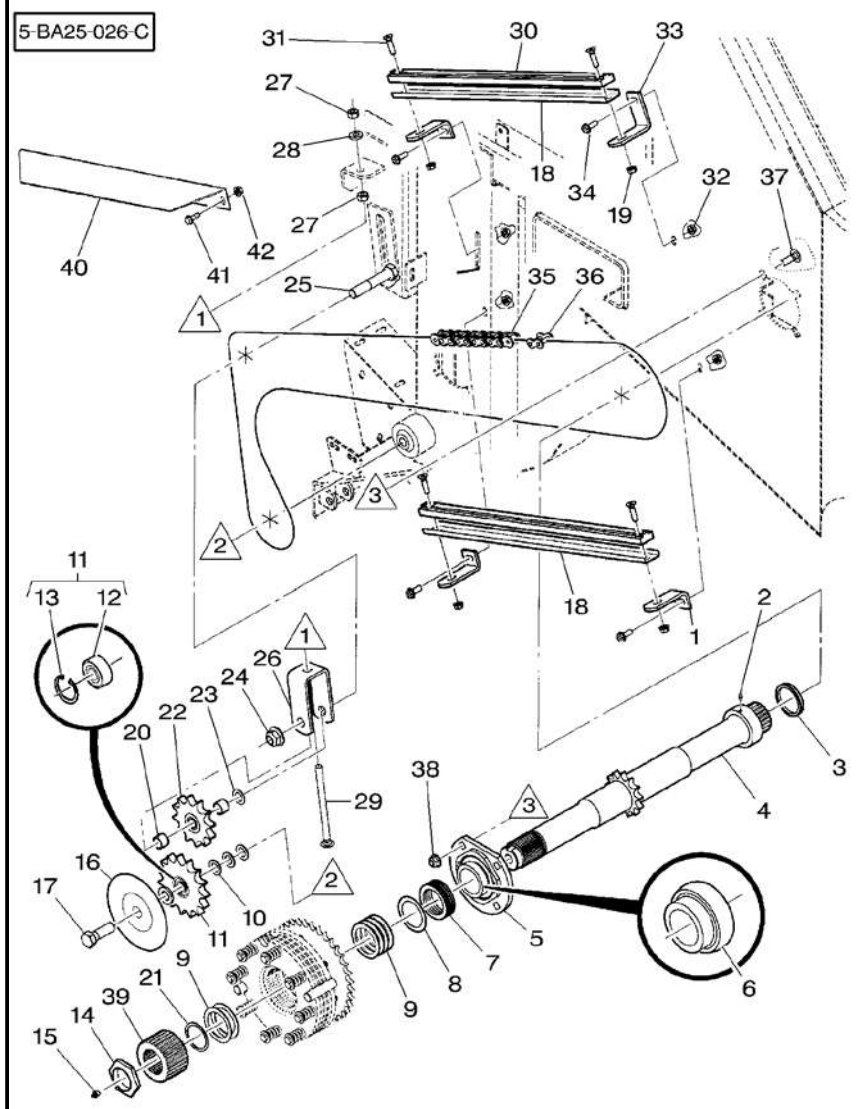

1*	700137386P		3 BRACKET	SUPPORT FIXATION SUPPORTO FISSAGG	HALTEARM SOPORTE
2	***70923219***	1/4"–28	1 GREASER	GRAISSEUR INGRASSATORE	FETTNIPPEL ENGRASADOR
3	***700715965***		1 SEAL	JOINT ETANCHEITE PARAOLIO	DICHTRING RETEN
4*	700137378	[A]	1 SHAFT	ARBRE ALBERO	WELLE ARBOL
4*	700155865	[B]	1 SHAFT	ARBRE ALBERO	WELLE ARBOL
5*	***700716611***		1 BEARING	COUSSINET CUSCINETTO	LAGER COJINETE
6*	***700704263***	5	1 BEARING	COUSSINET CUSCINETTO	LAGER COJINETE
7*	Y6613665	⧗ 0.13/.005	5 SHIM	CALE REGLAGE SPESSORE	EINSTELLBLECH CALCE
8	6523542	⧗ 0.78/.031	1 SHIM	CALE REGLAGE SPESSORE	EINSTELLBLECH CALCE
9	***6523500***		6 BUSH	BAGUE BOCCOLA	BUCHSE CASQUILLO
10*	***52761***	3/4" X 14	5 BUSH	BAGUE BOCCOLA	BUCHSE CASQUILLO
11*	700153519P		1 SPROCKET	BARBOTIN RUOTA MOTRICE	KETTENRAD RUEDA DE CADENA
12*	***712604***	11	1 BEARING	COUSSINET CUSCINETTO	LAGER COJINETE
13*	***70925993***	11	1 CLIP	CLIP FERMAGLIO	SCHELLE CRAPA RETEN
14	***700715751***		1 NUT	ECROU DADO	MUTTER TUERCA
15	70914465	1/8"–27	1 GREASE NIPPLE	GRAISSEUR DROIT INGRASSAT.	FETT–NIPPEL ENGRASADOR
16*	700137039P		1 SHIELD	TOLE RIPARO	SCHILD BLINDAJE
17*	**354712X1**	3/4"–10 X 2–1/4	1 BOLT UNC	BOULON UNC BULLONE UNC	MASCH.SCHRB.UNC PERNO UNC
18	700154485		2 SUPPORT	SUPPORT SUPPORTO	LAGERUNG DISPOS.DE SOSTEN
19*	***700711238***	[A] 3/8"–16	4 NUT	ECROU DADO	MUTTER TUERCA
19*	***Y704734***	[B] 3/8"–16	4 TOP LOCKNUT	ECROU FREIN DADO DI TESTA	SELBSTS.MUTTER CONTRATUERCA SUP
20*	6823512P		2 SPACER	ENTRETOISE DISTANZIALE	ABSTANDSTUECK PIEZA DISTANCIA
21*	***355919X1***		1 SNAPRING	SEGMENT ARRET ANELLO SIEGER	SPRENGRING ANILLA RETENCION
22	***Y747931***		1 SPROCKET	BARBOTIN RUOTA MOTRICE	KETTENRAD RUEDA DE CADENA
23	52183	3/4" X 18	1 BUSH	BAGUE BOCCOLA	BUCHSE CASQUILLO
24	700703923	3/4"–10	1 TOP LOCKNUT	ECROU FREIN DADO DI TESTA	SELBSTS.MUTTER CONTRATUERCA SUP

Chain Drive
Transmission Par Chaine
Kettenantrieb
Trasmissione A Catena
Accionamiento Cadena

10-110

Right Side
Cote Droit
Rechte Seite
Lato Destro
Lado Derecho

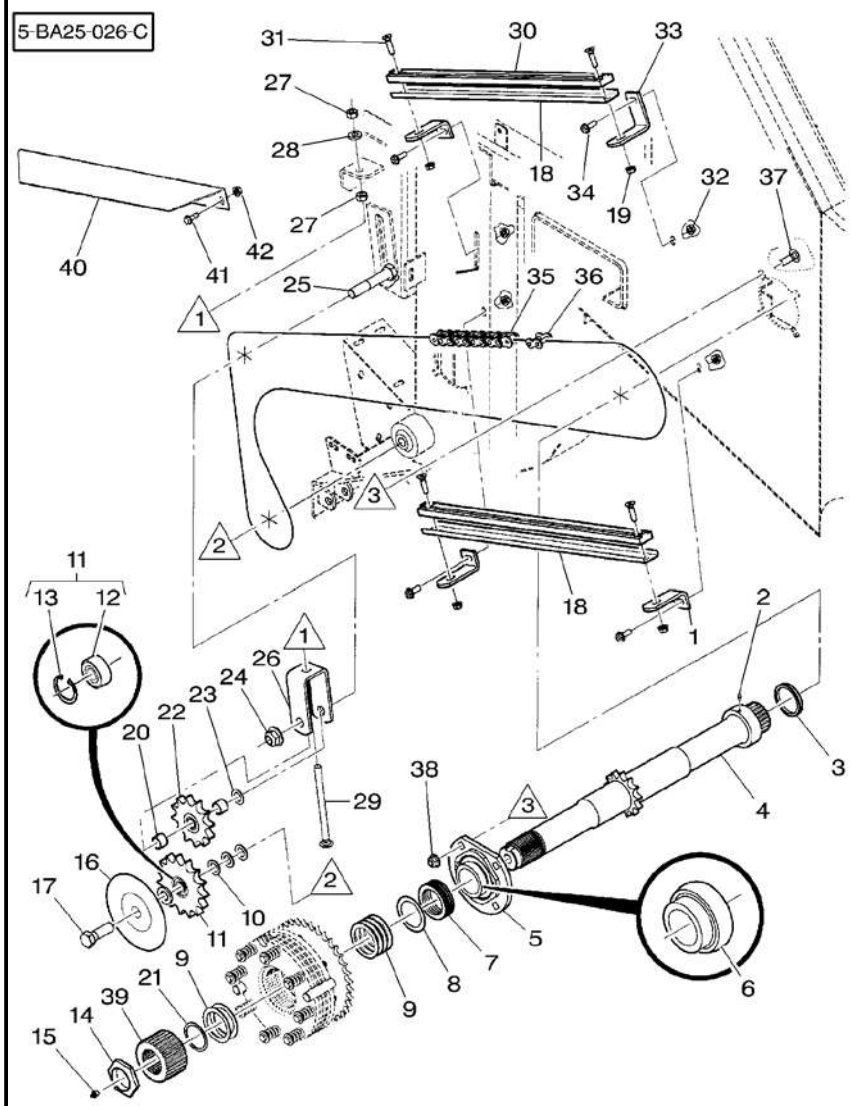

25 *	354726X1	3/4"-10 X 4	1	BOLT UNC BOULON UNC BULLONE UNC	MASCH.SCHRB.UNC PERNO UNC
26 *	700123330P		1	CLEVIS CHAPE GANCIO D'ATTACCO	GABELSTUECK GANCHO SEGURI.
27 *	704031	1/2"-13	2	NUT ECROU DADO	MUTTER TUERCA
28	***705541***	1/2"	1	FLAT WASHERS RONDELLES PLATES RONDELLE PIANE	UNTERLEGSCHEIBEN ARANDELAS PLANAS
29	7770878	1/2"-13 X 7	1	BOLT BOULON BULLONE	MASCH.SCHRAUBE PERNO
30 *	700716127		2	GUIDE GUIDE GUIDA	FUEHRUNG GUIA
31	70931528	3/8"-16 X 1-1/2	4	SCREW VIS VITE	SCHRAUBE TORNILLO
32 *	***700711238***	3/8"-16	4	NUT ECROU DADO	MUTTER TUERCA
33 *	700137387P		1	BRACKET SUPPORT FIXATION SUPPORTO FISSAGG	HALTEARM SOPORTE
34 *	7883382	3/8"-16 X 1	4	SCREW VIS VITE	SCHRAUBE TORNILLO
35 *	***7087935***	ASA80 - 143LINKS 10 FOOT BULK	1	CHAIN CHAINE CATENA	KETTE CADENA
36 *	***7088008***		1	LINK MAILLON MAGLIA	GLIED UNION
37 *	364246X1	1/2"-13 X 1-1/2	4	BOLT BOULON BULLONE	MASCH.SCHRAUBE PERNO
38	***Y704742***	1/2"-13	4	TOP LOCKNUT ECROU FREIN DADO DI TESTA	SELBSTS.MUTTER CONTRATUERCA SUP
39 *	700137382		1	HUB MOYEU MOZZO	NABE CUBO
40 *	700153563P	[B]	1	GUARD GARDE PROTEZIONE	SCHUTZVORR DEFENSA
41 *	7883382	[B] 3/8"-16 X 1	2	SCREW VIS VITE	SCHRAUBE TORNILLO
42 *	***700711238***	[B] 3/8"-16	2	NUT ECROU DADO	MUTTER TUERCA

[A] STANDARD
STANDARD
STANDARD
NORMALE
NORMALE

[B] WITH ELECTRONIC CONTROL
AVEC CONTROLE ELECTRONIQUE
MIT ELEKTRONISCHE STEUERUNG
CON CONTROLLO ELETTRONICO
CON CONTROL ELECTRONICO

Chain Drive
Transmission Par Chaine
Kettenantrieb
Trasmissione A Catena
Accionamiento Cadena

10-115

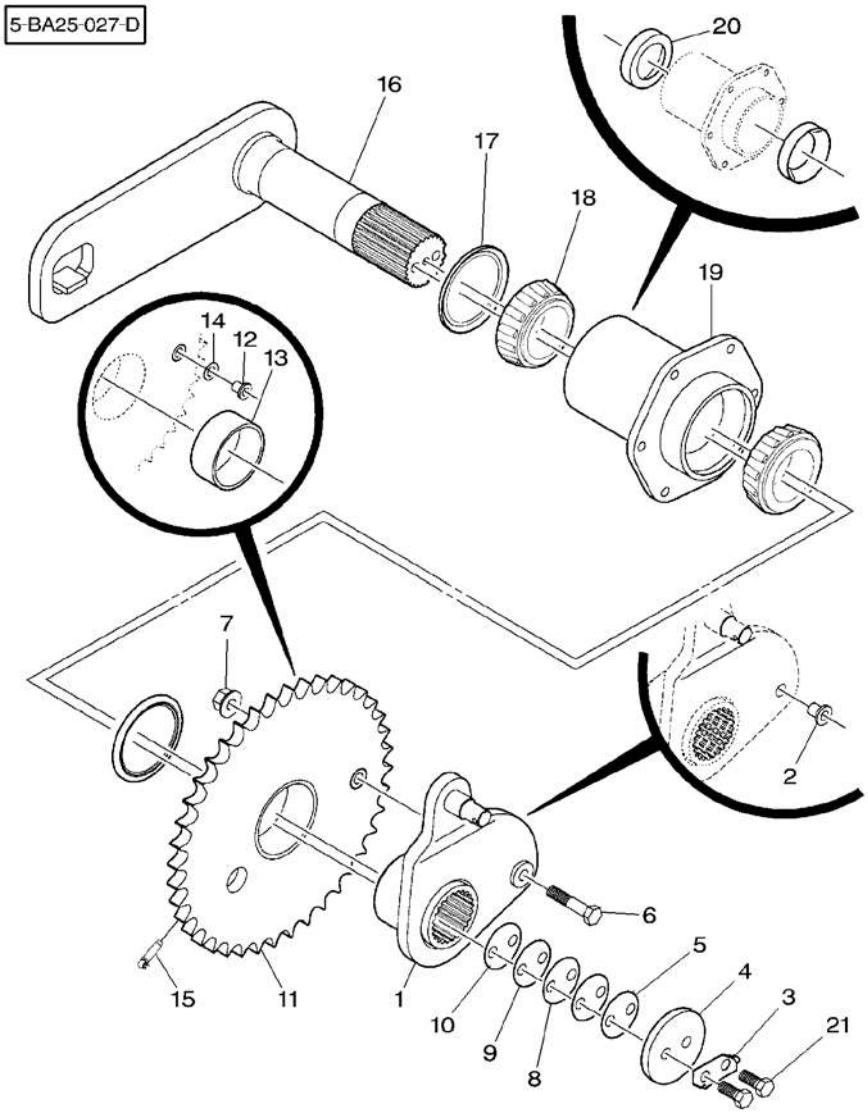

1 ✱	700137399P		1	HUB	MOYEU MOZZO	NABE CUBO
2 ✱	700137396	1	1	SLEEVE	MANCHON MANICOTTO	HUELSE MANCHA
3 ✱	700137407P		1	LOCKING PLATE	PLAQUE BLOCAGE PIASTRA DI FERMO	SICH.BLECH PLACA DE BLOCAJE
4 ✱	700137408P		1	CAP	CHAPEAU CAPPELLO	KAPPE TAPA
5	700716247	⧗ 0,510 / 0,020	1	SHIM	CALE REGLAGE SPESSORE	EINSTELLBLECH CALCE
6 ✱	*354289X1*	5/8"-11 X 3	1	BOLT UNC	BOULON UNC BULLONE UNC	MASCH.SCHRB.UNC PERNO UNC
7 ✱	***700703922***	5/8"-11	1	TOP LOCKNUT	ECROU FREIN DADO DI TESTA	SELBSTS.MUTTER CONTRATUERCA SUP
8	700716244	⧗ 0,076 / 0,003	2	SHIM	CALE REGLAGE SPESSORE	EINSTELLBLECH CALCE
9	700716245	⧗ 0,130 / 0,005	1	SHIM	CALE REGLAGE SPESSORE	EINSTELLBLECH CALCE
10	700716246	⧗ 0,250 / 0,010	1	SHIM	CALE REGLAGE SPESSORE	EINSTELLBLECH CALCE
11 ✱	700137397P	40	1	SPROCKET	BARBOTIN RUOTA MOTRICE	KETTENRAD RUEDA DE CADENA
12 ✱	700137396	11	2	SLEEVE	MANCHON MANICOTTO	HUELSE MANCHA
13 ✱	700112933	11	1	BUSH	BAGUE BOCCOLA	BUCHSE CASQUILLO
14	Y52266	11 1"-1/4 X 14	1	BOLT	BOULON BULLONE	MASCH.SCHRAUBE PERNO
15 ✱	77388	1/8"-27 X 90	1	PIN	GOUPILLE PERNO	BOLZEN PASADOR
16 ✱	700137390P		1	ARM	BRAS BRACCIO	ARM BRAZO
17	***700716267***		2	SEAL	JOINT ETANCHEITE PARAOLIO	DICHTRING RETEN
18	***70927347***		2	BEARING CONE	CONE ROULEMENT CONO CUSCINETTO	LAGERINNENRING CONO COJINETE
19 ✱	700137393P		1	HUB	MOYEU MOZZO	NABE CUBO
20 ✱	***70927348***	19	2	BEARING CUP	CUVETTE ROULEMNT COPPA CUSCINETTO	LAGERAUSSENRING ANILLO COJINETE
21 ✱	353726X1	5/8"-11 X 1-1/2	2	BOLT UNC	BOULON UNC BULLONE UNC	MASCH.SCHRB.UNC PERNO UNC

Chain Drive
Transmission Par Chaine
Kettenantrieb
Trasmissione A Catena
Accionamiento Cadena

10-120

Clutch
Embrayage
Kupplung
Frizione
Embraque

5 BA25 004 A

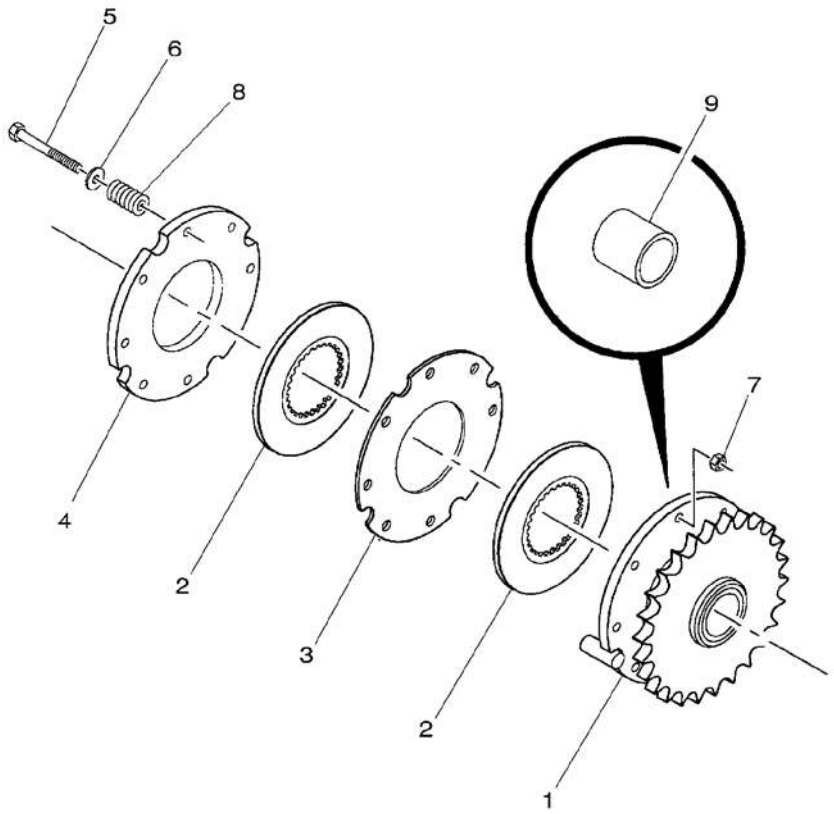

1*	700137377P	➡ HL 74155	1	SPROCKET	BARBOTIN RUOTA MOTRICE	KETTENRAD RUEDA DE CADENA
1*	700138076P	➡ HL 74156	1	HUB	MOYEU MOZZO	NABE CUBO
2	***700108820***		2	DISC	DISQUE DISCO	SCHEIBE DISCO
3*	***700112903P***	➡ HL 74155	1	PLATE	PLAQUE PIASTRA	PLATTE PLATO
3*	***700140071P***	➡ HL 74156	1	CLUTCH DISC	DISQUE EMBRAYAGE DISCO FRIZIONE	KUPPLUNGSSCHEIBE DISCO DE EMBRAGU
4*	***6522866P***	➡ HL 74155	1	PLATE	PLAQUE PIASTRA	PLATTE PLATO
4*	***700140072P***	➡ HL 74156	1	CLUTCH DISC	DISQUE EMBRAYAGE DISCO FRIZIONE	KUPPLUNGSSCHEIBE DISCO DE EMBRAGU
5*	354632X1	3/8"-16 X 4	8	BOLT UNC	BOULON UNC BULLONE UNC	MASCH.SCHRB.UNC PERNO UNC
6*	355619X1	3/8"	8	WASHER	RONDELLE RONDELLA	UNTERLEGSCHEIBE ARANDELA
7*	366573X1	3/8"-16 ➡ HL 74155	8	LOCKNUT	ECROU BLOCAGE AUTOBLOCCANTE	FLACHMUTTER CONTRATUERCA
7*	***Y704734***	3/8"-16 ➡ HL 74156	8	TOP LOCKNUT	ECROU FREIN DADO DI TESTA	SELBSTS.MUTTER CONTRATUERCA SUP
8*	***58107B***		8	SPRING	RESSORT MOLLA	FEDER MUELLE
9*	700137375	1 ➡ HL 74155	1	BUSH	BAGUE BOCCOLA	BUCHSE CASQUILLO

Cutter Drive Assembly	**Left**	**10-125**
Ensemble Commande Couteau	**Gauche**	
Schneidwerksantrieb	**Links**	
Completo Comando Coltello	**Sinistro**	
Conjunto Mando Cuchilla	**Izquierda**	

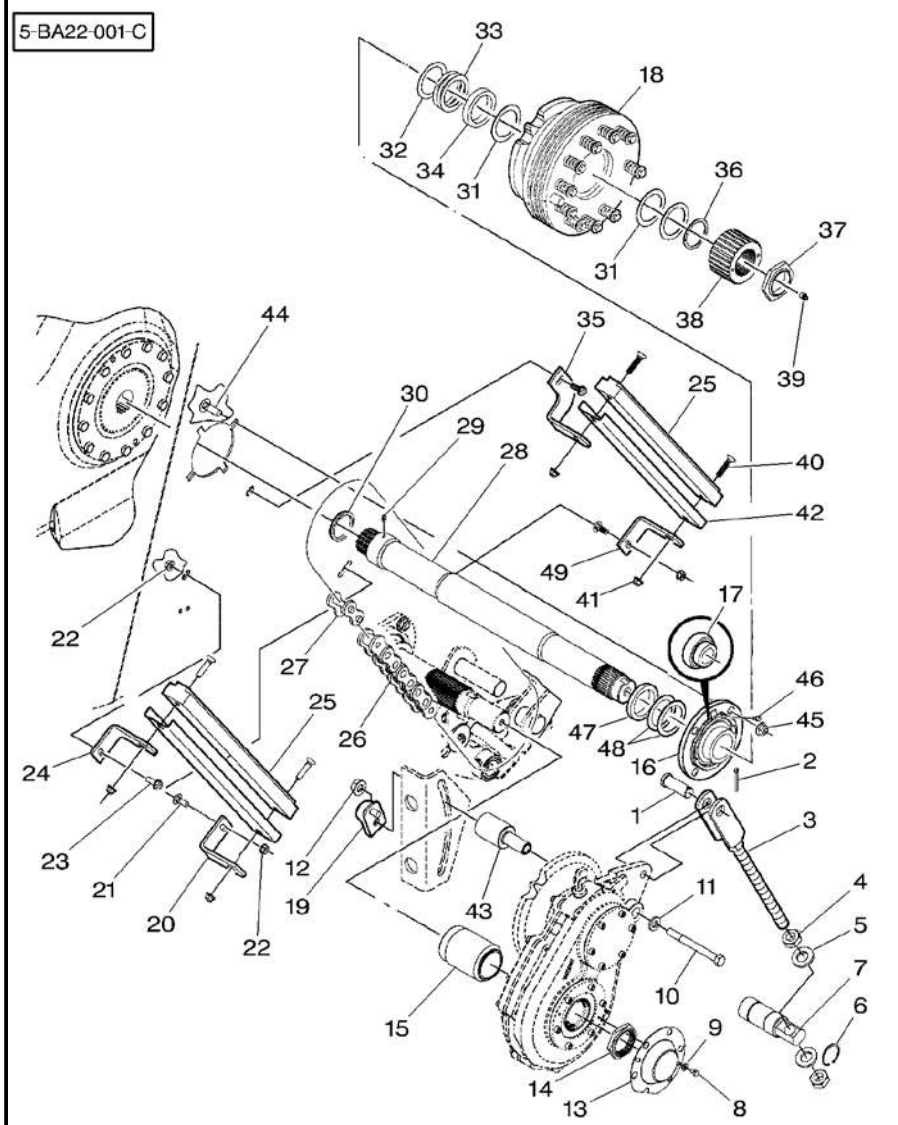

1*	763177	3/4" X 2	1	CLEVIS PIN	AXE PERNO D'ATTACCO SPLINTBOLZEN BULON CILINDRICO
2	62190	5/32" X 1-1/2	1	PIN	GOUPILLE PERNO BOLZEN PASADOR
3	700140333		1	TENSIONER	TENDEUR TENDITORE SPANNER TENSOR
4	375113X1	3/4"-10	2	NUT UNC	ECROU UNC DADO UNC MUTTER UNC TUERCA UNC
5*	Y705566	3/4"	2	WASHER	RONDELLE RONDELLA UNTERLEGSCHEIBE ARANDELA
6	*Y740720*		1	RING	ANNEAU ANELLO RING ARO
7	700140332		1	SHAFT	ARBRE ALBERO WELLE ARBOL
8	353675X1	5/16"-18 X 1/2	2	BOLT UNC	BOULON UNC BULLONE UNC MASCH.SCHRB.UNC PERNO UNC
9	*Y705525*	5/16"	2	WASHER	RONDELLE RONDELLA UNTERLEGSCHEIBE ARANDELA
10*	873786	5/8"-11 X 6-1/2	1	SCREW	VIS VITE SCHRAUBE TORNILLO
11*	Y705582	5/8"	1	WASHER	RONDELLE RONDELLA UNTERLEGSCHEIBE ARANDELA
12*	7704919	5/8"-11	1	NUT	ECROU DADO MUTTER TUERCA
13*	700140367P		1	CAP	CHAPEAU CAPPELLO KAPPE TAPA
14	700703806		1	NUT	ECROU DADO MUTTER TUERCA
15	700139180		1	SPACER	ENTRETOISE DISTANZIALE ABSTANDSTUECK PIEZA DISTANCIA
16*	*700140331*		1	BEARING	COUSSINET CUSCINETTO LAGER COJINETE
17*	*700704263*	16	1	BEARING	COUSSINET CUSCINETTO LAGER COJINETE
18*	700140066	10-130 No 1	1	CLUTCH	EMBRAYAGE FRIZIONE SCHALTKUPPLUNG EMBRAGUE
19	700140336		1	RETAINER	RETENEUR FERMO HALTERING RETENEDOR
20*	700139103P		1	ANGLE	EQUERRE ANGOLO WINKEL ANGULO
21*	*70922786*	3/8"-16 X 1	2	BOLT	BOULON BULLONE MASCH.SCHRAUBE PERNO
22*	*700711238*	3/8"-16	4	NUT	ECROU DADO MUTTER TUERCA
23*	7883382	3/8"-16 X 1	2	SCREW	VIS VITE SCHRAUBE TORNILLO
24*	700139101P		1	ANGLE	EQUERRE ANGOLO WINKEL ANGULO
25	700720245		2	GUIDE	GUIDE GUIDA FUEHRUNG GUIA
26	*700720264*		1	CHAIN	CHAINE CATENA KETTE CADENA

Cutter Drive Assembly	Left
Ensemble Commande Couteau	Gauche
Schneidwerksantrieb	Links
Completo Comando Coltello	Sinistro
Conjunto Mando Cuchilla	Izquierda

10-125

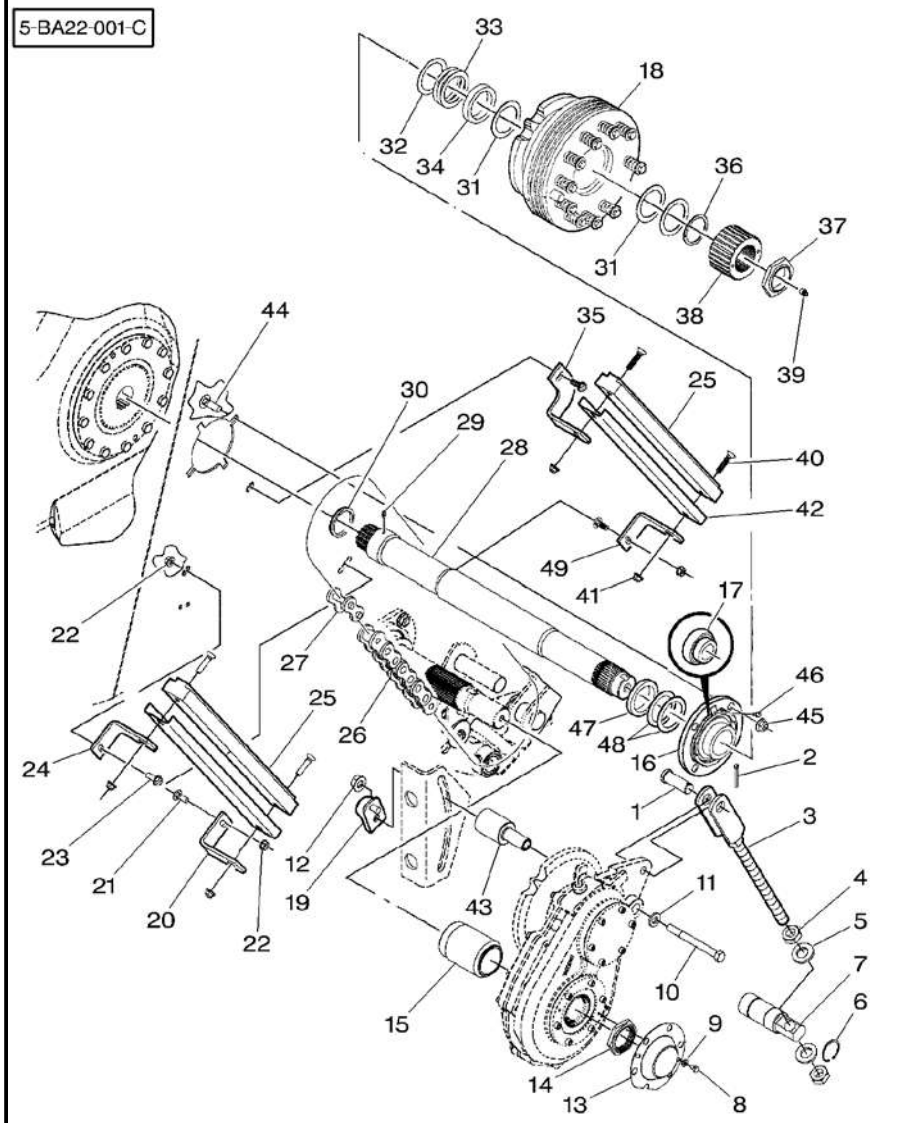

27	*700720263*		1	LINK	MAILLON MAGLIA	GLIED UNION
28*	700138348	➡ HM 74235	1	SHAFT	ARBRE ALBERO	WELLE ARBOL
28*	700161330	➡ HM 74236	1	SHAFT	ARBRE ALBERO	WELLE ARBOL
29	*70923219*	1/4"-28	1	GREASER	GRAISSEUR INGRASSATORE	FETTNIPPEL ENGRASADOR
30*	*700710542*	➡ HM 74235	1	SEAL	JOINT ETANCHEITE PARAOLIO	DICHTRING RETEN
30*	*700715965*	➡ HM 74236	1	SEAL	JOINT ETANCHEITE PARAOLIO	DICHTRING RETEN
31*	*6523500*		3	BUSH	BAGUE BOCCOLA	BUCHSE CASQUILLO
32*	6523542		1	SHIM	CALE REGLAGE SPESSORE	EINSTELLBLECH CALCE
33	Y6613665		3	SHIM	CALE REGLAGE SPESSORE	EINSTELLBLECH CALCE
34	700139098		1	SPACER	ENTRETOISE DISTANZIALE	ABSTANDSTUECK PIEZA DISTANCIA
35*	700139102P		1	BRACKET	SUPPORT FIXATION SUPPORTO FISSAGG	HALTEARM SOPORTE
36	*355919X1*		1	SNAPRING	SEGMENT ARRET ANELLO SIEGER	SPRENGRING ANILLA RETENCION
37	*700715751*		1	NUT	ECROU DADO	MUTTER TUERCA
38	700137382		1	HUB	MOYEU MOZZO	NABE CUBO
39	70914465	1/8"-27	1	GREASE NIPPLE	GRAISSEUR DROIT INGRASSAT.	FETT-NIPPEL ENGRASADOR
40*	700704513	3/8"-16 X 2	4	CAPSCREW	VIS BOUCHON TAPPO A VITE	HUTSCHRAUBE TORNILLO TAPON
41*	*Y704734*	3/8"-16	4	TOP LOCKNUT	ECROU FREIN DADO DI TESTA	SELBSTS.MUTTER CONTRATUERCA SUP
42	700139100		2	SUPPORT	SUPPORT SUPPORTO	LAGERUNG DISPOS.DE SOSTEN
43*	700153547		1	STUD	GOUJON PRIGIONIERO	STEHBOLZEN ESPARRAGO
44*	364246X1	1/2"-13 X 1-1/2	4	BOLT	BOULON BULLONE	MASCH.SCHRAUBE PERNO
45*	*Y704742*	1/2"-13	4	TOP LOCKNUT	ECROU FREIN DADO DI TESTA	SELBSTS.MUTTER CONTRATUERCA SUP
46*	70925731	1/4"-28 X 45	1	GREASER	GRAISSEUR INGRASSATORE	FETTNIPPEL ENGRASADOR
47*	700139332		1	SPACER	ENTRETOISE DISTANZIALE	ABSTANDSTUECK PIEZA DISTANCIA
48*	*6523500*		2	BUSH	BAGUE BOCCOLA	BUCHSE CASQUILLO
49*	700139103P		1	ANGLE	EQUERRE ANGOLO	WINKEL ANGULO

Clutch Embrayage Kupplung Frizione Embraque	With Cutter Avec Couteau Mit Messer Con Cuchillo Con Coltello	10-130

5-BA24-001-B

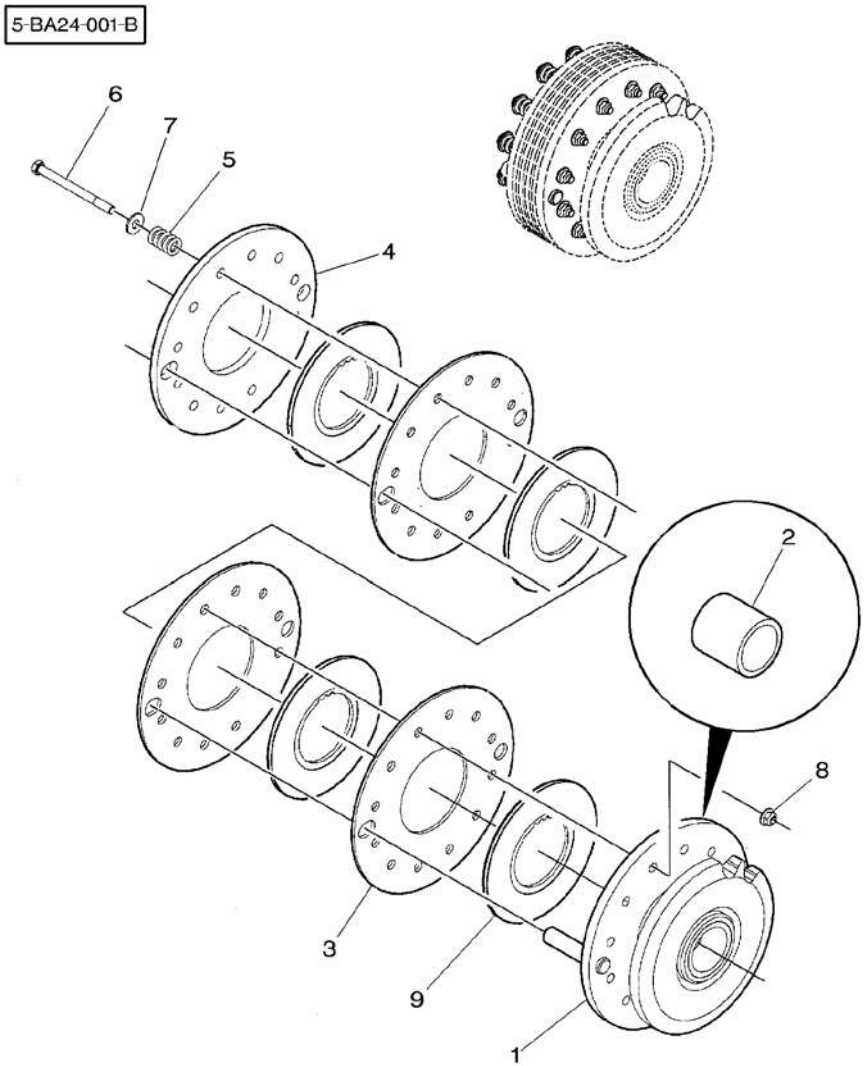

0*	700140066		1	CLUTCH	EMBRAYAGE FRIZIONE	SCHALTKUPPLUNG EMBRAGUE
1*	700140067P		1	HUB	MOYEU MOZZO	NABE CUBO
2*	700137375	1	1	BUSH	BAGUE BOCCOLA	BUCHSE CASQUILLO
3*	***700140071P***		3	CLUTCH DISC	DISQUE EMBRAYAGE DISCO FRIZIONE	KUPPLUNGSSCHEIBE DISCO DE EMBRAGU
4*	***700140072P***		1	CLUTCH DISC	DISQUE EMBRAYAGE DISCO FRIZIONE	KUPPLUNGSSCHEIBE DISCO DE EMBRAGU
5*	***58107B***		12	SPRING	RESSORT MOLLA	FEDER MUELLE
6*	***354636X1***	3/8"-16 X 4-1/2	12	BOLT UNC	BOULON UNC BULLONE UNC	MASCH.SCHRB.UNC PERNO UNC
7*	355619X1	3/8"	12	WASHER	RONDELLE RONDELLA	UNTERLEGSCHEIBE ARANDELA
8	***Y704734***	3/8"-16	12	TOP LOCKNUT	ECROU FREIN DADO DI TESTA	SELBSTS.MUTTER CONTRATUERCA SUP
9	***700108820***		4	DISC	DISQUE DISCO	SCHEIBE DISCO

20

Pick-Up
Pick-Up
Aufsammeltrommel
Raccoglitore
Recogedor

20-5

5-BA02-021-D

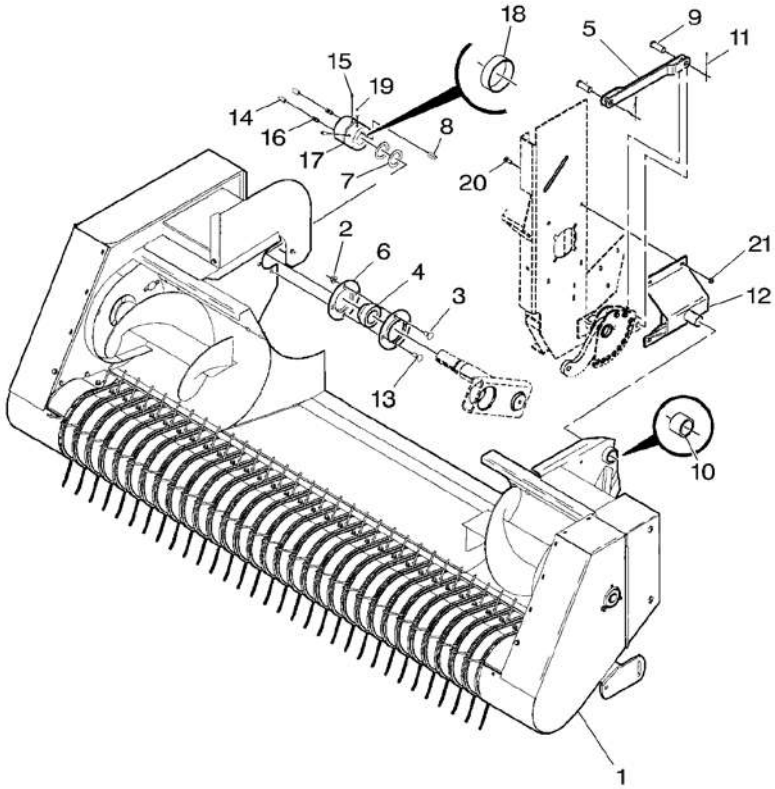

1 ✱	700138106P	➡ HL 74155	1	PICKUP	PICK UP RECUPERO	PICKUP RECOGEDORA
1 ✱	700140495P	➡ HL 74156 ➡ HP 74100	1	PICKUP	PICK UP RECUPERO	PICKUP RECOGEDORA
1 ✱	700139814M	➡ HP 74101	1	PICKUP	PICK UP RECUPERO	PICKUP RECOGEDORA
2 ✱	700714586	1/2"-13	4	NUT	ECROU DADO	MUTTER TUERCA
3	70928367	1/2"-13 X 1	1	BOLT	BOULON BULLONE	MASCH.SCHRAUBE PERNO
4	***51318***		1	BEARING	COUSSINET CUSCINETTO	LAGER COJINETE
5 ✱	700140179P		1	LINK	MAILLON MAGLIA	GLIED UNION
6	***71130258***		2	FLANGE	FLASQUE FLANGIA	FLANSCH PLETINA
7	Y52290	1"-3/4 X 14	2	WASHER	RONDELLE RONDELLA	UNTERLEGSCHEIBE ARANDELA
8 ✱	61770	3/8" X 1-1/2	1	KEY	CLAVETTE CHIAVETTA	PASSKEIL CLAVE
9	763177	3/4" X 2	2	CLEVIS PIN	AXE PERNO D'ATTACCO	SPLINTBOLZEN BULON CILINDRICO
10	6186506		1	BUSH	BAGUE BOCCOLA	BUCHSE CASQUILLO
11 ✱	354061X1	1/8" X 1-1/4	2	PIN	GOUPILLE PERNO	BOLZEN PASADOR
12 ✱	700123797P	◀	1	SUPPORT	SUPPORT SUPPORTO	LAGERUNG DISPOS.DE SOSTEN
13 ✱	364224X1	1/2"-13 X 1-1/4	3	BOLT UNC	BOULON UNC BULLONE UNC	MASCH.SCHRB.UNC PERNO UNC
14 ✱	63800	1/2" X 1-1/2 ➡ HL 74155	2	PIN	GOUPILLE PERNO	BOLZEN PASADOR
14 ✱	70937154	5/8" X 1-1/4 ➡ HL 74156	2	DOWEL	PLOT SPINA	ZYLINDERSTIFT CENTRAJE
15 ✱	***70923219***	1/4"-28	1	GREASER	GRAISSEUR INGRASSATORE	FETTNIPPEL ENGRASADOR
16 ✱	***58511***	➡ HL 74155	2	COMP.SPRING	RESSORT DE COMPR MOLLA COMPOSTA	DRUCKFEDER MUELLE COMPRESOR
16 ✱	***700720548***	➡ HL 74156	2	SPRING	RESSORT MOLLA	FEDER MUELLE
17 ✱	700137781P	➡ HL 74155	1	HUB	MOYEU MOZZO	NABE CUBO
17 ✱	700161210P	➡ HL 74156	1	HUB	MOYEU MOZZO	NABE CUBO
18 ✱	71500377	17	1	BUSH	BAGUE BOCCOLA	BUCHSE CASQUILLO
19 ✱	70906853	3/8"-16 X 1	2	SCREW	VIS VITE	SCHRAUBE TORNILLO
20 ✱	*70922786*	3/8"-16 X 1	4	BOLT	BOULON BULLONE	MASCH.SCHRAUBE PERNO
21 ✱	***700711238***	3/8"-16	4	NUT	ECROU DADO	MUTTER TUERCA

Pick-Up
Pick-Up
Aufsammeltrommel
Raccoglitore
Recogedor

20-10

HP 74100

5-BA02-038-A

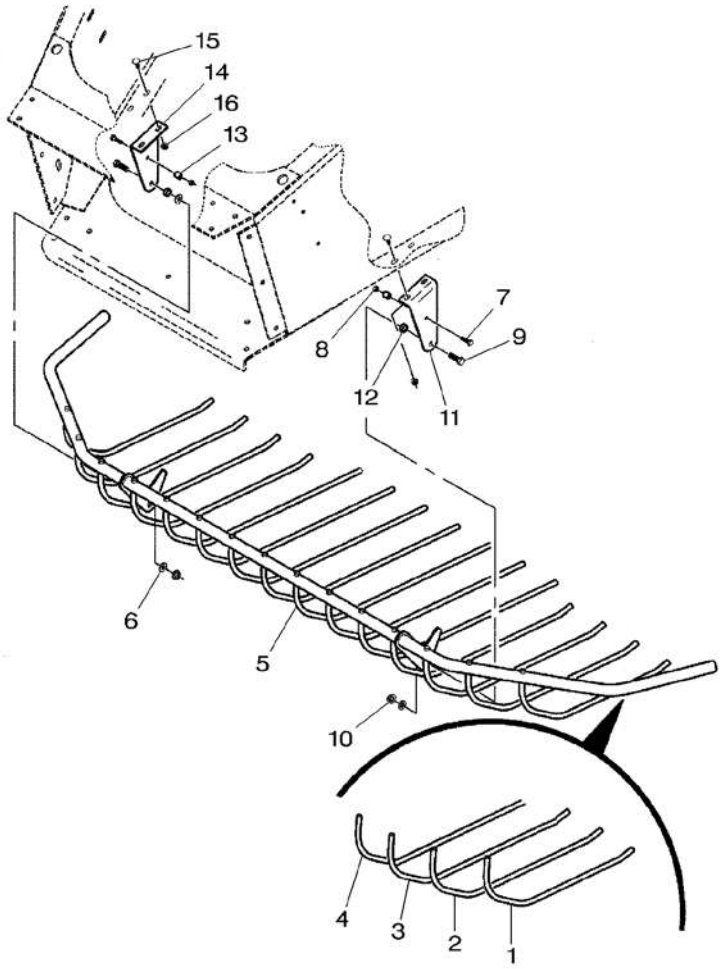

1 *	700123782P		2	ROD	TRINGLE ASTA	STANGE VARILLA
2 *	700123781P		2	ROD	TRINGLE ASTA	STANGE VARILLA
3 *	700123780P		4	ROD	TRINGLE ASTA	STANGE VARILLA
4 *	***700137699P***		7	ROD	TRINGLE ASTA	STANGE VARILLA
5 *	700137776P		1	GUARD	GARDE PROTEZIONE	SCHUTZVORR DEFENSA
6 *	700711557	1/2"	2	WASHER	RONDELLE RONDELLA	UNTERLEGSCHEIBE ARANDELA
7 *	353693X1	3/8"-16 X 1-1/4	2	SCREW UNC	VIS UNC VITE UNC	SCHRAUBE UNC TORNILLO UNC
8 *	7704141	3/8"-16	2	LOCKNUT	ECROU BLOCAGE AUTOBLOCCANTE	FLACHMUTTER CONTRATUERCA
9 *	353724X1	1/2"-13 X 1-1/2	2	BOLT UNC	BOULON UNC BULLONE UNC	MASCH.SCHRB.UNC PERNO UNC
10 *	***Y704742***	1/2"-13	2	TOP LOCKNUT	ECROU FREIN DADO DI TESTA	SELBSTS.MUTTER CONTRATUERCA SUP
11 *	700137775P	◀	1	SUPPORT	SUPPORT SUPPORTO	LAGERUNG DISPOS.DE SOSTEN
12 *	700708272		2	BUSH	BAGUE BOCCOLA	BUCHSE CASQUILLO
13 *	1117878P		2	BUSH	BAGUE BOCCOLA	BUCHSE CASQUILLO
14 *	700137774P	▶	1	SUPPORT	SUPPORT SUPPORTO	LAGERUNG DISPOS.DE SOSTEN
15 *	*70922786*	3/8"-16 X 1	4	BOLT	BOULON BULLONE	MASCH.SCHRAUBE PERNO
16 *	***700711238***	3/8"-16	4	NUT	ECROU DADO	MUTTER TUERCA

Pick–Up
Pick–Up
Aufsammeltrommel
Raccoglitore
Recogedor

20-15

HP 74101

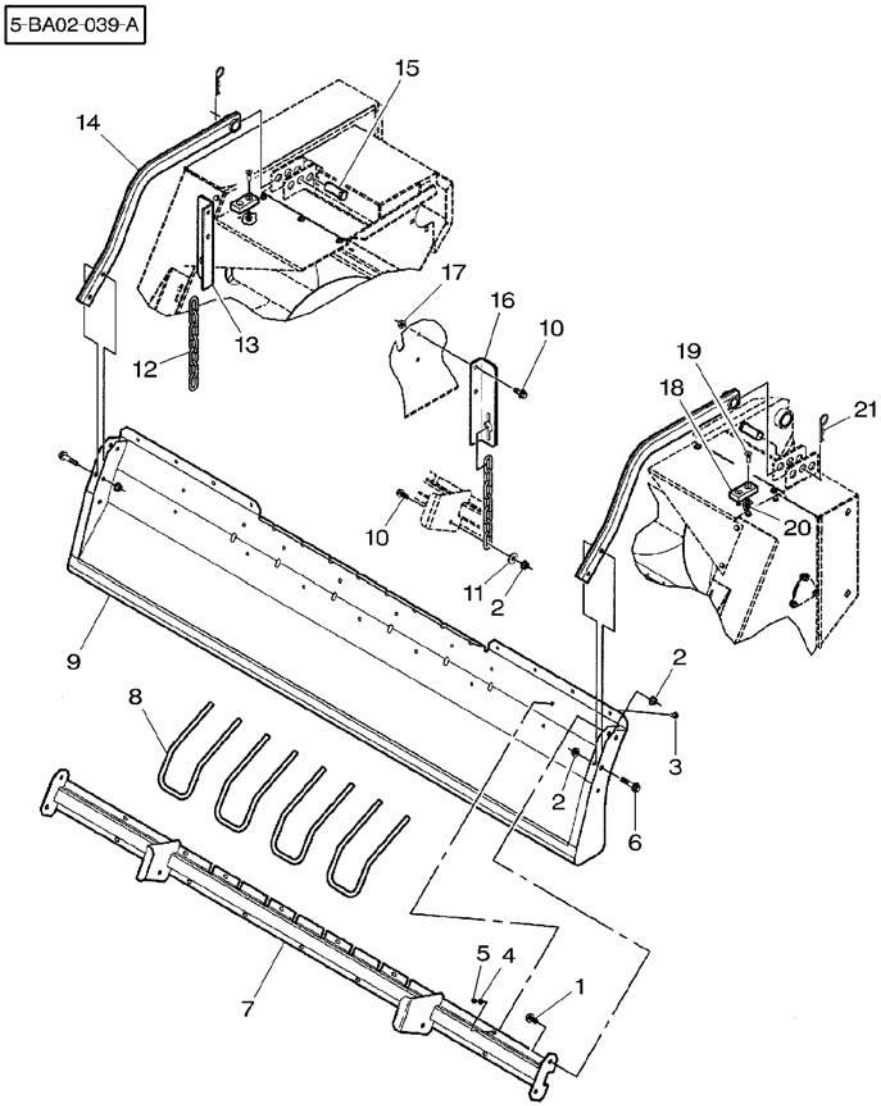

1 ✱	7883424	1/2"–13 X 1	2	SCREW	VIS VITE SCHRAUBE TORNILLO
2 ✱	***Y704742***	1/2"–13	8	TOP LOCKNUT	ECROU FREIN DADO DI TESTA SELBSTS.MUTTER CONTRATUERCA SUP
3 ✱	7700461	5/16"–18 X 3/4	15	BOLT	BOULON BULLONE MASCH.SCHRAUBE PERNO
4 ✱	***Y705525***	5/16"	15	WASHER	RONDELLE RONDELLA UNTERLEGSCHEIBE ARANDELA
5 ✱	Y704015	5/16"–185/16"–18	15	NUT	ECROU DADO MUTTER TUERCA
6 ✱	700712882	1/2"–13 X 2–1/4	4	SCREW	VIS VITE SCHRAUBE TORNILLO
7 ✱	700139146P		1	SUPPORT	SUPPORT SUPPORTO LAGERUNG DISPOS.DE SOSTEN
8 ✱	700140018		4	STIRRUP	ETRIER STAFFA BUEGEL ESTRIBO
9 ✱	700139141P		1	GUARD	GARDE PROTEZIONE SCHUTZVORR DEFENSA
10 ✱	700710984	1/2"–13 X 1–1/4	6	SCREW	VIS VITE SCHRAUBE TORNILLO
11 ✱	355621X1	1/2"	2	WASHER	RONDELLE RONDELLA UNTERLEGSCHEIBE ARANDELA
12 ✱	700139388		2	CHAIN	CHAINE CATENA KETTE CADENA
13 ✱	700139753P	▶	1	SUPPORT	SUPPORT SUPPORTO LAGERUNG DISPOS.DE SOSTEN
14 ✱	700139207P		2	ARM	BRAS BRACCIO ARM BRAZO
15 ✱	63701	1" X 2–1/2	2	CLEVIS PIN	AXE PERNO D'ATTACCO SPLINTBOLZEN BULON CILINDRICO
16 ✱	700139752P	◀	1	SUPPORT	SUPPORT SUPPORTO LAGERUNG DISPOS.DE SOSTEN
17 ✱	700714586	1/2"–13	4	NUT	ECROU DADO MUTTER TUERCA
18 ✱	700720546		2	STOP	BUTEE STOP ANSCHLAG PARO
19 ✱	***70934842***	3/8"–16 X 1–1/4	4	BOLT	BOULON BULLONE MASCH.SCHRAUBE PERNO
20 ✱	***Y704734***	3/8"–16	4	TOP LOCKNUT	ECROU FREIN DADO DI TESTA SELBSTS.MUTTER CONTRATUERCA SUP
21 ✱	2514740W1		2	PIN	GOUPILLE PERNO BOLZEN PASADOR

Pick-Up	With Cutter	20-20
Pick-Up	Avec Couteau	
Aufsammeltrommel	Mit Messer	
Raccoglitore	Con Cuchillo	
Recogedor	Con Coltello	

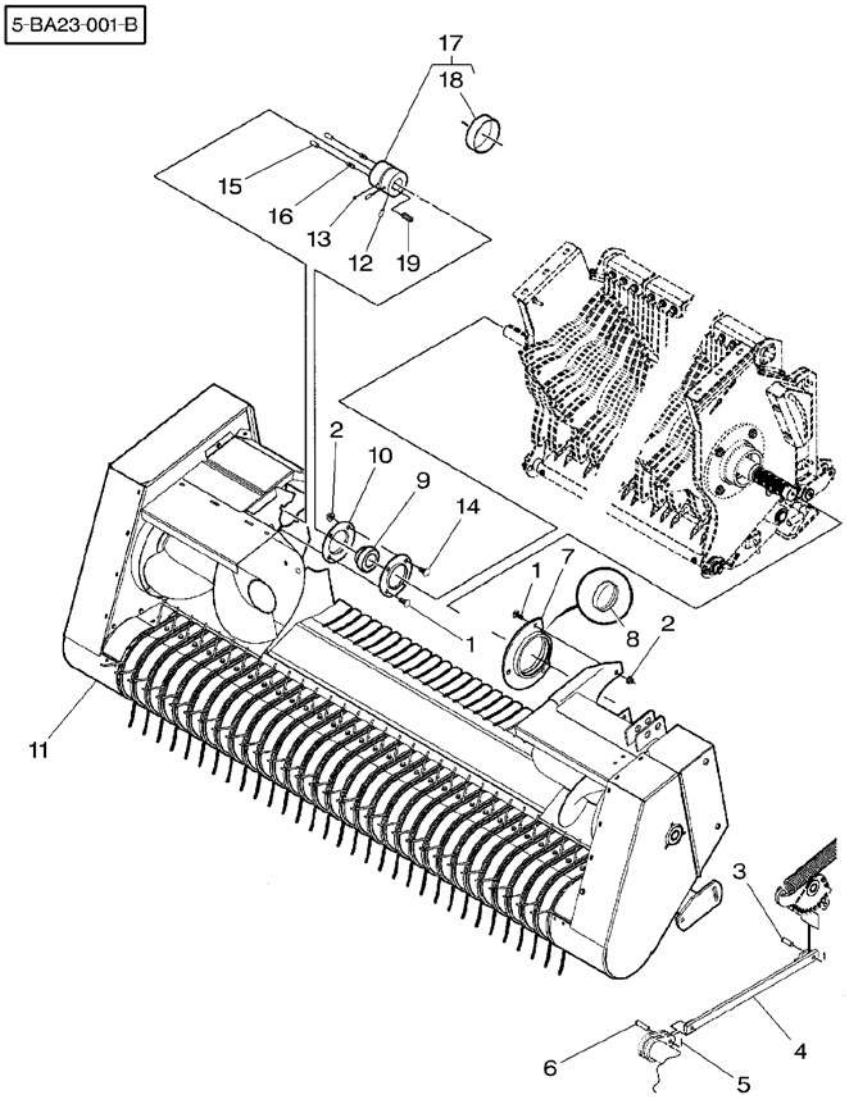

1*	364224X1	1/2"-13 X 1-1/4	6	BOLT UNC	BOULON UNC BULLONE UNC PERNO UNC
2*	700714586	1/2"-13	7	NUT	ECROU DADO MUTTER TUERCA
3	763177	3/4" X 2	1	CLEVIS PIN	AXE PERNO D'ATTACCO SPLINTBOLZEN BULON CILINDRICO
4*	700139379P	➡ HP 74100	1	STRAP	PATTE CORREGGIA LASCHE FAJA
4*	700161900P	➡ HP 74101	1	STRAP	PATTE CORREGGIA LASCHE FAJA
5*	354061X1	1/8" X 1-1/4	2	PIN	GOUPILLE PERNO BOLZEN PASADOR
6	Y762245	3/4" X 2-3/4	1	CLEVIS PIN	AXE PERNO D'ATTACCO SPLINTBOLZEN BULON CILINDRICO
7*	***700140328P***		1	FLANGE	FLASQUE FLANGIA FLANSCH PLETINA
8*	700720353	7	1	BUSH	BAGUE BOCCOLA BUCHSE CASQUILLO
9	***51318***		1	BEARING	COUSSINET CUSCINETTO LAGER COJINETE
10	***71130258***		2	FLANGE	FLASQUE FLANGIA FLANSCH PLETINA
11*	700139079P	➡ HP 74100	1	PICKUP	PICK UP RECUPERO PICKUP RECOGEDORA
11*	700163357M	➡ HP 74101	1	PICKUP	PICK UP RECUPERO PICKUP RECOGEDORA
12*	353906X1	3/8"-16 X 1-1/4	2	SCREW UNC	VIS UNC VITE UNC SCHRAUBE UNC TORNILLO UNC
13	***70923219***	1/4"-28	1	GREASER	GRAISSEUR INGRASSATORE FETTNIPPEL ENGRASADOR
14*	70928367	1/2"-13 X 1	1	BOLT	BOULON BULLONE MASCH.SCHRAUBE PERNO
15*	70937154	5/8" X 1-1/2	2	DOWEL	PLOT SPINA ZYLINDERSTIFT CENTRAJE
16*	***700720548***		2	SPRING	RESSORT MOLLA FEDER MUELLE
17*	700161210P		1	HUB	MOYEU MOZZO NABE CUBO
18*	71500377	17	1	BUSH	BAGUE BOCCOLA BUCHSE CASQUILLO
19*	61770	3/8" X 1-1/2	1	KEY	CLAVETTE CHIAVETTA PASSKEIL CLAVE

Pick-Up **Pick-Up** **Aufsammeltrommel** **Raccoglitore** **Recogedor**	**With Cutter** **Avec Couteau** **Mit Messer** **Con Cuchillo** **Con Coltello**	**20-25**	**Cowl** **Garants** **Aufsatz** **Cappottatura** **Caperuza**

5-BA23-002-A

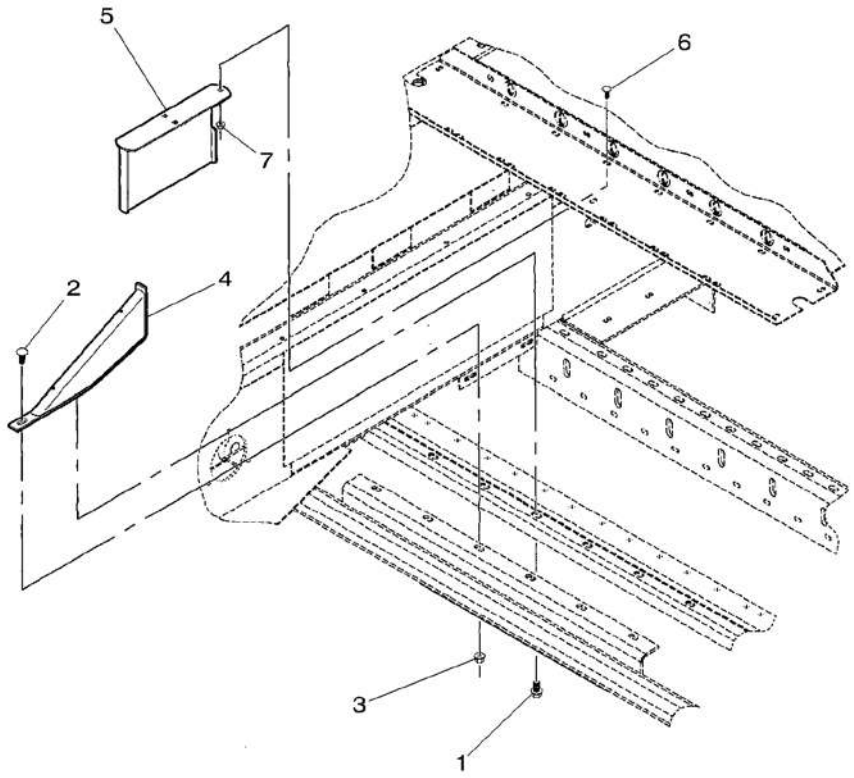

1	7883424	1/2"-13 X 1	**6**	SCREW	VIS VITE	SCHRAUBE TORNILLO
2*	364224X1	1/2"-13 X 1-1/4	**6**	BOLT UNC	BOULON UNC BULLONE UNC	MASCH.SCHRB.UNC PERNO UNC
3	***Y704742***	1/2"-13	**6**	TOP LOCKNUT	ECROU FREIN DADO DI TESTA	SELBSTS.MUTTER CONTRATUERCA SUP
4*	700153070P		**6**	CLEANER	EPURATEUR DEPURATORE	REINIGER DEPURADOR
5*	700139333		**6**	STRIPPER	DEBOURREUR SPOGLIATORE	ABSTREIFER DESBARBADOR
6	*70922786*	3/8"-16 X 1	**18**	BOLT	BOULON BULLONE	MASCH.SCHRAUBE PERNO
7	***Y704734***	3/8"-16	**18**	TOP LOCKNUT	ECROU FREIN DADO DI TESTA	SELBSTS.MUTTER CONTRATUERCA SUP

Pick-Up **Pick-Up** **Aufsammeltrommel** **Raccoglitore** **Recogedor**	**With Cutter** **Avec Couteau** **Mit Messer** **Con Cuchillo** **Con Coltello**	**20-30**

Fitting
Fixation
Anbau
Montaggio
Fijacion

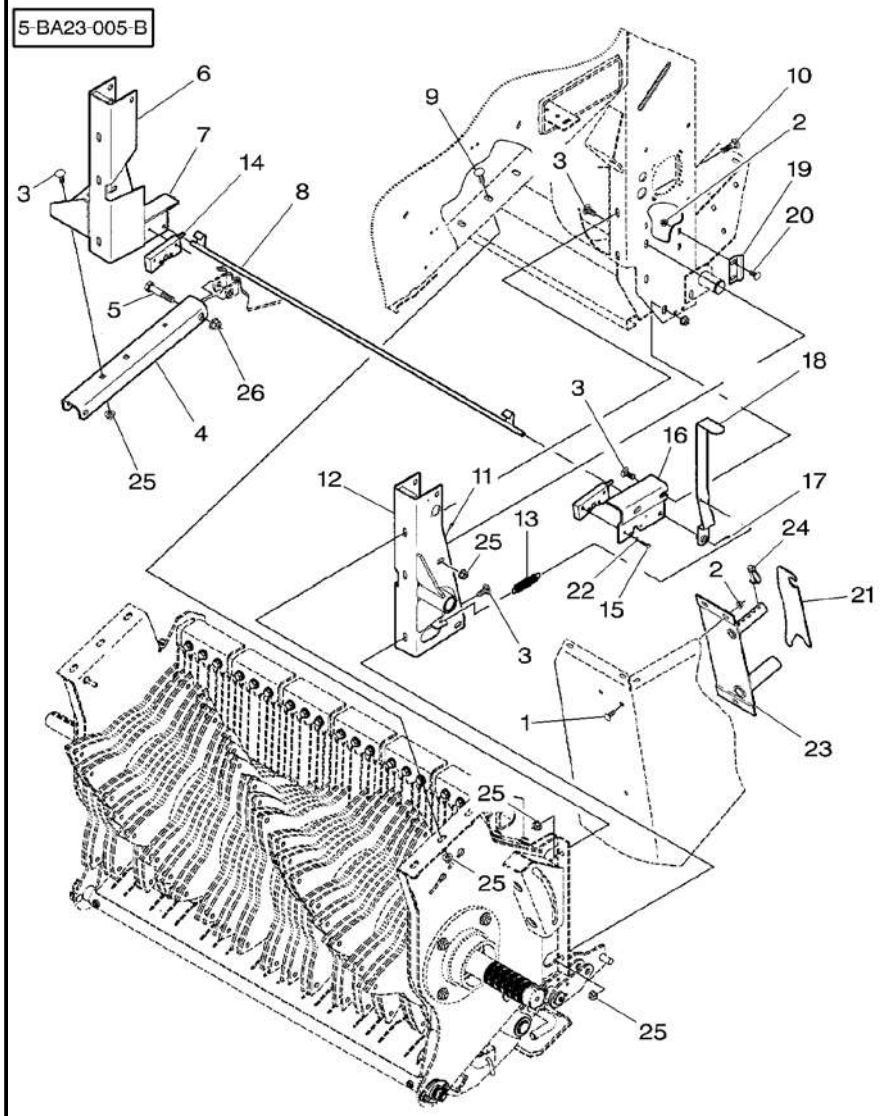

1 ✱	68759	3/8"-16 X 1	3	BOLT BULLONE	BOULON BULLONE	MASCH.SCHRAUBE PERNO
2 ✱	***700711238***	3/8"-16	5	NUT DADO	ECROU DADO	MUTTER TUERCA
3 ✱	364224X1	1/2"-13 X 1-1/4	12	BOLT UNC BULLONE UNC	BOULON UNC BULLONE UNC	MASCH.SCHRB.UNC PERNO UNC
4 ✱	700139046P		1	CHANNEL PROFILATO	CANAL PROFILATO	KANAL CANAL
5	354290X1	5/8"-11 X 3-1/4	1	BOLT UNC BULLONE UNC	BOULON UNC BULLONE UNC	MASCH.SCHRB.UNC PERNO UNC
6 ✱	700139060P	▶	1	CHANNEL PROFILATO	CANAL PROFILATO	KANAL CANAL
7 ✱	700139109P	▶	1	SUPPORT SUPPORTO	SUPPORT SUPPORTO	LAGERUNG DISPOS.DE SOSTEN
8 ✱	700139209P		1	ROD ASTA	TRINGLE ASTA	STANGE VARILLA
9 ✱	364246X1	1/2"-13 X 1-1/2	6	BOLT BULLONE	BOULON BULLONE	MASCH.SCHRAUBE PERNO
10 ✱	364976X1	1/2"-13 X 2	4	BOLT UNC BULLONE UNC	BOULON UNC BULLONE UNC	MASCH.SCHRB.UNC PERNO UNC
11	***70923219***	1/4"-28	1	GREASER INGRASSATORE	GRAISSEUR INGRASSATORE	FETTNIPPEL ENGRASADOR
12 ✱	700139050P	◀	1	CHANNEL PROFILATO	CANAL PROFILATO	KANAL CANAL
13	***700758888***		1	TENSION SPRING MOLLA TENDITRICE	RESSORT TRACTION MOLLA TENDITRICE	ZUGFEDER RESORTE TENSOR
14	700720033		2	LATCH SALISCENDI	VERROU SALISCENDI	RIEGEL CERROJO
15 ✱	70927401	1/4"-20 X 1	8	BOLT BULLONE	BOULON BULLONE	MASCH.SCHRAUBE PERNO
16 ✱	700139107P	◀	1	SUPPORT SUPPORTO	SUPPORT SUPPORTO	LAGERUNG DISPOS.DE SOSTEN
17 ✱	70926228	5/32" X 1	1	PIN PERNO	GOUPILLE PERNO	BOLZEN PASADOR
18	700139184		1	HANDLE MANIGLIA	POIGNEE MANIGLIA	HANDGRIFF MANETA
19	700139186		1	PLATE PIASTRA	PLAQUE PIASTRA	PLATTE PLATO
20 ✱	*70922786*	3/8"-16 X 1	2	BOLT BULLONE	BOULON BULLONE	MASCH.SCHRAUBE PERNO
21	700138460		19	PLATE PIASTRA	PLAQUE PIASTRA	PLATTE PLATO
22 ✱	353441X1	1/4"	8	LOCK WASHER ROSETTA ELASTICA	RONDELLE FREIN ROSETTA ELASTICA	FEDERRING ARANDELA GROWER
23 ✱	700139221P		1	SUPPORT SUPPORTO	SUPPORT SUPPORTO	LAGERUNG DISPOS.DE SOSTEN
24 ✱	528752	3/8" X 1-3/4	1	CLEVIS PIN PERNO D'ATTACCO	AXE PERNO D'ATTACCO	SPLINTBOLZEN BULON CILINDRICO
25 ✱	700714586	1/2"-13	22	NUT DADO	ECROU DADO	MUTTER TUERCA
26 ✱	7774458	5/8"-11	1	NUT DADO	ECROU DADO	MUTTER TUERCA

Pick-Up	With Cutter	20-35	Rotor
Pick-Up	Avec Couteau		Rotor
Aufsammeltrommel	Mit Messer		Rotor
Raccoglitore	Con Cuchillo		Rotore
Recogedor	Con Coltello		Rotor

5-BA23-006-D

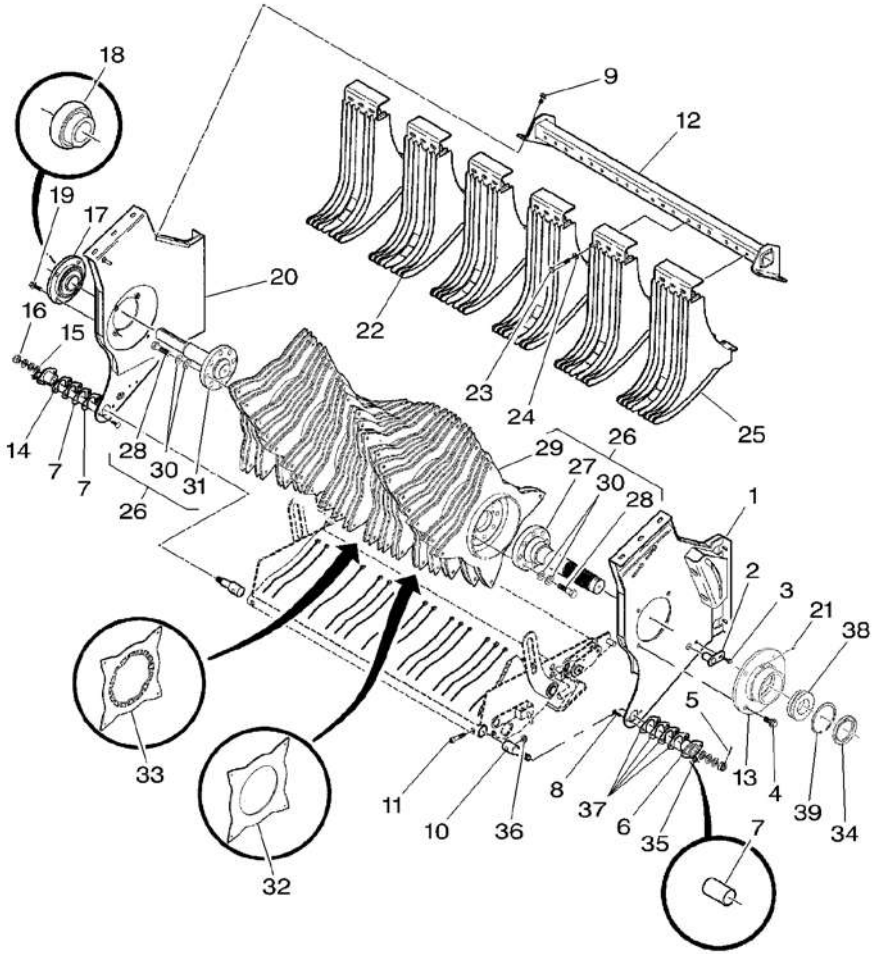

1*	700161076P	◀	1	SUPPORT SUPPORTO	LAGERUNG DISPOS.DE SOSTEN
2	700139023		2	CLEVIS PIN AXE PERNO D'ATTACCO	SPLINTBOLZEN BULON CILINDRICO
3*	*7883374*	3/8"-16 X 3/4	2	SCREW VIS VITE	SCHRAUBE TORNILLO
4*	700711262	5/8"-11 X 1-1/2	4	SCREW VIS VITE	SCHRAUBE TORNILLO
5	354061X1	1/8" X 1-1/4	2	PIN GOUPILLE PERNO	BOLZEN PASADOR
6*	*700161321*		2	BUSH BAGUE BOCCOLA	BUCHSE CASQUILLO
7*	*740217*	6	1	BUSH BAGUE BOCCOLA	BUCHSE CASQUILLO
8*	70923220	3/8"-16 X 1-1/4	4	BOLT BOULON BULLONE	MASCH.SCHRAUBE PERNO
9*	7883424	1/2"-13 X 1	4	SCREW VIS VITE	SCHRAUBE TORNILLO
10	700138435		2	CLEVIS PIN AXE PERNO D'ATTACCO	SPLINTBOLZEN BULON CILINDRICO
11	700718805	1/2"-13 X 2-1/2	2	SCREW VIS VITE	SCHRAUBE TORNILLO
12*	700139017P		1	TUBE TUBE TUBO	ROHR TUBO
13*	700140324P		1	BEARING HOUSING CARTER ROULEMENT CARCASSA CUSCIN.	LAGERGEHAEUSE CAJA COJINETE
14	700720236		4	SHIM CALE REGLAGE SPESSORE	EINSTELLBLECH CALCE
15	*52761*	3/4" X 14	6	BUSH BAGUE BOCCOLA	BUCHSE CASQUILLO
16*	Y704866	3/4"-10	2	NUT ECROU DADO	MUTTER TUERCA
17	*700140331*		1	BEARING COUSSINET CUSCINETTO	LAGER COJINETE
18*	*700720354*	17	1	BEARING SPHERICL ROULEMNT SPHERIC CUSCINETTO SFER.	LAGER-BALLIG COJINETE OSCIL.
19*	8701237	1/2"-13 X 1-1/2	4	SCREW VIS VITE	SCHRAUBE TORNILLO
20*	700161077P	▶	1	SUPPORT SUPPORTO	LAGERUNG DISPOS.DE SOSTEN
21	*70923219*	1/4"-28	1	GREASER GRAISSEUR INGRASSATORE	FETTNIPPEL ENGRASADOR
22*	*700161305P*	➡ HP 74100	5	STRIPPER DEBOURREUR SPOGLIATORE	ABSTREIFER DESBARBADOR
22*	700140716P	➡ HP 74101	5	STRIPPER DEBOURREUR SPOGLIATORE	ABSTREIFER DESBARBADOR
23*	354659X1	1/2"-13 X 3-1/2	18	BOLT UNC BOULON UNC BULLONE UNC	MASCH.SCHRB.UNC PERNO UNC
24	*705541*	1/2"	18	FLAT WASHERS RONDELLES PLATES RONDELLE PIANE	UNTERLEGSCHEIBEN ARANDELAS PLANAS
25*	700139326P	◀	1	STRIPPER DEBOURREUR SPOGLIATORE	ABSTREIFER DESBARBADOR

Pick-Up Pick-Up Aufsammeltrommel Raccoglitore Recogedor	With Cutter Avec Couteau Mit Messer Con Cuchillo Con Coltello	20-35	Rotor Rotor Rotor Rotore Rotor

5-BA23-006-D

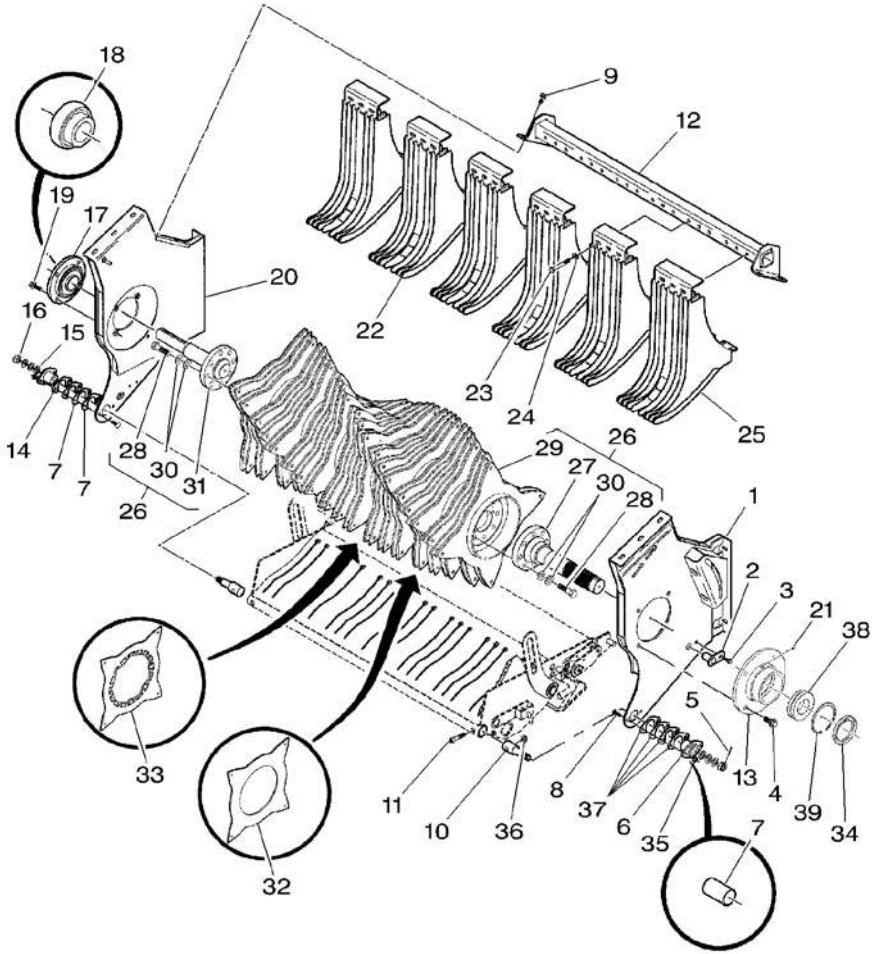

25* 700139326P	➡ HP 74100 ◀	1	STRIPPER	DEBOURREUR SPOGLIATORE	ABSTREIFER DESBARBADOR
25* 700139811P	➡ HP 74101 ◀	1	STRIPPER	DEBOURREUR SPOGLIATORE	ABSTREIFER DESBARBADOR
26* 700139320P	➡ HP 74100	1	ROTOR	ROTOR ROTORE	ROTOR ROTOR
27* 700139322	26 ◀	1	SHAFT	ARBRE ALBERO	WELLE ARBOL
28* 70923901	26 3/4"-10 X 2-3/4	16	CAPSCREW	VIS BOUCHON TAPPO A VITE	HUTSCHRAUBE TORNILLO TAPON
29* 700139321B	26 ➡ HP 74100	1	ROTOR	ROTOR ROTORE	ROTOR ROTOR
29* 700139810P	26 ➡ HP 74101	1	ROTOR	ROTOR ROTORE	ROTOR ROTOR
30* Y705566	26 3/4"	32	WASHER	RONDELLE RONDELLA	UNTERLEGSCHEIBE ARANDELA
31* 700140075	26 ▶	1	SHAFT	ARBRE ALBERO	WELLE ARBOL
32* 700161052	26 ➡ HP 74101	4	BLADE	LAME LAMA	KLINGE HOJA CORTANTE
33* 700140714X	26 ➡ HP 74101	48	BLADE	LAME LAMA	KLINGE HOJA CORTANTE
34 *700715740*		2	OIL SEAL	BAGUE ETANCHEITE BOCCOLA PARAOLIO	OELDICHTRING BUJE RETENACEITE
35* *700711238*	3/8"-16	4	NUT	ECROU DADO	MUTTER TUERCA
36* *Y704742*	1/2"-13	2	TOP LOCKNUT	ECROU FREIN DADO DI TESTA	SELBSTS.MUTTER CONTRATUERCA SUP
37 700720237		4	SHIM	CALE REGLAGE SPESSORE	EINSTELLBLECH CALCE
38 *700715741*		1	BEARING	COUSSINET CUSCINETTO	LAGER COJINETE
39 *700720004*		2	RING	ANNEAU ANELLO	RING ARO

Pick-Up Pick-Up Aufsammeltrommel Raccoglitore Recogedor	20-40	Knives Couteaux Messerlinge Lame Cuchillas

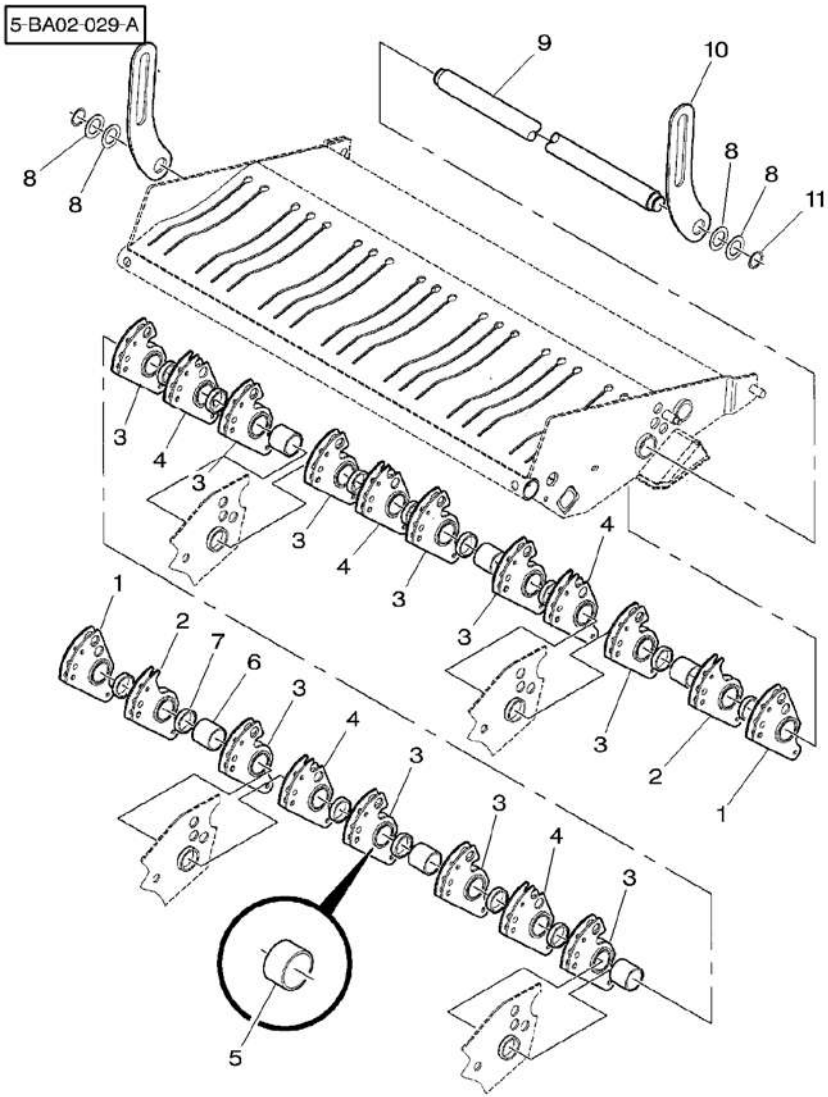

1*	700140083	[A]	2	PIVOT	PIVOT CARDINE	DREHZAPFEN PIVOTE
2*	700140084	[A]	2	PIVOT	PIVOT CARDINE	DREHZAPFEN PIVOTE
3*	700140082	[A]	10	PIVOT	PIVOT CARDINE	DREHZAPFEN PIVOTE
4*	700140085	[A]	5	PIVOT	PIVOT CARDINE	DREHZAPFEN PIVOTE
5*	***700720348***		19	BEARING	COUSSINET CUSCINETTO	LAGER COJINETE
6	***700139037***		6	BUSH	BAGUE BOCCOLA	BUCHSE CASQUILLO
7	***700138307***		14	BUSH	BAGUE BOCCOLA	BUCHSE CASQUILLO
8	Y52274	1"-3/8 X 14	4	WASHER	RONDELLE RONDELLA	UNTERLEGSCHEIBE ARANDELA
9	700139039		1	SHAFT	ARBRE ALBERO	WELLE ARBOL
10*	700139041P		2	SUPPORT	SUPPORT SUPPORTO	LAGERUNG DISPOS.DE SOSTEN
11	***70927744***		2	RING	ANNEAU ANELLO	RING ARO

[A] INCLUDE ITEM 5
COMPREND L'ITEM 5
BEINHALTET POS NR. 5
INCLUDE IL NUMERO 5
INCLUYE EL NO 5

5-BA02-030-A

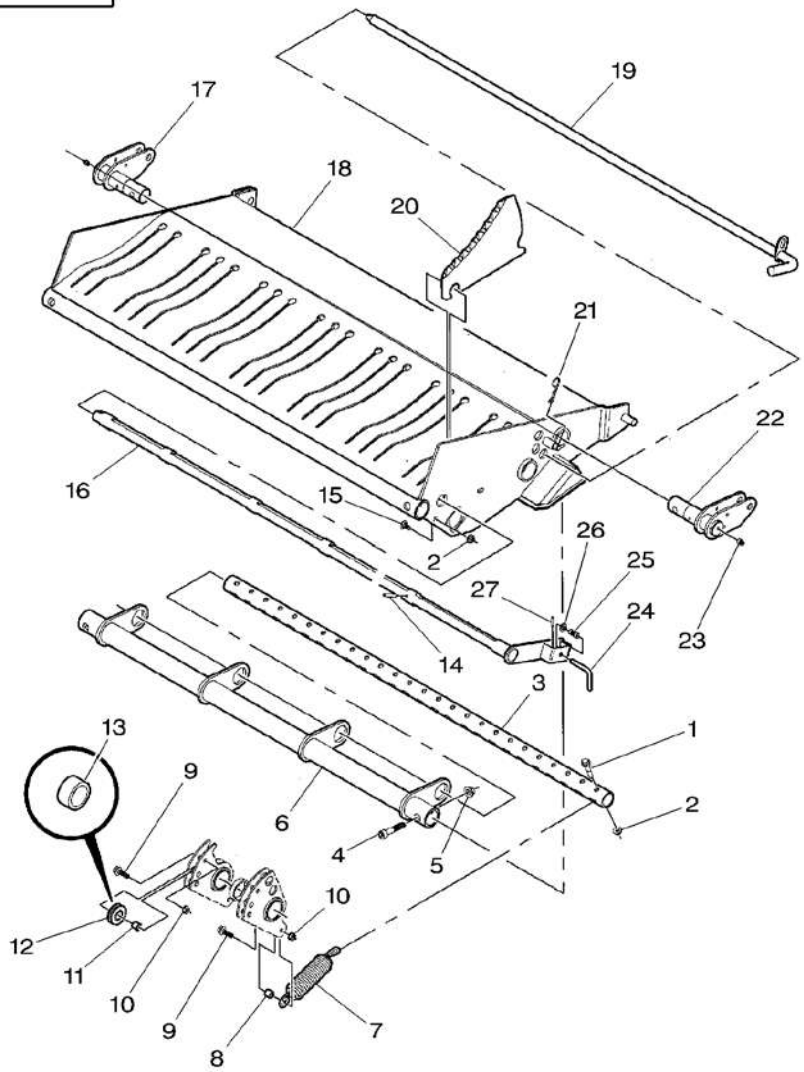

1	✱700711132	3/8"–16 X 2	19	SCREW	VIS VITE	SCHRAUBE TORNILLO
2	*Y704734*	3/8"–16	20	TOP LOCKNUT	ECROU FREIN DADO DI TESTA	SELBSTS.MUTTER CONTRATUERCA SUP
3	✱700139044P		1	TUBE	TUBE TUBO	ROHR TUBO
4	✱700718805	1/2"–13 X 2–1/2	2	SCREW	VIS VITE	SCHRAUBE TORNILLO
5	*Y704742*	1/2"–13	2	TOP LOCKNUT	ECROU FREIN DADO DI TESTA	SELBSTS.MUTTER CONTRATUERCA SUP
6	✱700139042P		1	TUBE	TUBE TUBO	ROHR TUBO
7	*700720059*		19	SPRING	RESSORT MOLLA	FEDER MUELLE
8	*158758*		19	SPACER	ENTRETOISE DISTANZIALE	ABSTANDSTUECK PIEZA DISTANCIA
9	✱353693X1	3/8"–16 X 1–1/4	38	SCREW UNC	VIS UNC VITE UNC	SCHRAUBE UNC TORNILLO UNC
10	✱*704247*	3/8"–16	38	LOCKNUT	ECROU BLOCAGE AUTOBLOCCANTE	FLACHMUTTER CONTRATUERCA
11	700140078		19	SPACER	ENTRETOISE DISTANZIALE	ABSTANDSTUECK PIEZA DISTANCIA
12	✱*700140080*		19	ROLLER	GALET RULLO	ROLLE RODILLO
13	✱*700720349*	12	19	BEARING	COUSSINET CUSCINETTO	LAGER COJINETE
14	70917758	1/4" X 2–1/2	1	PIN	GOUPILLE PERNO	BOLZEN PASADOR
15	7770456	3/8"–16 X 3/4	1	BOLT	BOULON BULLONE	MASCH.SCHRAUBE PERNO
16	700139045		1	ROD	TRINGLE ASTA	STANGE VARILLA
17	✱700139034P	▶	1	SHAFT	ARBRE ALBERO	WELLE ARBOL
18	✱700139327P		1	PAN	RECEPTEUR COPPA	AUFFANGWANNE CUBA
19	700139040		1	ROD	TRINGLE ASTA	STANGE VARILLA
20	✱*700721367*		19	KNIFE	COUTEAU COLTELLO	MESSER CUCHILLA
21	70936348		1	PIN	GOUPILLE PERNO	BOLZEN PASADOR
22	✱700139033P	◀	1	SHAFT	ARBRE ALBERO	WELLE ARBOL
23	70914465	1/8"–27	2	GREASE NIPPLE	GRAISSEUR DROIT INGRASSAT.	FETT–NIPPEL ENGRASADOR
24	✱700139040	➡| ...	1	ROD	TRINGLE ASTA	STANGE VARILLA
24	✱700138328	|➡ ...	1	ROD	TRINGLE ASTA	STANGE VARILLA
25	*58511*		1	COMP.SPRING	RESSORT DE COMPR MOLLA COMPOSTA	DRUCKFEDER MUELLE COMPRESOR

5-BA02-030-A

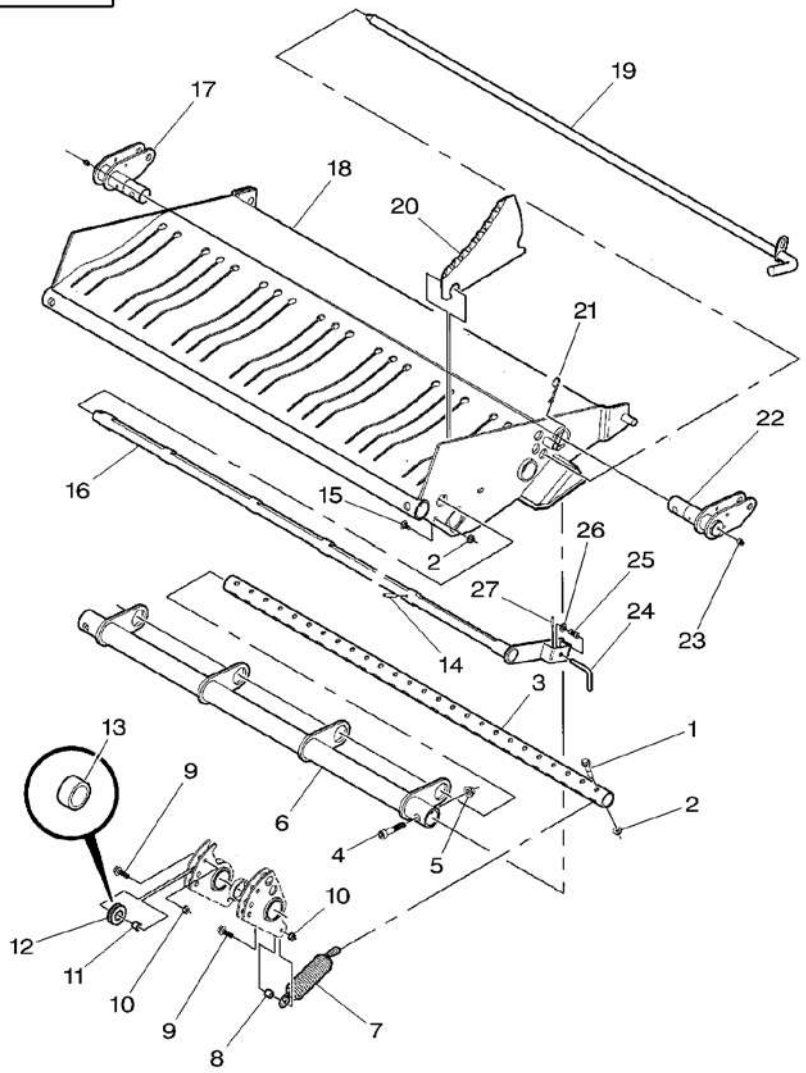

26	*Y705533*	3/8"	**1** WASHER	RONDELLE RONDELLA	UNTERLEGSCHEIBE ARANDELA
27	70918111	1/8" X 1	**1** PIN	GOUPILLE PERNO	BOLZEN PASADOR

Pick-Up
Pick-Up
Aufsammeltrommel
Raccoglitore
Recogedor

20-50

5-BA02-037-A

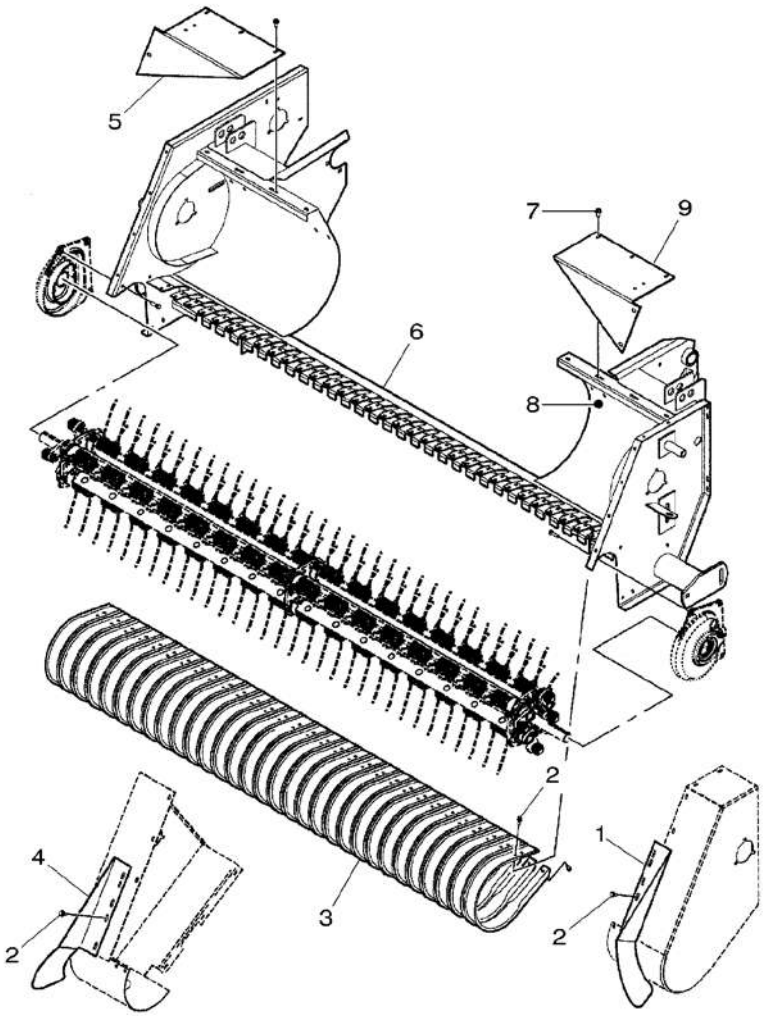

1*	700138175P	◀	1	SHIELD	TOLE RIPARO	SCHILD BLINDAJE
2	*Y703132*	5/16"-18 X 3/4	72	BOLT	BOULON BULLONE	MASCH.SCHRAUBE PERNO
3	*700129658P*		31	WRAPPER	COUVERTURE IMBALLATORE	UMSCHLAG ENVASE
4*	700138176P	▶	1	SHIELD	TOLE RIPARO	SCHILD BLINDAJE
5*	700139384B	▶	1	SHIELD	TOLE RIPARO	SCHILD BLINDAJE
6*	700137708	➡ HP 74100	1	PICKUP	PICK UP RECUPERO	PICKUP RECOGEDORA
6*	Y700139803	➡ HP 74101	1	PICKUP	PICK UP RECUPERO	PICKUP RECOGEDORA
7*	*7883374*	3/8"-16 X 3/4	6	SCREW	VIS VITE	SCHRAUBE TORNILLO
8*	70931277	5/16"-18	6	LOCKNUT	ECROU BLOCAGE AUTOBLOCCANTE	FLACHMUTTER CONTRATUERCA
9*	700139385B	◀	1	SHIELD	TOLE RIPARO	SCHILD BLINDAJE

Pick-Up Pick-Up Aufsammeltrommel Raccoglitore Recogedor	With Cutter Avec Couteau Mit Messer Con Cuchillo Con Coltello	20-55	➡| HP 74100

5-BA23-003-B

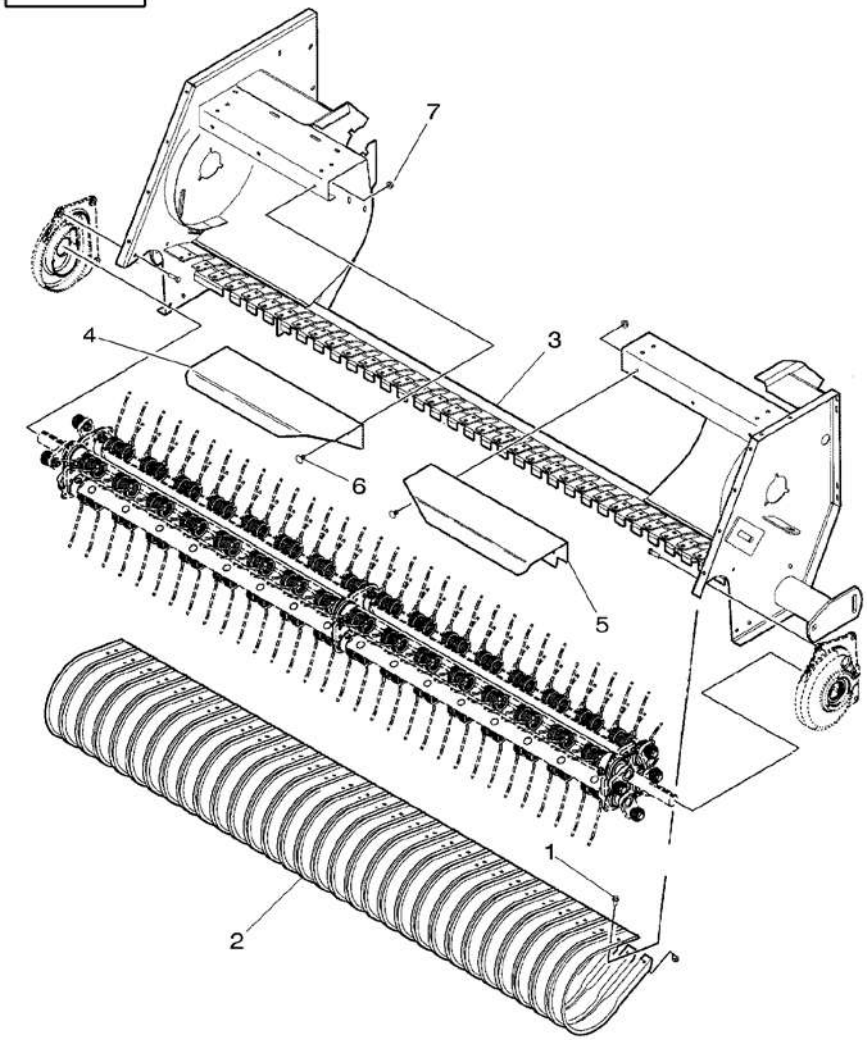

1	*Y703132*	5/16"-18 X 3/4	**62** BOLT	BOULON BULLONE	MASCH.SCHRAUBE PERNO
2*	*700129658P*		**31** WRAPPER	COUVERTURE IMBALLATORE	UMSCHLAG ENVASE
3*	700139082		**1** PICKUP	PICK UP RECUPERO	PICKUP RECOGEDORA
4*	700139183P	▶	**1** SHIELD	TOLE RIPARO	SCHILD BLINDAJE
5*	700139182P	◀	**1** SHIELD	TOLE RIPARO	SCHILD BLINDAJE
6*	7770456	3/8"-16 X 3/4	**6** BOLT	BOULON BULLONE	MASCH.SCHRAUBE PERNO
7*	*700711238*	3/8"-16	**6** NUT	ECROU DADO	MUTTER TUERCA

Pick-Up Pick-Up Aufsammeltrommel Raccoglitore Recogedor	With Cutter Avec Couteau Mit Messer Con Cuchillo Con Coltello	20-60	HP 74101

5-BA23-018-A

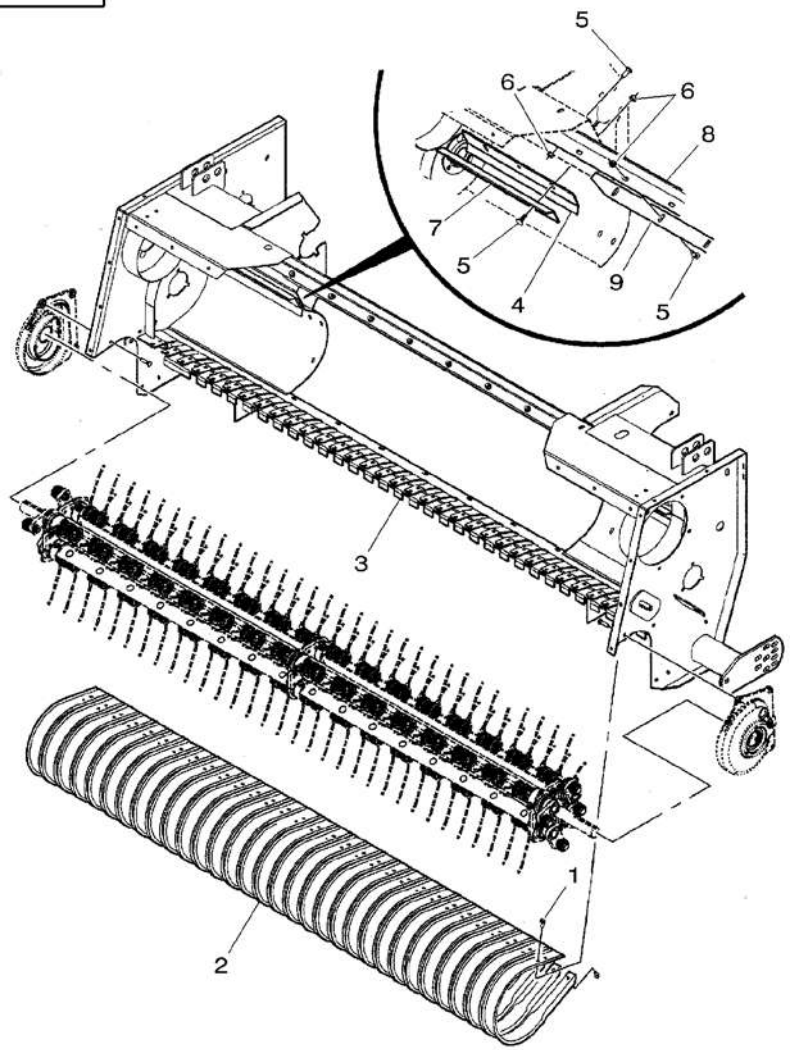

1*	*Y703132*	5/16"-18 X 3/4	**62**	BOLT	BOULON BULLONE	MASCH.SCHRAUBE PERNO
2*	***700129658P***		**31**	WRAPPER	COUVERTURE IMBALLATORE	UMSCHLAG ENVASE
3*	Y700163328		**1**	PICKUP	PICK UP RECUPERO	PICKUP RECOGEDORA
4*	700163348P		**2**	STRIPPER	DEBOURREUR SPOGLIATORE	ABSTREIFER DESBARBADOR
5*	*70922786*	3/8"-16 X 1	**18**	BOLT	BOULON BULLONE	MASCH.SCHRAUBE PERNO
6*	***700711238***	3/8"-16	**18**	NUT	ECROU DADO	MUTTER TUERCA
7*	700163349P		**2**	STRIPPER	DEBOURREUR SPOGLIATORE	ABSTREIFER DESBARBADOR
8*	700163346P		**1**	CHANNEL	CANAL PROFILATO	KANAL CANAL
9*	700163347P		**1**	STRIPPER	DEBOURREUR SPOGLIATORE	ABSTREIFER DESBARBADOR

Pick-Up	With Cutter
Pick-Up	Avec Couteau
Aufsammeltrommel	Mit Messer
Raccoglitore	Con Cuchillo
Recogedor	Con Coltello

20-65

➡ **HP 74100**

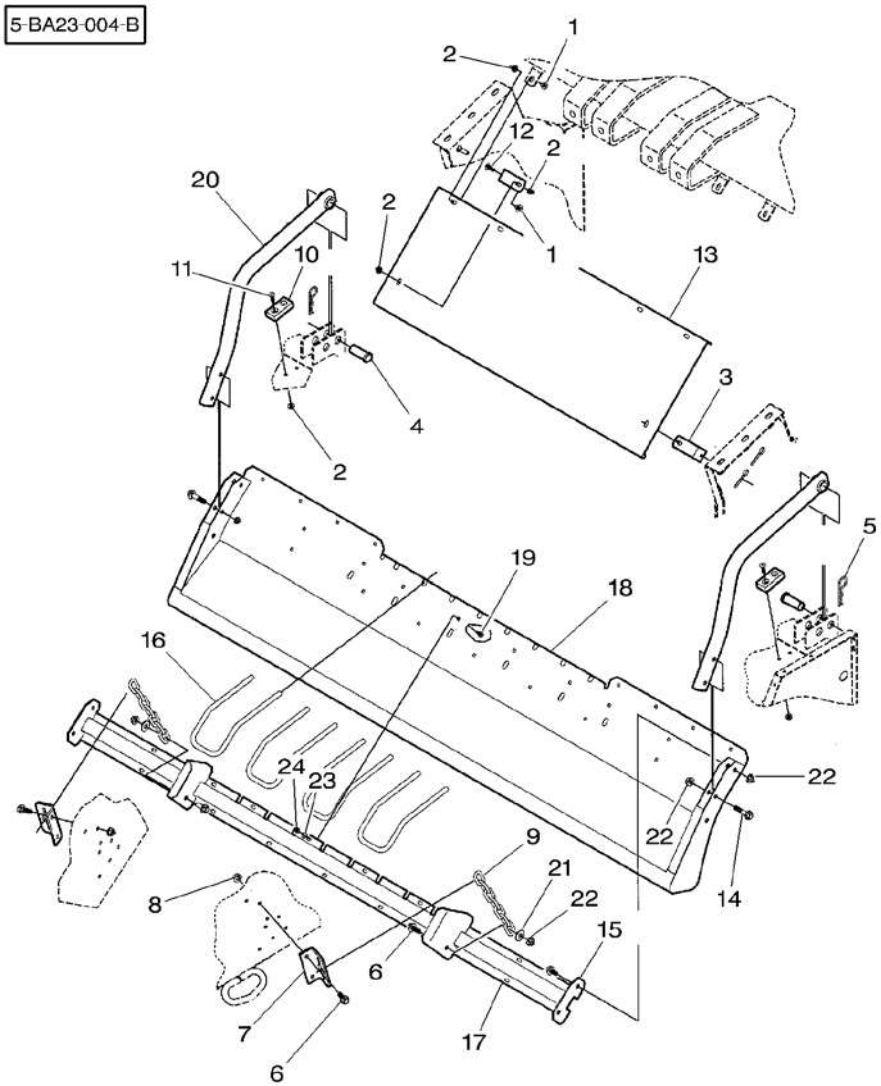

1	70922784	3/8"-16 X 3/4	6	BOLT	BOULON BULLONE	MASCH.SCHRAUBE PERNO
2	*Y704734*	3/8"-16	12	TOP LOCKNUT	ECROU FREIN DADO DI TESTA	SELBSTS.MUTTER CONTRATUERCA SUP
3*	700138989P		2	SUPPORT	SUPPORT SUPPORTO	LAGERUNG DISPOS.DE SOSTEN
4	63701	1" X 2-1/2	2	CLEVIS PIN	AXE PERNO D'ATTACCO	SPLINTBOLZEN BULON CILINDRICO
5	2514740W1		2	PIN	GOUPILLE PERNO	BOLZEN PASADOR
6	700710984	1/2"-13 X 1-1/4	6	SCREW	VIS VITE	SCHRAUBE TORNILLO
7*	700140014P		2	SUPPORT	SUPPORT SUPPORTO	LAGERUNG DISPOS.DE SOSTEN
8	700714586	1/2"-13	4	NUT	ECROU DADO	MUTTER TUERCA
9	700140026		1	CHAIN	CHAINE CATENA	KETTE CADENA
10	700720546		2	STOP	BUTEE STOP	ANSCHLAG PARO
11	*70934842*	3/8"-16 X 1-1/4	4	BOLT	BOULON BULLONE	MASCH.SCHRAUBE PERNO
12	*70922786*	3/8"-16 X 1	2	BOLT	BOULON BULLONE	MASCH.SCHRAUBE PERNO
13*	700139138P		1	PANEL	PANNEAU PANNELLO	VERKL.BLECH PANEL
14	700712882	1/2"-13 X 2-1/4	4	SCREW	VIS VITE	SCHRAUBE TORNILLO
15	7883424	1/2"-13 X 1	2	SCREW	VIS VITE	SCHRAUBE TORNILLO
16	700140018		4	STIRRUP	ETRIER STAFFA	BUEGEL ESTRIBO
17*	700139146P		1	SUPPORT	SUPPORT SUPPORTO	LAGERUNG DISPOS.DE SOSTEN
18*	700139141P		1	GUARD	GARDE PROTEZIONE	SCHUTZVORR DEFENSA
19	7700461	5/16"-18 X 3/4	15	BOLT	BOULON BULLONE	MASCH.SCHRAUBE PERNO
20*	700139207P		2	ARM	BRAS BRACCIO	ARM BRAZO
21*	355621X1	1/2"	2	WASHER	RONDELLE RONDELLA	UNTERLEGSCHEIBE ARANDELA
22*	*Y704742*	1/2"-13	8	TOP LOCKNUT	ECROU FREIN DADO DI TESTA	SELBSTS.MUTTER CONTRATUERCA SUP
23*	*Y705525*	5/16"	15	WASHER	RONDELLE RONDELLA	UNTERLEGSCHEIBE ARANDELA
24*	Y704015	5/16"-18	15	NUT	ECROU DADO	MUTTER TUERCA

Pick-Up	With Cutter
Pick-Up	Avec Couteau
Aufsammeltrommel	Mit Messer
Raccoglitore	Con Cuchillo
Recogedor	Con Coltello

20-70

➡ **HP 74101**

5-BA23-019-A

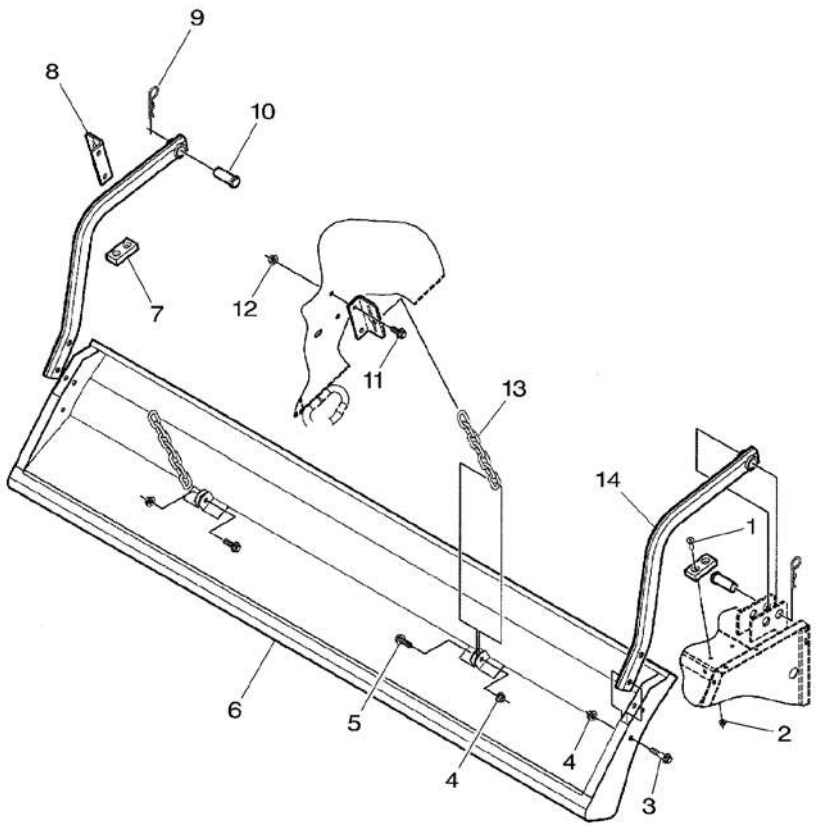

1 *	*70934842*	3/8"-16 X 1-1/4	4	BOLT	BOULON BULLONE	MASCH.SCHRAUBE PERNO
2 *	*700711238*	3/8"-16	4	NUT	ECROU DADO	MUTTER TUERCA
3 *	700712882	1/2"-13 X 2-1/4	4	SCREW	VIS VITE	SCHRAUBE TORNILLO
4 *	*Y704742*	1/2"-13	6	TOP LOCKNUT	ECROU FREIN DADO DI TESTA	SELBSTS.MUTTER CONTRATUERCA SUP
5 *	8701237	1/2"-13 X 1-1/2	2	SCREW	VIS VITE	SCHRAUBE TORNILLO
6 *	700163371P		1	GUARD	GARDE PROTEZIONE	SCHUTZVORR DEFENSA
7 *	700720546		2	STOP	BUTEE STOP	ANSCHLAG PARO
8 *	700140014P		2	SUPPORT	SUPPORT SUPPORTO	LAGERUNG DISPOS.DE SOSTEN
9 *	2514740W1		2	PIN	GOUPILLE PERNO	BOLZEN PASADOR
10 *	63701	1" X 2-1/2	2	CLEVIS PIN	AXE PERNO D'ATTACCO	SPLINTBOLZEN BULON CILINDRICO
11 *	700710984	1/2"-13 X 1-1/4	4	SCREW	VIS VITE	SCHRAUBE TORNILLO
12 *	700714586	1/2"-13	4	NUT	ECROU DADO	MUTTER TUERCA
13 *	700140026		2	CHAIN	CHAINE CATENA	KETTE CADENA
14 *	700161212P		2	ARM	BRAS BRACCIO	ARM BRAZO

Pick-Up Pick-Up Aufsammeltrommel Raccoglitore Recogedor	20-75	Suspension – Up To H.L 74197 Suspension – Jusqu'Au H.L 74197 Federung – Bis H.L 74197 Sospensione – Fino Alla H.L 74197 Suspension – Hasta H.L 74197

5-BA02-023-A

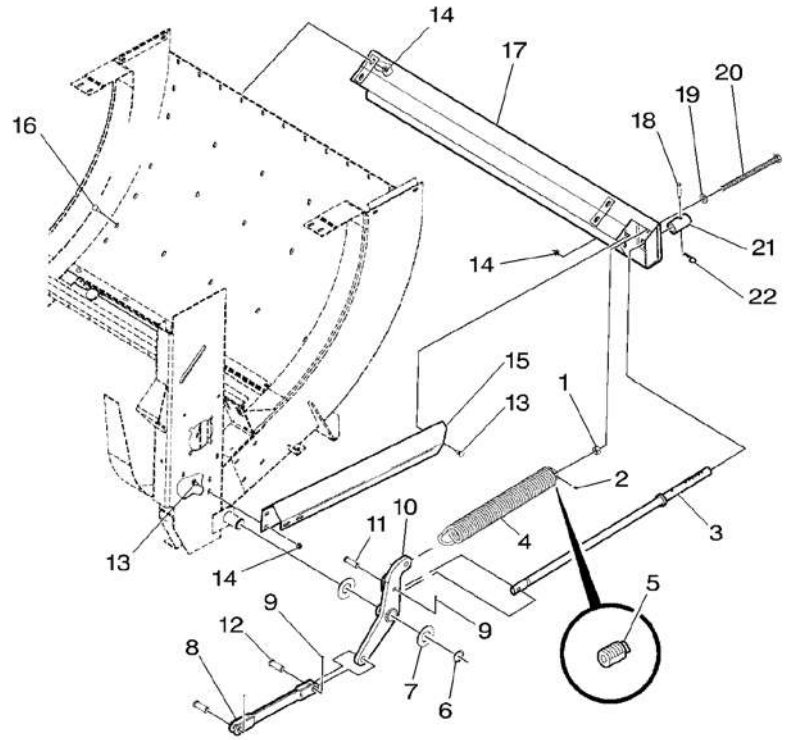

1*	375099X1	5/8"–11	1	NUT UNC	ECROU UNC DADO UNC	MUTTER UNC TUERCA UNC
2	***70923219***	1/4"–28	1	GREASER	GRAISSEUR INGRASSATORE	FETTNIPPEL ENGRASADOR
3*	700123446P		1	LINK	MAILLON MAGLIA	GLIED UNION
4*	***6522700P***		1	SPRING	RESSORT MOLLA	FEDER MUELLE
5*	6845879P	4	1	PLUG	BOUCHON TAPPO	VERSCHL.STOPFEN TAPON
6	1003115M1		1	CIRCLIP	CIRCLIP ANNELLO ELASTICO	SEEGERING GRAPA CIRCULAR
7	740522	1"–1/2 X 10	2	BUSH	BAGUE BOCCOLA	BUCHSE CASQUILLO
8*	700123444P		1	LINK	MAILLON MAGLIA	GLIED UNION
9*	354061X1	1/8" X 1–1/4	3	PIN	GOUPILLE PERNO	BOLZEN PASADOR
10*	700137784P		1	CRANK	MANIVELLE MANOVELLA	KURBEL MANIVELA
11*	63693	5/8" X 2	1	PIN	GOUPILLE PERNO	BOLZEN PASADOR
12	763177	3/4" X 2	2	CLEVIS PIN	AXE PERNO D'ATTACCO	SPLINTBOLZEN BULON CILINDRICO
13	70922784	3/8"–16 X 3/4	4	BOLT	BOULON BULLONE	MASCH.SCHRAUBE PERNO
14	***704247***	3/8"–16	8	LOCKNUT	ECROU BLOCAGE AUTOBLOCCANTE	FLACHMUTTER CONTRATUERCA
15*	700123321P		1	SUPPORT	SUPPORT SUPPORTO	LAGERUNG DISPOS.DE SOSTEN
16	70923220	3/8"–16 X 1–1/4	4	BOLT	BOULON BULLONE	MASCH.SCHRAUBE PERNO
17*	700137753P		1	SUPPORT	SUPPORT SUPPORTO	LAGERUNG DISPOS.DE SOSTEN
18	863381	3/8" X 2	1	CLEVIS PIN	AXE PERNO D'ATTACCO	SPLINTBOLZEN BULON CILINDRICO
19	Y705582	5/8"	1	WASHER	RONDELLE RONDELLA	UNTERLEGSCHEIBE ARANDELA
20	Y702282	5/8"–11 X 10	1	BOLT	BOULON BULLONE	MASCH.SCHRAUBE PERNO
21*	700113296P		1	COLLAR	COLLERETTE COLLARE	FLANSCHRING COLLAR
22	70936348		1	PIN	GOUPILLE PERNO	BOLZEN PASADOR

Pick-Up
Pick-Up
Aufsammeltrommel
Raccoglitore
Recogedor

20-80

Suspension – From H.L 74198
Suspension – A Partir Du H.L 74198
Federung – Ab H.L 74198
Sospensione – Dalla H.L 74198
Suspension – A Partir Del H.L 74198

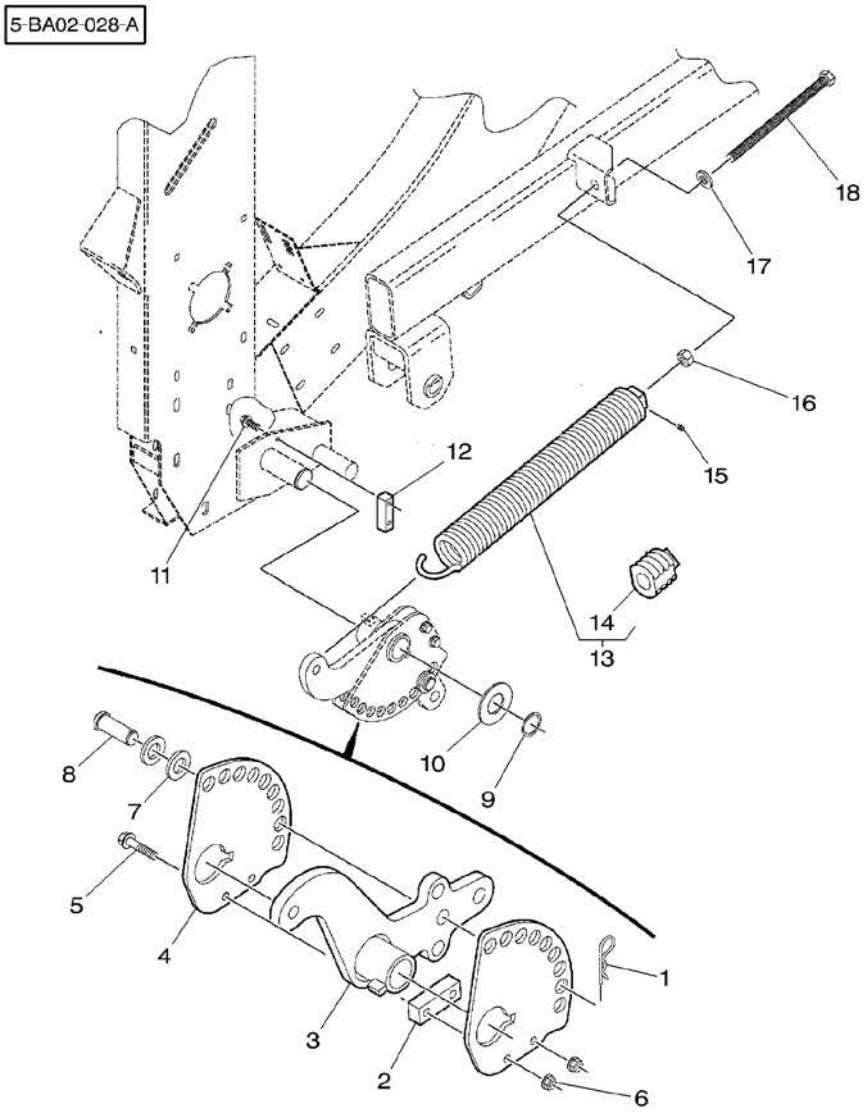

1	70936348		1	PIN	GOUPILLE PERNO	BOLZEN PASADOR
2	700140175		1	SPACER	ENTRETOISE DISTANZIALE	ABSTANDSTUECK PIEZA DISTANCIA
3*	700161905P		1	CRANK	MANIVELLE MANOVELLA	KURBEL MANIVELA
4*	700161907		2	PLATE	PLAQUE PIASTRA	PLATTE PLATO
5	700711134	3/8"-16 X 1-3/4	2	SCREW	VIS VITE	SCHRAUBE TORNILLO
6	***700711238***	3/8"-16	2	NUT	ECROU DADO	MUTTER TUERCA
7	Y705566	3/4"	2	WASHER	RONDELLE RONDELLA	UNTERLEGSCHEIBE ARANDELA
8	763177	3/4" X 2	1	CLEVIS PIN	AXE PERNO D'ATTACCO	SPLINTBOLZEN BULON CILINDRICO
9	1003115M1		1	CIRCLIP	CIRCLIP ANNELLO ELASTICO	SEEGERING GRAPA CIRCULAR
10	740522	1"-1/2 X 10	1	BUSH	BAGUE BOCCOLA	BUCHSE CASQUILLO
11	7703424	3/8"-16 X 1	2	SCREW	VIS VITE	SCHRAUBE TORNILLO
12*	700161903		1	STOP	BUTEE STOP	ANSCHLAG PARO
13*	***6522700P***		1	SPRING	RESSORT MOLLA	FEDER MUELLE
14*	6845879P	13	1	PLUG	BOUCHON TAPPO	VERSCHL.STOPFEN TAPON
15	***70923219***	1/4"-28	1	GREASER	GRAISSEUR INGRASSATORE	FETTNIPPEL ENGRASADOR
16*	375099X1	5/8"-11	1	NUT UNC	ECROU UNC DADO UNC	MUTTER UNC TUERCA UNC
17	Y705582	5/8"	1	WASHER	RONDELLE RONDELLA	UNTERLEGSCHEIBE ARANDELA
18	Y702282	5/8"-11 X 10	1	BOLT	BOULON BULLONE	MASCH.SCHRAUBE PERNO

Chain Drive
Transmission Par Chaine
Kettenantrieb
Trasmissione A Catena
Accionamiento Cadena

20-85

Left Side
Cote Gauche
Linke Seite
Lato Sinistro
Lado Izquierdo

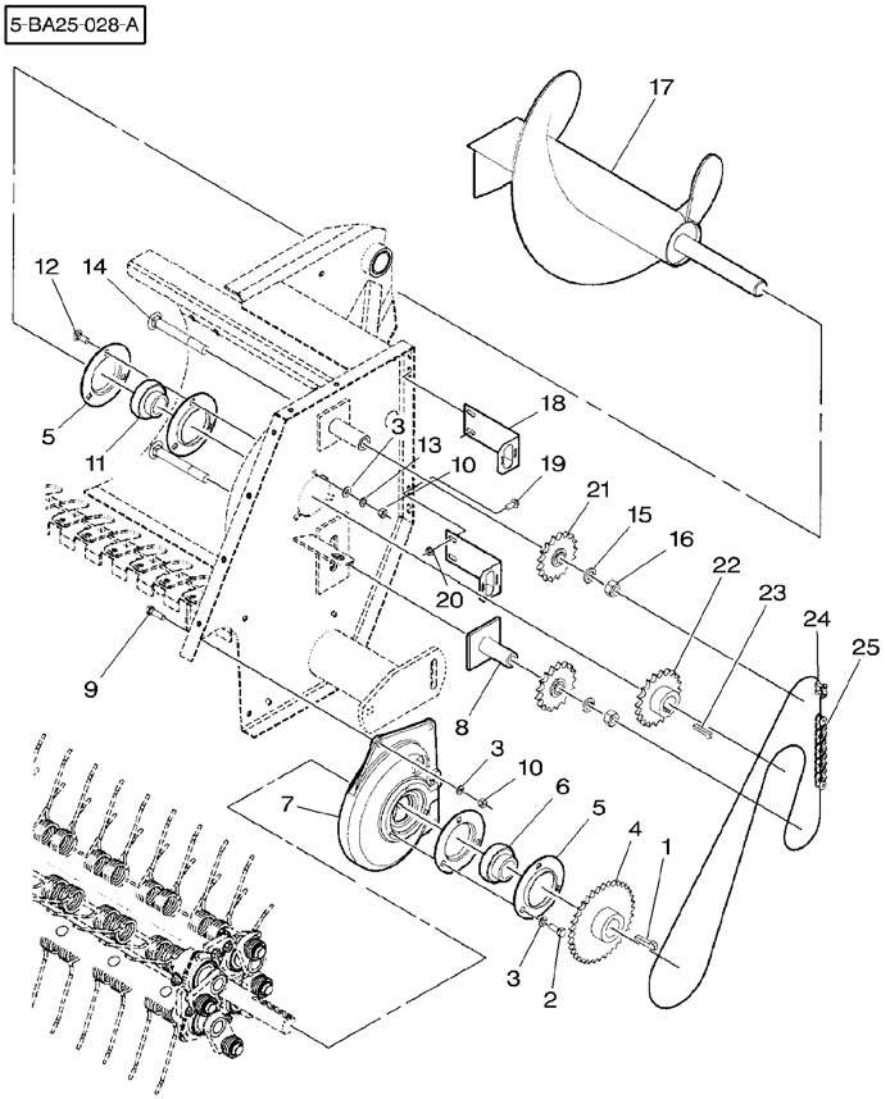

1	761213	5/16" X 1-1/2	1	KEY	CLAVETTE CHIAVETTA PASSKEIL CLAVE
2*	353691X1	3/8"-16 X 1	3	BOLT UNC	BOULON UNC BULLONE UNC MASCH.SCHRB.UNC PERNO UNC
3*	353434X1	3/8"	9	LOCK WASHER	RONDELLE FREIN ROSETTA ELASTICA FEDERRING ARANDELA GROWER
4*	700123773P		1	SPROCKET	BARBOTIN RUOTA MOTRICE KETTENRAD RUEDA DE CADENA
5*	*051417P*		4	FLANGE	FLASQUE FLANGIA FLANSCH PLETINA
6	*50021*		1	BEARING	COUSSINET CUSCINETTO LAGER COJINETE
7*	700137751P	◀	1	CAM	CAME CAMMA NOCKEN LEVA
8*	700108636P		1	SUPPORT	SUPPORT SUPPORTO LAGERUNG DISPOS.DE SOSTEN
9*	353693X1	3/8"-16 X 1-1/4	3	SCREW UNC	VIS UNC VITE UNC SCHRAUBE UNC TORNILLO UNC
10*	355566X1	3/8"-16	6	NUT UNC	ECROU UNC DADO UNC MUTTER UNC TUERCA UNC
11	*51292*		1	BEARING	COUSSINET CUSCINETTO LAGER COJINETE
12	*70922786*	3/8"-16 X 1	3	BOLT	BOULON BULLONE MASCH.SCHRAUBE PERNO
13	*Y705533*	3/8"	3	WASHER	RONDELLE RONDELLA UNTERLEGSCHEIBE ARANDELA
14	70924846	5/8"-11 X 5	2	BOLT	BOULON BULLONE MASCH.SCHRAUBE PERNO
15*	353433X1	5/8"	2	LOCK WASHER	RONDELLE FREIN ROSETTA ELASTICA FEDERRING ARANDELA GROWER
16*	375099X1	5/8"-11	2	NUT UNC	ECROU UNC DADO UNC MUTTER UNC TUERCA UNC
17*	700137718P	◀	1	AUGER	VIS SANS FIN COCLEA FOERDERSCHNECKE SINFIN
18*	700133129P		2	SUPPORT	SUPPORT SUPPORTO LAGERUNG DISPOS.DE SOSTEN
19	7883325	5/16"-18 X 3/4	4	SCREW	VIS VITE SCHRAUBE TORNILLO
20*	70931277	5/16"-18	4	LOCKNUT	ECROU BLOCAGE AUTOBLOCCANTE FLACHMUTTER CONTRATUERCA
21	*87973*		2	SPROCKET	BARBOTIN RUOTA MOTRICE KETTENRAD RUEDA DE CADENA
22	86439		1	SPROCKET	BARBOTIN RUOTA MOTRICE KETTENRAD RUEDA DE CADENA
23	Y61424	1/4" X 1-1/4	1	KEY	CLAVETTE CHIAVETTA PASSKEIL CLAVE
24*	*329264M91*		1	LINK	MAILLON MAGLIA GLIED UNION
25*	*1836103M91*	ASA50 -123LINK ◀▶ 5 M	1	ROLL OF CHAIN	ROULEAU CHAINE RULLO PER CATENA KETTE METERWARE CADENA 5M

Chain Drive	With Cutter	20-90	Left Side – Up To H.P 74100
Transmission Par Chaine	Avec Couteau		Cote Gauche – Jusqu'Au H.P 74100
Kettenantrieb	Mit Messer		Linke Seite – Bis H.P 74100
Trasmissione A Catena	Con Cuchillo		Lato Sinistro – Fino Alla H.P 74100
Accionamiento Cadena	Con Coltello		Lado Izquierdo – Hasta H.P 74100

5-BA32-001-A

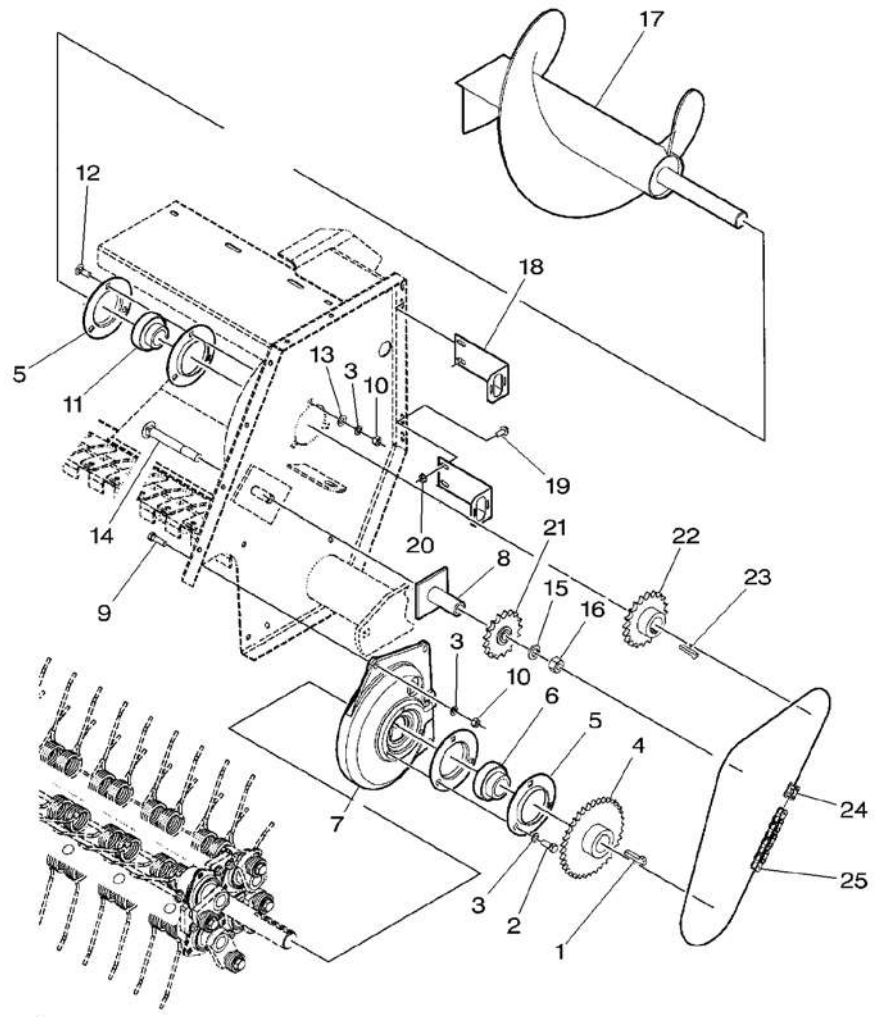

1	761213	5/16" X 1–1/2	1	KEY	CLAVETTE CHIAVETTA PASSKEIL CLAVE
2*	353691X1	3/8"–16 X 1	3	BOLT UNC	BOULON UNC BULLONE UNC MASCH.SCHRB.UNC PERNO UNC
3*	353434X1	3/8"	9	LOCK WASHER	RONDELLE FREIN ROSETTA ELASTICA FEDERRING ARANDELA GROWER
4*	700123773P		1	SPROCKET	BARBOTIN RUOTA MOTRICE KETTENRAD RUEDA DE CADENA
5*	***051417P***		4	FLANGE	FLASQUE FLANGIA FLANSCH PLETINA
6	*50021*		1	BEARING	COUSSINET CUSCINETTO LAGER COJINETE
7*	700137751P	◀	1	CAM	CAME CAMMA NOCKEN LEVA
8*	700108636P		1	SUPPORT	SUPPORT SUPPORTO LAGERUNG DISPOS.DE SOSTEN
9*	353693X1	3/8"–16 X 1–1/4	3	SCREW UNC	VIS UNC VITE UNC SCHRAUBE UNC TORNILLO UNC
10*	355566X1	3/8"–16	6	NUT UNC	ECROU UNC DADO UNC MUTTER UNC TUERCA UNC
11	*51292*		1	BEARING	COUSSINET CUSCINETTO LAGER COJINETE
12	*70922786*	3/8"–16 X 1	3	BOLT	BOULON BULLONE MASCH.SCHRAUBE PERNO
13	*Y705533*	3/8"	3	WASHER	RONDELLE RONDELLA UNTERLEGSCHEIBE ARANDELA
14*	70924846	5/8"–11 X 5	1	BOLT	BOULON BULLONE MASCH.SCHRAUBE PERNO
15*	353433X1	5/8"	1	LOCK WASHER	RONDELLE FREIN ROSETTA ELASTICA FEDERRING ARANDELA GROWER
16*	375099X1	5/8"–11	1	NUT UNC	ECROU UNC DADO UNC MUTTER UNC TUERCA UNC
17*	700139086P	◀	1	AUGER	VIS SANS FIN COCLEA FOERDERSCHNECKE SINFIN
18*	700133129P		2	SUPPORT	SUPPORT SUPPORTO LAGERUNG DISPOS.DE SOSTEN
19	7883325	5/16"–18 X 3/4	4	SCREW	VIS VITE SCHRAUBE TORNILLO
20	70931277	5/16"–18	4	LOCKNUT	ECROU BLOCAGE AUTOBLOCCANTE FLACHMUTTER CONTRATUERCA
21	***87973***		1	SPROCKET	BARBOTIN RUOTA MOTRICE KETTENRAD RUEDA DE CADENA
22	86439		1	SPROCKET	BARBOTIN RUOTA MOTRICE KETTENRAD RUEDA DE CADENA
23	Y61424	1/4" X 1–1/4	1	KEY	CLAVETTE CHIAVETTA PASSKEIL CLAVE
24*	***329264M91***	CONNECTOR	1	LINK	MAILLON MAGLIA GLIED UNION
24*	*329266M91*	OFFSET	1	CRANKED LINK	MAILLON COUDE MAGLIA INCLINATA GEKROEPFTESGLIED UNION ACODADA
25*	***1836103M91***	ASA50 – 75 LINK ◀▶ 5M	1	ROLL OF CHAIN	ROULEAU CHAINE RULLO PER CATENA KETTE METERWARE CADENA 5M

Chain Drive **Transmission Par Chaine** **Kettenantrieb** **Trasmissione A Catena** **Accionamiento Cadena**	**With Cutter** **Avec Couteau** **Mit Messer** **Con Cuchillo** **Con Coltello**	**20-95**	**Left Side – From H.P 74101** **Cote Gauche – A Partir Du H.P 74101** **Linke Seite – Ab H.P 74101** **Lato Sinistro – Dalla H.P 74101** **Lado Izquierdo – Despues H.P 74101**

5-BA32-003-A

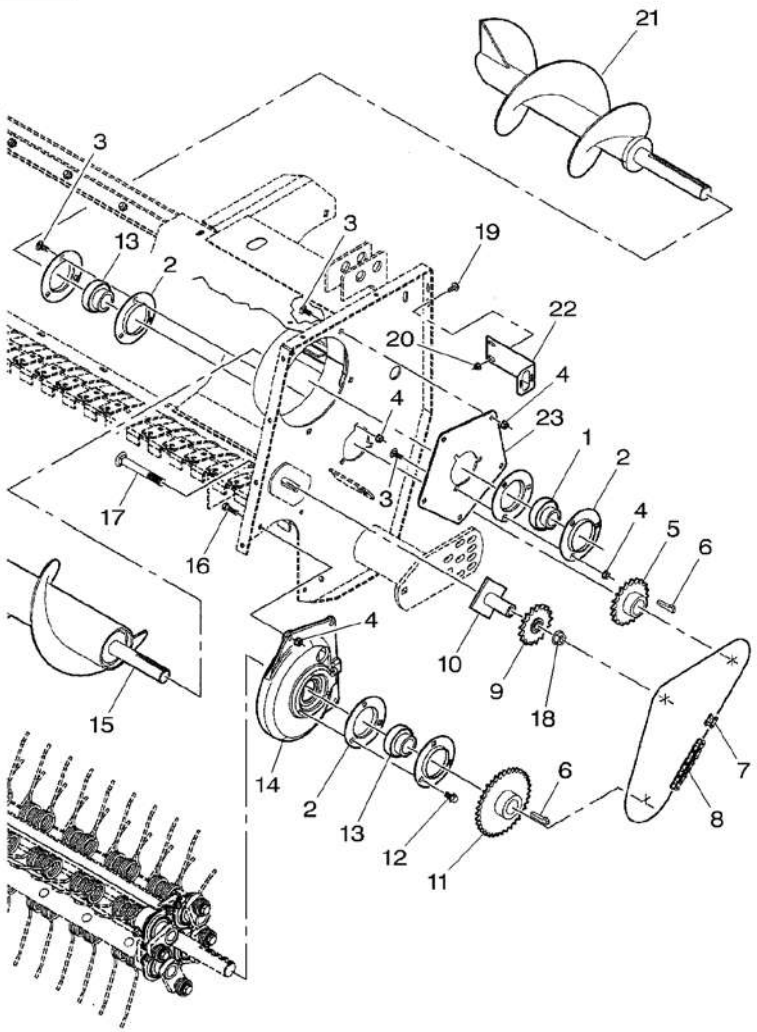

1 * *51292*		1	BEARING	COUSSINET CUSCINETTO	LAGER COJINETE
2 * ***051417P***		6	FLANGE	FLASQUE FLANGIA	FLANSCH PLETINA
3 * *70922786*	3/8"–16 X 1	11	BOLT	BOULON BULLONE	MASCH.SCHRAUBE PERNO
4 * ***700711238***	3/8"–16	14	NUT	ECROU DADO	MUTTER TUERCA
5 * 700721634		1	SPROCKET	BARBOTIN RUOTA MOTRICE	KETTENRAD RUEDA DE CADENA
6 * 761213	5/16" X 1–1/2	2	KEY	CLAVETTE CHIAVETTA	PASSKEIL CLAVE
7 * ***329264M91***		1	LINK	MAILLON MAGLIA	GLIED UNION
8 * ***1836103M91***	ASA 50 ◀▶ 5 M	1	ROLL OF CHAIN	ROULEAU CHAINE RULLO PER CATENA	KETTE METERWARE CADENA 5M
9 * ***87973***		1	SPROCKET	BARBOTIN RUOTA MOTRICE	KETTENRAD RUEDA DE CADENA
10 * 700108636P		1	SUPPORT	SUPPORT SUPPORTO	LAGERUNG DISPOS.DE SOSTEN
11 * 700123773P		1	SPROCKET	BARBOTIN RUOTA MOTRICE	KETTENRAD RUEDA DE CADENA
12 * ***7883374***	3/8"–16 X 3/4	3	SCREW	VIS VITE	SCHRAUBE TORNILLO
13 * *50021*		2	BEARING	COUSSINET CUSCINETTO	LAGER COJINETE
14 * 700137751P	◀	1	CAM	CAME CAMMA	NOCKEN LEVA
15 * 700163342P		1	AUGER	VIS SANS FIN COCLEA	FOERDERSCHNECKE SINFIN
16 * 353693X1	3/8"–16 X 1–1/4	3	SCREW UNC	VIS UNC VITE UNC	SCHRAUBE UNC TORNILLO UNC
17 * 70924846	5/8"–11 X 5	1	BOLT	BOULON BULLONE	MASCH.SCHRAUBE PERNO
18 * 7704919	5/8"–11	1	NUT	ECROU DADO	MUTTER TUERCA
19 * 7883325	5/16"–18 X 3/4	2	SCREW	VIS VITE	SCHRAUBE TORNILLO
20 * 70931277	5/16"–18	2	LOCKNUT	ECROU BLOCAGE AUTOBLOCCANTE	FLACHMUTTER CONTRATUERCA
21 * 700163334P	◀	1	AUGER	VIS SANS FIN COCLEA	FOERDERSCHNECKE SINFIN
22 * 700133129P		1	SUPPORT	SUPPORT SUPPORTO	LAGERUNG DISPOS.DE SOSTEN
23 * 700161046P		1	PLATE	PLAQUE PIASTRA	PLATTE PLATO

Chain Drive
Transmission Par Chaine
Kettenantrieb
Trasmissione A Catena
Accionamiento Cadena

20-100

Right Side
Cote Droit
Rechte Seite
Lato Destro
Lado Derecho

5-BA25-029-B

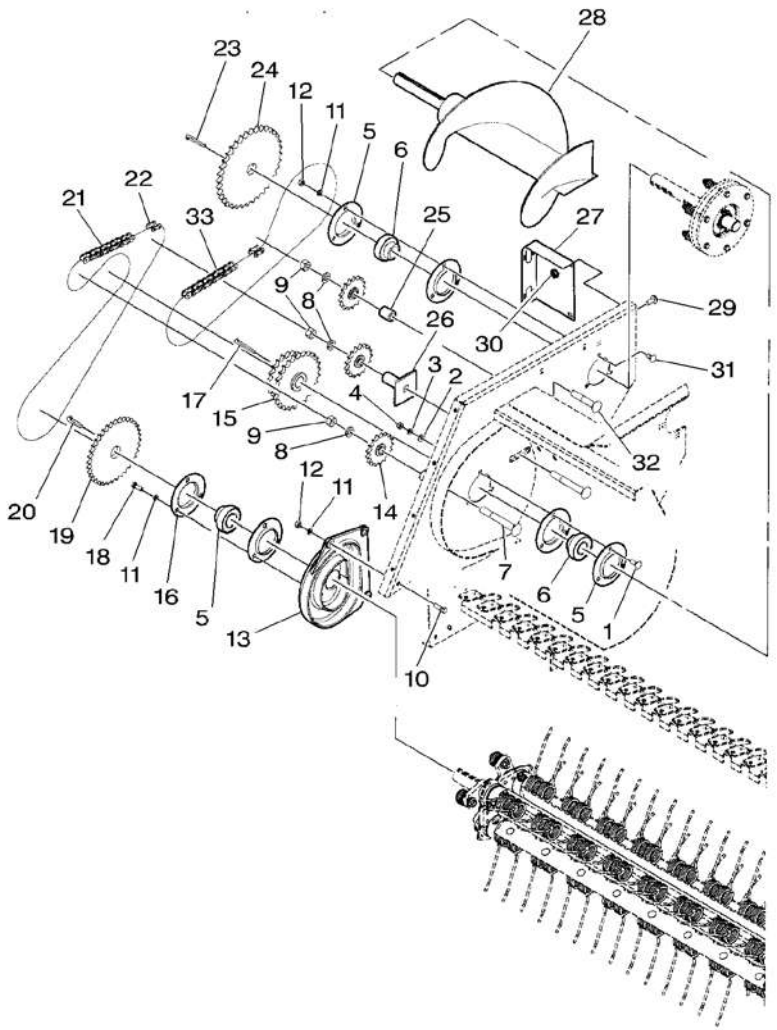

1	*70922786*	3/8"–16 X 1	**3** BOLT	BOULON BULLONE	MASCH.SCHRAUBE PERNO
2	*Y705533*	3/8"	**3** WASHER	RONDELLE RONDELLA	UNTERLEGSCHEIBE ARANDELA
3★	355566X1	3/8"–16	**3** NUT UNC	ECROU UNC DADO UNC	MUTTER UNC TUERCA UNC
4★	353434X1	3/8"	**3** LOCK WASHER	RONDELLE FREIN ROSETTA ELASTICA	FEDERRING ARANDELA GROWER
5★	***051417P***		**6** FLANGE	FLASQUE FLANGIA	FLANSCH PLETINA
6	*51292*		**2** BEARING	COUSSINET CUSCINETTO	LAGER COJINETE
7	70924846	5/8"–11 X 5	**2** BOLT	BOULON BULLONE	MASCH.SCHRAUBE PERNO
8★	353433X1	5/8"	**3** LOCK WASHER	RONDELLE FREIN ROSETTA ELASTICA	FEDERRING ARANDELA GROWER
9★	375099X1	5/8"–11	**3** NUT UNC	ECROU UNC DADO UNC	MUTTER UNC TUERCA UNC
10★	353693X1	3/8"–16 X 1–1/4	**3** SCREW UNC	VIS UNC VITE UNC	SCHRAUBE UNC TORNILLO UNC
11★	353434X1	3/8"	**9** LOCK WASHER	RONDELLE FREIN ROSETTA ELASTICA	FEDERRING ARANDELA GROWER
12★	355566X1	3/8"–16	**6** NUT UNC	ECROU UNC DADO UNC	MUTTER UNC TUERCA UNC
13★	700116125P		**1** TRACK	CHENILLE CINGOLO	LAUFKETTE RODADURA
14	***87726***		**3** SPROCKET	BARBOTIN RUOTA MOTRICE	KETTENRAD RUEDA DE CADENA
15★	700123775P		**1** SPROCKET	BARBOTIN RUOTA MOTRICE	KETTENRAD RUEDA DE CADENA
16	*50021*		**1** BEARING	COUSSINET CUSCINETTO	LAGER COJINETE
17	61978	1/4" X 2–1/2	**1** KEY	CLAVETTE CHIAVETTA	PASSKEIL CLAVE
18	353691X1	3/8"–16 X 1	**3** BOLT UNC	BOULON UNC BULLONE UNC	MASCH.SCHRB.UNC PERNO UNC
19★	700123774P		**1** SPROCKET	BARBOTIN RUOTA MOTRICE	KETTENRAD RUEDA DE CADENA
20	761213	5/16" X 1–1/2	**1** KEY	CLAVETTE CHIAVETTA	PASSKEIL CLAVE
21★	***1836104M91***	ASA60 – 105LINKS ◀▶ 5M	**1** ROLL OF CHAIN	ROULEAU CHAINE RULLO PER CATENA	KETTE METERWARE CADENA 5M
22★	*329277M91*	CONNECTOR	**2** LINK	MAILLON MAGLIA	GLIED UNION
22	*329420M91*	OFFSET	**2** CRANKED LINK	MAILLON COUDE MAGLIA INCLINATA	GEKROEPFTESGLIED UNION ACODADA
23★	61895	5/16" X 2–1/4	**1** KEY	CLAVETTE CHIAVETTA	PASSKEIL CLAVE
24★	700139181P		**1** SPROCKET	BARBOTIN RUOTA MOTRICE	KETTENRAD RUEDA DE CADENA
25★	6268494P		**1** SPACER	ENTRETOISE DISTANZIALE	ABSTANDSTUECK PIEZA DISTANCIA

Chain Drive
Transmission Par Chaine
Kettenantrieb
Trasmissione A Catena
Accionamiento Cadena

20-100

Right Side
Cote Droit
Rechte Seite
Lato Destro
Lado Derecho

5-BA25-029-B

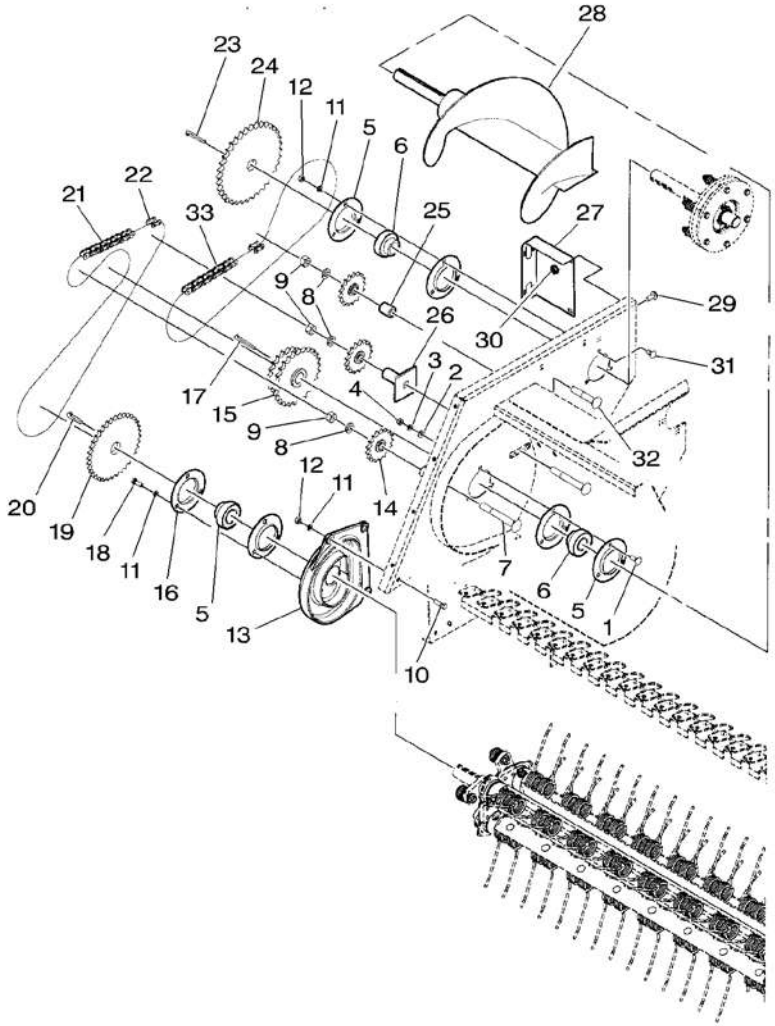

26*	700108636P		1	SUPPORT	SUPPORT SUPPORTO LAGERUNG DISPOS.DE SOSTEN
27*	700161289P		1	SUPPORT	SUPPORT SUPPORTO LAGERUNG DISPOS.DE SOSTEN
28*	700137719P	▶	1	AUGER	VIS SANS FIN COCLEA FOERDERSCHNECKE SINFIN
29	7883325	5/16"-18 X 3/4	2	SCREW	VIS VITE SCHRAUBE TORNILLO
30*	70931277	5/16"-18	2	LOCKNUT	ECROU BLOCAGE AUTOBLOCCANTE FLACHMUTTER CONTRATUERCA
31	70922784	3/8"-16 X 3/4	3	BOLT	BOULON BULLONE MASCH.SCHRAUBE PERNO
32	364988X1	5/8"-11 X 3-1/2	1	BOLT UNC	BOULON UNC BULLONE UNC MASCH.SCHRB.UNC PERNO UNC
33*	*1836104M91*	ASA60 - 81 LINKS ◀▶ 5M	1	ROLL OF CHAIN	ROULEAU CHAINE RULLO PER CATENA KETTE METERWARE CADENA 5M

Chain Drive **Transmission Par Chaine** **Kettenantrieb** **Trasmissione A Catena** **Accionamiento Cadena**	**With Cutter** **Avec Couteau** **Mit Messer** **Con Cuchillo** **Con Coltello**	**20-105**	**Right Side – Up To H.P 74100** **Cote Droit – Jusqu'Au H.P 74100** **Rechte Seite – Bis H.P 74100** **Lado Destra – Fino Alla H.P 74100** **Lado Derecho – Hasta H.P 74100**

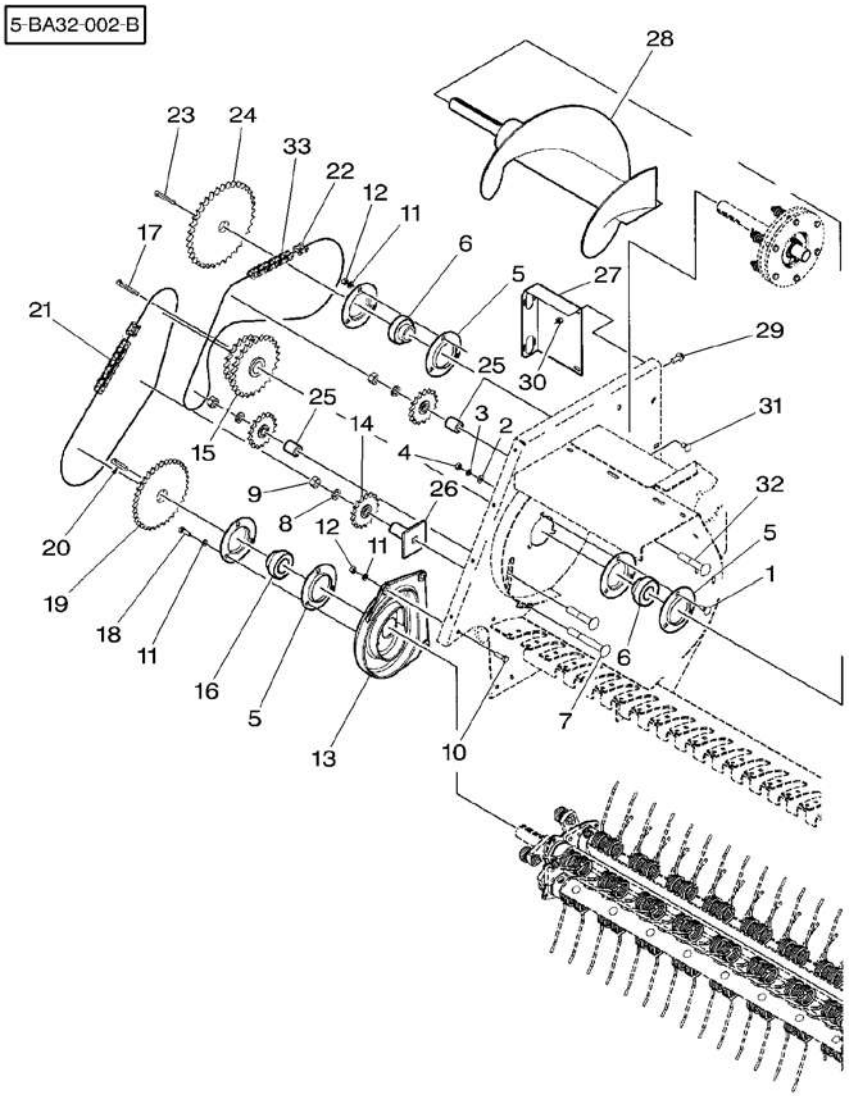

1★ *70922786*	3/8"–16 X 1	**3** BOLT	BOULON BULLONE	MASCH.SCHRAUBE PERNO
2★ *Y705533*	3/8"	**3** WASHER	RONDELLE RONDELLA	UNTERLEGSCHEIBE ARANDELA
3★ 355566X1	3/8"–16	**3** NUT UNC	ECROU UNC DADO UNC	MUTTER UNC TUERCA UNC
4★ 353434X1	3/8"	**3** LOCK WASHER	RONDELLE FREIN ROSETTA ELASTICA	FEDERRING ARANDELA GROWER
5★ ***051417P***		**6** FLANGE	FLASQUE FLANGIA	FLANSCH PLETINA
6 *51292*		**2** BEARING	COUSSINET CUSCINETTO	LAGER COJINETE
7★ 70924846	5/8"–11 X 5	**2** BOLT	BOULON BULLONE	MASCH.SCHRAUBE PERNO
8★ 353433X1	5/8"	**3** LOCK WASHER	RONDELLE FREIN ROSETTA ELASTICA	FEDERRING ARANDELA GROWER
9★ 375099X1	5/8"–11	**3** NUT UNC	ECROU UNC DADO UNC	MUTTER UNC TUERCA UNC
10★ 353693X1	3/8"–16 X 1–1/4	**3** SCREW UNC	VIS UNC VITE UNC	SCHRAUBE UNC TORNILLO UNC
11★ 353434X1	3/8"	**9** LOCK WASHER	RONDELLE FREIN ROSETTA ELASTICA	FEDERRING ARANDELA GROWER
12★ 355566X1	3/8"–16	**6** NUT UNC	ECROU UNC DADO UNC	MUTTER UNC TUERCA UNC
13★ 700116125P		**1** TRACK	CHENILLE CINGOLO	LAUFKETTE RODADURA
14 ***87726***		**3** SPROCKET	BARBOTIN RUOTA MOTRICE	KETTENRAD RUEDA DE CADENA
15★ 700140059P		**1** SPROCKET	BARBOTIN RUOTA MOTRICE	KETTENRAD RUEDA DE CADENA
16 *50021*		**1** BEARING	COUSSINET CUSCINETTO	LAGER COJINETE
17 61978	1/4" X 2–1/2	**1** KEY	CLAVETTE CHIAVETTA	PASSKEIL CLAVE
18★ 353691X1	3/8"–16 X 1	**3** BOLT UNC	BOULON UNC BULLONE UNC	MASCH.SCHRB.UNC PERNO UNC
19★ 700123774P		**1** SPROCKET	BARBOTIN RUOTA MOTRICE	KETTENRAD RUEDA DE CADENA
20 761213	5/16" X 1–1/2	**1** KEY	CLAVETTE CHIAVETTA	PASSKEIL CLAVE
21★ ***1836104M91***	ASA60 – 67LINKS ◀▶ 5M	**1** ROLL OF CHAIN	ROULEAU CHAINE RULLO PER CATENA	KETTE METERWARE CADENA 5M
22★ *329277M91*	ASA60–CONNECTOR	**2** LINK	MAILLON MAGLIA	GLIED UNION
22★ *329420M91*	ASA60 – OFFSET	**2** CRANKED LINK	MAILLON COUDE MAGLIA INCLINATA	GEKROEPFTESGLIED UNION ACODADA
23 61895	5/16" X 2–1/4	**1** KEY	CLAVETTE CHIAVETTA	PASSKEIL CLAVE
24★ 700139181P		**1** SPROCKET	BARBOTIN RUOTA MOTRICE	KETTENRAD RUEDA DE CADENA
25★ 6268494P		**1** SPACER	ENTRETOISE DISTANZIALE	ABSTANDSTUECK PIEZA DISTANCIA

Chain Drive **Transmission Par Chaine** **Kettenantrieb** **Trasmissione A Catena** **Accionamiento Cadena**	**With Cutter** **Avec Couteau** **Mit Messer** **Con Cuchillo** **Con Coltello**	**20-105**	**Right Side – Up To H.P 74100** **Cote Droit – Jusqu'Au H.P 74100** **Rechte Seite – Bis H.P 74100** **Lado Destra – Fino Alla H.P 74100** **Lado Derecho – Hasta H.P 74100**

5-BA32-002-B

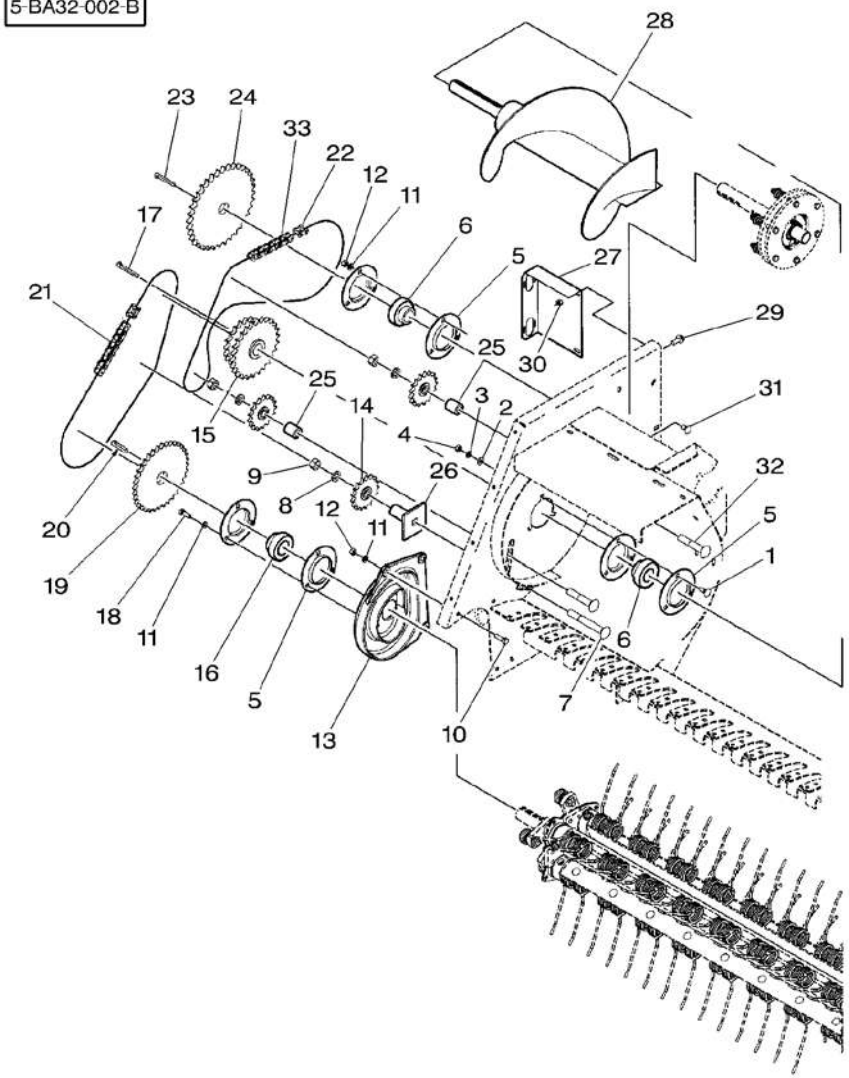

26*	700108636P		1 SUPPORT	SUPPORT SUPPORTO	LAGERUNG DISPOS.DE SOSTEN
27*	700161289P		1 SUPPORT	SUPPORT SUPPORTO	LAGERUNG DISPOS.DE SOSTEN
28*	700139090P	▶	1 AUGER	VIS SANS FIN COCLEA	FOERDERSCHNECKE SINFIN
29	7883325	5/16"–18 X 3/4	2 SCREW	VIS VITE	SCHRAUBE TORNILLO
30*	70931277	5/16"–18	2 LOCKNUT	ECROU BLOCAGE AUTOBLOCCANTE	FLACHMUTTER CONTRATUERCA
31	70922784	3/8"–16 X 3/4	3 BOLT	BOULON BULLONE	MASCH.SCHRAUBE PERNO
32	364988X1	5/8"–11 X 3–1/2	1 BOLT UNC	BOULON UNC BULLONE UNC	MASCH.SCHRB.UNC PERNO UNC
33*	*1836104M91*	ASA60 – 85 LINKS ◀▶ 5M	1 ROLL OF CHAIN	ROULEAU CHAINE RULLO PER CATENA	KETTE METERWARE CADENA 5M

Chain Drive Transmission Par Chaine Kettenantrieb Trasmissione A Catena Accionamiento Cadena	With Cutter Avec Couteau Mit Messer Con Cuchillo Con Coltello	20-110	Right Side – From H.P 74101 Cote Droit – A Partir Du H.P 74101 Rechte Seite – Ab H.P 74101 Lato Destro – Dalla H.P 74101 Lado Derecho – Despues H.P 74101

5-BA32-004-A

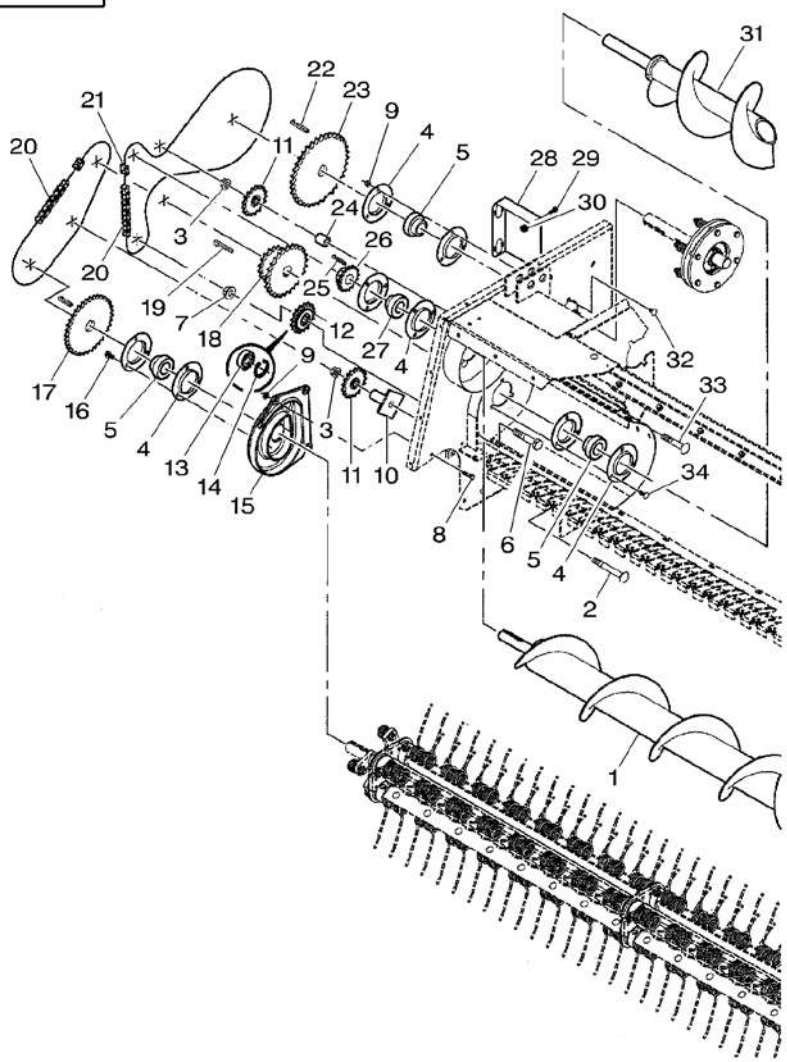

1 ✱	700163342P		1 AUGER	VIS SANS FIN COCLEA	FOERDERSCHNECKE SINFIN
2 ✱	70924846	5/8"–11 X 5	1 BOLT	BOULON BULLONE	MASCH.SCHRAUBE PERNO
3 ✱	7704919	5/8"–11	2 NUT	ECROU DADO	MUTTER TUERCA
4 ✱	***051417P***		8 FLANGE	FLASQUE FLANGIA	FLANSCH PLETINA
5 ✱	*50021*		3 BEARING	COUSSINET CUSCINETTO	LAGER COJINETE
6 ✱	354722X1	3/4"–10 X 3–1/2	1 BOLT UNC	BOULON UNC BULLONE UNC	MASCH.SCHRB.UNC PERNO UNC
7 ✱	700703923	3/4"–10	1 TOP LOCKNUT	ECROU FREIN DADO DI TESTA	SELBSTS.MUTTER CONTRATUERCA SUP
8 ✱	353693X1	3/8"–16 X 1–1/4	3 SCREW UNC	VIS UNC VITE UNC	SCHRAUBE UNC TORNILLO UNC
9 ✱	***700711238***	3/8"–16	12 NUT	ECROU DADO	MUTTER TUERCA
10 ✱	700108636P		1 SUPPORT	SUPPORT SUPPORTO	LAGERUNG DISPOS.DE SOSTEN
11 ✱	***87726***		2 SPROCKET	BARBOTIN RUOTA MOTRICE	KETTENRAD RUEDA DE CADENA
12 ✱	700161036P		1 SPROCKET	BARBOTIN RUOTA MOTRICE	KETTENRAD RUEDA DE CADENA
13 ✱	***712604***	12	1 BEARING	COUSSINET CUSCINETTO	LAGER COJINETE
14 ✱	***70925993***	12	1 CLIP	CLIP FERMAGLIO	SCHELLE CRAPA RETEN
15 ✱	700116125P		1 TRACK	CHENILLE CINGOLO	LAUFKETTE RODADURA
16 ✱	***7883374***	3/8"–16 X 3/4	3 SCREW	VIS VITE	SCHRAUBE TORNILLO
17 ✱	700123774P		1 SPROCKET	BARBOTIN RUOTA MOTRICE	KETTENRAD RUEDA DE CADENA
18 ✱	700161070P		1 SPROCKET	BARBOTIN RUOTA MOTRICE	KETTENRAD RUEDA DE CADENA
19 ✱	61390	5/16" X 2–1/2	1 KEY	CLAVETTE CHIAVETTA	PASSKEIL CLAVE
20 ✱	***1836104M91***	◀▶ 5 M	2 ROLL OF CHAIN	ROULEAU CHAINE RULLO PER CATENA	KETTE METERWARE CADENA 5M
21 ✱	*329277M91*	ASA 60	2 LINK	MAILLON MAGLIA	GLIED UNION
22 ✱	61895	5/16" X 2–1/4	1 KEY	CLAVETTE CHIAVETTA	PASSKEIL CLAVE
23 ✱	700161045P		1 SPROCKET	BARBOTIN RUOTA MOTRICE	KETTENRAD RUEDA DE CADENA
24 ✱	6268494P		1 SPACER	ENTRETOISE DISTANZIALE	ABSTANDSTUECK PIEZA DISTANCIA
25 ✱	***Y61952***	1/4" X 1–3/4	1 KEY	CLAVETTE CHIAVETTA	PASSKEIL CLAVE
26 ✱	7850399		1 SPROCKET	BARBOTIN RUOTA MOTRICE	KETTENRAD RUEDA DE CADENA

Chain Drive **Transmission Par Chaine** **Kettenantrieb** **Trasmissione A Catena** **Accionamiento Cadena**	**With Cutter** **Avec Couteau** **Mit Messer** **Con Cuchillo** **Con Coltello**	**20-110**	**Right Side – From H.P 74101** **Cote Droit – A Partir Du H.P 74101** **Rechte Seite – Ab H.P 74101** **Lato Destro – Dalla H.P 74101** **Lado Derecho – Despues H.P 74101**

5-BA32-004-A

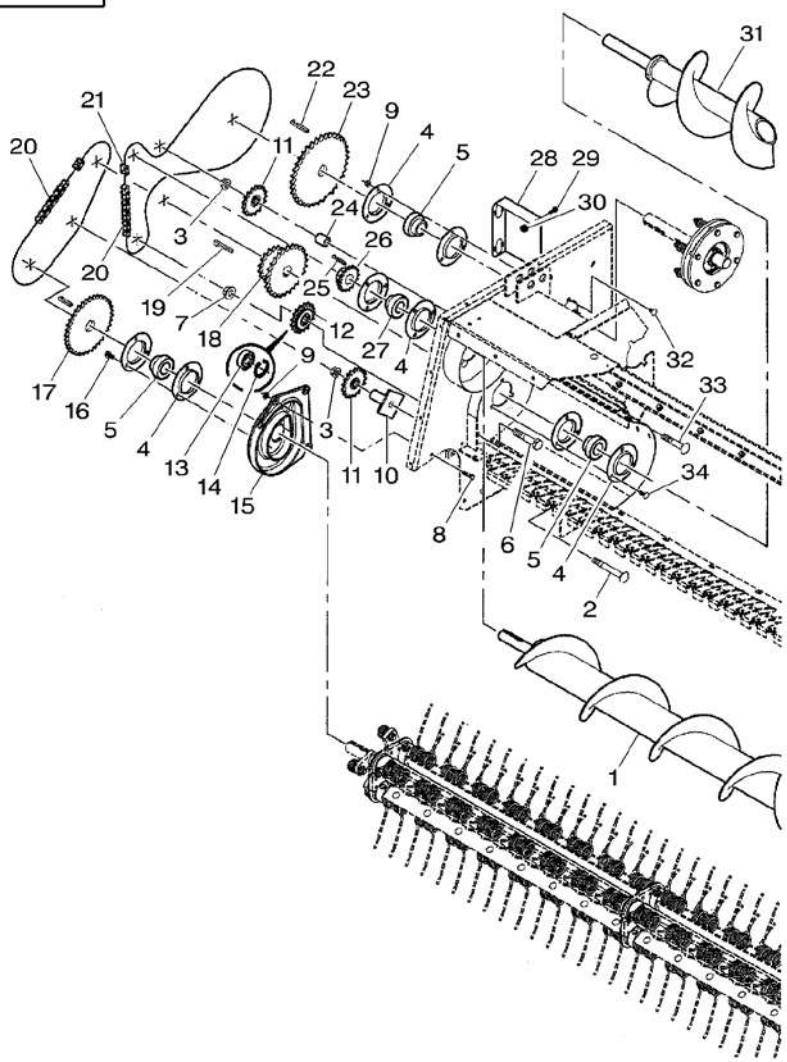

27✱	*51292*		**1** BEARING	COUSSINET CUSCINETTO	LAGER COJINETE
28✱	700161289P		**1** SUPPORT	SUPPORT SUPPORTO	LAGERUNG DISPOS.DE SOSTEN
29✱	7883325	5/16"–18 X 3/4	**2** SCREW	VIS VITE	SCHRAUBE TORNILLO
30✱	70931277	5/16"–18	**2** LOCKNUT	ECROU BLOCAGE AUTOBLOCCANTE	FLACHMUTTER CONTRATUERCA
31✱	700163340P	▶	**1** AUGER	VIS SANS FIN COCLEA	FOERDERSCHNECKE SINFIN
32✱	70922784	3/8"–16 X 3/4	**3** BOLT	BOULON BULLONE	MASCH.SCHRAUBE PERNO
33✱	364988X1	5/8"–11 X 3–1/2	**1** BOLT UNC	BOULON UNC BULLONE UNC	MASCH.SCHRB.UNC PERNO UNC
34✱	*70922786*	3/8"–16 X 1	**6** BOLT	BOULON BULLONE	MASCH.SCHRAUBE PERNO

Clutch Embrayage Kupplung Frizione Embraque	20-115	Pickup – Up To H.L 74155 Pickup – Jusqu'Au H.L 74155 Pickup – Bis H.L 74155 Recupero – Fino Alla H.L 74155 Recogedora – Hasta H.L 74155

5-BA18-008-B

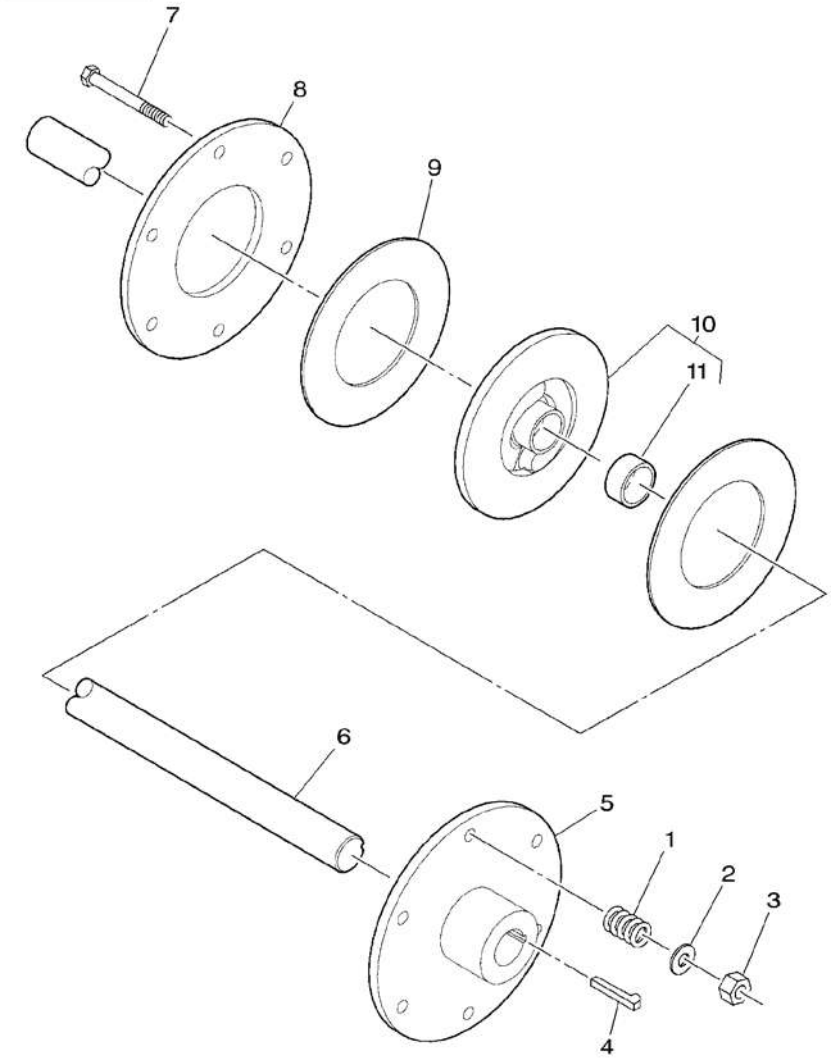

1*	*58107B*		6 SPRING	RESSORT MOLLA	FEDER MUELLE
2*	355619X1	3/8"	6 WASHER	RONDELLE RONDELLA	UNTERLEGSCHEIBE ARANDELA
3*	366573X1	3/8"–16	6 LOCKNUT	ECROU BLOCAGE AUTOBLOCCANTE	FLACHMUTTER CONTRATUERCA
4*	61622	1/4" X 1–1/2	1 KEY	CLAVETTE CHIAVETTA	PASSKEIL CLAVE
5*	700108661P		1 PLATE	PLAQUE PIASTRA	PLATTE PLATO
6	700137780		1 SHAFT	ARBRE ALBERO	WELLE ARBOL
7*	353898X1	3/8"–16 X 3–1/4	6 BOLT UNC	BOULON UNC BULLONE UNC	MASCH.SCHRB.UNC PERNO UNC
8*	392464P		1 PLATE	PLAQUE PIASTRA	PLATTE PLATO
9	*700711025*		2 DISC	DISQUE DISCO	SCHEIBE DISCO
10*	700108665P		1 CLUTCH	EMBRAYAGE FRIZIONE	SCHALTKUPPLUNG EMBRAGUE
11	Y852749	10	1 BUSH	BAGUE BOCCOLA	BUCHSE CASQUILLO

Clutch
Embrayage
Kupplung
Frizione
Embraque

20-120

Pickup – From H.L 74156 – Up To H.M 74235
Pickup – A Partir Du H.L 74156 – Jusqu'Au H.M 74235
Pickup – Ab H.L 74156 – Bis H.M 74235
Recupero – Dalla H.L 74156 – Fino Alla H.M 74235
Recogedora – Despues H.L 74156 – Hasta H.M 74235

5-BA18-011-A

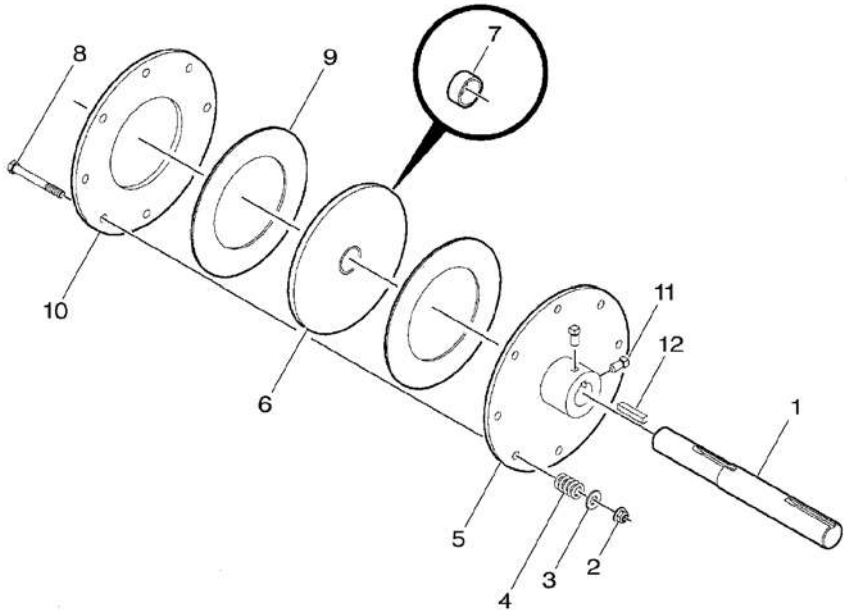

1*	700139148P		1	SHAFT	ARBRE ALBERO	WELLE ARBOL
2*	***Y704734***	3/8"–16	8	TOP LOCKNUT	ECROU FREIN DADO DI TESTA	SELBSTS.MUTTER CONTRATUERCA SUP
3*	355619X1	3/8"	8	WASHER	RONDELLE RONDELLA	UNTERLEGSCHEIBE ARANDELA
4*	***58107B***		8	SPRING	RESSORT MOLLA	FEDER MUELLE
5*	700138243P		1	PLATE	PLAQUE PIASTRA	PLATTE PLATO
6*	700161318P		1	CLUTCH	EMBRAYAGE FRIZIONE	SCHALTKUPPLUNG EMBRAGUE
7*	Y852749	6	1	BUSH	BAGUE BOCCOLA	BUCHSE CASQUILLO
8*	353898X1	3/8"–16 X 3–1/4	8	BOLT UNC	BOULON UNC BULLONE UNC	MASCH.SCHRB.UNC PERNO UNC
9*	***700710945***		2	CLUTCH DISC	DISQUE EMBRAYAGE DISCO FRIZIONE	KUPPLUNGSSCHEIBE DISCO DE EMBRAGU
10*	700138246P		1	PLATE	PLAQUE PIASTRA	PLATTE PLATO
11*	70920469	3/8"–16 X 3/4	2	SETSCREW	VIS DE BLOCAGE INSIEME VITI	STELLSCHRAUBE TORNILLO AJUSTE
12*	Y61556	5/16" X 1–3/4	1	KEY	CLAVETTE CHIAVETTA	PASSKEIL CLAVE

Clutch Embrayage Kupplung Frizione Embraque	20-125	Pickup – From H.M 74236 Pickup – A Partir Du H.M 74236 Pickup – Ab H.M 74236 Recupero – Dalla H.M 74236 Recogedora – Despues H.M 74236

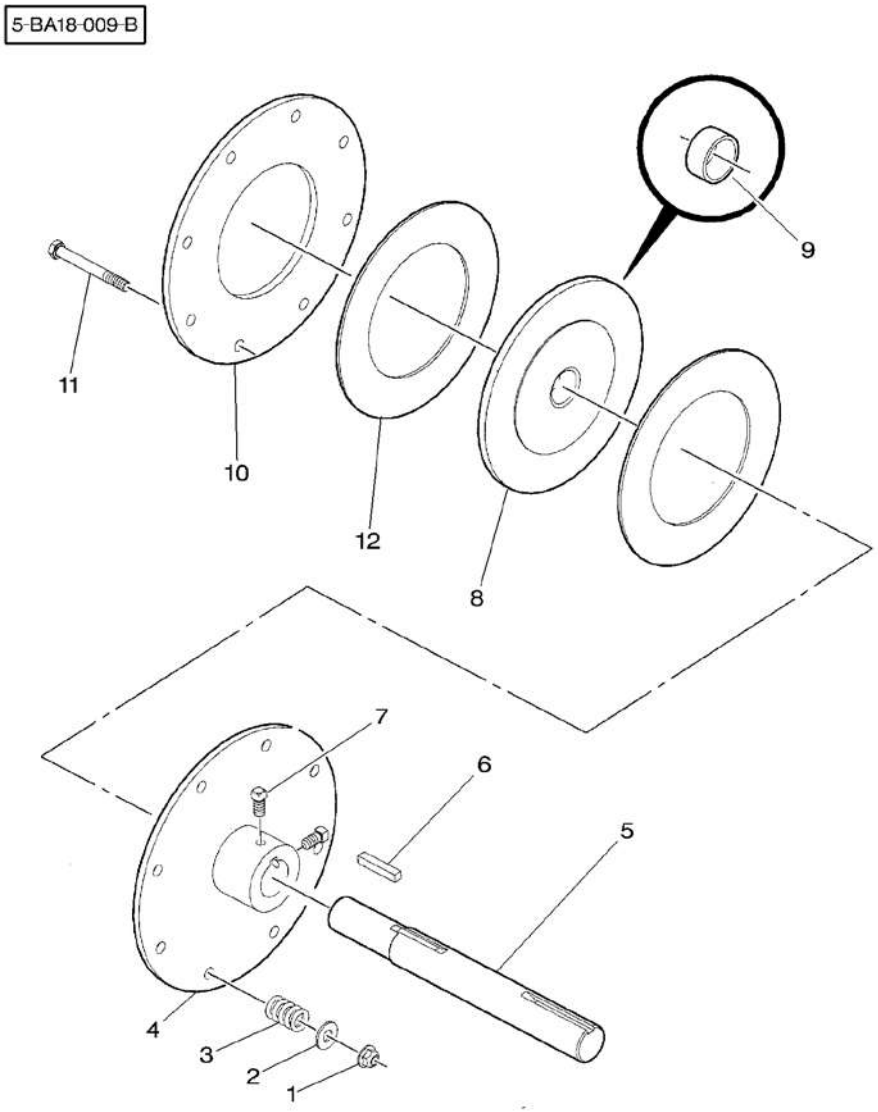

1*	*Y704734*	3/8"–16	8	TOP LOCKNUT	ECROU FREIN DADO DI TESTA	SELBSTS.MUTTER CONTRATUERCA SUP
2*	355619X1	3/8"	8	WASHER	RONDELLE RONDELLA	UNTERLEGSCHEIBE ARANDELA
3*	*58107B*		8	SPRING	RESSORT MOLLA	FEDER MUELLE
4*	700161206P		1	PLATE	PLAQUE PIASTRA	PLATTE PLATO
5*	700139324		1	SHAFT	ARBRE ALBERO	WELLE ARBOL
6*	Y61556	5/16" X 1–3/4	1	KEY	CLAVETTE CHIAVETTA	PASSKEIL CLAVE
7*	70920469	3/8"–16 X 3/4	2	SETSCREW	VIS DE BLOCAGE INSIEME VITI	STELLSCHRAUBE TORNILLO AJUSTE
8*	700161318P		1	CLUTCH	EMBRAYAGE FRIZIONE	SCHALTKUPPLUNG EMBRAGUE
9*	Y852749	8	1	BUSH	BAGUE BOCCOLA	BUCHSE CASQUILLO
10*	700138246P		1	PLATE	PLAQUE PIASTRA	PLATTE PLATO
11*	353898X1	3/8"–16 X 3–1/4	8	BOLT UNC	BOULON UNC BULLONE UNC	MASCH.SCHRB.UNC PERNO UNC
12*	*700710945*		2	CLUTCH DISC	DISQUE EMBRAYAGE DISCO FRIZIONE	KUPPLUNGSSCHEIBE DISCO DE EMBRAGU

Chain Drive Transmission Par Chaine Kettenantrieb Trasmissione A Catena Accionamiento Cadena	20-130	Rotor Rotor Rotor Rotore Rotor

5-BA25-030-A

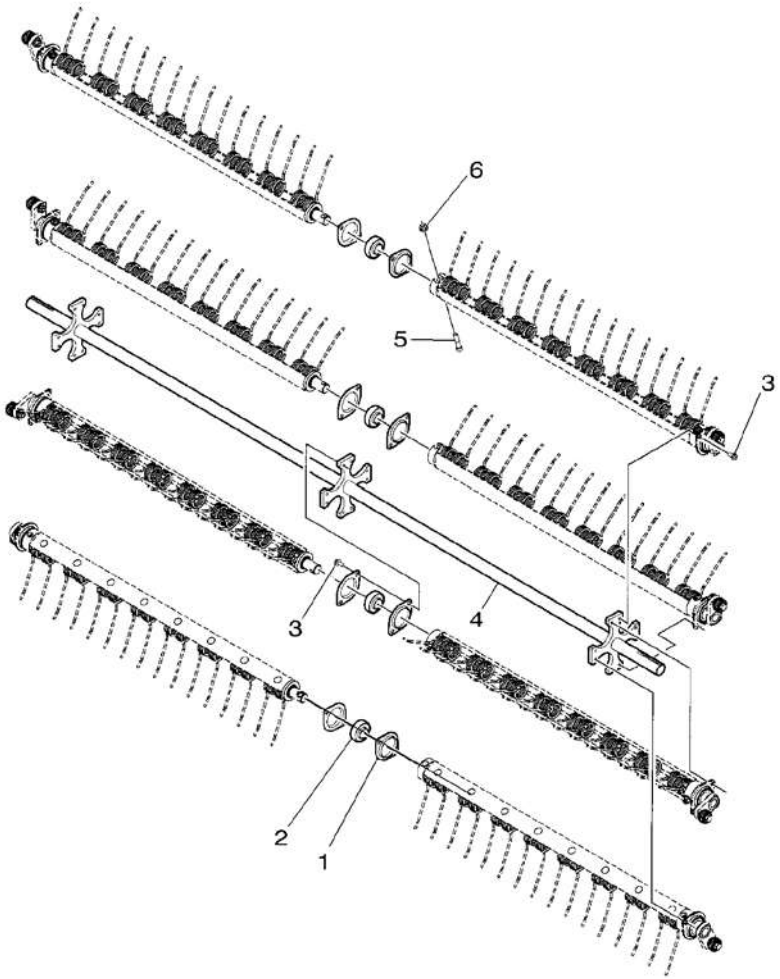

1	*Y710293*		**8** FLANGE	FLASQUE FLANGIA	FLANSCH PLETINA
2	*70590704*		**4** BEARING	COUSSINET CUSCINETTO	LAGER COJINETE
3*	*7883374*	3/8"–16 X 3/4	**24** SCREW	VIS VITE	SCHRAUBE TORNILLO
4*	700137726P		**1** ROTOR	ROTOR ROTORE	ROTOR ROTOR
5*	771022	7/16"–14 X 2–1/4	**4** BOLT	BOULON BULLONE	MASCH.SCHRAUBE PERNO
6*	Y704452	7/16"–14	**4** NUT	ECROU DADO	MUTTER TUERCA

Chain Drive Transmission Par Chaine Kettenantrieb Trasmissione A Catena Accionamiento Cadena	20-135	Rotor Rotor Rotor Rotore Rotor

5-BA25-031-A

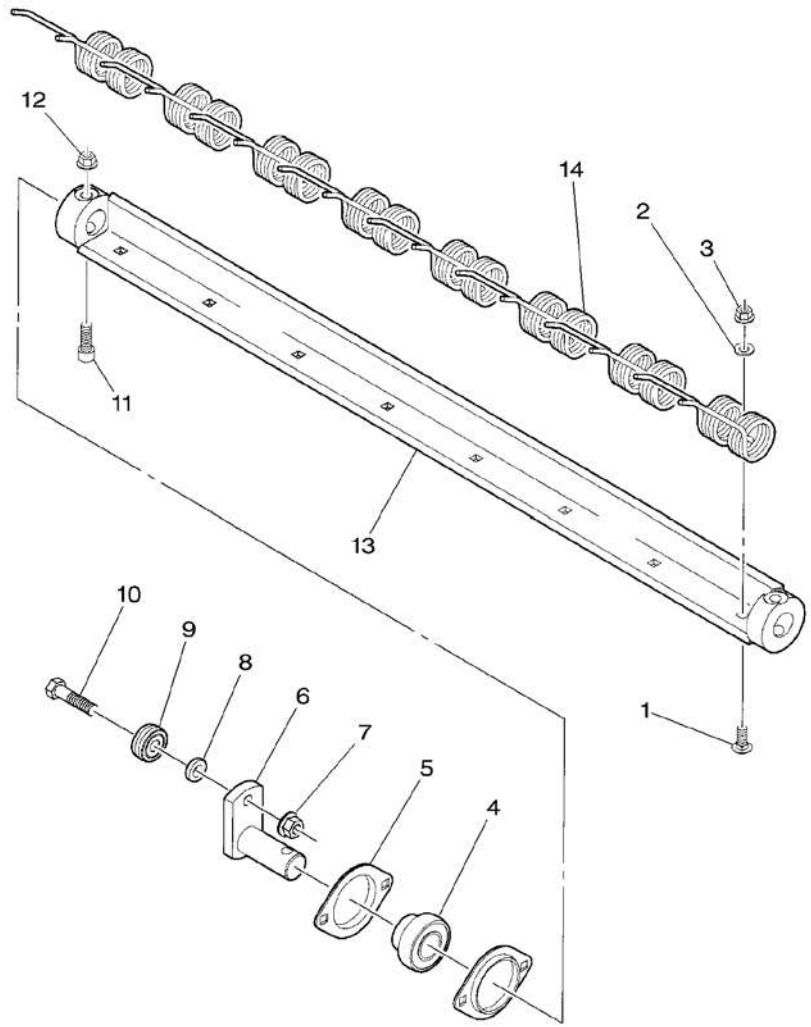

1*	70922786	3/8"–16 X 1	8	BOLT	BOULON BULLONE MASCH.SCHRAUBE PERNO
2*	Y705533	3/8"	8	WASHER	RONDELLE RONDELLA UNTERLEGSCHEIBE ARANDELA
3*	Y704734	3/8"–16	8	TOP LOCKNUT	ECROU FREIN DADO DI TESTA SELBSTS.MUTTER CONTRATUERCA SUP
4	70590709		1	BEARING ASSY	ROULEMENT CUSCINETTO COMPL RADIALLAGER RODAMIENTO RAD
5	Y710293		2	FLANGE	FLASQUE FLANGIA FLANSCH PLETINA
6*	700137747P		1	CRANK	MANIVELLE MANOVELLA KURBEL MANIVELA
7*	700707867	1/2"–20	1	LOCKNUT	ECROU BLOCAGE AUTOBLOCCANTE FLACHMUTTER CONTRATUERCA
8*	700137750P		1	SPACER	ENTRETOISE DISTANZIALE ABSTANDSTUECK PIEZA DISTANCIA
9	700720050		1	BEARING	COUSSINET CUSCINETTO LAGER COJINETE
10*	700716158	1/2"–20 X 2	1	BOLT	BOULON BULLONE MASCH.SCHRAUBE PERNO
11*	771022	7/16"–14 X 2–1/4	1	BOLT	BOULON BULLONE MASCH.SCHRAUBE PERNO
12*	Y704452	7/16"–14	1	NUT	ECROU DADO MUTTER TUERCA
13*	700137732P	◀	1	ANGLE	EQUERRE ANGOLO WINKEL ANGULO
13*	700137733P	▶	1	ANGLE	EQUERRE ANGOLO WINKEL ANGULO
14	700716132		8	TINE	DENT A RESSORT DENTE ELASTICO ZINKE DIENTE

Shields
Garants
Schutzbleche
Difese
Proteccionee

20-140

Left Side
Cote Gauche
Linke Seite
Lato Sinistro
Lado Izquierdo

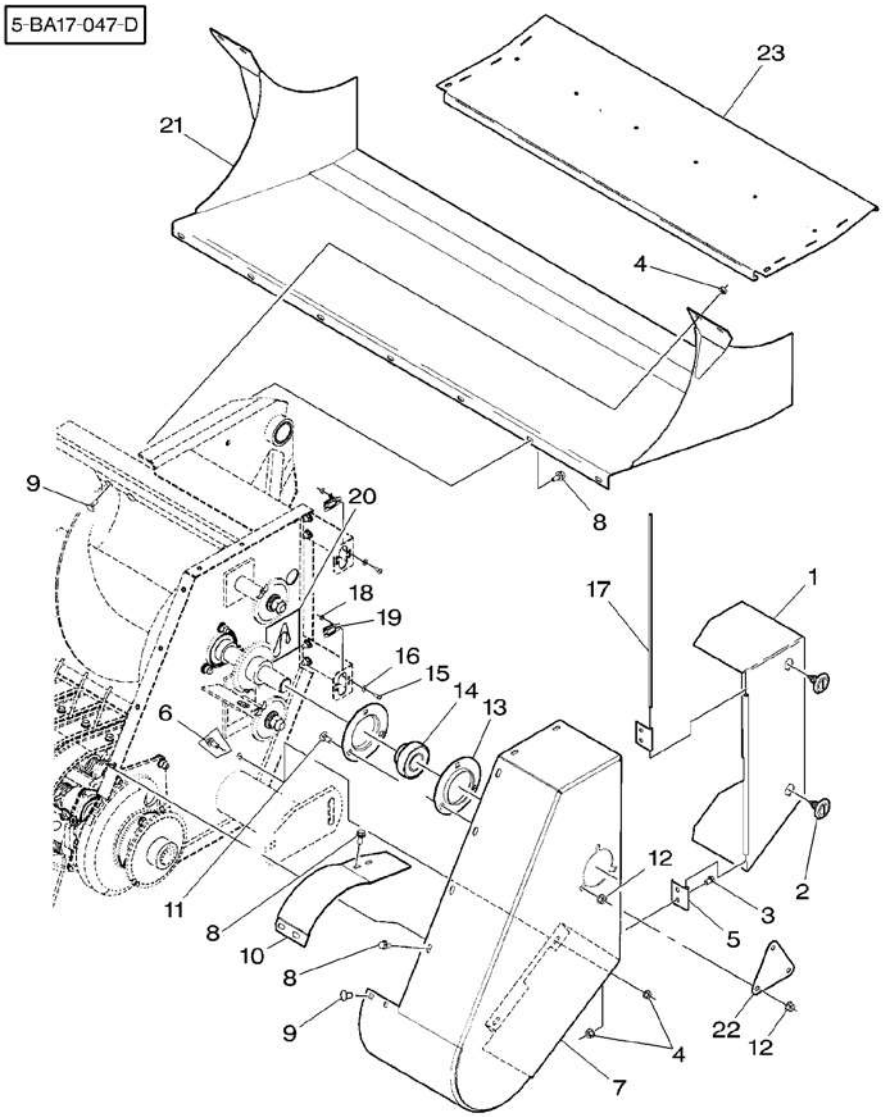

1*	700133120P	◀	1	SHIELD	TOLE RIPARO SCHILD BLINDAJE
2	***700714528***		2	LATCH	VERROU SALISCENDI RIEGEL CERROJO
3*	353675X1	5/16"–18 X 1/2	4	BOLT UNC	BOULON UNC BULLONE UNC MASCH.SCHRB.UNC PERNO UNC
4*	70931277	5/16"–18	12	LOCKNUT	ECROU BLOCAGE AUTOBLOCCANTE FLACHMUTTER CONTRATUERCA
5*	700163299		4	SUPPORT	SUPPORT SUPPORTO LAGERUNG DISPOS.DE SOSTEN
6	7883325	5/16"–18 X 3/4	2	SCREW	VIS VITE SCHRAUBE TORNILLO
7*	700153333P	◀	1	PANEL	PANNEAU PANNELLO VERKL.BLECH PANEL
8	***Y703132***	5/16"–18 X 3/4	15	BOLT	BOULON BULLONE MASCH.SCHRAUBE PERNO
9*	364352X1	5/16"–18 X 3/4	6	BOLT UNC	BOULON UNC BULLONE UNC MASCH.SCHRB.UNC PERNO UNC
10*	700137766P	◀	1	WRAPPER	COUVERTURE IMBALLATORE UMSCHLAG ENVASE
11*	70922784	3/8"–16 X 3/4	3	BOLT	BOULON BULLONE MASCH.SCHRAUBE PERNO
11*	70923220	3/8"–16 X 1–1/4	3	BOLT	BOULON BULLONE MASCH.SCHRAUBE PERNO
12*	***700711238***	3/8"–16	6	NUT	ECROU DADO MUTTER TUERCA
13*	***051417P***		2	FLANGE	FLASQUE FLANGIA FLANSCH PLETINA
14	*51292*		1	BEARING	COUSSINET CUSCINETTO LAGER COJINETE
15	700700628	No 10–24 X 1/2	4	SCREW	VIS VITE SCHRAUBE TORNILLO
16	70917380	No 10	4	WASHER	RONDELLE RONDELLA UNTERLEGSCHEIBE ARANDELA
17	6474316		1	PIN	GOUPILLE PERNO BOLZEN PASADOR
18*	70926673	No 10–24	4	NUT	ECROU DADO MUTTER TUERCA
19	***700714529***		2	RECEIVER	RECEVEUR RICEVITORE EMPFAENGER RECEPTOR
20	700711094	◀	1	DECAL	DECALCOMANIE DECALCOMANIA AUFKLEBER CALCOMANIA
21*	700157778P		1	CHUTE	DESCENTE SCARICO AUSWURFSCHACHT CAIDA
22*	700139682P		1	COVER	COUVERCLE COPERCHIO DECKEL CUBIERTA
23*	700139049P		1	PAN	RECEPTEUR COPPA AUFFANGWANNE CUBA

Shields	**With Cutter**	
Garants	**Avec Couteau**	
Schutzbleche	**Mit Messer**	
Difese	**Con Cuchillo**	
Proteccionee	**Con Coltello**	

20-145

Left Side – Up To H.M 74235
Cote Gauche – Jusqu'Au H.M 74235
Linke Seite – Bis H.M 74235
Lato Sinistro – Fino Alla H.M 74235
Lado Izquierdo – Hasta H.M 74235

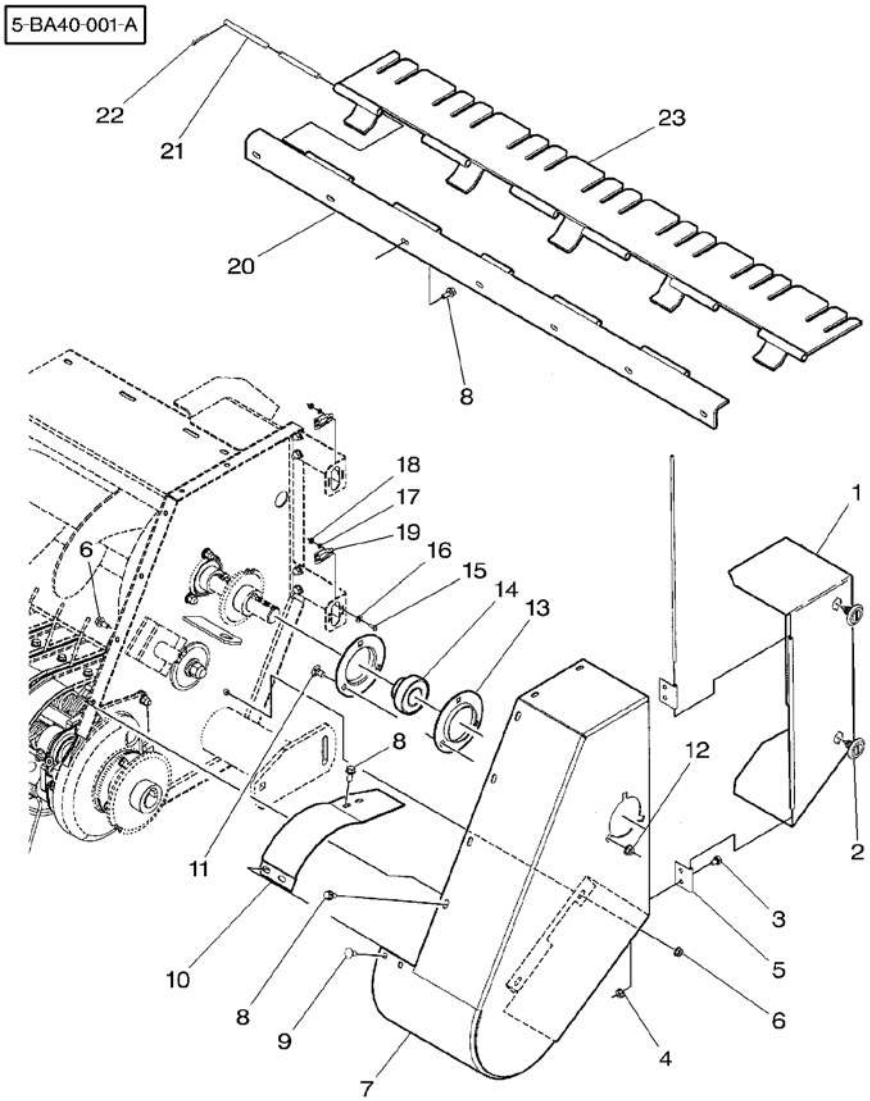

1*	700138138P	◀	1	SHIELD	TOLE RIPARO	SCHILD BLINDAJE
2	***700714528***		2	LATCH	VERROU SALISCENDI	RIEGEL CERROJO
3	353675X1	5/16"–18 X 1/2	4	BOLT UNC	BOULON UNC BULLONE UNC	MASCH.SCHRB.UNC PERNO UNC
4	70931277	5/16"–18	8	LOCKNUT	ECROU BLOCAGE AUTOBLOCCANTE	FLACHMUTTER CONTRATUERCA
5*	700161288		4	SUPPORT	SUPPORT SUPPORTO	LAGERUNG DISPOS.DE SOSTEN
6	7883325	5/16"–18 X 3/4	2	SCREW	VIS VITE	SCHRAUBE TORNILLO
7*	700153333P	◀	1	PANEL	PANNEAU PANNELLO	VERKL.BLECH PANEL
8	***Y703132***	5/16"–18 X 3/4	9	BOLT	BOULON BULLONE	MASCH.SCHRAUBE PERNO
9	364352X1	5/16"–18 X 3/4	2	BOLT UNC	BOULON UNC BULLONE UNC	MASCH.SCHRB.UNC PERNO UNC
10*	700137766P	◀	1	WRAPPER	COUVERTURE IMBALLATORE	UMSCHLAG ENVASE
11	70922784	3/8"–16 X 3/4	3	BOLT	BOULON BULLONE	MASCH.SCHRAUBE PERNO
12	***700711238***	3/8"–16	3	NUT	ECROU DADO	MUTTER TUERCA
13*	***051417P***		2	FLANGE	FLASQUE FLANGIA	FLANSCH PLETINA
14	*51292*		1	BEARING	COUSSINET CUSCINETTO	LAGER COJINETE
15	700700628	No 10–24 X 1/2	4	SCREW	VIS VITE	SCHRAUBE TORNILLO
16	70917380	No 10	4	WASHER	RONDELLE RONDELLA	UNTERLEGSCHEIBE ARANDELA
17*	353445X1	No 10	4	LOCK WASHER	RONDELLE FREIN ROSETTA ELASTICA	FEDERRING ARANDELA GROWER
18	***Y704072***	No 10–24	4	NUT	ECROU DADO	MUTTER TUERCA
19	***700714529***		2	RECEIVER	RECEVEUR RICEVITORE	EMPFAENGER RECEPTOR
20*	700139193P		1	ANGLE	EQUERRE ANGOLO	WINKEL ANGULO
21	700139192		1	ROD	TRINGLE ASTA	STANGE VARILLA
22	354070X1	5/32" X 1–1/4	2	PIN	GOUPILLE PERNO	BOLZEN PASADOR
23*	700139195P		1	PAN	RECEPTEUR COPPA	AUFFANGWANNE CUBA

Shields	**With Cutter**	
Garants	**Avec Couteau**	
Schutzbleche	**Mit Messer**	**20-150**
Difese	**Con Cuchillo**	
Proteccionee	**Con Coltello**	

Left Side – From H.M 74236 – Up To H.P 74100
Cote Gauche – A Partir Du H.M 74236 – Jusqu'Au H.P 74100
Linke Seite – Ab H.M 74236 – Bis H.P 74100
Lato Sinistro – Dalla H.M 74236 – Fino Alla H.P 74100
Lado Izquierdo – A Partir Del H.M 74236 – Hasta H.P 74100

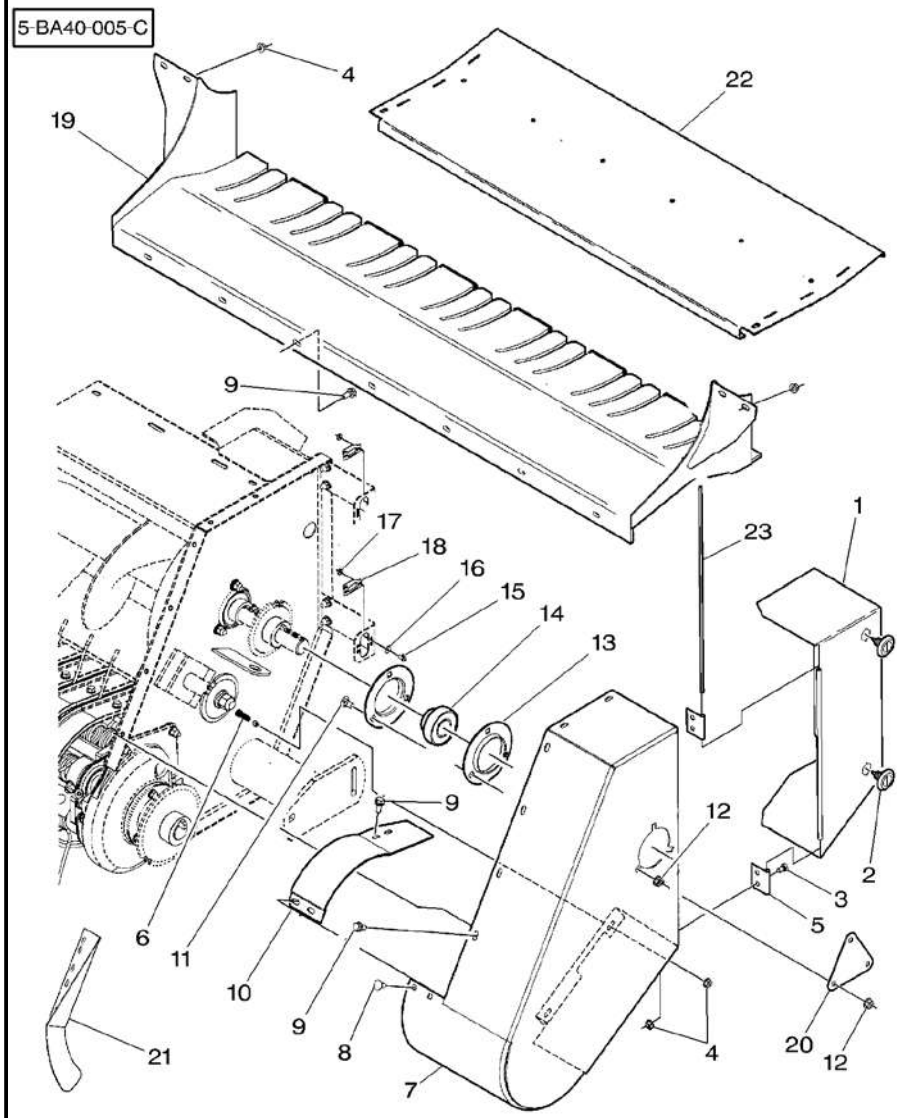

1	✱700133120P		1	SHIELD	TOLE RIPARO
2	✱*700714528*		2	LATCH	VERROU SALISCENDI
3	✱353675X1	5/16"–18 X 1/2	4	BOLT UNC	BOULON UNC BULLONE UNC
4	✱70931277	5/16"–18	12	LOCKNUT	ECROU BLOCAGE AUTOBLOCCANTE
5	✱700163299		4	SUPPORT	SUPPORT SUPPORTO
6	✱7883325	5/16"–18 X 3/4	2	SCREW	VIS VITE
7	✱700140346P		1	PANEL	PANNEAU PANNELLO
8	✱364352X1	5/16"–18 X 3/4	6	BOLT UNC	BOULON UNC BULLONE UNC
9	✱*Y703132*	5/16"–18 X 3/4	15	BOLT	BOULON BULLONE
10	✱700137766P		1	WRAPPER	COUVERTURE IMBALLATORE
11	✱70923220	3/8"–16 X 1–1/4	3	BOLT	BOULON BULLONE
12	✱*700711238*	3/8"–16	6	NUT	ECROU DADO
13	✱*051417P*		2	FLANGE	FLASQUE FLANGIA
14	✱*51292*		1	BEARING	COUSSINET CUSCINETTO
15	✱700700628	No 10–24 X 1/2	4	SCREW	VIS VITE
16	✱70917380	No 10	4	WASHER	RONDELLE RONDELLA
17	✱70926673	No 10–24	4	NUT	ECROU DADO
18	✱*700714529*		2	RECEIVER	RECEVEUR RICEVITORE
19	✱700139092P		1	CHUTE	DESCENTE SCARICO
20	✱700139682P		1	COVER	COUVERCLE COPERCHIO
21	✱700138175P	◀	1	SHIELD	TOLE RIPARO
22	✱700139049P		1	PAN	RECEPTEUR COPPA
23	✱6474316		1	PIN	GOUPILLE PERNO

SCHILD BLINDAJE		
RIEGEL CERROJO		
MASCH.SCHRB.UNC PERNO UNC		
FLACHMUTTER CONTRATUERCA		
LAGERUNG DISPOS.DE SOSTEN		
SCHRAUBE TORNILLO		
VERKL.BLECH PANEL		
MASCH.SCHRB.UNC PERNO UNC		
MASCH.SCHRAUBE PERNO		
UMSCHLAG ENVASE		
MASCH.SCHRAUBE PERNO		
MUTTER TUERCA		
FLANSCH PLETINA		
LAGER COJINETE		
SCHRAUBE TORNILLO		
UNTERLEGSCHEIBE ARANDELA		
MUTTER TUERCA		
EMPFAENGER RECEPTOR		
AUSWURFSCHACHT CAIDA		
DECKEL CUBIERTA		
SCHILD BLINDAJE		
AUFFANGWANNE CUBA		
BOLZEN PASADOR		

Shields	With Cutter	20-155	Left Side – From H.P 74101
Garants	Avec Couteau		Cote Gauche – A Partir Du H.P 74101
Schutzbleche	Mit Messer		Linke Seite – Ab H.P 74101
Difese	Con Cuchillo		Lato Sinistro – Dalla H.P 74101
Proteccionee	Con Coltello		Lado Izquierdo – Despues H.P 74101

5-BA40-008-A

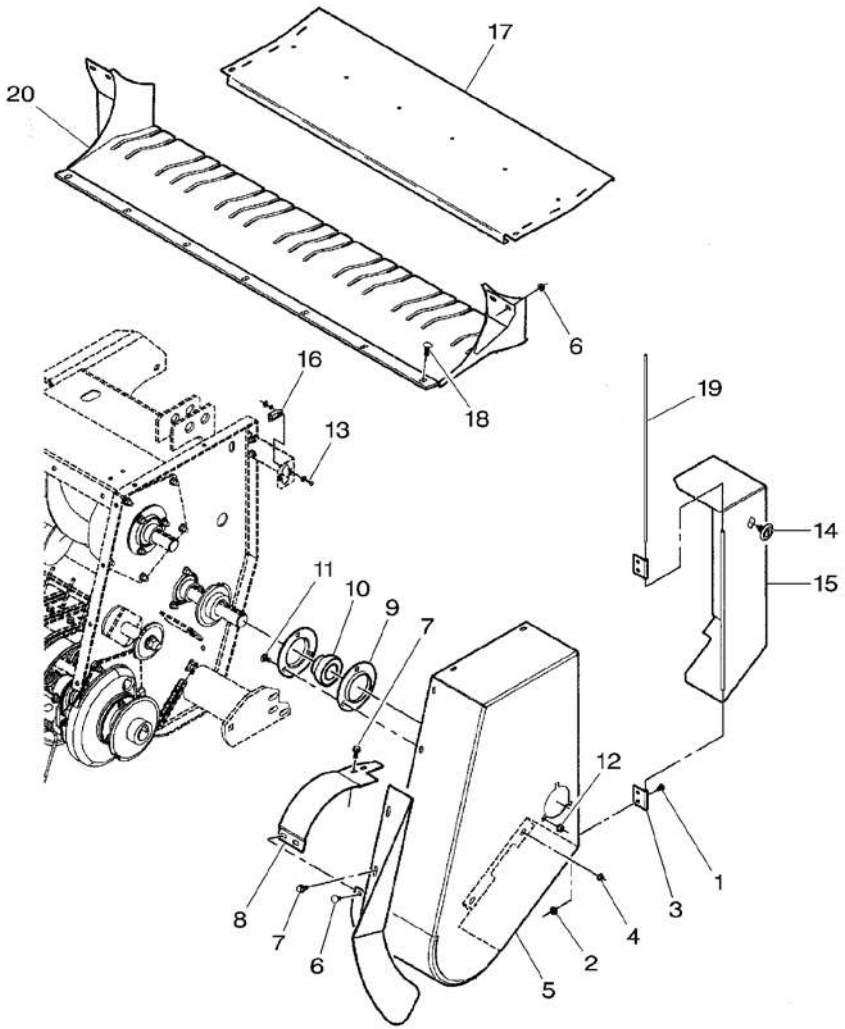

1 *	353675X1	5/16"–18 X 1/2	4	BOLT UNC BULLONE UNC	BOULON UNC BULLONE UNC	MASCH.SCHRB.UNC PERNO UNC
2 *	70931277	5/16"–18	4	LOCKNUT	ECROU BLOCAGE AUTOBLOCCANTE	FLACHMUTTER CONTRATUERCA
3 *	700163299		2	SUPPORT	SUPPORT SUPPORTO	LAGERUNG DISPOS.DE SOSTEN
4 *	7883325	5/16"–18 X 3/4	2	SCREW	VIS VITE	SCHRAUBE TORNILLO
4 *	70931277	5/16"–18	2	LOCKNUT	ECROU BLOCAGE AUTOBLOCCANTE	FLACHMUTTER CONTRATUERCA
5 *	700161187P	◀	1	PANEL	PANNEAU PANNELLO	VERKL.BLECH PANEL
6 *	364352X1	5/16"–18 X 3/4	6	BOLT UNC	BOULON UNC BULLONE UNC	MASCH.SCHRB.UNC PERNO UNC
6 *	70931277	5/16"–18	6	LOCKNUT	ECROU BLOCAGE AUTOBLOCCANTE	FLACHMUTTER CONTRATUERCA
7 *	*Y703132*	5/16"–18 X 3/4	8	BOLT	BOULON BULLONE	MASCH.SCHRAUBE PERNO
8 *	700161192P	◀	1	WRAPPER	COUVERTURE IMBALLATORE	UMSCHLAG ENVASE
9 *	*051417P*		2	FLANGE	FLASQUE FLANGIA	FLANSCH PLETINA
10 *	*50021*		1	BEARING	COUSSINET CUSCINETTO	LAGER COJINETE
11 *	70922784	3/8"–16 X 3/4	3	BOLT	BOULON BULLONE	MASCH.SCHRAUBE PERNO
12 *	*700711238*	3/8"–16	3	NUT	ECROU DADO	MUTTER TUERCA
13 *	700700628	No 10–24 X 1/2	2	SCREW	VIS VITE	SCHRAUBE TORNILLO
13 *	70917380	No 10	2	WASHER	RONDELLE RONDELLA	UNTERLEGSCHEIBE ARANDELA
13 *	70926673	No 10–24	2	NUT	ECROU DADO	MUTTER TUERCA
14 *	*700714528*		1	LATCH	VERROU SALISCENDI	RIEGEL CERROJO
15 *	700161189P	◀	1	SHIELD	TOLE RIPARO	SCHILD BLINDAJE
16 *	*700714529*		1	RECEIVER	RECEVEUR RICEVITORE	EMPFAENGER RECEPTOR
17 *	700139049P		1	PAN	RECEPTEUR COPPA	AUFFANGWANNE CUBA
18 *	*70922786*	3/8"–16 X 1	7	BOLT	BOULON BULLONE	MASCH.SCHRAUBE PERNO
18 *	*Y704734*	3/8"–16	7	TOP LOCKNUT	ECROU FREIN DADO DI TESTA	SELBSTS.MUTTER CONTRATUERCA SUP
19 *	700161194		1	PIN	GOUPILLE PERNO	BOLZEN PASADOR
20 *	700163330P		1	CHUTE	DESCENTE SCARICO	AUSWURFSCHACHT CAIDA

Shields Garants Schutzbleche Difese Proteccionee	20-160	Right Side Cote Droit Rechte Seite Lato Destro Lado Derecho

5-BA17-048-D

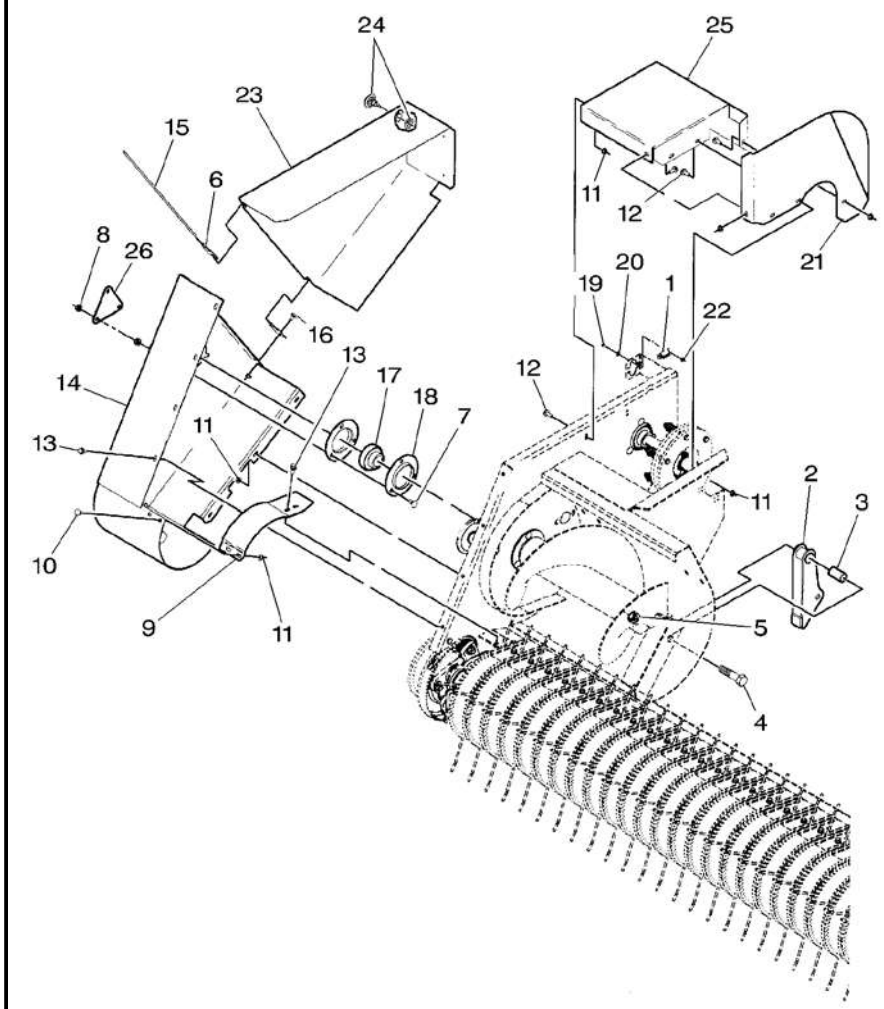

1 ★	*700714529*		2	RECEIVER	RECEVEUR RICEVITORE EMPFAENGER RECEPTOR
2 ★	700138287P		1	PIVOT	PIVOT CARDINE DREHZAPFEN PIVOTE
3 ★	700113281P		1	SPACER	ENTRETOISE DISTANZIALE ABSTANDSTUECK PIEZA DISTANCIA
4 ★	354718X1	3/4"-10 X 3	1	BOLT UNC	BOULON UNC BULLONE UNC MASCH.SCHRB.UNC PERNO UNC
5	Y704718	3/4"-10	1	NUT	ECROU DADO MUTTER TUERCA
6 ★	700163299		2	SUPPORT	SUPPORT SUPPORTO LAGERUNG DISPOS.DE SOSTEN
7 ★	70923220	3/8"-16 X 1-1/4	3	BOLT	BOULON BULLONE MASCH.SCHRAUBE PERNO
8 ★	*700711238*	3/8"-16	3	NUT	ECROU DADO MUTTER TUERCA
9 ★	700137765P	▶	1	WRAPPER	COUVERTURE IMBALLATORE UMSCHLAG ENVASE
10	364352X1	5/16"-18 X 3/4	2	BOLT UNC	BOULON UNC BULLONE UNC MASCH.SCHRB.UNC PERNO UNC
11 ★	70931277	5/16"-18	16	LOCKNUT	ECROU BLOCAGE AUTOBLOCCANTE FLACHMUTTER CONTRATUERCA
12	7883325	5/16"-18 X 3/4	10	SCREW	VIS VITE SCHRAUBE TORNILLO
13	*Y703132*	5/16"-18 X 3/4	6	BOLT	BOULON BULLONE MASCH.SCHRAUBE PERNO
14 ★	700153335P	▶	1	PANEL	PANNEAU PANNELLO VERKL.BLECH PANEL
15	6844344		1	PIN	GOUPILLE PERNO BOLZEN PASADOR
16 ★	353675X1	5/16"-18 X 1/2	4	BOLT UNC	BOULON UNC BULLONE UNC MASCH.SCHRB.UNC PERNO UNC
17	*51292*		1	BEARING	COUSSINET CUSCINETTO LAGER COJINETE
18 ★	*051417P*		2	FLANGE	FLASQUE FLANGIA FLANSCH PLETINA
19 ★	700700628	No 10-24 X 1/2	4	SCREW	VIS VITE SCHRAUBE TORNILLO
20 ★	70917380	No 10	4	WASHER	RONDELLE RONDELLA UNTERLEGSCHEIBE ARANDELA
21 ★	700137898P		1	SHIELD	TOLE RIPARO SCHILD BLINDAJE
22 ★	70926673	No 10-24	4	NUT	ECROU DADO MUTTER TUERCA
23 ★	700162029P	[A] ▶	1	SHIELD	TOLE RIPARO SCHILD BLINDAJE
23 ★	700161950P	[B]	1	SHIELD	TOLE RIPARO SCHILD BLINDAJE
24	*700714528*		1	LATCH	VERROU SALISCENDI RIEGEL CERROJO
25 ★	700137764P	➡| HP 74100	1	SHIELD	TOLE RIPARO SCHILD BLINDAJE

Shields Garants Schutzbleche Difese Proteccionee	20-160	Right Side Cote Droit Rechte Seite Lato Destro Lado Derecho

5-BA17-048-D

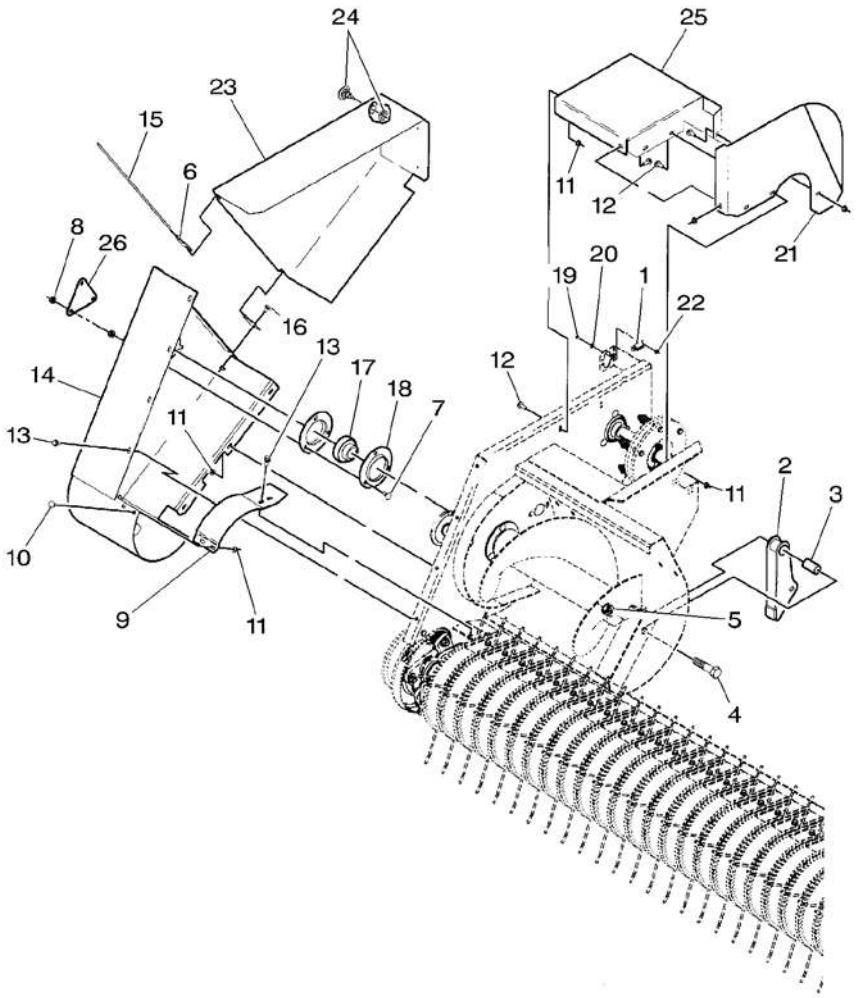

25*	700139812P	➡ HP 74101	1 SHIELD	TOLE RIPARO	SCHILD BLINDAJE
26*	700139682P		1 COVER	COUVERCLE COPERCHIO	DECKEL CUBIERTA

[A] ONE LATCH
UN VERROU
EIN RIEGEL
UNO BULLONE
UNO CERROJO

[B] TWO LATCH
DEUX VERROU
ZWEI RIEGEL
DUE BULLONE
DOS CERROJO

Shields	**With Cutter**	**Right Side – Up To H.P 74100**
Garants	**Avec Couteau**	**Cote Droit – Jusqu'Au H.P 74100**
Schutzbleche	**Mit Messer**	**Rechte Seite – Bis H.P 74100**
Difese	**Con Cuchillo**	**Lado Destra – Fino Alla H.P 74100**
Proteccionee	**Con Coltello**	**Lado Derecho – Hasta H.P 74100**

20-165

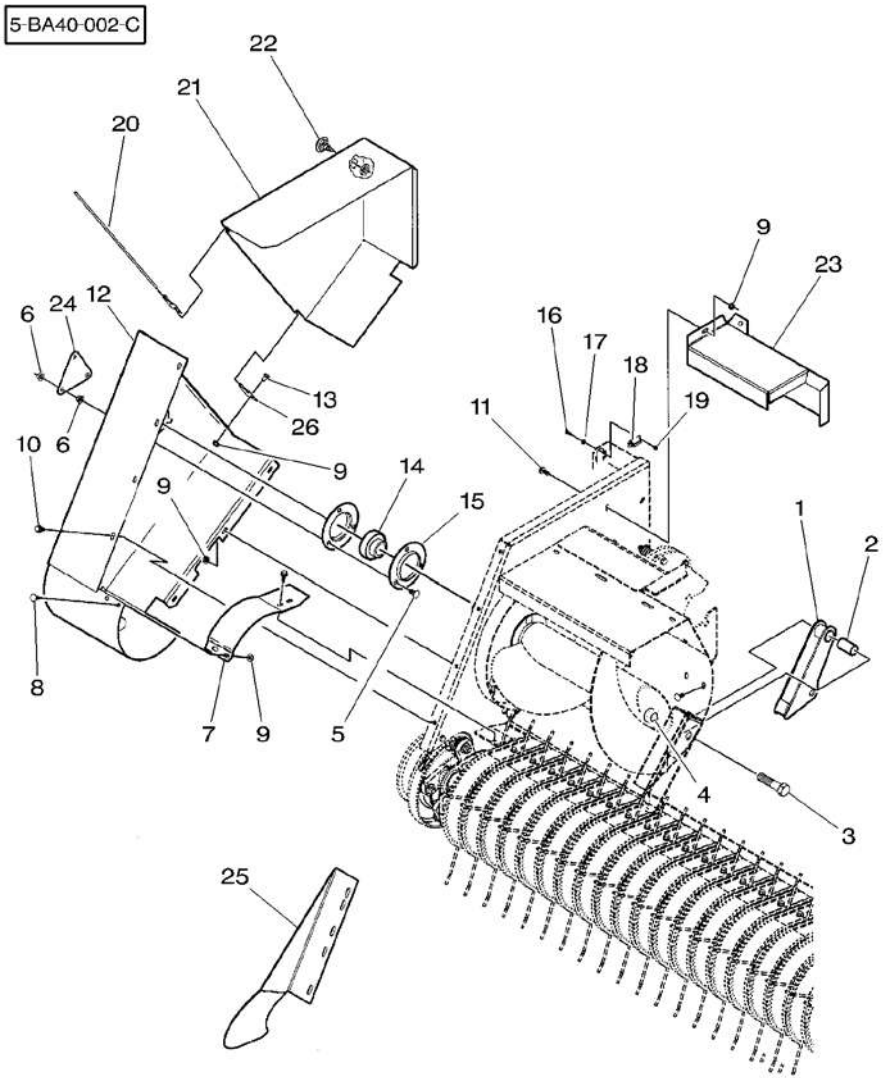

1 ✱	700138287P		1	PIVOT	PIVOT CARDINE PIVOTE DREHZAPFEN
2 ✱	700113281P		1	SPACER	ENTRETOISE DISTANZIALE PIEZA DISTANCIA ABSTANDSTUECK
3	354718X1	3/4"–10 X 3	1	BOLT UNC	BOULON UNC BULLONE UNC MASCH.SCHRB.UNC
4	Y704718	3/4"–10	1	NUT	ECROU DADO PERNO UNC MUTTER TUERCA
5 ✱	70923220	3/8"–16 X 1–1/4	3	BOLT	BOULON BULLONE MASCH.SCHRAUBE PERNO
6 ✱	***700711238***	3/8"–16	3	NUT	ECROU DADO MUTTER TUERCA
7 ✱	700137765P	▶	1	WRAPPER	COUVERTURE IMBALLATORE UMSCHLAG ENVASE
8 ✱	364352X1	5/16"–18 X 3/4	2	BOLT UNC	BOULON UNC BULLONE UNC MASCH.SCHRB.UNC PERNO UNC
9 ✱	70931277	5/16"–18	12	LOCKNUT	ECROU BLOCAGE AUTOBLOCCANTE FLACHMUTTER CONTRATUERCA
10	***Y703132***	5/16"–18 X 3/4	4	BOLT	BOULON BULLONE MASCH.SCHRAUBE PERNO
11	7883325	5/16"–18 X 3/4	6	SCREW	VIS VITE SCHRAUBE TORNILLO
12 ✱	700140347P	▶	1	PANEL	PANNEAU PANNELLO VERKL.BLECH PANEL
13	353675X1	5/16"–18 X 1/2	4	BOLT UNC	BOULON UNC BULLONE UNC MASCH.SCHRB.UNC PERNO UNC
14	*51292*		1	BEARING	COUSSINET CUSCINETTO LAGER COJINETE
15 ✱	***051417P***		2	FLANGE	FLASQUE FLANGIA FLANSCH PLETINA
16 ✱	700700628	No 10–24 X 1/2	4	SCREW	VIS VITE SCHRAUBE TORNILLO
17 ✱	70917380	No 10	4	WASHER	RONDELLE RONDELLA UNTERLEGSCHEIBE ARANDELA
18 ✱	***700714529***		2	RECEIVER	RECEVEUR RICEVITORE EMPFAENGER RECEPTOR
19 ✱	70926673	No 10–24	4	NUT	ECROU DADO MUTTER TUERCA
20	6844344		1	PIN	GOUPILLE PERNO BOLZEN PASADOR
21 ✱	700161920P	▶	1	SHIELD	TOLE RIPARO SCHILD BLINDAJE
22 ✱	***700714528***		2	LATCH	VERROU SALISCENDI RIEGEL CERROJO
23 ✱	700139094P		1	SHIELD	TOLE RIPARO SCHILD BLINDAJE
24 ✱	700139682P		1	COVER	COUVERCLE COPERCHIO DECKEL CUBIERTA
25 ✱	700138176P		1	SHIELD	TOLE RIPARO SCHILD BLINDAJE
26 ✱	700163299		2	SUPPORT	SUPPORT SUPPORTO LAGERUNG DISPOS.DE SOSTEN

Shields Garants Schutzbleche Difese Proteccionee	With Cutter Avec Couteau Mit Messer Con Cuchillo Con Coltello	20-170	Right Side – From H.P 74101 Cote Droit – A Partir Du H.P 74101 Rechte Seite – Ab H.P 74101 Lato Destro – Dalla H.P 74101 Lado Derecho – Despues H.P 74101

5-BA40-009-A

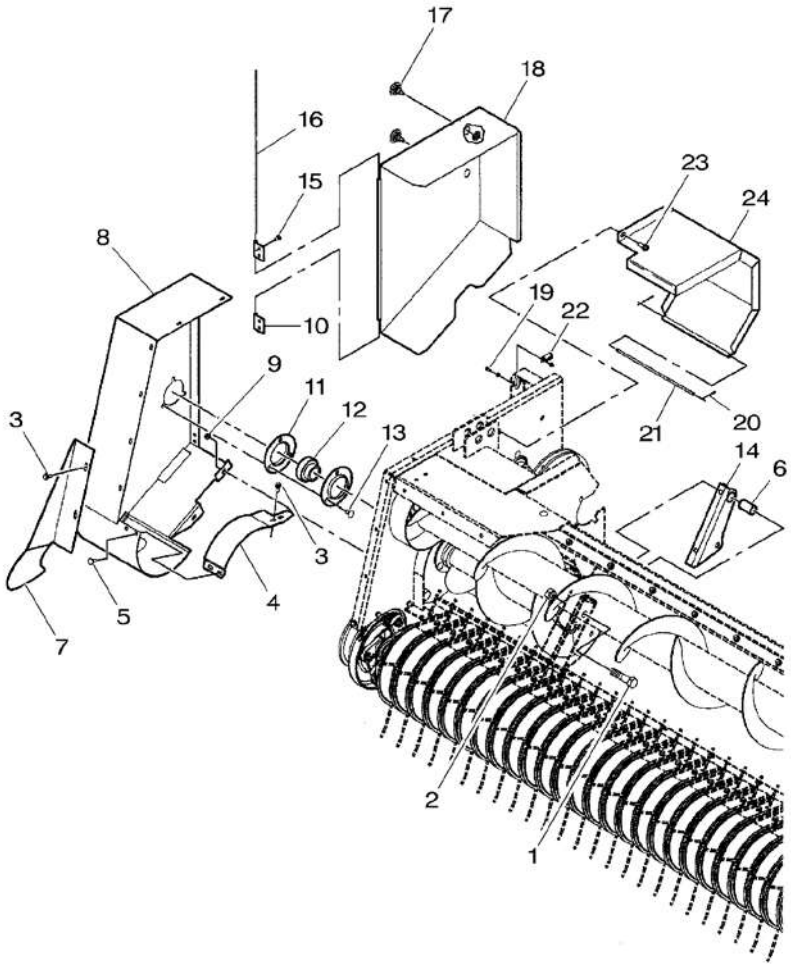

1*	354718X1	3/4"–10 X 3	1	BOLT UNC BULLONE UNC	BOULON UNC PERNO UNC
2*	Y704718	3/4"–10	1	NUT DADO	ECROU MUTTER
3*	*Y703132*	5/16"–18 X 3/4	8	BOLT BULLONE	BOULON PERNO
4*	700161193P	▶	1	WRAPPER IMBALLATORE	COUVERTURE UMSCHLAG
5*	364352X1	5/16"–18 X 3/4	2	BOLT UNC BULLONE UNC	BOULON UNC PERNO UNC
5*	70931277	5/16"–18	2	LOCKNUT AUTOBLOCCANTE	ECROU BLOCAGE CONTRATUERCA
6*	700113281P		1	SPACER DISTANZIALE	ENTRETOISE ABSTANDSTUECK
7*	700161209P	▶	1	SHIELD RIPARO	TOLE SCHILD
8*	700161188P	▶	1	PANEL PANNELLO	PANNEAU VERKL.BLECH
9*	7883325	5/16"–18 X 3/4	2	SCREW VITE	VIS SCHRAUBE
9*	70931277	5/16"–18	2	LOCKNUT AUTOBLOCCANTE	ECROU BLOCAGE CONTRATUERCA
10*	700163299		2	SUPPORT SUPPORTO	SUPPORT LAGERUNG
11*	*051417P*		2	FLANGE FLANGIA	FLASQUE FLANSCH
12*	*50021*		1	BEARING CUSCINETTO	COUSSINET LAGER
13*	70922784	3/8"–16 X 3/4	3	BOLT BULLONE	BOULON PERNO
13*	*700711238*	3/8"–16	3	NUT DADO	ECROU MUTTER
14*	700138287P		1	PIVOT CARDINE	PIVOT DREHZAPFEN
15*	353675X1	5/16"–18 X 1/2	4	BOLT UNC BULLONE UNC	BOULON UNC PERNO UNC
15*	70931277	5/16"–18	4	LOCKNUT AUTOBLOCCANTE	ECROU BLOCAGE CONTRATUERCA
16*	700161195		1	PIN PERNO	GOUPILLE BOLZEN
17*	*700714528*		2	LATCH SALISCENDI	VERROU RIEGEL
18*	700161191P	▶	1	PANEL PANNELLO	PANNEAU VERKL.BLECH
19*	700700628	No 10–24 X 1/2	4	SCREW VITE	VIS SCHRAUBE
19*	70917380	No 10	4	WASHER RONDELLA	RONDELLE UNTERLEGSCHEIBE
19*	70926673	No 10–24	4	NUT DADO	ECROU MUTTER
20*	354048X1	3/32" X 3/4	2	PIN PERNO	GOUPILLE BOLZEN

Shields	**With Cutter**	**Right Side – From H.P 74101**
Garants	**Avec Couteau**	**Cote Droit – A Partir Du H.P 74101**
Schutzbleche	**Mit Messer**	**Rechte Seite – Ab H.P 74101**
Difese	**Con Cuchillo**	**Lato Destro – Dalla H.P 74101**
Proteccionee	**Con Coltello**	**Lado Derecho – Despues H.P 74101**

20-170

5-BA40-009-A

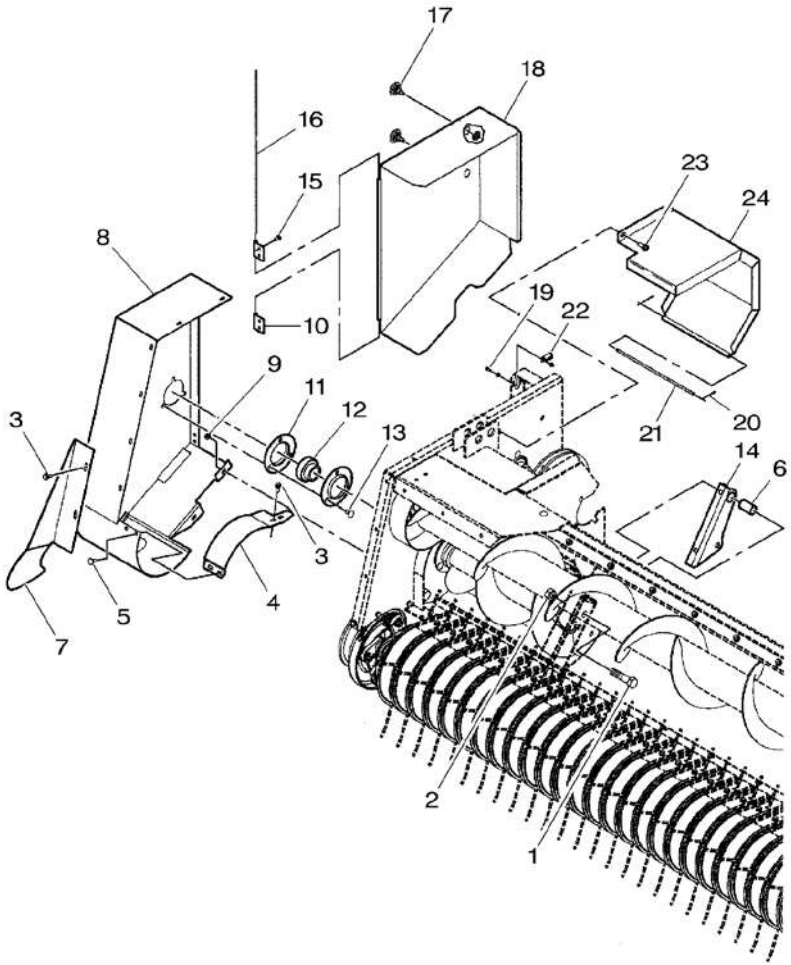

21*	700163333X		1	CLEVIS PIN	AXE PERNO D'ATTACCO BULON CILINDRICO
22*	*700714529*		2	RECEIVER	RECEVEUR RICEVITORE EMPFAENGER RECEPTOR
23*	7883382	3/8"–16 X 1	1	SCREW	VIS VITE SCHRAUBE TORNILLO
23*	*Y704734*	3/8"–16	1	TOP LOCKNUT	ECROU FREIN DADO DI TESTA SELBSTS.MUTTER CONTRATUERCA SUP
24*	700163332P		1	SHIELD	TOLE RIPARO SCHILD BLINDAJE

Wheel Roues Rader Ruota Rueda	20-175	Pickup Pickup Pickup Recupero Recogedora

5-BA28-009-C

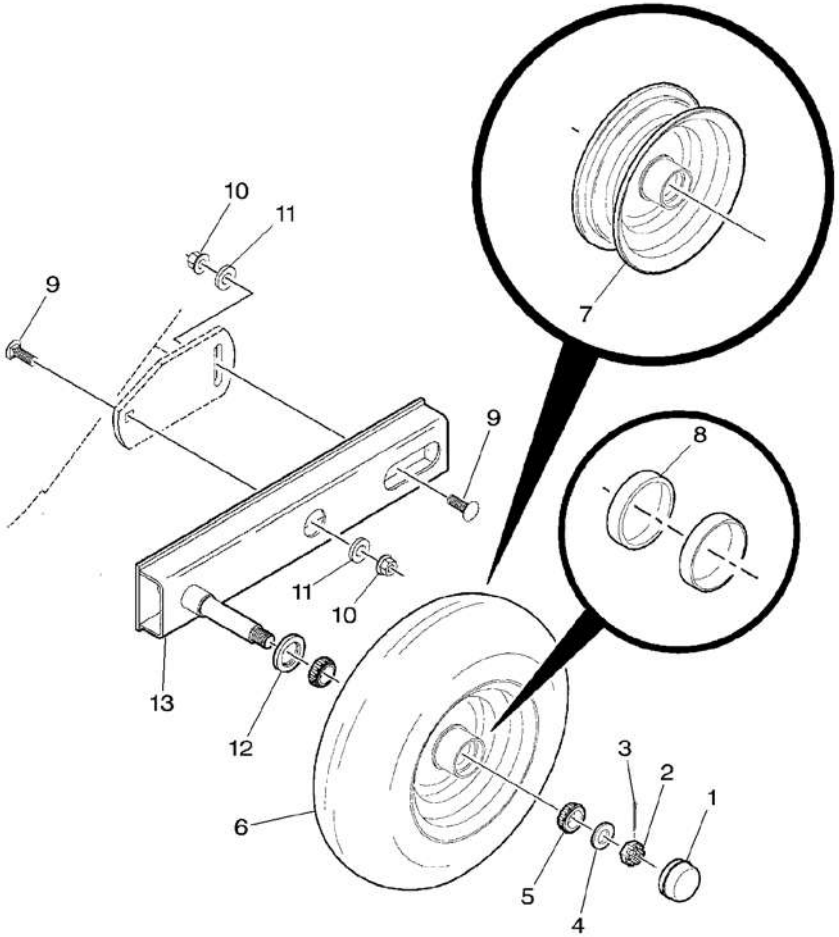

1	*26260*		2	CAP CAPPELLO	CHAPEAU TAPA	KAPPE
2*	*7704208*	3/4"–16	2	NUT DADO	ECROU TUERCA	MUTTER
3*	70918454	1/8" X 1–1/2	2	PIN PERNO	GOUPILLE PASADOR	BOLZEN
4	Y705566	3/4"	2	WASHER RONDELLA	RONDELLE ARANDELA	UNTERLEGSCHEIBE
5	*70341230*		4	CONE CONO	CONE CONO	KONUS
6*	700722670		2	WHEEL RUOTA	ROUE RUEDA	RAD
7*	700708048	6	2	WHEEL RUOTA	ROUE RUEDA	RAD
8*	*832190M1*	7	4	BEARING CUP COPPA CUSCINETTO	CUVETTE ROULEMNT ANILLO COJINETE	LAGERAUSSENRING
9*	364246X1	1/2"–13 X 1–1/2	4	BOLT BULLONE	BOULON PERNO	MASCH.SCHRAUBE
10*	700714586	1/2"–13	4	NUT DADO	ECROU TUERCA	MUTTER
11*	*705541*	1/2"	4	FLAT WASHERS RONDELLE PIANE	RONDELLES PLATES ARANDELAS PLANAS	UNTERLEGSCHEIBEN
12*	*70248372*		2	SEAL PARAOLIO	JOINT ETANCHEITE RETEN	DICHTRING
13*	700161334P		2	STRUT PUNTONE	JAMBE DE FORCE CODAL	VERSTREBUNG

30

Electrical Electricite Elektrizitat Elettricita Electricidad	30-5	Main Harness – Up To H.K 74244 Faisceau Principal – Jusqu'Au H.K 74244 Hauptkabelbaum – Bis H.K 74244 Cavo Principale – Fino Alla H.K 74244 Mazo Cables Principale – Hasta H.K 74244

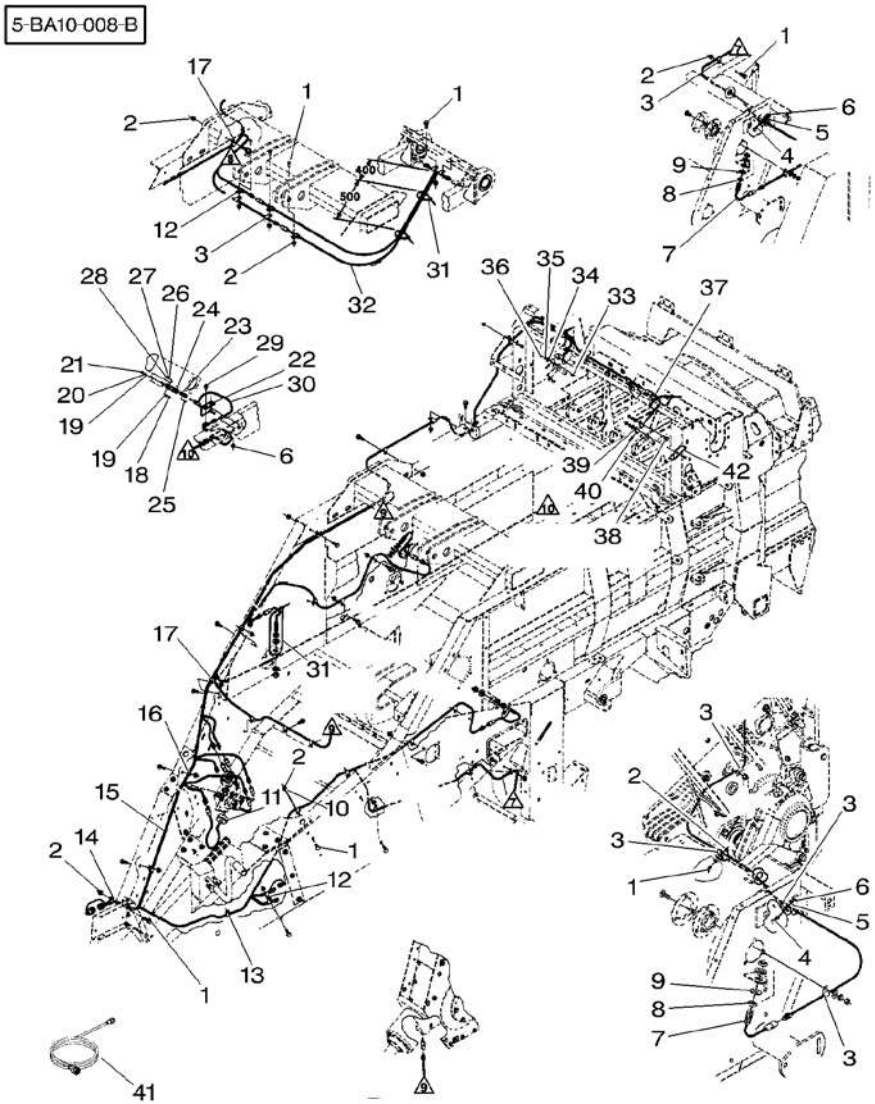

1	7883382	3/8"–16 X 1	31 SCREW	VIS VITE	SCHRAUBE TORNILLO
2	***700711238***	3/8"–16	34 NUT	ECROU DADO	MUTTER TUERCA
3	70926917	3/8"	30 CLAMP	COLLIER FASCETTA	HALTESCHELLE ABRAZADERA
4	7700461	5/16"–18 X 3/4	2 BOLT	BOULON BULLONE	MASCH.SCHRAUBE PERNO
5	***Y705525***	5/16"	2 WASHER	RONDELLE RONDELLA	UNTERLEGSCHEIBE ARANDELA
6*	70931277	5/16"–18	4 LOCKNUT	ECROU BLOCAGE AUTOBLOCCANTE	FLACHMUTTER CONTRATUERCA
7	***700706398***		8 SENSOR	DETECTEUR SENSORE	SENSOR. DETECTOR
8	353436X1	3/4"–16	16 NUT UNF	ECROU UNF DADO UNF	MUTTER UNF TUERCA UNF
9*	Y705566	3/4"	16 WASHER	RONDELLE RONDELLA	UNTERLEGSCHEIBE ARANDELA
10*	*Y705533*	3/8"	9 WASHER	RONDELLE RONDELLA	UNTERLEGSCHEIBE ARANDELA
11	***700720228***		1 TRANSDUCER	CAPTEUR TRANSDUCER	NABENTRIEB. TRANSDUCER
12	70925617	1/2"	3 CLAMP	COLLIER FASCETTA	HALTESCHELLE ABRAZADERA
13	70929160	1"	2 CLAMP	COLLIER FASCETTA	HALTESCHELLE ABRAZADERA
14*	360568X1	1"–1/4	1 TIE	ATTACHE TRAVERSA ATTACCO	KUPPL.STANGE BARRA DE ENLACE
15	700716887		1 HARNESS	FAISCEAU FASCIOCAVI	KABELBAUM MAZO CABLES
16*	70926049	3/4"	1 CLAMP	COLLIER FASCETTA	HALTESCHELLE ABRAZADERA
17*	70925619	5/8"	4 CLAMP	COLLIER FASCETTA	HALTESCHELLE ABRAZADERA
18	700711659	No 8–32 X 3/4	2 SCREW	VIS VITE	SCHRAUBE TORNILLO
19*	353752X1	No 8	4 WASHER	RONDELLE RONDELLA	UNTERLEGSCHEIBE ARANDELA
20*	353444X1	No 8	2 LOCK WASHER	RONDELLE FREIN ROSETTA ELASTICA	FEDERRING ARANDELA GROWER
21	704494	No 8–32	2 NUT	ECROU DADO	MUTTER TUERCA
22	700138067		1 SHANK	ANGLE FUSO	SCHAFT MANGO
23	***700709996***		1 ACTUATOR	DECLENCHEUR AZIONATORE	BETAETIGUNG ACTUADOR
24	700122574		1 SUPPORT	SUPPORT SUPPORTO	LAGERUNG DISPOS.DE SOSTEN
25	700710188	No 6–32 X 3/4	4 SCREW	VIS VITE	SCHRAUBE TORNILLO
26	700703830	No 6	4 WASHER	RONDELLE RONDELLA	UNTERLEGSCHEIBE ARANDELA

Electrical Electricite Elektrizitat Elettricita Electricidad	30-5	Main Harness – Up To H.K 74244 Faisceau Principal – Jusqu'Au H.K 74244 Hauptkabelbaum – Bis H.K 74244 Cavo Principale – Fino Alla H.K 74244 Mazo Cables Principale – Hasta H.K 74244

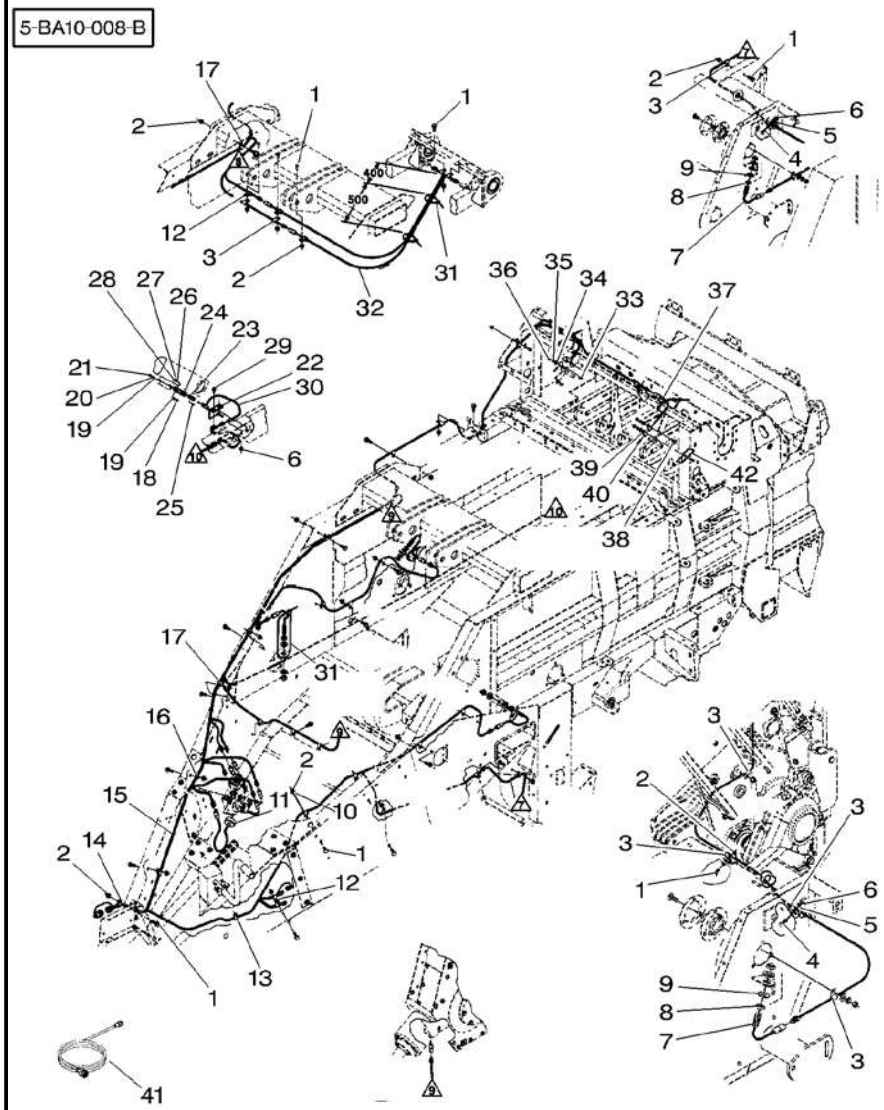

27*	195441M1	No 6	4 LOCK WASHER	RONDELLE FREIN ROSETTA ELASTICA	FEDERRING ARANDELA GROWER
28	704551	No 6–32	4 NUT	ECROU DADO	MUTTER TUERCA
29	7883325	5/16"–18 X 3/4	2 SCREW	VIS VITE	SCHRAUBE TORNILLO
30	***700710208***		1 SWITCH	INTERRUPTEUR INTERRUTTORE	SCHALTER INTERRUPTOR
31	*70925094*		6 CLAMP	COLLIER FASCETTA	HALTESCHELLE ABRAZADERA
32	700716724		2 CABLE	CABLE CAVO	KABEL CABLE
33*	70927401	1/4"–20 X 1	2 BOLT	BOULON BULLONE	MASCH.SCHRAUBE PERNO
34*	355617X1	1/4"	4 WASHER	RONDELLE RONDELLA	UNTERLEGSCHEIBE ARANDELA
35*	353441X1	1/4"	4 LOCK WASHER	RONDELLE FREIN ROSETTA ELASTICA	FEDERRING ARANDELA GROWER
36*	355564X1	1/4"–20	4 NUT UNC	ECROU UNC DADO UNC	MUTTER UNC TUERCA UNC
37	***700113863***		2 SWITCH	INTERRUPTEUR INTERRUTTORE	SCHALTER INTERRUPTOR
38*	70931317	1/4"–20 X 3/4	2 BOLT	BOULON BULLONE	MASCH.SCHRAUBE PERNO
39	70926919	1/4"	4 CLIP	CLIP FERMAGLIO	SCHELLE CRAPA RETEN
40	***700706340***		2 MAGNET	AIMANT MAGNETE	MAGNET IMAN
41	700706459		1 HARNESS	FAISCEAU FASCIOCAVI	KABELBAUM MAZO CABLES
42	700138074		1 SHANK	ANGLE FUSO	SCHAFT MANGO

Electrical
Electricite
Elektrizitat
Elettricita
Electricidad

30-10

Main Harness – From H.K 74245
Faisceau Principal – A Partir Du H.K 74245
Hauptkabelbaum – Ab H.K 74245
Cavo Principale – Dalla H.K 74245
Mazo Cables Principale – A Partir Del H.K 74245

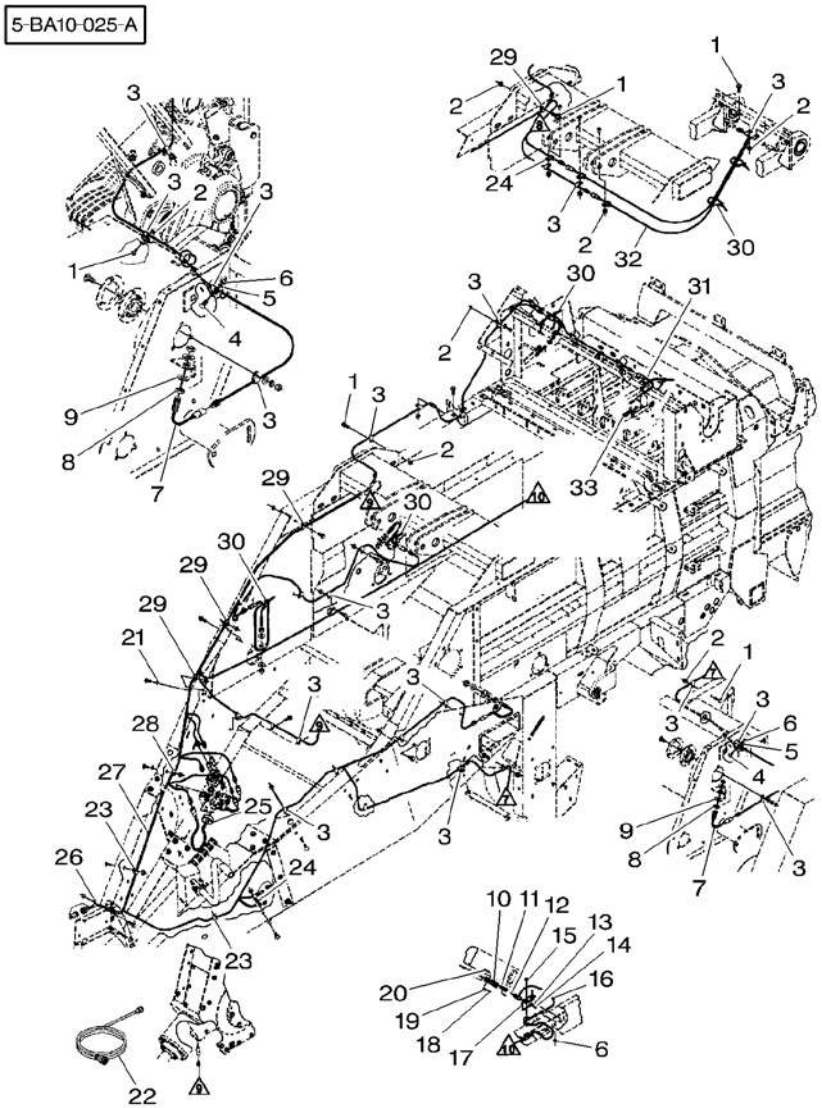

1 *	7883382	3/8"–16 X 1	31	SCREW	VIS VITE	SCHRAUBE TORNILLO
2 *	***700711238***	3/8"–16	34	NUT	ECROU DADO	MUTTER TUERCA
3 *	70926917	3/8"	33	CLAMP	COLLIER FASCETTA	HALTESCHELLE ABRAZADERA
4 *	7700461	5/16"–18 X 3/4	2	BOLT	BOULON BULLONE	MASCH.SCHRAUBE PERNO
5 *	***Y705525***	5/16"	2	WASHER	RONDELLE RONDELLA	UNTERLEGSCHEIBE ARANDELA
6 *	70931277	5/16"–18	4	LOCKNUT	ECROU BLOCAGE AUTOBLOCCANTE	FLACHMUTTER CONTRATUERCA
7 *	***700706398***		8	SENSOR	DETECTEUR SENSORE	SENSOR. DETECTOR
8 *	353436X1	3/4"–16	16	NUT UNF	ECROU UNF DADO UNF	MUTTER UNF TUERCA UNF
9 *	Y705566	3/4"	16	WASHER	RONDELLE RONDELLA	UNTERLEGSCHEIBE ARANDELA
10 *	700122574		1	SUPPORT	SUPPORT SUPPORTO	LAGERUNG DISPOS.DE SOSTEN
11 *	***700709996***		1	ACTUATOR	DECLENCHEUR AZIONATORE	BETAETIGUNG ACTUADOR
12 *	700710188	No 6–32 X 3/4	4	SCREW	VIS VITE	SCHRAUBE TORNILLO
13 *	700703830	No 6	4	WASHER	RONDELLE RONDELLA	UNTERLEGSCHEIBE ARANDELA
14 *	700710189	No 6–32	4	NUT	ECROU DADO	MUTTER TUERCA
15 *	7883325	5/16"–18 X 3/4	2	SCREW	VIS VITE	SCHRAUBE TORNILLO
16 *	***700710208***		1	SWITCH	INTERRUPTEUR INTERRUTTORE	SCHALTER INTERRUPTOR
17 *	700138067		1	SHANK	ANGLE FUSO	SCHAFT MANGO
18 *	700711659	No 8–32 X 3/4	2	SCREW	VIS VITE	SCHRAUBE TORNILLO
19 *	353752X1	No 8	4	WASHER	RONDELLE RONDELLA	UNTERLEGSCHEIBE ARANDELA
20 *	7775414	No 8–32	2	NUT	ECROU DADO	MUTTER TUERCA
21 *	*Y705533*	3/8"	9	WASHER	RONDELLE RONDELLA	UNTERLEGSCHEIBE ARANDELA
22 *	700706459		1	HARNESS	FAISCEAU FASCIOCAVI	KABELBAUM MAZO CABLES
23 *	70929160	1"	2	CLAMP	COLLIER FASCETTA	HALTESCHELLE ABRAZADERA
24 *	70925617	1/2"	3	CLAMP	COLLIER FASCETTA	HALTESCHELLE ABRAZADERA
25 *	***700720228***		1	TRANSDUCER	CAPTEUR TRANSDUCER	NABENTRIEB. TRANSDUCER
26 *	360030X1	1"–1/4	1	CLIP	CLIP FERMAGLIO	SCHELLE CRAPA RETEN

Electrical
Electricite
Elektrizitat
Elettricita
Electricidad

30-10

Main Harness – From H.K 74245
Faisceau Principal – A Partir Du H.K 74245
Hauptkabelbaum – Ab H.K 74245
Cavo Principale – Dalla H.K 74245
Mazo Cables Principale – A Partir Del H.K 74245

5-BA10-025-A

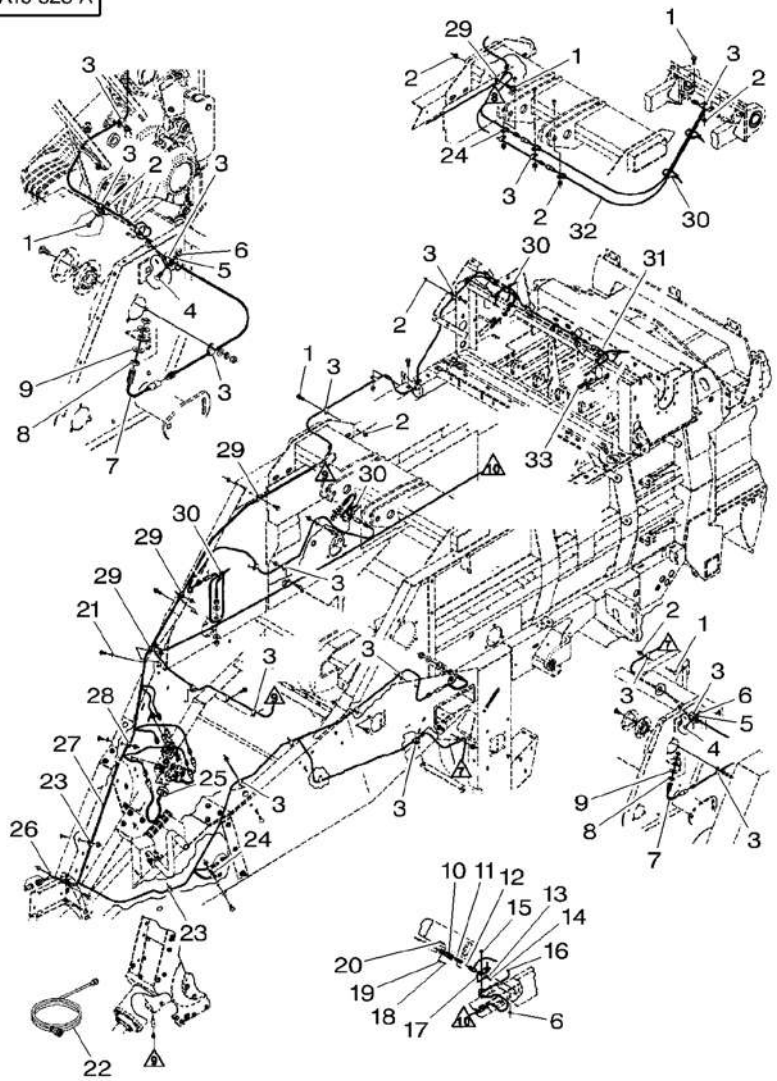

27*	700716887		1 HARNESS	FAISCEAU FASCIOCAVI	KABELBAUM MAZO CABLES
28*	70926049	3/4"	1 CLAMP	COLLIER FASCETTA	HALTESCHELLE ABRAZADERA
29*	70925619	5/8"	4 CLAMP	COLLIER FASCETTA	HALTESCHELLE ABRAZADERA
30*	*70925094*		6 CLAMP	COLLIER FASCETTA	HALTESCHELLE ABRAZADERA
31*	***700119161***		2 SWITCH	INTERRUPTEUR INTERRUTTORE	SCHALTER INTERRUPTOR
32*	700716724		2 CABLE	CABLE CAVO	KABEL CABLE
33*	***700710211***		2 ACTUATOR	DECLENCHEUR AZIONATORE	BETAETIGUNG ACTUADOR

Sensors Harness
Faisceau Capteurs
Sensoren–Kabelb
Cavi Sensori
Sensores De Arnes

30-15

With Electronic Control
Avec Controle Electronique
Mit Elektronische Steuerung
Con Controllo Elettronico
Con Control Electronico

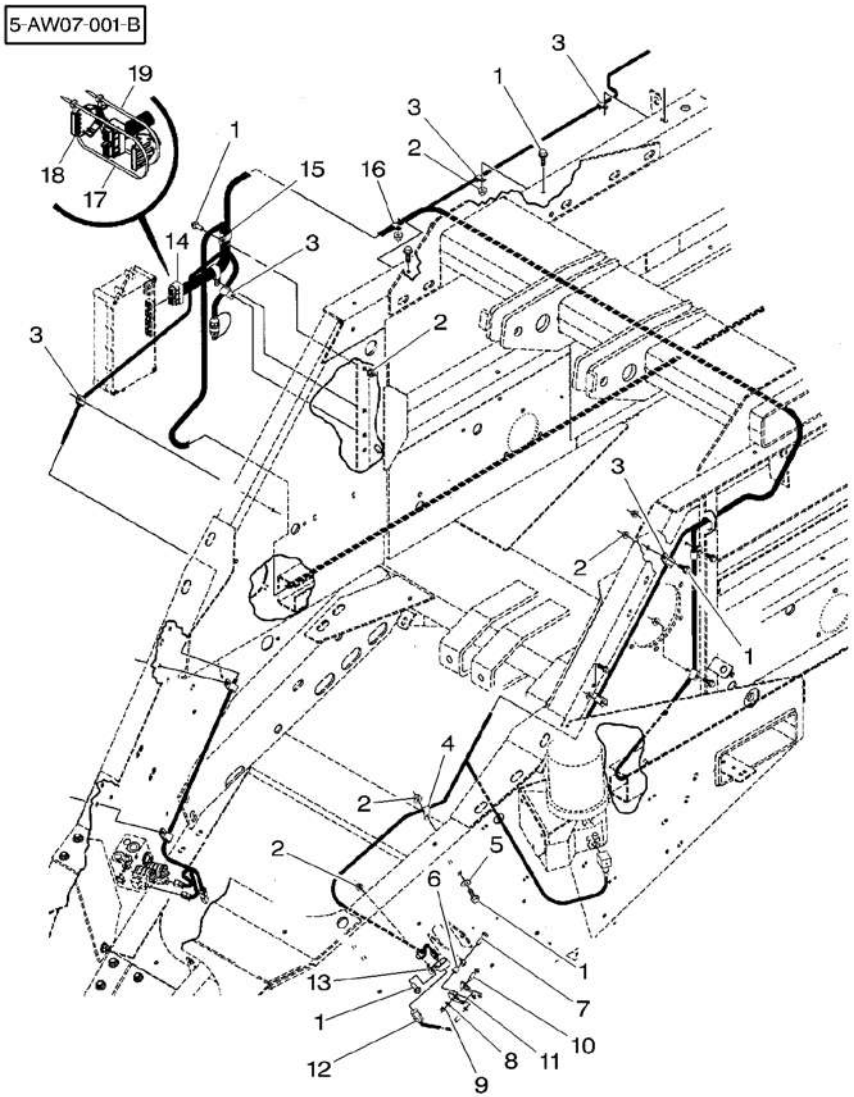

1	7883382	3/8"–16 X 1	**11**	SCREW	VIS VITE	SCHRAUBE TORNILLO
2	***700711238***	3/8"–16	**11**	NUT	ECROU DADO	MUTTER TUERCA
3	70925617	1/2"	**10**	CLAMP	COLLIER FASCETTA	HALTESCHELLE ABRAZADERA
4	70926917	3/8"	**1**	CLAMP	COLLIER FASCETTA	HALTESCHELLE ABRAZADERA
5	*Y705533*	3/8"	**1**	WASHER	RONDELLE RONDELLA	UNTERLEGSCHEIBE ARANDELA
6	***6523799***		**1**	BUSH	BAGUE BOCCOLA	BUCHSE CASQUILLO
7	353681X1	5/16"–18 X 1–1/4	**1**	BOLT UNC	BOULON UNC BULLONE UNC	MASCH.SCHRB.UNC PERNO UNC
8	***Y705525***	5/16"	**1**	WASHER	RONDELLE RONDELLA	UNTERLEGSCHEIBE ARANDELA
9	70931277	5/16"–18	**1**	LOCKNUT	ECROU BLOCAGE AUTOBLOCCANTE	FLACHMUTTER CONTRATUERCA
10	***700710211***		**1**	ACTUATOR	DECLENCHEUR AZIONATORE	BETAETIGUNG ACTUADOR
11	700155843		**1**	CHANNEL	CANAL PROFILATO	KANAL CANAL
12	***700119161***		**1**	SWITCH	INTERRUPTEUR INTERRUTTORE	SCHALTER INTERRUPTOR
13	700717627		**1**	CLAMP	COLLIER FASCETTA	HALTESCHELLE ABRAZADERA
14	700725814	▲	**1**	HARNESS	FAISCEAU FASCIOCAVI	KABELBAUM MAZO CABLES
15	700725832	1"–1/8	**2**	CLAMP	COLLIER FASCETTA	HALTESCHELLE ABRAZADERA
16	70925619	5/8"	**1**	CLAMP	COLLIER FASCETTA	HALTESCHELLE ABRAZADERA
17*	3619622M1	◄► 390 MM	**1**	CABLE TIE	ATTACHE CABLE FASCETTA CAVI	KABELBINDER ENLACE DE CABLE
18*	700720952		**2**	COVER	COUVERCLE COPERCHIO	DECKEL CUBIERTA
19*	*70925094*		**1**	CLAMP	COLLIER FASCETTA	HALTESCHELLE ABRAZADERA

Sensors Harness
Faisceau Capteurs
Sensoren–Kabelb
Cavi Sensori
Sensores De Arnes

30-20

With Electronic Control
Avec Controle Electronique
Mit Elektronische Steuerung
Con Controllo Elettronico
Con Control Electronico

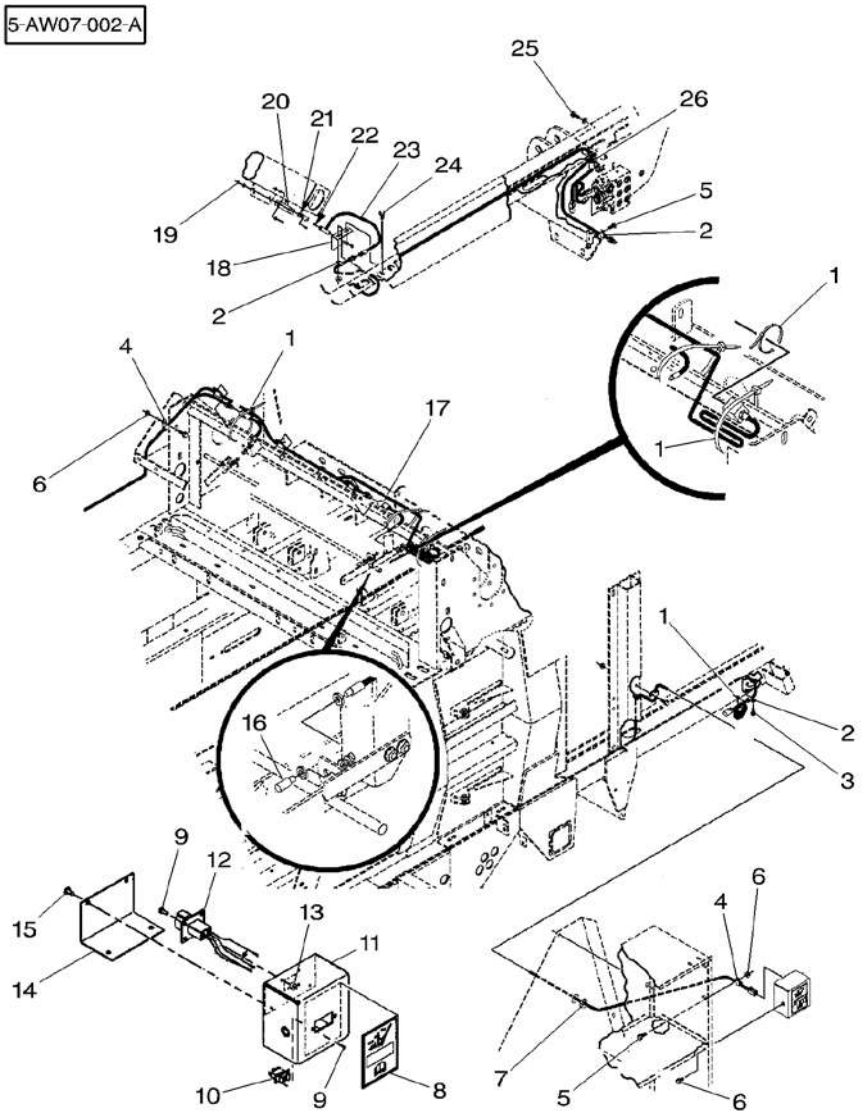

1*	*70925094*		**5** CLAMP	COLLIER FASCETTA	HALTESCHELLE ABRAZADERA
2	70926917	3/8"	**3** CLAMP	COLLIER FASCETTA	HALTESCHELLE ABRAZADERA
3	Y702951	3/8"–16 X 3/4	**1** SCREW	VIS VITE	SCHRAUBE TORNILLO
4	70925617	1/2"	**6** CLAMP	COLLIER FASCETTA	HALTESCHELLE ABRAZADERA
5*	7883382	3/8"–16 X 1	**7** SCREW	VIS VITE	SCHRAUBE TORNILLO
6*	***700711238***	3/8"–16	**8** NUT	ECROU DADO	MUTTER TUERCA
7	113354M1		**1** GROMMET	PASSE FIL GOMMINO	GUMMITUELLE PASACABLE
8	700715152		**1** DECAL	DECALCOMANIE DECALCOMANIA	AUFKLEBER CALCOMANIA
9	700704132	No 6–32 X 3/8	**6** SCREW	VIS VITE	SCHRAUBE TORNILLO
10	***700711188***		**1** SWITCH	INTERRUPTEUR INTERRUTTORE	SCHALTER INTERRUPTOR
11	700153393		**1** HOUSING	CARTER CARCASSA	GEHAEUSE ALOJAMIENTO
12	700725949		**1** HARNESS	FAISCEAU FASCIOCAVI	KABELBAUM MAZO CABLES
13*	700710189	No 6–32	**4** NUT	ECROU DADO	MUTTER TUERCA
14	700153397		**1** COVER	COUVERCLE COPERCHIO	DECKEL CUBIERTA
15	1705912		**4** SCREW	VIS VITE	SCHRAUBE TORNILLO
16	***700710211***		**2** ACTUATOR	DECLENCHEUR AZIONATORE	BETAETIGUNG ACTUADOR
17	***700119161***		**2** SWITCH	INTERRUPTEUR INTERRUTTORE	SCHALTER INTERRUPTOR
18	700138067		**1** SHANK	ANGLE FUSO	SCHAFT MANGO
19	700711659	No 8–32 X 3/4	**2** SCREW	VIS VITE	SCHRAUBE TORNILLO
19	7775414	No 8–32	**2** NUT	ECROU DADO	MUTTER TUERCA
19*	353752X1	No 8	**4** WASHER	RONDELLE RONDELLA	UNTERLEGSCHEIBE ARANDELA
20	700122574		**1** SUPPORT	SUPPORT SUPPORTO	LAGERUNG DISPOS.DE SOSTEN
21	***700709996***		**1** ACTUATOR	DECLENCHEUR AZIONATORE	BETAETIGUNG ACTUADOR
22	700710188	No 6–32 X 3/4	**4** SCREW	VIS VITE	SCHRAUBE TORNILLO
22	700703830	No 6	**4** WASHER	RONDELLE RONDELLA	UNTERLEGSCHEIBE ARANDELA
22	700710189	No 6–32	**4** NUT	ECROU DADO	MUTTER TUERCA

Sensors Harness
Faisceau Capteurs
Sensoren–Kabelb
Cavi Sensori
Sensores De Arnes

30-20

With Electronic Control
Avec Controle Electronique
Mit Elektronische Steuerung
Con Controllo Elettronico
Con Control Electronico

5-AW07-002-A

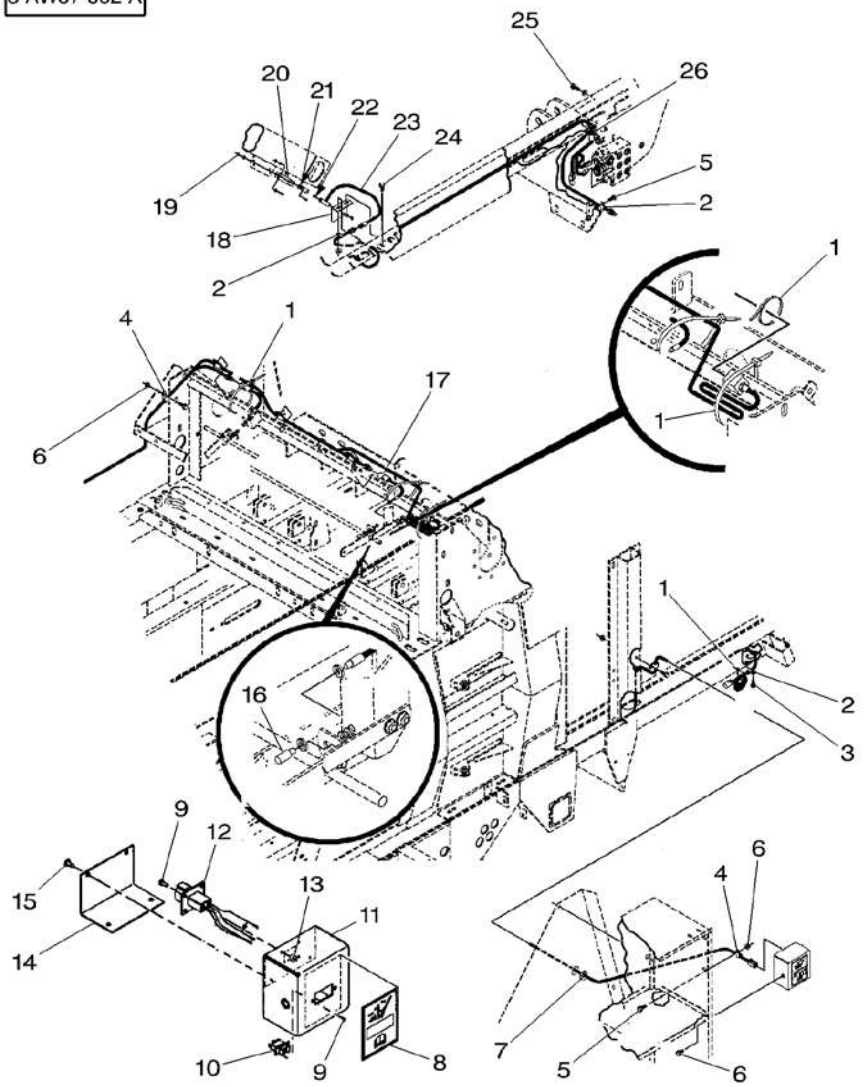

23	***700710208***		**1** SWITCH	INTERRUPTEUR INTERRUTTORE	SCHALTER INTERRUPTOR
24	7883325	5/16"–18 X 3/4	**2** SCREW	VIS VITE	SCHRAUBE TORNILLO
24	70931277	5/16"–18	**2** LOCKNUT	ECROU BLOCAGE AUTOBLOCCANTE	FLACHMUTTER CONTRATUERCA
25	7883382	3/8"–16 X 1	**1** SCREW	VIS VITE	SCHRAUBE TORNILLO
25	*Y705533*	3/8"	**1** WASHER	RONDELLE RONDELLA	UNTERLEGSCHEIBE ARANDELA
25	***700711238***	3/8"–16	**1** NUT	ECROU DADO	MUTTER TUERCA
26*	70926049	3/4"	**1** CLAMP	COLLIER FASCETTA	HALTESCHELLE ABRAZADERA

Sensors Harness
Faisceau Capteurs
Sensoren–Kabelb
Cavi Sensori
Sensores De Arnes

30-25

With Electronic Control
Avec Controle Electronique
Mit Elektronische Steuerung
Con Controllo Elettronico
Con Control Electronico

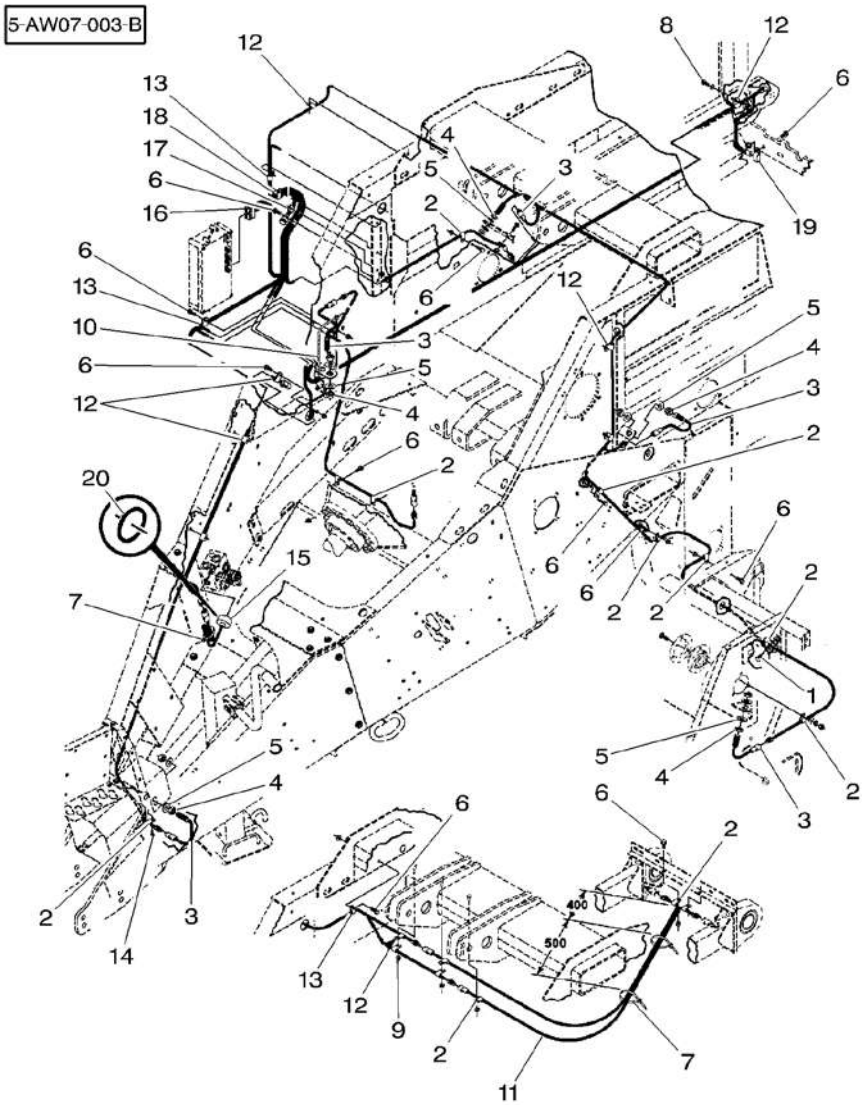

1	7700461	5/16"–18 X 3/4	1	BOLT	BOULON BULLONE	MASCH.SCHRAUBE PERNO
1	***Y705525***	5/16"	1	WASHER	RONDELLE RONDELLA	UNTERLEGSCHEIBE ARANDELA
1	70931277	5/16"–18	1	LOCKNUT	ECROU BLOCAGE AUTOBLOCCANTE	FLACHMUTTER CONTRATUERCA
2	70926917	3/8"	15	CLAMP	COLLIER FASCETTA	HALTESCHELLE ABRAZADERA
3	***700706398***		5	SENSOR	DETECTEUR SENSORE	SENSOR. DETECTOR
4	353436X1	3/4"–16	10	NUT UNF	ECROU UNF DADO UNF	MUTTER UNF TUERCA UNF
5	Y705566	3/4"	10	WASHER	RONDELLE RONDELLA	UNTERLEGSCHEIBE ARANDELA
6	7883382	3/8"–16 X 1	15	SCREW	VIS VITE	SCHRAUBE TORNILLO
6	***700711238***	3/8"–16	18	NUT	ECROU DADO	MUTTER TUERCA
7	*70925094*		4	CLAMP	COLLIER FASCETTA	HALTESCHELLE ABRAZADERA
8	7883382	3/8"–16 X 1	1	SCREW	VIS VITE	SCHRAUBE TORNILLO
8	*Y705533*	3/8"	1	WASHER	RONDELLE RONDELLA	UNTERLEGSCHEIBE ARANDELA
8	***700711238***	3/8"–16	1	NUT	ECROU DADO	MUTTER TUERCA
9	***700711238***	3/8"–16	X	NUT	ECROU DADO	MUTTER TUERCA
10	*70925094*		X	CLAMP	COLLIER FASCETTA	HALTESCHELLE ABRAZADERA
11	700716724		2	CABLE	CABLE CAVO	KABEL CABLE
12	70925617	1/2"	8	CLAMP	COLLIER FASCETTA	HALTESCHELLE ABRAZADERA
13*	70925619	5/8"	3	CLAMP	COLLIER FASCETTA	HALTESCHELLE ABRAZADERA
14	7883325	5/16"–18 X 3/4	1	SCREW	VIS VITE	SCHRAUBE TORNILLO
15*	***700722199***		1	TRANSDUCER	CAPTEUR TRANSDUCER	NABENTRIEB. TRANSDUCER
16	700725815		1	HARNESS	FAISCEAU FASCIOCAVI	KABELBAUM MAZO CABLES
17*	70926049	3/4"	1	CLAMP	COLLIER FASCETTA	HALTESCHELLE ABRAZADERA
18	700725832	1"–1/8	2	CLAMP	COLLIER FASCETTA	HALTESCHELLE ABRAZADERA
19	700717627		1	CLAMP	COLLIER FASCETTA	HALTESCHELLE ABRAZADERA
20*	***70921882***	3/16"	1	O RING	JOINT TORIQUE ANELLO OR	O–RING JUNTA TORICA

Sensors Harness
Faisceau Capteurs
Sensoren–Kabelb
Cavi Sensori
Sensores De Arnes

30-30

With Electronic Control
Avec Controle Electronique
Mit Elektronische Steuerung
Con Controllo Elettronico
Con Control Electronico

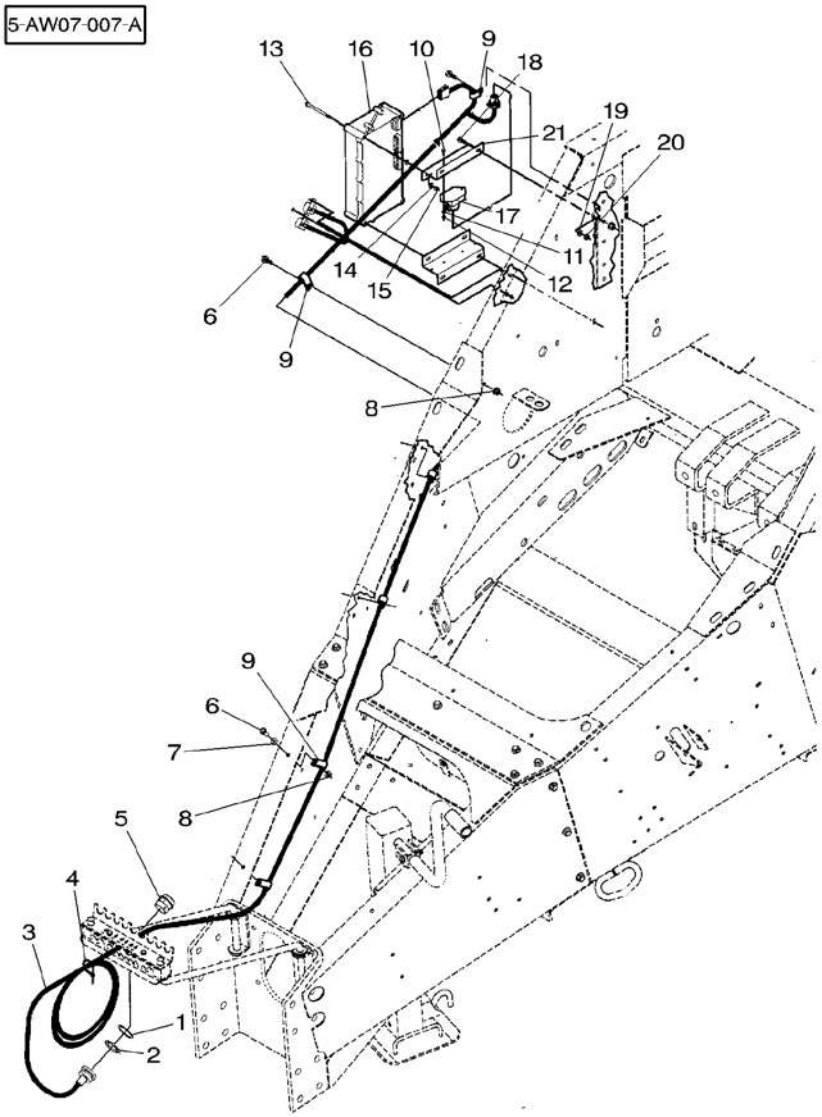

1	700720550		1	WASHER	RONDELLE RONDELLA ARANDELA
2	700716842		1	NUT	ECROU DADO MUTTER TUERCA
3	700725816		1	HARNESS	FAISCEAU FASCIOCAVI KABELBAUM MAZO CABLES
4	*70925094*		1	CLAMP	COLLIER FASCETTA HALTESCHELLE ABRAZADERA
5	700725925		1	CAP	CHAPEAU CAPPELLO KAPPE TAPA
6	7883382	3/8"–16 X 1	6	SCREW	VIS VITE SCHRAUBE TORNILLO
7	*Y705533*	3/8"	4	WASHER	RONDELLE RONDELLA UNTERLEGSCHEIBE ARANDELA
8	***700711238***	3/8"–16	6	NUT	ECROU DADO MUTTER TUERCA
9	70925619	5/8"	6	CLAMP	COLLIER FASCETTA HALTESCHELLE ABRAZADERA
10	772426	No 10–24 X 5/8	4	SCREW	VIS VITE SCHRAUBE TORNILLO
11	70917380	No 10	4	WASHER	RONDELLE RONDELLA UNTERLEGSCHEIBE ARANDELA
12	70926673	No 10–24	4	NUT	ECROU DADO MUTTER TUERCA
13	70931272	1/4"–20 X 4	4	CAPSCREW	VIS BOUCHON TAPPO A VITE HUTSCHRAUBE TORNILLO TAPON
14	353769X1	1/4"	8	WASHER	RONDELLE RONDELLA UNTERLEGSCHEIBE ARANDELA
15	Y704395	1/4"–20	4	NUT	ECROU DADO MUTTER TUERCA
16	700722957		1	CONTROL	CONTROLE CONTROLLO STEUERUNG MANDO
17	700725818		1	MODULE	MODULE MODULO MODEL MODULO
18	7883325	5/16"–18 X 3/4	4	SCREW	VIS VITE SCHRAUBE TORNILLO
19	***Y705525***	5/16"	4	WASHER	RONDELLE RONDELLA UNTERLEGSCHEIBE ARANDELA
20	70931277	5/16"–18	4	LOCKNUT	ECROU BLOCAGE AUTOBLOCCANTE FLACHMUTTER CONTRATUERCA
21	700155835		2	SUPPORT	SUPPORT SUPPORTO LAGERUNG DISPOS.DE SOSTEN

Electrical
Electricite
Elektrizitat
Elettricita
Electricidad

30-35

5-BA10-009-A

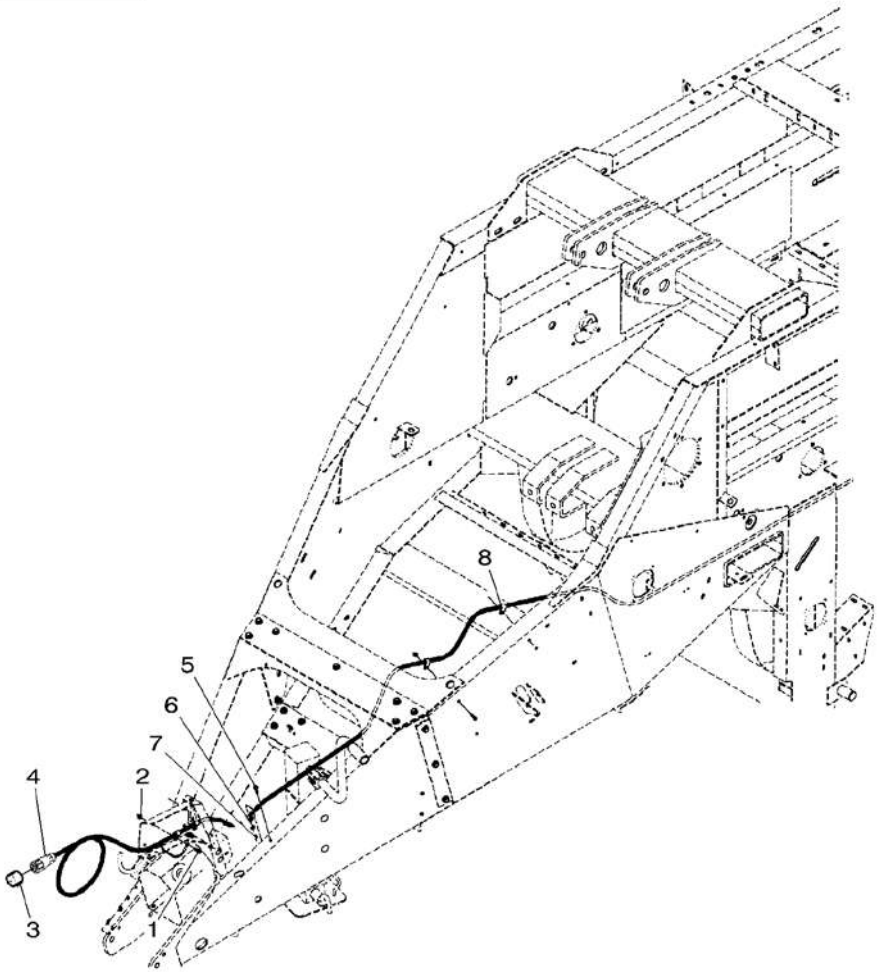

1*	7883333	5/16"–18 X 1	1 SCREW	VIS VITE	SCHRAUBE TORNILLO
2	Y704726	5/16"–18	1 TOP LOCKNUT	ECROU FREIN DADO DI TESTA	SELBSTS.MUTTER CONTRATUERCA SUP
3	Y745216		1 CAP	CHAPEAU CAPPELLO	KAPPE TAPA
4	700717836	➡ ...	1 HARNESS	FAISCEAU FASCIOCAVI	KABELBAUM MAZO CABLES
4*	700722788	➡ ...	1 HARNESS	FAISCEAU FASCIOCAVI	KABELBAUM MAZO CABLES
5	7883382	3/8"–16 X 1	3 SCREW	VIS VITE	SCHRAUBE TORNILLO
6	*Y705533*	3/8"	3 WASHER	RONDELLE RONDELLA	UNTERLEGSCHEIBE ARANDELA
7	***700711238***	3/8"–16	3 NUT	ECROU DADO	MUTTER TUERCA
8	70925617	1/2"	5 CLAMP	COLLIER FASCETTA	HALTESCHELLE ABRAZADERA

Electrical Electricite Elektrizitat Elettricita Electricidad	30-40	With Electronic Control Avec Controle Electronique Mit Elektronische Steuerung Con Controllo Elettronico Con Control Electronico

5-BA10-017-A

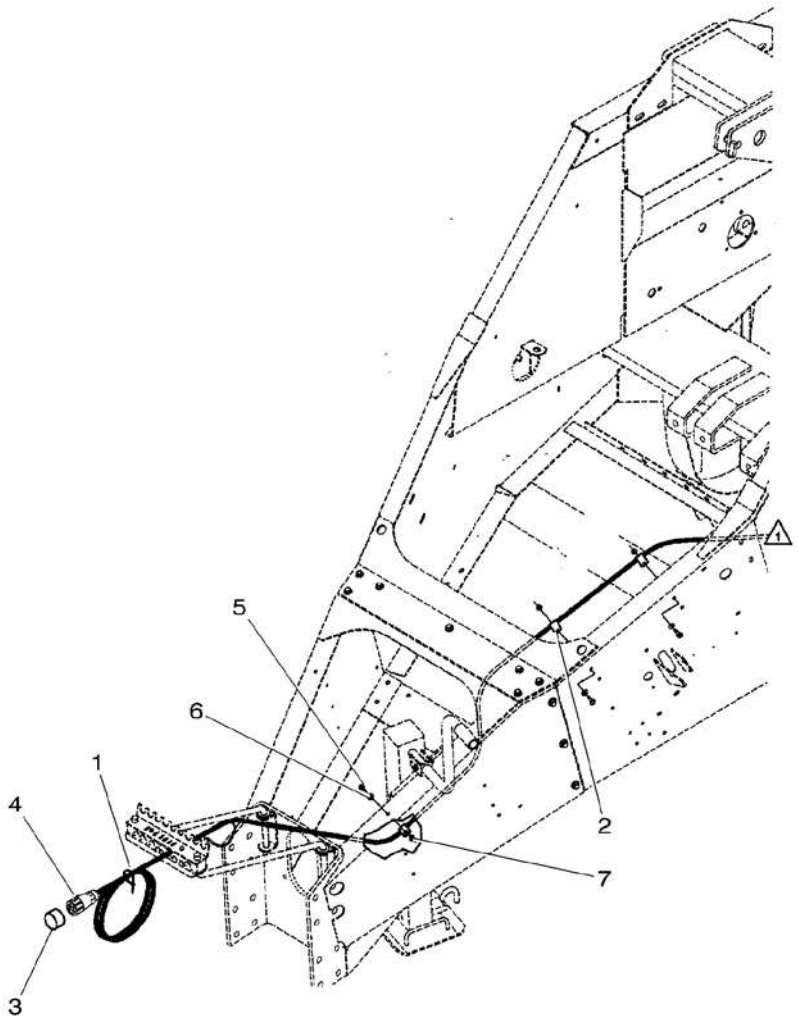

1*	70937133		1 TIE	ATTACHE TRAVERSA ATTACCO	KUPPL.STANGE BARRA DE ENLACE
2*	70925617	1/2"	5 CLAMP	COLLIER FASCETTA	HALTESCHELLE ABRAZADERA
3	Y745216		1 CAP	CHAPEAU CAPPELLO	KAPPE TAPA
4	700717836		1 HARNESS	FAISCEAU FASCIOCAVI	KABELBAUM MAZO CABLES
5	7883382	3/8"-16 X 1	3 SCREW	VIS VITE	SCHRAUBE TORNILLO
6	*Y705533*	3/8"	3 WASHER	RONDELLE RONDELLA	UNTERLEGSCHEIBE ARANDELA
7	***700711238***	3/8"-16	3 NUT	ECROU DADO	MUTTER TUERCA

Electrical
Electricite
Elektrizitat
Elettricita
Electricidad

30-45

With Electronic Control
Avec Controle Electronique
Mit Elektronische Steuerung
Con Controllo Elettronico
Con Control Electronico

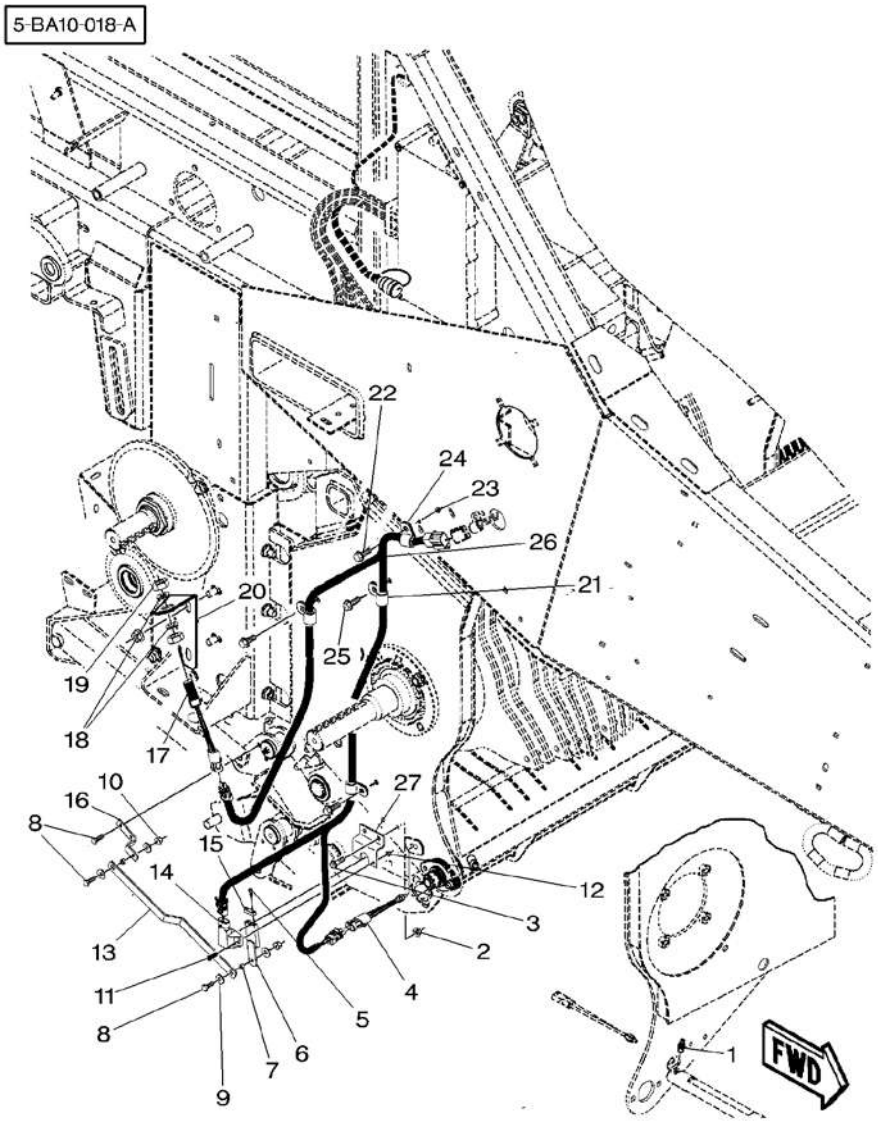

1*	***700710211***		**1** ACTUATOR	DECLENCHEUR AZIONATORE	BETAETIGUNG ACTUADOR
2*	7883333	5/16"-18 X 1	**2** SCREW	VIS VITE	SCHRAUBE TORNILLO
3*	Y704726	5/16"-18	**2** TOP LOCKNUT	ECROU FREIN DADO DI TESTA	SELBSTS.MUTTER CONTRATUERCA SUP
4*	***700119161***		**1** SWITCH	INTERRUPTEUR INTERRUTTORE	SCHALTER INTERRUPTOR
5*	700719204	No 10-24 X 1/2	**2** SCREW	VIS VITE	SCHRAUBE TORNILLO
6*	700139215		**1** STRAP	PATTE CORREGGIA	LASCHE FAJA
7*	700139211		**2** BUSH	BAGUE BOCCOLA	BUCHSE CASQUILLO
8*	353667X1	1/4"-20 X 3/4	**4** BOLT UNC	BOULON UNC BULLONE UNC	MASCH.SCHRB.UNC PERNO UNC
9*	355617X1	1/4"	**4** WASHER	RONDELLE RONDELLA	UNTERLEGSCHEIBE ARANDELA
10*	1703354	1/4"-20	**4** LOCKNUT	ECROU BLOCAGE AUTOBLOCCANTE	FLACHMUTTER CONTRATUERCA
11*	700711659	No 8-32 X 3/4	**2** SCREW	VIS VITE	SCHRAUBE TORNILLO
12*	7775414	No 8-32	**2** NUT	ECROU DADO	MUTTER TUERCA
13*	700139213		**1** STRAP	PATTE CORREGGIA	LASCHE FAJA
14*	***71391869***		**1** SENSOR	DETECTEUR SENSORE	SENSOR. DETECTOR
15*	700140373		**1** CAP	CHAPEAU CAPPELLO	KAPPE TAPA
16*	700139217		**1** LINK	MAILLON MAGLIA	GLIED UNION
17*	***700706398***		**1** SENSOR	DETECTEUR SENSORE	SENSOR. DETECTOR
18*	Y705566	3/4"	**2** WASHER	RONDELLE RONDELLA	UNTERLEGSCHEIBE ARANDELA
19*	353436X1	3/4"-16	**2** NUT UNF	ECROU UNF DADO UNF	MUTTER UNF TUERCA UNF
20*	700140359P		**1** SUPPORT	SUPPORT SUPPORTO	LAGERUNG DISPOS.DE SOSTEN
21*	70926917	3/8"	**1** CLAMP	COLLIER FASCETTA	HALTESCHELLE ABRAZADERA
22*	7883382	3/8"-16 X 1	**1** SCREW	VIS VITE	SCHRAUBE TORNILLO
23*	***700711238***	3/8"-16	**1** NUT	ECROU DADO	MUTTER TUERCA
24*	70925617	1/2"	**3** CLAMP	COLLIER FASCETTA	HALTESCHELLE ABRAZADERA
25*	Y702951	3/8"-16 X 3/4	**3** SCREW	VIS VITE	SCHRAUBE TORNILLO
26*	700725824		**1** HARNESS	FAISCEAU FASCIOCAVI	KABELBAUM MAZO CABLES

5-BA10-018-A

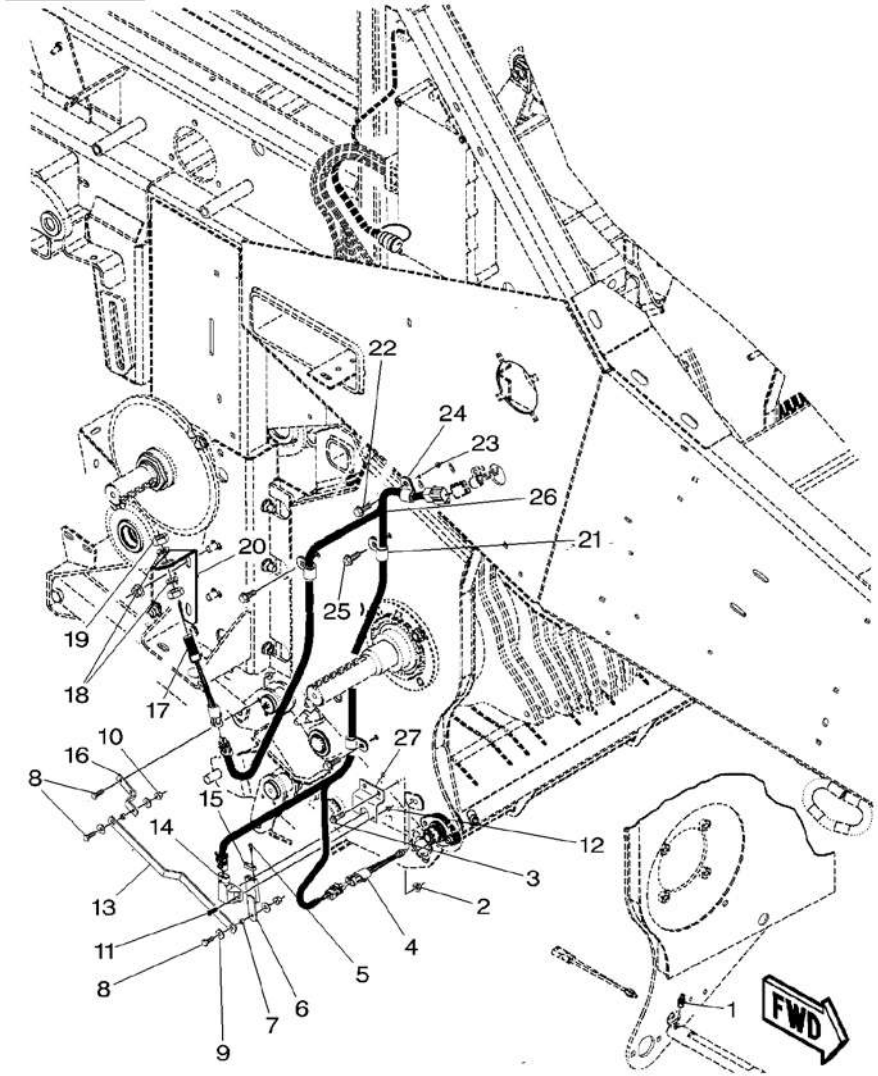

27*	700139216	1	SUPPORT SUPPORTO	LAGERUNG DISPOS.DE SOSTEN

Lighting Equipment **Eclairage** **Beleuchtungsanlage** **Equipaggiamento Illuminazione** **Equipo Alumbrado**	**Front** **Avant** **Vorderseite** **Frontale** **Frontal**	**30-50**	**With Electronic Control** **Avec Controle Electronique** **Mit Elektronische Steuerung** **Con Controllo Elettronico** **Con Control Electronico**

5-AW02-004-B

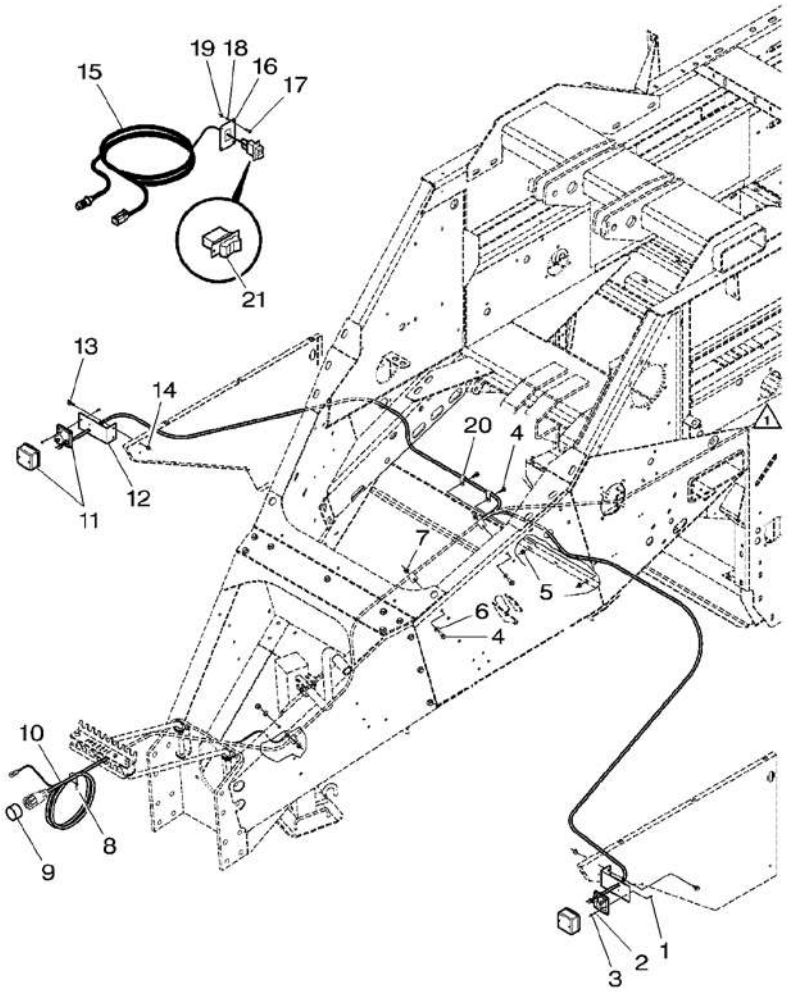

1*	700705185	No 8–32 X 1/2	4	SCREW	VIS VITE	SCHRAUBE TORNILLO
2*	70922710	No 8	4	LOCK WASHER	RONDELLE FREIN ROSETTA ELASTICA	FEDERRING ARANDELA GROWER
3*	704494	No 8–32	4	NUT	ECROU DADO	MUTTER TUERCA
4*	7883382	3/8"–16 X 1	5	SCREW	VIS VITE	SCHRAUBE TORNILLO
5*	***Y704734***	3/8"–16	2	TOP LOCKNUT	ECROU FREIN DADO DI TESTA	SELBSTS.MUTTER CONTRATUERCA SUP
6*	*Y705533*	3/8"	3	WASHER	RONDELLE RONDELLA	UNTERLEGSCHEIBE ARANDELA
7*	***700711238***	3/8"–16	3	NUT	ECROU DADO	MUTTER TUERCA
8*	70937133		1	TIE	ATTACHE TRAVERSA ATTACCO	KUPPL.STANGE BARRA DE ENLACE
9*	Y745216		1	CAP	CHAPEAU CAPPELLO	KAPPE TAPA
10*	700722788		1	HARNESS	FAISCEAU FASCIOCAVI	KABELBAUM MAZO CABLES
11*	700723642		2	LIGHT	FEU FARO	LEUCHTE ALUMBRADO
12*	700137697P		2	BRACKET	SUPPORT FIXATION SUPPORTO FISSAGG	HALTEARM SOPORTE
13*	7883333	5/16"–18 X 1	4	SCREW	VIS VITE	SCHRAUBE TORNILLO
14*	Y704726	5/16"–18	4	TOP LOCKNUT	ECROU FREIN DADO DI TESTA	SELBSTS.MUTTER CONTRATUERCA SUP
15*	700722786		1	HARNESS	FAISCEAU FASCIOCAVI	KABELBAUM MAZO CABLES
16*	700137047P		1	BRACKET	SUPPORT FIXATION SUPPORTO FISSAGG	HALTEARM SOPORTE
17*	700705088	No 10–24 X 3/4	4	SCREW	VIS VITE	SCHRAUBE TORNILLO
18*	353445X1	No 10	4	LOCK WASHER	RONDELLE FREIN ROSETTA ELASTICA	FEDERRING ARANDELA GROWER
19*	***Y704072***	No 10–24	4	NUT	ECROU DADO	MUTTER TUERCA
20*	70925617	1/2"	5	CLAMP	COLLIER FASCETTA	HALTESCHELLE ABRAZADERA
21*	700723828		1	SWITCH	INTERRUPTEUR INTERRUTTORE	SCHALTER INTERRUPTOR

Lighting Equipment
Eclairage
Beleuchtung
Equipaggiamento Illuminazione
Equipo Alumbrado

30-55

HL74155

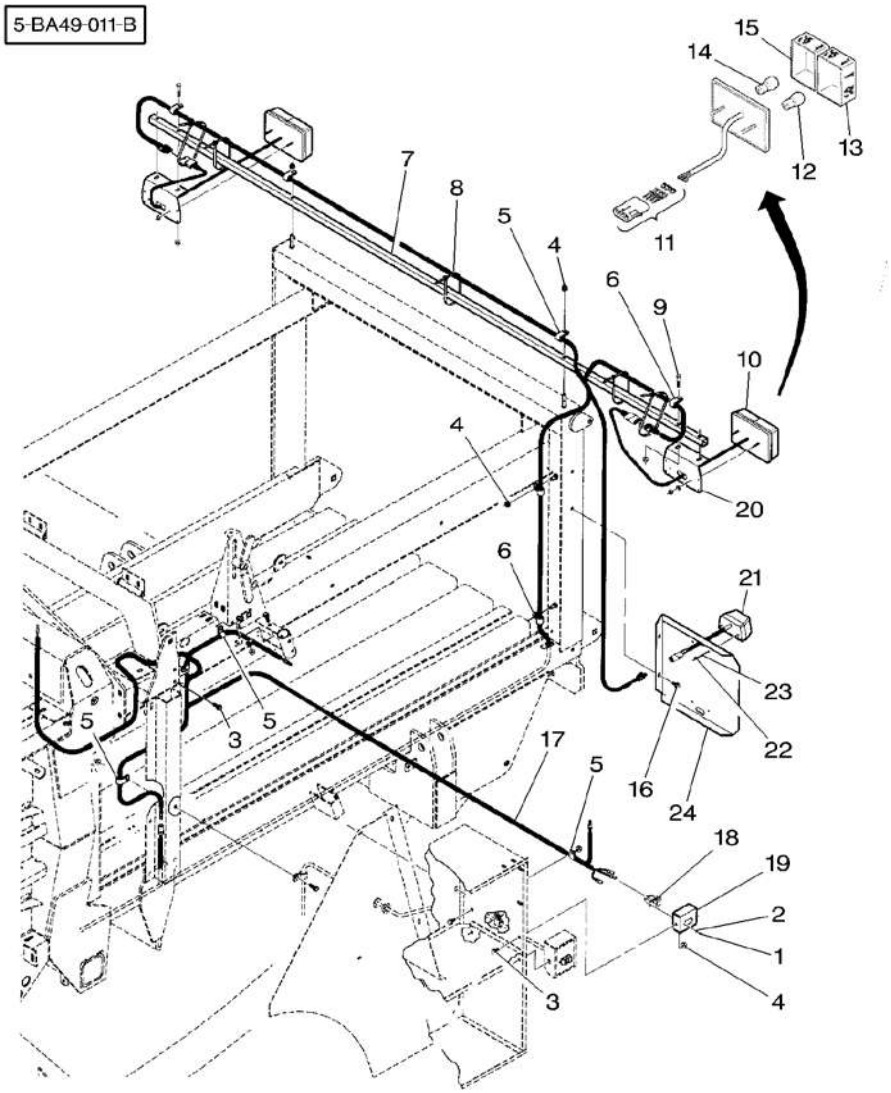

1	700707619	No 6-32 X 1/2	2	SCREW	VIS VITE	SCHRAUBE TORNILLO
2*	195441M1	No 6	2	LOCK WASHER	RONDELLE FREIN ROSETTA ELASTICA	FEDERRING ARANDELA GROWER
3	***7883374***	3/8"-16 X 3/4	3	SCREW	VIS VITE	SCHRAUBE TORNILLO
4	***700711238***	3/8"-16	11	NUT	ECROU DADO	MUTTER TUERCA
5	70926917	3/8"	8	CLAMP	COLLIER FASCETTA	HALTESCHELLE ABRAZADERA
6	70925617	1/2"	4	CLAMP	COLLIER FASCETTA	HALTESCHELLE ABRAZADERA
7	700138066		1	SUPPORT	SUPPORT SUPPORTO	LAGERUNG DISPOS.DE SOSTEN
8	*70925094*		5	CLAMP	COLLIER FASCETTA	HALTESCHELLE ABRAZADERA
9	354264X1	3/8"-16 X 1-3/4	4	BOLT UNC	BOULON UNC BULLONE UNC	MASCH.SCHRB.UNC PERNO UNC
10	***700716461***		2	LIGHT	FEU FARO	LEUCHTE ALUMBRADO
11	700709354	10	1	KIT	JEU KIT	SATZ JUEGO
12	***908543M1***	10	1	BULB S/L 21/5W	AMPOULE 21/5W BULBO 21/5W	GLUEHLAMPE 21/5W BOMB C/I 21/5W
13	700717386	10	1	LENS	LENTILLE LENTE	LINSE LENTE
14	***621235M1***	10	1	BULB 12V 21W SBC	AMPOULE 12V 21W BULBO 12V 21W	GLUEHL 12V21WSBC BOMB 12V 21W SBC
15	700717417	10	1	LENS	LENTILLE LENTE	LINSE LENTE
16	701953	5/16"-18 X 3/4	2	SCREW	VIS VITE	SCHRAUBE TORNILLO
17	700717837		1	HARNESS	FAISCEAU FASCIOCAVI	KABELBAUM MAZO CABLES
18	700715143		1	SWITCH	INTERRUPTEUR INTERRUTTORE	SCHALTER INTERRUPTOR
19	700133171		1	SUPPORT	SUPPORT SUPPORTO	LAGERUNG DISPOS.DE SOSTEN
20*	700133748P		2	PLATE	PLAQUE PIASTRA	PLATTE PLATO
21	700716772		1	LIGHT	FEU FARO	LEUCHTE ALUMBRADO
22	7774078	M5	2	NUT	ECROU DADO	MUTTER TUERCA
23*	353445X1	No 10	2	LOCK WASHER	RONDELLE FREIN ROSETTA ELASTICA	FEDERRING ARANDELA GROWER
24*	700133747P		1	SUPPORT	SUPPORT SUPPORTO	LAGERUNG DISPOS.DE SOSTEN

Lighting Equipment
Eclairage
Beleuchtung
Equipaggiamento Illuminazione
Equipo Alumbrado

30-60

HL74156

5-BA49-019-C

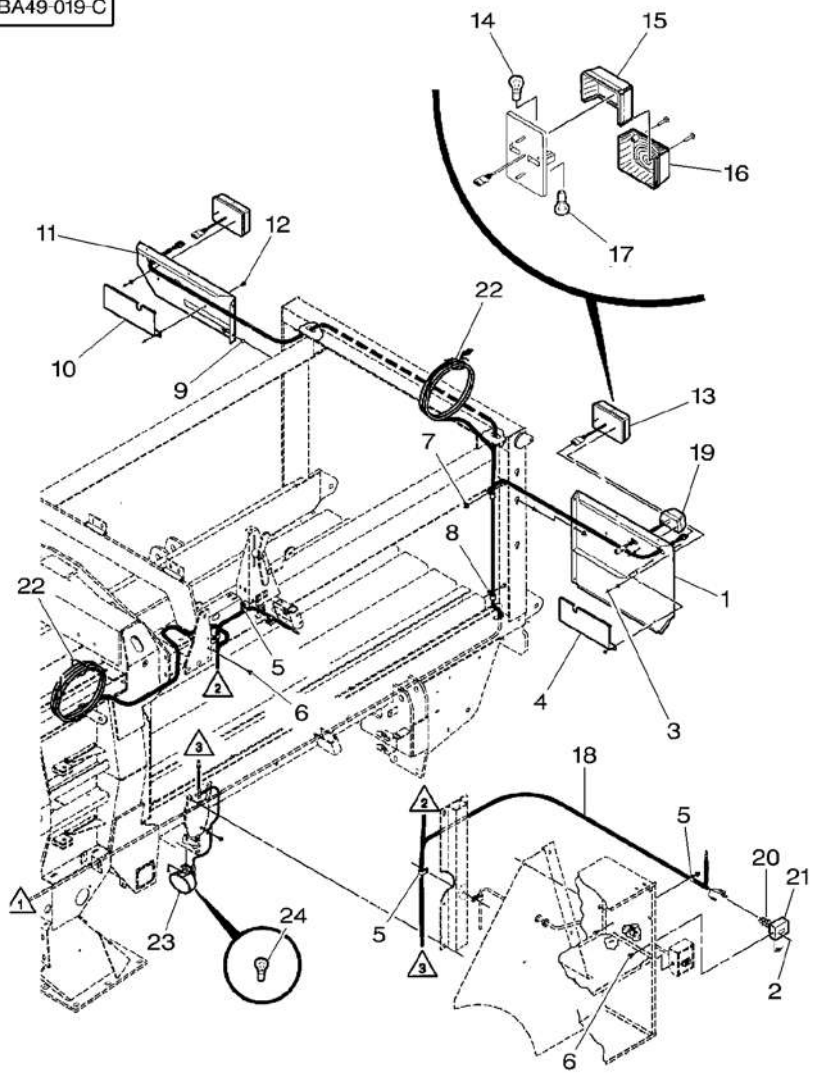

1	✱700139176P	◀	1	SUPPORT	SUPPORT SUPPORTO	LAGERUNG DISPOS.DE SOSTEN
2	✱700710188	No 6–32 X 3/4	2	SCREW	VIS VITE	SCHRAUBE TORNILLO
2	✱195441M1	No 6	2	LOCK WASHER	RONDELLE FREIN ROSETTA ELASTICA	FEDERRING ARANDELA GROWER
3	✱353445X1	No 10	6	LOCK WASHER	RONDELLE FREIN ROSETTA ELASTICA	FEDERRING ARANDELA GROWER
3	7774078	M5	6	NUT	ECROU DADO	MUTTER TUERCA
4	✱700153546P	◀	1	SHIELD	TOLE RIPARO	SCHILD BLINDAJE
5	70926917	3/8"	5	CLAMP	COLLIER FASCETTA	HALTESCHELLE ABRAZADERA
5	✱700717627		1	CLAMP	COLLIER FASCETTA	HALTESCHELLE ABRAZADERA
6	✱*7883374*	3/8"–16 X 3/4	4	SCREW	VIS VITE	SCHRAUBE TORNILLO
6	✱*700711238*	3/8"–16	4	NUT	ECROU DADO	MUTTER TUERCA
7	*700711238*	3/8"–16	2	NUT	ECROU DADO	MUTTER TUERCA
8	70925617	1/2"	2	CLAMP	COLLIER FASCETTA	HALTESCHELLE ABRAZADERA
9	364352X1	5/16"–18 X 3/4	5	BOLT UNC	BOULON UNC BULLONE UNC	MASCH.SCHRB.UNC PERNO UNC
9	70931277	5/16–18	5	LOCKNUT	ECROU BLOCAGE AUTOBLOCCANTE	FLACHMUTTER CONTRATUERCA
10	✱700153566P	▶	1	SHIELD	TOLE RIPARO	SCHILD BLINDAJE
11	✱700139177P	▶	1	SUPPORT	SUPPORT SUPPORTO	LAGERUNG DISPOS.DE SOSTEN
12	✱70931317	1/4"–20 X 3/4	4	BOLT	BOULON BULLONE	MASCH.SCHRAUBE PERNO
12	✱353769X1	1/4"	4	WASHER	RONDELLE RONDELLA	UNTERLEGSCHEIBE ARANDELA
12	70931209	1/4"–20	4	NUT	ECROU DADO	MUTTER TUERCA
13	*700716461*		2	LIGHT	FEU FARO	LEUCHTE ALUMBRADO
14	✱*621235M1*	13	2	BULB 12V 21W SBC	AMPOULE 12V 21W BULBO 12V 21W	GLUEHL 12V21WSBC BOMB 12V 21W SBC
15	✱700717417	13 [A]	2	LENS	LENTILLE LENTE	LINSE LENTE
16	✱700717386	13 [B]	2	LENS	LENTILLE LENTE	LINSE LENTE
17	✱*908543M1*	13	2	BULB S/L 21/5W	AMPOULE 21/5W BULBO 21/5W	GLUEHLAMPE 21/5W BOMB C/I 21/5W
18	✱700717837	➡ ...	1	HARNESS	FAISCEAU FASCIOCAVI	KABELBAUM MAZO CABLES
18	✱700722787	➡ ...	1	HARNESS	FAISCEAU FASCIOCAVI	KABELBAUM MAZO CABLES

Lighting Equipment
Eclairage
Beleuchtung
Equipaggiamento Illuminazione
Equipo Alumbrado

30-60

➡ **HL74156**

5-BA49-019-C

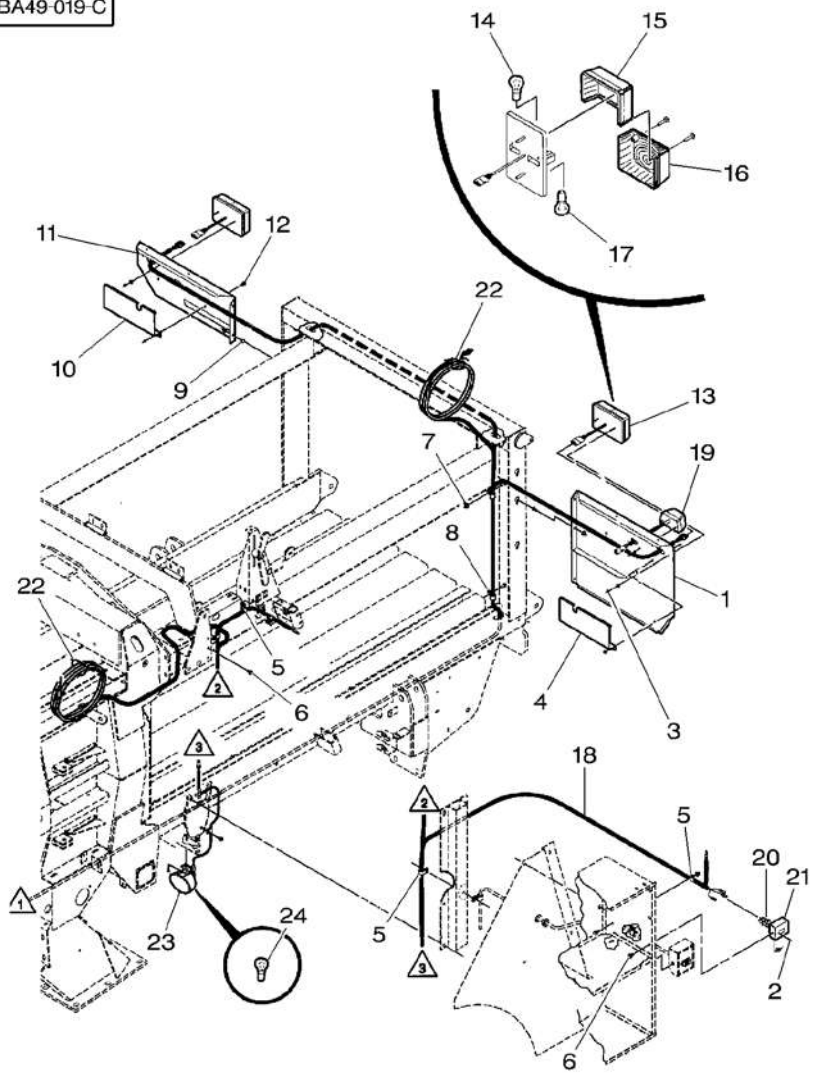

19	700716772		1	LIGHT	FEU FARO INTERRUPTEUR INTERRUTTORE SUPPORT SUPPORTO ATTACHE TRAVERSA ATTACCO FEU FARO AMPOULE BULBO	LEUCHTE ALUMBRADO SCHALTER INTERRUPTOR LAGERUNG DISPOS.DE SOSTEN KUPPL.STANGE BARRA DE ENLACE LEUCHTE ALUMBRADO GLUEHLAMPE LAMPARA
20*	700715143		1	SWITCH		
21*	700133171		1	SUPPORT		
22*	70937133		2	TIE		
23*	*700726172*	➡ ...	1	LIGHT		
24*	*285871M1*	23	1	BULB		

[A] AMBER
AMBRE
BERNSTEIN
AMBRA
AMBAR

[B] RED
ROUGE
ROT
ROSSO
ROJA

Lighting Equipment
Eclairage
Beleuchtung
Equipaggiamento Illuminazione
Equipo Alumbrado

30-65

With Electronic Control
Avec Controle Electronique
Mit Elektronische Steuerung
Con Controllo Elettronico
Con Control Electronico

5-BA49-023-A

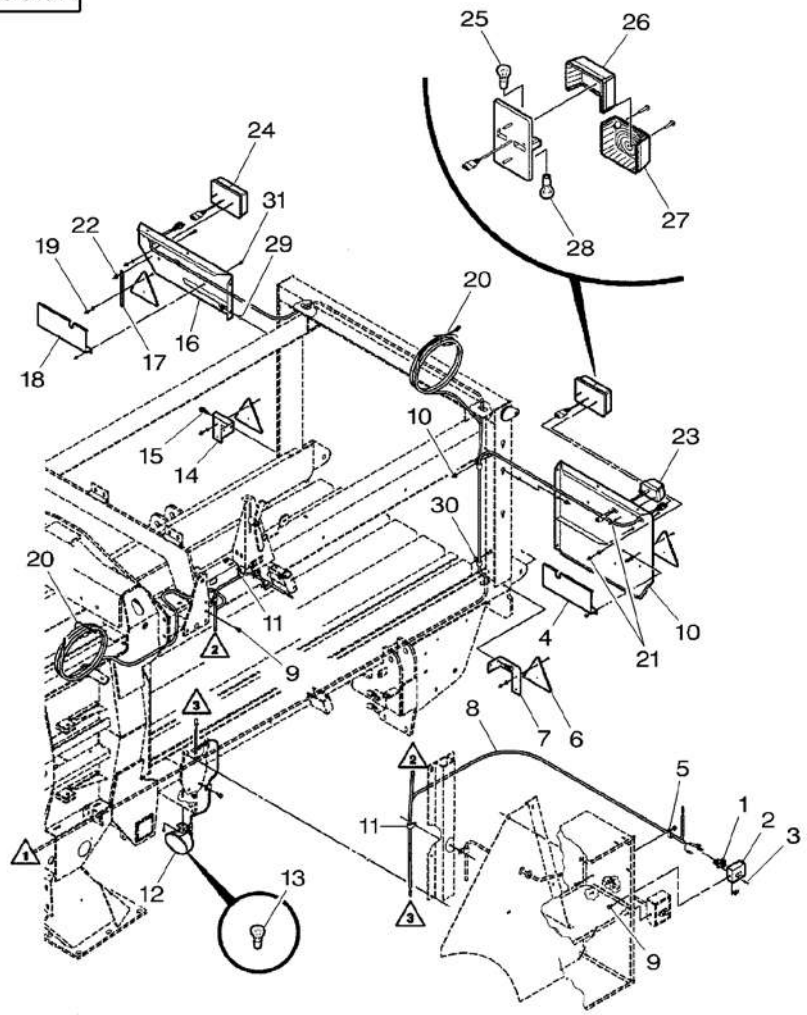

1 ✱	700715143		1	SWITCH	INTERRUPTEUR INTERRUTTORE SCHALTER INTERRUPTOR
2 ✱	700133171		1	SUPPORT	SUPPORT SUPPORTO LAGERUNG DISPOS.DE SOSTEN
3 ✱	700710188	No 6-32 X 3/4	2	SCREW	VIS VITE SCHRAUBE TORNILLO
3 ✱	195441M1	No 6	2	LOCK WASHER	RONDELLE FREIN ROSETTA ELASTICA FEDERRING ARANDELA GROWER
4 ✱	700153546P	◀	1	SHIELD	TOLE RIPARO SCHILD BLINDAJE
5 ✱	700717627		1	CLAMP	COLLIER FASCETTA HALTESCHELLE ABRAZADERA
6 ✱	700722759	[A]	4	REFLECTOR	CATADIOPTRE CATARIFRANGENTE REFLEKTOR CATADIOPTRICO
7 ✱	700163376P	◀	1	BRACKET	SUPPORT FIXATION SUPPORTO FISSAGG HALTEARM SOPORTE
8 ✱	700722787		1	HARNESS	FAISCEAU FASCIOCAVI KABELBAUM MAZO CABLES
9 ✱	***7883374***	3/8"-16 X 3/4	4	SCREW	VIS VITE SCHRAUBE TORNILLO
9 ✱	***700711238***	3/8"-16	4	NUT	ECROU DADO MUTTER TUERCA
10 ✱	700139176P	◀	1	SUPPORT	SUPPORT SUPPORTO LAGERUNG DISPOS.DE SOSTEN
11 ✱	70926917	3/8"	4	CLAMP	COLLIER FASCETTA HALTESCHELLE ABRAZADERA
12 ✱	***700726172***		1	LIGHT	FEU FARO LEUCHTE ALUMBRADO
13 ✱	***285871M1***	12	1	BULB	AMPOULE BULBO GLUEHLAMPE LAMPARA
14 ✱	700163377P	▶	1	BRACKET	SUPPORT FIXATION SUPPORTO FISSAGG HALTEARM SOPORTE
15 ✱	7883382	3/8"-16 X 1	4	SCREW	VIS VITE SCHRAUBE TORNILLO
15 ✱	***700711238***	3/8"-16	4	NUT	ECROU DADO MUTTER TUERCA
16 ✱	700139177P	▶	1	SUPPORT	SUPPORT SUPPORTO LAGERUNG DISPOS.DE SOSTEN
17 ✱	700139673P		1	BRACKET	SUPPORT FIXATION SUPPORTO FISSAGG HALTEARM SOPORTE
18 ✱	700153566P	▶	1	SHIELD	TOLE RIPARO SCHILD BLINDAJE
19 ✱	700705088	No 10-24 X 3/4	8	SCREW	VIS VITE SCHRAUBE TORNILLO
19 ✱	7774078	M5	8	NUT	ECROU DADO MUTTER TUERCA
19 ✱	***Y704072***	No 10-24	8	NUT	ECROU DADO MUTTER TUERCA
20 ✱	70937133		2	TIE	ATTACHE TRAVERSA ATTACCO KUPPL.STANGE BARRA DE ENLACE
21 ✱	353445X1	No 10	6	LOCK WASHER	RONDELLE FREIN ROSETTA ELASTICA FEDERRING ARANDELA GROWER

Lighting Equipment
Eclairage
Beleuchtung
Equipaggiamento Illuminazione
Equipo Alumbrado

30-65

With Electronic Control
Avec Controle Electronique
Mit Elektronische Steuerung
Con Controllo Elettronico
Con Control Electronico

5-BA49-023-A

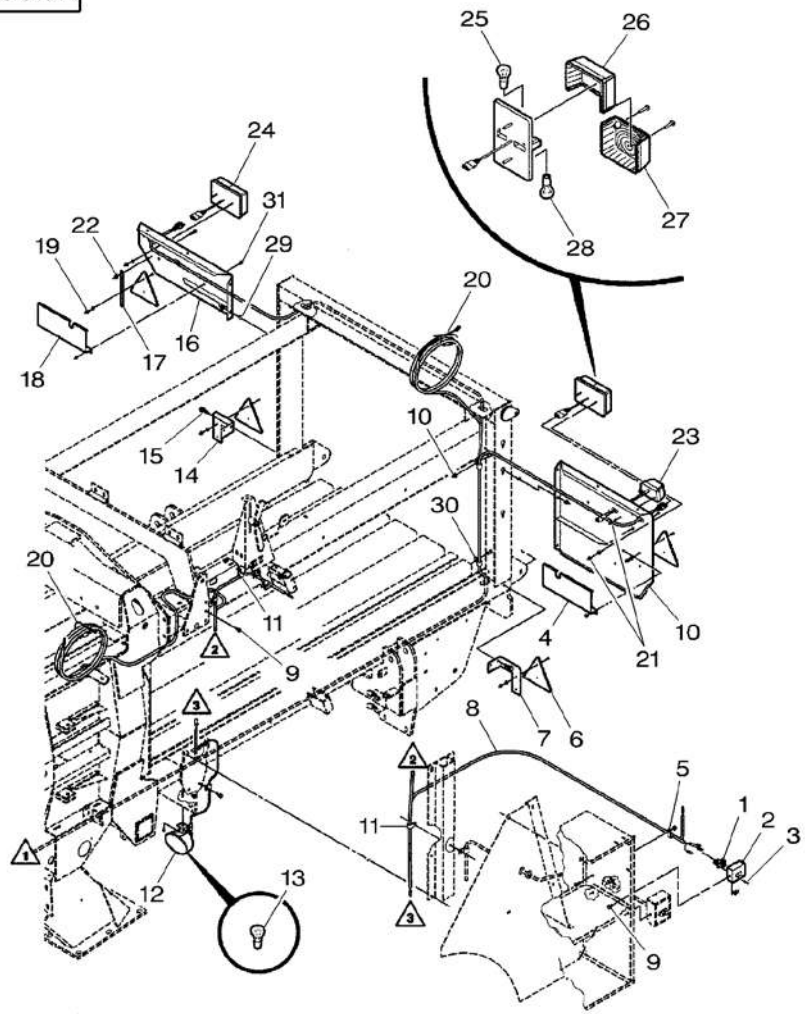

21 * 7774078	M5	6	NUT	ECROU DADO	MUTTER TUERCA
22 * 7883275	1/4"–20 X 3/4	2	BOLT	BOULON BULLONE	MASCH.SCHRAUBE PERNO
22 * 1703354	1/4"–20	2	LOCKNUT	ECROU BLOCAGE AUTOBLOCCANTE	FLACHMUTTER CONTRATUERCA
23 * 700716772		1	LIGHT	FEU FARO	LEUCHTE ALUMBRADO
24 * ***700716461***		2	LIGHT	FEU FARO	LEUCHTE ALUMBRADO
25 * ***621235M1***	24	1	BULB 12V 21W SBC	AMPOULE 12V 21W BULBO 12V 21W	GLUEHL 12V21WSBC BOMB 12V 21W SBC
26 * 700717417	24 [B]	1	LENS	LENTILLE LENTE	LINSE LENTE
27 * 700717386	24 [A]	1	LENS	LENTILLE LENTE	LINSE LENTE
28 * ***908543M1***	24	1	BULB S/L 21/5W	AMPOULE 21/5W BULBO 21/5W	GLUEHLAMPE 21/5W BOMB C/I 21/5W
29 * 364352X1	5/16"–18 X 3/4	5	BOLT UNC	BOULON UNC BULLONE UNC	MASCH.SCHRB.UNC PERNO UNC
29 * 70931277	5/16"–18	5	LOCKNUT	ECROU BLOCAGE AUTOBLOCCANTE	FLACHMUTTER CONTRATUERCA
30 * 70925617	1/2"	2	CLAMP	COLLIER FASCETTA	HALTESCHELLE ABRAZADERA
31 * 70931317	1/4"–20 X 3/4	4	BOLT	BOULON BULLONE	MASCH.SCHRAUBE PERNO
31 * 353769X1	1/4"	4	WASHER	RONDELLE RONDELLA	UNTERLEGSCHEIBE ARANDELA
31 * 70931209	1/4"–20	4	NUT	ECROU DADO	MUTTER TUERCA

[A] RED
ROUGE
ROT
ROSSO
ROJA

[B] ORANGE
ORANGE
ORANGE
ARANCIONE
ANARANJADO

Lighting Equipment
Eclairage
Beleuchtung
Equipaggiamento Illuminazione
Equipo Alumbrado

30-70

5-BA49-012-B

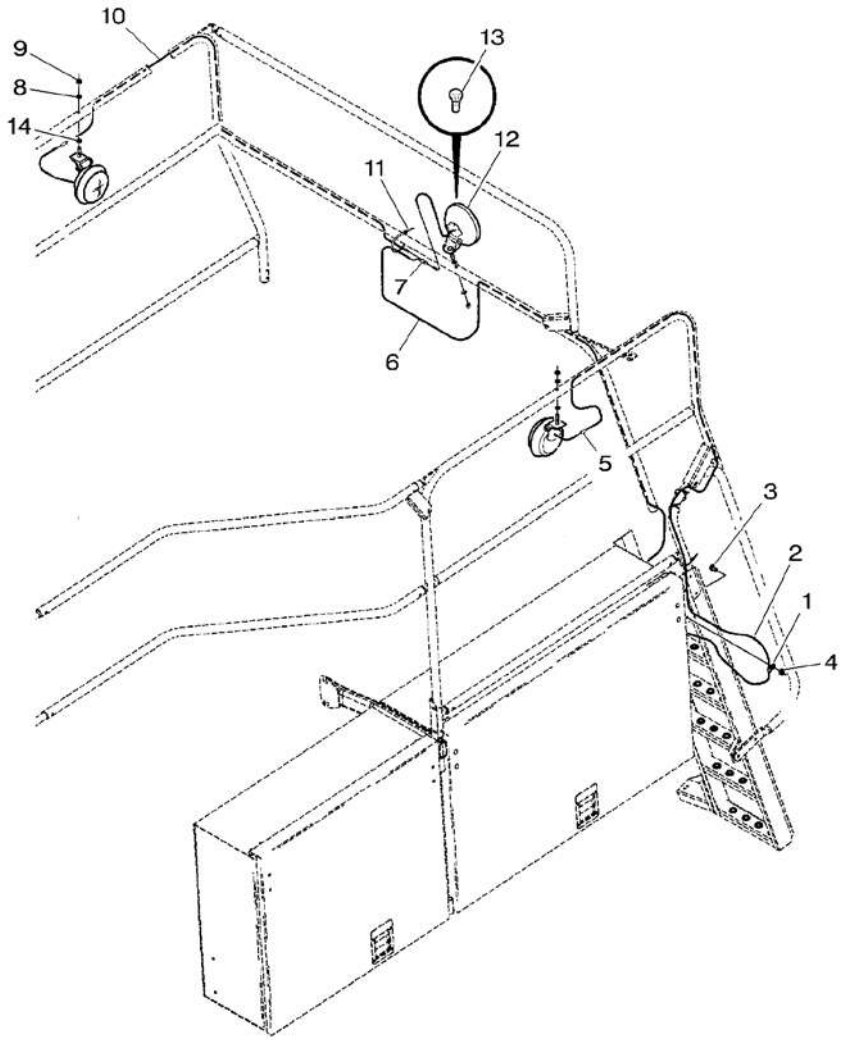

1*	70928654		1	CLIP	CLIP FERMAGLIO	SCHELLE CRAPA RETEN
2	700720117		1	WIRE	FIL FILO DI FERRO	DRAHT HILO
3	***7883374***	3/8"–16 X 3/4	1	SCREW	VIS VITE	SCHRAUBE TORNILLO
4	***700711238***	3/8"–16	1	NUT	ECROU DADO	MUTTER TUERCA
5	41145		2	CONNECTOR	BORNE MORSETTO	DOPPELNIPPEL CONECTOR
6	700720118		1	WIRE	FIL FILO DI FERRO	DRAHT HILO
7	41681		1	CONNECTOR	BORNE MORSETTO	DOPPELNIPPEL CONECTOR
8*	353434X1	3/8"	3	LOCK WASHER	RONDELLE FREIN ROSETTA ELASTICA	FEDERRING ARANDELA GROWER
9*	353431X1	3/8"–24	3	NUT UNF	ECROU UNF DADO UNF	MUTTER UNF TUERCA UNF
10	700720119		1	WIRE	FIL FILO DI FERRO	DRAHT HILO
11	*70925094*		4	CLAMP	COLLIER FASCETTA	HALTESCHELLE ABRAZADERA
12*	***700721617***		3	LAMP	PHARE LAMPADINA	SCHEINWERFER FARO
13*	***285871M1***	12	1	BULB	AMPOULE BULBO	GLUEHLAMPE LAMPARA
14*	*Y705533*	3/8"	6	WASHER	RONDELLE RONDELLA	UNTERLEGSCHEIBE ARANDELA

Lighting Equipment
Eclairage
Beleuchtung
Equipaggiamento Illuminazione
Equipo Alumbrado

30-75

Bale Ejector
Ejecteur De Balle
Auswerferarm Der Ballen
Espulsor Di Bale
Brazo Expulsor De Las Pacas

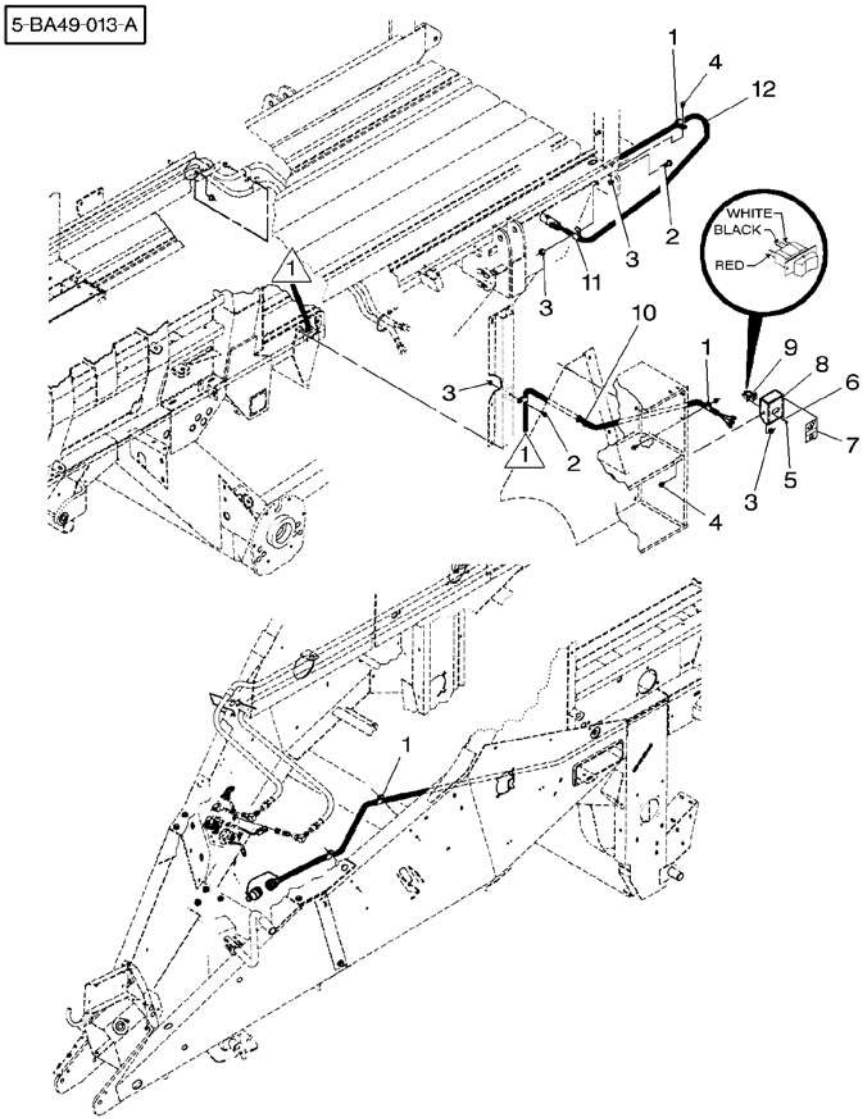

1	70926917	3/8"	**5** CLAMP	COLLIER FASCETTA	HALTESCHELLE ABRAZADERA
2	7883382	3/8"–16 X 1	**3** SCREW	VIS VITE	SCHRAUBE TORNILLO
3	***700711238***	3/8"–16	**5** NUT	ECROU DADO	MUTTER TUERCA
4	***7883374***	3/8"–16 X 3/4	**2** SCREW	VIS VITE	SCHRAUBE TORNILLO
5	700704132	No 6–32 X 3/8	**2** SCREW	VIS VITE	SCHRAUBE TORNILLO
6*	195441M1	No 6	**2** LOCK WASHER	RONDELLE FREIN ROSETTA ELASTICA	FEDERRING ARANDELA GROWER
7	700715152		**1** DECAL	DECALCOMANIE DECALCOMANIA	AUFKLEBER CALCOMANIA
8	700133172		**1** SUPPORT	SUPPORT SUPPORTO	LAGERUNG DISPOS.DE SOSTEN
9	700714096		**1** SWITCH	INTERRUPTEUR INTERRUTTORE	SCHALTER INTERRUPTOR
10*	113354M1		**1** GROMMET	PASSE FIL GOMMINO	GUMMITUELLE PASACABLE
11	755751		**1** CLAMP	COLLIER FASCETTA	HALTESCHELLE ABRAZADERA
12	700714114		**1** HARNESS	FAISCEAU FASCIOCAVI	KABELBAUM MAZO CABLES

Electrical Electricite Elektrizitat Elettricita Electricidad	30-80	Monitor Box Console Konsole Mensola Consola

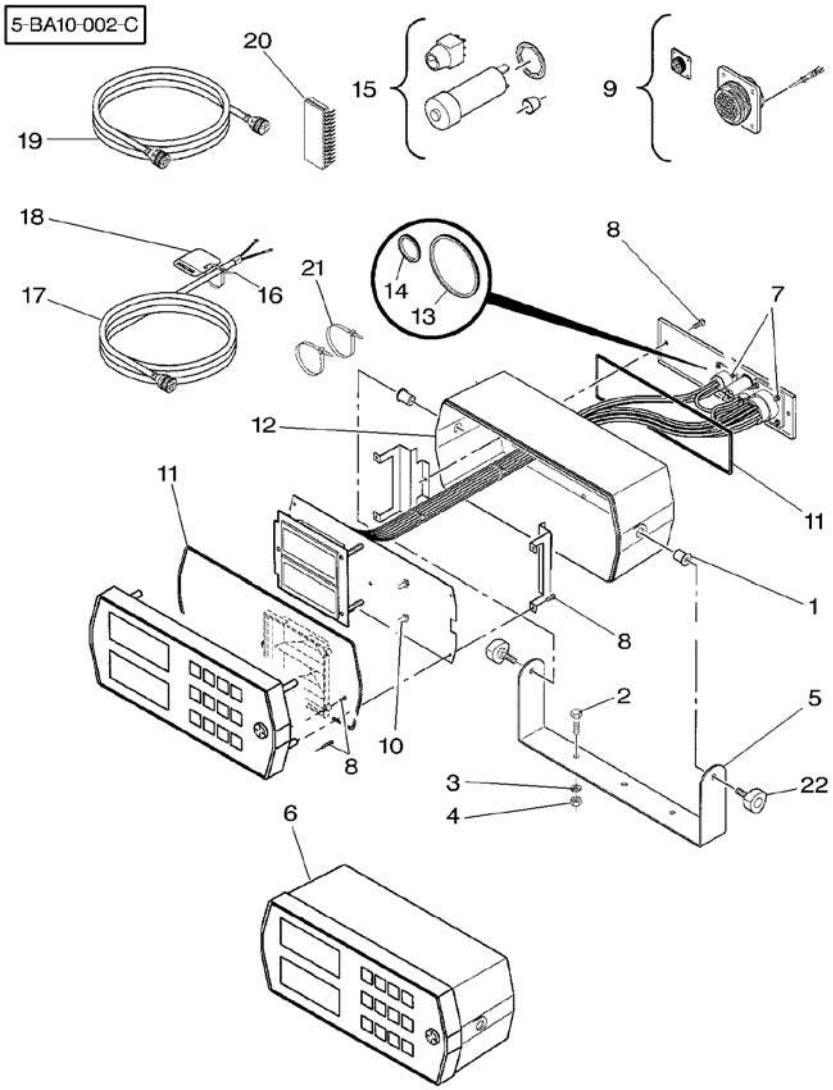

1	700707294		2	NUT	ECROU DADO	MUTTER TUERCA
2	70927401	1/4"–20 X 1	3	BOLT	BOULON BULLONE	MASCH.SCHRAUBE PERNO
3*	353441X1	1/4"	3	LOCK WASHER	RONDELLE FREIN ROSETTA ELASTICA	FEDERRING ARANDELA GROWER
4	355564X1	1/4"–20	3	NUT UNC	ECROU UNC DADO UNC	MUTTER UNC TUERCA UNC
5	700114077		1	SUPPORT	SUPPORT SUPPORTO	LAGERUNG DISPOS.DE SOSTEN
6*	700720302		1	CONSOLE	CONSOLE MENSOLA	KONSOLE CONSOLA
7	700707377	6	1	KIT	JEU KIT	SATZ JUEGO
8	700707378	6	1	KIT	JEU KIT	SATZ JUEGO
9*	700712134	6	1	KIT, REPAIR	JEU REPARATION KIT RIPARAZIONE	REPARATURSATZ JUEGO REPARACION
10	700707457	6	3	LAMP	PHARE LAMPADINA	SCHEINWERFER FARO
11	700707383	6	1	GASKET	JOINT GUARNIZIONE	DICHTSCHEIBE EMPAQUETADURA.
12	700707296	6	1	COVER	COUVERCLE COPERCHIO	DECKEL CUBIERTA
13	700711660	6	1	SEAL	JOINT ETANCHEITE PARAOLIO	DICHTRING RETEN
14	700712102	6	1	SEAL	JOINT ETANCHEITE PARAOLIO	DICHTRING RETEN
15*	700707382	6	1	KIT, REPAIR	JEU REPARATION KIT RIPARAZIONE	REPARATURSATZ JUEGO REPARACION
16	70932747		1	CABLE TIE	ATTACHE CABLE FASCETTA CAVI	KABELBINDER ENLACE DE CABLE
17*	700707598		1	CABLE	CABLE CAVO	KABEL CABLE
18	700707683		1	DECAL	DECALCOMANIE DECALCOMANIA	AUFKLEBER CALCOMANIA
19	700712135		1	CABLE	CABLE CAVO	KABEL CABLE
20				NOT USED	NON UTILISE INUSATO	NICHT VERWENDET NO SE USA
21*	*70925094*		2	CLAMP	COLLIER FASCETTA	HALTESCHELLE ABRAZADERA
22*	700707295		2	KNOB	POMMEAU POMELLO	KNOPF POMO

Electrical Plug
Prise Electrique
Elektrischer Stecker
Presaelettricita
Tomacorriente

30-85

5-BA64-007-B

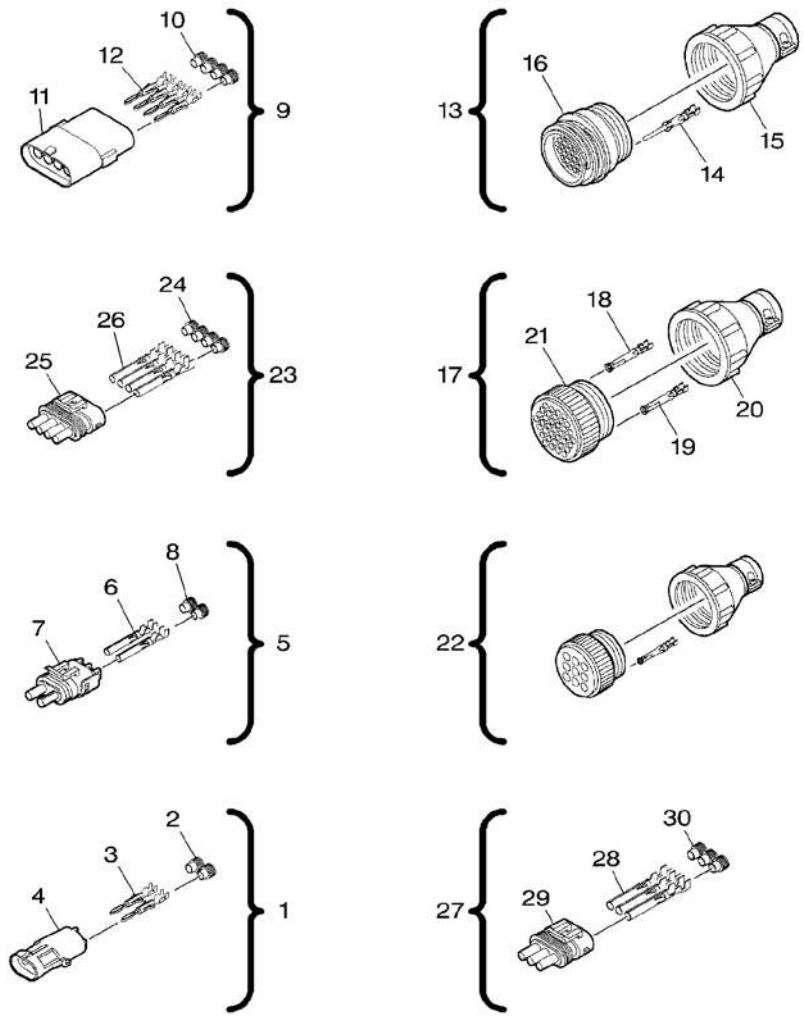

1	700708753			1	KIT, HARNESS	JEU FAISCEAU KIT FASCIOCAVI	KABELSTRANGSATZ JUEGO DE ARNES
2*	700706400	1		2	SEAL	JOINT ETANCHEITE PARAOLIO	DICHTRING RETEN
3*	700706401	1	(18–20 GAUGE)	2	CONNECTOR	BORNE MORSETTO	DOPPELNIPPEL CONECTOR
4*	700706399	1		1	CONNECTOR	BORNE MORSETTO	DOPPELNIPPEL CONECTOR
5	700706999			1	KIT, HARNESS	JEU FAISCEAU KIT FASCIOCAVI	KABELSTRANGSATZ JUEGO DE ARNES
6*	700708760	5	(18–20 GAUGE)	2	SLEEVE	MANCHON MANICOTTO	HUELSE MANCHA
7*	700708761	5		1	CONNECTOR	BORNE MORSETTO	DOPPELNIPPEL CONECTOR
8*	700706400	5		2	SEAL	JOINT ETANCHEITE PARAOLIO	DICHTRING RETEN
9	700709354			1	KIT	JEU KIT	SATZ JUEGO
10*	700706400	9		4	SEAL	JOINT ETANCHEITE PARAOLIO	DICHTRING RETEN
11*	700708964	9		1	CONNECTOR	BORNE MORSETTO	DOPPELNIPPEL CONECTOR
12*	700706401	9		4	CONNECTOR	BORNE MORSETTO	DOPPELNIPPEL CONECTOR
13	700707003			1	KIT, HARNESS	JEU FAISCEAU KIT FASCIOCAVI	KABELSTRANGSATZ JUEGO DE ARNES
14*	700718605	13		37	PIN	GOUPILLE PERNO	BOLZEN PASADOR
15*	700709911	13		1	CLAMP	COLLIER FASCETTA	HALTESCHELLE ABRAZADERA
16*	700718604	13		1	CONNECTOR	BORNE MORSETTO	DOPPELNIPPEL CONECTOR
17	700707004			1	KIT, HARNESS	JEU FAISCEAU KIT FASCIOCAVI	KABELSTRANGSATZ JUEGO DE ARNES
18*	700718608	17		37	CONNECTOR	BORNE MORSETTO	DOPPELNIPPEL CONECTOR
19*	700718607	17		37	CONNECTOR	BORNE MORSETTO	DOPPELNIPPEL CONECTOR
20*	72514691	17		1	CLAMP	COLLIER FASCETTA	HALTESCHELLE ABRAZADERA
21*	72514681	17		1	CONNECTOR	BORNE MORSETTO	DOPPELNIPPEL CONECTOR
22	1713981			1	KIT	JEU KIT	SATZ JUEGO
23	700707002			1	KIT, HARNESS	JEU FAISCEAU KIT FASCIOCAVI	KABELSTRANGSATZ JUEGO DE ARNES
24*	700706400	23		4	SEAL	JOINT ETANCHEITE PARAOLIO	DICHTRING RETEN
25*	700708963	23		1	CONNECTOR	BORNE MORSETTO	DOPPELNIPPEL CONECTOR
26*	700708760	23	(18–20 GAUGE)	4	SLEEVE	MANCHON MANICOTTO	HUELSE MANCHA

Electrical Plug
Prise Electrique
Elektrischer Stecker
Presaelettricita
Tomacorriente

30-85

5-BA64-007-B

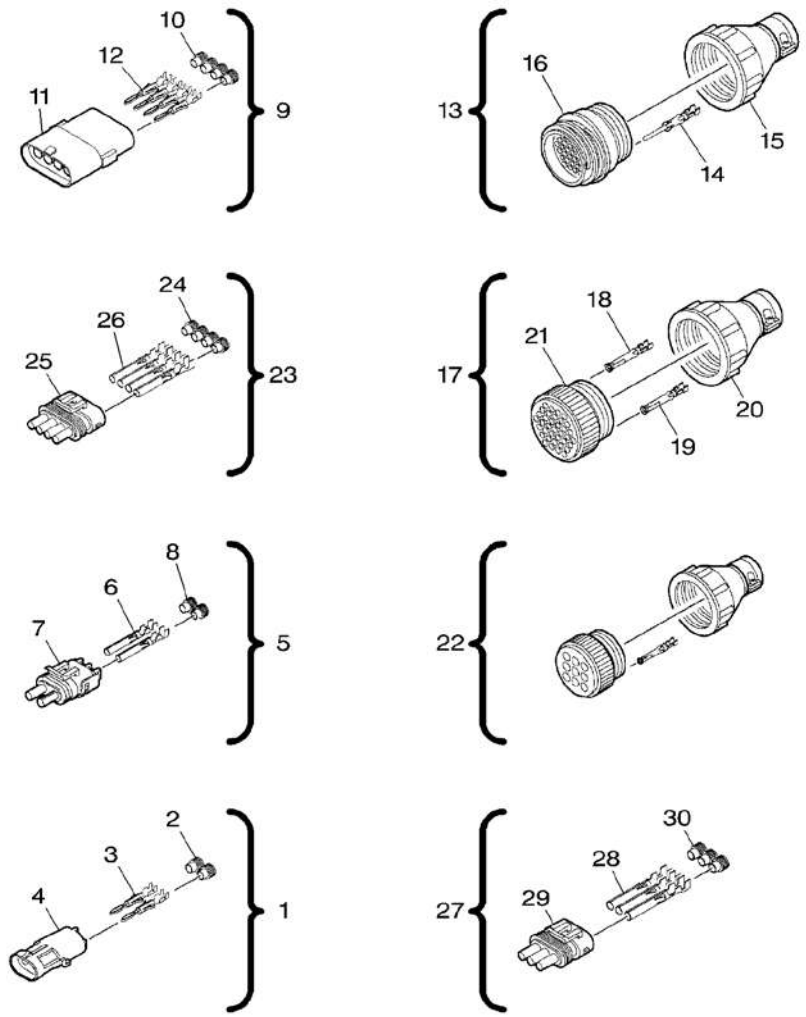

27	700707001		1 KIT, HARNESS	JEU FAISCEAU KIT FASCIOCAVI	KABELSTRANGSATZ JUEGO DE ARNES
28*	700708760	27 (18–20 GAUGE)	3 SLEEVE	MANCHON MANICOTTO	HUELSE MANCHA
29*	700709175	27	1 CONNECTOR	BORNE MORSETTO	DOPPELNIPPEL CONECTOR
30*	700706400	27	3 SEAL	JOINT ETANCHEITE PARAOLIO	DICHTRING RETEN

Electrical Plug
Prise Electrique
Elektrischer Stecker
Presaelettricita
Tomacorriente

30-90

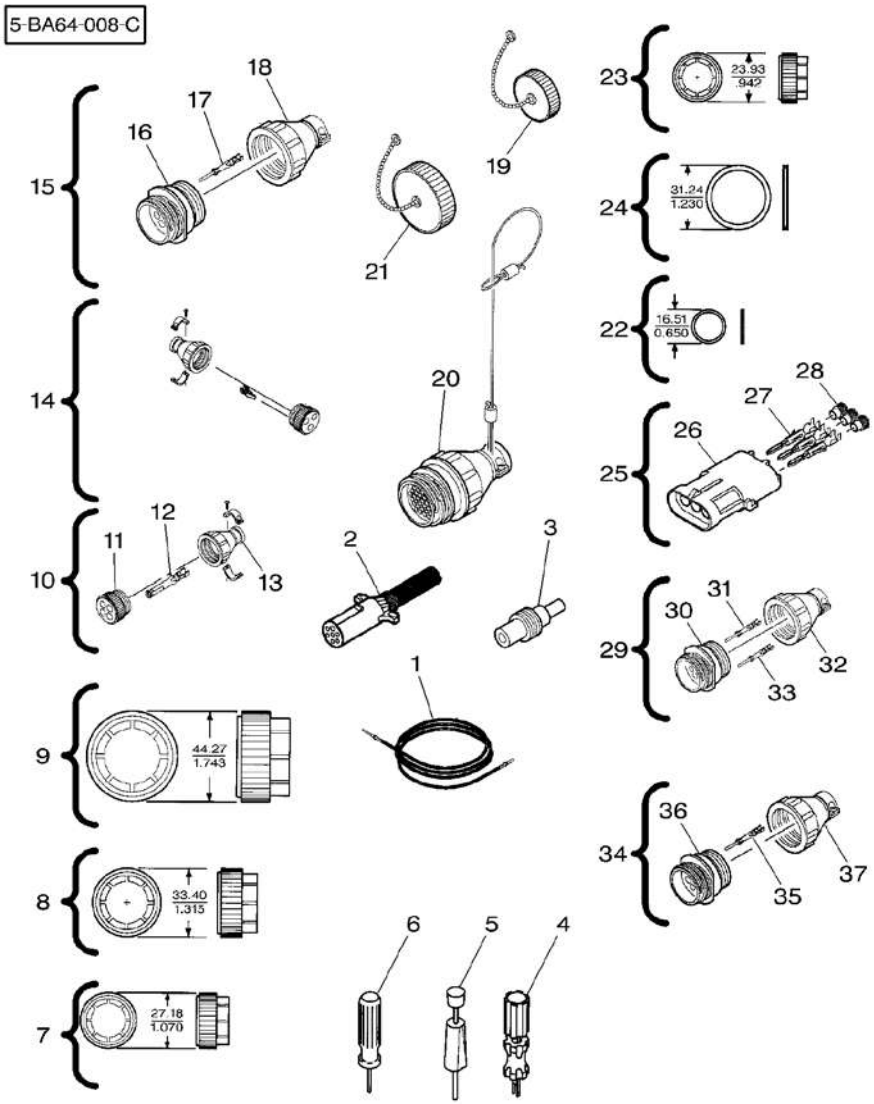

1	700708333		1	WIRE	FIL FILO DI FERRO DRAHT HILO
2*	700706646		1	PLUG	BOUCHON TAPPO VERSCHL.STOPFEN TAPON
3	700714829		1	PLUG	BOUCHON TAPPO VERSCHL.STOPFEN TAPON
4	700707014		1	TOOL	OUTIL ATTREZZO WERKZEUG HERRAMIENTA
5	700707013		1	TOOL	OUTIL ATTREZZO WERKZEUG HERRAMIENTA
6	700707012		1	TOOL	OUTIL ATTREZZO WERKZEUG HERRAMIENTA
7	700707818		1	RING	ANNEAU ANELLO RING ARO
8	700707819		1	RING	ANNEAU ANELLO RING ARO
9	700707820		1	RING	ANNEAU ANELLO RING ARO
10	700712132		1	KIT, REPAIR	JEU REPARATION KIT RIPARAZIONE REPARATURSATZ JUEGO REPARACION
11*	700709232	10	1	PLUG	BOUCHON TAPPO VERSCHL.STOPFEN TAPON
12*	700708758	10	4	SOCKET	CORPS ROTULE PORTALAMPADA STECKSCHL.NUSS ENCHUFE
13*	700709233	10	1	CLAMP	COLLIER FASCETTA HALTESCHELLE ABRAZADERA
14	1714005		1	KIT	JEU KIT SATZ JUEGO
15	1713973		1	KIT	JEU KIT SATZ JUEGO
16*	72514685	15	1	CONNECTOR	BORNE MORSETTO DOPPELNIPPEL CONECTOR
17*	700718605	15	9	PIN	GOUPILLE PERNO BOLZEN PASADOR
18*	700709708	15	1	CLAMP	COLLIER FASCETTA HALTESCHELLE ABRAZADERA
19*	Y745216		1	CAP	CHAPEAU CAPPELLO KAPPE TAPA
20	700713300		1	PLUG	BOUCHON TAPPO VERSCHL.STOPFEN TAPON
21	700712983		1	CAP	CHAPEAU CAPPELLO KAPPE TAPA
22*	700712896		1	SEAL	JOINT ETANCHEITE PARAOLIO DICHTRING RETEN
23*	700707817		1	RING	ANNEAU ANELLO RING ARO
24*	700711660		1	SEAL	JOINT ETANCHEITE PARAOLIO DICHTRING RETEN
25*	700719282		1	KIT, REPAIR	JEU REPARATION KIT RIPARAZIONE REPARATURSATZ JUEGO REPARACION
26*	700706413	25	1	CONNECTOR	BORNE MORSETTO DOPPELNIPPEL CONECTOR

Electrical Plug
Prise Electrique
Elektrischer Stecker
Presaelettricita
Tomacorriente

30-90

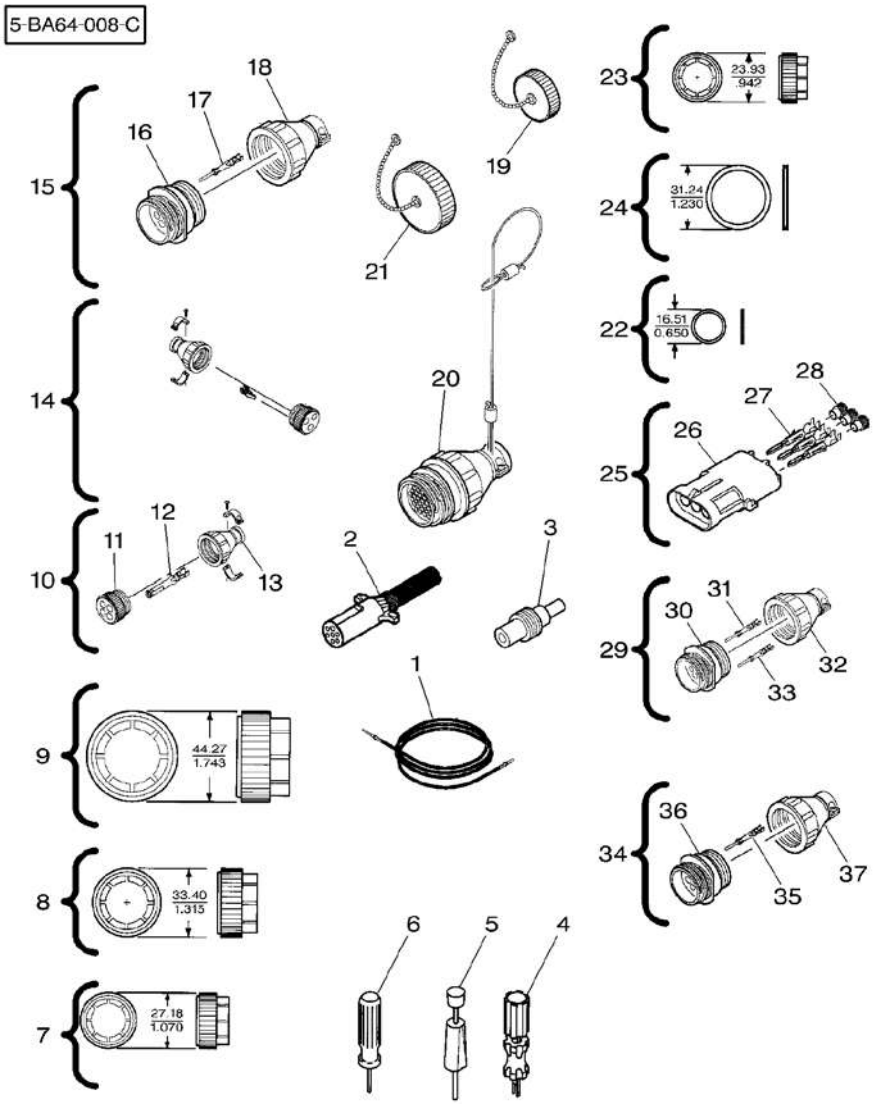

27* 700706414	25		3 PIN	GOUPILLE PERNO	BOLZEN PASADOR
28* 700706415	25		3 SEAL	JOINT ETANCHEITE PARAOLIO	DICHTRING RETEN
29* 1713999			1 KIT	JEU KIT	SATZ JUEGO
30* 700710659	29		1 ELECTRICAL PLUG	PRISE ELECTRIQUE PRESAELETTRICITA	STECKER TOMACORRIENTE
31* 72514689	29	12-16 GAUGE	1 CONTACT	RUPTEUR CONTATTO	KONTAKT CONTACTO
32* 700708756	29		1 CLAMP	COLLIER FASCETTA	HALTESCHELLE ABRAZADERA
33* 700719297	29	10 GAUGE	3 CONTACT	RUPTEUR CONTATTO	KONTAKT CONTACTO
34* 700718618			1 KIT, REPAIR	JEU REPARATION KIT RIPARAZIONE	REPARATURSATZ JUEGO REPARACION
35* 700708757	34		9 PIN	GOUPILLE PERNO	BOLZEN PASADOR
36* 72514685	34		1 CONNECTOR	BORNE MORSETTO	DOPPELNIPPEL CONECTOR
37* 700709708	34		1 CLAMP	COLLIER FASCETTA	HALTESCHELLE ABRAZADERA

Electrical Plug
Prise Electrique
Elektrischer Stecker
Presaelettricita
Tomacorriente

30-95

5-BA64-001-B

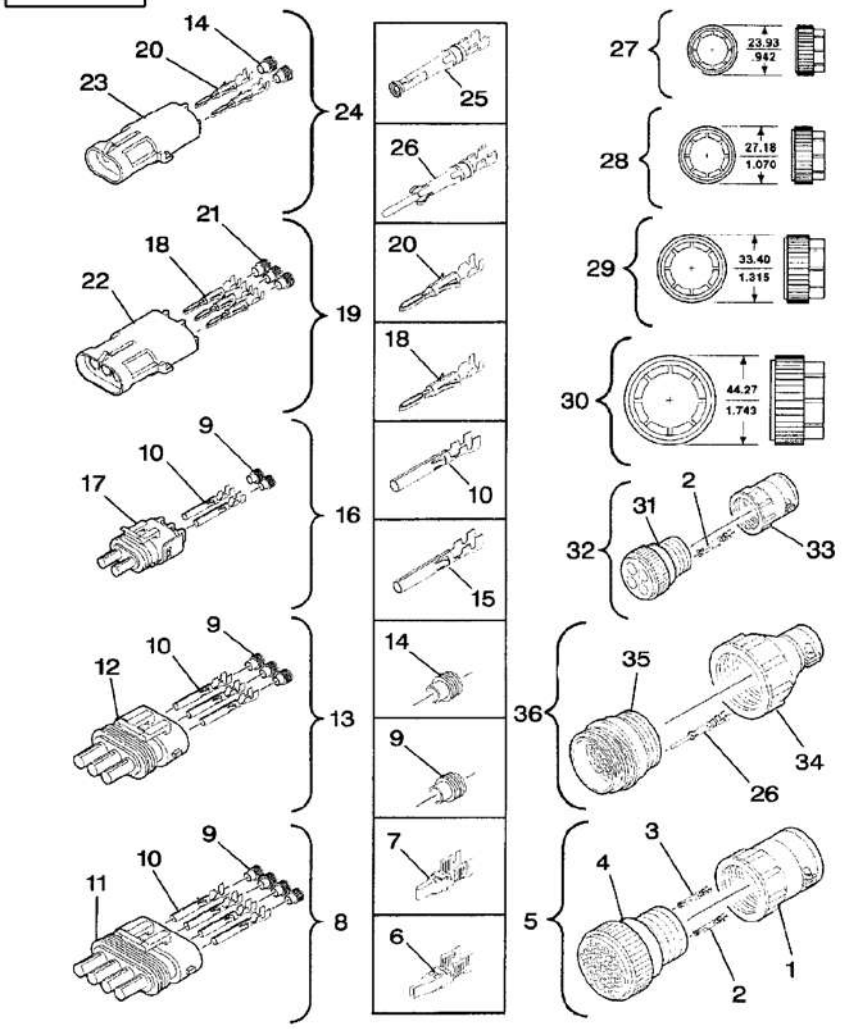

1	72514691	1	CLAMP	COLLIER FASCETTA	HALTESCHELLE ABRAZADERA
2	700718607	1	CONNECTOR	BORNE MORSETTO	DOPPELNIPPEL CONECTOR
3	700718608	1	CONNECTOR	BORNE MORSETTO	DOPPELNIPPEL CONECTOR
4	72514681	1	CONNECTOR	BORNE MORSETTO	DOPPELNIPPEL CONECTOR
5	700707004	1	KIT, HARNESS	JEU FAISCEAU KIT FASCIOCAVI	KABELSTRANGSATZ JUEGO DE ARNES
6	700709706	1	CONTACT	RUPTEUR CONTATTO	KONTAKT CONTACTO
7	700710620	1	CONTACT	RUPTEUR CONTATTO	KONTAKT CONTACTO
8	700707002	9	KIT, HARNESS	JEU FAISCEAU KIT FASCIOCAVI	KABELSTRANGSATZ JUEGO DE ARNES
9	700706400	1	SEAL	JOINT ETANCHEITE PARAOLIO	DICHTRING RETEN
10	700708760	1	SLEEVE	MANCHON MANICOTTO	HUELSE MANCHA
11	700708963	9	CONNECTOR	BORNE MORSETTO	DOPPELNIPPEL CONECTOR
12	700709175	1	CONNECTOR	BORNE MORSETTO	DOPPELNIPPEL CONECTOR
13	700707001	1	KIT, HARNESS	JEU FAISCEAU KIT FASCIOCAVI	KABELSTRANGSATZ JUEGO DE ARNES
14	700712467	1	SEAL	JOINT ETANCHEITE PARAOLIO	DICHTRING RETEN
15	700718576	1	CONNECTOR	BORNE MORSETTO	DOPPELNIPPEL CONECTOR
16	700706999	1	KIT, HARNESS	JEU FAISCEAU KIT FASCIOCAVI	KABELSTRANGSATZ JUEGO DE ARNES
17	700708761	1	CONNECTOR	BORNE MORSETTO	DOPPELNIPPEL CONECTOR
18	700706414	2	PIN	GOUPILLE PERNO	BOLZEN PASADOR
19	700719282	1	KIT, REPAIR	JEU REPARATION KIT RIPARAZIONE	REPARATURSATZ JUEGO REPARACION
20	700718530	1	PIN	GOUPILLE PERNO	BOLZEN PASADOR
21	700706415	1	SEAL	JOINT ETANCHEITE PARAOLIO	DICHTRING RETEN
22	***700720228***	1	TRANSDUCER	CAPTEUR TRANSDUCER	NABENTRIEB. TRANSDUCER
23	700706399	1	CONNECTOR	BORNE MORSETTO	DOPPELNIPPEL CONECTOR
24	700718588	1	KIT, REPAIR	JEU REPARATION KIT RIPARAZIONE	REPARATURSATZ JUEGO REPARACION
25	700708758	1	SOCKET	CORPS ROTULE PORTALAMPADA	STECKSCHL.NUSS ENCHUFE
26	700718605	1	PIN	GOUPILLE PERNO	BOLZEN PASADOR

Electrical Plug
Prise Electrique
Elektrischer Stecker
Presaelettricita
Tomacorriente

30-95

5-BA64-001-B

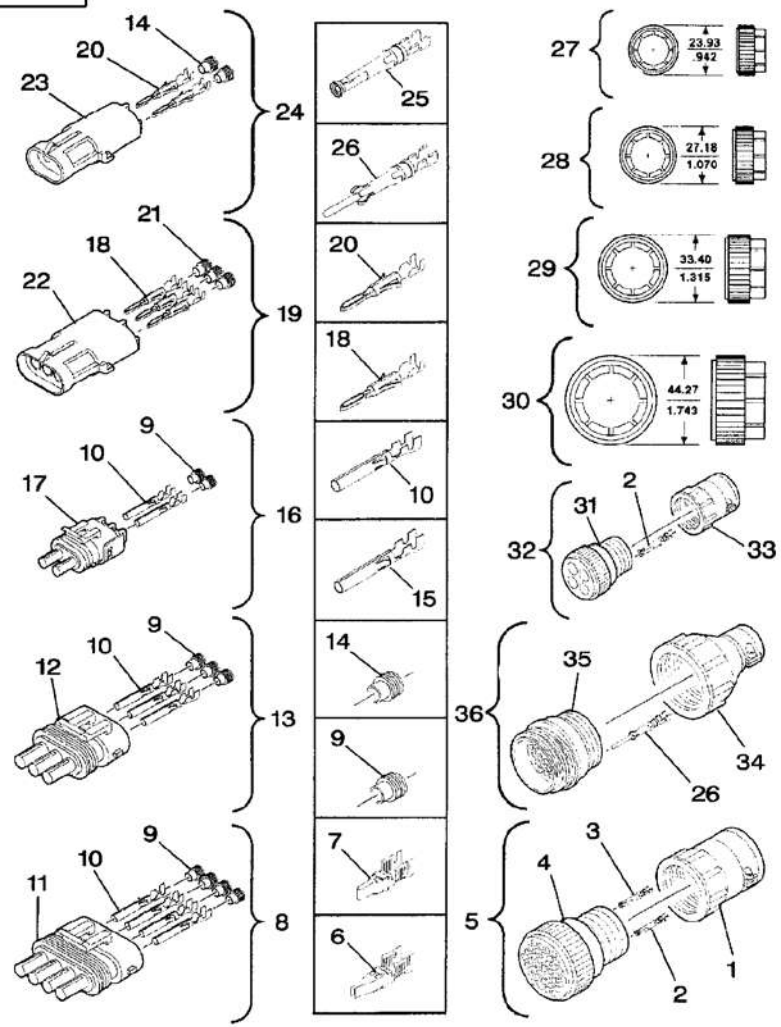

27	700707817	1	RING	ANNEAU ANELLO	RING ARO
28	700707818	1	RING	ANNEAU ANELLO	RING ARO
29	700707819	1	RING	ANNEAU ANELLO	RING ARO
30	700707820	1	RING	ANNEAU ANELLO	RING ARO
31	700709232	1	PLUG	BOUCHON TAPPO	VERSCHL.STOPFEN TAPON
32	700712132	1	KIT, REPAIR	JEU REPARATION KIT RIPARAZIONE	REPARATURSATZ JUEGO REPARACION
33	700713576	1	CLAMP	COLLIER FASCETTA	HALTESCHELLE ABRAZADERA
34	700709911	1	CLAMP	COLLIER FASCETTA	HALTESCHELLE ABRAZADERA
35	700718604	1	CONNECTOR	BORNE MORSETTO	DOPPELNIPPEL CONECTOR
36	700707003	1	KIT, HARNESS	JEU FAISCEAU KIT FASCIOCAVI	KABELSTRANGSATZ JUEGO DE ARNES

Electrical Plug
Prise Electrique
Elektrischer Stecker
Presaelettricita
Tomacorriente

30-100

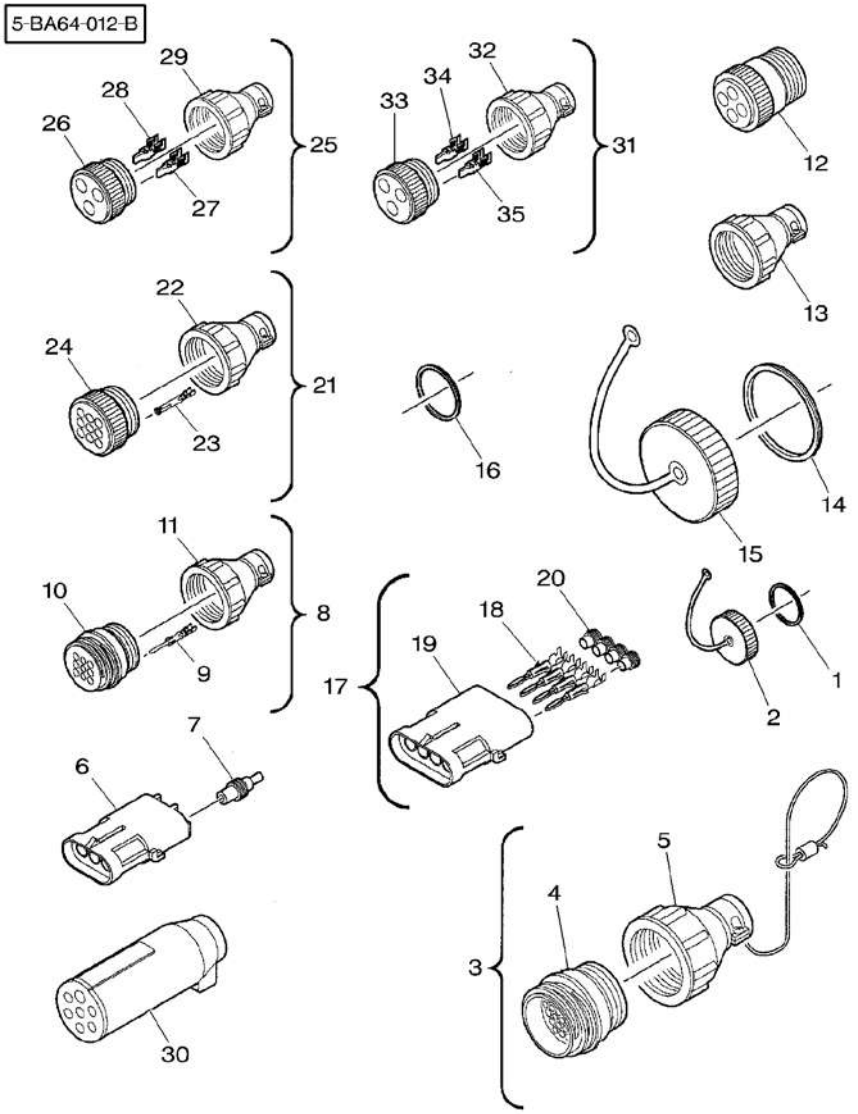

1	700712896		X	SEAL	JOINT ETANCHEITE PARAOLIO	DICHTRING RETEN
2*	Y745216		X	CAP	CHAPEAU CAPPELLO	KAPPE TAPA
3	700713300		X	PLUG	BOUCHON TAPPO	VERSCHL.STOPFEN TAPON
4*	700719293	3	1	CONNECTOR	BORNE MORSETTO	DOPPELNIPPEL CONECTOR
5*	700709911	3	1	CLAMP	COLLIER FASCETTA	HALTESCHELLE ABRAZADERA
6*	***700720228***		X	TRANSDUCER	CAPTEUR TRANSDUCER	NABENTRIEB. TRANSDUCER
7	700714829		X	PLUG	BOUCHON TAPPO	VERSCHL.STOPFEN TAPON
8	1713973		X	KIT	JEU KIT	SATZ JUEGO
9*	700718605	8	1	PIN	GOUPILLE PERNO	BOLZEN PASADOR
10*	72514685	8	9	CONNECTOR	BORNE MORSETTO	DOPPELNIPPEL CONECTOR
11*	700709708	8	1	CLAMP	COLLIER FASCETTA	HALTESCHELLE ABRAZADERA
12	700709232		X	PLUG	BOUCHON TAPPO	VERSCHL.STOPFEN TAPON
13	700709233		X	CLAMP	COLLIER FASCETTA	HALTESCHELLE ABRAZADERA
14	700711660		X	SEAL	JOINT ETANCHEITE PARAOLIO	DICHTRING RETEN
15	700712983		X	CAP	CHAPEAU CAPPELLO	KAPPE TAPA
16	700711829		X	SEAL	JOINT ETANCHEITE PARAOLIO	DICHTRING RETEN
17*	700709354		X	KIT	JEU KIT	SATZ JUEGO
18*	700706401	17	4	CONNECTOR	BORNE MORSETTO	DOPPELNIPPEL CONECTOR
19*	700708964	17	1	CONNECTOR	BORNE MORSETTO	DOPPELNIPPEL CONECTOR
20*	700706400	17	4	SEAL	JOINT ETANCHEITE PARAOLIO	DICHTRING RETEN
21*	1713981		X	KIT	JEU KIT	SATZ JUEGO
22*	700709708	21	1	CLAMP	COLLIER FASCETTA	HALTESCHELLE ABRAZADERA
23*	700718608	21	9	CONNECTOR	BORNE MORSETTO	DOPPELNIPPEL CONECTOR
24*	700709704	21	1	PLUG	BOUCHON TAPPO	VERSCHL.STOPFEN TAPON
25*	1714005		X	KIT	JEU KIT	SATZ JUEGO
26*	700709705	25	1	PLUG	BOUCHON TAPPO	VERSCHL.STOPFEN TAPON

Electrical Plug
Prise Electrique
Elektrischer Stecker
Presaelettricita
Tomacorriente

30-100

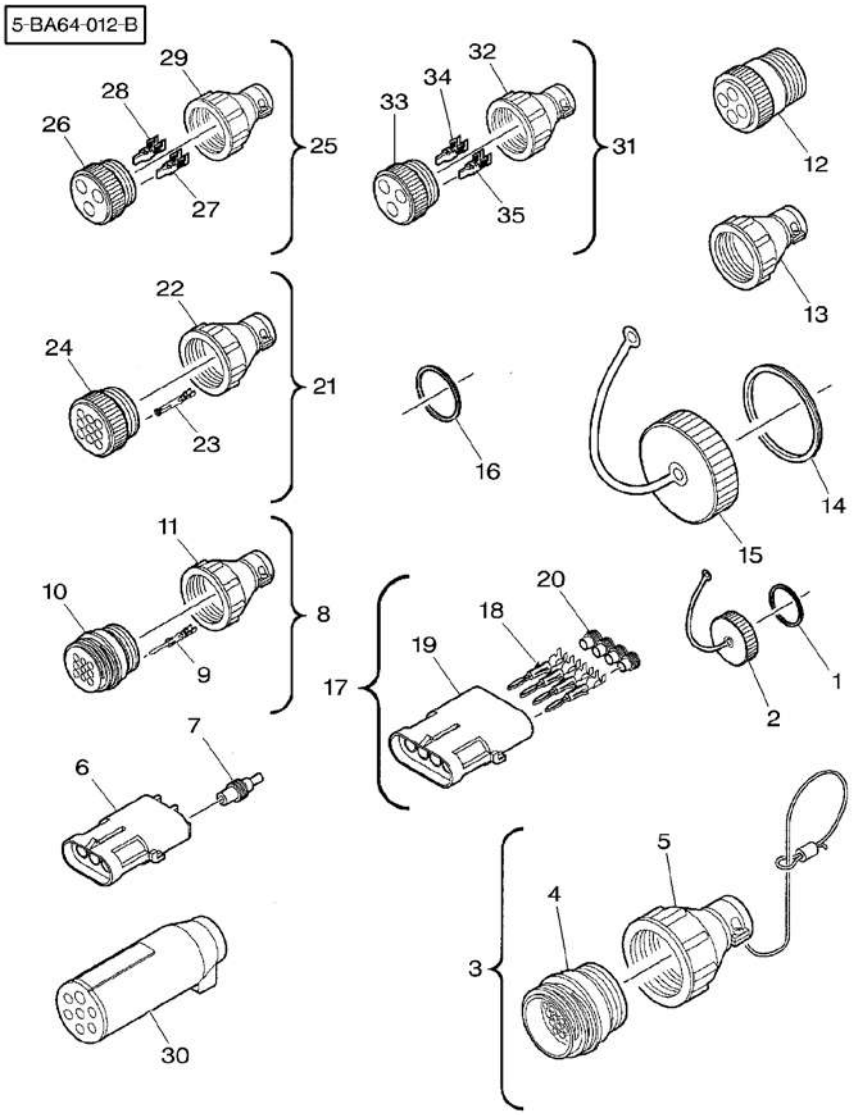

27*	700709706	25	3	CONTACT	RUPTEUR CONTATTO	KONTAKT CONTACTO
28*	700710620	25	3	CONTACT	RUPTEUR CONTATTO	KONTAKT CONTACTO
29*	700708756	25	1	CLAMP	COLLIER FASCETTA	HALTESCHELLE ABRAZADERA
30*	700706646		X	PLUG	BOUCHON TAPPO	VERSCHL.STOPFEN TAPON
31*	1713999		X	KIT	JEU KIT	SATZ JUEGO
32*	700708756	31	1	CLAMP	COLLIER FASCETTA	HALTESCHELLE ABRAZADERA
33*	700710659	31	1	ELECTRICAL PLUG	PRISE ELECTRIQUE PRESAELETTRICITA	STECKER TOMACORRIENTE
34*	700719297	31	3	CONTACT	RUPTEUR CONTATTO	KONTAKT CONTACTO
35*	72514689	31	3	CONTACT	RUPTEUR CONTATTO	KONTAKT CONTACTO

Electrical Plug
Prise Electrique
Elektrischer Stecker
Presaelettricita
Tomacorriente

30-105

5-BA64-016-C

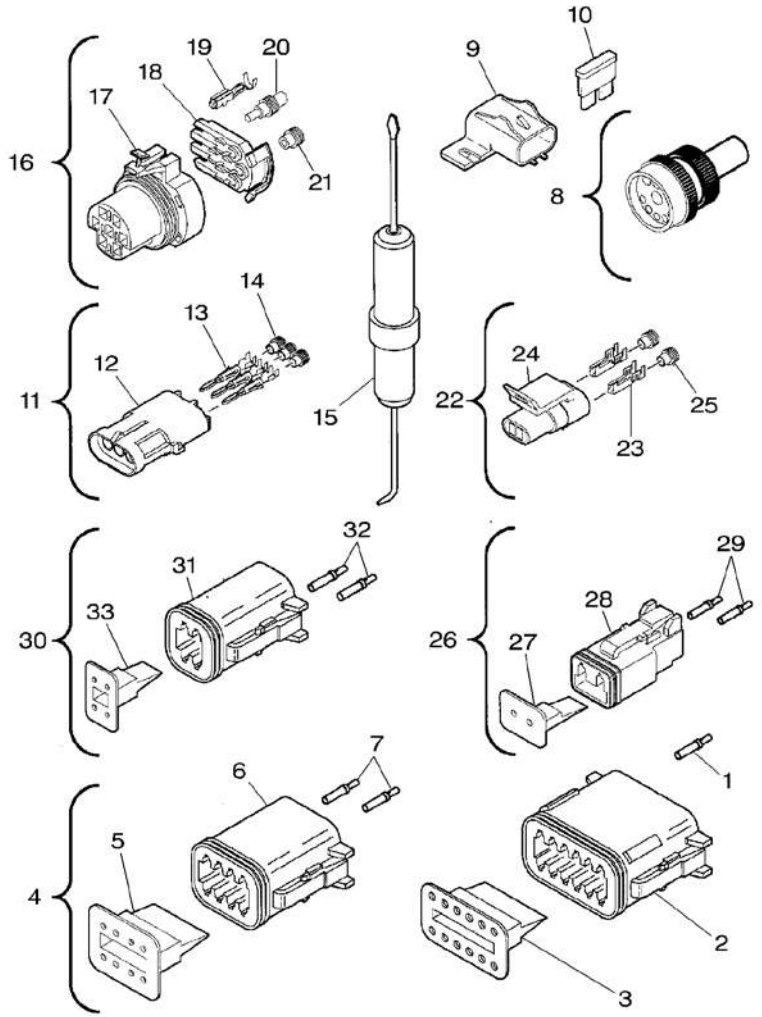

1*	700719870		(16–18) FEMALE	12	CONNECTOR	BORNE MORSETTO	DOPPELNIPPEL CONECTOR
2*	700719863			1	HOUSING	CARTER CARCASSA	GEHAEUSE ALOJAMIENTO
3*	700719868			1	CLIP	CLIP FERMAGLIO	SCHELLE CRAPA RETEN
4*	700720802		(8 PIN)	1	KIT, REPAIR	JEU REPARATION KIT RIPARAZIONE	REPARATURSATZ JUEGO REPARACION
5*	700720764	4		1	CLIP	CLIP FERMAGLIO	SCHELLE CRAPA RETEN
6*	700720762	4		1	HOUSING	CARTER CARCASSA	GEHAEUSE ALOJAMIENTO
7*	N858482	4	(14–16) FEMALE	8	CONNECTOR	BORNE MORSETTO	DOPPELNIPPEL CONECTOR
7*	700719870	4	(16–18) FEMALE	8	CONNECTOR	BORNE MORSETTO	DOPPELNIPPEL CONECTOR
8*	N858734		(9 WAY)	1	KIT	JEU KIT	SATZ JUEGO
9*	700720586			1	CAP	CHAPEAU CAPPELLO	KAPPE TAPA
10*	***3387318M1***		5 Amp	1	FUSE	FUSIBLE FUSIBILE	SICHERUNG FUSIBLE
10*	***1695966M1***		15 Amp	1	FUSE	FUSIBLE FUSIBILE	SICHERUNG FUSIBLE
11*	700718599		(3 PIN)	1	KIT, REPAIR	JEU REPARATION KIT RIPARAZIONE	REPARATURSATZ JUEGO REPARACION
12*	700706413	11	(3 PIN)	1	CONNECTOR	BORNE MORSETTO	DOPPELNIPPEL CONECTOR
13*	700706401	11	(18–20 GAUGE)	3	CONNECTOR	BORNE MORSETTO	DOPPELNIPPEL CONECTOR
14*	700706400	11	(18–20 GAUGE)	3	SEAL	JOINT ETANCHEITE PARAOLIO	DICHTRING RETEN
15*	700719871			1	TOOL	OUTIL ATTREZZO	WERKZEUG HERRAMIENTA
16*	N858736		(12 WAY)	1	KIT	JEU KIT	SATZ JUEGO
17*	N858742	16		1	CONNECTOR	BORNE MORSETTO	DOPPELNIPPEL CONECTOR
18*	N858747	16		1	TERMINAL	TERMINAL TERMINALE	TERMINAL TERMINAL
19*	N857482	16	(12/14 GAUGE)	2	SLEEVE	MANCHON MANICOTTO	HUELSE MANCHA
20*	N858743	16	(16–18) FEMALE	4	CONNECTOR	BORNE MORSETTO	DOPPELNIPPEL CONECTOR
21*	N858677	16		6	PLUG	BOUCHON TAPPO	VERSCHL.STOPFEN TAPON
22*	700720807			1	KIT, REPAIR	JEU REPARATION KIT RIPARAZIONE	REPARATURSATZ JUEGO REPARACION
23*	72514694	22		2	THIMBLE	COSSE BUSSOLA	MUFFE DEDAL
24*	72514693	22	(2 PIN)	1	CONNECTOR	BORNE MORSETTO	DOPPELNIPPEL CONECTOR

Electrical Plug
Prise Electrique
Elektrischer Stecker
Presaelettricita
Tomacorriente

30-105

5-BA64-016-C

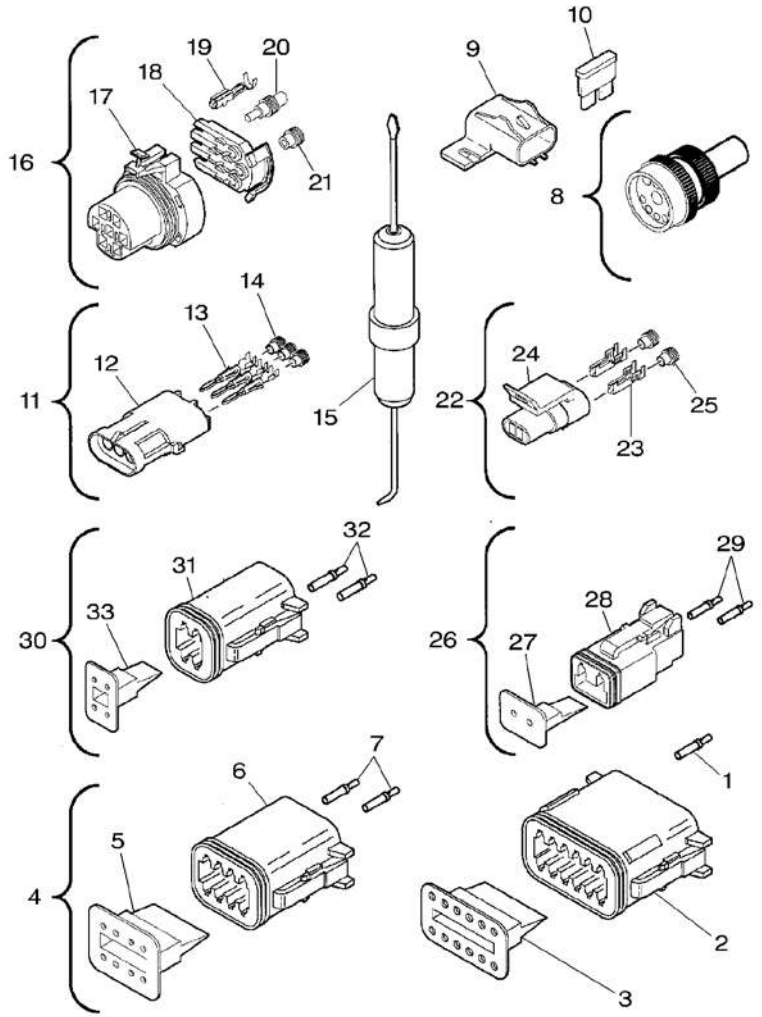

25*N857459	22		2 SEAL	JOINT ETANCHEITE PARAOLIO	DICHTRING RETEN
26*700720800		(2 PIN)	1 KIT, REPAIR	JEU REPARATION KIT RIPARAZIONE	REPARATURSATZ JUEGO REPARACION
27*700720654	26		1 CLIP	CLIP FERMAGLIO	SCHELLE CRAPA RETEN
28*700720655	26		1 HOUSING	CARTER CARCASSA	GEHAEUSE ALOJAMIENTO
29*700719870	26	(16–18) FEMALE	2 CONNECTOR	BORNE MORSETTO	DOPPELNIPPEL CONECTOR
29*N858482	26	(14–16) FEMALE	2 CONNECTOR	BORNE MORSETTO	DOPPELNIPPEL CONECTOR
30*700720801		(4 PIN)	1 KIT, REPAIR	JEU REPARATION KIT RIPARAZIONE	REPARATURSATZ JUEGO REPARACION
31*700720765	30		1 HOUSING	CARTER CARCASSA	GEHAEUSE ALOJAMIENTO
32*700719870	30	(16–18) FEMALE	4 CONNECTOR	BORNE MORSETTO	DOPPELNIPPEL CONECTOR
32*N858482	30	(14–16) FEMALE	4 CONNECTOR	BORNE MORSETTO	DOPPELNIPPEL CONECTOR
33*700720766	30		1 CLIP	CLIP FERMAGLIO	SCHELLE CRAPA RETEN

Electrical Plug
Prise Electrique
Elektrischer Stecker
Presaelettricita
Tomacorriente

30-110

5-BA64-021-A

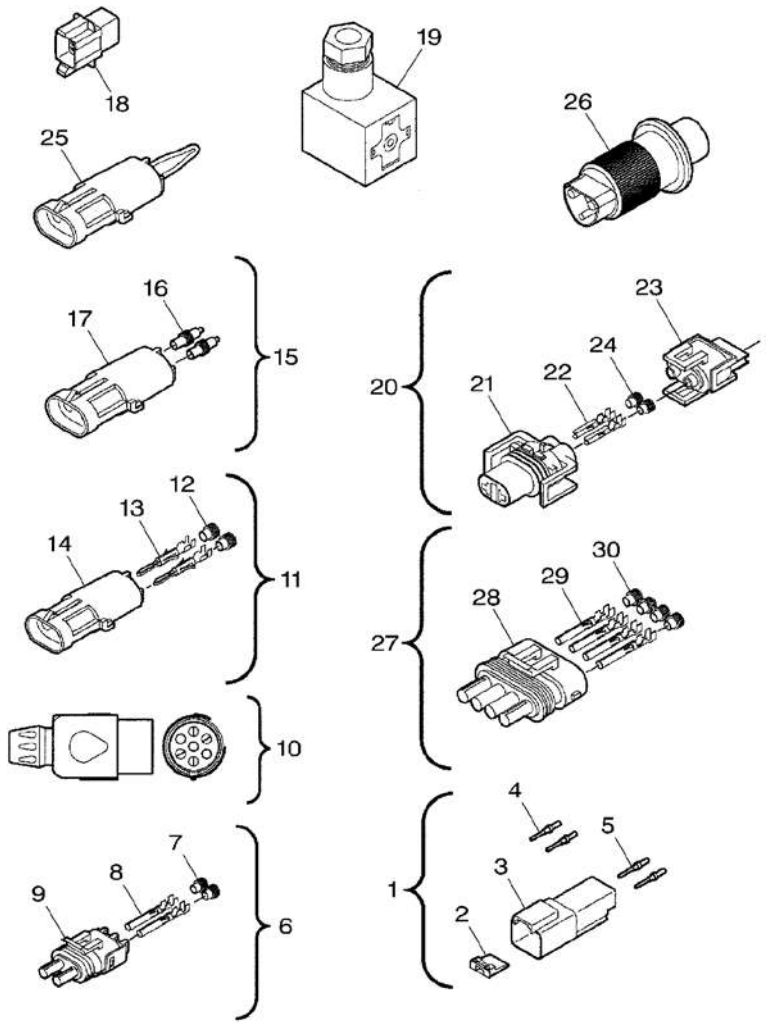

1*	700723223			1	KIT, REPAIR	JEU REPARATION KIT RIPARAZIONE	REPARATURSATZ JUEGO REPARACION
2*	700723222	1		1	CLIP	CLIP FERMAGLIO	SCHELLE CRAPA RETEN
3*	71399389	1		1	CONNECTOR	BORNE MORSETTO	DOPPELNIPPEL CONECTOR
4*	700719869	1	(16–18)	2	CONTACT PIN	AXE DE CONTACT CONTACT PIN	KONTAKTSTIFT CONTACT PIN
5*	700723220	1	(14–16)	2	CONTACT PIN	AXE DE CONTACT CONTACT PIN	KONTAKTSTIFT CONTACT PIN
6*	700718590			1	KIT, REPAIR	JEU REPARATION KIT RIPARAZIONE	REPARATURSATZ JUEGO REPARACION
7*	700712467	6		2	SEAL	JOINT ETANCHEITE PARAOLIO	DICHTRING RETEN
8*	700718576	6		2	CONNECTOR	BORNE MORSETTO	DOPPELNIPPEL CONECTOR
9*	700708761	6		1	CONNECTOR	BORNE MORSETTO	DOPPELNIPPEL CONECTOR
10*	1427996M1		(7 PIN)	1	PLUG 7 PIN MALE	PRISE MALE MASCHIO DA 7	STECKER 7 POLIG ENCHUFE 7 ESPIGA
11*	700708753		(2 PIN) MALE (18–20 GAUGE)	1	KIT, HARNESS	JEU FAISCEAU KIT FASCIOCAVI	KABELSTRANGSATZ JUEGO DE ARNES
12*	700706400	11		2	SEAL	JOINT ETANCHEITE PARAOLIO	DICHTRING RETEN
13*	700706401	11		2	CONNECTOR	BORNE MORSETTO	DOPPELNIPPEL CONECTOR
14*	700706399	11		1	CONNECTOR	BORNE MORSETTO	DOPPELNIPPEL CONECTOR
15*	700716345		(2 WAY)	1	KIT, REPAIR	JEU REPARATION KIT RIPARAZIONE	REPARATURSATZ JUEGO REPARACION
16*	700714829	15		2	PLUG	BOUCHON TAPPO	VERSCHL.STOPFEN TAPON
17*	700706399	15		1	CONNECTOR	BORNE MORSETTO	DOPPELNIPPEL CONECTOR
18*	700721234		(8 WAY)	1	CONNECTOR	BORNE MORSETTO	DOPPELNIPPEL CONECTOR
19*	700720804			1	CONNECTOR	BORNE MORSETTO	DOPPELNIPPEL CONECTOR
20*	700726147		(2 PIN)	1	KIT, REPAIR	JEU REPARATION KIT RIPARAZIONE	REPARATURSATZ JUEGO REPARACION
21*	700725527	20		1	CONNECTOR	BORNE MORSETTO	DOPPELNIPPEL CONECTOR
22*	700725529	20		2	TERMINAL	TERMINAL TERMINALE	TERMINAL TERMINAL
23*	700725528	20		1	CONNECTOR	BORNE MORSETTO	DOPPELNIPPEL CONECTOR
24*	700706400	20		2	SEAL	JOINT ETANCHEITE PARAOLIO	DICHTRING RETEN
25*	700716454		(2 WAY	1	ELECTRICAL PLUG	PRISE ELECTRIQUE PRESAELETTRICITA	STECKER TOMACORRIENTE
26*	700723802			1	CONNECTOR	BORNE MORSETTO	DOPPELNIPPEL CONECTOR

Electrical Plug
Prise Electrique
Elektrischer Stecker
Presaelettricita
Tomacorriente

30-110

5-BA64-021-A

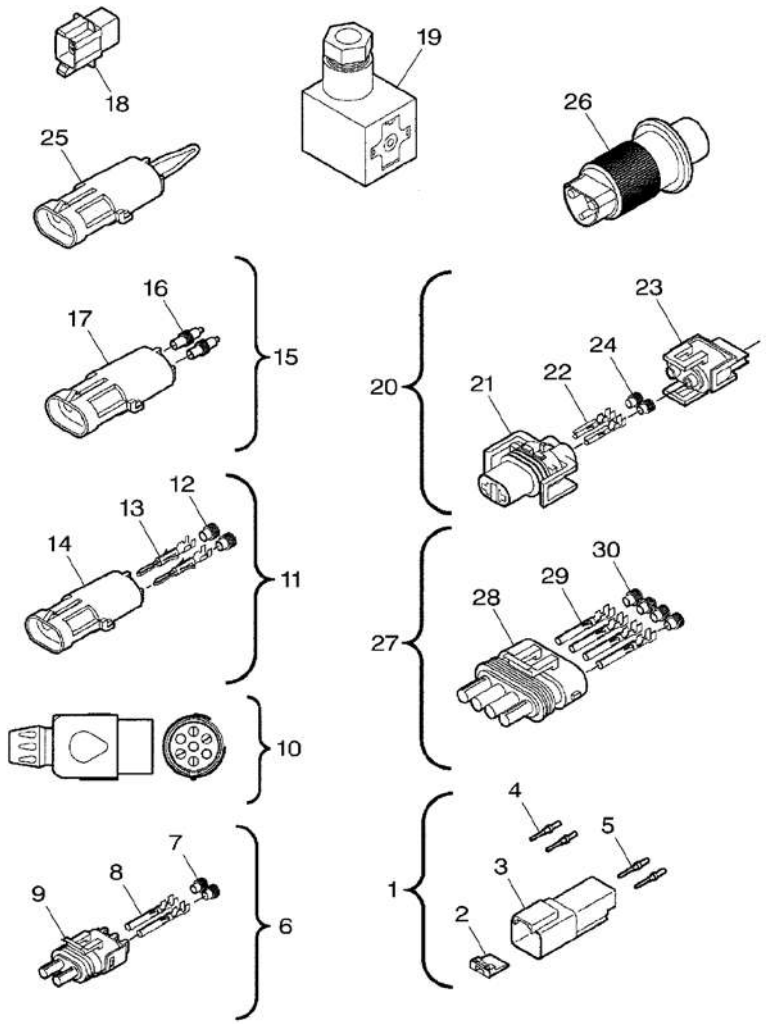

27*	700726155		(4 PIN) FEMALE	1 KIT, REPAIR	JEU REPARATION KIT RIPARAZIONE REPARATURSATZ JUEGO REPARACION
28*	700708963	27		1 CONNECTOR	BORNE MORSETTO DOPPELNIPPEL CONECTOR
29*	700718576	27		2 CONNECTOR	BORNE MORSETTO DOPPELNIPPEL CONECTOR
30*	700712467	27		2 SEAL	JOINT ETANCHEITE PARAOLIO DICHTRING RETEN

Electrical Electricite Elektrizitat Elettricita Electricidad	30-115	Kit Kit Kit Kit Kit

5-BA10-003-A

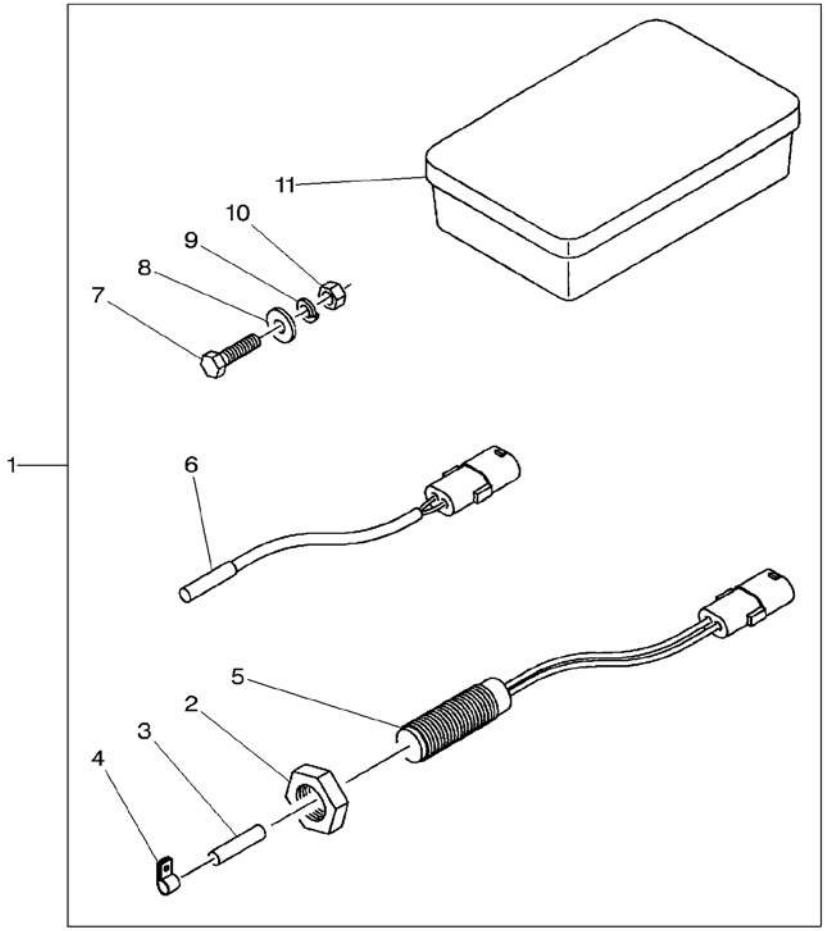

1	***700114076***			**1** BOX	BOITE SCATOLA	SCHACHTEL CAJA
2	353436X1	1	3/4"–16	**2** NUT UNF	ECROU UNF DADO UNF	MUTTER UNF TUERCA UNF
3	***700706340***	1		**1** MAGNET	AIMANT MAGNETE	MAGNET IMAN
4	70926919	1	1/4"	**1** CLIP	CLIP FERMAGLIO	SCHELLE CRAPA RETEN
5	***700706398***	1		**1** SENSOR	DETECTEUR SENSORE	SENSOR. DETECTOR
6	***700113863***	1		**1** SWITCH	INTERRUPTEUR INTERRUTTORE	SCHALTER INTERRUPTOR
7	70927401	1	1/4"–20 X 1	**1** BOLT	BOULON BULLONE	MASCH.SCHRAUBE PERNO
8*	353769X1	1	1/4"	**1** WASHER	RONDELLE RONDELLA	UNTERLEGSCHEIBE ARANDELA
9*	353441X1	1	1/4"	**1** LOCK WASHER	RONDELLE FREIN ROSETTA ELASTICA	FEDERRING ARANDELA GROWER
10*	355564X1	1	1/4"–20	**1** NUT UNC	ECROU UNC DADO UNC	MUTTER UNC TUERCA UNC
11	700707474	1		**1** BOX	BOITE SCATOLA	SCHACHTEL CAJA

Electrical Electricite Elektrizitat Elettricita Electricidad	30-120	Kit Kit Kit Kit Kit

5-BA10-026-A

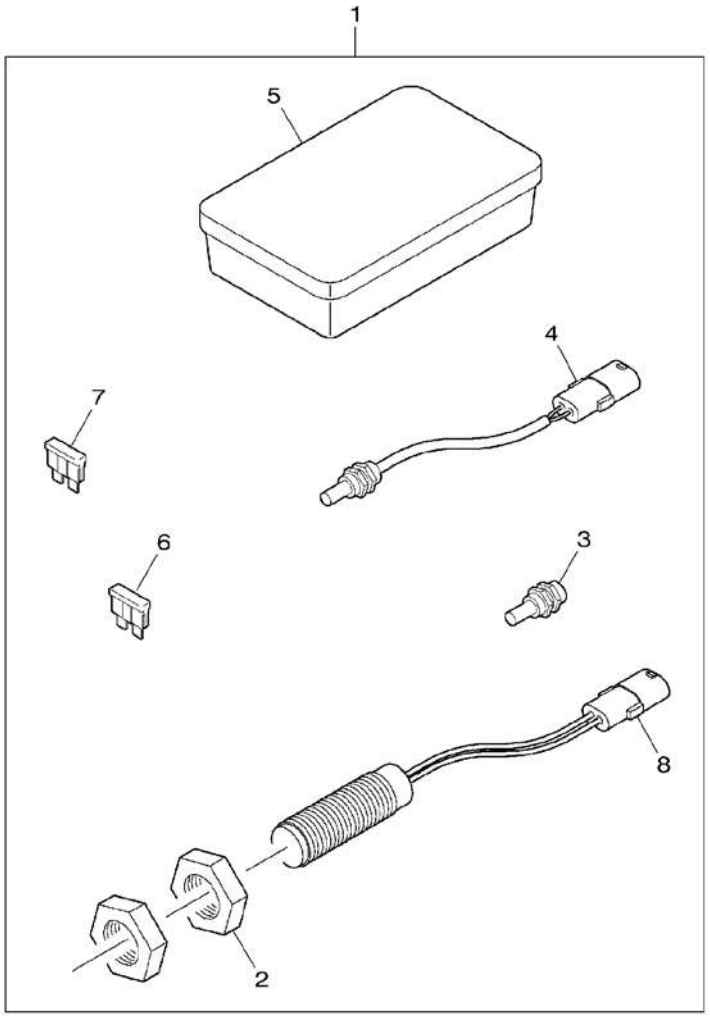

1	*700154471			1	KIT, REPAIR	JEU REPARATION KIT RIPARAZIONE REPARATURSATZ JUEGO REPARACION
2	353436X1	1	3/4"-16	2	NUT UNF	ECROU UNF DADO UNF MUTTER UNF TUERCA UNF
3	*700710211*	1		1	ACTUATOR	DECLENCHEUR AZIONATORE BETAETIGUNG ACTUADOR
4	*700119161*	1		1	SWITCH	INTERRUPTEUR INTERRUTTORE SCHALTER INTERRUPTOR
5	700707474	1		1	BOX	BOITE SCATOLA SCHACHTEL CAJA
6	*3387318M1*	1	5 Amp	2	FUSE	FUSIBLE FUSIBILE SICHERUNG FUSIBLE
7	*1695966M1*	1	15 Amp	2	FUSE	FUSIBLE FUSIBILE SICHERUNG FUSIBLE
8	*700706398*	1		1	SENSOR	DETECTEUR SENSORE SENSOR. DETECTOR

40

5-BA01-039-B

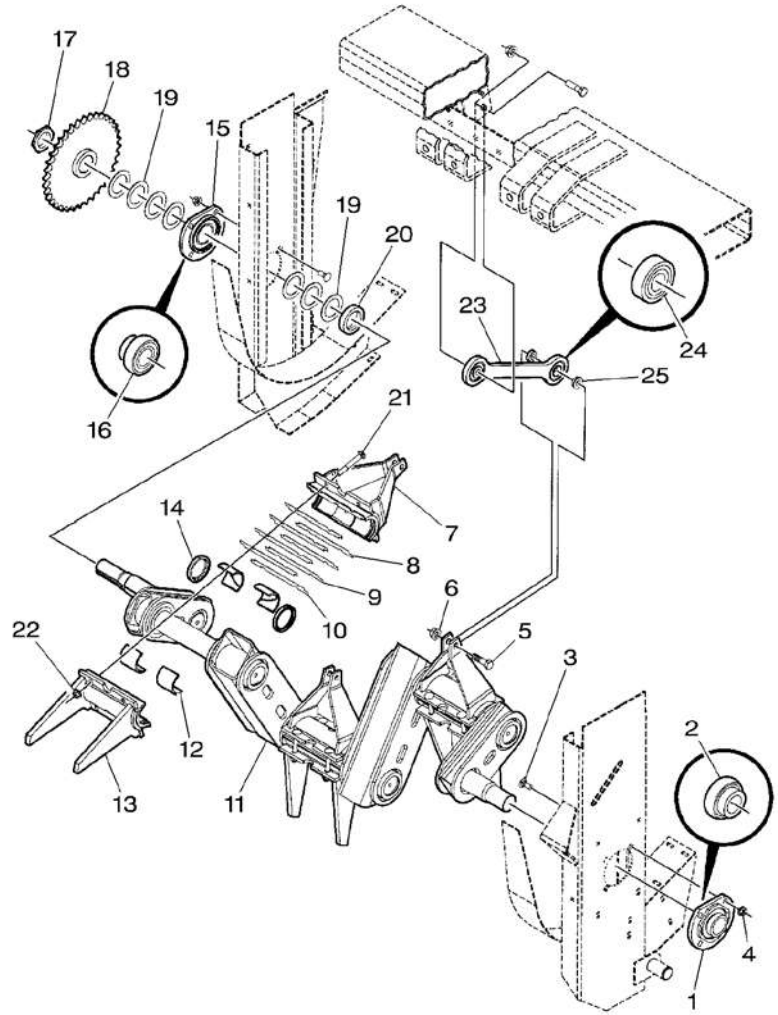

1*	*700109753P*		1	BEARING	COUSSINET CUSCINETTO	LAGER COJINETE
2	*712158*	1	1	BEARING	COUSSINET CUSCINETTO	LAGER COJINETE
3*	364224X1	1/2"–13 X 1–1/4	8	BOLT UNC	BOULON UNC BULLONE UNC	MASCH.SCHRB.UNC PERNO UNC
4	700714586	1/2"–13	8	NUT	ECROU DADO	MUTTER TUERCA
5*	354285X1	5/8"–11 X 2–1/4	6	BOLT UNC	BOULON UNC BULLONE UNC	MASCH.SCHRB.UNC PERNO UNC
6*	*700703922*	5/8"–11	6	TOP LOCKNUT	ECROU FREIN DADO DI TESTA	SELBSTS.MUTTER CONTRATUERCA SUP
7*	700112817P		3	ARM	BRAS BRACCIO	ARM BRAZO
8	700706850	⧗ 0.51/.020	12	SHIM	CALE REGLAGE SPESSORE	EINSTELLBLECH CALCE
9	700706133	⧗ 0.25/.010	6	SHIM	CALE REGLAGE SPESSORE	EINSTELLBLECH CALCE
10	700706134	⧗ 0.13/.005	6	SHIM	CALE REGLAGE SPESSORE	EINSTELLBLECH CALCE
11*	700137305P		1	CRANK	MANIVELLE MANOVELLA	KURBEL MANIVELA
12	*700706131*		6	BEARING	COUSSINET CUSCINETTO	LAGER COJINETE
13*	700112787P		3	FINGER	DOIGT DITO	FINGER DEDO
14	*700706096*		6	SEAL	JOINT ETANCHEITE PARAOLIO	DICHTRING RETEN
15	*700716611*		1	BEARING	COUSSINET CUSCINETTO	LAGER COJINETE
16	*700704263*	15	1	BEARING	COUSSINET CUSCINETTO	LAGER COJINETE
17	*700715751*		1	NUT	ECROU DADO	MUTTER TUERCA
18*	700137337P	35	1	SPROCKET	BARBOTIN RUOTA MOTRICE	KETTENRAD RUEDA DE CADENA
19	Y852947	2"–1/4 X 14	7	BUSH	BAGUE BOCCOLA	BUCHSE CASQUILLO
20*	700137336P		1	SPACER	ENTRETOISE DISTANZIALE	ABSTANDSTUECK PIEZA DISTANCIA
21	364982X1	1/2"–13 X 3–3/4	12	BOLT	BOULON BULLONE	MASCH.SCHRAUBE PERNO
22	*Y704742*	1/2"–13	12	TOP LOCKNUT	ECROU FREIN DADO DI TESTA	SELBSTS.MUTTER CONTRATUERCA SUP
23*	*700124036P*		3	LINK	MAILLON MAGLIA	GLIED UNION
24	*1109055*	23	6	BALL BEARING	ROULEMENT BILLES CUSCINETTO SFERE	KUGELLAGER COJINETE DE BOLA
25	*700124038*		12	BUSH	BAGUE BOCCOLA	BUCHSE CASQUILLO

Finger
Ameneurs
Zubringer
Infaldatore
Embocador

40-10

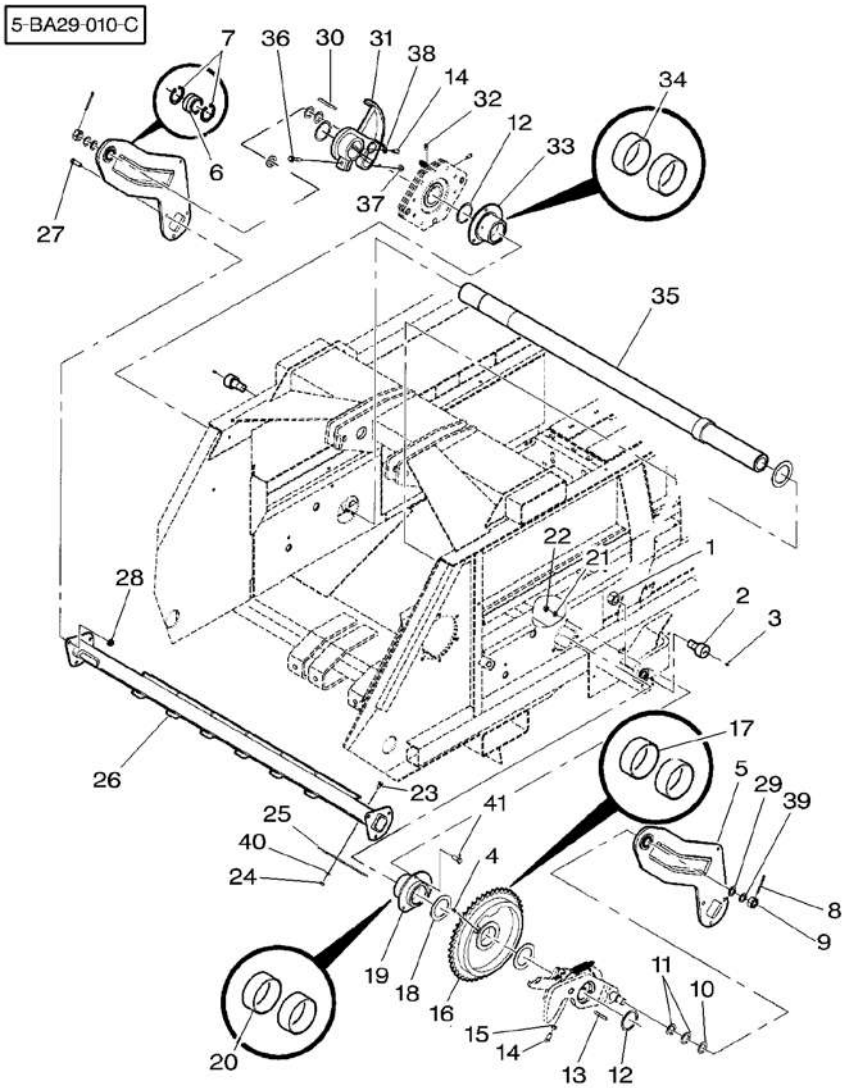

1 ✱	360025X1	1"-1/8-12	2 NUT	ECROU DADO	MUTTER TUERCA
2	***7713837***		2 BEARING	COUSSINET CUSCINETTO	LAGER COJINETE
3	70930680	3/16"	2 PIN	GOUPILLE PERNO	BOLZEN PASADOR
4 ✱	***70923219***	1/4"-28	1 GREASER	GRAISSEUR INGRASSATORE	FETTNIPPEL ENGRASADOR
5 ✱	700155797B		2 ARM	BRAS BRACCIO	ARM BRAZO
6 ✱	***712810***	5	1 BUSH	BAGUE BOCCOLA	BUCHSE CASQUILLO
7 ✱	***70927700***	5	2 RING	ANNEAU ANELLO	RING ARO
8 ✱	62786	1/4" X 2-1/2	2 PIN	GOUPILLE PERNO	BOLZEN PASADOR
9	704692	1"-4	2 NUT	ECROU DADO	MUTTER TUERCA
10 ✱	700154475P		2 SPACER	ENTRETOISE DISTANZIALE	ABSTANDSTUECK PIEZA DISTANCIA
11	Y740068	1"-1/4 X 18	4 SHIM	CALE REGLAGE SPESSORE	EINSTELLBLECH CALCE
12	***7852767***		3 RING	ANNEAU ANELLO	RING ARO
13	Y761312	5/16" X 2-1/2	1 KEY	CLAVETTE CHIAVETTA	PASSKEIL CLAVE
14 ✱	***70923306***	1/2"-13 X 1	3 SETSCREW	VIS DE BLOCAGE INSIEME VITI	STELLSCHRAUBE TORNILLO AJUSTE
15 ✱	***700710414***	1/2"-13	2 NUT	ECROU DADO	MUTTER TUERCA
16 ✱	700137243P		1 SPROCKET	BARBOTIN RUOTA MOTRICE	KETTENRAD RUEDA DE CADENA
17 ✱	***700129529***	16	2 BUSH	BAGUE BOCCOLA	BUCHSE CASQUILLO
18 ✱	***700123293P***		3 WASHER	RONDELLE RONDELLA	UNTERLEGSCHEIBE ARANDELA
19 ✱	700129533P	◀	1 SUPPORT	SUPPORT SUPPORTO	LAGERUNG DISPOS.DE SOSTEN
20 ✱	***700129529***	19	2 BUSH	BAGUE BOCCOLA	BUCHSE CASQUILLO
21 ✱	353439X1	1/2"	6 LOCK WASHER	RONDELLE FREIN ROSETTA ELASTICA	FEDERRING ARANDELA GROWER
22 ✱	704031	1/2"-13	6 NUT	ECROU DADO	MUTTER TUERCA
23	70922784	3/8"-16 X 3/4	2 BOLT	BOULON BULLONE	MASCH.SCHRAUBE PERNO
24 ✱	***704247***	3/8"-16	2 LOCKNUT	ECROU BLOCAGE AUTOBLOCCANTE	FLACHMUTTER CONTRATUERCA
25 ✱	***700137058***		1 RUBBER	CAOUTCHOUC COTE	GUMMI CAUCHO
26 ✱	700139165P		1 FINGER	DOIGT DITO	FINGER DEDO

Finger
Ameneurs
Zubringer
Infaldatore
Embocador

40-10

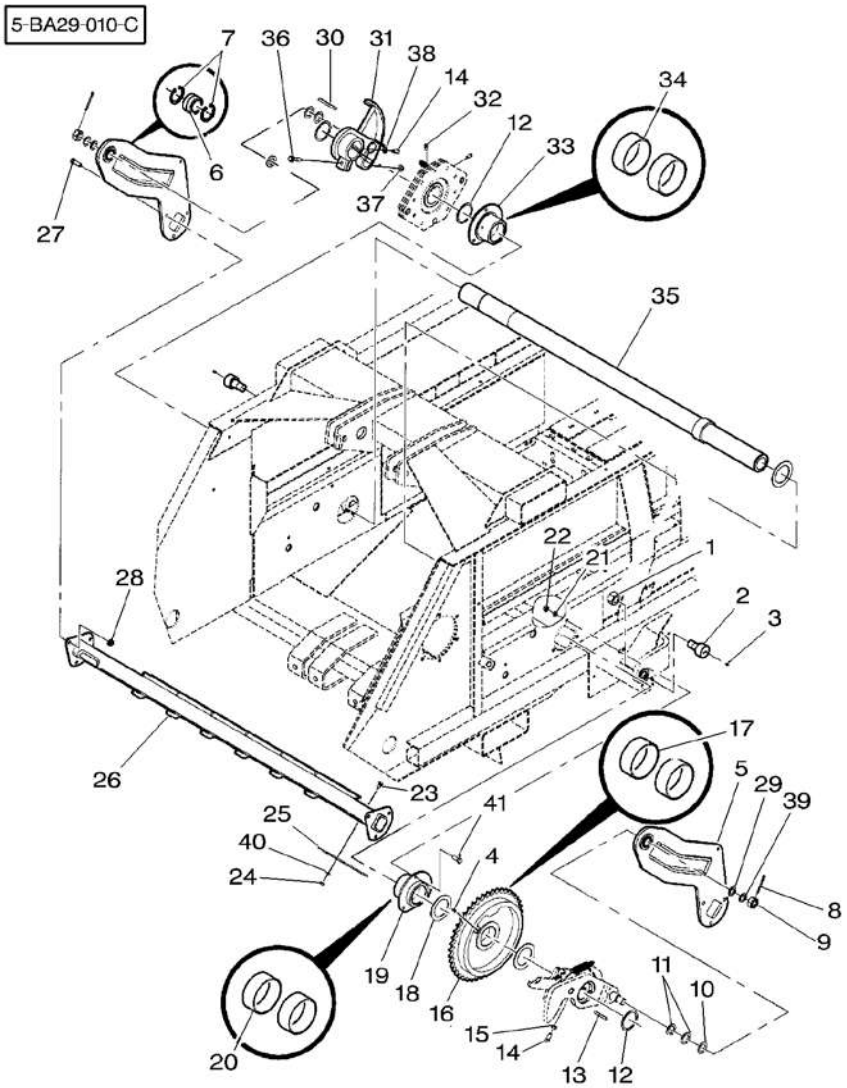

27*	353724X1	1/2"–13 X 1–1/2	6	BOLT UNC	BOULON UNC BULLONE UNC	MASCH.SCHRB.UNC PERNO UNC
28	*Y704742*	1/2"–13	6	TOP LOCKNUT	ECROU FREIN DADO DI TESTA	SELBSTS.MUTTER CONTRATUERCA SUP
29*	*Y52316*	1" X 10	2	BUSH	BAGUE BOCCOLA	BUCHSE CASQUILLO
30	6201404	5/16" X 3–3/4	1	KEY	CLAVETTE CHIAVETTA	PASSKEIL CLAVE
31*	700138197	➡ HP 74100 ▶	1	CRANK	MANIVELLE MANOVELLA	KURBEL MANIVELA
31*	700139374P	➡ HP 74101 ▶	1	CRANK	MANIVELLE MANOVELLA	KURBEL MANIVELA
32*	70920469	3/8"–16 X 3/4	2	SETSCREW	VIS DE BLOCAGE INSIEME VITI	STELLSCHRAUBE TORNILLO AJUSTE
33*	700129534P	▶	1	SUPPORT	SUPPORT SUPPORTO	LAGERUNG DISPOS.DE SOSTEN
34*	***700129529***	33	2	BUSH	BAGUE BOCCOLA	BUCHSE CASQUILLO
35*	700161909		1	SHAFT	ARBRE ALBERO	WELLE ARBOL
36*	700712882	➡ HP 74100 1/2"–13 X 2–1/4	1	SCREW	VIS VITE	SCHRAUBE TORNILLO
36*	70926162	➡ HP 74101 5/8"–11 X 2–1/4	1	BOLT	BOULON BULLONE	MASCH.SCHRAUBE PERNO
37*	704254	➡ HP 74100 1/2"–13	1	LOCKNUT	ECROU BLOCAGE AUTOBLOCCANTE	FLACHMUTTER CONTRATUERCA
37*	7774482	➡ HP 74101 5/8"–11	1	LOCKNUT	ECROU BLOCAGE AUTOBLOCCANTE	FLACHMUTTER CONTRATUERCA
38*	***700710414***	1/2"–13	1	NUT	ECROU DADO	MUTTER TUERCA
39*	Y52258	1" X 14	2	WASHER	RONDELLE RONDELLA	UNTERLEGSCHEIBE ARANDELA
40*	*Y705533*	3/8"	2	WASHER	RONDELLE RONDELLA	UNTERLEGSCHEIBE ARANDELA
41*	354276X1	1/2"–13 X 1–1/4	6	BOLT UNC	BOULON UNC BULLONE UNC	MASCH.SCHRB.UNC PERNO UNC

Hay Check
Reteneur Escamotable
Pressgut–Rueckhalter
Controllo Fieno
Control

40-15

5-BA30-005-C

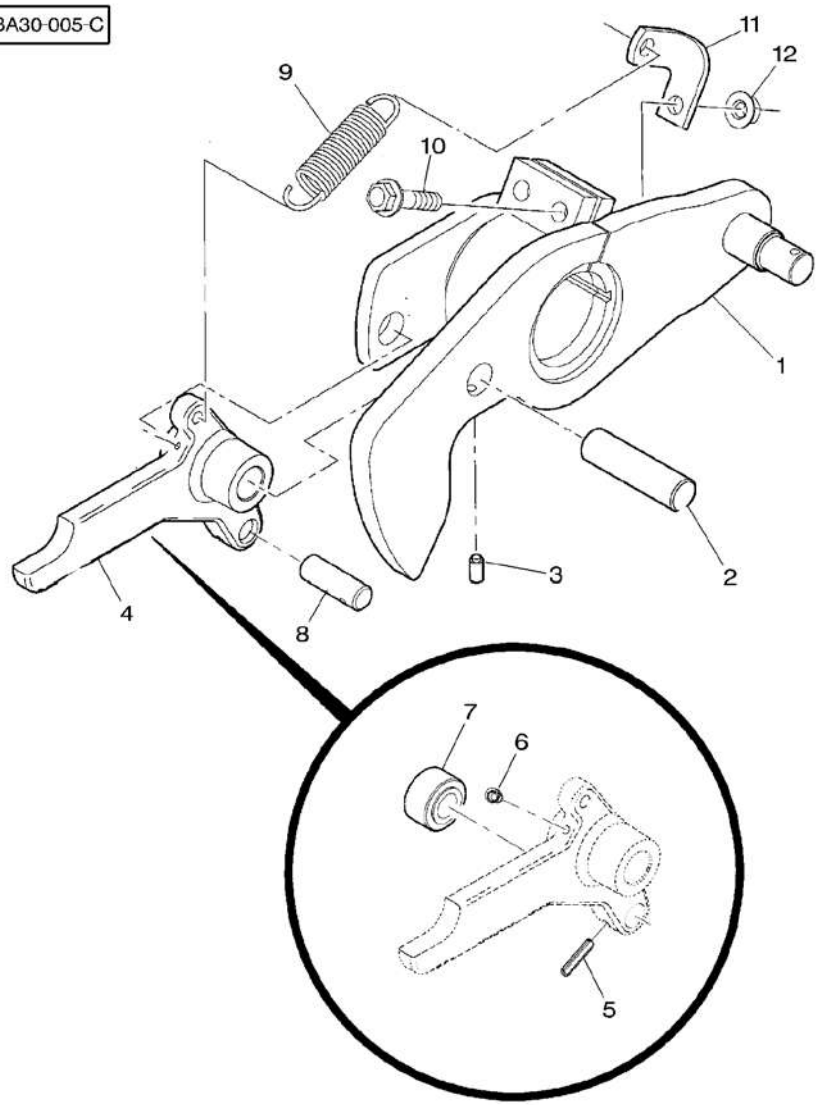

1*	700138199P		1	ARM	BRAS BRACCIO	ARM BRAZO
2	700137246		1	SHAFT	ARBRE ALBERO	WELLE ARBOL
3	69526	3/8"–16 X 3/4	1	SCREW	VIS VITE	SCHRAUBE TORNILLO
4*	700137248P		1	ARM	BRAS BRACCIO	ARM BRAZO
5	763987	4 1/4" X 1–1/4	1	PIN	GOUPILLE PERNO	BOLZEN PASADOR
6	70925731	4 1/4"–28 X 45	1	GREASER	GRAISSEUR INGRASSATORE	FETTNIPPEL ENGRASADOR
7*	700112856P	4	1	ROLLER	GALET RULLO	ROLLE RODILLO
8*	700112857	4	1	SHAFT	ARBRE ALBERO	WELLE ARBOL
9	***758268***		1	TENSION SPRING	RESSORT TRACTION MOLLA TENDITRICE	ZUGFEDER RESORTE TENSOR
10*	700712882	1/2"–13 X 2–1/4	2	SCREW	VIS VITE	SCHRAUBE TORNILLO
11*	700138179P		1	SUPPORT	SUPPORT SUPPORTO	LAGERUNG DISPOS.DE SOSTEN
12*	704254	1/2"–13	2	LOCKNUT	ECROU BLOCAGE AUTOBLOCCANTE	FLACHMUTTER CONTRATUERCA

Finger
Ameneurs
Zubringer
Infaldatore
Embocador

40-20

5-BA29-012-A

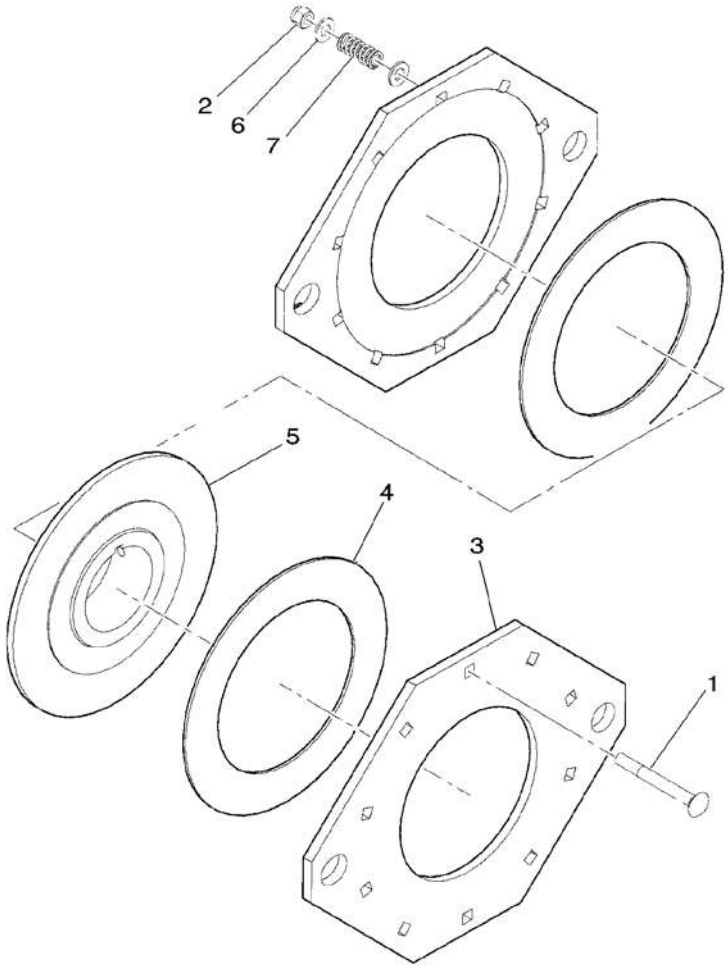

1	*364970X1	3/8"-16 X 3-1/2	**10**	BOLT	BOULON BULLONE	MASCH.SCHRAUBE PERNO
2	*366573X1	3/8"-16	**10**	LOCKNUT	ECROU BLOCAGE AUTOBLOCCANTE	FLACHMUTTER CONTRATUERCA
3	*6818561P		**2**	PLATE	PLAQUE PIASTRA	PLATTE PLATO
4	***700710946***		**2**	CLUTCH DISC	DISQUE EMBRAYAGE DISCO FRIZIONE	KUPPLUNGSSCHEIBE DISCO DE EMBRAGU
5	*700129588P		**1**	HUB	MOYEU MOZZO	NABE CUBO
6	*Y705533*	3/8"	**20**	WASHER	RONDELLE RONDELLA	UNTERLEGSCHEIBE ARANDELA
7	***758011***		**10**	SPRING	RESSORT MOLLA	FEDER MUELLE

Charge And Plunger
Alimentation
Zubringer
Alimentatore
Alimentacione

40-25

5-BA04-006-A

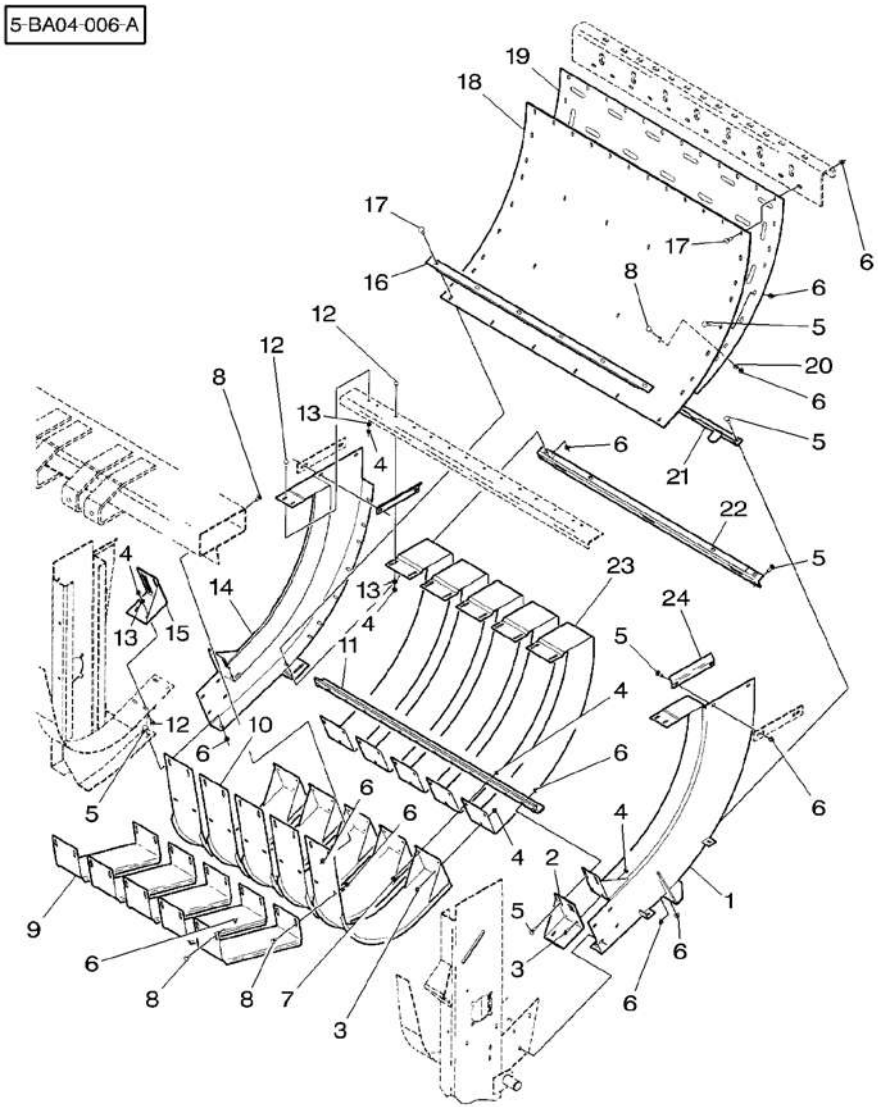

1 ✱ 700137326P	◀ ➡ HL 74216	1	PANEL	PANNEAU PANNELLO	VERKL.BLECH PANEL
1 ✱ 700140279P	◀ ➡ HL 74217	1	PANEL	PANNEAU PANNELLO	VERKL.BLECH PANEL
2 ✱ 700112825P	◀	1	ANGLE	EQUERRE ANGOLO	WINKEL ANGULO
3 *Y703132*	5/16"-18 X 3/4	9	BOLT	BOULON BULLONE	MASCH.SCHRAUBE PERNO
4 ✱ 70931277	5/16"-18	41	LOCKNUT	ECROU BLOCAGE AUTOBLOCCANTE	FLACHMUTTER CONTRATUERCA
5 *70922786*	3/8"-16 X 1	18	BOLT	BOULON BULLONE	MASCH.SCHRAUBE PERNO
6 ✱ ***700711238***	3/8"-16	74	NUT	ECROU DADO	MUTTER TUERCA
7 7772049	5/16"-18 X 1	10	SCREW	VIS VITE	SCHRAUBE TORNILLO
8 ✱ 70922784	3/8"-16 X 3/4	38	BOLT	BOULON BULLONE	MASCH.SCHRAUBE PERNO
9 ✱ 700123388P		5	EXTENSION	RALLONGE PROLUNGA	VERLAENGERUNG EXTENSION
10 ✱ 700138462P		5	WRAPPER	COUVERTURE IMBALLATORE	UMSCHLAG ENVASE
11 ✱ 700137310P		1	ANGLE	EQUERRE ANGOLO	WINKEL ANGULO
12 ✱ 364352X1	5/16"-18 X 3/4	22	BOLT UNC	BOULON UNC BULLONE UNC	MASCH.SCHRB.UNC PERNO UNC
13 ***Y705525***	5/16"	22	WASHER	RONDELLE RONDELLA	UNTERLEGSCHEIBE ARANDELA
14 ✱ 700137327P	▶ ➡ HL 74216	1	PANEL	PANNEAU PANNELLO	VERKL.BLECH PANEL
14 ✱ 700140280P	▶ ➡ HL 74217	1	PANEL	PANNEAU PANNELLO	VERKL.BLECH PANEL
15 ✱ 700112826P	▶	1	ANGLE	EQUERRE ANGOLO	WINKEL ANGULO
16 ✱ 700137318P		1	ANGLE	EQUERRE ANGOLO	WINKEL ANGULO
17 ✱ 70923220	3/8"-16 X 1-1/4	18	BOLT	BOULON BULLONE	MASCH.SCHRAUBE PERNO
18 700715956		1	LINER	CHEMISE CAMICIA	LAUFBUCHSE CAMISA
19 ✱ 700137316P		1	PANEL	PANNEAU PANNELLO	VERKL.BLECH PANEL
20 *Y705533*	3/8"	8	WASHER	RONDELLE RONDELLA	UNTERLEGSCHEIBE ARANDELA
21 ✱ 700137330P		1	ANGLE	EQUERRE ANGOLO	WINKEL ANGULO
22 ✱ 700137312P		1	SUPPORT	SUPPORT SUPPORTO	LAGERUNG DISPOS.DE SOSTEN
23 ✱ 700123409P		5	STRAP	PATTE CORREGGIA	LASCHE FAJA
24 ✱ 700123417P		2	ANGLE	EQUERRE ANGOLO	WINKEL ANGULO

Charge And Plunger Alimentation Zubringer Alimentatore Alimentacione	40-30	Without Cutters Sans Couteaux Ohne Messer Senza Lame Sin Cuchillos

5-BA04-010-A

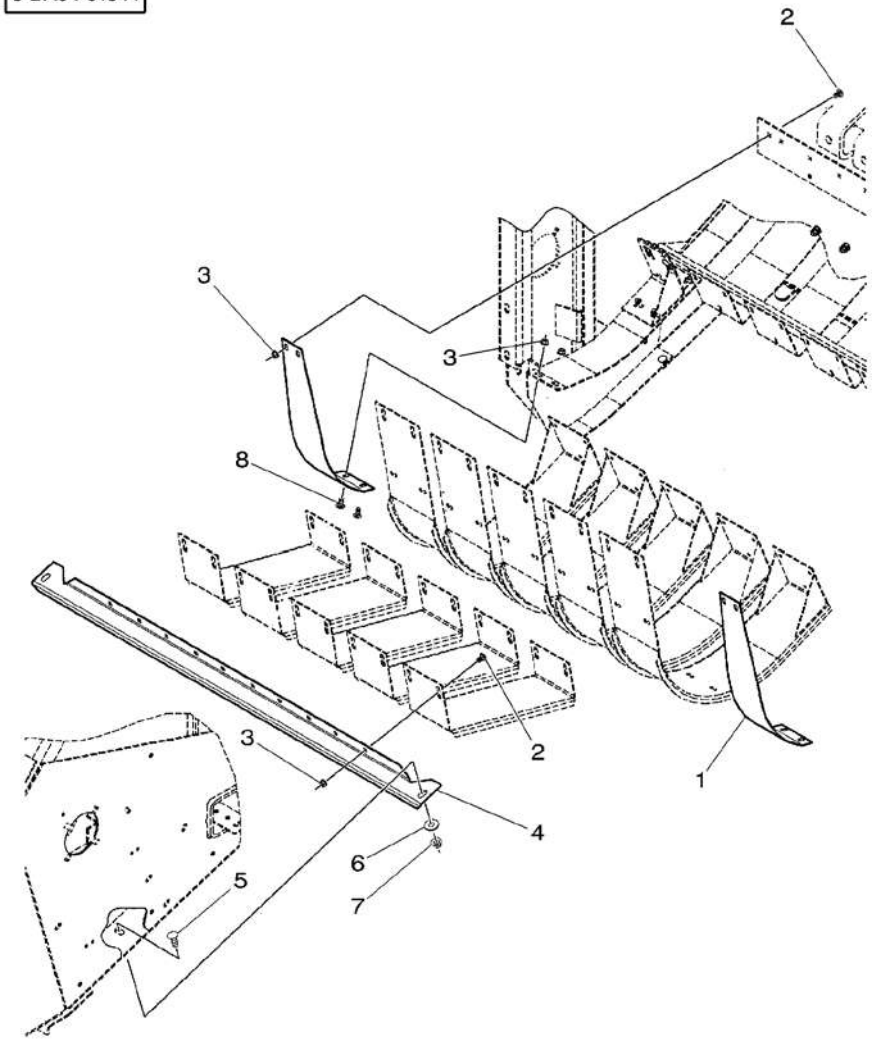

1*	700157769P		2	WRAPPER	COUVERTURE IMBALLATORE	UMSCHLAG ENVASE
2	70922784	3/8"–16 X 3/4	14	BOLT	BOULON BULLONE	MASCH.SCHRAUBE PERNO
3	***700711238***	3/8"–16	18	NUT	ECROU DADO	MUTTER TUERCA
4*	700139179		1	ANGLE	EQUERRE ANGOLO	WINKEL ANGULO
5*	364224X1	1/2"–13 X 1–1/4	2	BOLT UNC	BOULON UNC BULLONE UNC	MASCH.SCHRB.UNC PERNO UNC
6	***705541***	1/2"	2	FLAT WASHERS	RONDELLES PLATES RONDELLE PIANE	UNTERLEGSCHEIBEN ARANDELAS PLANAS
7	700714586	1/2"–13	2	NUT	ECROU DADO	MUTTER TUERCA
8	7770456	3/8"–16 X 3/4	4	BOLT	BOULON BULLONE	MASCH.SCHRAUBE PERNO

Charge And Plunger Alimentation Zubringer Alimentatore Alimentacione	40-35	With Cutters Avec Couteaux Mit Messer Con Lame Con Cuchillos

5-BA04-011-A

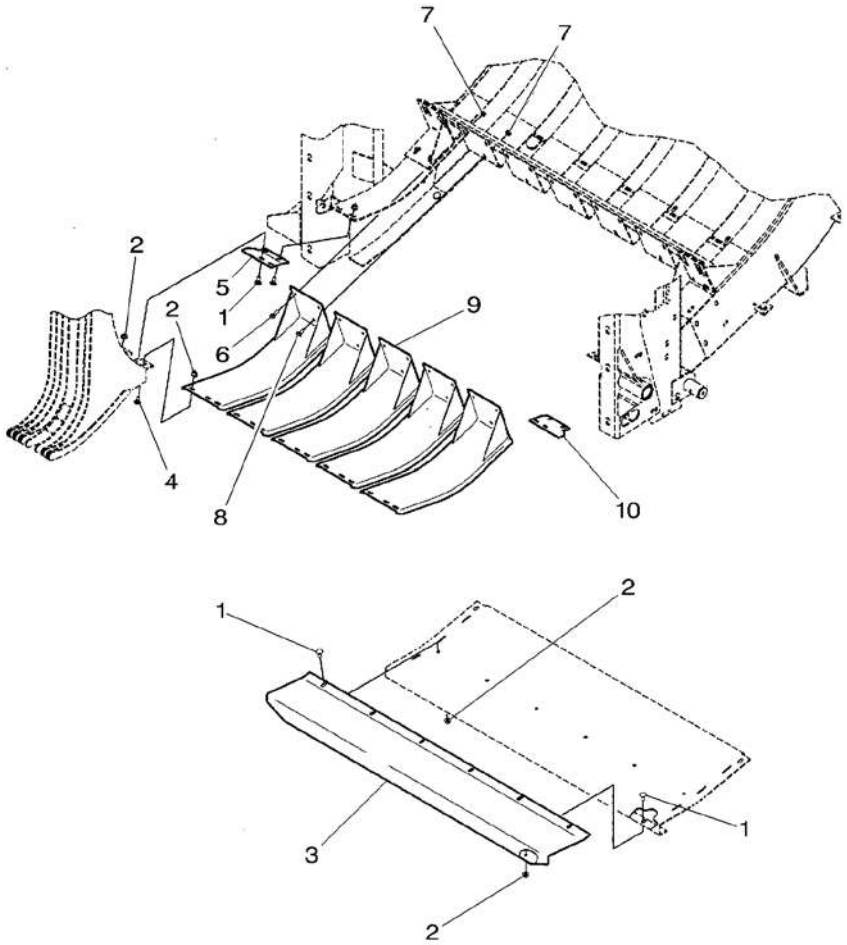

1	7770456	3/8"–16 X 3/4	16	BOLT	BOULON BULLONE	MASCH.SCHRAUBE PERNO
2	*700711238*	3/8"–16	31	NUT	ECROU DADO	MUTTER TUERCA
3*	700139058P		1	PAN	RECEPTEUR COPPA	AUFFANGWANNE CUBA
4	70922784	3/8"–16 X 3/4	15	BOLT	BOULON BULLONE	MASCH.SCHRAUBE PERNO
5*	700139124P	▶	1	PLATE	PLAQUE PIASTRA	PLATTE PLATO
6	7772049	5/16"–18 X 1	10	SCREW	VIS VITE	SCHRAUBE TORNILLO
7	70931277	5/16"–18	15	LOCKNUT	ECROU BLOCAGE AUTOBLOCCANTE	FLACHMUTTER CONTRATUERCA
8	*Y703132*	5/16"–18 X 3/4	5	BOLT	BOULON BULLONE	MASCH.SCHRAUBE PERNO
9*	700139117P		5	WRAPPER	COUVERTURE IMBALLATORE	UMSCHLAG ENVASE
10*	700139123P	◀	1	PLATE	PLAQUE PIASTRA	PLATTE PLATO

Charge And Plunger
Alimentation
Zubringer
Alimentatore
Alimentacione

40-40

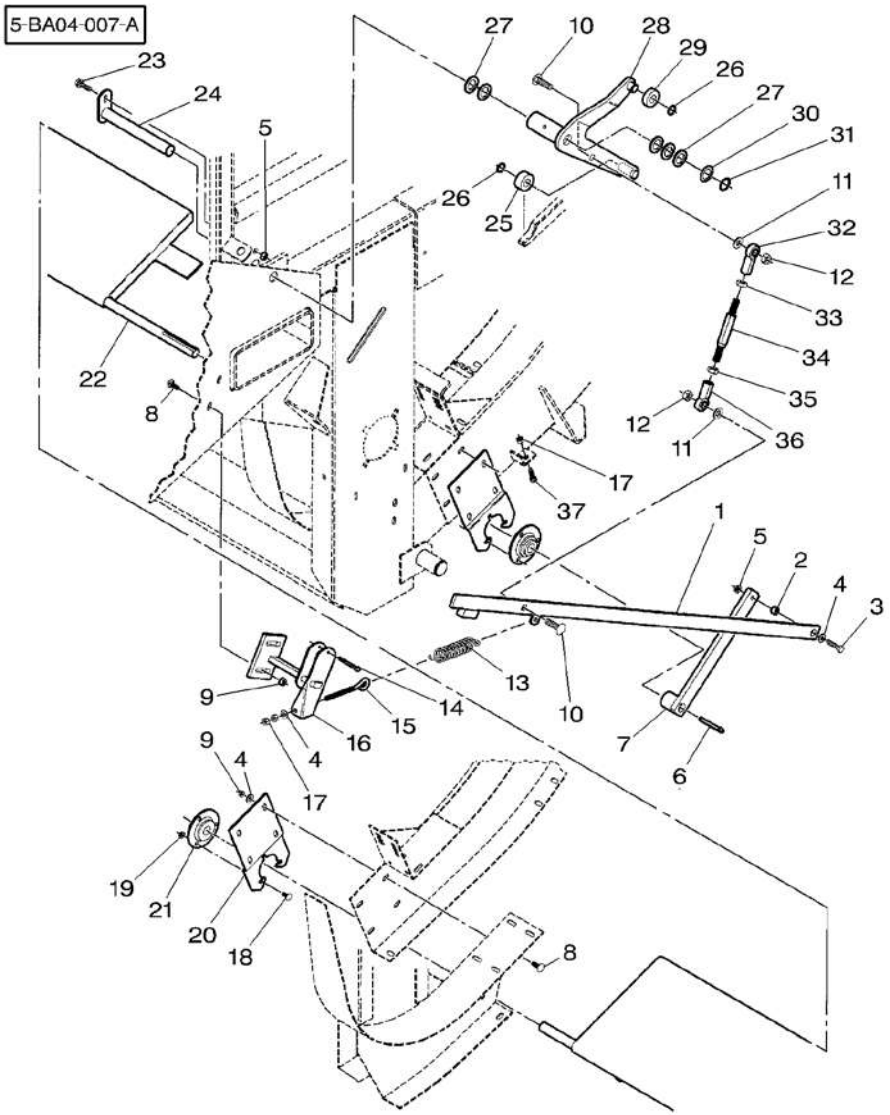

1 ★	700137354P		1	ARM	BRAS BRACCIO
2 ★	6179832P		1	SPACER	ENTRETOISE DISTANZIALE
3 ★	354262X1	3/8"-16 X 1-1/2	1	BOLT UNC	BOULON UNC BULLONE UNC
4	*Y705533*	3/8"	10	WASHER	RONDELLE RONDELLA
5	***Y704734***	3/8"-16	2	TOP LOCKNUT	ECROU FREIN DADO DI TESTA
6	61978	1/4" X 2-1/2	1	KEY	CLAVETTE CHIAVETTA
7 ★	6524946P		1	ARM	BRAS BRACCIO
8	*70922786*	3/8"-16 X 1	10	BOLT	BOULON BULLONE
9	***700711238***	3/8"-16	10	NUT	ECROU DADO
10 ★	364975X1	1/2"-13 X 1-3/4	2	BOLT UNC	BOULON UNC BULLONE UNC
11 ★	***705541***	1/2"	2	FLAT WASHERS	RONDELLES PLATES RONDELLE PIANE
12	704858	1/2"-13	2	LOCKNUT	ECROU BLOCAGE AUTOBLOCCANTE
13	***858308***		1	SPRING	RESSORT MOLLA
14	62307	1/4" X 2	1	PIN	GOUPILLE PERNO
15	766485		1	BOLT	BOULON BULLONE
16 ★	700123432P		1	STOP	BUTEE STOP
17 ★	355566X1	3/8"-16	3	NUT UNC	ECROU UNC DADO UNC
18 ★	364352X1	5/16"-18 X 3/4	6	BOLT UNC	BOULON UNC BULLONE UNC
19 ★	70931277	5/16"-18	6	LOCKNUT	ECROU BLOCAGE AUTOBLOCCANTE
20 ★	700112815P		2	SUPPORT	SUPPORT SUPPORTO
21	***50393***		2	BEARING	COUSSINET CUSCINETTO
22 ★	700137321P	➡ HL 74216	1	DOOR	PORTIERE PORTA
22 ★	700140281P	➡ HL 74217	1	DOOR	PORTIERE PORTA
23	7883408	3/8"-16 X 1-1/4	1	SCREW	VIS VITE
24 ★	700137346P		1	PIN	GOUPILLE PERNO
25 ★	***6524870P***		1	ROLLER	GALET RULLO

ARM	BRAZO		
SPACER	ABSTANDSTUECK		
	PIEZA DISTANCIA		
BOLT UNC	MASCH.SCHRB.UNC		
	PERNO UNC		
WASHER	UNTERLEGSCHEIBE		
	ARANDELA		
TOP LOCKNUT	SELBSTS.MUTTER		
	CONTRATUERCA SUP		
KEY	PASSKEIL		
	CLAVE		
ARM	ARM		
	BRAZO		
BOLT	MASCH.SCHRAUBE		
	PERNO		
NUT	MUTTER		
	TUERCA		
BOLT UNC	MASCH.SCHRB.UNC		
	PERNO UNC		
FLAT WASHERS	UNTERLEGSCHEIBEN		
	ARANDELAS PLANAS		
LOCKNUT	FLACHMUTTER		
	CONTRATUERCA		
SPRING	FEDER		
	MUELLE		
PIN	BOLZEN		
	PASADOR		
BOLT	MASCH.SCHRAUBE		
	PERNO		
STOP	ANSCHLAG		
	PARO		
NUT UNC	MUTTER UNC		
	TUERCA UNC		
BOLT UNC	MASCH.SCHRB.UNC		
	PERNO UNC		
LOCKNUT	FLACHMUTTER		
	CONTRATUERCA		
SUPPORT	LAGERUNG		
	DISPOS.DE SOSTEN		
BEARING	LAGER		
	COJINETE		
DOOR	TUER		
	PUERTA		
DOOR	TUER		
	PUERTA		
SCREW	SCHRAUBE		
	TORNILLO		
PIN	BOLZEN		
	PASADOR		
ROLLER	ROLLE		
	RODILLO		

Charge And Plunger
Alimentation
Zubringer
Alimentatore
Alimentacione

40-40

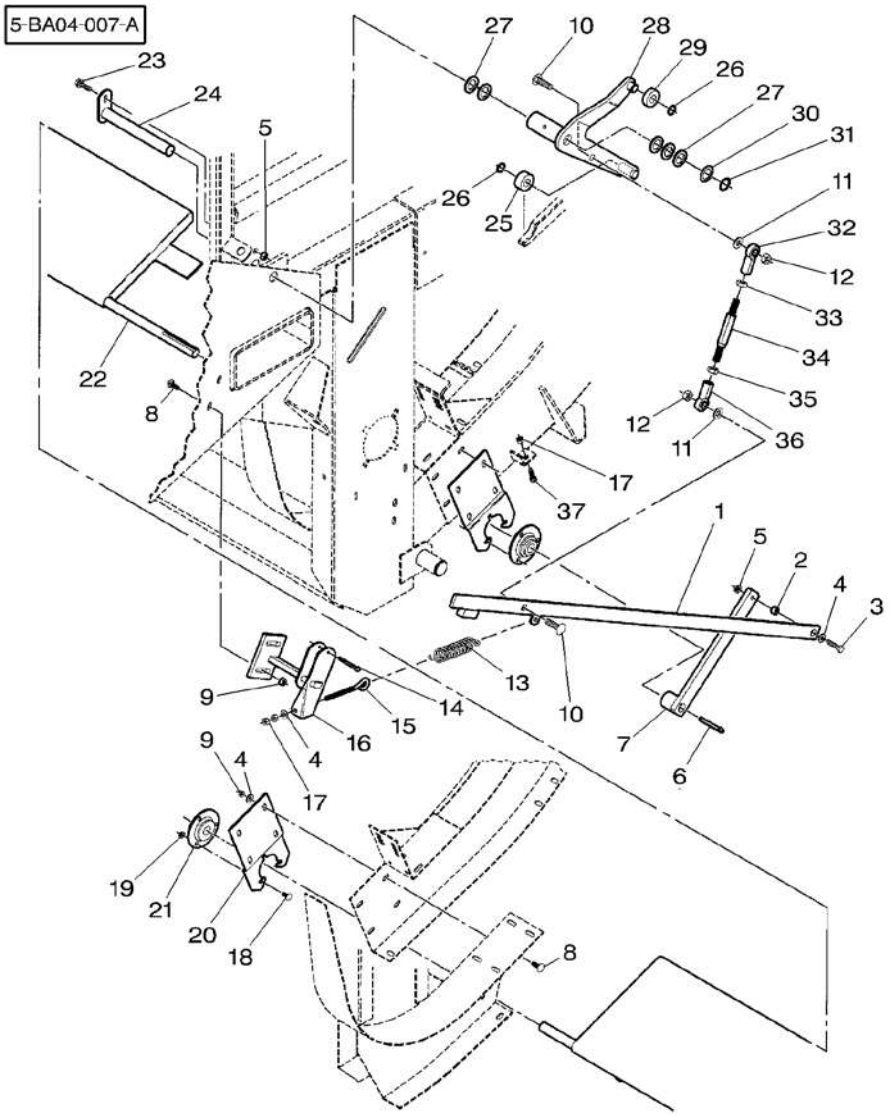

26	***70927732***		**2** SNAPRING	SEGMENT ARRET ANELLO SIEGER	SPRENGRING ANILLA RETENCION
27	***Y52316***	1" X 10	**5** BUSH	BAGUE BOCCOLA	BUCHSE CASQUILLO
28*	700137341P		**1** ARM	BRAS BRACCIO	ARM BRAZO
29*	***700138225***		**1** ROLLER	GALET RULLO	ROLLE RODILLO
30	Y52209	1" X 18	**1** BUSH	BAGUE BOCCOLA	BUCHSE CASQUILLO
31	70927738		**1** RING	ANNEAU ANELLO	RING ARO
32	700720067		**1** TOGGLE	ROTULE ROTULA	GELENKZAPFEN PERNO ENGANCHE
33	7704000	1/2"-20	**1** NUT	ECROU DADO	MUTTER TUERCA
34*	700137343P		**1** ROD	TRINGLE ASTA	STANGE VARILLA
35	7774151	1/2"-20	**1** NUT	ECROU DADO	MUTTER TUERCA
36	700715897		**1** TOGGLE	ROTULE ROTULA	GELENKZAPFEN PERNO ENGANCHE
37	772434	3/8"-16 X 1-1/4	**1** BOLT	BOULON BULLONE	MASCH.SCHRAUBE PERNO

Finger
Ameneurs
Zubringer
Infaldatore
Embocador

40-45

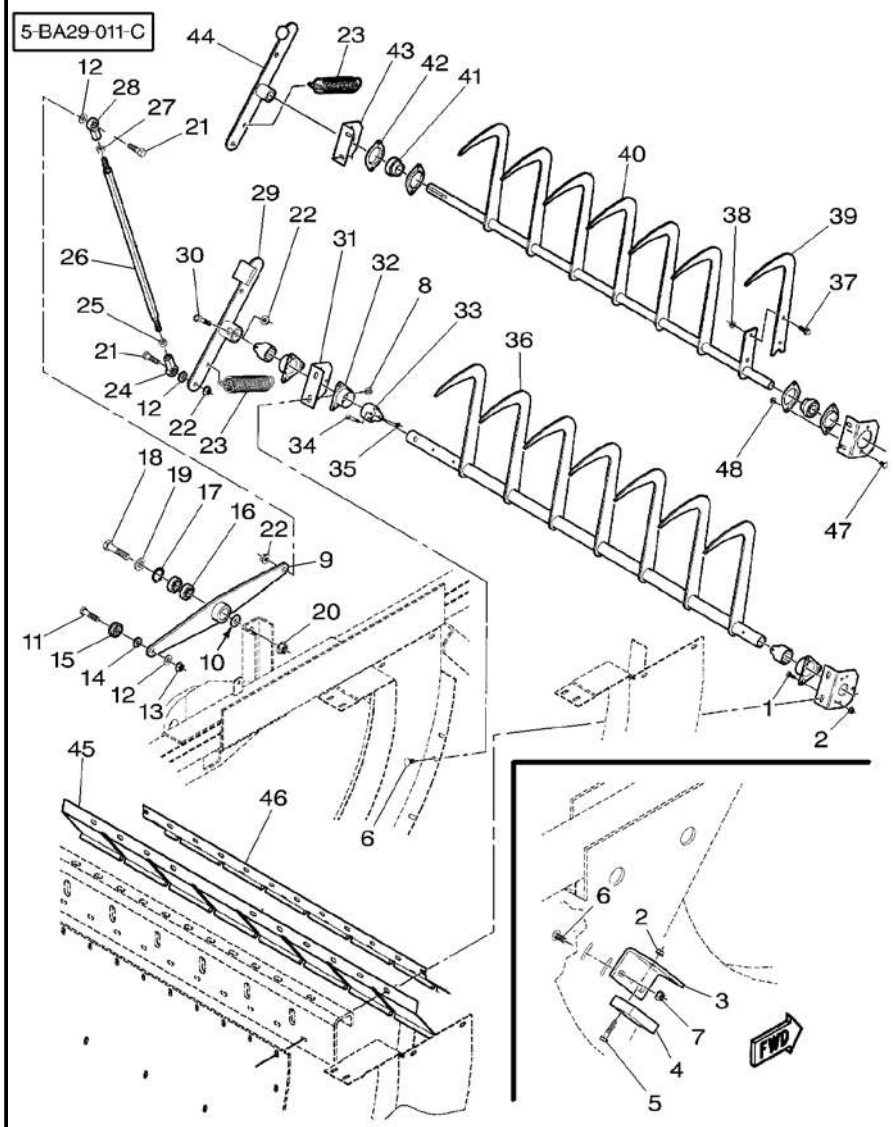

1*	353677X1	5/16"–18 X 3/4	6	BOLT UNC	BOULON UNC BULLONE UNC	MASCH.SCHRB.UNC PERNO UNC
2*	Y704726	5/16"–18	14	TOP LOCKNUT	ECROU FREIN DADO DI TESTA	SELBSTS.MUTTER CONTRATUERCA SUP
3*	700137228P		1	BRACKET	SUPPORT FIXATION SUPPORTO FISSAGG	HALTEARM SOPORTE
4	8027005		1	PAD	TAMPON TAMPONE	KLOTZ ALMOHADILLA
5*	7883358	5/16"–18 X 1–1/2	8	SCREW	VIS VITE	SCHRAUBE TORNILLO
6	*70922786*	3/8"–16 X 1	6	BOLT	BOULON BULLONE	MASCH.SCHRAUBE PERNO
7	***Y704734***	3/8"–16	2	TOP LOCKNUT	ECROU FREIN DADO DI TESTA	SELBSTS.MUTTER CONTRATUERCA SUP
8	***700711238***	3/8"–16	4	NUT	ECROU DADO	MUTTER TUERCA
9*	700137233P		1	LEVER	LEVIER LEVA	HEBEL PALANCA
10*	353760X1	5/8"	1	WASHER	RONDELLE RONDELLA	UNTERLEGSCHEIBE ARANDELA
11*	70927236	1/2"–20 X 2	1	BOLT UNF	BOULON UNF BULLONE UNF	MASCH.SCHRB.UNF PERNO UNF
12*	***705541***	1/2"	3	FLAT WASHERS	RONDELLES PLATES RONDELLE PIANE	UNTERLEGSCHEIBEN ARANDELAS PLANAS
13	700707867	1/2"–20	1	LOCKNUT	ECROU BLOCAGE AUTOBLOCCANTE	FLACHMUTTER CONTRATUERCA
14*	***700137750P***		1	SPACER	ENTRETOISE DISTANZIALE	ABSTANDSTUECK PIEZA DISTANCIA
15	***700720050***		1	BEARING	COUSSINET CUSCINETTO	LAGER COJINETE
16*	3643380M1		2	BEARING ASSY	ROULEMENT CUSCINETTO COMPL	RADIALLAGER RODAMIENTO RAD
17	740167		1	RING	ANNEAU ANELLO	RING ARO
18*	369275X1	5/8"–11 X 2–3/4	1	BOLT UNC	BOULON UNC BULLONE UNC	MASCH.SCHRB.UNC PERNO UNC
19	Y705582	5/8"	1	WASHER	RONDELLE RONDELLA	UNTERLEGSCHEIBE ARANDELA
20	***700703922***	5/8"–11	1	TOP LOCKNUT	ECROU FREIN DADO DI TESTA	SELBSTS.MUTTER CONTRATUERCA SUP
21*	353725X1	1/2"–13 X 1–3/4	2	BOLT UNC	BOULON UNC BULLONE UNC	MASCH.SCHRB.UNC PERNO UNC
22	***Y704742***	1/2"–13	3	TOP LOCKNUT	ECROU FREIN DADO DI TESTA	SELBSTS.MUTTER CONTRATUERCA SUP
23	***700714987***		1	SPRING	RESSORT MOLLA	FEDER MUELLE
24	700715897		1	TOGGLE	ROTULE ROTULA	GELENKZAPFEN PERNO ENGANCHE
25	7774151	1/2"–20	1	NUT	ECROU DADO	MUTTER TUERCA
26*	700137229P		1	ROD	TRINGLE ASTA	STANGE VARILLA

Finger
Ameneurs
Zubringer
Infaldatore
Embocador

40-45

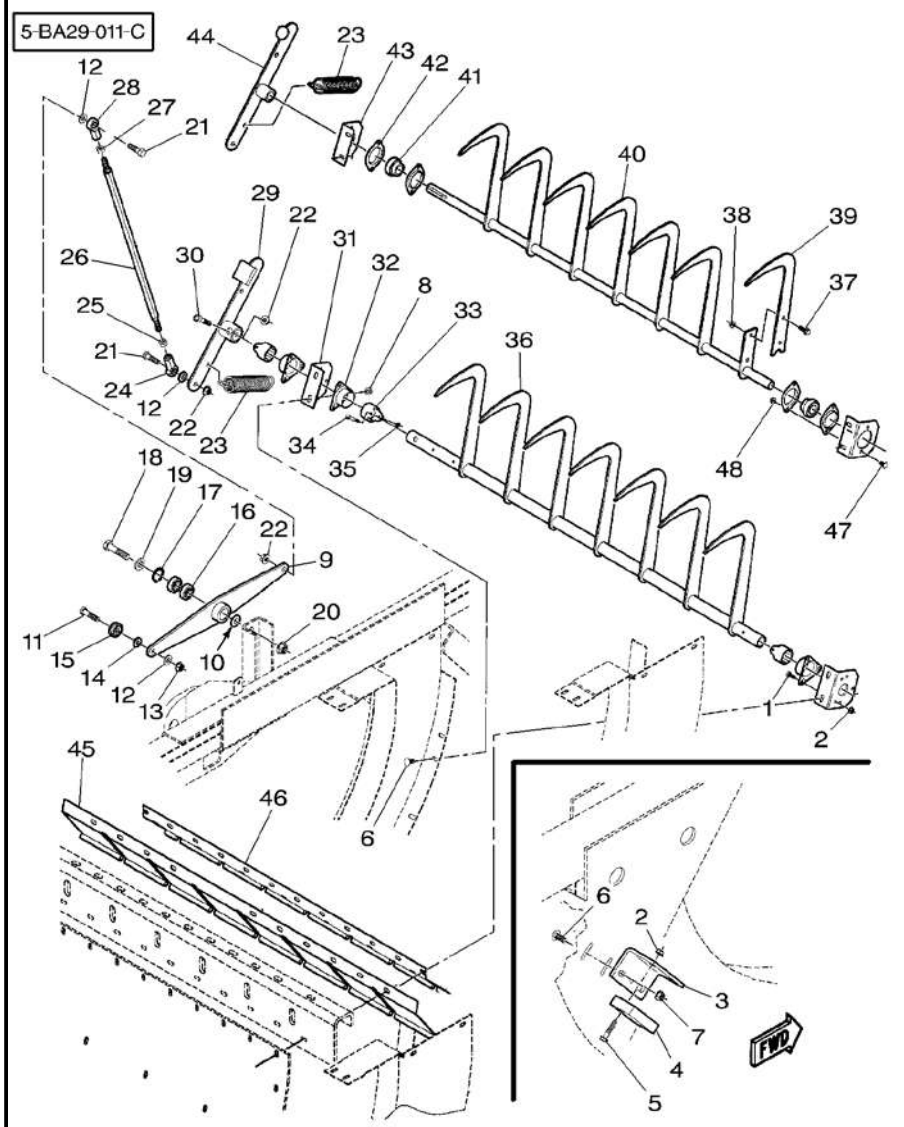

27	7704000	1/2"–20	1 NUT	ECROU DADO	MUTTER TUERCA
28	700720067		1 TOGGLE	ROTULE ROTULA	GELENKZAPFEN PERNO ENGANCHE
29*	700137225P		1 ARM	BRAS BRACCIO	ARM BRAZO
30*	700706548	1/2"–13 X 2–1/4	1 BOLT	BOULON BULLONE	MASCH.SCHRAUBE PERNO
31*	6845507P		2 BRACKET	SUPPORT FIXATION SUPPORTO FISSAGG	HALTEARM SOPORTE
32	700119832		3 HOUSING	CARTER CARCASSA	GEHAEUSE ALOJAMIENTO
33	***6105159***		3 BEARING	COUSSINET CUSCINETTO	LAGER COJINETE
34*	354603X1	1/4"–20 X 2	3 BOLT UNC	BOULON UNC BULLONE UNC	MASCH.SCHRB.UNC PERNO UNC
35	7774839	1/4"–20	3 LOCKNUT	ECROU BLOCAGE AUTOBLOCCANTE	FLACHMUTTER CONTRATUERCA
36*	700137319P		1 FINGER	DOIGT DITO	FINGER DEDO
37	7703424	➡ HL 74198 3/8"–16 X 1	2 SCREW	VIS VITE	SCHRAUBE TORNILLO
38	***700711238***	➡ HL 74198 3/8"–16	2 NUT	ECROU DADO	MUTTER TUERCA
39*	700140233P	➡ HL 74198	1 FINGER	DOIGT DITO	FINGER DEDO
40*	700140272	➡ HL 74198	1 FINGER	DOIGT DITO	FINGER DEDO
41	***71308951***	➡ HL 74198	2 KIT, BEARING	JEU COUSSINETS KIT CUSCINETTO	LAGERSATZ JUEGO COJINETES
42	***50591***	➡ HL 74198	4 FLANGE	FLASQUE FLANGIA	FLANSCH PLETINA
43*	700153141P	➡ HL 74198	2 BRACKET	SUPPORT FIXATION SUPPORTO FISSAGG	HALTEARM SOPORTE
44*	700140425P	➡ HL 74198	1 ARM	BRAS BRACCIO	ARM BRAZO
45*	700139173P	➡ HL 74197	1 SHIELD	TOLE RIPARO	SCHILD BLINDAJE
46*	700140478P	➡ HL 74198	1 SHIELD	TOLE RIPARO	SCHILD BLINDAJE
47*	364352X1	➡ HL 74198 5/16"–18 X 3/4	4 BOLT UNC	BOULON UNC BULLONE UNC	MASCH.SCHRB.UNC PERNO UNC
48*	70931277	➡ HL 74198 5/16"–18	4 LOCKNUT	ECROU BLOCAGE AUTOBLOCCANTE	FLACHMUTTER CONTRATUERCA

Plunger Piston Kolben Pistone Stantuffo	40-50	Shaft Arbre Welle Albero Palier

5-BA31-013-A

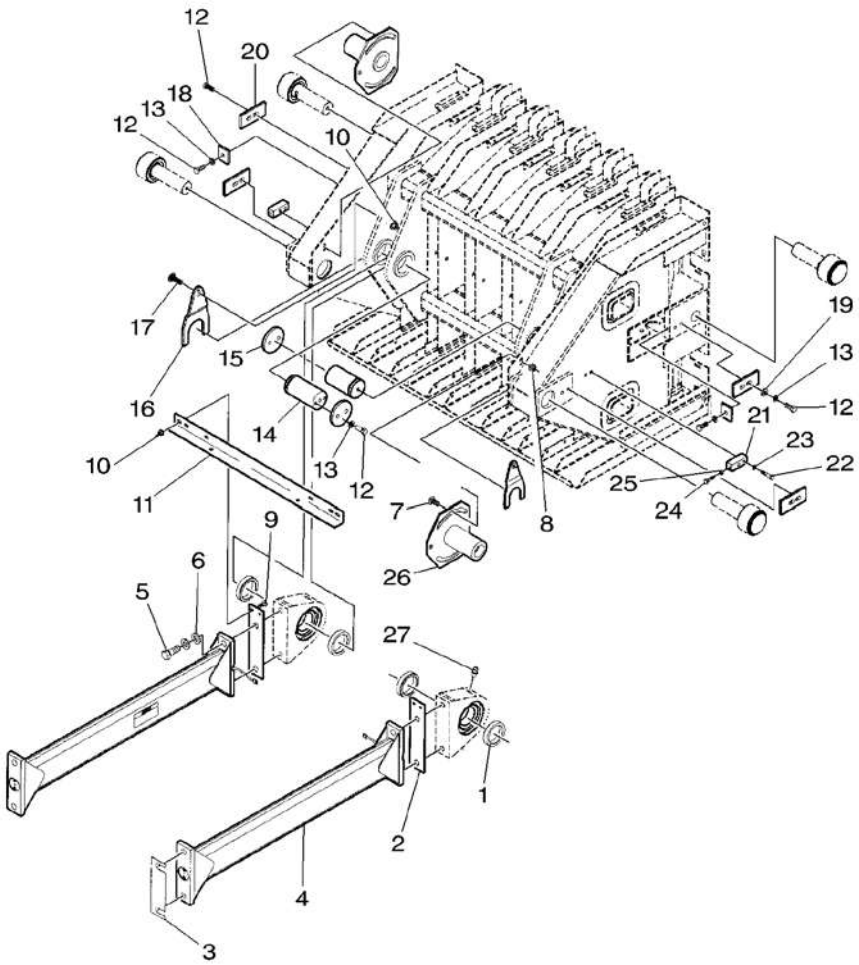

1*	700137198P		4	SPACER	ENTRETOISE DISTANZIALE	ABSTANDSTUECK PIEZA DISTANCIA
2*	700137187P		2	PLATE	PLAQUE PIASTRA	PLATTE PLATO
3*	700137210P		1	SHIM	CALE REGLAGE SPESSORE	EINSTELLBLECH CALCE
4*	700137254B		2	ARM	BRAS BRACCIO	ARM BRAZO
5	700706419	3/4"-10 X 2	8	BOLT	BOULON BULLONE	MASCH.SCHRAUBE PERNO
6	Y705566	3/4"	16	WASHER	RONDELLE RONDELLA	UNTERLEGSCHEIBE ARANDELA
7*	364224X1	1/2"-13 X 1-1/4	2	BOLT UNC	BOULON UNC BULLONE UNC	MASCH.SCHRB.UNC PERNO UNC
8	***Y704742***	1/2"-13	2	TOP LOCKNUT	ECROU FREIN DADO DI TESTA	SELBSTS.MUTTER CONTRATUERCA SUP
9	7883382	3/8"-16 X 1	4	SCREW	VIS VITE	SCHRAUBE TORNILLO
10	***Y704734***	3/8"-16	6	TOP LOCKNUT	ECROU FREIN DADO DI TESTA	SELBSTS.MUTTER CONTRATUERCA SUP
11*	700137181P		1	ANGLE	EQUERRE ANGOLO	WINKEL ANGULO
12*	354276X1	1/2"-13 X 1-1/4	14	BOLT UNC	BOULON UNC BULLONE UNC	MASCH.SCHRB.UNC PERNO UNC
13*	353439X1	1/2"	14	LOCK WASHER	RONDELLE FREIN ROSETTA ELASTICA	FEDERRING ARANDELA GROWER
14	700137222		2	SHAFT	ARBRE ALBERO	WELLE ARBOL
15*	700137184P		2	PLATE	PLAQUE PIASTRA	PLATTE PLATO
16*	700137221P		2	CLIP	CLIP FERMAGLIO	SCHELLE CRAPA RETEN
17*	70923220	3/8"-16 X 1-1/4	2	BOLT	BOULON BULLONE	MASCH.SCHRAUBE PERNO
18*	700124027P		2	PLATE	PLAQUE PIASTRA	PLATTE PLATO
19*	***705541***	1/2"	8	FLAT WASHERS	RONDELLES PLATES RONDELLE PIANE	UNTERLEGSCHEIBEN ARANDELAS PLANAS
20*	700124022P		4	PLATE	PLAQUE PIASTRA	PLATTE PLATO
21*	700124023P		2	BLOCK	BLOC BLOCCO	BLOCK BLOQUE
22*	354264X1	3/8"-16 X 1-3/4	4	BOLT UNC	BOULON UNC BULLONE UNC	MASCH.SCHRB.UNC PERNO UNC
23*	353434X1	3/8"	4	LOCK WASHER	RONDELLE FREIN ROSETTA ELASTICA	FEDERRING ARANDELA GROWER
24*	353693X1	3/8"-16 X 1-1/4	2	SCREW UNC	VIS UNC VITE UNC	SCHRAUBE UNC TORNILLO UNC
25*	***70917421***	3/8"-16	2	NUT	ECROU DADO	MUTTER TUERCA
26*	700137200P		2	SUPPORT	SUPPORT SUPPORTO	LAGERUNG DISPOS.DE SOSTEN

Plunger Piston Kolben Pistone Stantuffo	40-50	Shaft Arbre Welle Albero Palier

5-BA31-013-A

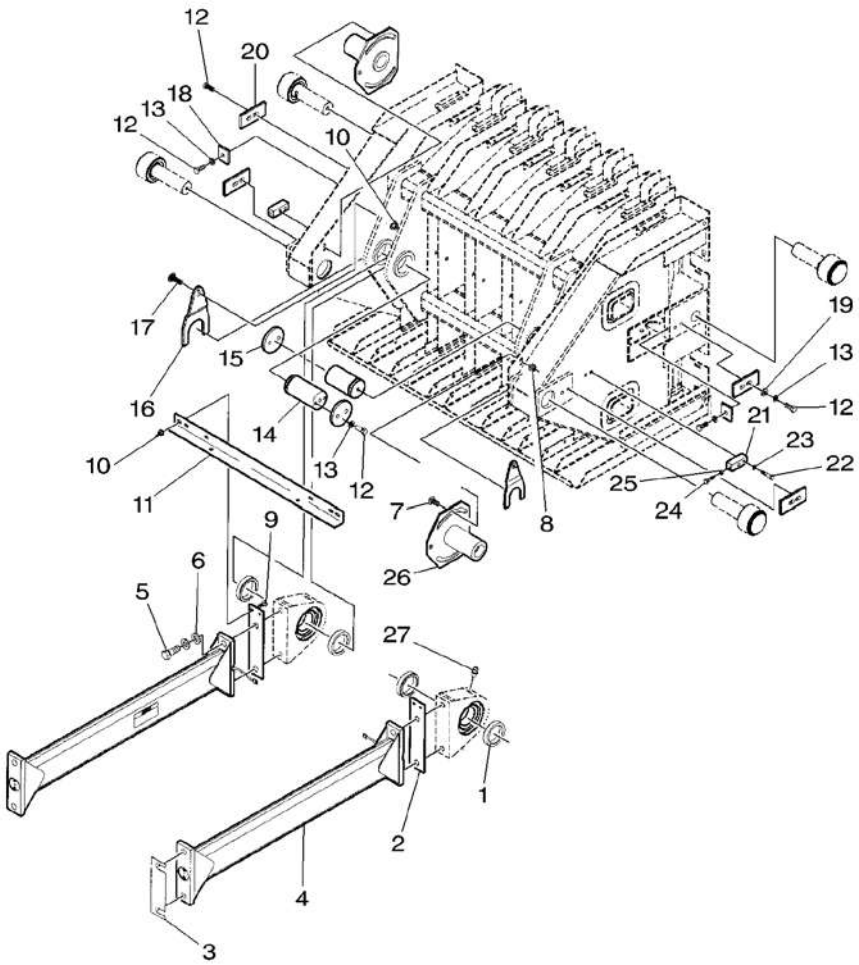

27	*70923219*	1/4"–28	**2** GREASER	GRAISSEUR INGRASSATORE	FETTNIPPEL ENGRASADOR

Plunger
Piston
Kolben
Pistone
Stantuffo

40-55

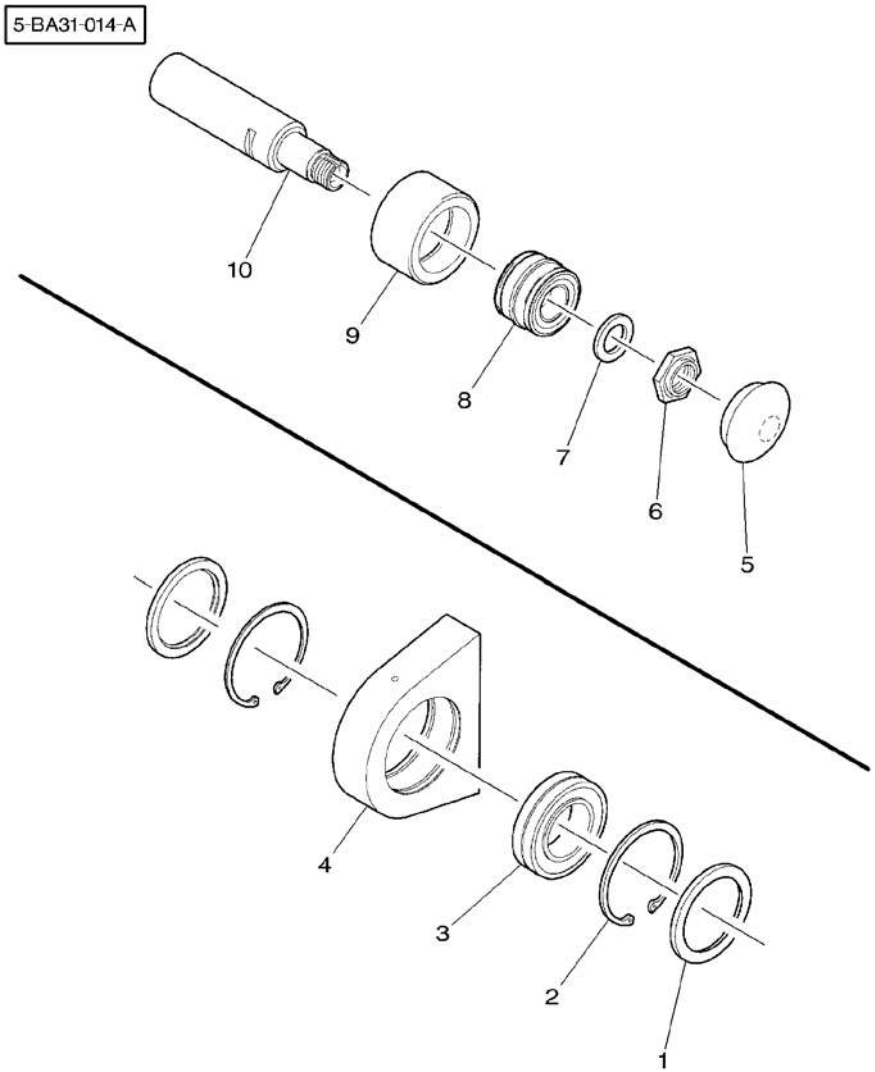

1	***700715740***	**2**	OIL SEAL	BAGUE ETANCHEITE BOCCOLA PARAOLIO	OELDICHTRING BUJE RETENACEITE
2	***700720004***	**2**	RING	ANNEAU ANELLO	RING ARO
3	***700715741***	**1**	BEARING	COUSSINET CUSCINETTO	LAGER COJINETE
4*	700137110	**1**	HOUSING	CARTER CARCASSA	GEHAEUSE ALOJAMIENTO
5	26922	**1**	CAP	CHAPEAU CAPPELLO	KAPPE TAPA
6	700113171	**1**	NUT	ECROU DADO	MUTTER TUERCA
7	700706125	**1**	WASHER	RONDELLE RONDELLA	UNTERLEGSCHEIBE ARANDELA
8	***700706124***	**1**	BEARING	COUSSINET CUSCINETTO	LAGER COJINETE
9	700113170	**1**	ROLLER	GALET RULLO	ROLLE RODILLO
10	700124026	**1**	SHAFT	ARBRE ALBERO	WELLE ARBOL

Plunger
Piston
Kolben
Pistone
Stantuffo

40-60

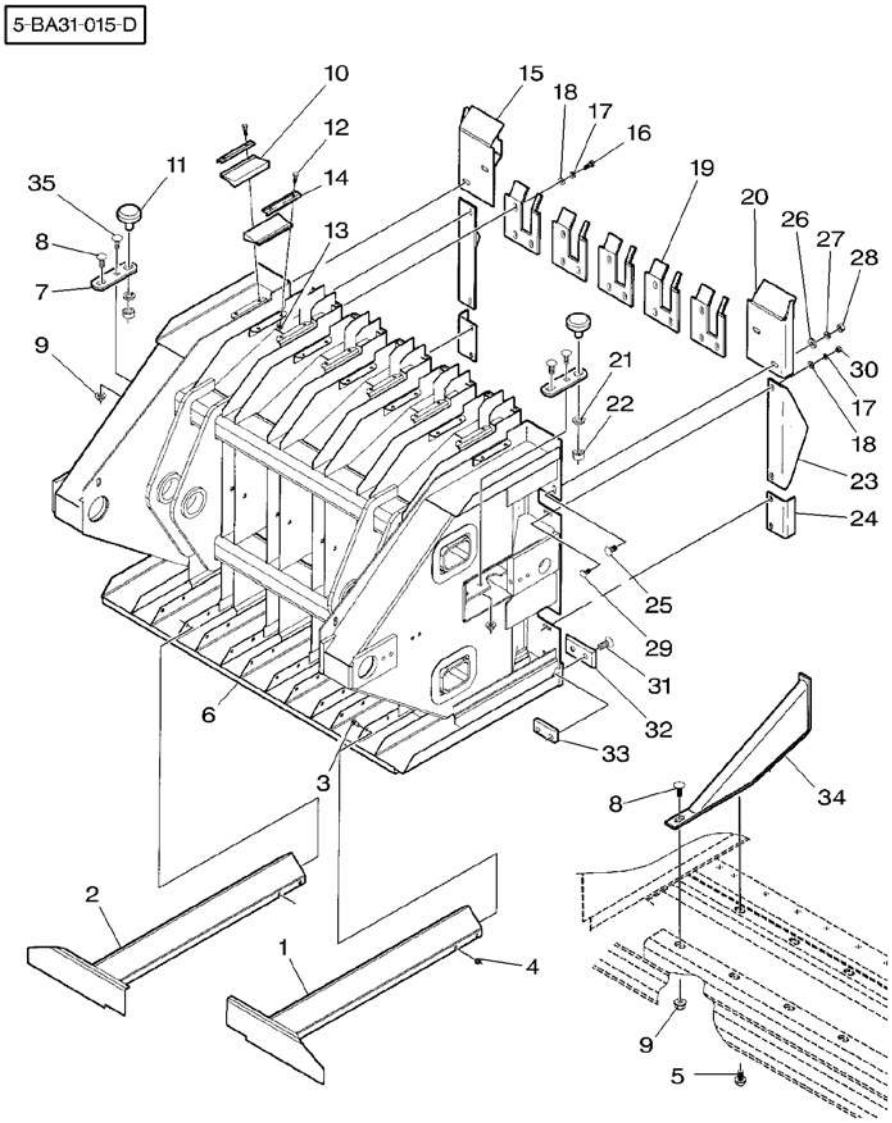

1 ✱ 700137215P	➡ ◀ ...	1	SCRAPER	RACLEUR RUSPA	ABSTREICHER RASPADOR
1 ✱ 700163300P	➡ ◀ ...	1	SCRAPER	RACLEUR RUSPA	ABSTREICHER RASPADOR
2 ✱ 700137217P	➡ ▶ ...	1	SCRAPER	RACLEUR RUSPA	ABSTREICHER RASPADOR
2 ✱ 700163301P	➡ ▶ ...	1	SCRAPER	RACLEUR RUSPA	ABSTREICHER RASPADOR
3 ✱ *7883374*	➡ ... 3/8"–16 X 3/4	8	SCREW	VIS VITE	SCHRAUBE TORNILLO
3 ✱ 700706463	➡ ... 3/8"–16 X 1	8	CAPSCREW	VIS BOUCHON TAPPO A VITE	HUTSCHRAUBE TORNILLO TAPON
3 ✱ *Y705533*	➡ ... 3/8"	16	WASHER	RONDELLE RONDELLA	UNTERLEGSCHEIBE ARANDELA
4 ✱ *Y704734*	3/8"–16	8	TOP LOCKNUT	ECROU FREIN DADO DI TESTA	SELBSTS.MUTTER CONTRATUERCA SUP
5 7883424	1/2"–13 X 1	6	SCREW	VIS VITE	SCHRAUBE TORNILLO
6 ✱ 700137150		1	PLUNGER	PLONGEUR STANTUFFO	TAUCHKOLBEN EMBOLO
7 ✱ 700123184P		2	PLATE	PLAQUE PIASTRA	PLATTE PLATO
8 ✱ 700710984	1/2"–13 X 1–1/4	6	SCREW	VIS VITE	SCHRAUBE TORNILLO
9 ✱ *Y704742*	1/2"–13	10	TOP LOCKNUT	ECROU FREIN DADO DI TESTA	SELBSTS.MUTTER CONTRATUERCA SUP
10 *700713894*		12	BRUSH	BALAI SPAZZOLA	BUERSTE ESCOBILLA
11 *7713829*		2	BEARING	COUSSINET CUSCINETTO	LAGER COJINETE
12 ✱ Y704726	5/16"–18	24	TOP LOCKNUT	ECROU FREIN DADO DI TESTA	SELBSTS.MUTTER CONTRATUERCA SUP
13 ✱ 353679X1	5/16"–18 X 1	24	BOLT UNC	BOULON UNC BULLONE UNC	MASCH.SCHRB.UNC PERNO UNC
14 ✱ 700129690P		12	RETAINER	RETENEUR FERMO	HALTERING RETENEDOR
15 ✱ 700137207	▶	1	PLATE	PLAQUE PIASTRA	PLATTE PLATO
16 ✱ 353691X1	3/8"–16 X 1	15	BOLT UNC	BOULON UNC BULLONE UNC	MASCH.SCHRB.UNC PERNO UNC
17 ✱ 353434X1	3/8"	23	LOCK WASHER	RONDELLE FREIN ROSETTA ELASTICA	FEDERRING ARANDELA GROWER
18 ✱ *Y705533*	3/8"	15	WASHER	RONDELLE RONDELLA	UNTERLEGSCHEIBE ARANDELA
19 ✱ 700113187P		5	PLATE	PLAQUE PIASTRA	PLATTE PLATO
20 ✱ 700137204	◀	1	PLATE	PLAQUE PIASTRA	PLATTE PLATO
21 ✱ 353440X1	3/4"	2	LOCK WASHER	RONDELLE FREIN ROSETTA ELASTICA	FEDERRING ARANDELA GROWER
22 ✱ 70930253	3/4"–16	2	NUT	ECROU DADO	MUTTER TUERCA

Plunger
Piston
Kolben
Pistone
Stantuffo

40-60

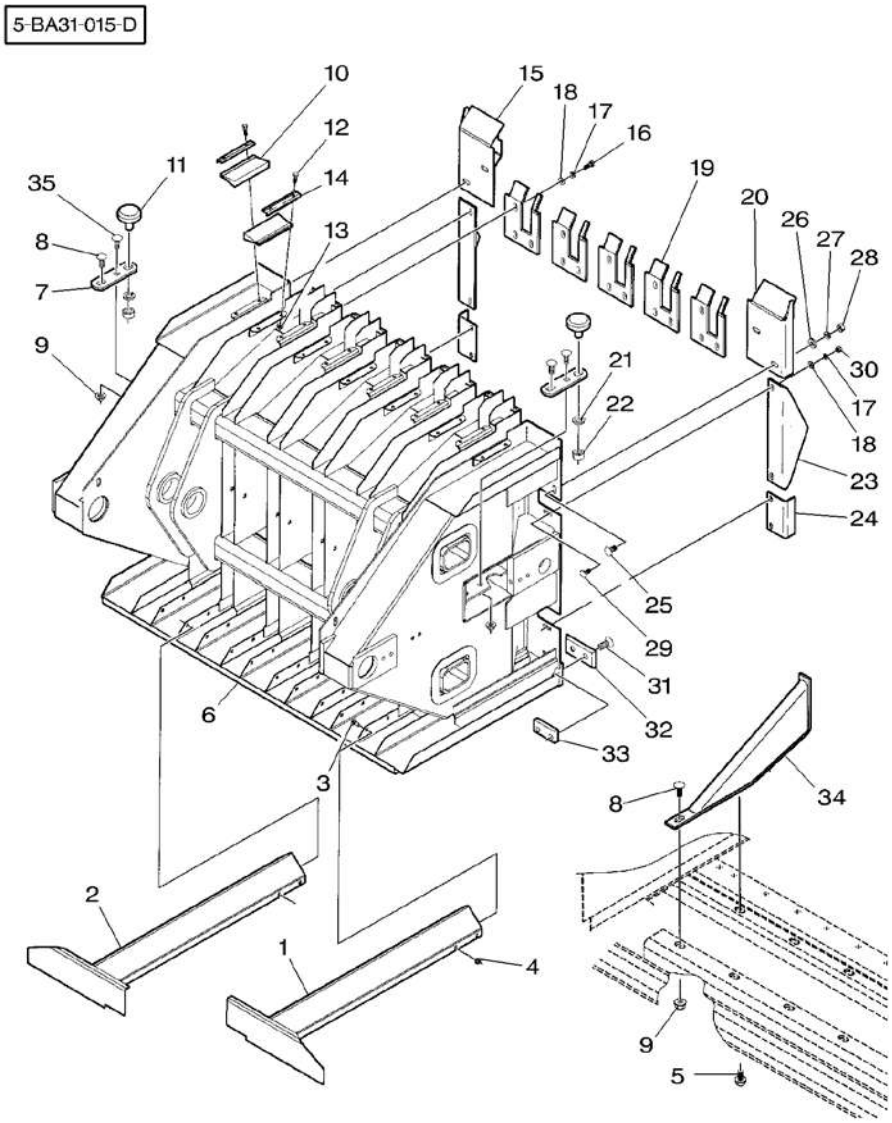

23 * 700123193P		2	SHANK	ANGLE FUSO	SCHAFT MANGO
24 * 700123192P		2	ANGLE	EQUERRE ANGOLO	WINKEL ANGULO
25 * 70928367	1/2"-13 X 1	4	BOLT	BOULON BULLONE	MASCH.SCHRAUBE PERNO
26 * ***705541***	1/2"	4	FLAT WASHERS	RONDELLES PLATES RONDELLE PIANE	UNTERLEGSCHEIBEN ARANDELAS PLANAS
27 * 353439X1	1/2"	4	LOCK WASHER	RONDELLE FREIN ROSETTA ELASTICA	FEDERRING ARANDELA GROWER
28 * 704031	1/2"-13	4	NUT	ECROU DADO	MUTTER TUERCA
29 *70922786*	3/8"-16 X 1	8	BOLT	BOULON BULLONE	MASCH.SCHRAUBE PERNO
30 * 355566X1	3/8"-16	8	NUT UNC	ECROU UNC DADO UNC	MUTTER UNC TUERCA UNC
31 * 700706852	5/8"-11 X 1-1/2	14	BOLT	BOULON BULLONE	MASCH.SCHRAUBE PERNO
32 * ***700113188P***		7	KNIFE	COUTEAU COLTELLO	MESSER CUCHILLA
33 * ***700113189***		7	BAR	BARRE BARRA	STAB BARRA
34 * 700153070P		6	CLEANER	EPURATEUR DEPURATORE	REINIGER DEPURADOR
35 * 364224X1	1/2"-13 X 1-1/4	4	BOLT UNC	BOULON UNC BULLONE UNC	MASCH.SCHRB.UNC PERNO UNC

Plunger Piston Kolben Pistone Stantuffo	40-65	Slot Cleaner Grille De Nettoyage Gittereinigung Griglia Di Pulitura Criba De Limpia

5-BA31-016-A

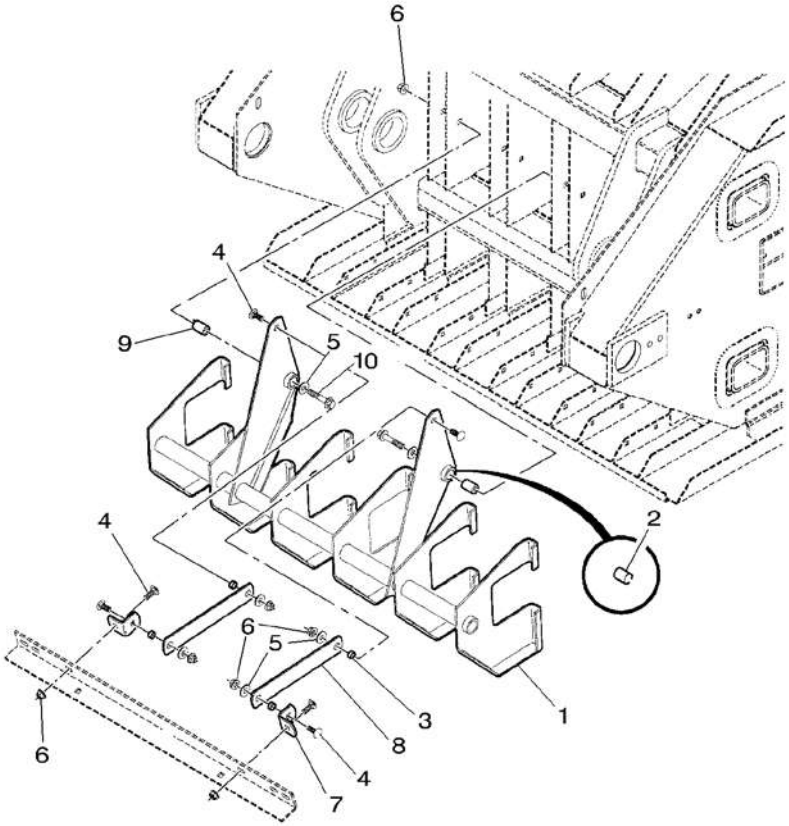

1	700137213		1 PLATE	PLAQUE PIASTRA	PLATTE PLATO
2	Y740787	1	2 BUSH	BAGUE BOCCOLA	BUCHSE CASQUILLO
3	6232946		4 BUSH	BAGUE BOCCOLA	BUCHSE CASQUILLO
4*	*70922786*	3/8"–16 X 1	6 BOLT	BOULON BULLONE	MASCH.SCHRAUBE PERNO
5*	700702916	3/8"	6 WASHER	RONDELLE RONDELLA	UNTERLEGSCHEIBE ARANDELA
6*	***Y704734***	3/8"–16	8 TOP LOCKNUT	ECROU FREIN DADO DI TESTA	SELBSTS.MUTTER CONTRATUERCA SUP
7*	700122588P		2 ANGLE	EQUERRE ANGOLO	WINKEL ANGULO
8	700137144		2 STRAP	PATTE CORREGGIA	LASCHE FAJA
9	***6518302***		2 SPACER	ENTRETOISE DISTANZIALE	ABSTANDSTUECK PIEZA DISTANCIA
10*	363906X1	3/8"–16 X 2	2 BOLT UNC	BOULON UNC BULLONE UNC	MASCH.SCHRB.UNC PERNO UNC

Plunger
Piston
Kolben
Pistone
Stantuffo

40-70

Slot Cleaner – Kit
Grille De Nettoyage – Kit
Gittereinigung – Kit
Griglia Di Pulitura – Kit
Criba De Limpia – Kit

5-BA31-019-A

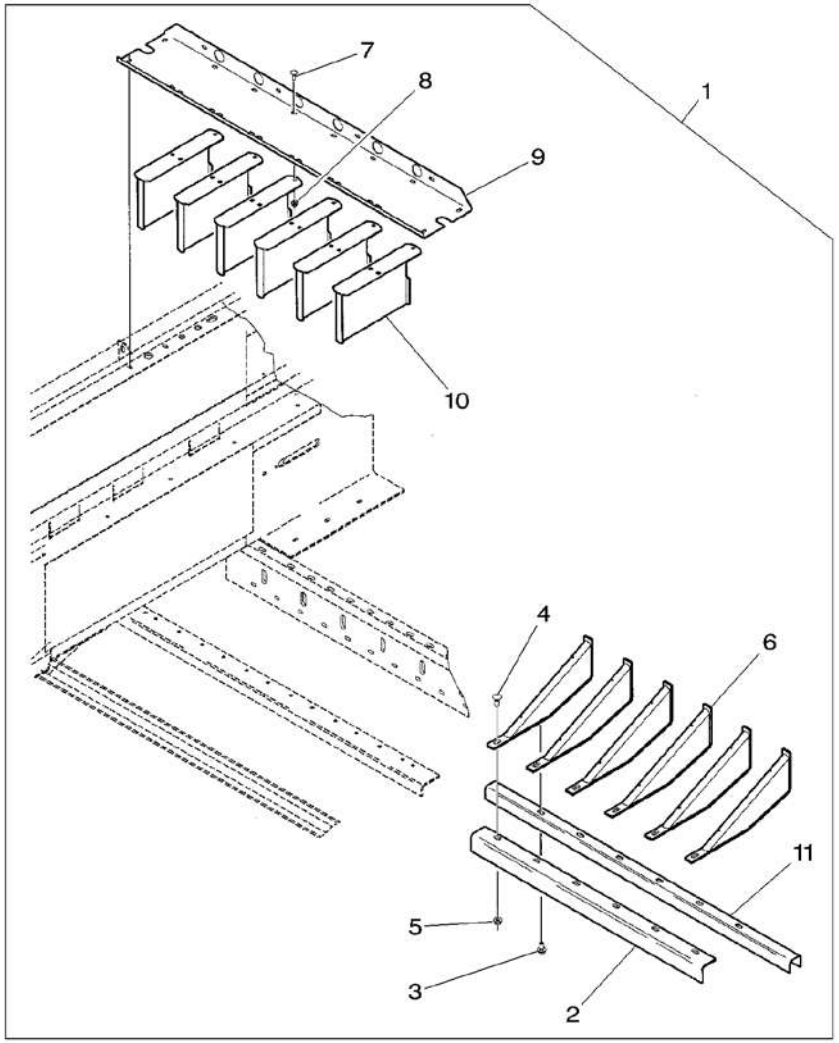

1	MK41076		**1**	KIT	JEU KIT	SATZ JUEGO
2	700138228B	1	**1**	SHANK	ANGLE FUSO	SCHAFT MANGO
3*	7883424	1 1/2"–13 X 1	**6**	SCREW	VIS VITE	SCHRAUBE TORNILLO
4*	364224X1	1 1/2"–13 X 1–1/4	**6**	BOLT UNC	BOULON UNC BULLONE UNC	MASCH.SCHRB.UNC PERNO UNC
5*	***Y704742***	1 1/2"–13	**6**	TOP LOCKNUT	ECROU FREIN DADO DI TESTA	SELBSTS.MUTTER CONTRATUERCA SUP
6*	700153070P	1	**6**	CLEANER	EPURATEUR DEPURATORE	REINIGER DEPURADOR
7*	*70922786*	1 3/8"–16 X 1	**18**	BOLT	BOULON BULLONE	MASCH.SCHRAUBE PERNO
8*	***Y704734***	1 3/8"–16	**18**	TOP LOCKNUT	ECROU FREIN DADO DI TESTA	SELBSTS.MUTTER CONTRATUERCA SUP
9*	700139341	1	**1**	CHANNEL	CANAL PROFILATO	KANAL CANAL
10*	700139333	1	**6**	STRIPPER	DEBOURREUR SPOGLIATORE	ABSTREIFER DESBARBADOR
11	700138229B	1	**1**	CHANNEL	CANAL PROFILATO	KANAL CANAL

Bale Chute
Rampe De Dechargement
Ballenrutsche
Scivolo Per Balle
Tobogan De Descarga

40-75

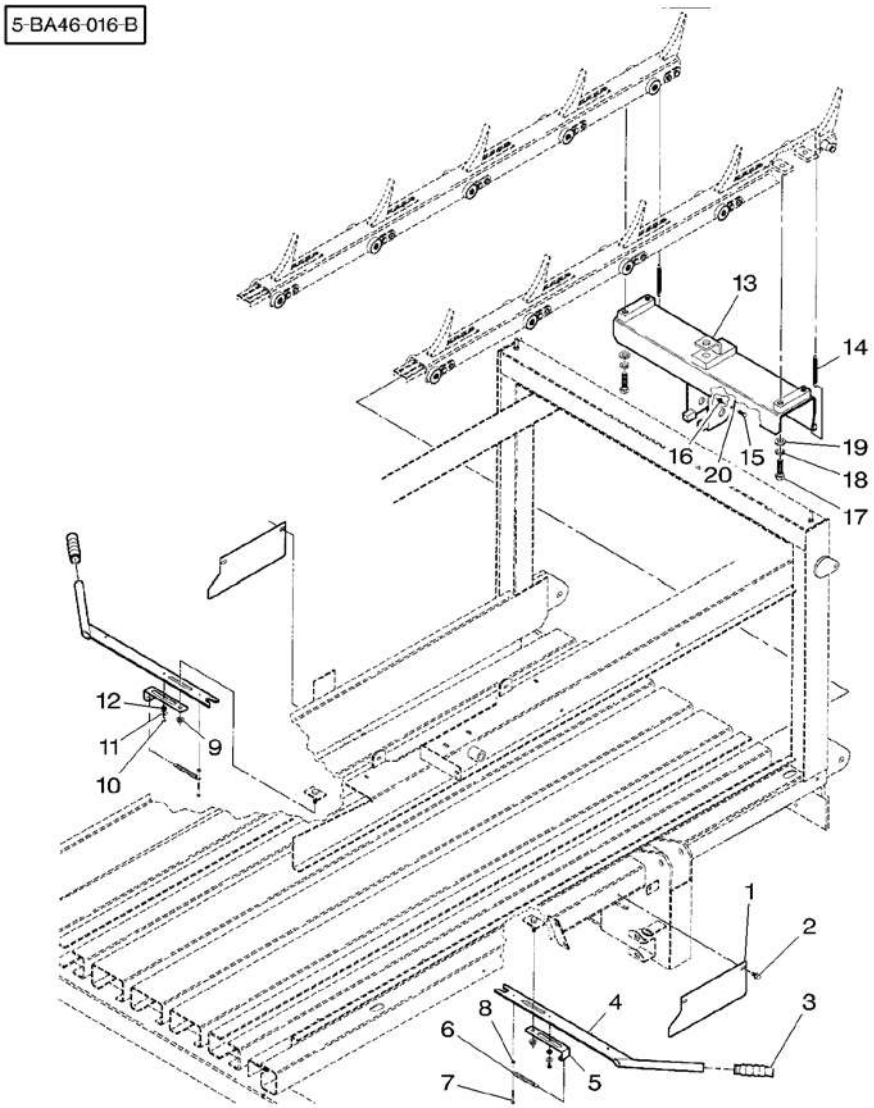

1*	700129665P		2	PLATE	PLAQUE PIASTRA PLATTE PLATO
2	Y702951	3/8"–16 X 3/4	4	SCREW	VIS VITE SCHRAUBE TORNILLO
3	27342		2	GRIP	MANCHE IMPUGNATURA GRIFF EMPUNADURA
4*	700129704P		2	HANDLE	POIGNEE MANIGLIA HANDGRIFF MANETA
5	700129769		2	SUPPORT	SUPPORT SUPPORTO LAGERUNG DISPOS.DE SOSTEN
6	***7758915***		2	SPRING	RESSORT MOLLA FEDER MUELLE
7*	354601X1	1/4"–20 X 1–3/4	2	BOLT UNC	BOULON UNC BULLONE UNC MASCH.SCHRB.UNC PERNO UNC
8*	355564X1	1/4"–20	2	NUT UNC	ECROU UNC DADO UNC MUTTER UNC TUERCA UNC
9*	***Y704742***	1/2"–13	2	TOP LOCKNUT	ECROU FREIN DADO DI TESTA SELBSTS.MUTTER CONTRATUERCA SUP
10*	70921958	1/4"–20 X 1/2	2	CAPSCREW	VIS BOUCHON TAPPO A VITE HUTSCHRAUBE TORNILLO TAPON
11*	355617X1	1/4"	2	WASHER	RONDELLE RONDELLA UNTERLEGSCHEIBE ARANDELA
12	700127895		2	SPACER	ENTRETOISE DISTANZIALE ABSTANDSTUECK PIEZA DISTANCIA
13*	700137440		1	BRACKET	SUPPORT FIXATION SUPPORTO FISSAGG HALTEARM SOPORTE
14	***700714166***		2	SPRING	RESSORT MOLLA FEDER MUELLE
15*	353679X1	5/16"–18 X 1	2	BOLT UNC	BOULON UNC BULLONE UNC MASCH.SCHRB.UNC PERNO UNC
16*	Y704726	5/16"–18	2	TOP LOCKNUT	ECROU FREIN DADO DI TESTA SELBSTS.MUTTER CONTRATUERCA SUP
17*	354285X1	5/8"–11 X 2–1/4	4	BOLT UNC	BOULON UNC BULLONE UNC MASCH.SCHRB.UNC PERNO UNC
18*	353433X1	5/8"	4	LOCK WASHER	RONDELLE FREIN ROSETTA ELASTICA FEDERRING ARANDELA GROWER
19	Y705582	5/8"	4	WASHER	RONDELLE RONDELLA UNTERLEGSCHEIBE ARANDELA
20*	***Y705525***	5/16"	2	WASHER	RONDELLE RONDELLA UNTERLEGSCHEIBE ARANDELA

Bale Chute
Rampe De Dechargement
Ballenrutsche
Scivolo Per Balle
Tobogan De Descarga

40-80

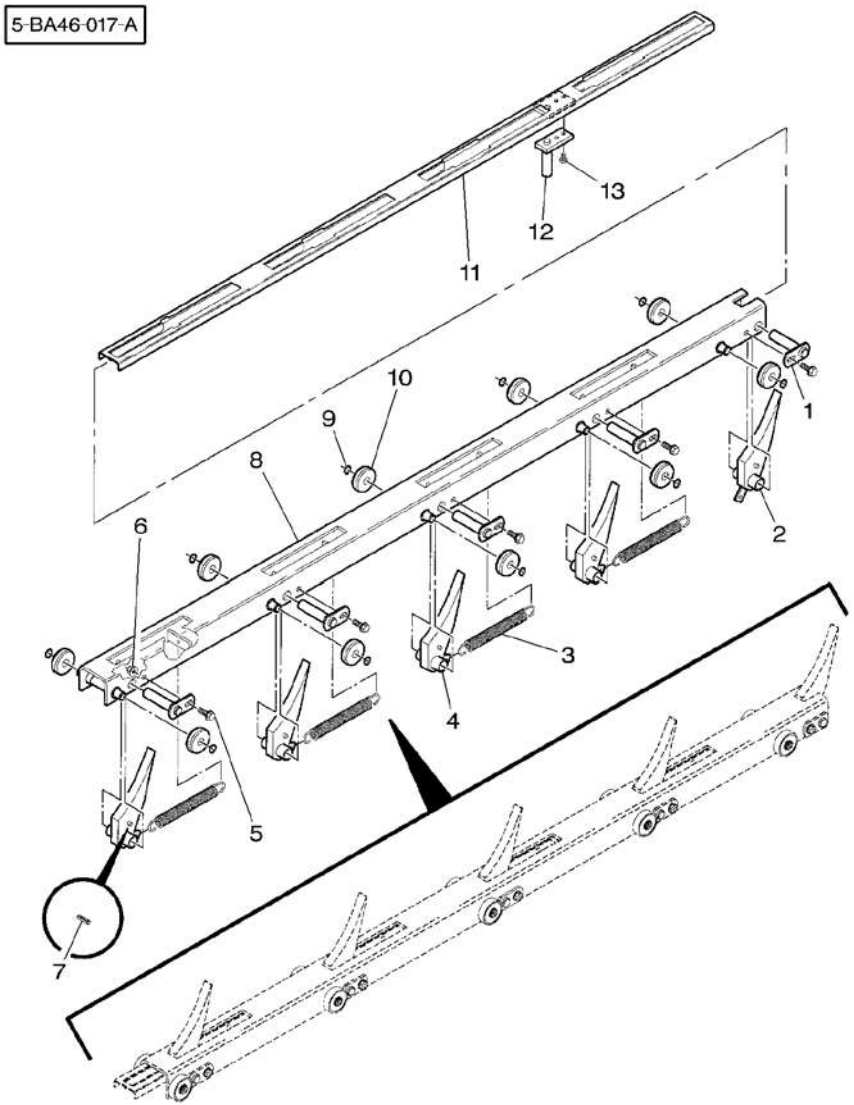

1*	700129567P		5	PIN	GOUPILLE PERNO	BOLZEN PASADOR
2*	700129695P		1	DOG	CHIEN CANE	KLAUE PRISIONERO
3	***700714166***		4	SPRING	RESSORT MOLLA	FEDER MUELLE
4*	***700129571P***		4	DOG	CHIEN CANE	KLAUE PRISIONERO
5*	7883382	3/8"-16 X 1	5	SCREW	VIS VITE	SCHRAUBE TORNILLO
6*	***Y704734***	3/8"-16	5	TOP LOCKNUT	ECROU FREIN DADO DI TESTA	SELBSTS.MUTTER CONTRATUERCA SUP
7	70915935	5/16" X 1-1/4	5	PIN	GOUPILLE PERNO	BOLZEN PASADOR
8*	700129562P		1	CHANNEL	CANAL PROFILATO	KANAL CANAL
9	***70927103***		10	RING	ANNEAU ANELLO	RING ARO
10	***711770***		10	BEARING	COUSSINET CUSCINETTO	LAGER COJINETE
11*	700129705P		1	CHANNEL	CANAL PROFILATO	KANAL CANAL
12*	700129701P		1	PIN	GOUPILLE PERNO	BOLZEN PASADOR
13*	70930228	5/16"-18 X 3/4	2	SCREW	VIS VITE	SCHRAUBE TORNILLO

50

Needle
Aiguille
Nadeln
Ago
Aguja

50-5

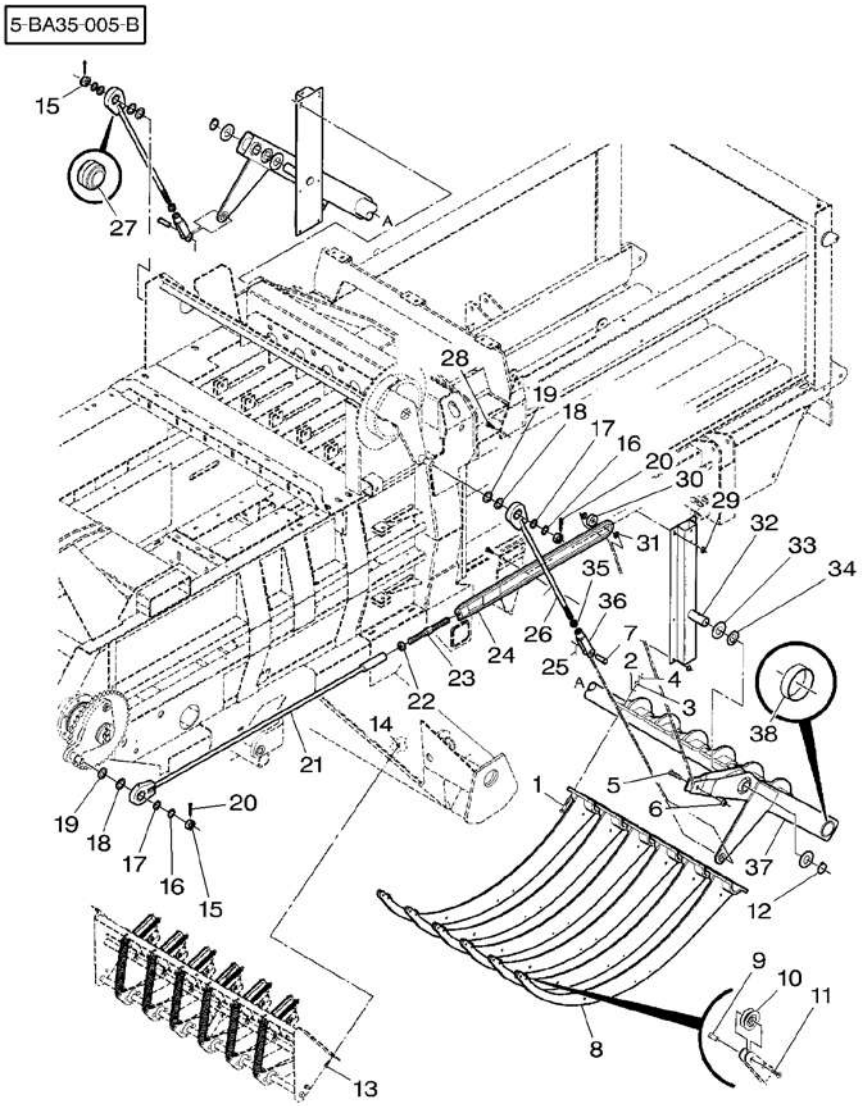

1 *	*700710413*	1/2"–13 X 2–1/2	**24**	BOLT	BOULON BULLONE	MASCH.SCHRAUBE PERNO
2 *	*705541*	1/2"	**24**	FLAT WASHERS	RONDELLES PLATES RONDELLE PIANE	UNTERLEGSCHEIBEN ARANDELAS PLANAS
3 *	*700703458*	1/2"–13	**24**	NUT	ECROU DADO	MUTTER TUERCA
4 *	*700710414*	1/2"–13	**24**	NUT	ECROU DADO	MUTTER TUERCA
5 *	354285X1	5/8"–11 X 2–1/4	**1**	BOLT UNC	BOULON UNC BULLONE UNC	MASCH.SCHRB.UNC PERNO UNC
6 *	*700703922*	5/8"–11	**1**	TOP LOCKNUT	ECROU FREIN DADO DI TESTA	SELBSTS.MUTTER CONTRATUERCA SUP
7 *	763177	3/4" X 2	**2**	CLEVIS PIN	AXE PERNO D'ATTACCO	SPLINTBOLZEN BULON CILINDRICO
8 *	*700123233P*		**6**	NEEDLE	AIGUILLE AGO	NADEL AGUJA
9 *	*866566*	8	**2**	FASTENER	AGRAFE LACCIO	HALTEKLAMMER CIERRE
10 *	*700722661*	8	**2**	BALL BEARING	ROULEMENT BILLES CUSCINETTO SFERE	KUGELLAGER COJINETE DE BOLA
11 *	*8701476*	8 No 10–32 X 1/2	**2**	BOLT	BOULON BULLONE	MASCH.SCHRAUBE PERNO
12 *	*70928179*		**2**	SNAPRING	SEGMENT ARRET ANELLO SIEGER	SPRENGRING ANILLA RETENCION
13 *	7883382	3/8"–16 X 1	**4**	SCREW	VIS VITE	SCHRAUBE TORNILLO
14 *	*Y704734*	3/8"–16	**4**	TOP LOCKNUT	ECROU FREIN DADO DI TESTA	SELBSTS.MUTTER CONTRATUERCA SUP
15 *	704692	1"–14	**1**	NUT	ECROU DADO	MUTTER TUERCA
16 *	Y52258	1" X 14	**3**	WASHER	RONDELLE RONDELLA	UNTERLEGSCHEIBE ARANDELA
17 *	*Y52316*	1" X 10	**3**	BUSH	BAGUE BOCCOLA	BUCHSE CASQUILLO
18 *	Y52266	1"–1/4 X 14	**3**	BOLT	BOULON BULLONE	MASCH.SCHRAUBE PERNO
19 *	Y52324	1"–1/4 X 10	**3**	WASHER	RONDELLE RONDELLA	UNTERLEGSCHEIBE ARANDELA
20 *	62786	1/4" X 2–1/2	**3**	PIN	GOUPILLE PERNO	BOLZEN PASADOR
21 *	700137472P		**1**	ROD	TRINGLE ASTA	STANGE VARILLA
22 *	7774391	7/8"–14	**1**	NUT	ECROU DADO	MUTTER TUERCA
23	6530604		**1**	ROD	TRINGLE ASTA	STANGE VARILLA
24 *	700113098P		**1**	STRAP	PATTE CORREGGIA	LASCHE FAJA
25 *	70923740	5/32" X 1–1/2	**2**	PIN	GOUPILLE PERNO	BOLZEN PASADOR
26 *	700137476P		**2**	ROD	TRINGLE ASTA	STANGE VARILLA

Needle
Aiguille
Nadeln
Ago
Aguja

50-5

5-BA35-005-B

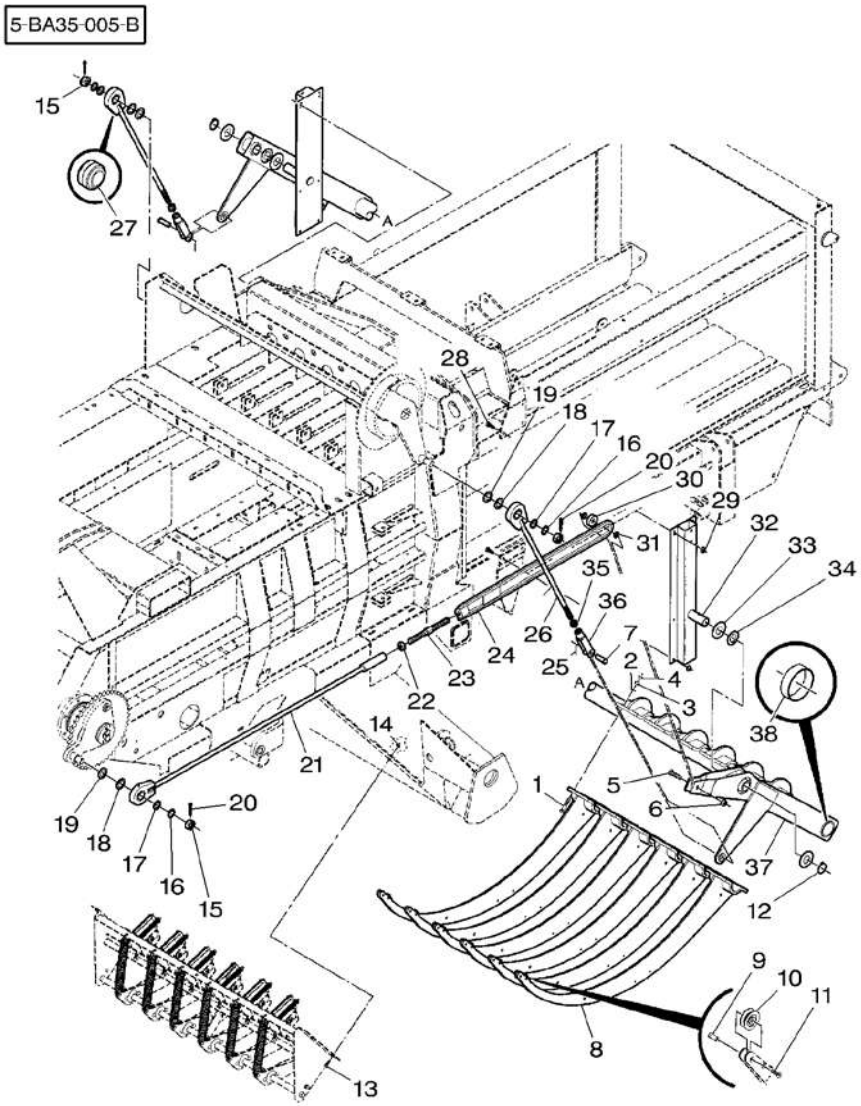

27 ✱	*712810*		3 BUSH	BAGUE BOCCOLA	BUCHSE CASQUILLO
28 ✱	354276X1	1/2"–13 X 1–1/4	8 BOLT UNC	BOULON UNC BULLONE UNC	MASCH.SCHRB.UNC PERNO UNC
29 ✱	*Y704742*	1/2"–13	8 TOP LOCKNUT	ECROU FREIN DADO DI TESTA	SELBSTS.MUTTER CONTRATUERCA SUP
30	*711770*		1 BEARING	COUSSINET CUSCINETTO	LAGER COJINETE
31 ✱	52233	5/8" X 14	2 WASHER	RONDELLE RONDELLA	UNTERLEGSCHEIBE ARANDELA
32 ✱	700153515P		2 PIVOT	PIVOT CARDINE	DREHZAPFEN PIVOTE
33 ✱	740522	1"–1/2 X 10	4 BUSH	BAGUE BOCCOLA	BUCHSE CASQUILLO
34 ✱	700710540		4 WASHER	RONDELLE RONDELLA	UNTERLEGSCHEIBE ARANDELA
35 ✱	375113X1	3/4"–10	2 NUT UNC	ECROU UNC DADO UNC	MUTTER UNC TUERCA UNC
36	66332		2 CLEVIS	CHAPE GANCIO D'ATTACCO	GABELSTUECK GANCHO SEGURI.
37 ✱	700137451P		1 SUPPORT	SUPPORT SUPPORTO	LAGERUNG DISPOS.DE SOSTEN
38 ✱	*700123261*	37	1 BUSH	BAGUE BOCCOLA	BUCHSE CASQUILLO

Knotter
Noueur
Binder
Legatore
Anudadora

50-10

Tension Adjusting – Up To H.M 74235
Reglage De Tension – Jusqu'Au H.M 74235
Spannungregler – Bis Den H.M 74235
Regitro Della Tensione – Fino Alla H.M 74235
Reguladora De La Tension – Hasta H.M 74235

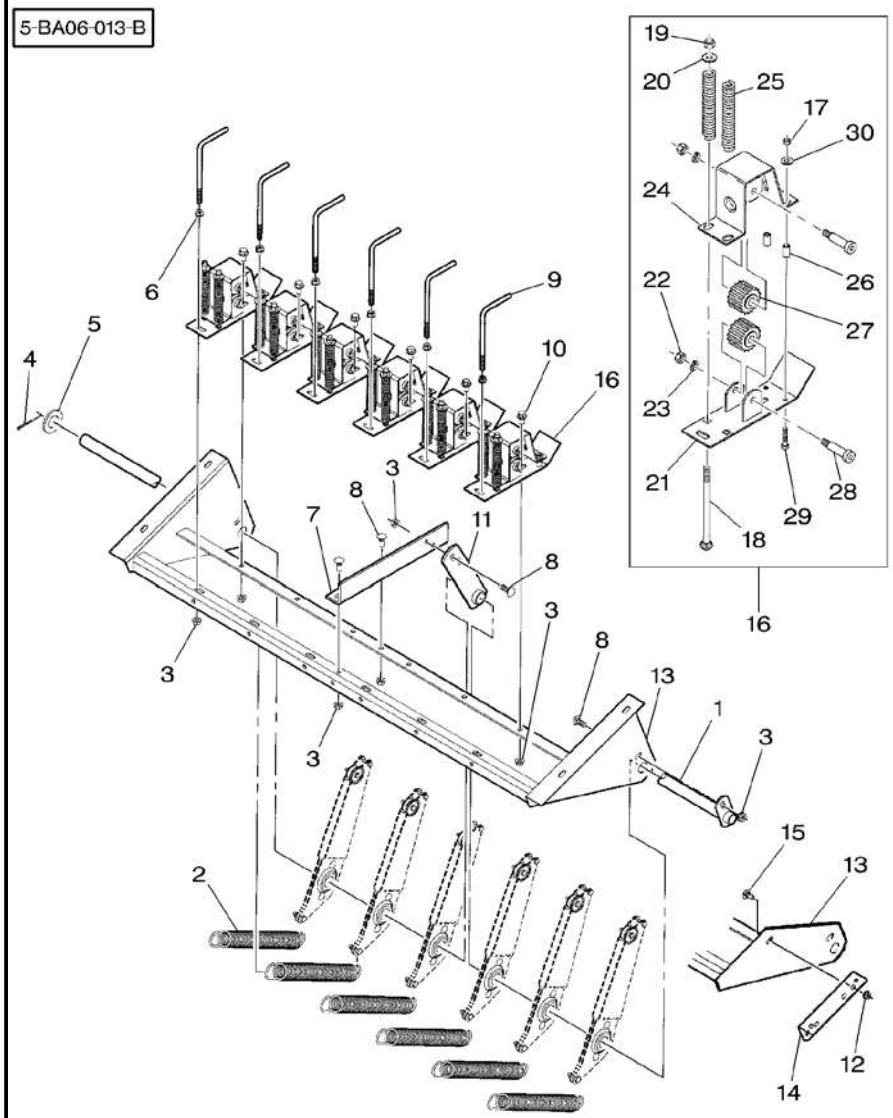

1*	700137469P		1	ROD	TRINGLE ASTA STANGE VARILLA
2	***700714986***		6	SPRING	RESSORT MOLLA FEDER MUELLE
3*	***700711238***	3/8"–16	17	NUT	ECROU DADO MUTTER TUERCA
4*	62190	5/32" X 1–1/2	1	PIN	GOUPILLE PERNO BOLZEN PASADOR
5*	705574	1"	1	FLAT WASHERS	RONDELLES PLATES RONDELLE PIANE UNTERLEGSCHEIBEN ARANDELAS PLANAS
6*	***704247***	3/8"–16	6	LOCKNUT	ECROU BLOCAGE AUTOBLOCCANTE FLACHMUTTER CONTRATUERCA
7*	6848832P		1	ANGLE	EQUERRE ANGOLO WINKEL ANGULO
8*	*70922786*	3/8"–16 X 1	4	BOLT	BOULON BULLONE MASCH.SCHRAUBE PERNO
9	***702400048***		6	ROD	TRINGLE ASTA STANGE VARILLA
10*	7703432	3/8"–16 X 3/4	7	SCREW	VIS VITE SCHRAUBE TORNILLO
11*	700137477P		1	STRAP	PATTE CORREGGIA LASCHE FAJA
12*	***700711238***	➡ HL 74217 3/8"–16	4	NUT	ECROU DADO MUTTER TUERCA
13*	700137460P	➡ HL 74216	1	SUPPORT	SUPPORT SUPPORTO LAGERUNG DISPOS.DE SOSTEN
13*	700140282P	➡ HL 74217	1	SUPPORT	SUPPORT SUPPORTO LAGERUNG DISPOS.DE SOSTEN
14*	700140189P	➡ HL 74217	2	SUPPORT	SUPPORT SUPPORTO LAGERUNG DISPOS.DE SOSTEN
15*	70922784	➡ HL 74217 3/8"–16 X 3/4	4	BOLT	BOULON BULLONE MASCH.SCHRAUBE PERNO
16*	***6845077***		1	TENSIONER	TENDEUR TENDITORE SPANNER TENSOR
17*	355564X1	16 1/4"–20	2	NUT UNC	ECROU UNC DADO UNC MUTTER UNC TUERCA UNC
18*	700704745	16 3/8"–16 X 6	2	BOLT	BOULON BULLONE MASCH.SCHRAUBE PERNO
19*	7704141	16 3/8"–16	2	LOCKNUT	ECROU BLOCAGE AUTOBLOCCANTE FLACHMUTTER CONTRATUERCA
20*	355619X1	16 3/8"	2	WASHER	RONDELLE RONDELLA UNTERLEGSCHEIBE ARANDELA
21*	6845135P	16	1	PLATE	PLAQUE PIASTRA PLATTE PLATO
22*	355566X1	16 3/8"–16	2	NUT UNC	ECROU UNC DADO UNC MUTTER UNC TUERCA UNC
23*	353434X1	16 3/8"	2	LOCK WASHER	RONDELLE FREIN ROSETTA ELASTICA FEDERRING ARANDELA GROWER
24*	6845101P	16	1	BRACKET	SUPPORT FIXATION SUPPORTO FISSAGG HALTEARM SOPORTE
25*	***858027***	16	2	SPRING	RESSORT MOLLA FEDER MUELLE

Knotter
Noueur
Binder
Legatore
Anudadora

50-10

Tension Adjusting – Up To H.M 74235
Reglage De Tension – Jusqu'Au H.M 74235
Spannungregler – Bis Den H.M 74235
Regitro Della Tensione – Fino Alla H.M 74235
Reguladora De La Tension – Hasta H.M 74235

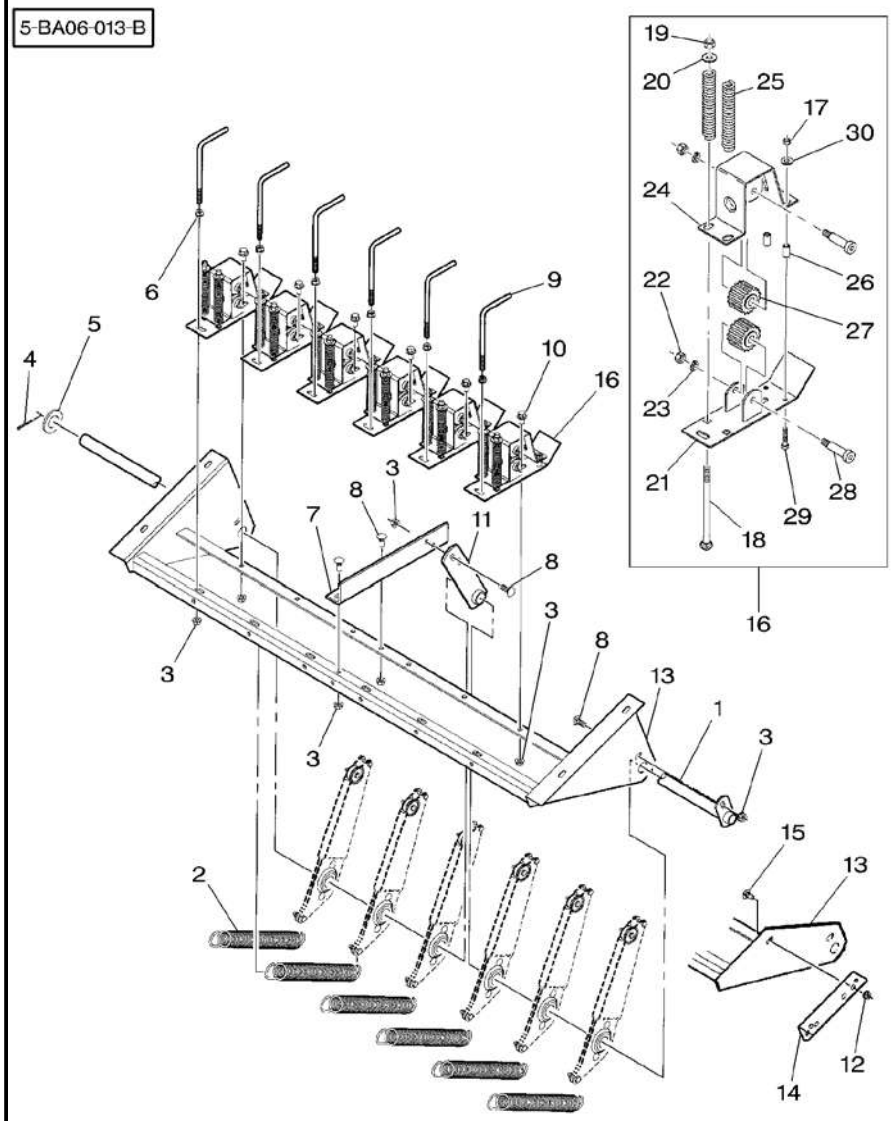

26*	*6530828P*	16	**2**	SPACER	ENTRETOISE DISTANZIALE
27*	*8802795*	16	**2**	GEAR	ENGRENAGE INGRANAGGIO
28*	*8701781*	16	**2**	SCREW	VIS VITE
29*	376331X1	16 1/4"–20 X 1–1/4	**2**	SCREW UNC	VIS UNC VITE UNC
30*	355617X1	16 1/4"	**2**	WASHER	RONDELLE RONDELLA

ABSTANDSTUECK
PIEZA DISTANCIA
ZAHNRAD
ENGRANAJE
SCHRAUBE
TORNILLO
SCHRAUBE UNC
TORNILLO UNC
UNTERLEGSCHEIBE
ARANDELA

Knotter
Noueur
Binder
Legatore
Anudadora

50-15

Tension Adjusting – From H.M 74236
Reglage De Tension – A Partir Du H.M 74236
Spannungregler – Ab H.M 74236
Regitro Della Tensione – Dalla H.M 74236
Reguladora De La Tension – Despues El H.M 74236

5-BA06-037-A

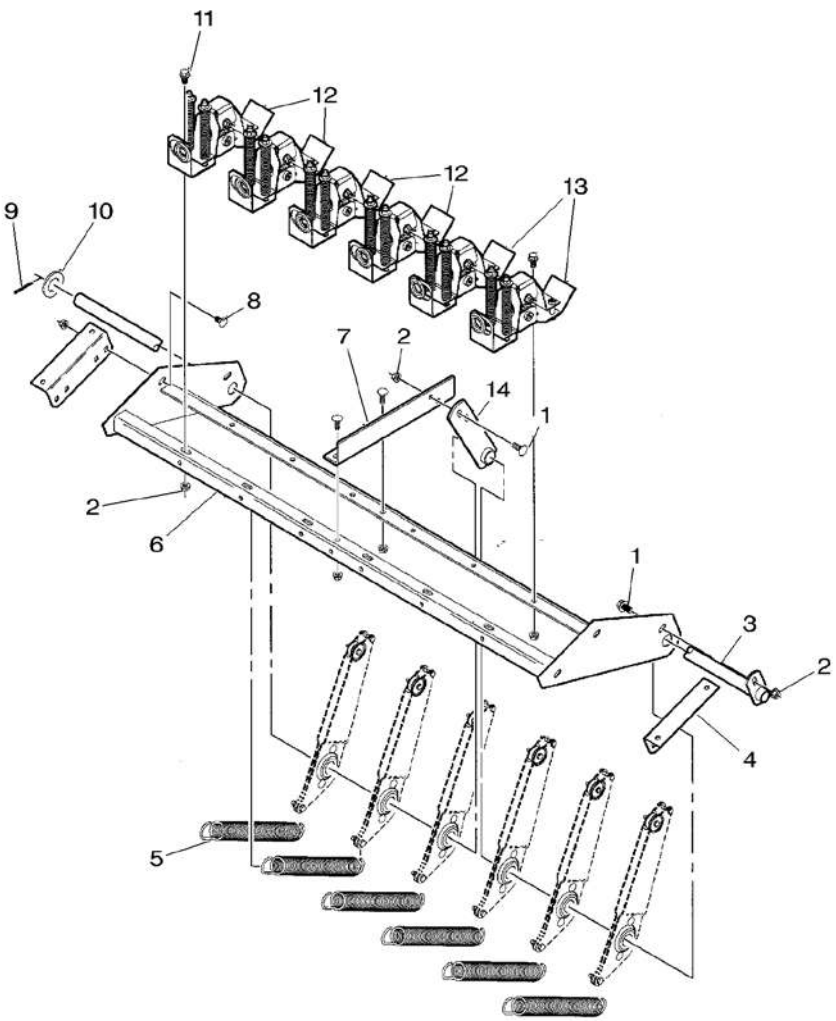

1*	*70922786*	3/8"–16 X 1	**5**	BOLT	BOULON BULLONE MASCH.SCHRAUBE PERNO
2*	***700711238***	3/8"–16	**21**	NUT	ECROU DADO MUTTER TUERCA
3*	700137469P		**1**	ROD	TRINGLE ASTA STANGE VARILLA
4*	700140189P		**2**	SUPPORT	SUPPORT SUPPORTO LAGERUNG DISPOS.DE SOSTEN
5*	***700714986***		**6**	SPRING	RESSORT MOLLA FEDER MUELLE
6*	700140282P		**1**	SUPPORT	SUPPORT SUPPORTO LAGERUNG DISPOS.DE SOSTEN
7*	6848832P		**1**	ANGLE	EQUERRE ANGOLO WINKEL ANGULO
8*	70922784	3/8"–16 X 3/4	**4**	BOLT	BOULON BULLONE MASCH.SCHRAUBE PERNO
9*	62190	5/32" X 1–1/2	**1**	PIN	GOUPILLE PERNO BOLZEN PASADOR
10*	705574	1"	**1**	FLAT WASHERS	RONDELLES PLATES RONDELLE PIANE UNTERLEGSCHEIBEN ARANDELAS PLANAS
11*	7703432	3/8"–16 X 3/4	**12**	SCREW	VIS VITE SCHRAUBE TORNILLO
12*	700139336P		**4**	TENSIONER	TENDEUR TENDITORE SPANNER TENSOR
13*	700139338P		**2**	TENSIONER	TENDEUR TENDITORE SPANNER TENSOR
14*	700137477P		**1**	STRAP	PATTE CORREGGIA LASCHE FAJA

Knotter
Noueur
Binder
Legatore
Anudadora

50-20

Tension Adjusting – From H.M 74236
Reglage De Tension – A Partir Du H.M 74236
Spannungregler – Ab H.M 74236
Regitro Della Tensione – Dalla H.M 74236
Reguladora De La Tension – Despues El H.M 74236

5-BA06-038-B

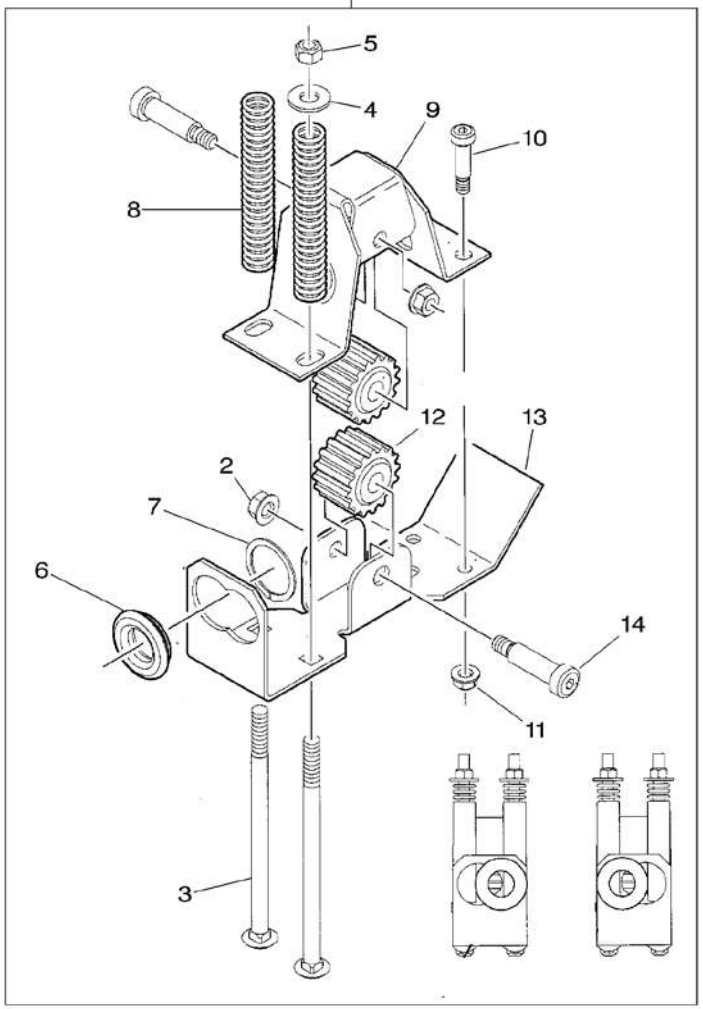

1*	700139336P	▶	1	TENSIONER	TENDEUR TENDITORE SPANNER TENSOR
1*	700139338P	◀	1	TENSIONER	TENDEUR TENDITORE SPANNER TENSOR
2*	*704247*	1 3/8"–16	2	LOCKNUT	ECROU BLOCAGE AUTOBLOCCANTE FLACHMUTTER CONTRATUERCA
3*	7770589	1 3/8"–16 X 6–1/2	2	BOLT	BOULON BULLONE MASCH.SCHRAUBE PERNO
4*	355619X1	1 3/8"	2	WASHER	RONDELLE RONDELLA UNTERLEGSCHEIBE ARANDELA
5*	7704141	1 3/8"–16	2	LOCKNUT	ECROU BLOCAGE AUTOBLOCCANTE FLACHMUTTER CONTRATUERCA
6*	*700139255*	1	1	GUARD	GARDE PROTEZIONE SCHUTZVORR DEFENSA
7*	*70927744*	1	1	RING	ANNEAU ANELLO RING ARO
8*	*858027*	1	2	SPRING	RESSORT MOLLA FEDER MUELLE
9*	700163380P	1	1	PLATE	PLAQUE PIASTRA PLATTE PLATO
10*	72835	1 3/8" X 1 X 5/16	2	BOLT	BOULON BULLONE MASCH.SCHRAUBE PERNO
11*	Y704726	1 5/16"–18	2	TOP LOCKNUT	ECROU FREIN DADO DI TESTA SELBSTS.MUTTER CONTRATUERCA SUP
12*	*8802795*	1	2	GEAR	ENGRENAGE INGRANAGGIO ZAHNRAD ENGRANAJE
13*	700139339P	1	1	PLATE	PLAQUE PIASTRA PLATTE PLATO
14*	*8701781*	1	2	SCREW	VIS VITE SCHRAUBE TORNILLO

Knotter
Noueur
Binder
Legatore
Anudadora

50-25

5-BA06-014-A

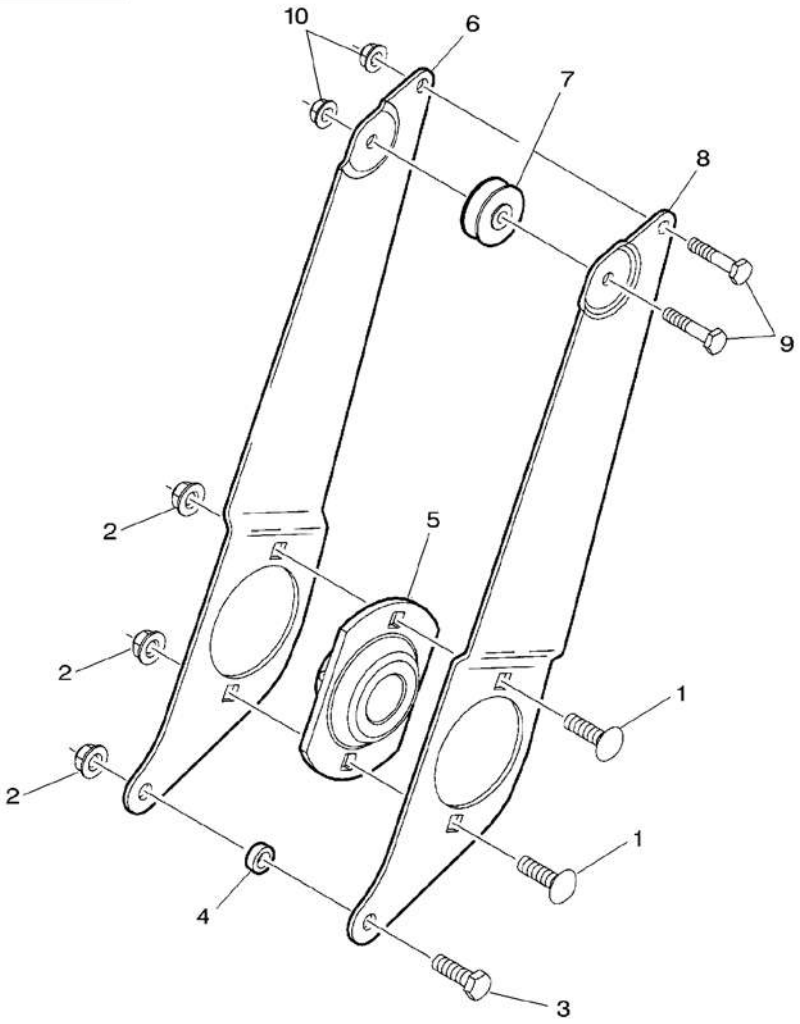

1 *	364534X1	5/16"-18 X 1	2	BOLT	BOULON BULLONE PERNO
2 *	Y704726	5/16"-18	3	TOP LOCKNUT	ECROU FREIN DADO DI TESTA SELBSTS.MUTTER CONTRATUERCA SUP
3 *	353679X1	5/16"-18 X 1	1	BOLT UNC	BOULON UNC BULLONE UNC MASCH.SCHRB.UNC PERNO UNC
4	6514772		1	SPACER	ENTRETOISE DISTANZIALE ABSTANDSTUECK PIEZA DISTANCIA
5	***700715941***		1	BEARING	COUSSINET CUSCINETTO LAGER COJINETE
6 *	700137467P	▶	1	ARM	BRAS BRACCIO ARM BRAZO
7 *	***700722661***		1	BALL BEARING	ROULEMENT BILLES CUSCINETTO SFERE KUGELLAGER COJINETE DE BOLA
8 *	700137466P	◀	1	ARM	BRAS BRACCIO ARM BRAZO
9 *	376331X1	1/4"-20 X 1-1/4	2	SCREW UNC	VIS UNC VITE UNC SCHRAUBE UNC TORNILLO UNC
10 *	1703354	1/4"-20	2	LOCKNUT	ECROU BLOCAGE AUTOBLOCCANTE FLACHMUTTER CONTRATUERCA

Knotter
Noueur
Binder
Legatore
Anudadora

50-30

5-BA06-015-A

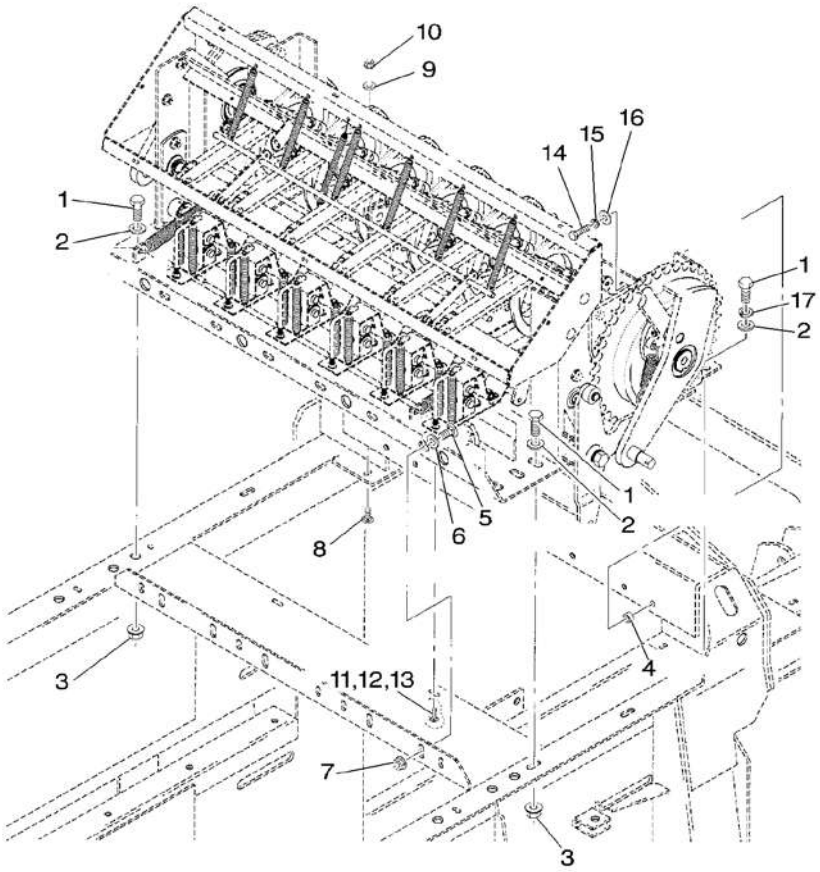

1 *	354708X1	3/4"–10 X 1–3/4	**10**	BOLT UNC	BOULON UNC BULLONE UNC PERNO UNC
2 *	Y705566	3/4"	**10**	WASHER	RONDELLE RONDELLA UNTERLEGSCHEIBE ARANDELA
3 *	700703923	3/4"–10	**8**	TOP LOCKNUT	ECROU FREIN DADO DI TESTA SELBSTS.MUTTER CONTRATUERCA SUP
4 *	6591614P		**7**	SPACER	ENTRETOISE DISTANZIALE ABSTANDSTUECK PIEZA DISTANCIA
5 *	363503X1	5/8"–11 X 1–1/2	**6**	BOLT UNC	BOULON UNC BULLONE UNC MASCH.SCHRB.UNC PERNO UNC
6 *	Y705582	5/8"	**6**	WASHER	RONDELLE RONDELLA UNTERLEGSCHEIBE ARANDELA
7 *	7704919	5/8"–11	**6**	NUT	ECROU DADO MUTTER TUERCA
8 *	364224X1	1/2"–13 X 1–1/4	**2**	BOLT UNC	BOULON UNC BULLONE UNC MASCH.SCHRB.UNC PERNO UNC
9 *	***705541***	1/2"	**2**	FLAT WASHERS	RONDELLES PLATES RONDELLE PIANE UNTERLEGSCHEIBEN ARANDELAS PLANAS
10 *	700714586	1/2"–13	**2**	NUT	ECROU DADO MUTTER TUERCA
11 *	70923220	3/8"–16 X 1–1/4	**2**	BOLT	BOULON BULLONE MASCH.SCHRAUBE PERNO
12 *	*Y705533*	3/8"	**2**	WASHER	RONDELLE RONDELLA UNTERLEGSCHEIBE ARANDELA
13 *	***700711238***	3/8"–16	**2**	NUT	ECROU DADO MUTTER TUERCA
14 *	353725X1	1/2"–13 X 1–3/4	**7**	BOLT UNC	BOULON UNC BULLONE UNC MASCH.SCHRB.UNC PERNO UNC
15 *	353439X1	1/2"	**7**	LOCK WASHER	RONDELLE FREIN ROSETTA ELASTICA FEDERRING ARANDELA GROWER
16 *	355621X1	1/2	**7**	WASHER	RONDELLE RONDELLA UNTERLEGSCHEIBE ARANDELA
17 *	353440X1	3/4"	**2**	LOCK WASHER	RONDELLE FREIN ROSETTA ELASTICA FEDERRING ARANDELA GROWER

Frame
Chassis
Rahmen
Telaio
Bastidor

50-35

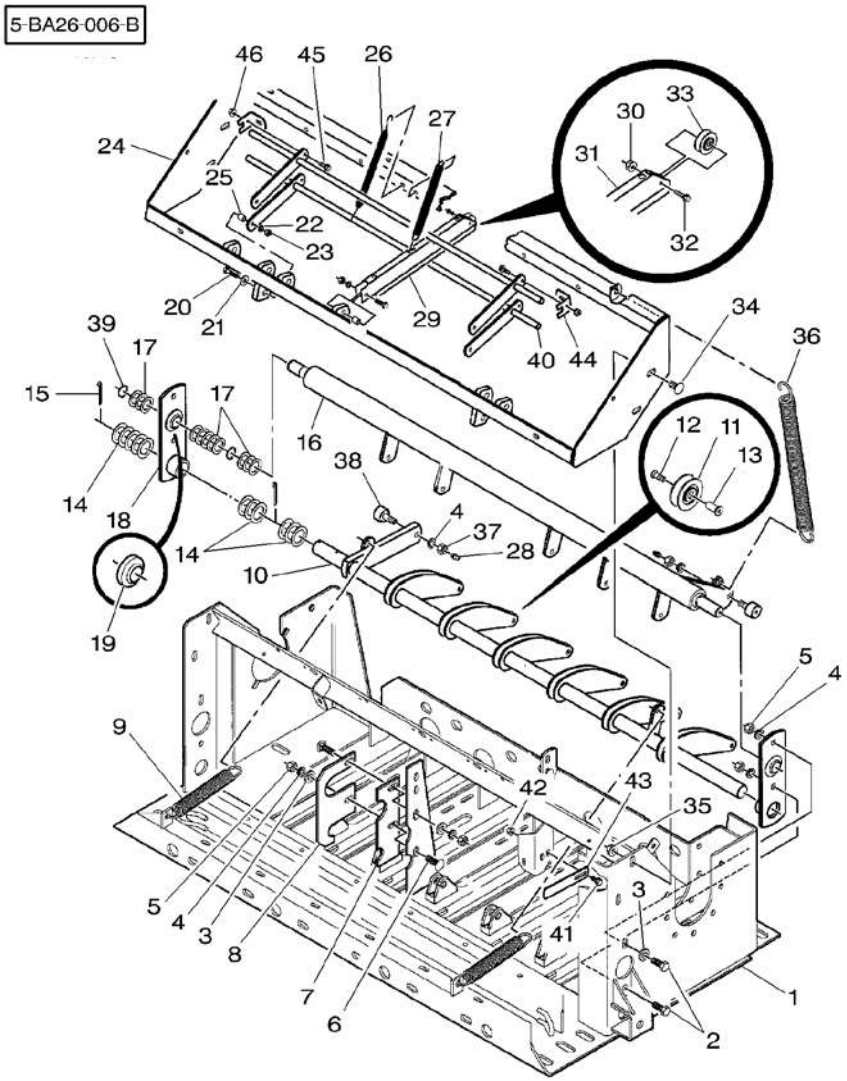

1 ✱ 700113311	➡ HL 74216	1	FRAME	BATI TELAIO	RAHMEN BASTIDOR
1 ✱ 700154495	➡ HL 74217	1	FRAME	BATI TELAIO	RAHMEN BASTIDOR
2 ✱ 354276X1	1/2"-13 X 1-1/4	4	BOLT UNC	BOULON UNC BULLONE UNC	MASCH.SCHRB.UNC PERNO UNC
3 ✱ *705541*	1/2"	4	FLAT WASHERS	RONDELLES PLATES RONDELLE PIANE	UNTERLEGSCHEIBEN ARANDELAS PLANAS
4 ✱ 353439X1	1/2"	8	LOCK WASHER	RONDELLE FREIN ROSETTA ELASTICA	FEDERRING ARANDELA GROWER
5 ✱ 704031	1/2"-13	6	NUT	ECROU DADO	MUTTER TUERCA
6 ✱ 364246X1	1/2"-13 X 1-1/2	2	BOLT	BOULON BULLONE	MASCH.SCHRAUBE PERNO
7 ✱ 6845713P		1	PLATE	PLAQUE PIASTRA	PLATTE PLATO
8 ✱ 6845721P		1	BRACKET	SUPPORT FIXATION SUPPORTO FISSAGG	HALTEARM SOPORTE
9 *858308*		2	SPRING	RESSORT MOLLA	FEDER MUELLE
10 ✱ 700113336P		1	ARM	BRAS BRACCIO	ARM BRAZO
11 ✱ *700722661*	10	6	BALL BEARING	ROULEMENT BILLES CUSCINETTO SFERE	KUGELLAGER COJINETE DE BOLA
12 ✱ *8701476*	10 No 10-32 X 1/2	6	BOLT	BOULON BULLONE	MASCH.SCHRAUBE PERNO
13 ✱ *866566*	10 No 10-32	6	FASTENER	AGRAFE LACCIO	HALTEKLAMMER CIERRE
14 Y740068	1"-1/4 X 18	11	SHIM	CALE REGLAGE SPESSORE	EINSTELLBLECH CALCE
15 ✱ 354072X1	5/32" X 1-3/4	2	PIN	GOUPILLE PERNO	BOLZEN PASADOR
16 ✱ 700113330P		1	SHAFT	ARBRE ALBERO	WELLE ARBOL
17 ✱ Y52209	1" X 18	11	BUSH	BAGUE BOCCOLA	BUCHSE CASQUILLO
18 ✱ 700113342P		2	SUPPORT	SUPPORT SUPPORTO	LAGERUNG DISPOS.DE SOSTEN
19 ✱ 700706269	18	1	BALL JOINT	ROTULE SPHERIQUE GIUNTO SFERICO	KUGELGELENK UNION ROTULA
20 ✱ 353681X1	5/16"-18 X1-1/4	10	BOLT UNC	BOULON UNC BULLONE UNC	MASCH.SCHRB.UNC PERNO UNC
21 ✱ 355618X1	5/16"	4	WASHER	RONDELLE RONDELLA	UNTERLEGSCHEIBE ARANDELA
22 ✱ 339374X1	5/16"	10	LOCK WASHER	RONDELLE FREIN ROSETTA ELASTICA	FEDERRING ARANDELA GROWER
23 ✱ Y704015	5/16"-18	10	NUT	ECROU DADO	MUTTER TUERCA
24 ✱ 6844971		1	BRACKET	SUPPORT FIXATION SUPPORTO FISSAGG	HALTEARM SOPORTE
25 *6523799*		10	BUSH	BAGUE BOCCOLA	BUCHSE CASQUILLO

Frame
Chassis
Rahmen
Telaio
Bastidor

50-35

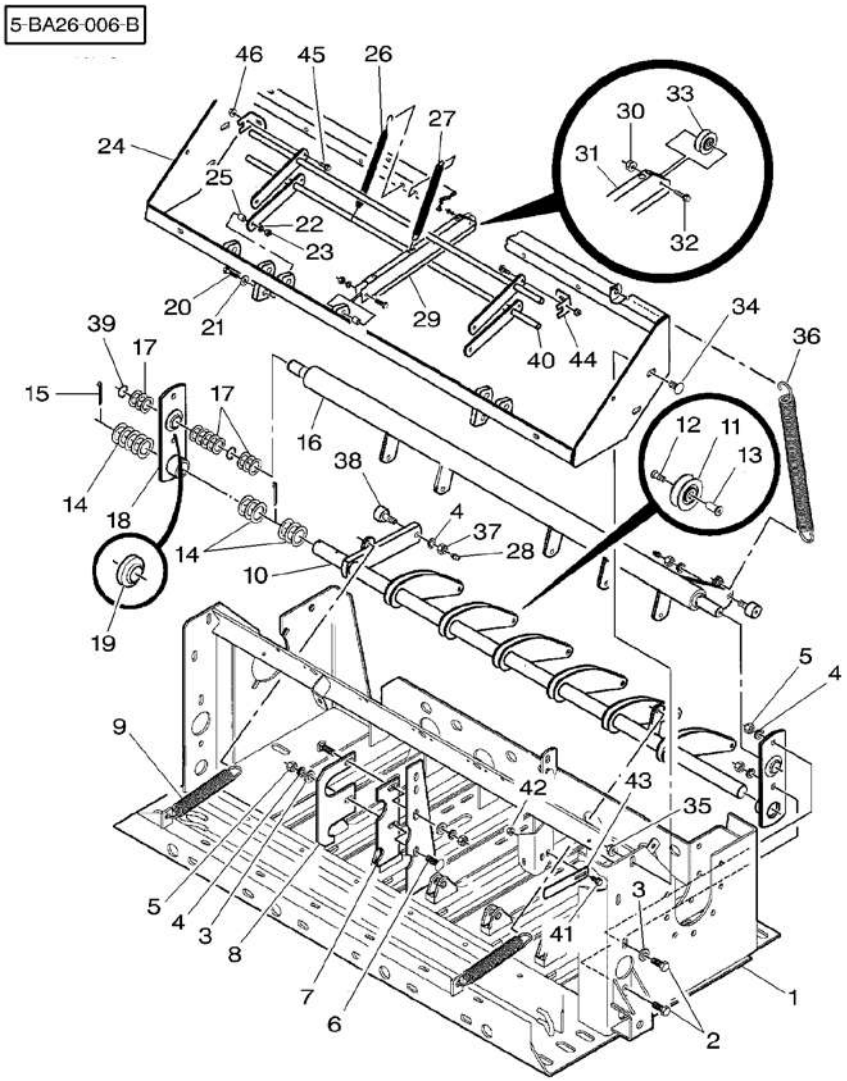

26	***700712484***		**1**	TENSION SPRING	RESSORT TRACTION MOLLA TENDITRICE	ZUGFEDER RESORTE TENSOR
27	***758482***		**6**	SPRING	RESSORT MOLLA	FEDER MUELLE
28*	70930680	3/16"	**2**	PIN	GOUPILLE PERNO	BOLZEN PASADOR
29*	700150609P		**6**	ARM	BRAS BRACCIO	ARM BRAZO
30*	1703354	29 1/4"-20	**1**	LOCKNUT	ECROU BLOCAGE AUTOBLOCCANTE	FLACHMUTTER CONTRATUERCA
31*	700150610P	29	**1**	ARM	BRAS BRACCIO	ARM BRAZO
32*	7883283	29 1/4"-20 X 1	**1**	SCREW	VIS VITE	SCHRAUBE TORNILLO
33*	***700722661***	29	**1**	BALL BEARING	ROULEMENT BILLES CUSCINETTO SFERE	KUGELLAGER COJINETE DE BOLA
34*	70928367	1/2"-13 X 1	**4**	BOLT	BOULON BULLONE	MASCH.SCHRAUBE PERNO
35*	704254	1/2"-13	**4**	LOCKNUT	ECROU BLOCAGE AUTOBLOCCANTE	FLACHMUTTER CONTRATUERCA
36	***700714985***		**1**	SPRING	RESSORT MOLLA	FEDER MUELLE
37*	353437X1	1/2"-20	**2**	NUT UNF	ECROU UNF DADO UNF	MUTTER UNF TUERCA UNF
38*	***8050866***		**2**	BEARING	COUSSINET CUSCINETTO	LAGER COJINETE
39	***738633***		**2**	RING	ANNEAU ANELLO	RING ARO
40*	700113346B		**2**	ROD	TRINGLE ASTA	STANGE VARILLA
41*	7883325	5/16"-18 X 3/4	**2**	SCREW	VIS VITE	SCHRAUBE TORNILLO
42*	Y704726	5/16"-18	**2**	TOP LOCKNUT	ECROU FREIN DADO DI TESTA	SELBSTS.MUTTER CONTRATUERCA SUP
43*	700153514P		**1**	STRAP	PATTE CORREGGIA	LASCHE FAJA
44*	700153509		**2**	SUPPORT	SUPPORT SUPPORTO	LAGERUNG DISPOS.DE SOSTEN
45*	7883275	1/4"-20 X 3/4	**2**	BOLT	BOULON BULLONE	MASCH.SCHRAUBE PERNO
46*	1703354	1/4"-20	**2**	LOCKNUT	ECROU BLOCAGE AUTOBLOCCANTE	FLACHMUTTER CONTRATUERCA

Knotter Control Commande Des Noueurs Binderantrieb Commando Legatore Mando Del Anudadora	Cam Assembly Ensemble Came Nocken Kpl Cammacomplet Levacjt	50-40

5-BA38-006-B

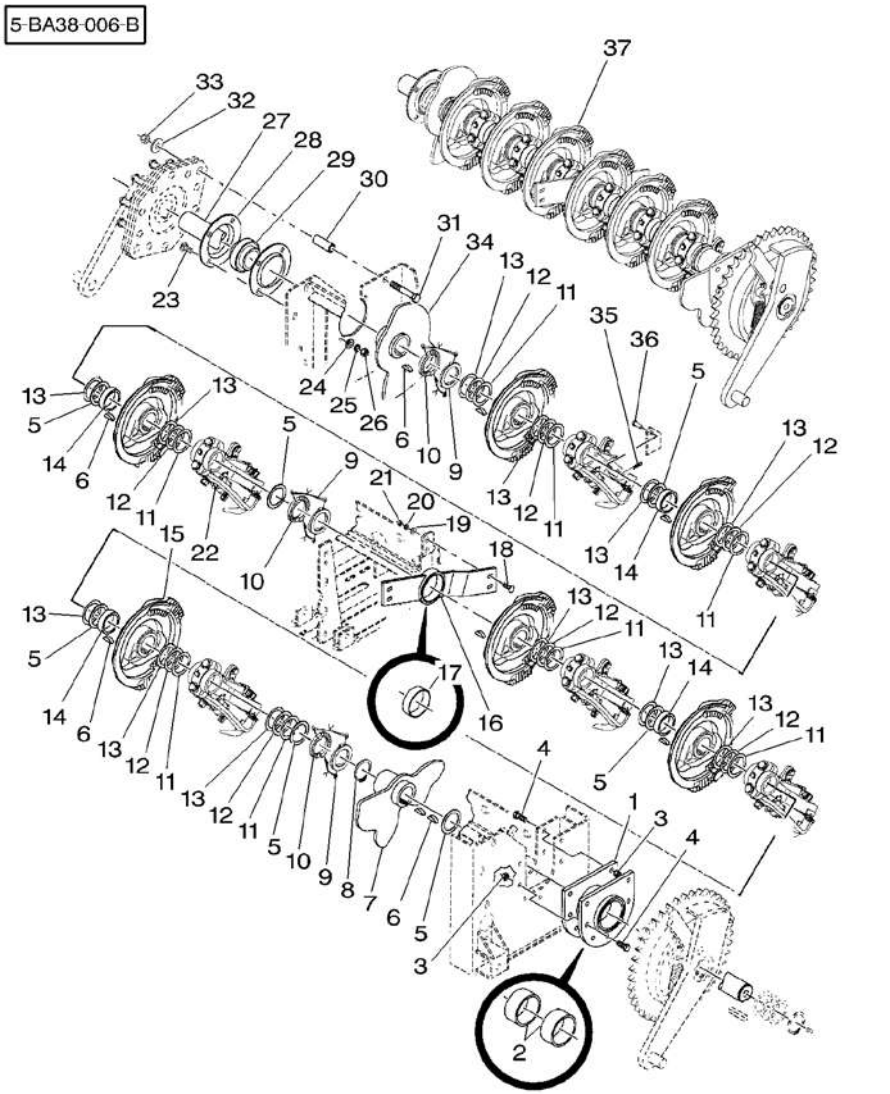

1 *	6844773P		1	BRACKET	SUPPORT FIXATION SUPPORTO FISSAGG	HALTEARM SOPORTE
2	6565014	1	2	BEARING	COUSSINET CUSCINETTO	LAGER COJINETE
3 *	Y704288	1/2"-13	13	NUT	ECROU DADO	MUTTER TUERCA
4 *	354276X1	1/2"-13 X 1-1/4	13	BOLT UNC	BOULON UNC BULLONE UNC	MASCH.SCHRB.UNC PERNO UNC
5	***6523500***		7	BUSH	BAGUE BOCCOLA	BUCHSE CASQUILLO
6 *	70910851	3/8" X 1-1/2	9	KEY	CLAVETTE CHIAVETTA	PASSKEIL CLAVE
7 *	700113328P		1	CAM	CAME CAMMA	NOCKEN LEVA
8 *	***355919X1***		1	SNAPRING	SEGMENT ARRET ANELLO SIEGER	SPRENGRING ANILLA RETENCION
9 *	8701484	No 10 X 1/2	12	SCREW	VIS VITE	SCHRAUBE TORNILLO
10	6591457		6	SHIM	CALE REGLAGE SPESSORE	EINSTELLBLECH CALCE
11	Y6613665	⧗ .005	16	SHIM	CALE REGLAGE SPESSORE	EINSTELLBLECH CALCE
12	6523534		16	SHIM	CALE REGLAGE SPESSORE	EINSTELLBLECH CALCE
13	6523542	⧗ .031	18	SHIM	CALE REGLAGE SPESSORE	EINSTELLBLECH CALCE
14 *	6591549P		16	SPACER	ENTRETOISE DISTANZIALE	ABSTANDSTUECK PIEZA DISTANCIA
15 *	700138856P		6	GEAR	ENGRENAGE INGRANAGGIO	ZAHNRAD ENGRANAJE
16 *	6591465P		1	BRACKET	SUPPORT FIXATION SUPPORTO FISSAGG	HALTEARM SOPORTE
17	6591564	16	1	BUSH	BAGUE BOCCOLA	BUCHSE CASQUILLO
18 *	70923220	3/8"-16 X 1-1/4	4	BOLT	BOULON BULLONE	MASCH.SCHRAUBE PERNO
19 *	*Y705533*	3/8"	4	WASHER	RONDELLE RONDELLA	UNTERLEGSCHEIBE ARANDELA
20 *	353434X1	3/8"	4	LOCK WASHER	RONDELLE FREIN ROSETTA ELASTICA	FEDERRING ARANDELA GROWER
21 *	355566X1	3/8"-16	4	NUT UNC	ECROU UNC DADO UNC	MUTTER UNC TUERCA UNC
22 *	700113321B	👁 50-45 No	6	HEAD	TETE TESTA	KOPF CULATA
23 *	364224X1	1/2"-13 X 1-1/4	4	BOLT UNC	BOULON UNC BULLONE UNC	MASCH.SCHRB.UNC PERNO UNC
24 *	***705541***	1/2"	4	FLAT WASHERS	RONDELLES PLATES RONDELLE PIANE	UNTERLEGSCHEIBEN ARANDELAS PLANAS
25 *	353439X1	1/2"	4	LOCK WASHER	RONDELLE FREIN ROSETTA ELASTICA	FEDERRING ARANDELA GROWER
26 *	704031	1/2"-13	4	NUT	ECROU DADO	MUTTER TUERCA

Knotter Control Commande Des Noueurs Binderantrieb Commando Legatore Mando Del Anudadora	Cam Assembly Ensemble Came Nocken Kpl Cammacomplet Levacjt	50-40

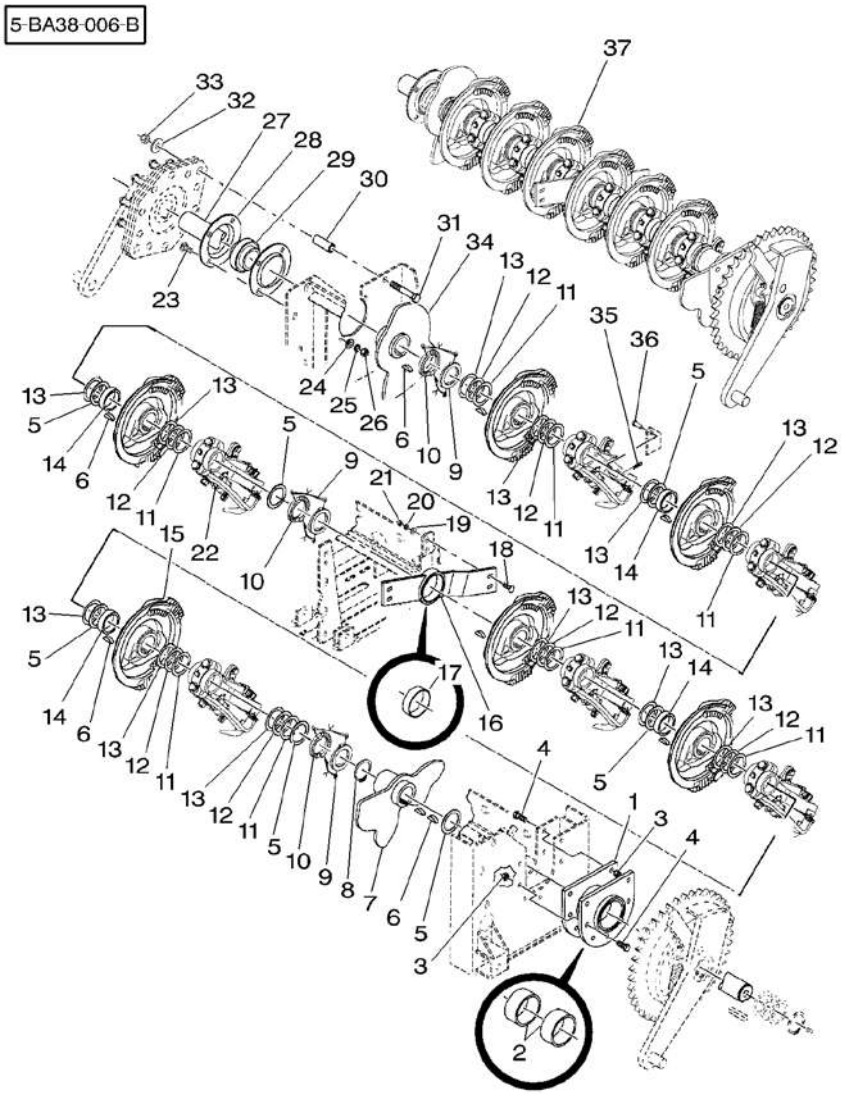

27	6591366		1	SHAFT	ARBRE ALBERO	WELLE ARBOL
28	*714360*		2	FLANGE	FLASQUE FLANGIA	FLANSCH PLETINA
29	*8050478*		1	BEARING	COUSSINET CUSCINETTO	LAGER COJINETE
30*	235663		2	BUSH	BAGUE BOCCOLA	BUCHSE CASQUILLO
31*	**354294X1**	5/8"-11 X 3-3/4	2	BOLT UNC	BOULON UNC BULLONE UNC	MASCH.SCHRB.UNC PERNO UNC
32*	355623X1	5/8"	2	WASHER	RONDELLE RONDELLA	UNTERLEGSCHEIBE ARANDELA
33*	7774482	5/8"-11	2	LOCKNUT	ECROU BLOCAGE AUTOBLOCCANTE	FLACHMUTTER CONTRATUERCA
34*	700113325P		1	CAM	CAME CAMMA	NOCKEN LEVA
35*	98-2107		1	PIN	GOUPILLE PERNO	BOLZEN PASADOR
36*	63586	3/8" X 1-1/8	1	CLEVIS PIN	AXE PERNO D'ATTACCO	SPLINTBOLZEN BULON CILINDRICO
37	700137481		1	KNOTTER	NOUEUR LEGATORE	BINDER ANUDADOR

Knotter
Noueur
Binder
Legatore
Anudadora

50-45

5-BA06-006-C

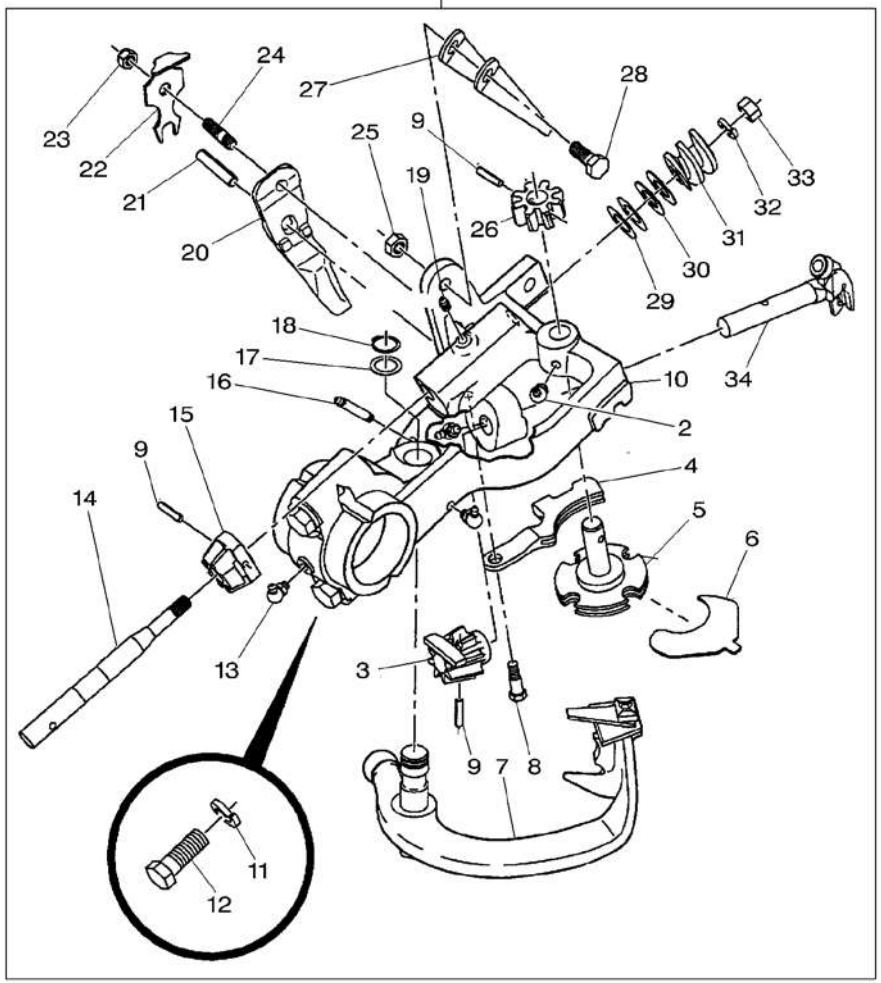

1 ✱ 700113321B		1	HEAD	TETE TESTA	KOPF CULATA
2 ✱ 77057	1 1/4"–28 X 90	1	GREASER	GRAISSEUR INGRASSATORE	FETTNIPPEL ENGRASADOR
3 ✱ *7894389*	1	1	BEVEL GEAR	COURONNE CONIQUE INGRANAGGIO CON.	KEGELRAD ENGRANAJE CONICO
4 ✱ *8045148*	1	1	HOLDER	PIECE SUPPORT SUPPORTO DI BASE	HALTER SUJETADOR
5 ✱ *1712868*	1	1	DISC	DISQUE DISCO	SCHEIBE DISCO
6 ✱ *6523807*	1	1	PLATE	PLAQUE PIASTRA	PLATTE PLATO
7 ✱ *700138858*	1	1	STRIPPER	DEBOURREUR SPOGLIATORE	ABSTREIFER DESBARBADOR
8 ✱ 702400022	1 5/16"–18	1	SCREW	VIS VITE	SCHRAUBE TORNILLO
9 ✱ *70922598*	1 3/16" X 7/8	3	PIN	GOUPILLE PERNO	BOLZEN PASADOR
10 ✱ 700138857P	1	1	FRAME	BATI TELAIO	RAHMEN BASTIDOR
11 ✱ 353439X1	10 1/2"	2	LOCK WASHER	RONDELLE FREIN ROSETTA ELASTICA	FEDERRING ARANDELA GROWER
12 ✱ 354280X1	10 1/2"–13 X 2	2	BOLT UNC	BOULON UNC BULLONE UNC	MASCH.SCHRB.UNC PERNO UNC
13 ✱ 77057	1 1/4"–28 X 90	3	GREASER	GRAISSEUR INGRASSATORE	FETTNIPPEL ENGRASADOR
14 ✱ *6553267*	1	1	SHAFT	ARBRE ALBERO	WELLE ARBOL
15 ✱ *702700040*	1	1	PINION	PIGNON PIGNONE	RITZEL PINON
16 ✱ 70921744	1 1/4"–28 X 1–5/8	1	FITTING	MONTAGE RACCORDO.	ANSCHLVERSCHRBG. ACCESORIO.
17 ✱ *7852742*	1 25/32"	1	WASHER	RONDELLE RONDELLA	UNTERLEGSCHEIBE ARANDELA
18 ✱ *70927732*	1	1	SNAPRING	SEGMENT ARRET ANELLO SIEGER	SPRENGRING ANILLA RETENCION
19 ✱ *70923219*	1 1/4"–28	1	GREASER	GRAISSEUR INGRASSATORE	FETTNIPPEL ENGRASADOR
20 ✱ *700113323P*	1	1	CAM	CAME CAMMA	NOCKEN LEVA
21 ✱ *70922135*	1 5/16" X 1	1	PIN	GOUPILLE PERNO	BOLZEN PASADOR
22 ✱ *7895733*	1	1	TENSIONER	TENDEUR TENDITORE	SPANNER TENSOR
23 ✱ *704486*	1 5/16"–18	1	NUT	ECROU DADO	MUTTER TUERCA
24 ✱ *6523229*	1	1	STUD	GOUJON PRIGIONIERO	STEHBOLZEN ESPARRAGO
25 ✱ *70917421*	1 3/8"–16	1	NUT	ECROU DADO	MUTTER TUERCA
26 ✱ *7894454*	1	1	GEAR	ENGRENAGE INGRANAGGIO	ZAHNRAD ENGRANAJE

Knotter
Noueur
Binder
Legatore
Anudadora

50-45

5-BA06-006-C

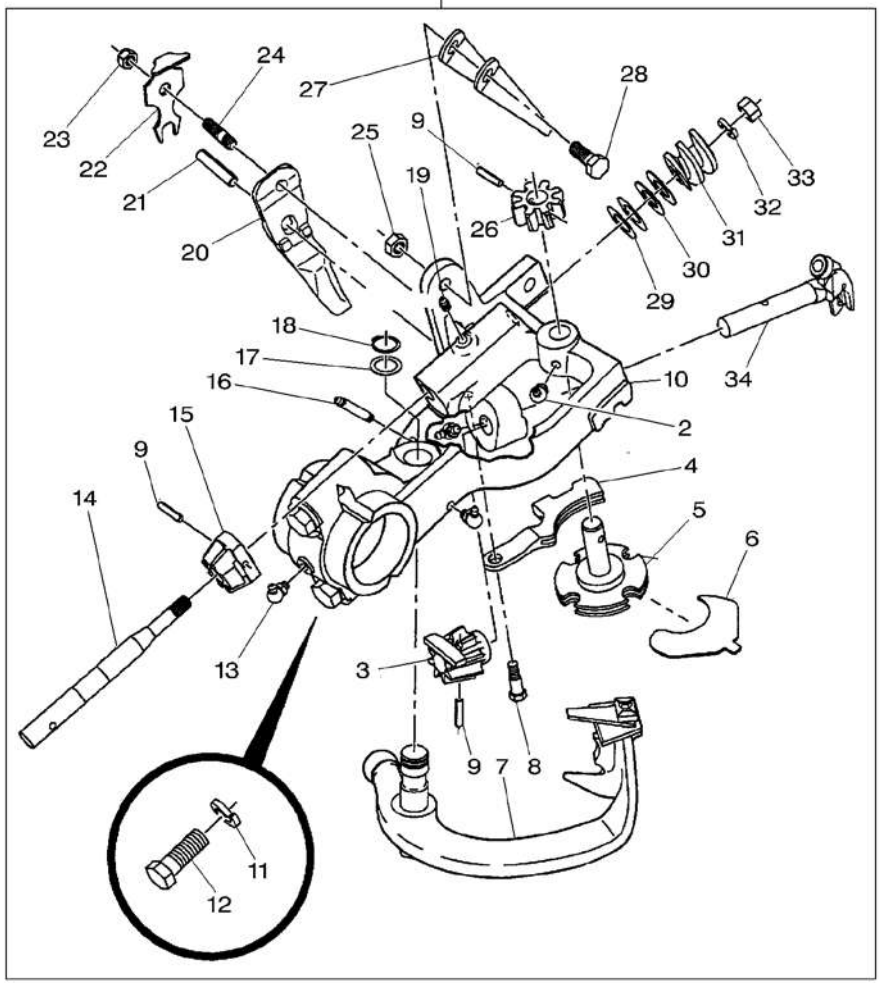

27 * *6553259P*	1		**2** SPRING	RESSORT MOLLA	FEDER MUELLE
28 * 353691X1	1	3/8"–16 X 1	**1** BOLT UNC	BOULON UNC BULLONE UNC	MASCH.SCHRB.UNC PERNO UNC
29 * *6553275*	1		**2** SHIM	CALE REGLAGE SPESSORE	EINSTELLBLECH CALCE
30 * *7852163*	1	5/8"	**2** WASHER	RONDELLE RONDELLA	UNTERLEGSCHEIBE ARANDELA
31 * *7894413*	1		**1** WORM GEAR	PIGNON HELICOIDA INGRANAGGIO ELIC	SCHNECKENRAD ENGRANAJE SINFIN
32 * 353434X1	1	3/8"	**1** LOCK WASHER	RONDELLE FREIN ROSETTA ELASTICA	FEDERRING ARANDELA GROWER
33 * 353431X1	1	3/8"–24	**1** NUT UNF	ECROU UNF DADO UNF	MUTTER UNF TUERCA UNF
34 * *700700968*	1		**1** KNOTTER	NOUEUR LEGATORE	BINDER ANUDADOR

Knotter
Noueur
Binder
Legatore
Anudadora

50-50

5-BA06-002-B

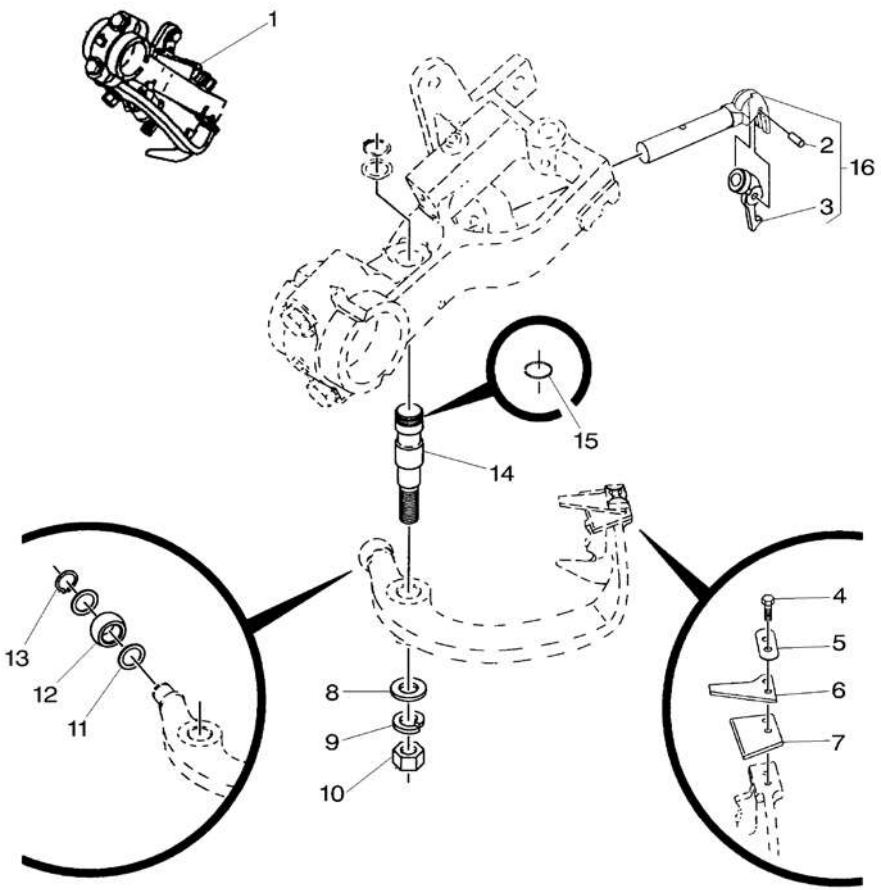

1*	700113321B		1	HEAD	TETE TESTA	KOPF CULATA
2*	*863738*	16 3/16" X 1/2	1	DOWEL	PLOT SPINA	ZYLINDERSTIFT CENTRAJE
3	*1712835*	16	1	HOOK	CROCHET GANCIO	HAKEN GANCHO
4*	8701625	1 No 10-32 X 1/2	2	SCREW	VIS VITE	SCHRAUBE TORNILLO
5*	*6613624P*	1	1	LOCKING PLATE	PLAQUE BLOCAGE PIASTRA DI FERMO	SICH.BLECH PLACA DE BLOCAJE
6	*700718710*	1 ⧗ 1,5 MM	1	KNIFE	COUTEAU COLTELLO	MESSER CUCHILLA
7	*700102136*	1	1	SUPPORT	SUPPORT SUPPORTO	LAGERUNG DISPOS.DE SOSTEN
8*	*6591572*	1	1	WASHER	RONDELLE RONDELLA	UNTERLEGSCHEIBE ARANDELA
9*	353439X1	1 1/2"	1	LOCK WASHER	RONDELLE FREIN ROSETTA ELASTICA	FEDERRING ARANDELA GROWER
10*	353437X1	1 1/2"-20	1	NUT UNF	ECROU UNF DADO UNF	MUTTER UNF TUERCA UNF
11*	*7852593*	1 9/16" X 20	2	WASHER	RONDELLE RONDELLA	UNTERLEGSCHEIBE ARANDELA
12	*700122799*	1	1	ROLLER	GALET RULLO	ROLLE RODILLO
13	*70927728*	1	1	RING	ANNEAU ANELLO	RING ARO
14	*6591580*	1	1	SHAFT	ARBRE ALBERO	WELLE ARBOL
15	*70923561*	14	1	O RING	JOINT TORIQUE ANELLO OR	O-RING JUNTA TORICA
16	*700700968*	1	1	KNOTTER	NOUEUR LEGATORE	BINDER ANUDADOR

Hay Check
Reteneur Escamotable
Pressgut–Rueckhalter
Controllo Fieno
Control

50-55

5-BA30-006-B

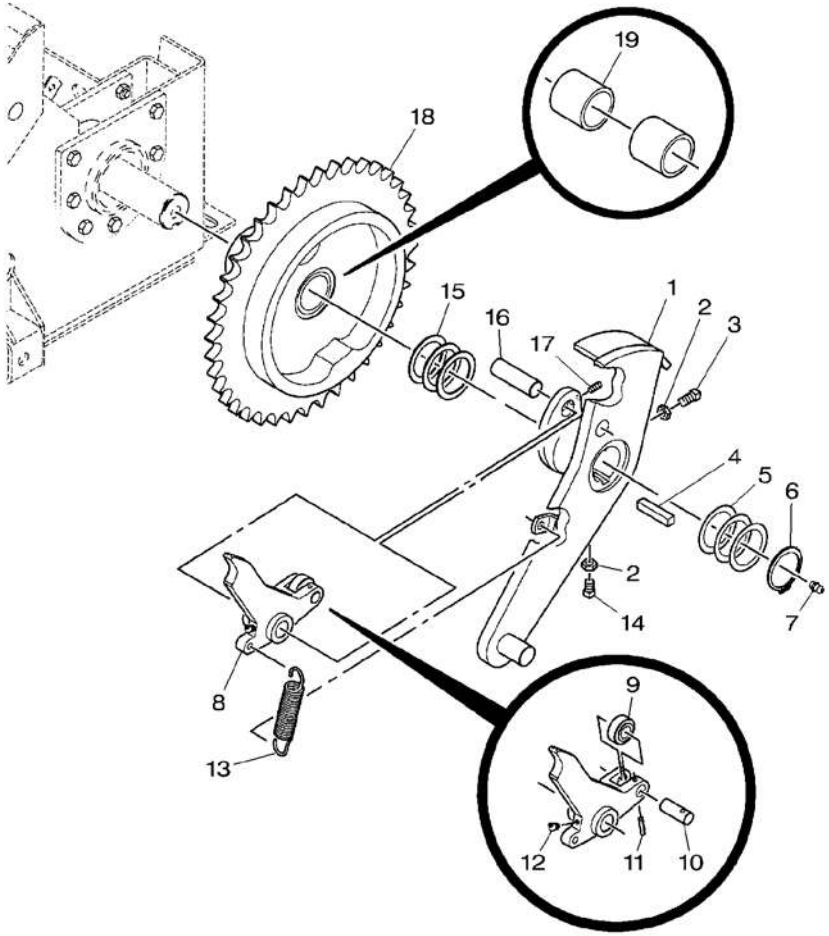

1	✱700137474P	➡ HN 74258	1	ARM	BRAS BRACCIO	ARM BRAZO
1	✱700139598P	➡ HN 74259	1	ARM	BRAS BRACCIO	ARM BRAZO
2	✱***700710414***	1/2"–13	2	NUT	ECROU DADO	MUTTER TUERCA
3	✱70922695	1/2"–13 X 1–1/4	1	SETSCREW	VIS DE BLOCAGE INSIEME VITI	STELLSCHRAUBE TORNILLO AJUSTE
4	✱Y61879		1	KEY	CLAVETTE CHIAVETTA	PASSKEIL CLAVE
5	6523534		3	SHIM	CALE REGLAGE SPESSORE	EINSTELLBLECH CALCE
6	✱***355919X1***		1	SNAPRING	SEGMENT ARRET ANELLO SIEGER	SPRENGRING ANILLA RETENCION
7	✱70914465	1/8"–27	1	GREASE NIPPLE	GRAISSEUR DROIT INGRASSAT.	FETT–NIPPEL ENGRASADOR
8	✱700124052P		1	ARM	BRAS BRACCIO	ARM BRAZO
9	✱***6524623P***	8	1	ROLLER	GALET RULLO	ROLLE RODILLO
10	✱6524649P	8	1	SHAFT	ARBRE ALBERO	WELLE ARBOL
11	✱763987	8 1/4" X 1–1/4	1	PIN	GOUPILLE PERNO	BOLZEN PASADOR
12	✱70925731	8 1/4"–28 X 45	1	GREASER	GRAISSEUR INGRASSATORE	FETTNIPPEL ENGRASADOR
13	***758268***		1	TENSION SPRING	RESSORT TRACTION MOLLA TENDITRICE	ZUGFEDER RESORTE TENSOR
14	✱***70923306***	1/2"–13 X 1	1	SETSCREW	VIS DE BLOCAGE INSIEME VITI	STELLSCHRAUBE TORNILLO AJUSTE
15	***6523500***		3	BUSH	BAGUE BOCCOLA	BUCHSE CASQUILLO
16	6523518		1	SHAFT	ARBRE ALBERO	WELLE ARBOL
17	✱Y708230	5/16"–18 X 3/4	1	BOLT	BOULON BULLONE	MASCH.SCHRAUBE PERNO
18	✱700137486P	40	1	SPROCKET	BARBOTIN RUOTA MOTRICE	KETTENRAD RUEDA DE CADENA
19	700122883	18	2	BEARING	COUSSINET CUSCINETTO	LAGER COJINETE

Knotter Noueur Binder Legatore Anudadora	50-60	Brakes Frein Bremse Freni Freno

5-BA06-016-A

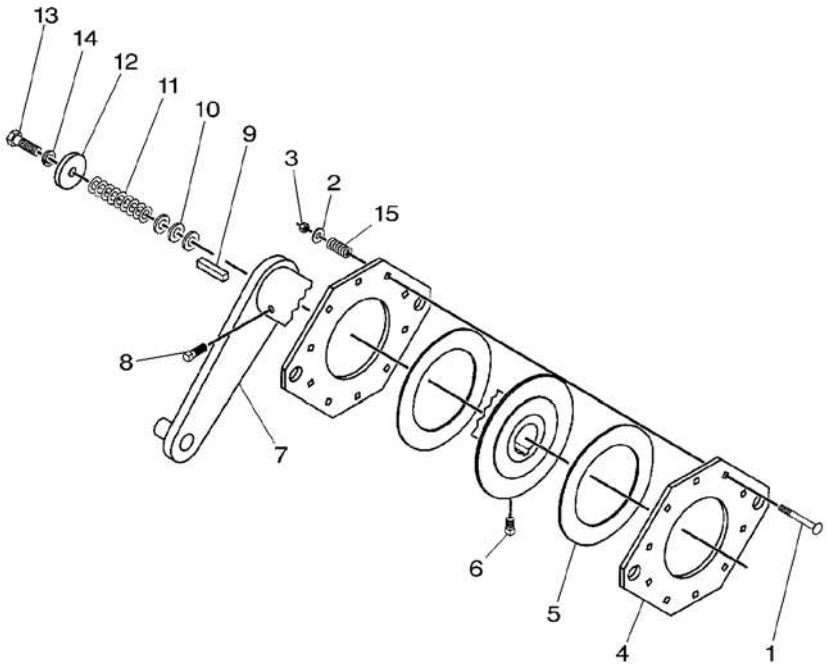

1	364970X1	3/8"–16 X 3–1/2	**10**	BOLT	BOULON BULLONE	MASCH.SCHRAUBE PERNO
2	355619X1	3/8"	**10**	WASHER	RONDELLE RONDELLA	UNTERLEGSCHEIBE ARANDELA
3	366573X1	3/8"–16	**10**	LOCKNUT	ECROU BLOCAGE AUTOBLOCCANTE	FLACHMUTTER CONTRATUERCA
4*	6818561P		**2**	PLATE	PLAQUE PIASTRA	PLATTE PLATO
5	***700710946***		**2**	CLUTCH DISC	DISQUE EMBRAYAGE DISCO FRIZIONE	KUPPLUNGSSCHEIBE DISCO DE EMBRAGU
6*	70923056	1/2"–13 X 3/4	**1**	SCREW	VIS VITE	SCHRAUBE TORNILLO
7*	700137484P	▶	**1**	ARM	BRAS BRACCIO	ARM BRAZO
8*	70922695	1/2"–13 X 1–1/4	**1**	SETSCREW	VIS DE BLOCAGE INSIEME VITI	STELLSCHRAUBE TORNILLO AJUSTE
9	Y61879		**1**	KEY	CLAVETTE CHIAVETTA	PASSKEIL CLAVE
10*	Y705582	5/8"	**3**	WASHER	RONDELLE RONDELLA	UNTERLEGSCHEIBE ARANDELA
11	***6553275***		**9**	SHIM	CALE REGLAGE SPESSORE	EINSTELLBLECH CALCE
12*	6561351P		**1**	CAP	CHAPEAU CAPPELLO	KAPPE TAPA
13*	**353728X1**	5/8"–11 X 2	**1**	BOLT UNC	BOULON UNC BULLONE UNC	MASCH.SCHRB.UNC PERNO UNC
14	353433X1	5/8"	**1**	LOCK WASHER	RONDELLE FREIN ROSETTA ELASTICA	FEDERRING ARANDELA GROWER
15	***58644***		**10**	SPRING	RESSORT MOLLA	FEDER MUELLE

Knotter Control Commande Des Noueurs Binderantrieb Commando Legatore Mando Del Anudadora	Frame Bati Rahmen Telaio Bastidor	50-65	➡ H.M 74235

5-BA37-002-B

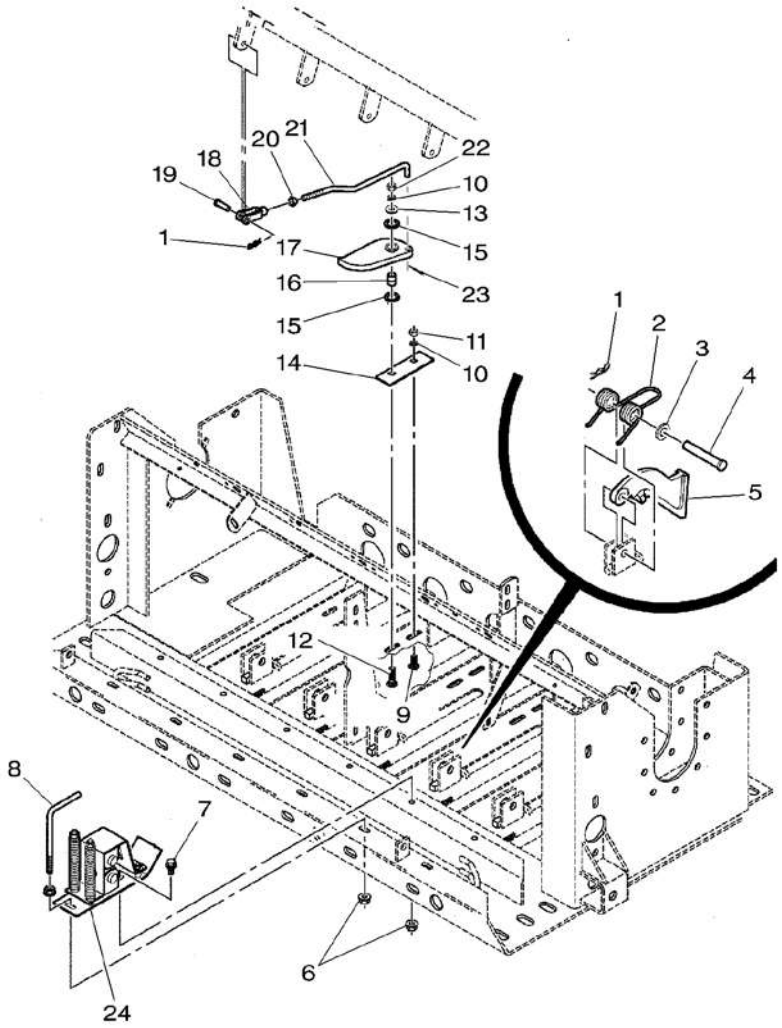

1	98-2107		11	PIN	GOUPILLE PERNO BOLZEN PASADOR
2	***700706376***		5	SPRING	RESSORT MOLLA FEDER MUELLE
3*	Y705582	5/8"	5	WASHER	RONDELLE RONDELLA UNTERLEGSCHEIBE ARANDELA
4*	***700706685***	5/8" X 3-3/4	5	CLEVIS PIN	AXE PERNO D'ATTACCO SPLINTBOLZEN BULON CILINDRICO
5*	***700137655P***		5	DOG	CHIEN CANE KLAUE PRISIONERO
6*	***704247***	3/8"-16	18	LOCKNUT	ECROU BLOCAGE AUTOBLOCCANTE FLACHMUTTER CONTRATUERCA
7*	7703432	3/8"-16 X 3/4	6	SCREW	VIS VITE SCHRAUBE TORNILLO
8	***702400048***		6	ROD	TRINGLE ASTA STANGE VARILLA
9*	*70922786*	3/8"-16 X 1	6	BOLT	BOULON BULLONE MASCH.SCHRAUBE PERNO
10*	353434X1	3/8"	18	LOCK WASHER	RONDELLE FREIN ROSETTA ELASTICA FEDERRING ARANDELA GROWER
11*	355566X1	3/8"-16	6	NUT UNC	ECROU UNC DADO UNC MUTTER UNC TUERCA UNC
12*	364965X1	3/8"-16 X 1-1/2	6	BOLT UNC	BOULON UNC BULLONE UNC MASCH.SCHRB.UNC PERNO UNC
13*	355619X1	3/8"	6	WASHER	RONDELLE RONDELLA UNTERLEGSCHEIBE ARANDELA
14*	700122682P		6	PLATE	PLAQUE PIASTRA PLATTE PLATO
15	***8044695***		12	SEAL	JOINT ETANCHEITE PARAOLIO DICHTRING RETEN
16*	***700122681P***		6	BUSH	BAGUE BOCCOLA BUCHSE CASQUILLO
17*	***700113345P***		6	FINGER	DOIGT DITO FINGER DEDO
18*	70924121	3/8"-24	6	YOKE	CHAPE ARTICULAT FORCELLA GELENKGABEL YUGO
19*	63586	3/8" X 1-1/8	6	CLEVIS PIN	AXE PERNO D'ATTACCO SPLINTBOLZEN BULON CILINDRICO
20*	70918403	3/8"-24	6	NUT	ECROU DADO MUTTER TUERCA
21*	***6523740P***		6	ROD	TRINGLE ASTA STANGE VARILLA
22*	***70917421***	3/8"-16	6	NUT	ECROU DADO MUTTER TUERCA
23*	354057X1	1/8" X 3/4	12	PIN	GOUPILLE PERNO BOLZEN PASADOR
24*			6	TENSIONER	TENDEUR TENDITORE SPANNER TENSOR

Knotter Control Commande Des Noueurs Binderantrieb Commando Legatore Mando Del Anudadora	Frame Bati Rahmen Telaio Bastidor	50-70	H.M 74236

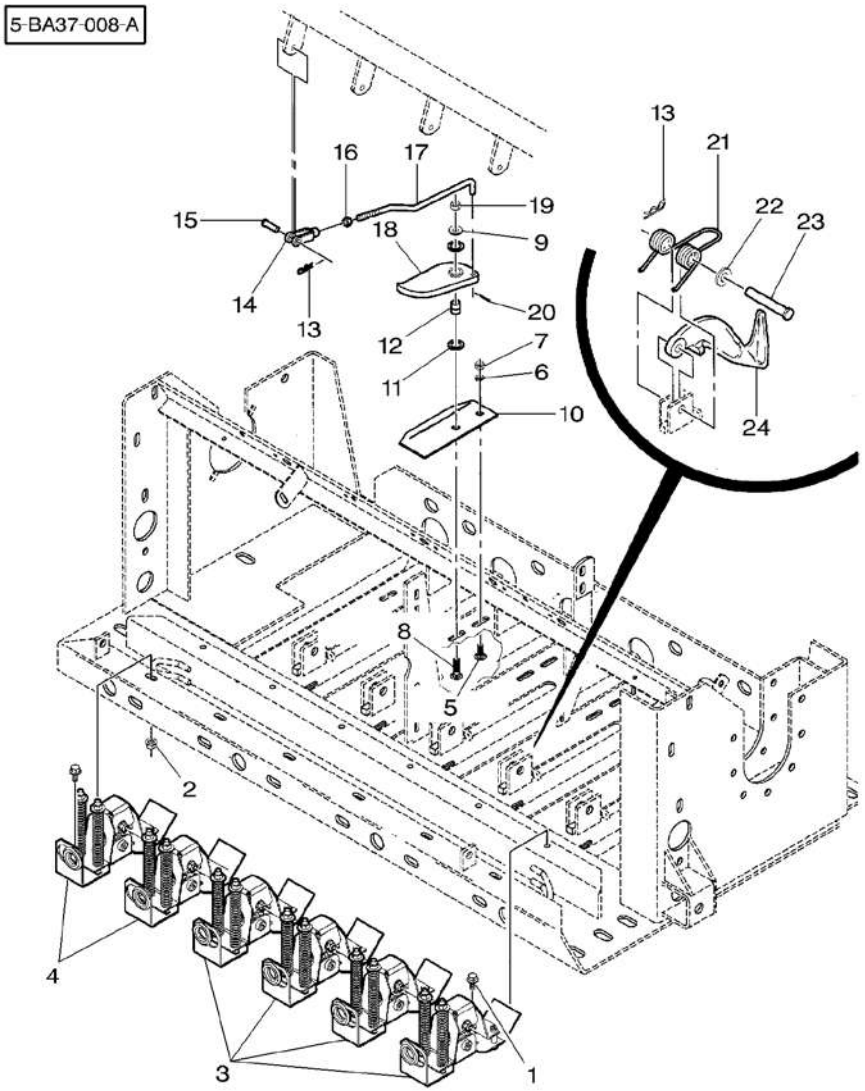

1 * 7703432	3/8"-16 X 3/4	12	SCREW	VIS VITE	SCHRAUBE TORNILLO
2 * *704247*	3/8"-16	12	LOCKNUT	ECROU BLOCAGE AUTOBLOCCANTE	FLACHMUTTER CONTRATUERCA
3 * 700139338P		4	TENSIONER	TENDEUR TENDITORE	SPANNER TENSOR
4 * 700139336P		2	TENSIONER	TENDEUR TENDITORE	SPANNER TENSOR
5 * *70922786*	3/8"-16 X 1	6	BOLT	BOULON BULLONE	MASCH.SCHRAUBE PERNO
6 * 353434X1	3/8"	6	LOCK WASHER	RONDELLE FREIN ROSETTA ELASTICA	FEDERRING ARANDELA GROWER
7 * 355566X1	3/8"-16	6	NUT UNC	ECROU UNC DADO UNC	MUTTER UNC TUERCA UNC
8 * 364965X1	3/83-16 X 1-1/2	6	BOLT UNC	BOULON UNC BULLONE UNC	MASCH.SCHRB.UNC PERNO UNC
9 * 355619X1	3/8"	6	WASHER	RONDELLE RONDELLA	UNTERLEGSCHEIBE ARANDELA
10 * 700122682P		6	PLATE	PLAQUE PIASTRA	PLATTE PLATO
11 * ***8044695***		12	SEAL	JOINT ETANCHEITE PARAOLIO	DICHTRING RETEN
12 * ***700122681P***		6	BUSH	BAGUE BOCCOLA	BUCHSE CASQUILLO
13 * 98-2107		11	PIN	GOUPILLE PERNO	BOLZEN PASADOR
14 * 70924121		6	YOKE	CHAPE ARTICULAT FORCELLA	GELENKGABEL YUGO
15 * 63586	3/8" X 1-1/8	6	CLEVIS PIN	AXE PERNO D'ATTACCO	SPLINTBOLZEN BULON CILINDRICO
16 * 70918403	3/8"-24	6	NUT	ECROU DADO	MUTTER TUERCA
17 * ***6523740P***		6	ROD	TRINGLE ASTA	STANGE VARILLA
18 * ***700113345P***		6	FINGER	DOIGT DITO	FINGER DEDO
19 * 10163	3/8"-16	6	NUT	ECROU DADO	MUTTER TUERCA
20 * 354057X1	1/8" X 3/4	12	PIN	GOUPILLE PERNO	BOLZEN PASADOR
21 * ***700706376***		5	SPRING	RESSORT MOLLA	FEDER MUELLE
22 * Y705582	5/8"	5	WASHER	RONDELLE RONDELLA	UNTERLEGSCHEIBE ARANDELA
23 * ***700706685***	5/8" X 3-3/4	5	CLEVIS PIN	AXE PERNO D'ATTACCO	SPLINTBOLZEN BULON CILINDRICO
24 * ***700137655P***		5	DOG	CHIEN CANE	KLAUE PRISIONERO

Star Wheel
Declencheur
Strohrad
Braccio Di Scatto
Rueda Medicion

50-75

5-BA33-005-B

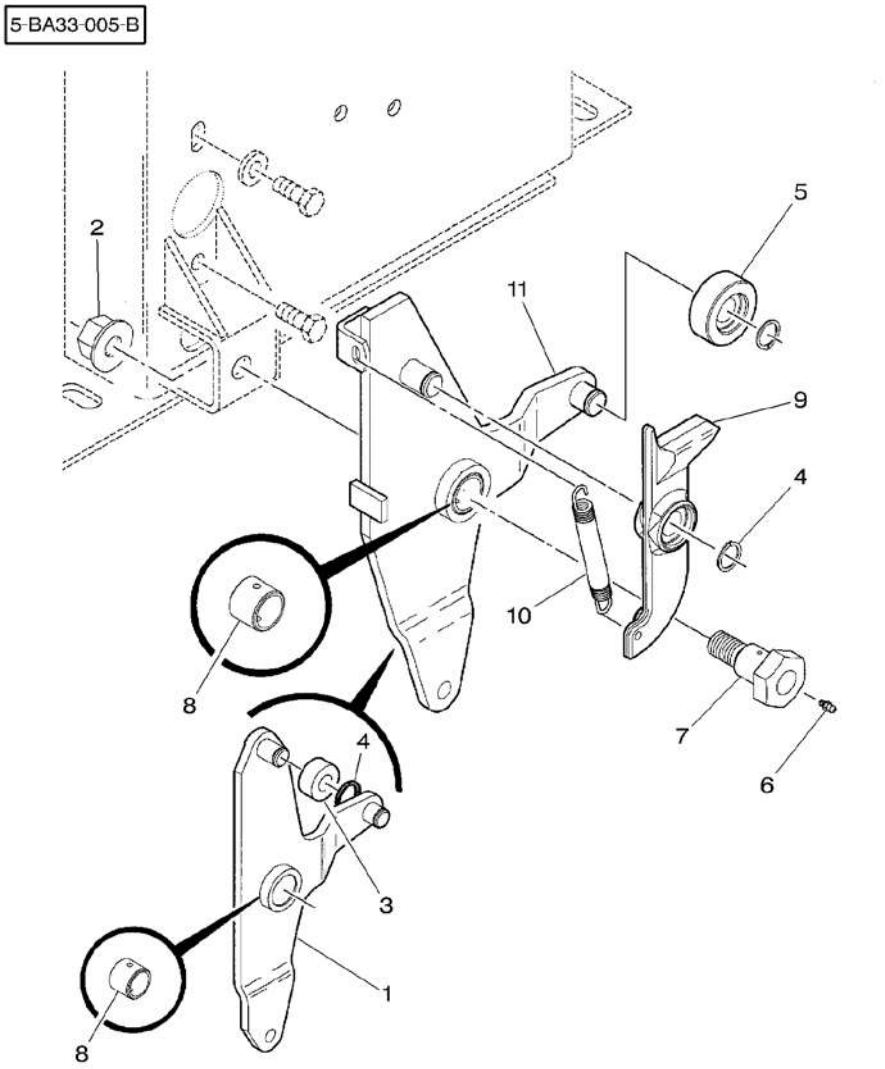

1	*700137490P	[A]	1	ARM	BRAS BRACCIO	ARM BRAZO
2	*700703923	3/4"–10	1	TOP LOCKNUT	ECROU FREIN DADO DI TESTA	SELBSTS.MUTTER CONTRATUERCA SUP
3	*700124056P	[A]	1	ROLLER	GALET RULLO	ROLLE RODILLO
4	***70927732***		2	SNAPRING	SEGMENT ARRET ANELLO SIEGER	SPRENGRING ANILLA RETENCION
5	****700138225***		1	ROLLER	GALET RULLO	ROLLE RODILLO
6	***70923219***	1/4"–28	1	GREASER	GRAISSEUR INGRASSATORE	FETTNIPPEL ENGRASADOR
7	*700137492		1	BOLT	BOULON BULLONE	MASCH.SCHRAUBE PERNO
8	*8050536		1	BEARING	COUSSINET CUSCINETTO	LAGER COJINETE
9	700138224		1	LEVER	LEVIER LEVA	HEBEL PALANCA
10	***700714166***		1	SPRING	RESSORT MOLLA	FEDER MUELLE
11	700138219		1	ARM	BRAS BRACCIO	ARM BRAZO

[A] FIRST FIT
PREMIER MONTAGE
ERSTE ZUSAMMEN
PRIMO MONTAGGIO
PRIMER MONTAJE

Star Wheel
Declencheur
Strohrad
Braccio Di Scatto
Rueda Medicion

50-80

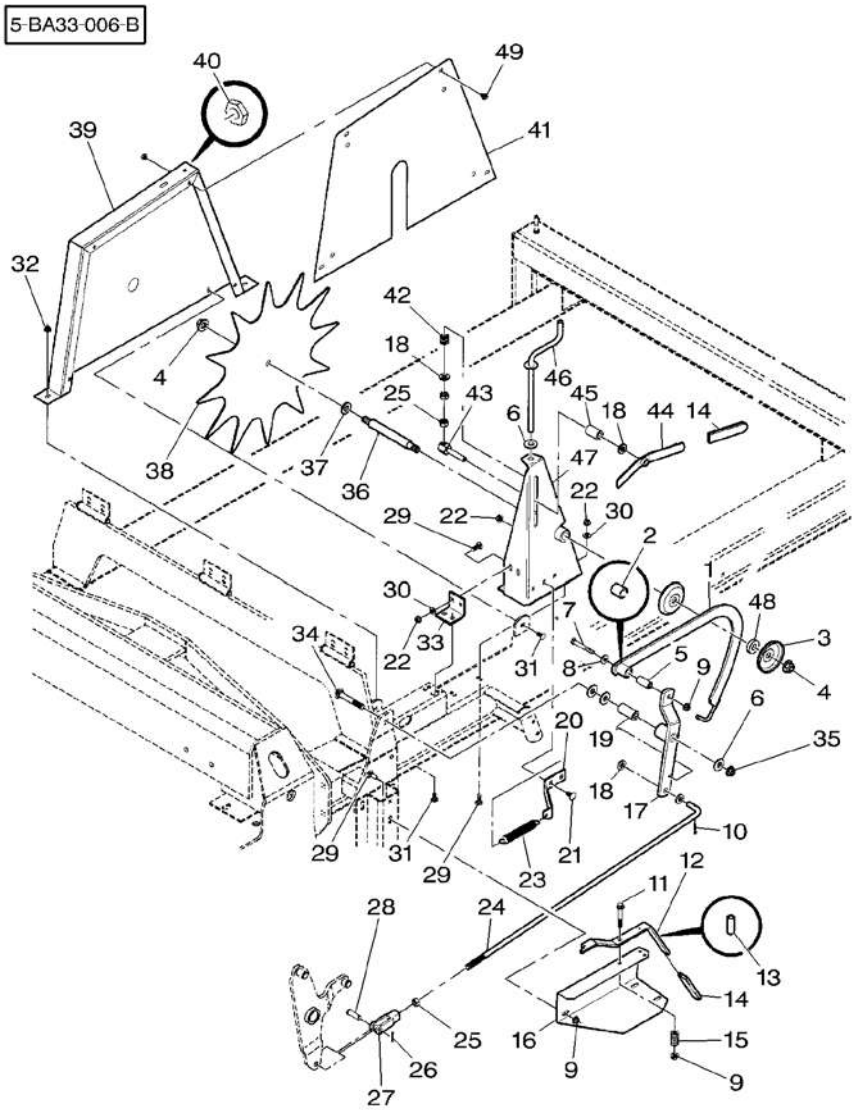

1 ✱	700123857	➡ HM 74235	1	ARM	BRAS BRACCIO	ARM BRAZO
1 ✱	700136931P	➡ HM 74236	1	ARM	BRAS BRACCIO	ARM BRAZO
2 ✱	6176655	1 ➡ HM 74235	1	BUSH	BAGUE BOCCOLA	BUCHSE CASQUILLO
3 ✱	700123850P		2	SHIELD	TOLE RIPARO	SCHILD BLINDAJE
4 ✱	***700703922***	5/8"–11	3	TOP LOCKNUT	ECROU FREIN DADO DI TESTA	SELBSTS.MUTTER CONTRATUERCA SUP
5 ✱	700109003P		1	BUSH	BAGUE BOCCOLA	BUCHSE CASQUILLO
6 ✱	700711557	1/2"	4	WASHER	RONDELLE RONDELLA	UNTERLEGSCHEIBE ARANDELA
7 ✱	354271X1	3/8"–16 X 2–3/4	1	BOLT UNC	BOULON UNC BULLONE UNC	MASCH.SCHRB.UNC PERNO UNC
8 ✱	700702916	3/8"	1	WASHER	RONDELLE RONDELLA	UNTERLEGSCHEIBE ARANDELA
9 ✱	***Y704734***	3/8"–16	4	TOP LOCKNUT	ECROU FREIN DADO DI TESTA	SELBSTS.MUTTER CONTRATUERCA SUP
10 ✱	354066X1	5/32" X 1	2	PIN	GOUPILLE PERNO	BOLZEN PASADOR
11 ✱	369250X1	3/8"–16 X 2–1/2	1	BOLT	BOULON BULLONE	MASCH.SCHRAUBE PERNO
12 ✱	700129686P		1	LEVER	LEVIER LEVA	HEBEL PALANCA
13 ✱	70921292	12 1/4" X 1/2	1	PIN	GOUPILLE PERNO	BOLZEN PASADOR
14 ✱	827360		5	GRIP	MANCHE IMPUGNATURA	GRIFF EMPUNADURA
15	***58644***		1	SPRING	RESSORT MOLLA	FEDER MUELLE
16 ✱	700129689P		1	SUPPORT	SUPPORT SUPPORTO	LAGERUNG DISPOS.DE SOSTEN
17 ✱	700123852P		1	ARM	BRAS BRACCIO	ARM BRAZO
18 ✱	***705541***	1/2"	4	FLAT WASHERS	RONDELLES PLATES RONDELLE PIANE	UNTERLEGSCHEIBEN ARANDELAS PLANAS
19 ✱	6621825P		1	SPACER	ENTRETOISE DISTANZIALE	ABSTANDSTUECK PIEZA DISTANCIA
20 ✱	700134937P	➡ HM 74235	1	SUPPORT	SUPPORT SUPPORTO	LAGERUNG DISPOS.DE SOSTEN
20 ✱	700136934P	➡ HM 74236	1	SUPPORT	SUPPORT SUPPORTO	LAGERUNG DISPOS.DE SOSTEN
21 ✱	70922784	➡ HM 74235 3/8"–16 X 3/4	2	BOLT	BOULON BULLONE	MASCH.SCHRAUBE PERNO
21 ✱	*70922786*	➡ HM 74236 3/8"–16 X 1	2	BOLT	BOULON BULLONE	MASCH.SCHRAUBE PERNO
22 ✱	***700711238***	3/8"–16	8	NUT	ECROU DADO	MUTTER TUERCA
23 ✱	***758441***	➡ HM 74235	1	TENSION SPRING	RESSORT TRACTION MOLLA TENDITRICE	ZUGFEDER RESORTE TENSOR

Star Wheel
Declencheur
Strohrad
Braccio Di Scatto
Rueda Medicion

50-80

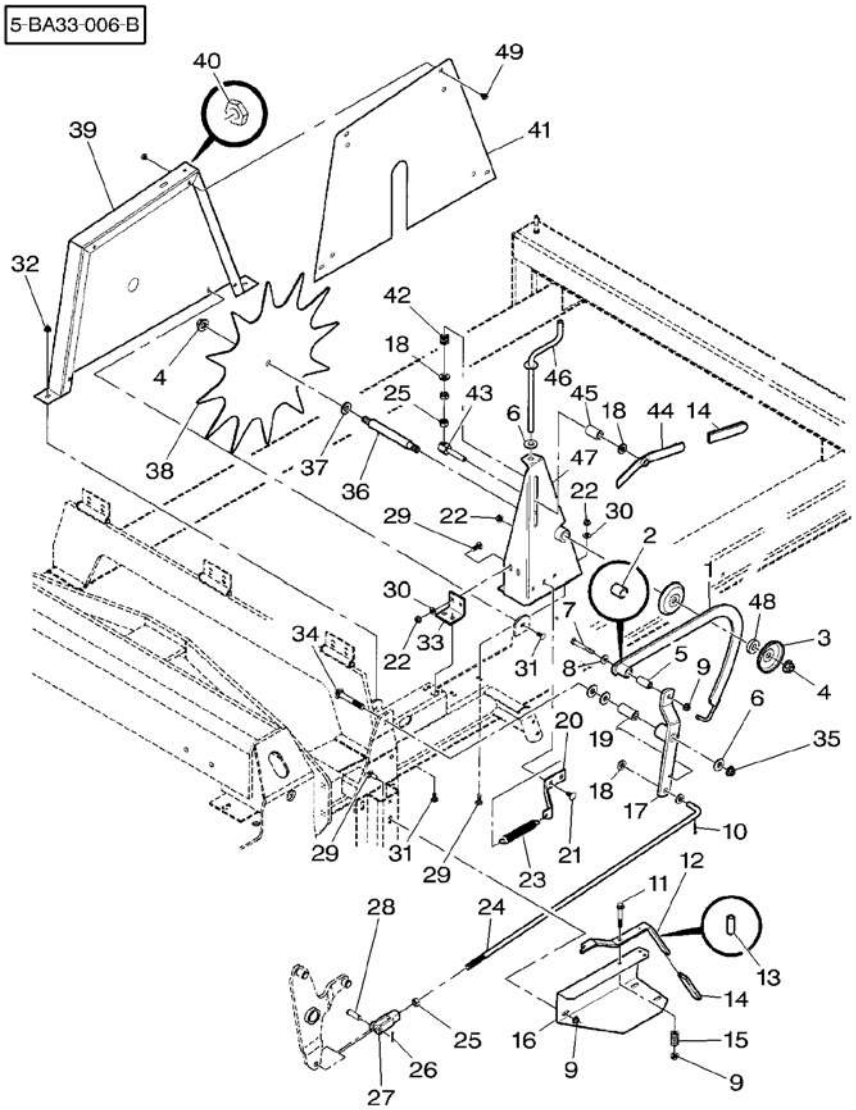

23★	*700709636*	➡ HM 74236	1	SPRING	RESSORT MOLLA FEDER MUELLE
24★	700123860P		1	ROD	TRINGLE ASTA STANGE VARILLA
25★	704031	1/2"–13	3	NUT	ECROU DADO MUTTER TUERCA
26★	354059X1	1/8" X 1	1	PIN	GOUPILLE PERNO BOLZEN PASADOR
27★	70937465	1/2"–13	1	YOKE	CHAPE ARTICULAT FORCELLA GELENKGABEL YUGO
28★	70929593	1/2" X 1–1/2	1	PIN	GOUPILLE PERNO BOLZEN PASADOR
29★	*70922786*	3/8"–16 X 1	8	BOLT	BOULON BULLONE MASCH.SCHRAUBE PERNO
30★	*Y705533*	3/8"	6	WASHER	RONDELLE RONDELLA UNTERLEGSCHEIBE ARANDELA
31★	364352X1	5/16"–18 X 3/4	4	BOLT UNC	BOULON UNC BULLONE UNC MASCH.SCHRB.UNC PERNO UNC
32★	70931277	5/16"–18	4	LOCKNUT	ECROU BLOCAGE AUTOBLOCCANTE FLACHMUTTER CONTRATUERCA
33★	700134449P		1	ANGLE	EQUERRE ANGOLO WINKEL ANGULO
34★	70931813	1/2"–13 X 3–1/2	1	BOLT	BOULON BULLONE MASCH.SCHRAUBE PERNO
35★	***Y704742***	1/2"–13	1	TOP LOCKNUT	ECROU FREIN DADO DI TESTA SELBSTS.MUTTER CONTRATUERCA SUP
36	700123855		1	SHAFT	ARBRE ALBERO WELLE ARBOL
37★	Y705582	5/8"	1	WASHER	RONDELLE RONDELLA UNTERLEGSCHEIBE ARANDELA
38★	700123856P		1	WHEEL	ROUE RUOTA RAD RUEDA
39★	700153538P		1	SHIELD	TOLE RIPARO SCHILD BLINDAJE
40★	774521	39	6	NUT	ECROU DADO MUTTER TUERCA
41★	700133188P		1	COVER	COUVERCLE COPERCHIO DECKEL CUBIERTA
42	Y58024		1	SPRING	RESSORT MOLLA FEDER MUELLE
43	700134527		1	SHAFT	ARBRE ALBERO WELLE ARBOL
44	700134935		1	LEVER	LEVIER LEVA HEBEL PALANCA
45	6234710		1	SPACER	ENTRETOISE DISTANZIALE ABSTANDSTUECK PIEZA DISTANCIA
46	700134938		1	CRANK	MANIVELLE MANOVELLA KURBEL MANIVELA
47★	700134931P		1	BRACKET	SUPPORT FIXATION SUPPORTO FISSAGG HALTEARM SOPORTE
48★	6530489P	➡ HM 74235	1	SPACER	ENTRETOISE DISTANZIALE ABSTANDSTUECK PIEZA DISTANCIA

Star Wheel
Declencheur
Strohrad
Braccio Di Scatto
Rueda Medicion

50-80

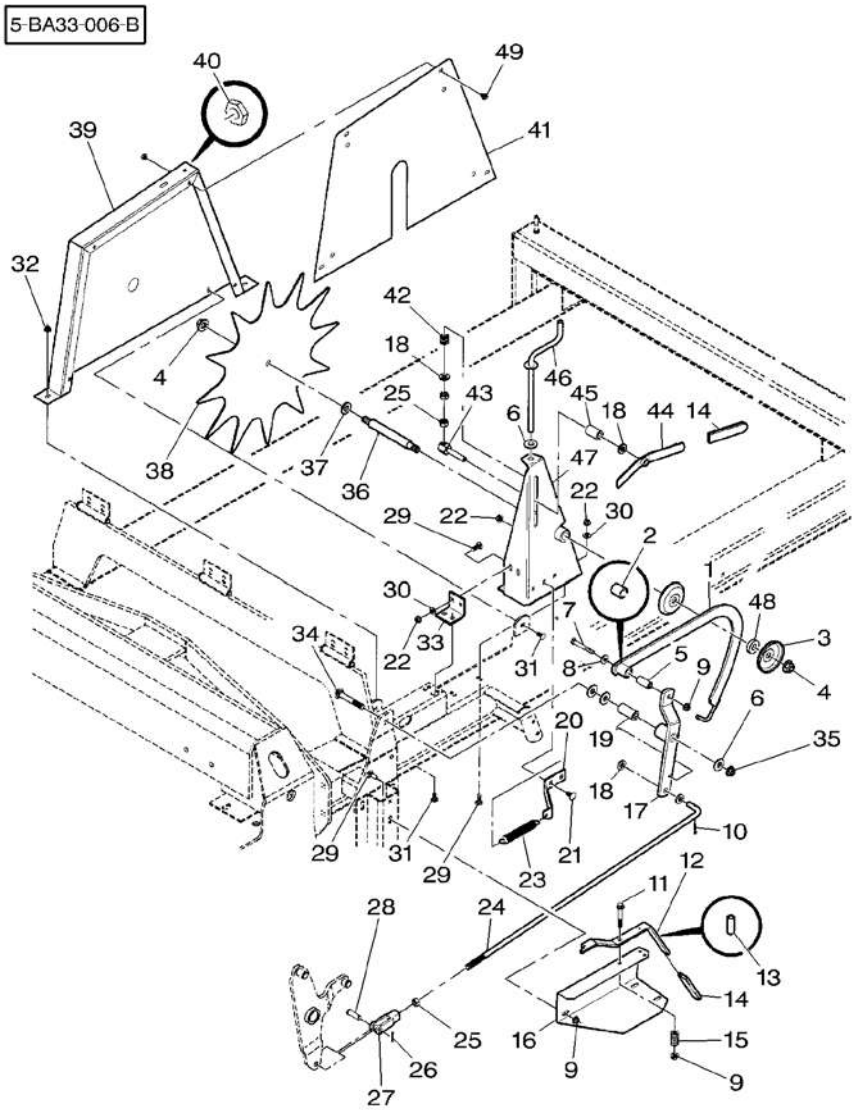

48 * *2401516P*	➡ HM 74236	**1** SPACER	ENTRETOISE DISTANZIALE	ABSTANDSTUECK PIEZA DISTANCIA
49 * 7883317	5/16"–18 X 1/2	**4** SCREW	VIS VITE	SCHRAUBE TORNILLO

Knotter Noueur Binder Legatore Anudadora	50-85	Reflector Catadioptre Ruckstrahler Catadiottro Catafaros

5 BA06 005 A

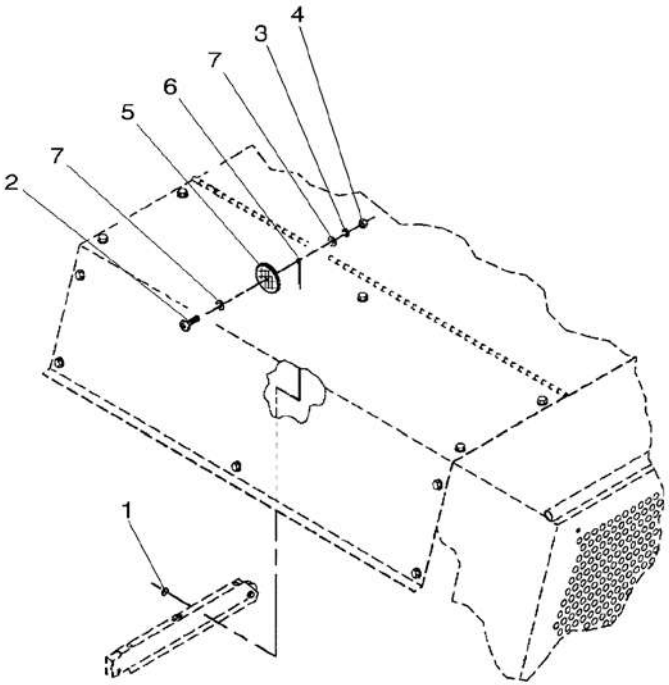

1 * *874404*		6	NUT	ECROU DADO	MUTTER TUERCA
2 * *Y706549*	No 10–24 X 3/4	6	SCREW	VIS VITE	SCHRAUBE TORNILLO
3 * 353445X1	No 10	6	LOCK WASHER	RONDELLE FREIN ROSETTA ELASTICA	FEDERRING ARANDELA GROWER
4 * *Y704072*	No 10–24	6	NUT	ECROU DADO	MUTTER TUERCA
5 * *8722894*	➡| ...	6	REFLECTOR	CATADIOPTRE CATARIFRANGENTE	REFLEKTOR CATADIOPTRICO
5 * *700723134*	➡ ...	6	REFLECTOR	CATADIOPTRE CATARIFRANGENTE	REFLEKTOR CATADIOPTRICO
6 * *700706503*		6	ROD	TRINGLE ASTA	STANGE VARILLA
7 * 70917380	No 10	6	WASHER	RONDELLE RONDELLA	UNTERLEGSCHEIBE ARANDELA

Knotter Noueur Binder Legatore Anudadora	50-90	Kit Kit Kit Kit Kit

5-BA06-017-B

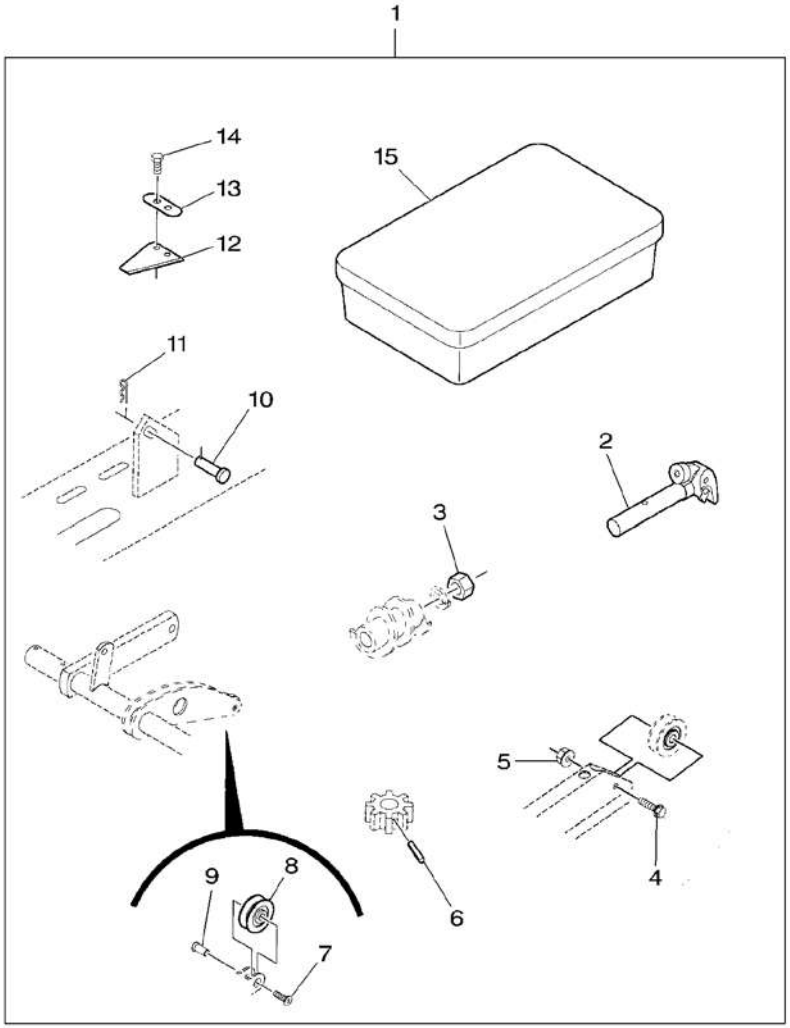

1	***700150670***		**1**	KIT, REPAIR	JEU REPARATION KIT RIPARAZIONE	REPARATURSATZ JUEGO REPARACION
2	***700700968***	1	**1**	KNOTTER	NOUEUR LEGATORE	BINDER ANUDADOR
3*	353431X1	1 3/8"–24	**1**	NUT UNF	ECROU UNF DADO UNF	MUTTER UNF TUERCA UNF
4*	7883283	1 1/4"–20 X 1	**1**	SCREW	VIS VITE	SCHRAUBE TORNILLO
5*	1703354	1 1/4"–20	**1**	LOCKNUT	ECROU BLOCAGE AUTOBLOCCANTE	FLACHMUTTER CONTRATUERCA
6*	*70922598*	1 3/16" X 7/8	**1**	PIN	GOUPILLE PERNO	BOLZEN PASADOR
7*	***8701476***	1 No 10–32 X 1/2	**1**	BOLT	BOULON BULLONE	MASCH.SCHRAUBE PERNO
8*	***700722661***	1	**1**	BALL BEARING	ROULEMENT BILLES CUSCINETTO SFERE	KUGELLAGER COJINETE DE BOLA
9	***866566***	1 No 10–32	**1**	FASTENER	AGRAFE LACCIO	HALTEKLAMMER CIERRE
10*	63586	1 3/8" X 1–1/8	**1**	CLEVIS PIN	AXE PERNO D'ATTACCO	SPLINTBOLZEN BULON CILINDRICO
11*	98–2107	1	**1**	PIN	GOUPILLE PERNO	BOLZEN PASADOR
12	***700718710***	1 ⧗ 1,5 MM	**1**	KNIFE	COUTEAU COLTELLO	MESSER CUCHILLA
13*	***6613624P***	1	**1**	LOCKING PLATE	PLAQUE BLOCAGE PIASTRA DI FERMO	SICH.BLECH PLACA DE BLOCAJE
14*	8701625	1 No 10–32 X 1/2	**2**	SCREW	VIS VITE	SCHRAUBE TORNILLO
15	700707474	1	**1**	BOX	BOITE SCATOLA	SCHACHTEL CAJA

Lubrication Lubrification Schmieren Lubrificazione Engrase	50-95	Feeder Ameneur Zubringer Infadatore Embocador

5-BA16-016-A

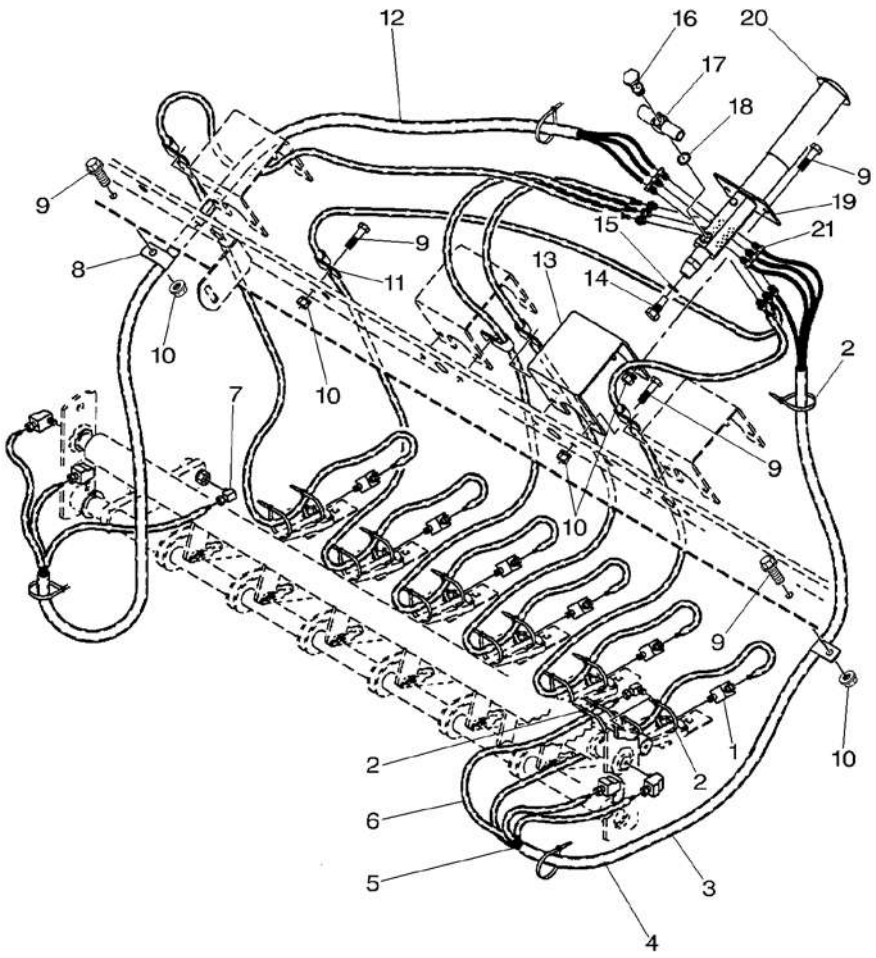

1	792259		10	ELBOW	COUDE GOMITO	WINKELSTUECK CODO
2*	*70925094*		18	CLAMP	COLLIER FASCETTA	HALTESCHELLE ABRAZADERA
3	700123461	◀	1	HARNESS	FAISCEAU FASCIOCAVI	KABELBAUM MAZO CABLES
4	700123362		1	PROTECTIVE STRIP	GAINE PROTECTION GUAINA PROTETTIV	KANTENSCHUTZ BANDA PROTECTORA
5	700113359		1	TUBE	TUBE TUBO	ROHR TUBO
6	700113360		1	PROTECTIVE STRIP	GAINE PROTECTION GUAINA PROTETTIV	KANTENSCHUTZ BANDA PROTECTORA
7	700706279		2	COUPLER	ACCOUPLEMENT ACCOPPIATORE	KUPPLUNGSSTUECK ACOPLADOR
8*	700711751		2	CLAMP	COLLIER FASCETTA	HALTESCHELLE ABRAZADERA
9*	7883275	1/4"-20 X 3/4	7	BOLT	BOULON BULLONE	MASCH.SCHRAUBE PERNO
10*	1703354	1/4"-20	7	LOCKNUT	ECROU BLOCAGE AUTOBLOCCANTE	FLACHMUTTER CONTRATUERCA
11	70926919		5	CLIP	CLIP FERMAGLIO	SCHELLE CRAPA RETEN
12	700122683	▶	1	HARNESS	FAISCEAU FASCIOCAVI	KABELBAUM MAZO CABLES
13*	700113353P		1	SUPPORT	SUPPORT SUPPORTO	LAGERUNG DISPOS.DE SOSTEN
14	700706539		1	PLUG	BOUCHON TAPPO	VERSCHL.STOPFEN TAPON
15	700706540		1	GASKET	JOINT GUARNIZIONE	DICHTSCHEIBE EMPAQUETADURA.
16	700706543		1	STUD	GOUJON PRIGIONIERO	STEHBOLZEN ESPARRAGO
17	700706542		1	NIPPLE	GRAISSEUR COUDE NIPPLO	NIPPEL NIPLE
18	700706541		1	GASKET	JOINT GUARNIZIONE	DICHTSCHEIBE EMPAQUETADURA.
19*	700113361P		1	PLATE	PLAQUE PIASTRA	PLATTE PLATO
20	700706276		1	PUMP	POMPE POMPA	PUMPE BOMBA
21*	700706277		12	NUT	ECROU DADO	MUTTER TUERCA

Lubrication
Lubrification
Schmieren
Lubrificazione
Engrase

50-100

5-BA16-024-A

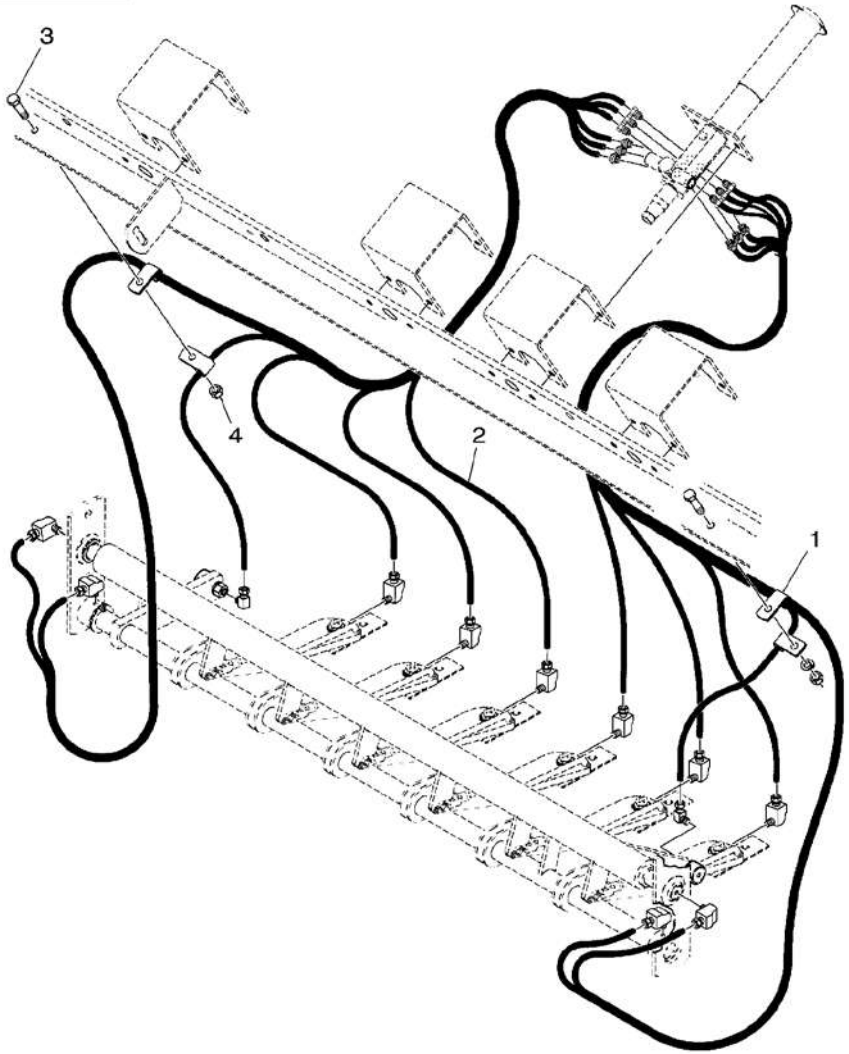

1	751628		4	CLAMP	COLLIER FASCETTA	HALTESCHELLE ABRAZADERA
2	700113359		1	TUBE	TUBE TUBO	ROHR TUBO
3*	7883275	1/4"–20 X 3/4	2	BOLT	BOULON BULLONE	MASCH.SCHRAUBE PERNO
4*	1703354	1/4"–20	2	LOCKNUT	ECROU BLOCAGE AUTOBLOCCANTE	FLACHMUTTER CONTRATUERCA

Lubrication
Lubrification
Schmieren
Lubrificazione
Engrase

50-105

5-BA16-015-B

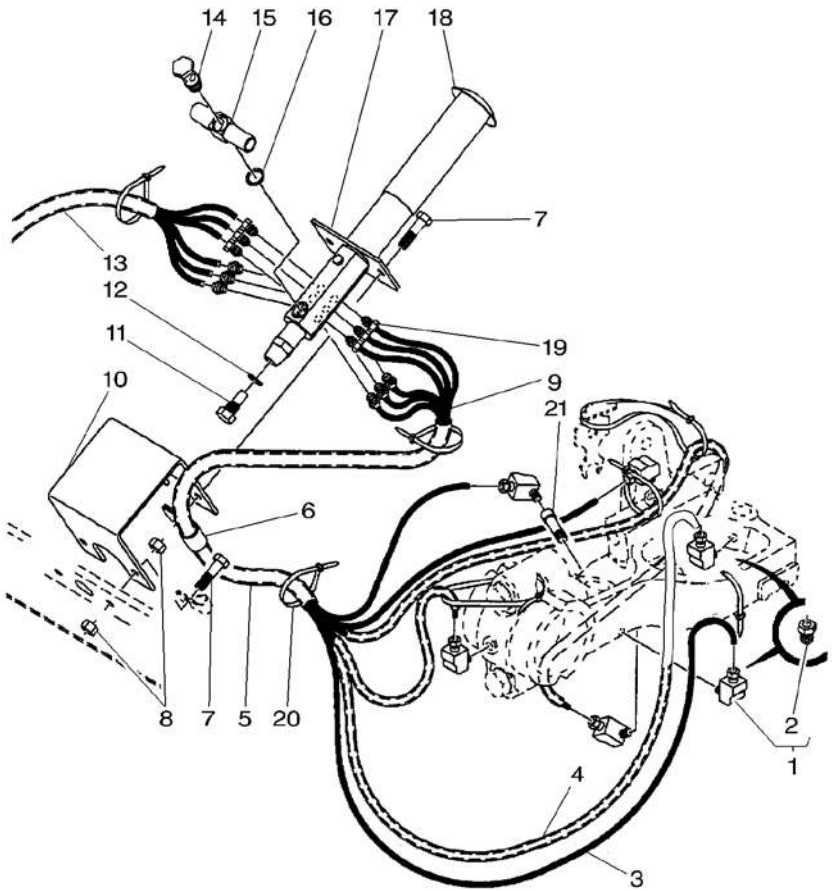

1	792259		**36**	ELBOW	COUDE GOMITO	WINKELSTUECK CODO
2*	700706898	1	**1**	NUT	ECROU DADO	MUTTER TUERCA
3	700113359		**1**	TUBE	TUBE TUBO	ROHR TUBO
4	700113360		**1**	PROTECTIVE STRIP	GAINE PROTECTION GUAINA PROTETTIV	KANTENSCHUTZ BANDA PROTECTORA
5	700123362		**1**	PROTECTIVE STRIP	GAINE PROTECTION GUAINA PROTETTIV	KANTENSCHUTZ BANDA PROTECTORA
6	700711751		**3**	CLAMP	COLLIER FASCETTA	HALTESCHELLE ABRAZADERA
7	7883275	1/4"–20 X 3/4	**12**	BOLT	BOULON BULLONE	MASCH.SCHRAUBE PERNO
8	1703354	1/4"–20	**12**	LOCKNUT	ECROU BLOCAGE AUTOBLOCCANTE	FLACHMUTTER CONTRATUERCA
9*				NOT USED	NON UTILISE INUSATO	NICHT VERWENDET NO SE USA
10*	700113353P		**3**	SUPPORT	SUPPORT SUPPORTO	LAGERUNG DISPOS.DE SOSTEN
11	700706539		**3**	PLUG	BOUCHON TAPPO	VERSCHL.STOPFEN TAPON
12	700706540		**3**	GASKET	JOINT GUARNIZIONE	DICHTSCHEIBE EMPAQUETADURA.
13	700123460		**6**	HARNESS	FAISCEAU FASCIOCAVI	KABELBAUM MAZO CABLES
14	700706543		**3**	STUD	GOUJON PRIGIONIERO	STEHBOLZEN ESPARRAGO
15	700706542		**3**	NIPPLE	GRAISSEUR COUDE NIPPLO	NIPPEL NIPLE
16	700706541		**3**	GASKET	JOINT GUARNIZIONE	DICHTSCHEIBE EMPAQUETADURA.
17*	700113361P		**3**	PLATE	PLAQUE PIASTRA	PLATTE PLATO
18	700706276		**3**	PUMP	POMPE POMPA	PUMPE BOMBA
19	700706277		**36**	NUT	ECROU DADO	MUTTER TUERCA
20	*70925094*		**36**	CLAMP	COLLIER FASCETTA	HALTESCHELLE ABRAZADERA
21	700706280		**6**	EXTENSION	RALLONGE PROLUNGA	VERLAENGERUNG EXTENSION

Lubrication
Lubrification
Schmieren
Lubrificazione
Engrase

50-110

5-BA16-025-A

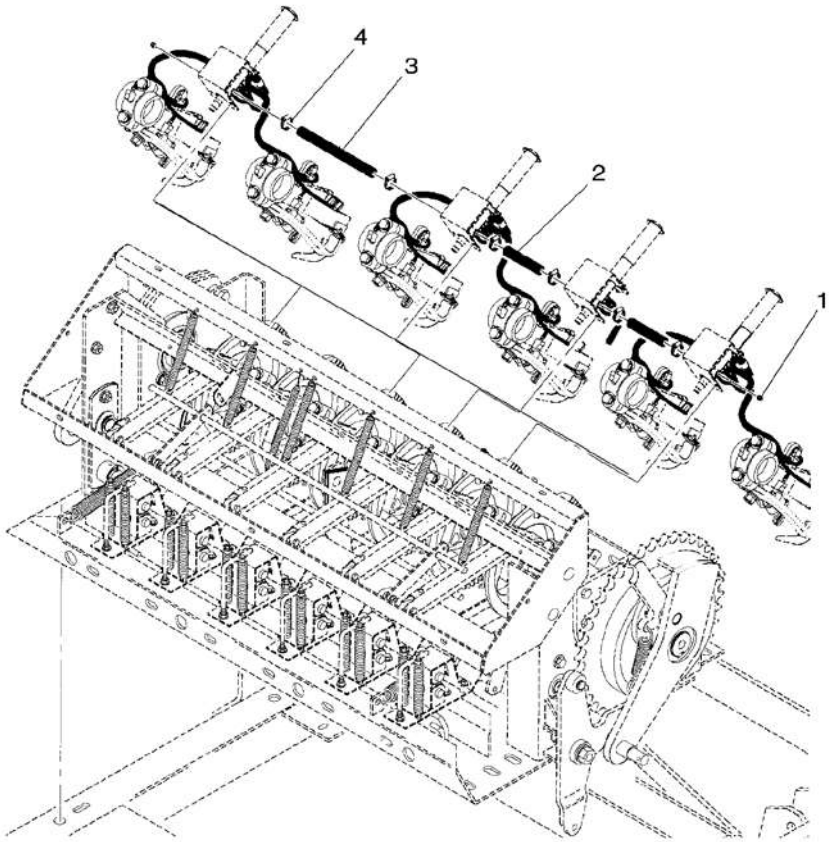

1*	Y46409	1/8"	**2**	PLUG	BOUCHON TAPPO	VERSCHL.STOPFEN TAPON
2	700706281		**2**	HOSE	DURITE TUBO FLESSIBILE	SCHLAUCH FLEXIBLE
3	700706282		**1**	HOSE	DURITE TUBO FLESSIBILE	SCHLAUCH FLEXIBLE
4	7020019		**6**	CLAMP	COLLIER FASCETTA	HALTESCHELLE ABRAZADERA

Lubrication Lubrification Schmieren Lubrificazione Engrase	50-115	Kit Kit Kit Kit Kit

5-BA16-021-C

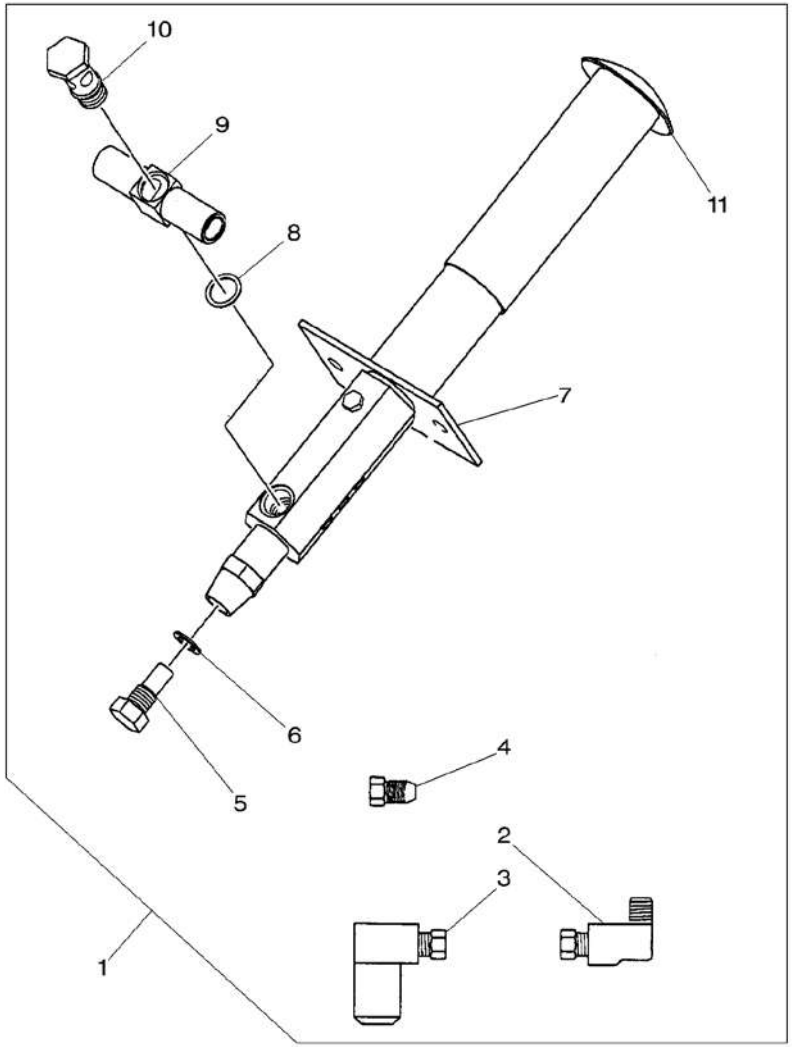

1	***700710807***		**1**	KIT	JEU KIT	SATZ JUEGO
2	792259	1	**46**	ELBOW	COUDE GOMITO	WINKELSTUECK CODO
3	700706279	1	**2**	COUPLER	ACCOUPLEMENT ACCOPPIATORE	KUPPLUNGSSTUECK ACOPLADOR
4	700706277	1	**48**	NUT	ECROU DADO	MUTTER TUERCA
5	700706539	1	**4**	PLUG	BOUCHON TAPPO	VERSCHL.STOPFEN TAPON
6	700706540	1	**4**	GASKET	JOINT GUARNIZIONE	DICHTSCHEIBE EMPAQUETADURA.
7*	700113361P	1	**4**	PLATE	PLAQUE PIASTRA	PLATTE PLATO
8	700706541	1	**4**	GASKET	JOINT GUARNIZIONE	DICHTSCHEIBE EMPAQUETADURA.
9	700706542	1	**4**	NIPPLE	GRAISSEUR COUDE NIPPLO	NIPPEL NIPLE
10	700706543	1	**4**	STUD	GOUJON PRIGIONIERO	STEHBOLZEN ESPARRAGO
11	700706276	1	**4**	PUMP	POMPE POMPA	PUMPE BOMBA

Lubrication
Lubrification
Schmieren
Lubrificazione
Engrase

50-120

Front – Standard
Avant – Standard
Vorne – Standard
Anteriore – Standard
Delantero – Standard

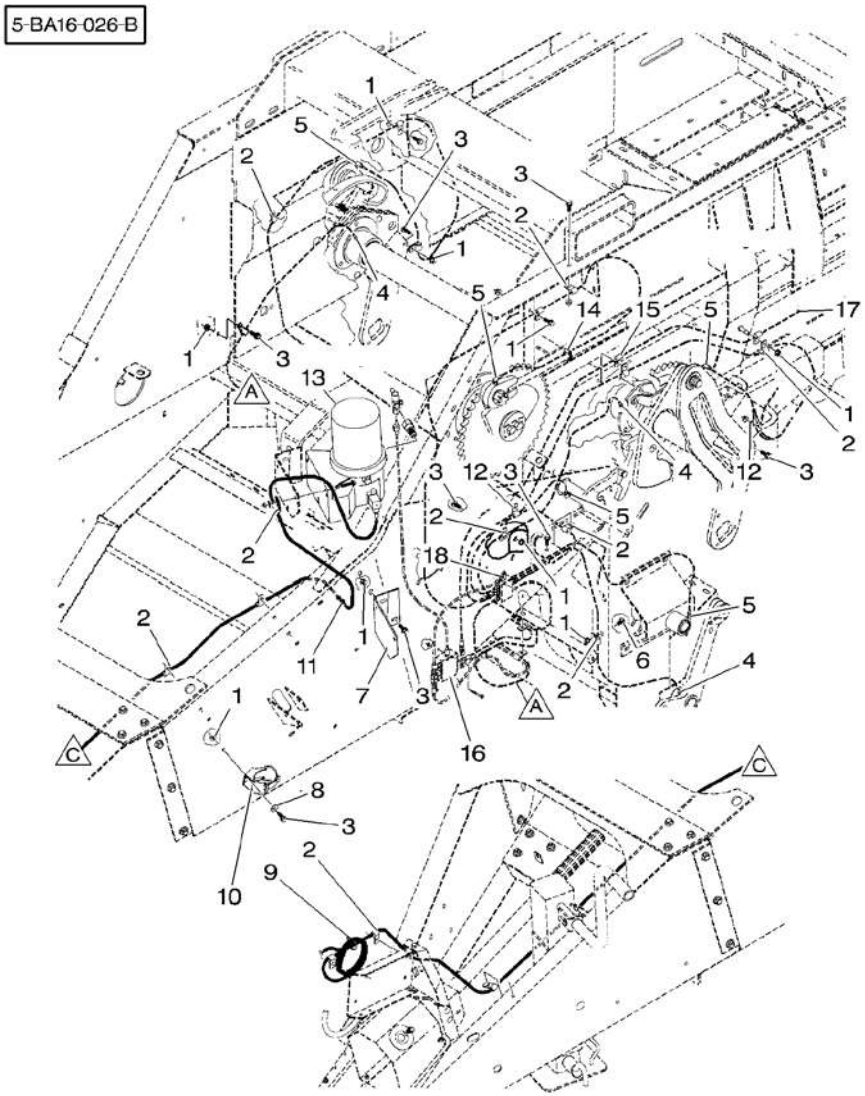

1	***700711238***	3/8"–16	**14**	NUT	ECROU DADO	MUTTER TUERCA
2 *	70928654	1/4"	**18**	CLIP	CLIP FERMAGLIO	SCHELLE CRAPA RETEN
3 *	7883382	3/8"–16 X 1	**11**	SCREW	VIS VITE	SCHRAUBE TORNILLO
4	***700706683***	1/8	**3**	CONNECTOR	BORNE MORSETTO	DOPPELNIPPEL CONECTOR
5	***700706682***		**5**	ELBOW	COUDE GOMITO	WINKELSTUECK CODO
6 *	70922784	3/8"–16 X 3/4	**1**	BOLT	BOULON BULLONE	MASCH.SCHRAUBE PERNO
7 *	700139237P		**1**	BRACKET	SUPPORT FIXATION SUPPORTO FISSAGG	HALTEARM SOPORTE
8 *	700702916	3/8"	**1**	WASHER	RONDELLE RONDELLA	UNTERLEGSCHEIBE ARANDELA
9	*70925094*		**1**	CLAMP	COLLIER FASCETTA	HALTESCHELLE ABRAZADERA
10	700707011		**1**	HOLDER	PIECE SUPPORT SUPPORTO DI BASE	HALTER SUJETADOR
11	7027352		**1**	GROMMET	PASSE FIL GOMMINO	GUMMITUELLE PASACABLE
12	70925617	1/2"	**3**	CLAMP	COLLIER FASCETTA	HALTESCHELLE ABRAZADERA
13	700720087	50–140 No 1	**1**	PUMP	POMPE POMPA	PUMPE BOMBA
14	70921911		**1**	CLAMP	COLLIER FASCETTA	HALTESCHELLE ABRAZADERA
15	70926917	3/8"	**3**	CLAMP	COLLIER FASCETTA	HALTESCHELLE ABRAZADERA
16		50–165 No 3	**1**	PRESSURE VALVE	VALVE VALVOLA PRESSION	DRUCKVENTIL VALVULA PRESION
17		50–130 No 14	**1**	HOSE FLEXIBLE	TUYAU FLEXIBLE MANICOTTO FLESS.	GUMMISCHLAUCH MANGUERA FLEX
18		50–155 No 1	**1**	PRESSURE VALVE	VALVE VALVOLA PRESSION	DRUCKVENTIL VALVULA PRESION

Lubrication
Lubrification
Schmieren
Lubrificazione
Engrase

50-125

Front – With Electronic Control
Avant – Avec Controle Electronique
Vorne – Mit Elektronische Steuerung
Anteriore – Con Controllo Elettronico
Delantero – Con Control Electronico

5-BA16-063-C

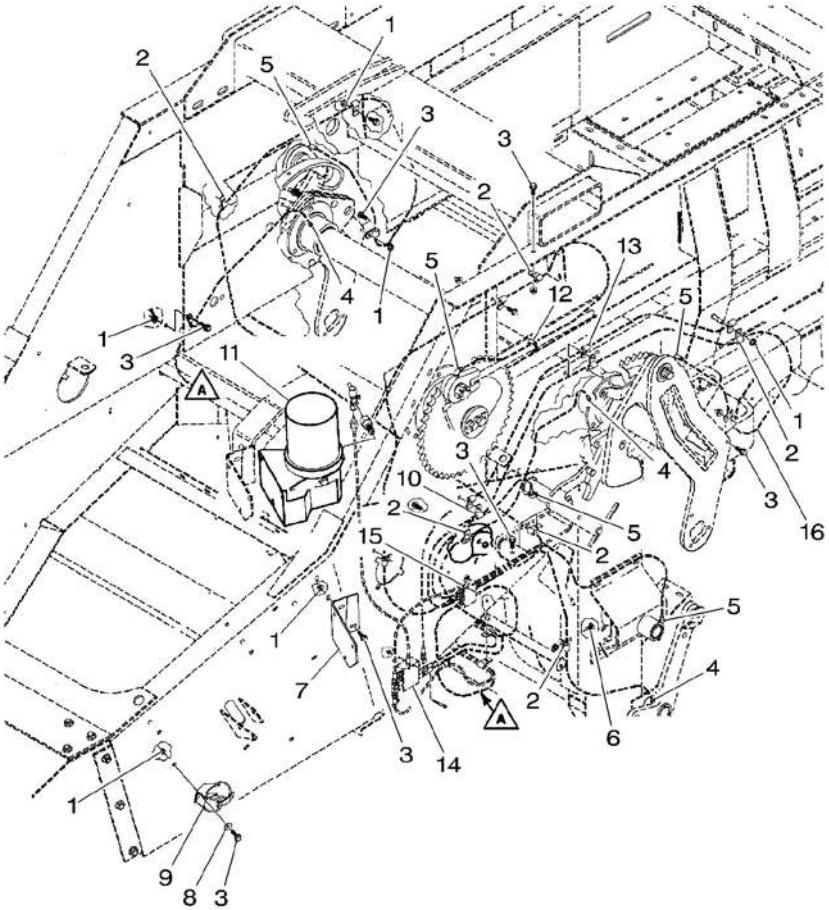

1	***700711238***	3/8"–16	**14**	NUT	ECROU DADO	MUTTER TUERCA
2*	70928654	1/4"	**13**	CLIP	CLIP FERMAGLIO	SCHELLE CRAPA RETEN
3*	7883382	3/8"–16 X 1	**11**	SCREW	VIS VITE	SCHRAUBE TORNILLO
4	***700706683***		**3**	CONNECTOR	BORNE MORSETTO	DOPPELNIPPEL CONECTOR
5*	***700706682***		**5**	ELBOW	COUDE GOMITO	WINKELSTUECK CODO
6	70922784	3/8"–16 X 34	**1**	BOLT	BOULON BULLONE	MASCH.SCHRAUBE PERNO
7*	700137643P	➡ ...	**1**	BRACKET	SUPPORT FIXATION SUPPORTO FISSAGG	HALTEARM SOPORTE
7*	700139237P	➡ ...	**1**	BRACKET	SUPPORT FIXATION SUPPORTO FISSAGG	HALTEARM SOPORTE
8	700702916	3/8"	**1**	WASHER	RONDELLE RONDELLA	UNTERLEGSCHEIBE ARANDELA
9*	700707011		**1**	HOLDER	PIECE SUPPORT SUPPORTO DI BASE	HALTER SUJETADOR
10*	70925617	1/2"	**1**	CLAMP	COLLIER FASCETTA	HALTESCHELLE ABRAZADERA
11*	700725825	👁 50–140 No 1	**1**	PUMP	POMPE POMPA	PUMPE BOMBA
12*	70921911		**1**	CLAMP	COLLIER FASCETTA	HALTESCHELLE ABRAZADERA
13*	70926917	3/8"	**3**	CLAMP	COLLIER FASCETTA	HALTESCHELLE ABRAZADERA
14*		👁 50–165 No 3	**1**	PRESSURE VALVE	VALVE VALVOLA PRESSION	DRUCKVENTIL VALVULA PRESION
15*		👁 50–155 No 1	**1**	PRESSURE VALVE	VALVE VALVOLA PRESSION	DRUCKVENTIL VALVULA PRESION
16*	700720109		**2**	HOSE	DURITE TUBO FLESSIBILE	SCHLAUCH FLEXIBLE

Lubrication Lubrification Schmieren Lubrificazione Engrase	50-130	Rear Arriere Hinten Posteriore Trasero

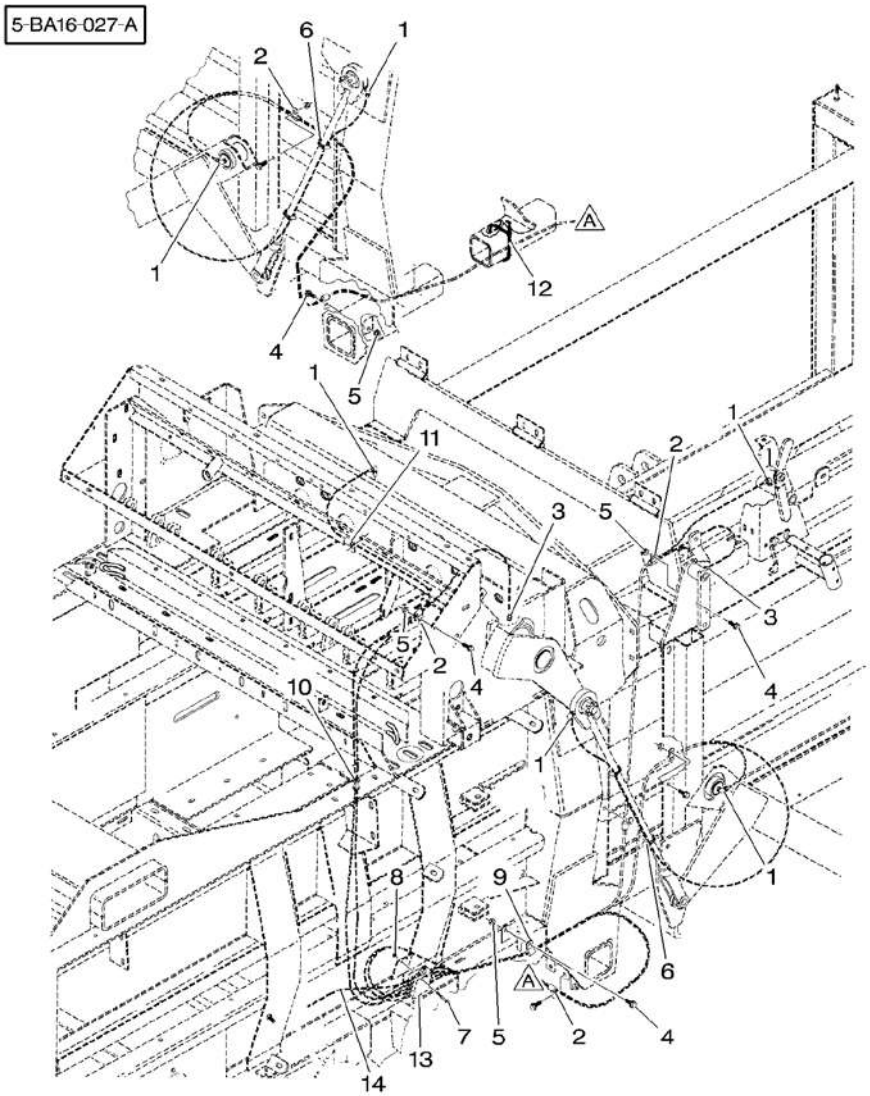

1	*700706682*		6	ELBOW	COUDE GOMITO	WINKELSTUECK CODO
2	70925617	1/2"	7	CLAMP	COLLIER FASCETTA	HALTESCHELLE ABRAZADERA
3	*700706683*		2	CONNECTOR	BORNE MORSETTO	DOPPELNIPPEL CONECTOR
4*	7883382	3/8"-16 X 1	8	SCREW	VIS VITE	SCHRAUBE TORNILLO
5*	*700711238*	3/8"-16	8	NUT	ECROU DADO	MUTTER TUERCA
6	70921911		4	CLAMP	COLLIER FASCETTA	HALTESCHELLE ABRAZADERA
7*	7701444	No 10-32 X 1-3/4	2	BOLT	BOULON BULLONE	MASCH.SCHRAUBE PERNO
8*	Y704445	No 10-32	2	NUT	ECROU DADO	MUTTER TUERCA
9*	70926049	3/4"	1	CLAMP	COLLIER FASCETTA	HALTESCHELLE ABRAZADERA
10	7827561		1	GROMMET	PASSE FIL GOMMINO	GUMMITUELLE PASACABLE
11*	70928654	1/4"	1	CLIP	CLIP FERMAGLIO	SCHELLE CRAPA RETEN
12*	3619622M1		2	CABLE TIE	ATTACHE CABLE FASCETTA CAVI	KABELBINDER ENLACE DE CABLE
13		50-145 No 1	1	PRESSURE VALVE	VALVE VALVOLA PRESSION	DRUCKVENTIL VALVULA PRESION
14		50-120 No 17	1	HOSE FLEXIBLE	TUYAU FLEXIBLE MANICOTTO FLESS.	GUMMISCHLAUCH MANGUERA FLEX

Lubrication
Lubrification
Schmieren
Lubrificazione
Engrase

50-135

5-BA16-028-B

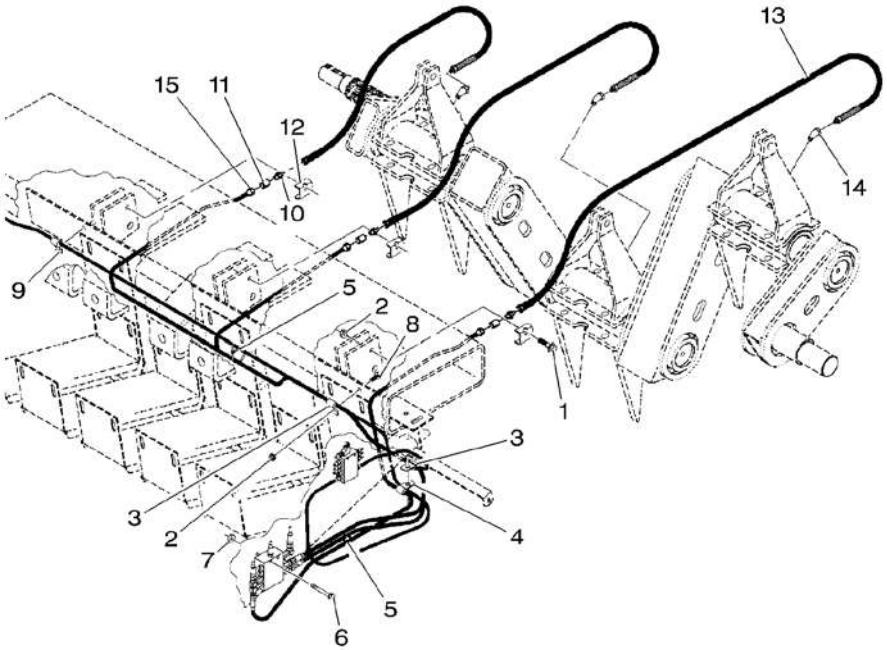

1*	700711084	3/8"-16 X 1-1/2	3	BOLT BOULON BULLONE	MASCH.SCHRAUBE PERNO
2*	***700711238***	3/8"-16	5	NUT ECROU DADO	MUTTER TUERCA
3*	70925619	5/8"	2	CLAMP COLLIER FASCETTA	HALTESCHELLE ABRAZADERA
4*	70926049	3/4"	1	CLAMP COLLIER FASCETTA	HALTESCHELLE ABRAZADERA
5	*70925094*		2	CLAMP COLLIER FASCETTA	HALTESCHELLE ABRAZADERA
6	7701444	No 10-32 X 1-3/4	4	BOLT BOULON BULLONE	MASCH.SCHRAUBE PERNO
7	Y704445	No 10-32	4	NUT ECROU DADO	MUTTER TUERCA
8*	7883382	3/8"-16 X 1	2	SCREW VIS VITE	SCHRAUBE TORNILLO
9*	70928654	1/4"	1	CLIP CLIP FERMAGLIO	SCHELLE CRAPA RETEN
10	***70919171***		3	CONNECTOR BORNE MORSETTO	DOPPELNIPPEL CONECTOR
11	70901763		3	UNION RACCORD RACCORDO	VERSCHRAUBUNG RACOR
12*	700113671P		3	CLAMP COLLIER FASCETTA	HALTESCHELLE ABRAZADERA
13	***700706798***		3	HOSE DURITE TUBO FLESSIBILE	SCHLAUCH FLEXIBLE
14	70920655	1/8"-27 X 45	3	ELBOW COUDE GOMITO	WINKELSTUECK CODO
15*	700706840		3	CONNECTOR BORNE MORSETTO	DOPPELNIPPEL CONECTOR

Lubrication Lubrification Schmieren Lubrificazione Engrase	50-140	Pump Pompe Pumpe Pompa Bomba

5-BA16-029-C

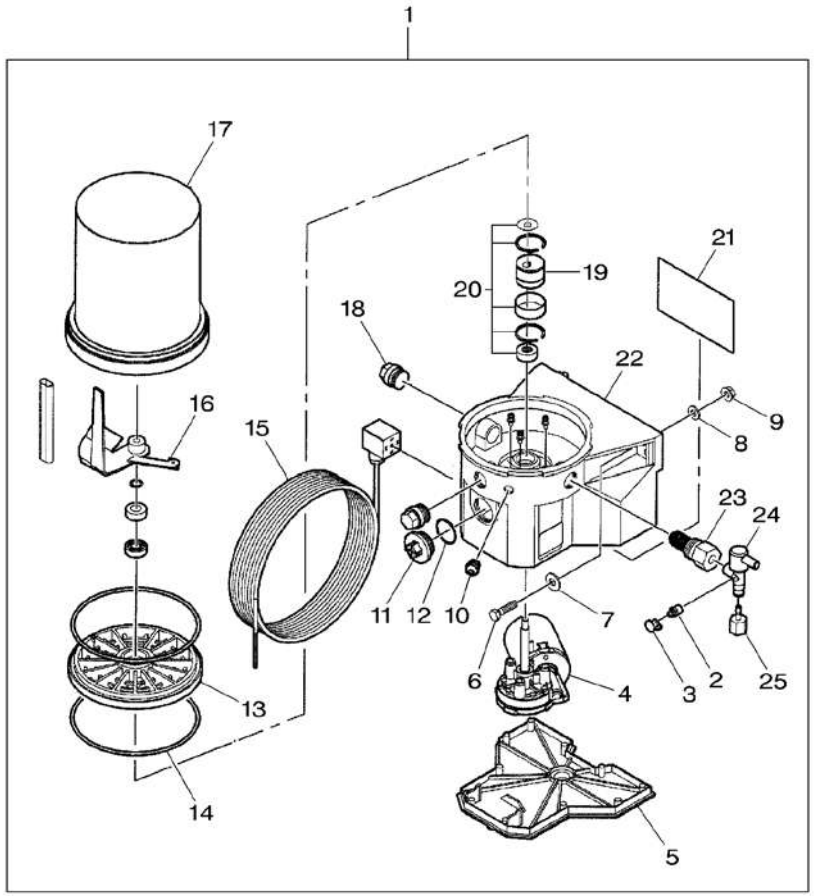

1*	700720087		1	PUMP	POMPE POMPA	PUMPE BOMBA
1*	700725825	[A]	1	PUMP	POMPE POMPA	PUMPE BOMBA
2*	70914465	1 1/8"-27	1	GREASE NIPPLE	GRAISSEUR DROIT INGRASSAT.	FETT-NIPPEL ENGRASADOR
3*	700720101	1	1	CAP	CHAPEAU CAPPELLO	KAPPE TAPA
4*	700724608	1	1	HYDRAULIC MOTOR	MOTEUR HYDRAULIC MOTORE IDRAULICO	HYDROMOTOR MOTOR HIDRAULICO
5*	700724618	1	1	COVER	COUVERCLE COPERCHIO	DECKEL CUBIERTA
6*	700705617	1 5/16"-18 X 1-1/4	2	BOLT	BOULON BULLONE	MASCH.SCHRAUBE PERNO
7*	355618X1	1 5/16"	2	WASHER	RONDELLE RONDELLA	UNTERLEGSCHEIBE ARANDELA
8*	*Y705525*	1 5/16"	2	WASHER	RONDELLE RONDELLA	UNTERLEGSCHEIBE ARANDELA
9*	70931277	1 5/16"-18	2	LOCKNUT	ECROU BLOCAGE AUTOBLOCCANTE	FLACHMUTTER CONTRATUERCA
10*	700724621	1	1	GREASER	GRAISSEUR INGRASSATORE	FETTNIPPEL ENGRASADOR
11*	700720105	1	1	PLUG	BOUCHON TAPPO	VERSCHL.STOPFEN TAPON
12*	700720106	1	1	O RING	JOINT TORIQUE ANELLO OR	O-RING JUNTA TORICA
13*	700724603	1	1	PLATE	PLAQUE PIASTRA	PLATTE PLATO
14*	700724602	1	2	O RING	JOINT TORIQUE ANELLO OR	O-RING JUNTA TORICA
15*	700720103	1	1	HARNESS	FAISCEAU FASCIOCAVI	KABELBAUM MAZO CABLES
15*		[A]		NOT USED	NON UTILISE INUSATO	NICHT VERWENDET NO SE USA
16*	700724606	1	1	PADDLE	PALE PALETTA	PADDEL ESPATULA
17*	700724605	1	1	HYDRAULIC TANK	RESERVOIR HYDR SERBATOIO IDRAUL	HYDRAULIKTANK DEPOSITO HIDRAU
18*	700720104	1	2	PLUG	BOUCHON TAPPO	VERSCHL.STOPFEN TAPON
19*	700724619	1	1	CAM	CAME CAMMA	NOCKEN LEVA
20*	700724607	1	1	KIT, JOINT	JEU JOINTS KIT GIUNTO	DICHTUNGSSATZ JUEGO JUNTAS
21*	700724601	1	1	DECAL	DECALCOMANIE DECALCOMANIA	AUFKLEBER CALCOMANIA
21*		[A]		NOT USED	NON UTILISE INUSATO	NICHT VERWENDET NO SE USA
22*	700724620	1	1	BODY PUMP	CORPS DE POMPE CORPO POMPA	PUMPENGEHAEUSE CUERPO DE BOMBA
23*	700720108	1	1	ELEMENT	ELEMENT ELEMENTO	ELEMENT ELEMENTO

Lubrication Lubrification Schmieren Lubrificazione Engrase	50-140	Pump Pompe Pumpe Pompa Bomba

5-BA16-029-C

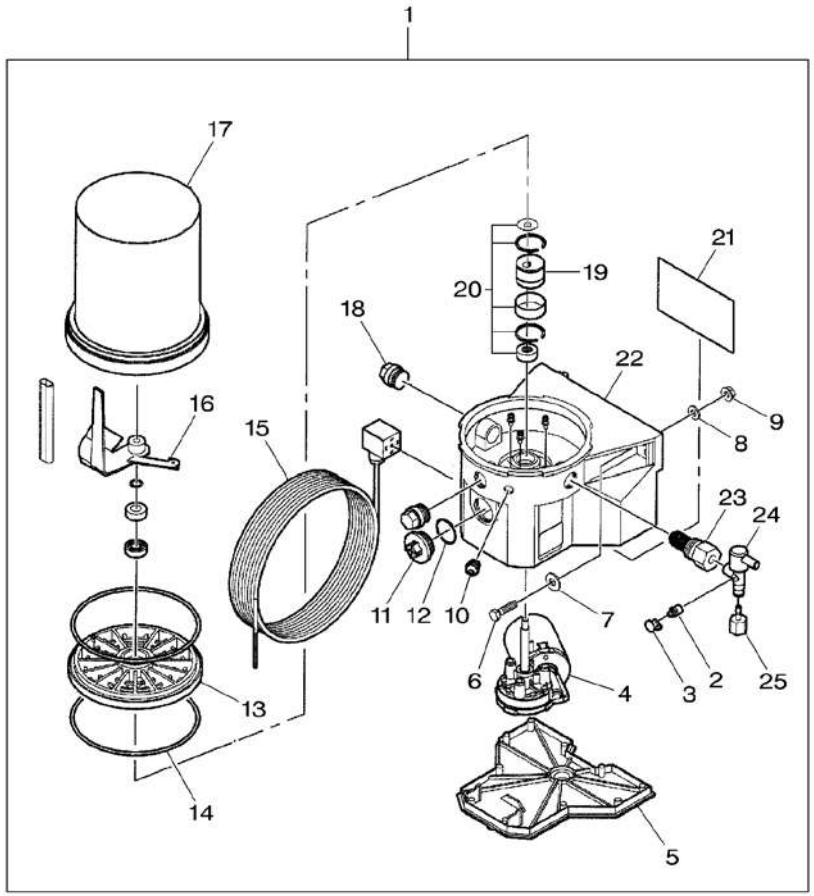

24*	700720099	1	1	RELIEF VALVE	VALVE SECURITE VALVOLA LIMITATR	UEBERDR.VENTIL VALV.DESCARG
25*	700720100	1	1	ADAPTOR	ADAPTATEUR ADATTATORE	REDUZIERNIPPEL ADAPTADOR
26*	700724610	1 [B] 8 Amp	1	FUSE	FUSIBLE FUSIBILE	SICHERUNG FUSIBLE
27*	700724611	1 [B]	1	FUSE HOLDER	PORTE FUSIBLE PORTA FUSIBILI	SICHERUNGSHALTER PORTAFUSIBLE
28*	700724612	1 [B]	1	SWITCH	INTERRUPTEUR INTERRUTTORE	SCHALTER INTERRUPTOR

[A] WITH ELECTRONIC CONTROL
AVEC CONTROLE ELECTRONIQUE
MIT ELEKTRONISCHE STEUERUNG
CON CONTROLLO ELETTRONICO
CON CONTROL ELECTRONICO

[B] NOT ILLUSTRATED
NON ILLUSTRE
NICHT ABGEBILDET
NO ILLUSTRADO
NO ILLUSTRADED

Lubrication
Lubrification
Schmieren
Lubrificazione
Engrase

50-145

Rear Valve – Up To H.P 74100
Valve Arriere – Jusqu'Au H.P 74100
Hinten Ventil – Bis H.P 74100
Posteriore Valvola – Fino Alla H.P 74100
Trasero Valvula – Hasta H.P 74100

5-BA16-030-B

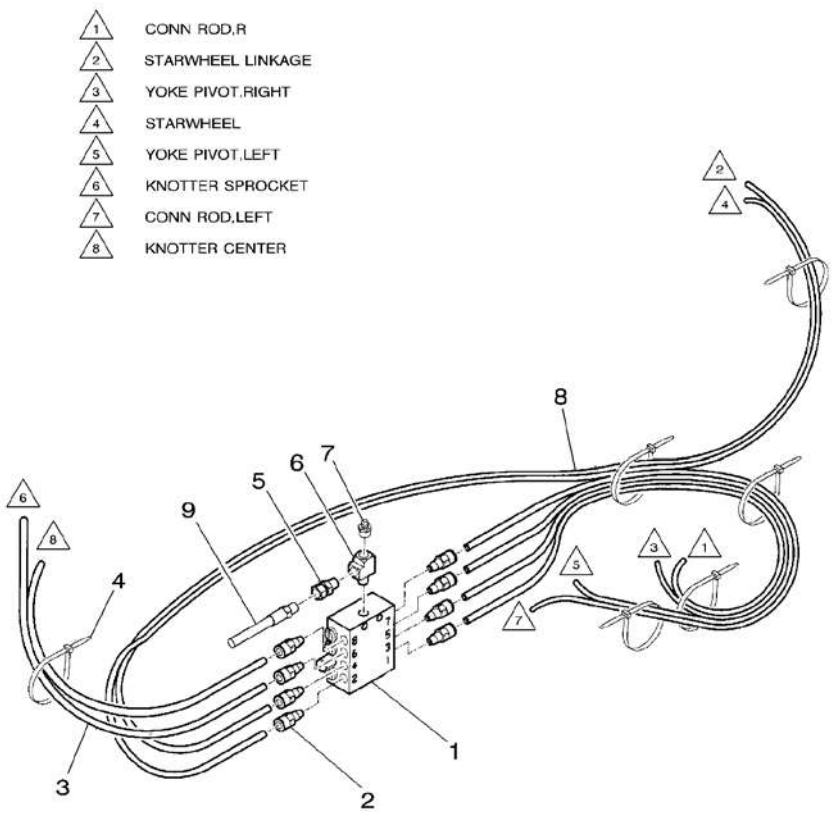

1	700706837		1 VALVE	SOUPAPE VALVOLA	VENTIL VALVULA
2	700714008		8 FITTING	MONTAGE RACCORDO.	ANSCHLVERSCHRBG. ACCESORIO.
3	700720089	[A]	X HARNESS	FAISCEAU FASCIOCAVI	KABELBAUM MAZO CABLES
4	*70925094*		6 CLAMP	COLLIER FASCETTA	HALTESCHELLE ABRAZADERA
5	700720091		1 CONNECTOR	BORNE MORSETTO	DOPPELNIPPEL CONECTOR
6	700720092		1 TEEPIECE	TE RACCORDO A T	T-STUECK PIEZA EN T
7	70914465	1/8"-27	1 GREASE NIPPLE	GRAISSEUR DROIT INGRASSAT.	FETT-NIPPEL ENGRASADOR
8*	700720088	[A]	X HARNESS	FAISCEAU FASCIOCAVI	KABELBAUM MAZO CABLES
9*	700720081	50-165 No 13	1 HOSE	DURITE TUBO FLESSIBILE	SCHLAUCH FLEXIBLE

[A] CUT TO REQUIRED LENGTH
COUPER A LA LONGEUR DESIREE
BENOETIGTE LAENGE ABSCHNEIDEN
TAGLIARE A LUNGHEZZA RICHIESTA
CORTAR A LA LONGITUD NECESARIA

Lubrication Lubrification Schmieren Lubrificazione Engrase	50-150	Rear Valve – From H.P 74101 Valve Arriere – A Partir Du H.P 74101 Hinten Ventil – Ab H.P 74101 Posteriore Valvola – Dalla H.P 74101 Trasero Valvula – Despues H.P 74101

5-BA16-076-A

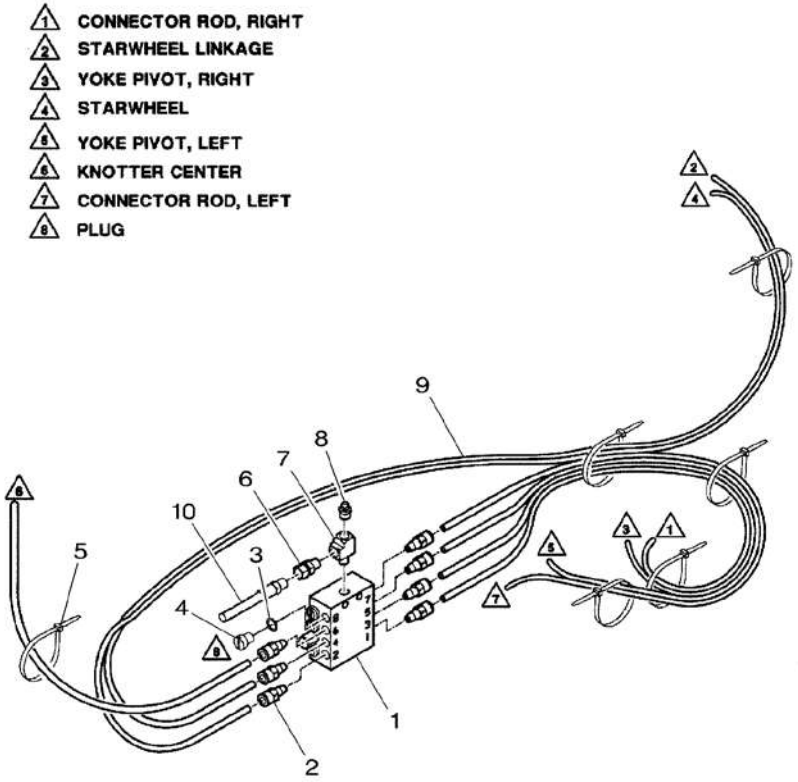

1 * 700706837		1	VALVE	SOUPAPE VALVOLA	VENTIL VALVULA
2 * 700714008		7	FITTING	MONTAGE RACCORDO.	ANSCHLVERSCHRBG. ACCESORIO.
3 * 700706839		1	GASKET	JOINT GUARNIZIONE	DICHTSCHEIBE EMPAQUETADURA.
4 * 700706841		1	PLUG	BOUCHON TAPPO	VERSCHL.STOPFEN TAPON
5 * *70925094*		6	CLAMP	COLLIER FASCETTA	HALTESCHELLE ABRAZADERA
6 * 700720091		1	CONNECTOR	BORNE MORSETTO	DOPPELNIPPEL CONECTOR
7 * 700720092		1	TEEPIECE	TE RACCORDO A T	T-STUECK PIEZA EN T
8 * 70914465	1/8"-27	1	GREASE NIPPLE	GRAISSEUR DROIT INGRASSAT.	FETT-NIPPEL ENGRASADOR
9 * 700113862		1	HOSE	DURITE TUBO FLESSIBILE	SCHLAUCH FLEXIBLE
10 * 700720081	50-165 No 13	1	HOSE	DURITE TUBO FLESSIBILE	SCHLAUCH FLEXIBLE

Lubrication Lubrification Schmieren Lubrificazione Engrase	50-155	Front Valve – Up To H.P 74100 Valve Avant – Jusqu'Au H.P 74100 Vorne Ventil – Bis H.P 74100 Anteriore Valvola – Fino Alla H.P 74100 Delantero Valvula – Hasta H.P 74100

5-BA16-031-A

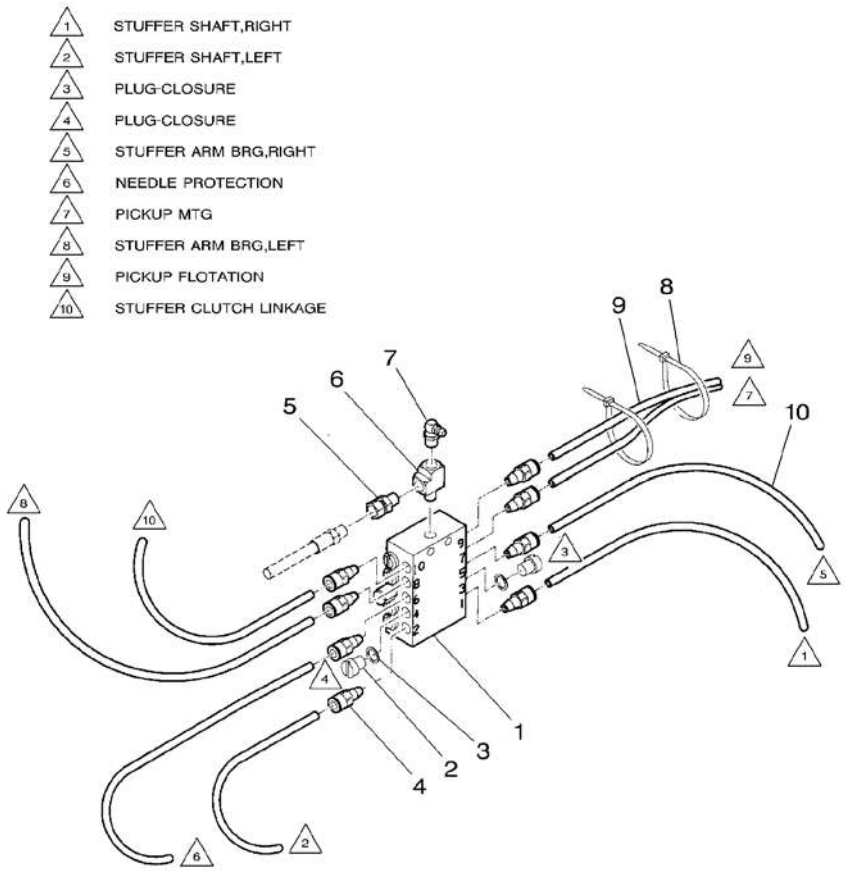

1	700720097		1	PRESSURE VALVE	VALVE VALVOLA PRESSION	DRUCKVENTIL VALVULA PRESION
2	700706841		2	PLUG	BOUCHON TAPPO	VERSCHL.STOPFEN TAPON
3	700706839		2	GASKET	JOINT GUARNIZIONE	DICHTSCHEIBE EMPAQUETADURA.
4	700714008		8	FITTING	MONTAGE RACCORDO.	ANSCHLVERSCHRBG. ACCESORIO.
5	700720091		1	CONNECTOR	BORNE MORSETTO	DOPPELNIPPEL CONECTOR
6	700720092		1	TEEPIECE	TE RACCORDO A T	T-STUECK PIEZA EN T
7	***70915276***	1/8"-27 X 90	1	NIPPLE	GRAISSEUR COUDE NIPPLO	NIPPEL NIPLE
8	*70925094*		2	CLAMP	COLLIER FASCETTA	HALTESCHELLE ABRAZADERA
9★	700720093	[A]	1	HOSE	DURITE TUBO FLESSIBILE	SCHLAUCH FLEXIBLE
10	700113862		1	HOSE	DURITE TUBO FLESSIBILE	SCHLAUCH FLEXIBLE

[A] WITHOUT CUTTERS
SANS COUTEAUX
OHNE MESSERKLINGE
SINZA LAME
SIN CUCHILLOS

Lubrication Lubrification Schmieren Lubrificazione Engrase	50-160	Front Valve – From H.P 74101 Valve Avant – A Partir Du H.P 74101 Vorne Ventil – Ab H.P 74101 Anteriore Valvola – Dalla H.P 74101 Delantero Valvula – Despues H.P 74101

5-BA16-077-A

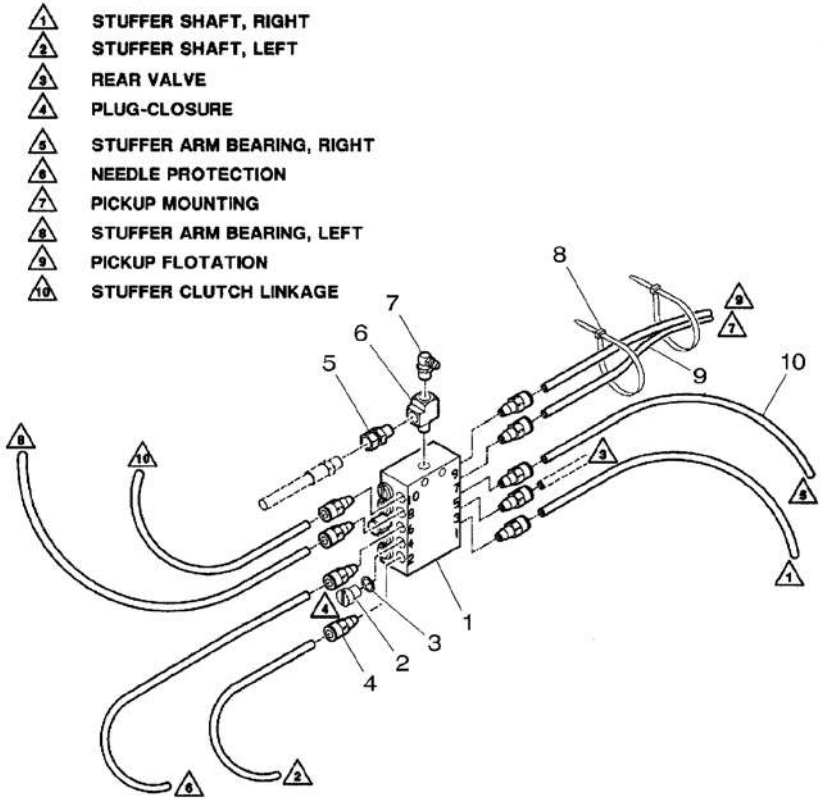

1*	700720097		1 PRESSURE VALVE	VALVE VALVOLA PRESSION	DRUCKVENTIL VALVULA PRESION
2*	700706841		1 PLUG	BOUCHON TAPPO	VERSCHL.STOPFEN TAPON
3*	700706839		2 GASKET	JOINT GUARNIZIONE	DICHTSCHEIBE EMPAQUETADURA.
4*	700714008		9 FITTING	MONTAGE RACCORDO.	ANSCHLVERSCHRBG. ACCESORIO.
5*	700720091		1 CONNECTOR	BORNE MORSETTO	DOPPELNIPPEL CONECTOR
6*	700720092		1 TEEPIECE	TE RACCORDO A T	T-STUECK PIEZA EN T
7*	*70915276*	1/8"-27 X 90	1 NIPPLE	GRAISSEUR COUDE NIPPLO	NIPPEL NIPLE
8*	*70925094*		2 CLAMP	COLLIER FASCETTA	HALTESCHELLE ABRAZADERA
9*	700720093		1 HOSE	DURITE TUBO FLESSIBILE	SCHLAUCH FLEXIBLE
10*	700113862		1 HOSE	DURITE TUBO FLESSIBILE	SCHLAUCH FLEXIBLE

Lubrication
Lubrification
Schmieren
Lubrificazione
Engrase

50-165

Primary Valve – Up To H.P 74100
Premiere Valve – Jusqu'Au H.P 74100
Primaereventil – Bis H.P 74100
Precedente Valvola – Fino Alla H.P 74100
Original Valvula – Hasta H.P 74100

5-BA16-032-A

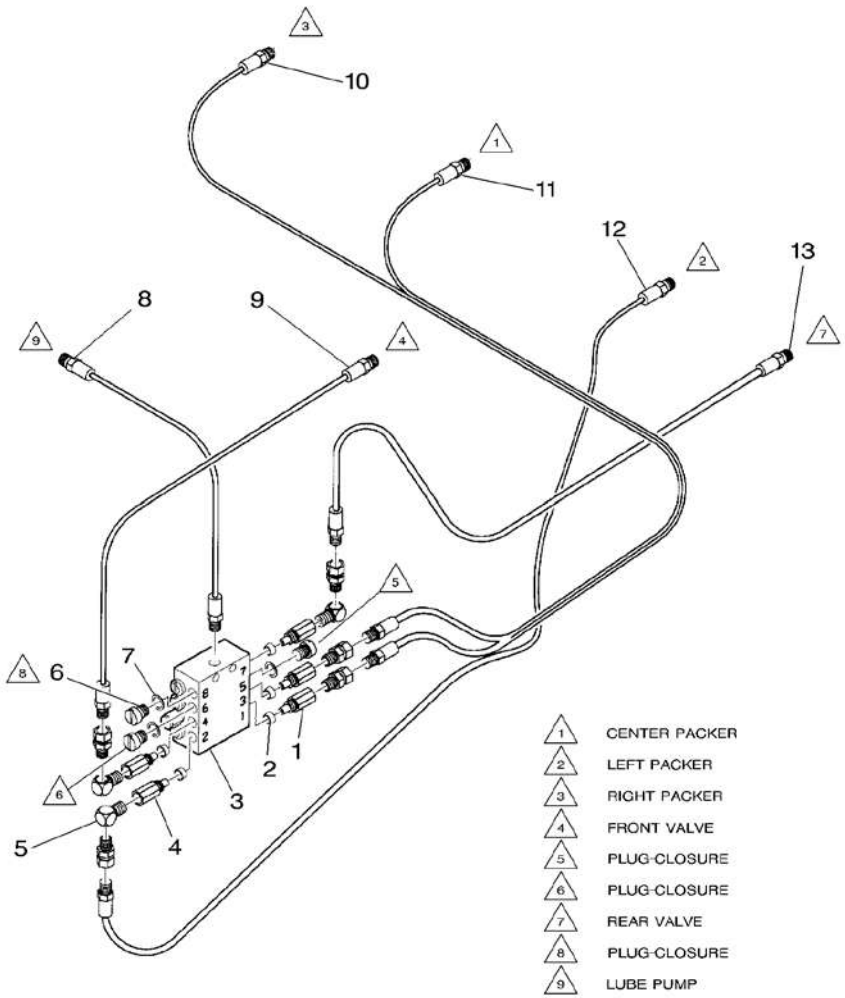

1	700720091	5	CONNECTOR	BORNE MORSETTO	DOPPELNIPPEL CONECTOR
2	700706678	5	OLIVE	OLIVE OLIVA	SCHNEIDRING OLIVA
3	700706837	1	VALVE	SOUPAPE VALVOLA	VENTIL VALVULA
4	700720095	5	VALVE CHECK	VALVE CONTROLE VALVOLA RITEGNO	PRUEFVENTIL VALVULA D CIERRE
5	700718962	1	ELBOW	COUDE GOMITO	WINKELSTUECK CODO
5	700718963	2	ELBOW	COUDE GOMITO	WINKELSTUECK CODO
6	700706841	3	PLUG	BOUCHON TAPPO	VERSCHL.STOPFEN TAPON
7	700706839	3	GASKET	JOINT GUARNIZIONE	DICHTSCHEIBE EMPAQUETADURA.
8	700720077	1	HOSE	DURITE TUBO FLESSIBILE	SCHLAUCH FLEXIBLE
9	700720079	1	HOSE	DURITE TUBO FLESSIBILE	SCHLAUCH FLEXIBLE
10	700720082	1	HOSE	DURITE TUBO FLESSIBILE	SCHLAUCH FLEXIBLE
11	700720083	1	HOSE	DURITE TUBO FLESSIBILE	SCHLAUCH FLEXIBLE
12	700720080	1	HOSE	DURITE TUBO FLESSIBILE	SCHLAUCH FLEXIBLE
13	700720081	1	HOSE	DURITE TUBO FLESSIBILE	SCHLAUCH FLEXIBLE

Lubrication Lubrification Schmieren Lubrificazione Engrase	50-170	Primary Valve – From H.P 74101 Premiere Valve – A Partir Du H.P 74101 Primaereventil – Ab H.P 74101 Precedente Valvola – Dalla H.P 74101 Original Valvula – Despues H.P 74101

5-BA16-078-A

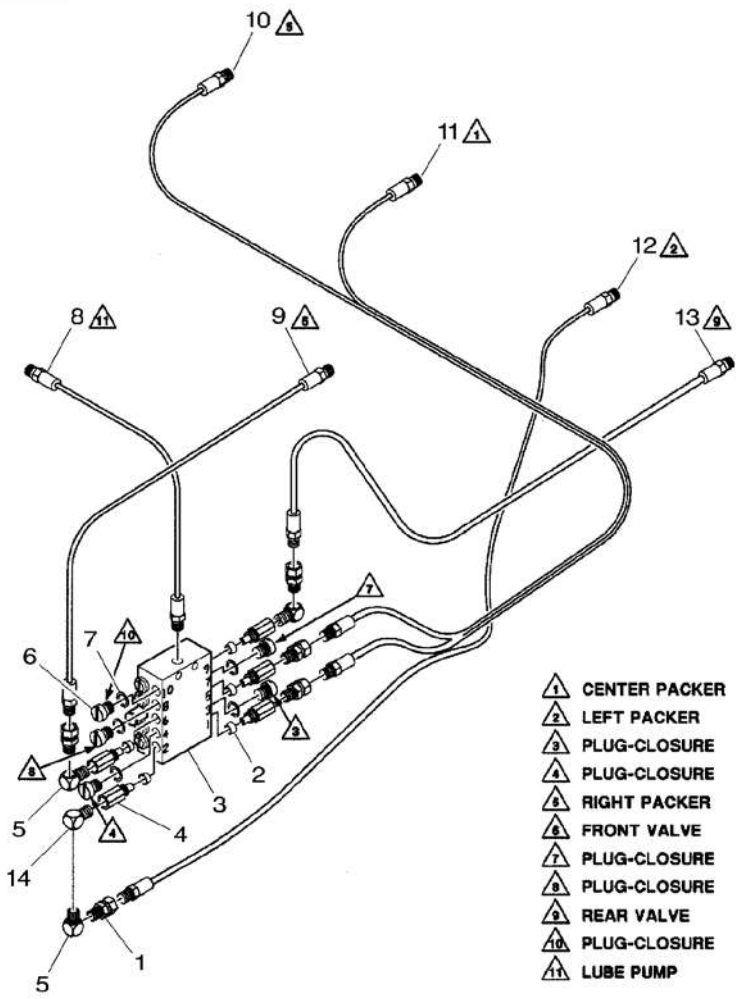

1*	700720091	5 CONNECTOR	BORNE MORSETTO	DOPPELNIPPEL CONECTOR
2*	700706678	5 OLIVE	OLIVE OLIVA	SCHNEIDRING OLIVA
3*	700720097	1 PRESSURE VALVE	VALVE VALVOLA PRESSION	DRUCKVENTIL VALVULA PRESION
4*	700720095	5 VALVE CHECK	VALVE CONTROLE VALVOLA RITEGNO	PRUEFVENTIL VALVULA D CIERRE
5*	700718962	2 ELBOW	COUDE GOMITO	WINKELSTUECK CODO
6*	700706841	5 PLUG	BOUCHON TAPPO	VERSCHL.STOPFEN TAPON
7*	700706839	5 GASKET	JOINT GUARNIZIONE	DICHTSCHEIBE EMPAQUETADURA.
8*	700720077	1 HOSE	DURITE TUBO FLESSIBILE	SCHLAUCH FLEXIBLE
9*	700720079	1 HOSE	DURITE TUBO FLESSIBILE	SCHLAUCH FLEXIBLE
10*	700720082	1 HOSE	DURITE TUBO FLESSIBILE	SCHLAUCH FLEXIBLE
11*	700720083	1 HOSE	DURITE TUBO FLESSIBILE	SCHLAUCH FLEXIBLE
12*	700720080	1 HOSE	DURITE TUBO FLESSIBILE	SCHLAUCH FLEXIBLE
13*	700720081	1 HOSE	DURITE TUBO FLESSIBILE	SCHLAUCH FLEXIBLE
14*	700718963	2 ELBOW	COUDE GOMITO	WINKELSTUECK CODO

Lubrication Lubrification Schmieren Lubrificazione Engrase	50-175	Kit Kit Kit Kit Kit

5-BA16-070-A

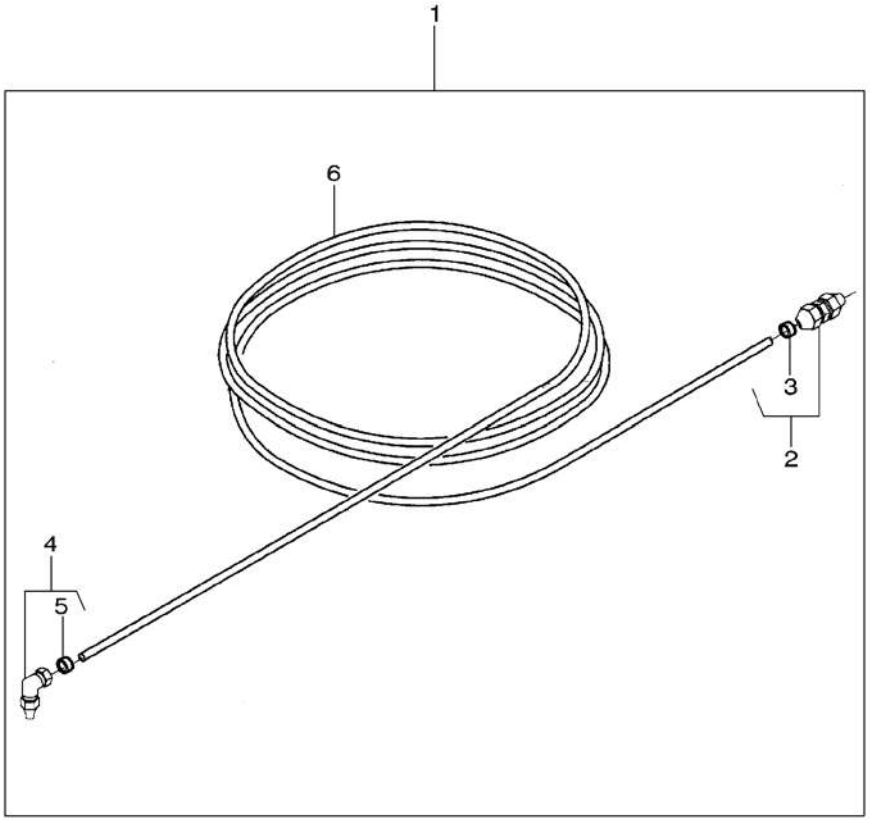

1 *	***700720098***		**1**	KIT	JEU KIT	SATZ JUEGO
2 *	***700706683***	1	**6**	CONNECTOR	BORNE MORSETTO	DOPPELNIPPEL CONECTOR
3 *	700706679	2	**1**	SLEEVE	MANCHON MANICOTTO	HUELSE MANCHA
4 *	***700706682***	1	**11**	ELBOW	COUDE GOMITO	WINKELSTUECK CODO
5 *	700706679	4	**1**	SLEEVE	MANCHON MANICOTTO	HUELSE MANCHA
6 *	700113862	1	**1**	HOSE	DURITE TUBO FLESSIBILE	SCHLAUCH FLEXIBLE

Lubrication Lubrification Schmieren Lubrificazione Engrase	50-180	Kit Kit Kit Kit Kit

5-BA16-009-C

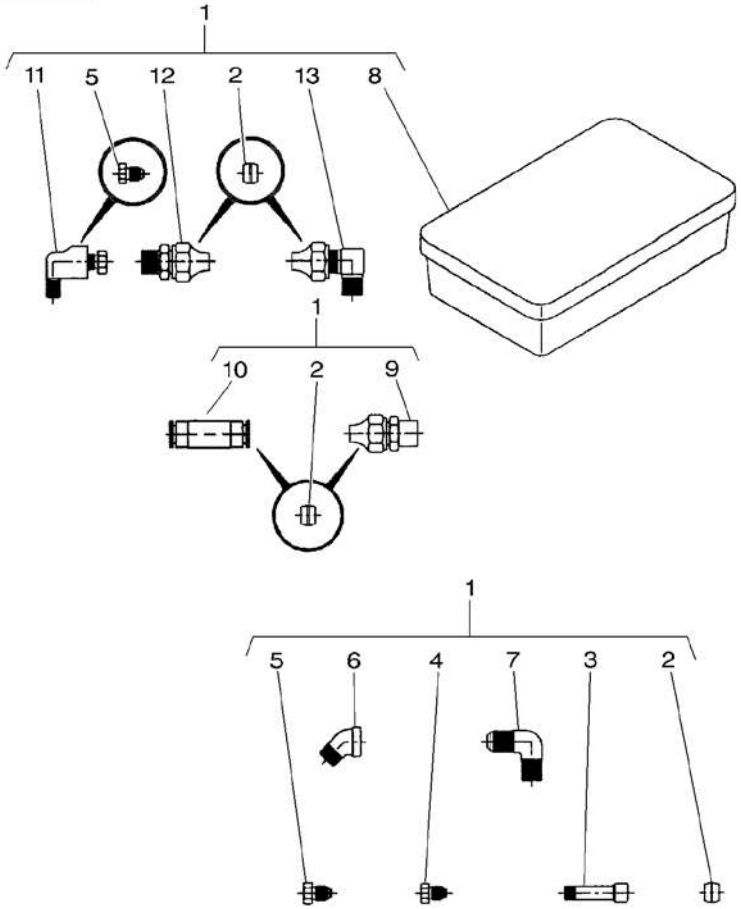

1	***700114079***		**1**	BOX	BOITE SCATOLA	SCHACHTEL CAJA
2	700706679	1	**4**	SLEEVE	MANCHON MANICOTTO	HUELSE MANCHA
3	700706280	1	**1**	EXTENSION	RALLONGE PROLUNGA	VERLAENGERUNG EXTENSION
4	700706277	1	**4**	NUT	ECROU DADO	MUTTER TUERCA
5*	700706898	1	**6**	NUT	ECROU DADO	MUTTER TUERCA
6	Y746461	1	**1**	ELBOW	COUDE GOMITO	WINKELSTUECK CODO
7	70919173	1	**1**	ELBOW	COUDE GOMITO	WINKELSTUECK CODO
8	700707474	1	**1**	BOX	BOITE SCATOLA	SCHACHTEL CAJA
9	700706840	1	**1**	CONNECTOR	BORNE MORSETTO	DOPPELNIPPEL CONECTOR
10	700706843	1	**2**	UNION	RACCORD RACCORDO	VERSCHRAUBUNG RACOR
11	792259	1	**2**	ELBOW	COUDE GOMITO	WINKELSTUECK CODO
12	***700706683***	1	**2**	CONNECTOR	BORNE MORSETTO	DOPPELNIPPEL CONECTOR
13	***700706682***	1	**2**	ELBOW	COUDE GOMITO	WINKELSTUECK CODO

Lubrication Lubrification Schmieren Lubrificazione Engrase	50-185	Tank Reservoir Behalter Serbatoio Deposito

5-BA16-034-B

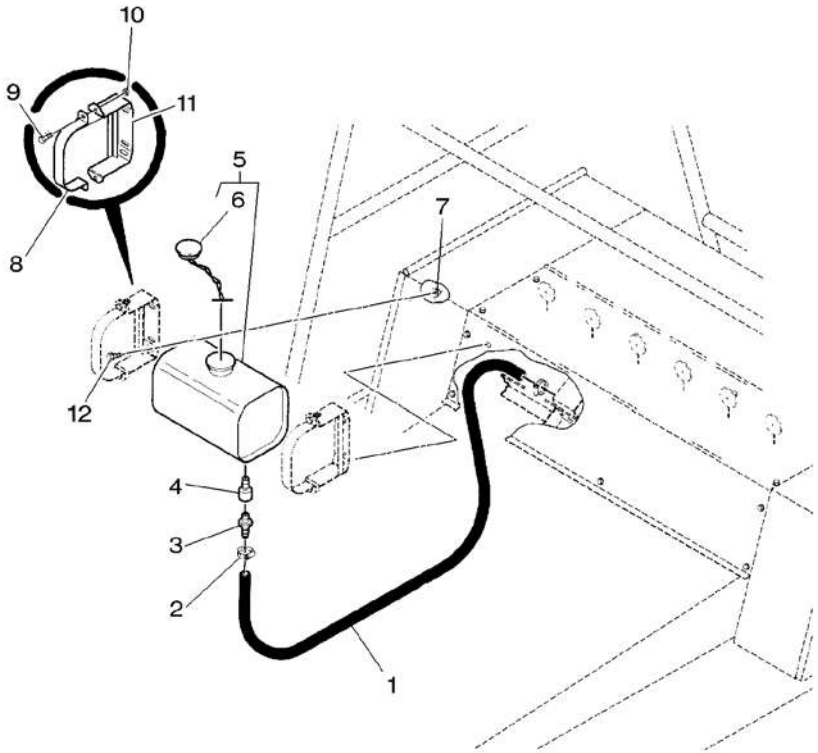

1*	700706284		1 HOSE	DURITE TUBO FLESSIBILE	SCHLAUCH FLEXIBLE
2	7020019		2 CLAMP	COLLIER FASCETTA	HALTESCHELLE ABRAZADERA
3	846915		1 INSERT	DOUILLE INSERTO	EINSATZSTUECK INSERCION
4	700706288		1 ADAPTOR	ADAPTATEUR ADATTATORE	REDUZIERNIPPEL ADAPTADOR
5	700715415		1 OIL TANK	RESERVOIR HUILE SERBATOIO OLIO	OELBEHAELTER DEPOSITO ACEITE
6	700715459	5	1 CAP	CHAPEAU CAPPELLO	KAPPE TAPA
7	***704247***	3/8"-16	2 LOCKNUT	ECROU BLOCAGE AUTOBLOCCANTE	FLACHMUTTER CONTRATUERCA
8*	700129435P		2 STRAP	PATTE CORREGGIA	LASCHE FAJA
9*	353693X1	3/8"-16 X 1-1/4	4 SCREW UNC	VIS UNC VITE UNC	SCHRAUBE UNC TORNILLO UNC
10	7704141	3/8"-16	4 LOCKNUT	ECROU BLOCAGE AUTOBLOCCANTE	FLACHMUTTER CONTRATUERCA
11*	700129433B		2 SUPPORT	SUPPORT SUPPORTO	LAGERUNG DISPOS.DE SOSTEN
12*	7703424	3/8"-16 X 1	2 SCREW	VIS VITE	SCHRAUBE TORNILLO

Lubrication Lubrification Schmieren Lubrificazione Engrase	50-190	Grease Pump Pompe A Graisse Schmierpumpe Ingrassatore Inyector De Engrase

5-BA16-072-B

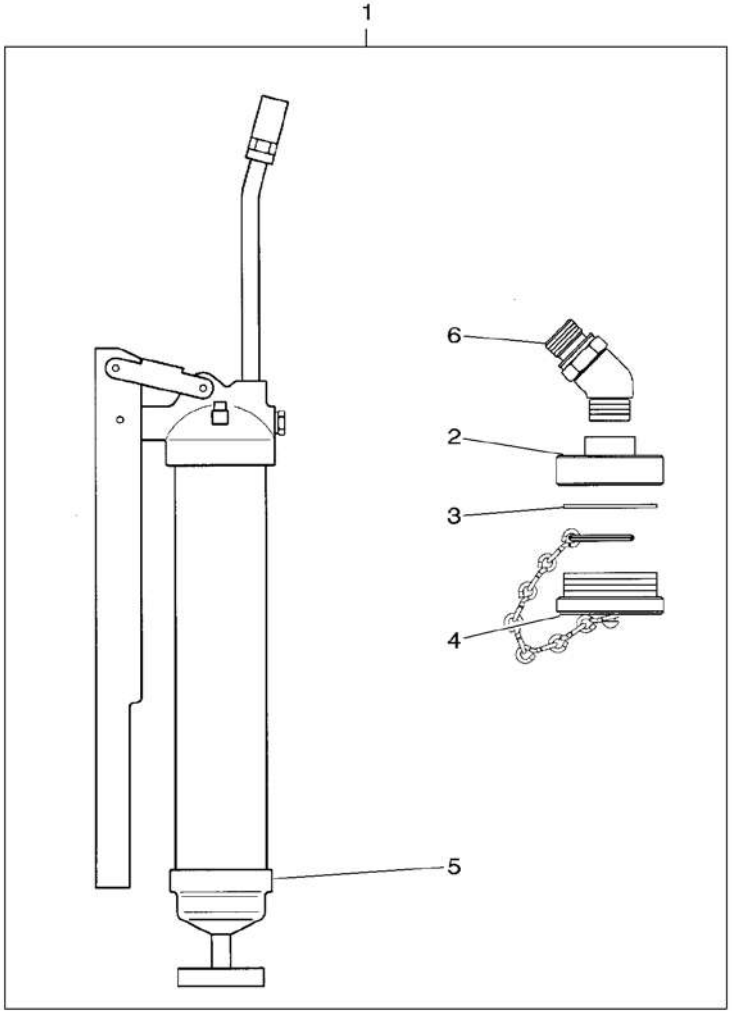

1*	700726183		1	KIT	JEU KIT SATZ JUEGO
2*	700726248	1	1	REDUCER	REDUCTEUR RIDUTTORE REDUZIERSTUECK REDUCTOR
3*	700726249	1	1	GASKET	JOINT GUARNIZIONE DICHTSCHEIBE EMPAQUETADURA.
4*	700726250	1	1	CAP	CHAPEAU CAPPELLO KAPPE TAPA
5*	3405930M1	1	1	GREASE GUN	POMPE A GRAISSE SIRINGA FETTPRESSE BOMBA DE ENGRASE
6*	700726247	1	1	ELBOW	COUDE GOMITO WINKELSTUECK CODO

60

Bale Tensioner
Chambre De Compression
Kanalverstellung
Tenditore Balle
Tensor Paca

60-5

5-BA41-009-B

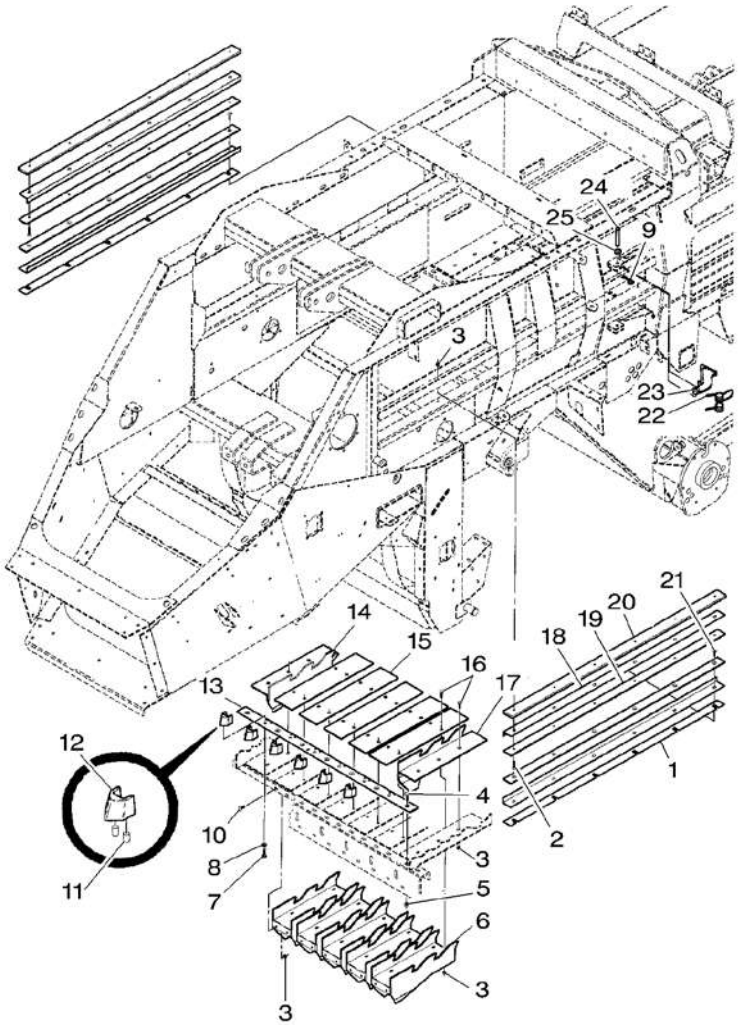

1*	700137594P		2	SHIM	CALE REGLAGE SPESSORE	EINSTELLBLECH CALCE
2*	8701377	3/8"–16 X 1–3/4	12	BOLT	BOULON BULLONE	MASCH.SCHRAUBE PERNO
3*	***700711238***	3/8"–16	40	NUT	ECROU DADO	MUTTER TUERCA
4*	707448	1/2"–13 X 1–1/2	7	BOLT	BOULON BULLONE	MASCH.SCHRAUBE PERNO
5*	700714586	1/2"–13	7	NUT	ECROU DADO	MUTTER TUERCA
6*	700129640P		5	DOG	CHIEN CANE	KLAUE PRISIONERO
7*	700710984	1/2"–13 X 1–1/4	6	SCREW	VIS VITE	SCHRAUBE TORNILLO
8*	***705541***	1/2"	6	FLAT WASHERS	RONDELLES PLATES RONDELLE PIANE	UNTERLEGSCHEIBEN ARANDELAS PLANAS
9*	98–2107		4	PIN	GOUPILLE PERNO	BOLZEN PASADOR
10*	70923220	3/8"–16 X 1–1/4	10	BOLT	BOULON BULLONE	MASCH.SCHRAUBE PERNO
11*	63776	3/8" X 3/4	12	PIN	GOUPILLE PERNO	BOLZEN PASADOR
12*	***700129647P***		6	PROTECTOR	PROTECTEUR PROTETTORE	SCHUTZ PROTECTOR
13	700715900		1	KNIFE	COUTEAU COLTELLO	MESSER CUCHILLA
14*	700129646P	▶	1	DOG	CHIEN CANE	KLAUE PRISIONERO
15*	700129586P		5	PLATE	PLAQUE PIASTRA	PLATTE PLATO
16*	707018	3/8"–16 X 1–1/4	6	SCREW	VIS VITE	SCHRAUBE TORNILLO
17*	700129645P	◀	1	DOG	CHIEN CANE	KLAUE PRISIONERO
18*	700137581P		4	ANGLE	EQUERRE ANGOLO	WINKEL ANGULO
19*	700715957P		4	RAIL	RAIL SBARRA	SCHIENE RIEL
20*	700137582P		2	RAIL	RAIL SBARRA	SCHIENE RIEL
21*	***70934842***	3/8"–16 X 1–1/4	12	BOLT	BOULON BULLONE	MASCH.SCHRAUBE PERNO
22	***700706376***		4	SPRING	RESSORT MOLLA	FEDER MUELLE
23*	***700137654P***		4	DOG	CHIEN CANE	KLAUE PRISIONERO
24*	***700706685***	5/8" X 3–3/4	4	CLEVIS PIN	AXE PERNO D'ATTACCO	SPLINTBOLZEN BULON CILINDRICO
25*	Y705582	5/8"	4	WASHER	RONDELLE RONDELLA	UNTERLEGSCHEIBE ARANDELA

Bale Tensioner
Chambre De Compression
Kanalverstellung
Tenditore Balle
Tensor Paca

60-10

Door
Porte
Tuer
Porta
Puerta

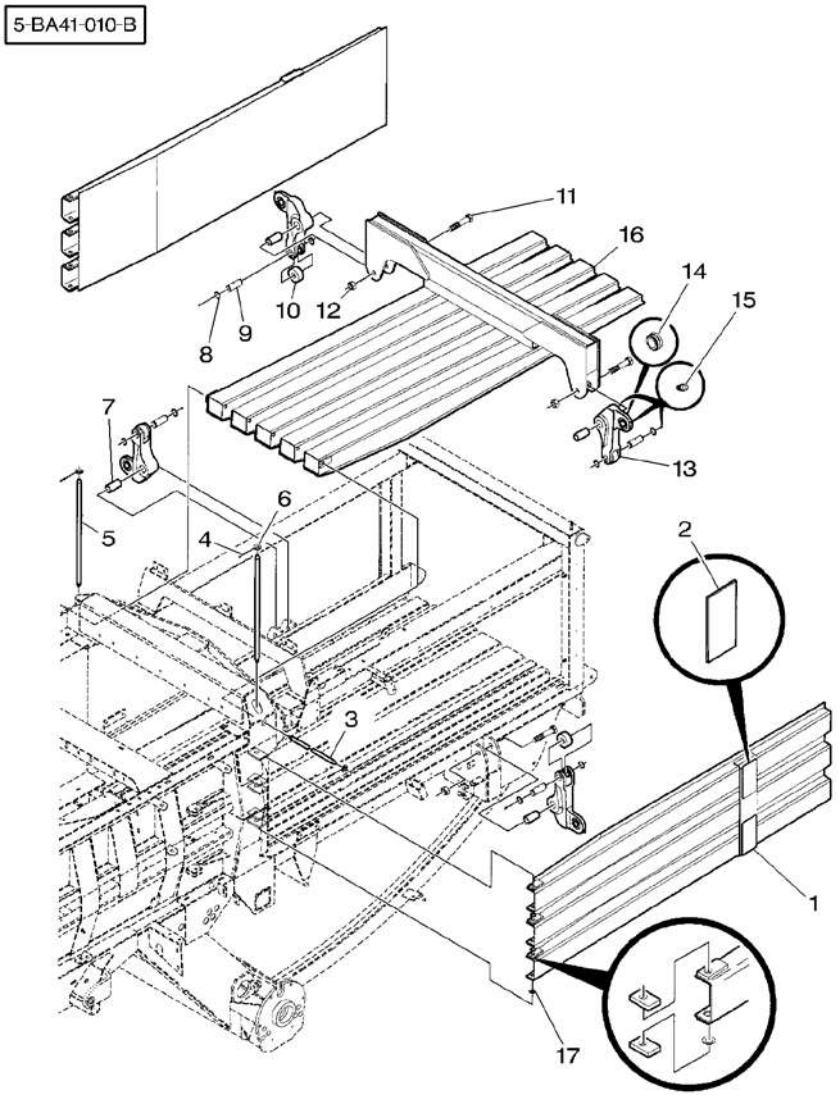

1*	700123700P		2	DOOR	PORTIERE PORTA	TUER PUERTA
2*	700123706P	1	1	PLATE	PLAQUE PIASTRA	PLATTE PLATO
3*	6529432		1	PIN	GOUPILLE PERNO	BOLZEN PASADOR
4	354089X1	1/4" X 1-1/4	6	PIN	GOUPILLE PERNO	BOLZEN PASADOR
5*	700123709P		2	PIN	GOUPILLE PERNO	BOLZEN PASADOR
6*	Y705566	3/4"	6	WASHER	RONDELLE RONDELLA	UNTERLEGSCHEIBE ARANDELA
7*	6529408		4	BUSH	BAGUE BOCCOLA	BUCHSE CASQUILLO
8	***70928720***		8	RING	ANNEAU ANELLO	RING ARO
9	700113615		4	PIN	GOUPILLE PERNO	BOLZEN PASADOR
10	700113614		4	ROLLER	GALET RULLO	ROLLE RODILLO
11*	700710312	1/8" X 5-1/2	4	BOLT	BOULON BULLONE	MASCH.SCHRAUBE PERNO
12*	70931390	1/8"	4	NUT	ECROU DADO	MUTTER TUERCA
13*	700137425P		4	ARM	BRAS BRACCIO	ARM BRAZO
14*	***70936273***	13	1	BUSH	BAGUE BOCCOLA	BUCHSE CASQUILLO
15*	***70923219***	13	2	GREASER	GRAISSEUR INGRASSATORE	FETTNIPPEL ENGRASADOR
16*	700137423P		1	DOOR	PORTIERE PORTA	TUER PUERTA
17*	***52761***	3/4" X 14	6	BUSH	BAGUE BOCCOLA	BUCHSE CASQUILLO

Shields
Garants
Schutzbleche
Difese
Proteccionee

60-15

Front
Avant
Vorne
Anteriore
Delantero

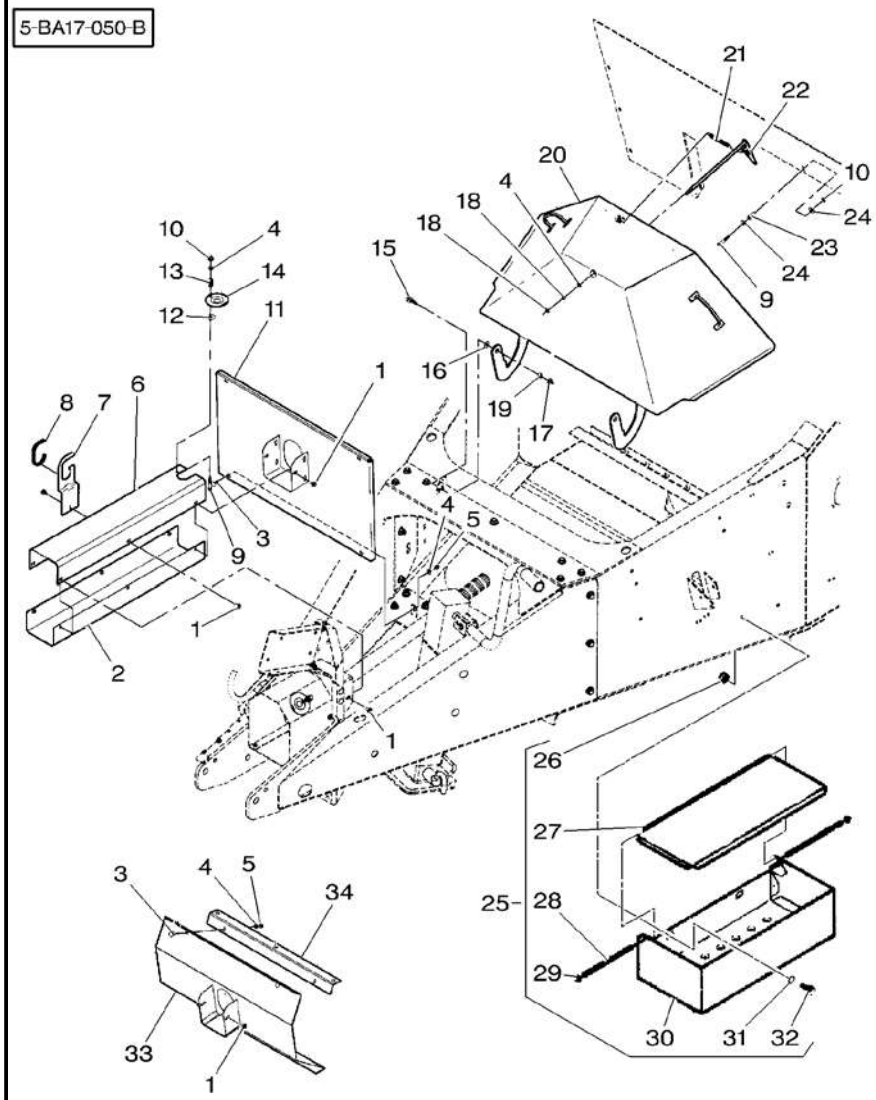

1 ✱	7883317	5/16"–18 X 1/2	6	SCREW	VIS VITE	SCHRAUBE TORNILLO
2 ✱	700137982P		1	SHIELD	TOLE RIPARO	SCHILD BLINDAJE
2 ✱	700155840P	[A]	1	SHIELD	TOLE RIPARO	SCHILD BLINDAJE
3 ✱	364352X1	5/16"–18 X 3/4	8	BOLT UNC	BOULON UNC BULLONE UNC	MASCH.SCHRB.UNC PERNO UNC
4 ✱	*Y705525*	5/16"	6	WASHER	RONDELLE RONDELLA	UNTERLEGSCHEIBE ARANDELA
5 ✱	70931277	5/16"–18	4	LOCKNUT	ECROU BLOCAGE AUTOBLOCCANTE	FLACHMUTTER CONTRATUERCA
6 ✱	700137906P		1	SHIELD	TOLE RIPARO	SCHILD BLINDAJE
6 ✱	700155841P	[A]	1	SHIELD	TOLE RIPARO	SCHILD BLINDAJE
7 ✱	700137964P		1	HANDLE	POIGNEE MANIGLIA	HANDGRIFF MANETA
8	6612030		1	TRIM	ENJOLIVEUR FINITURA	ZIERLEISTE TAPIZADO
9 ✱	353685X1	5/16"–18 X 1–3/4	2	BOLT UNC	BOULON UNC BULLONE UNC	MASCH.SCHRB.UNC PERNO UNC
10 ✱	Y704726	5/16"–18	2	TOP LOCKNUT	ECROU FREIN DADO DI TESTA	SELBSTS.MUTTER CONTRATUERCA SUP
11 ✱	700137985P	➡ HL 74216	1	SHIELD	TOLE RIPARO	SCHILD BLINDAJE
12	700709866		1	WASHER	RONDELLE RONDELLA	UNTERLEGSCHEIBE ARANDELA
13	758342		1	COMP.SPRING	RESSORT DE COMPR MOLLA COMPOSTA	DRUCKFEDER MUELLE COMPRESOR
14 ✱	700137803P		1	SHIELD	TOLE RIPARO	SCHILD BLINDAJE
15 ✱	7883408	3/8"–16 X 1–1/4	2	SCREW	VIS VITE	SCHRAUBE TORNILLO
16 ✱	*Y705533*	3/8"	2	WASHER	RONDELLE RONDELLA	UNTERLEGSCHEIBE ARANDELA
17 ✱	*Y704734*	3/8"–16	2	TOP LOCKNUT	ECROU FREIN DADO DI TESTA	SELBSTS.MUTTER CONTRATUERCA SUP
18 ✱	Y704015	5/16"–18	2	NUT	ECROU DADO	MUTTER TUERCA
19	6270888		2	BUSH	BAGUE BOCCOLA	BUCHSE CASQUILLO
20 ✱	700138104P	➡ HL 74216	1	SHIELD	TOLE RIPARO	SCHILD BLINDAJE
20 ✱	700137897P	➡ HL 74217	1	SHIELD	TOLE RIPARO	SCHILD BLINDAJE
21	***7758915***		1	SPRING	RESSORT MOLLA	FEDER MUELLE
22	700137990		1	SHAFT	ARBRE ALBERO	WELLE ARBOL
23	6124267		1	SPACER	ENTRETOISE DISTANZIALE	ABSTANDSTUECK PIEZA DISTANCIA

Shields
Garants
Schutzbleche
Difese
Proteccionee

60-15

Front
Avant
Vorne
Anteriore
Delantero

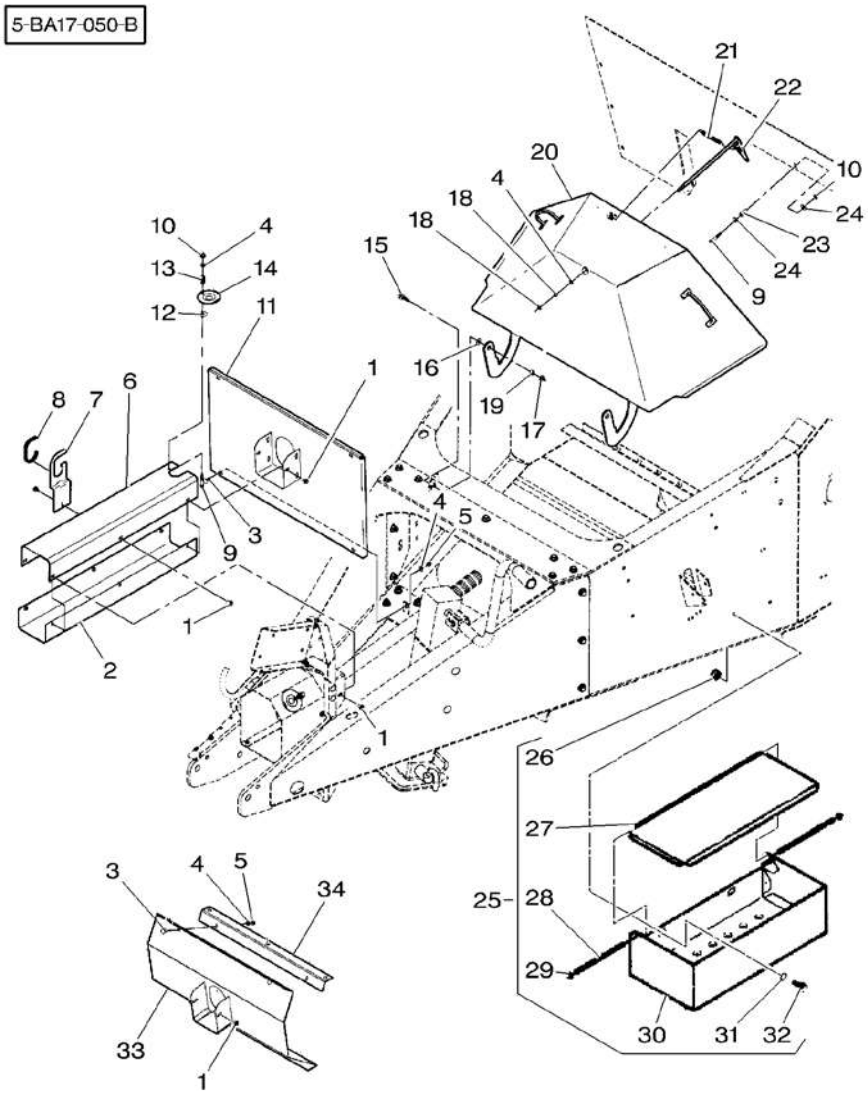

24 ✱	355618X1	5/16"	2	WASHER	RONDELLE RONDELLA ARANDELA
25	700108565		1	TOOL BOX	BOITE A OUTILS CASSETTA ATTREZZ WERKZEUGKASTEN CAJA HERRAMIENTA
26 ✱	***700711238***	25 3/8"–16	2	NUT	ECROU DADO MUTTER TUERCA
27 ✱	700108569P	25	1	LID	PLAQUE COUVERCLE COPERTA ABDECKPLATTE COBERTURA
28	700108570	25	1	ROD	TRINGLE ASTA STANGE VARILLA
29	700707858	25	2	RING	ANNEAU ANELLO RING ARO
30 ✱	700108566P	25	1	BOX	BOITE SCATOLA SCHACHTEL CAJA
31 ✱	*Y705533*	25 3/8"	2	WASHER	RONDELLE RONDELLA UNTERLEGSCHEIBE ARANDELA
32 ✱	7883382	25 3/8"–16 X 1	2	SCREW	VIS VITE SCHRAUBE TORNILLO
33 ✱	700140313P	➡ HL 74217	1	PANEL	PANNEAU PANNELLO VERKL.BLECH PANEL
34 ✱	700140315P	➡ HL 74217	1	SUPPORT	SUPPORT SUPPORTO LAGERUNG DISPOS.DE SOSTEN

[A] WITH ELECTRONIC CONTROL
AVEC CONTROLE ELECTRONIQUE
MIT ELEKTRONISCHE STEUERUNG
CON CONTROLLO ELETTRONICO
CON CONTROL ELECTRONICO

Shields Garants Schutzbleche Difese Proteccionee	60-20	High Hitch Attelage Haut Hoch Anhaengekupplung Attacco Alto Enganche Alto

5-BA17-076-A

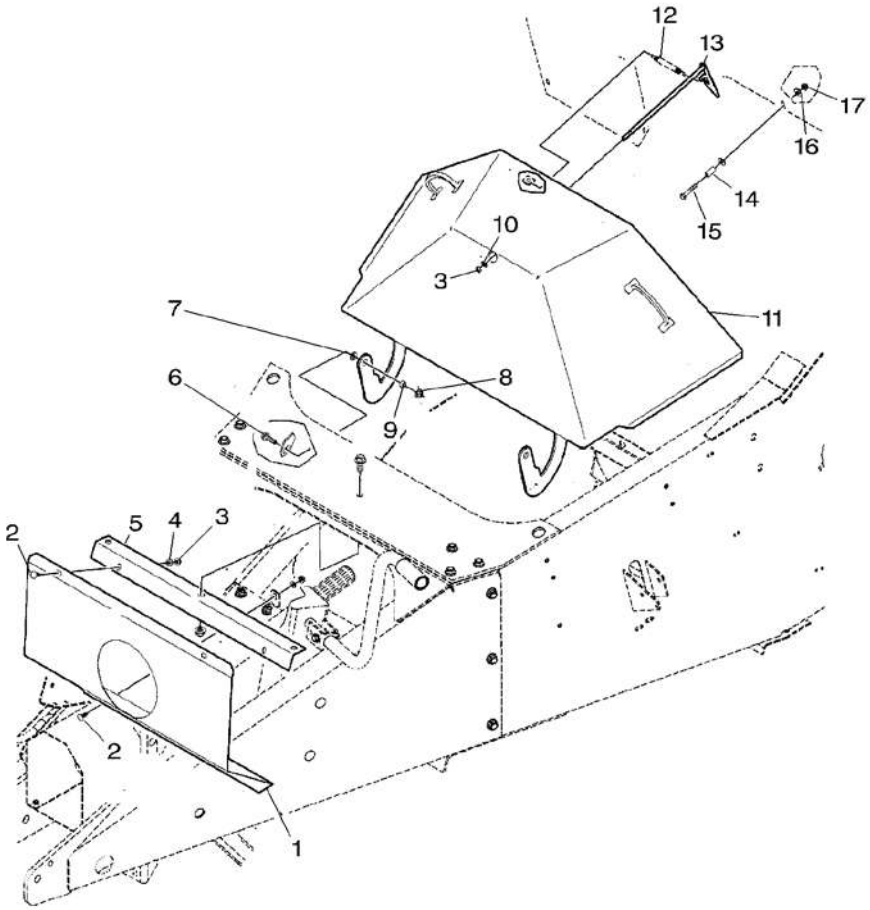

1 *	700139445P		1	SHIELD	TOLE RIPARO	SCHILD BLINDAJE
2 *	364352X1	5/16"-18 X 3/4	4	BOLT UNC	BOULON UNC BULLONE UNC	MASCH.SCHRB.UNC PERNO UNC
3 *	***Y705525***	5/16"	5	WASHER	RONDELLE RONDELLA	UNTERLEGSCHEIBE ARANDELA
4 *	70931277	5/16"-18	4	LOCKNUT	ECROU BLOCAGE AUTOBLOCCANTE	FLACHMUTTER CONTRATUERCA
5 *	700140315P		1	SUPPORT	SUPPORT SUPPORTO	LAGERUNG DISPOS.DE SOSTEN
6 *	7883408	3/8"-16 X 1-1/4	2	SCREW	VIS VITE	SCHRAUBE TORNILLO
7 *	*Y705533*	3/8"	2	WASHER	RONDELLE RONDELLA	UNTERLEGSCHEIBE ARANDELA
8 *	***Y704734***	3/8"-16	2	TOP LOCKNUT	ECROU FREIN DADO DI TESTA	SELBSTS.MUTTER CONTRATUERCA SUP
9 *	6270888		2	BUSH	BAGUE BOCCOLA	BUCHSE CASQUILLO
10 *	Y704015	5/16"-18	1	NUT	ECROU DADO	MUTTER TUERCA
11 *	700137897P		1	SHIELD	TOLE RIPARO	SCHILD BLINDAJE
12 *	***7758915***		1	SPRING	RESSORT MOLLA	FEDER MUELLE
13 *	700137990		1	SHAFT	ARBRE ALBERO	WELLE ARBOL
14 *	6124267		1	SPACER	ENTRETOISE DISTANZIALE	ABSTANDSTUECK PIEZA DISTANCIA
15 *	353685X1	5/16"-18 X 1-3/4	1	BOLT UNC	BOULON UNC BULLONE UNC	MASCH.SCHRB.UNC PERNO UNC
16 *	355618X1	5/16"	2	WASHER	RONDELLE RONDELLA	UNTERLEGSCHEIBE ARANDELA
17 *	Y704726	5/16"-18	1	TOP LOCKNUT	ECROU FREIN DADO DI TESTA	SELBSTS.MUTTER CONTRATUERCA SUP

Shields Garants Schutzbleche Difese Proteccionee	60-25	Upper Compoments Partie Superieure Oberer Teil Parte Superior Partido Superior

5-BA17-051-A

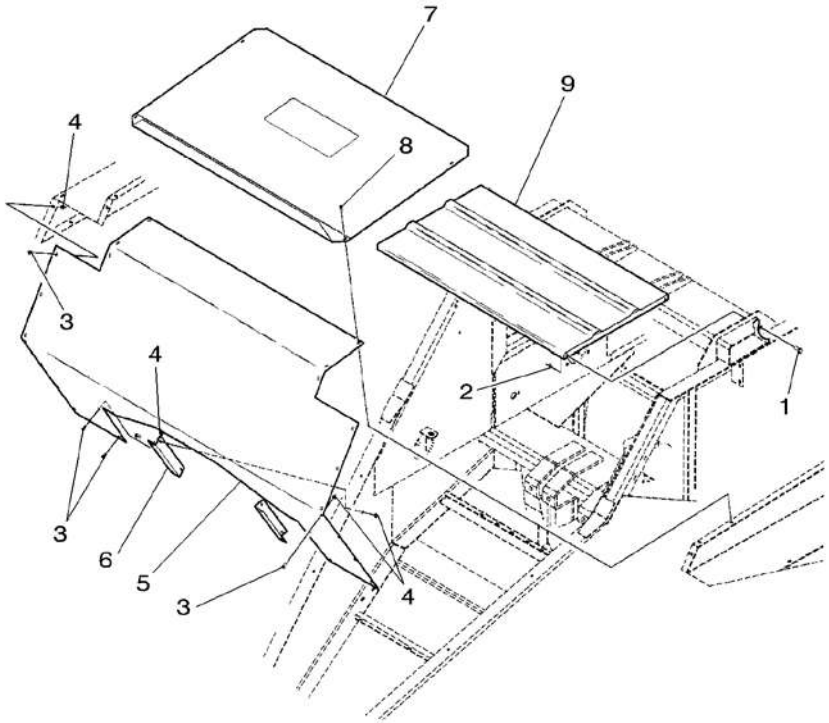

1*	354276X1	1/2"–13 X 1–1/4	2	BOLT UNC BOULON UNC BULLONE UNC	MASCH.SCHRB.UNC PERNO UNC
2*	704858	1/2"–13	2	LOCKNUT ECROU BLOCAGE AUTOBLOCCANTE	FLACHMUTTER CONTRATUERCA
3*	7883325	5/16"–18 X 3/4	26	SCREW VIS VITE	SCHRAUBE TORNILLO
4*	70931277	5/16"–18	30	LOCKNUT ECROU BLOCAGE AUTOBLOCCANTE	FLACHMUTTER CONTRATUERCA
5*	700137890P		1	SHIELD TOLE RIPARO	SCHILD BLINDAJE
6*	700138061P		2	ANGLE EQUERRE ANGOLO	WINKEL ANGULO
7*	700137977P		1	SHIELD TOLE RIPARO	SCHILD BLINDAJE
8*	7883333	5/16"–18 X 1	4	SCREW VIS VITE	SCHRAUBE TORNILLO
9*	700137911		1	LID PLAQUE COUVERCLE COPERTA	ABDECKPLATTE COBERTURA

Shields
Garants
Schutzbleche
Difese
Proteccionee

60-30

Knotter
Noueur
Binder
Legatore
Anudadora

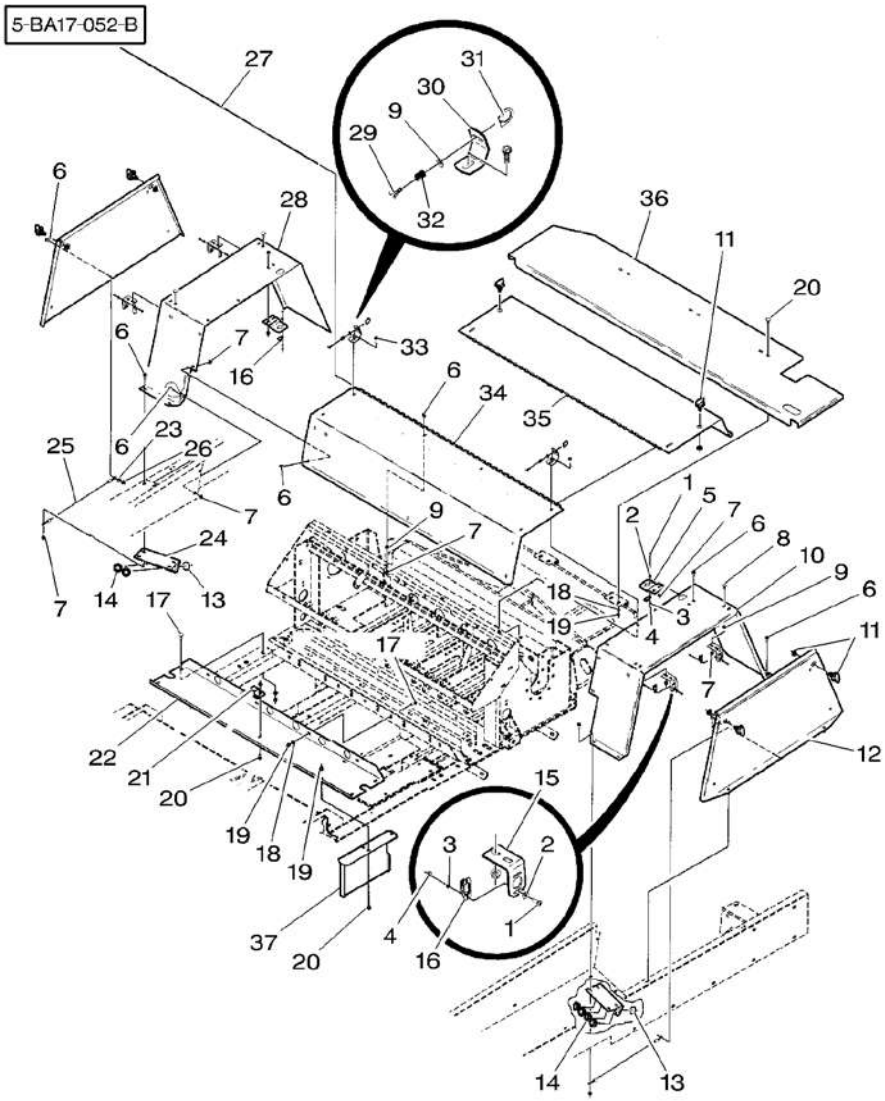

1*	700700628	No 10–24 X 1/2	12	SCREW	VIS VITE	SCHRAUBE TORNILLO
2*	70917380	No 10	12	WASHER	RONDELLE RONDELLA	UNTERLEGSCHEIBE ARANDELA
3*	353445X1	No 10	12	LOCK WASHER	RONDELLE FREIN ROSETTA ELASTICA	FEDERRING ARANDELA GROWER
4	***Y704072***	No 10–24	12	NUT	ECROU DADO	MUTTER TUERCA
5	700133160		2	SUPPORT	SUPPORT SUPPORTO	LAGERUNG DISPOS.DE SOSTEN
6*	7883325	5/16"–18 X 3/4	25	SCREW	VIS VITE	SCHRAUBE TORNILLO
7*	70931277	5/16"–18	33	LOCKNUT	ECROU BLOCAGE AUTOBLOCCANTE	FLACHMUTTER CONTRATUERCA
8*	7700461	5/16"–18 X 3/4	8	BOLT	BOULON BULLONE	MASCH.SCHRAUBE PERNO
9*	***Y705525***	5/16"	12	WASHER	RONDELLE RONDELLA	UNTERLEGSCHEIBE ARANDELA
10*	700133153P	◀	1	FRAME	BATI TELAIO	RAHMEN BASTIDOR
11*	***700714528***		6	LATCH	VERROU SALISCENDI	RIEGEL CERROJO
12*	700133155P		2	SHIELD	TOLE RIPARO	SCHILD BLINDAJE
13	***70927744***		6	RING	ANNEAU ANELLO	RING ARO
14*	***700139255***		6	GUARD	GARDE PROTEZIONE	SCHUTZVORR DEFENSA
15	700133164		4	SUPPORT	SUPPORT SUPPORTO	LAGERUNG DISPOS.DE SOSTEN
16	***700714529***		6	RECEIVER	RECEVEUR RICEVITORE	EMPFAENGER RECEPTOR
17*	*70922786*	3/8"–16 X 1	8	BOLT	BOULON BULLONE	MASCH.SCHRAUBE PERNO
18*	*Y705533*	3/8"	14	WASHER	RONDELLE RONDELLA	UNTERLEGSCHEIBE ARANDELA
19*	***700711238***	3/8"–16	33	NUT	ECROU DADO	MUTTER TUERCA
20*	70922784	3/8"–16 X 3/4	25	BOLT	BOULON BULLONE	MASCH.SCHRAUBE PERNO
21*	700138037P		1	STRAP	PATTE CORREGGIA	LASCHE FAJA
22*	700139341		1	CHANNEL	CANAL PROFILATO	KANAL CANAL
23*	355618X1	5/16"	2	WASHER	RONDELLE RONDELLA	UNTERLEGSCHEIBE ARANDELA
24*	700138000P		2	ANGLE	EQUERRE ANGOLO	WINKEL ANGULO
25	8021693		2	CABLE	CABLE CAVO	KABEL CABLE
26*	Y704726	5/16"–18	2	TOP LOCKNUT	ECROU FREIN DADO DI TESTA	SELBSTS.MUTTER CONTRATUERCA SUP

Shields Garants Schutzbleche Difese Proteccionee	60-30	Knotter Noueur Binder Legatore Anudadora

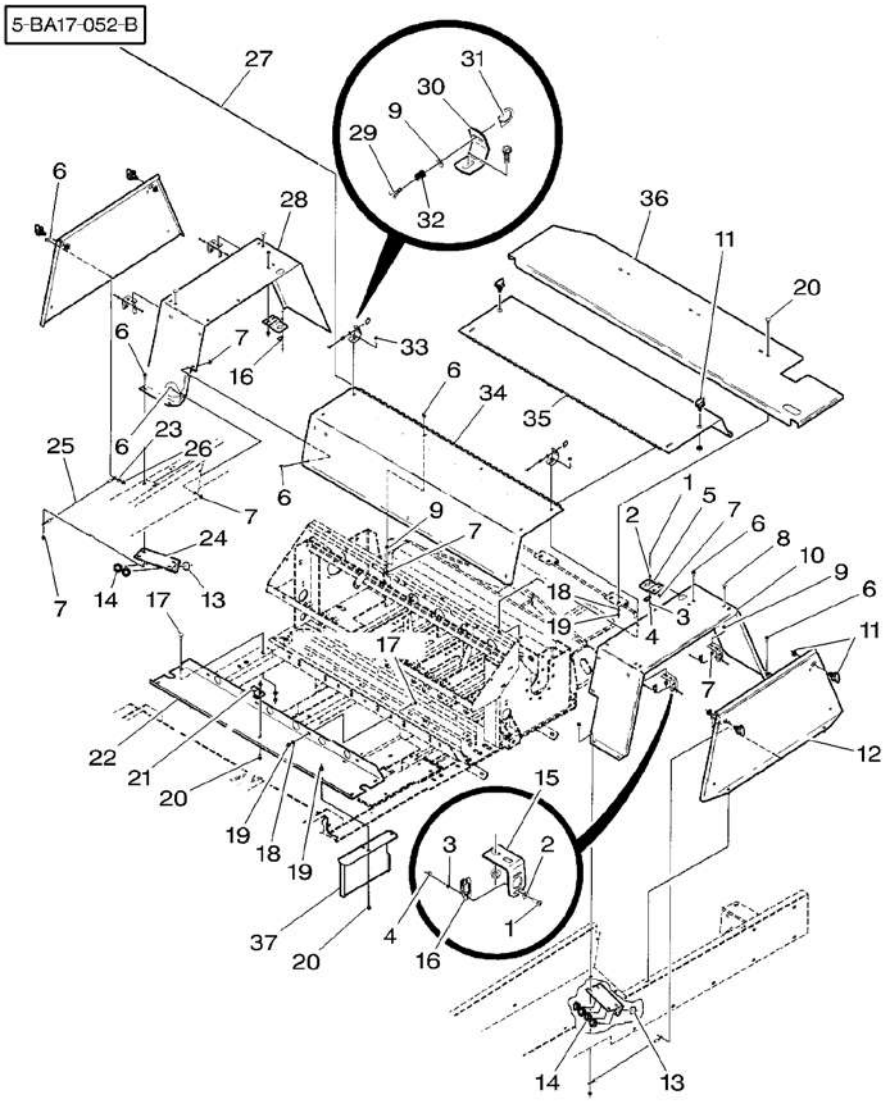

27	700137956		1	PIN	GOUPILLE PERNO	BOLZEN PASADOR
28*	700133154P	▶	1	FRAME	BATI TELAIO	RAHMEN BASTIDOR
29	*7894975*		2	CLIP	CLIP FERMAGLIO	SCHELLE CRAPA RETEN
30	6564595		2	STOP	BUTEE STOP	ANSCHLAG PARO
31	*7894967*		2	HANDLE	POIGNEE MANIGLIA	HANDGRIFF MANETA
32	*7758212*		2	SPRING	RESSORT MOLLA	FEDER MUELLE
33*	7883333	5/16"–18 X 1	2	SCREW	VIS VITE	SCHRAUBE TORNILLO
34	700137979		1	SHIELD	TOLE RIPARO	SCHILD BLINDAJE
35*	700139366P		1	SHIELD	TOLE RIPARO	SCHILD BLINDAJE
36*	700137957P		1	PLATFORM	PLATEFORME PIATTAFORMA	PLATTFORM PLATATORMA
37*	700139333		6	STRIPPER	DEBOURREUR SPOGLIATORE	ABSTREIFER DESBARBADOR

Shields
Garants
Schutzbleche
Difese
Proteccionee

60-35

Left Side – Up To H.L 74216
Cote Gauche – Jusqu'Au H.L 74216
Linke Seite – Bis H.L 74216
Lato Sinistro – Fino Alla H.L 74216
Lado Izquierdo – Hasta H.L 74216

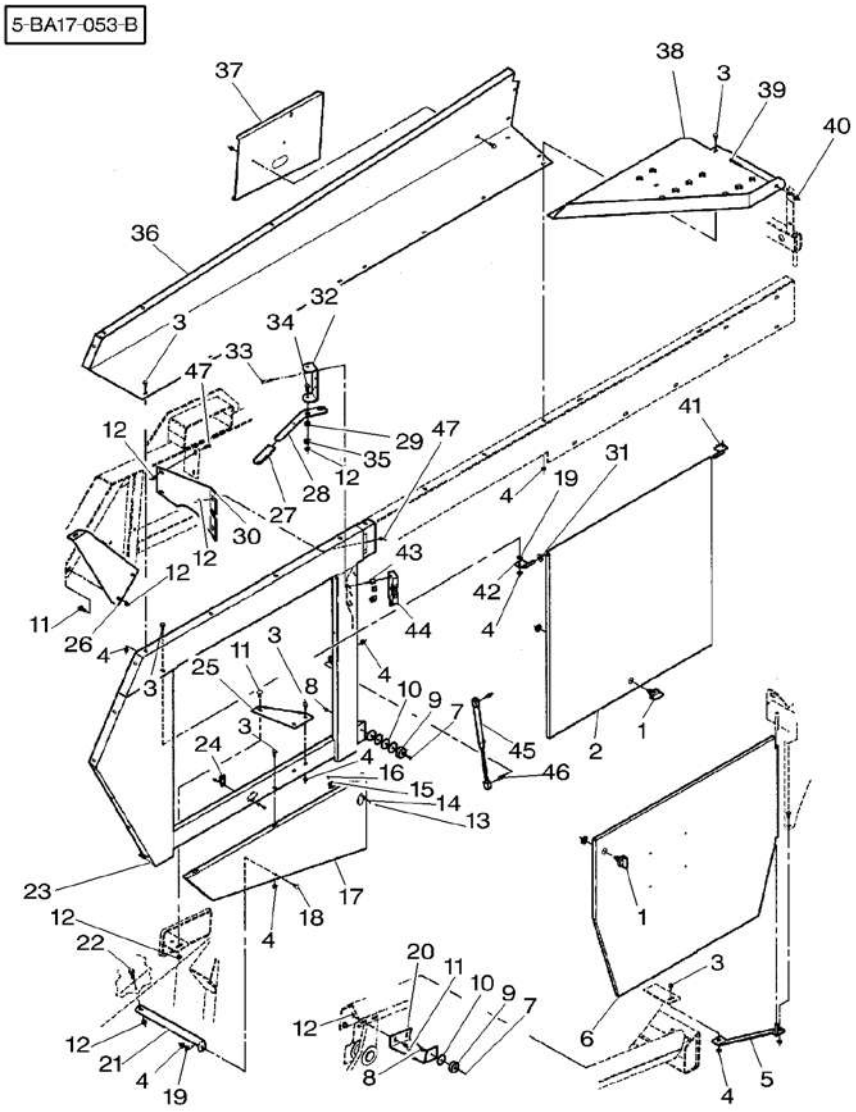

1	*700714528*		2	LATCH	VERROU SALISCENDI	RIEGEL CERROJO
2*	700137934P		1	PANEL	PANNEAU PANNELLO	VERKL.BLECH PANEL
3*	7883325	5/16"–18 X 3/4	18	SCREW	VIS VITE	SCHRAUBE TORNILLO
4*	70931277	5/16"–18	21	LOCKNUT	ECROU BLOCAGE AUTOBLOCCANTE	FLACHMUTTER CONTRATUERCA
5	700137939	◀	1	SUPPORT	SUPPORT SUPPORTO	LAGERUNG DISPOS.DE SOSTEN
6	700137996	◀	1	SHIELD	TOLE RIPARO	SCHILD BLINDAJE
7*	700707203	No 12–24 X 3/4	2	SCREW	VIS VITE	SCHRAUBE TORNILLO
8*	373839X1	No 12–24	2	NUT	ECROU DADO	MUTTER TUERCA
9	700708648		2	BUMPER	PARE CHOC PARAURTI	STOSSFAENGER PARAGOLPES
10*	76695	5/16"	5	WASHER	RONDELLE RONDELLA	UNTERLEGSCHEIBE ARANDELA
11*	*70922786*	3/8"–16 X 1	4	BOLT	BOULON BULLONE	MASCH.SCHRAUBE PERNO
12*	***700711238***	3/8"–16	12	NUT	ECROU DADO	MUTTER TUERCA
13*	700700628	No 10–24 X 1/2	4	SCREW	VIS VITE	SCHRAUBE TORNILLO
14*	70917380	No 10	4	WASHER	RONDELLE RONDELLA	UNTERLEGSCHEIBE ARANDELA
15*	353445X1	No 10	4	LOCK WASHER	RONDELLE FREIN ROSETTA ELASTICA	FEDERRING ARANDELA GROWER
16*	***Y704072***	No 10–24	4	NUT	ECROU DADO	MUTTER TUERCA
17*	700138165P	◀	1	SHIELD	TOLE RIPARO	SCHILD BLINDAJE
18*	364352X1	5/16"–18 X 3/4	1	BOLT UNC	BOULON UNC BULLONE UNC	MASCH.SCHRB.UNC PERNO UNC
19*	***Y705525***	5/16"	2	WASHER	RONDELLE RONDELLA	UNTERLEGSCHEIBE ARANDELA
20*	700137954P	◀	1	SUPPORT	SUPPORT SUPPORTO	LAGERUNG DISPOS.DE SOSTEN
21	700138036		1	STRAP	PATTE CORREGGIA	LASCHE FAJA
22*	368270X1	3/8"–16 X 1–1/4	1	SCREW	VIS VITE	SCHRAUBE TORNILLO
23*	700138109P	◀	1	SHIELD	TOLE RIPARO	SCHILD BLINDAJE
24	***700714529***		2	RECEIVER	RECEVEUR RICEVITORE	EMPFAENGER RECEPTOR
25*	700137929P		1	SUPPORT	SUPPORT SUPPORTO	LAGERUNG DISPOS.DE SOSTEN
26*	700137938P	◀	1	SUPPORT	SUPPORT SUPPORTO	LAGERUNG DISPOS.DE SOSTEN

Shields
Garants
Schutzbleche
Difese
Proteccionee

60-35

Left Side – Up To H.L 74216
Cote Gauche – Jusqu'Au H.L 74216
Linke Seite – Bis H.L 74216
Lato Sinistro – Fino Alla H.L 74216
Lado Izquierdo – Hasta H.L 74216

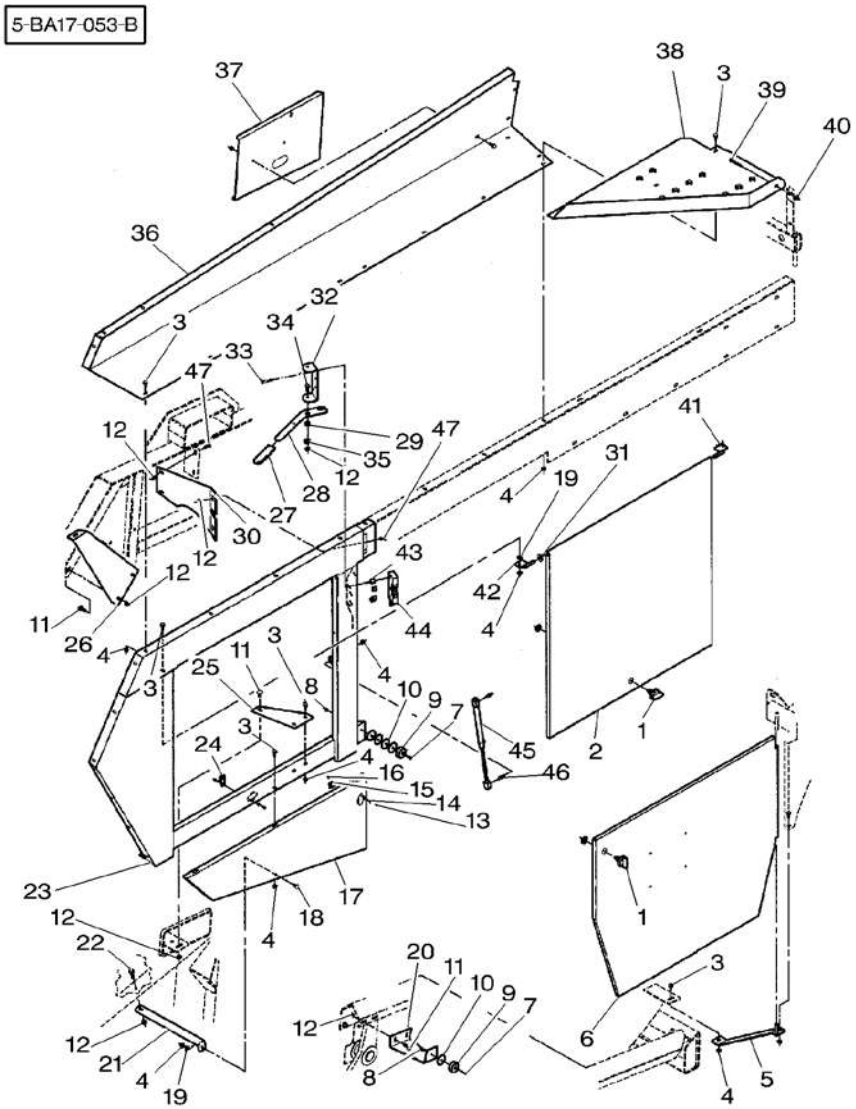

27	827360		1	GRIP	MANCHE IMPUGNATURA	GRIFF EMPUNADURA
28	700137981		1	LEVER	LEVIER LEVA	HEBEL PALANCA
29	700134804		1	SPACER	ENTRETOISE DISTANZIALE	ABSTANDSTUECK PIEZA DISTANCIA
30*	700137937P		1	SUPPORT	SUPPORT SUPPORTO	LAGERUNG DISPOS.DE SOSTEN
31*	*Y705533*	3/8"	1	WASHER	RONDELLE RONDELLA	UNTERLEGSCHEIBE ARANDELA
32	700137933		1	SUPPORT	SUPPORT SUPPORTO	LAGERUNG DISPOS.DE SOSTEN
33*	353673X1	1/4"–20 X 1–1/2	4	BOLT UNC	BOULON UNC BULLONE UNC	MASCH.SCHRB.UNC PERNO UNC
34*	353691X1	3/8"–16 X 1	1	BOLT UNC	BOULON UNC BULLONE UNC	MASCH.SCHRB.UNC PERNO UNC
35*	355619X1	3/8"	1	WASHER	RONDELLE RONDELLA	UNTERLEGSCHEIBE ARANDELA
36*	700152209P	◀ ▲	1	SHIELD	TOLE RIPARO	SCHILD BLINDAJE
37*	700137899P		1	SHIELD	TOLE RIPARO	SCHILD BLINDAJE
38*	700137918P		1	PANEL	PANNEAU PANNELLO	VERKL.BLECH PANEL
39*	7773930	5/16"–18 X 2	1	SCREW	VIS VITE	SCHRAUBE TORNILLO
40*	Y704726	5/16"–18	1	TOP LOCKNUT	ECROU FREIN DADO DI TESTA	SELBSTS.MUTTER CONTRATUERCA SUP
41	700137960	◀	1	HINGE	CHARNIERE CERNIERA	SCHARNIER BISAGRA
42	700137961	▶	1	HINGE	CHARNIERE CERNIERA	SCHARNIER BISAGRA
43*	318618X		4	BUSH	BAGUE BOCCOLA	BUCHSE CASQUILLO
44	700720033		1	LATCH	VERROU SALISCENDI	RIEGEL CERROJO
45	700720032		1	GAS STRUT	VERIN AMORTISSEU CILINDRO GAS	GASZYLINDER CILINDRO GAS
46*	***71339847***	5/16"–18	2	GREASER	GRAISSEUR INGRASSATORE	FETTNIPPEL ENGRASADOR
47*	70922784	3/8"–16 X 3/4	6	BOLT	BOULON BULLONE	MASCH.SCHRAUBE PERNO

Shields
Garants
Schutzbleche
Difese
Proteccionee

60-40

Left Side – From H.L 74217 – Without Cutters
Cote Gauche – A Partir Du H.L 74217 – Sans Couteaux
Linke Seite – Ab H.L 74217 – Ohne Messer
Lato Sinistro –Dalla H.L 74217 – Senza Lame
Lado Izquierdo – A Partir Del H.L 74217 – Sin Cuchillos

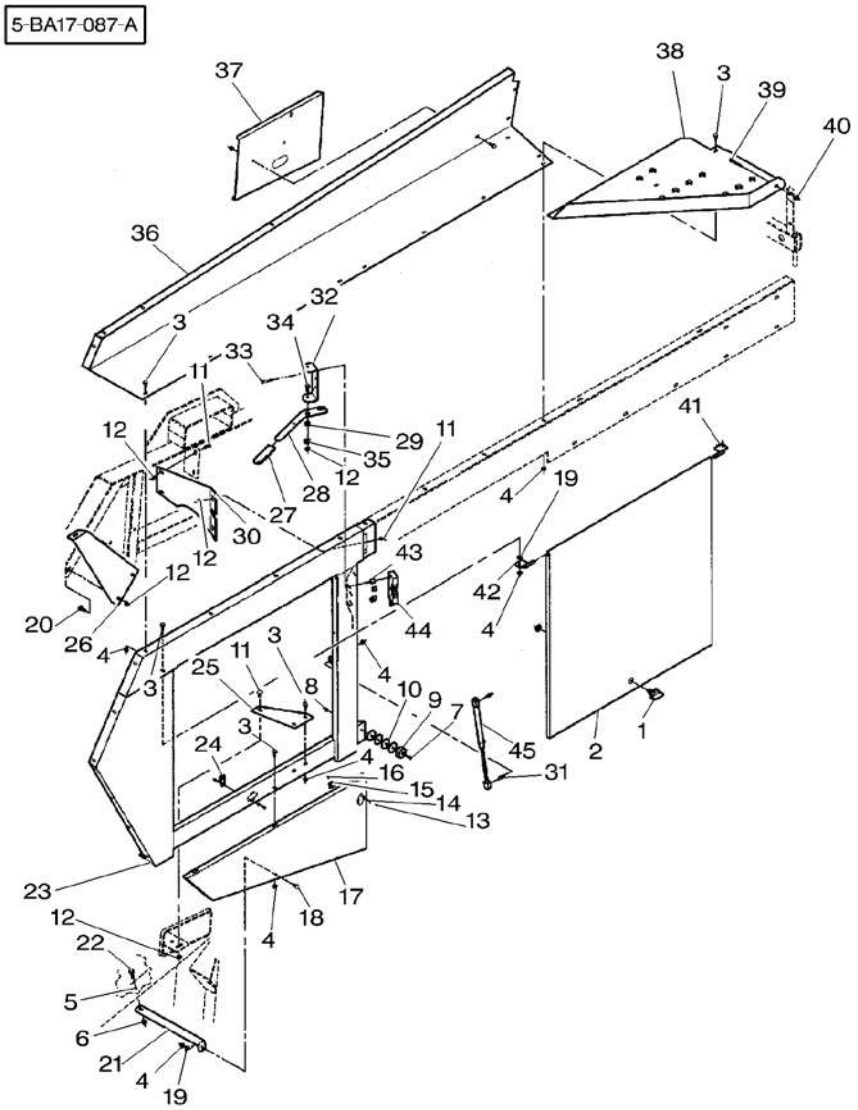

1 ★	***700714528***		**1**	LATCH	VERROU SALISCENDI	RIEGEL CERROJO
2 ★	700137934P		**1**	PANEL	PANNEAU PANNELLO	VERKL.BLECH PANEL
3 ★	7883325	5/16"–18 X 3/4	**16**	SCREW	VIS VITE	SCHRAUBE TORNILLO
4 ★	70931277	5/16"–18	**19**	LOCKNUT	ECROU BLOCAGE AUTOBLOCCANTE	FLACHMUTTER CONTRATUERCA
5 ★	700711557	1/2"	**1**	WASHER	RONDELLE RONDELLA	UNTERLEGSCHEIBE ARANDELA
6 ★	700714586	1/2"–13	**1**	NUT	ECROU DADO	MUTTER TUERCA
7 ★	700707203	No 12–24 X 3/4	**1**	SCREW	VIS VITE	SCHRAUBE TORNILLO
8 ★	373839X1	No 12–24	**1**	NUT	ECROU DADO	MUTTER TUERCA
9 ★	700708648		**1**	BUMPER	PARE CHOC PARAURTI	STOSSFAENGER PARAGOLPES
10 ★	76695	5/16"	**4**	WASHER	RONDELLE RONDELLA	UNTERLEGSCHEIBE ARANDELA
11 ★	70922784	3/8"–16 X 3/4	**6**	BOLT	BOULON BULLONE	MASCH.SCHRAUBE PERNO
12 ★	***700711238***	3/8"–16	**9**	NUT	ECROU DADO	MUTTER TUERCA
13	700700628	No 10–24 X 1/2	**4**	SCREW	VIS VITE	SCHRAUBE TORNILLO
14	70917380	No 10	**4**	WASHER	RONDELLE RONDELLA	UNTERLEGSCHEIBE ARANDELA
15 ★	353445X1	No 10	**4**	LOCK WASHER	RONDELLE FREIN ROSETTA ELASTICA	FEDERRING ARANDELA GROWER
16	***Y704072***	No 10–24	**4**	NUT	ECROU DADO	MUTTER TUERCA
17 ★	700138165P	◀	**1**	SHIELD	TOLE RIPARO	SCHILD BLINDAJE
18	364352X1	5/16"–18 X 3/4	**1**	BOLT UNC	BOULON UNC BULLONE UNC	MASCH.SCHRB.UNC PERNO UNC
19	***Y705525***	5/16"	**2**	WASHER	RONDELLE RONDELLA	UNTERLEGSCHEIBE ARANDELA
20 ★	*70922786*	3/8"–16 X 1	**2**	BOLT	BOULON BULLONE	MASCH.SCHRAUBE PERNO
21 ★	700138247P		**1**	STRAP	PATTE CORREGGIA	LASCHE FAJA
22 ★	364224X1	1/2"–13 X 1–1/4	**1**	BOLT UNC	BOULON UNC BULLONE UNC	MASCH.SCHRB.UNC PERNO UNC
23 ★	700138109P	◀	**1**	SHIELD	TOLE RIPARO	SCHILD BLINDAJE
24	***700714529***		**2**	RECEIVER	RECEVEUR RICEVITORE	EMPFAENGER RECEPTOR
25 ★	700137929P		**1**	SUPPORT	SUPPORT SUPPORTO	LAGERUNG DISPOS.DE SOSTEN
26 ★	700137938P	◀	**1**	SUPPORT	SUPPORT SUPPORTO	LAGERUNG DISPOS.DE SOSTEN

Shields
Garants
Schutzbleche
Difese
Proteccionee

60-40

Left Side – From H.L 74217 – Without Cutters
Cote Gauche – A Partir Du H.L 74217 – Sans Couteaux
Linke Seite – Ab H.L 74217 – Ohne Messer
Lato Sinistro –Dalla H.L 74217 – Senza Lame
Lado Izquierdo – A Partir Del H.L 74217 – Sin Cuchillos

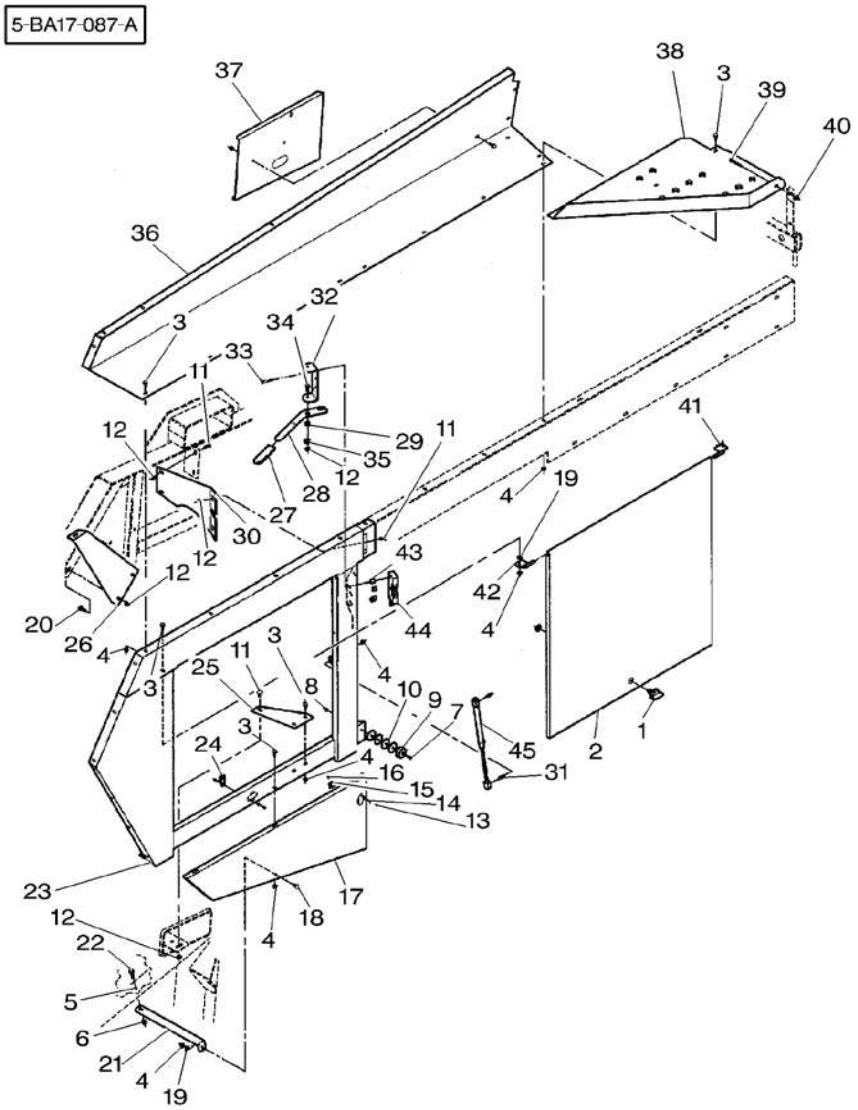

27	827360		1	GRIP	MANCHE IMPUGNATURA	GRIFF EMPUNADURA
28	700137981		1	LEVER	LEVIER LEVA	HEBEL PALANCA
29	700134804		1	SPACER	ENTRETOISE DISTANZIALE	ABSTANDSTUECK PIEZA DISTANCIA
30*	700137937P		1	SUPPORT	SUPPORT SUPPORTO	LAGERUNG DISPOS.DE SOSTEN
31	***71339847***	5/16"–18	2	GREASER	GRAISSEUR INGRASSATORE	FETTNIPPEL ENGRASADOR
32	700137933		1	SUPPORT	SUPPORT SUPPORTO	LAGERUNG DISPOS.DE SOSTEN
33*	353673X1	1/4"–20 X 1–1/2	4	BOLT UNC	BOULON UNC BULLONE UNC	MASCH.SCHRB.UNC PERNO UNC
34	353691X1	3/8"–16 X 1	1	BOLT UNC	BOULON UNC BULLONE UNC	MASCH.SCHRB.UNC PERNO UNC
35	355619X1	3/8"	1	WASHER	RONDELLE RONDELLA	UNTERLEGSCHEIBE ARANDELA
36*	700152209P	◀ ▲	1	SHIELD	TOLE RIPARO	SCHILD BLINDAJE
37*	700137899P		1	SHIELD	TOLE RIPARO	SCHILD BLINDAJE
38*	700137918P		1	PANEL	PANNEAU PANNELLO	VERKL.BLECH PANEL
39	7773930	5/16"–18 X 2	1	SCREW	VIS VITE	SCHRAUBE TORNILLO
40	Y704726	5/16"–18	1	TOP LOCKNUT	ECROU FREIN DADO DI TESTA	SELBSTS.MUTTER CONTRATUERCA SUP
41	700137960	◀	1	HINGE	CHARNIERE CERNIERA	SCHARNIER BISAGRA
42	700137961	▶	1	HINGE	CHARNIERE CERNIERA	SCHARNIER BISAGRA
43*	318618X		4	BUSH	BAGUE BOCCOLA	BUCHSE CASQUILLO
44	700720033		1	LATCH	VERROU SALISCENDI	RIEGEL CERROJO
45	700720032		1	GAS STRUT	VERIN AMORTISSEU CILINDRO GAS	GASZYLINDER CILINDRO GAS

Shields
Garants
Schutzbleche
Difese
Proteccionee

60-45

Left Side – From H.L 74217 – With Cutters
Cote Gauche – A Partir Du H.L 74217 – Avec Couteaux
Linke Seite – Ab H.L 74217 – Mit Messer
Lato Sinistro – Dalla H.L 74217 – Con Lame
Lado Izquierdo – A Partir Del H.L 74217 – Con Cuchillos

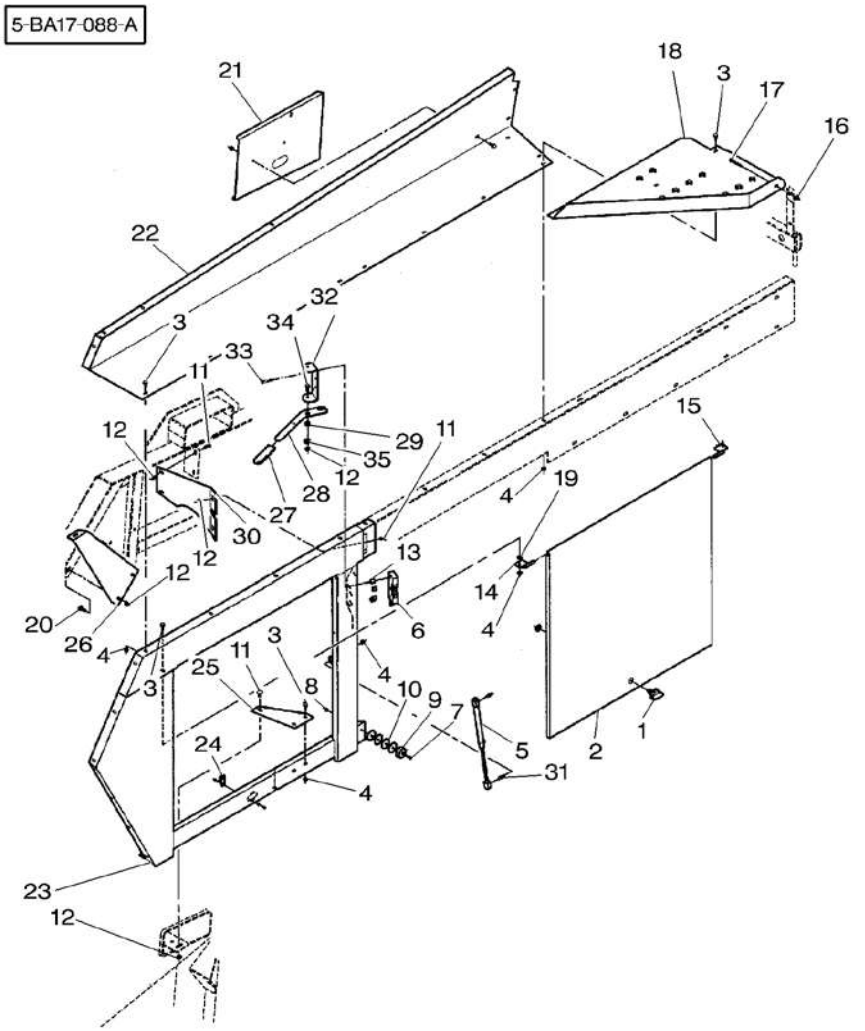

1	***700714528***		**1**	LATCH	VERROU SALISCENDI	RIEGEL CERROJO
2★	700137934P		**1**	PANEL	PANNEAU PANNELLO	VERKL.BLECH PANEL
3★	7883325	5/16"–18 X 3/4	**13**	SCREW	VIS VITE	SCHRAUBE TORNILLO
4★	70931277	5/16"–18	**15**	LOCKNUT	ECROU BLOCAGE AUTOBLOCCANTE	FLACHMUTTER CONTRATUERCA
5	700720032		**1**	GAS STRUT	VERIN AMORTISSEU CILINDRO GAS	GASZYLINDER CILINDRO GAS
6	700720033		**1**	LATCH	VERROU SALISCENDI	RIEGEL CERROJO
7	700707203	No 12–24 X 3/4	**1**	SCREW	VIS VITE	SCHRAUBE TORNILLO
8	373839X1	No 12–24	**1**	NUT	ECROU DADO	MUTTER TUERCA
9	700708648		**1**	BUMPER	PARE CHOC PARAURTI	STOSSFAENGER PARAGOLPES
10	76695	5/16"	**4**	WASHER	RONDELLE RONDELLA	UNTERLEGSCHEIBE ARANDELA
11	70922784	3/8"–16 X 3/4	**6**	BOLT	BOULON BULLONE	MASCH.SCHRAUBE PERNO
12	***700711238***	3/8"–16	**9**	NUT	ECROU DADO	MUTTER TUERCA
13★	318618X		**4**	BUSH	BAGUE BOCCOLA	BUCHSE CASQUILLO
14	700137961	▶	**1**	HINGE	CHARNIERE CERNIERA	SCHARNIER BISAGRA
15	700137960	◀	**1**	HINGE	CHARNIERE CERNIERA	SCHARNIER BISAGRA
16	Y704726	5/16"–18	**1**	TOP LOCKNUT	ECROU FREIN DADO DI TESTA	SELBSTS.MUTTER CONTRATUERCA SUP
17	7773930	5/16"–18 X 2	**1**	SCREW	VIS VITE	SCHRAUBE TORNILLO
18★	700137918P		**1**	PANEL	PANNEAU PANNELLO	VERKL.BLECH PANEL
19★	***Y705525***	5/16"	**1**	WASHER	RONDELLE RONDELLA	UNTERLEGSCHEIBE ARANDELA
20★	*70922786*	3/8"–16 X 1	**2**	BOLT	BOULON BULLONE	MASCH.SCHRAUBE PERNO
21★	700137899P		**1**	SHIELD	TOLE RIPARO	SCHILD BLINDAJE
22★	700152209P	◀ ▲	**1**	SHIELD	TOLE RIPARO	SCHILD BLINDAJE
23★	700138109P	◀	**1**	SHIELD	TOLE RIPARO	SCHILD BLINDAJE
24	***700714529***		**2**	RECEIVER	RECEVEUR RICEVITORE	EMPFAENGER RECEPTOR
25★	700137929P		**1**	SUPPORT	SUPPORT SUPPORTO	LAGERUNG DISPOS.DE SOSTEN
26★	700137938P	◀	**1**	SUPPORT	SUPPORT SUPPORTO	LAGERUNG DISPOS.DE SOSTEN

Shields
Garants
Schutzbleche
Difese
Proteccionee

60-45

Left Side – From H.L 74217 – With Cutters
Cote Gauche – A Partir Du H.L 74217 – Avec Couteaux
Linke Seite – Ab H.L 74217 – Mit Messer
Lato Sinistro – Dalla H.L 74217 – Con Lame
Lado Izquierdo – A Partir Del H.L 74217 – Con Cuchillos

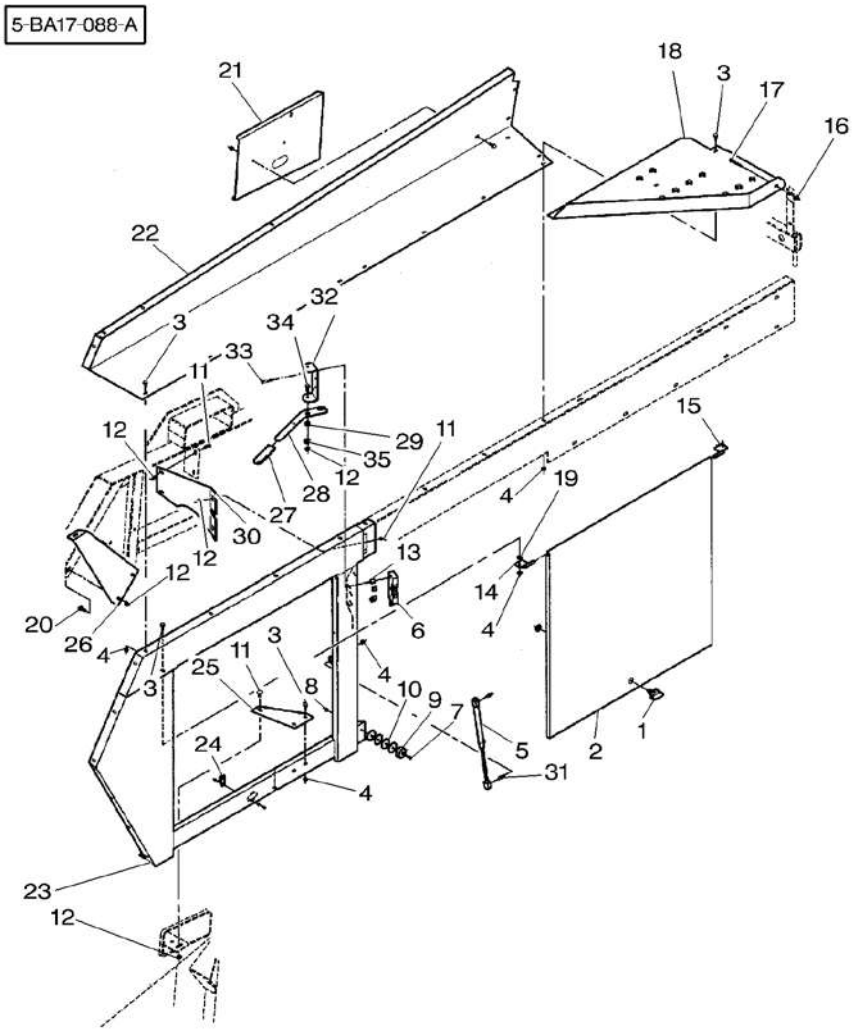

27	827360		**1** GRIP	MANCHE IMPUGNATURA	GRIFF EMPUNADURA
28	700137981		**1** LEVER	LEVIER LEVA	HEBEL PALANCA
29	700134804		**1** SPACER	ENTRETOISE DISTANZIALE	ABSTANDSTUECK PIEZA DISTANCIA
30*	700137937P		**1** SUPPORT	SUPPORT SUPPORTO	LAGERUNG DISPOS.DE SOSTEN
31	***71339847***	5/16"–18	**2** GREASER	GRAISSEUR INGRASSATORE	FETTNIPPEL ENGRASADOR
32	700137933		**1** SUPPORT	SUPPORT SUPPORTO	LAGERUNG DISPOS.DE SOSTEN
33*	353673X1	1/4"–20 X 1–1/2	**4** BOLT UNC	BOULON UNC BULLONE UNC	MASCH.SCHRB.UNC PERNO UNC
34	353691X1	3/8"–16 X 1	**1** BOLT UNC	BOULON UNC BULLONE UNC	MASCH.SCHRB.UNC PERNO UNC
35	355619X1	3/8"	**1** WASHER	RONDELLE RONDELLA	UNTERLEGSCHEIBE ARANDELA

Shields
Garants
Schutzbleche
Difese
Proteccionee

60-50

Right Side – Up To H.L 74216
Cote Droit – Jusqu'Au H.L 74216
Rechte Seite – Bis H.L 74216
Lado Destra – Fino Alla H.L 74216
Lado Derecho – Hasta H.L 74216

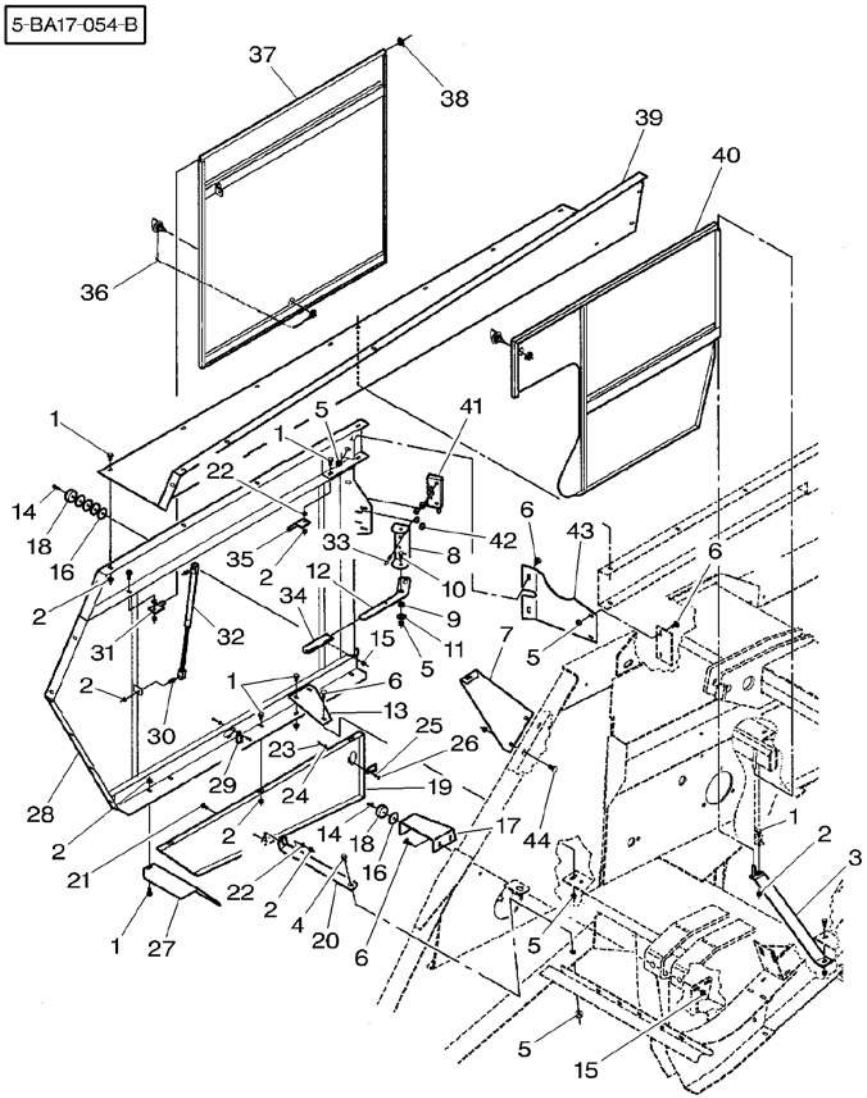

1	✱7883325	5/16"–18 X 3/4	18	SCREW	VIS VITE	SCHRAUBE TORNILLO
2	✱70931277	5/16"–18	21	LOCKNUT	ECROU BLOCAGE AUTOBLOCCANTE	FLACHMUTTER CONTRATUERCA
3	✱700137940P	▶	1	SUPPORT	SUPPORT SUPPORTO	LAGERUNG DISPOS.DE SOSTEN
4	✱*7883374*	3/8"–16 X 3/4	1	SCREW	VIS VITE	SCHRAUBE TORNILLO
5	✱*700711238*	3/8"–16	11	NUT	ECROU DADO	MUTTER TUERCA
6	✱70922784	3/8"–16 X 3/4	7	BOLT	BOULON BULLONE	MASCH.SCHRAUBE PERNO
7	✱700137975P	▶	1	SUPPORT	SUPPORT SUPPORTO	LAGERUNG DISPOS.DE SOSTEN
8	700137933		1	SUPPORT	SUPPORT SUPPORTO	LAGERUNG DISPOS.DE SOSTEN
9	700134804		1	SPACER	ENTRETOISE DISTANZIALE	ABSTANDSTUECK PIEZA DISTANCIA
10	✱353691X1	3/8"–16 X 1	1	BOLT UNC	BOULON UNC BULLONE UNC	MASCH.SCHRB.UNC PERNO UNC
11	✱355619X1	3/8"	1	WASHER	RONDELLE RONDELLA	UNTERLEGSCHEIBE ARANDELA
12	700137981		1	LEVER	LEVIER LEVA	HEBEL PALANCA
13	✱700137929P		1	SUPPORT	SUPPORT SUPPORTO	LAGERUNG DISPOS.DE SOSTEN
14	✱700707203	No 12–24 X 3/4	2	SCREW	VIS VITE	SCHRAUBE TORNILLO
15	✱373839X1	No 12–24	2	NUT	ECROU DADO	MUTTER TUERCA
16	✱76695	5/16"	5	WASHER	RONDELLE RONDELLA	UNTERLEGSCHEIBE ARANDELA
17	✱700137955P	▶	1	SUPPORT	SUPPORT SUPPORTO	LAGERUNG DISPOS.DE SOSTEN
18	700708648		2	BUMPER	PARE CHOC PARAURTI	STOSSFAENGER PARAGOLPES
19	✱700138167P	▶ ▼	1	SHIELD	TOLE RIPARO	SCHILD BLINDAJE
20	700138036		1	STRAP	PATTE CORREGGIA	LASCHE FAJA
21	✱364352X1	5/16"–18 X 3/4	1	BOLT UNC	BOULON UNC BULLONE UNC	MASCH.SCHRB.UNC PERNO UNC
22	✱*Y705525*	5/16"	2	WASHER	RONDELLE RONDELLA	UNTERLEGSCHEIBE ARANDELA
23	✱700700628	No 10–24 X 1/2	4	SCREW	VIS VITE	SCHRAUBE TORNILLO
24	✱70917380	No 10	4	WASHER	RONDELLE RONDELLA	UNTERLEGSCHEIBE ARANDELA
25	✱353445X1	No 10	4	LOCK WASHER	RONDELLE FREIN ROSETTA ELASTICA	FEDERRING ARANDELA GROWER
26	✱*Y704072*	No 10–24	4	NUT	ECROU DADO	MUTTER TUERCA

Shields
Garants
Schutzbleche
Difese
Proteccionee

60-50

Right Side – Up To H.L 74216
Cote Droit – Jusqu'Au H.L 74216
Rechte Seite – Bis H.L 74216
Lado Destra – Fino Alla H.L 74216
Lado Derecho – Hasta H.L 74216

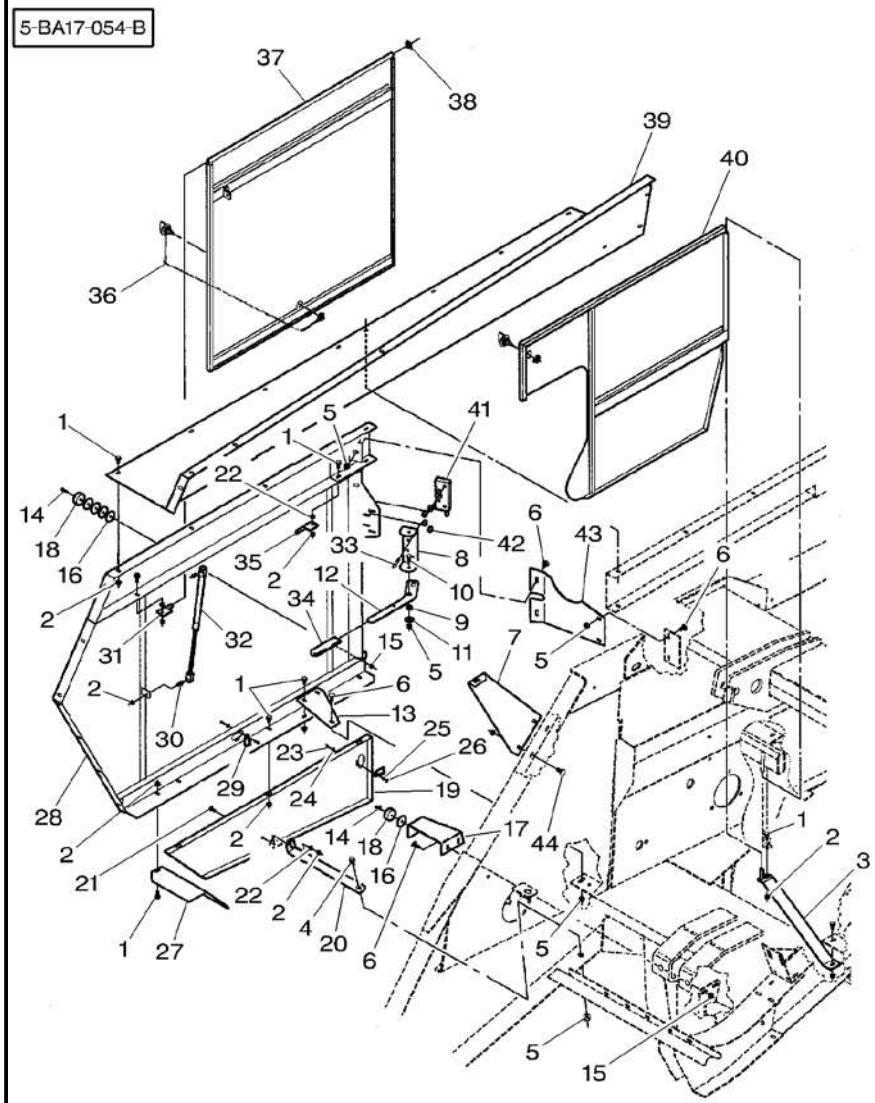

27	✱700138169P		1	SHIELD	TOLE RIPARO	SCHILD BLINDAJE
28	✱700137921P	▶	1	SHIELD	TOLE RIPARO	SCHILD BLINDAJE
29	***700714529***		2	RECEIVER	RECEVEUR RICEVITORE	EMPFAENGER RECEPTOR
30	***71339847***		2	GREASER	GRAISSEUR INGRASSATORE	FETTNIPPEL ENGRASADOR
31	700137960	◀	1	HINGE	CHARNIERE CERNIERA	SCHARNIER BISAGRA
32	700720032		1	GAS STRUT	VERIN AMORTISSEU CILINDRO GAS	GASZYLINDER CILINDRO GAS
33	✱353673X1	1/4"–20 X 1–1/2	4	BOLT UNC	BOULON UNC BULLONE UNC	MASCH.SCHRB.UNC PERNO UNC
34	827360		1	GRIP	MANCHE IMPUGNATURA	GRIFF EMPUNADURA
35	700137961		1	HINGE	CHARNIERE CERNIERA	SCHARNIER BISAGRA
36	***700714528***		2	LATCH	VERROU SALISCENDI	RIEGEL CERROJO
37	✱700137934P		1	PANEL	PANNEAU PANNELLO	VERKL.BLECH PANEL
38	✱*Y705533*	3/8"	1	WASHER	RONDELLE RONDELLA	UNTERLEGSCHEIBE ARANDELA
39	✱700152211P	▶ ▲	1	SHIELD	TOLE RIPARO	SCHILD BLINDAJE
40	✱700137997P	▶	1	SHIELD	TOLE RIPARO	SCHILD BLINDAJE
41	700720033		1	LATCH	VERROU SALISCENDI	RIEGEL CERROJO
42	✱318618X		4	BUSH	BAGUE BOCCOLA	BUCHSE CASQUILLO
43	✱700137937P		1	SUPPORT	SUPPORT SUPPORTO	LAGERUNG DISPOS.DE SOSTEN
44	✱*70922786*	3/8"–16 X 1	2	BOLT	BOULON BULLONE	MASCH.SCHRAUBE PERNO

Shields
Garants
Schutzbleche
Difese
Proteccionee

60-55

Right Side – From H.L 74217 – Without Cutter
Cote Droit – A Partir Du H.L 74217 – Sans Couteaux
Rechte Seite – Ab H.L 74217 – Ohne Messer
Lato Destro – Dalla H.L 74217 – Senza Lame
Lado Derecho – Despues H.L 74217 – Sin Cuchillos

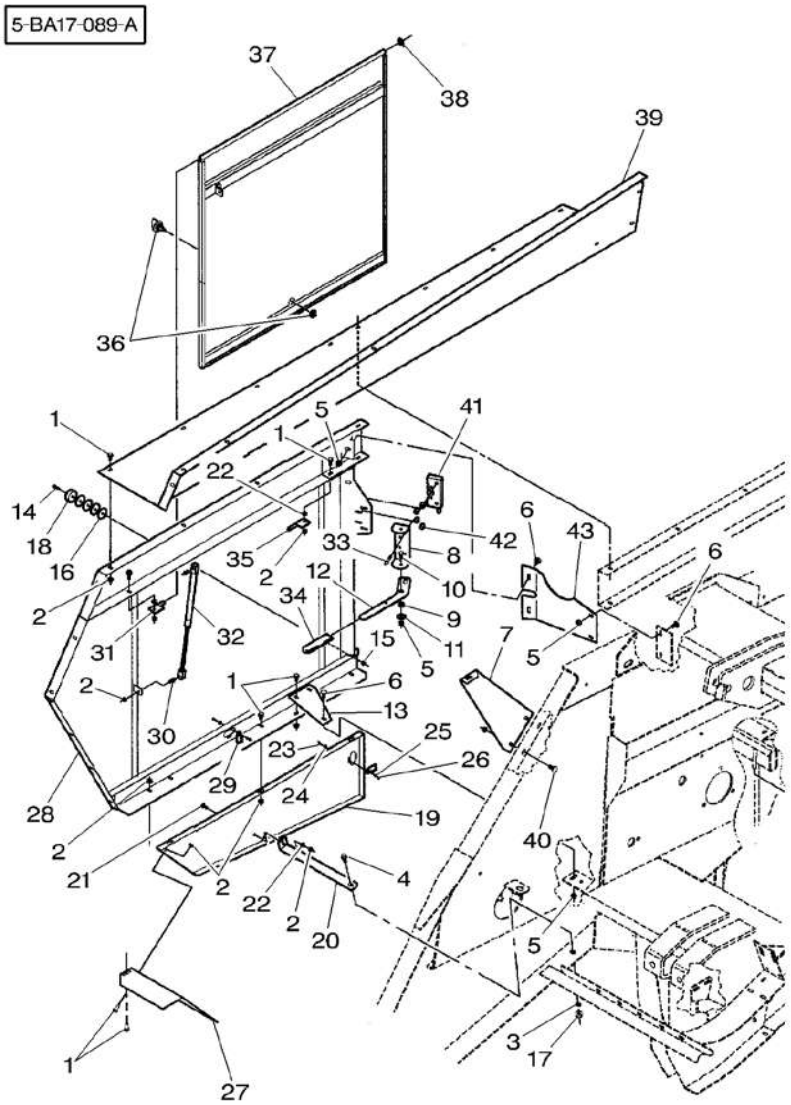

1*	7883325	5/16"–18 X 3/4	16	SCREW	VIS VITE SCHRAUBE TORNILLO
2*	70931277	5/16"–18	19	LOCKNUT	ECROU BLOCAGE AUTOBLOCCANTE FLACHMUTTER CONTRATUERCA
3*	700711557	1/2"	1	WASHER	RONDELLE RONDELLA UNTERLEGSCHEIBE ARANDELA
4*	364224X1	1/2"–13 X 1–1/4	1	BOLT UNC	BOULON UNC BULLONE UNC MASCH.SCHRB.UNC PERNO UNC
5*	***700711238***	3/8"–16	8	NUT	ECROU DADO MUTTER TUERCA
6*	70922784	3/8"–16 X 3/4	5	BOLT	BOULON BULLONE MASCH.SCHRAUBE PERNO
7*	700137975P	▶	1	SUPPORT	SUPPORT SUPPORTO LAGERUNG DISPOS.DE SOSTEN
8	700137933		1	SUPPORT	SUPPORT SUPPORTO LAGERUNG DISPOS.DE SOSTEN
9	700134804		1	SPACER	ENTRETOISE DISTANZIALE ABSTANDSTUECK PIEZA DISTANCIA
10*	353691X1	3/8"–16 X 1	1	BOLT UNC	BOULON UNC BULLONE UNC MASCH.SCHRB.UNC PERNO UNC
11*	355619X1	3/8"	1	WASHER	RONDELLE RONDELLA UNTERLEGSCHEIBE ARANDELA
12	700137981		1	LEVER	LEVIER LEVA HEBEL PALANCA
13*	700137929P		1	SUPPORT	SUPPORT SUPPORTO LAGERUNG DISPOS.DE SOSTEN
14*	700707203	No 12–24 X 3/4	1	SCREW	VIS VITE SCHRAUBE TORNILLO
15*	373839X1	No 12–24	1	NUT	ECROU DADO MUTTER TUERCA
16*	76695	5/16"	4	WASHER	RONDELLE RONDELLA UNTERLEGSCHEIBE ARANDELA
17*	700714586	1/2"–13	1	NUT	ECROU DADO MUTTER TUERCA
18*	700708648		1	BUMPER	PARE CHOC PARAURTI STOSSFAENGER PARAGOLPES
19*	700138167P	▶ ▼	1	SHIELD	TOLE RIPARO SCHILD BLINDAJE
20*	700138247P		1	STRAP	PATTE CORREGGIA LASCHE FAJA
21	364352X1	5/16"–18 X 3/4	1	BOLT UNC	BOULON UNC BULLONE UNC MASCH.SCHRB.UNC PERNO UNC
22	***Y705525***	5/16"	2	WASHER	RONDELLE RONDELLA UNTERLEGSCHEIBE ARANDELA
23	700700628	No 10–24 X 1/2	4	SCREW	VIS VITE SCHRAUBE TORNILLO
24	70917380	No 10	4	WASHER	RONDELLE RONDELLA UNTERLEGSCHEIBE ARANDELA
25*	353445X1	No 10	4	LOCK WASHER	RONDELLE FREIN ROSETTA ELASTICA FEDERRING ARANDELA GROWER
26	***Y704072***	No 10–24	4	NUT	ECROU DADO MUTTER TUERCA

Shields
Garants
Schutzbleche
Difese
Proteccionee

60-55

Right Side – From H.L 74217 – Without Cutter
Cote Droit – A Partir Du H.L 74217 – Sans Couteaux
Rechte Seite – Ab H.L 74217 – Ohne Messer
Lato Destro – Dalla H.L 74217 – Senza Lame
Lado Derecho – Despues H.L 74217 – Sin Cuchillos

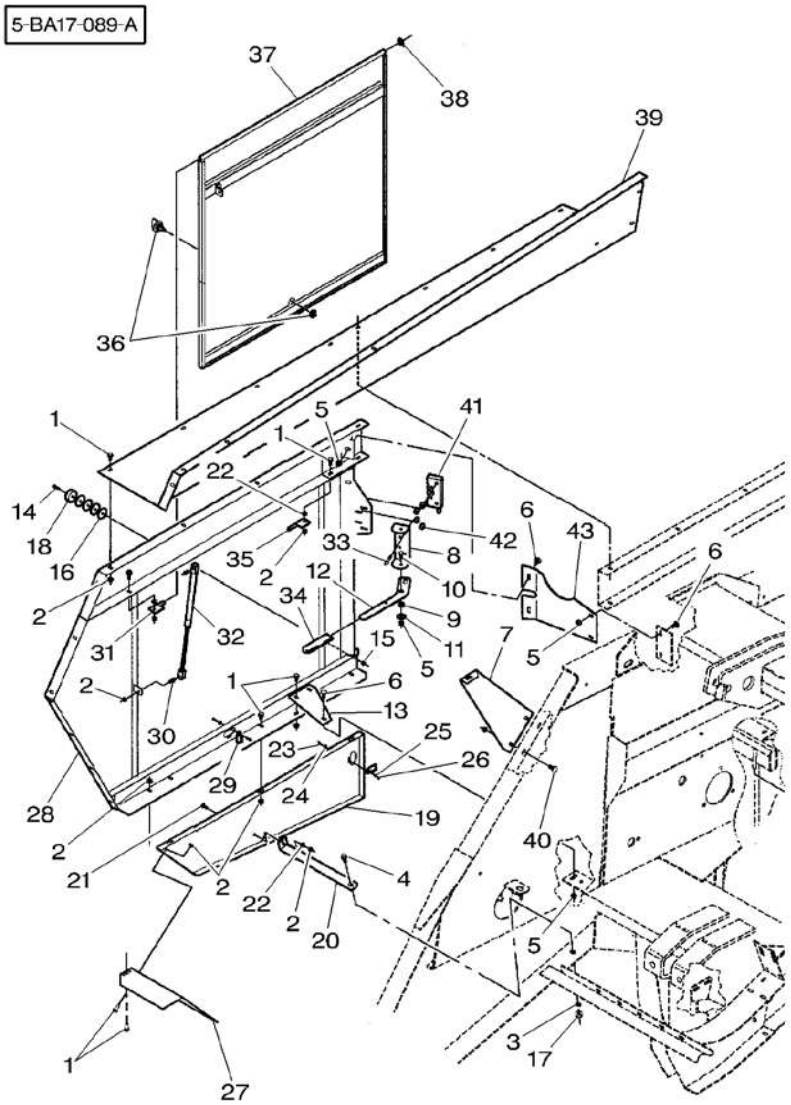

27*	700138169P		1	SHIELD	TOLE RIPARO SCHILD BLINDAJE
28*	700137921P	▶	1	SHIELD	TOLE RIPARO SCHILD BLINDAJE
29	***700714529***		2	RECEIVER	RECEVEUR RICEVITORE EMPFAENGER RECEPTOR
30	***71339847***		2	GREASER	GRAISSEUR INGRASSATORE FETTNIPPEL ENGRASADOR
31	700137960	◀	1	HINGE	CHARNIERE CERNIERA SCHARNIER BISAGRA
32	700720032		1	GAS STRUT	VERIN AMORTISSEU CILINDRO GAS GASZYLINDER CILINDRO GAS
33*	353673X1	1/4"–20 X 1–1/2	4	BOLT UNC	BOULON UNC BULLONE UNC MASCH.SCHRB.UNC PERNO UNC
34	827360		1	GRIP	MANCHE IMPUGNATURA GRIFF EMPUNADURA
35	700137961	▶	1	HINGE	CHARNIERE CERNIERA SCHARNIER BISAGRA
36*	***700714528***		1	LATCH	VERROU SALISCENDI RIEGEL CERROJO
37*	700137934P		1	PANEL	PANNEAU PANNELLO VERKL.BLECH PANEL
38	*Y705533*	3/8"	1	WASHER	RONDELLE RONDELLA UNTERLEGSCHEIBE ARANDELA
39*	700152211P	▶ ▲	1	SHIELD	TOLE RIPARO SCHILD BLINDAJE
40*	*70922786*	3/8"–16 X 1	2	BOLT	BOULON BULLONE MASCH.SCHRAUBE PERNO
41	700720033		1	LATCH	VERROU SALISCENDI RIEGEL CERROJO
42*	318618X		4	BUSH	BAGUE BOCCOLA BUCHSE CASQUILLO
43*	700137937P		1	SUPPORT	SUPPORT SUPPORTO LAGERUNG DISPOS.DE SOSTEN

Shields
Garants
Schutzbleche
Difese
Proteccionee

60-60

Right Side – From H.L 74217 – With Cutter
Cote Droit – A Partir Du H.L 74217 – Avec Couteaux
Rechte Seite – Ab H.L 74217 – Mit Messer
Lato Destro – Dalla H.L 74217 – Con Lame
Lado Derecho – Despues H.L 74217 – Con Cuchillos

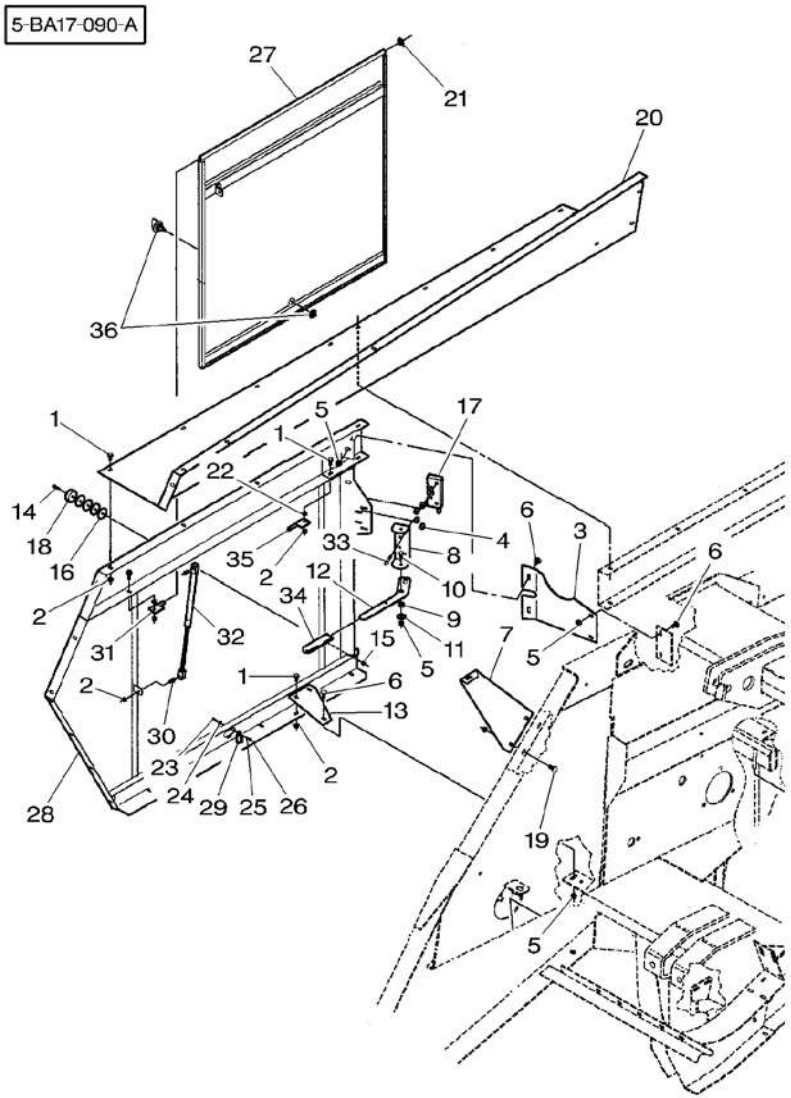

1*	7883325	5/16"–18 X 3/4	13	SCREW	VIS VITE SCHRAUBE TORNILLO
2*	70931277	5/16"–18	15	LOCKNUT	ECROU BLOCAGE AUTOBLOCCANTE FLACHMUTTER CONTRATUERCA
3*	700137937P		1	SUPPORT	SUPPORT SUPPORTO LAGERUNG DISPOS.DE SOSTEN
4*	318618X		4	BUSH	BAGUE BOCCOLA BUCHSE CASQUILLO
5	***700711238***	3/8"–16	8	NUT	ECROU DADO MUTTER TUERCA
6	70922784	3/8"–16 X 3/4	5	BOLT	BOULON BULLONE MASCH.SCHRAUBE PERNO
7*	700137975P	▶	1	SUPPORT	SUPPORT SUPPORTO LAGERUNG DISPOS.DE SOSTEN
8	700137933		1	SUPPORT	SUPPORT SUPPORTO LAGERUNG DISPOS.DE SOSTEN
9	700134804		1	SPACER	ENTRETOISE DISTANZIALE ABSTANDSTUECK PIEZA DISTANCIA
10	353691X1	3/8"–16 X 1	1	BOLT UNC	BOULON UNC BULLONE UNC MASCH.SCHRB.UNC PERNO UNC
11	355619X1	3/8"	1	WASHER	RONDELLE RONDELLA UNTERLEGSCHEIBE ARANDELA
12	700137981		1	LEVER	LEVIER LEVA HEBEL PALANCA
13*	700137929P		1	SUPPORT	SUPPORT SUPPORTO LAGERUNG DISPOS.DE SOSTEN
14	700707203	No 12–24 X 3/4	1	SCREW	VIS VITE SCHRAUBE TORNILLO
15	373839X1	No 12–24	1	NUT	ECROU DADO MUTTER TUERCA
16	76695	5/16"	4	WASHER	RONDELLE RONDELLA UNTERLEGSCHEIBE ARANDELA
17	700720033		1	LATCH	VERROU SALISCENDI RIEGEL CERROJO
18	700708648		1	BUMPER	PARE CHOC PARAURTI STOSSFAENGER PARAGOLPES
19*	*70922786*	3/8"–16 X 1	2	BOLT	BOULON BULLONE MASCH.SCHRAUBE PERNO
20*	700152211P	▶ ▲	1	SHIELD	TOLE RIPARO SCHILD BLINDAJE
21	*Y705533*	3/8"	1	WASHER	RONDELLE RONDELLA UNTERLEGSCHEIBE ARANDELA
22*	***Y705525***	5/16"	1	WASHER	RONDELLE RONDELLA UNTERLEGSCHEIBE ARANDELA
23*	700700628	No 10–24 X 1/2	4	SCREW	VIS VITE SCHRAUBE TORNILLO
24*	70917380	No 10	4	WASHER	RONDELLE RONDELLA UNTERLEGSCHEIBE ARANDELA
25*	353445X1	No 10	4	LOCK WASHER	RONDELLE FREIN ROSETTA ELASTICA FEDERRING ARANDELA GROWER
26	***Y704072***	No 10–24	4	NUT	ECROU DADO MUTTER TUERCA

Shields
Garants
Schutzbleche
Difese
Proteccionee

60-60

Right Side – From H.L 74217 – With Cutter
Cote Droit – A Partir Du H.L 74217 – Avec Couteaux
Rechte Seite – Ab H.L 74217 – Mit Messer
Lato Destro – Dalla H.L 74217 – Con Lame
Lado Derecho – Despues H.L 74217 – Con Cuchillos

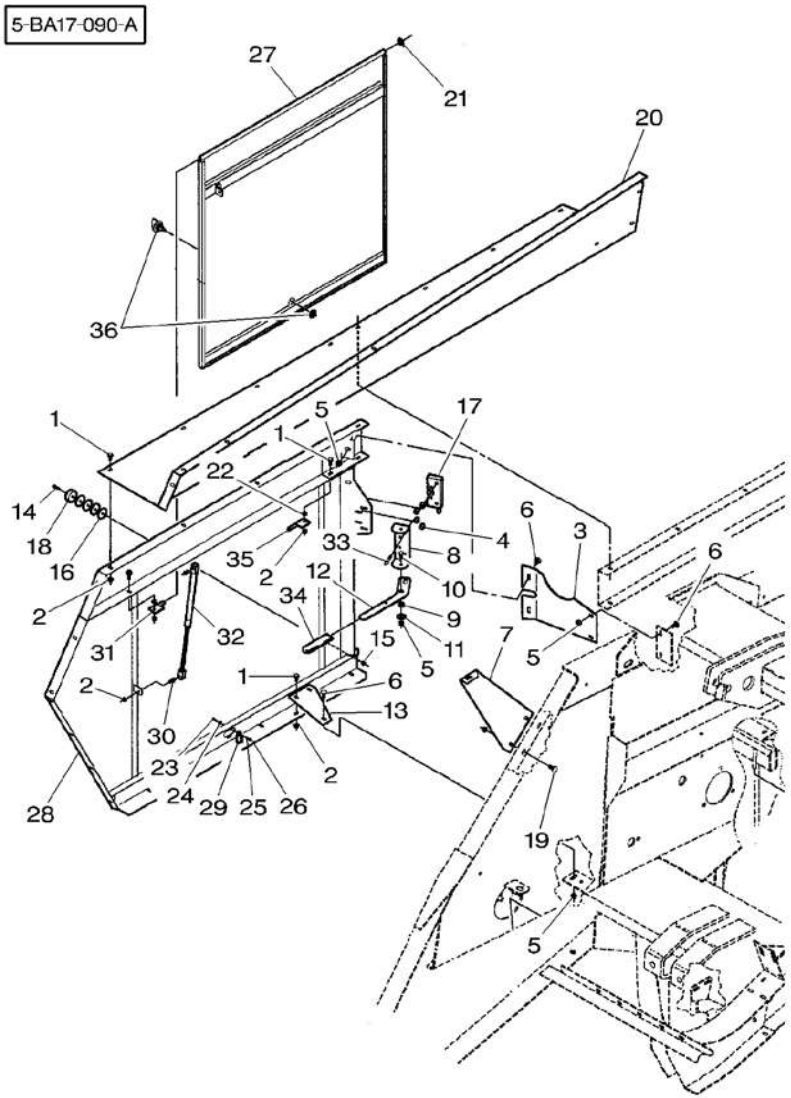

27*	700137934P		1	PANEL	PANNEAU PANNELLO	VERKL.BLECH PANEL
28*	700137921P	▶	1	SHIELD	TOLE RIPARO	SCHILD BLINDAJE
29	***700714529***		2	RECEIVER	RECEVEUR RICEVITORE	EMPFAENGER RECEPTOR
30	***71339847***		2	GREASER	GRAISSEUR INGRASSATORE	FETTNIPPEL ENGRASADOR
31	700137960	◀	1	HINGE	CHARNIERE CERNIERA	SCHARNIER BISAGRA
32	700720032		1	GAS STRUT	VERIN AMORTISSEU CILINDRO GAS	GASZYLINDER CILINDRO GAS
33*	353673X1	1/4"–20 X 1–1/2	4	BOLT UNC	BOULON UNC BULLONE UNC	MASCH.SCHRB.UNC PERNO UNC
34	827360		1	GRIP	MANCHE IMPUGNATURA	GRIFF EMPUNADURA
35	700137961	▶	1	HINGE	CHARNIERE CERNIERA	SCHARNIER BISAGRA
36	***700714528***		1	LATCH	VERROU SALISCENDI	RIEGEL CERROJO

Shields	**With Cutter**	
Garants	**Avec Couteau**	
Schutzbleche	**Mit Messer**	
Difese	**Con Cuchillo**	
Proteccionee	**Con Coltello**	

60-65

Left Side – Up To H.L 74216
Cote Gauche – Jusqu'Au H.L 74216
Linke Seite – Bis H.L 74216
Lato Sinistro – Fino Alla H.L 74216
Lado Izquierdo – Hasta H.L 74216

5-BA40-003-A

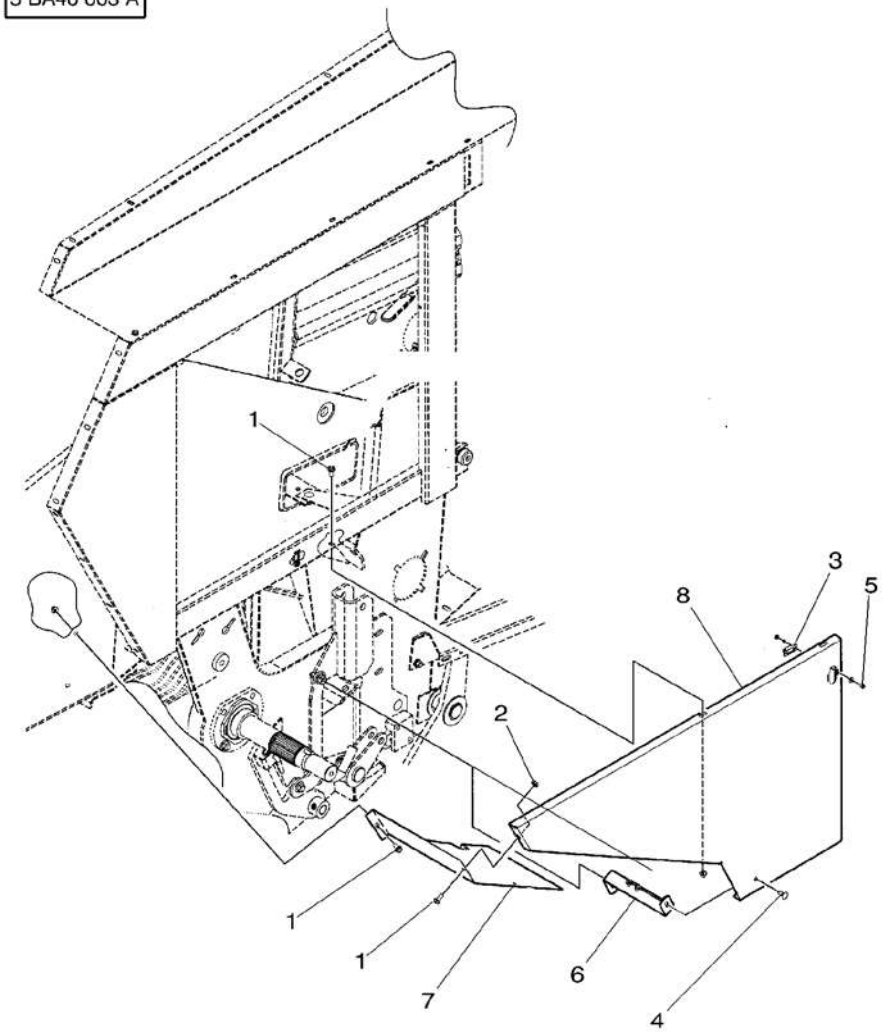

1	7883325	5/16"–18 X 3/4	**6** SCREW	VIS VITE	SCHRAUBE TORNILLO
2*	70931277	5/16"–18	**6** LOCKNUT	ECROU BLOCAGE AUTOBLOCCANTE	FLACHMUTTER CONTRATUERCA
3	***700714529***		**1** RECEIVER	RECEVEUR RICEVITORE	EMPFAENGER RECEPTOR
4	364352X1	5/16"–18 X 3/4	**2** BOLT UNC	BOULON UNC BULLONE UNC	MASCH.SCHRB.UNC PERNO UNC
4	***Y705525***	5/16"	**2** WASHER	RONDELLE RONDELLA	UNTERLEGSCHEIBE ARANDELA
4	70931277	5/16"–18	**2** LOCKNUT	ECROU BLOCAGE AUTOBLOCCANTE	FLACHMUTTER CONTRATUERCA
5*	700700628	No 10–24 X 1/2	**2** SCREW	VIS VITE	SCHRAUBE TORNILLO
5	70917380	No 10	**2** WASHER	RONDELLE RONDELLA	UNTERLEGSCHEIBE ARANDELA
5*	353445X1	No 10	**2** LOCK WASHER	RONDELLE FREIN ROSETTA ELASTICA	FEDERRING ARANDELA GROWER
5	***Y704072***	No 10–24	**2** NUT	ECROU DADO	MUTTER TUERCA
6*	700139059P		**1** STRAP	PATTE CORREGGIA	LASCHE FAJA
7*	700138491P	◀	**1** SHIELD	TOLE RIPARO	SCHILD BLINDAJE
8*	700138489P	◀	**1** SHIELD	TOLE RIPARO	SCHILD BLINDAJE

Shields **Garants** **Schutzbleche** **Difese** **Proteccionee**	**With Cutter** **Avec Couteau** **Mit Messer** **Con Cuchillo** **Con Coltello**	**60-70**

Left Side – From H.L 74217
Cote Gauche – A Partir Du H.L 74217
Linke Seite – Ab H.L 74217
Lato Sinistro –Dalla H.L 74217
Lado Izquierdo – A Partir Del H.L 74217

5-BA40-006-A

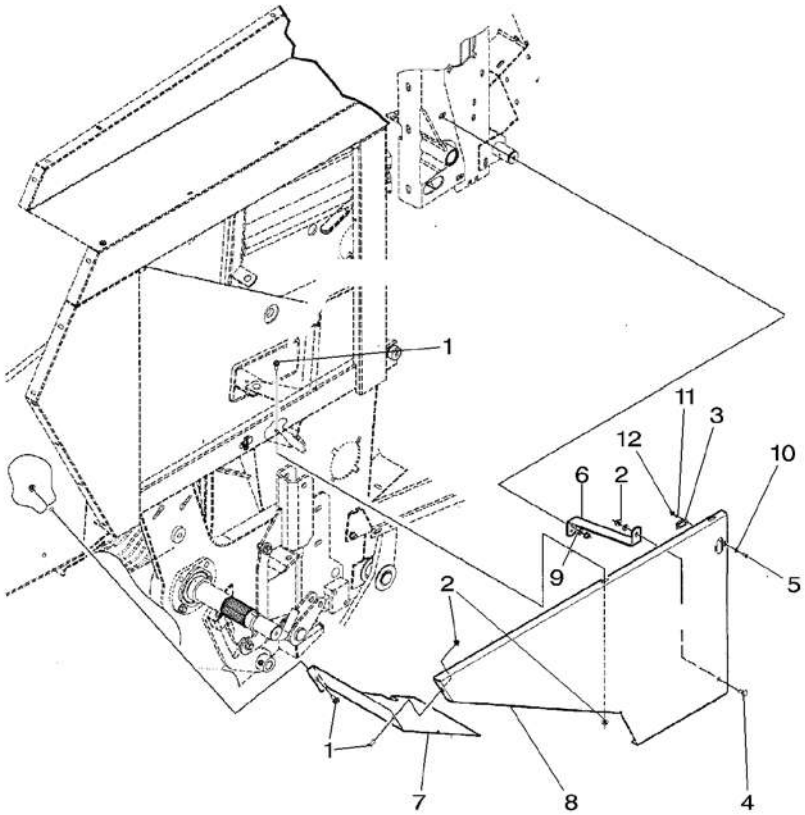

1*	7883325	5/16"–18 X 3/4	6	SCREW	VIS VITE	SCHRAUBE TORNILLO
2	70931277	5/16"–18	8	LOCKNUT	ECROU BLOCAGE AUTOBLOCCANTE	FLACHMUTTER CONTRATUERCA
3	***700714529***		1	RECEIVER	RECEVEUR RICEVITORE	EMPFAENGER RECEPTOR
4*	***Y705525***	5/16"	2	WASHER	RONDELLE RONDELLA	UNTERLEGSCHEIBE ARANDELA
5	700700628	No 10–24 X 1/2	2	SCREW	VIS VITE	SCHRAUBE TORNILLO
6*	700139059P		1	STRAP	PATTE CORREGGIA	LASCHE FAJA
7*	700138491P	◀	1	SHIELD	TOLE RIPARO	SCHILD BLINDAJE
8*	700138489P	◀	1	SHIELD	TOLE RIPARO	SCHILD BLINDAJE
9*	364352X1	5/16"–18 X 3/4	2	BOLT UNC	BOULON UNC BULLONE UNC	MASCH.SCHRB.UNC PERNO UNC
10*	70917380	No 10	2	WASHER	RONDELLE RONDELLA	UNTERLEGSCHEIBE ARANDELA
11*	353445X1	No 10	2	LOCK WASHER	RONDELLE FREIN ROSETTA ELASTICA	FEDERRING ARANDELA GROWER
12*	***Y704072***	No 10–24	2	NUT	ECROU DADO	MUTTER TUERCA

Shields / Garants / Schutzbleche / Difese / Proteccionee	With Cutter / Avec Couteau / Mit Messer / Con Cuchillo / Con Coltello	60-75	Right Side – Up To H.L 74216 / Cote Droit – Jusqu'Au H.L 74216 / Rechte Seite – Bis H.L 74216 / Lado Destra – Fino Alla H.L 74216 / Lado Derecho – Hasta H.L 74216

5-BA40-004-A

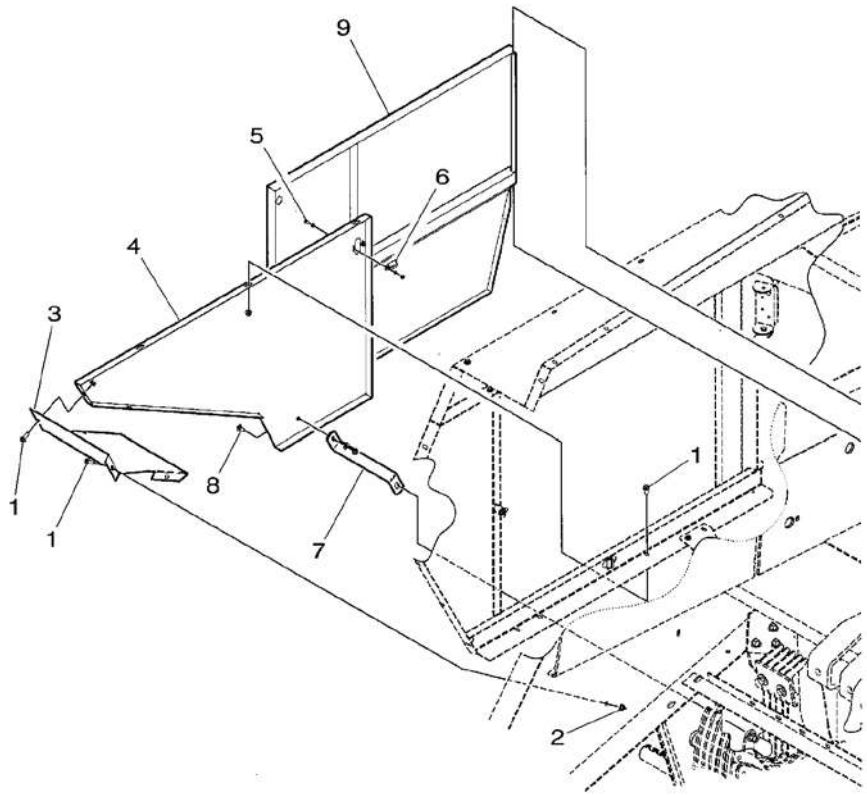

1*	7883325	5/16"–18 X 3/4	7	SCREW	VIS / VITE / SCHRAUBE / TORNILLO
2*	70931277	5/16"–18	7	LOCKNUT	ECROU BLOCAGE AUTOBLOCCANTE / FLACHMUTTER CONTRATUERCA
3*	700138492P		1	SHIELD	TOLE RIPARO / SCHILD BLINDAJE
4*	700138490P		1	SHIELD	TOLE RIPARO / SCHILD BLINDAJE
5*	700700628	No 10–24 X 1/2	2	SCREW	VIS / VITE / SCHRAUBE / TORNILLO
5	70917380	No 10	2	WASHER	RONDELLE / RONDELLA / UNTERLEGSCHEIBE / ARANDELA
5*	353445X1	No 10	2	LOCK WASHER	RONDELLE FREIN / ROSETTA ELASTICA / FEDERRING / ARANDELA GROWER
5	*Y704072*	No 10–24	2	NUT	ECROU / DADO / MUTTER / TUERCA
6	*700714529*		1	RECEIVER	RECEVEUR / RICEVITORE / EMPFAENGER / RECEPTOR
7*	700139059P		1	STRAP	PATTE / CORREGGIA / LASCHE / FAJA
8	364352X1	5/16"–18 X 3/4	1	BOLT UNC	BOULON UNC / BULLONE UNC / MASCH.SCHRB.UNC / PERNO UNC
8	*Y705525*	5/16"	1	WASHER	RONDELLE / RONDELLA / UNTERLEGSCHEIBE / ARANDELA
8	70931277	5/16"–18	1	LOCKNUT	ECROU BLOCAGE AUTOBLOCCANTE / FLACHMUTTER CONTRATUERCA
9	700138493		1	SHIELD	TOLE RIPARO / SCHILD BLINDAJE

Shields **Garants** **Schutzbleche** **Difese** **Proteccionee**	**With Cutter** **Avec Couteau** **Mit Messer** **Con Cuchillo** **Con Coltello**	**60-80**

Right Side – From H.L 74217
Cote Droit – A Partir Du H.L 74217
Rechte Seite – Ab H.L 74217
Lato Destro – Dalla H.L 74217
Lado Derecho – Despues H.L 74217

5-BA40-007-A

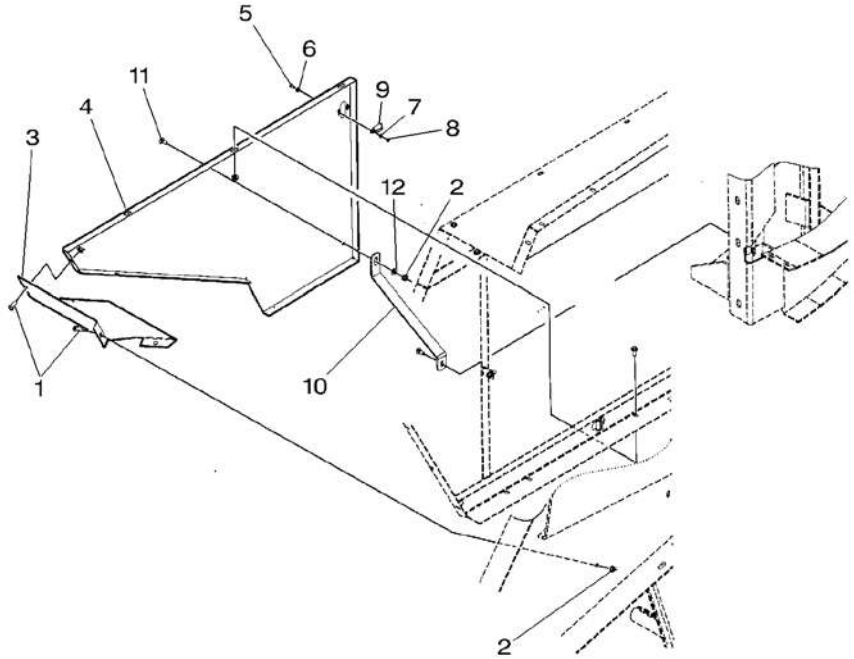

1*	7883325	5/16"–18 X 3/4	7	SCREW	VIS VITE	SCHRAUBE TORNILLO
2*	70931277	5/16"–18	9	LOCKNUT	ECROU BLOCAGE AUTOBLOCCANTE	FLACHMUTTER CONTRATUERCA
3*	700138492P	▶	1	SHIELD	TOLE RIPARO	SCHILD BLINDAJE
4*	700138490P	➡ ...	1	SHIELD	TOLE RIPARO	SCHILD BLINDAJE
4*	700163366P	➡ ...	1	SHIELD	TOLE RIPARO	SCHILD BLINDAJE
5*	700700628	➡ ... No 10–24 X 1/2	2	SCREW	VIS VITE	SCHRAUBE TORNILLO
6*	70917380	➡ ... No 10	2	WASHER	RONDELLE RONDELLA	UNTERLEGSCHEIBE ARANDELA
7*	353445X1	➡ ... No 10	2	LOCK WASHER	RONDELLE FREIN ROSETTA ELASTICA	FEDERRING ARANDELA GROWER
8*	***Y704072***	➡ ... No 10–24	2	NUT	ECROU DADO	MUTTER TUERCA
9*	***700714529***	➡ ...	1	RECEIVER	RECEVEUR RICEVITORE	EMPFAENGER RECEPTOR
10*	700153137P		1	STRAP	PATTE CORREGGIA	LASCHE FAJA
11*	364352X1	5/16"–18 X 3/4	2	BOLT UNC	BOULON UNC BULLONE UNC	MASCH.SCHRB.UNC PERNO UNC
12*	***Y705525***	5/16"	2	WASHER	RONDELLE RONDELLA	UNTERLEGSCHEIBE ARANDELA

Shields Garants Schutzbleche Difese Proteccionee	60-85	Tandem – Right Side Tandem – Cote Droit Tandem – Rechte Seite Tandem – Lado Destra Tandem – Lado Derecho

5-BA17-068-B

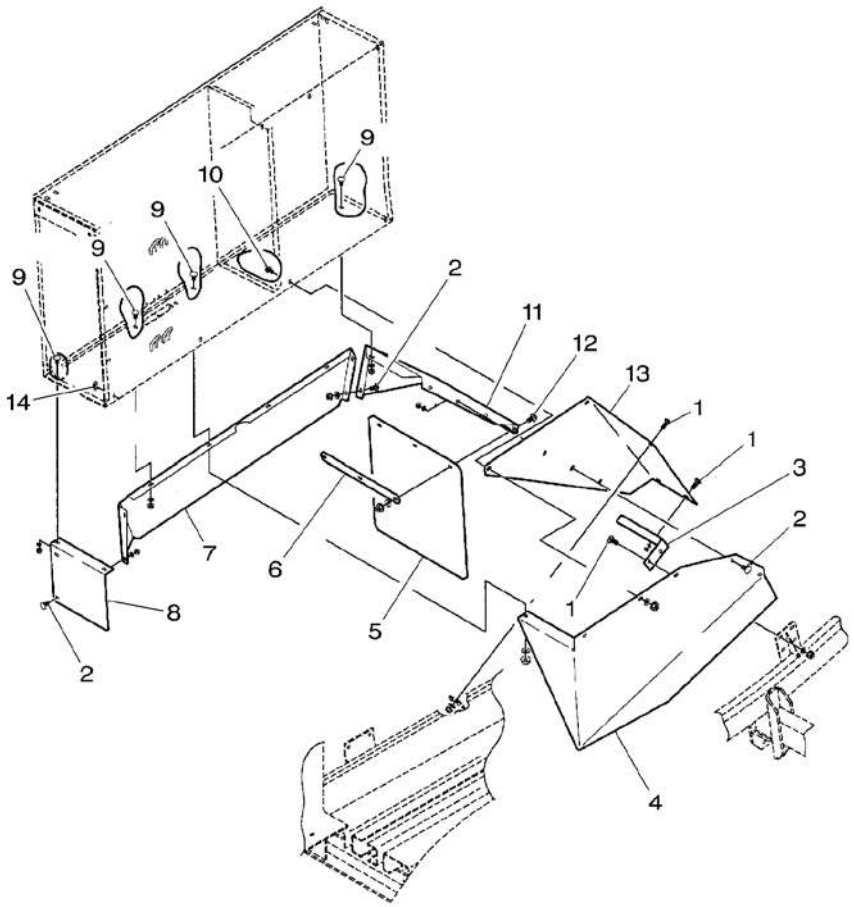

1*	*70922786*	3/8"–16 X 1	5	BOLT	BOULON BULLONE MASCH.SCHRAUBE PERNO
1*	*Y705533*	3/8"	5	WASHER	RONDELLE RONDELLA UNTERLEGSCHEIBE ARANDELA
1*	***700711238***	3/8"–16	5	NUT	ECROU DADO MUTTER TUERCA
2*	7770456	3/8"–16 X 3/4	4	BOLT	BOULON BULLONE MASCH.SCHRAUBE PERNO
2*	*Y705533*	3/8"	4	WASHER	RONDELLE RONDELLA UNTERLEGSCHEIBE ARANDELA
2*	***700711238***	3/8"–16	4	NUT	ECROU DADO MUTTER TUERCA
3*	700140387P		1	SUPPORT	SUPPORT SUPPORTO LAGERUNG DISPOS.DE SOSTEN
4*	700140294P		1	SHIELD	TOLE RIPARO SCHILD BLINDAJE
5	700720521		1	FLAP	BATTANT PIANO KLAPPE ALETILLA
6*	700140445P		1	STRAP	PATTE CORREGGIA LASCHE FAJA
7	700140487M		1	GUARD	GARDE PROTEZIONE SCHUTZVORR DEFENSA
8*	700140383P		1	MUDGUARD	GARDE BOUE MUDGUARD KOTBLECH MUDGUARD
9*	7770456	3/8"–16 X 3/4	7	BOLT	BOULON BULLONE MASCH.SCHRAUBE PERNO
9	***705541***	1/2"	7	FLAT WASHERS	RONDELLES PLATES RONDELLE PIANE UNTERLEGSCHEIBEN ARANDELAS PLANAS
9*	***700711238***	3/8"–16	7	NUT	ECROU DADO MUTTER TUERCA
10	***7883374***	3/8"–16 X 3/4	2	SCREW	VIS VITE SCHRAUBE TORNILLO
10	700710049	3/8"	2	WASHER	RONDELLE RONDELLA UNTERLEGSCHEIBE ARANDELA
10*	***700711238***	3/8"–16	2	NUT	ECROU DADO MUTTER TUERCA
11*	700140391P		1	MUDGUARD	GARDE BOUE MUDGUARD KOTBLECH MUDGUARD
12	7883382	3/8"–16 X 1	3	SCREW	VIS VITE SCHRAUBE TORNILLO
12*	*Y705533*	3/8"	3	WASHER	RONDELLE RONDELLA UNTERLEGSCHEIBE ARANDELA
12*	***700711238***	3/8"–16	3	NUT	ECROU DADO MUTTER TUERCA
13*	700140393P		1	SHIELD	TOLE RIPARO SCHILD BLINDAJE
14*	700720744	1/2" X 3/4	1	PLUG	BOUCHON TAPPO VERSCHL.STOPFEN TAPON

Shields Garants Schutzbleche Difese Proteccionee	60-90	Tandem – From H.L 74217 Tandem – A Partir Du H.L 74217 Tandem – Ab H.L 74217 Tandem – Dalla H.L 74217 Tandem – Despues H.L 74217

5-BA17-069-A

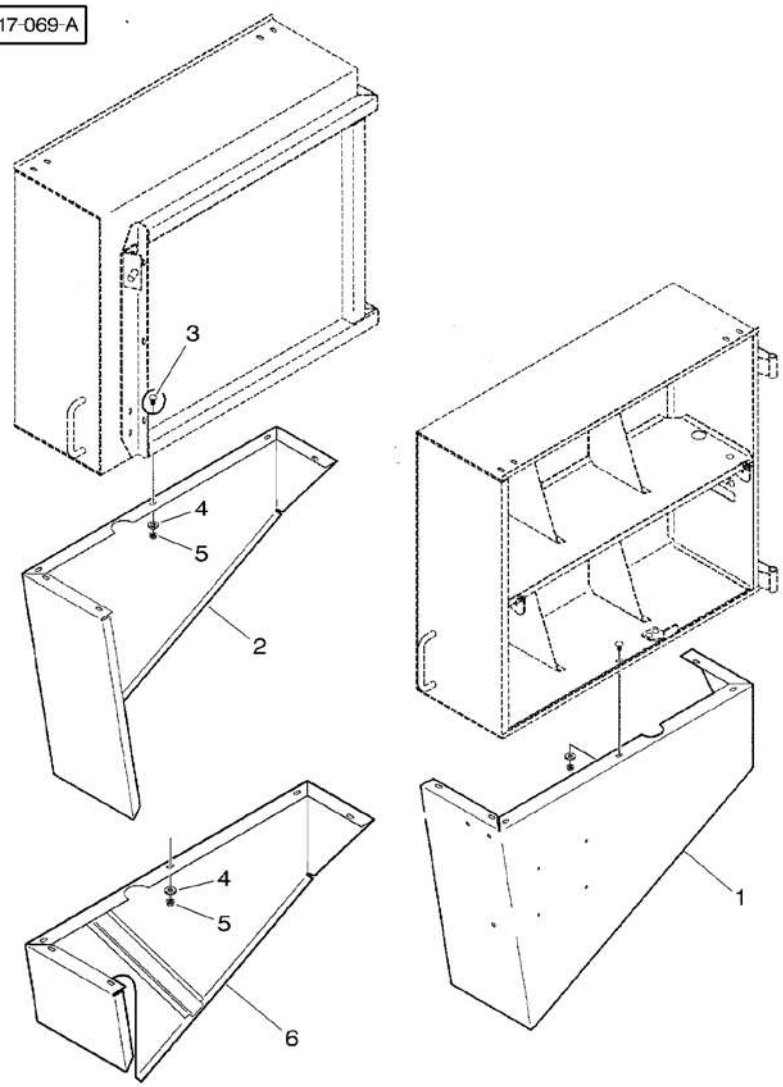

1*	700140433P	◀	1	SHIELD	TOLE RIPARO	SCHILD BLINDAJE
2*	700140438P	[A] ▶ ▼	1	SHIELD	TOLE RIPARO	SCHILD BLINDAJE
3*	7770456	3/8"–16 X 3/4	12	BOLT	BOULON BULLONE	MASCH.SCHRAUBE PERNO
4*	*705541*	1/2"	12	FLAT WASHERS	RONDELLES PLATES RONDELLE PIANE	UNTERLEGSCHEIBEN ARANDELAS PLANAS
5*	*700711238*	3/8"–16	12	NUT	ECROU DADO	MUTTER TUERCA
6*	700140436P	[B] ▶ ▼	1	SHIELD	TOLE RIPARO	SCHILD BLINDAJE

[A] WITH CUTTERS
AVEC COUTEAUX
MIT MESSERKLINGE
LAME
CON CUCHILLAS

[B] WITHOUT CUTTERS
SANS COUTEAUX
OHNE MESSERKLINGE
SINZA LAME
SIN CUCHILLOS

Shields
Garants
Schutzbleche
Difese
Proteccionee

60-95

H.L 74217

5-BA17-070-A

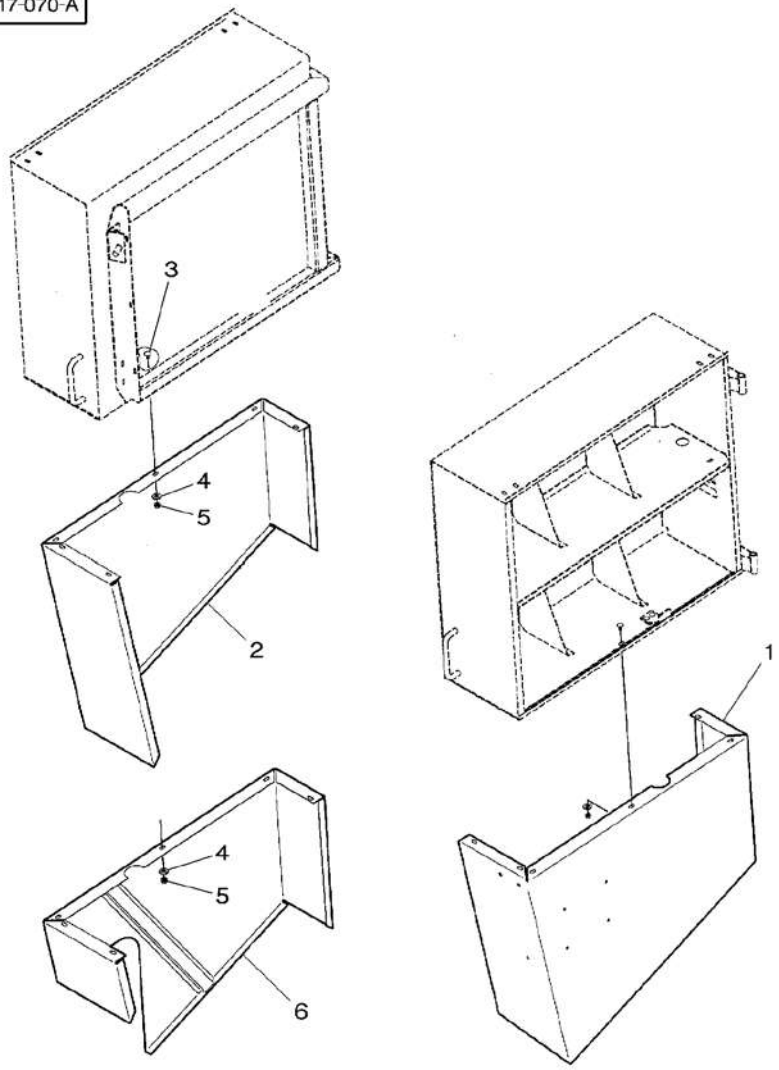

1*	700140439P	◀	1	SHIELD	TOLE RIPARO	SCHILD BLINDAJE
2*	700140440P	[A] ▶ ▼	1	SHIELD	TOLE RIPARO	SCHILD BLINDAJE
3	7770456	3/8"–16 X 3/4	12	BOLT	BOULON BULLONE	MASCH.SCHRAUBE PERNO
4	***705541***	1/2"	12	FLAT WASHERS	RONDELLES PLATES RONDELLE PIANE	UNTERLEGSCHEIBEN ARANDELAS PLANAS
5	***700711238***	3/8"–16	12	NUT	ECROU DADO	MUTTER TUERCA
6*	700140441P	[B] ▶ ▼	1	SHIELD	TOLE RIPARO	SCHILD BLINDAJE

[A] WITH CUTTERS
AVEC COUTEAUX
MIT MESSERKLINGE
LAME
CON CUCHILLAS

[B] WITHOUT CUTTERS
SANS COUTEAUX
OHNE MESSERKLINGE
SINZA LAME
SIN CUCHILLOS

Shields
Garants
Schutzbleche
Difese
Proteccionee

60-100

Ladder Rails – Up To H.L 74216
Echelle – Jusqu'Au H.L 74216
Aufstieg – Bis H.L 74216
Guida Scala – Fino Alla H.L 74216
Guia Escala – Hasta H.L 74216

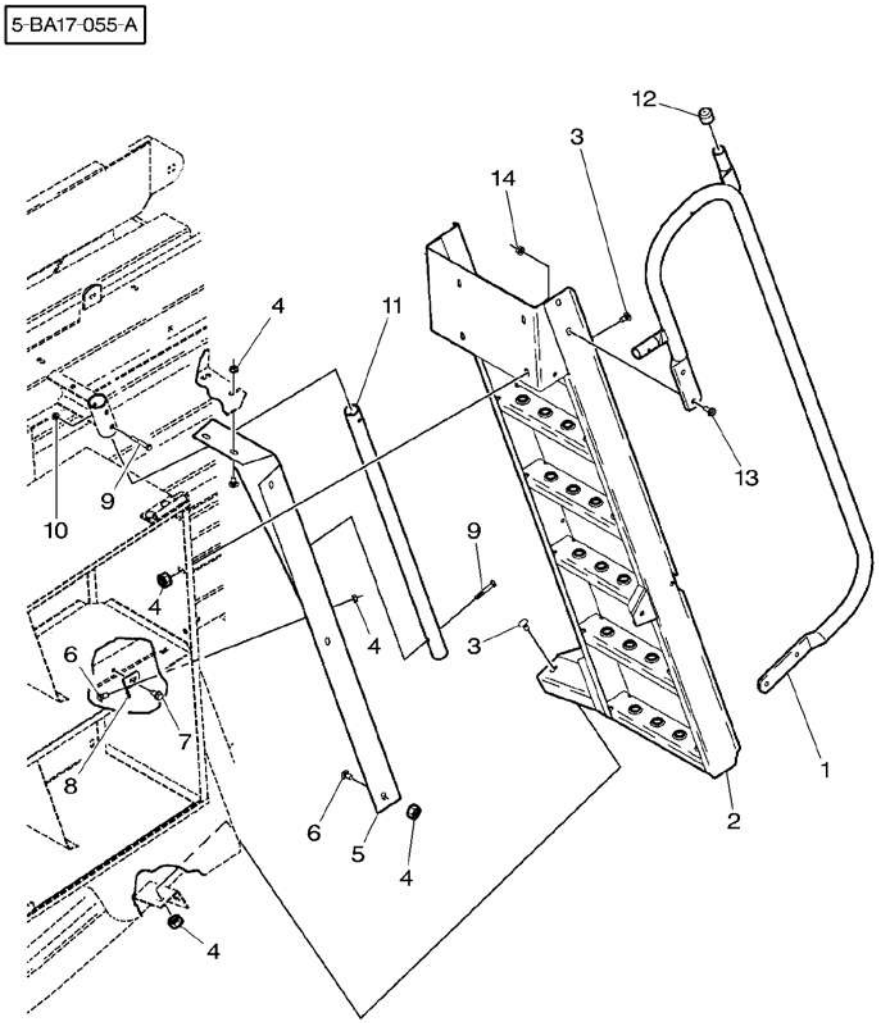

1*	700138022B	◀	1	RAIL	RAIL SBARRA	SCHIENE RIEL
2*	700137894		1	LADDER	ECHELLE SCALA	LEITER ESCALERA
3*	70922784	3/8"–16 X 3/4	6	BOLT	BOULON BULLONE	MASCH.SCHRAUBE PERNO
4*	***700711238***	3/8"–16	12	NUT	ECROU DADO	MUTTER TUERCA
5*	700138132	◀	1	SHIELD	TOLE RIPARO	SCHILD BLINDAJE
6*	7770456	3/8"–16 X 3/4	6	BOLT	BOULON BULLONE	MASCH.SCHRAUBE PERNO
7*	Y702951	3/8"–16 X 3/4	1	SCREW	VIS VITE	SCHRAUBE TORNILLO
8	700137888		1	SUPPORT	SUPPORT SUPPORTO	LAGERUNG DISPOS.DE SOSTEN
9*	353687X1	5/16"–18 X 2	2	BOLT UNC	BOULON UNC BULLONE UNC	MASCH.SCHRB.UNC PERNO UNC
10*	Y704726	5/16"–18	2	TOP LOCKNUT	ECROU FREIN DADO DI TESTA	SELBSTS.MUTTER CONTRATUERCA SUP
11	700138031	▶	1	PIPE	TUYAU TUBO	ROHRLEITUNG CANO
12	700708407		1	PLUG	BOUCHON TAPPO	VERSCHL.STOPFEN TAPON
13*	***7883374***	3/8"–16 X 3/4	4	SCREW	VIS VITE	SCHRAUBE TORNILLO
14*	***704247***	3/8"–16	4	LOCKNUT	ECROU BLOCAGE AUTOBLOCCANTE	FLACHMUTTER CONTRATUERCA

Shields
Garants
Schutzbleche
Difese
Proteccionee

60-105

Ladder Rails – From H.L 74217
Echelle – A Partir Du H.L 74217
Aufstieg – Ab H.L 74217
Guida Scala – Dalla H.L 74217
Guia Escala – Despues H.L 74217

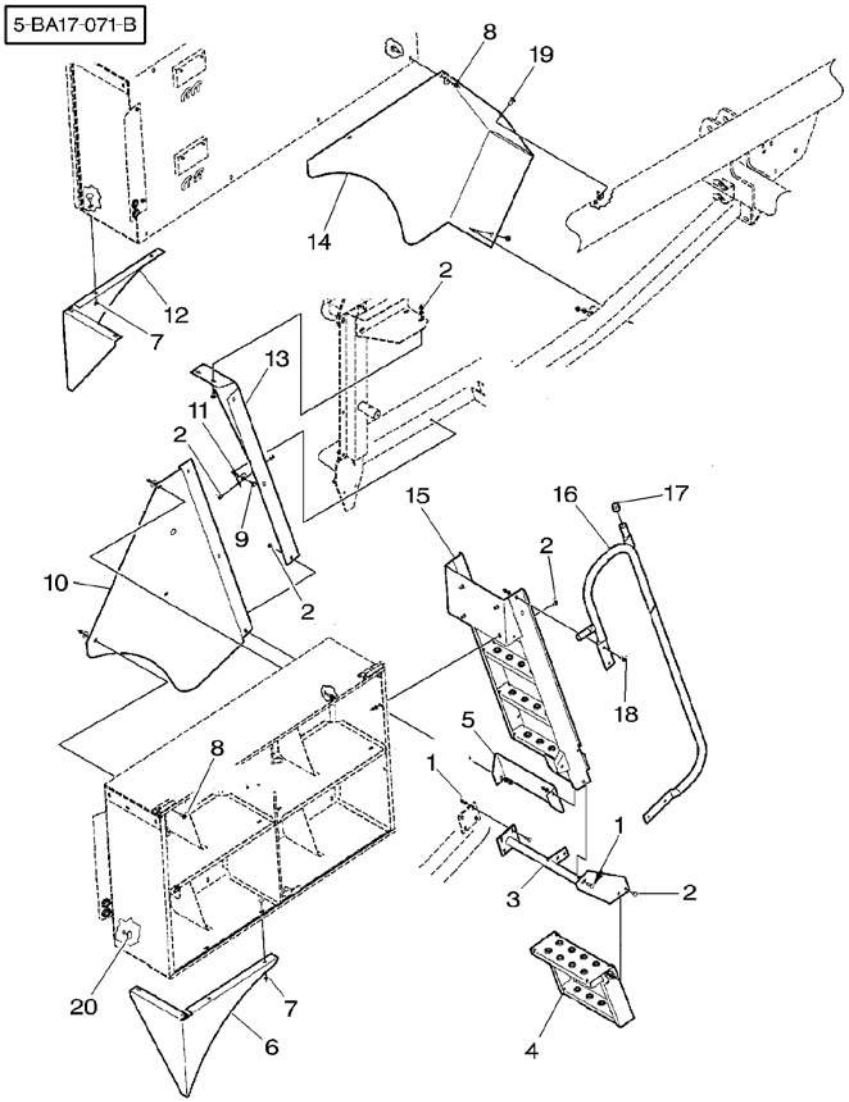

1 *	*70922786*	3/8"–16 X 1	5	BOLT	BOULON BULLONE MASCH.SCHRAUBE PERNO
1 *	*Y705533*	3/8"	5	WASHER	RONDELLE RONDELLA UNTERLEGSCHEIBE ARANDELA
1 *	***700711238***	3/8"–16	5	NUT	ECROU DADO MUTTER TUERCA
2 *	7770456	3/8"–16 X 3/4	14	BOLT	BOULON BULLONE MASCH.SCHRAUBE PERNO
2 *	*Y705533*	3/8"	14	WASHER	RONDELLE RONDELLA UNTERLEGSCHEIBE ARANDELA
2 *	***700711238***	3/8"–16	14	NUT	ECROU DADO MUTTER TUERCA
3 *	700140386P	◀	1	TUBE	TUBE TUBO ROHR TUBO
4 *	700140395P		1	LADDER	ECHELLE SCALA LEITER ESCALERA
5 *	700140489P		1	SHIELD	TOLE RIPARO SCHILD BLINDAJE
6 *	700140499P	◀	1	PANEL	PANNEAU PANNELLO VERKL.BLECH PANEL
7 *	7770456	3/8"–16 X 3/4	4	BOLT	BOULON BULLONE MASCH.SCHRAUBE PERNO
7 *	***700711238***	3/8"–16	4	NUT	ECROU DADO MUTTER TUERCA
8 *	***7883374***	3/8"–16 X 3/4	5	SCREW	VIS VITE SCHRAUBE TORNILLO
8 *	700710049	3/8"	5	WASHER	RONDELLE RONDELLA UNTERLEGSCHEIBE ARANDELA
8 *	***704247***	3/8"–16	5	LOCKNUT	ECROU BLOCAGE AUTOBLOCCANTE FLACHMUTTER CONTRATUERCA
9 *	Y702951	3/8"–16 X 3/4	1	SCREW	VIS VITE SCHRAUBE TORNILLO
10 *	700140431P	◀	1	SHIELD	TOLE RIPARO SCHILD BLINDAJE
11	700137888		1	SUPPORT	SUPPORT SUPPORTO LAGERUNG DISPOS.DE SOSTEN
12 *	700140500P	▶	1	PANEL	PANNEAU PANNELLO VERKL.BLECH PANEL
13 *	700140481M	◀	1	SHIELD	TOLE RIPARO SCHILD BLINDAJE
14 *	700140482P	▶	1	SHIELD	TOLE RIPARO SCHILD BLINDAJE
15	700140488M		1	LADDER	ECHELLE SCALA LEITER ESCALERA
16 *	700138022B		1	RAIL	RAIL SBARRA SCHIENE RIEL
17	700708407		1	PLUG	BOUCHON TAPPO VERSCHL.STOPFEN TAPON
18 *	***7883374***	3/8"–16 X 3/4	4	SCREW	VIS VITE SCHRAUBE TORNILLO
18 *	*Y705533*	3/8"	4	WASHER	RONDELLE RONDELLA UNTERLEGSCHEIBE ARANDELA

Shields
Garants
Schutzbleche
Difese
Proteccionee

60-105

Ladder Rails – From H.L 74217
Echelle – A Partir Du H.L 74217
Aufstieg – Ab H.L 74217
Guida Scala – Dalla H.L 74217
Guia Escala – Despues H.L 74217

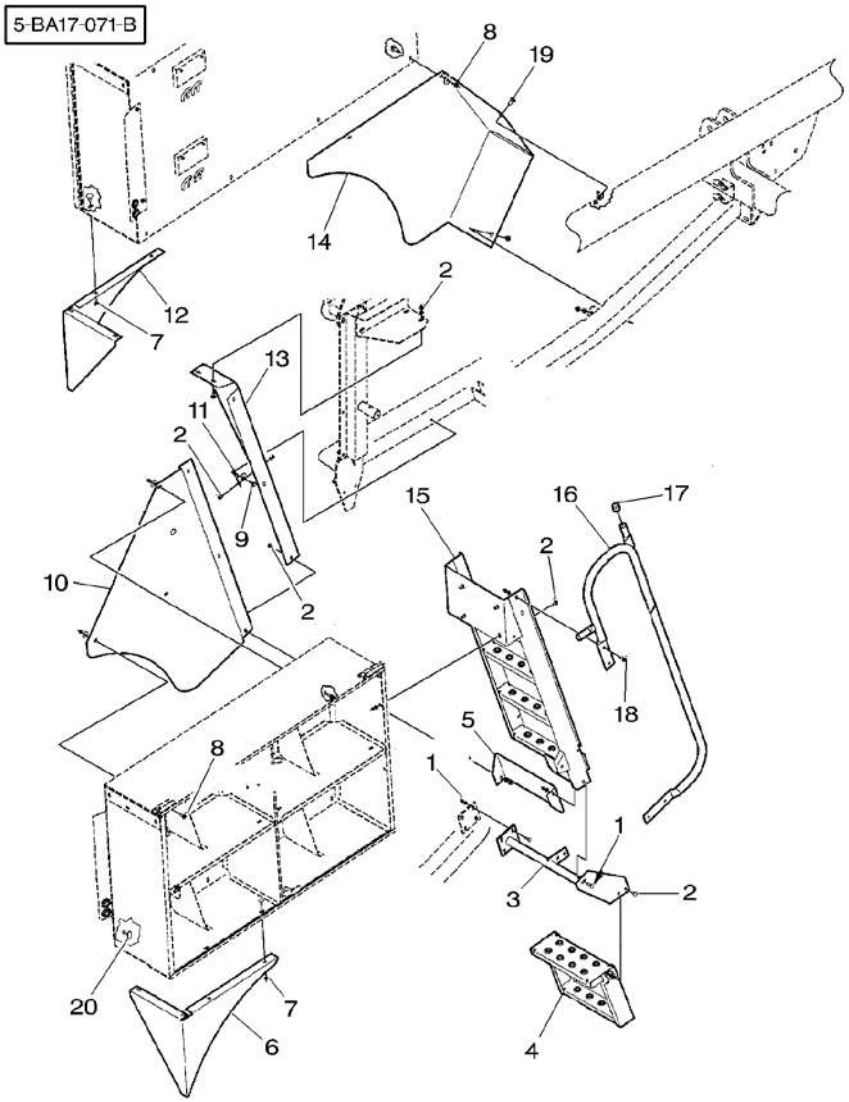

18*	*704247*	3/8"–16	**4** LOCKNUT	ECROU BLOCAGE AUTOBLOCCANTE	FLACHMUTTER CONTRATUERCA
19*	7770456	3/8"–16 X 3/4	**2** BOLT	BOULON BULLONE	MASCH.SCHRAUBE PERNO
19*	*Y705533*	3/8"	**2** WASHER	RONDELLE RONDELLA	UNTERLEGSCHEIBE ARANDELA
19*	*704247*	3/8"–16	**2** LOCKNUT	ECROU BLOCAGE AUTOBLOCCANTE	FLACHMUTTER CONTRATUERCA
20*	700720744	1/2" X 3/4	**8** PLUG	BOUCHON TAPPO	VERSCHL.STOPFEN TAPON

Shields
Garants
Schutzbleche
Difese
Proteccionee

60-110

Tandem – Ladder Rails
Tandem – Echelle
Tandem – Aufstieg
Tandem – Guida Scala
Tandem – Guia Escala

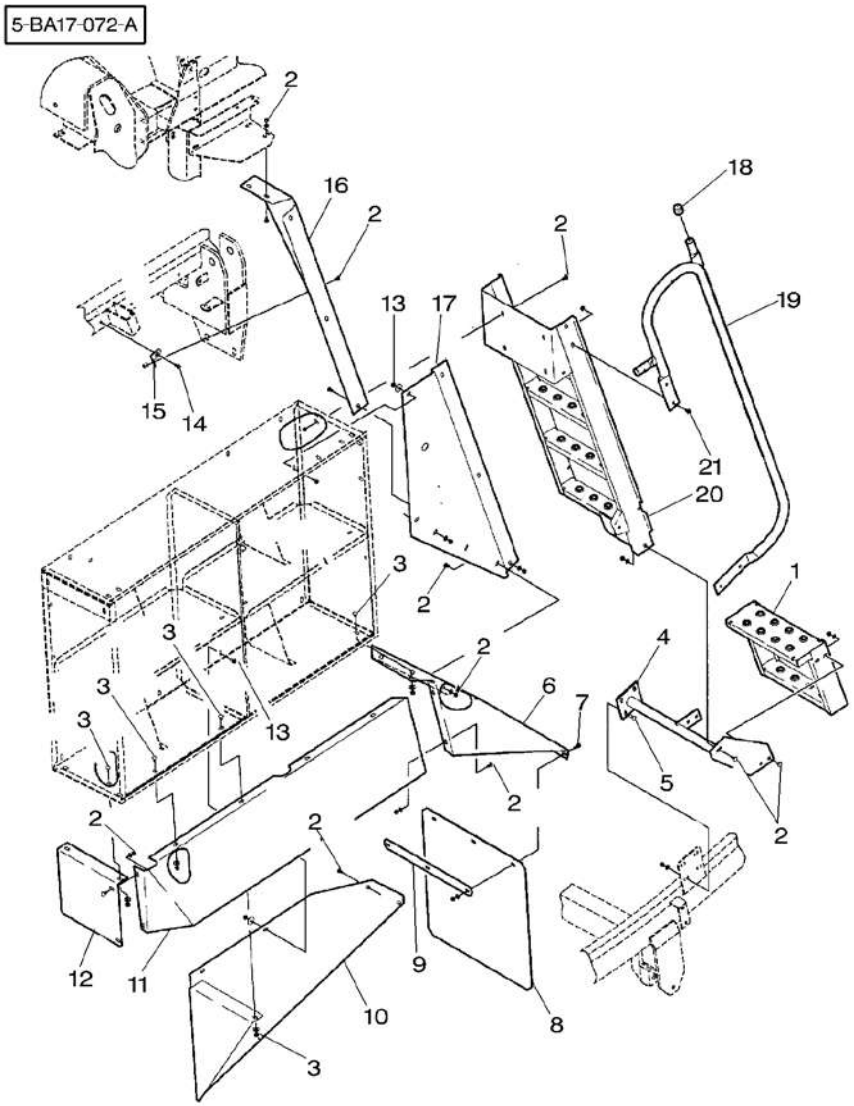

1★	700140395P		1	LADDER	ECHELLE SCALA	LEITER ESCALERA
2★	7770456	3/8"–16 X 3/4	20	BOLT	BOULON BULLONE	MASCH.SCHRAUBE PERNO
2★	*Y705533*	3/8"	20	WASHER	RONDELLE RONDELLA	UNTERLEGSCHEIBE ARANDELA
2★	***700711238***	3/8"–16	20	NUT	ECROU DADO	MUTTER TUERCA
3★	7770456	3/8"–16 X 3/4	12	BOLT	BOULON BULLONE	MASCH.SCHRAUBE PERNO
3	***705541***	1/2"	12	FLAT WASHERS	RONDELLES PLATES RONDELLE PIANE	UNTERLEGSCHEIBEN ARANDELAS PLANAS
3★	***700711238***	3/8"–16	12	NUT	ECROU DADO	MUTTER TUERCA
4★	700140386P	◀	1	TUBE	TUBE TUBO	ROHR TUBO
5★	*70922786*	3/8"–16 X 1	4	BOLT	BOULON BULLONE	MASCH.SCHRAUBE PERNO
5★	*Y705533*	3/8"	4	WASHER	RONDELLE RONDELLA	UNTERLEGSCHEIBE ARANDELA
5★	***700711238***	3/8"–16	4	NUT	ECROU DADO	MUTTER TUERCA
6★	700140382P	◀	1	MUDGUARD	GARDE BOUE MUDGUARD	KOTBLECH MUDGUARD
7★	7883382	3/8"–16 X 1	3	SCREW	VIS VITE	SCHRAUBE TORNILLO
7★	*Y705533*	3/8"	3	WASHER	RONDELLE RONDELLA	UNTERLEGSCHEIBE ARANDELA
7★	***700711238***	3/8"–16	3	NUT	ECROU DADO	MUTTER TUERCA
8	700720521		1	FLAP	BATTANT PIANO	KLAPPE ALETILLA
9★	700140445P		1	STRAP	PATTE CORREGGIA	LASCHE FAJA
10★	700140292P	◀	1	SHIELD	TOLE RIPARO	SCHILD BLINDAJE
11★	700140486M	◀	1	GUARD	GARDE PROTEZIONE	SCHUTZVORR DEFENSA
12★	700140380P	◀	1	MUDGUARD	GARDE BOUE MUDGUARD	KOTBLECH MUDGUARD
13★	***7883374***	3/8"–16 X 3/4	3	SCREW	VIS VITE	SCHRAUBE TORNILLO
13★	700710049	3/8"	3	WASHER	RONDELLE RONDELLA	UNTERLEGSCHEIBE ARANDELA
13★	***700711238***	3/8"–16	3	NUT	ECROU DADO	MUTTER TUERCA
14★	Y702951	3/8"–16 X 3/4	1	SCREW	VIS VITE	SCHRAUBE TORNILLO
15	700137888		1	SUPPORT	SUPPORT SUPPORTO	LAGERUNG DISPOS.DE SOSTEN
16★	700140481M	◀	1	SHIELD	TOLE RIPARO	SCHILD BLINDAJE

Shields Garants Schutzbleche Difese Proteccionee	60-110	Tandem – Ladder Rails Tandem – Echelle Tandem – Aufstieg Tandem – Guida Scala Tandem – Guia Escala

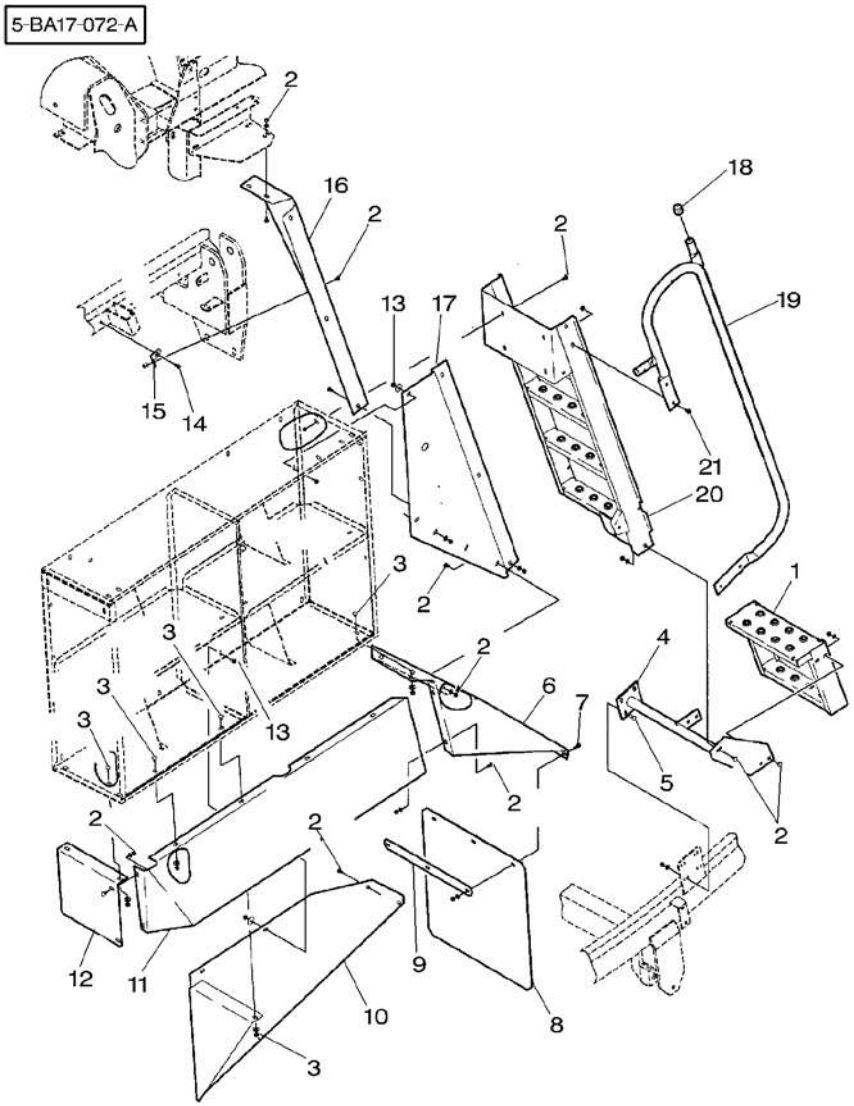

17*	700140432P	◀	1	SHIELD	TOLE RIPARO SCHILD BLINDAJE
18	700708407		1	PLUG	BOUCHON TAPPO VERSCHL.STOPFEN TAPON
19*	700138022B	◀	1	RAIL	RAIL SBARRA SCHIENE RIEL
20*	700140488M		1	LADDER	ECHELLE SCALA LEITER ESCALERA
21*	*7883374*	3/8"–16 X 3/4	4	SCREW	VIS VITE SCHRAUBE TORNILLO
21	*704247*	3/8"–16	4	LOCKNUT	ECROU BLOCAGE AUTOBLOCCANTE FLACHMUTTER CONTRATUERCA

Shields
Garants
Schutzbleche
Difese
Proteccionee

60-115

Tubular Support Stays
Armature
Armatur
Armatura
Armadura

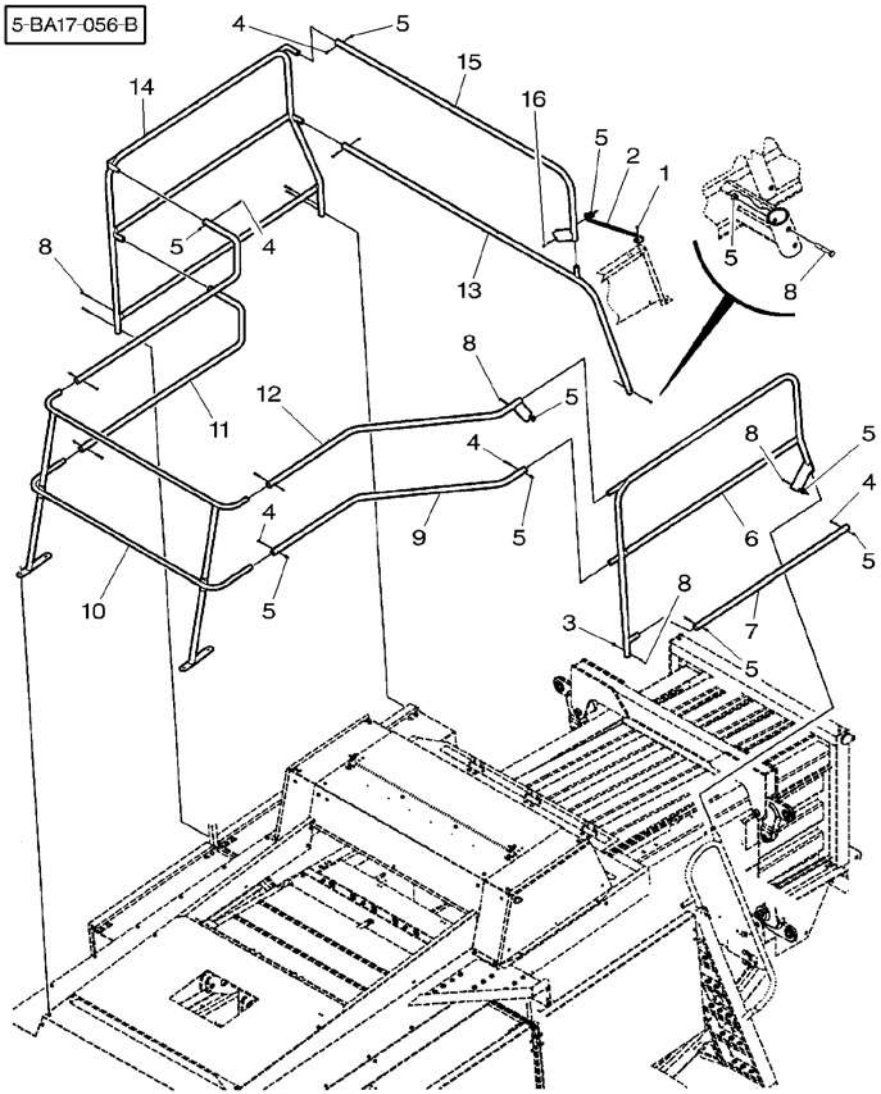

1*	7883325	5/16"-18 X 3/4	1	SCREW	VIS VITE	SCHRAUBE TORNILLO
2*	700138035		1	SHANK	ANGLE FUSO	SCHAFT MANGO
3*	Y704726	5/16"-18	5	TOP LOCKNUT	ECROU FREIN DADO DI TESTA	SELBSTS.MUTTER CONTRATUERCA SUP
4*	353685X1	5/16"-18 X 1-3/4	11	BOLT UNC	BOULON UNC BULLONE UNC	MASCH.SCHRB.UNC PERNO UNC
5*	Y704163	5/16"-18	15	NUT	ECROU DADO	MUTTER TUERCA
6*	700138001B	◀	1	RAIL	RAIL SBARRA	SCHIENE RIEL
7	700138004		1	PIPE	TUYAU TUBO	ROHRLEITUNG CANO
8*	353687X1	5/16"-18 X 2	8	BOLT UNC	BOULON UNC BULLONE UNC	MASCH.SCHRB.UNC PERNO UNC
9*	700138009B	◀	1	RAIL	RAIL SBARRA	SCHIENE RIEL
10*	700138010B		1	RAIL	RAIL SBARRA	SCHIENE RIEL
11*	700138029B	▶	2	PIPE	TUYAU TUBO	ROHRLEITUNG CANO
12*	700138028B	◀	1	PIPE	TUYAU TUBO	ROHRLEITUNG CANO
13*	700138026	▶	1	RAIL	RAIL SBARRA	SCHIENE RIEL
14*	700138015B	▶	1	RAIL	RAIL SBARRA	SCHIENE RIEL
15*	700138023B	▶	1	RAIL	RAIL SBARRA	SCHIENE RIEL
16*	**354615X1**	5/16"-18 X 2-1/2	1	BOLT UNC	BOULON UNC BULLONE UNC	MASCH.SCHRB.UNC PERNO UNC

Shields Garants Schutzbleche Difese Proteccionee	60-120	With Cutters Avec Couteaux Mit Messer Con Lame Con Cuchillos

5-BA17-101-A

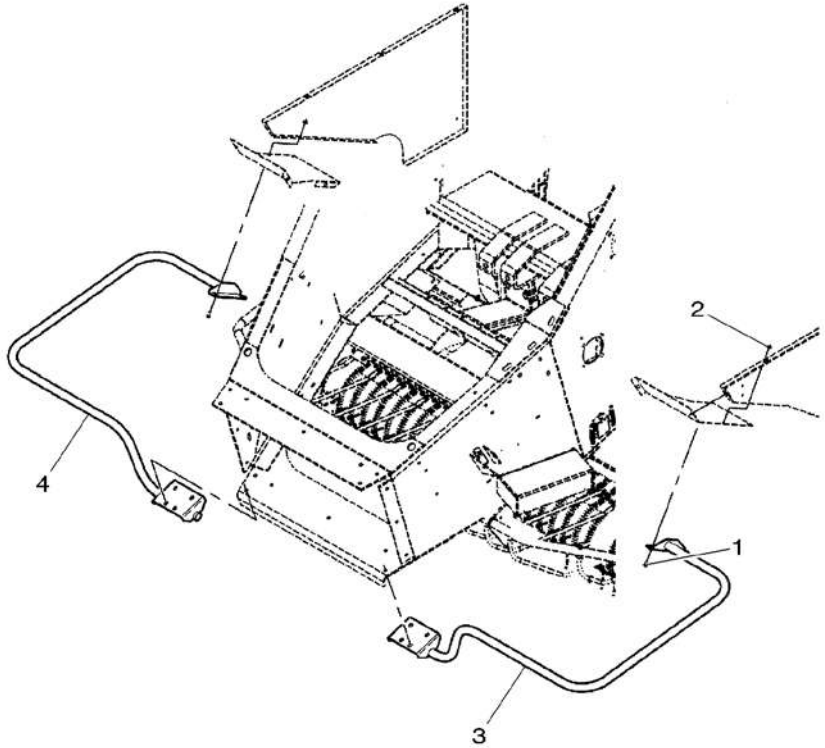

1*	7883325	5/16"–18 X 3/4	4	SCREW	VIS VITE	SCHRAUBE TORNILLO
2*	70931277	5/16"–18	4	LOCKNUT	ECROU BLOCAGE AUTOBLOCCANTE	FLACHMUTTER CONTRATUERCA
3*	700163359P	◀	1	PROTECTOR	PROTECTEUR PROTETTORE	SCHUTZ PROTECTOR
4*	700163361P	▶	1	PROTECTOR	PROTECTEUR PROTETTORE	SCHUTZ PROTECTOR

Shields Garants Schutzbleche Difese Proteccionee	60-125	Without Cutters Sans Couteaux Ohne Messer Senza Lame Sin Cuchillos

5-BA17-049-A

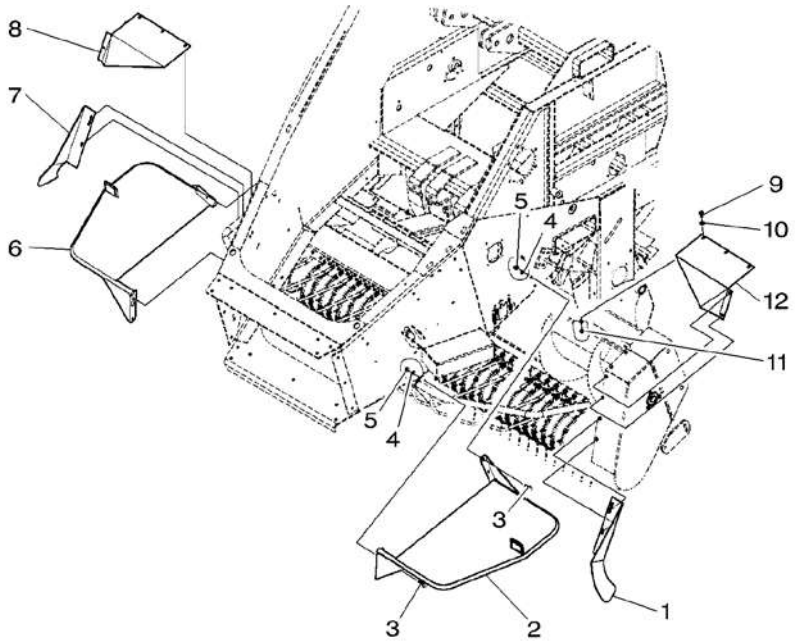

1*	700138175P	◀	1	SHIELD	TOLE RIPARO	SCHILD BLINDAJE
2*	700138140M	◀	1	SHIELD	TOLE RIPARO	SCHILD BLINDAJE
3	7883382	3/8"–16 X 1	6	SCREW	VIS VITE	SCHRAUBE TORNILLO
4	*Y705533*	3/8"	6	WASHER	RONDELLE RONDELLA	UNTERLEGSCHEIBE ARANDELA
5	***700711238***	3/8"–16	6	NUT	ECROU DADO	MUTTER TUERCA
6*	700138145M	▶	1	SHIELD	TOLE RIPARO	SCHILD BLINDAJE
7*	700138176P	▶	1	SHIELD	TOLE RIPARO	SCHILD BLINDAJE
8*	700138161P	▶	1	SHIELD	TOLE RIPARO	SCHILD BLINDAJE
9	7883325	5/16"–18 X 3/4	6	SCREW	VIS VITE	SCHRAUBE TORNILLO
10	***Y705525***	5/16"	6	WASHER	RONDELLE RONDELLA	UNTERLEGSCHEIBE ARANDELA
11*	70931277	5/16"–18	6	LOCKNUT	ECROU BLOCAGE AUTOBLOCCANTE	FLACHMUTTER CONTRATUERCA
12*	700138146P	◀	1	SHIELD	TOLE RIPARO	SCHILD BLINDAJE

Twine Box
Boite A Ficelle
Garnbehalter
Scatola Portafilo
Caja De La Bobina

60-130

Left Side – Up To H.L 74216
Cote Gauche – Jusqu'Au H.L 74216
Linke Seite – Bis H.L 74216
Lato Sinistro – Fino Alla H.L 74216
Lado Izquierdo – Hasta H.L 74216

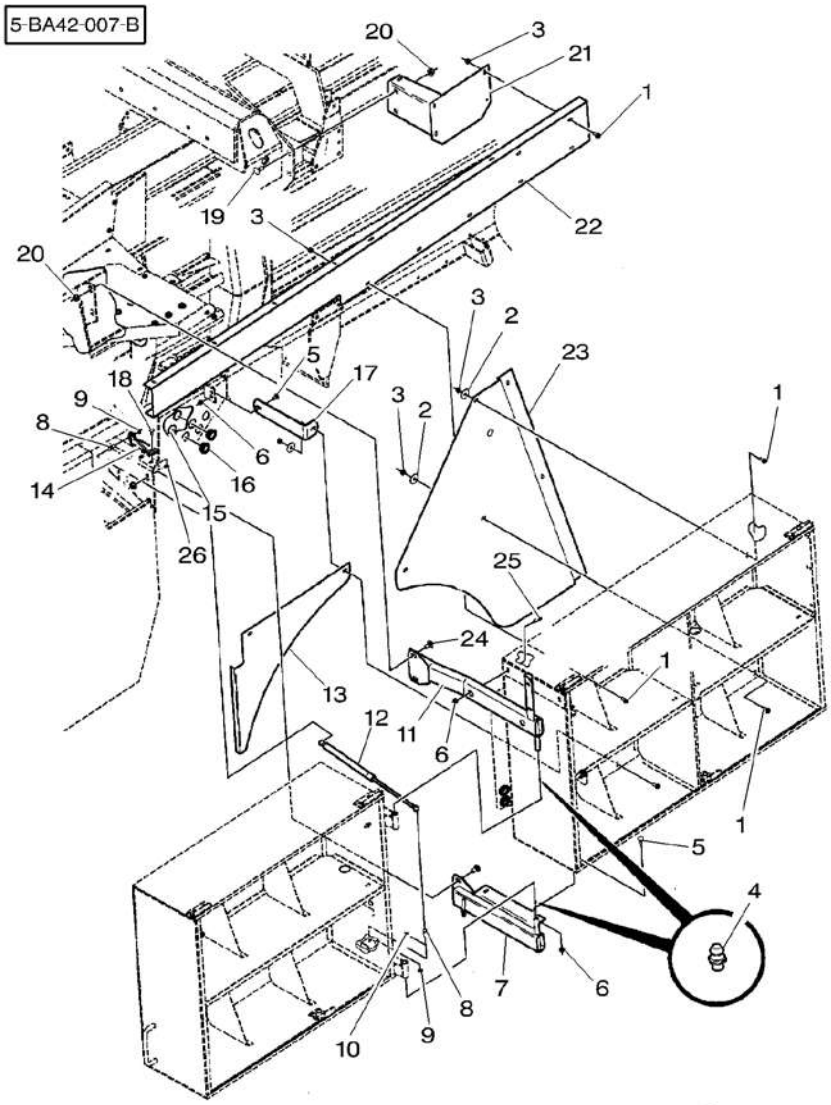

1*	*7883374*	3/8"–16 X 3/4	12	SCREW	VIS VITE	SCHRAUBE TORNILLO
2*	700710049	3/8"	5	WASHER	RONDELLE RONDELLA	UNTERLEGSCHEIBE ARANDELA
3*	*704247*	3/8"–16	12	LOCKNUT	ECROU BLOCAGE AUTOBLOCCANTE	FLACHMUTTER CONTRATUERCA
4	*70923219*	1/4"–28	2	GREASER	GRAISSEUR INGRASSATORE	FETTNIPPEL ENGRASADOR
5*	70922784	3/8"–16 X 3/4	3	BOLT	BOULON BULLONE	MASCH.SCHRAUBE PERNO
6*	*700711238*	3/8"–16	5	NUT	ECROU DADO	MUTTER TUERCA
7*	700137848P	◀ ▼	1	SUPPORT	SUPPORT SUPPORTO	LAGERUNG DISPOS.DE SOSTEN
8*	700720042	5/16"–18	2	STUD	GOUJON PRIGIONIERO	STEHBOLZEN ESPARRAGO
9*	70931277	5/16"–18	2	LOCKNUT	ECROU BLOCAGE AUTOBLOCCANTE	FLACHMUTTER CONTRATUERCA
10	71307132		2	CLIP	CLIP FERMAGLIO	SCHELLE CRAPA RETEN
11	700137855	◀ ▲	1	SUPPORT	SUPPORT SUPPORTO	LAGERUNG DISPOS.DE SOSTEN
12	700720043		1	GAS STRUT	VERIN AMORTISSEU CILINDRO GAS	GASZYLINDER CILINDRO GAS
13	700137971	◀	1	PANEL	PANNEAU PANNELLO	VERKL.BLECH PANEL
14*	700137820P		1	SUPPORT	SUPPORT SUPPORTO	LAGERUNG DISPOS.DE SOSTEN
15	*70927744*		2	RING	ANNEAU ANELLO	RING ARO
16	700137816		2	GUIDE	GUIDE GUIDA	FUEHRUNG GUIA
17*	700123922P		1	SUPPORT	SUPPORT SUPPORTO	LAGERUNG DISPOS.DE SOSTEN
18*	364352X1	5/16"–18 X 3/4	2	BOLT UNC	BOULON UNC BULLONE UNC	MASCH.SCHRB.UNC PERNO UNC
19*	364224X1	1/2"–13 X 1–1/4	2	BOLT UNC	BOULON UNC BULLONE UNC	MASCH.SCHRB.UNC PERNO UNC
20*	700714586	1/2"–13	6	NUT	ECROU DADO	MUTTER TUERCA
21*	700137949P	◀	1	SUPPORT	SUPPORT SUPPORTO	LAGERUNG DISPOS.DE SOSTEN
22*	700137945P	◀	1	SHIELD	TOLE RIPARO	SCHILD BLINDAJE
23	700137965	◀	1	SHIELD	TOLE RIPARO	SCHILD BLINDAJE
24*	70928367	1/2"–13 X 1	4	BOLT	BOULON BULLONE	MASCH.SCHRAUBE PERNO
25*	*70922786*	3/8"–16 X 1	2	BOLT	BOULON BULLONE	MASCH.SCHRAUBE PERNO
26*	Y704726	5/16"–18	2	TOP LOCKNUT	ECROU FREIN DADO DI TESTA	SELBSTS.MUTTER CONTRATUERCA SUP

Twine Box
Boite A Ficelle
Garnbehalter
Scatola Portafilo
Caja De La Bobina

60-135

Right Side – Up To H.L 74216
Cote Droit – Jusqu'Au H.L 74216
Rechte Seite – Bis H.L 74216
Lado Destra – Fino Alla H.L 74216
Lado Derecho – Hasta H.L 74216

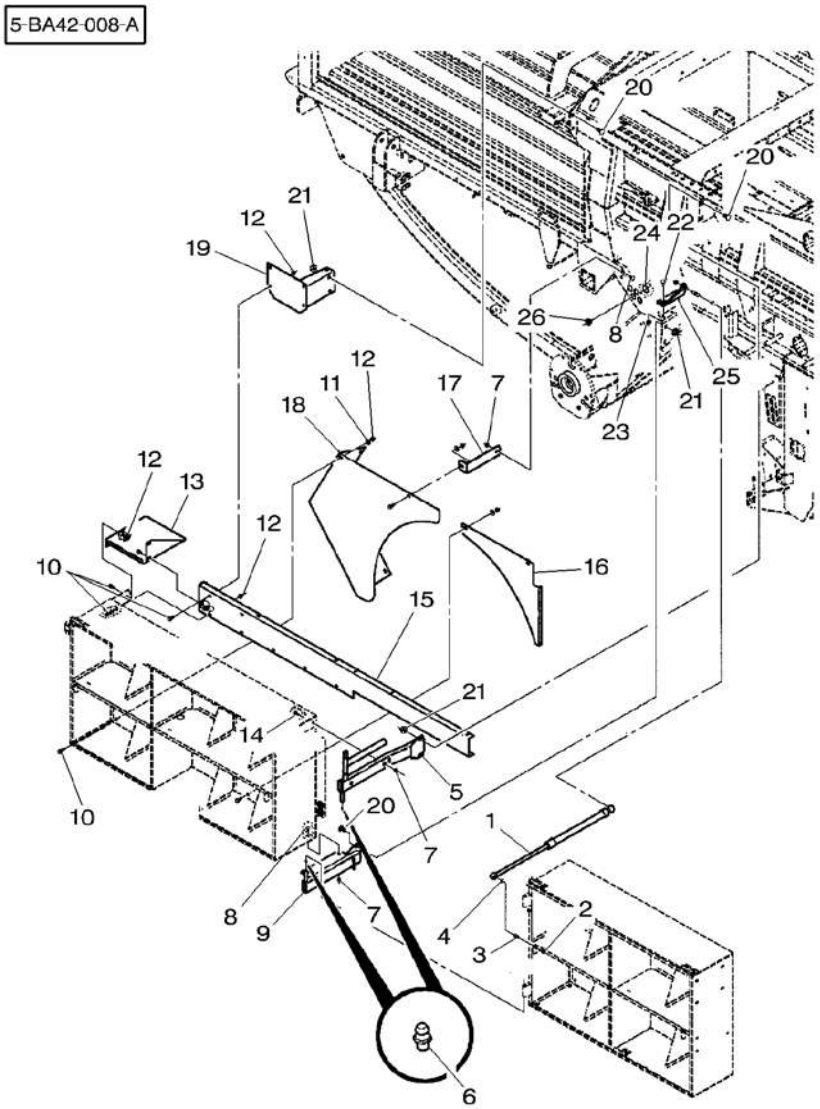

1	700720043		1	GAS STRUT	VERIN AMORTISSEU CILINDRO GAS	GASZYLINDER CILINDRO GAS
2★	70931277	5/16"–18	2	LOCKNUT	ECROU BLOCAGE AUTOBLOCCANTE	FLACHMUTTER CONTRATUERCA
3★	700720042	5/16"–18	2	STUD	GOUJON PRIGIONIERO	STEHBOLZEN ESPARRAGO
4★	71307132		4	CLIP	CLIP FERMAGLIO	SCHELLE CRAPA RETEN
5★	700152212P	▶ ▲	1	SUPPORT	SUPPORT SUPPORTO	LAGERUNG DISPOS.DE SOSTEN
6★	***70923219***	1/4"–28	4	GREASER	GRAISSEUR INGRASSATORE	FETTNIPPEL ENGRASADOR
7★	***700711238***	3/8"–16	5	NUT	ECROU DADO	MUTTER TUERCA
8★	70922784	3/8"–16 X 3/4	3	BOLT	BOULON BULLONE	MASCH.SCHRAUBE PERNO
9★	700137849P	▶ ▼	1	SUPPORT	SUPPORT SUPPORTO	LAGERUNG DISPOS.DE SOSTEN
10★	***7883374***	3/8"–16 X 3/4	15	SCREW	VIS VITE	SCHRAUBE TORNILLO
11★	700710049	3/8"	4	WASHER	RONDELLE RONDELLA	UNTERLEGSCHEIBE ARANDELA
12★	***704247***	3/8"–16	15	LOCKNUT	ECROU BLOCAGE AUTOBLOCCANTE	FLACHMUTTER CONTRATUERCA
13★	700138053P		1	SHIELD	TOLE RIPARO	SCHILD BLINDAJE
14★	*70922786*	3/8"–16 X 1	2	BOLT	BOULON BULLONE	MASCH.SCHRAUBE PERNO
15★	700152210P	▶	1	SHIELD	TOLE RIPARO	SCHILD BLINDAJE
16	700137972	▶	1	PANEL	PANNEAU PANNELLO	VERKL.BLECH PANEL
17★	700123922P		1	SUPPORT	SUPPORT SUPPORTO	LAGERUNG DISPOS.DE SOSTEN
18★	700138135	▶	1	SHIELD	TOLE RIPARO	SCHILD BLINDAJE
19★	700137951P	▶	1	SUPPORT	SUPPORT SUPPORTO	LAGERUNG DISPOS.DE SOSTEN
20★	70928367	1/2"–13 X 1	6	BOLT	BOULON BULLONE	MASCH.SCHRAUBE PERNO
21★	700714586	1/2"–13	6	NUT	ECROU DADO	MUTTER TUERCA
22★	364352X1	5/16"–18 X 3/4	2	BOLT UNC	BOULON UNC BULLONE UNC	MASCH.SCHRB.UNC PERNO UNC
23★	Y704726	5/16"–18	2	TOP LOCKNUT	ECROU FREIN DADO DI TESTA	SELBSTS.MUTTER CONTRATUERCA SUP
24	***70927744***		4	RING	ANNEAU ANELLO	RING ARO
25★	700137820P		1	SUPPORT	SUPPORT SUPPORTO	LAGERUNG DISPOS.DE SOSTEN
26	700137816		4	GUIDE	GUIDE GUIDA	FUEHRUNG GUIA

Twine Box Boite A Ficelle Garnbehalter Scatola Portafilo Caja De La Bobina	60-140	Tandem Tandem Tandem Tandem Tandem

5-BA42-014-C

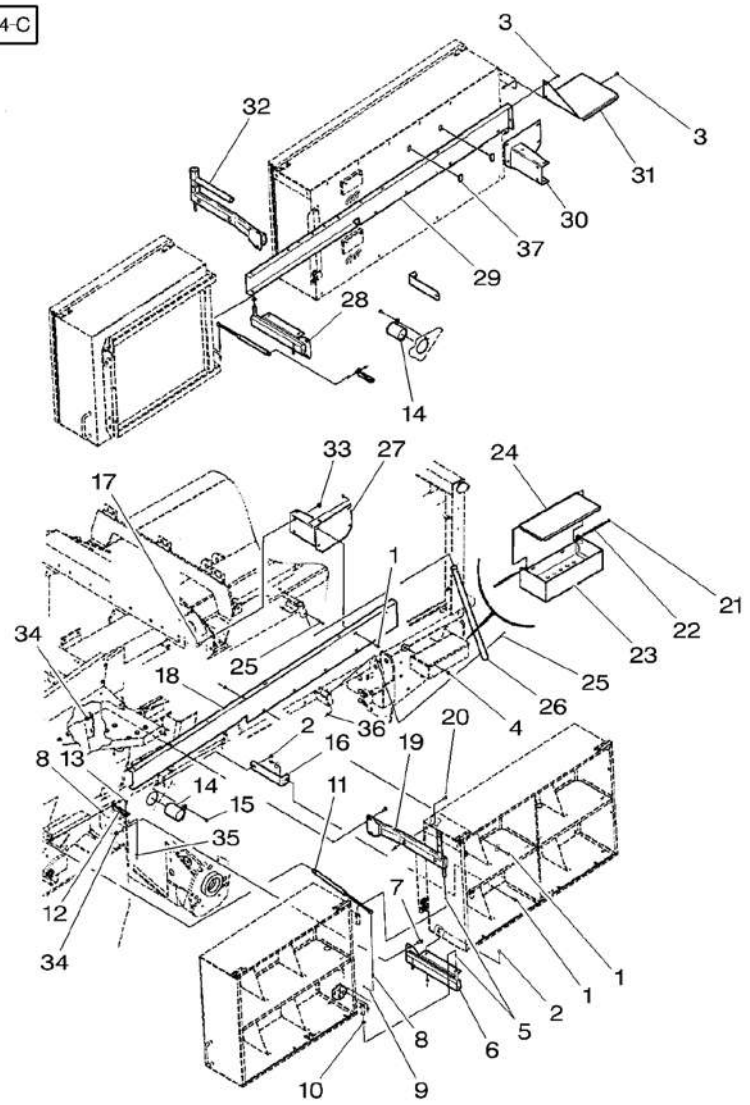

1	*7883374*	3/8"-16 X 3/4	20	SCREW	VIS VITE	SCHRAUBE TORNILLO
2	70922784	3/8"-16 X 3/4	6	BOLT	BOULON BULLONE	MASCH.SCHRAUBE PERNO
3	700710049	3/8"	12	WASHER	RONDELLE RONDELLA	UNTERLEGSCHEIBE ARANDELA
4	*700711238*	3/8"-16	12	NUT	ECROU DADO	MUTTER TUERCA
5	*70923219*	1/4"-28	4	GREASER	GRAISSEUR INGRASSATORE	FETTNIPPEL ENGRASADOR
6	700137848P	◀ ▼	1	SUPPORT	SUPPORT SUPPORTO	LAGERUNG DISPOS.DE SOSTEN
7	70928367	1/2"-13 X 1	8	BOLT	BOULON BULLONE	MASCH.SCHRAUBE PERNO
8	700720042	5/16"-18	3	STUD	GOUJON PRIGIONIERO	STEHBOLZEN ESPARRAGO
9	71307132		4	CLIP	CLIP FERMAGLIO	SCHELLE CRAPA RETEN
10	52233	5/8" X 14	2	WASHER	RONDELLE RONDELLA	UNTERLEGSCHEIBE ARANDELA
11	700720043		2	GAS STRUT	VERIN AMORTISSEU CILINDRO GAS	GASZYLINDER CILINDRO GAS
12	700137820P		2	SUPPORT	SUPPORT SUPPORTO	LAGERUNG DISPOS.DE SOSTEN
13	7883333	5/16"-18 X 1	4	SCREW	VIS VITE	SCHRAUBE TORNILLO
14	700140320		2	TUBE	TUBE TUBO	ROHR TUBO
15	Y702951	3/8"-16 X 3/4	2	SCREW	VIS VITE	SCHRAUBE TORNILLO
16	700123922P		2	SUPPORT	SUPPORT SUPPORTO	LAGERUNG DISPOS.DE SOSTEN
17	364224X1	1/2"-13 X 1-1/4	4	BOLT UNC	BOULON UNC BULLONE UNC	MASCH.SCHRB.UNC PERNO UNC
18	700137945P	◀	1	SHIELD	TOLE RIPARO	SCHILD BLINDAJE
19	700137855	◀ ▲	1	SUPPORT	SUPPORT SUPPORTO	LAGERUNG DISPOS.DE SOSTEN
20	*70922786*	3/8"-16 X 1	4	BOLT	BOULON BULLONE	MASCH.SCHRAUBE PERNO
21	700707858		2	RING	ANNEAU ANELLO	RING ARO
22	700108570		1	ROD	TRINGLE ASTA	STANGE VARILLA
23	700108566P		1	BOX	BOITE SCATOLA	SCHACHTEL CAJA
24	700108569P		1	LID	PLAQUE COUVERCLE COPERTA	ABDECKPLATTE COBERTURA
25	70921978	5/16"-18 X 2	2	CAPSCREW	VIS BOUCHON TAPPO A VITE	HUTSCHRAUBE TORNILLO TAPON
26	700138031	▶ ▼	1	PIPE	TUYAU TUBO	ROHRLEITUNG CANO

Twine Box Boite A Ficelle Garnbehalter Scatola Portafilo Caja De La Bobina	60-140	Tandem Tandem Tandem Tandem Tandem

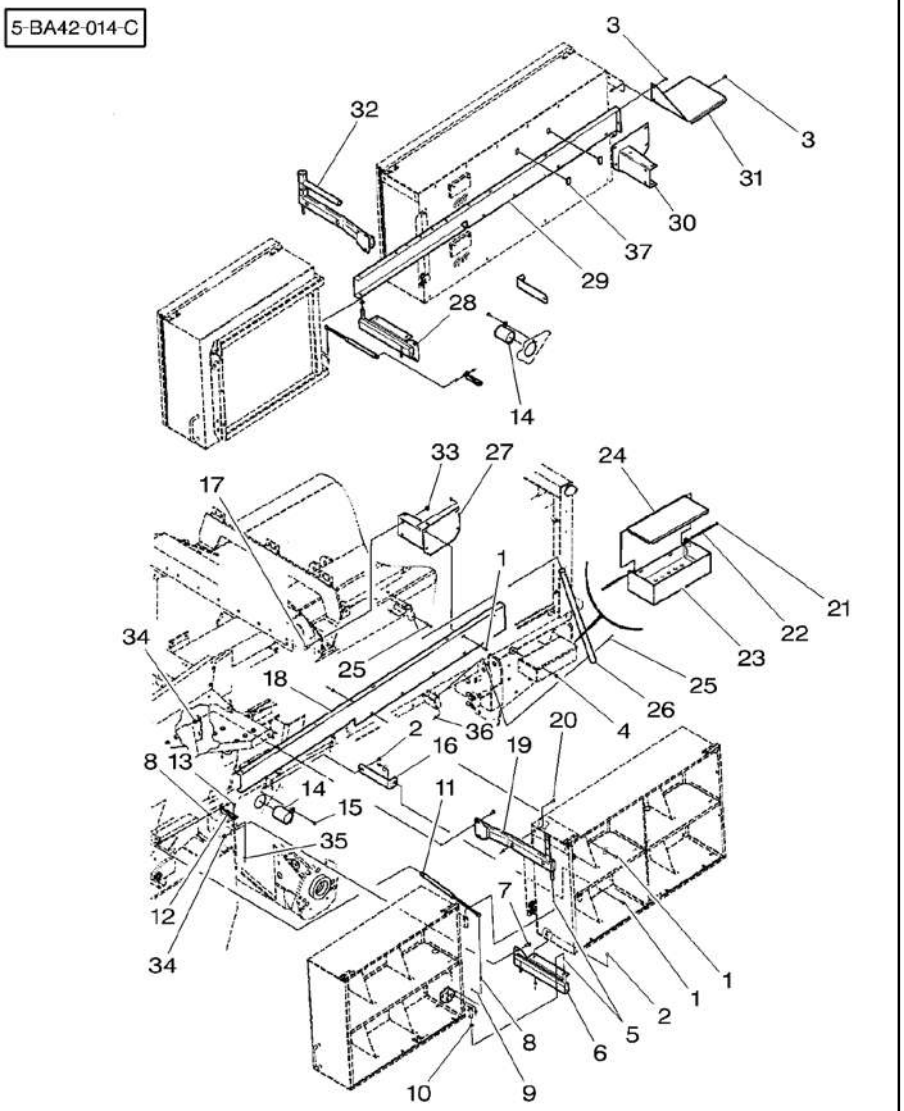

27*	700137949P	◀	1	SUPPORT	SUPPORT SUPPORTO LAGERUNG DISPOS.DE SOSTEN
28*	700137849P	▶ ▼	1	SUPPORT	SUPPORT SUPPORTO LAGERUNG DISPOS.DE SOSTEN
29*	700152210P	▶	1	SHIELD	TOLE RIPARO SCHILD BLINDAJE
30*	700137951P	▶	1	SUPPORT	SUPPORT SUPPORTO LAGERUNG DISPOS.DE SOSTEN
31*	700138053P		1	SHIELD	TOLE RIPARO SCHILD BLINDAJE
32*	700152212P	▶ ▲	1	SUPPORT	SUPPORT SUPPORTO LAGERUNG DISPOS.DE SOSTEN
33*	*704247*	3/8"–16	18	LOCKNUT	ECROU BLOCAGE AUTOBLOCCANTE FLACHMUTTER CONTRATUERCA
34*	700714586	1/2"–13	12	NUT	ECROU DADO MUTTER TUERCA
35*	70931277	5/16"–18	7	LOCKNUT	ECROU BLOCAGE AUTOBLOCCANTE FLACHMUTTER CONTRATUERCA
36*	Y704726	5/16"–18	2	TOP LOCKNUT	ECROU FREIN DADO DI TESTA SELBSTS.MUTTER CONTRATUERCA SUP
37*	700720744	1/2" X 3/4	4	PLUG	BOUCHON TAPPO VERSCHL.STOPFEN TAPON

Twine Box
Boite A Ficelle
Garnbehalter
Scatola Portafilo
Caja De La Bobina

60-145

Front Left – Up To H.M 74235
Avant Gauche – Jusqu'Au H.M 74235
Vorne Linke – Bis H.M 74235
Anteriore Sinistra – Fino Alla H.M 74235
Delantero Izquierda – Hasta H.M 74235

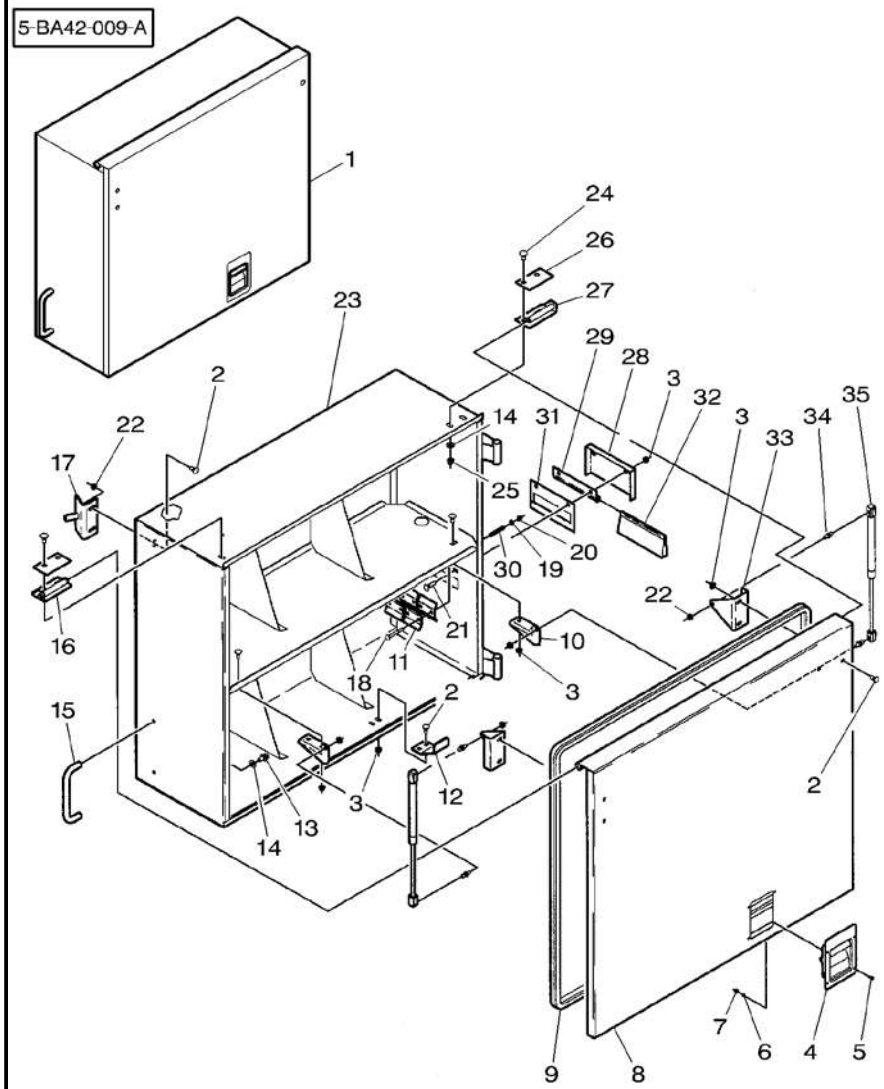

1*	700138111P		1	TWINE CAN	BOITE A FICELLE SCATOLA SPAGO	FADENKASTEN BOTE PARA HILO
2*	364352X1	1 5/16"–18 X 3/4	12	BOLT UNC	BOULON UNC BULLONE UNC	MASCH.SCHRB.UNC PERNO UNC
3*	Y704726	1 5/16"–18	12	TOP LOCKNUT	ECROU FREIN DADO DI TESTA	SELBSTS.MUTTER CONTRATUERCA SUP
4	700720034	1	1	LATCH	VERROU SALISCENDI	RIEGEL CERROJO
5*	700704837	1 No 10–24 X 3/8	4	SCREW	VIS VITE	SCHRAUBE TORNILLO
6*	353445X1	1 No 10	4	LOCK WASHER	RONDELLE FREIN ROSETTA ELASTICA	FEDERRING ARANDELA GROWER
7	*Y704072*	1 No 10–24	4	NUT	ECROU DADO	MUTTER TUERCA
8*	700137876P	1	1	DOOR	PORTIERE PORTA	TUER PUERTA
9	700720046	1	1	SEAL	JOINT ETANCHEITE PARAOLIO	DICHTRING RETEN
10	700137889	1	2	SUPPORT	SUPPORT SUPPORTO	LAGERUNG DISPOS.DE SOSTEN
11	700123929	1	4	CLIP	CLIP FERMAGLIO	SCHELLE CRAPA RETEN
12	700137886	1	1	LATCH	VERROU SALISCENDI	RIEGEL CERROJO
13*	7703432	1 3/8"–16 X 3/4	2	SCREW	VIS VITE	SCHRAUBE TORNILLO
14*	*Y705533*	1 3/8"	6	WASHER	RONDELLE RONDELLA	UNTERLEGSCHEIBE ARANDELA
15*	325621P	1	1	HANDLE	POIGNEE MANIGLIA	HANDGRIFF MANETA
16*	700137881	1 ▶	1	PIN	GOUPILLE PERNO	BOLZEN PASADOR
17	700137812	1	1	CATCH	LOQUET PORTE ANCORAGGIO	FALLE FIJADOR
18*	7770225	1 1/4"–20 X 2–1/4	4	BOLT	BOULON BULLONE	MASCH.SCHRAUBE PERNO
19*	353769X1	1 1/4"	4	WASHER	RONDELLE RONDELLA	UNTERLEGSCHEIBE ARANDELA
20*	Y704395	1 1/4"–20	4	NUT	ECROU DADO	MUTTER TUERCA
21*	364533X1	1 5/16"–18 X1–1/4	2	BOLT	BOULON BULLONE	MASCH.SCHRAUBE PERNO
22*	70931277	1 5/16"–18	8	LOCKNUT	ECROU BLOCAGE AUTOBLOCCANTE	FLACHMUTTER CONTRATUERCA
23*	700138113P	1	1	BOX	BOITE SCATOLA	SCHACHTEL CAJA
24*	70922784	1 3/8"–16 X 3/4	4	BOLT	BOULON BULLONE	MASCH.SCHRAUBE PERNO
25*	*704247*	1 3/8"–16	4	LOCKNUT	ECROU BLOCAGE AUTOBLOCCANTE	FLACHMUTTER CONTRATUERCA
26	700137824	1	2	PLATE	PLAQUE PIASTRA	PLATTE PLATO

Twine Box
Boite A Ficelle
Garnbehalter
Scatola Portafilo
Caja De La Bobina

60-145

Front Left – Up To H.M 74235
Avant Gauche – Jusqu'Au H.M 74235
Vorne Linke – Bis H.M 74235
Anteriore Sinistra – Fino Alla H.M 74235
Delantero Izquierda – Hasta H.M 74235

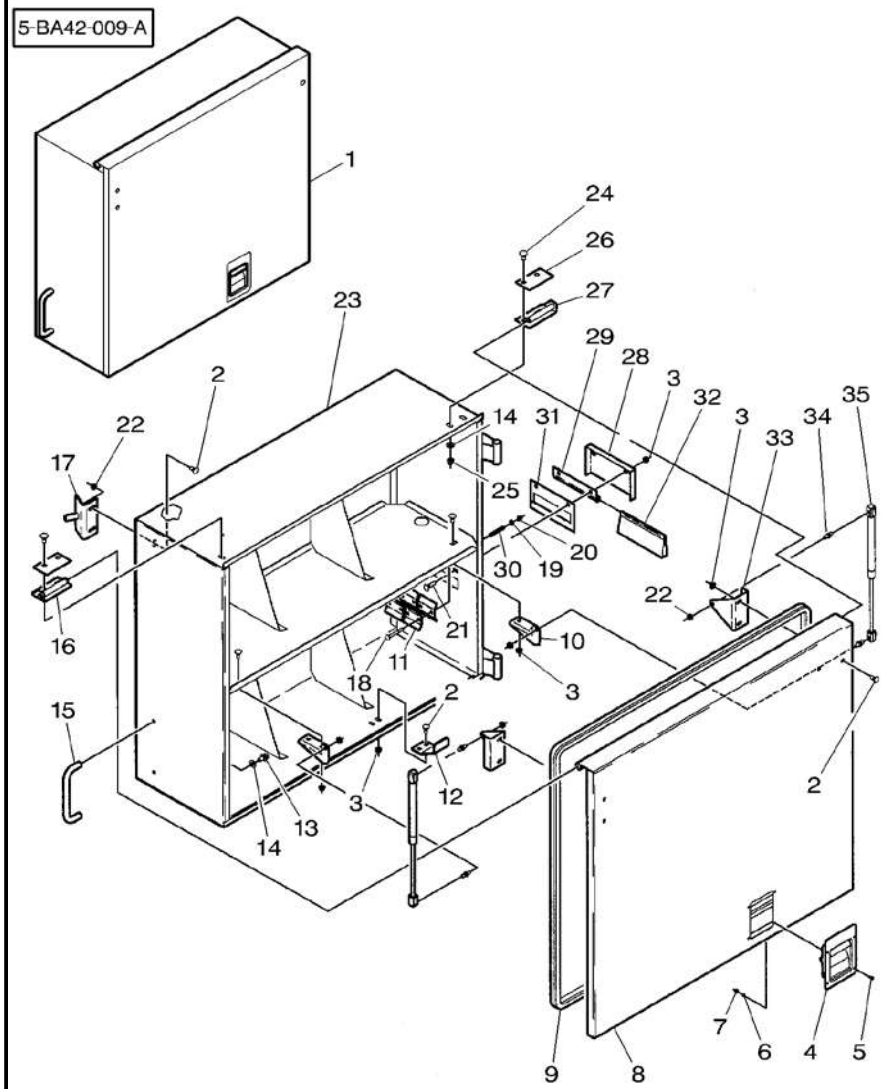

27	700137880	1 ◀	**1**	PIN	GOUPILLE PERNO	BOLZEN PASADOR
28	700137822	1	**1**	COVER	COUVERCLE COPERCHIO	DECKEL CUBIERTA
29	700720018	1	**1**	SUPPORT	SUPPORT SUPPORTO	LAGERUNG DISPOS.DE SOSTEN
30*	700707677B	1	**4**	SPRING	RESSORT MOLLA	FEDER MUELLE
31	700137825	1	**1**	PLATE	PLAQUE PIASTRA	PLATTE PLATO
32	700716314	1	**1**	BRUSH	BALAI SPAZZOLA	BUERSTE ESCOBILLA
33	700137887	1	**2**	SUPPORT	SUPPORT SUPPORTO	LAGERUNG DISPOS.DE SOSTEN
34	***71339847***	1	**4**	GREASER	GRAISSEUR INGRASSATORE	FETTNIPPEL ENGRASADOR
35	700720031	1	**2**	GAS STRUT	VERIN AMORTISSEU CILINDRO GAS	GASZYLINDER CILINDRO GAS

Twine Box
Boite A Ficelle
Garnbehalter
Scatola Portafilo
Caja De La Bobina

60-150

Front Left – From H.M 74236
Avant Gauche – A Partir Du H.M 74236
Vorne Linke – Ab H.M 74236
Anteriore Sinistra – Dalla H.M 74236
Delantero Izquierda – A Partir Del H.M 74236

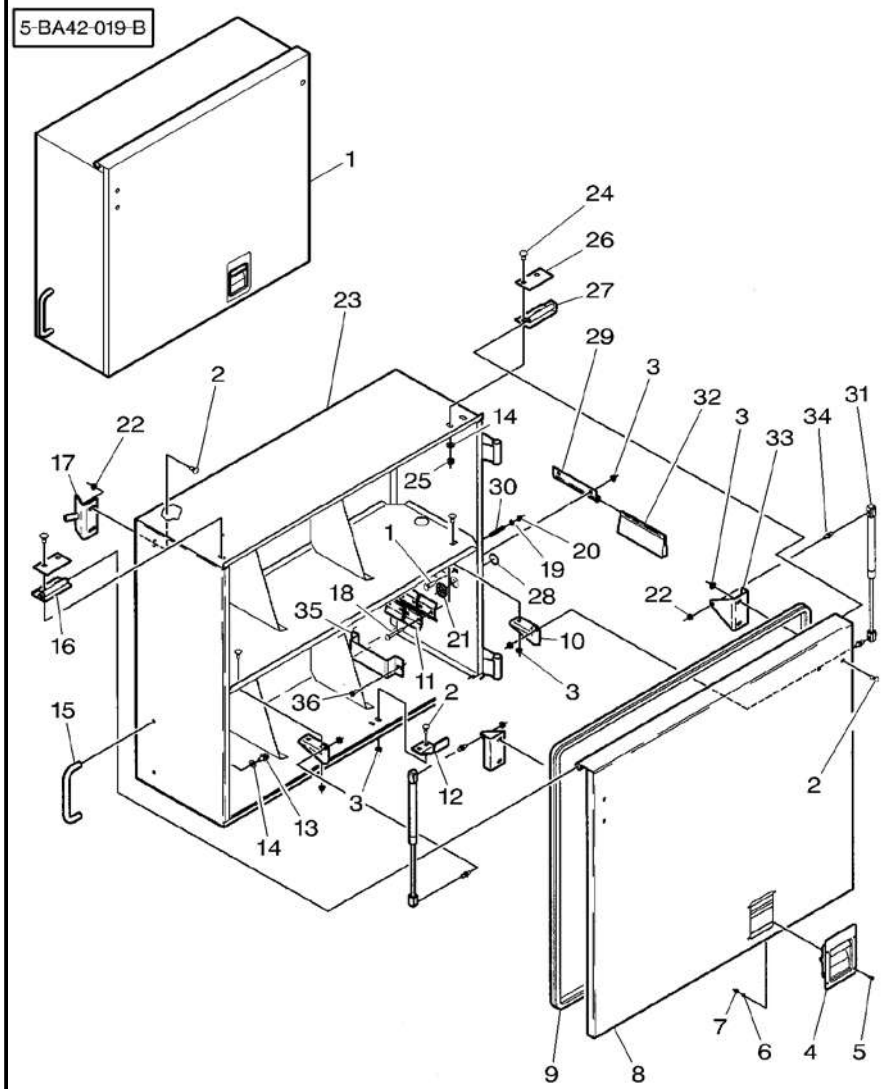

1*	700139346P		1	BOX	BOITE SCATOLA	SCHACHTEL CAJA
2*	364352X1	1 5/16"–18 X 3/4	14	BOLT UNC	BOULON UNC BULLONE UNC	MASCH.SCHRB.UNC PERNO UNC
3	Y704726	1 5/16"–18	12	TOP LOCKNUT	ECROU FREIN DADO DI TESTA	SELBSTS.MUTTER CONTRATUERCA SUP
4	700720034	1	1	LATCH	VERROU SALISCENDI	RIEGEL CERROJO
5	700704837	1 No 10–24 X 3/8	4	SCREW	VIS VITE	SCHRAUBE TORNILLO
6*	353445X1	1 No 10	4	LOCK WASHER	RONDELLE FREIN ROSETTA ELASTICA	FEDERRING ARANDELA GROWER
7	***Y704072***	1 No 10–24	4	NUT	ECROU DADO	MUTTER TUERCA
8*	700137876P	1	1	DOOR	PORTIERE PORTA	TUER PUERTA
9	700720046	1	1	SEAL	JOINT ETANCHEITE PARAOLIO	DICHTRING RETEN
10	700137889	1	2	SUPPORT	SUPPORT SUPPORTO	LAGERUNG DISPOS.DE SOSTEN
11	700123929	1	4	CLIP	CLIP FERMAGLIO	SCHELLE CRAPA RETEN
12	700137886	1	1	LATCH	VERROU SALISCENDI	RIEGEL CERROJO
13*	7703432	1 3/8"–16 X 3/4	2	SCREW	VIS VITE	SCHRAUBE TORNILLO
14	*Y705533*	1 3/8"	6	WASHER	RONDELLE RONDELLA	UNTERLEGSCHEIBE ARANDELA
15*	325621P	1	1	HANDLE	POIGNEE MANIGLIA	HANDGRIFF MANETA
16	700137881	1 ▶	1	PIN	GOUPILLE PERNO	BOLZEN PASADOR
17	700137812	1	1	CATCH	LOQUET PORTE ANCORAGGIO	FALLE FIJADOR
18*	7770225	1 1/4"–20 X 2–1/2	4	BOLT	BOULON BULLONE	MASCH.SCHRAUBE PERNO
19	353769X1	1 1/4"	4	WASHER	RONDELLE RONDELLA	UNTERLEGSCHEIBE ARANDELA
20	Y704395	1 1/4"–20	4	NUT	ECROU DADO	MUTTER TUERCA
21*	***700139255***	1	2	GUARD	GARDE PROTEZIONE	SCHUTZVORR DEFENSA
22	70931277	1 5/16"–18	8	LOCKNUT	ECROU BLOCAGE AUTOBLOCCANTE	FLACHMUTTER CONTRATUERCA
23*	700139343P	1	1	BOX	BOITE SCATOLA	SCHACHTEL CAJA
24	70922784	1 3/8"–16 X 3/4	4	BOLT	BOULON BULLONE	MASCH.SCHRAUBE PERNO
25	***704247***	1 3/8"–16	4	LOCKNUT	ECROU BLOCAGE AUTOBLOCCANTE	FLACHMUTTER CONTRATUERCA
26	700137824	1	2	PLATE	PLAQUE PIASTRA	PLATTE PLATO

Twine Box
Boite A Ficelle
Garnbehalter
Scatola Portafilo
Caja De La Bobina

60-150

Front Left – From H.M 74236
Avant Gauche – A Partir Du H.M 74236
Vorne Linke – Ab H.M 74236
Anteriore Sinistra – Dalla H.M 74236
Delantero Izquierda – A Partir Del H.M 74236

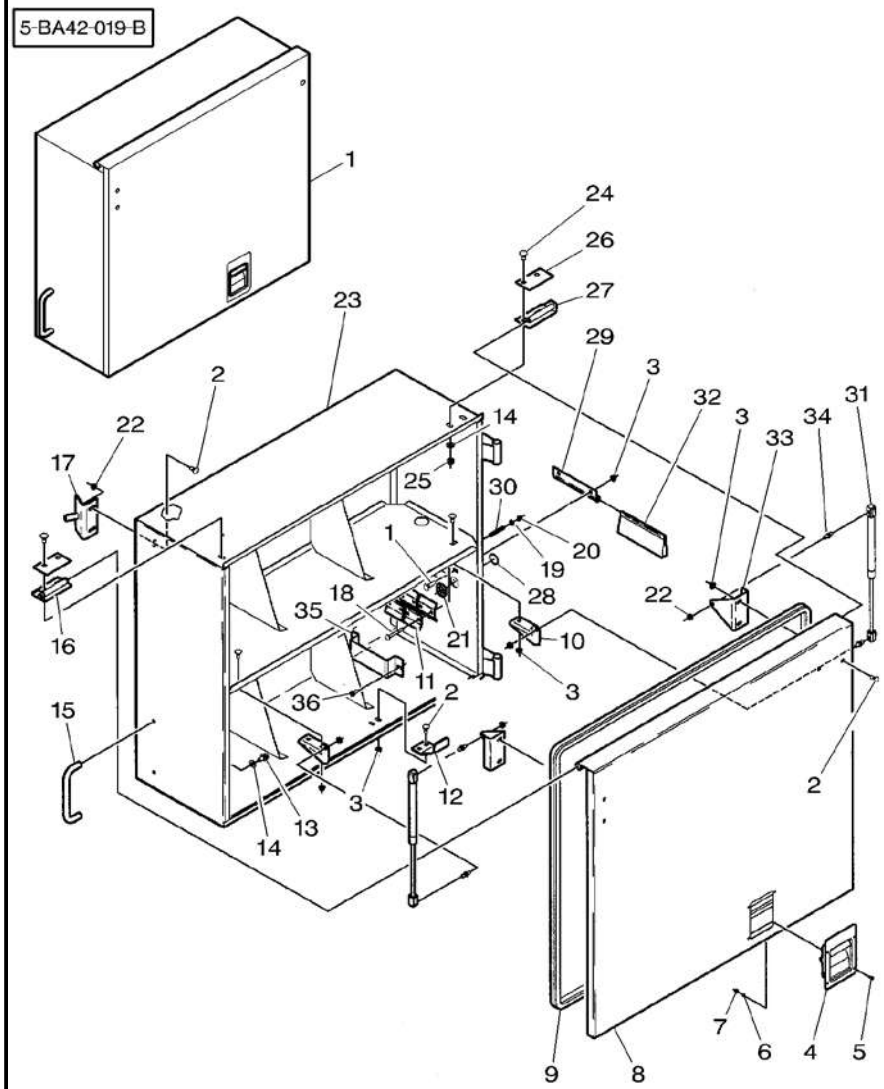

27	700137880	1 ◀	1	PIN	GOUPILLE PERNO	BOLZEN PASADOR
28*	*70927744*	1	2	RING	ANNEAU ANELLO	RING ARO
29	700720018	1	1	SUPPORT	SUPPORT SUPPORTO	LAGERUNG DISPOS.DE SOSTEN
30*	700707677B	1	4	SPRING	RESSORT MOLLA	FEDER MUELLE
31	700720031	1	2	GAS STRUT	VERIN AMORTISSEU CILINDRO GAS	GASZYLINDER CILINDRO GAS
32	700716314	1	1	BRUSH	BALAI SPAZZOLA	BUERSTE ESCOBILLA
33	700137887	1	2	SUPPORT	SUPPORT SUPPORTO	LAGERUNG DISPOS.DE SOSTEN
34	*71339847*	1	4	GREASER	GRAISSEUR INGRASSATORE	FETTNIPPEL ENGRASADOR
35*	700139224P	1	1	SHANK	ANGLE FUSO	SCHAFT MANGO
36*	7883325	1 5/16"-18 X 3/4	2	SCREW	VIS VITE	SCHRAUBE TORNILLO
36*	Y704726	1 5/16"-18	2	TOP LOCKNUT	ECROU FREIN DADO DI TESTA	SELBSTS.MUTTER CONTRATUERCA SUP

Twine Box
Boite A Ficelle
Garnbehalter
Scatola Portafilo
Caja De La Bobina

60-155

Left Rear – Up To H.M 74235
Arriere Gauche – Jusqu'Au H.M 74235
Hinten Links – Bis H.M 74235
Posteriore Sinistro – Fino Alla H.M 74235
Trasero Izquierdo – Hasta H.M 74235

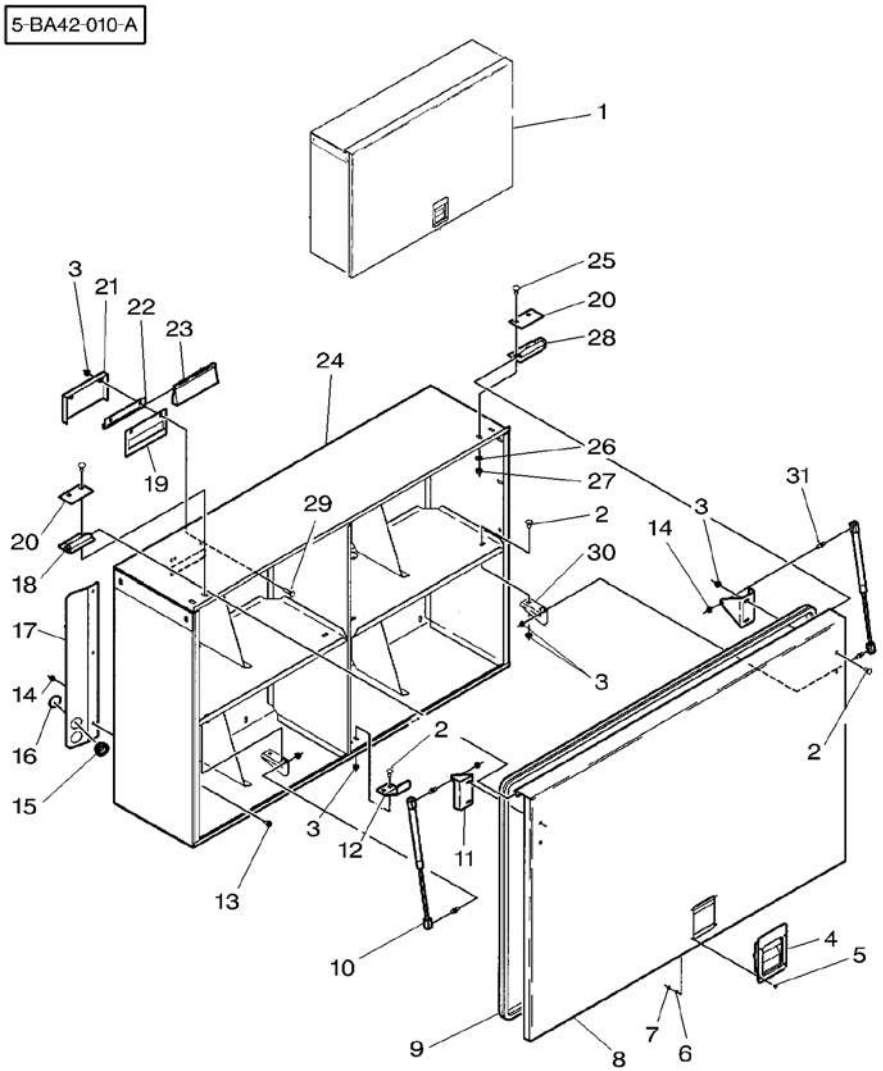

1*	700138120P		1	BOX	BOITE SCATOLA	SCHACHTEL CAJA
2*	364352X1	1 5/16"–18 X 3/4	10	BOLT UNC	BOULON UNC BULLONE UNC	MASCH.SCHRB.UNC PERNO UNC
3	Y704726	1 5/16"–18	12	TOP LOCKNUT	ECROU FREIN DADO DI TESTA	SELBSTS.MUTTER CONTRATUERCA SUP
4	700720034	1	1	LATCH	VERROU SALISCENDI	RIEGEL CERROJO
5*	700704837	1 No 10–24 X 3/8	4	SCREW	VIS VITE	SCHRAUBE TORNILLO
6*	353445X1	1 No 10	4	LOCK WASHER	RONDELLE FREIN ROSETTA ELASTICA	FEDERRING ARANDELA GROWER
7	*Y704072*	1 No 10–24	4	NUT	ECROU DADO	MUTTER TUERCA
8*	700138126P	1 ◀	1	DOOR	PORTIERE PORTA	TUER PUERTA
9	700720047	1	1	SEAL	JOINT ETANCHEITE PARAOLIO	DICHTRING RETEN
10	700720032	1	2	GAS STRUT	VERIN AMORTISSEU CILINDRO GAS	GASZYLINDER CILINDRO GAS
11	700137887	1	2	SUPPORT	SUPPORT SUPPORTO	LAGERUNG DISPOS.DE SOSTEN
12	700137886	1	1	LATCH	VERROU SALISCENDI	RIEGEL CERROJO
13*	7883317	1 5/16"–18 X 1/2	3	SCREW	VIS VITE	SCHRAUBE TORNILLO
14*	70931277	1 5/16"–18	7	LOCKNUT	ECROU BLOCAGE AUTOBLOCCANTE	FLACHMUTTER CONTRATUERCA
15	700137816	1	2	GUIDE	GUIDE GUIDA	FUEHRUNG GUIA
16	*70927744*	1	2	RING	ANNEAU ANELLO	RING ARO
17*	700137866P	1 ◀	1	SHIELD	TOLE RIPARO	SCHILD BLINDAJE
18	700137881	1 ▶	1	PIN	GOUPILLE PERNO	BOLZEN PASADOR
19	700137825	1	1	PLATE	PLAQUE PIASTRA	PLATTE PLATO
20	700137824	1	2	PLATE	PLAQUE PIASTRA	PLATTE PLATO
21	700137822	1	1	COVER	COUVERCLE COPERCHIO	DECKEL CUBIERTA
22	700720018	1	1	SUPPORT	SUPPORT SUPPORTO	LAGERUNG DISPOS.DE SOSTEN
23	700716314	1	1	BRUSH	BALAI SPAZZOLA	BUERSTE ESCOBILLA
24	700138122M	1 ◀	1	BOX	BOITE SCATOLA	SCHACHTEL CAJA
25*	70922784	1 3/8"–16 X 3/4	4	BOLT	BOULON BULLONE	MASCH.SCHRAUBE PERNO
26*	*Y705533*	1 3/8"	4	WASHER	RONDELLE RONDELLA	UNTERLEGSCHEIBE ARANDELA

Twine Box
Boite A Ficelle
Garnbehalter
Scatola Portafilo
Caja De La Bobina

60-155

Left Rear – Up To H.M 74235
Arriere Gauche – Jusqu'Au H.M 74235
Hinten Links – Bis H.M 74235
Posteriore Sinistro – Fino Alla H.M 74235
Trasero Izquierdo – Hasta H.M 74235

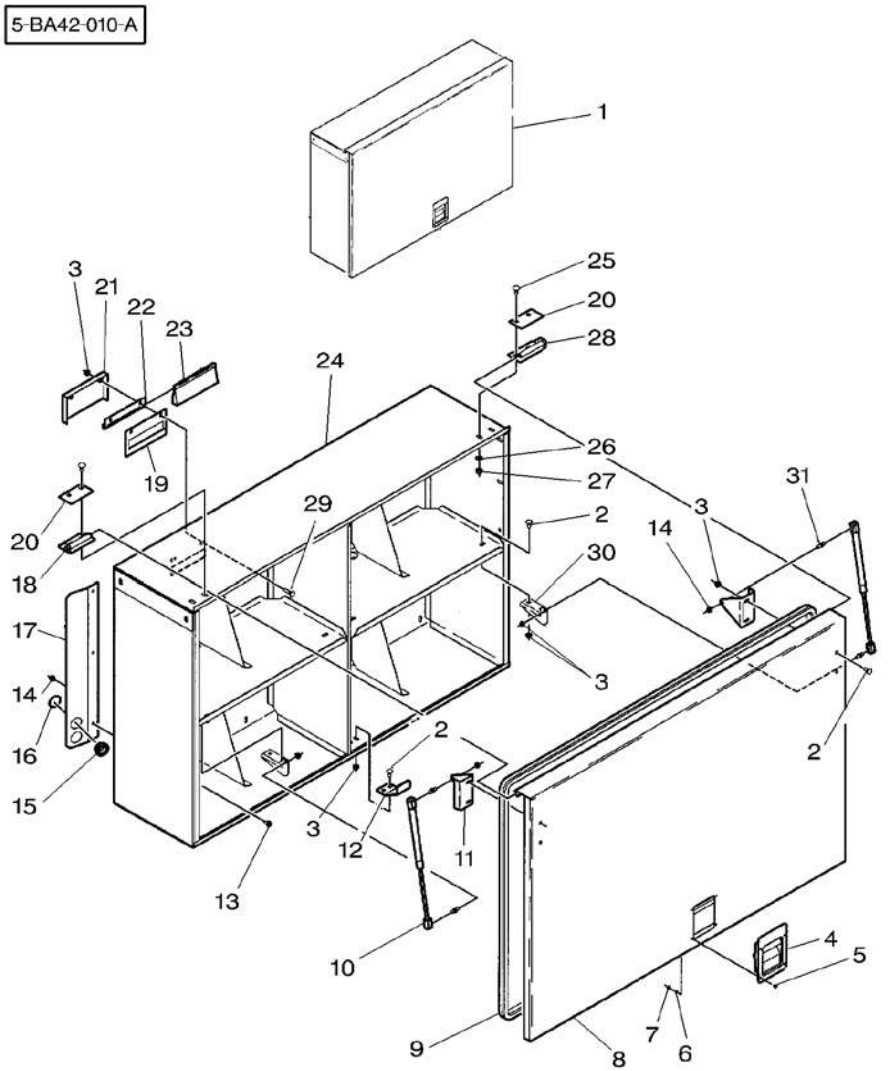

27 ★	*704247*	1	3/8"–16	4	LOCKNUT	ECROU BLOCAGE AUTOBLOCCANTE FLACHMUTTER CONTRATUERCA
28	700137880	1	◀	1	PIN	GOUPILLE PERNO BOLZEN PASADOR
29 ★	364533X1	1	5/16"–18 X1–1/4	2	BOLT	BOULON BULLONE MASCH.SCHRAUBE PERNO
30	700137889	1		2	SUPPORT	SUPPORT SUPPORTO LAGERUNG DISPOS.DE SOSTEN
31	*71339847*	1		4	GREASER	GRAISSEUR INGRASSATORE FETTNIPPEL ENGRASADOR

Twine Box
Boite A Ficelle
Garnbehalter
Scatola Portafilo
Caja De La Bobina

60-160

Left Rear – From H.M 74236
Arriere Gauche – A Partir Du H.M 74236
Hinten Links – Ab H.M 74236
Posteriore Sinistro – Dalla H.M 74236
Trasero Izquierdo – Despues H.M 74236

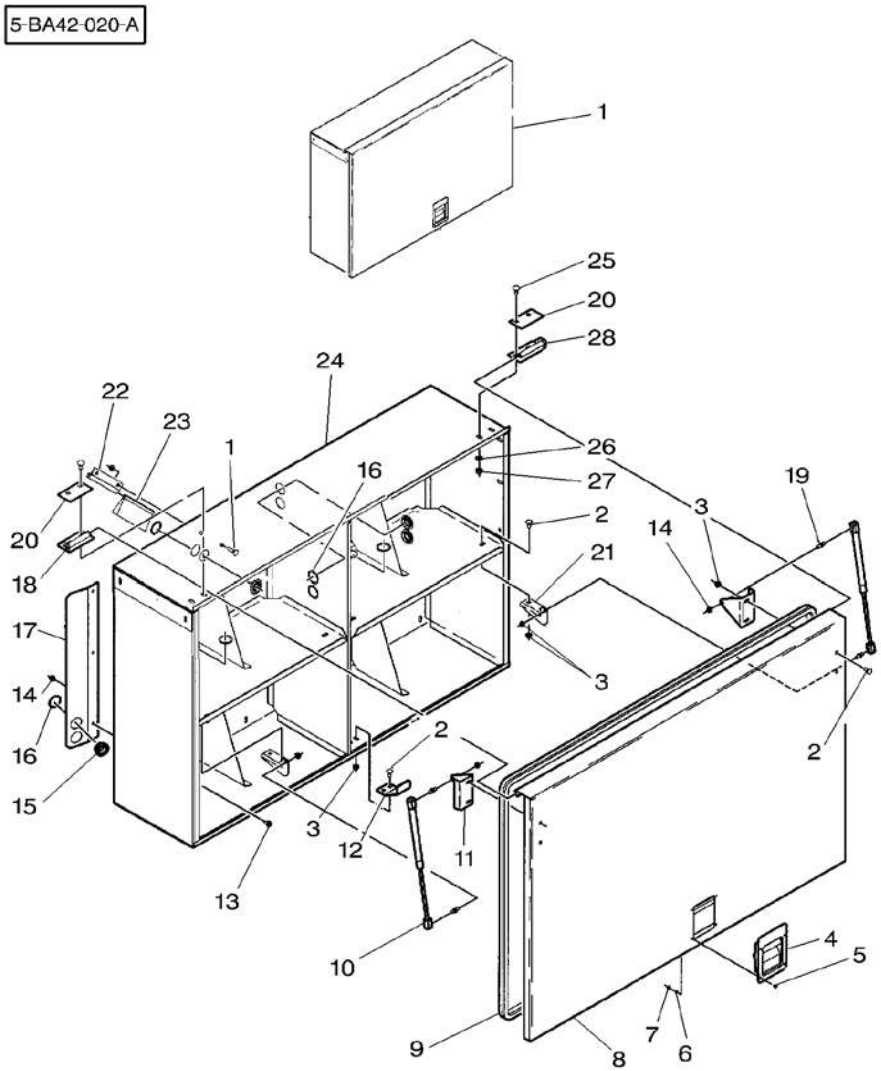

1 ✱	700139349P		1	BOX	BOITE SCATOLA	SCHACHTEL CAJA
2 ✱	364352X1	1 5/16"–18 X 3/4	14	BOLT UNC	BOULON UNC BULLONE UNC	MASCH.SCHRB.UNC PERNO UNC
3 ✱	Y704726	1 5/16"–18	14	TOP LOCKNUT	ECROU FREIN DADO DI TESTA	SELBSTS.MUTTER CONTRATUERCA SUP
4	700720034	1	1	LATCH	VERROU SALISCENDI	RIEGEL CERROJO
5	700704837	1 No 10–24 X 3/8	4	SCREW	VIS VITE	SCHRAUBE TORNILLO
6 ✱	353445X1	1 No 10	4	LOCK WASHER	RONDELLE FREIN ROSETTA ELASTICA	FEDERRING ARANDELA GROWER
7	*Y704072*	1 No 10–24	4	NUT	ECROU DADO	MUTTER TUERCA
8 ✱	700138126P	1 ◀	1	DOOR	PORTIERE PORTA	TUER PUERTA
9	700720047	1	1	SEAL	JOINT ETANCHEITE PARAOLIO	DICHTRING RETEN
10	700720032	1	2	GAS STRUT	VERIN AMORTISSEU CILINDRO GAS	GASZYLINDER CILINDRO GAS
11	700137887	1	2	SUPPORT	SUPPORT SUPPORTO	LAGERUNG DISPOS.DE SOSTEN
12	700137886	1	1	LATCH	VERROU SALISCENDI	RIEGEL CERROJO
13 ✱	7883317	1 5/16"–18 X 1/2	3	SCREW	VIS VITE	SCHRAUBE TORNILLO
14	70931277	1 5/16"–18	7	LOCKNUT	ECROU BLOCAGE AUTOBLOCCANTE	FLACHMUTTER CONTRATUERCA
15 ✱	*700139255*	1	10	GUARD	GARDE PROTEZIONE	SCHUTZVORR DEFENSA
16 ✱	*70927744*	1	10	RING	ANNEAU ANELLO	RING ARO
17 ✱	700137866P	1 ◀	1	SHIELD	TOLE RIPARO	SCHILD BLINDAJE
18	700137881	1 ▶	1	PIN	GOUPILLE PERNO	BOLZEN PASADOR
19	*71339847*	1	4	GREASER	GRAISSEUR INGRASSATORE	FETTNIPPEL ENGRASADOR
20	700137824	1	2	PLATE	PLAQUE PIASTRA	PLATTE PLATO
21	700137889	1	2	SUPPORT	SUPPORT SUPPORTO	LAGERUNG DISPOS.DE SOSTEN
22 ✱	700720018	1	2	SUPPORT	SUPPORT SUPPORTO	LAGERUNG DISPOS.DE SOSTEN
23 ✱	700716314	1	2	BRUSH	BALAI SPAZZOLA	BUERSTE ESCOBILLA
24 ✱	700139347P	1 ◀	1	BOX	BOITE SCATOLA	SCHACHTEL CAJA
25	70922784	1 3/8"–16 X 3/4	4	BOLT	BOULON BULLONE	MASCH.SCHRAUBE PERNO
26	*Y705533*	1 3/8"	4	WASHER	RONDELLE RONDELLA	UNTERLEGSCHEIBE ARANDELA

Twine Box
Boite A Ficelle
Garnbehalter
Scatola Portafilo
Caja De La Bobina

60-160

Left Rear – From H.M 74236
Arriere Gauche – A Partir Du H.M 74236
Hinten Links – Ab H.M 74236
Posteriore Sinistro – Dalla H.M 74236
Trasero Izquierdo – Despues H.M 74236

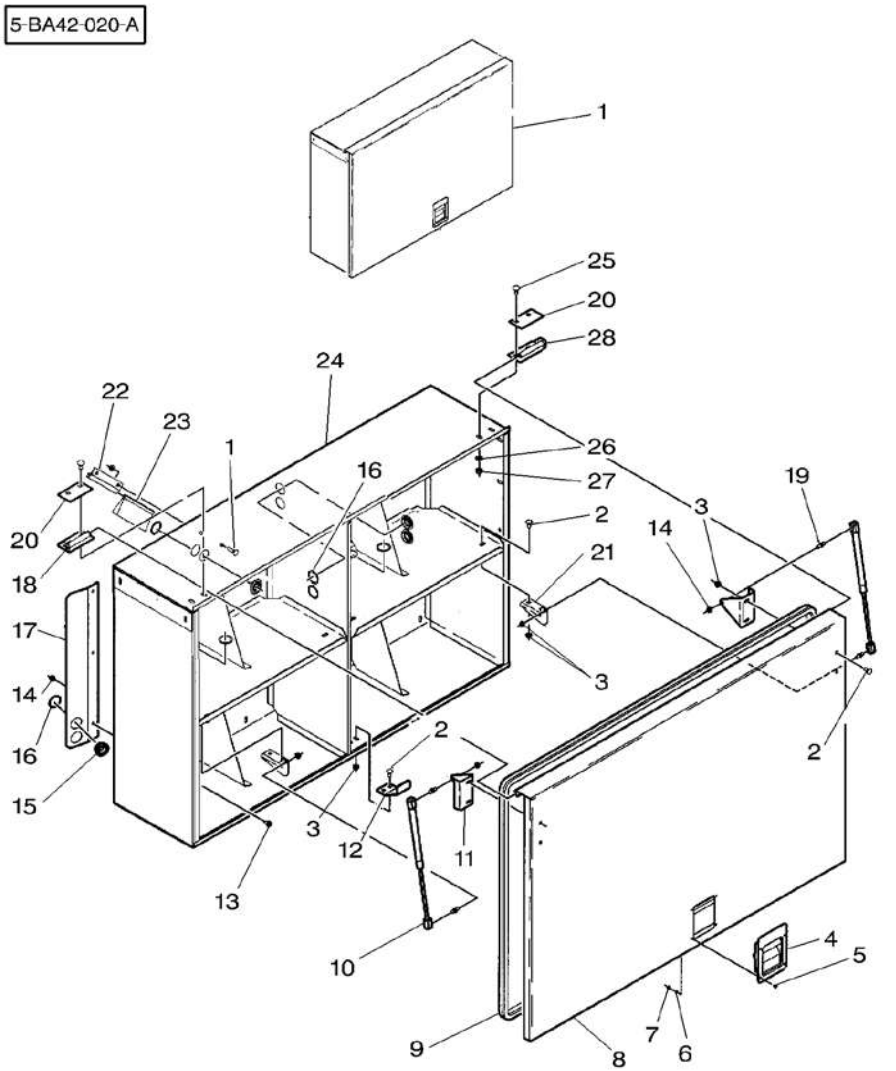

27	*704247*	1	3/8"–16	**4**	LOCKNUT	ECROU BLOCAGE AUTOBLOCCANTE FLACHMUTTER CONTRATUERCA
28	700137880	1	◀	**1**	PIN	GOUPILLE PERNO BOLZEN PASADOR

Twine Box
Boite A Ficelle
Garnbehalter
Scatola Portafilo
Caja De La Bobina

60-165

Front Right – Up To H.M 74235
Avant Droit – Jusqu'Au H.M 74235
Vorne Recht – Bis H.M 74235
Anteriore Destra – Fino Alla H.M 74235
Delantero Derecha – Hasta H.M 74235

5-BA42-011-A

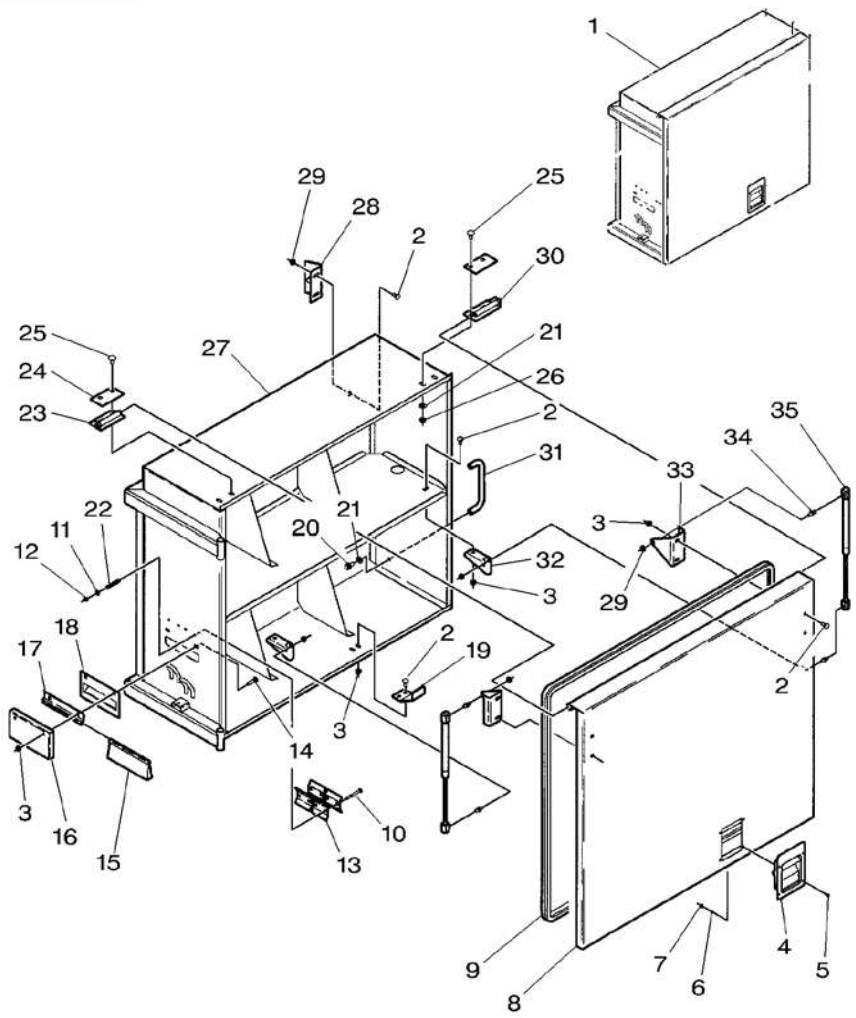

1	700138116M		1	BOX	BOITE SCATOLA	SCHACHTEL CAJA
2*	364352X1	1 5/16"–18 X 3/4	12	BOLT UNC	BOULON UNC BULLONE UNC	MASCH.SCHRB.UNC PERNO UNC
3	Y704726	1 5/16"–18	12	TOP LOCKNUT	ECROU FREIN DADO DI TESTA	SELBSTS.MUTTER CONTRATUERCA SUP
4	700720034	1	1	LATCH	VERROU SALISCENDI	RIEGEL CERROJO
5	700704837	1 No 10–24 X 3/8	4	SCREW	VIS VITE	SCHRAUBE TORNILLO
6*	353445X1	1 No 10	4	LOCK WASHER	RONDELLE FREIN ROSETTA ELASTICA	FEDERRING ARANDELA GROWER
7	*Y704072*	1 No 10–24	4	NUT	ECROU DADO	MUTTER TUERCA
8*	700137876P	1	1	DOOR	PORTIERE PORTA	TUER PUERTA
9	700720046	1	1	SEAL	JOINT ETANCHEITE PARAOLIO	DICHTRING RETEN
10*	7770225	1 1/4"–20 X 2–1/4	4	BOLT	BOULON BULLONE	MASCH.SCHRAUBE PERNO
11*	353769X1	1 1/4"	4	WASHER	RONDELLE RONDELLA	UNTERLEGSCHEIBE ARANDELA
12	Y704395	1 1/4"–20	4	NUT	ECROU DADO	MUTTER TUERCA
13	700123929	1	4	CLIP	CLIP FERMAGLIO	SCHELLE CRAPA RETEN
14*	364533X1	1 5/16"–18 X1–1/4	2	BOLT	BOULON BULLONE	MASCH.SCHRAUBE PERNO
15	700716314	1	1	BRUSH	BALAI SPAZZOLA	BUERSTE ESCOBILLA
16	700137822	1	1	COVER	COUVERCLE COPERCHIO	DECKEL CUBIERTA
17	700720018	1	1	SUPPORT	SUPPORT SUPPORTO	LAGERUNG DISPOS.DE SOSTEN
18	700137825	1	1	PLATE	PLAQUE PIASTRA	PLATTE PLATO
19	700137886	1	1	LATCH	VERROU SALISCENDI	RIEGEL CERROJO
20	7703432	1 3/8"–16 X 3/4	2	SCREW	VIS VITE	SCHRAUBE TORNILLO
21	*Y705533*	1 3/8"	6	WASHER	RONDELLE RONDELLA	UNTERLEGSCHEIBE ARANDELA
22*	700707677B	1	4	SPRING	RESSORT MOLLA	FEDER MUELLE
23	700137881	1 ▶	1	PIN	GOUPILLE PERNO	BOLZEN PASADOR
24	700137824	1	2	PLATE	PLAQUE PIASTRA	PLATTE PLATO
25	70922784	1 3/8"–16 X 3/4	4	BOLT	BOULON BULLONE	MASCH.SCHRAUBE PERNO
26	***704247***	1 3/8"–16	4	LOCKNUT	ECROU BLOCAGE AUTOBLOCCANTE	FLACHMUTTER CONTRATUERCA

Twine Box
Boite A Ficelle
Garnbehalter
Scatola Portafilo
Caja De La Bobina

60-165

Front Right – Up To H.M 74235
Avant Droit – Jusqu'Au H.M 74235
Vorne Recht – Bis H.M 74235
Anteriore Destra – Fino Alla H.M 74235
Delantero Derecha – Hasta H.M 74235

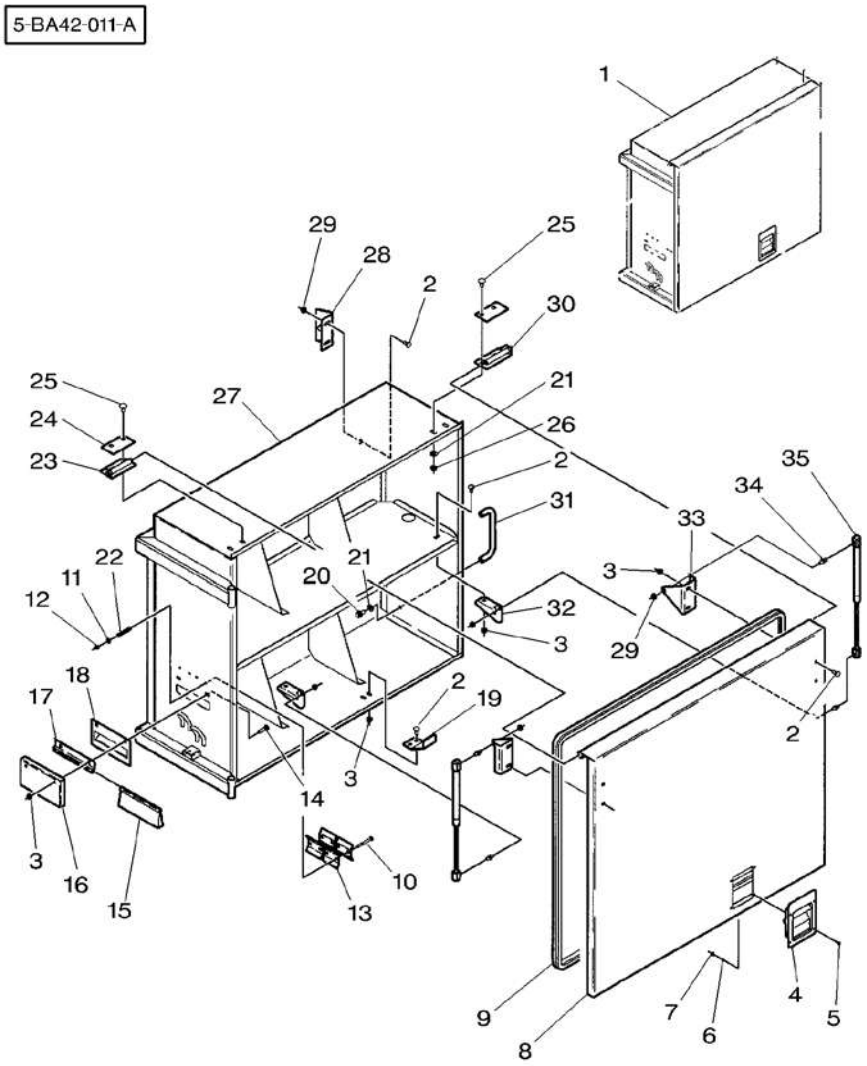

27	700138118M	1		1	BOX	BOITE SCATOLA CAJA
28	700137812	1		1	CATCH	LOQUET PORTE ANCORAGGIO FIJADOR
29*	70931277	1	5/16"–18	6	LOCKNUT	ECROU BLOCAGE AUTOBLOCCANTE FLACHMUTTER CONTRATUERCA
30	700137880	1	◀	1	PIN	GOUPILLE PERNO BOLZEN PASADOR
31*	325621P	1		1	HANDLE	POIGNEE MANIGLIA HANDGRIFF MANETA
32	700137889	1		2	SUPPORT	SUPPORT SUPPORTO LAGERUNG DISPOS.DE SOSTEN
33	700137887	1		2	SUPPORT	SUPPORT SUPPORTO LAGERUNG DISPOS.DE SOSTEN
34	*71339847*	1		4	GREASER	GRAISSEUR INGRASSATORE FETTNIPPEL ENGRASADOR
35	700720031	1		2	GAS STRUT	VERIN AMORTISSEU CILINDRO GAS GASZYLINDER CILINDRO GAS

Twine Box
Boite A Ficelle
Garnbehalter
Scatola Portafilo
Caja De La Bobina

60-170

Front Right – From H.M 74236
Avant Droit – A Partir Du H.M 74236
Vorne Recht – Ab H.M 74236
Anteriore Destra – Dalla H.M 74236
Delantero Derecha – Despues H.M 74236

5-BA42-021-B

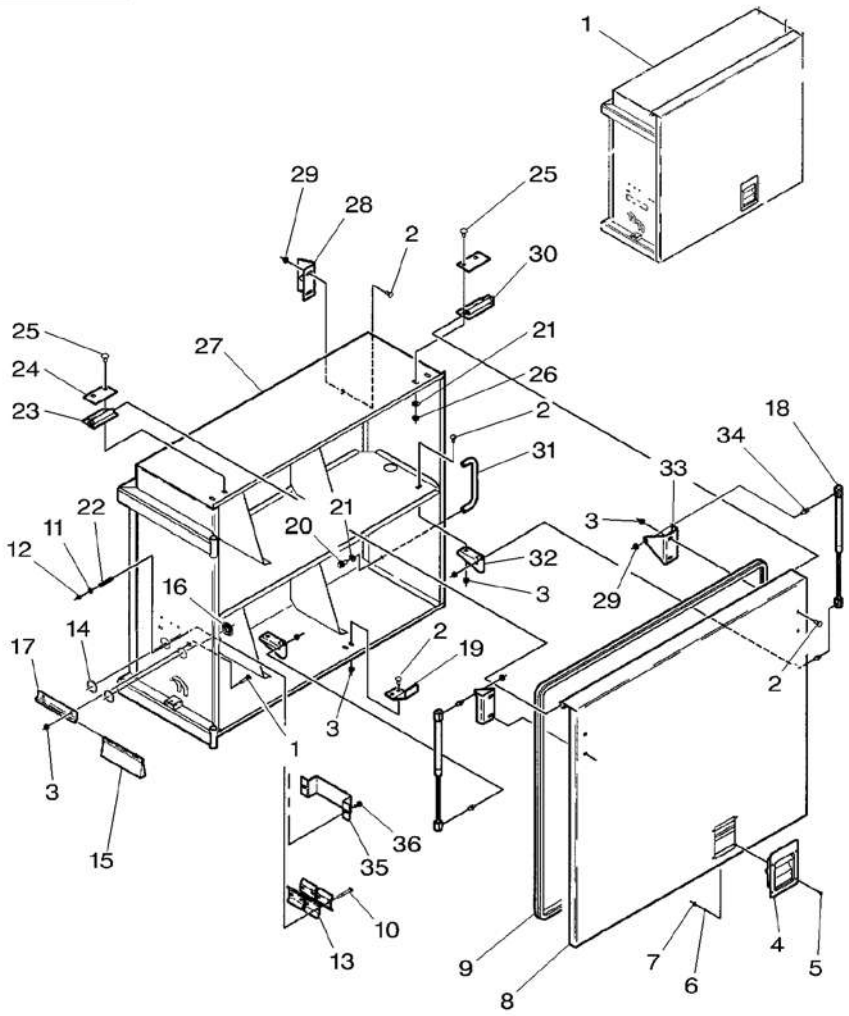

1★	700139355P		1 BOX	BOITE SCATOLA	SCHACHTEL CAJA
2★	364352X1	1 5/16"–18 X 3/4	14 BOLT UNC	BOULON UNC BULLONE UNC	MASCH.SCHRB.UNC PERNO UNC
3★	Y704726	1 5/16"–18	12 TOP LOCKNUT	ECROU FREIN DADO DI TESTA	SELBSTS.MUTTER CONTRATUERCA SUP
4	700720034	1	1 LATCH	VERROU SALISCENDI	RIEGEL CERROJO
5	700704837	1 No 10–24 X 3/8	4 SCREW	VIS VITE	SCHRAUBE TORNILLO
6★	353445X1	1 No 10	4 LOCK WASHER	RONDELLE FREIN ROSETTA ELASTICA	FEDERRING ARANDELA GROWER
7	***Y704072***	1 No 10–24	4 NUT	ECROU DADO	MUTTER TUERCA
8★	700137876P	1	1 DOOR	PORTIERE PORTA	TUER PUERTA
9	700720046	1	1 SEAL	JOINT ETANCHEITE PARAOLIO	DICHTRING RETEN
10★	7770225	1 1/4"–20 X 2–1/4	4 BOLT	BOULON BULLONE	MASCH.SCHRAUBE PERNO
11	353769X1	1 1/4"	4 WASHER	RONDELLE RONDELLA	UNTERLEGSCHEIBE ARANDELA
12	Y704395	1 1/4"–20	4 NUT	ECROU DADO	MUTTER TUERCA
13	700123929	1	4 CLIP	CLIP FERMAGLIO	SCHELLE CRAPA RETEN
14★	***70927744***	1	2 RING	ANNEAU ANELLO	RING ARO
15	700716314	1	1 BRUSH	BALAI SPAZZOLA	BUERSTE ESCOBILLA
16★	***700139255***	1	2 GUARD	GARDE PROTEZIONE	SCHUTZVORR DEFENSA
17	700720018	1	1 SUPPORT	SUPPORT SUPPORTO	LAGERUNG DISPOS.DE SOSTEN
18	700720031	1	2 GAS STRUT	VERIN AMORTISSEU CILINDRO GAS	GASZYLINDER CILINDRO GAS
19	700137886	1	1 LATCH	VERROU SALISCENDI	RIEGEL CERROJO
20	7703432	1 3/8"–16 X 3/4	2 SCREW	VIS VITE	SCHRAUBE TORNILLO
21	*Y705533*	1 3/8"	6 WASHER	RONDELLE RONDELLA	UNTERLEGSCHEIBE ARANDELA
22★	700707677B	1	4 SPRING	RESSORT MOLLA	FEDER MUELLE
23	700137881	1 ▶	1 PIN	GOUPILLE PERNO	BOLZEN PASADOR
24	700137824	1	2 PLATE	PLAQUE PIASTRA	PLATTE PLATO
25	70922784	1 3/8"–16 X 3/4	4 BOLT	BOULON BULLONE	MASCH.SCHRAUBE PERNO
26	***704247***	1 3/8"–16	4 LOCKNUT	ECROU BLOCAGE AUTOBLOCCANTE	FLACHMUTTER CONTRATUERCA

Twine Box
Boite A Ficelle
Garnbehalter
Scatola Portafilo
Caja De La Bobina

60-170

Front Right – From H.M 74236
Avant Droit – A Partir Du H.M 74236
Vorne Recht – Ab H.M 74236
Anteriore Destra – Dalla H.M 74236
Delantero Derecha – Despues H.M 74236

5-BA42-021-B

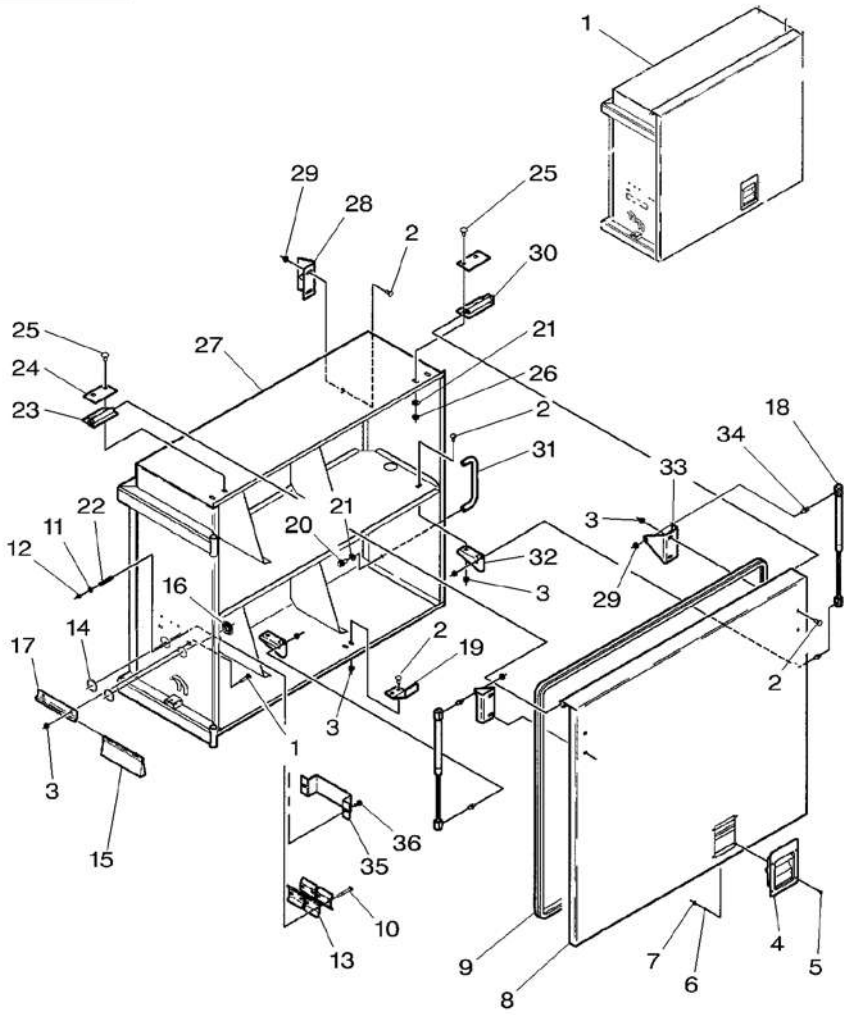

27*	700139353P	1		1	BOX	BOITE SCATOLA CAJA	SCHACHTEL
28	700137812	1		1	CATCH	LOQUET PORTE ANCORAGGIO FIJADOR	FALLE
29	70931277	1	5/16"–18	6	LOCKNUT	ECROU BLOCAGE AUTOBLOCCANTE CONTRATUERCA	FLACHMUTTER
30	700137880	1	◀	1	PIN	GOUPILLE PERNO BOLZEN	PASADOR
31*	325621P	1		1	HANDLE	POIGNEE MANIGLIA HANDGRIFF	MANETA
32	700137889	1		2	SUPPORT	SUPPORT SUPPORTO LAGERUNG	DISPOS.DE SOSTEN
33	700137887	1		2	SUPPORT	SUPPORT SUPPORTO LAGERUNG	DISPOS.DE SOSTEN
34	*71339847*	1		4	GREASER	GRAISSEUR INGRASSATORE FETTNIPPEL	ENGRASADOR
35*	700139224P	1		1	SHANK	ANGLE FUSO SCHAFT	MANGO
36*	7883325	1	5/16"–18 X 3/4	2	SCREW	VIS VITE SCHRAUBE	TORNILLO
36*	Y704726	1	5/16"–18	2	TOP LOCKNUT	ECROU FREIN DADO DI TESTA SELBSTS.MUTTER	CONTRATUERCA SUP

Twine Box
Boite A Ficelle
Garnbehalter
Scatola Portafilo
Caja De La Bobina

60-175

Right Rear – Up To H.M 74235
Arriere Droit – Jusqu'Au H.M 74235
Hinten Recht – Bis H.M 74235
Posteriore Destra – Fino Alla H.M 74235
Trasero Derecho – Hasta H.M 74235

5-BA42-012-A

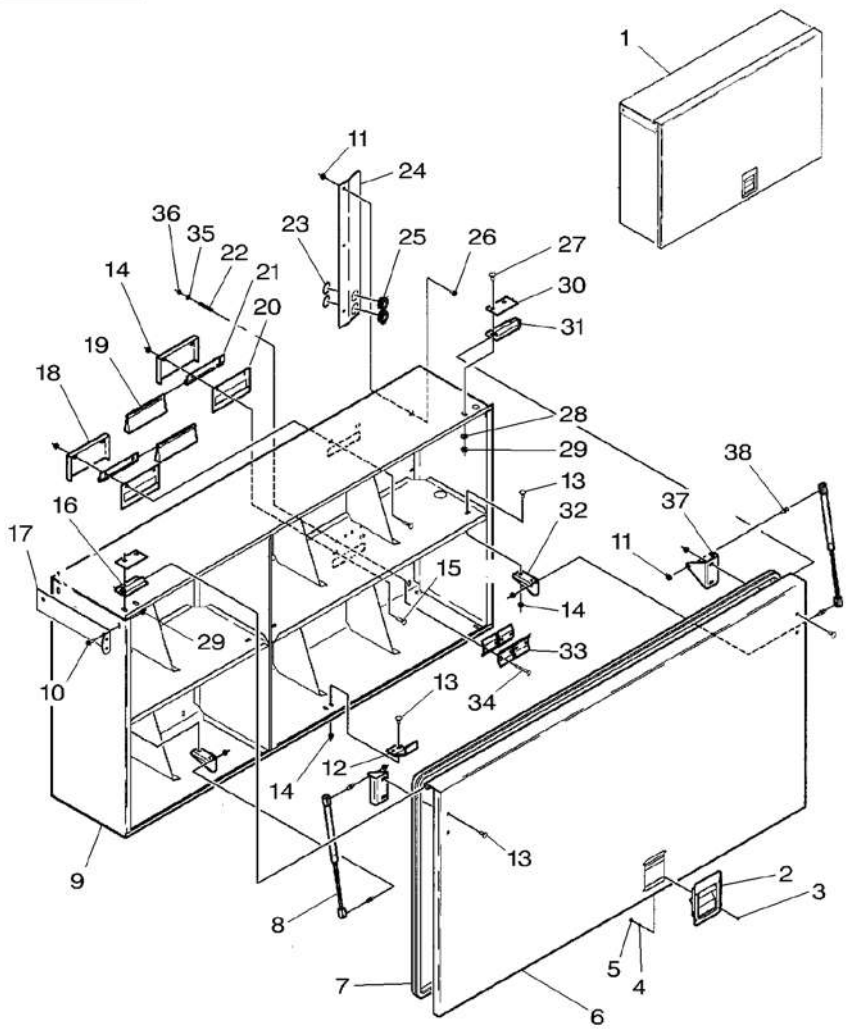

1*	700138127P		1	BOX	BOITE SCATOLA	SCHACHTEL CAJA
2	700720034	1	1	LATCH	VERROU SALISCENDI	RIEGEL CERROJO
3	700704837	1 No 10–24 X 3/8	4	SCREW	VIS VITE	SCHRAUBE TORNILLO
4*	353445X1	1 No 10	4	LOCK WASHER	RONDELLE FREIN ROSETTA ELASTICA	FEDERRING ARANDELA GROWER
5	*Y704072*	1 No 10–24	4	NUT	ECROU DADO	MUTTER TUERCA
6*	700138133P	1 ▶	1	DOOR	PORTIERE PORTA	TUER PUERTA
7	700720048	1	1	SEAL	JOINT ETANCHEITE PARAOLIO	DICHTRING RETEN
8	700720032	1	2	GAS STRUT	VERIN AMORTISSEU CILINDRO GAS	GASZYLINDER CILINDRO GAS
9*	700138129	1	1	BOX	BOITE SCATOLA	SCHACHTEL CAJA
10*	7883325	1 5/16"–18 X 3/4	2	SCREW	VIS VITE	SCHRAUBE TORNILLO
11*	70931277	1 5/16"–18	9	LOCKNUT	ECROU BLOCAGE AUTOBLOCCANTE	FLACHMUTTER CONTRATUERCA
12	700137886	1	1	LATCH	VERROU SALISCENDI	RIEGEL CERROJO
13*	364352X1	1 5/16"–18 X 3/4	10	BOLT UNC	BOULON UNC BULLONE UNC	MASCH.SCHRB.UNC PERNO UNC
14	Y704726	1 5/16"–18	14	TOP LOCKNUT	ECROU FREIN DADO DI TESTA	SELBSTS.MUTTER CONTRATUERCA SUP
15*	364533X1	1 5/16"–18 X1–1/4	4	BOLT	BOULON BULLONE	MASCH.SCHRAUBE PERNO
16	700137881	1 ▶	1	PIN	GOUPILLE PERNO	BOLZEN PASADOR
17*	700137811P	1	1	SUPPORT	SUPPORT SUPPORTO	LAGERUNG DISPOS.DE SOSTEN
18	700137822	1	2	COVER	COUVERCLE COPERCHIO	DECKEL CUBIERTA
19	700716314	1	2	BRUSH	BALAI SPAZZOLA	BUERSTE ESCOBILLA
20	700137825	1	2	PLATE	PLAQUE PIASTRA	PLATTE PLATO
21	700720018	1	2	SUPPORT	SUPPORT SUPPORTO	LAGERUNG DISPOS.DE SOSTEN
22*	700707677B	1	4	SPRING	RESSORT MOLLA	FEDER MUELLE
23	*70927744*	1	2	RING	ANNEAU ANELLO	RING ARO
24*	700137867P	1 ▶	1	SHIELD	TOLE RIPARO	SCHILD BLINDAJE
25	700137816	1	2	GUIDE	GUIDE GUIDA	FUEHRUNG GUIA
26*	7883317	1 5/16"–18 X 1/2	3	SCREW	VIS VITE	SCHRAUBE TORNILLO

Twine Box
Boite A Ficelle
Garnbehalter
Scatola Portafilo
Caja De La Bobina

60-175

Right Rear – Up To H.M 74235
Arriere Droit – Jusqu'Au H.M 74235
Hinten Recht – Bis H.M 74235
Posteriore Destra – Fino Alla H.M 74235
Trasero Derecho – Hasta H.M 74235

5-BA42-012-A

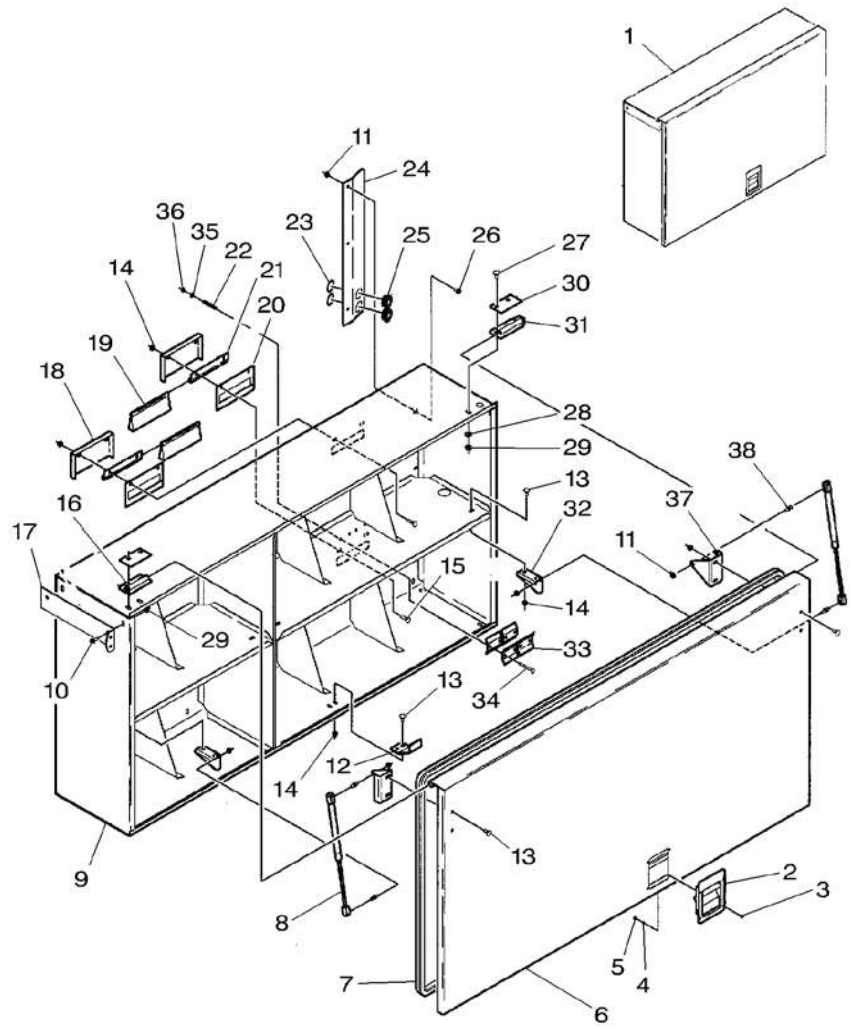

27	70922784	1	3/8"–16 X 3/4	4	BOLT	BOULON BULLONE MASCH.SCHRAUBE PERNO
28	*Y705533*	1	3/8"	4	WASHER	RONDELLE RONDELLA UNTERLEGSCHEIBE ARANDELA
29*	***704247***	1	3/8"–16	4	LOCKNUT	ECROU BLOCAGE AUTOBLOCCANTE FLACHMUTTER CONTRATUERCA
30	700137824	1		2	PLATE	PLAQUE PIASTRA PLATTE PLATO
31	700137880	1 ◀		1	PIN	GOUPILLE PERNO BOLZEN PASADOR
32	700137889	1		2	SUPPORT	SUPPORT SUPPORTO LAGERUNG DISPOS.DE SOSTEN
33	700123929	1		4	CLIP	CLIP FERMAGLIO SCHELLE CRAPA RETEN
34*	7770225	1	1/4"–20 X 2–1/4	4	BOLT	BOULON BULLONE MASCH.SCHRAUBE PERNO
35*	353769X1	1	1/4"	4	WASHER	RONDELLE RONDELLA UNTERLEGSCHEIBE ARANDELA
36	Y704395	1	1/4"–20	4	NUT	ECROU DADO MUTTER TUERCA
37	700137887	1		2	SUPPORT	SUPPORT SUPPORTO LAGERUNG DISPOS.DE SOSTEN
38	***71339847***	1		4	GREASER	GRAISSEUR INGRASSATORE FETTNIPPEL ENGRASADOR

Twine Box
Boite A Ficelle
Garnbehalter
Scatola Portafilo
Caja De La Bobina

60-180

Right Rear – From H.M 74236
Arriere Droit – A Partir Du H.M 74236
Hinten Recht – Ab H.M 74236
Posteriore Destra – Dalla H.M 74236
Trasero Derecho – Despues H.M 74236

5-BA42-022-A

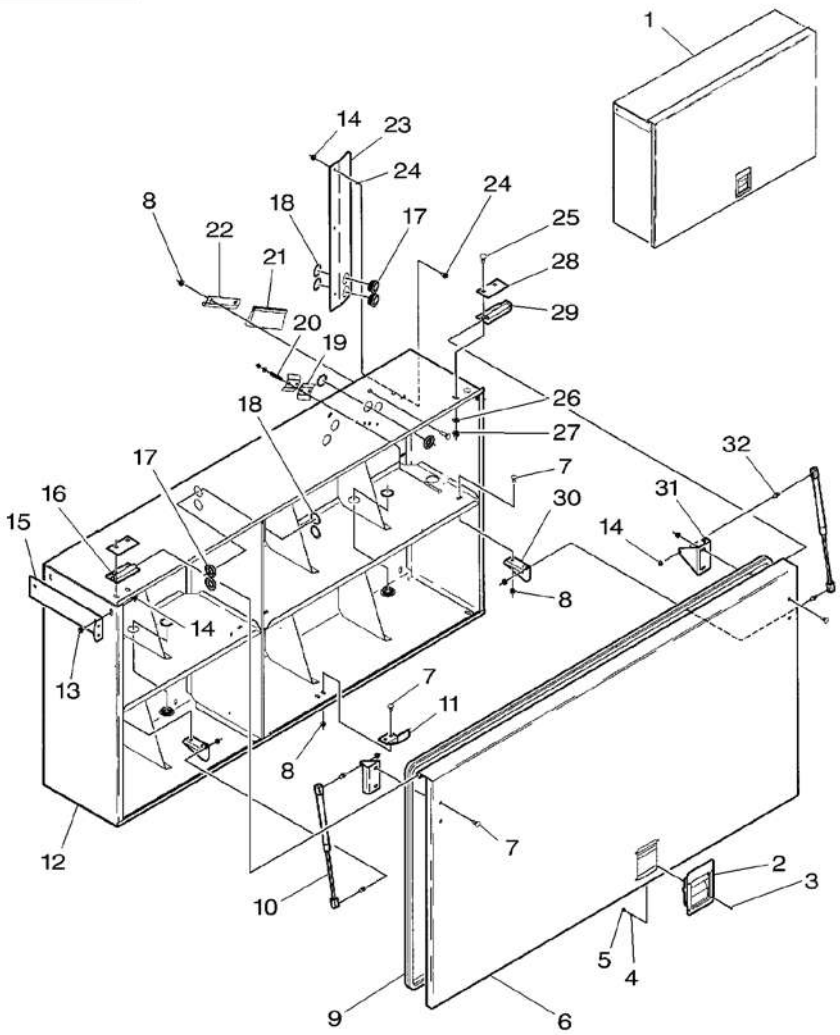

1★	700139359P		1 BOX	BOITE SCATOLA	SCHACHTEL CAJA
2	700720034	1	1 LATCH	VERROU SALISCENDI	RIEGEL CERROJO
3	700704837	1 No 10–24 X 3/8	4 SCREW	VIS VITE	SCHRAUBE TORNILLO
4★	353445X1	1 No 10	4 LOCK WASHER	RONDELLE FREIN ROSETTA ELASTICA	FEDERRING ARANDELA GROWER
5	*Y704072*	1 No 10–24	4 NUT	ECROU DADO	MUTTER TUERCA
6★	700138133P	1 ▶	1 DOOR	PORTIERE PORTA	TUER PUERTA
7★	364352X1	1 5/16"–18 X 3/4	14 BOLT UNC	BOULON UNC BULLONE UNC	MASCH.SCHRB.UNC PERNO UNC
8★	Y704726	1 5/16"–18	14 TOP LOCKNUT	ECROU FREIN DADO DI TESTA	SELBSTS.MUTTER CONTRATUERCA SUP
9★	700720048	1	1 SEAL	JOINT ETANCHEITE PARAOLIO	DICHTRING RETEN
10★	700720032	1	2 GAS STRUT	VERIN AMORTISSEU CILINDRO GAS	GASZYLINDER CILINDRO GAS
11★	700137886	1	1 LATCH	VERROU SALISCENDI	RIEGEL CERROJO
12★	700139357P	1	1 BOX	BOITE SCATOLA	SCHACHTEL CAJA
13★	7883325	1 5/16"–18 X 3/4	2 SCREW	VIS VITE	SCHRAUBE TORNILLO
14★	70931277	1 5/16"–18	9 LOCKNUT	ECROU BLOCAGE AUTOBLOCCANTE	FLACHMUTTER CONTRATUERCA
15★	700137811P	1	1 SUPPORT	SUPPORT SUPPORTO	LAGERUNG DISPOS.DE SOSTEN
16★	700137881	1 ▶	1 PIN	GOUPILLE PERNO	BOLZEN PASADOR
17★	***700139255***	1	10 GUARD	GARDE PROTEZIONE	SCHUTZVORR DEFENSA
18★	***70927744***	1	10 RING	ANNEAU ANELLO	RING ARO
19★	700123929	1	4 CLIP	CLIP FERMAGLIO	SCHELLE CRAPA RETEN
20★	700707677B	1	4 SPRING	RESSORT MOLLA	FEDER MUELLE
21★	700716314	1	2 BRUSH	BALAI SPAZZOLA	BUERSTE ESCOBILLA
22★	700720018	1	2 SUPPORT	SUPPORT SUPPORTO	LAGERUNG DISPOS.DE SOSTEN
23★	700137867P	1	1 SHIELD	TOLE RIPARO	SCHILD BLINDAJE
24★	7883317	1 5/16"–18 X 1/2	3 SCREW	VIS VITE	SCHRAUBE TORNILLO
25★	70922784	1 3/8"–16 X 3/4	4 BOLT	BOULON BULLONE	MASCH.SCHRAUBE PERNO
26★	*Y705533*	1 3/8"	4 WASHER	RONDELLE RONDELLA	UNTERLEGSCHEIBE ARANDELA

Twine Box
Boite A Ficelle
Garnbehalter
Scatola Portafilo
Caja De La Bobina

60-180

Right Rear – From H.M 74236
Arriere Droit – A Partir Du H.M 74236
Hinten Recht – Ab H.M 74236
Posteriore Destra – Dalla H.M 74236
Trasero Derecho – Despues H.M 74236

5-BA42-022-A

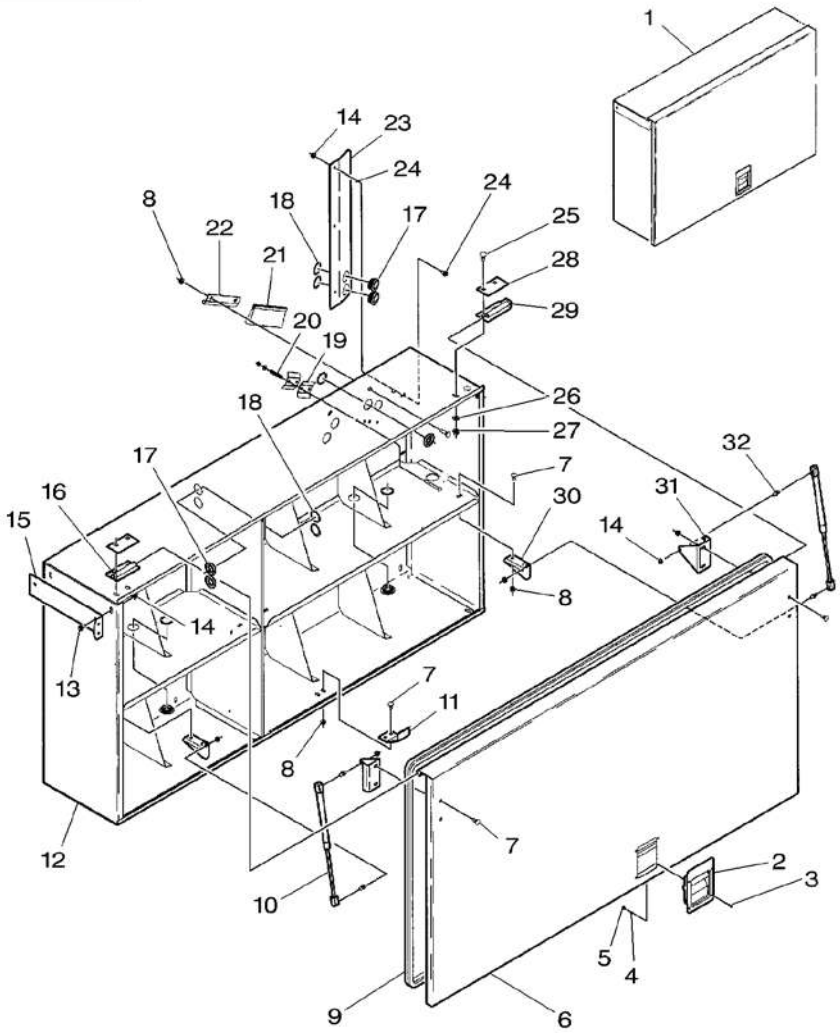

27*	*704247*	1 3/8"–16	4 LOCKNUT	ECROU BLOCAGE AUTOBLOCCANTE	FLACHMUTTER CONTRATUERCA
28*	700137824	1	2 PLATE	PLAQUE PIASTRA	PLATTE PLATO
29*	700137880	1 ◀	1 PIN	GOUPILLE PERNO	BOLZEN PASADOR
30*	700137889	1	2 SUPPORT	SUPPORT SUPPORTO	LAGERUNG DISPOS.DE SOSTEN
31*	700137887	1	2 SUPPORT	SUPPORT SUPPORTO	LAGERUNG DISPOS.DE SOSTEN
32*	*71339847*	1	4 GREASER	GRAISSEUR INGRASSATORE	FETTNIPPEL ENGRASADOR

Rear Axle Essieu Arriere Hinterachse Assale Posteriore Eje Trasero	60-185	Frame Bati Rahmen Telaio Bastidor

5-AG01-002-B

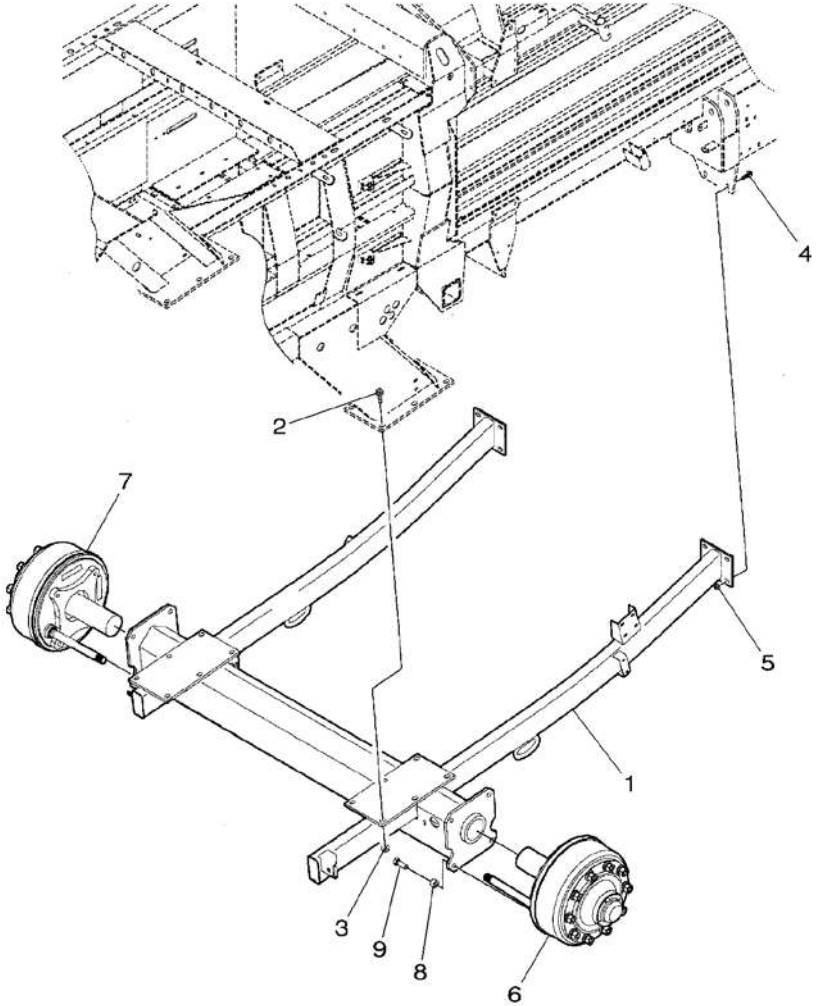

1 ✱ 700140286P		1	AXLE	ESSIEU ASSALE	ACHSE EJE
2 ✱ 700710982	5/8"-11 X 2	12	SCREW	VIS VITE	SCHRAUBE TORNILLO
3 ✱ 7704919	5/8"-11	12	NUT	ECROU DADO	MUTTER TUERCA
4 ✱ 8701237	1/2"-13 X 1-1/2	8	SCREW	VIS VITE	SCHRAUBE TORNILLO
5 ✱ 700714586	1/2"-13	8	NUT	ECROU DADO	MUTTER TUERCA
6 ✱ 700140468	◀ 60-290 No 1	1	BRAKE	FREIN FRENO	BREMSE FRENO
7 ✱ 700140469	▶ 60-290 No 1	1	BRAKE	FREIN FRENO	BREMSE FRENO
8 ✱ 700131436P		8	BUSH	BAGUE BOCCOLA	BUCHSE CASQUILLO
9 ✱ 700706419	3/4"-10 X 2	8	BOLT	BOULON BULLONE	MASCH.SCHRAUBE PERNO

Axle Essieu Achse Assale Eje	60-190	Tandem Tandem Tandem Tandem Tandem

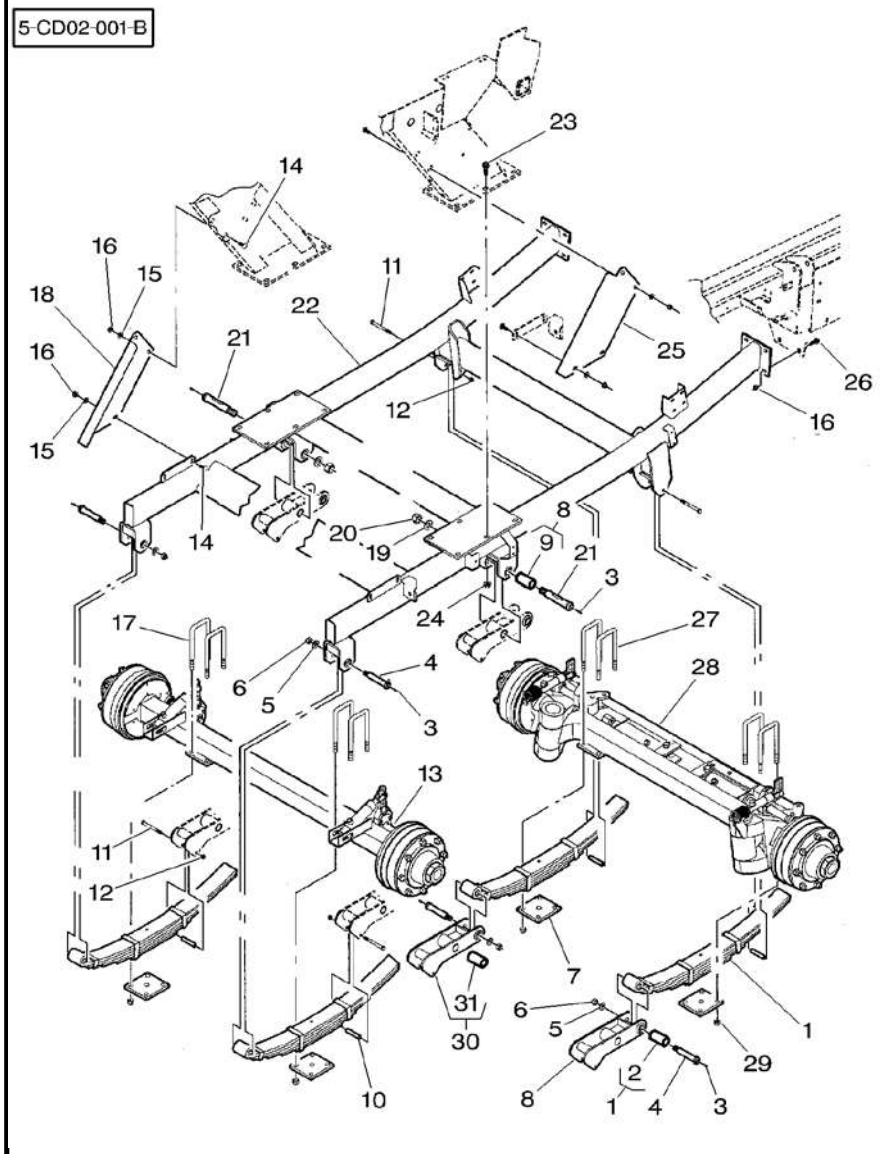

1	700720368		4	SPRING	RESSORT MOLLA	FEDER MUELLE
2*	700720369	1	1	BUSH	BAGUE BOCCOLA	BUCHSE CASQUILLO
3*	77552	M8	6	GREASER	GRAISSEUR INGRASSATORE	FETTNIPPEL ENGRASADOR
4*	700720370		4	PIN	GOUPILLE PERNO	BOLZEN PASADOR
5*	700050220		4	WASHER	RONDELLE RONDELLA	UNTERLEGSCHEIBE ARANDELA
6*	700720386	M18	4	LOCKNUT	ECROU BLOCAGE AUTOBLOCCANTE	FLACHMUTTER CONTRATUERCA
7	700720379		4	PLATE	PLAQUE PIASTRA	PLATTE PLATO
8	700720372	◀	1	ARM	BRAS BRACCIO	ARM BRAZO
9*	700720374	8	1	BUSH	BAGUE BOCCOLA	BUCHSE CASQUILLO
10	700720371		4	ROLLER	GALET RULLO	ROLLE RODILLO
11*	700720390	M12 X 120	4	SCREW	VIS VITE	SCHRAUBE TORNILLO
12*	700720388	M12	4	LOCKNUT	ECROU BLOCAGE AUTOBLOCCANTE	FLACHMUTTER CONTRATUERCA
13*	700720484	[A] 60-305 No 1	1	AXLE	ESSIEU ASSALE	ACHSE EJE
13*	700721771	[B] 60-310 No 1	1	AXLE	ESSIEU ASSALE	ACHSE EJE
14*	700705456	1/2"-13 X 1-1/4	8	SCREW	VIS VITE	SCHRAUBE TORNILLO
15*	*705541*	1/2"	8	FLAT WASHERS	RONDELLES PLATES RONDELLE PIANE	UNTERLEGSCHEIBEN ARANDELAS PLANAS
16*	700714586	1/2"-13	16	NUT	ECROU DADO	MUTTER TUERCA
17	700720377		4	U BOLT	ETRIER FILETE CAVALLOTTO	BUEGELSCHRAUBE BRIDA EN U
18*	700140466P	▶	1	SUPPORT	SUPPORT SUPPORTO	LAGERUNG DISPOS.DE SOSTEN
19*	7705841	M27	2	WASHER	RONDELLE RONDELLA	UNTERLEGSCHEIBE ARANDELA
20*	700720385	M27	2	LOCKNUT	ECROU BLOCAGE AUTOBLOCCANTE	FLACHMUTTER CONTRATUERCA
21	700720376		2	PIN	GOUPILLE PERNO	BOLZEN PASADOR
22*	700140266P		1	AXLE	ESSIEU ASSALE	ACHSE EJE
23*	700710982	5/8"-11 X 2	12	SCREW	VIS VITE	SCHRAUBE TORNILLO
24*	7704919	5/8"-11	12	NUT	ECROU DADO	MUTTER TUERCA
25*	700140465P	◀	1	SUPPORT	SUPPORT SUPPORTO	LAGERUNG DISPOS.DE SOSTEN

Axle Essieu Achse Assale Eje	60-190	Tandem Tandem Tandem Tandem Tandem

5-CD02-001-B

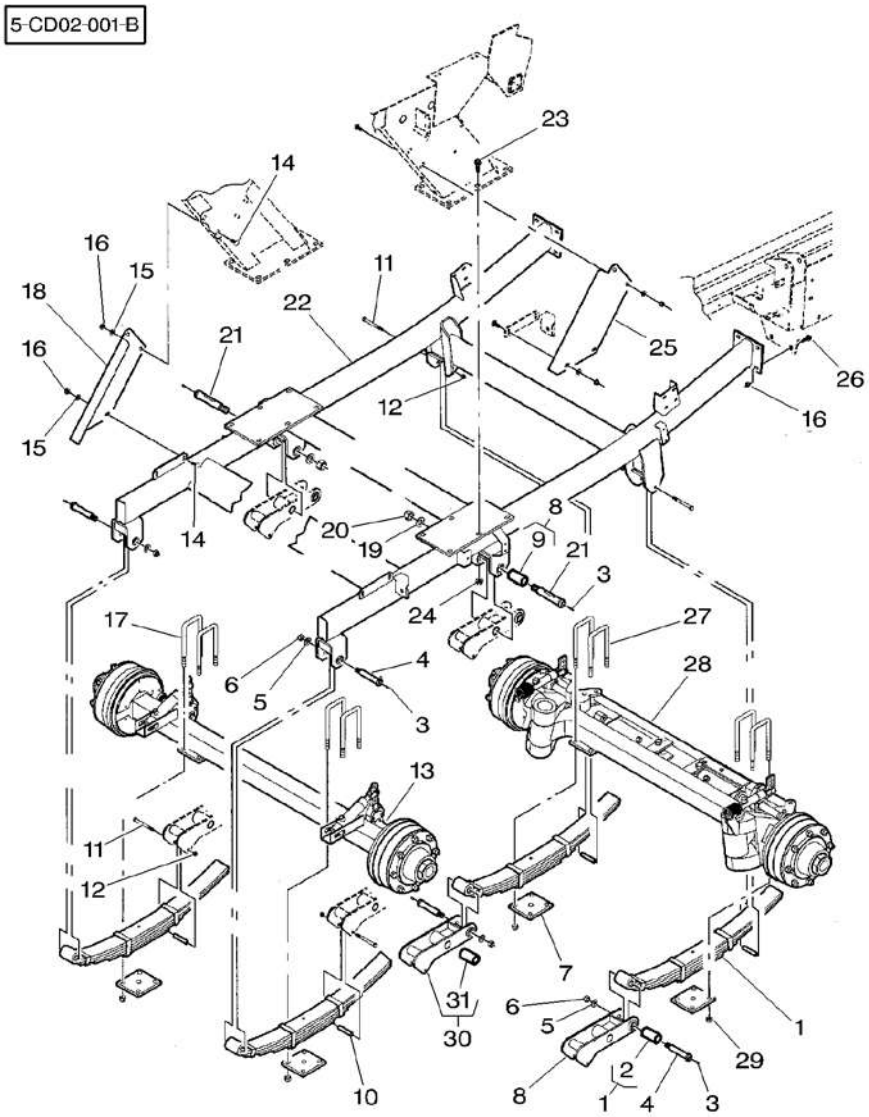

26*	8701237	1/2"-13 X 1-1/2	**8**	SCREW	VIS VITE	SCHRAUBE TORNILLO
27	700720504		**4**	U BOLT	ETRIER FILETE CAVALLOTTO	BUEGELSCHRAUBE BRIDA EN U
28*	700720483	[A]	**1**	AXLE	ESSIEU ASSALE	ACHSE EJE
28*	700721774	[B]	**1**	AXLE	ESSIEU ASSALE	ACHSE EJE
29*	700720387	M18	**16**	LOCKNUT	ECROU BLOCAGE AUTOBLOCCANTE	FLACHMUTTER CONTRATUERCA
30	700720373	▶	**1**	ARM	BRAS BRACCIO	ARM BRAZO
31*	700720374	30	**1**	BUSH	BAGUE BOCCOLA	BUCHSE CASQUILLO

[A] WITH HYDRAULIC BRAKES
AVEC FREIN HYDRAULIQUE
MIT HYDRAULISCHE BREMSE
CON FRENI HIDRAULICA
CON FRENO IDRAULICO

[B] WITH PNEUMATIC BRAKE
AVEC FREINAGE PNEUMATIQUE
MIT LUFTDRUCKBREMSE
CON FRENO PNEUMATICO
CON FRENO NEUMATICO

Wheel
Roues
Rader
Ruota
Rueda

60-195

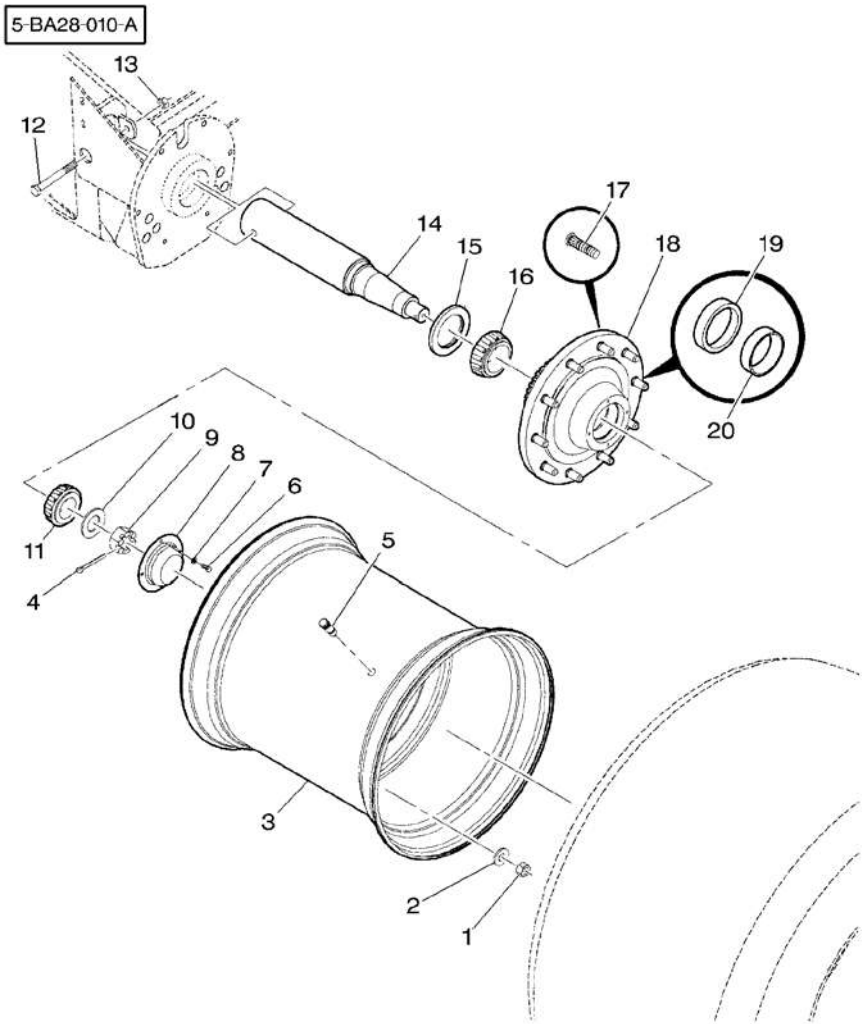

1*	700706194	3/4"–16	**20**	NUT	ECROU DADO	MUTTER TUERCA
1*	700701848	[A] M22	**20**	NUT	ECROU DADO	MUTTER TUERCA
2*	826271		**20**	WASHER	RONDELLE RONDELLA	UNTERLEGSCHEIBE ARANDELA
3	700720021	22,5 X W24 ➡| HL74155	**2**	WHEEL	ROUE RUOTA	RAD RUEDA
3	700720503	22,5 X W24 ➡ HL74156	**2**	WHEEL	ROUE RUOTA	RAD RUEDA
4*	375095X1	5/16" X 3	**2**	PIN	GOUPILLE PERNO	BOLZEN PASADOR
5	7027469		**2**	VALVE	SOUPAPE VALVOLA	VENTIL VALVULA
6*	353677X1	5/16"–18 X 3/4	**8**	BOLT UNC	BOULON UNC BULLONE UNC	MASCH.SCHRB.UNC PERNO UNC
7*	353446X1	5/16"	**8**	LOCK WASHER	RONDELLE FREIN ROSETTA ELASTICA	FEDERRING ARANDELA GROWER
8	826578		**2**	CAP	CHAPEAU CAPPELLO	KAPPE TAPA
9*	704601	1"–1/2–12	**2**	NUT	ECROU DADO	MUTTER TUERCA
10*	7705064	1"–1/2	**2**	WASHER	RONDELLE RONDELLA	UNTERLEGSCHEIBE ARANDELA
11	300974M1		**2**	CONE	CONE CONO	KONUS CONO
12*	354687X1	5/8"–11 X 5	**2**	BOLT UNC	BOULON UNC BULLONE UNC	MASCH.SCHRB.UNC PERNO UNC
13*	7774482	5/8"–11	**2**	LOCKNUT	ECROU BLOCAGE AUTOBLOCCANTE	FLACHMUTTER CONTRATUERCA
14	700137740		**2**	SPINDLE	FUSEE FUSELLO	SPINDEL MANGUETA
15	7744519		**2**	SEAL	JOINT ETANCHEITE PARAOLIO	DICHTRING RETEN
16	7713134		**2**	BEARING CONE	CONE ROULEMENT CONO CUSCINETTO	LAGERINNENRING CONO COJINETE
17*	826545		**20**	BOLT	BOULON BULLONE	MASCH.SCHRAUBE PERNO
18	700137742		**2**	HUB	MOYEU MOZZO	NABE CUBO
19	KB5012B		**2**	BEARING CUP	CUVETTE ROULEMNT COPPA CUSCINETTO	LAGERAUSSENRING ANILLO COJINETE
20	300975M1		**2**	CUP	COUPELLE SCODELLINO	LAUFRING CUBETA

[A] WITH BRAKES
AVEC FREIN
MIT BREMSE
CON FRENI
CON FRENO

Wheel Roues Rader Ruota Rueda	60-200	Tandem Tandem Tandem Tandem Tandem

5-BA28-012-A

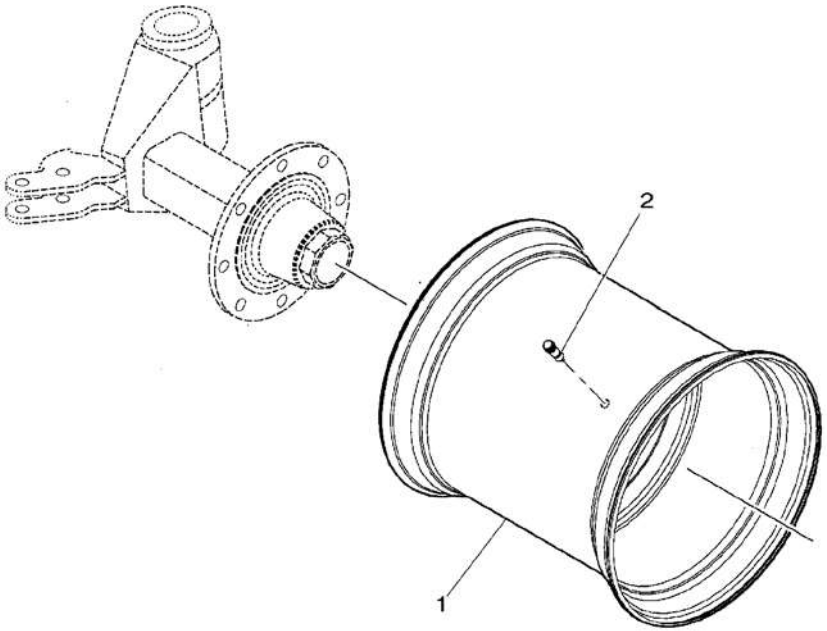

1*	700720411	16 X W17	2 WHEEL	ROUE RUOTA	RAD RUEDA
2	7027469		2 VALVE	SOUPAPE VALVOLA	VENTIL VALVULA

Brake System
Systeme De Freinage
Brems System
Sistea Di Frenata
Sistema De Frenado

60-205

Left Side – Up To H.K 74299
Cote Gauche – Jusqu'Au H.K 74299
Linke Seite – Bis H.K 74299
Lato Sinistro – Fino Alla H.K 74299
Lado Izquierdo – Hasta H.K 74299

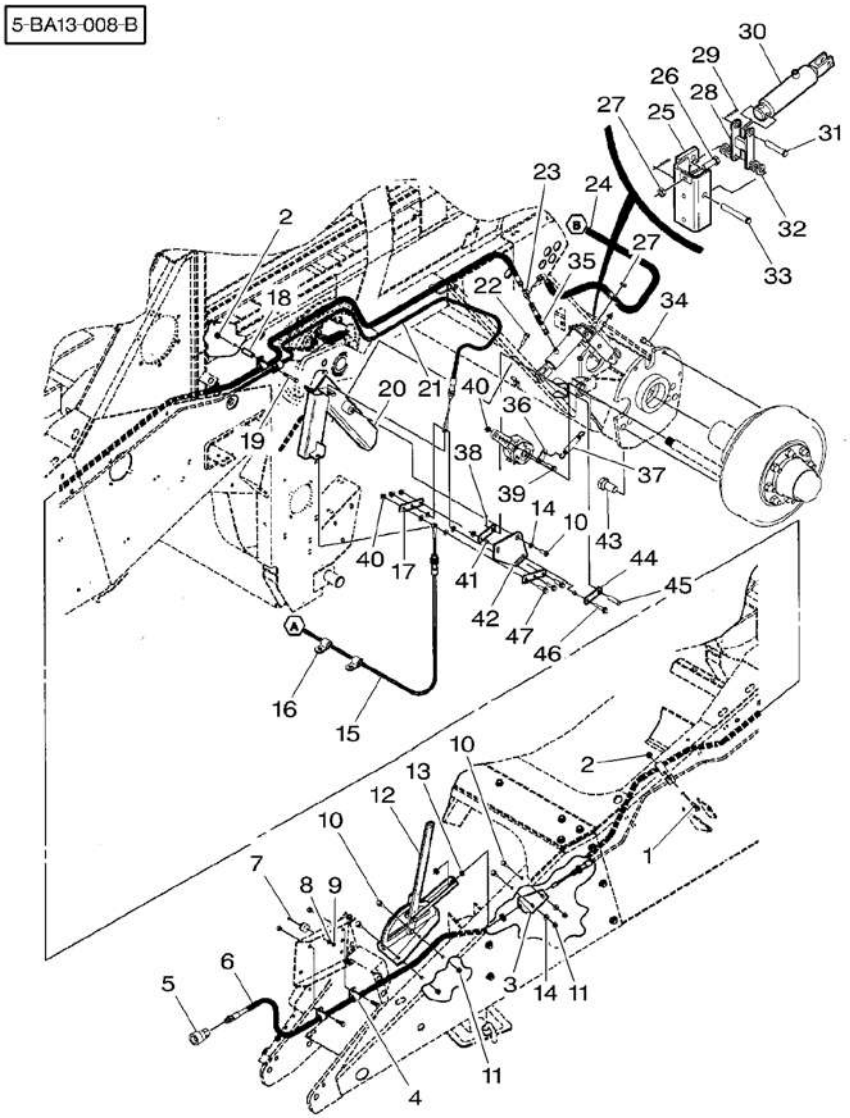

1 ✱	353693X1	3/8"–16 X 1–1/4	1	SCREW UNC VIS UNC VITE UNC	SCHRAUBE UNC TORNILLO UNC
2 ✱	***700711238***	3/8"–16	2	NUT ECROU DADO	MUTTER TUERCA
3 ✱	700138152P		1	SUPPORT SUPPORTO	LAGERUNG DISPOS.DE SOSTEN
4 ✱	70925617		7	CLAMP COLLIER FASCETTA	HALTESCHELLE ABRAZADERA
5 ✱	3901314M1		1	COUPLING CRABOT ACCOPPIAMENTO	KUPPLUNG ACOPLAMIENTO
6 ✱	700720140		1	HYDRAULIC HOSE DURITE HYDRAULIC TUBO HYDRAULICO	HYDRAUL.SCHLAUCH TUBO HYDRAULICO
7 ✱	700707346	No 10–32 X 3/4	1	BOLT BOULON BULLONE	MASCH.SCHRAUBE PERNO
8 ✱	70917380	No 10	1	WASHER RONDELLE RONDELLA	UNTERLEGSCHEIBE ARANDELA
9 ✱	Y704445	No 10–32	1	NUT ECROU DADO	MUTTER TUERCA
10 ✱	7883382	3/8"–16 X 1	5	SCREW VIS VITE	SCHRAUBE TORNILLO
11 ✱	***704247***	3/8"–16	4	LOCKNUT ECROU BLOCAGE AUTOBLOCCANTE	FLACHMUTTER CONTRATUERCA
12 ✱	3901284M91		1	HANDBRAKE ASSY FREIN A MAIN FRENO A MANO	HANDBREMSE FRENO DE MANO
13 ✱	353431X1	3/8"–24	2	NUT UNF ECROU UNF DADO UNF	MUTTER UNF TUERCA UNF
14 ✱	*Y705533*	3/8"	3	WASHER RONDELLE RONDELLA	UNTERLEGSCHEIBE ARANDELA
15 ✱	700720134		1	CABLE CAVO	KABEL CABLE
16 ✱	70926917		2	CLAMP COLLIER FASCETTA	HALTESCHELLE ABRAZADERA
17 ✱	700138159		2	STRAP PATTE CORREGGIA	LASCHE FAJA
18 ✱	700121187		1	BUSH BAGUE BOCCOLA	BUCHSE CASQUILLO
19 ✱	354271X1	3/8"–16 X 2–3/4	1	BOLT UNC BOULON UNC BULLONE UNC	MASCH.SCHRB.UNC PERNO UNC
20 ✱	700155859P		1	PIVOT PIVOT CARDINE	DREHZAPFEN PIVOTE
21 ✱	700720135		1	CABLE CABLE CAVO	KABEL CABLE
22 ✱	700711084	3/8"–16 X 1–1/2	2	BOLT BOULON BULLONE	MASCH.SCHRAUBE PERNO
23 ✱	70919087		1	TEEPIECE TE RACCORDO A T	T–STUECK PIEZA EN T
24 ✱	700725942		1	HOSE DURITE TUBO FLESSIBILE	SCHLAUCH FLEXIBLE
25 ✱	700137366P		1	CHANNEL CANAL PROFILATO	KANAL CANAL
26 ✱	701144	1/2"–13 X 1–1/2	1	SCREW VIS VITE	SCHRAUBE TORNILLO

Brake System
Systeme De Freinage
Brems System
Sistea Di Frenata
Sistema De Frenado

60-205

Left Side – Up To H.K 74299
Cote Gauche – Jusqu'Au H.K 74299
Linke Seite – Bis H.K 74299
Lato Sinistro – Fino Alla H.K 74299
Lado Izquierdo – Hasta H.K 74299

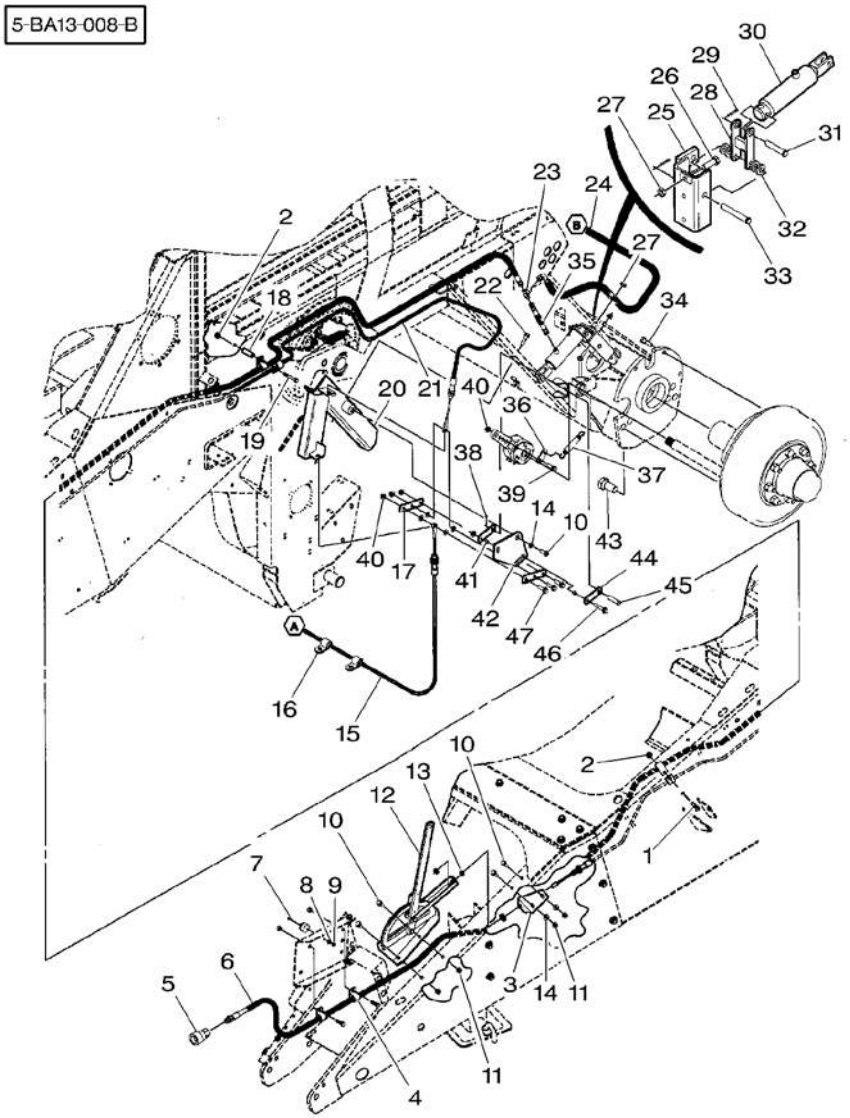

27★704056	1/2"–13	2 NUT	ECROU DADO	MUTTER TUERCA
28★700154430P		1 LINK	MAILLON MAGLIA	GLIED UNION
29★354066X1	5/32" X 1	2 PIN	GOUPILLE PERNO	BOLZEN PASADOR
30★700725980		1 CYLINDER	CYLINDRE CILINDRO	ZYLINDER CILINDRO
31★63875	1/2" X 2–1/2	1 CLEVIS PIN	AXE PERNO D'ATTACCO	SPLINTBOLZEN BULON CILINDRICO
32★*705541*	1/2"	4 FLAT WASHERS	RONDELLES PLATES RONDELLE PIANE	UNTERLEGSCHEIBEN ARANDELAS PLANAS
33★863423	1/2" X 3–1/2	1 CLEVIS PIN	AXE PERNO D'ATTACCO	SPLINTBOLZEN BULON CILINDRICO
34★**390912X1**	M12 X 40	2 HEX. SOCK. SCREW	VIS TETE HEX VITE PARKER	ZYLINDERSCHRAUBE TORN.CAB.HUECA
35★700725941		1 HOSE	DURITE TUBO FLESSIBILE	SCHLAUCH FLEXIBLE
36★700137370P		1 LINK	MAILLON MAGLIA	GLIED UNION
37★700714064		1 SPRING	RESSORT MOLLA	FEDER MUELLE
38★354059X1	1/8" X 1	2 PIN	GOUPILLE PERNO	BOLZEN PASADOR
39★7883408	3/8"–16 X 1–1/4	1 SCREW	VIS VITE	SCHRAUBE TORNILLO
40★*Y704734*	3/8"–16	4 TOP LOCKNUT	ECROU FREIN DADO DI TESTA	SELBSTS.MUTTER CONTRATUERCA SUP
41★700149042		2 SPACER	ENTRETOISE DISTANZIALE	ABSTANDSTUECK PIEZA DISTANCIA
42★700155860P		1 PLATE	PLAQUE PIASTRA	PLATTE PLATO
43★70950401	M24 X 50	2 SCREW	VIS VITE	SCHRAUBE TORNILLO
44★700137367P		2 BAR	BARRE BARRA	STAB BARRA
45★763730	1/2" X 2	1 CLEVIS PIN	AXE PERNO D'ATTACCO	SPLINTBOLZEN BULON CILINDRICO
46★700711132	3/8"–16 X 2	1 SCREW	VIS VITE	SCHRAUBE TORNILLO
47★353691X1	3/8"–16 X 1	3 BOLT UNC	BOULON UNC BULLONE UNC	MASCH.SCHRB.UNC PERNO UNC

Brake System
Systeme De Freinage
Brems System
Sistea Di Frenata
Sistema De Frenado

60-210

Right Side – Up To H.K 74299
Cote Droit – Jusqu'Au H.K 74299
Rechte Seite – Bis H.K 74299
Lado Destra – Fino Alla H.K 74299
Lado Derecho – Hasta H.K 74299

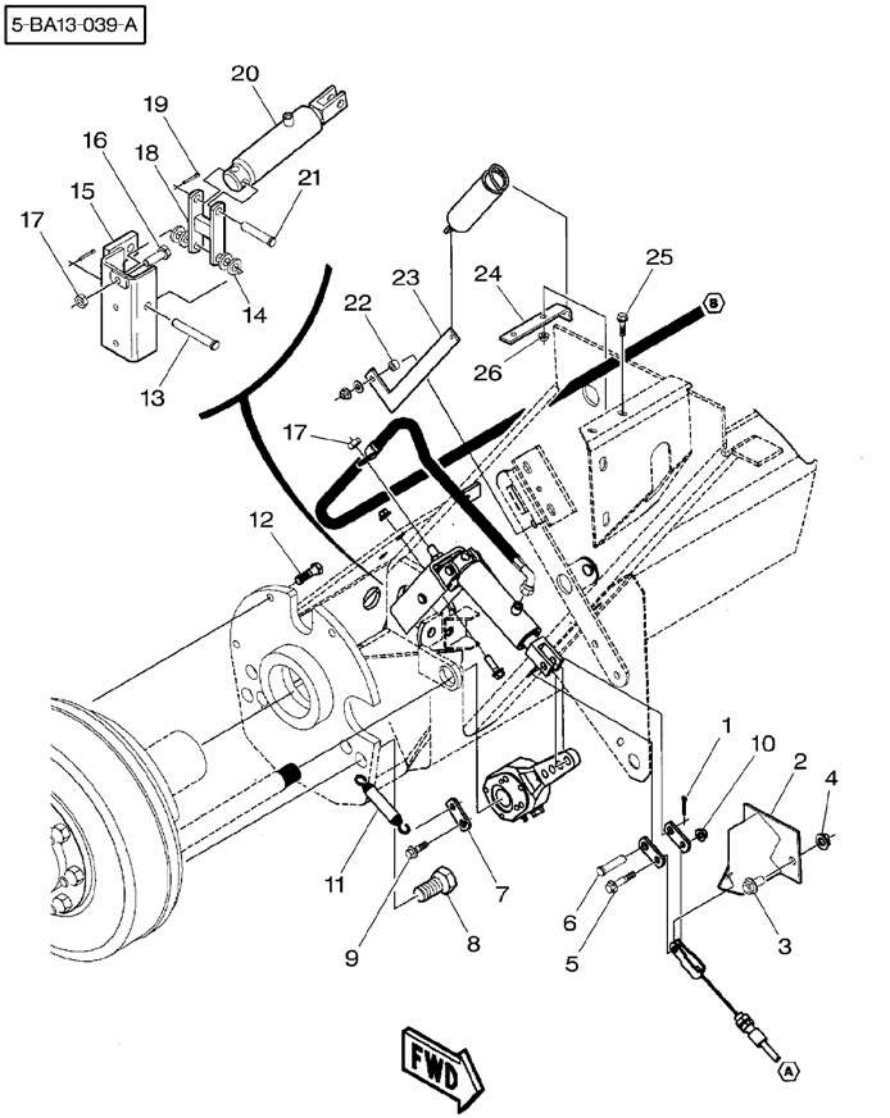

1	354059X1	1/8" X 1	2	PIN	GOUPILLE PERNO BOLZEN PASADOR
2	700137374P		1	SUPPORT	SUPPORT SUPPORTO LAGERUNG DISPOS.DE SOSTEN
3	7883424	1/2"–13 X 1	2	SCREW	VIS VITE SCHRAUBE TORNILLO
4	700711320	1/2"–13	2	NUT	ECROU DADO MUTTER TUERCA
5	700711132	3/8"–16 X 2	1	SCREW	VIS VITE SCHRAUBE TORNILLO
6	763730	1/2" X 2	1	CLEVIS PIN	AXE PERNO D'ATTACCO SPLINTBOLZEN BULON CILINDRICO
7	700137370P		3	LINK	MAILLON MAGLIA GLIED UNION
8	70950401	M24 X 50	2	SCREW	VIS VITE SCHRAUBE TORNILLO
9	7883408	3/8"–16 X 1–1/4	1	SCREW	VIS VITE SCHRAUBE TORNILLO
10	***Y704734***	3/8"–16	1	TOP LOCKNUT	ECROU FREIN DADO DI TESTA SELBSTS.MUTTER CONTRATUERCA SUP
11	700714064		1	SPRING	RESSORT MOLLA FEDER MUELLE
12	**390912X1**	M12 X 40	2	HEX. SOCK. SCREW	VIS TETE HEX VITE PARKER ZYLINDERSCHRAUBE TORN.CAB.HUECA
13	863423	1/2" X 3–1/2	1	CLEVIS PIN	AXE PERNO D'ATTACCO SPLINTBOLZEN BULON CILINDRICO
14	***705541***	1/2"	4	FLAT WASHERS	RONDELLES PLATES RONDELLE PIANE UNTERLEGSCHEIBEN ARANDELAS PLANAS
15	700137361P		1	CHANNEL	CANAL PROFILATO KANAL CANAL
16	701144	1/2"–13 X 1–1/2	1	SCREW	VIS VITE SCHRAUBE TORNILLO
17	704056	1/2"–13	2	NUT	ECROU DADO MUTTER TUERCA
18	700154430P		1	LINK	MAILLON MAGLIA GLIED UNION
19	354066X1	5/32" X 1	2	PIN	GOUPILLE PERNO BOLZEN PASADOR
20	700725980		1	CYLINDER	CYLINDRE CILINDRO ZYLINDER CILINDRO
21	63875	1/2" X 2–1/2	1	CLEVIS PIN	AXE PERNO D'ATTACCO SPLINTBOLZEN BULON CILINDRICO
22	6179832P		1	SPACER	ENTRETOISE DISTANZIALE ABSTANDSTUECK PIEZA DISTANCIA
23	700137368P		1	LINK	MAILLON MAGLIA GLIED UNION
24	700137369P		1	STRAP	PATTE CORREGGIA LASCHE FAJA
25	7771371	5/16"–18 X 1–1/4	2	BOLT	BOULON BULLONE MASCH.SCHRAUBE PERNO
26	Y704726	5/16"–18	2	TOP LOCKNUT	ECROU FREIN DADO DI TESTA SELBSTS.MUTTER CONTRATUERCA SUP

Brake System
Systeme De Freinage
Brems System
Sistea Di Frenata
Sistema De Frenado

60-215 ➡ **H.K 74300**

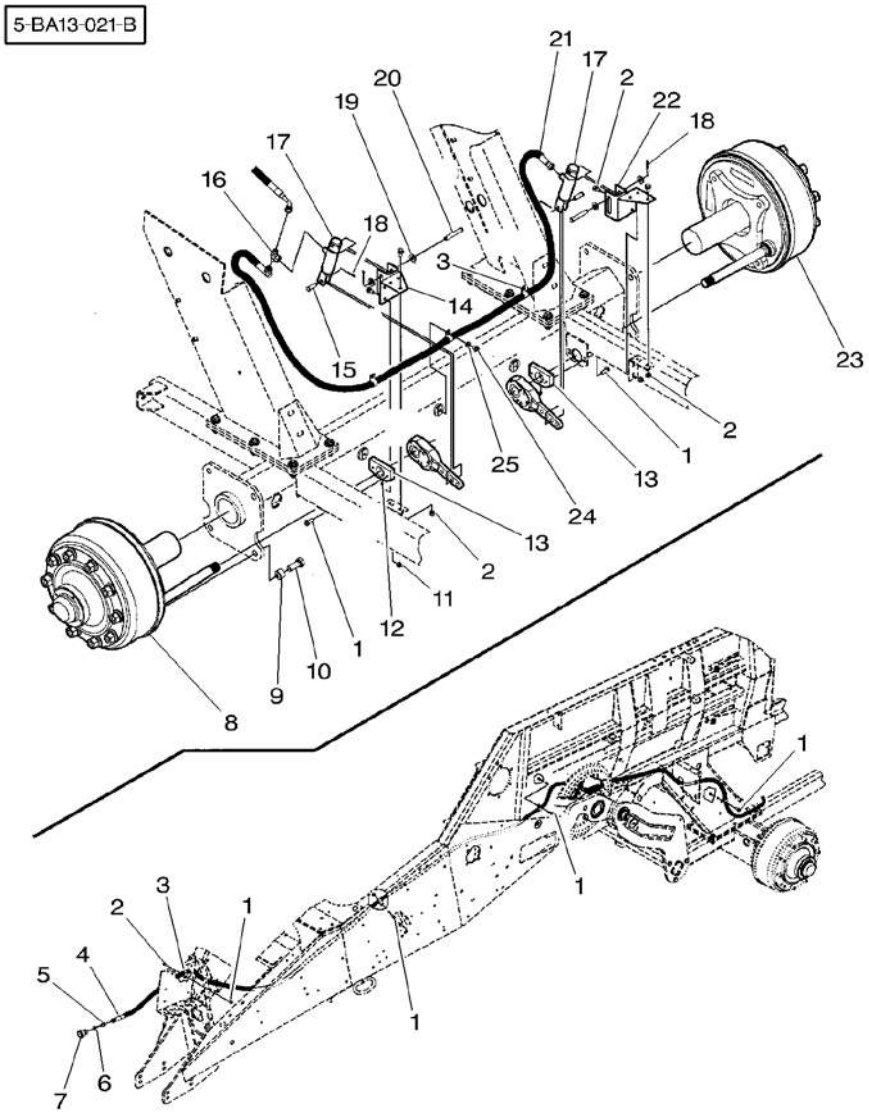

1★	7883382	3/8"–16 X 1	8	SCREW	VIS VITE	SCHRAUBE TORNILLO
1★	***700711238***	3/8"–16	8	NUT	ECROU DADO	MUTTER TUERCA
2★	***700711238***	3/8"–16	3	NUT	ECROU DADO	MUTTER TUERCA
2★	7703432	3/8"–16 X 3/4	3	SCREW	VIS VITE	SCHRAUBE TORNILLO
3	70925619	5/8"	7	CLAMP	COLLIER FASCETTA	HALTESCHELLE ABRAZADERA
4	700720499		1	HYDRAULIC HOSE	DURITE HYDRAULIC TUBO HYDRAULICO	HYDRAUL.SCHLAUCH TUBO HYDRAULICO
5	700720416		1	ADAPTOR	ADAPTATEUR ADATTATORE	REDUZIERNIPPEL ADAPTADOR
6★	700720414		1	WASHER	RONDELLE RONDELLA	UNTERLEGSCHEIBE ARANDELA
7	700720423		1	COUPLER	ACCOUPLEMENT ACCOPPIATORE	KUPPLUNGSSTUECK ACOPLADOR
8	700140468	◀ 👁 60–290 No 1	1	BRAKE	FREIN FRENO	BREMSE FRENO
9★	700131436P		8	BUSH	BAGUE BOCCOLA	BUCHSE CASQUILLO
10★	700706419	3/4"–10 X 2	8	BOLT	BOULON BULLONE	MASCH.SCHRAUBE PERNO
11★	7703432	3/8"–16 X 3/4	2	SCREW	VIS VITE	SCHRAUBE TORNILLO
11★	***700711238***	3/8"–16	2	NUT	ECROU DADO	MUTTER TUERCA
12	***70923219***	1/4"–28	2	GREASER	GRAISSEUR INGRASSATORE	FETTNIPPEL ENGRASADOR
13★	700140452P		2	SUPPORT	SUPPORT SUPPORTO	LAGERUNG DISPOS.DE SOSTEN
14★	700140457P	◀	1	SUPPORT	SUPPORT SUPPORTO	LAGERUNG DISPOS.DE SOSTEN
15★	700708652		2	PIN	GOUPILLE PERNO	BOLZEN PASADOR
16	3901293M1		1	TEEPIECE	TE RACCORDO A T	T–STUECK PIEZA EN T
17	700728081		2	BRAKE CYLINDER	CYLINDRE FREIN CILINDRO FRENO	BREMSZYLINDER CILINDRO FRENO
18	354066X1	5/32" X 1	4	PIN	GOUPILLE PERNO	BOLZEN PASADOR
19★	***705541***	1/2"	4	FLAT WASHERS	RONDELLES PLATES RONDELLE PIANE	UNTERLEGSCHEIBEN ARANDELAS PLANAS
20	63883	1/2" X 3	2	CLEVIS PIN	AXE PERNO D'ATTACCO	SPLINTBOLZEN BULON CILINDRICO
21	700720500		1	HYDRAULIC HOSE	DURITE HYDRAULIC TUBO HYDRAULICO	HYDRAUL.SCHLAUCH TUBO HYDRAULICO
22★	700140458P	▶	1	SUPPORT	SUPPORT SUPPORTO	LAGERUNG DISPOS.DE SOSTEN
23	700140469	▶ 👁 60–290 No 1	1	BRAKE	FREIN FRENO	BREMSE FRENO

Brake System
Systeme De Freinage
Brems System
Sistea Di Frenata
Sistema De Frenado

60-215 ➡ **H.K 74300**

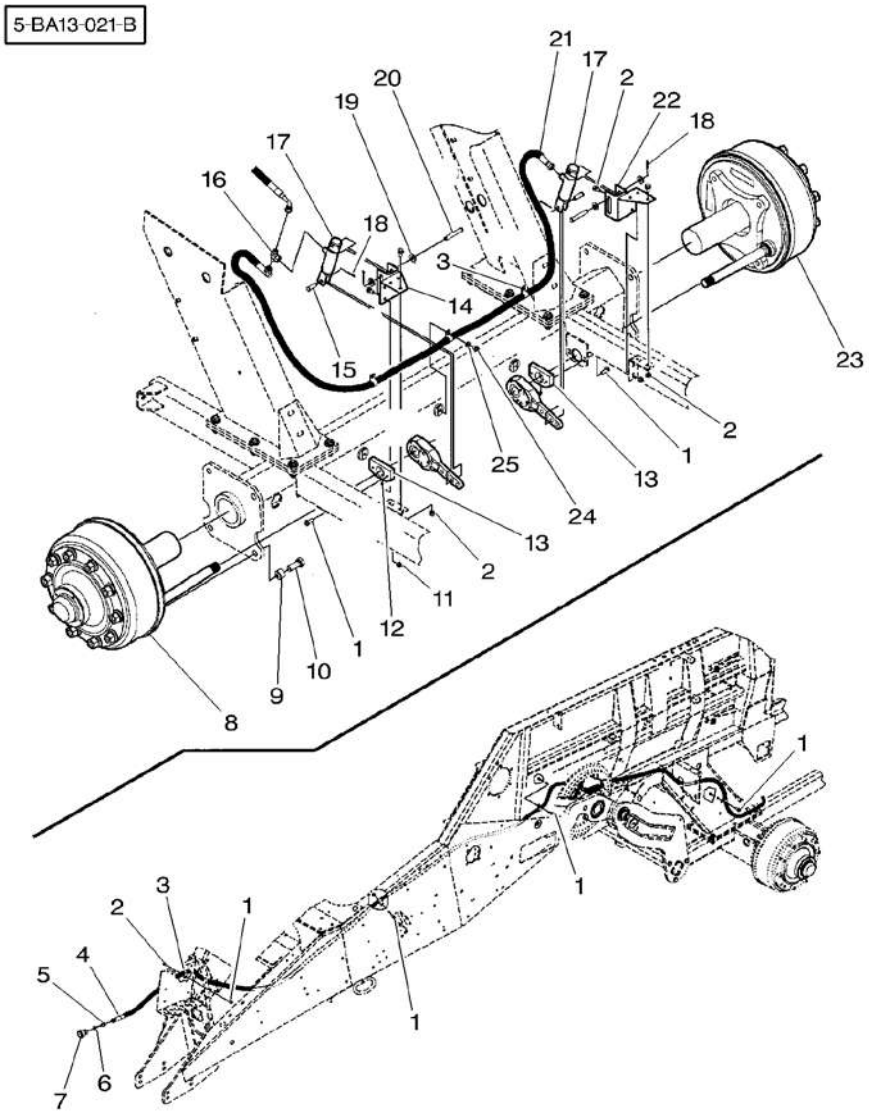

24*	7883366		3 SCREW	VIS VITE	SCHRAUBE TORNILLO
25*	Y705533	3/8"	3 WASHER	RONDELLE RONDELLA	UNTERLEGSCHEIBE ARANDELA

Brake System
Systeme De Freinage
Brems System
Sistea Di Frenata
Sistema De Frenado

60-220

High/Low Hitch
Attelage Haut/Bas
Hoch/Niedrig Anhaengekupplung
Attacco Alto/Basso
Enganche Alto/Bajo

5-BA13-040-A

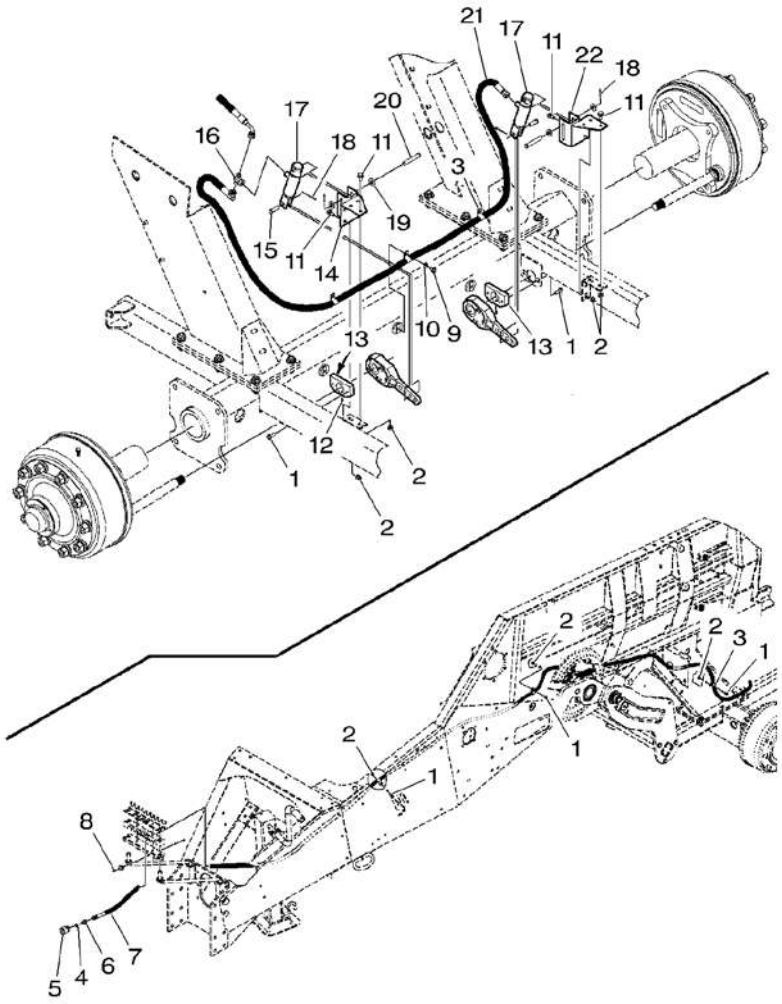

1 ✱	7883382	3/8"–16 X 1	7	SCREW	VIS VITE	SCHRAUBE TORNILLO
2 ✱	***700711238***	3/8"–16	8	NUT	ECROU DADO	MUTTER TUERCA
3 ✱	70925619		6	CLAMP	COLLIER FASCETTA	HALTESCHELLE ABRAZADERA
4 ✱	700720414	3/8"	1	WASHER	RONDELLE RONDELLA	UNTERLEGSCHEIBE ARANDELA
5 ✱	700720423		1	COUPLER	ACCOUPLEMENT ACCOPPIATORE	KUPPLUNGSSTUECK ACOPLADOR
6 ✱	700720416	3/8"	1	ADAPTOR	ADAPTATEUR ADATTATORE	REDUZIERNIPPEL ADAPTADOR
7 ✱	700720499		1	HYDRAULIC HOSE	DURITE HYDRAULIC TUBO HYDRAULICO	HYDRAUL.SCHLAUCH TUBO HYDRAULICO
8 ✱	700707346	No 10–32 X 3/4	1	BOLT	BOULON BULLONE	MASCH.SCHRAUBE PERNO
8 ✱	70917380	No 10	1	WASHER	RONDELLE RONDELLA	UNTERLEGSCHEIBE ARANDELA
8 ✱	Y704445	No 10–32	1	NUT	ECROU DADO	MUTTER TUERCA
9 ✱	7883366	3/8"–16 X 1/2	3	SCREW	VIS VITE	SCHRAUBE TORNILLO
10 ✱	*Y705533*	3/8"	3	WASHER	RONDELLE RONDELLA	UNTERLEGSCHEIBE ARANDELA
11 ✱	7703432	3/8"–16 X 3/4	5	SCREW	VIS VITE	SCHRAUBE TORNILLO
12 ✱	***70923219***	1/4"–28	2	GREASER	GRAISSEUR INGRASSATORE	FETTNIPPEL ENGRASADOR
13 ✱	700140452P		2	SUPPORT	SUPPORT SUPPORTO	LAGERUNG DISPOS.DE SOSTEN
14 ✱	700140457P	◀	1	SUPPORT	SUPPORT SUPPORTO	LAGERUNG DISPOS.DE SOSTEN
15 ✱	700708652	1/2" X 1–27/64	2	PIN	GOUPILLE PERNO	BOLZEN PASADOR
16 ✱	3901293M1		1	TEEPIECE	TE RACCORDO A T	T–STUECK PIEZA EN T
17 ✱	700728081		2	BRAKE CYLINDER	CYLINDRE FREIN CILINDRO FRENO	BREMSZYLINDER CILINDRO FRENO
18 ✱	354066X1	5/32" X 1	4	PIN	GOUPILLE PERNO	BOLZEN PASADOR
19 ✱	***705541***	1/2	4	FLAT WASHERS	RONDELLES PLATES RONDELLE PIANE	UNTERLEGSCHEIBEN ARANDELAS PLANAS
20 ✱	63883	1/2" X 3	2	CLEVIS PIN	AXE PERNO D'ATTACCO	SPLINTBOLZEN BULON CILINDRICO
21 ✱	700720500		1	HYDRAULIC HOSE	DURITE HYDRAULIC TUBO HYDRAULICO	HYDRAUL.SCHLAUCH TUBO HYDRAULICO
22 ✱	700140458P	▶	1	SUPPORT	SUPPORT SUPPORTO	LAGERUNG DISPOS.DE SOSTEN

Brake System
Systeme De Freinage
Brems System
Sistea Di Frenata
Sistema De Frenado

60-225

Tandem – Hydraulic Brakes
Tandem – Frein Hydraulique
Tandem – Hydraulik Bremse
Tandem – Freni Idraulico
Tandem – Freno Hydraulico

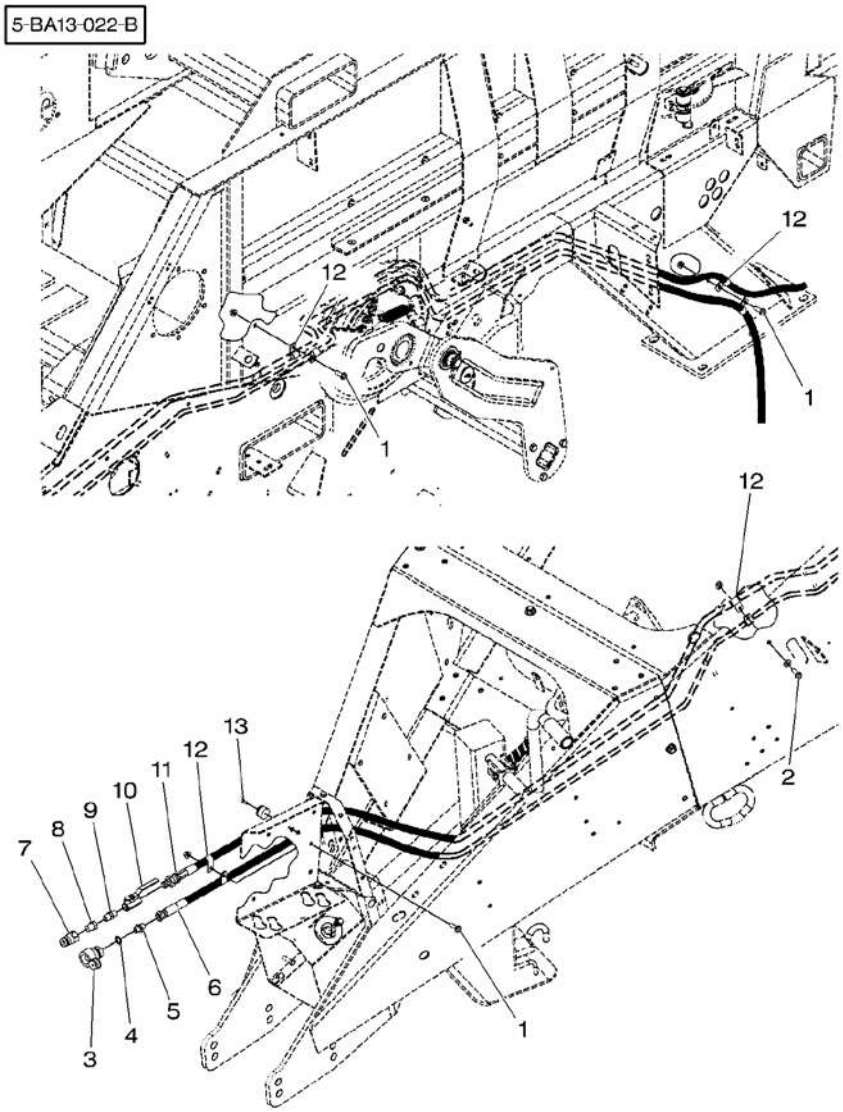

1 *	7883382	3/8"–16 X 1	3	SCREW	VIS VITE
1 *	*700711238*	3/8"–16	3	NUT	ECROU DADO
2 *	7883382	3/8"–16 X 1	1	SCREW	VIS VITE
2 *	*Y705533*	3/8"	1	WASHER	RONDELLE RONDELLA
2 *	*700711238*	3/8"–16	1	NUT	ECROU DADO
3	700720423		1	COUPLER	ACCOUPLEMENT ACCOPPIATORE
4	700720414		1	WASHER	RONDELLE RONDELLA
5	700720416		1	ADAPTOR	ADAPTATEUR ADATTATORE
6	700720426	60–230 No 4&	1	HOSE	DURITE TUBO FLESSIBILE
7 *	70594977		1	COUPLER	ACCOUPLEMENT ACCOPPIATORE
8	46235		1	BUSH	BAGUE BOCCOLA
9	7846462		1	NIPPLE	GRAISSEUR COUDE NIPPLO
10	700709593		1	PRESSURE VALVE	VALVE VALVOLA PRESSION
11	700720427	60–230 No 4&	1	HYDRAULIC HOSE	DURITE HYDRAULIC TUBO HYDRAULICO
12	70925619	5/8"	8	CLAMP	COLLIER FASCETTA
13 *	700707346	No 10–32 X 3/4	1	BOLT	BOULON BULLONE
13	70917380	No 10	1	WASHER	RONDELLE RONDELLA
13	Y704445	No 10–32	1	NUT	ECROU DADO

SCHRAUBE TORNILLO		
MUTTER TUERCA		
SCHRAUBE TORNILLO		
UNTERLEGSCHEIBE ARANDELA		
MUTTER TUERCA		
KUPPLUNGSSTUECK ACOPLADOR		
UNTERLEGSCHEIBE ARANDELA		
REDUZIERNIPPEL ADAPTADOR		
SCHLAUCH FLEXIBLE		
KUPPLUNGSSTUECK ACOPLADOR		
BUCHSE CASQUILLO		
NIPPEL NIPLE		
DRUCKVENTIL VALVULA PRESION		
HYDRAUL.SCHLAUCH TUBO HYDRAULICO		
HALTESCHELLE ABRAZADERA		
MASCH.SCHRAUBE PERNO		
UNTERLEGSCHEIBE ARANDELA		
MUTTER TUERCA		

Brake System Systeme De Freinage Brems System Sistea Di Frenata Sistema De Frenado	60-230	Tandem – Hydraulic Brakes Tandem – Frein Hydraulique Tandem – Hydraulik Bremse Tandem – Freni Idraulico Tandem – Freno Hydraulico

5-BA13-023-A

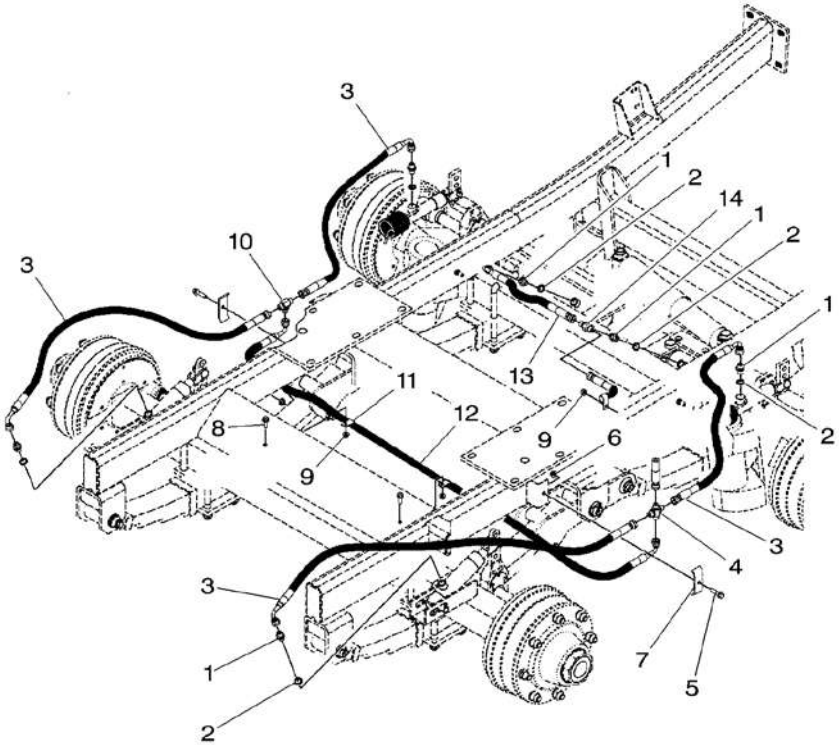

1	700720416	3/8"	6	ADAPTOR	ADAPTATEUR ADATTATORE	REDUZIERNIPPEL ADAPTADOR
2	700720414	3/8"	6	WASHER	RONDELLE RONDELLA	UNTERLEGSCHEIBE ARANDELA
3	700720430		4	HYDRAULIC HOSE	DURITE HYDRAULIC TUBO HYDRAULICO	HYDRAUL.SCHLAUCH TUBO HYDRAULICO
4*	700720431	3/8"	1	CONNECTOR	BORNE MORSETTO	DOPPELNIPPEL CONECTOR
5*	700711084	3/8"–16 X 1–1/2	2	BOLT	BOULON BULLONE	MASCH.SCHRAUBE PERNO
6*	*Y704734*	3/8"–16	2	TOP LOCKNUT	ECROU FREIN DADO DI TESTA	SELBSTS.MUTTER CONTRATUERCA SUP
7	700140227		2	CLAMP	COLLIER FASCETTA	HALTESCHELLE ABRAZADERA
8*	7883382	3/8"–16 X 1	2	SCREW	VIS VITE	SCHRAUBE TORNILLO
9*	*700711238*	3/8"–16	3	NUT	ECROU DADO	MUTTER TUERCA
10	700720415	3/8"	1	TEEPIECE	TE RACCORDO A T	T–STUECK PIEZA EN T
11	70925619		3	CLAMP	COLLIER FASCETTA	HALTESCHELLE ABRAZADERA
12	700720498		1	HYDRAULIC HOSE	DURITE HYDRAULIC TUBO HYDRAULICO	HYDRAUL.SCHLAUCH TUBO HYDRAULICO
13	700720429		1	HYDRAULIC HOSE	DURITE HYDRAULIC TUBO HYDRAULICO	HYDRAUL.SCHLAUCH TUBO HYDRAULICO
14*	3901293M1		1	TEEPIECE	TE RACCORDO A T	T–STUECK PIEZA EN T

Brake System Systeme De Freinage Brems System Sistea Di Frenata Sistema De Frenado	60-235	Tandem – Pneumatic Brakes Tandem – Frein Pneumatique Tandem – Luftdruck Bremse Tandem – Freni Pneumatico Tandem – Freno Pneumatico

5-BA13-027-A

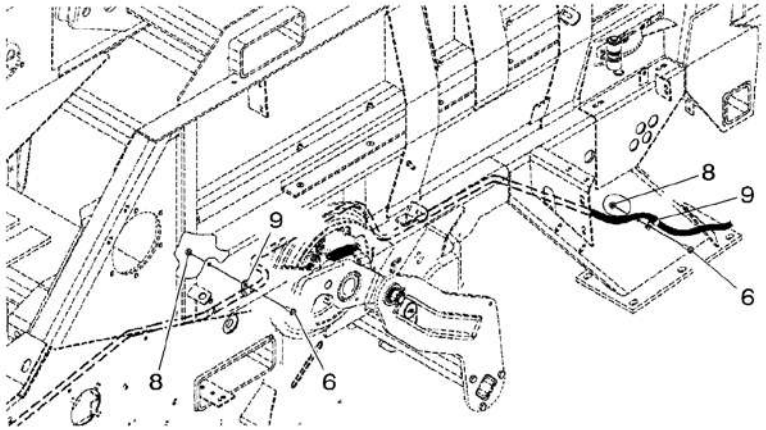

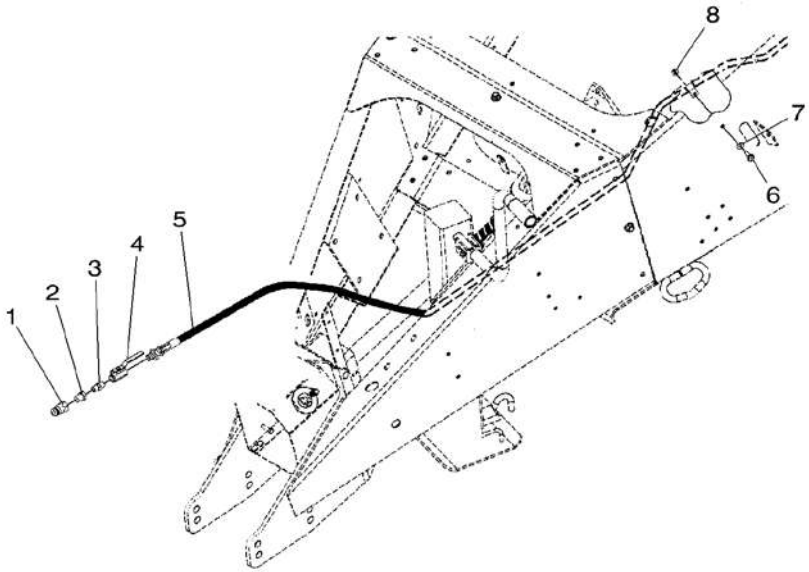

1 *	70594977		1	COUPLER	ACCOUPLEMENT ACCOPPIATORE
2 *	46235		1	BUSH	BAGUE BOCCOLA
3 *	7846462		1	NIPPLE	GRAISSEUR COUDE NIPPLO
4 *	700709593		1	PRESSURE VALVE	VALVE VALVOLA PRESSION
5 *	700720427		1	HYDRAULIC HOSE	DURITE HYDRAULIC TUBO HYDRAULICO
6 *	7883382	3/8"–16 X 1	3	SCREW	VIS VITE
7 *	*Y705533*	3/8"	1	WASHER	RONDELLE RONDELLA
8 *	***700711238***	3/8"–16	3	NUT	ECROU DADO
9 *	70925619	5/8"	4	CLAMP	COLLIER FASCETTA

					KUPPLUNGSSTUECK ACOPLADOR
					BUCHSE CASQUILLO
					NIPPEL NIPLE
					DRUCKVENTIL VALVULA PRESION
					HYDRAUL.SCHLAUCH TUBO HYDRAULICO
					SCHRAUBE TORNILLO
					UNTERLEGSCHEIBE ARANDELA
					MUTTER TUERCA
					HALTESCHELLE ABRAZADERA

Brake System Systeme De Freinage Brems System Sistea Di Frenata Sistema De Frenado	60-240	Tandem – Pneumatic Brakes Tandem – Frein Pneumatique Tandem – Luftdruck Bremse Tandem – Freni Pneumatico Tandem – Freno Pneumatico

5-BA13-028-A

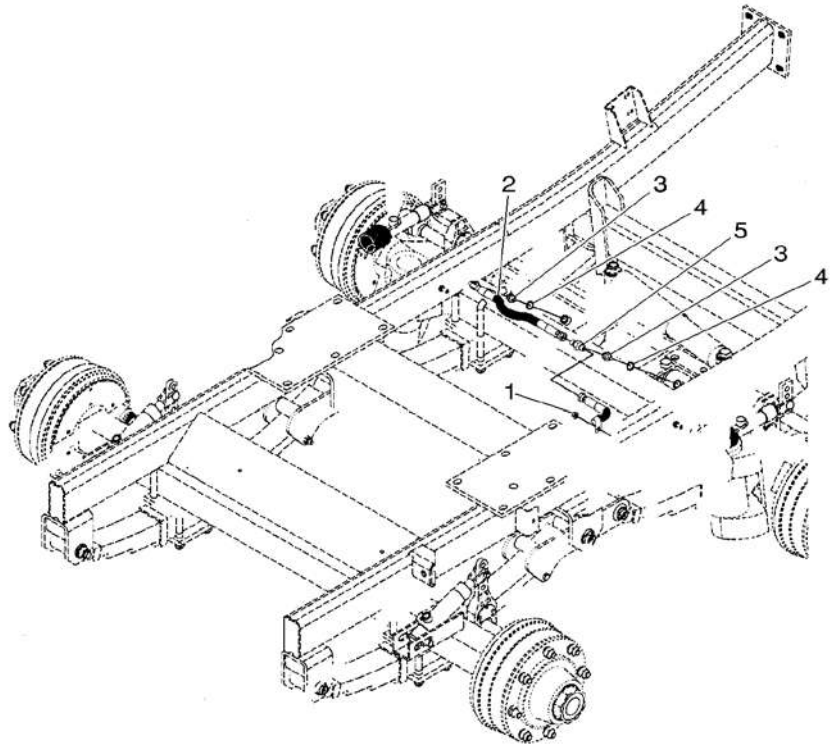

1*	*700711238*	3/8"–16	1 NUT	ECROU DADO	MUTTER TUERCA
2*	700722091		1 HOSE	DURITE TUBO FLESSIBILE	SCHLAUCH FLEXIBLE
3*	700720416	3/8"	2 ADAPTOR	ADAPTATEUR ADATTATORE	REDUZIERNIPPEL ADAPTADOR
4*	700720414	3/8"	2 WASHER	RONDELLE RONDELLA	UNTERLEGSCHEIBE ARANDELA
5*	3901293M1		1 TEEPIECE	TE RACCORDO A T	T–STUECK PIEZA EN T

Handbrake Frein A Main Handbremse Freno A Mano Freno De Mano	Control Linkage Commande De Freinage Bremsgestaenge Freni E Leverismi Comando Freno Varillaje	60-245

5-1186-001-B

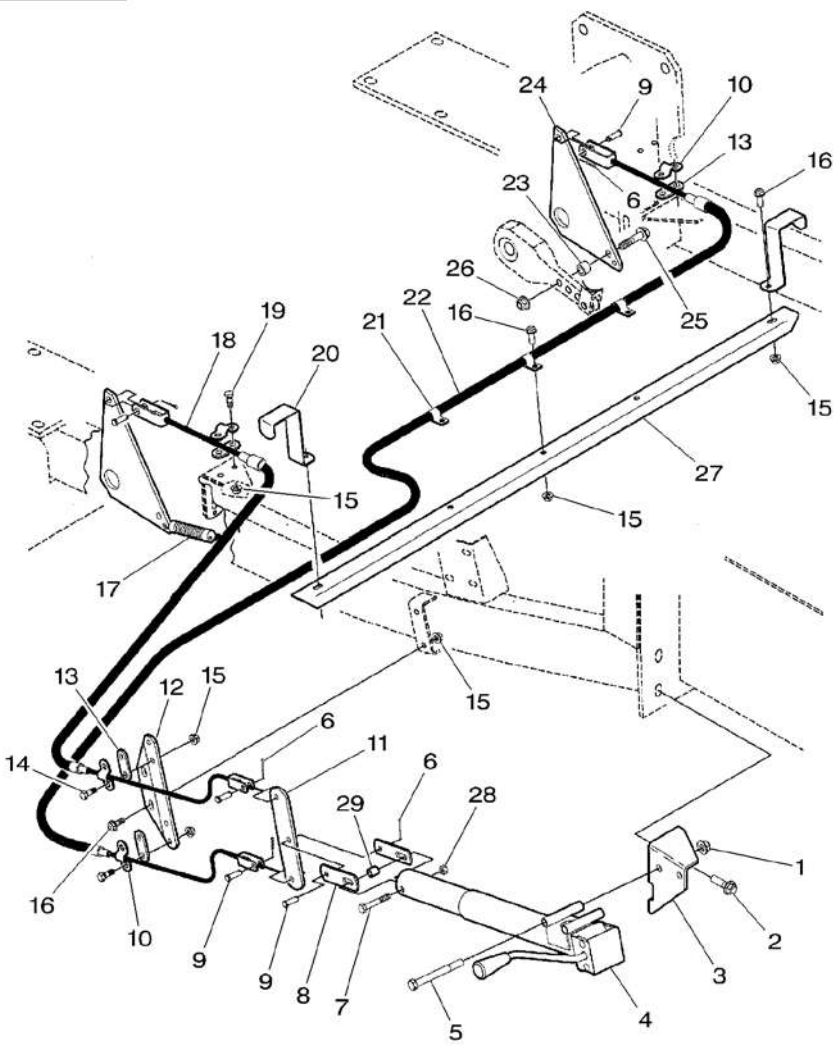

1	✱ *Y704742*	1/2"–13	1	TOP LOCKNUT	ECROU FREIN DADO DI TESTA	SELBSTS.MUTTER CONTRATUERCA SUP
2	✱ 7883432	1/2"–13 X 1–3/4	1	SCREW	VIS VITE	SCHRAUBE TORNILLO
3	✱ 700161867P		1	ANGLE	EQUERRE ANGOLO	WINKEL ANGULO
4	✱ 700721855		1	ACTUATOR	DECLENCHEUR AZIONATORE	BETAETIGUNG ACTUADOR
5	✱ *354667X1*	1/2"–13 X 4–1/2	2	BOLT UNC	BOULON UNC BULLONE UNC	MASCH.SCHRB.UNC PERNO UNC
6	✱ 354057X1	1/8" X 3/4	5	PIN	GOUPILLE PERNO	BOLZEN PASADOR
7	✱ *354269X1*	3/8"–16 X 2–1/2	1	BOLT UNC	BOULON UNC BULLONE UNC	MASCH.SCHRB.UNC PERNO UNC
8	700140260		2	ACTUATOR	DECLENCHEUR AZIONATORE	BETAETIGUNG ACTUADOR
9	63586	3/8" X 1–1/8	5	CLEVIS PIN	AXE PERNO D'ATTACCO	SPLINTBOLZEN BULON CILINDRICO
10	700720412		4	CLAMP	COLLIER FASCETTA	HALTESCHELLE ABRAZADERA
11	700155822		1	ARM	BRAS BRACCIO	ARM BRAZO
12	✱ 700140166P		1	SUPPORT	SUPPORT SUPPORTO	LAGERUNG DISPOS.DE SOSTEN
13	700720413		4	LINK	MAILLON MAGLIA	GLIED UNION
14	✱ 353691X1	3/8"–16 X 1	4	BOLT UNC	BOULON UNC BULLONE UNC	MASCH.SCHRB.UNC PERNO UNC
15	✱ *Y704734*	3/8"–16	13	TOP LOCKNUT	ECROU FREIN DADO DI TESTA	SELBSTS.MUTTER CONTRATUERCA SUP
16	✱ 7883382	3/8"–16 X 1	7	SCREW	VIS VITE	SCHRAUBE TORNILLO
17	*758441*		2	TENSION SPRING	RESSORT TRACTION MOLLA TENDITRICE	ZUGFEDER RESORTE TENSOR
18	700720421	◀	1	CABLE	CABLE CAVO	KABEL CABLE
19	✱ 353693X1	3/8"–16 X 1–1/4	2	SCREW UNC	VIS UNC VITE UNC	SCHRAUBE UNC TORNILLO UNC
20	✱ 700140185P		2	CHANNEL	CANAL PROFILATO	KANAL CANAL
21	70925619	5/8"	3	CLAMP	COLLIER FASCETTA	HALTESCHELLE ABRAZADERA
22	700720496	▶	1	CABLE	CABLE CAVO	KABEL CABLE
23	6143895B		2	BUSH	BAGUE BOCCOLA	BUCHSE CASQUILLO
24	✱ 700140463P		2	PLATE	PLAQUE PIASTRA	PLATTE PLATO
25	✱ 700712882	1/2"–13 X 2–1/4	2	SCREW	VIS VITE	SCHRAUBE TORNILLO
26	700711320	1/2"–13	2	NUT	ECROU DADO	MUTTER TUERCA

Handbrake Frein A Main Handbremse Freno A Mano Freno De Mano	Control Linkage Commande De Freinage Bremsgestaenge Freni E Leverismi Comando Freno Varillaje	60-245

5-1186-001-B

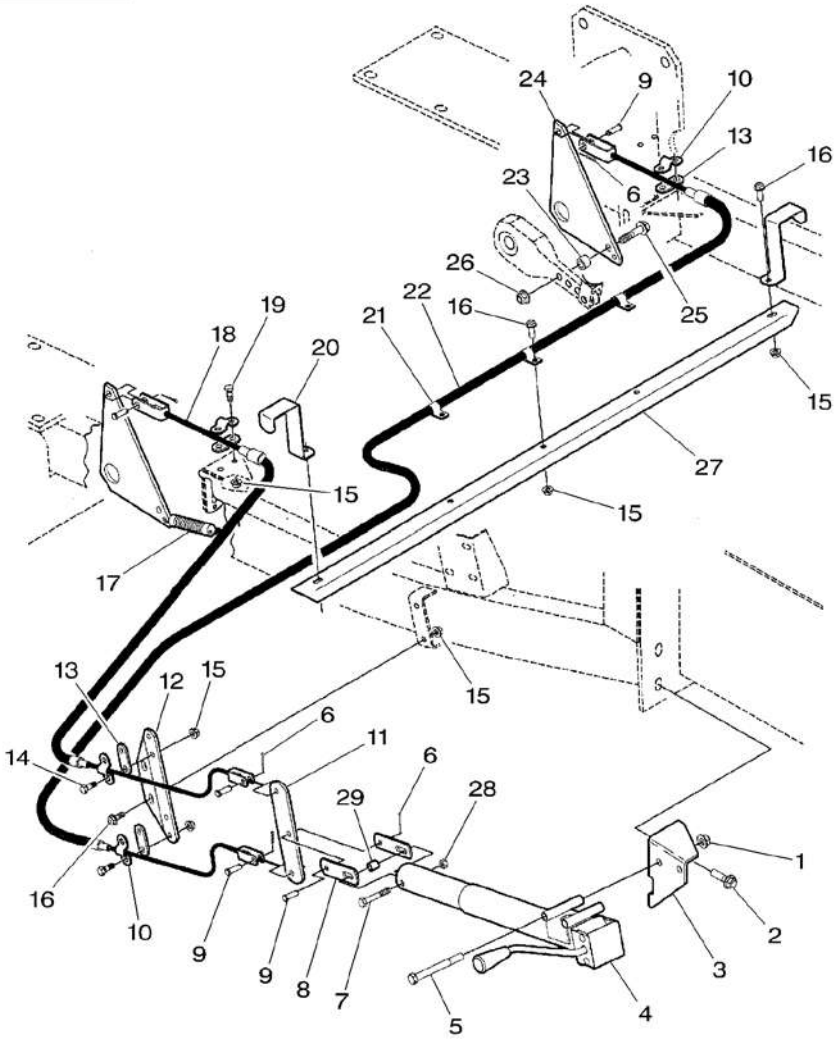

27*	700140446P		1	ANGLE	EQUERRE ANGOLO WINKEL ANGULO
28*	7704141	3/8"–16	1	LOCKNUT	ECROU BLOCAGE AUTOBLOCCANTE FLACHMUTTER CONTRATUERCA
29*	*158758*		1	SPACER	ENTRETOISE DISTANZIALE ABSTANDSTUECK PIEZA DISTANCIA

Handbrake Frein A Main Handbremse Freno A Mano Freno De Mano	Control Linkage Commande De Freinage Bremsgestaenge Freni E Leverismi Comando Freno Varillaje	60-250	With Electronic Control Avec Controle Electronique Mit Elektronische Steuerung Con Controllo Elettronico Con Control Electronico

5-1186-005-A

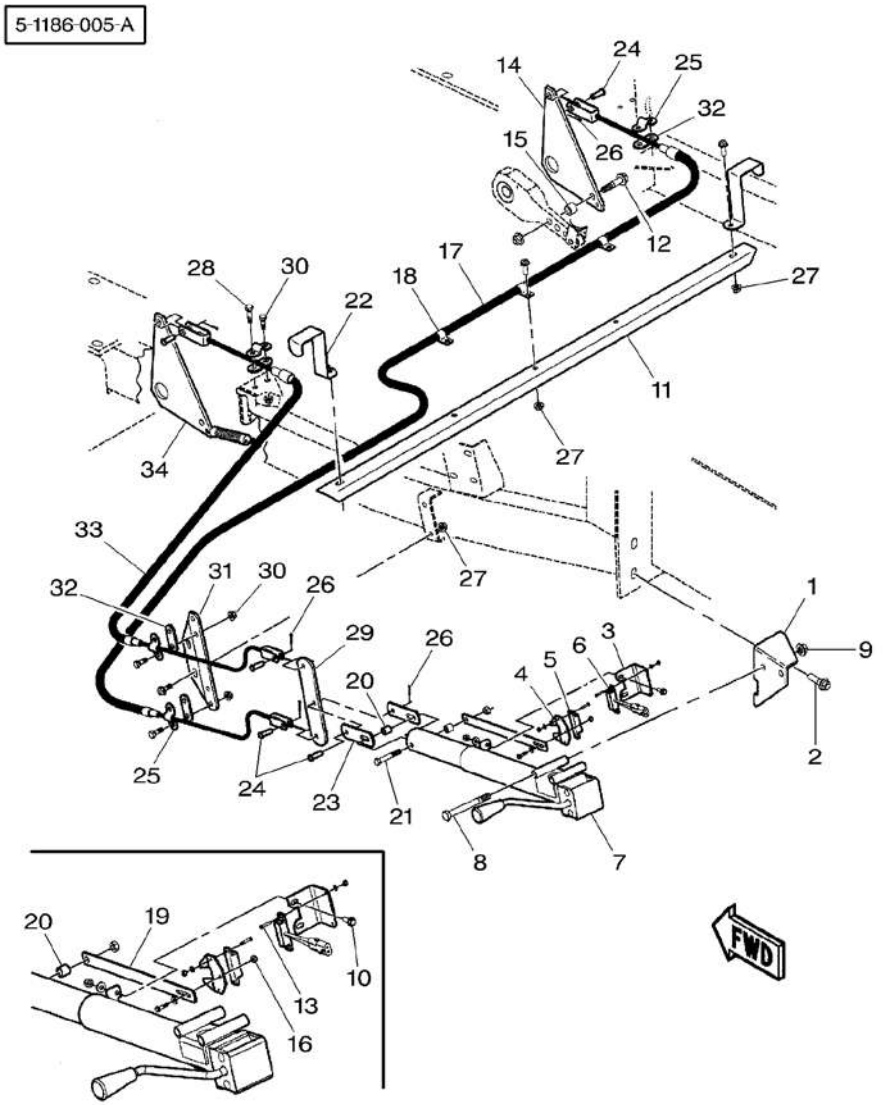

1 ✱ 700161867P		1	ANGLE	EQUERRE ANGOLO	WINKEL ANGULO
2 ✱ 7883432	1/2"–13 X 1–3/4	2	SCREW	VIS VITE	SCHRAUBE TORNILLO
3 ✱ 700161337		1	SHANK	ANGLE FUSO	SCHAFT MANGO
4 ✱ 700161338		1	SHANK	ANGLE FUSO	SCHAFT MANGO
5 ✱ ***700709996***		1	ACTUATOR	DECLENCHEUR AZIONATORE	BETAETIGUNG ACTUADOR
6 ✱ ***700710208***		1	SWITCH	INTERRUPTEUR INTERRUTTORE	SCHALTER INTERRUPTOR
7 ✱ 700721855		1	ACTUATOR	DECLENCHEUR AZIONATORE	BETAETIGUNG ACTUADOR
8 ✱ ***354667X1***	1/2"–13 X 4–1/2	2	BOLT UNC	BOULON UNC BULLONE UNC	MASCH.SCHRB.UNC PERNO UNC
9 ✱ ***Y704742***	1/2"–13	2	TOP LOCKNUT	ECROU FREIN DADO DI TESTA	SELBSTS.MUTTER CONTRATUERCA SUP
10 ✱ 7883275	1/4"–20 X 3/4	2	BOLT	BOULON BULLONE	MASCH.SCHRAUBE PERNO
10 ✱ 353769X1	1/4"	2	WASHER	RONDELLE RONDELLA	UNTERLEGSCHEIBE ARANDELA
10 ✱ Y704395	1/4"–20	2	NUT	ECROU DADO	MUTTER TUERCA
11 ✱ 700140446P		1	ANGLE	EQUERRE ANGOLO	WINKEL ANGULO
12 ✱ 700712882	1/2"–13 X 2–1/4	2	SCREW	VIS VITE	SCHRAUBE TORNILLO
12 ✱ 700711320	1/2"–13	2	NUT	ECROU DADO	MUTTER TUERCA
13 ✱ 700710188	No 6–32 X 3/4	4	SCREW	VIS VITE	SCHRAUBE TORNILLO
13 ✱ 700703830	No 6	4	WASHER	RONDELLE RONDELLA	UNTERLEGSCHEIBE ARANDELA
13 ✱ 700710189	No 6–32	4	NUT	ECROU DADO	MUTTER TUERCA
14 ✱ 700140463P		2	PLATE	PLAQUE PIASTRA	PLATTE PLATO
15 ✱ 6143895B		2	BUSH	BAGUE BOCCOLA	BUCHSE CASQUILLO
16 ✱ 7701782	No 10–24 X 3/4	1	SCREW	VIS VITE	SCHRAUBE TORNILLO
16 ✱ 70917380	No 10	1	WASHER	RONDELLE RONDELLA	UNTERLEGSCHEIBE ARANDELA
16 ✱ 70926673	No 10–24	1	NUT	ECROU DADO	MUTTER TUERCA
17 ✱ 700722908	▶	1	CABLE	CABLE CAVO	KABEL CABLE
18 ✱ 70925619		3	CLAMP	COLLIER FASCETTA	HALTESCHELLE ABRAZADERA
19 ✱ 700161336		1	STRAP	PATTE CORREGGIA	LASCHE FAJA

Handbrake Frein A Main Handbremse Freno A Mano Freno De Mano	Control Linkage Commande De Freinage Bremsgestaenge Freni E Leverismi Comando Freno Varillaje	60-250	With Electronic Control Avec Controle Electronique Mit Elektronische Steuerung Con Controllo Elettronico Con Control Electronico

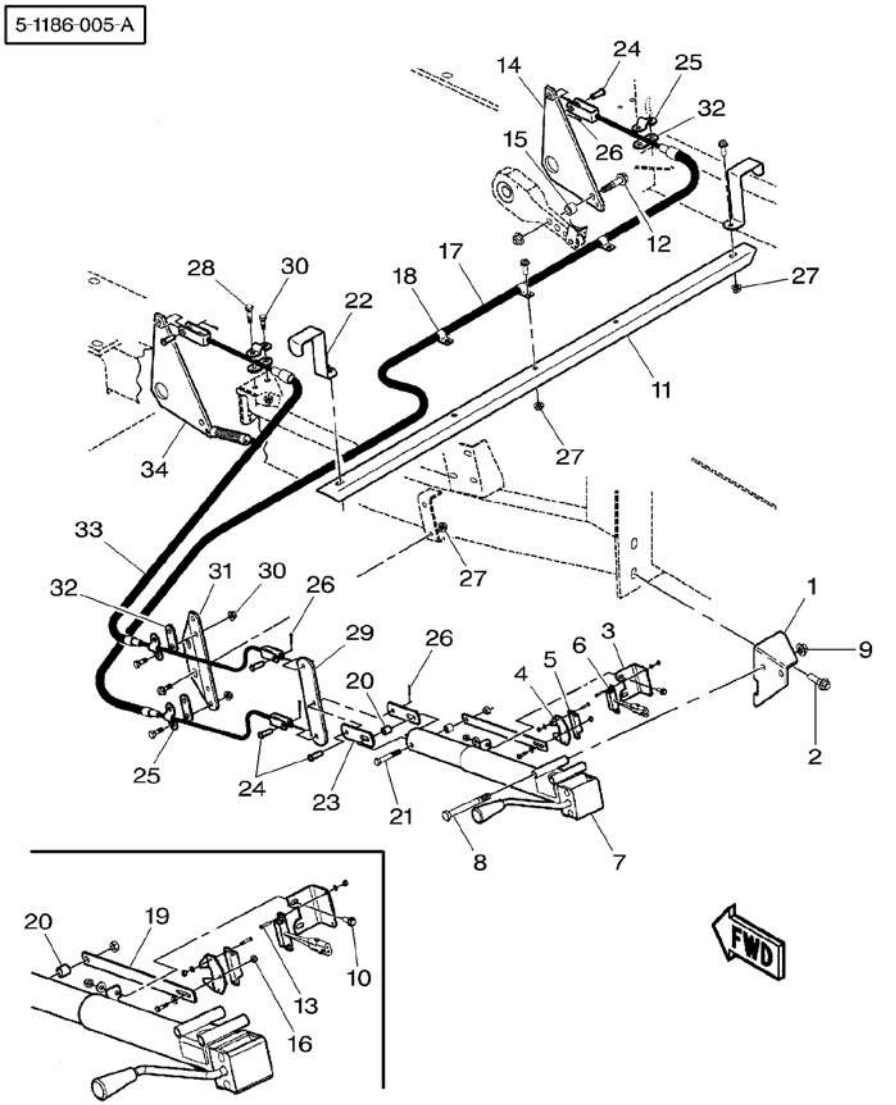

20 * *158758*		2	SPACER	ENTRETOISE DISTANZIALE	ABSTANDSTUECK PIEZA DISTANCIA
21 * 354628X1	3/8"-16 X 3-1/2	1	BOLT UNC	BOULON UNC BULLONE UNC	MASCH.SCHRB.UNC PERNO UNC
21 * 7704141	3/8"-16	1	LOCKNUT	ECROU BLOCAGE AUTOBLOCCANTE	FLACHMUTTER CONTRATUERCA
22 * 700140185P		2	CHANNEL	CANAL PROFILATO	KANAL CANAL
23 * 700140260		2	ACTUATOR	DECLENCHEUR AZIONATORE	BETAETIGUNG ACTUADOR
24 * 63586	3/8" X 1-1/8	5	CLEVIS PIN	AXE PERNO D'ATTACCO	SPLINTBOLZEN BULON CILINDRICO
25 * 700720412		4	CLAMP	COLLIER FASCETTA	HALTESCHELLE ABRAZADERA
26 * 354057X1	1/8" X 3/4	5	PIN	GOUPILLE PERNO	BOLZEN PASADOR
27 * 7883382	3/8"-16 X 1	7	SCREW	VIS VITE	SCHRAUBE TORNILLO
27 * *Y704734*	3/8"-16	7	TOP LOCKNUT	ECROU FREIN DADO DI TESTA	SELBSTS.MUTTER CONTRATUERCA SUP
28 * 353693X1	3/8"-16 X 1-1/4	2	SCREW UNC	VIS UNC VITE UNC	SCHRAUBE UNC TORNILLO UNC
28 * *Y704734*	3/8"-16	2	TOP LOCKNUT	ECROU FREIN DADO DI TESTA	SELBSTS.MUTTER CONTRATUERCA SUP
29 * 700155822		1	ARM	BRAS BRACCIO	ARM BRAZO
30 * 353691X1	3/8"-16 X 1	6	BOLT UNC	BOULON UNC BULLONE UNC	MASCH.SCHRB.UNC PERNO UNC
30 * *Y704734*	3/8"-16	6	TOP LOCKNUT	ECROU FREIN DADO DI TESTA	SELBSTS.MUTTER CONTRATUERCA SUP
31 * 700140166P		1	SUPPORT	SUPPORT SUPPORTO	LAGERUNG DISPOS.DE SOSTEN
32 * 700720413		4	LINK	MAILLON MAGLIA	GLIED UNION
33 * 700722906	◄	1	CABLE	CABLE CAVO	KABEL CABLE
34 * *758441*		2	TENSION SPRING	RESSORT TRACTION MOLLA TENDITRICE	ZUGFEDER RESORTE TENSOR

Brake System
Systeme De Freinage
Brems System
Sistea Di Frenata
Sistema De Frenado

60-255

With Pneumatic Brake
Avec Freinage Pneumatique
Mit Luftdruckbremse
Con Freno Pneumatico
Con Freno Pneumatico

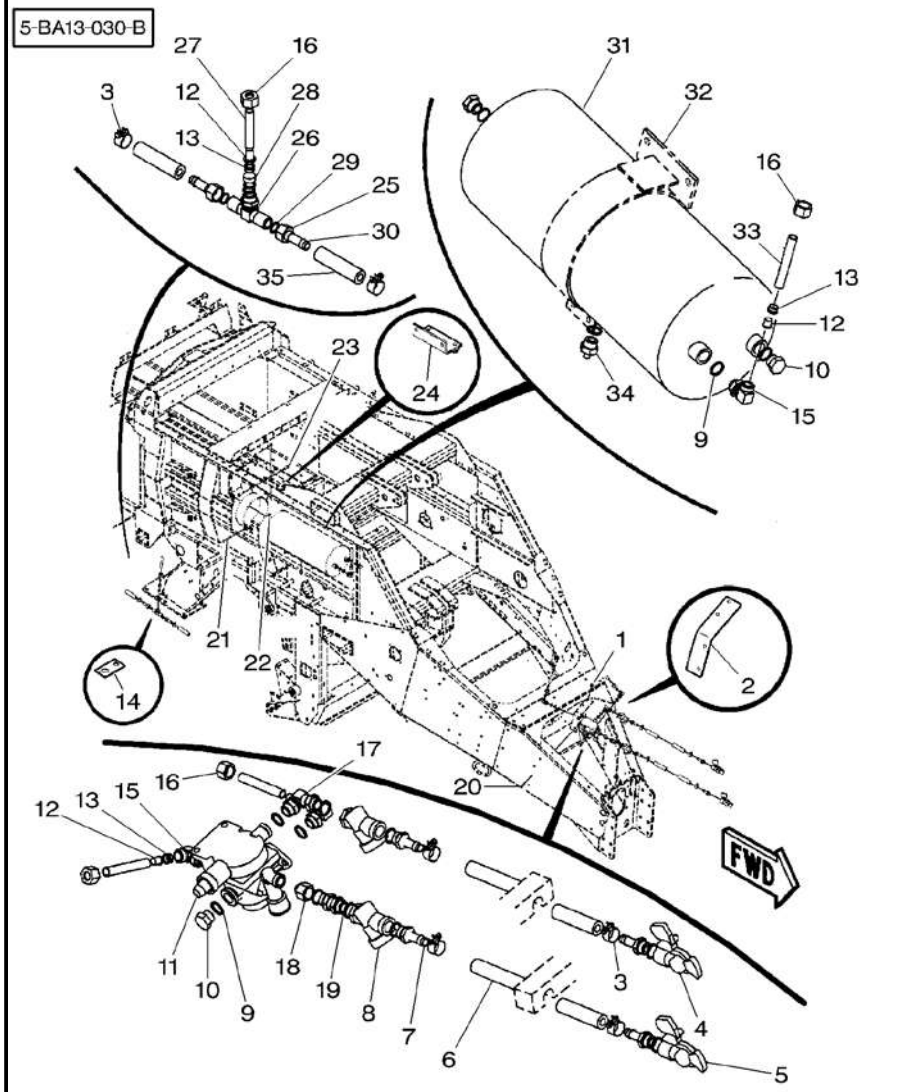

1 *	700711084	3/8"-16 X 1-1/2	2	BOLT BULLONE	BOULON PERNO	MASCH.SCHRAUBE
2 *	700139465P		1	STRAP CORREGGIA	PATTE FASCETTA	LASCHE ABRAZADERA
3 *	700722309		6	CLAMP	COLLIER	HALTESCHELLE
4 *	700722325		1	CONNECTOR MORSETTO	BORNE	DOPPELNIPPEL CONECTOR
5 *	700722326		1	CONNECTOR MORSETTO	BORNE	DOPPELNIPPEL CONECTOR
6 *	700139475		2	HOSE TUBO FLESSIBILE	DURITE	SCHLAUCH FLEXIBLE
7 *	700722313		4	NOZZLE INIETTORE	NEZ INJECTEUR	DUESE TOBERA
8 *	700722320		2	AIR FILTER FILTRO ARIA	FILTRE AIR	LUFTFILTER FILTRO DE AIRE
9 *	700722310		15	O RING ANELLO OR	JOINT TORIQUE	O-RING JUNTA TORICA
10 *	700722305		3	PLUG TAPPO	BOUCHON	VERSCHL.STOPFEN TAPON
11 *	700722324		1	PRESSURE VALVE VALVOLA PRESSION	VALVE	DRUCKVENTIL VALVULA PRESION
12 *	700722315		3	INSERT INSERTO	DOUILLE	EINSATZSTUECK INSERCION
13 *	700722311		3	FERRULE GHIERA	VIROLE	ZWINGE MANGTO METALICO
14 *	700139466P		1	STRIP STRISCIA	RUBAN	STREIFEN TIRA
15 *	700722295		3	ELBOW GOMITO	COUDE	WINKELSTUECK CODO
16 *	700722312		4	NUT DADO	ECROU	MUTTER TUERCA
17 *	700722297		1	ELBOW GOMITO	COUDE	WINKELSTUECK CODO
18 *	700722302		1	REDUCER RIDUTTORE	REDUCTEUR	REDUZIERSTUECK REDUCTOR
19 *	700722299		1	CONNECTOR MORSETTO	BORNE	DOPPELNIPPEL CONECTOR
20 *	7883408	3/8"-16 X 1-1/4	2	SCREW VITE	VIS	SCHRAUBE TORNILLO
21 *	353898X1	3/8"-16 X 3-1/4	2	BOLT UNC BULLONE UNC	BOULON UNC	MASCH.SCHRB.UNC PERNO UNC
22 *	***704247***	3/8"-16	2	LOCKNUT AUTOBLOCCANTE	ECROU BLOCAGE	FLACHMUTTER CONTRATUERCA
23 *	354276X1	1/2"-13 X 1-1/4	4	BOLT UNC BULLONE UNC	BOULON UNC	MASCH.SCHRB.UNC PERNO UNC
24 *	700139472P		1	PLATE PIASTRA	PLAQUE	PLATTE PLATO
25 *	700722307		2	NUT DADO	ECROU	MUTTER TUERCA
26 *	700722303		1	TEEPIECE RACCORDO A T	TE	T-STUECK PIEZA EN T

Brake System
Systeme De Freinage
Brems System
Sistea Di Frenata
Sistema De Frenado

60-255

With Pneumatic Brake
Avec Freinage Pneumatique
Mit Luftdruckbremse
Con Freno Pneumatico
Con Freno Pneumatico

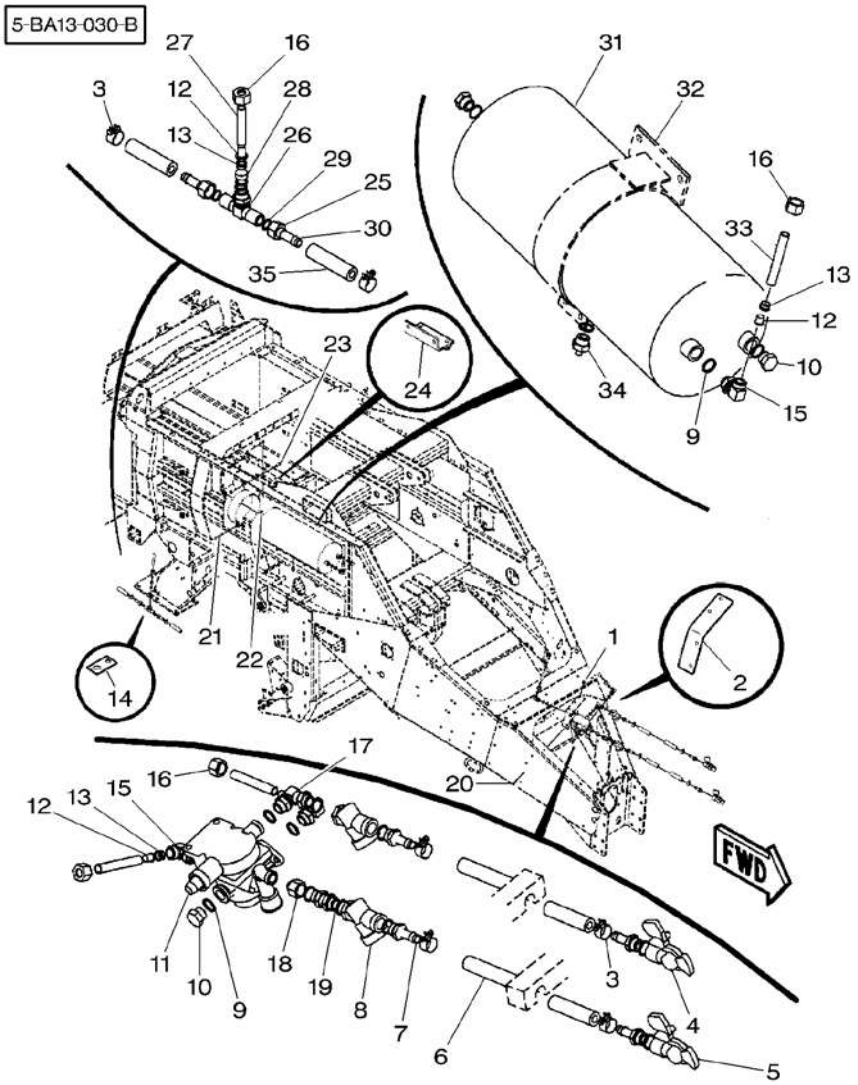

27*	700139478	1	TUBE	TUBE TUBO	ROHR TUBO
28*	700722300	1	RING	ANNEAU ANELLO	RING ARO
29*	700722317	4	WASHER	RONDELLE RONDELLA	UNTERLEGSCHEIBE ARANDELA
30*	700722304	2	NOZZLE	NEZ INJECTEUR INIETTORE	DUESE TOBERA
31*	700722327	1	TANK	RESERVOIR SERBATOIO	TANK TANQUE
32*	700139467P	1	BRACKET	SUPPORT FIXATION SUPPORTO FISSAGG	HALTEARM SOPORTE
33*	700139476	1	TUBE	TUBE TUBO	ROHR TUBO
34*	700722316	1	PRESSURE VALVE	VALVE VALVOLA PRESSION	DRUCKVENTIL VALVULA PRESION
35*	700139474	2	HOSE	DURITE TUBO FLESSIBILE	SCHLAUCH FLEXIBLE

Brake System Systeme De Freinage Brems System Sistea Di Frenata Sistema De Frenado	60-260	With Pneumatic Brake Avec Freinage Pneumatique Mit Luftdruckbremse Con Freno Pneumatico Con Freno Pneumatico

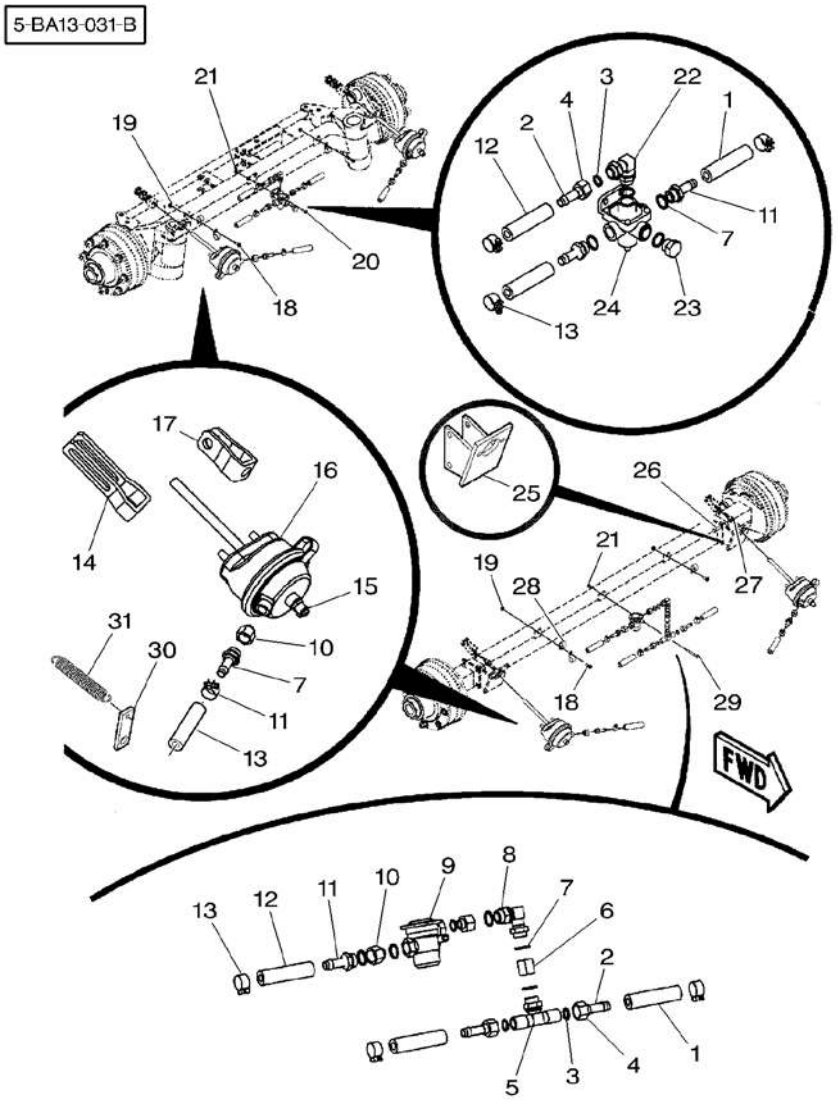

1 * 700139473		5	HOSE	DURITE TUBO FLESSIBILE	SCHLAUCH FLEXIBLE
2 * 700722304		3	NOZZLE	NEZ INJECTEUR INIETTORE	DUESE TOBERA
3 * 700722317		3	WASHER	RONDELLE RONDELLA	UNTERLEGSCHEIBE ARANDELA
4 * 700722307		3	NUT	ECROU DADO	MUTTER TUERCA
5 * 700722303		1	TEEPIECE	TE RACCORDO A T	T-STUECK PIEZA EN T
6 * 700722301		1	CONNECTOR	BORNE MORSETTO	DOPPELNIPPEL CONECTOR
7 * 700722310		12	O RING	JOINT TORIQUE ANELLO OR	O-RING JUNTA TORICA
8 * 700722296		1	ELBOW	COUDE GOMITO	WINKELSTUECK CODO
9 * 700722319		1	PRESSURE VALVE	VALVE VALVOLA PRESSION	DRUCKVENTIL VALVULA PRESION
10 * 700722302		6	REDUCER	REDUCTEUR RIDUTTORE	REDUZIERSTUECK REDUCTOR
11 * 700722313		7	NOZZLE	NEZ INJECTEUR INIETTORE	DUESE TOBERA
12 * 700139474		2	HOSE	DURITE TUBO FLESSIBILE	SCHLAUCH FLEXIBLE
13 * 700722309		10	CLAMP	COLLIER FASCETTA	HALTESCHELLE ABRAZADERA
14 * 700722323		2	YOKE	CHAPE ARTICULAT FORCELLA	GELENKGABEL YUGO
15 * 700722308		2	COUPLING	CRABOT ACCOPPIAMENTO	KUPPLUNG ACOPLAMIENTO
16 * 700722318		4	CHAMBER	CHAMBRE CAMERA	KAMMER CAMARA
17 * 700722321		2	YOKE	CHAPE ARTICULAT FORCELLA	GELENKGABEL YUGO
18 * 7883382	3/8"-16 X 1	4	SCREW	VIS VITE	SCHRAUBE TORNILLO
19 * *Y704734*	3/8"-16	4	TOP LOCKNUT	ECROU FREIN DADO DI TESTA	SELBSTS.MUTTER CONTRATUERCA SUP
20 * 7883333	5/16"-18 X 1	2	SCREW	VIS VITE	SCHRAUBE TORNILLO
21 * Y704726	5/16"-18	3	TOP LOCKNUT	ECROU FREIN DADO DI TESTA	SELBSTS.MUTTER CONTRATUERCA SUP
22 * 700722297		1	ELBOW	COUDE GOMITO	WINKELSTUECK CODO
23 * 700722305		1	PLUG	BOUCHON TAPPO	VERSCHL.STOPFEN TAPON
24 * 700722328		1	PRESSURE VALVE	VALVE VALVOLA PRESSION	DRUCKVENTIL VALVULA PRESION
25 * 700139479P		2	PLATE	PLAQUE PIASTRA	PLATTE PLATO
26 * 353724X1	1/2"-13 X 1-1/2	8	BOLT UNC	BOULON UNC BULLONE UNC	MASCH.SCHRB.UNC PERNO UNC

Brake System Systeme De Freinage Brems System Sistea Di Frenata Sistema De Frenado	60-260	With Pneumatic Brake Avec Freinage Pneumatique Mit Luftdruckbremse Con Freno Pneumatico Con Freno Pneumatico

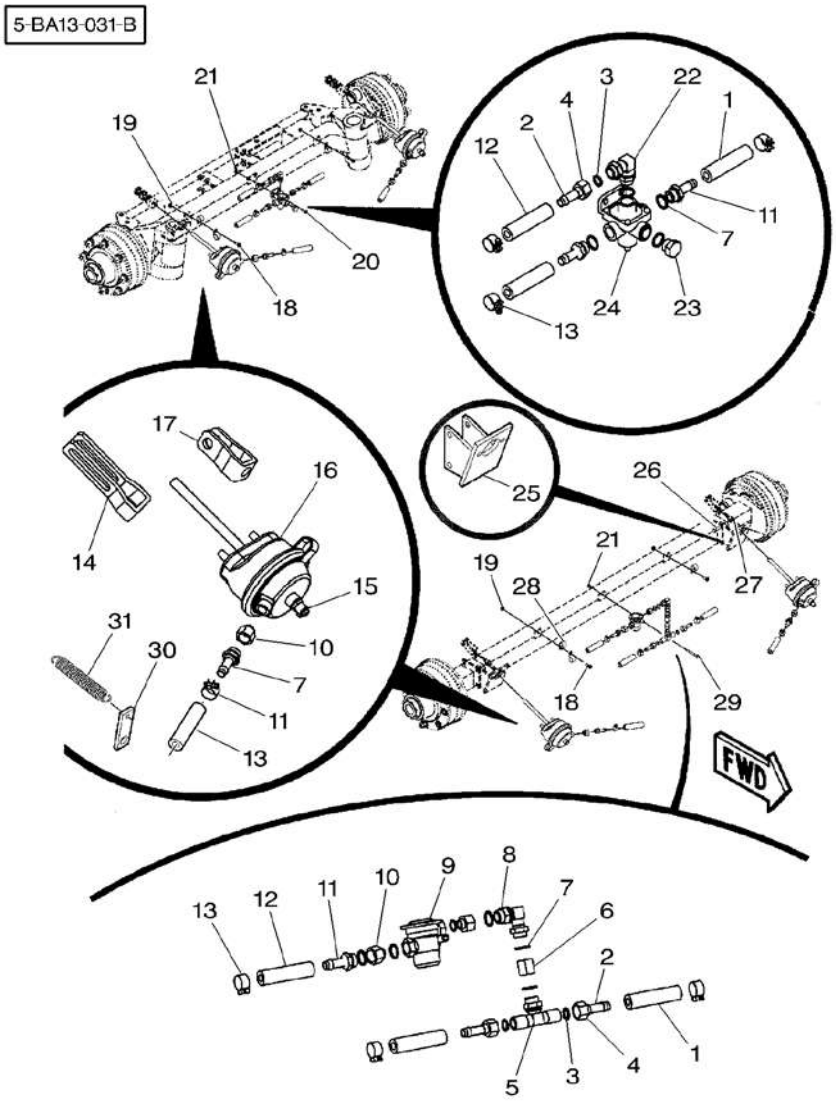

27*	*Y704742*	1/2"–13	**8** TOP LOCKNUT	ECROU FREIN DADO DI TESTA	SELBSTS.MUTTER CONTRATUERCA SUP
28*	70929160		**6** CLAMP	COLLIER FASCETTA	HALTESCHELLE ABRAZADERA
29*	70925689	5/16"–18 X 3	**1** CAPSCREW	VIS BOUCHON TAPPO A VITE	HUTSCHRAUBE TORNILLO TAPON
30*	700137040P		**4** BRACKET	SUPPORT FIXATION SUPPORTO FISSAGG	HALTEARM SOPORTE
31*	700722928		**4** SPRING	RESSORT MOLLA	FEDER MUELLE

Handbrake	**Control Linkage**	**60-265**	**Tandem**
Frein A Main	**Commande De Freinage**		**Tandem**
Handbremse	**Bremsgestaenge**		**Tandem**
Freno A Mano	**Freni E Leverismi**		**Tandem**
Freno De Mano	**Comando Freno Varillaje**		**Tandem**

5-1186-002-B

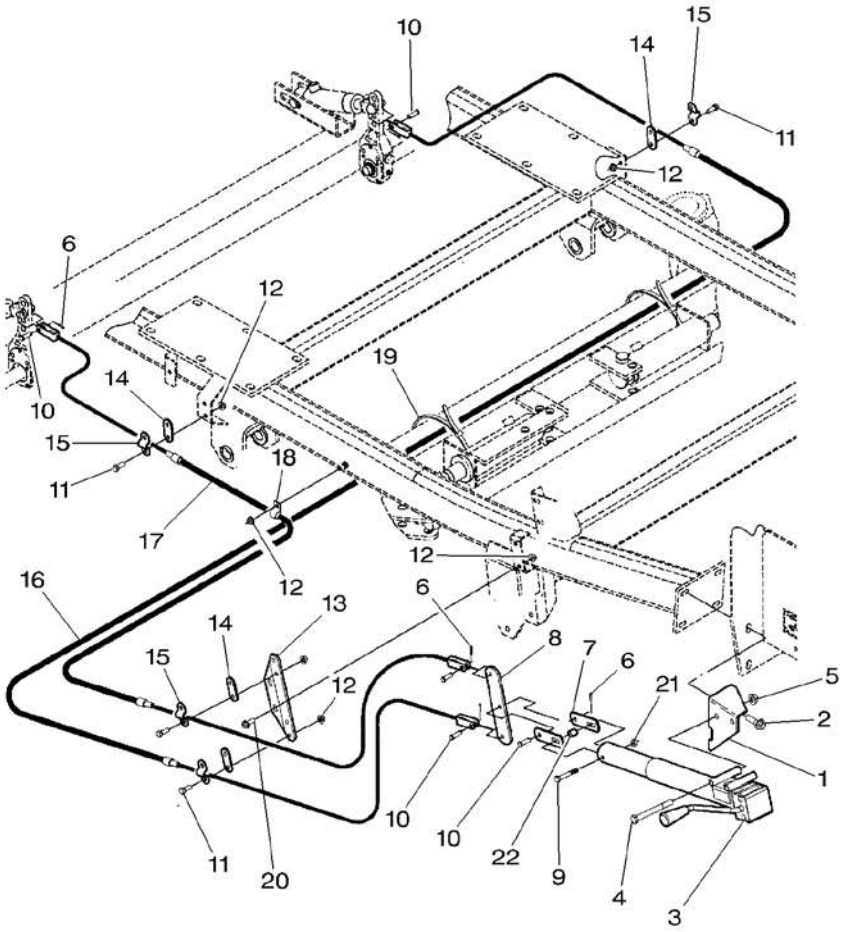

1 ✱	700161867P		1	ANGLE	EQUERRE ANGOLO WINKEL ANGULO
2 ✱	7883432	1/2"-13 X 1-3/4	2	SCREW	VIS VITE SCHRAUBE TORNILLO
3 ✱	700721855	👁 60-275 No 1	1	ACTUATOR	DECLENCHEUR AZIONATORE BETAETIGUNG ACTUADOR
4 ✱	***354667X1***	1/2"-13 X 4-1/2	2	BOLT UNC	BOULON UNC BULLONE UNC MASCH.SCHRB.UNC PERNO UNC
5 ✱	***Y704742***	1/2"-13	2	TOP LOCKNUT	ECROU FREIN DADO DI TESTA SELBSTS.MUTTER CONTRATUERCA SUP
6 ✱	354057X1	1/8" X 3/4	5	PIN	GOUPILLE PERNO BOLZEN PASADOR
7	700140260		2	ACTUATOR	DECLENCHEUR AZIONATORE BETAETIGUNG ACTUADOR
8	700155822		1	ARM	BRAS BRACCIO ARM BRAZO
9 ✱	***354269X1***	3/8"-16 X 2-1/2	1	BOLT UNC	BOULON UNC BULLONE UNC MASCH.SCHRB.UNC PERNO UNC
10 ✱	63586	3/8" X 1-1/8	5	CLEVIS PIN	AXE PERNO D'ATTACCO SPLINTBOLZEN BULON CILINDRICO
11 ✱	353691X1	3/8"-16 X 1	8	BOLT UNC	BOULON UNC BULLONE UNC MASCH.SCHRB.UNC PERNO UNC
12	***Y704734***	3/8"-16	11	TOP LOCKNUT	ECROU FREIN DADO DI TESTA SELBSTS.MUTTER CONTRATUERCA SUP
13 ✱	700140166P		1	SUPPORT	SUPPORT SUPPORTO LAGERUNG DISPOS.DE SOSTEN
14	700720413		4	LINK	MAILLON MAGLIA GLIED UNION
15	700720412		4	CLAMP	COLLIER FASCETTA HALTESCHELLE ABRAZADERA
16 ✱	700722909	▶	1	CABLE	CABLE CAVO KABEL CABLE
17 ✱	700722910	◀	1	CABLE	CABLE CAVO KABEL CABLE
18	70925619	5/8"	1	CLAMP	COLLIER FASCETTA HALTESCHELLE ABRAZADERA
19 ✱	70937133		2	TIE	ATTACHE TRAVERSA ATTACCO KUPPL.STANGE BARRA DE ENLACE
20	7883382	3/8"-16 X 1	2	SCREW	VIS VITE SCHRAUBE TORNILLO
21 ✱	7704141	3/8"-16	1	LOCKNUT	ECROU BLOCAGE AUTOBLOCCANTE FLACHMUTTER CONTRATUERCA
22 ✱	***158758***		1	SPACER	ENTRETOISE DISTANZIALE ABSTANDSTUECK PIEZA DISTANCIA

Handbrake	Control Linkage	60-270	Tandem – With Electronic Control
Frein A Main	Commande De Freinage		Tandem – Avec Controle Electronique
Handbremse	Bremsgestaenge		Tandem – Mit Elektronische Steuerung
Freno A Mano	Freni E Leverismi		Tandem – Con Controllo Elettronico
Freno De Mano	Comando Freno Varillaje		Tandem – Con Control Electronico

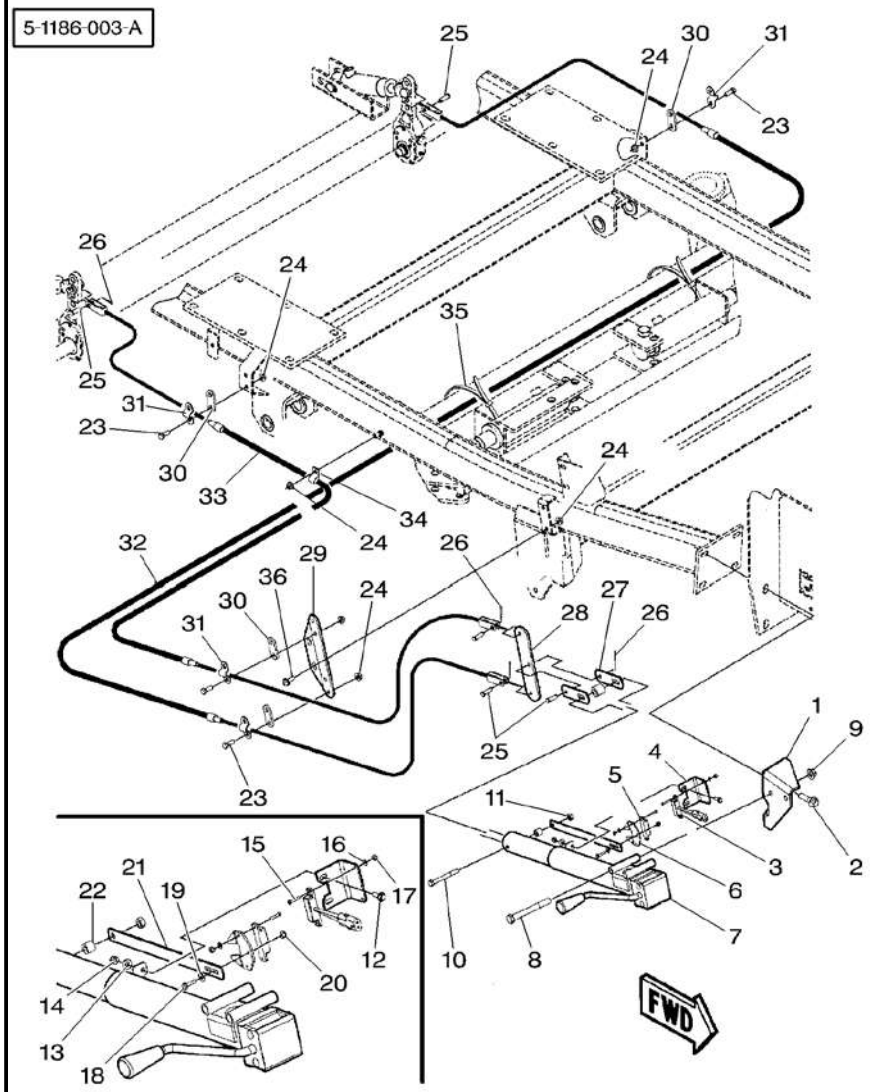

1 *	700161867P		1 ANGLE	EQUERRE	WINKEL
				ANGOLO	ANGULO
2 *	8701534	1/2"–13 X 2	2 BOLT	BOULON	MASCH.SCHRAUBE
				BULLONE	PERNO
3 *	***700710208***		1 SWITCH	INTERRUPTEUR	SCHALTER
				INTERRUTTORE	INTERRUPTOR
4 *	700161337		1 SHANK	ANGLE	SCHAFT
				FUSO	MANGO
5 *	***700709996***		1 ACTUATOR	DECLENCHEUR	BETAETIGUNG
				AZIONATORE	ACTUADOR
6 *	700161338		1 SHANK	ANGLE	SCHAFT
				FUSO	MANGO
7 *	700721855		1 ACTUATOR	DECLENCHEUR	BETAETIGUNG
				AZIONATORE	ACTUADOR
8 *	***354667X1***	1/2"–13 X 4–1/2	2 BOLT UNC	BOULON UNC	MASCH.SCHRB.UNC
				BULLONE UNC	PERNO UNC
9 *	***Y704742***	1/2"–13	2 TOP LOCKNUT	ECROU FREIN	SELBSTS.MUTTER
				DADO DI TESTA	CONTRATUERCA SUP
10 *	353898X1	3/8"–16 X 3–1/4	1 BOLT UNC	BOULON UNC	MASCH.SCHRB.UNC
				BULLONE UNC	PERNO UNC
11 *	7704141	3/8"–16	1 LOCKNUT	ECROU BLOCAGE	FLACHMUTTER
				AUTOBLOCCANTE	CONTRATUERCA
12 *	7883275	1/4"–20 X 3/4	2 BOLT	BOULON	MASCH.SCHRAUBE
				BULLONE	PERNO
13 *	353769X1	1/4"	2 WASHER	RONDELLE	UNTERLEGSCHEIBE
				RONDELLA	ARANDELA
14 *	Y704395	1/4"–20	2 NUT	ECROU	MUTTER
				DADO	TUERCA
15 *	700710188	No 6–32 X 3/4	4 SCREW	VIS	SCHRAUBE
				VITE	TORNILLO
16 *	700703830	No 6	4 WASHER	RONDELLE	UNTERLEGSCHEIBE
				RONDELLA	ARANDELA
17 *	700710189	No 6–32	4 NUT	ECROU	MUTTER
				DADO	TUERCA
18 *	7701782	No 10–24 X 3/4	1 SCREW	VIS	SCHRAUBE
				VITE	TORNILLO
19 *	70917380	No 10	1 WASHER	RONDELLE	UNTERLEGSCHEIBE
				RONDELLA	ARANDELA
20 *	70926673	No 10–24	1 NUT	ECROU	MUTTER
				DADO	TUERCA
21 *	700161336		1 STRAP	PATTE	LASCHE
				CORREGGIA	FAJA
22 *	***158758***		2 SPACER	ENTRETOISE	ABSTANDSTUECK
				DISTANZIALE	PIEZA DISTANCIA
23 *	353691X1	3/8"–16 X 1	8 BOLT UNC	BOULON UNC	MASCH.SCHRB.UNC
				BULLONE UNC	PERNO UNC
24 *	***Y704734***	3/8"–16	11 TOP LOCKNUT	ECROU FREIN	SELBSTS.MUTTER
				DADO DI TESTA	CONTRATUERCA SUP
25 *	63586	3/8" X 1–1/8	5 CLEVIS PIN	AXE	SPLINTBOLZEN
				PERNO D'ATTACCO	BULON CILINDRICO
26 *	354057X1	1/8" X 3/4	5 PIN	GOUPILLE	BOLZEN
				PERNO	PASADOR

Handbrake	Control Linkage	60-270	Tandem – With Electronic Control
Frein A Main	Commande De Freinage		Tandem – Avec Controle Electronique
Handbremse	Bremsgestaenge		Tandem – Mit Elektronische Steuerung
Freno A Mano	Freni E Leverismi		Tandem – Con Controllo Elettronico
Freno De Mano	Comando Freno Varillaje		Tandem – Con Control Electronico

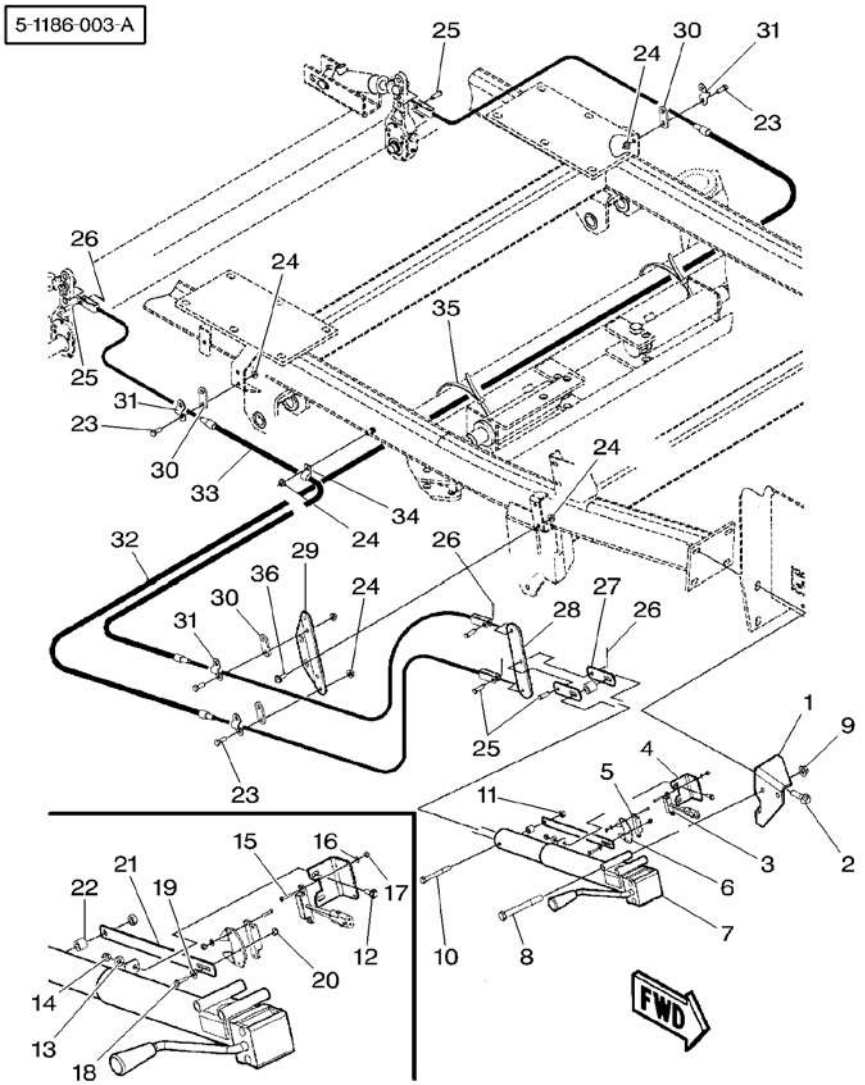

27*	700140260		2 ACTUATOR	DECLENCHEUR	BETAETIGUNG
				AZIONATORE	ACTUADOR
28*	700155822		1 ARM	BRAS	ARM
				BRACCIO	BRAZO
29*	700140166P		1 SUPPORT	SUPPORT	LAGERUNG
				SUPPORTO	DISPOS.DE SOSTEN
30*	700720413		4 LINK	MAILLON	GLIED
				MAGLIA	UNION
31*	700720412		4 CLAMP	COLLIER	HALTESCHELLE
				FASCETTA	ABRAZADERA
32*	700722909	▶	1 CABLE	CABLE	KABEL
				CAVO	CABLE
33*	700722910	◀	1 CABLE	CABLE	KABEL
				CAVO	CABLE
34*	70925619	5/8"	1 CLAMP	COLLIER	HALTESCHELLE
				FASCETTA	ABRAZADERA
35*	70937133		3 TIE	ATTACHE	KUPPL.STANGE
				TRAVERSA ATTACCO	BARRA DE ENLACE
36*	7883382	3/8"–16 X 1	2 SCREW	VIS	SCHRAUBE
				VITE	TORNILLO

Brake System
Systeme De Freinage
Brems System
Sistea Di Frenata
Sistema De Frenado

60-275

5-BA13-016-B

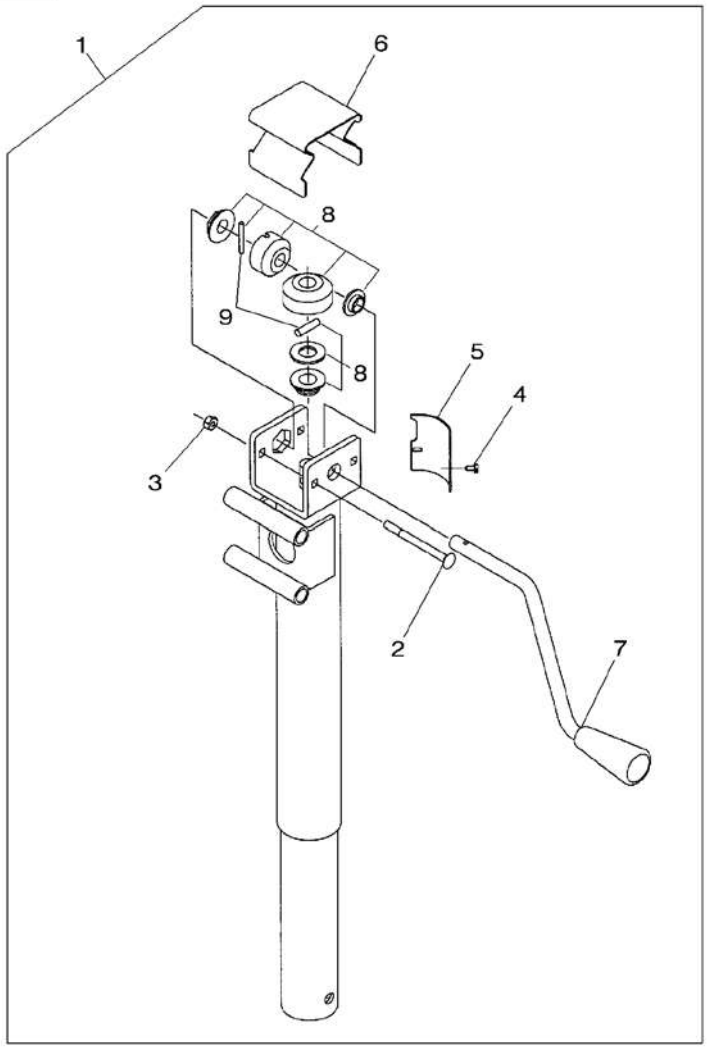

1*	700721855		1	ACTUATOR	DECLENCHEUR AZIONATORE	BETAETIGUNG ACTUADOR
2	700720494	1 1/4"–20 X 3–1/8	2	SCREW	VIS VITE	SCHRAUBE TORNILLO
3	Y704783	1 1/4"–20	2	NUT	ECROU DADO	MUTTER TUERCA
4*	700718428	1	1	SCREW	VIS VITE	SCHRAUBE TORNILLO
5	700720495	1	1	COVER	COUVERCLE COPERCHIO	DECKEL CUBIERTA
6	700720492	1	1	COVER	COUVERCLE COPERCHIO	DECKEL CUBIERTA
7	700720493	1	1	CRANK	MANIVELLE MANOVELLA	KURBEL MANIVELA
8	700720491	1	1	KIT, GEAR	JEU ENGRENAGES KIT INGRANAGGI	ZAHNRADSATZ ENGRANAJES JUEGO
9	700720489	1	1	KIT, PIN	KIT GOUPILLES KIT PERNO	BOLZENSATZ JUEGO PASADOR

Brake System
Systeme De Freinage
Brems System
Sistea Di Frenata
Sistema De Frenado

60-280 ➡ ...

5-BA13-010-A

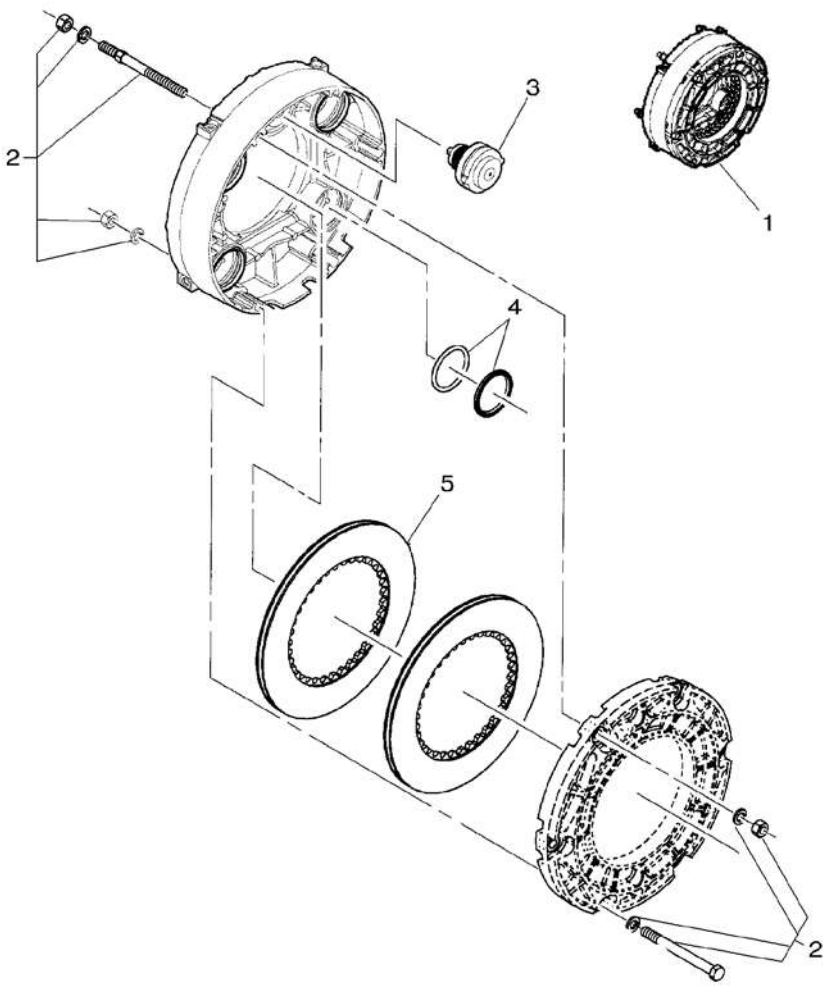

1	700720133		**1**	BRAKE	FREIN FRENO	BREMSE FRENO
2	700720054	1	**1**	KIT, HARDWARE	JEUQUINCAILLERIE KIT BULLONERIA	NORMTEILESATZ BULONERIA JUEGO
3	700720158	1	**1**	CAM	CAME CAMMA	NOCKEN LEVA
4	700720157	1	**1**	KIT, SEAL	JEU ETANCHEITE KIT TENUTA	DICHTRINGSATZ RETENES JUEGO
5	700720063	1	**2**	KIT, BRAKE	JEU FREIN KIT FRENO	BREMSENSATZ FRENOS JUEGO

Drum Brake
Frein Tambour
Trommelbremse
Freno A Tamburo
Tambor De Freno

60-285

Up To H.K 74299 – Germany Up To H.K 74208
Jusqu'Au H.K 74299 – Allemagne Jusqu'Au H.K 74208
Bis H.K 74299 – Deutschland Bis H.K 74208
Fino Alla H.K 74299 – Alemania Fino Alla H.K 74208
Hasta H.K 74299 – Alemania Hasta H.K 74208

5-2825-002-A

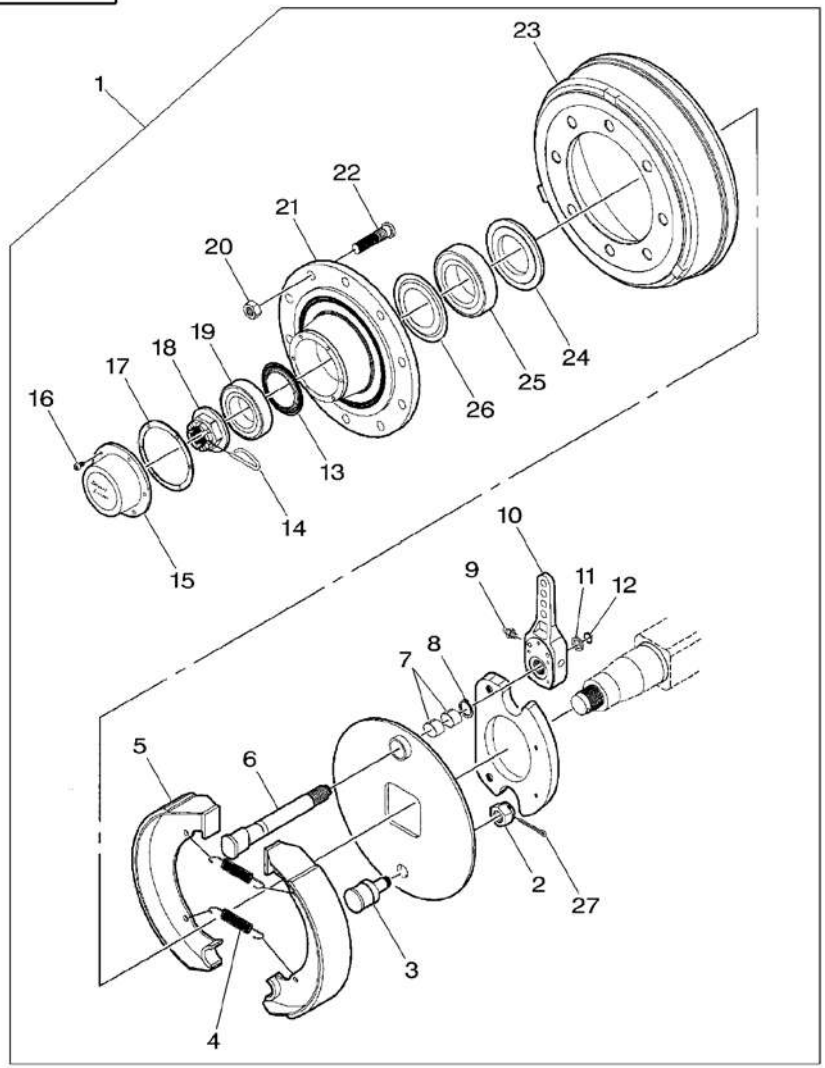

1 * 700721426		◀	1	BRAKE	FREIN FRENO	BREMSE FRENO
1 * 700721425		▶	1	BRAKE	FREIN FRENO	BREMSE FRENO
2 * 700728149	1		1	NUT	ECROU DADO	MUTTER TUERCA
3 * 700721427	1		1	PIVOT	PIVOT CARDINE	DREHZAPFEN PIVOTE
4 * 700728132	1		2	SPRING	RESSORT MOLLA	FEDER MUELLE
5 * 3904692M91	1		2	KIT, SHOE	JEU SABOTS KIT SUOLE	BODENPLATTENSATZ JUEGO ZAPATAS
6 * 700721428	1		1	SHAFT	ARBRE ALBERO	WELLE ARBOL
7 * 700728144	1		2	BUSH	BAGUE BOCCOLA	BUCHSE CASQUILLO
8 * 700720148	1		1	UNIVERSAL JOINT	CARDAN GIUNTO UNIVERSAL	KARDANGELENK CRUCETA CARDAN
9 * 77552	1		1	GREASER	GRAISSEUR INGRASSATORE	FETTNIPPEL ENGRASADOR
10 * 700720555	1	◀	1	LEVER	LEVIER LEVA	HEBEL PALANCA
10 * 700720554	1	▶	1	LEVER	LEVIER LEVA	HEBEL PALANCA
11 * 3901370M1	1		1	WASHER	RONDELLE RONDELLA	UNTERLEGSCHEIBE ARANDELA
12 * 3901359M1	1		1	CIRCLIP	CIRCLIP ANNELLO ELASTICO	SEEGERING GRAPA CIRCULAR
13 * 3904704M91	1		1	KIT, SEAL	JEU ETANCHEITE KIT TENUTA	DICHTRINGSATZ RETENES JUEGO
14 * 700728141	1		1	CLIP	CLIP FERMAGLIO	SCHELLE CRAPA RETEN
15 * 3904577M1	1		1	CAP	CHAPEAU CAPPELLO	KAPPE TAPA
16 * 700720826	1		6	SCREW	VIS VITE	SCHRAUBE TORNILLO
17 * 700720928	1		1	GASKET	JOINT GUARNIZIONE	DICHTSCHEIBE EMPAQUETADURA.
18 * 700728140	1		1	NUT	ECROU DADO	MUTTER TUERCA
19 * 700720457	1		1	BEARING	COUSSINET CUSCINETTO	LAGER COJINETE
20 * 700715684	1		1	NUT	ECROU DADO	MUTTER TUERCA
21 * 3904573M1	1		1	HUB	MOYEU MOZZO	NABE CUBO
22 * ***700728135***	1		10	BOLT	BOULON BULLONE	MASCH.SCHRAUBE PERNO
23 * 3904567M1	1		1	BRAKE DRUM	TAMBOUR DE FREIN TAMBURO FRENO	BREMSTROMMEL TAMBOR DE FRENO
24 * 3904704M91	1		1	KIT, SEAL	JEU ETANCHEITE KIT TENUTA	DICHTRINGSATZ RETENES JUEGO

Drum Brake
Frein Tambour
Trommelbremse
Freno A Tamburo
Tambor De Freno

60-285

Up To H.K 74299 – Germany Up To H.K 74208
Jusqu'Au H.K 74299 – Allemagne Jusqu'Au H.K 74208
Bis H.K 74299 – Deutschland Bis H.K 74208
Fino Alla H.K 74299 – Alemania Fino Alla H.K 74208
Hasta H.K 74299 – Alemania Hasta H.K 74208

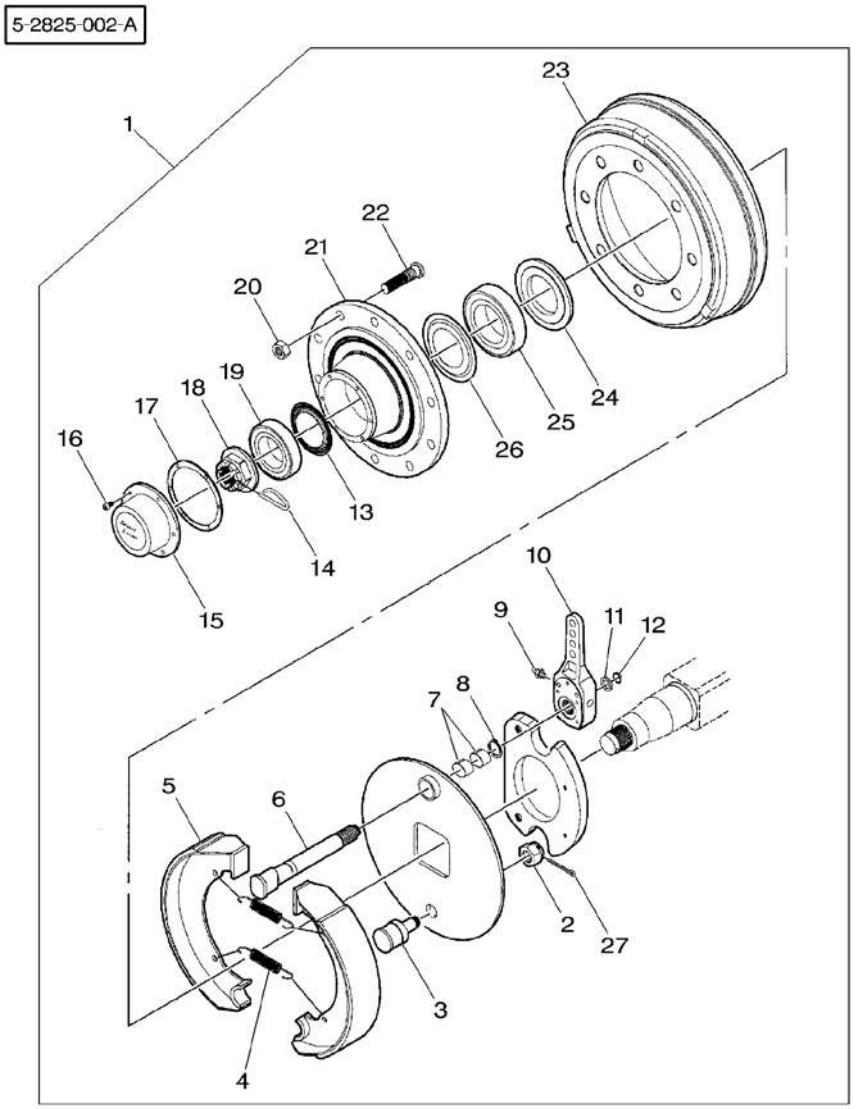

25*	700720531	1		1	BEARING ASSY	ROULEMENT CUSCINETTO COMPL RADIALLAGER RODAMIENTO RAD
26*	700720925	1		1	RING	ANNEAU ANELLO RING ARO
27*	70918454	1	1/8" X 1-1/2	1	PIN	GOUPILLE PERNO BOLZEN PASADOR

Drum Brake
Frein Tambour
Trommelbremse
Freno A Tamburo
Tambor De Freno

60-290

From H.K 74300 – Germany From H.K 74209
A Partir Du H.K 74300 – Allemagne A Partir Du H.K 74209
Ab H.K 74300 – Deutschland Ab H.K 74209
Dalla H.K 74300 – Alemania Dalla H.K 74209
Despues H.K 74300 – Alemania Despues H.K 74209

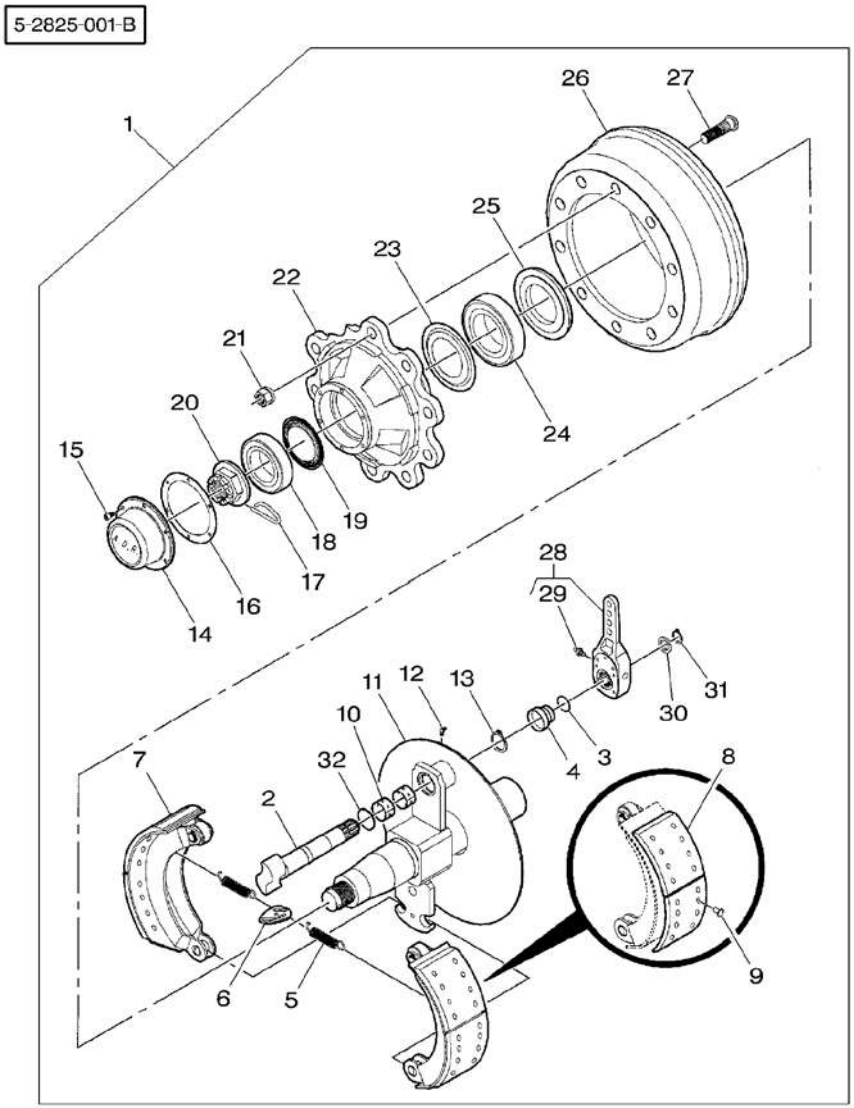

1 ✱700140468		◀	1	BRAKE	FREIN FRENO	BREMSE FRENO
1 ✱700140469		▶	1	BRAKE	FREIN FRENO	BREMSE FRENO
2 ✱700720929	1	◀	1	SHAFT	ARBRE ALBERO	WELLE ARBOL
2 ✱700720930	1	▶	1	SHAFT	ARBRE ALBERO	WELLE ARBOL
3 ✱700720538	1		1	RING	ANNEAU ANELLO	RING ARO
4 ✱700720451	1		1	GROMMET	PASSE FIL GOMMINO	GUMMITUELLE PASACABLE
5 ✱700720923	1		2	SPRING	RESSORT MOLLA	FEDER MUELLE
6 ✱700720927	1		1	TENSIONER	TENDEUR TENDITORE	SPANNER TENSOR
7 ✱3904705M91	1		2	KIT, SHOE	JEU SABOTS KIT SUOLE	BODENPLATTENSATZ JUEGO ZAPATAS
8 ✱700720921	7		1	BRAKE LINING	GARNITURE FREIN FERODO FRENO	BREMSBELAG FORRO DE FRENO
9 ✱700720440	7		8	RIVET	RIVET RIVETTO	NIET REMACHE
10 ✱700720438	1		2	BUSH	BAGUE BOCCOLA	BUCHSE CASQUILLO
11 ✱700140497P	1	◀	1	SPINDLE	FUSEE FUSELLO	SPINDEL MANGUETA
11 ✱700140498P	1	▶	1	SPINDLE	FUSEE FUSELLO	SPINDEL MANGUETA
12 ✱700720827	1		1	GREASER	GRAISSEUR INGRASSATORE	FETTNIPPEL ENGRASADOR
13 ✱700720436	1		1	RING	ANNEAU ANELLO	RING ARO
14 ✱700720533	1		1	CAP	CHAPEAU CAPPELLO	KAPPE TAPA
15 ✱700720826	1		6	SCREW	VIS VITE	SCHRAUBE TORNILLO
16 ✱700720928	1		1	GASKET	JOINT GUARNIZIONE	DICHTSCHEIBE EMPAQUETADURA.
17 ✱700728141	1		1	CLIP	CLIP FERMAGLIO	SCHELLE CRAPA RETEN
18 ✱700720457	1		1	BEARING	COUSSINET CUSCINETTO	LAGER COJINETE
19 ✱3904704M91	1		1	KIT, SEAL	JEU ETANCHEITE KIT TENUTA	DICHTRINGSATZ RETENES JUEGO
20 ✱700728140	1		1	NUT	ECROU DADO	MUTTER TUERCA
21 ✱700701848	1		10	NUT	ECROU DADO	MUTTER TUERCA
22 ✱700720570	1		1	HUB	MOYEU MOZZO	NABE CUBO
23 ✱700720925	1		1	RING	ANNEAU ANELLO	RING ARO

Drum Brake
Frein Tambour
Trommelbremse
Freno A Tamburo
Tambor De Freno

60-290

From H.K 74300 – Germany From H.K 74209
A Partir Du H.K 74300 – Allemagne A Partir Du H.K 74209
Ab H.K 74300 – Deutschland Ab H.K 74209
Dalla H.K 74300 – Alemania Dalla H.K 74209
Despues H.K 74300 – Alemania Despues H.K 74209

5-2825-001-B

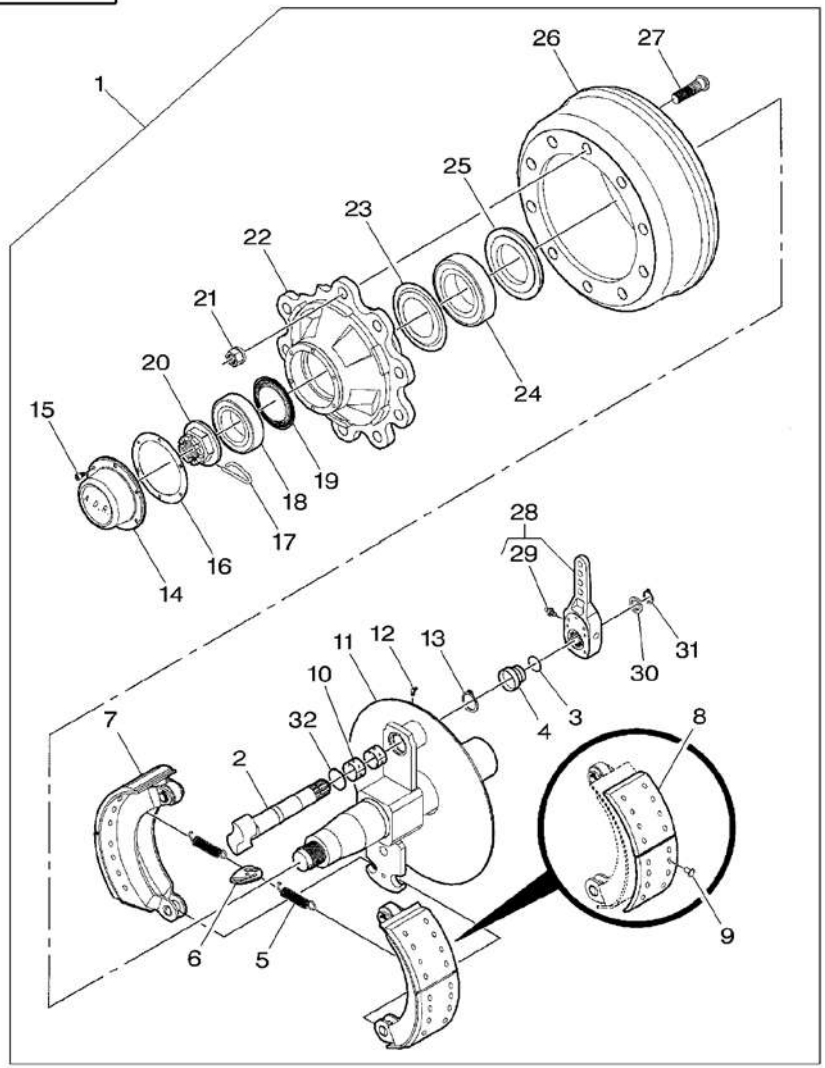

24*	700720531	1	1	BEARING ASSY	ROULEMENT CUSCINETTO COMPL	RADIALLAGER RODAMIENTO RAD
25*	3904704M91	1	1	KIT, SEAL	JEU ETANCHEITE KIT TENUTA	DICHTRINGSATZ RETENES JUEGO
26*	700720571	1	1	BRAKE DRUM	TAMBOUR DE FREIN TAMBURO FRENO	BREMSTROMMEL TAMBOR DE FRENO
27*	700720926	1	10	BOLT	BOULON BULLONE	MASCH.SCHRAUBE PERNO
28*	700720475	1	1	LEVER	LEVIER LEVA	HEBEL PALANCA
29*	77552	28	1	GREASER	GRAISSEUR INGRASSATORE	FETTNIPPEL ENGRASADOR
30*	*Y52316*	1	1	BUSH	BAGUE BOCCOLA	BUCHSE CASQUILLO
31*	700720435	1	1	RING	ANNEAU ANELLO	RING ARO
32*	700720525	1	1	O RING	JOINT TORIQUE ANELLO OR	O-RING JUNTA TORICA

Drum Brake
Frein Tambour
Trommelbremse
Freno A Tamburo
Tambor De Freno

60-295

∅ **400 X 80**

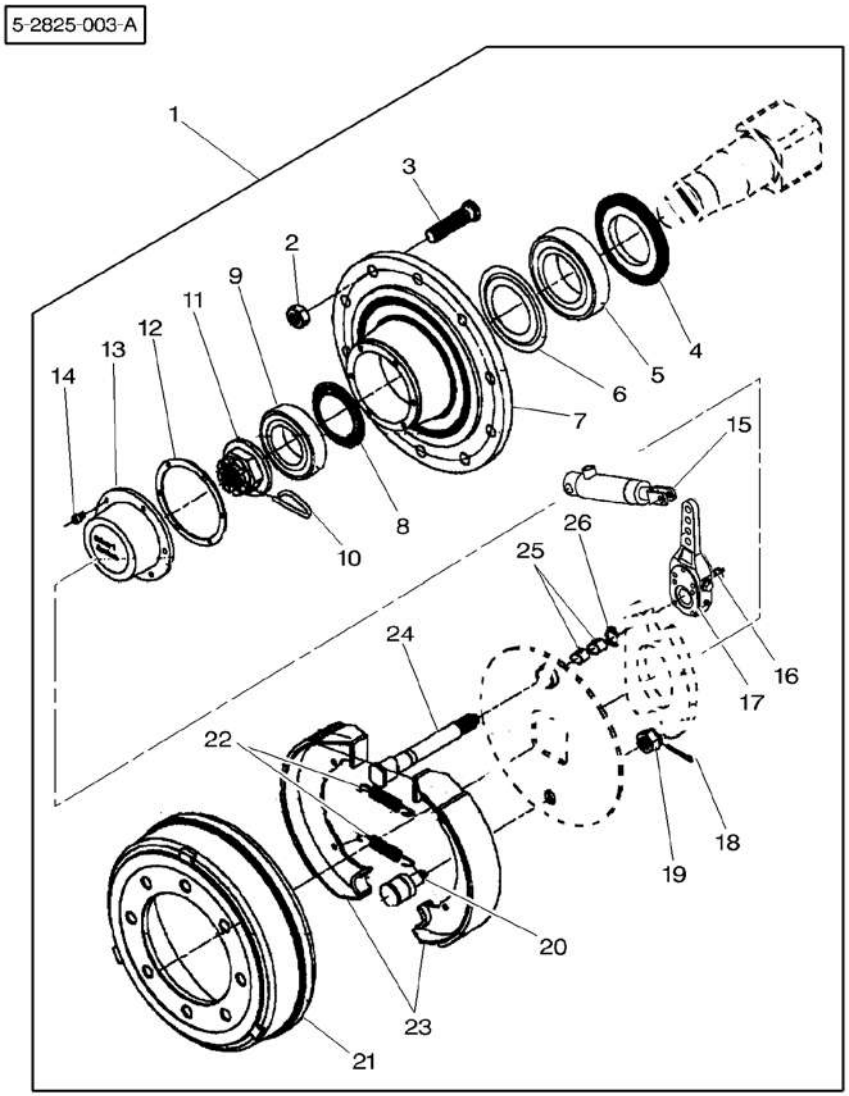

1 ✱ 700725972	◀ ∅ 400 X 80	1	KIT, SERVICE	KIT SERVICE KIT DI SERVIZIO	WARTUNGSSATZ JEUGO,SERVICE
1 ✱ 700725973	▶ ∅ 400 X 80	1	KIT, SERVICE	KIT SERVICE KIT DI SERVIZIO	WARTUNGSSATZ JEUGO,SERVICE
2 ✱ 700715684	1	10	NUT	ECROU DADO	MUTTER TUERCA
3 ✱ 3904569M1	1	10	STUD	GOUJON PRIGIONIERO	STEHBOLZEN ESPARRAGO
4 ✱ 3904704M91	1	1	KIT, SEAL	JEU ETANCHEITE KIT TENUTA	DICHTRINGSATZ RETENES JUEGO
5 ✱ 3904571M1	1	1	BEARING	COUSSINET CUSCINETTO	LAGER COJINETE
6 ✱ 3904572M1	1	1	WASHER	RONDELLE RONDELLA	UNTERLEGSCHEIBE ARANDELA
7 ✱ 3904573M1	1	1	HUB	MOYEU MOZZO	NABE CUBO
8 ✱ 3904574M1	1	1	OIL SEAL	BAGUE ETANCHEITE BOCCOLA PARAOLIO	OELDICHTRING BUJE RETENACEITE
9 ✱ 700720457	1	1	BEARING	COUSSINET CUSCINETTO	LAGER COJINETE
10 ✱ 3901358M1	1	1	CLIP	CLIP FERMAGLIO	SCHELLE CRAPA RETEN
11 ✱ 3904575M1	1	1	NUT	ECROU DADO	MUTTER TUERCA
12 ✱ 3904576M1	1	1	SEAL	JOINT ETANCHEITE PARAOLIO	DICHTRING RETEN
13 ✱ 3904577M1	1	1	CAP	CHAPEAU CAPPELLO	KAPPE TAPA
14 ✱ 3904578M1	1	6	SCREW	VIS VITE	SCHRAUBE TORNILLO
15 ✱ 700725980	1	1	CYLINDER	CYLINDRE CILINDRO	ZYLINDER CILINDRO
16 ✱ 3901359M1	1	1	CIRCLIP	CIRCLIP ANNELLO ELASTICO	SEEGERING GRAPA CIRCULAR
17 ✱ 700720554	1 ▶	1	LEVER	LEVIER LEVA	HEBEL PALANCA
17 ✱ 700720555	1 ◀	1	LEVER	LEVIER LEVA	HEBEL PALANCA
18 ✱ 3901361M1	1	1	PIN	GOUPILLE PERNO	BOLZEN PASADOR
19 ✱ 3901364M1	1	1	NUT	ECROU DADO	MUTTER TUERCA
20 ✱ 3901363M1	1	1	PIVOT	PIVOT CARDINE	DREHZAPFEN PIVOTE
21 ✱ 3904567M1	1	1	BRAKE DRUM	TAMBOUR DE FREIN TAMBURO FRENO	BREMSTROMMEL TAMBOR DE FRENO
22 ✱ 3901362M1	1	2	SPRING	RESSORT MOLLA	FEDER MUELLE
23 ✱ 3904692M91	1	2	KIT, SHOE	JEU SABOTS KIT SUOLE	BODENPLATTENSATZ JUEGO ZAPATAS
24 ✱ 3904568M1	1	1	SHAFT	ARBRE ALBERO	WELLE ARBOL

Drum Brake
Frein Tambour
Trommelbremse
Freno A Tamburo
Tambor De Freno

60-295

∅ **400 X 80**

5-2825-003-A

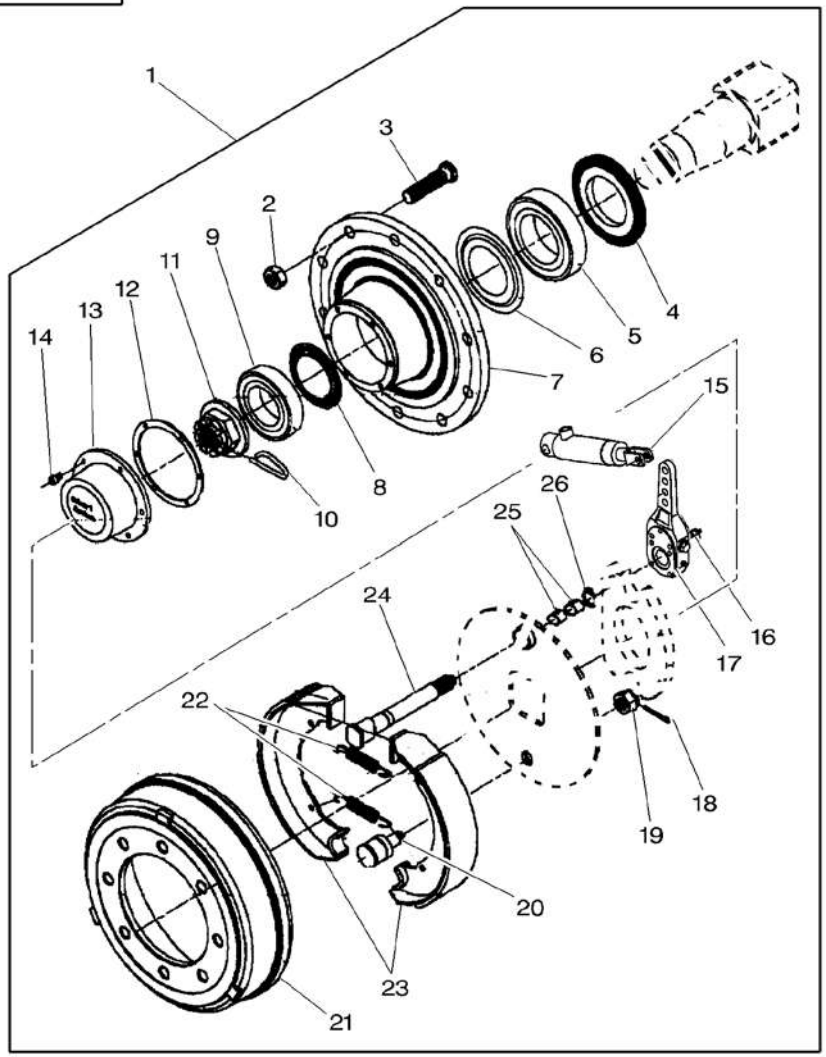

25*	700720535	1	**2** BUSH	BAGUE BOCCOLA	BUCHSE CASQUILLO
26*	3901368M1	1	**1** CIRCLIP	CIRCLIP ANNELLO ELASTICO	SEEGERING GRAPA CIRCULAR

Brake System Systeme De Freinage Brems System Sistea Di Frenata Sistema De Frenado	60-300	Cylinder Components Detail De Verin Hydraulikzylinder Teil Componenti De Cilindro Idraulica Partidas De Ariete

5-BA13-011-A

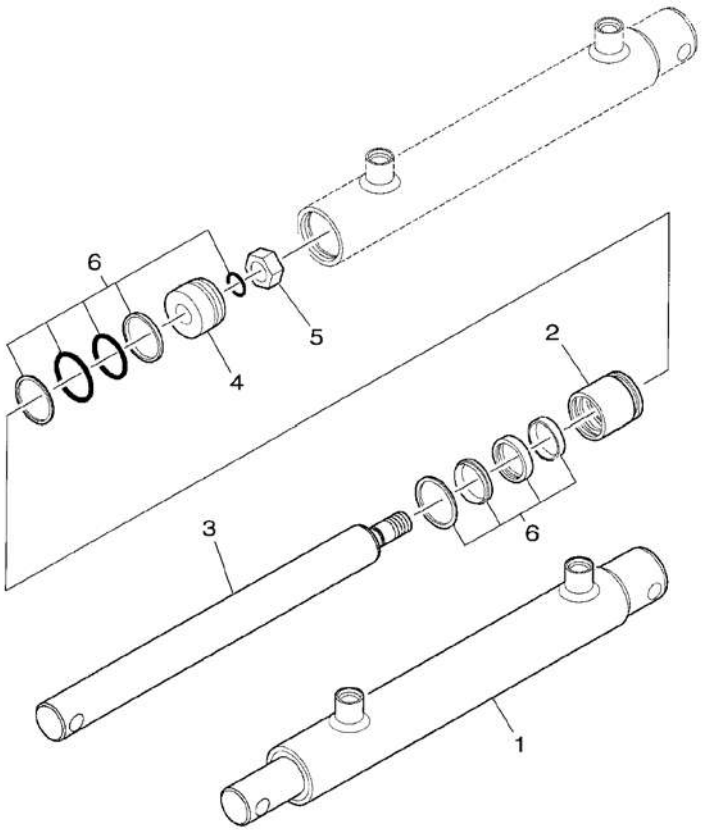

1	700714178		1	HYDRAULIC, CYLIN	VERIN HYDRAULI. CILINDRO IDRAULI	HYDRAULIK ZILIND CILINDRO IDRAULI
2	700714206	1	1	HEAD	TETE TESTA	KOPF CULATA
3	700714205	1	1	ROD	TRINGLE ASTA	STANGE VARILLA
4	700714203	1	1	PISTON	PISTON PISTONE	KOLBEN PISTON
5	700714202	1	1	LOCKNUT	ECROU BLOCAGE AUTOBLOCCANTE	FLACHMUTTER CONTRATUERCA
6	700714201	1	1	KIT, REPAIR	JEU REPARATION KIT RIPARAZIONE	REPARATURSATZ JUEGO REPARACION

Brake System
Systeme De Freinage
Brems System
Sistea Di Frenata
Sistema De Frenado

60-305

Tandem – Rigid Axle – Hydraulic Brakes
Tandem – Essieu Fixe – Frein Hydraulique
Tandem – Achse Steif – Hydraulik Bremse
Tandem – Assale Rigido – Freni Idraulico
Tandem – Eje Rigido – Freno Hydraulico

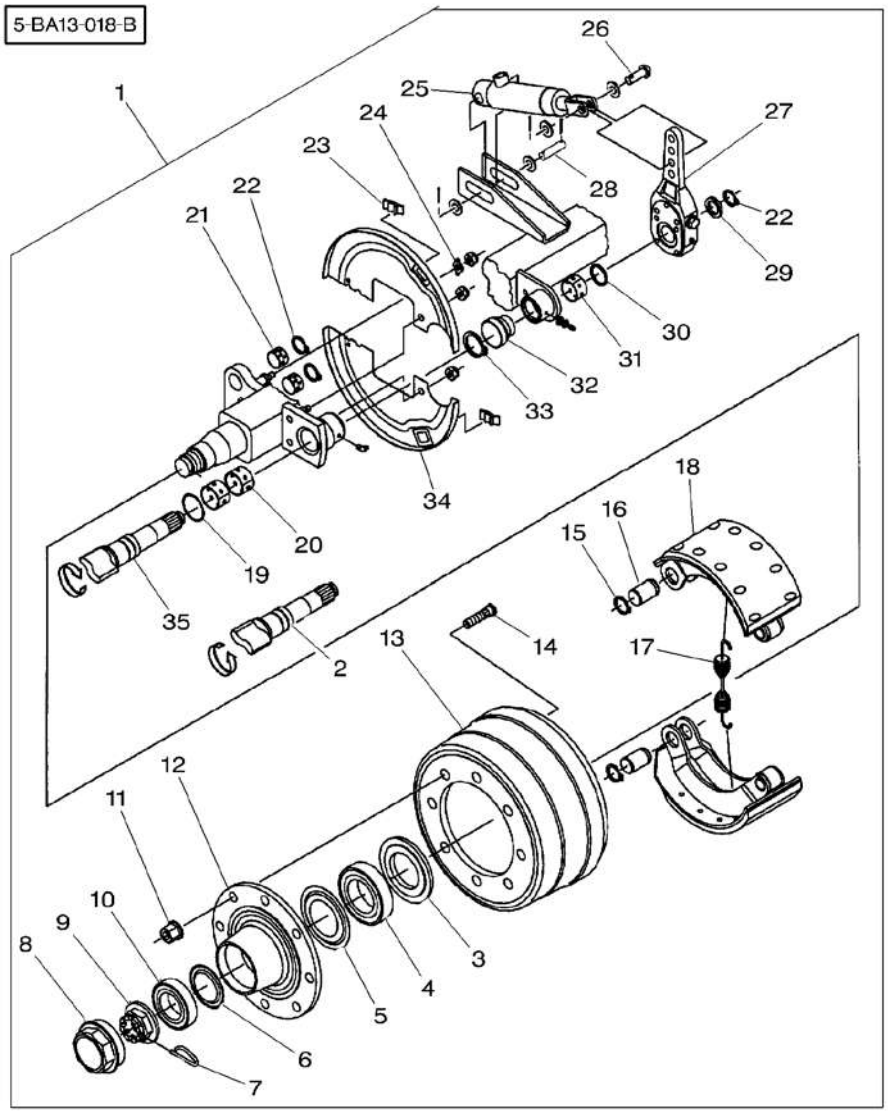

1 ✱ 700720484		1	AXLE	ESSIEU ASSALE	ACHSE EJE
2 ✱ 700720541	1 ◀	1	CAMSHAFT	ARBRE A CAMES ALBERO A CAMME	NOCKENWELLE ARBOL DE LEVAS
3 ✱ 700728133	1	2	SEAL	JOINT ETANCHEITE PARAOLIO	DICHTRING RETEN
4 ✱ 700726370	1	2	BEARING	COUSSINET CUSCINETTO	LAGER COJINETE
5 ✱ 700728134	1	2	RING	ANNEAU ANELLO	RING ARO
6 ✱ 700728138	1	2	RING	ANNEAU ANELLO	RING ARO
7 ✱ 700728141	1	2	CLIP	CLIP FERMAGLIO	SCHELLE CRAPA RETEN
8 ✱ 700728142	1	2	CAP	CHAPEAU CAPPELLO	KAPPE TAPA
9 ✱ 700728140	1	2	NUT	ECROU DADO	MUTTER TUERCA
10 ✱ 700726369	1	2	BEARING	COUSSINET CUSCINETTO	LAGER COJINETE
11 ✱ 700720424	1	16	NUT	ECROU DADO	MUTTER TUERCA
12 ✱ 700720526	1	2	HUB	MOYEU MOZZO	NABE CUBO
13 ✱ 700720527	1	2	DRUM BRAKE	FREIN TAMBOUR FRENO A TAMBURO	TROMMELBREMSE FRENO DE TAMBOR
14 ✱ ***700728135***	1	16	BOLT	BOULON BULLONE	MASCH.SCHRAUBE PERNO
15 ✱ 700720537	1	4	RING	ANNEAU ANELLO	RING ARO
16 ✱ 700720539	1	4	CLEVIS PIN	AXE PERNO D'ATTACCO	SPLINTBOLZEN BULON CILINDRICO
17 ✱ 700720472	1	2	SPRING	RESSORT MOLLA	FEDER MUELLE
18 ✱ ***700720545***	1	4	BRAKE SHOE	SABOT DE FREIN CEPPO FRENO	BREMSBACKE ZAPATA DE FRENO
19 ✱ 700720525	1	2	O RING	JOINT TORIQUE ANELLO OR	O-RING JUNTA TORICA
20 ✱ 700720438	1	4	BUSH	BAGUE BOCCOLA	BUCHSE CASQUILLO
21 ✱ 700720439	1	4	BUSH	BAGUE BOCCOLA	BUCHSE CASQUILLO
22 ✱ 700720435	1	6	RING	ANNEAU ANELLO	RING ARO
23 ✱ 700720476	1	4	COVER	COUVERCLE COPERCHIO	DECKEL CUBIERTA
24 ✱ 700720473	1	2	LOCK	SERRURE SERRATURA	SCHLOSS CERRADURA
25 ✱ 700720459	1	2	CYLINDER	CYLINDRE CILINDRO	ZYLINDER CILINDRO
26 ✱ 700720447	1	2	RIVET	RIVET RIVETTO	NIET REMACHE

Brake System
Systeme De Freinage
Brems System
Sistea Di Frenata
Sistema De Frenado

60-305

Tandem – Rigid Axle – Hydraulic Brakes
Tandem – Essieu Fixe – Frein Hydraulique
Tandem – Achse Steif – Hydraulik Bremse
Tandem – Assale Rigido – Freni Idraulico
Tandem – Eje Rigido – Freno Hydraulico

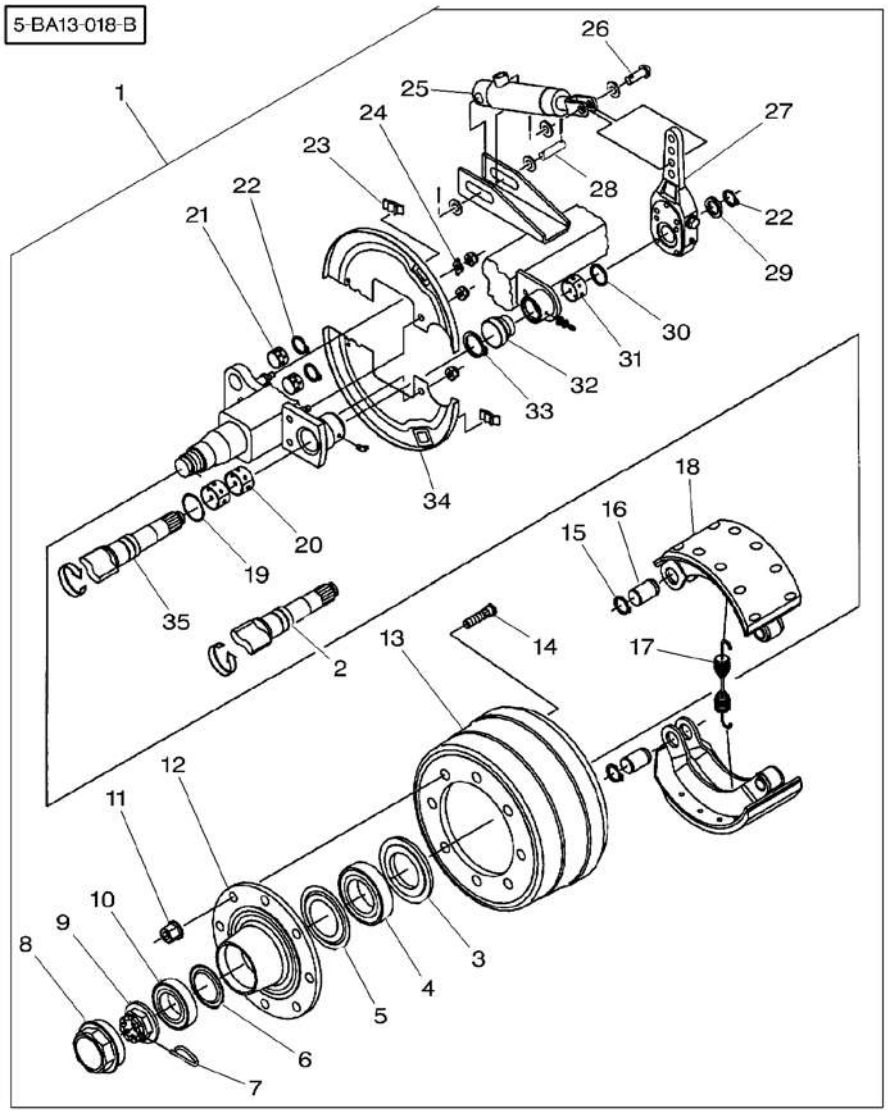

27*	700720475	1	2	LEVER	LEVIER LEVA HEBEL PALANCA
28*	700720444	1	2	PIN	GOUPILLE PERNO BOLZEN PASADOR
29*	*Y52316*	1	2	BUSH	BAGUE BOCCOLA BUCHSE CASQUILLO
30*	700720538	1	2	RING	ANNEAU ANELLO RING ARO
31*	700720535	1	2	BUSH	BAGUE BOCCOLA BUCHSE CASQUILLO
32*	700720451	1	2	GROMMET	PASSE FIL GOMMINO GUMMITUELLE PASACABLE
33*	700720436	1	2	RING	ANNEAU ANELLO RING ARO
34*	700720470	1	2	COVER	COUVERCLE COPERCHIO DECKEL CUBIERTA
35*	700720542	1 ▶	1	CAMSHAFT	ARBRE A CAMES ALBERO A CAMME NOCKENWELLE ARBOL DE LEVAS

Brake System
Systeme De Freinage
Brems System
Sistea Di Frenata
Sistema De Frenado

60-310

Tandem – Rigid Axle – Pneumatic Brakes
Tandem – Essieu Fixe – Frein Pneumatique
Tandem – Achse Steif – Luftdruck Bremse
Tandem – Assale Rigido – Freni Pneumatico
Tandem – Eje Rigido – Freno Pneumatico

5-BA13-024-B

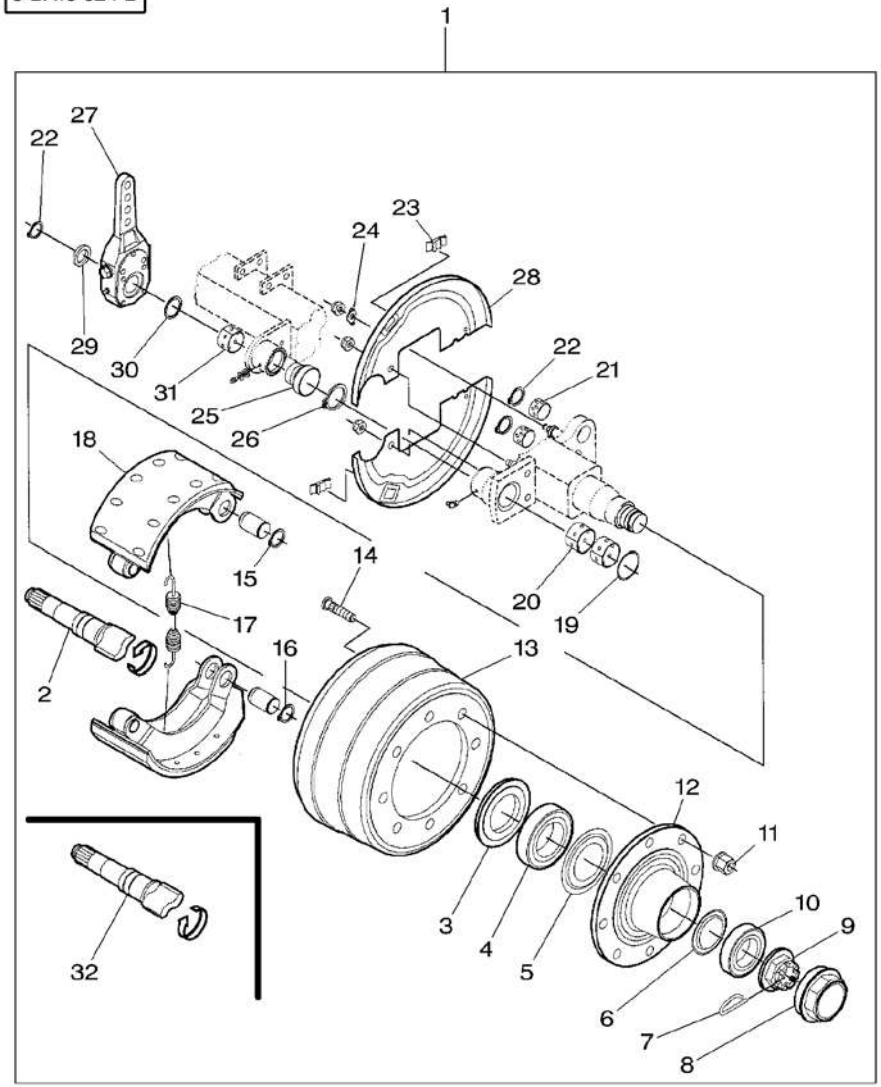

1 ✱ 700721771		1	AXLE	ESSIEU ASSALE	ACHSE EJE
2 ✱ 700720541	1 ◀	1	CAMSHAFT	ARBRE A CAMES ALBERO A CAMME	NOCKENWELLE ARBOL DE LEVAS
3 ✱ 700728133	1	2	SEAL	JOINT ETANCHEITE PARAOLIO	DICHTRING RETEN
4 ✱ 700726370	1	2	BEARING	COUSSINET CUSCINETTO	LAGER COJINETE
5 ✱ 700728134	1	2	RING	ANNEAU ANELLO	RING ARO
6 ✱ 700728138	1	2	RING	ANNEAU ANELLO	RING ARO
7 ✱ 700728141	1	2	CLIP	CLIP FERMAGLIO	SCHELLE CRAPA RETEN
8 ✱ 700728142	1	2	CAP	CHAPEAU CAPPELLO	KAPPE TAPA
9 ✱ 700728140	1	2	NUT	ECROU DADO	MUTTER TUERCA
10 ✱ 700726369	1	2	BEARING	COUSSINET CUSCINETTO	LAGER COJINETE
11 ✱ 700720424	1	16	NUT	ECROU DADO	MUTTER TUERCA
12 ✱ 700720526	1	2	HUB	MOYEU MOZZO	NABE CUBO
13 ✱ 700720527	1	2	DRUM BRAKE	FREIN TAMBOUR FRENO A TAMBURO	TROMMELBREMSE FRENO DE TAMBOR
14 ✱ ***700728135***	1	16	BOLT	BOULON BULLONE	MASCH.SCHRAUBE PERNO
15 ✱ 700720537	1	4	RING	ANNEAU ANELLO	RING ARO
16 ✱ 700720539	1	4	CLEVIS PIN	AXE PERNO D'ATTACCO	SPLINTBOLZEN BULON CILINDRICO
17 ✱ 700720472	1	2	SPRING	RESSORT MOLLA	FEDER MUELLE
18 ✱ ***700720545***	1	4	BRAKE SHOE	SABOT DE FREIN CEPPO FRENO	BREMSBACKE ZAPATA DE FRENO
19 ✱ 700720525	1	2	O RING	JOINT TORIQUE ANELLO OR	O-RING JUNTA TORICA
20 ✱ 700720438	1	4	BUSH	BAGUE BOCCOLA	BUCHSE CASQUILLO
21 ✱ 700720439	1	4	BUSH	BAGUE BOCCOLA	BUCHSE CASQUILLO
22 ✱ 700720435	1	6	RING	ANNEAU ANELLO	RING ARO
23 ✱ 700720476	1	4	COVER	COUVERCLE COPERCHIO	DECKEL CUBIERTA
24 ✱ 700720473	1	2	LOCK	SERRURE SERRATURA	SCHLOSS CERRADURA
25 ✱ 700720451	1	2	GROMMET	PASSE FIL GOMMINO	GUMMITUELLE PASACABLE
26 ✱ 700720436	1	2	RING	ANNEAU ANELLO	RING ARO

Brake System Systeme De Freinage Brems System Sistea Di Frenata Sistema De Frenado	60-310	Tandem – Rigid Axle – Pneumatic Brakes Tandem – Essieu Fixe – Frein Pneumatique Tandem – Achse Steif – Luftdruck Bremse Tandem – Assale Rigido – Freni Pneumatico Tandem – Eje Rigido – Freno Pneumatico

5-BA13-024-B

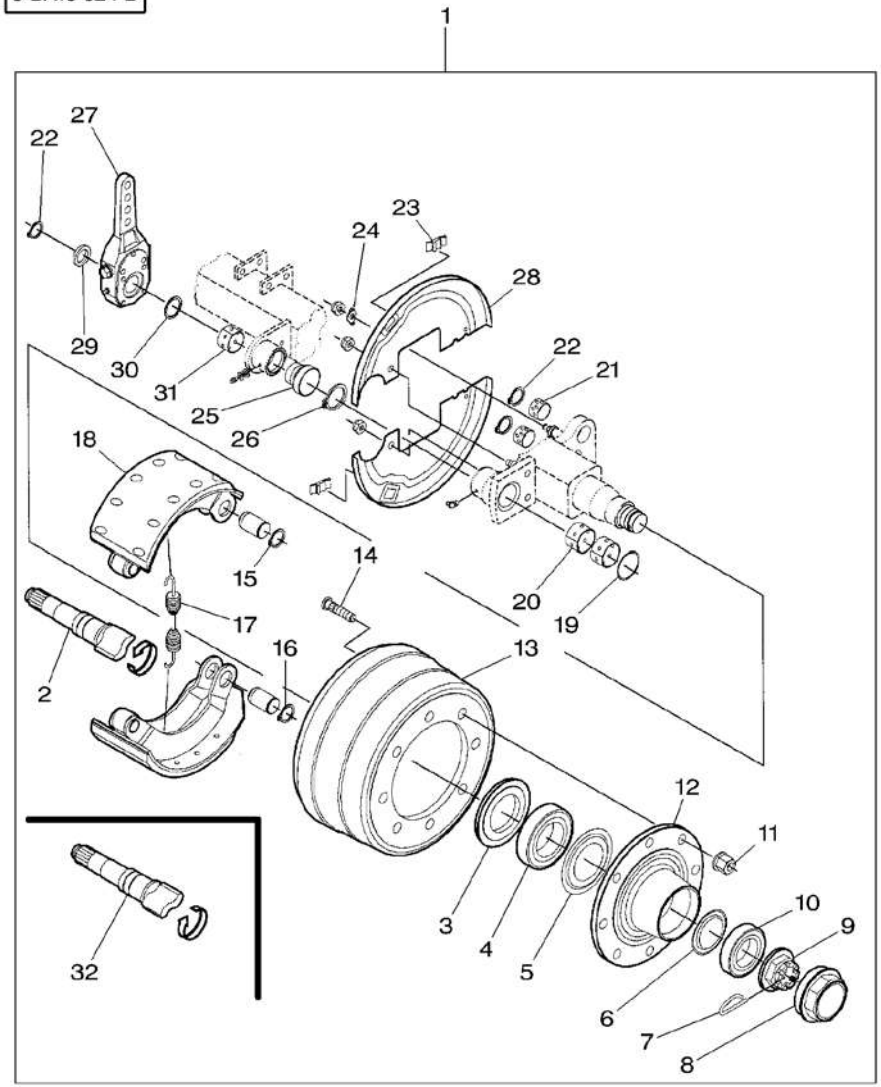

27*	700720475	1	2	LEVER	LEVIER LEVA	HEBEL PALANCA
28*	700720470	1	2	COVER	COUVERCLE COPERCHIO	DECKEL CUBIERTA
29*	*Y52316*	1	2	BUSH	BAGUE BOCCOLA	BUCHSE CASQUILLO
30*	700720538	1	2	RING	ANNEAU ANELLO	RING ARO
31*	700720535	1	2	BUSH	BAGUE BOCCOLA	BUCHSE CASQUILLO
32*	700720542	1 ▶	1	CAMSHAFT	ARBRE A CAMES ALBERO A CAMME	NOCKENWELLE ARBOL DE LEVAS

Steering Axle Essieu De Direction Lenkachse Assale Sterzo Eje Direccion	60-315	Tandem Tandem Tandem Tandem Tandem

5-ABZR-001-B

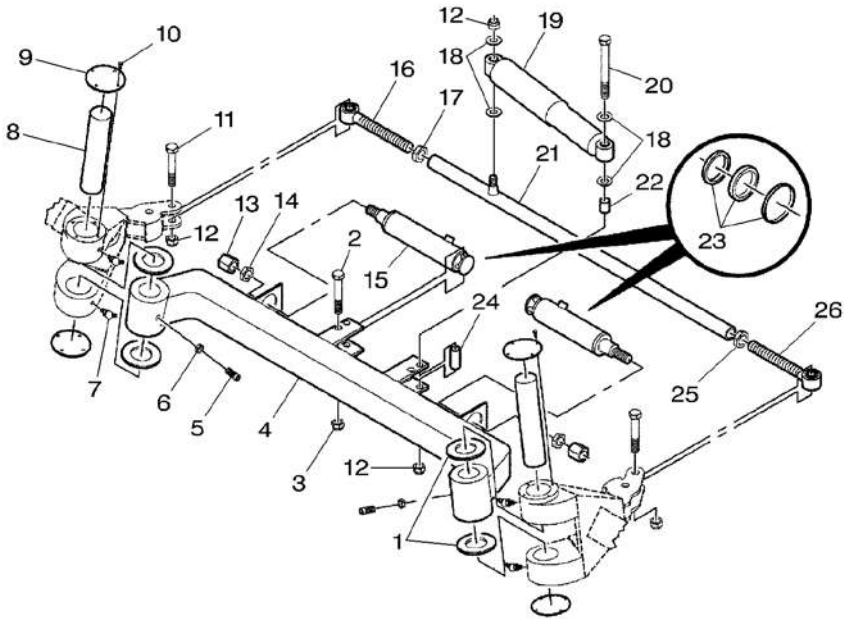

1 ✱	700722137	▶	2	BUSH BOCCOLA	BAGUE CASQUILLO
2 ✱	700722126	M22 X 120	2	BOLT BULLONE	BOULON MASCH.SCHRAUBE PERNO
3 ✱	700722127	M22	2	NUT DADO	ECROU MUTTER TUERCA
4 ✱	700724387		1	AXLE ASSALE	ESSIEU ACHSE EJE
5 ✱	700722133	M16 X 45	2	CAPSCREW TAPPO A VITE	VIS BOUCHON HUTSCHRAUBE TORNILLO TAPON
6 ✱	700722134	M16	2	NUT DADO	ECROU MUTTER TUERCA
7 ✱	700720827	M8	4	GREASER INGRASSATORE	GRAISSEUR FETTNIPPEL ENGRASADOR
8 ✱	700722138	▶	2	STEERING AXLE ASSALE STERZANTE	AXE DIRECTION LENKACHSE EJE DE DIRECCION
9 ✱	700720462		4	CAP CAPPELLO	CHAPEAU KAPPE TAPA
10 ✱	700722135	M8 X 20	16	SCREW VITE	VIS SCHRAUBE TORNILLO
11 ✱	700722129	M20 X 100	2	BOLT BULLONE	BOULON MASCH.SCHRAUBE PERNO
12 ✱	700720384	M20	4	NUT DADO	ECROU MUTTER TUERCA
13 ✱	700720446		2	NUT DADO	ECROU MUTTER TUERCA
14 ✱	700720445		2	NUT DADO	ECROU MUTTER TUERCA
15 ✱	700720461		2	CYLINDER CILINDRO	CYLINDRE ZYLINDER CILINDRO
16 ✱	700720569	▶	1	TOGGLE ROTULA	ROTULE GELENKZAPFEN PERNO ENGANCHE
17 ✱	700722130	M30	1	NUT DADO	ECROU MUTTER TUERCA
18 ✱	700722128	M20	4	WASHER RONDELLA	RONDELLE UNTERLEGSCHEIBE ARANDELA
19 ✱	700720380		1	CYLINDER CILINDRO	CYLINDRE ZYLINDER CILINDRO
20 ✱	700720389	M20 X 190	1	BOLT BULLONE	BOULON MASCH.SCHRAUBE PERNO
21 ✱	700724389	[A]	1	ROD ASTA	TRINGLE STANGE VARILLA
21 ✱	700724388	[B]	1	ROD ASTA	TRINGLE STANGE VARILLA
22 ✱	700720381		1	SPACER DISTANZIALE	ENTRETOISE ABSTANDSTUECK PIEZA DISTANCIA
23 ✱	***700720460***		1	KIT, SEAL KIT TENUTA	JEU ETANCHEITE DICHTRINGSATZ RETENES JUEGO
24 ✱	700720382		1	SPACER DISTANZIALE	ENTRETOISE ABSTANDSTUECK PIEZA DISTANCIA
25 ✱	700722131	M30	1	NUT DADO	ECROU MUTTER TUERCA

Steering Axle Essieu De Direction Lenkachse Assale Sterzo Eje Direccion	60-315	Tandem Tandem Tandem Tandem Tandem

5-ABZR-001-B

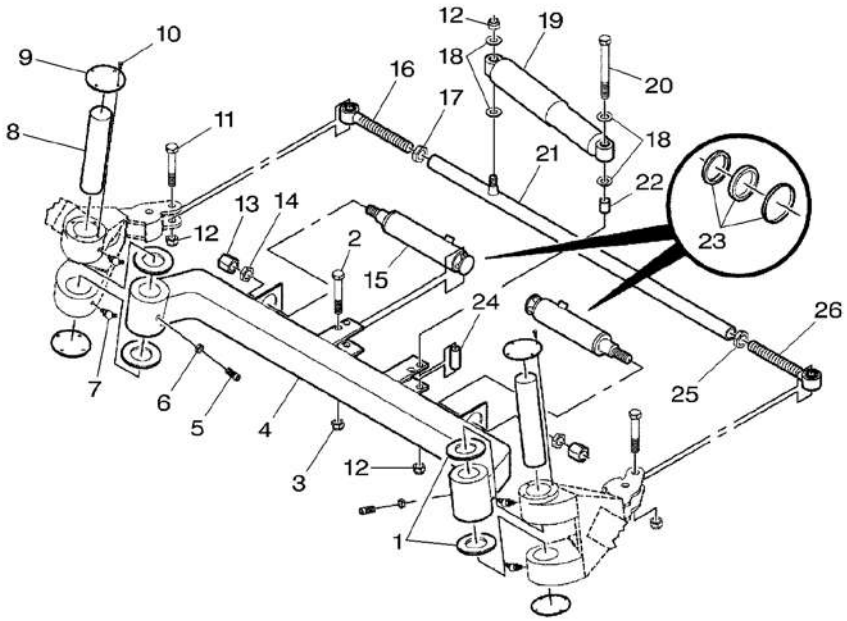

26*	700720568	◀	1 TOGGLE	ROTULE ROTULA	GELENKZAPFEN PERNO ENGANCHE

[A] WITH HYDRAULIC BRAKES
AVEC FREIN HYDRAULIQUE
MIT HYDRAULISCHE BREMSE
CON FRENI HIDRAULICA
CON FRENO IDRAULICO

[B] WITH PNEUMATIC BRAKE
AVEC FREINAGE PNEUMATIQUE
MIT LUFTDRUCKBREMSE
CON FRENO PNEUMATICO
CON FRENO NEUMATICO

Brake System
Systeme De Freinage
Brems System
Sistea Di Frenata
Sistema De Frenado

60-320

Tandem – Steering Axle – Hydraulic Brakes – Left Side
Tandem – Essieu Direction – Frein Hydraulique – Cote Gauche
Tandem – Lenkachse – Hydraulik Bremse – Linke Seite
Tandem – Assale Sterzo – Freni Idraulico – Lato Sinistro
Tandem – Eje Direccion – Freno Hydraulico – Lado Izquierdo

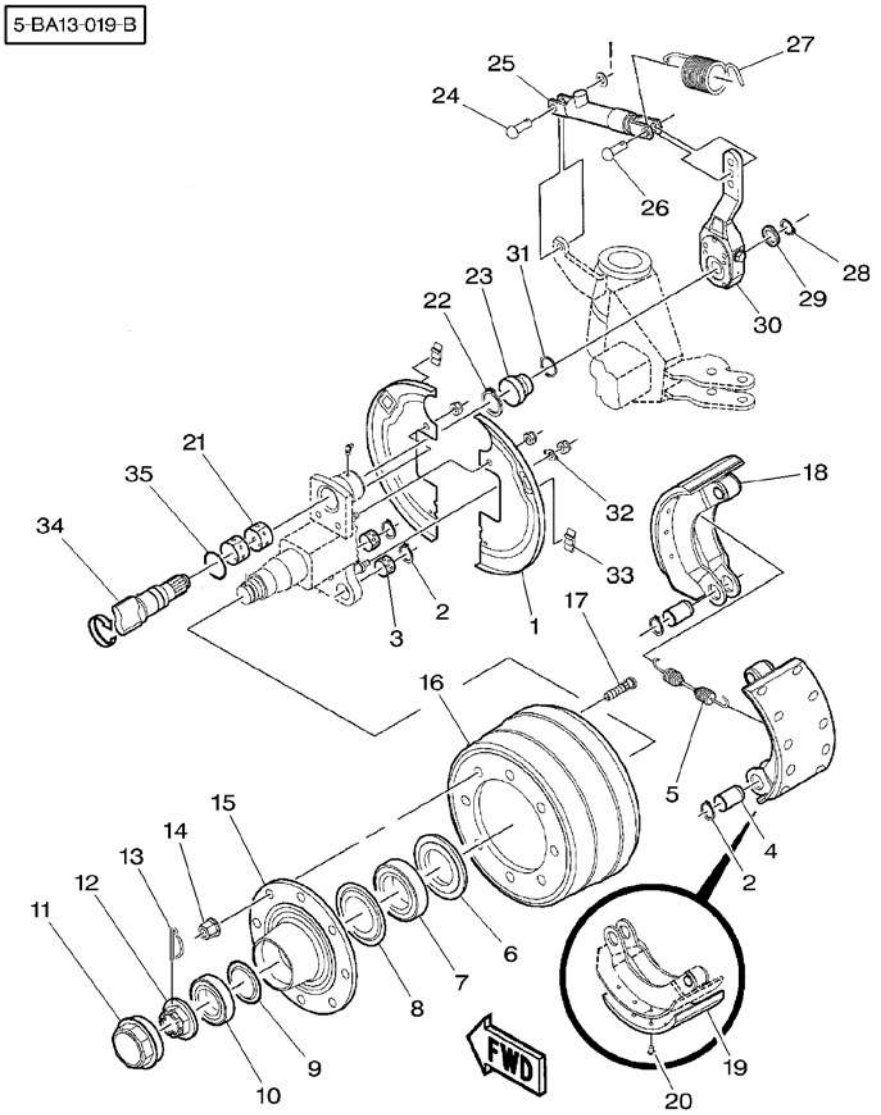

1	700720470		1	COVER	COUVERCLE COPERCHIO	DECKEL CUBIERTA
2	700720537		4	RING	ANNEAU ANELLO	RING ARO
3	700720439		2	BUSH	BAGUE BOCCOLA	BUCHSE CASQUILLO
4	700720539		2	CLEVIS PIN	AXE PERNO D'ATTACCO	SPLINTBOLZEN BULON CILINDRICO
5	700720472		1	SPRING	RESSORT MOLLA	FEDER MUELLE
6	700728133		1	SEAL	JOINT ETANCHEITE PARAOLIO	DICHTRING RETEN
7	700726370		1	BEARING	COUSSINET CUSCINETTO	LAGER COJINETE
8	700728134		1	RING	ANNEAU ANELLO	RING ARO
9	700728138		1	RING	ANNEAU ANELLO	RING ARO
10	700726369		1	BEARING	COUSSINET CUSCINETTO	LAGER COJINETE
11	700728142		1	CAP	CHAPEAU CAPPELLO	KAPPE TAPA
12	700728140		1	NUT	ECROU DADO	MUTTER TUERCA
13	700728141		1	CLIP	CLIP FERMAGLIO	SCHELLE CRAPA RETEN
14	700720424		8	NUT	ECROU DADO	MUTTER TUERCA
15	700720526		1	HUB	MOYEU MOZZO	NABE CUBO
16	700720527		1	DRUM BRAKE	FREIN TAMBOUR FRENO A TAMBURO	TROMMELBREMSE FRENO DE TAMBOR
17	***700728135***		8	BOLT	BOULON BULLONE	MASCH.SCHRAUBE PERNO
18	***700720545***		2	BRAKE SHOE	SABOT DE FREIN CEPPO FRENO	BREMSBACKE ZAPATA DE FRENO
19*	700720442	18	1	LINING	GARNITURE FRICT SETTORE ATTRITO	BELAG FORRO
20*	700720440	18	10	RIVET	RIVET RIVETTO	NIET REMACHE
21	700720438		2	BUSH	BAGUE BOCCOLA	BUCHSE CASQUILLO
22	700720436		1	RING	ANNEAU ANELLO	RING ARO
23	700720451		1	GROMMET	PASSE FIL GOMMINO	GUMMITUELLE PASACABLE
24	700720447		1	RIVET	RIVET RIVETTO	NIET REMACHE
25	700720463		1	CYLINDER	CYLINDRE CILINDRO	ZYLINDER CILINDRO
26	700720448		1	RIVET	RIVET RIVETTO	NIET REMACHE

Brake System
Systeme De Freinage
Brems System
Sistea Di Frenata
Sistema De Frenado

60-320

Tandem – Steering Axle – Hydraulic Brakes – Left Side
Tandem – Essieu Direction – Frein Hydraulique – Cote Gauche
Tandem – Lenkachse – Hydraulik Bremse – Linke Seite
Tandem – Assale Sterzo – Freni Idraulico – Lato Sinistro
Tandem – Eje Direccion – Freno Hydraulico – Lado Izquierdo

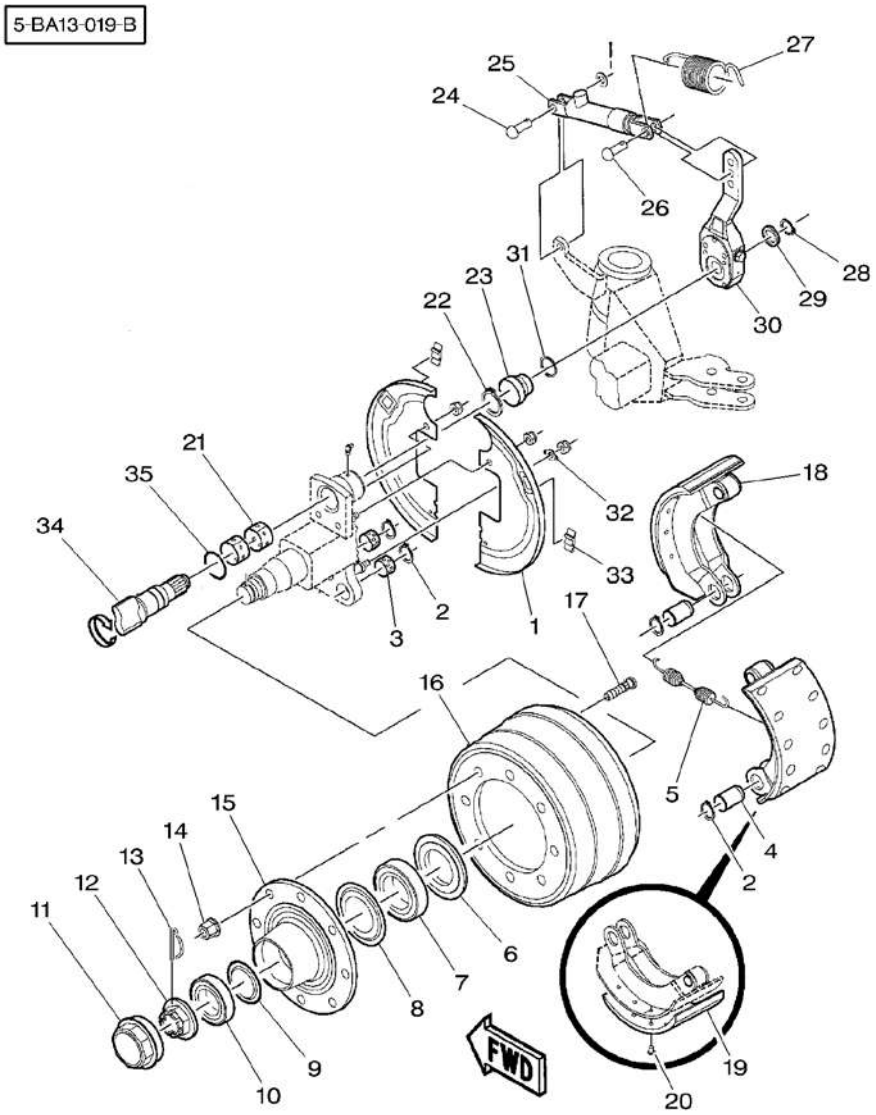

27	700720471		1	SPRING	RESSORT MOLLA	FEDER MUELLE
28	700720435		1	RING	ANNEAU ANELLO	RING ARO
29	*Y52316*		1	BUSH	BAGUE BOCCOLA	BUCHSE CASQUILLO
30	700720477		1	LEVER	LEVIER LEVA	HEBEL PALANCA
31	700720538		1	RING	ANNEAU ANELLO	RING ARO
32	700720473		1	LOCK	SERRURE SERRATURA	SCHLOSS CERRADURA
33	700720476		2	COVER	COUVERCLE COPERCHIO	DECKEL CUBIERTA
34	700720544	▶	1	CAMSHAFT	ARBRE A CAMES ALBERO A CAMME	NOCKENWELLE ARBOL DE LEVAS
35	700720525		1	O RING	JOINT TORIQUE ANELLO OR	O-RING JUNTA TORICA

Brake System
Systeme De Freinage
Brems System
Sistea Di Frenata
Sistema De Frenado

60-325

Tandem – Steering Axle – Pneumatic Brakes – Left Side
Tandem – Essieu Direction – Frein Pneumatique – Cote Gauche
Tandem – Lenkachse – Luftdruck Bremse – Linke Seite
Tandem – Assale Sterzo – Freni Pneumatico – Lato Sinistro
Tandem – Eje Direccion – Freno Pneumatico – Lado Izquierdo

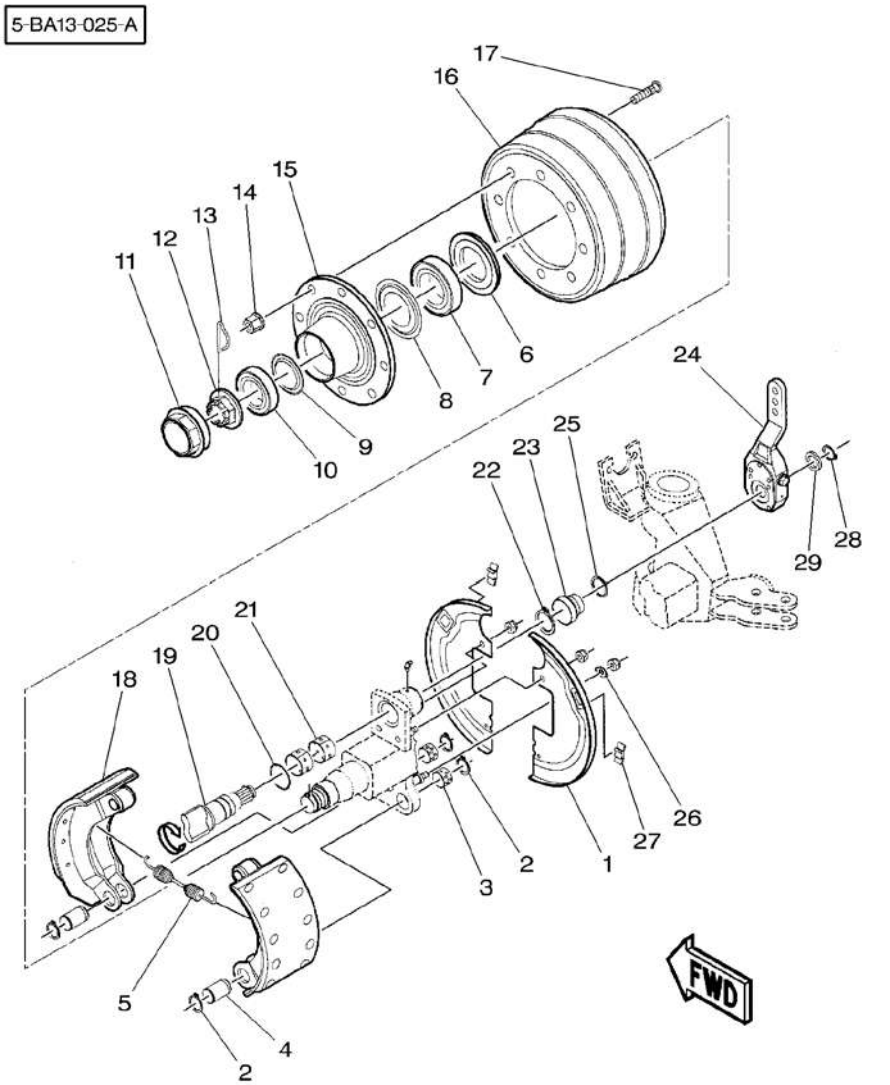

1	700720470		1	COVER	COUVERCLE COPERCHIO	DECKEL CUBIERTA
2	700720537		4	RING	ANNEAU ANELLO	RING ARO
3	700720439		2	BUSH	BAGUE BOCCOLA	BUCHSE CASQUILLO
4	700720539		2	CLEVIS PIN	AXE PERNO D'ATTACCO	SPLINTBOLZEN BULON CILINDRICO
5	700720472		1	SPRING	RESSORT MOLLA	FEDER MUELLE
6	700728133		1	SEAL	JOINT ETANCHEITE PARAOLIO	DICHTRING RETEN
7	700726370		1	BEARING	COUSSINET CUSCINETTO	LAGER COJINETE
8	700728134		1	RING	ANNEAU ANELLO	RING ARO
9	700728138		1	RING	ANNEAU ANELLO	RING ARO
10	700726369		1	BEARING	COUSSINET CUSCINETTO	LAGER COJINETE
11	700728142		1	CAP	CHAPEAU CAPPELLO	KAPPE TAPA
12	700728140		1	NUT	ECROU DADO	MUTTER TUERCA
13	700728141		1	CLIP	CLIP FERMAGLIO	SCHELLE CRAPA RETEN
14	700720424		8	NUT	ECROU DADO	MUTTER TUERCA
15	700720526		1	HUB	MOYEU MOZZO	NABE CUBO
16	700720527		1	DRUM BRAKE	FREIN TAMBOUR FRENO A TAMBURO	TROMMELBREMSE FRENO DE TAMBOR
17	***700728135***		8	BOLT	BOULON BULLONE	MASCH.SCHRAUBE PERNO
18	***700720545***		2	BRAKE SHOE	SABOT DE FREIN CEPPO FRENO	BREMSBACKE ZAPATA DE FRENO
19	700720544	▶	1	CAMSHAFT	ARBRE A CAMES ALBERO A CAMME	NOCKENWELLE ARBOL DE LEVAS
20	700720525		1	O RING	JOINT TORIQUE ANELLO OR	O-RING JUNTA TORICA
21	700720438		2	BUSH	BAGUE BOCCOLA	BUCHSE CASQUILLO
22	700720436		1	RING	ANNEAU ANELLO	RING ARO
23	700720451		1	GROMMET	PASSE FIL GOMMINO	GUMMITUELLE PASACABLE
24	700720477		1	LEVER	LEVIER LEVA	HEBEL PALANCA
25	700720538		1	RING	ANNEAU ANELLO	RING ARO
26	700720473		1	LOCK	SERRURE SERRATURA	SCHLOSS CERRADURA

Brake System Systeme De Freinage Brems System Sistea Di Frenata Sistema De Frenado	60-325	Tandem – Steering Axle – Pneumatic Brakes – Left Side Tandem – Essieu Direction – Frein Pneumatique – Cote Gauche Tandem – Lenkachse – Luftdruck Bremse – Linke Seite Tandem – Assale Sterzo – Freni Pneumatico – Lato Sinistro Tandem – Eje Direccion – Freno Pneumatico – Lado Izquierdo

5-BA13-025-A

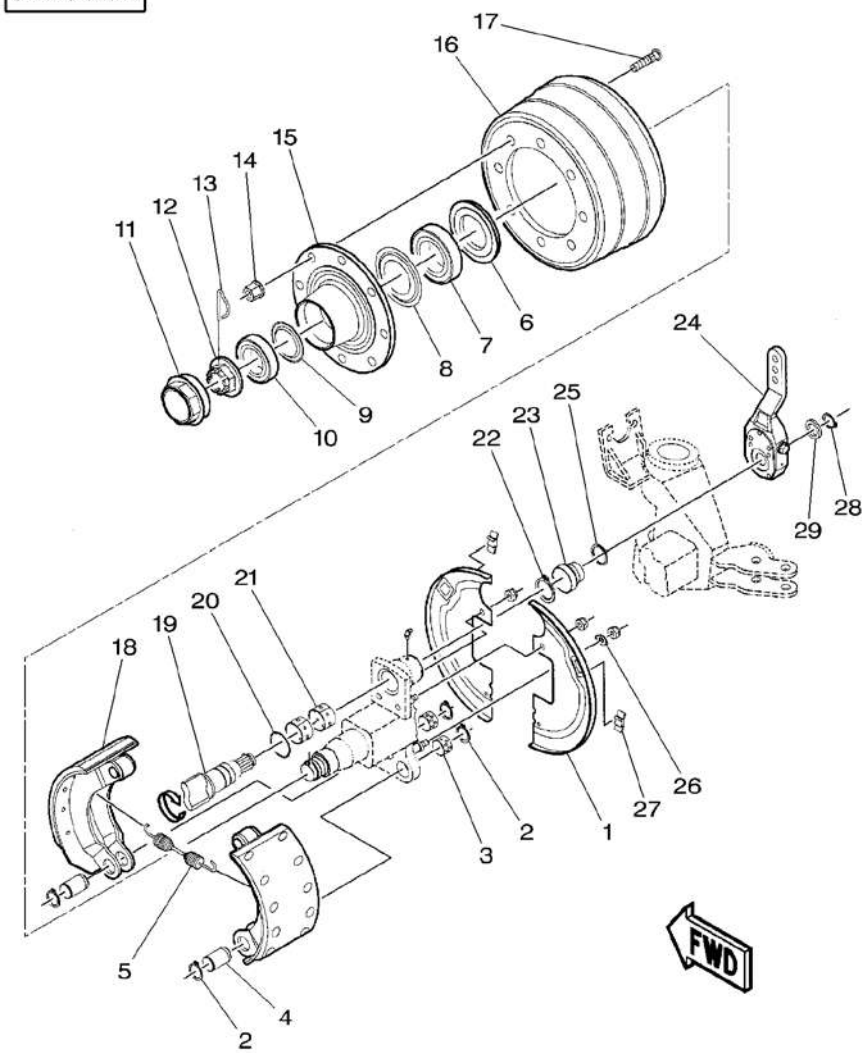

27	700720476	2	COVER	COUVERCLE COPERCHIO	DECKEL CUBIERTA
28	700720435	1	RING	ANNEAU ANELLO	RING ARO
29	*Y52316*	1	BUSH	BAGUE BOCCOLA	BUCHSE CASQUILLO

Brake System Systeme De Freinage Brems System Sistea Di Frenata Sistema De Frenado	60-330	Tandem – Steering Axle – Hydraulic Brakes – Right Side Tandem – Essieu Direction – Frein Hydraulique – Cote Droit Tandem – Lenkachse – Hydraulik Bremse – Rechte Seite Tandem – Assale Sterzo – Freni Idraulico – Lato Destra Tandem – Eje Direccion – Freno Hydraulico – Lado Derecho

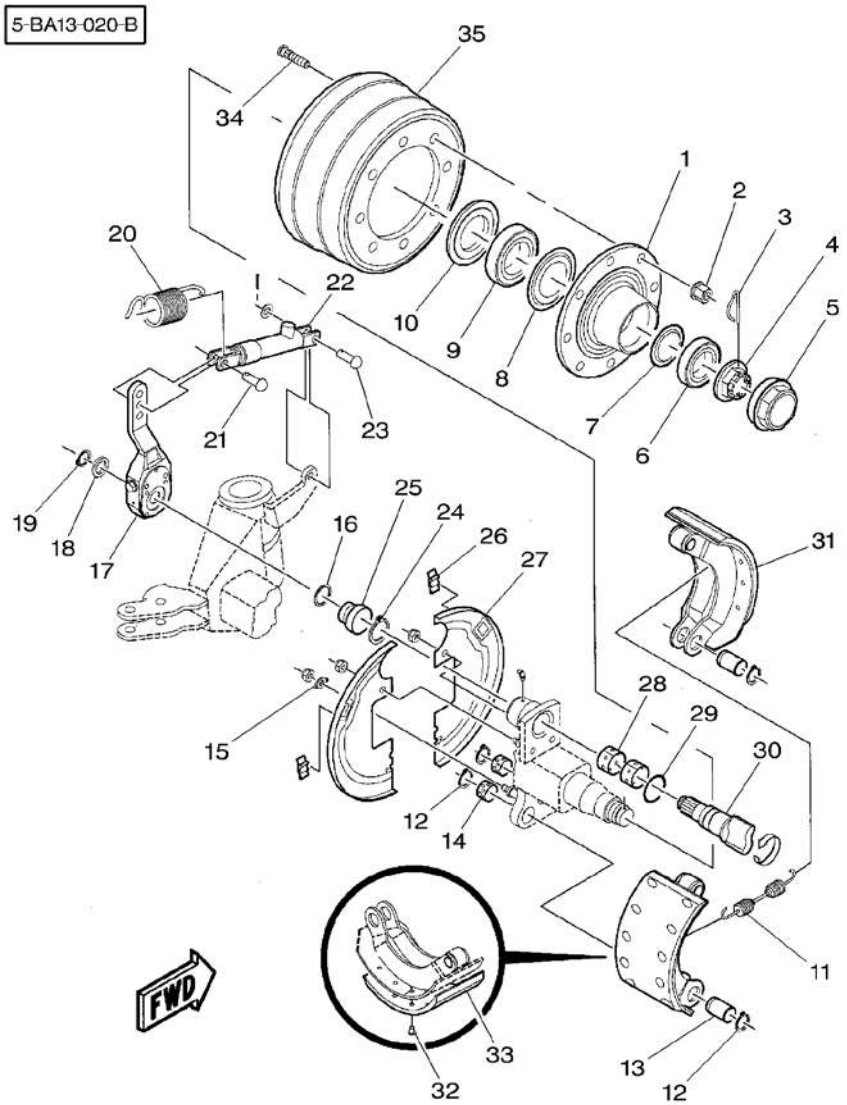

1	700720526	1	HUB	MOYEU MOZZO	NABE CUBO
2	700720424	8	NUT	ECROU DADO	MUTTER TUERCA
3	700728141	1	CLIP	CLIP FERMAGLIO	SCHELLE CRAPA RETEN
4	700728140	1	NUT	ECROU DADO	MUTTER TUERCA
5	700728142	1	CAP	CHAPEAU CAPPELLO	KAPPE TAPA
6	700726369	1	BEARING	COUSSINET CUSCINETTO	LAGER COJINETE
7	700728138	1	RING	ANNEAU ANELLO	RING ARO
8	700728134	1	RING	ANNEAU ANELLO	RING ARO
9	700726370	1	BEARING	COUSSINET CUSCINETTO	LAGER COJINETE
10	700728133	1	SEAL	JOINT ETANCHEITE PARAOLIO	DICHTRING RETEN
11	700720472	1	SPRING	RESSORT MOLLA	FEDER MUELLE
12	700720537	4	RING	ANNEAU ANELLO	RING ARO
13	700720539	2	CLEVIS PIN	AXE PERNO D'ATTACCO	SPLINTBOLZEN BULON CILINDRICO
14	700720439	2	BUSH	BAGUE BOCCOLA	BUCHSE CASQUILLO
15	700720473	1	LOCK	SERRURE SERRATURA	SCHLOSS CERRADURA
16	700720538	1	RING	ANNEAU ANELLO	RING ARO
17	700720478	1	LEVER	LEVIER LEVA	HEBEL PALANCA
18	*Y52316*	1	BUSH	BAGUE BOCCOLA	BUCHSE CASQUILLO
19	700720435	1	RING	ANNEAU ANELLO	RING ARO
20	700720471	1	SPRING	RESSORT MOLLA	FEDER MUELLE
21	700720448	1	RIVET	RIVET RIVETTO	NIET REMACHE
22	700720463	1	CYLINDER	CYLINDRE CILINDRO	ZYLINDER CILINDRO
23	700720447	1	RIVET	RIVET RIVETTO	NIET REMACHE
24*	700720436	1	RING	ANNEAU ANELLO	RING ARO
25	700720451	1	GROMMET	PASSE FIL GOMMINO	GUMMITUELLE PASACABLE
26	700720476	2	COVER	COUVERCLE COPERCHIO	DECKEL CUBIERTA

Brake System
Systeme De Freinage
Brems System
Sistea Di Frenata
Sistema De Frenado

60-330

Tandem – Steering Axle – Hydraulic Brakes – Right Side
Tandem – Essieu Direction – Frein Hydraulique – Cote Droit
Tandem – Lenkachse – Hydraulik Bremse – Rechte Seite
Tandem – Assale Sterzo – Freni Idraulico – Lato Destra
Tandem – Eje Direccion – Freno Hydraulico – Lado Derecho

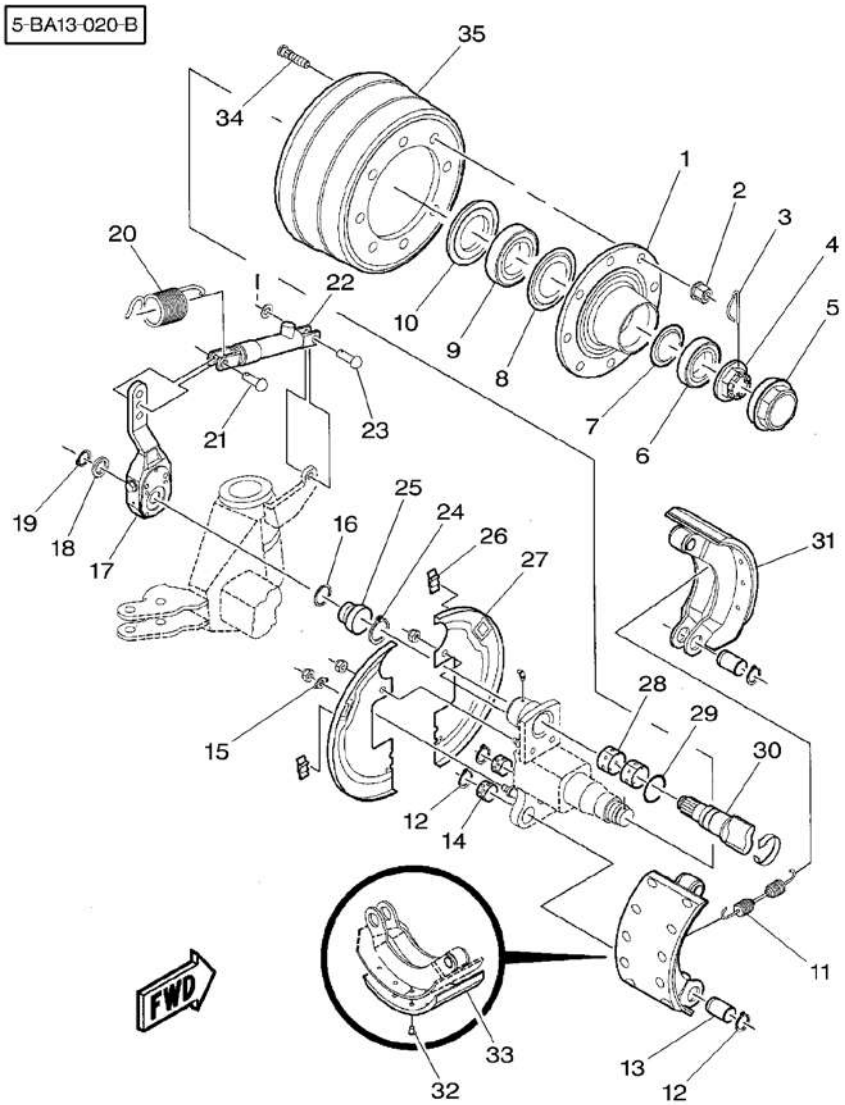

27	700720470			1	COVER	COUVERCLE COPERCHIO	DECKEL CUBIERTA
28	700720438			2	BUSH	BAGUE BOCCOLA	BUCHSE CASQUILLO
29	700720525			1	O RING	JOINT TORIQUE ANELLO OR	O-RING JUNTA TORICA
30	700720543		◀	1	CAMSHAFT	ARBRE A CAMES ALBERO A CAMME	NOCKENWELLE ARBOL DE LEVAS
31	***700720545***			2	BRAKE SHOE	SABOT DE FREIN CEPPO FRENO	BREMSBACKE ZAPATA DE FRENO
32*	700720442	31		1	LINING	GARNITURE FRICT SETTORE ATTRITO	BELAG FORRO
33*	700720440	31		10	RIVET	RIVET RIVETTO	NIET REMACHE
34	***700728135***			8	BOLT	BOULON BULLONE	MASCH.SCHRAUBE PERNO
35	700720527			1	DRUM BRAKE	FREIN TAMBOUR FRENO A TAMBURO	TROMMELBREMSE FRENO DE TAMBOR

Brake System
Systeme De Freinage
Brems System
Sistea Di Frenata
Sistema De Frenado

60-335

Tandem – Steering Axle – Pneumatic Brakes – Right Side
Tandem – Essieu Direction – Frein Pneumatique – Cote Droit
Tandem – Lenkachse – Luftdruck Bremse – Rechte Seite
Tandem – Assale Sterzo – Freni Pneumatico – Lato Destra
Tandem – Eje Direccion – Freno Pneumatico – Lado Derecho

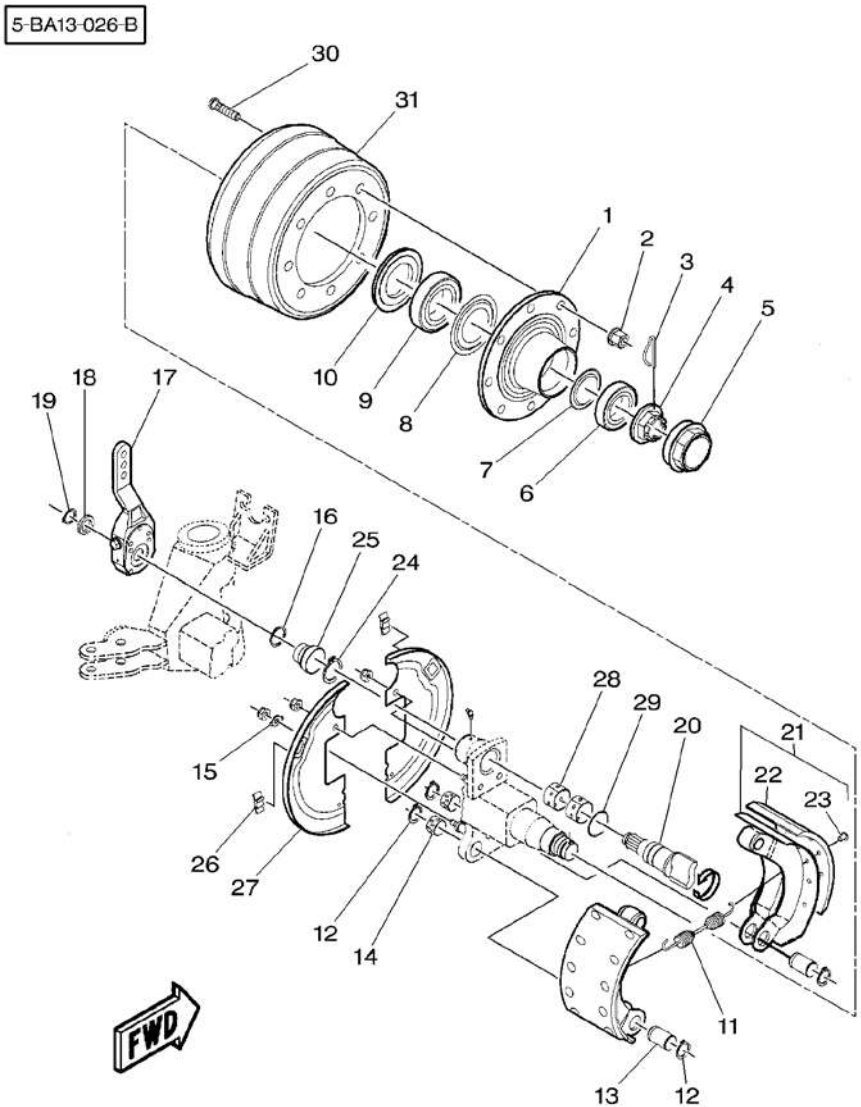

1	700720526		1	HUB	MOYEU MOZZO	NABE CUBO
2	700720424		8	NUT	ECROU DADO	MUTTER TUERCA
3	700728141		1	CLIP	CLIP FERMAGLIO	SCHELLE CRAPA RETEN
4	700728140		1	NUT	ECROU DADO	MUTTER TUERCA
5	700728142		1	CAP	CHAPEAU CAPPELLO	KAPPE TAPA
6	700726369		1	BEARING	COUSSINET CUSCINETTO	LAGER COJINETE
7	700728138		1	RING	ANNEAU ANELLO	RING ARO
8	700728134		1	RING	ANNEAU ANELLO	RING ARO
9	700726370		1	BEARING	COUSSINET CUSCINETTO	LAGER COJINETE
10	700728133		1	SEAL	JOINT ETANCHEITE PARAOLIO	DICHTRING RETEN
11	700720472		1	SPRING	RESSORT MOLLA	FEDER MUELLE
12	700720537		4	RING	ANNEAU ANELLO	RING ARO
13	700720539		2	CLEVIS PIN	AXE PERNO D'ATTACCO	SPLINTBOLZEN BULON CILINDRICO
14	700720439		2	BUSH	BAGUE BOCCOLA	BUCHSE CASQUILLO
15	700720473		1	LOCK	SERRURE SERRATURA	SCHLOSS CERRADURA
16	700720538		1	RING	ANNEAU ANELLO	RING ARO
17	700720478		1	LEVER	LEVIER LEVA	HEBEL PALANCA
18	***Y52316***		1	BUSH	BAGUE BOCCOLA	BUCHSE CASQUILLO
19	700720435		1	RING	ANNEAU ANELLO	RING ARO
20	700720543	◀	1	CAMSHAFT	ARBRE A CAMES ALBERO A CAMME	NOCKENWELLE ARBOL DE LEVAS
21	***700720545***		2	BRAKE SHOE	SABOT DE FREIN CEPPO FRENO	BREMSBACKE ZAPATA DE FRENO
22★	700720442	21	1	LINING	GARNITURE FRICT SETTORE ATTRITO	BELAG FORRO
23★	700720440	21	10	RIVET	RIVET RIVETTO	NIET REMACHE
24★	700720436		1	RING	ANNEAU ANELLO	RING ARO
25	700720451		1	GROMMET	PASSE FIL GOMMINO	GUMMITUELLE PASACABLE
26	700720476		2	COVER	COUVERCLE COPERCHIO	DECKEL CUBIERTA

Brake System Systeme De Freinage Brems System Sistea Di Frenata Sistema De Frenado	60-335	Tandem – Steering Axle – Pneumatic Brakes – Right Side Tandem – Essieu Direction – Frein Pneumatique – Cote Droit Tandem – Lenkachse – Luftdruck Bremse – Rechte Seite Tandem – Assale Sterzo – Freni Pneumatico – Lato Destra Tandem – Eje Direccion – Freno Pneumatico – Lado Derecho

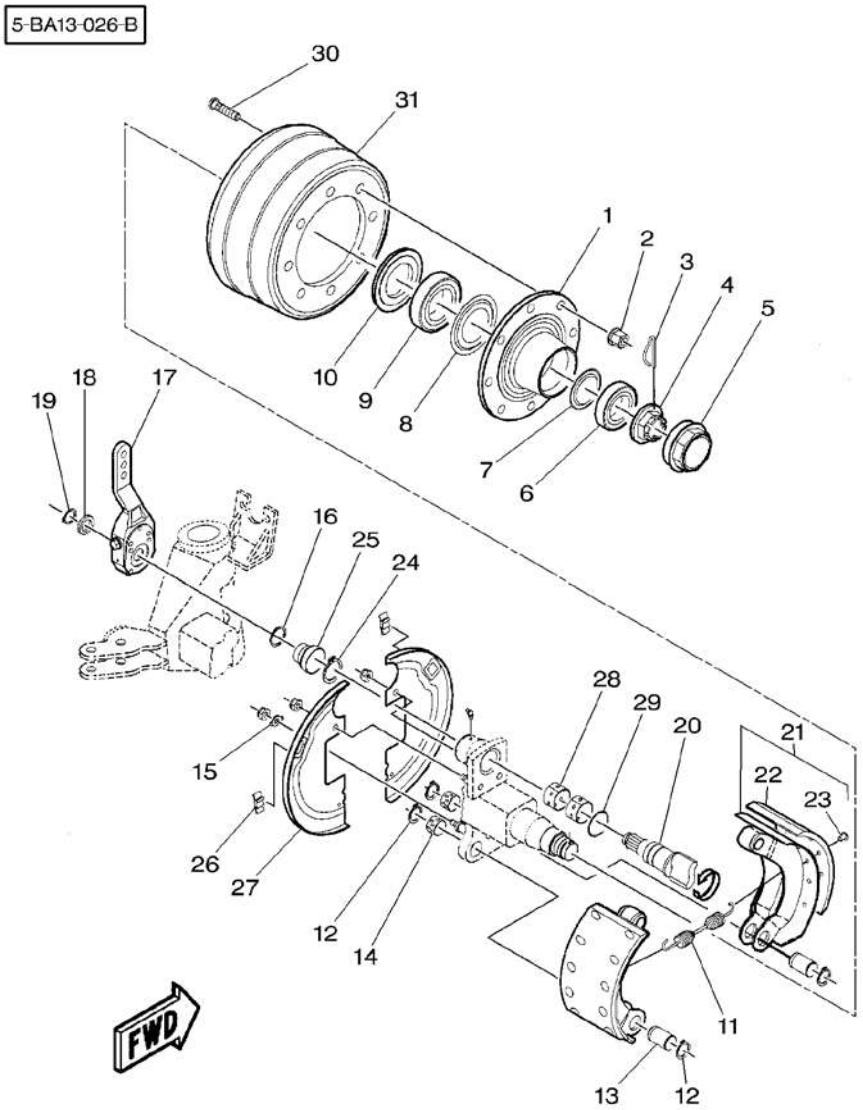

27	700720470	1	COVER	COUVERCLE COPERCHIO	DECKEL CUBIERTA
28	700720438	2	BUSH	BAGUE BOCCOLA	BUCHSE CASQUILLO
29	700720525	1	O RING	JOINT TORIQUE ANELLO OR	O–RING JUNTA TORICA
30	***700728135***	8	BOLT	BOULON BULLONE	MASCH.SCHRAUBE PERNO
31	700720527	1	DRUM BRAKE	FREIN TAMBOUR FRENO A TAMBURO	TROMMELBREMSE FRENO DE TAMBOR

70

Hydraulic Hydraulique Hydraulik Idraulica Hidraulico	70-5	Front Avant Vorne Anteriore Delantero

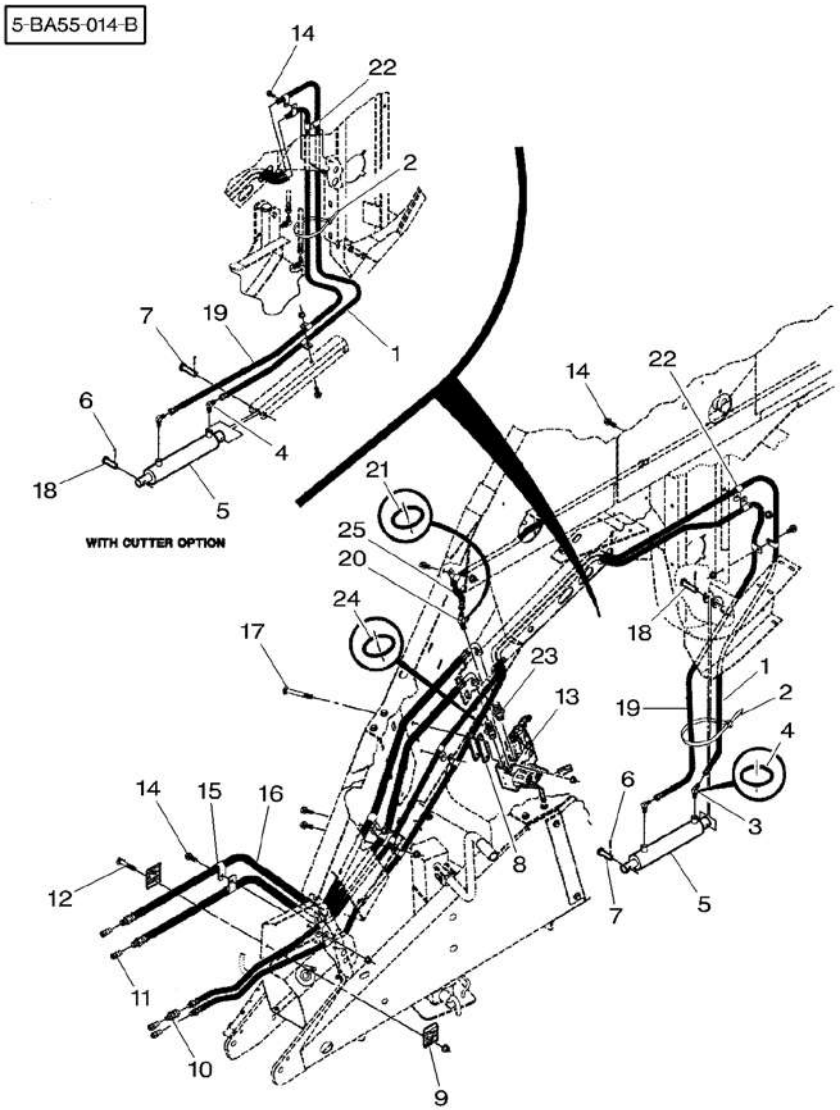

1	700716857		1	HYDRAULIC HOSE	DURITE HYDRAULIC TUBO HYDRAULICO	HYDRAUL.SCHLAUCH TUBO HYDRAULICO
2*	70937133		1	TIE	ATTACHE TRAVERSA ATTACCO	KUPPL.STANGE BARRA DE ENLACE
3*	**357197X91**		2	ELBOW	COUDE GOMITO	WINKELSTUECK CODO
4*	***831452M1***	3	1	O RING	JOINT TORIQUE ANELLO OR	O-RING JUNTA TORICA
5*	700712122	70-25 No 1	1	CYLINDER	CYLINDRE CILINDRO	ZYLINDER CILINDRO
6*	354070X1	5/32" X 1-1/4	2	PIN	GOUPILLE PERNO	BOLZEN PASADOR
7*	Y763227	5/8" X 3	1	PIN	GOUPILLE PERNO	BOLZEN PASADOR
8*	700134434P		2	PLATE	PLAQUE PIASTRA	PLATTE PLATO
9	700129085		2	CLAMP	COLLIER FASCETTA	HALTESCHELLE ABRAZADERA
10	7846389		1	RESTRICTOR	LIMITEUR LIMITATORE	SPARDUESE LIMITADOR
11*	700724190		4	GREASER	GRAISSEUR INGRASSATORE	FETTNIPPEL ENGRASADOR
12*	70931805	3/8"-16 X 2-1/4	1	BOLT	BOULON BULLONE	MASCH.SCHRAUBE PERNO
12*	***Y704734***	3/8"-16	1	TOP LOCKNUT	ECROU FREIN DADO DI TESTA	SELBSTS.MUTTER CONTRATUERCA SUP
13*	700720280	70-15 No 1	1	CONTROL VALVE	VALVE COMMANDE DISTRIBUTORE IDR	STEUERVENTIL VALVULA CONTROL
14*	7883382	3/8"-16 X 1	6	SCREW	VIS VITE	SCHRAUBE TORNILLO
14*	***Y704734***	3/8"-16	6	TOP LOCKNUT	ECROU FREIN DADO DI TESTA	SELBSTS.MUTTER CONTRATUERCA SUP
15	70929160		4	CLAMP	COLLIER FASCETTA	HALTESCHELLE ABRAZADERA
16	700716856		2	HYDRAULIC HOSE	DURITE HYDRAULIC TUBO HYDRAULICO	HYDRAUL.SCHLAUCH TUBO HYDRAULICO
17*	364970X1	3/8"-16 X 3-1/2	2	BOLT	BOULON BULLONE	MASCH.SCHRAUBE PERNO
17*	***700711238***	3/8"-16	2	NUT	ECROU DADO	MUTTER TUERCA
18*	63495	5/8" X 2-1/2	2	CLIP	CLIP FERMAGLIO	SCHELLE CRAPA RETEN
19*	700716858		1	HYDRAULIC HOSE	DURITE HYDRAULIC TUBO HYDRAULICO	HYDRAUL.SCHLAUCH TUBO HYDRAULICO
20	70922921		1	ELBOW	COUDE GOMITO	WINKELSTUECK CODO
21*	***831452M1***	20	1	O RING	JOINT TORIQUE ANELLO OR	O-RING JUNTA TORICA
22*	70925617		16	CLAMP	COLLIER FASCETTA	HALTESCHELLE ABRAZADERA
23	70921326		2	CONNECTOR	BORNE MORSETTO	DOPPELNIPPEL CONECTOR

Hydraulic Hydraulique Hydraulik Idraulica Hidraulico	70-5	Front Avant Vorne Anteriore Delantero

5-BA55-014-B

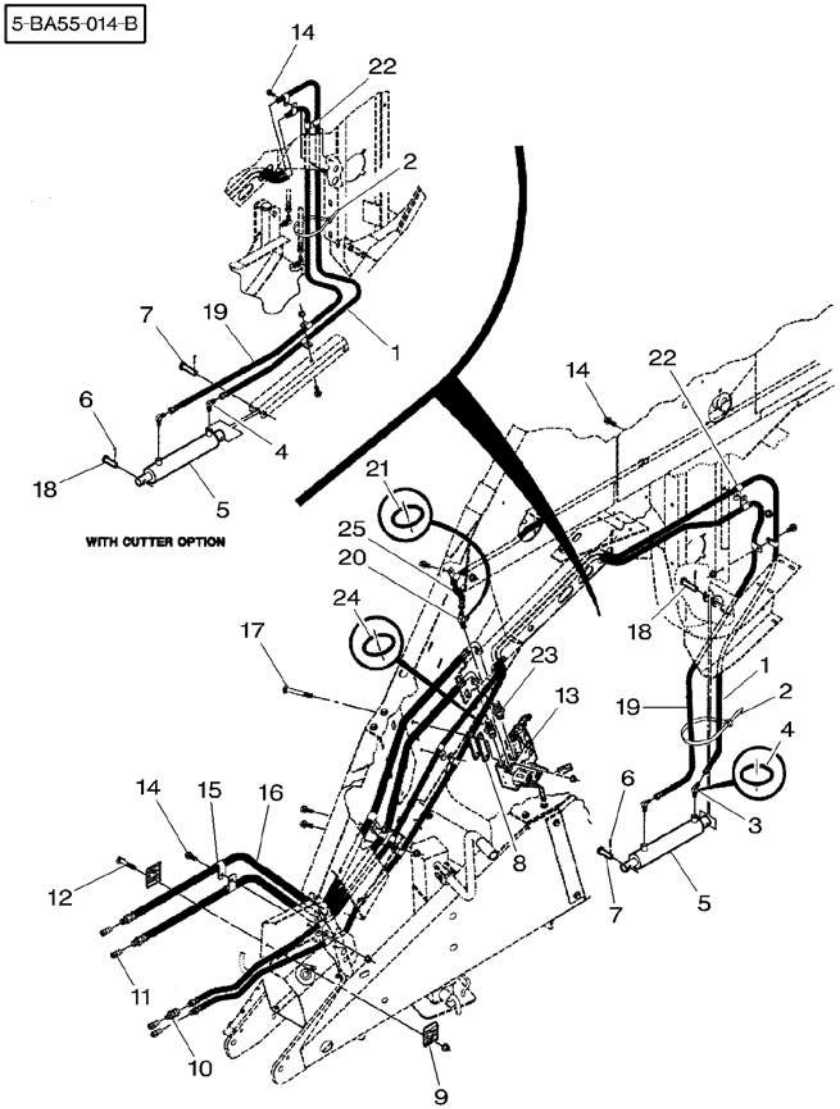

24 * *70921205*	23	1 O RING	JOINT TORIQUE ANELLO OR	O-RING JUNTA TORICA
25 * 700716854		1 HYDRAULIC HOSE	DURITE HYDRAULIC TUBO HYDRAULICO	HYDRAUL.SCHLAUCH TUBO HYDRAULICO

Hydraulic
Hydraulique
Hydraulik
Idraulica
Hidraulico

70-10

Front – With Electronic Control
Avant – Avec Controle Electronique
Vorne – Mit Elektronische Steuerung
Anteriore – Con Controllo Elettronico
Delantero – Con Control Electronico

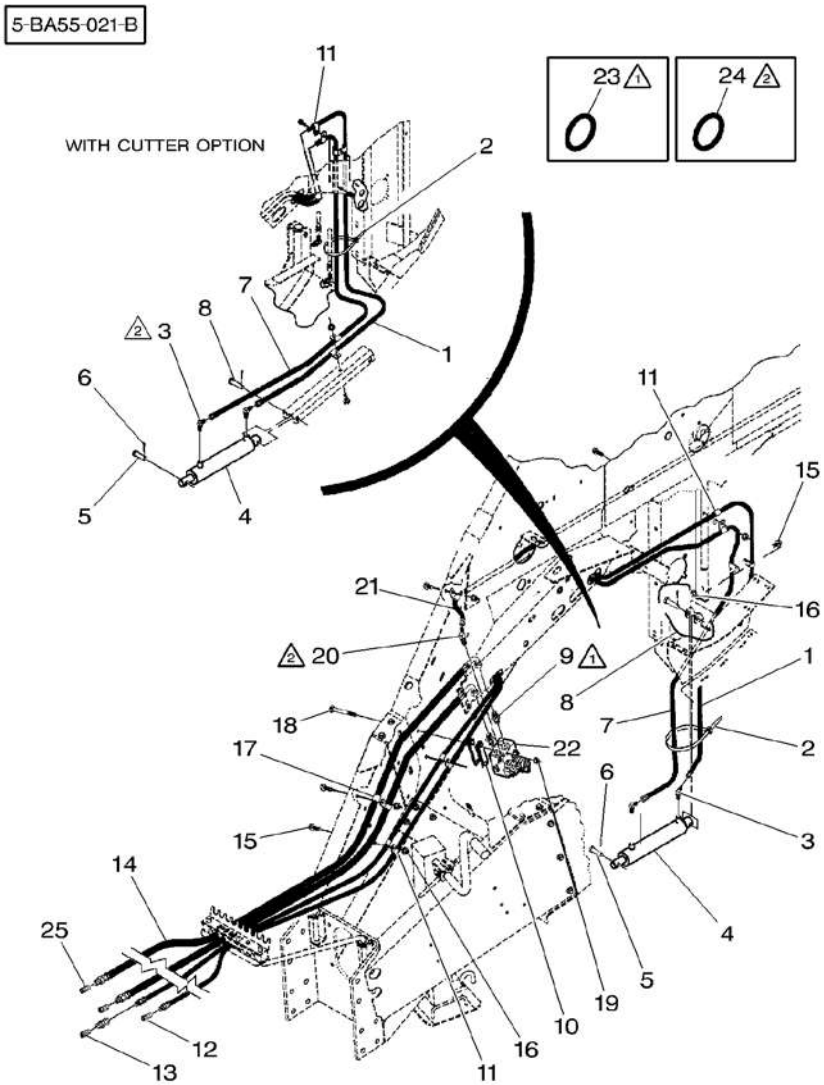

1 ✱	700716857		1	HYDRAULIC HOSE DURITE HYDRAULIC TUBO HYDRAULICO	HYDRAUL.SCHLAUCH TUBO HYDRAULICO
2 ✱	70937133		1	TIE ATTACHE TRAVERSA ATTACCO	KUPPL.STANGE BARRA DE ENLACE
3 ✱	**357197X91**		2	ELBOW COUDE GOMITO	WINKELSTUECK CODO
4 ✱	700712122	70–25 No 1	1	CYLINDER CYLINDRE CILINDRO	ZYLINDER CILINDRO
5 ✱	Y763227	5/8" X 3	1	PIN GOUPILLE PERNO	BOLZEN PASADOR
6 ✱	354070X1	5/32" X 1–1/4	2	PIN GOUPILLE PERNO	BOLZEN PASADOR
7 ✱	700716858		1	HYDRAULIC HOSE DURITE HYDRAULIC TUBO HYDRAULICO	HYDRAUL.SCHLAUCH TUBO HYDRAULICO
8 ✱	63495	5/8" X 2–1/2	1	CLIP CLIP FERMAGLIO	SCHELLE CRAPA RETEN
9 ✱	70921326		2	CONNECTOR BORNE MORSETTO	DOPPELNIPPEL CONECTOR
10 ✱	700134434P		2	PLATE PLAQUE PIASTRA	PLATTE PLATO
11 ✱	70925617		8	CLAMP COLLIER FASCETTA	HALTESCHELLE ABRAZADERA
12 ✱	70594977		2	COUPLER ACCOUPLEMENT ACCOPPIATORE	KUPPLUNGSSTUECK ACOPLADOR
13 ✱	7846389		1	RESTRICTOR LIMITEUR LIMITATORE	SPARDUESE LIMITADOR
14 ✱	700716856		2	HYDRAULIC HOSE DURITE HYDRAULIC TUBO HYDRAULICO	HYDRAUL.SCHLAUCH TUBO HYDRAULICO
15 ✱	7883382	3/8"–16 X 1	5	SCREW VIS VITE	SCHRAUBE TORNILLO
16 ✱	***Y704734***	3/8"–16	5	TOP LOCKNUT ECROU FREIN DADO DI TESTA	SELBSTS.MUTTER CONTRATUERCA SUP
17 ✱	70929160		2	CLAMP COLLIER FASCETTA	HALTESCHELLE ABRAZADERA
18 ✱	364970X1	3/8"–16 X 3–1/2	2	BOLT BOULON BULLONE	MASCH.SCHRAUBE PERNO
19 ✱	***700711238***	3/8"–16	2	NUT ECROU DADO	MUTTER TUERCA
20 ✱	70922921		1	ELBOW COUDE GOMITO	WINKELSTUECK CODO
21 ✱	700716854		1	HYDRAULIC HOSE DURITE HYDRAULIC TUBO HYDRAULICO	HYDRAUL.SCHLAUCH TUBO HYDRAULICO
22 ✱	700725829	70–20 No 1	1	CONTROL VALVE VALVE COMMANDE DISTRIBUTORE IDR	STEUERVENTIL VALVULA CONTROL
23 ✱	***70921205***		X	O RING JOINT TORIQUE ANELLO OR	O–RING JUNTA TORICA
24 ✱	***831452M1***		X	O RING JOINT TORIQUE ANELLO OR	O–RING JUNTA TORICA
25 ✱	700724190		2	GREASER GRAISSEUR INGRASSATORE	FETTNIPPEL ENGRASADOR

Hydraulic Flow Control	**Valve**	**70-15**	**Bale Tensioner**
Commande Hydraulique	**Valve**		**Chambre De Compression**
Hydraulischer Antrieb	**Ventil**		**Kanalverstellung**
Mando Hidraulico	**Valvola**		**Tenditore Balle**
Comando Idraulico	**Valvula**		**Tensor Paca**

5-BA57-006-B

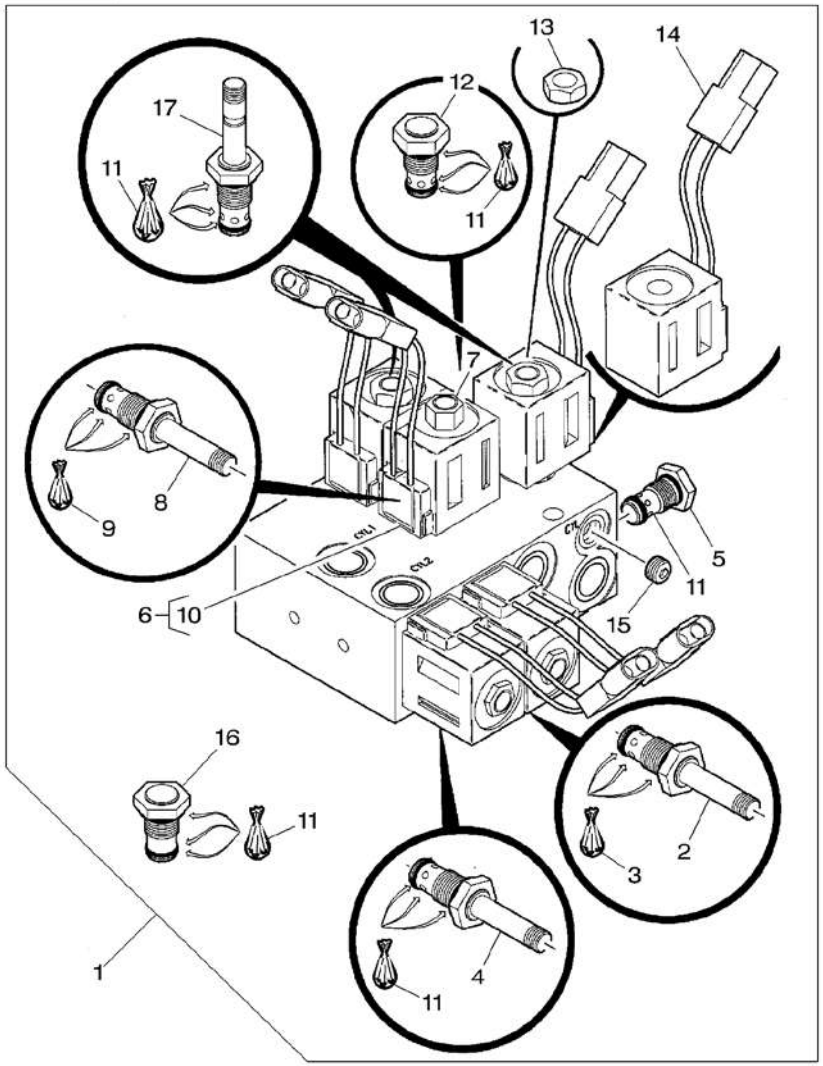

1*	700720280		1	CONTROL VALVE	VALVE COMMANDE DISTRIBUTORE IDR	STEUERVENTIL VALVULA CONTROL
2*	700706611	1	1	CARTRIDGE	CARTOUCHE CARTUCCIA	PATRONE ELEMENTO FILTRO
3*	700720058	1	1	KIT, SEAL	JEU ETANCHEITE KIT TENUTA	DICHTRINGSATZ RETENES JUEGO
4*	700706610	1	1	CARTRIDGE	CARTOUCHE CARTUCCIA	PATRONE ELEMENTO FILTRO
5*	700715659	1	1	VALVE CHECK	VALVE CONTROLE VALVOLA RITEGNO	PRUEFVENTIL VALVULA D CIERRE
6*	700720040	1	1	PRESSURE VALVE	VALVE VALVOLA PRESSION	DRUCKVENTIL VALVULA PRESION
7*	700706156	6	1	NUT	ECROU DADO	MUTTER TUERCA
8*	700706155	6	1	CARTRIDGE	CARTOUCHE CARTUCCIA	PATRONE ELEMENTO FILTRO
9*	***700715662***	6	1	KIT, SEAL	JEU ETANCHEITE KIT TENUTA	DICHTRINGSATZ RETENES JUEGO
10*	***700720041***	6	1	SOLENOID	SOLENOIDE SOLENOIDE	MAGNETSPULE SOLENOIDE
11*	***700715662***	6	6	KIT, SEAL	JEU ETANCHEITE KIT TENUTA	DICHTRINGSATZ RETENES JUEGO
12*	700707832	1	1	VALVE	SOUPAPE VALVOLA	VENTIL VALVULA
13*	700706151	1	4	NUT	ECROU DADO	MUTTER TUERCA
14*	***700720041***	6	4	SOLENOID	SOLENOIDE SOLENOIDE	MAGNETSPULE SOLENOIDE
15*	700706609	1	1	PLUG	BOUCHON TAPPO	VERSCHL.STOPFEN TAPON
16*	700706602	1	1	PLUG	BOUCHON TAPPO	VERSCHL.STOPFEN TAPON
17*	***700706153***	1	2	CARTRIDGE	CARTOUCHE CARTUCCIA	PATRONE ELEMENTO FILTRO

Hydraulic Flow Control	**Valve**	**70-20**	**Bale Tensioner – With Electronic Control**
Commande Hydraulique	**Valve**		**Chambre De Compression – Avec Controle Electronique**
Hydraulischer Antrieb	**Ventil**		**Kanalverstellung – Mit Elektronische Steuerung**
Mando Hidraulico	**Valvola**		**Tenditore Balle – Con Controllo Elettronico**
Comando Idraulico	**Valvula**		**Tensor Paca – Con Control Electronico**

5-BA57-011-B

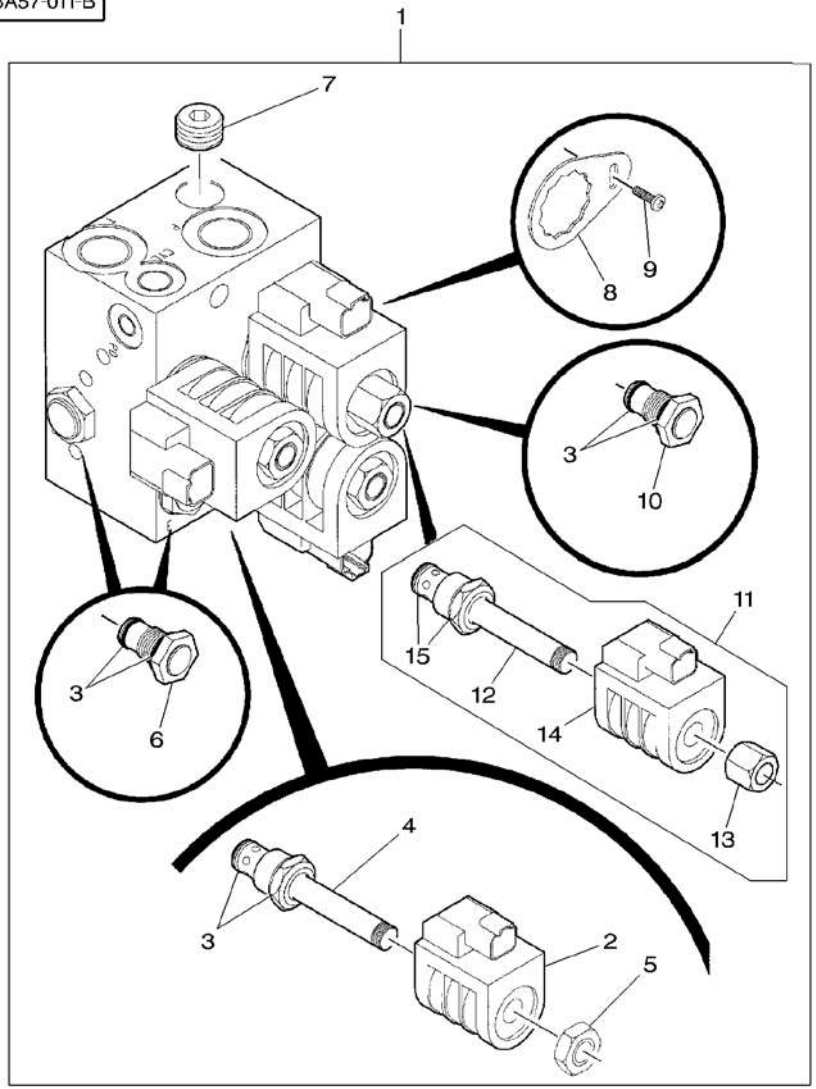

1*	700725829			1	CONTROL VALVE	VALVE COMMANDE DISTRIBUTORE IDR	STEUERVENTIL VALVULA CONTROL
2*	***700725827***	1		3	COIL	BOBINE BOBINA	KNICKSCHUTZFEDER BOBINA
3*	***700715929***	1		5	KIT, SEAL	JEU ETANCHEITE KIT TENUTA	DICHTRINGSATZ RETENES JUEGO
4*	***1079721M1***	1		2	SOLENOID VALVE	VALVE SOLENOIDE VALVOLASOLENOIDE	MAGNETVENTIL VALVULA SOLENOID
5*	700712821	1		2	NUT	ECROU DADO	MUTTER TUERCA
6*	700712917	1		2	VALVE CHECK	VALVE CONTROLE VALVOLA RITEGNO	PRUEFVENTIL VALVULA D CIERRE
7*	700719201	1		1	PLUG	BOUCHON TAPPO	VERSCHL.STOPFEN TAPON
8*	700716903	1		3	PLATE	PLAQUE PIASTRA	PLATTE PLATO
9*	700704132	1	No 6–32 X 3/8	2	SCREW	VIS VITE	SCHRAUBE TORNILLO
10*	700712924	1		1	PLUG	BOUCHON TAPPO	VERSCHL.STOPFEN TAPON
11*	700725954	1		1	CARTRIDGE	CARTOUCHE CARTUCCIA	PATRONE ELEMENTO FILTRO
12*	700712823	11		1	SOLENOID	SOLENOIDE SOLENOIDE	MAGNETSPULE SOLENOIDE
13*	700712824	11		1	NUT	ECROU DADO	MUTTER TUERCA
14*	***700725827***	11		1	COIL	BOBINE BOBINA	KNICKSCHUTZFEDER BOBINA
15*	***700715929***	11		3	KIT, SEAL	JEU ETANCHEITE KIT TENUTA	DICHTRINGSATZ RETENES JUEGO

Hydraulic Cylinder
Verin Hydraulique
Hydraulikzylinder
Cilindros Idraulico
Cilindro Hidraulico

70-25

5-BA45-001-A

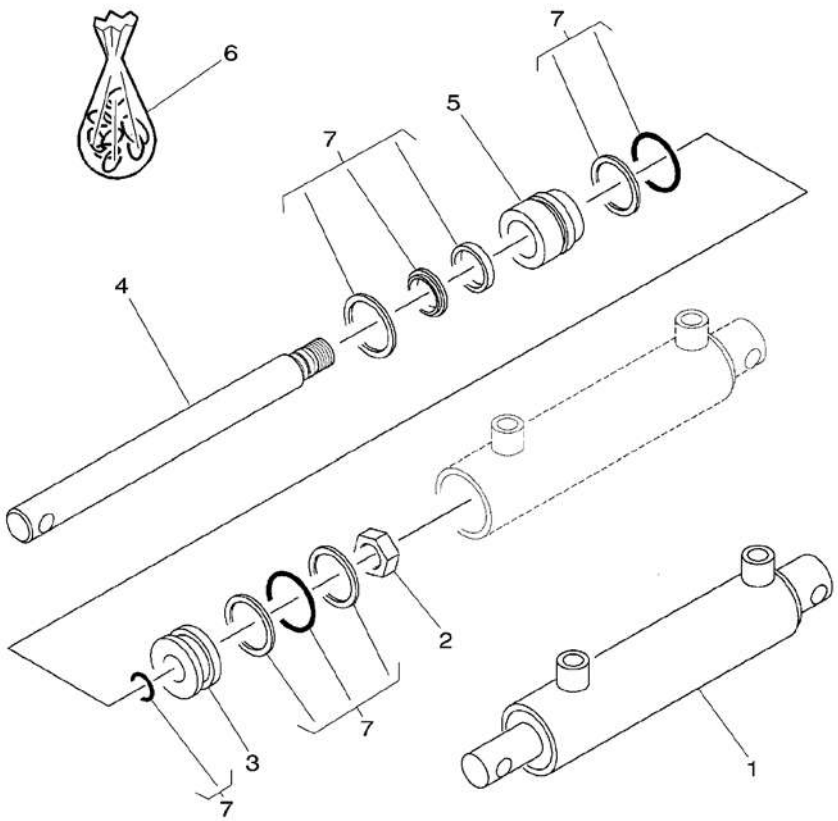

1	700712122		1 CYLINDER	CYLINDRE CILINDRO	ZYLINDER CILINDRO
2*	700707418	1 7/8"-14	1 NUT	ECROU DADO	MUTTER TUERCA
3	700707419	1	1 PISTON	PISTON PISTONE	KOLBEN PISTON
4	700709465	1	1 ROD	TRINGLE ASTA	STANGE VARILLA
5	700711112	1	1 GUIDE	GUIDE GUIDA	FUEHRUNG GUIA
6	***700711114***	1	1 KIT, SEAL	JEU ETANCHEITE KIT TENUTA	DICHTRINGSATZ RETENES JUEGO
7		REF. 6	1 GASKET	JOINT GUARNIZIONE	DICHTSCHEIBE EMPAQUETADURA.

Hydraulic Hydraulique Hydraulik Idraulica Hidraulico	70-30	Bale Tensioner Chambre De Compression Kanalverstellung Tenditore Balle Tensor Paca

5-BA55-015-B

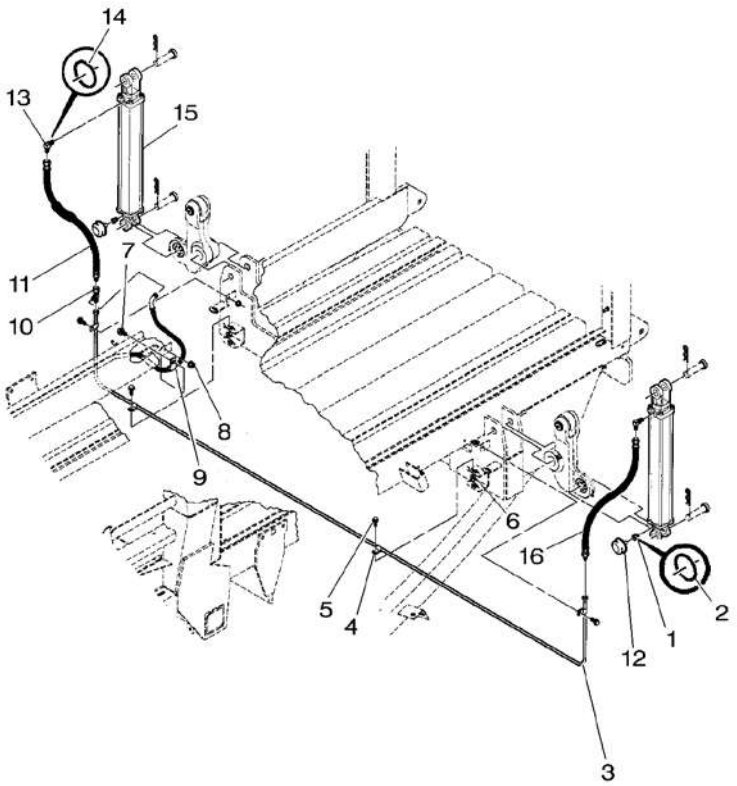

1	8046724		2	ADAPTOR	ADAPTATEUR ADATTATORE ADAPTADOR REDUZIERNIPPEL
2*	*70921349*	1	2	O RING	JOINT TORIQUE ANELLO OR O-RING JUNTA TORICA
3	700706392		1	TUBE	TUBE TUBO ROHR TUBO
4*	70928931		4	CLAMP	COLLIER FASCETTA HALTESCHELLE ABRAZADERA
5*	7883325	5/16"-18 X 3/4	4	SCREW	VIS VITE SCHRAUBE TORNILLO
6*	Y704726	5/16"-18	4	TOP LOCKNUT	ECROU FREIN DADO DI TESTA SELBSTS.MUTTER CONTRATUERCA SUP
7*	*7883374*	3/8"-16 X 3/4	2	SCREW	VIS VITE SCHRAUBE TORNILLO
8*	*Y704734*	3/8"-16	2	TOP LOCKNUT	ECROU FREIN DADO DI TESTA SELBSTS.MUTTER CONTRATUERCA SUP
9	70925617		2	CLAMP	COLLIER FASCETTA HALTESCHELLE ABRAZADERA
10	70921297		1	TEEPIECE	TE RACCORDO A T T-STUECK PIEZA EN T
11*	700716853		1	HYDRAULIC HOSE	DURITE HYDRAULIC TUBO HYDRAULICO HYDRAUL.SCHLAUCH TUBO HYDRAULICO
12	*8799280*		2	FILTER	FILTRE FILTRO FILTRO
13	70923905		2	ELBOW	COUDE GOMITO WINKELSTUECK CODO
14*	*70921349*	13	2	O RING	JOINT TORIQUE ANELLO OR O-RING JUNTA TORICA
15	700715969	70-35 No 1	2	HYDRAULIC, CYLIN	VERIN HYDRAULI. CILINDRO IDRAULI HYDRAULIK ZILIND CILINDRO IDRAULI
16*	700716853		1	HYDRAULIC HOSE	DURITE HYDRAULIC TUBO HYDRAULICO HYDRAUL.SCHLAUCH TUBO HYDRAULICO

Hydraulic Cylinder
Verin Hydraulique
Hydraulikzylinder
Cilindros Idraulico
Cilindro Hidraulico

70-35

5-BA45-009-A

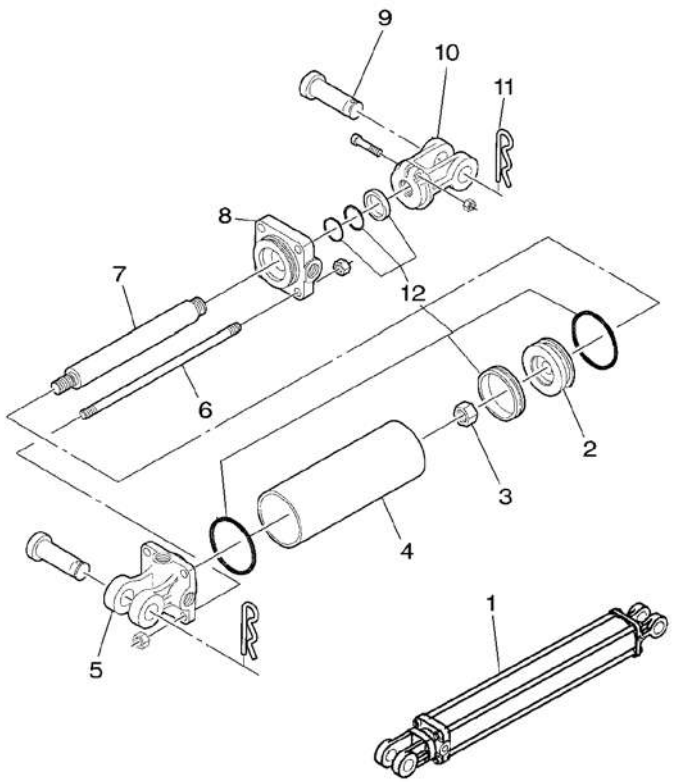

1	700715969		1	HYDRAULIC, CYLIN	VERIN HYDRAULI. CILINDRO IDRAULI	HYDRAULIK ZILIND CILINDRO IDRAULI
2	700720179	1	1	PISTON	PISTON PISTONE	KOLBEN PISTON
3*	367550X1	1	1	NUT	ECROU DADO	MUTTER TUERCA
4	700720068	1	1	TUBE	TUBE TUBO	ROHR TUBO
5*	528516	1	1	CLEVIS	CHAPE GANCIO D'ATTACCO	GABELSTUECK GANCHO SEGURI.
6	700720072	1	4	TIE ROD	TRINGLERIE TIRANTE	ZUGSTANGE BRAZO DE ENLACE
7	700720075	1	1	CYLINDER ROD	TIGE DE VERIN ASTA CILINDRO	KOLBENSTANGE BIELA DE CILINDR
8	700720071	1	1	PISTON HEAD	TETE DE PISTON TESTA PISTONE	KOLBENBODEN CABEZA DE PISTON
9*	763201	1 1" X 3-1/2	2	CLIP	CLIP FERMAGLIO	SCHELLE CRAPA RETEN
10	1043728M91	1	1	ROD	TRINGLE ASTA	STANGE VARILLA
11*	98-2107	1	2	PIN	GOUPILLE PERNO	BOLZEN PASADOR
12	***700720178***	1	1	KIT, SEAL	JEU ETANCHEITE KIT TENUTA	DICHTRINGSATZ RETENES JUEGO

Hydraulic
Hydraulique
Hydraulik
Idraulica
Hidraulico

70-40

Bale Ejector
Ejecteur De Balle
Auswerferarm Der Ballen
Espulsor Di Bale
Brazo Expulsor De Las Pacas

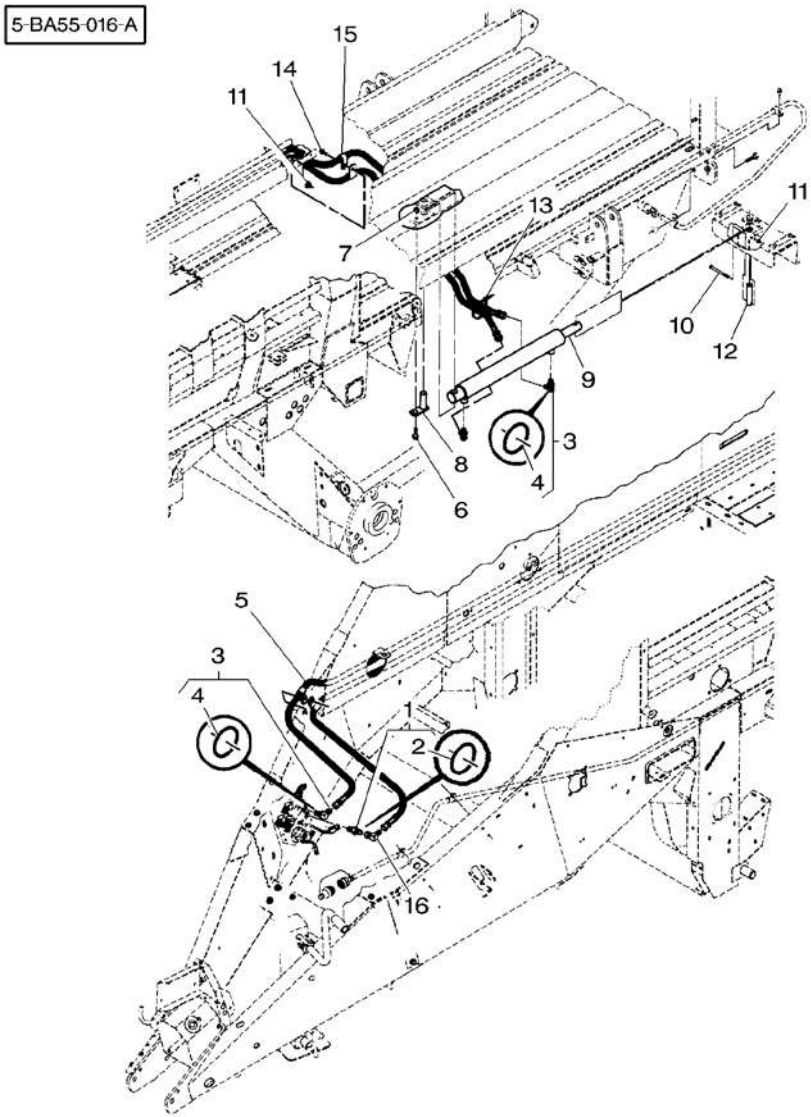

1	846337		1 CONNECTOR	BORNE MORSETTO	DOPPELNIPPEL CONECTOR
2	*70921349*	1	1 O RING	JOINT TORIQUE ANELLO OR	O-RING JUNTA TORICA
3*	70935781		3 ELBOW	COUDE GOMITO	WINKELSTUECK CODO
4*	*70921349*	3	1 O RING	JOINT TORIQUE ANELLO OR	O-RING JUNTA TORICA
5	1714708		2 HOSE	DURITE TUBO FLESSIBILE	SCHLAUCH FLEXIBLE
6*	7883432	1/2"-13 X 1-3/4	1 SCREW	VIS VITE	SCHRAUBE TORNILLO
7*	*Y704742*	1/2"-13	1 TOP LOCKNUT	ECROU FREIN DADO DI TESTA	SELBSTS.MUTTER CONTRATUERCA SUP
8*	700129696		1 PIN	GOUPILLE PERNO	BOLZEN PASADOR
9	700713998	70-55 No 1	1 CYLINDER	CYLINDRE CILINDRO	ZYLINDER CILINDRO
10*	*354636X1*	3/8"-16 X 4-1/2	1 BOLT UNC	BOULON UNC BULLONE UNC	MASCH.SCHRB.UNC PERNO UNC
11*	*700711238*	3/8"-16	3 NUT	ECROU DADO	MUTTER TUERCA
12*	700129699		1 PIN	GOUPILLE PERNO	BOLZEN PASADOR
13	*70925094*		1 CLAMP	COLLIER FASCETTA	HALTESCHELLE ABRAZADERA
14*	7883382	3/8"-16 X 1	2 SCREW	VIS VITE	SCHRAUBE TORNILLO
15	755751		4 CLAMP	COLLIER FASCETTA	HALTESCHELLE ABRAZADERA
16	70921279		1 ELBOW	COUDE GOMITO	WINKELSTUECK CODO

Hydraulic
Hydraulique
Hydraulik
Idraulica
Hidraulico

70-45

Bale Ejector – With Electronic Control
Ejecteur De Balle – Avec Controle Electronique
Auswerferarm Der Ballen – Mit Elektronische Steuerung
Espulsor Di Bale – Con Controllo Elettronico
Brazo Expulsor De Las Pacas – Con Control Electronico

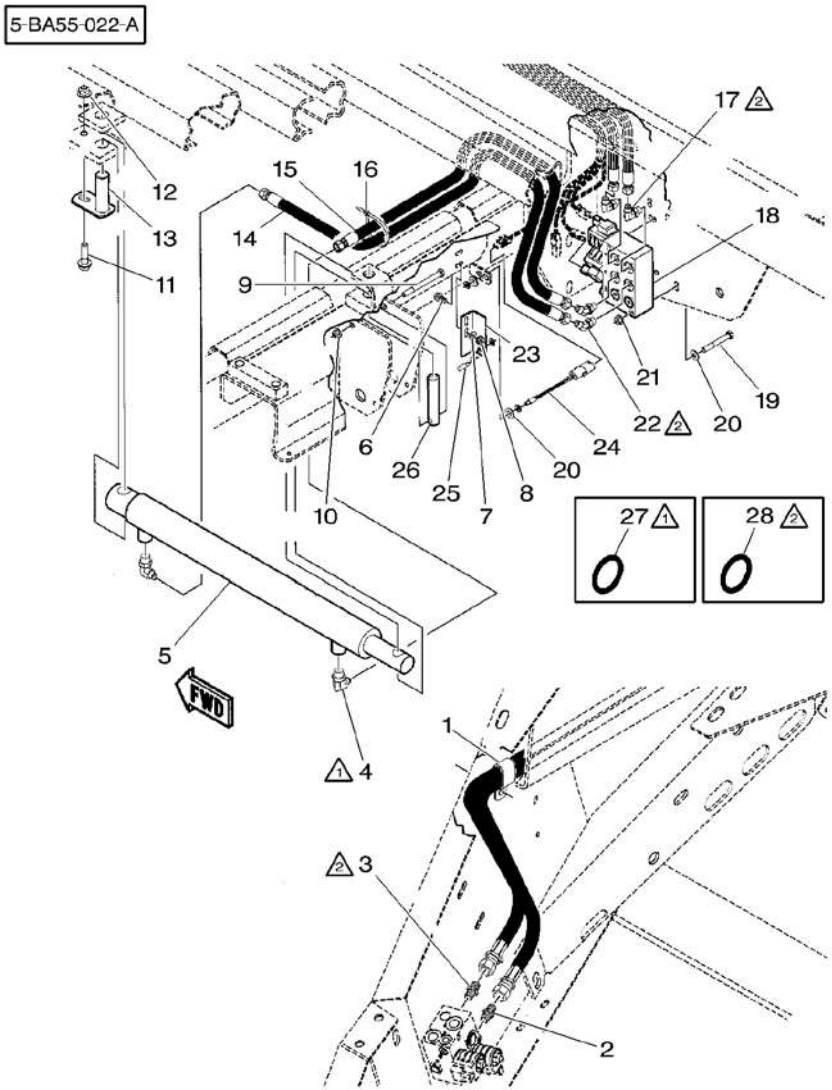

1	700717627	➡ ...	1	CLAMP	COLLIER FASCETTA HALTESCHELLE ABRAZADERA
1	70928148	➡ ...	1	CLAMP	COLLIER FASCETTA HALTESCHELLE ABRAZADERA
2	211468		2	HOSE	DURITE TUBO FLESSIBILE SCHLAUCH FLEXIBLE
3	70922522	9/16"–18	2	CONNECTOR	BORNE MORSETTO DOPPELNIPPEL CONECTOR
4	70923905		2	ELBOW	COUDE GOMITO WINKELSTUECK CODO
5	700713998	70–55 No 1	1	CYLINDER	CYLINDRE CILINDRO ZYLINDER CILINDRO
6	7883325	5/16"–18 X 3/4	2	SCREW	VIS VITE SCHRAUBE TORNILLO
7	Y705525	5/16"	2	WASHER	RONDELLE RONDELLA UNTERLEGSCHEIBE ARANDELA
8	70931277	5/16"–18	2	LOCKNUT	ECROU BLOCAGE AUTOBLOCCANTE FLACHMUTTER CONTRATUERCA
9	354636X1	3/8"–16 X 4–1/2	1	BOLT UNC	BOULON UNC BULLONE UNC MASCH.SCHRB.UNC PERNO UNC
10	Y704734	3/8"–16	1	TOP LOCKNUT	ECROU FREIN DADO DI TESTA SELBSTS.MUTTER CONTRATUERCA SUP
11	7883432	1/2"–13 X 1–3/4	1	SCREW	VIS VITE SCHRAUBE TORNILLO
12	Y704742	1/2"–13	1	TOP LOCKNUT	ECROU FREIN DADO DI TESTA SELBSTS.MUTTER CONTRATUERCA SUP
13	700129696		1	PIN	GOUPILLE PERNO BOLZEN PASADOR
14	7873755		1	HOSE	DURITE TUBO FLESSIBILE SCHLAUCH FLEXIBLE
15	700707386		1	HOSE	DURITE TUBO FLESSIBILE SCHLAUCH FLEXIBLE
16	70937133		1	TIE	ATTACHE TRAVERSA ATTACCO KUPPL.STANGE BARRA DE ENLACE
17	357197X91	9/16"–18 X 90	2	ELBOW	COUDE GOMITO WINKELSTUECK CODO
18	700725830	70–50 No 1	1	PRESSURE VALVE	VALVE VALVOLA PRESSION DRUCKVENTIL VALVULA PRESION
19	354271X1	3/8"–16 X 2–3/4	2	BOLT UNC	BOULON UNC BULLONE UNC MASCH.SCHRB.UNC PERNO UNC
20	Y705533	3/8"	4	WASHER	RONDELLE RONDELLA UNTERLEGSCHEIBE ARANDELA
21	700711238	3/8"–16	2	NUT	ECROU DADO MUTTER TUERCA
22	70922921	9/16"–18 X 45	2	ELBOW	COUDE GOMITO WINKELSTUECK CODO
23	700155844		1	SUPPORT	SUPPORT SUPPORTO LAGERUNG DISPOS.DE SOSTEN
24	700119161		1	SWITCH	INTERRUPTEUR INTERRUTTORE SCHALTER INTERRUPTOR
25	700710211		1	ACTUATOR	DECLENCHEUR AZIONATORE BETAETIGUNG ACTUADOR

Hydraulic Hydraulique Hydraulik Idraulica Hidraulico	70-45	Bale Ejector – With Electronic Control Ejecteur De Balle – Avec Controle Electronique Auswerferarm Der Ballen – Mit Elektronische Steuerung Espulsor Di Bale – Con Controllo Elettronico Brazo Expulsor De Las Pacas – Con Control Electronico

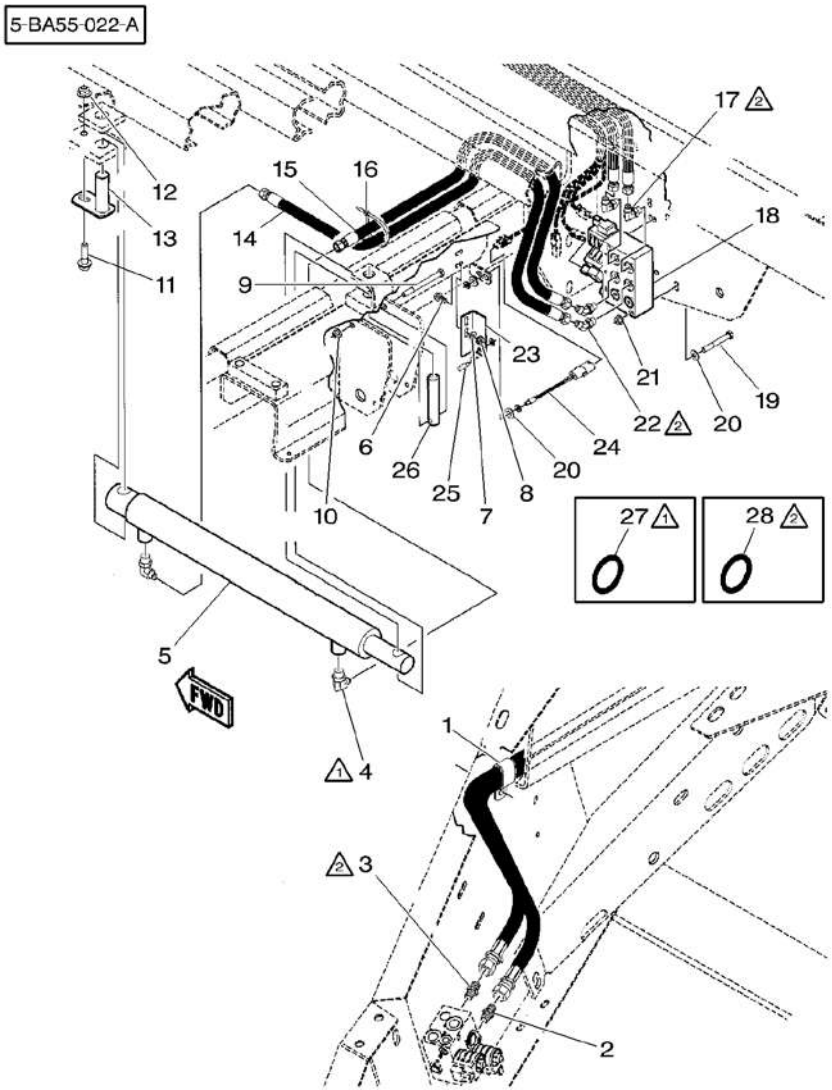

26*	700129699	1	PIN	GOUPILLE PERNO BOLZEN PASADOR
27*	*70921349*	X	O RING	JOINT TORIQUE ANELLO OR O-RING JUNTA TORICA
28*	*831452M1*	X	O RING	JOINT TORIQUE ANELLO OR O-RING JUNTA TORICA

Hydraulic Hydraulique Hydraulik Idraulica Hidraulico	70-50	Valve Valve Ventil Valvola Valvula

5-BA55-023-B

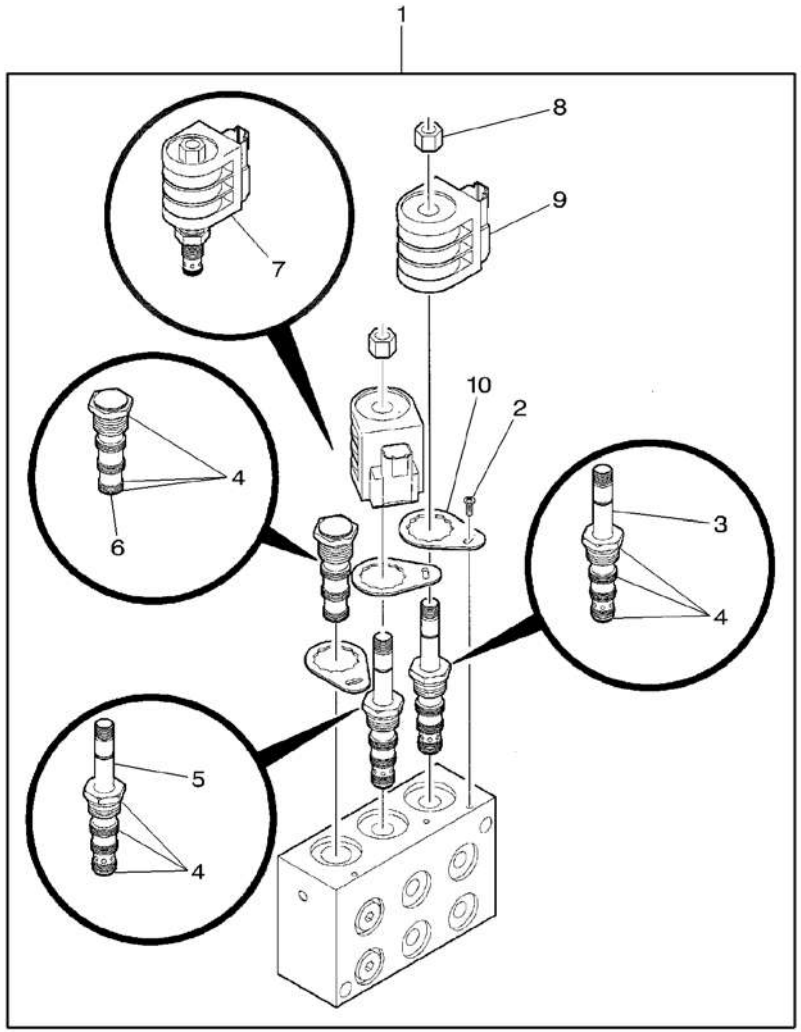

1*	700725830		1	PRESSURE VALVE	VALVE VALVOLA PRESSION	DRUCKVENTIL VALVULA PRESION
2*	700704132	1 No 6–32 X 3/8	3	SCREW	VIS VITE	SCHRAUBE TORNILLO
3*	***1079723M1***	1	1	SOLENOID VALVE	VALVE SOLENOIDE VALVOLASOLENOIDE	MAGNETVENTIL VALVULA SOLENOID
4*	***700712678***	1	3	KIT, SEAL	JEU ETANCHEITE KIT TENUTA	DICHTRINGSATZ RETENES JUEGO
5*	700712920	7	1	PRESSURE VALVE	VALVE VALVOLA PRESSION	DRUCKVENTIL VALVULA PRESION
6*	700720311	1	1	PLUG	BOUCHON TAPPO	VERSCHL.STOPFEN TAPON
7*	700725938	1	1	CARTRIDGE	CARTOUCHE CARTUCCIA	PATRONE ELEMENTO FILTRO
8*	700712821	7	2	NUT	ECROU DADO	MUTTER TUERCA
9*	***700725827***	7	2	COIL	BOBINE BOBINA	KNICKSCHUTZFEDER BOBINA
10*	700716903	1	3	PLATE	PLAQUE PIASTRA	PLATTE PLATO

Hydraulic Cylinder
Verin Hydraulique
Hydraulikzylinder
Cilindros Idraulico
Cilindro Hidraulico

70-55

5 BA45 003 A

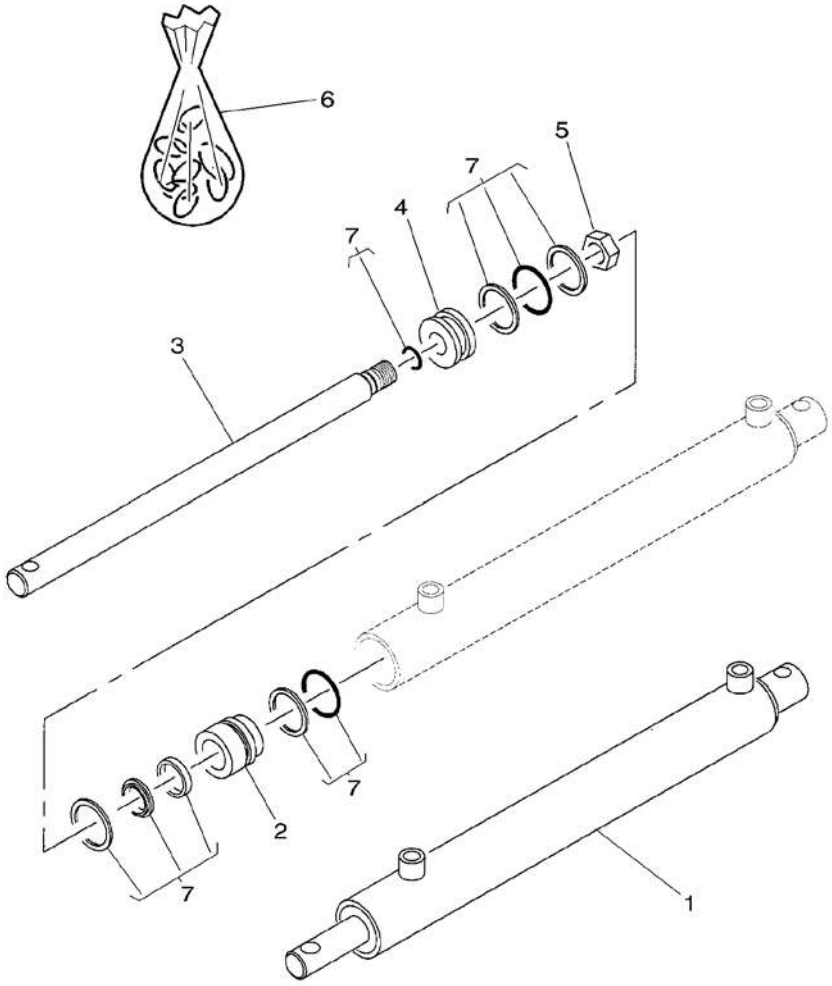

1	700713998		1	CYLINDER	CYLINDRE CILINDRO	ZYLINDER CILINDRO
2	700714384	1	1	GUIDE	GUIDE GUIDA	FUEHRUNG GUIA
3	700714383	1	1	ROD	TRINGLE ASTA	STANGE VARILLA
4	700710421	1	1	PISTON	PISTON PISTONE	KOLBEN PISTON
5*	7774516	1 7/8"–14	1	NUT	ECROU DADO	MUTTER TUERCA
6	***700714382***	1	1	KIT, SEAL	JEU ETANCHEITE KIT TENUTA	DICHTRINGSATZ RETENES JUEGO
7		REF. 6	1	GASKET	JOINT GUARNIZIONE	DICHTSCHEIBE EMPAQUETADURA.

Hydraulic
Hydraulique
Hydraulik
Idraulica
Hidraulico

70-60

Knives
Couteaux
Messerlinge
Lame
Cuchillas

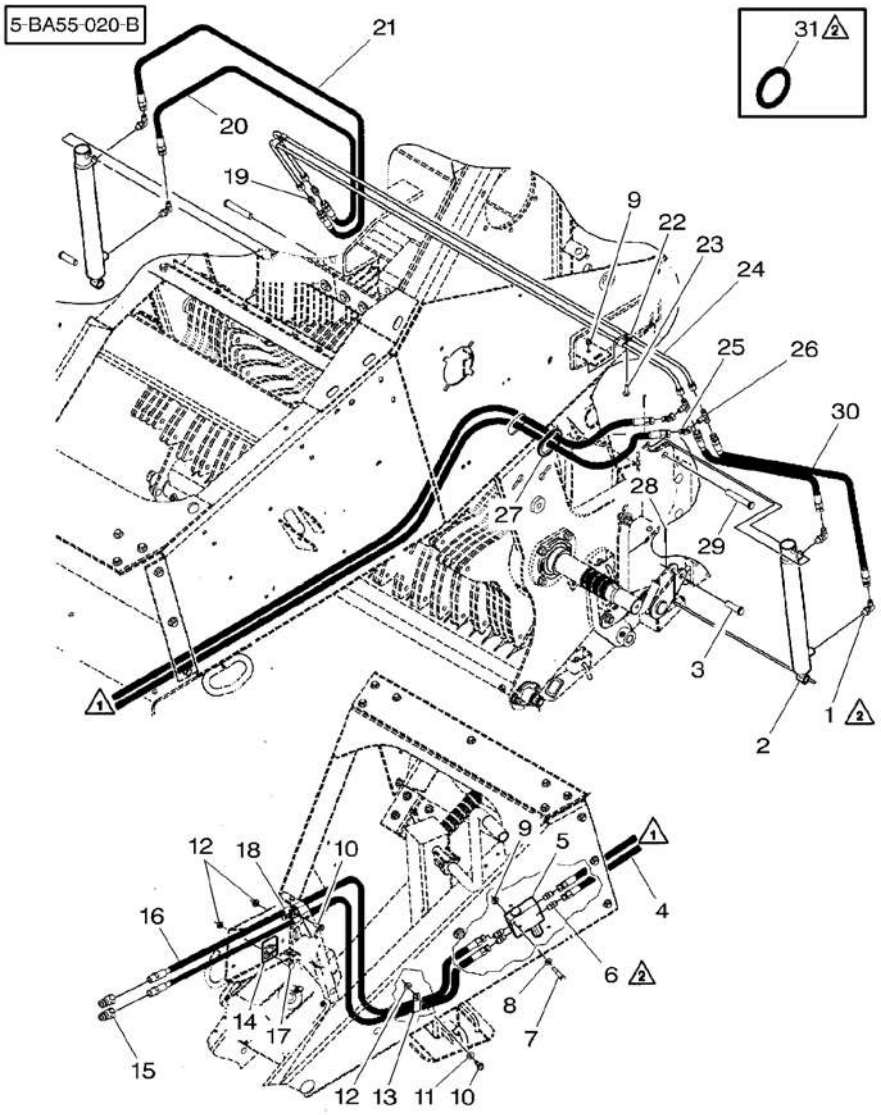

1	**357197X91**	9/16"–18 X 90	**4**	ELBOW	COUDE GOMITO WINKELSTUECK CODO
2	700720351	70–75 No 1	**2**	CYLINDER	CYLINDRE CILINDRO ZYLINDER CILINDRO
3	63693	5/8" X 2	**2**	PIN	GOUPILLE PERNO BOLZEN PASADOR
4	700720306		**2**	HOSE	DURITE TUBO FLESSIBILE SCHLAUCH FLEXIBLE
5	700720347	70–70 No 1	**1**	PRESSURE VALVE	VALVE VALVOLA PRESSION DRUCKVENTIL VALVULA PRESION
6	70922522	9/16"–18	**4**	CONNECTOR	BORNE MORSETTO DOPPELNIPPEL CONECTOR
7	354613X1	5/16"–18 X 2–1/4	**2**	BOLT UNC	BOULON UNC BULLONE UNC MASCH.SCHRB.UNC PERNO UNC
8	390972X1	∅ 8–17 X 1,7	**2**	WASHER METRIC	RONDELLE METR. RONDELLA METRICO SCHEIBE METRISCH ARANDELA METRICO
9	Y704726	5/16"–18	**4**	TOP LOCKNUT	ECROU FREIN DADO DI TESTA SELBSTS.MUTTER CONTRATUERCA SUP
10	7883382	3/8"–16 X 1	**2**	SCREW	VIS VITE SCHRAUBE TORNILLO
11	*Y705533*	3/8"	**1**	WASHER	RONDELLE RONDELLA UNTERLEGSCHEIBE ARANDELA
12	***Y704734***	3/8"–16	**3**	TOP LOCKNUT	ECROU FREIN DADO DI TESTA SELBSTS.MUTTER CONTRATUERCA SUP
13	700717627		**1**	CLAMP	COLLIER FASCETTA HALTESCHELLE ABRAZADERA
14	700129085		**1**	CLAMP	COLLIER FASCETTA HALTESCHELLE ABRAZADERA
15	70594977		**2**	COUPLER	ACCOUPLEMENT ACCOPPIATORE KUPPLUNGSSTUECK ACOPLADOR
16	700720224		**2**	HOSE	DURITE TUBO FLESSIBILE SCHLAUCH FLEXIBLE
17	70923220	3/8"–16 X 1–1/4	**1**	BOLT	BOULON BULLONE MASCH.SCHRAUBE PERNO
18	70925617		**2**	CLAMP	COLLIER FASCETTA HALTESCHELLE ABRAZADERA
19	846477		**2**	UNION	RACCORD RACCORDO VERSCHRAUBUNG RACOR
20	700720358		**1**	HOSE	DURITE TUBO FLESSIBILE SCHLAUCH FLEXIBLE
21	700720222		**2**	HOSE	DURITE TUBO FLESSIBILE SCHLAUCH FLEXIBLE
22	70928931		**4**	CLAMP	COLLIER FASCETTA HALTESCHELLE ABRAZADERA
23	7883333	5/16"–18 X 1	**2**	SCREW	VIS VITE SCHRAUBE TORNILLO
24	700706392		**2**	TUBE	TUBE TUBO ROHR TUBO
25	70929912		**2**	ELBOW	COUDE GOMITO WINKELSTUECK CODO
26	70919087		**2**	TEEPIECE	TE RACCORDO A T T–STUECK PIEZA EN T

Hydraulic Hydraulique Hydraulik Idraulica Hidraulico	70-60	Knives Couteaux Messerlinge Lame Cuchillas

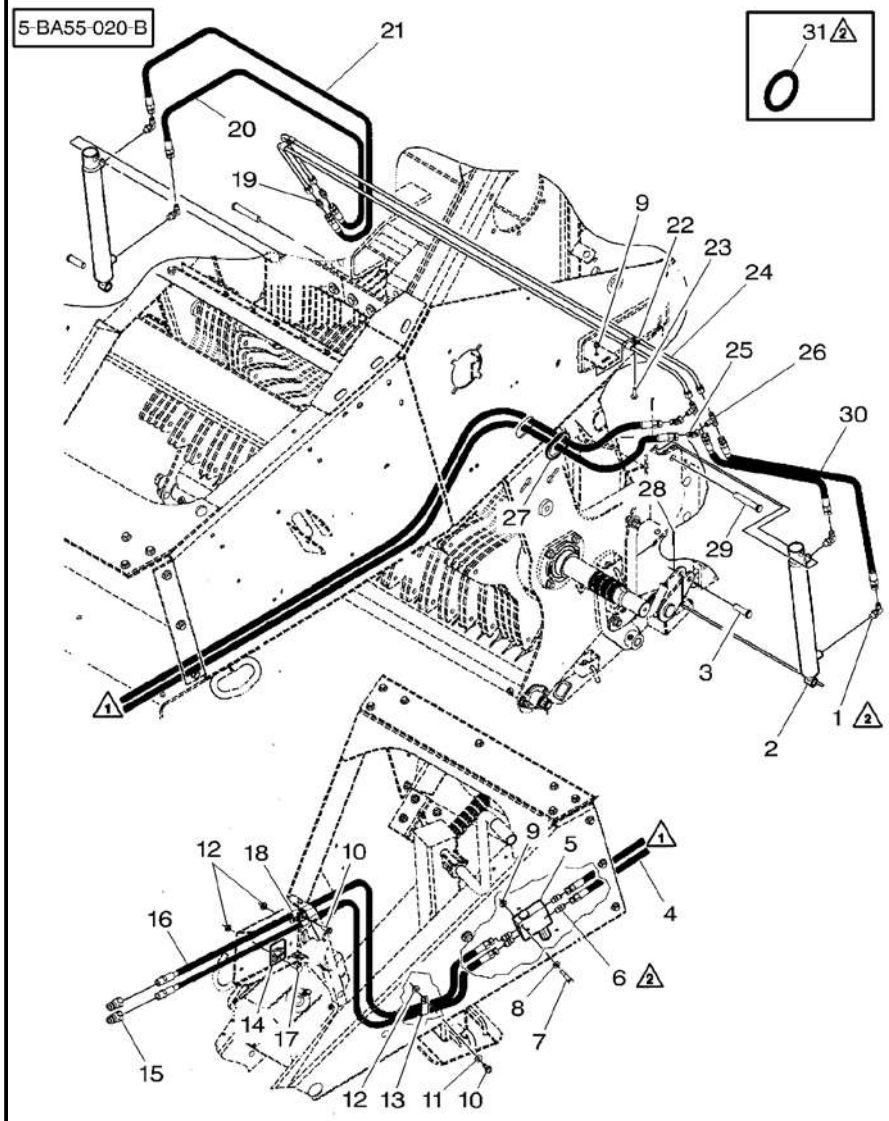

27*	700139077		1 TRIM	ENJOLIVEUR FINITURA	ZIERLEISTE TAPIZADO
28*	354070X1	5/32" X 1-1/4	4 PIN	GOUPILLE PERNO	BOLZEN PASADOR
29*	*700706685*	5/8" X 3-3/4	2 CLEVIS PIN	AXE PERNO D'ATTACCO	SPLINTBOLZEN BULON CILINDRICO
30*	700720223		1 HOSE	DURITE TUBO FLESSIBILE	SCHLAUCH FLEXIBLE
31*	*831452M1*		X O RING	JOINT TORIQUE ANELLO OR	O-RING JUNTA TORICA

Hydraulic Hydraulique Hydraulik Idraulica Hidraulico	70-65	High/Low Hitch – With Cutters Attelage Haut/Bas – Avec Couteaux Hoch/Niedrig Anhaengekupplung – Mit Messer Attacco Alto/Basso – Con Lame Enganche Alto/Bajo – Con Cuchillos

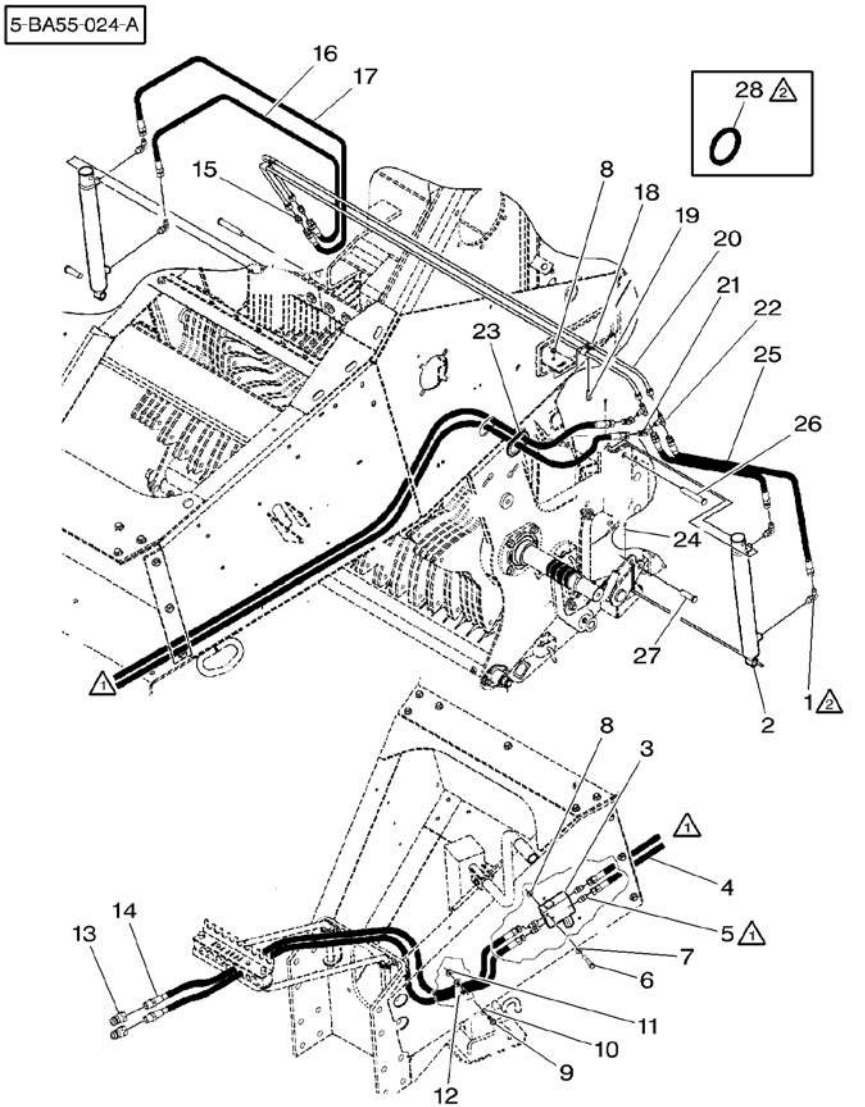

1	***357197X91***	9/16"–18 X 90	**4**	ELBOW COUDE GOMITO	WINKELSTUECK CODO
2	700720351	70–75 No 1	**2**	CYLINDER CYLINDRE CILINDRO	ZYLINDER CILINDRO
3	700720347	70–70 No 1	**1**	PRESSURE VALVE VALVE VALVOLA PRESSION	DRUCKVENTIL VALVULA PRESION
4	700720306		**2**	HOSE DURITE TUBO FLESSIBILE	SCHLAUCH FLEXIBLE
5	70922522	9/16"–18	**4**	CONNECTOR BORNE MORSETTO	DOPPELNIPPEL CONECTOR
6	354613X1	5/16"–18 X 2–1/4	**1**	BOLT UNC BOULON UNC BULLONE UNC	MASCH.SCHRB.UNC PERNO UNC
7	390972X1	∅ 8–17 X 1,7	**1**	WASHER METRIC RONDELLE METR. RONDELLA METRICO	SCHEIBE METRISCH ARANDELA METRICO
8	Y704726	5/16"–18	**3**	TOP LOCKNUT ECROU FREIN DADO DI TESTA	SELBSTS.MUTTER CONTRATUERCA SUP
9	7883382	3/8"–16 X 1	**1**	SCREW VIS VITE	SCHRAUBE TORNILLO
10	*Y705533*	3/8"	**1**	WASHER RONDELLE RONDELLA	UNTERLEGSCHEIBE ARANDELA
11	***Y704734***	3/8"–16	**3**	TOP LOCKNUT ECROU FREIN DADO DI TESTA	SELBSTS.MUTTER CONTRATUERCA SUP
12	700717627		**1**	CLAMP COLLIER FASCETTA	HALTESCHELLE ABRAZADERA
13	70594977		**2**	COUPLER ACCOUPLEMENT ACCOPPIATORE	KUPPLUNGSSTUECK ACOPLADOR
14	700720224		**2**	HOSE DURITE TUBO FLESSIBILE	SCHLAUCH FLEXIBLE
15	846477		**2**	UNION RACCORD RACCORDO	VERSCHRAUBUNG RACOR
16	700720358		**1**	HOSE DURITE TUBO FLESSIBILE	SCHLAUCH FLEXIBLE
17	700720222		**2**	HOSE DURITE TUBO FLESSIBILE	SCHLAUCH FLEXIBLE
18	70928931		**4**	CLAMP COLLIER FASCETTA	HALTESCHELLE ABRAZADERA
19	7883333	5/16"–18 X 1	**2**	SCREW VIS VITE	SCHRAUBE TORNILLO
20	700706392		**2**	TUBE TUBE TUBO	ROHR TUBO
21	70929912	9/16"–18 X 45	**2**	ELBOW COUDE GOMITO	WINKELSTUECK CODO
22	70919087		**2**	TEEPIECE TE RACCORDO A T	T–STUECK PIEZA EN T
23	700139077		**1**	TRIM ENJOLIVEUR FINITURA	ZIERLEISTE TAPIZADO
24	354070X1	5/32" X 1–1/4	**4**	PIN GOUPILLE PERNO	BOLZEN PASADOR
25	700720223		**1**	HOSE DURITE TUBO FLESSIBILE	SCHLAUCH FLEXIBLE
26	***700706685***	5/8" X 3–3/4	**2**	CLEVIS PIN AXE PERNO D'ATTACCO	SPLINTBOLZEN BULON CILINDRICO

Hydraulic Hydraulique Hydraulik Idraulica Hidraulico	70-65	High/Low Hitch – With Cutters Attelage Haut/Bas – Avec Couteaux Hoch/Niedrig Anhaengekupplung – Mit Messer Attacco Alto/Basso – Con Lame Enganche Alto/Bajo – Con Cuchillos

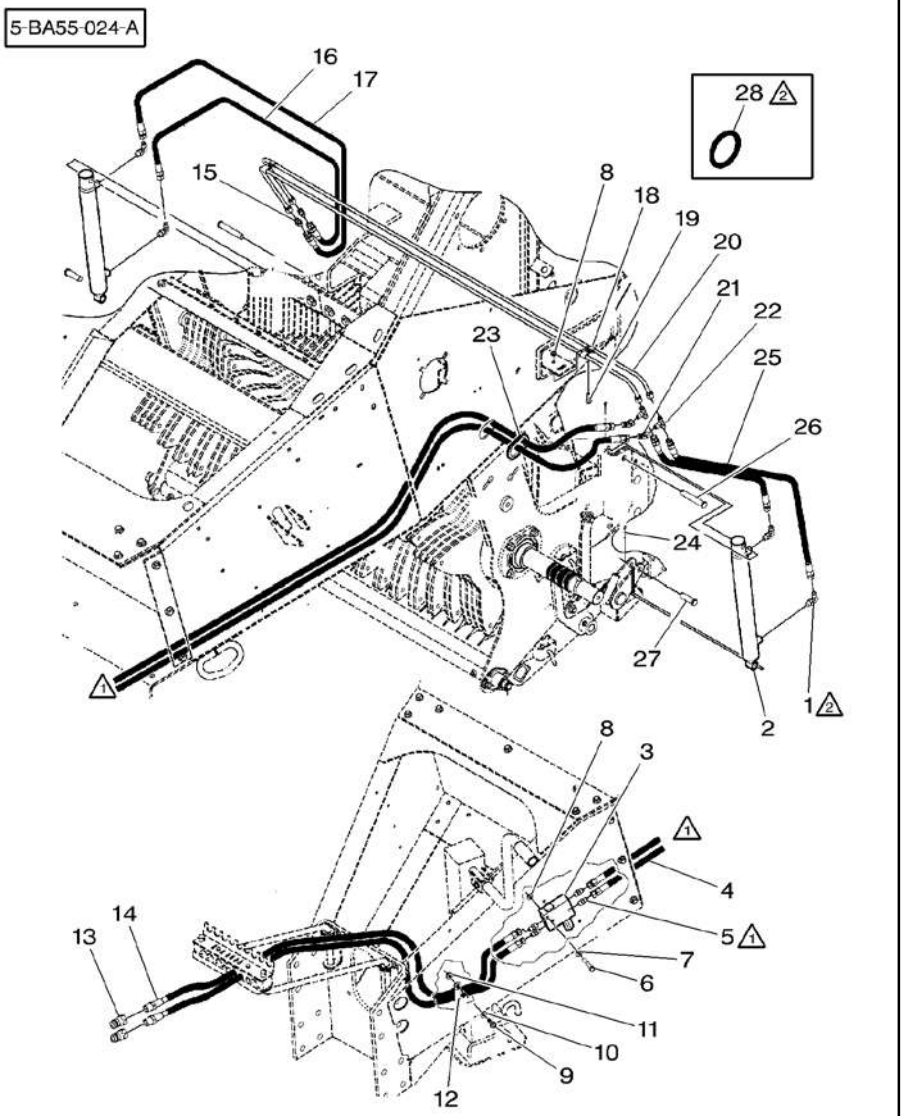

27*	63693	5/8" X 2	**2** PIN	GOUPILLE PERNO	BOLZEN PASADOR
28*	*831452M1*		**X** O RING	JOINT TORIQUE ANELLO OR	O–RING JUNTA TORICA

Hydraulic Hydraulique Hydraulik Idraulica Hidraulico	70-70	Valve Valve Ventil Valvola Valvula

5-BA55-025-A

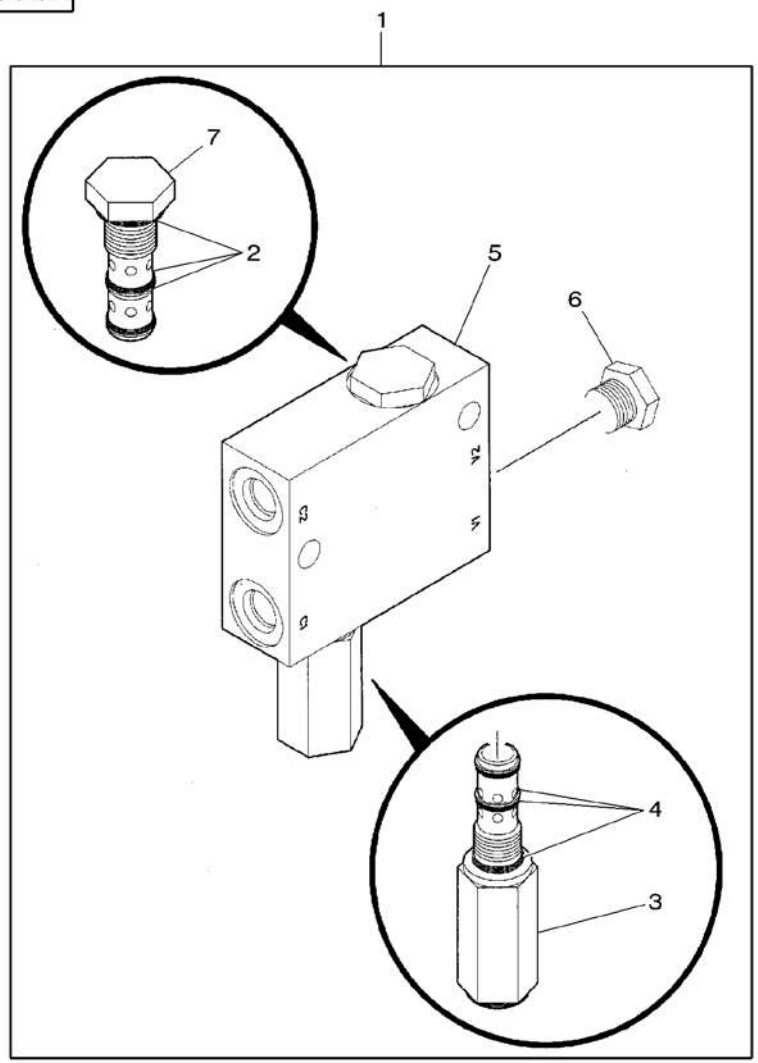

1*		[A]	1	PRESSURE VALVE	VALVE VALVOLA PRESSION	DRUCKVENTIL VALVULA PRESION
2*	***700712678***	1	1	KIT, SEAL	JEU ETANCHEITE KIT TENUTA	DICHTRINGSATZ RETENES JUEGO
3*	700720362	1	1	RELIEF VALVE	VALVE SECURITE VALVOLA LIMITATR	UEBERDR.VENTIL VALV.DESCARG
4*	***700719151***	1	1	KIT, SEAL	JEU ETANCHEITE KIT TENUTA	DICHTRINGSATZ RETENES JUEGO
5*	700720347	1	1	PRESSURE VALVE	VALVE VALVOLA PRESSION	DRUCKVENTIL VALVULA PRESION
6*	700720363	1	1	PLUG	BOUCHON TAPPO	VERSCHL.STOPFEN TAPON
7*	700713587	1	1	VALVE CHECK	VALVE CONTROLE VALVOLA RITEGNO	PRUEFVENTIL VALVULA D CIERRE

[A] NUMBER TO BE ADVISED
NUMERO COMMUNIQUE ULTERIEUREMENT
NUMMER WIRD BEKANNTGEGEBEN
NUMERO DA AVUISARE
NUMERO AVISAR

Hydraulic Cylinder Verin Hydraulique Hydraulikzylinder Cilindros Idraulico Cilindro Hidraulico	70-75	Knives Couteaux Messerlinge Lame Cuchillas

5-BA45-016-A

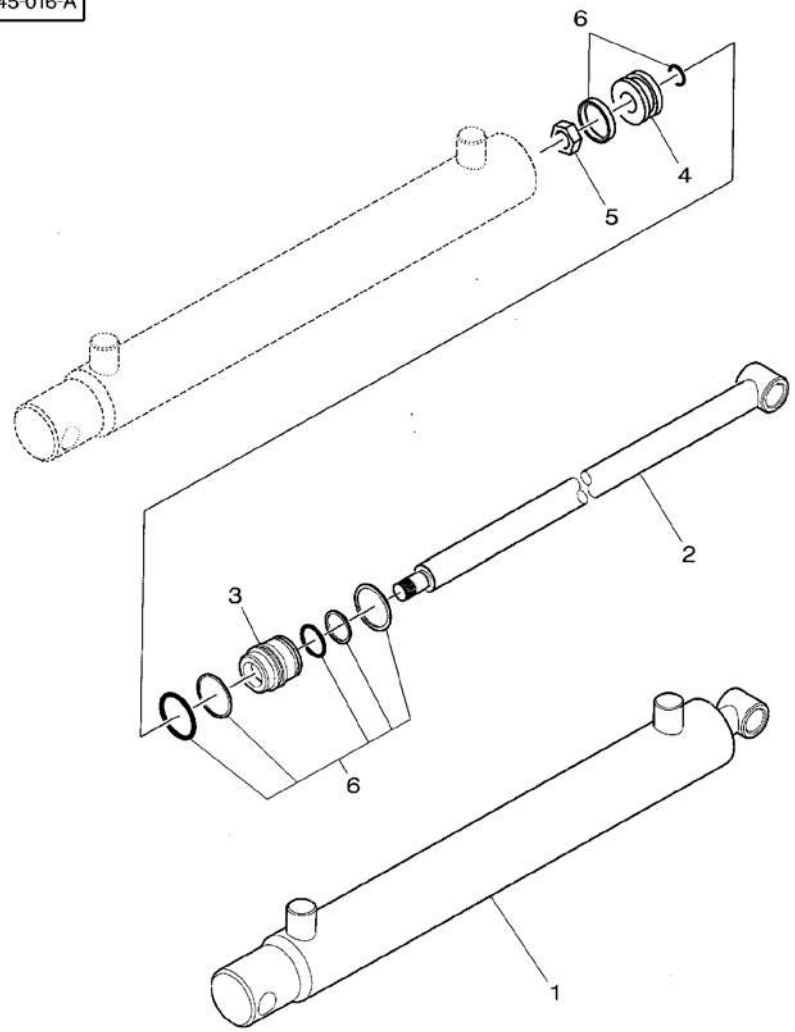

1	700720351		1	CYLINDER	CYLINDRE CILINDRO	ZYLINDER CILINDRO
2	700720345	1	1	ROD	TRINGLE ASTA	STANGE VARILLA
3	700719341	1	1	GUIDE	GUIDE GUIDA	FUEHRUNG GUIA
4	700719339	1	1	PISTON	PISTON PISTONE	KOLBEN PISTON
5*	700719342	1	1	NUT	ECROU DADO	MUTTER TUERCA
6	***700719338***	1	1	KIT, REPAIR	JEU REPARATION KIT RIPARAZIONE	REPARATURSATZ JUEGO REPARACION

80

Decals
Decalcomanies
Aufkleber
Decalcomanie
Callomanias

80-5

5-BA43-017-C

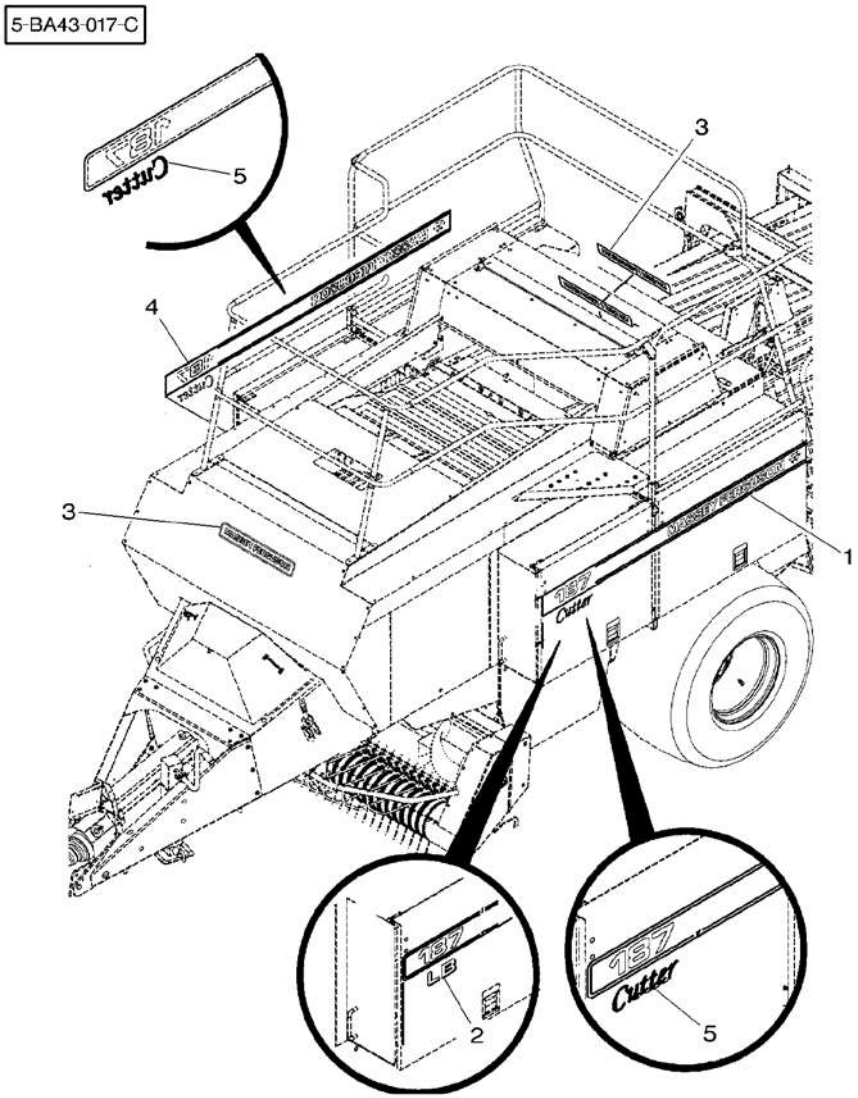

1	700720127	HL 74226	1 DECAL	DECALCOMANIE DECALCOMANIA	AUFKLEBER CALCOMANIA
1	700725849	HL 74227	1 DECAL	DECALCOMANIE DECALCOMANIA	AUFKLEBER CALCOMANIA
2	700714545	HL 74226	2 DECAL	DECALCOMANIE DECALCOMANIA	AUFKLEBER CALCOMANIA
3	700714506		2 DECAL	DECALCOMANIE DECALCOMANIA	AUFKLEBER CALCOMANIA
4	700720129	HL 74226	1 DECAL	DECALCOMANIE DECALCOMANIA	AUFKLEBER CALCOMANIA
4	700725850	HL 74227	1 DECAL	DECALCOMANIE DECALCOMANIA	AUFKLEBER CALCOMANIA
5	700720304		1 DECAL	DECALCOMANIE DECALCOMANIA	AUFKLEBER CALCOMANIA

Decals
Decalcomanies
Aufkleber
Decalcomanie
Callomanias

80-10

5-BA43-018-C

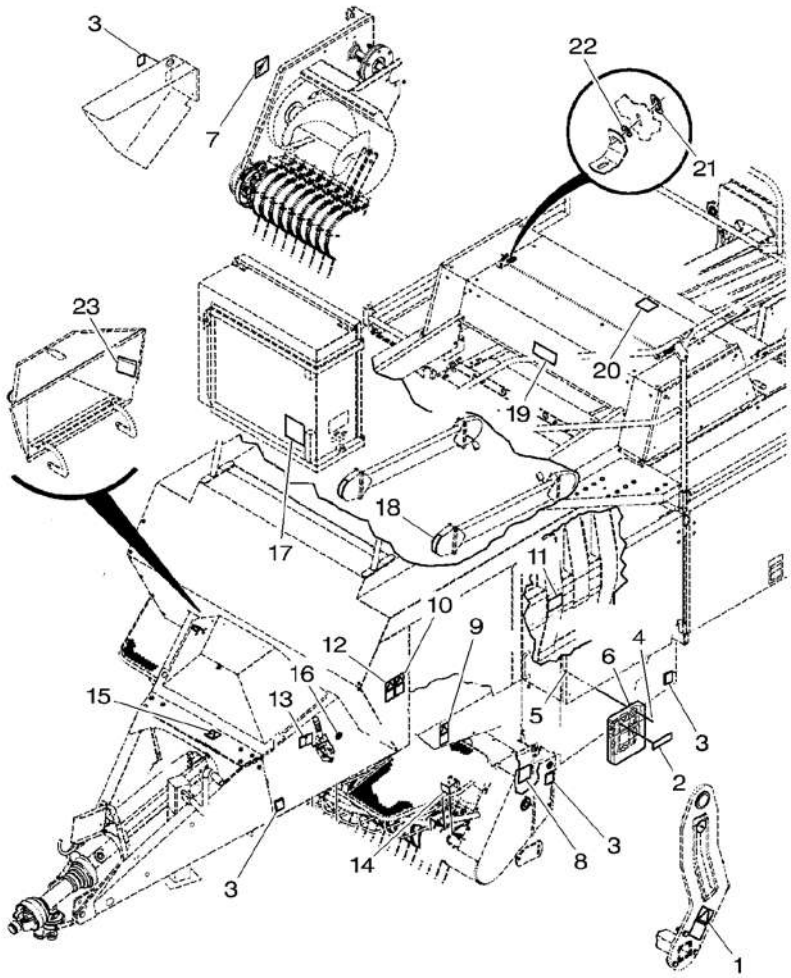

1	700720131		1	DECAL	DECALCOMANIE DECALCOMANIA	AUFKLEBER CALCOMANIA
2	700714585		1	DECAL	DECALCOMANIE DECALCOMANIA	AUFKLEBER CALCOMANIA
3*	700714661	[C]	6	REFLECTOR	CATADIOPTRE CATARIFRANGENTE	REFLEKTOR CATADIOPTRICO
4*	700705158	1/4"–20 X 1/2	4	SCREW	VIS VITE	SCHRAUBE TORNILLO
5*	70931209	1/4"–20	4	NUT	ECROU DADO	MUTTER TUERCA
6	700714418		1	HOLDER	PIECE SUPPORT SUPPORTO DI BASE	HALTER SUJETADOR
7	700711095	[A] ▶	1	DECAL	DECALCOMANIE DECALCOMANIA	AUFKLEBER CALCOMANIA
7	700706633	[B] ▶	1	DECAL	DECALCOMANIE DECALCOMANIA	AUFKLEBER CALCOMANIA
8	700711094	◀	1	DECAL	DECALCOMANIE DECALCOMANIA	AUFKLEBER CALCOMANIA
9	700714570		2	DECAL	DECALCOMANIE DECALCOMANIA	AUFKLEBER CALCOMANIA
10	700715192		1	DECAL	DECALCOMANIE DECALCOMANIA	AUFKLEBER CALCOMANIA
11	8877334		1	DECAL	DECALCOMANIE DECALCOMANIA	AUFKLEBER CALCOMANIA
12	700714074		1	DECAL	DECALCOMANIE DECALCOMANIA	AUFKLEBER CALCOMANIA
13	700715154		1	DECAL	DECALCOMANIE DECALCOMANIA	AUFKLEBER CALCOMANIA
14*	528324	[D]	2	REFLECTOR	CATADIOPTRE CATARIFRANGENTE	REFLEKTOR CATADIOPTRICO
15	700715051		1	DECAL	DECALCOMANIE DECALCOMANIA	AUFKLEBER CALCOMANIA
16*	700714067		1	DECAL	DECALCOMANIE DECALCOMANIA	AUFKLEBER CALCOMANIA
17	700715159		1	DECAL	DECALCOMANIE DECALCOMANIA	AUFKLEBER CALCOMANIA
18	700711336		2	DECAL	DECALCOMANIE DECALCOMANIA	AUFKLEBER CALCOMANIA
19*	700721968		1	DECAL	DECALCOMANIE DECALCOMANIA	AUFKLEBER CALCOMANIA
20*	700721970		1	DECAL	DECALCOMANIE DECALCOMANIA	AUFKLEBER CALCOMANIA
21	700709867		2	DECAL	DECALCOMANIE DECALCOMANIA	AUFKLEBER CALCOMANIA
22	700709866		2	WASHER	RONDELLE RONDELLA	UNTERLEGSCHEIBE ARANDELA
23*		[E]	1	DECAL	DECALCOMANIE DECALCOMANIA	AUFKLEBER CALCOMANIA

Decals
Decalcomanies
Aufkleber
Decalcomanie
Callomanias

80-10

5-BA43-018-C

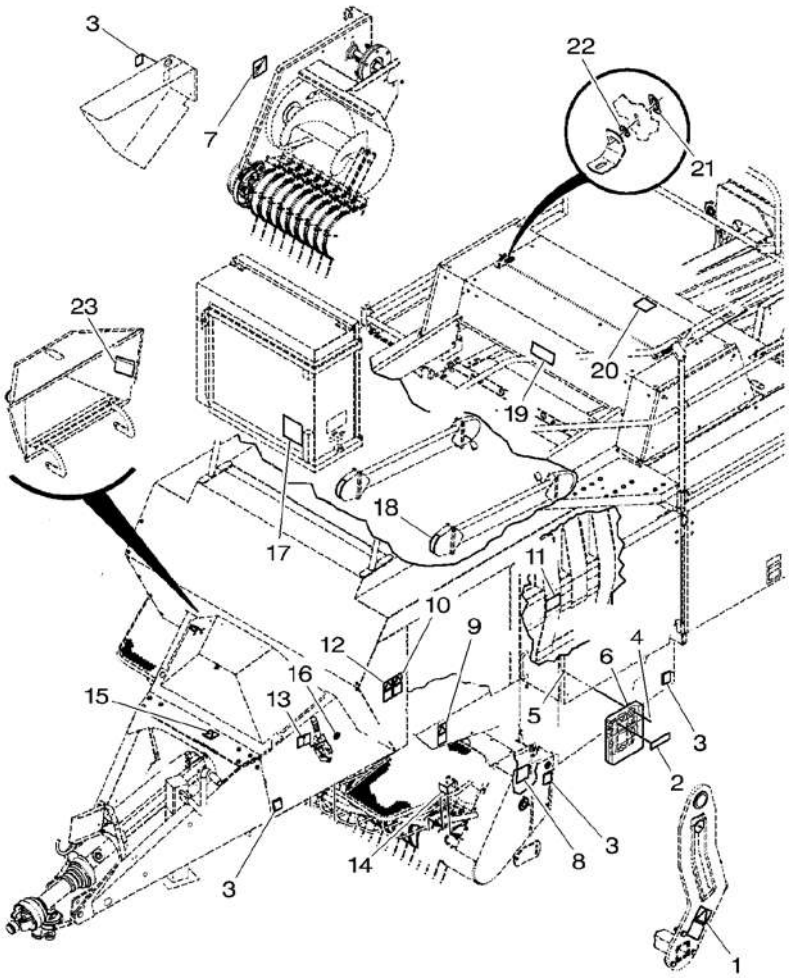

[A] WITHOUT CUTTERS
SANS COUTEAUX
OHNE MESSERKLINGE
SINZA LAME
SIN CUCHILLOS

[B] WITH CUTTERS
AVEC COUTEAUX
MIT MESSERKLINGE
LAME
CON CUCHILLAS

[C] AMBER
AMBRE
BERNSTEIN
AMBRA
AMBAR

[D] CLEAR
TRANSPARENT
HELLE
TRANSPARENT
TRANSPERENTE

[E] NUMBER TO BE ADVISED
NUMERO COMMUNIQUE ULTERIEUREMENT
NUMMER WIRD BEKANNTGEGEBEN
NUMERO DA AVUISARE
NUMERO AVISAR

Decals
Decalcomanies
Aufkleber
Decalcomanie
Callomanias

80-15

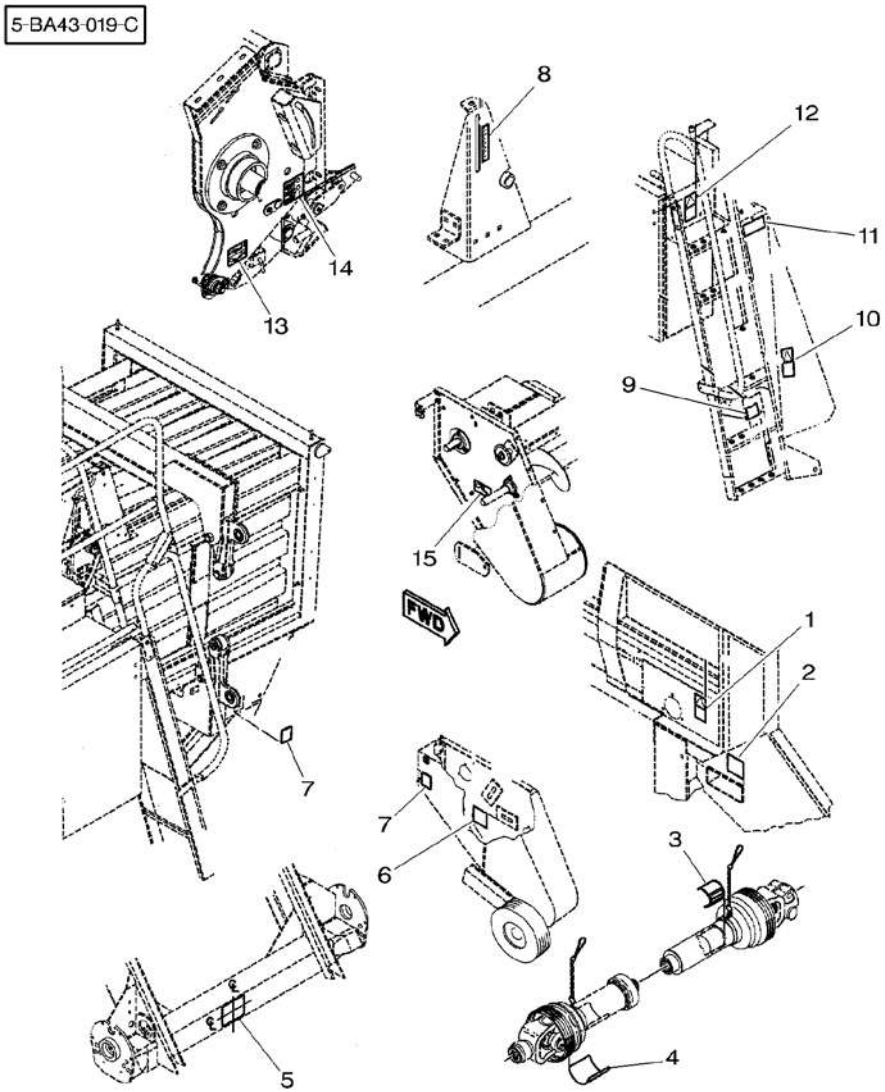

1	700714572		1	DECAL	DECALCOMANIE DECALCOMANIA	AUFKLEBER CALCOMANIA
2	700711092		1	DECAL	DECALCOMANIE DECALCOMANIA	AUFKLEBER CALCOMANIA
3*	210371		1	DECAL	DECALCOMANIE DECALCOMANIA	AUFKLEBER CALCOMANIA
4	700707960		1	DECAL	DECALCOMANIE DECALCOMANIA	AUFKLEBER CALCOMANIA
5	700706990		1	DECAL	DECALCOMANIE DECALCOMANIA	AUFKLEBER CALCOMANIA
6	700711095	▶	1	DECAL	DECALCOMANIE DECALCOMANIA	AUFKLEBER CALCOMANIA
7*	700714661	[A]	3	REFLECTOR	CATADIOPTRE CATARIFRANGENTE	REFLEKTOR CATADIOPTRICO
8	700714164		1	DECAL	DECALCOMANIE DECALCOMANIA	AUFKLEBER CALCOMANIA
9*	700714662	[B]	1	REFLECTOR	CATADIOPTRE CATARIFRANGENTE	REFLEKTOR CATADIOPTRICO
10	700715157		1	DECAL	DECALCOMANIE DECALCOMANIA	AUFKLEBER CALCOMANIA
11	700715156		1	DECAL	DECALCOMANIE DECALCOMANIA	AUFKLEBER CALCOMANIA
12	700715158		1	DECAL	DECALCOMANIE DECALCOMANIA	AUFKLEBER CALCOMANIA
13*	700720285		1	DECAL	DECALCOMANIE DECALCOMANIA	AUFKLEBER CALCOMANIA
14*	700720248		1	DECAL	DECALCOMANIE DECALCOMANIA	AUFKLEBER CALCOMANIA
15*	700721595		1	DECAL	DECALCOMANIE DECALCOMANIA	AUFKLEBER CALCOMANIA

[A] AMBER
AMBRE
BERNSTEIN
AMBRA
AMBAR

[B] RED
ROUGE
ROT
ROSSO
ROJA

Decals Decalcomanies Aufkleber Decalcomanie Callomanias	80-20	Twine Box Boite A Ficelle Garngehause Scatola Di Spago Caja De Hilo

5-BA43-020-B

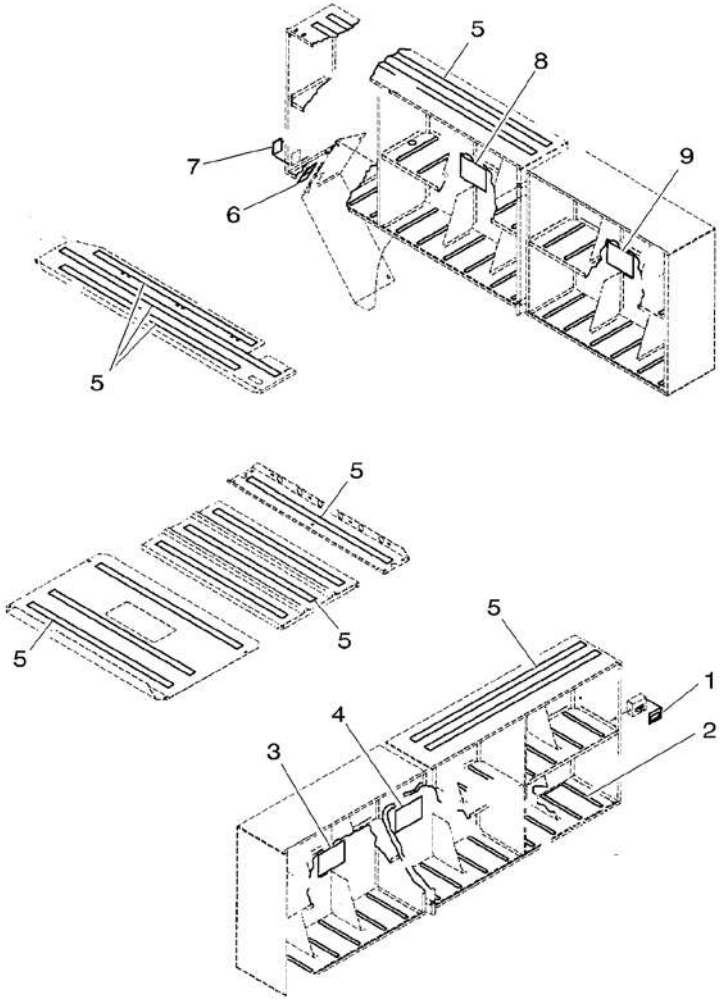

1	700715153		1	DECAL	DECALCOMANIE DECALCOMANIA	AUFKLEBER CALCOMANIA
2	700717102		60	SEAL	JOINT ETANCHEITE PARAOLIO	DICHTRING RETEN
3*	700717103	[A] ➡ HM 74235	1	DECAL	DECALCOMANIE DECALCOMANIA	AUFKLEBER CALCOMANIA
3*	700721952	[A] ➡ HM 74236	1	DECAL	DECALCOMANIE DECALCOMANIA	AUFKLEBER CALCOMANIA
4*	700717104	[B] ➡ HM 74235	1	DECAL	DECALCOMANIE DECALCOMANIA	AUFKLEBER CALCOMANIA
4*	700721953	[B] ➡ HM 74236	1	DECAL	DECALCOMANIE DECALCOMANIA	AUFKLEBER CALCOMANIA
5	6849178		13	BAND	BANDE NASTRO	BAND BANDA
6	700715157		1	DECAL	DECALCOMANIE DECALCOMANIA	AUFKLEBER CALCOMANIA
7*	700714662	[E]	1	REFLECTOR	CATADIOPTRE CATARIFRANGENTE	REFLEKTOR CATADIOPTRICO
8*	700717106	[C] ➡ HM 74235	1	DECAL	DECALCOMANIE DECALCOMANIA	AUFKLEBER CALCOMANIA
8*	700721955	[C] ➡ HM 74236	1	DECAL	DECALCOMANIE DECALCOMANIA	AUFKLEBER CALCOMANIA
9*	700717105	[D] ➡ HM 74235	1	DECAL	DECALCOMANIE DECALCOMANIA	AUFKLEBER CALCOMANIA
9*	700721954	[D] ➡ HM 74236	1	DECAL	DECALCOMANIE DECALCOMANIA	AUFKLEBER CALCOMANIA

[A] FRONT LEFT
AVANT GAUCHE
VORNE LINKE
ANTERIORE SINISTRA
DELANTERO IZQUIERDA

[B] LEFT, REAR
ARRIERE GAUCHE
HINTEN LINKS
POSTERIORE SINISTRO
TRASERO IZQUIERDO

[C] RIGHT, REAR
ARRIERE DROIT
HINTEN RECHT
POSTERIORE DESTRA
TRASERO DERECHO

[D] FRONT RIGHT
AVANT DROIT
VORNE RECHT
ANTERIORE DESTRA
DELANTERO DERECHA

Decals Decalcomanies Aufkleber Decalcomanie Callomanias	80-20	Twine Box Boite A Ficelle Garngehause Scatola Di Spago Caja De Hilo

5-BA43-020-B

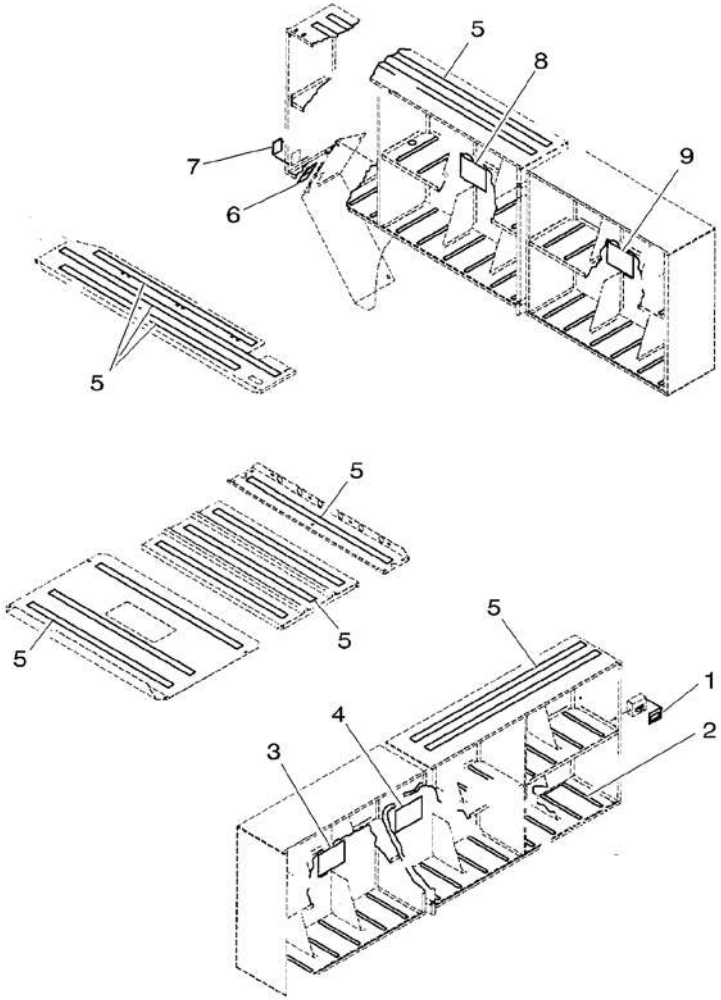

[E] RED
ROUGE
ROT
ROSSO
ROJA

Decals
Decalcomanies
Aufkleber
Decalcomanie
Callomanias

80-25

5-BA43-027-B

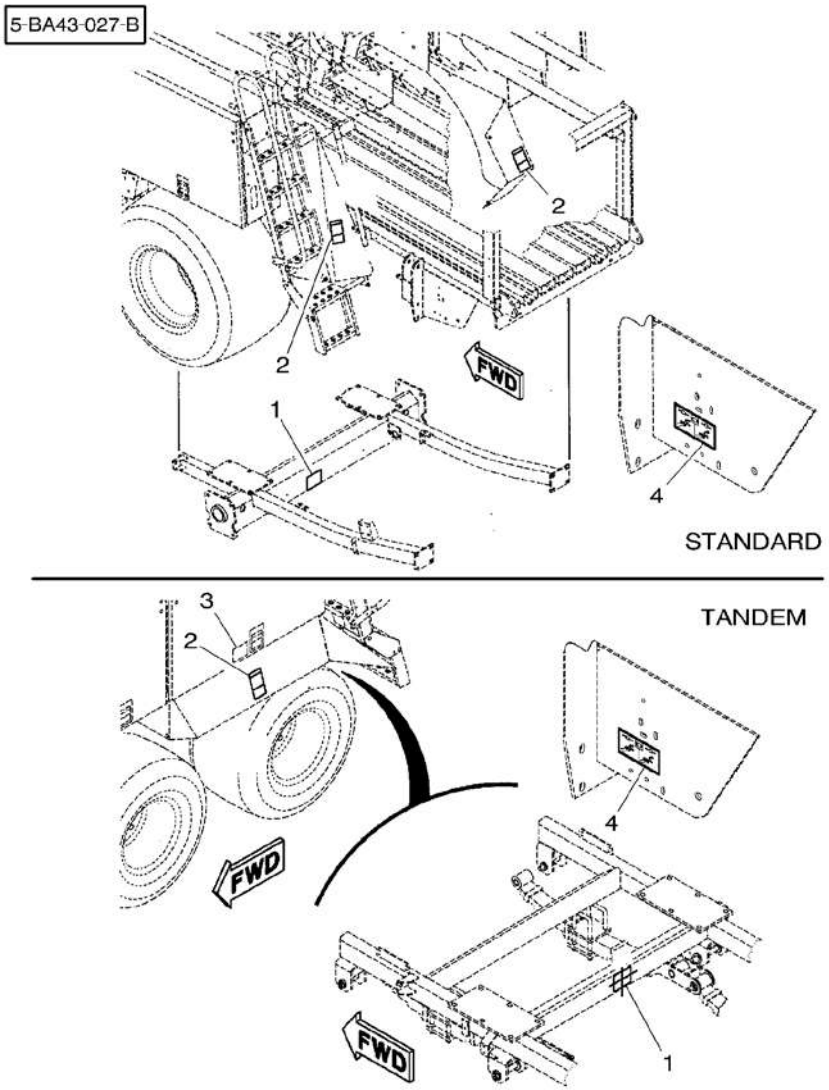

1*	700706990	➡ HM 74235	2 DECAL	DECALCOMANIE DECALCOMANIA	AUFKLEBER CALCOMANIA
1*	700721967	➡ HM 74236	2 DECAL	DECALCOMANIE DECALCOMANIA	AUFKLEBER CALCOMANIA
2	700715157		4 DECAL	DECALCOMANIE DECALCOMANIA	AUFKLEBER CALCOMANIA
3*	700725801		2 DECAL	DECALCOMANIE DECALCOMANIA	AUFKLEBER CALCOMANIA
4*	700725581		2 DECAL	DECALCOMANIE DECALCOMANIA	AUFKLEBER CALCOMANIA

Decals
Decalcomanies
Aufkleber
Decalcomanie
Callomanias

80-30

5-BA43-021-A

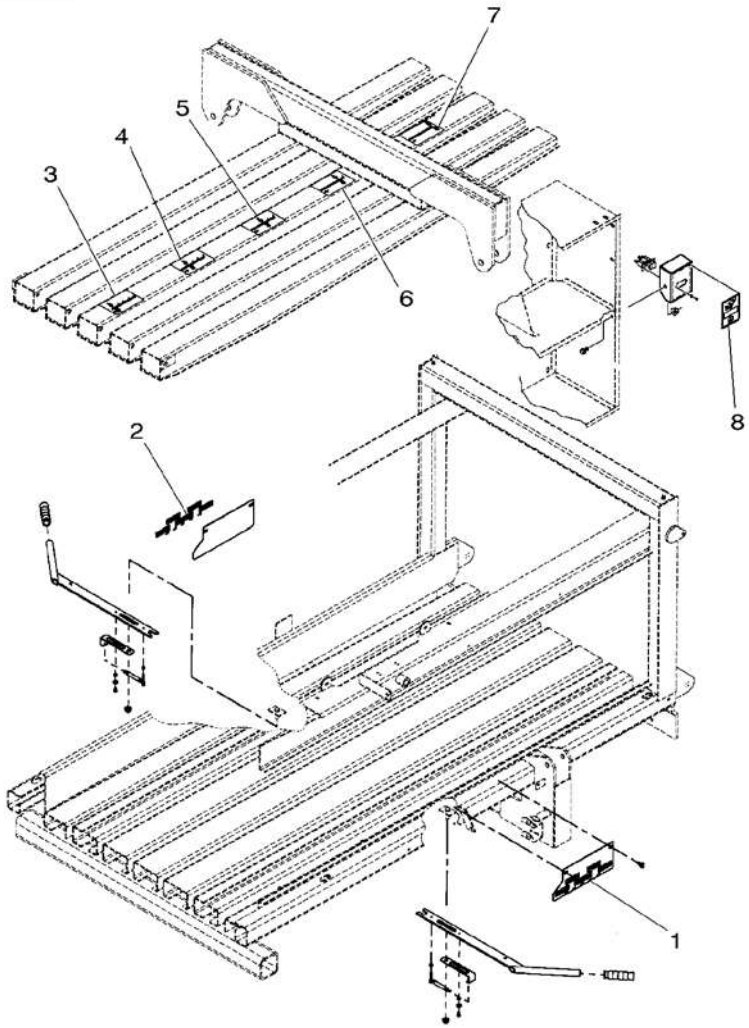

1	700714106	◀	1 DECAL	DECALCOMANIE DECALCOMANIA	AUFKLEBER CALCOMANIA
2	700714107	▶	1 DECAL	DECALCOMANIE DECALCOMANIA	AUFKLEBER CALCOMANIA
3	700714112	EJECTOR 5	1 DECAL	DECALCOMANIE DECALCOMANIA	AUFKLEBER CALCOMANIA
4	700714111	EJECTOR 4	1 DECAL	DECALCOMANIE DECALCOMANIA	AUFKLEBER CALCOMANIA
5	700714110	EJECTOR 3	1 DECAL	DECALCOMANIE DECALCOMANIA	AUFKLEBER CALCOMANIA
6	700714109	EJECTOR 2	1 DECAL	DECALCOMANIE DECALCOMANIA	AUFKLEBER CALCOMANIA
7	700714108	EJECTOR 1	1 DECAL	DECALCOMANIE DECALCOMANIA	AUFKLEBER CALCOMANIA
8	700715152		1 DECAL	DECALCOMANIE DECALCOMANIA	AUFKLEBER CALCOMANIA

Connector Assembly Kit
Jeu D'Accouplement
Satz Kupplungsstueck
Kit Raccordi
Juego De Conjunto De Conectador

80-35

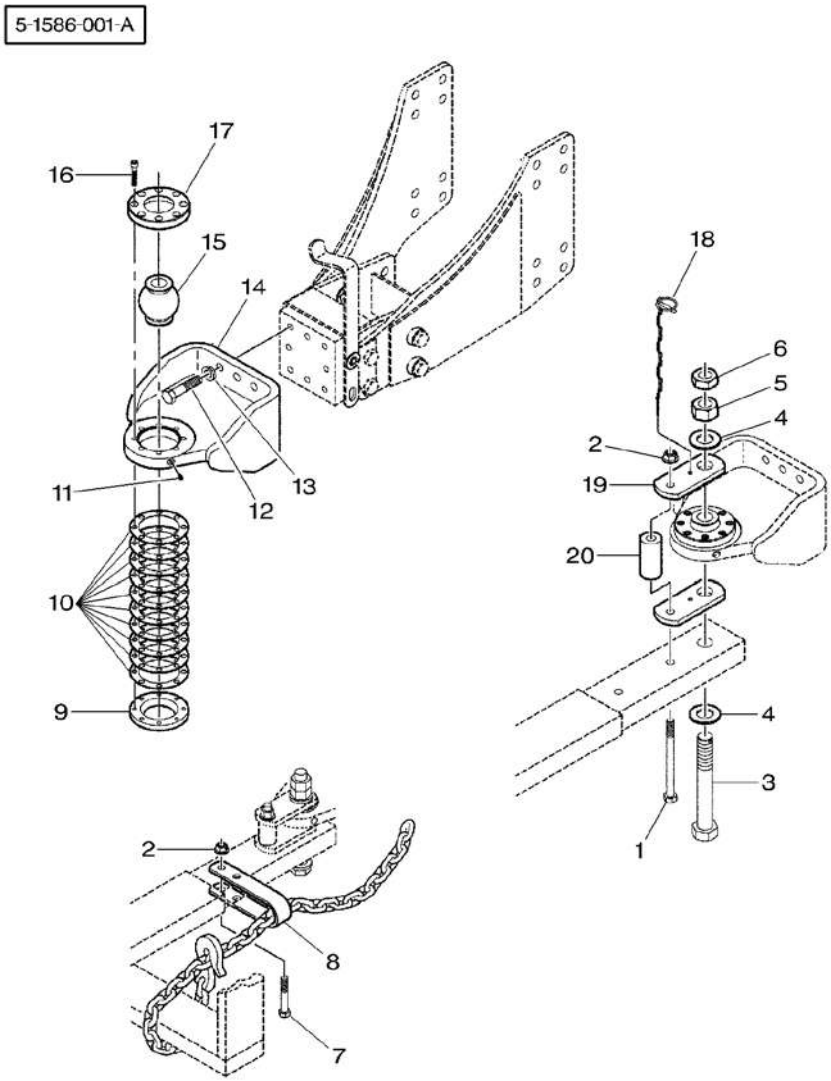

0*	700164425B		1	KIT, ATTACHMENT	JEU ACCESSOIRES KIT ACCESSORI
1*	700716624	5/8"-11 X 7-1/2	1	BOLT	BOULON BULLONE
2*	***700703922***	5/8"-11	2	TOP LOCKNUT	ECROU FREIN DADO DI TESTA
3*	700124041		1	BOLT	BOULON BULLONE
4*	7705197	1"-1/4	2	WASHER	RONDELLE RONDELLA
5*	355573X1	1"-1/4-7	1	NUT UNC	ECROU UNC DADO UNC
6*	704585	1"-1/4-7	1	NUT	ECROU DADO
7*	**354294X1**	5/8"-11 X 3-3/4	1	BOLT UNC	BOULON UNC BULLONE UNC
8*	700113646B		1	CLEVIS	CHAPE GANCIO D'ATTACCO
9*	1663158P		1	RING	ANNEAU ANELLO
10*	1663163		10	SHIM	CALE REGLAGE SPESSORE
11*	***70923219***	1/4"-28	1	GREASER	GRAISSEUR INGRASSATORE
12*	7703879	M16 X 60	6	SCREW	VIS VITE
13*	700708348	M16	6	NUT	ECROU DADO
14*	700164420P		1	HITCH	ATTELAGE ATTACCO
15*	1663159P		1	BALL	BILLE SFERA
16*	70912269	3/8"-16 X 2	8	BOLT	BOULON BULLONE
17*	1663157P		1	RING	ANNEAU ANELLO
18*	Y762260		1	PIN	GOUPILLE PERNO
19*	1663161		2	PLATE	PLAQUE PIASTRA
20*	1663162		1	SPACER	ENTRETOISE DISTANZIALE

SATZ ANBAUTEILE
JUEGO ACCESORIO
MASCH.SCHRAUBE
PERNO
SELBSTS.MUTTER
CONTRATUERCA SUP
MASCH.SCHRAUBE
PERNO
UNTERLEGSCHEIBE
ARANDELA
MUTTER UNC
TUERCA UNC
MUTTER
TUERCA
MASCH.SCHRB.UNC
PERNO UNC
GABELSTUECK
GANCHO SEGURI.
RING
ARO
EINSTELLBLECH
CALCE
FETTNIPPEL
ENGRASADOR
SCHRAUBE
TORNILLO
MUTTER
TUERCA
ANHAENGEKUPPLUNG
ENGANCHE
KUGEL
BOLA
MASCH.SCHRAUBE
PERNO
RING
ARO
BOLZEN
PASADOR
PLATTE
PLATO
ABSTANDSTUECK
PIEZA DISTANCIA

Accessories And Decals Accessoires Et Decalcomanies Zubehoer Und Aufkleber Accessories E Decalcomanies Accesorios Y Callomanies	80-40	Shear Bolt – Kit Boulon De Cisaillement – Kit Scherbolzen – Kit Perno Di Taglio – Kit Bulonde Cizallamiento

5-BA12-008-A

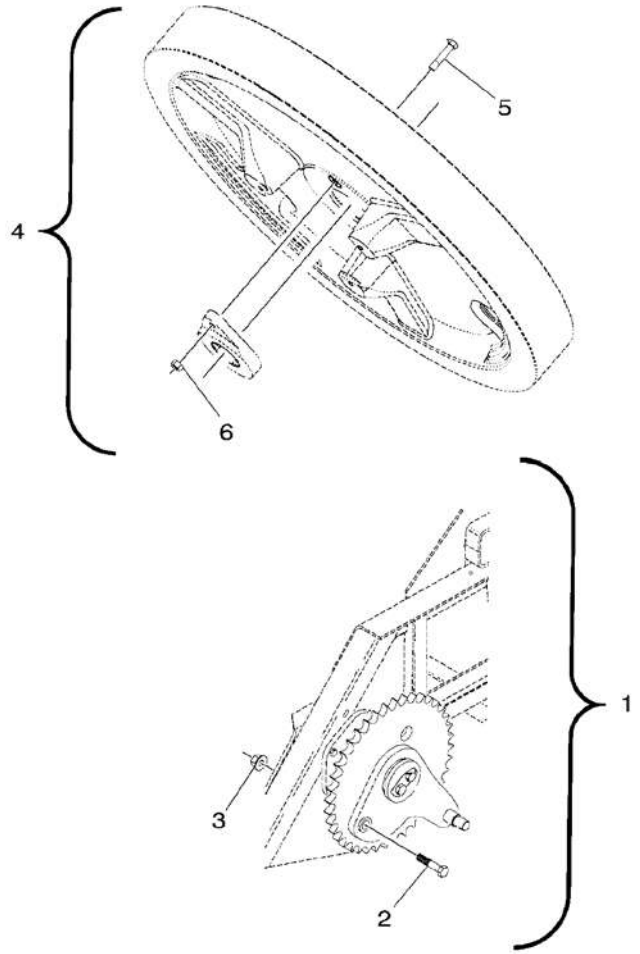

1	*700138038*		**1**	KIT	JEU KIT	SATZ JUEGO
2*	*354289X1*	1 5/8"–11 X 3	**10**	BOLT UNC	BOULON UNC BULLONE UNC	MASCH.SCHRB.UNC PERNO UNC
3*	*700703922*	1 5/8"–11	**10**	TOP LOCKNUT	ECROU FREIN DADO DI TESTA	SELBSTS.MUTTER CONTRATUERCA SUP
4	*6521868*		**1**	BOLT ASSY	ENSEMBLE BOULON BULLONE COMPLET	MASCH.SCHRB.KPL CJT PERNO
5*	7884950	4 7/16"–14 X2–1/8	**10**	BOLT	BOULON BULLONE	MASCH.SCHRAUBE PERNO
6*	*370873X1*	4 7/16"–14	**10**	NUT	ECROU DADO	MUTTER TUERCA

Bale Chute
Rampe De Dechargement
Ballenrutsche
Scivolo Per Balle
Tobogan De Descarga

80-45

Roller Kit
Jeu De Rouleaux
Satzwalzen
Gioco Rullo
Juego Rodillos

5-BA46-018-B

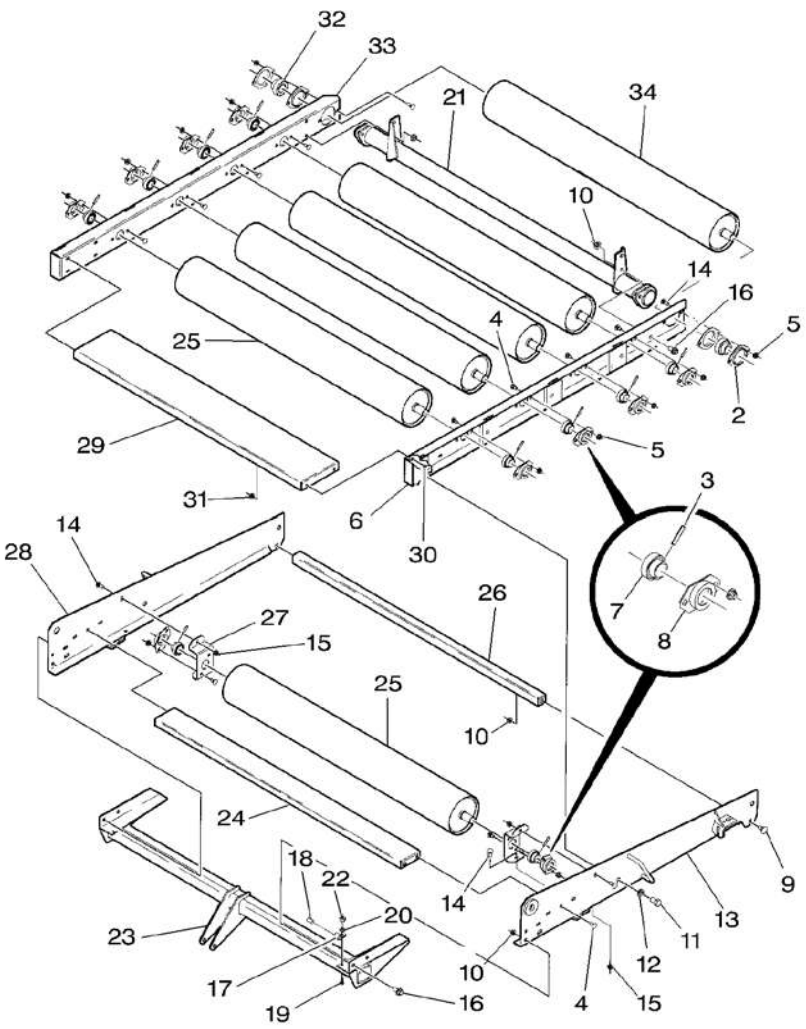

1	MK40934		[A]	1	KIT, ATTACHMENT	JEU ACCESSOIRES KIT ACCESSORI	SATZ ANBAUTEILE JUEGO ACCESORIO
2	***Y710293***	1		4	FLANGE	FLASQUE FLANGIA	FLANSCH PLETINA
3★	62307	1	1/4" X 2	10	PIN	GOUPILLE PERNO	BOLZEN PASADOR
4★	70922784	1	3/8"–16 X 3/4	24	BOLT	BOULON BULLONE	MASCH.SCHRAUBE PERNO
5★	***Y704734***	1	3/8"–16	28	TOP LOCKNUT	ECROU FREIN DADO DI TESTA	SELBSTS.MUTTER CONTRATUERCA SUP
6	700139258B	1 ◀		1	CHANNEL	CANAL PROFILATO	KANAL CANAL
7	*Y710392*	1		10	BEARING	COUSSINET CUSCINETTO	LAGER COJINETE
8★	***700108622P***	1		10	FLANGE	FLASQUE FLANGIA	FLANSCH PLETINA
9★	70928367	1	1/2"–13 X 1	10	BOLT	BOULON BULLONE	MASCH.SCHRAUBE PERNO
10★	***Y704742***	1	1/2"–13	10	TOP LOCKNUT	ECROU FREIN DADO DI TESTA	SELBSTS.MUTTER CONTRATUERCA SUP
11	354441X1	1	5/8"–11 X 1	4	BOLT UNC	BOULON UNC BULLONE UNC	MASCH.SCHRB.UNC PERNO UNC
12★	353433X1	1	5/8"	4	LOCK WASHER	RONDELLE FREIN ROSETTA ELASTICA	FEDERRING ARANDELA GROWER
13★	700129744P	1 ◀		1	ANGLE	EQUERRE ANGOLO	WINKEL ANGULO
14★	*70922786*	1	3/8"–16 X 1	8	BOLT	BOULON BULLONE	MASCH.SCHRAUBE PERNO
15★	***700711238***	1	3/8"–16	4	NUT	ECROU DADO	MUTTER TUERCA
16★	7883424	1	1/2"–13 X 1	8	SCREW	VIS VITE	SCHRAUBE TORNILLO
17	70926919	1		1	CLIP	CLIP FERMAGLIO	SCHELLE CRAPA RETEN
18	***700706340***	1		1	MAGNET	AIMANT MAGNETE	MAGNET IMAN
19★	70931317	1	1/4"–20 X 3/4	1	BOLT	BOULON BULLONE	MASCH.SCHRAUBE PERNO
20★	355617X1	1	1/4"	1	WASHER	RONDELLE RONDELLA	UNTERLEGSCHEIBE ARANDELA
21	700138047	1		1	SUPPORT	SUPPORT SUPPORTO	LAGERUNG DISPOS.DE SOSTEN
22★	Y704395	1	1/4"–20	1	NUT	ECROU DADO	MUTTER TUERCA
23★	700138042B	1		1	SUPPORT	SUPPORT SUPPORTO	LAGERUNG DISPOS.DE SOSTEN
24★	700138050B	1		1	SHIELD	TOLE RIPARO	SCHILD BLINDAJE
25★	700138044B	1		5	TUBE	TUBE TUBO	ROHR TUBO
26★	700138046B	1		1	CHANNEL	CANAL PROFILATO	KANAL CANAL

Bale Chute Rampe De Dechargement Ballenrutsche Scivolo Per Balle Tobogan De Descarga	80-45	Roller Kit Jeu De Rouleaux Satzwalzen Gioco Rullo Juego Rodillos

5-BA46-018-B

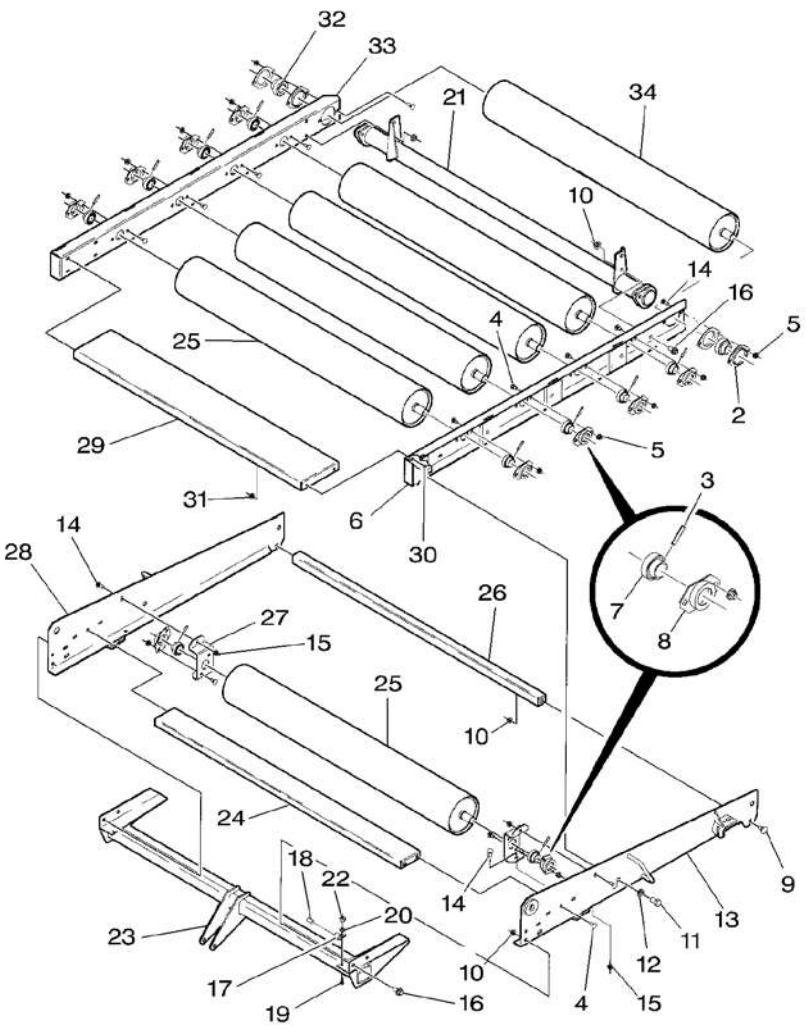

27*	700138052B	1		2	SUPPORT	SUPPORT SUPPORTO LAGERUNG DISPOS.DE SOSTEN
28*	700129745P	1 ▶		1	ANGLE	EQUERRE ANGOLO WINKEL ANGULO
29*	700138051B	1		1	SHIELD	TOLE RIPARO SCHILD BLINDAJE
30*	7883325	1	5/16"-18 X 3/4	4	SCREW	VIS VITE SCHRAUBE TORNILLO
31*	Y704726	1	5/16"-18	4	TOP LOCKNUT	ECROU FREIN DADO DI TESTA SELBSTS.MUTTER CONTRATUERCA SUP
32	*70590709*	1		2	BEARING ASSY	ROULEMENT CUSCINETTO COMPL RADIALLAGER RODAMIENTO RAD
33	700139259B	1 ▶		1	CHANNEL	CANAL PROFILATO KANAL CANAL
34*	700138049B	1		1	TUBE	TUBE TUBO ROHR TUBO

[A] NOT ILLUSTRATED
NON ILLUSTRE
NICHT ABGEBILDET
NO ILLUSTRADO
NO ILLUSTRADED

Bale Chute
Rampe De Dechargement
Ballenrutsche
Scivolo Per Balle
Tobogan De Descarga

80-50

Roller Kit (Continued)
Jeu De Rouleaux (Suite)
Satzwalzen (Folge)
Gioco Rullo (Seguito)
Juego Rodillos (Sigue)

5-BA46-019-B

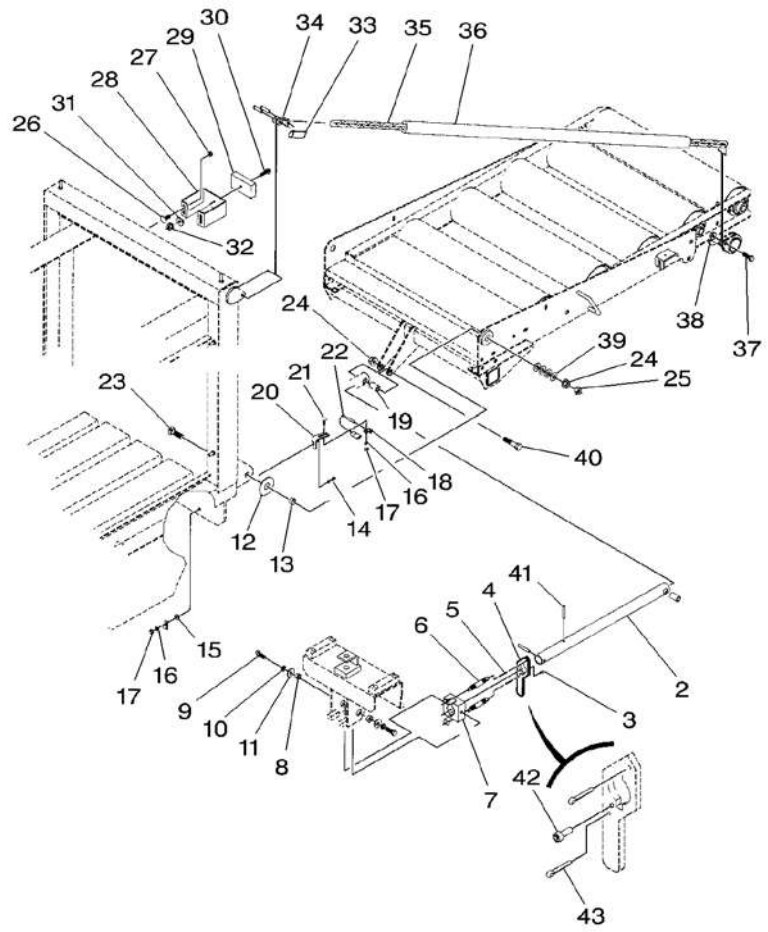

1		[A] 80-45 No 1	1	KIT, ATTACHING	JEU ACCESSOIRE KIT ATTACCO	BEFESTIGUNGSSATZ JUEGO DE UNION
2	700151970	1	1	TUBE	TUBE TUBO	ROHR TUBO
3*	70921292	1 3/16" X 1/2	1	PIN	GOUPILLE PERNO	BOLZEN PASADOR
4*	700151968	1	1	HANDLE	POIGNEE MANIGLIA	HANDGRIFF MANETA
5*	354057X1	1 1/8" X 3/4	2	PIN	GOUPILLE PERNO	BOLZEN PASADOR
6	700709843	1	2	SPRING	RESSORT MOLLA	FEDER MUELLE
7*	700151967	1	1	TRUNNION	TOURILLON PERNO ARTICOLAZ.	ZAPFEN MUNON
8*	378604P	1	2	SPACER	ENTRETOISE DISTANZIALE	ABSTANDSTUECK PIEZA DISTANCIA
9*	354276X1	1 1/2"-13 X 1-1/4	2	BOLT UNC	BOULON UNC BULLONE UNC	MASCH.SCHRB.UNC PERNO UNC
10*	353439X1	1 1/2"	2	LOCK WASHER	RONDELLE FREIN ROSETTA ELASTICA	FEDERRING ARANDELA GROWER
11*	700711557	1 1/2	2	WASHER	RONDELLE RONDELLA	UNTERLEGSCHEIBE ARANDELA
12	700714065	1	2	WASHER	RONDELLE RONDELLA	UNTERLEGSCHEIBE ARANDELA
13	700121805	1	2	BUSH	BAGUE BOCCOLA	BUCHSE CASQUILLO
14*	7770175	1 1/4"-20 X 1-1/4	1	BOLT	BOULON BULLONE	MASCH.SCHRAUBE PERNO
15*	355617X1	1 1/4"	2	WASHER	RONDELLE RONDELLA	UNTERLEGSCHEIBE ARANDELA
16*	353441X1	1 1/4"	2	LOCK WASHER	RONDELLE FREIN ROSETTA ELASTICA	FEDERRING ARANDELA GROWER
17*	355564X1	1 1/4"-20	2	NUT UNC	ECROU UNC DADO UNC	MUTTER UNC TUERCA UNC
18*	70926919	1 1/4"	1	CLIP	CLIP FERMAGLIO	SCHELLE CRAPA RETEN
19	6475842	1	1	SPACER	ENTRETOISE DISTANZIALE	ABSTANDSTUECK PIEZA DISTANCIA
20*	700129761B	1	1	SHANK	ANGLE FUSO	SCHAFT MANGO
21*	70931317	1 1/4"-20 X 3/4	1	BOLT	BOULON BULLONE	MASCH.SCHRAUBE PERNO
22	***700113863***	1	1	SWITCH	INTERRUPTEUR INTERRUTTORE	SCHALTER INTERRUPTOR
23*	70933955	1 5/8"-11 X 2-3/4	2	BOLT	BOULON BULLONE	MASCH.SCHRAUBE PERNO
24*	***700703922***	1 5/8"-11	3	TOP LOCKNUT	ECROU FREIN DADO DI TESTA	SELBSTS.MUTTER CONTRATUERCA SUP
25*	375099X1	1 5/8"-11	2	NUT UNC	ECROU UNC DADO UNC	MUTTER UNC TUERCA UNC
26*	70922784	1 3/8"-16 X 3/4	2	BOLT	BOULON BULLONE	MASCH.SCHRAUBE PERNO

Bale Chute Rampe De Dechargement Ballenrutsche Scivolo Per Balle Tobogan De Descarga	80-50	Roller Kit (Continued) Jeu De Rouleaux (Suite) Satzwalzen (Folge) Gioco Rullo (Seguito) Juego Rodillos (Sigue)

5-BA46-019-B

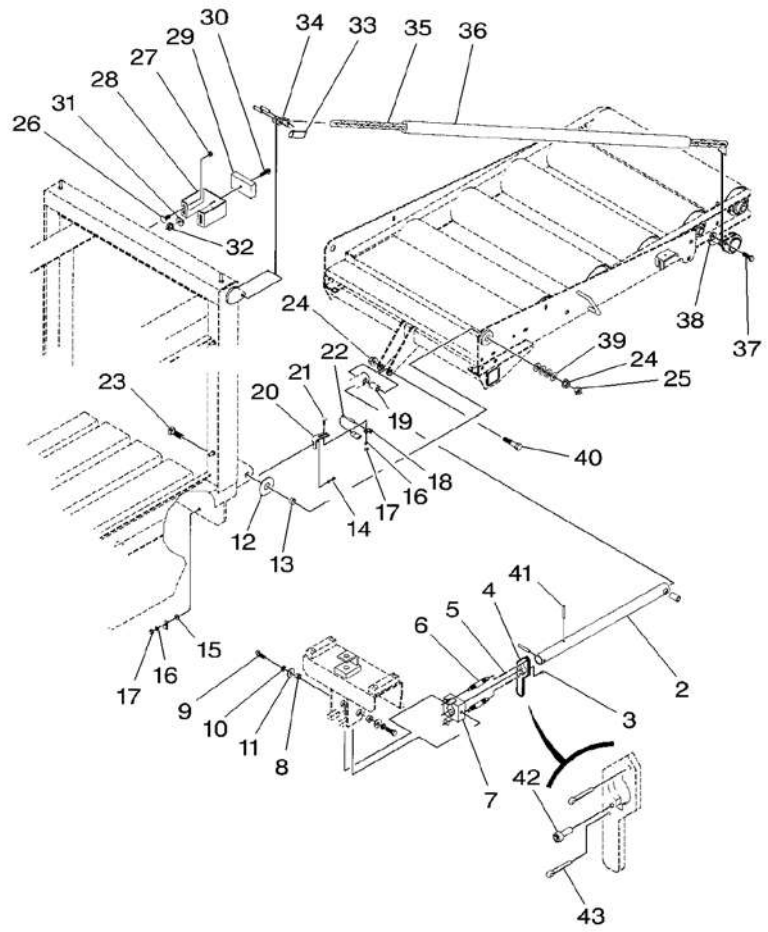

27*	*704247*	1	3/8"-16	2	LOCKNUT	ECROU BLOCAGE AUTOBLOCCANTE FLACHMUTTER CONTRATUERCA
28*	700129682B	1		1	SUPPORT	SUPPORT SUPPORTO LAGERUNG DISPOS.DE SOSTEN
29	700707584	1		1	ADHESIVE	COLLANT ADESIVO KLEBSTOFF ADHESIVO
30*	7883341	1	5/16"-18 X1-1/4	1	BOLT	BOULON BULLONE MASCH.SCHRAUBE PERNO
31*	355618X1	1	5/16"	1	WASHER	RONDELLE RONDELLA UNTERLEGSCHEIBE ARANDELA
32*	Y704726	1	5/16"-18	1	TOP LOCKNUT	ECROU FREIN DADO DI TESTA SELBSTS.MUTTER CONTRATUERCA SUP
33	700714066	33		2	PIN	GOUPILLE PERNO BOLZEN PASADOR
34	700714053	1		2	LINK	MAILLON MAGLIA GLIED UNION
35	700714047	1		2	CHAIN	CHAINE CATENA KETTE CADENA
36	700714150	1		2	SLEEVE	MANCHON MANICOTTO HUELSE MANCHA
37*	353725X1	1	1/2"-13 X 1-3/4	2	BOLT UNC	BOULON UNC BULLONE UNC MASCH.SCHRB.UNC PERNO UNC
38*	*Y704742*	1	1/2"-13	2	TOP LOCKNUT	ECROU FREIN DADO DI TESTA SELBSTS.MUTTER CONTRATUERCA SUP
39	700712616	1		8	WASHER	RONDELLE RONDELLA UNTERLEGSCHEIBE ARANDELA
40*	354290X1	1	5/8"-11 X 3-1/4	1	BOLT UNC	BOULON UNC BULLONE UNC MASCH.SCHRB.UNC PERNO UNC
41*	700720195	2	5/16" X 2-1/4	2	PIN	GOUPILLE PERNO BOLZEN PASADOR
42*	700719204	1	No 10-24 X 1/2	1	SCREW	VIS VITE SCHRAUBE TORNILLO
43*	354057X1	1	1/8" X 3/4	2	PIN	GOUPILLE PERNO BOLZEN PASADOR

[A] NOT ILLUSTRATED
NON ILLUSTRE
NICHT ABGEBILDET
NO ILLUSTRADO
NO ILLUSTRADED

Bale Chute Rampe De Dechargement Ballenrutsche Scivolo Per Balle Tobogan De Descarga	80-55	Kit Kit Kit Kit Kit

5-BA46-022-A

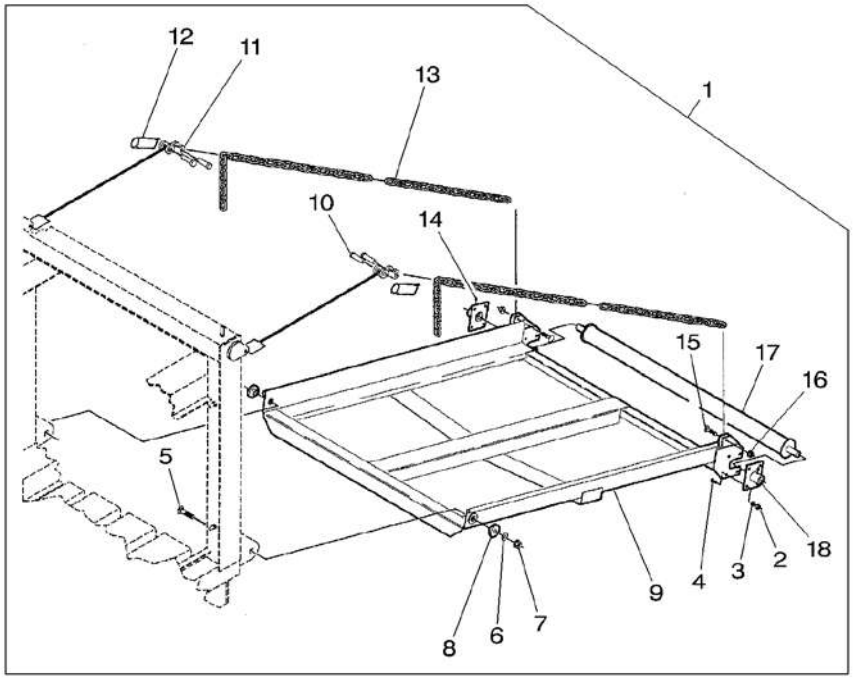

1	MK41084		1	KIT, BALE	JEU BALLE KIT IMBALLAGGIO	BALLENPR.SATZ JUEGO PARA BALAS
2*	*70922786*	1 3/8"-16 X 1	8	BOLT	BOULON BULLONE	MASCH.SCHRAUBE PERNO
3*	353434X1	1 3/8"	8	LOCK WASHER	RONDELLE FREIN ROSETTA ELASTICA	FEDERRING ARANDELA GROWER
4*	355566X1	1 3/8"-16	8	NUT UNC	ECROU UNC DADO UNC	MUTTER UNC TUERCA UNC
5*	70933955	1 5/8"-11 X 2-3/4	2	BOLT	BOULON BULLONE	MASCH.SCHRAUBE PERNO
6*	700711165	1 5/8"	2	WASHER	RONDELLE RONDELLA	UNTERLEGSCHEIBE ARANDELA
7*	***700703922***	1 5/8"-11	2	TOP LOCKNUT	ECROU FREIN DADO DI TESTA	SELBSTS.MUTTER CONTRATUERCA SUP
8*	700153603B	1	2	BUSH	BAGUE BOCCOLA	BUCHSE CASQUILLO
9*	700139232B	1	1	CHUTE	DESCENTE SCARICO	AUSWURFSCHACHT CAIDA
10	Y766113	1	4	CLEVIS	CHAPE GANCIO D'ATTACCO	GABELSTUECK GANCHO SEGURI.
11	700714053	1	2	LINK	MAILLON MAGLIA	GLIED UNION
12*	700714066	1	2	PIN	GOUPILLE PERNO	BOLZEN PASADOR
13	700714047	1	2	CHAIN	CHAINE CATENA	KETTE CADENA
14*	***70923219***	1 1/4"-28	2	GREASER	GRAISSEUR INGRASSATORE	FETTNIPPEL ENGRASADOR
15*	364976X1	1 1/2"-13 X 2	2	BOLT UNC	BOULON UNC BULLONE UNC	MASCH.SCHRB.UNC PERNO UNC
16*	***Y704742***	1 1/2"-13	2	TOP LOCKNUT	ECROU FREIN DADO DI TESTA	SELBSTS.MUTTER CONTRATUERCA SUP
17*	700153598B	1	1	ROLLER	GALET RULLO	ROLLE RODILLO
18	6529671B	1	2	BEARING	COUSSINET CUSCINETTO	LAGER COJINETE

Bale Chute
Rampe De Dechargement
Ballenrutsche
Scivolo Per Balle
Tobogan De Descarga

80-60

Roller Kit – With Electronic Control
Jeu De Rouleaux – Avec Controle Electronique
Satzwalzen – Mit Elektronische Steuerung
Gioco Rullo – Con Controllo Elettronico
Juego Rodillos – Con Control Electronico

5-BA46-023-B

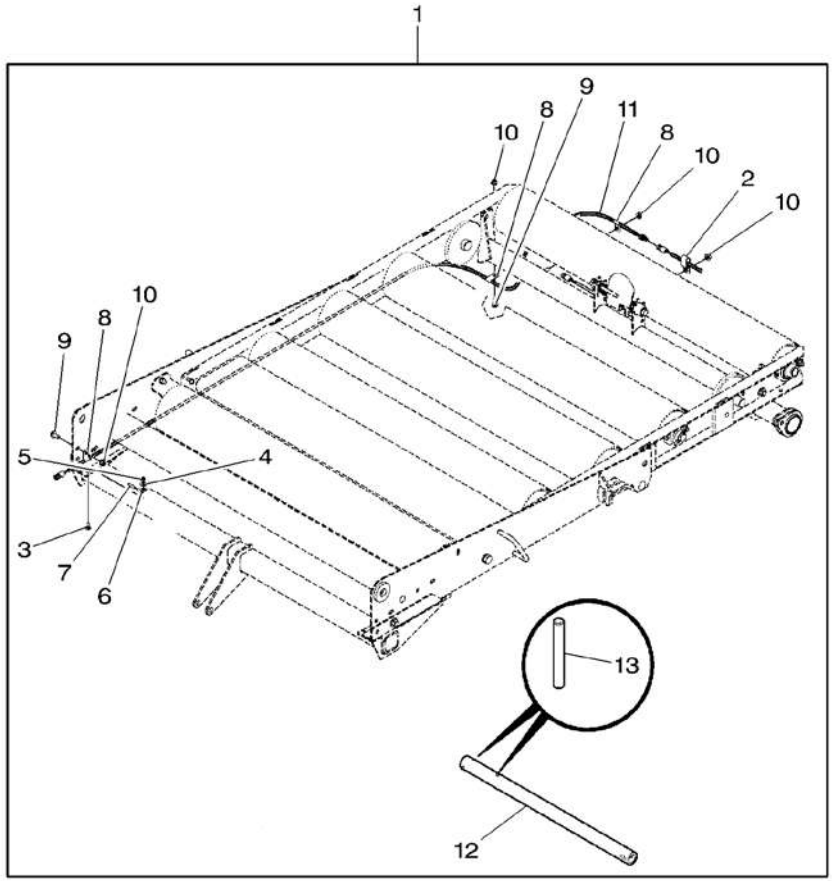

1*	MK41086			1	KIT, ATTACHMENT	JEU ACCESSOIRES KIT ACCESSORI	SATZ ANBAUTEILE JUEGO ACCESORIO
2*	700717627	1		1	CLAMP	COLLIER FASCETTA	HALTESCHELLE ABRAZADERA
3*	70931317	1	1/4"–20 X 3/4	1	BOLT	BOULON BULLONE	MASCH.SCHRAUBE PERNO
4*	355617X1	1	1/4"	1	WASHER	RONDELLE RONDELLA	UNTERLEGSCHEIBE ARANDELA
5*	Y704395	1	1/4"–20	1	NUT	ECROU DADO	MUTTER TUERCA
6*	70926919	1		1	CLIP	CLIP FERMAGLIO	SCHELLE CRAPA RETEN
7*	***700706340***	1		1	MAGNET	AIMANT MAGNETE	MAGNET IMAN
8*	70928654	1		3	CLIP	CLIP FERMAGLIO	SCHELLE CRAPA RETEN
9*	***7883374***	1	3/8"–16 X 3/4	2	SCREW	VIS VITE	SCHRAUBE TORNILLO
10*	***700711238***	1	3/8"–16	4	NUT	ECROU DADO	MUTTER TUERCA
11*	700725817	1		1	HARNESS	FAISCEAU FASCIOCAVI	KABELBAUM MAZO CABLES
12*	700151970	1		1	TUBE	TUBE TUBO	ROHR TUBO
13*	700720195	12	5/16" X 2–1/4	2	PIN	GOUPILLE PERNO	BOLZEN PASADOR

Bale Chute
Rampe De Dechargement
Ballenrutsche
Scivolo Per Balle
Tobogan De Descarga

80-65

Roller Kit (Continued) – With Electronic Control
Jeu De Rouleaux (Suite) – Avec Controle Electronique
Satzwalzen (Folge) – Mit Elektronische Steuerung
Gioco Rullo (Seguito) – Con Controllo Elettronico
Juego Rodillos (Sigue) – Con Control Electronico

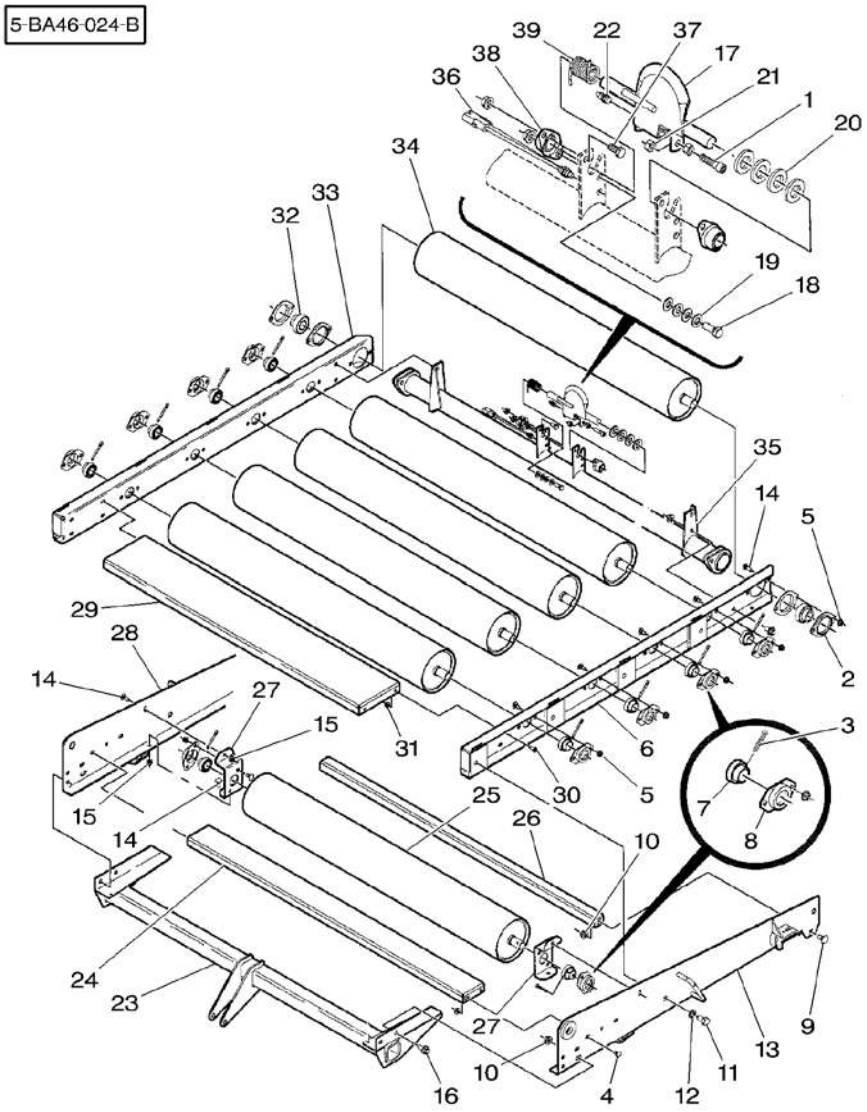

0★	MK41086		1	KIT, ATTACHMENT	JEU ACCESSOIRES KIT ACCESSORI SATZ ANBAUTEILE JUEGO ACCESORIO
1★	70917733	3/8"–16 X 1–1/4	1	SCREW UNC	VIS UNC VITE UNC SCHRAUBE UNC TORNILLO UNC
2★	***Y710293***		4	FLANGE	FLASQUE FLANGIA FLANSCH PLETINA
3★	62307	1/4" X 2	10	PIN	GOUPILLE PERNO BOLZEN PASADOR
4★	70922784	3/8"–16 X 3/4	24	BOLT	BOULON BULLONE MASCH.SCHRAUBE PERNO
5★	***Y704734***	3/8"–16	28	TOP LOCKNUT	ECROU FREIN DADO DI TESTA SELBSTS.MUTTER CONTRATUERCA SUP
6★	700139258B	◀	1	CHANNEL	CANAL PROFILATO KANAL CANAL
7★	*Y710392*		10	BEARING	COUSSINET CUSCINETTO LAGER COJINETE
8★	***700108622P***		10	FLANGE	FLASQUE FLANGIA FLANSCH PLETINA
9★	70928367	1/2"–13 X 1	2	BOLT	BOULON BULLONE MASCH.SCHRAUBE PERNO
10★	***Y704742***	1/2"–13	10	TOP LOCKNUT	ECROU FREIN DADO DI TESTA SELBSTS.MUTTER CONTRATUERCA SUP
11★	354441X1	5/8"–11 X 1	4	BOLT UNC	BOULON UNC BULLONE UNC MASCH.SCHRB.UNC PERNO UNC
12★	353433X1	5/8"	4	LOCK WASHER	RONDELLE FREIN ROSETTA ELASTICA FEDERRING ARANDELA GROWER
13★	700129744P	◀	1	ANGLE	EQUERRE ANGOLO WINKEL ANGULO
14★	*70922786*	3/8"–16 X 1	8	BOLT	BOULON BULLONE MASCH.SCHRAUBE PERNO
15★	***700711238***	3/8"–16	8	NUT	ECROU DADO MUTTER TUERCA
16★	7883424	1/2"–13 X 1	8	SCREW	VIS VITE SCHRAUBE TORNILLO
17★	700153131B		1	PADDLE	PALE PALETTA PADDEL ESPATULA
18★	353691X1	3/8"–16 X 1	1	BOLT UNC	BOULON UNC BULLONE UNC MASCH.SCHRB.UNC PERNO UNC
19★	*Y705533*	3/8"	4	WASHER	RONDELLE RONDELLA UNTERLEGSCHEIBE ARANDELA
20★	Y705566	3/4"	4	WASHER	RONDELLE RONDELLA UNTERLEGSCHEIBE ARANDELA
21★	355566X1	3/8"–16	1	NUT UNC	ECROU UNC DADO UNC MUTTER UNC TUERCA UNC
22★	***700710211***		1	ACTUATOR	DECLENCHEUR AZIONATORE BETAETIGUNG ACTUADOR
23★	700138042B		1	SUPPORT	SUPPORT SUPPORTO LAGERUNG DISPOS.DE SOSTEN
24★	700138050B		1	SHIELD	TOLE RIPARO SCHILD BLINDAJE
25★	700138044B		5	TUBE	TUBE TUBO ROHR TUBO

Bale Chute
Rampe De Dechargement
Ballenrutsche
Scivolo Per Balle
Tobogan De Descarga

80-65

Roller Kit (Continued) – With Electronic Control
Jeu De Rouleaux (Suite) – Avec Controle Electronique
Satzwalzen (Folge) – Mit Elektronische Steuerung
Gioco Rullo (Seguito) – Con Controllo Elettronico
Juego Rodillos (Sigue) – Con Control Electronico

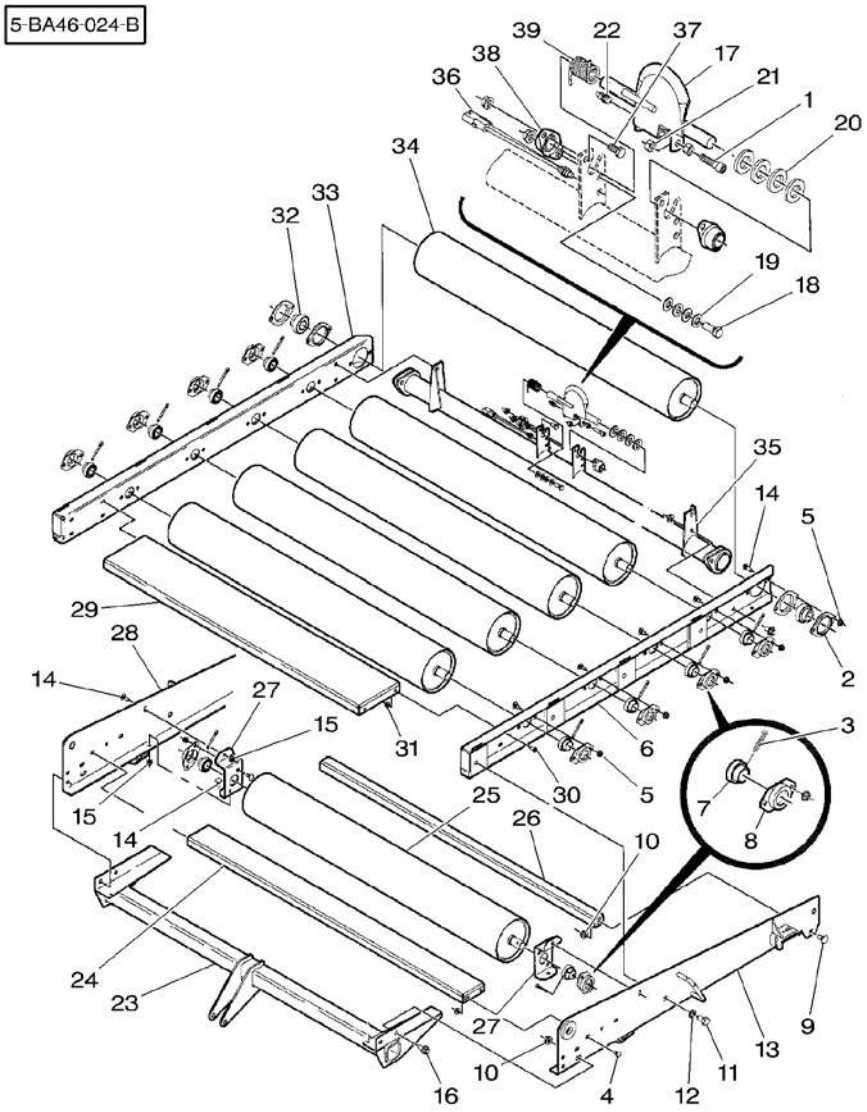

26 ✱	700138046B		1	CHANNEL	CANAL PROFILATO KANAL CANAL
27 ✱	700138052B		2	SUPPORT	SUPPORT SUPPORTO LAGERUNG DISPOS.DE SOSTEN
28 ✱	700129745P	▶	1	ANGLE	EQUERRE ANGOLO WINKEL ANGULO
29 ✱	700138051B		1	SHIELD	TOLE RIPARO SCHILD BLINDAJE
30 ✱	7883325	5/16"–18 X 3/4	4	SCREW	VIS VITE SCHRAUBE TORNILLO
31 ✱	Y704726	5/16"–18	4	TOP LOCKNUT	ECROU FREIN DADO DI TESTA SELBSTS.MUTTER CONTRATUERCA SUP
32 ✱	*70590709*		2	BEARING ASSY	ROULEMENT CUSCINETTO COMPL RADIALLAGER RODAMIENTO RAD
33 ✱	700139259B	▶	1	CHANNEL	CANAL PROFILATO KANAL CANAL
34 ✱	700138049B		1	TUBE	TUBE TUBO ROHR TUBO
35 ✱	700153373B		1	SUPPORT	SUPPORT SUPPORTO LAGERUNG DISPOS.DE SOSTEN
36 ✱	***700119161***		1	SWITCH	INTERRUPTEUR INTERRUTTORE SCHALTER INTERRUPTOR
37 ✱	353689X1	3/8"–16 X 3/4	3	BOLT UNC	BOULON UNC BULLONE UNC MASCH.SCHRB.UNC PERNO UNC
38 ✱	Y714592		2	BUSH	BAGUE BOCCOLA BUCHSE CASQUILLO
39 ✱	700716833		1	SPRING	RESSORT MOLLA FEDER MUELLE

Bale Chute
Rampe De Dechargement
Ballenrutsche
Scivolo Per Balle
Tobogan De Descarga

80-70

Roller Kit (Continued) – With Electronic Control
Jeu De Rouleaux (Suite) – Avec Controle Electronique
Satzwalzen (Folge) – Mit Elektronische Steuerung
Gioco Rullo (Seguito) – Con Controllo Elettronico
Juego Rodillos (Sigue) – Con Control Electronico

5-BA46-029-A

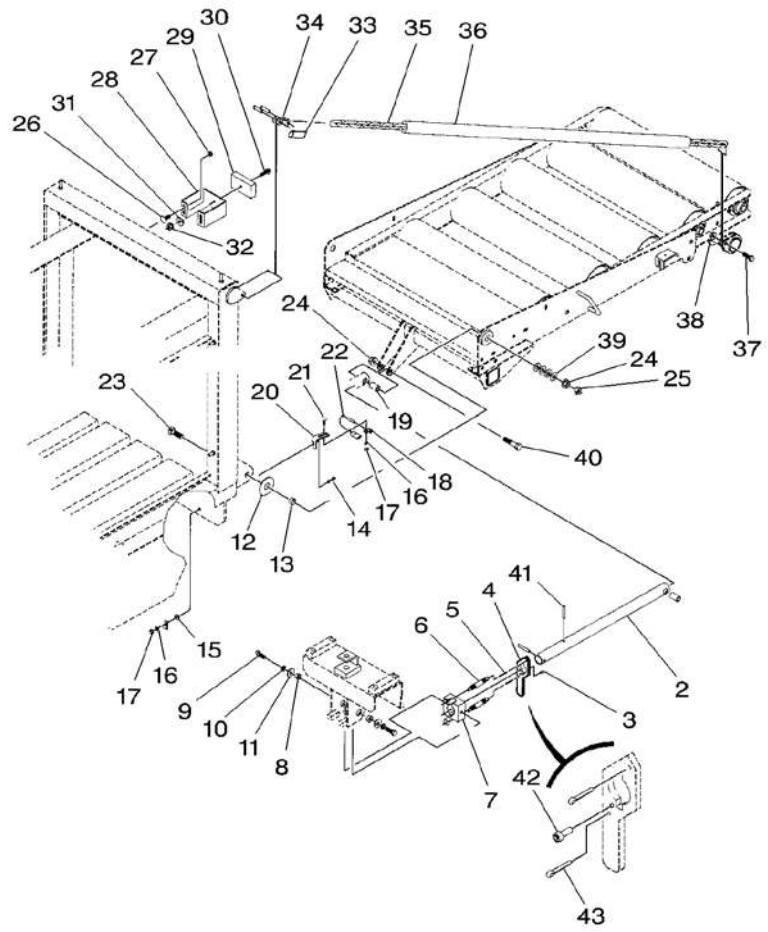

1		[A] 80–60 No 1	1	KIT, ATTACHING	JEU ACCESSOIRE KIT ATTACCO	BEFESTIGUNGSSATZ JUEGO DE UNION
2	700151970	1	1	TUBE	TUBE TUBO	ROHR TUBO
3	70921292	1 3/16" X 1/2	1	PIN	GOUPILLE PERNO	BOLZEN PASADOR
4	700151968	1	1	HANDLE	POIGNEE MANIGLIA	HANDGRIFF MANETA
5	354057X1	1 1/8" X 3/4	2	PIN	GOUPILLE PERNO	BOLZEN PASADOR
6	700709843	1	2	SPRING	RESSORT MOLLA	FEDER MUELLE
7	700151967	1	1	TRUNNION	TOURILLON PERNO ARTICOLAZ.	ZAPFEN MUNON
8	378604P	1	2	SPACER	ENTRETOISE DISTANZIALE	ABSTANDSTUECK PIEZA DISTANCIA
9	354276X1	1 1/2"–13 X 1–1/4	2	BOLT UNC	BOULON UNC BULLONE UNC	MASCH.SCHRB.UNC PERNO UNC
10	353439X1	1 1/2"	2	LOCK WASHER	RONDELLE FREIN ROSETTA ELASTICA	FEDERRING ARANDELA GROWER
11	700711557	1 1/2	2	WASHER	RONDELLE RONDELLA	UNTERLEGSCHEIBE ARANDELA
12	700714065	1	2	WASHER	RONDELLE RONDELLA	UNTERLEGSCHEIBE ARANDELA
13	700121805	1	2	BUSH	BAGUE BOCCOLA	BUCHSE CASQUILLO
14	7770175	1 1/4"–20 X 1–1/4	1	BOLT	BOULON BULLONE	MASCH.SCHRAUBE PERNO
15	355617X1	1 1/4"	2	WASHER	RONDELLE RONDELLA	UNTERLEGSCHEIBE ARANDELA
16	353441X1	1 1/4"	2	LOCK WASHER	RONDELLE FREIN ROSETTA ELASTICA	FEDERRING ARANDELA GROWER
17	355564X1	1 1/4"–20	2	NUT UNC	ECROU UNC DADO UNC	MUTTER UNC TUERCA UNC
18	70926919	1 1/4"	1	CLIP	CLIP FERMAGLIO	SCHELLE CRAPA RETEN
19	6475842	1	1	SPACER	ENTRETOISE DISTANZIALE	ABSTANDSTUECK PIEZA DISTANCIA
20	700129761B	1	1	SHANK	ANGLE FUSO	SCHAFT MANGO
21	70931317	1 1/4"–20 X 3/4	1	BOLT	BOULON BULLONE	MASCH.SCHRAUBE PERNO
22	***700113863***	1	1	SWITCH	INTERRUPTEUR INTERRUTTORE	SCHALTER INTERRUPTOR
23	70933955	1 5/8"–11 X 2–3/4	2	BOLT	BOULON BULLONE	MASCH.SCHRAUBE PERNO
24	***700703922***	1 5/8"–11	3	TOP LOCKNUT	ECROU FREIN DADO DI TESTA	SELBSTS.MUTTER CONTRATUERCA SUP
25	375099X1	1 5/8"–11	2	NUT UNC	ECROU UNC DADO UNC	MUTTER UNC TUERCA UNC
26	70922784	1 3/8"–16 X 3/4	2	BOLT	BOULON BULLONE	MASCH.SCHRAUBE PERNO

Bale Chute
Rampe De Dechargement
Ballenrutsche
Scivolo Per Balle
Tobogan De Descarga

80-70

Roller Kit (Continued) – With Electronic Control
Jeu De Rouleaux (Suite) – Avec Controle Electronique
Satzwalzen (Folge) – Mit Elektronische Steuerung
Gioco Rullo (Seguito) – Con Controllo Elettronico
Juego Rodillos (Sigue) – Con Control Electronico

5-BA46-029-A

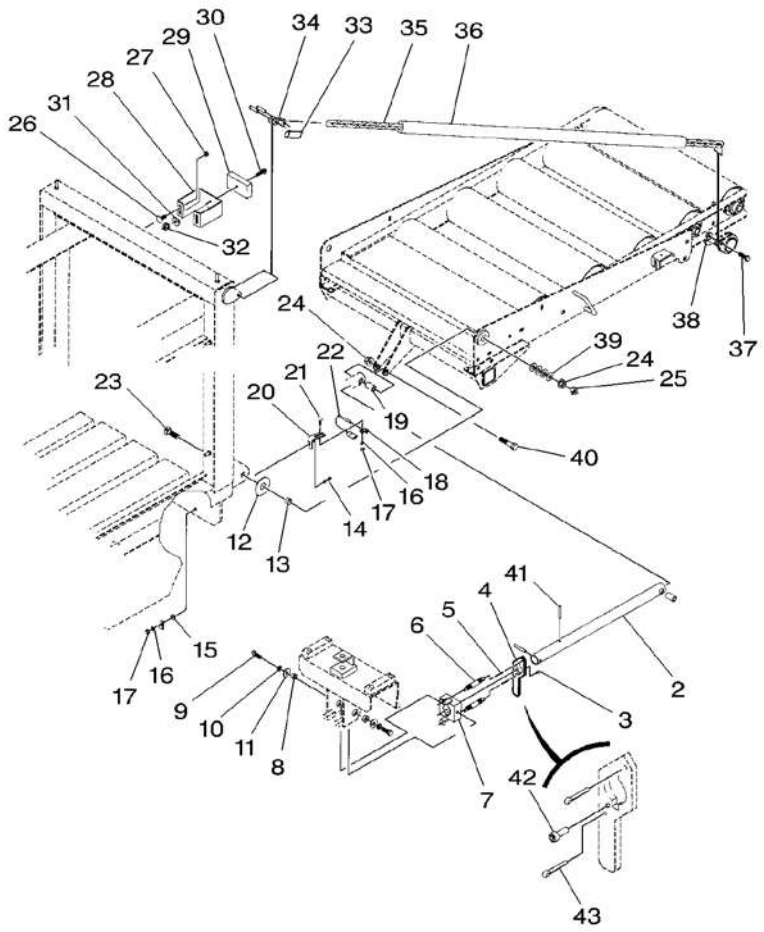

27	***704247***	1	3/8"–16	**2** LOCKNUT	ECROU BLOCAGE AUTOBLOCCANTE	FLACHMUTTER CONTRATUERCA
28	700129682B	1		**1** SUPPORT	SUPPORT SUPPORTO	LAGERUNG DISPOS.DE SOSTEN
29	700707584	1		**1** ADHESIVE	COLLANT ADESIVO	KLEBSTOFF ADHESIVO
30	7883341	1	5/16"–18 X1–1/4	**1** BOLT	BOULON BULLONE	MASCH.SCHRAUBE PERNO
31	355618X1	1	5/16"	**1** WASHER	RONDELLE RONDELLA	UNTERLEGSCHEIBE ARANDELA
32	Y704726	1	5/16"–18	**1** TOP LOCKNUT	ECROU FREIN DADO DI TESTA	SELBSTS.MUTTER CONTRATUERCA SUP
33	700714066	33		**2** PIN	GOUPILLE PERNO	BOLZEN PASADOR
34	700714053	1		**2** LINK	MAILLON MAGLIA	GLIED UNION
35	700714047	1		**2** CHAIN	CHAINE CATENA	KETTE CADENA
36	700714150	1		**2** SLEEVE	MANCHON MANICOTTO	HUELSE MANCHA
37	353725X1	1	1/2"–13 X 1–3/4	**2** BOLT UNC	BOULON UNC BULLONE UNC	MASCH.SCHRB.UNC PERNO UNC
38	***Y704742***	1	1/2"–13	**2** TOP LOCKNUT	ECROU FREIN DADO DI TESTA	SELBSTS.MUTTER CONTRATUERCA SUP
39	700712616	1		**8** WASHER	RONDELLE RONDELLA	UNTERLEGSCHEIBE ARANDELA
40	354290X1	1	5/8"–11 X 3–1/4	**1** BOLT UNC	BOULON UNC BULLONE UNC	MASCH.SCHRB.UNC PERNO UNC
41	700720195	2	5/16" X 2–1/4	**2** PIN	GOUPILLE PERNO	BOLZEN PASADOR
42★	700719204	1	No 10–24 X 1/2	**1** SCREW	VIS VITE	SCHRAUBE TORNILLO
43★	354057X1	1	1/8" X 3/4	**2** PIN	GOUPILLE PERNO	BOLZEN PASADOR

[A] NOT ILLUSTRATED
NON ILLUSTRE
NICHT ABGEBILDET
NO ILLUSTRADO
NO ILLUSTRADED

Knotter Noueur Binder Legatore Anudadora	80-75	Blower Kit Jeu Ventilateur Satz Ventilator Gioco Ventola Juego Ventilador

5-BA06-018-A

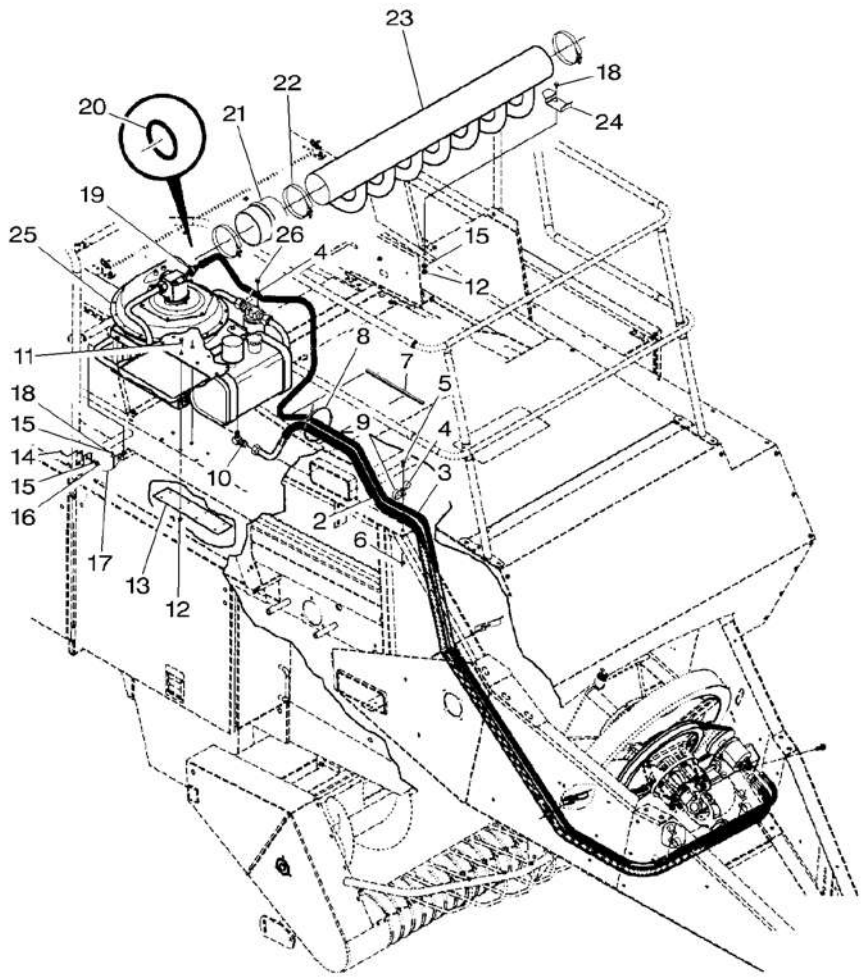

1	MK40954		[A]	1	KIT	JEU KIT	SATZ JUEGO
2	700717865	1		1	HYDRAULIC HOSE	DURITE HYDRAULIC TUBO HYDRAULICO	HYDRAUL.SCHLAUCH TUBO HYDRAULICO
3	700701764	1		1	HOSE	DURITE TUBO FLESSIBILE	SCHLAUCH FLEXIBLE
4*	70926049	1	3/4"	6	CLAMP	COLLIER FASCETTA	HALTESCHELLE ABRAZADERA
5*	7883408	1	3/8"-16 X 1-1/4	5	SCREW	VIS VITE	SCHRAUBE TORNILLO
6	***700711238***	1	3/8"-16	5	NUT	ECROU DADO	MUTTER TUERCA
7	700105144	1		1	TRIM	ENJOLIVEUR FINITURA	ZIERLEISTE TAPIZADO
8*	70935468	1		1	TIE	ATTACHE TRAVERSA ATTACCO	KUPPL.STANGE BARRA DE ENLACE
9*	70929160	1		5	CLAMP	COLLIER FASCETTA	HALTESCHELLE ABRAZADERA
10	70922974	1		1	ELBOW	COUDE GOMITO	WINKELSTUECK CODO
11*	7883341	1	5/16"-18 X1-1/4	8	BOLT	BOULON BULLONE	MASCH.SCHRAUBE PERNO
12*	Y704726	1	5/16"-18	10	TOP LOCKNUT	ECROU FREIN DADO DI TESTA	SELBSTS.MUTTER CONTRATUERCA SUP
13*	700149723P	1		1	STRAP	PATTE CORREGGIA	LASCHE FAJA
14*	700701069	1	5/16"-18 X 3/4	2	SCREW	VIS VITE	SCHRAUBE TORNILLO
15*	***Y705525***	1	5/16"	5	WASHER	RONDELLE RONDELLA	UNTERLEGSCHEIBE ARANDELA
16*	70931277	1	5/16"-18	2	LOCKNUT	ECROU BLOCAGE AUTOBLOCCANTE	FLACHMUTTER CONTRATUERCA
17*	700149734P	1		1	SUPPORT	SUPPORT SUPPORTO	LAGERUNG DISPOS.DE SOSTEN
18*	7883325	1	5/16"-18 X 3/4	3	SCREW	VIS VITE	SCHRAUBE TORNILLO
19	700701753	1		1	ADAPTOR	ADAPTATEUR ADATTATORE	REDUZIERNIPPEL ADAPTADOR
20	***70921206***	19		1	O RING	JOINT TORIQUE ANELLO OR	O-RING JUNTA TORICA
21	700717760	1		1	ADAPTOR	ADAPTATEUR ADATTATORE	REDUZIERNIPPEL ADAPTADOR
22	700717761	1		3	CLAMP	COLLIER FASCETTA	HALTESCHELLE ABRAZADERA
23*	700149720P	1		1	MANIFOLD	COLLECTEUR COLLETTORE	KRUEMMER MULTIPLE
24*	700149725P	1		1	CHANNEL	CANAL PROFILATO	KANAL CANAL
25		1	80-85 No 28	1	KIT, FAN	JEU VENTILATEUR KIT VENTOLA	LEUFTER JUEGO VENTILADOR
26*	***7883374***	1	3/8"-16 X 3/4	1	SCREW	VIS VITE	SCHRAUBE TORNILLO

Knotter Noueur Binder Legatore Anudadora	80-75	Blower Kit Jeu Ventilateur Satz Ventilator Gioco Ventola Juego Ventilador

5-BA06-018-A

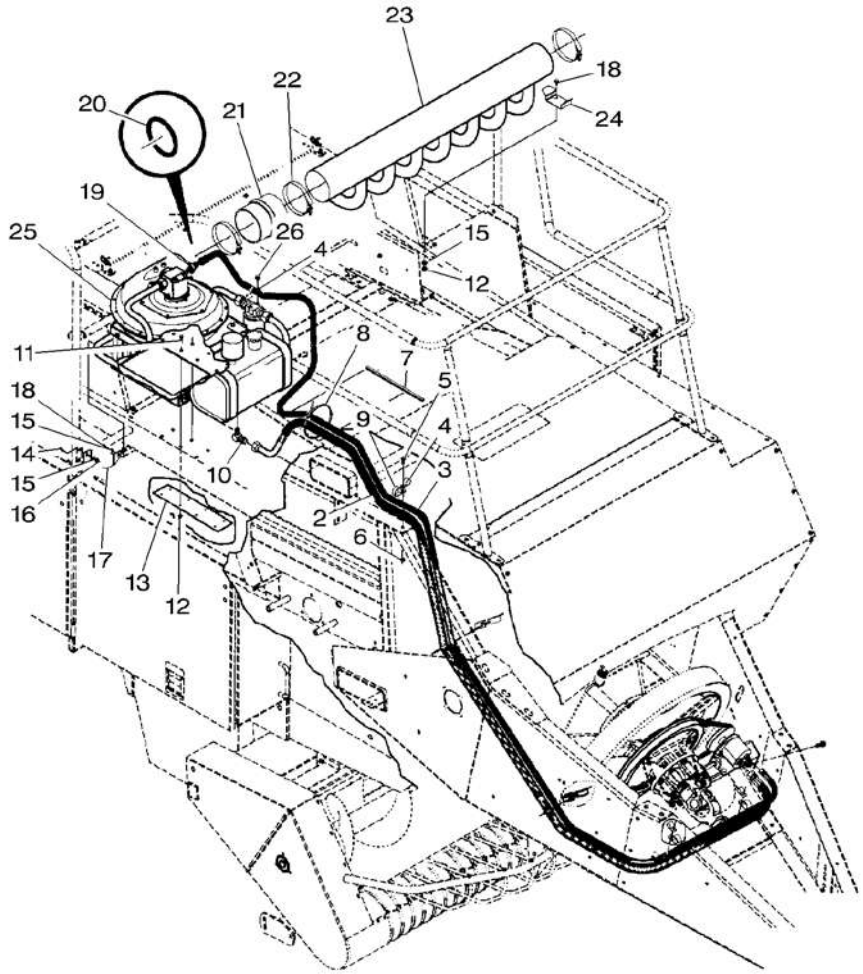

[A] NOT ILLUSTRATED
NON ILLUSTRE
NICHT ABGEBILDET
NO ILLUSTRADO
NO ILLUSTRADED

Knotter Noueur Binder Legatore Anudadora	80-80	Blower Kitit (Continued) Jeu Ventilateur (Suite) Satz Ventilator (Folge) Gioco Ventola (Seguito) Juego Ventilador (Sigue)

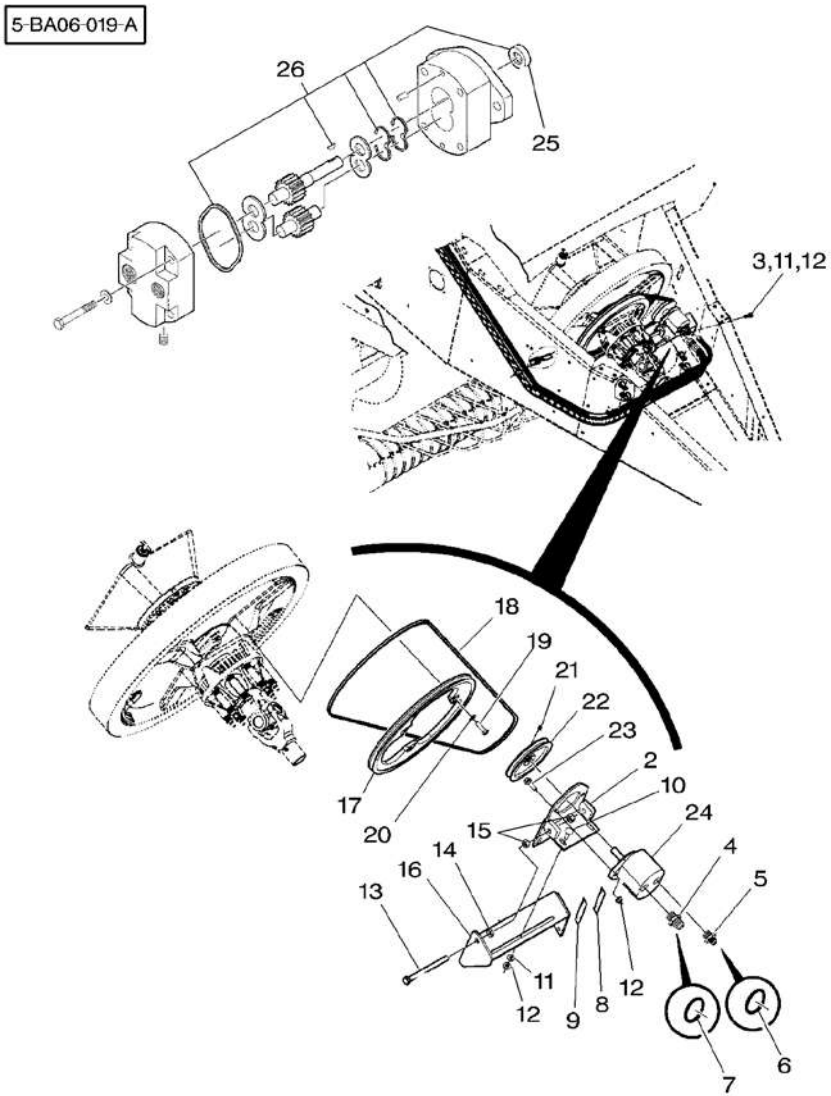

1		[A] 80-75 No 1	1	KIT, ATTACHMENT	JEU ACCESSOIRES KIT ACCESSORI	SATZ ANBAUTEILE JUEGO ACCESORIO
2*	700149726P	1	1	SUPPORT	SUPPORT SUPPORTO	LAGERUNG DISPOS.DE SOSTEN
3	7883333	1 5/16"-18 X 1	4	SCREW	VIS VITE	SCHRAUBE TORNILLO
4	378083X91	1	1	UNION	RACCORD RACCORDO	VERSCHRAUBUNG RACOR
5	70923717	1	1	CONNECTOR	BORNE MORSETTO	DOPPELNIPPEL CONECTOR
6	***70921205***	5	1	O RING	JOINT TORIQUE ANELLO OR	O-RING JUNTA TORICA
7	***70921206***	4	1	O RING	JOINT TORIQUE ANELLO OR	O-RING JUNTA TORICA
8	700718483	1 .018 "	1	SHIM	CALE REGLAGE SPESSORE	EINSTELLBLECH CALCE
9	700718484	1 .034 "	6	SHIM	CALE REGLAGE SPESSORE	EINSTELLBLECH CALCE
10	*70922786*	1 3/8"-16 X 1	4	BOLT	BOULON BULLONE	MASCH.SCHRAUBE PERNO
11	*Y705533*	1 3/8"	8	WASHER	RONDELLE RONDELLA	UNTERLEGSCHEIBE ARANDELA
12	***700711238***	1 3/8"-16	10	NUT	ECROU DADO	MUTTER TUERCA
13	873513	1 1/2"-13 X 6	1	CAPSCREW	VIS BOUCHON TAPPO A VITE	HUTSCHRAUBE TORNILLO TAPON
14	704056	1 1/2"-13	1	NUT	ECROU DADO	MUTTER TUERCA
15*	704031	1 1/2"-13	2	NUT	ECROU DADO	MUTTER TUERCA
16*	700149729P	1	1	ANGLE	EQUERRE ANGOLO	WINKEL ANGULO
17*	700149736P	1	1	PULLEY	POULIE PULEGGIA	RIEMENSCHEIBE POLEA
18	***700717886***	1	1	BELT	COURROIE CINGHIA	RIEMEN CORREA
19*	353724X1	1 1/2"-13 X 1-1/2	3	BOLT UNC	BOULON UNC BULLONE UNC	MASCH.SCHRB.UNC PERNO UNC
20*	353439X1	1 1/2"	3	LOCK WASHER	RONDELLE FREIN ROSETTA ELASTICA	FEDERRING ARANDELA GROWER
21	70903835	1 1/4"-20 X 3/8	2	SCREW UNC	VIS UNC VITE UNC	SCHRAUBE UNC TORNILLO UNC
22*	700149735P	1	1	PULLEY	POULIE PULEGGIA	RIEMENSCHEIBE POLEA
23	7883408	1 3/8"-16 X 1-1/4	2	SCREW	VIS VITE	SCHRAUBE TORNILLO
24*	700717866	1 ➡ HM 74288	1	HYDRAULIC PUMP	POMPEHYDRAULIQUE POMPA IDRAULICA	HYDROPUMPE BOMBA HIDRAULICA
24*	700722236	1 ➡ HM 74289	1	HYDRAULIC PUMP	POMPEHYDRAULIQUE POMPA IDRAULICA	HYDROPUMPE BOMBA HIDRAULICA
25	***700718774***	24 ➡ HM 74288	1	SEAL	JOINT ETANCHEITE PARAOLIO	DICHTRING RETEN

5-BA06-019-A

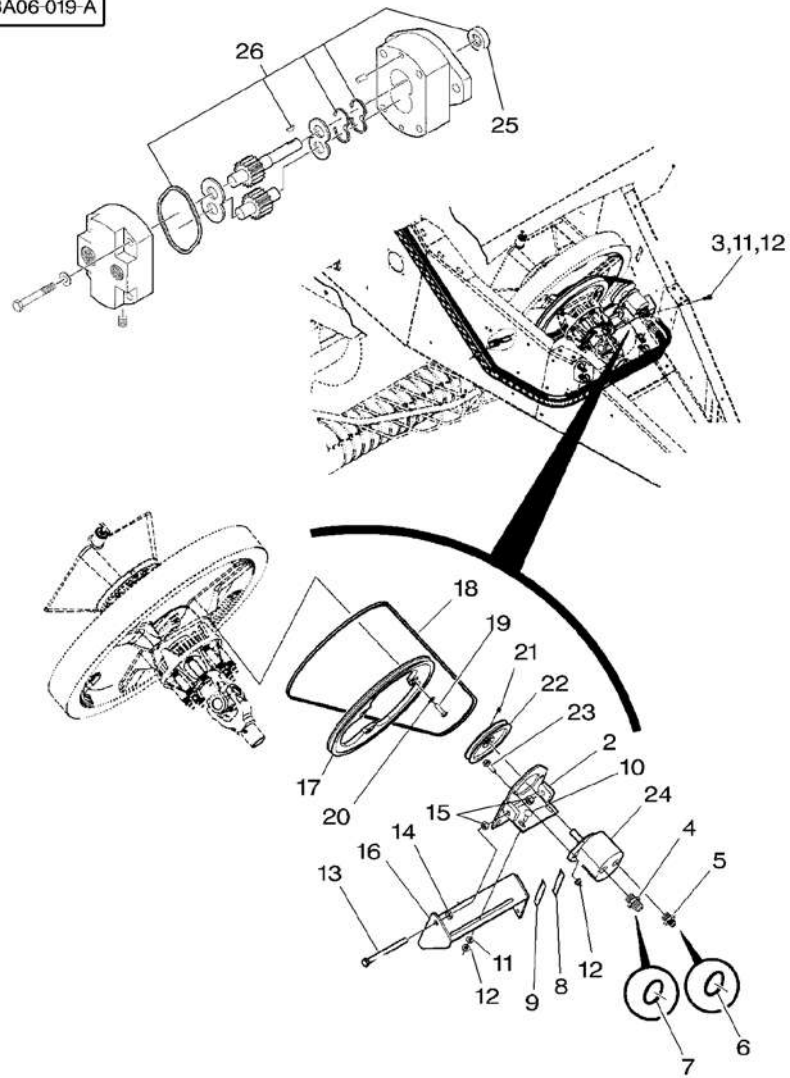

26	*8732661*	24 ➡	HM 74288	1 KIT, REPAIR	JEU REPARATION KIT RIPARAZIONE
26*	*700722237*	24 ➡	HM 74289	1 KIT, SEAL	JEU ETANCHEITE KIT TENUTA

REPARATURSATZ
JUEGO REPARACION
DICHTRINGSATZ
RETENES JUEGO

[A] NOT ILLUSTRATED
NON ILLUSTRE
NICHT ABGEBILDET
NO ILLUSTRADO
NO ILLUSTRADED

Knotter
Noueur
Binder
Legatore
Anudadora

80-85

Fan
Ventilateur
Lufter
Ventilatore
Ventilador

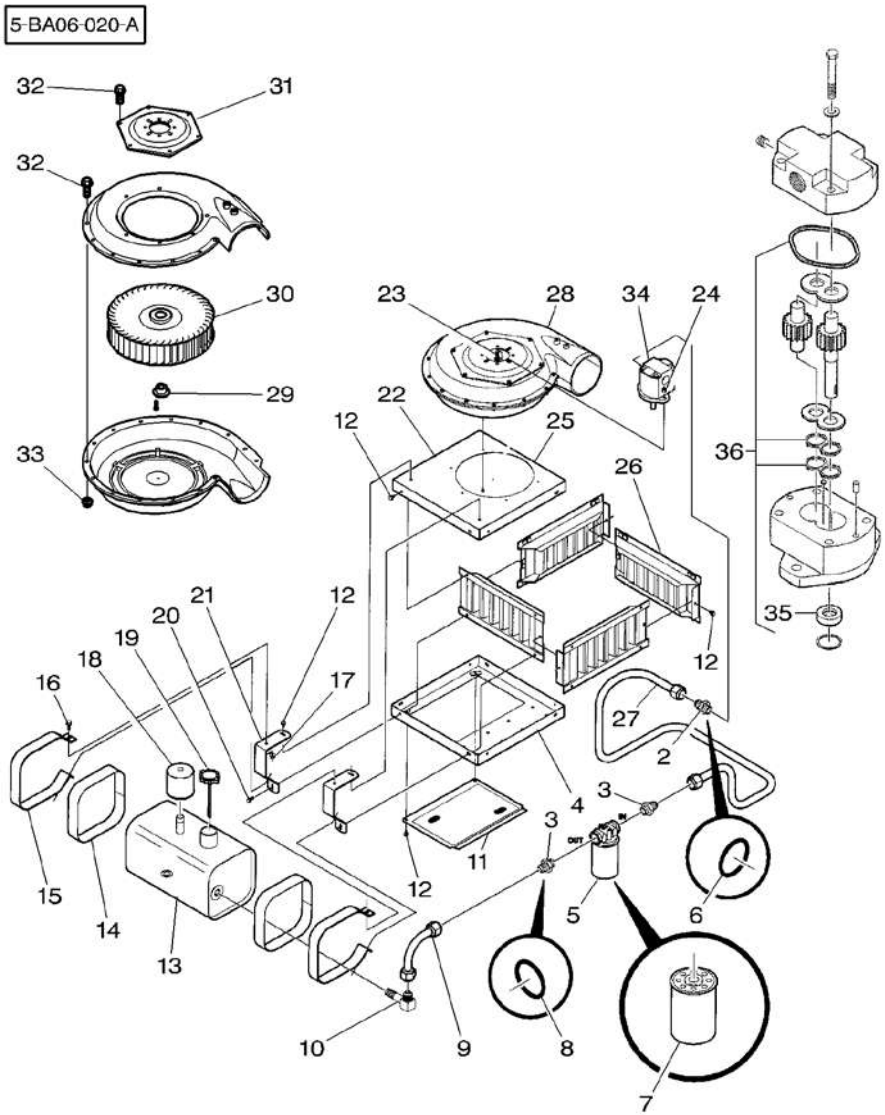

1		[A] 80-75 No 1	1	KIT, ATTACHMENT	JEU ACCESSOIRES KIT ACCESSORI	SATZ ANBAUTEILE JUEGO ACCESORIO
2	70923174	1	1	CONNECTOR	BORNE MORSETTO	DOPPELNIPPEL CONECTOR
3	70921228	1	2	ADAPTOR	ADAPTATEUR ADATTATORE	REDUZIERNIPPEL ADAPTADOR
4	700149712	1	1	PANEL	PANNEAU PANNELLO	VERKL.BLECH PANEL
5	700710972	1	1	FILTER	FILTRE FILTRO	FILTER FILTRO
6	***70921206***	2	1	O RING	JOINT TORIQUE ANELLO OR	O-RING JUNTA TORICA
7	***7033616***	5	1	ELEMENT	ELEMENT ELEMENTO	ELEMENT ELEMENTO
8*	***70921214***	3	2	O RING	JOINT TORIQUE ANELLO OR	O-RING JUNTA TORICA
9	700717695	1	1	TUBE	TUBE TUBO	ROHR TUBO
10	700717705	1	1	ELBOW	COUDE GOMITO	WINKELSTUECK CODO
11	700149714	1	1	GRILLE	GRILLE GRIGLIA	GRILL REJILLA
12*	7883317	1 5/16"-18 X 1/2	22	SCREW	VIS VITE	SCHRAUBE TORNILLO
13*	700722704	1	1	OIL TANK	RESERVOIR HUILE SERBATOIO OLIO	OELBEHAELTER DEPOSITO ACEITE
14	***844498***	1	2	BAND	BANDE NASTRO	BAND BANDA
15*	700149719B	1	2	STRAP	PATTE CORREGGIA	LASCHE FAJA
16*	7883382	1 3/8"-16 X 1	4	SCREW	VIS VITE	SCHRAUBE TORNILLO
17*	***Y704734***	1 3/8"-16	4	TOP LOCKNUT	ECROU FREIN DADO DI TESTA	SELBSTS.MUTTER CONTRATUERCA SUP
18	***7825516***	1	1	FILTER	FILTRE FILTRO	FILTER FILTRO
19	700708076	1	1	CAP	CHAPEAU CAPPELLO	KAPPE TAPA
20*	7883325	1 5/16"-18 X 3/4	2	SCREW	VIS VITE	SCHRAUBE TORNILLO
21	700149718	1	2	STRAP	PATTE CORREGGIA	LASCHE FAJA
22	700149710	1	1	PANEL	PANNEAU PANNELLO	VERKL.BLECH PANEL
23*	70923220	1 3/8"-16 X 1-1/4	2	BOLT	BOULON BULLONE	MASCH.SCHRAUBE PERNO
24*	366573X1	1 3/8"-16	2	LOCKNUT	ECROU BLOCAGE AUTOBLOCCANTE	FLACHMUTTER CONTRATUERCA
25*	7883275	1 1/4"-20 X 3/4	5	BOLT	BOULON BULLONE	MASCH.SCHRAUBE PERNO
26	700149704	1	4	GRILLE	GRILLE GRIGLIA	GRILL REJILLA

Knotter Noueur Binder Legatore Anudadora	80-85	Fan Ventilateur Lufter Ventilatore Ventilador

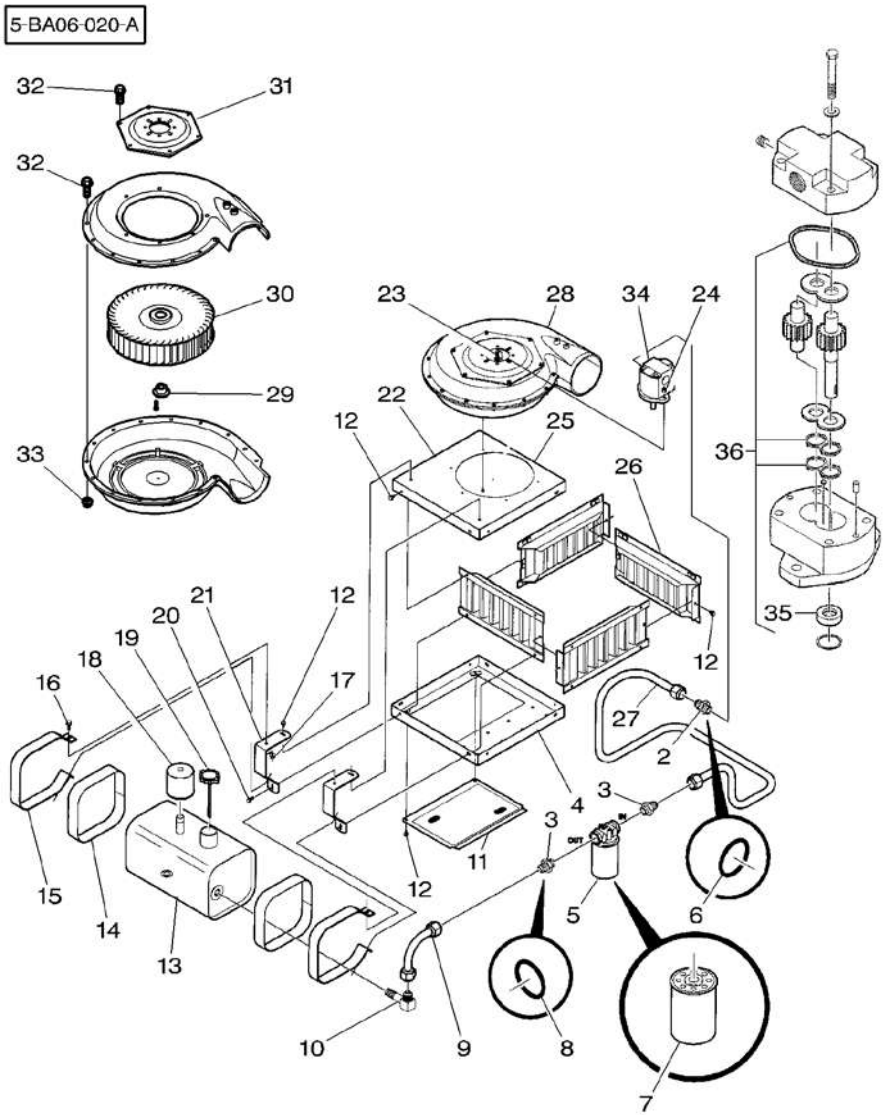

27*	700717696	1 ➡ HP 74100	1	TUBE	TUBE TUBO	ROHR TUBO
27*	700723558	1 ➡ HP 74101	1	TUBE	TUBE TUBO	ROHR TUBO
28	700717713	1	1	BLOWER	SOUFFLERIE SOFFIANTE	GEBLAESE SOPLADOR
29	700718704	28	1	BUSH	BAGUE BOCCOLA	BUCHSE CASQUILLO
30	700718702	28	1	FAN	VENTILATEUR VENTOLA	LUEFTER VENTILADOR
31	700718703	28	1	PLATE	PLAQUE PIASTRA	PLATTE PLATO
32	1079645M1	28 1/4"–20 X 1	23	SCREW	VIS VITE	SCHRAUBE TORNILLO
33*	70931209	28 1/4"–20	17	NUT	ECROU DADO	MUTTER TUERCA
34*	700717759	1 ➡ HP 74100	1	HYDRAULIC MOTOR	MOTEUR HYDRAULIC MOTORE IDRAULICO	HYDROMOTOR MOTOR HIDRAULICO
34*	700723555	1 ➡ HP 74101	1	HYDRAULIC MOTOR	MOTEUR HYDRAULIC MOTORE IDRAULICO	HYDROMOTOR MOTOR HIDRAULICO
35*	1713486	34 ➡ HP 74100	1	SEAL	JOINT ETANCHEITE PARAOLIO	DICHTRING RETEN
35*	*700723562*	34 ➡ HP 74101	1	SEAL	JOINT ETANCHEITE PARAOLIO	DICHTRING RETEN
36*	*7738800*	34 ➡ HP 74100	1	KIT, REPAIR	JEU REPARATION KIT RIPARAZIONE	REPARATURSATZ JUEGO REPARACION
36*	*700723560*	34 ➡ HP 74101	1	KIT, REPAIR	JEU REPARATION KIT RIPARAZIONE	REPARATURSATZ JUEGO REPARACION

[A] NOT ILLUSTRATED
NON ILLUSTRE
NICHT ABGEBILDET
NO ILLUSTRADO
NO ILLUSTRADED

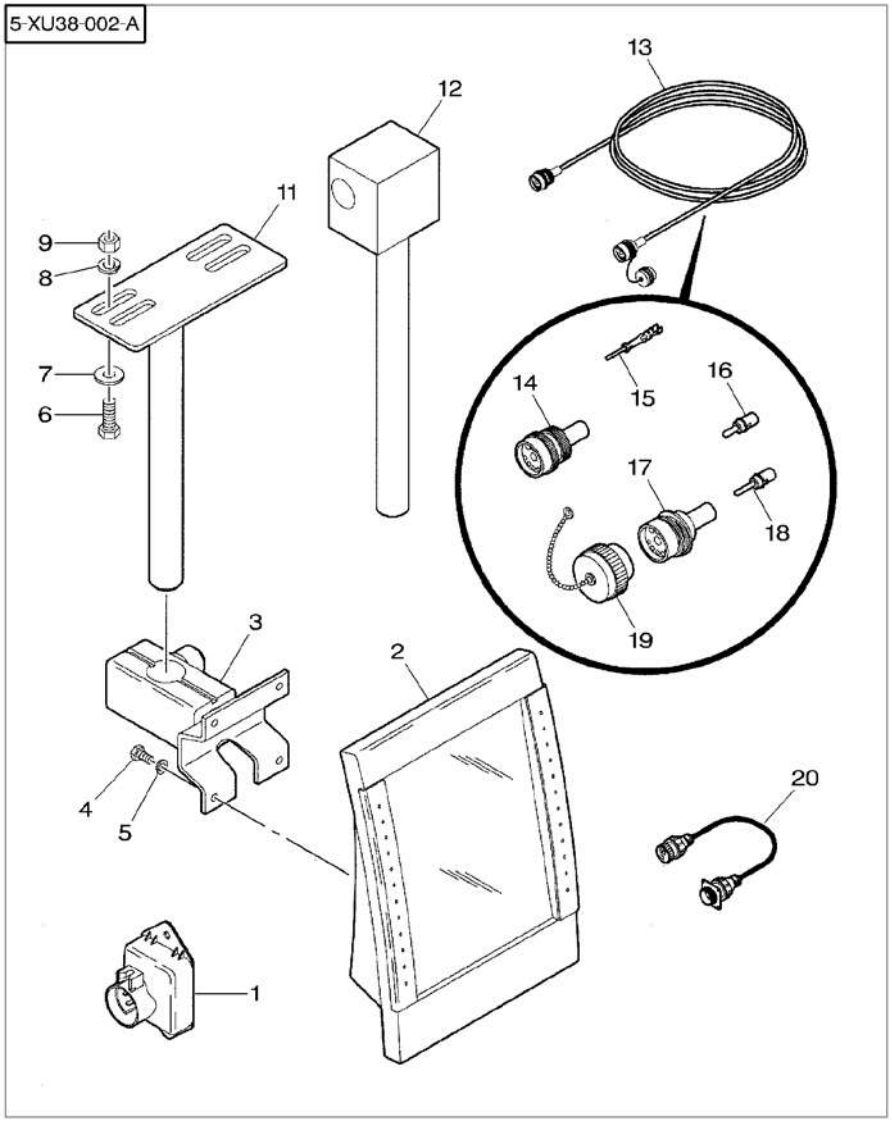

0*	MK41106		1 KIT	JEU KIT	SATZ JUEGO
1*	700725818		1 MODULE	MODULE MODULO	MODEL MODULO
2*	D28989058		1 MONITOR	MONITOR MONITORE	RATGEBER MONITOR
3*	N858871		1 BRACKET	SUPPORT FIXATION SUPPORTO FISSAGG	HALTEARM SOPORTE
4*	7883978	M6 X 12	4 SCREW	VIS VITE	SCHRAUBE TORNILLO
5*	Y705269	M6	4 WASHER	RONDELLE RONDELLA	UNTERLEGSCHEIBE ARANDELA
6*	353691X1	3/8"–16 X 1	4 BOLT UNC	BOULON UNC BULLONE UNC	MASCH.SCHRB.UNC PERNO UNC
7*	355619X1	3/8"	4 WASHER	RONDELLE RONDELLA	UNTERLEGSCHEIBE ARANDELA
8*	353434X1	3/8"	4 LOCK WASHER	RONDELLE FREIN ROSETTA ELASTICA	FEDERRING ARANDELA GROWER
9*	355566X1	3/8"–16	4 NUT UNC	ECROU UNC DADO UNC	MUTTER UNC TUERCA UNC
10*	700725961	[B]	1 HARNESS	FAISCEAU FASCIOCAVI	KABELBAUM MAZO CABLES
11*	N858852		1 BASE	SEMELLE BASE	FUSSPLATTE BASE
12*	N858872		1 BAR	BARRE BARRA	STAB BARRA
13*	700723738	[A]	1 HARNESS	FAISCEAU FASCIOCAVI	KABELBAUM MAZO CABLES
14*	N858734	13 [A]	1 KIT	JEU KIT	SATZ JUEGO
15*	N857481	13 [A]	4 TERMINAL	TERMINAL TERMINALE	TERMINAL TERMINAL
16*	71399227	13 [A]	2 PIN	GOUPILLE PERNO	BOLZEN PASADOR
17*	71396309	13 [A] D	1 TERMINAL	TERMINAL TERMINALE	TERMINAL TERMINAL
18*	700721775	13 [A]	2 PIN	GOUPILLE PERNO	BOLZEN PASADOR
19*	700716838	13 [A]	1 PLUG	BOUCHON TAPPO	VERSCHL.STOPFEN TAPON
20*	700723470		1 HARNESS	FAISCEAU FASCIOCAVI	KABELBAUM MAZO CABLES

[A] NOT INCLUDED IN KIT
N'EST PAS INCLUS DANS KIT
NICHT ENTHALTEN IN REPARATURSATZ
NON COMPRESI NEL
NO INCLUYE EN JUEGO

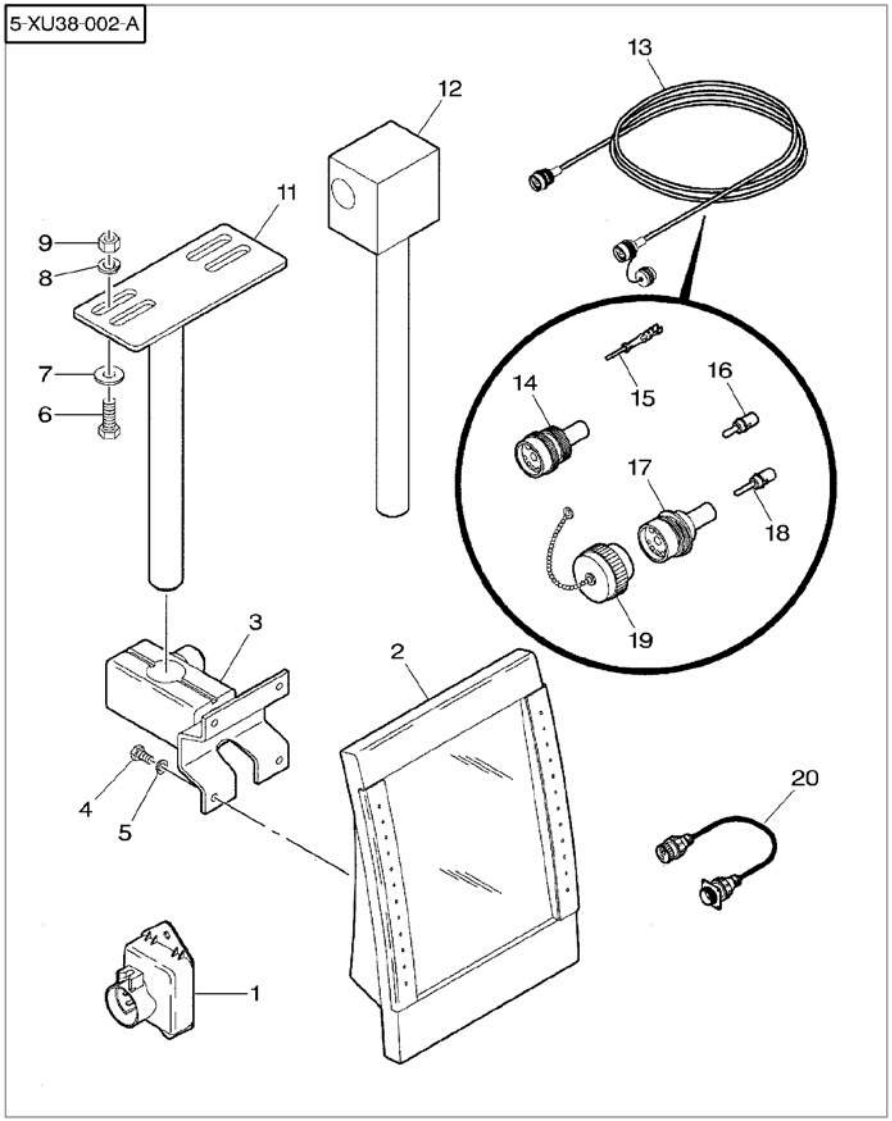

[B] NOT ILLUSTRATED
NON ILLUSTRE
NICHT ABGEBILDET
NO ILLUSTRADO
NO ILLUSTRADED

Hydraulic Hydraulique Hydraulik Idraulica Hidraulico	80-95	Load Sensing Load Sensing Load Sensing Load Sensing Load Sensing

5-BA55-032-A

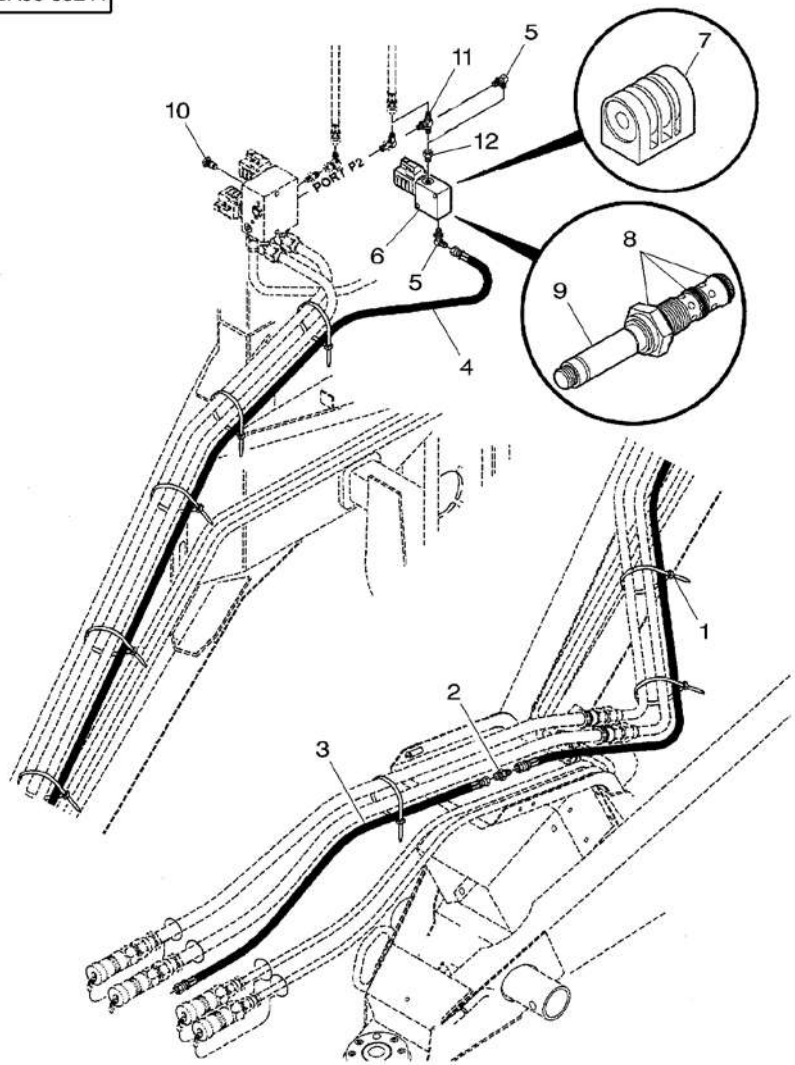

0*	MK41152		1	KIT	JEU KIT SATZ JUEGO
1*	3619622M1		8	CABLE TIE	ATTACHE CABLE FASCETTA CAVI KABELBINDER ENLACE DE CABLE
2*	846477		1	UNION	RACCORD RACCORDO VERSCHRAUBUNG RACOR
3*	700709957		1	HOSE	DURITE TUBO FLESSIBILE SCHLAUCH FLEXIBLE
4*	700706300		1	HYDRAULIC HOSE	DURITE HYDRAULIC TUBO HYDRAULICO HYDRAUL.SCHLAUCH TUBO HYDRAULICO
5*	**357197X91**		2	ELBOW	COUDE GOMITO WINKELSTUECK CODO
6*	700724342		1	PRESSURE VALVE	VALVE VALVOLA PRESSION DRUCKVENTIL VALVULA PRESION
7*	700720644	6	1	SOLENOID VALVE	VALVE SOLENOIDE VALVOLASOLENOIDE MAGNETVENTIL VALVULA SOLENOID
8*	700720679	6	1	KIT, JOINT	JEU JOINTS KIT GIUNTO DICHTUNGSSATZ JUEGO JUNTAS
9*	700720916	6	1	POPPET	POUSSOIR SUPPORTO VERTIC. VENTILKEGEL CONTRAPUNTA
10*	700706602		1	PLUG	BOUCHON TAPPO VERSCHL.STOPFEN TAPON
11*	70923894		1	TEEPIECE	TE RACCORDO A T T-STUECK PIEZA EN T
12*	700709216		1	ADAPTOR	ADAPTATEUR ADATTATORE REDUZIERNIPPEL ADAPTADOR

Literature
Litterature
Literatur
Letteratura
Literatura

80-100

5-BA20-002-A

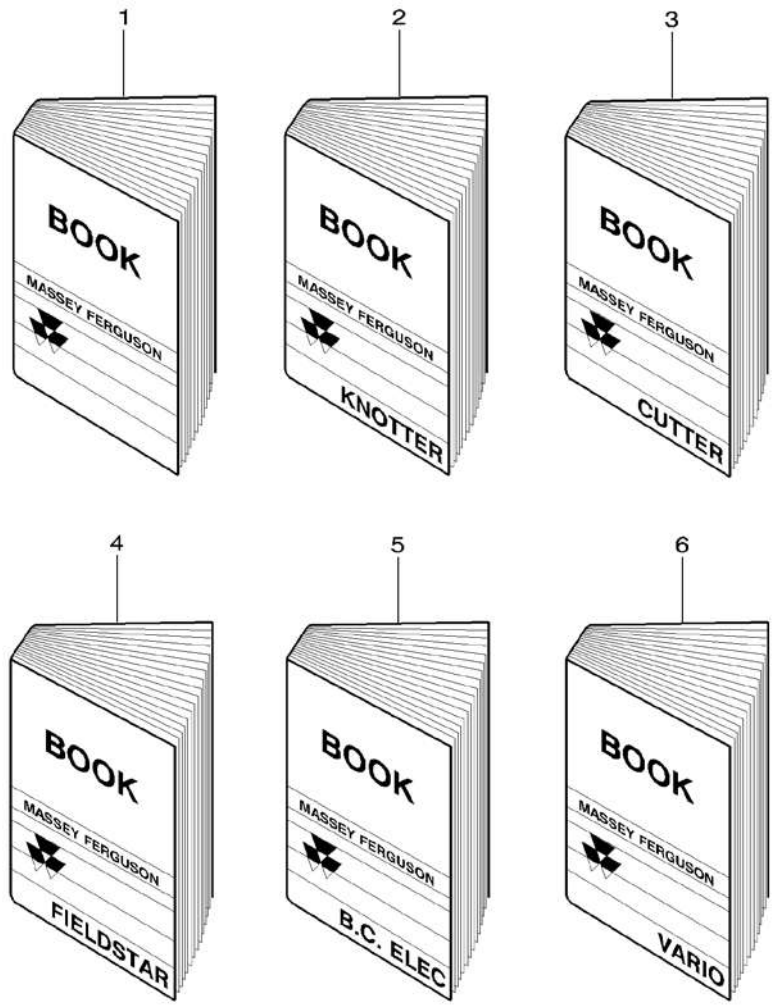

1 * 700720064J	GB	1	INSTRUCTION BOOK	GUIDEUTILISATION MANUALE ISTRUZI.	BETRIEBSANLEITG. MANUAL SERVICIO
1 * 700720166C	D	1	INSTRUCTION BOOK	GUIDEUTILISATION MANUALE ISTRUZI.	BETRIEBSANLEITG. MANUAL SERVICIO
1 * 700720162D	F	1	INSTRUCTION BOOK	GUIDEUTILISATION MANUALE ISTRUZI.	BETRIEBSANLEITG. MANUAL SERVICIO
1 * 700720171C	SPANISH	1	INSTRUCTION BOOK	GUIDEUTILISATION MANUALE ISTRUZI.	BETRIEBSANLEITG. MANUAL SERVICIO
1 * 700719193C	DANISH	1	INSTRUCTION BOOK	GUIDEUTILISATION MANUALE ISTRUZI.	BETRIEBSANLEITG. MANUAL SERVICIO
2 * 700719423C	[A]	1	INSTRUCTION BOOK	GUIDEUTILISATION MANUALE ISTRUZI.	BETRIEBSANLEITG. MANUAL SERVICIO
3 * 700720257D	[B]	1	INSTRUCTION BOOK	GUIDEUTILISATION MANUALE ISTRUZI.	BETRIEBSANLEITG. MANUAL SERVICIO
4 * 700720579B	[C] GB	1	INSTRUCTION BOOK	GUIDEUTILISATION MANUALE ISTRUZI.	BETRIEBSANLEITG. MANUAL SERVICIO
4 * 700721913B	[C] D	1	INSTRUCTION BOOK	GUIDEUTILISATION MANUALE ISTRUZI.	BETRIEBSANLEITG. MANUAL SERVICIO
4 * 700722534B	[C] F	1	INSTRUCTION BOOK	GUIDEUTILISATION MANUALE ISTRUZI.	BETRIEBSANLEITG. MANUAL SERVICIO
4 * 700722535B	[C] SPANISH	1	INSTRUCTION BOOK	GUIDEUTILISATION MANUALE ISTRUZI.	BETRIEBSANLEITG. MANUAL SERVICIO
4 * 700722533B	[C] DANISH	1	INSTRUCTION BOOK	GUIDEUTILISATION MANUALE ISTRUZI.	BETRIEBSANLEITG. MANUAL SERVICIO
4 * 700722532B	[C] I	1	INSTRUCTION BOOK	GUIDEUTILISATION MANUALE ISTRUZI.	BETRIEBSANLEITG. MANUAL SERVICIO
5 * 700721914B	[D] GB	1	INSTRUCTION BOOK	GUIDEUTILISATION MANUALE ISTRUZI.	BETRIEBSANLEITG. MANUAL SERVICIO
5 * 700722507A	[D] D	1	INSTRUCTION BOOK	GUIDEUTILISATION MANUALE ISTRUZI.	BETRIEBSANLEITG. MANUAL SERVICIO
5 * 700722506A	[D] F	1	INSTRUCTION BOOK	GUIDEUTILISATION MANUALE ISTRUZI.	BETRIEBSANLEITG. MANUAL SERVICIO
5 * 700722508A	[D] SPANISH	1	INSTRUCTION BOOK	GUIDEUTILISATION MANUALE ISTRUZI.	BETRIEBSANLEITG. MANUAL SERVICIO
5 * 700722505A	[D] DANISH	1	INSTRUCTION BOOK	GUIDEUTILISATION MANUALE ISTRUZI.	BETRIEBSANLEITG. MANUAL SERVICIO
5 * 700720213A	[D] I	1	INSTRUCTION BOOK	GUIDEUTILISATION MANUALE ISTRUZI.	BETRIEBSANLEITG. MANUAL SERVICIO
6 * 700722402A	[E] GB	1	INSTRUCTION BOOK	GUIDEUTILISATION MANUALE ISTRUZI.	BETRIEBSANLEITG. MANUAL SERVICIO
6 * 700722691A	[E] D	1	INSTRUCTION BOOK	GUIDEUTILISATION MANUALE ISTRUZI.	BETRIEBSANLEITG. MANUAL SERVICIO

[A] KNOTTER
NOUEUR
BINDER
LEGATORE
ANUDADORA

5-BA20-002-A

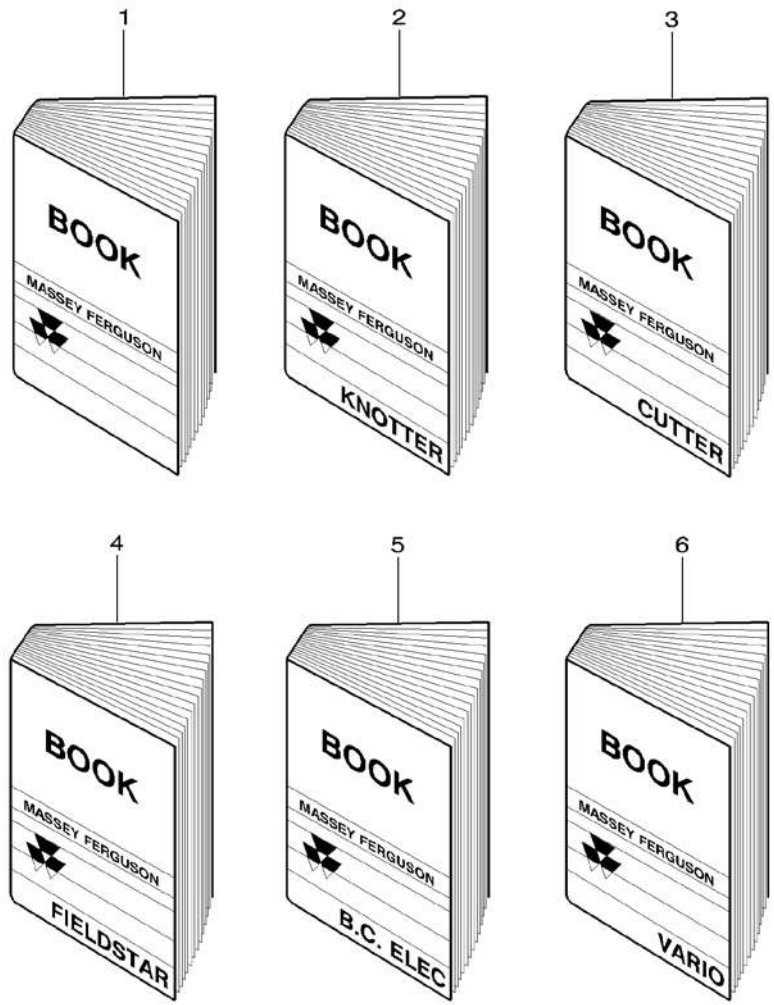

[B] CUTTER
COUTEAUX
MESSERKLINGE
LAME
CUCHILLA

[C] FIELDSTAR
FIELDSTAR
FIELDSTAR
FIELDSTAR
FIELDSTAR

[D] WITH ELECTRONIC CONTROL
AVEC CONTROLE ELECTRONIQUE
MIT ELEKTRONISCHE STEUERUNG
CON CONTROLLO ELETTRONICO
CON CONTROL ELECTRONICO

[E] VARIO
VARIO
VARIO
VARIO
VARIO